https://truckmanualshub.com/

For use in service manual
form SB2199E

SB2200E00
Jun. 1999

SERVICE MANUAL CONTENTS

NOTICE

This form lists the contents of the complete Service Manual for this product. The items listed with form numbers are available and included in the manual. If form numbers listed with mark (*) are, they are not available for the initial release of the manual. When items are updated, or supplements added, they will be announced in preview and should be ordered as they become available.

TITLE	FORM NUMBER
Service Manual Contents	SB2200E00
Safety	SB2003E00
Torque Specifications	SB2004E00
ENGINE	
DB58 Diesel Engine	SB2201E00
Alternator	SB2134E00
Starting Motors	SB2135E00
GM Vortec V6(4.3 Liter) Gasoline Engine	SB2110E00
GM Vortec V6(4.3 Liter) Gasoline Engine D & A	SB2111E00
POWER TRAIN	
Power Train	SB2202E00
VEHICLE SYSTEMS	
Vehicle Systems	SB2203E00
Vehicle Systems D & A	SB2204E00
Hydraulic System Schematic	SB2205E00
Electric System Schematic	SB2206E00
Mast Systems	SB2207E00
OPERATION & MAINTENANCE	
Operation & Maintenance Menual	SB2301E02

Models ; D35S-2, D40S-2, D45S-2, D40SC-2, D45SC-2, D50SC-2
G35S-2, G40S-2, G45S-2, G40SC-2, G45SC-2, G50SC-2

https://truckmanualshub.com/

⚠ WARNING

SAFETY

⚠ WARNING

The proper and safe lubrication and maintenance for this machine, recommended by DAEWOO, are outlined in the OPERATION & MAINTENANCE GUIDE for this machine.

Improper performance of lubrication or maintenance procedures is dangerous and could result in injury or death. Read and understand the OPERATION & MAINTENANCE GUIDE before performing any lubrication or maintenance.

The serviceman or mechanic may be unfamiliar with many of the systems on this machine. This makes it important to use caution when performing service work. A knowledge of the system and/or components is important before the removal or disassembly of any component.

Because of the size of some of the machine components, the serviceman or mechanic should check the weights noted in this Manual, Use proper lifting procedures when removing any components.

Following is a list of basic precautions that should always be observed.

1. Read and understand all Warning plates and decals on the machine before operating, lubricating or repairing the product.

2. Always wear protective glasses and protective shoes when working around machines. In particular, wear protective glasses when pounding on any part of the machine or its attachments with a hammer or sledge. Use welders gloves, hood/goggles, apron and other protective clothing appropriate to the welding job being performed. Do not wear loose-fitting or torn clothing. Remove all rings from fingers when working on machinery.

3. Do not work on any machine that is supported only by lift jacks or a hoist. Always use blocks or jack stands to support the machine before performing any disassembly.

4. Lower the forks or other implements to the ground before performing any work on the machine. If this cannot be done, make sure the forks or other implements are blocked correctly to prevent them from dropping unexpectedly.

⚠ WARNING

Do not operate this machine unless you have read and understand the instructions in the OPERATOR'S GUIDE. Improper machine operation is dangerous and could result in injury or death.

5. Use steps and grab handles (if applicable) when mounting or dismounting a machine. Clean any mud or debris from steps, walkways or work platforms before using. Always face machine when using steps, ladders and walkways. When it is not possible to use the designed access system, provide ladders, scaffolds, or work platforms to perform safe repair operations.

6. To avoid back injury, use a hoist when lifting components which weigh 23 kg (50 lb.) or more. Make sure all chains, hooks, slings, etc., are in good condition and are of the correct capacity. Be sure hooks are positioned correctly. Lifting eyes are not to be side loaded during a lifting operation.

7. To avoid burns, be alert for hot parts on machines which have just been stopped and hot fluids in lines, tubes and compartments.

8. Be careful when removing cover plates. Gradually back off the last two bolts or nuts located at opposite ends of the cover or device and pry cover loose to relieve any spring or other pressure, before removing the last two bolts or nuts completely.

9. Be careful when removing filler caps, breathers and plugs on the machine. Hold a rag over the cap or plug to prevent being sprayed or splashed by liquids under pressure. The danger is even greater if the machine has just been stopped because fluids can be hot.

10. Always use tools that are in good condition and be sure you understand how to use them before performing any service work.

11. Reinstall all fasteners with same part number. Do not use a lesser quality fastener if replacements are necessary. Do not mix metric fasteners with standard nuts and bolts.

12. If possible, make all repairs with the machine parked on a level, hard surface. Block machine so it does not roll while working on or under machine.

https://truckmanualshub.com/

⚠ WARNING

13. Disconnect battery and discharge any capacitors (electric trucks) before starting to work on machine. Hang "Do Not Operate" tag in the Operator's Compartment.

14. Repairs, which require welding, should be performed only with the benefit of the appropriate reference information and by personnel adequately trained and knowledgeable in welding procedures. Determine type of metal being welded and select correct welding procedure and electrodes, rods or wire to provide a weld metal strength equivalent at least to that of parent metal.

15. Do not damage wiring during removal operations. Reinstall the wiring so it is not damaged nor will it be damaged in operation by contacting sharp corners, or by rubbing against some object or hot surface. Do not connect wiring to a line containing fluid.

16. Be sure all protective devices including guards and shields are properly installed and functioning correctly before starting a repair. If a guard or shield must be removed to perform the repair work, use extra caution.

17. Always support the mast and carriage to keep carriage or attachments raised when maintenance or repair work is performed, which requires the mast in the raised position.

18. Loose or damaged fuel, lubricant and hydraulic lines, tubes and hoses can cause fires. Do not bend or strike high pressure lines or install ones which have been bent or damaged. Inspect lines, tubes and hoses carefully. Do not check for leaks with your hands. Pin hole (very small) leaks can result in a high velocity oil stream that will be invisible close to the hose. This oil can penetrate the skin and cause personal injury. Use cardboard or paper to locate pin hole leaks.

19. Tighten connections to the correct torque. Make sure that all heat shields, clamps and guards are installed correctly to avoid excessive heat, vibration or rubbing against other parts during operation. Shields that protect against oil spray onto hot exhaust components in event of a line, tube or seal failure must be installed correctly.

20. Relieve all pressure in air, oil or water systems before any lines, fittings or related items are disconnected or removed. Always make sure all raised components are blocked correctly and be alert for possible pressure when disconnecting any device from a system that utilizes pressure.

21. Do not operate a machine if any rotating part is damaged or contacts any other part during operation. Any high speed rotating component that has been damaged or altered should be checked for balance before reusing.

22. On LP equipped lift trucks, be sure to close the valve on the LP tank before service work is performed. Always close the valve on the LP tank when the lift truck is being stored. Do not check for LP leaks with an open flame.

23. Caution should be used to avoid breathing dust that may be generated when handling components containing asbestos fibers. If this dust is inhaled, it can be hazardous to your health. Components in **DAEWOO** products that may contain asbestos fibers are brake pads, brake band and lining assemblies, clutch plates and some gaskets. The asbestos used in these components is usually bound in a resin or sealed in some way. Normal handling is not hazardous as long as airborne dust which contains asbestos is not generated.

If dust which may contain asbestos is present, there are several common sense guidelines that should be followed.

a. Never use compressed air for cleaning.

b. Avoid brushing or grinding of asbestos containing materials.

c. For clean up, use wet methods or a vacuum equipped with a high efficiency particulate air (HEPA) filter.

d. Use exhaust ventilation on permanent machining jobs.

e. Wear an approved respirator if there is no other way to control the dust.

f. Comply with applicable rules and regulations for the work place (for example in the U.S.A., OSHA requirements as set forth in 29 CFR 1910. 1001).

g. Follow environmental rules and regulations for disposal of asbestos.

h. Avoid areas where asbestos particles may be in the air.

https://truckmanualshub.com/

SB2004E00
Dec.1998

Specifications

TORQUE SPECIFICATIONS

https://truckmanualshub.com/

STANDARD TORQUE FOR METRIC FASTENERS

NOTE : Take care to avoid mixing metric and inch dimensioned fasteners. Mismatched or incorrect fasteners can result in vehicle damage or malfunction, or possible injury. Exceptions to these torques are given in the Service Manual where needed.

NOTE : Prior to installation of any hardware, be sure components are in near new condition. Bolt and nut threads must not be worn or damaged. Hardware must be free of rust and corrosion. Clean hardware with a non-corrosive cleaner and apply engine oil to threads and bearing face. If thread lock or other compounds are to be applied, do not apply engine oil.

METRIC NUTS AND BOLTS		
THREAD SIZE (mm)	STANDARD TORQUE	
	(N • m)	(lb • ft)
M6	12 ± 3	9 ± 2
M8	28 ± 7	20 ± 5
M10	55 ± 10	40 ± 7
M12	100 ± 20	75 ± 15
M14	160 ± 30	120 ± 22
M16	240 ± 40	175 ± 30
M20	460 ± 60	340 ± 44
M24	800 ± 100	600 ± 75
M30	1600 ± 200	1200 ± 150
M36	2700 ± 300	2000 ± 225

METRIC TAPERLOCK STUDS		
THREAD SIZE (mm)	STANDARD TORQUE	
	(N • m)	(lb • ft)
M6	8 ± 3	6 ± 2
M8	17 ± 5	13 ± 4
M10	35 ± 5	26 ± 4
M12	65 ± 10	48 ± 7
M16	110 ± 20	80 ± 15
M20	170 ± 30	125 ± 22
M24	400 ± 60	300 ± 45
M30	650 ± 80	480 ± 60
M36	870 ± 100	640 ± 75

STANDARD TORQUE FOR INCH FASTENERS

Exceptions to these torques are given in the Service Manual where needed.

INCH NUTS AND BOLTS		
THREAD SIZE inch	STANDARD TORQUE	
	(N • m)	(lb • ft)
1/4	12 ± 3	9 ± 2
5/16	25 ± 6	18.0 ± 4.5
3/8	47 ± 9	35 ± 7
7/16	70 ± 15	50 ± 11
1/2	105 ± 20	75 ± 15
9/16	160 ± 30	120 ± 20
5/8	215 ± 40	160 ± 30
3/4	370 ± 50	275 ± 35
7/8	620 ± 80	460 ± 60
1	900 ± 100	660 ± 75
1-1/8	1300 ± 150	950 ± 100
1-1/4	1800 ± 200	1325 ± 150
1-3/8	2400 ± 300	1800 ± 225
1-1/2	3100 ± 350	2300 ± 250

INCH TAPERLOCK STUDS		
THREAD SIZE inch	STANDARD TORQUE	
	(N • m)	(lb • ft)
1/4	8 ± 3	6 ± 2
5/16	17 ± 5	13 ± 4
3/8	35 ± 5	26 ± 4
7/16	45 ± 10	33 ± 7
1/2	65 ± 10	48 ± 7
5/8	110 ± 20	80 ± 15
3/4	170 ± 30	125 ± 22
7/8	260 ± 40	190 ± 30
1	400 ± 60	300 ± 45
1-1/8	500 ± 70	370 ± 50
1-1/4	650 ± 80	480 ± 60
1-3/8	750 ± 90	550 ± 65
1-1/2	870 ± 100	640 ± 75

O-RING FACE SEAL FITTINGS

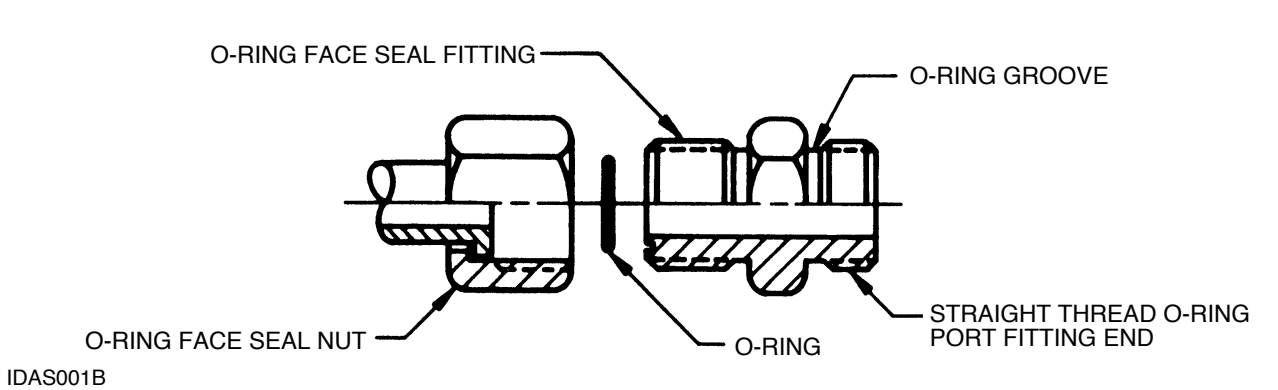

IDAS001B

STRAIGHT THREAD O-RING FITTING (FOR O-RING FACE SEAL FITTING ONLY)		
THREAD SIZE inch	STANDARD TORQUE	
	(N • m)	(lb • ft)
5/16-24	5.0 ± 1.5	45±15 lb • in
3/8-24	12 ± 2	110±20 lb • in
7/16-20	20 ± 4	15 ± 3
1/2-20	30 ± 5	22 ± 4
9/16-18	40 ± 5	30 ± 4
3/4-16	100 ± 15	75 ± 10
7/8-14	135 ± 15	100 ± 10
1 1/16-12	200 ± 25	150 ± 20
1 3/16-12	250 ± 25	185 ± 20
1 5/16-12	300 ± 40	225 ± 30
1 5/8-12	300 ± 40	225 ± 30
1 7/8-12	300 ± 40	225 ± 30
2 1/2-12	300 ± 40	225 ± 30

O-RING FACE SEAL FITTING NUT		
THREAD SIZE inch	STANDARD TORQUE	
	(N • m)	(lb • ft)
9/16-18	16 ± 3	12 ± 2
11/16-16	30 ± 4	22 ± 3
13/16-16	50 ± 7	37 ± 5
1-14	90 ± 10	65 ± 7
1 3/16-12	120 ± 15	90 ± 10
1 7/16-12	160 ± 20	120 ± 15
1 11/16-12	190 ± 20	140 ± 15
2-12	215 ± 25	160 ± 20

https://truckmanualshub.com/

FITTING INSTALLATION

HYDRAULIC LINE INSTALLATION

1. For a metal tube to hose installation, install the tube and tighten all bolts finger tight.
2. Tighten the bolts at the rigid end.
3. Install the hose and tighten all bolts finger tight.
4. Put the hose in a position so that it does not make contact with the machine or another hose.
5. Tighten the bolts on both connections.
6. Start the engine.
7. Move the implement control levers to all positions.
8. Look at the hose during movement of the implement. Make sure hose is not in contact with the machine or other hoses.
9. Shut off the engine.
10. If necessary, put the hose in a new position where it will not make contact when the implement is moved.

ASSEMBLY OF FITTINGS WITH STRAIGHT THREADS AND O-RING SEALS

This type of fitting is used in many applications. The tube end of the fitting will be different in design so that it can be used in many different applications. However, the installation procedure of the fitting is the same. If the tube end of the fitting body is the same as in the illustration (either an elbow or a straight body) it will be necessary to assemble the sleeve on the tube before connecting the tube to the end.

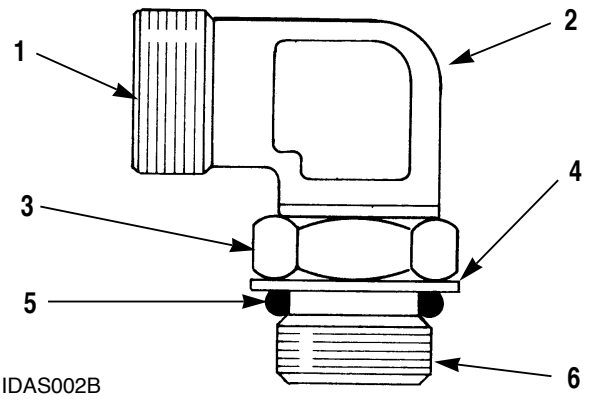

ELBOW BODY ASSEMBLY

(1) End of fitting body (connects to tube). (2) Fitting body. (3) Lock-nut. (4) Backup washer. (5) O-ring seal. (6) End of fitting that goes into other part.

1. Put locknut (3), backup washer (4) and O-ring seal (5) as far back on fitting body (2) as possible. Hold these components in this position. Turn the fitting into the part it is used on until backup washer (4) just makes contact with the face of the part it is used on.
2. To put the fitting assembly in its correct position, turn the fitting body (2) out (counterclockwise) a maximum of 359°. Tighten locknut (3) to the torque shown in the correct chart for the fitting used.

NOTE: If the fitting is a connector (straight fitting), the hex on the body takes the place of the locknut. To install this type fitting, tighten the hex against the face of the part it goes into.

TORQUES FOR FLARED AND O-RING FITTINGS

The torques shown in the charts that follow are to be used on the nut part of 37° Flared, 45° Flared and Inverted Flared fittings (when used with steel tubing), O-ring plugs, O-ring fittings and swivel nuts when used in applications to 3000 psi (20 700 kPa).

HOSE CLAMP-BAND TYPE

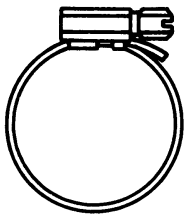

IDAS003B

CLAMP WIDTH	TORQUE ON NEW HOSE	RETIGHTENING TORQUE
7.9 mm (.312 in)	0.9 ± 0.2 N • m 8 ± 2 lb • in	0.7 ± 0.2 N • m 6 ± 2 lb • in
13.5 mm (.531 in)	4.5 ± 0.5 N • m 40 ± 5 lb • in	3.0 ± 0.5 N • m 25 ± 5 lb • in
15.9 mm (.625 in)	7.5 ± 0.5 N • m 65 ± 5 lb • in	4.5 ± 0.5 N • m 40 ± 5 lb • in

37° FLARED AND STRAIGHT THREAD O-RING FITTINGS

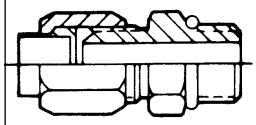

37° FLARED

IDAS004B

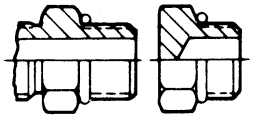

O-RING FITTING-PLUG

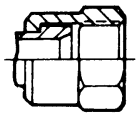

SWIVEL NUTS

37° FLARED AND STRAIGHT THREAD O-RING FITTINGS (EXCEPT O-RING FACE SEAL FITTINGS)				
NOMINAL TUBE O.D.		THREAD SIZE inch	STANDARD TORQUE	
METRIC	INCH		(N • m)	(lb • ft)
3.18	.125	5/16	5.0 ± 1.5	4 ± 1
4.76	.188	3/8	11.0 ± 1.5	8 ± 1
6.35	.250	7/16	16 ± 2	12 ± 1
7.94	.312	1/2	20 ± 5	15 ± 4
9.52	.375	9/16	25 ± 5	18 ± 4
9.52	.375	5/8	35 ± 5	26 ± 4
12.70	.500	3/4	50 ± 7	37 ± 5
15.88	.625	7/8	65 ± 7	48 ± 5
19.05	.750	1-1/16	100 ± 10	75 ± 7
22.22	.875	1-3/16	120 ± 10	90 ± 7
25.40	1.000	1-5/16	135 ± 15	100 ± 11
31.75	1.250	1-5/8	180 ± 15	135 ± 11
38.10	1.500	1-7/8	225 ± 15	165 ± 11
50.80	2.000	2-1/2	320 ± 30	240 ± 22

TIGHTENING OTHER FITTINGS

Hi Duty (Shear sleeve) Tube Fittings

After tube has been put through the nut and makes contact against the tube shoulder in the fitting body, turn the nut with a wrench until a small decrease in torque is felt. This is an indication that the sleeve has been broken off the nut. Hold the tube to prevent turning and tighten the nut 1-1/2 turns.

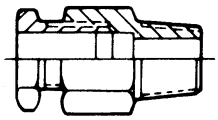

IDAS005B

Hi Seal Fittings

Put nut and sleeve over the tubing with the short heavy end of the sleeve facing the end of tubing. Put the tube end against the counterbore in the body of the fitting and tighten until nut is over the last thread on the body. The remainder of space is used whenever the fitting is removed and installed again.

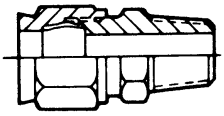

IDAS006B

45° FLARED AND 45° INVERTED FLARE FITTINGS

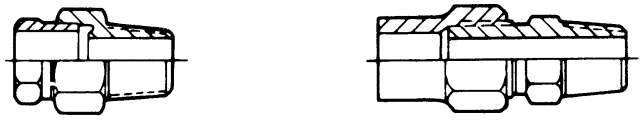

INVERTED 45° FLARED

45° FLARED

IDAS007B

45° FLARED AND 45° INVERTED FLARE FITTINGS				
NOMINAL TUBE O.D.		THREAD SIZE inch	STANDARD TORQUE	
METRIC	INCH		(N • m)	(lb • ft)
3.18	.125	5/16	5.0 ± 1.5	4 ± 1
4.76	.188	3/8	8.0 ± 1.5	6 ± 1
6.35	.250	7/16	11 ± 2	8 ± 1
7.94	.312	1/2	17 ± 3	13 ± 2
9.52	.375	5/8	30 ± 3	22 ± 2
11.11	.438	11/16	30 ± 3	22 ± 2
12.70	.500	3/4	38 ± 4	28 ± 3
15.88	.625	7/8	50 ± 5	37 ± 4
19.05	.750	1-1/16	90 ± 8	65 ± 6
22.22	.875	1-1/4	100 ± 10	75 ± 7

TIGHTENING OTHER FITTINGS

Ermeto Tube Fittings

Put nut and sleeve over the tube with head or shoulder end of sleeve next to nut. Push tube into counterbore of fitting body as far as possible. Turn nut clockwise until sleeve holds tube and prevents movement. Tighten the nut 1-1/4 turns more to seat sleeve and give a locking action. When necessary to assemble again, put sleeve over tube and tighten nut until a sudden increase in torque is felt. Then tighten 1/6 to 1/3 turn more to seat the sleeve.

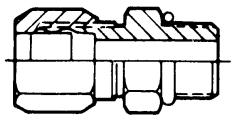

IDAS008B

Flex Fittings

Put nut and sleeve over the tubing and push tube in to counterbore of fitting body as far as possible. Tighten the nut until it is against the hex part of the fitting body.

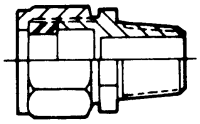

IDAS009B

AIR CONDITIONING AND TAPERED PIPE THREAD FITTINGS

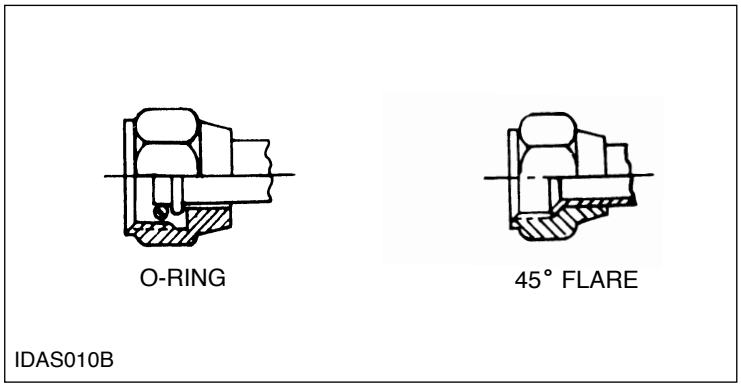

AIR CONDITIONING FITTINGS						
O-RING FITTING END			45° FLARE FITTING END			
THREAD SIZE inch	STANDARD TORQUE		STEEL TUBES STANDARD TORQUE		ALUMINUM TUBES STANDARD TORQUE	
	N • m	(lb • ft)	N • m	(lb • ft)	N • m	(lb • ft)
5/8-18	18 ± 4	13 ± 3	30 ± 3	22 ± 2	23 ± 3	17 ± 2
3/4-16	37 ± 4	27 ± 3	52 ± 5	38 ± 4	33 ± 4	24 ± 3
7/8-14	40 ± 4	30 ± 3	60 ± 7	44 ± 5	38 ± 4	28 ± 3
1 1/16-14	45 ± 5	33 ± 4	75 ± 8	55 ± 6	50 ± 5	37 ± 4

TAPERED PIPE THREAD FITTINGS				
PIPE THREAD SIZE inch	STANDARD TORQUE			
	THREADS WITH 1E2200E SEALANT		THREADS WITHOUT SEALANT	
	N • m	(lb • ft)	N • m	(lb • ft)
1/16-27	15	11	20	15
1/8-27	20	15	25	18
1/4-18	25	18	35	26
3/8-18	35	26	45	33
1/2-14	45	33	60	45
3/4-14	60	45	75	55
1-11 1/2	75	55	90	65
1 1/4-11 1/2	95	70	110	80
1 1/2-11 1/2	110	80	130	95
2-11 1/2	130	95	160	120

https://truckmanualshub.com/

SB2201E00
Jun. 1999

Service Manual

Diesel Engine
5.8 Liter (DB58)
D35S-2, D40S-2, D45S-2
D40SC-2, D45SC-2, D50SC-2

https://truckmanualshub.com/

Important Safety Information

Most accidents involving product operation, maintenance and repair are caused by failure to observe basic safety rules or precautions. An accident can often be avoided by recognizing potentially hazardous situations before an accident occurs. A person must be alert to potential hazards. This person should also have the necessary training, skills and tools to perform these functions properly.

Read and understand all safety precautions and warnings before operating or performing lubrication, maintenance and repair on this product.

Basic safety precautions are listed in the “Safety” section of the Service or Technical Manual. Additional safety precautions are listed in the “Safety” section of the owner/operation/maintenance publication.

Specific safety warnings for all these publications are provided in the description of operations where hazards exist. WARNING labels have also been put on the product to provide instructions and to identify specific hazards. If these hazard warnings are not heeded, bodily injury or death could occur to you or other persons. Warnings in this publication and on the product labels are identified by the following symbol.

⚠ WARNING

IImproper operation, lubrication, maintenance or repair of this product can be dangerous and could result in injury or death.
Do not operate or perform any lubrication, maintenance or repair on this product, until you have read and understood the operation, lubrication, maintenance and repair information.

Operations that may cause product damage are identified by NOTICE labels on the product and in this publication.

DAEWOO cannot anticipate every possible circumstance that might involve a potential hazard. The warnings in this publication and on the product are therefore not all inclusive. If a tool, procedure, work method or operating technique not specifically recommended by DAEWOO is used, you must satisfy yourself that it is safe for you and others. You should also ensure that the product will not be damaged or made unsafe by the operation, lubrication, maintenance or repair procedures you choose.

The information, specifications, and illustrations in this publication are on the basis of information available at the time it was written. The specifications, torques, pressures, measurements, adjustments, illustrations, and other items can change at any time. These changes can affect the service given to the product. Obtain the complete and most current information before starting any job. DAEWOO dealers have the most current information available.

https://truckmanualshub.com/

TO THE CUSTOMERS

This operation and maintenance manual is designed to serve as a reference for DHI's customers and distributors who wish to gain basic product knowledge on DHI's DB58 Diesel engine.
To maintain the engine in optimum condition and retain maximum performance for a long time, CORRECT OPERATION and PROPER MAINTENANCE are essential.
In this manual, the following symbols are used to indicate the type of service operations to be performed.

	Removal		Adjustment
	Installation		Liquid gasket application
	Disassembly		Cleaning
	Reassembly		Pay close attention-Important
	Alignment(Marks)		Tighten to specified torque
	Directional Indication		Use special tools of manufacturer's
	Inspection		Lubricate with oil
	Measurement		Lubricate with grease

If you have any question or recommendation in connection with this manual, please do not hesitate to contact our head office, dealers or authorized service shops.

https://truckmanualshub.com/

CONTENTS

1. GENERAL INFORMATION 1

1.1. General Repair Instructions
1.2. Engine Specifications
1.3. Torque Specifications
1.4. Major Part Fixing Bolts
1.5. Maintenance
1.6. Engine Repair Parts

2. ENGINE DISASSEMBLY AND ASSEMBLY 24

2.1. Engine External Parts
2.2. Disassembly
2.3. Inspection and Repair
2.4. Reassembly

3. SYSTEM OF LUBRICATION 73

3.1. General Description
3.2. Oil Pump
3.3. Oil Cooler

4. COOLING SYSTEM 78

4.1. General Description
4.2. Coolant pump

5. FUEL SYSTEM 83

5.1. General Description
5.2. Fuel filter
5.3. Injection Nozzle
5.4. Injection Pump

6. CAUSE OF TROUBLE, DIAGNOSIS AND TROUBLESHOOTING 92

https://truckmanualshub.com/

1. General Information

1.1. General Repair Instructions

1. For safety, park the truck on even ground or work station and fix the wheels using wedges and hand brake during operation.
2. Before performing service operations, disconnect the grounding cable from the battery to reduce the chance of cable damage and burning due to short-circuiting.
3. Before performing service operations release the air pressure in the machine air line system for safety. To not do so is extremely dangerous.
4. Use covers to prevent the components from damage or pollution.
5. Brake oil and anti-freeze solution must be handled with reasonable care as they cause paint damage.
6. The use of proper tools and special tools where specified is important for efficient and reliable service operation.
7. Use genuine DAEWOO parts exclusively.
8. Used cotter pins, gaskets, O-rings, oil seals, lock washers and self-lock nuts should be discarded and new ones should be prepared for installation as normal function of the parts can not be maintained if these parts are reused.
9. To facilitate proper and smooth reassembly operation, keep disassembled parts neatly in groups. Keeping bolts and nuts separate is very important as they vary in hardness and design depending on the position of installation.
10. Clean the parts before inspection or reassembly. Also clean oil ports, etc. using compressed air to make certain they are free from restrictions.
11. Lubricate rotating and sliding faces of parts with oil or grease before installation.
12. When necessary, use a sealant on gaskets to prevent leakage.
13. Carefully observe all specifications for bolts and nuts torques.
14. When a service operation is completed, make a final check to ensure that the service has been done properly.

1.2. Engine Specifications

Items / Engine Model	DB 58
Engine type	Water cooled, 4 cycle, vertical in-line, overhead valve
Combustion chamber type	Direct injection
Cylinder liner type	Dry type
Timing gear system	Gear drive type
Number of piston ring	Compression ring 2, oil ring 1
No. of cylinder-bore × stroke (mm)	6-102 × 118
Total piston displacement (cc)	5,785
Compression ratio	17.5 : 1
Engine dimension(length × width × height) (mm)	1122 × 648 × 775
Engine weight(dry) (kg)	455
Fuel injection order	1-5-3-6-2-4
Fuel injection timing(B.T.D.C static)	18˚
Type of fuel used	High speed diesel fuel (SAE No.2)
Fuel filter type	Cartridge type
Injection pump type	Bosch in-line A type
Governor type	Mechanical governing (RSV type)
Injection nozzle type	Multi-hole type
Fuel injection pressure (Kg/cm^2)	220
Compression pressure (kg/cm^2)	31 (at 200 RPM)
Low idle speed(R.P.M)	750 ± 30
High idle speed(R.P.M)	2370 ± 50
Intake and exhaust valve clearance(mm)	0.4 (at cold)
Rated Power	92 ps / 2,200rpm
Max torque	31.5 kg • m / 1,600rpm
Lubrication method	Pressurized circulation
Oil pump type	Gear type
Oil filter type	Full-flow, cartridge
Lubricating oil capacity (ℓ)	14.5
Oil cooler type	Water cooled
Cooling method	Pressurized forced circulation
Cooling water capacity(engine only) (ℓ)	12
Water pump	Belt driven impeller type
Thermostat type	Wax pallet type
Battery (V)	24
Alternator (V-A)	24-4.5
Starter (V-KW)	24-4.5

https://truckmanualshub.com/

1.3. Torque Specifications

● **Standards bolts**

The torque values given in the following table should be applied where a particular torque is not specified.

(Unit : kg•m)

Bolt identification / Bolt diameter × pitch	4	7	9
	4T Low carbon steel	7T High carbon steel	9T Alloy steel
6 × 1.0	0.4-0.8	0.5-1.0	-
8 × 1.25	0.8-1.8	1.2-2.3	1.7-3.1
10 × 1.25	2.1-3.5	2.8-4.7	3.8-6.4
★10 × 1.5	2.0-3.4	2.8-4.6	3.7-6.1
12 × 1.25	5.0-7.5	6.2-9.3	7.7-11.6
★12 × 1.75	4.6-7.0	5.8-8.6	7.3-10.9
14 × 1.5	7.8-11.7	9.5-14.2	11.6-17.4
★14 × 2.0	7.3-10.9	9.0-13.4	10.9-16.3
16 × 1.5	10.6-16.0	13.8-20.8	16.3-24.5
★16 × 2.0	10.2-15.2	13.2-19.8	15.6-23.4
18 × 1.5	15.4-23.0	19.9-29.9	23.4-35.2
20 × 1.5	21.0-31.6	27.5-41.3	32.3-48.5
22 × 1.5	25.6-42.2	37.0-55.5	43.3-64.9
24 × 2.0	36.6-55.0	43.9-72.5	56.5-84.7

The ★ indicates that the bolts are used for female-threaded parts that are made of soft materials such as casting, etc.

https://truckmanualshub.com/

1.4. Major Parts Fixing Bolts

● **Cylinder Head and Block**

(Unit : kg•m)

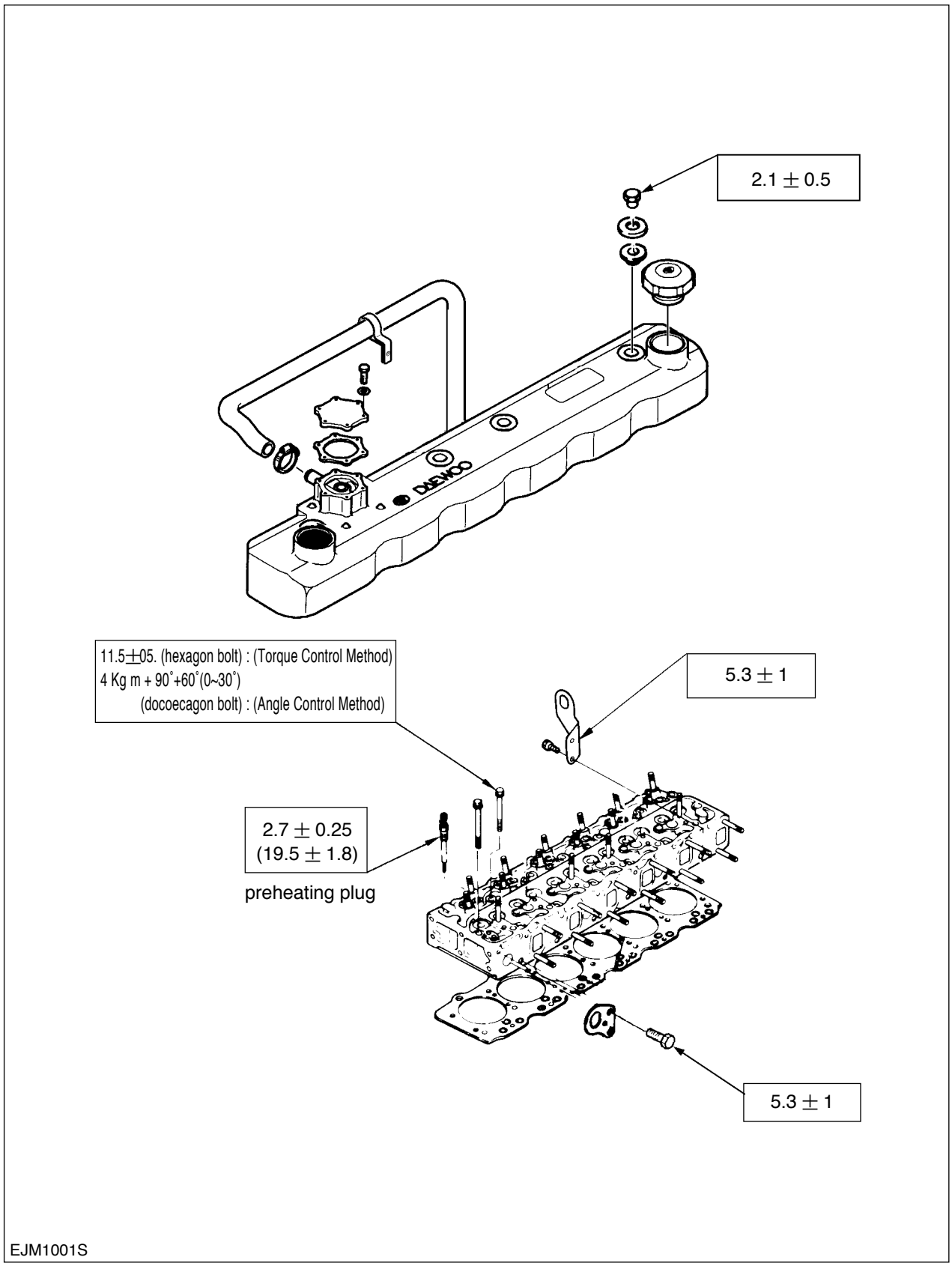

https://truckmanualshub.com/

• **Intake and Exhaust Manifold(DB58)**

(Unit : kg•m)

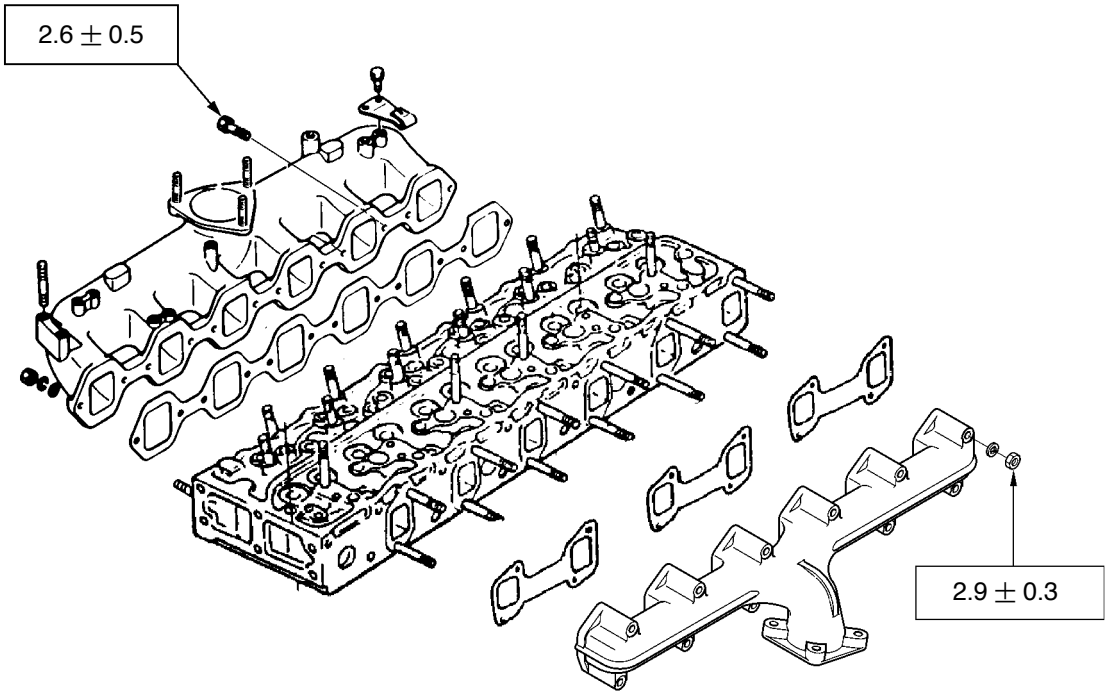

EJM1007S

https://truckmanualshub.com/

• **Cylinder Block**

(Unit : kg•m)

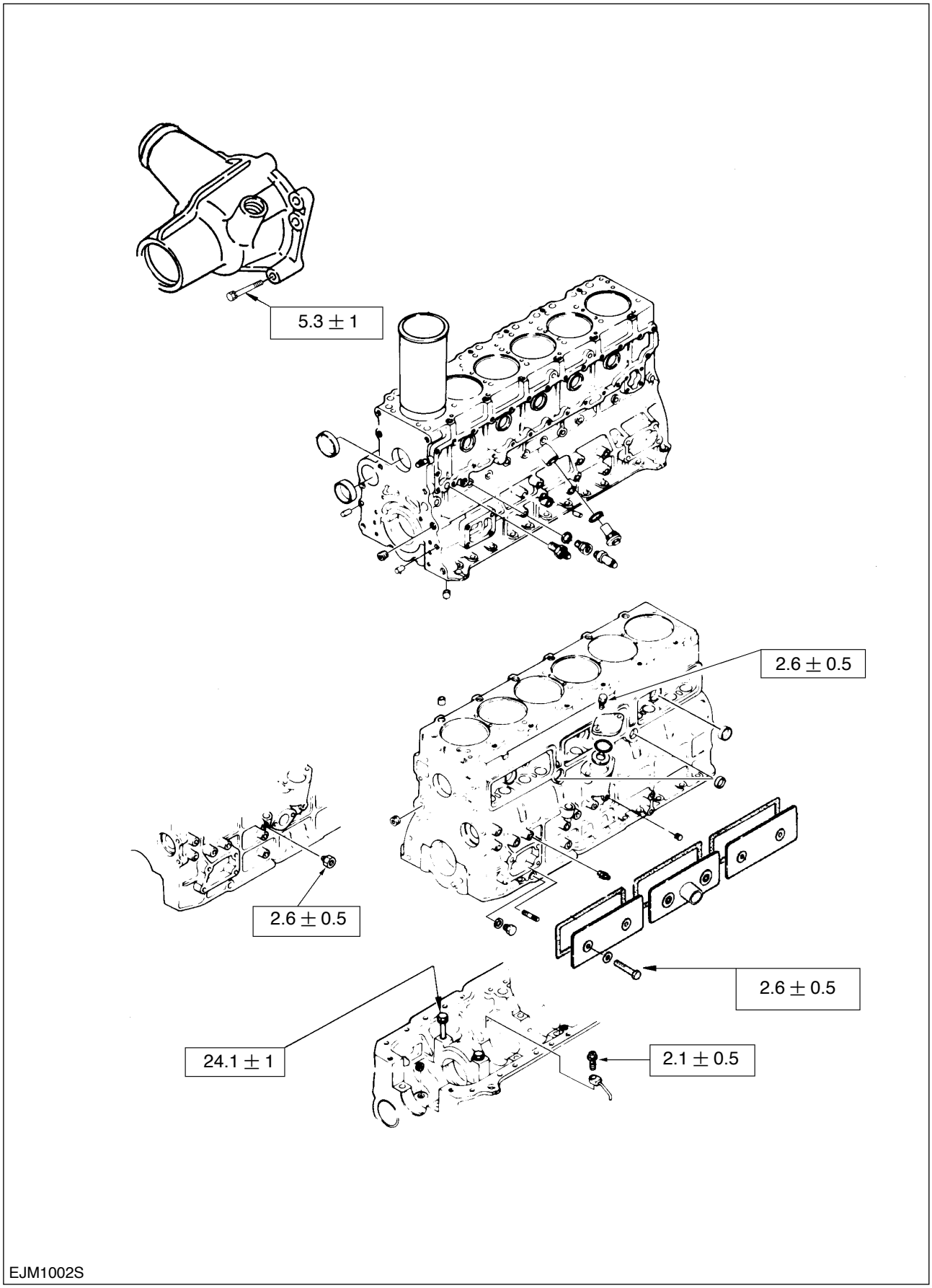

https://truckmanualshub.com/

• **Oil Pan and Dipstick**

(Unit : kg•m)

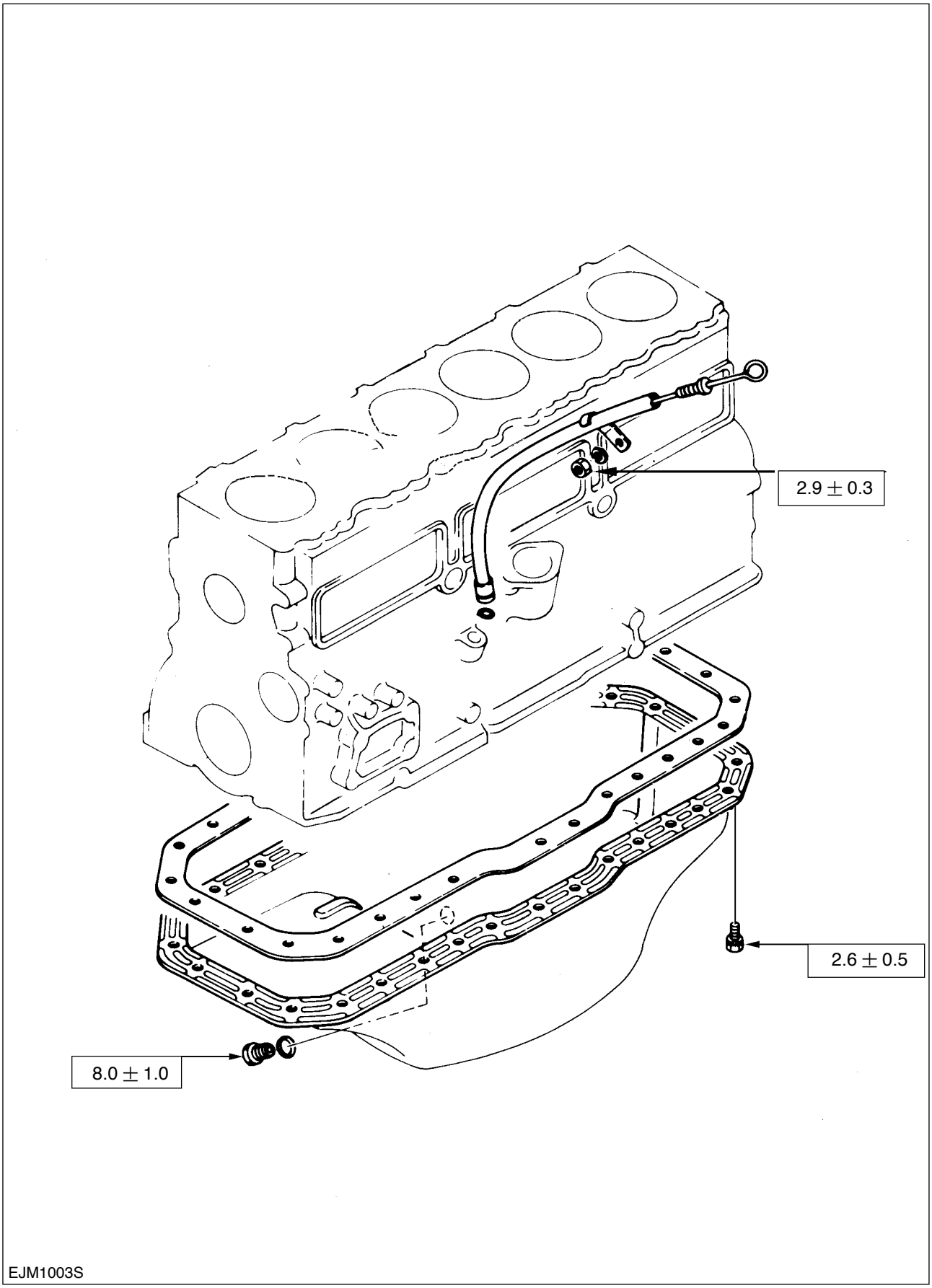

• **Cam Shaft and Rocker Arm**

(Unit : kg•m)

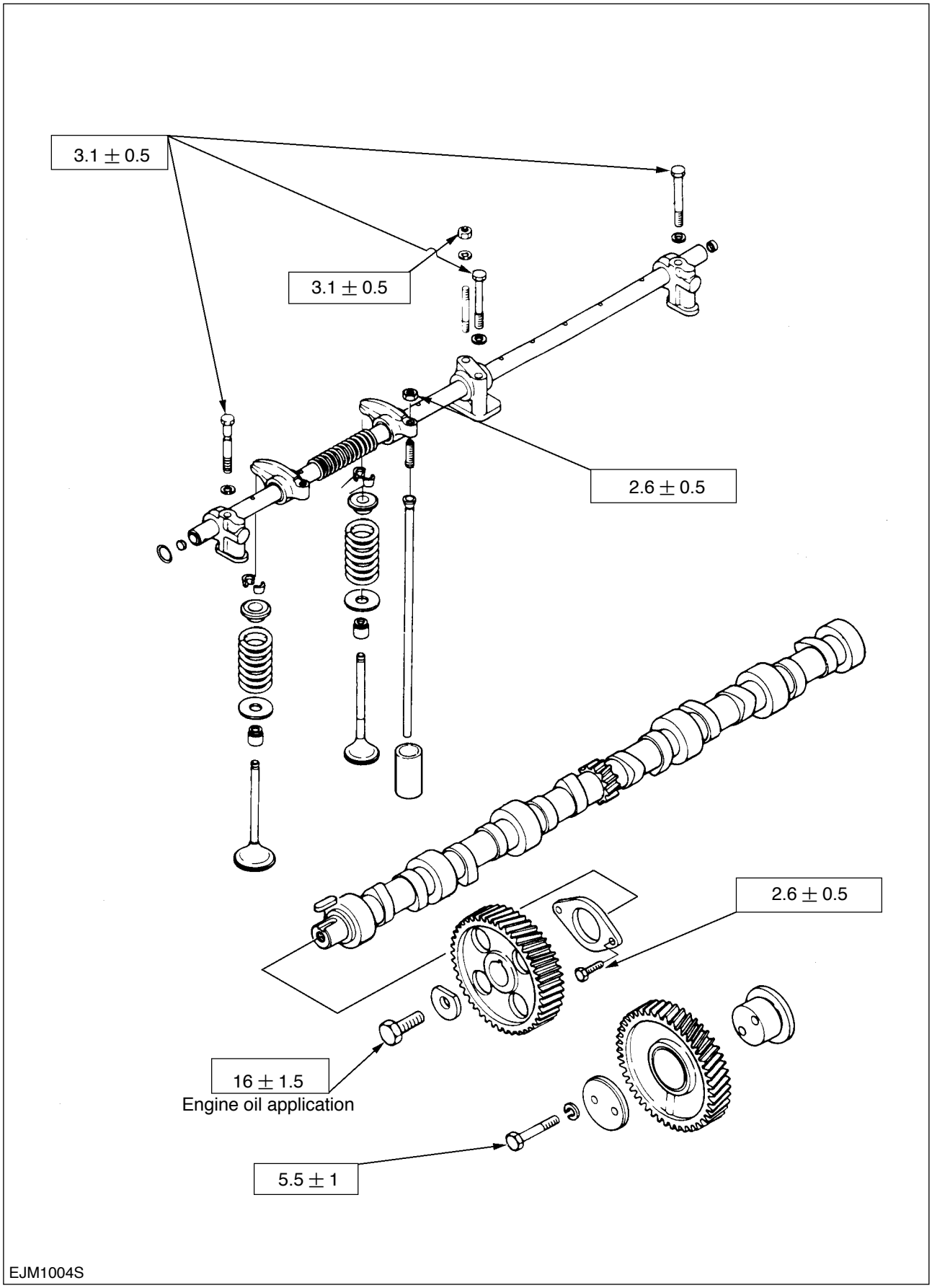

• **Crankshaft, Piston, and Flywheel**

(Unit : kg•m)

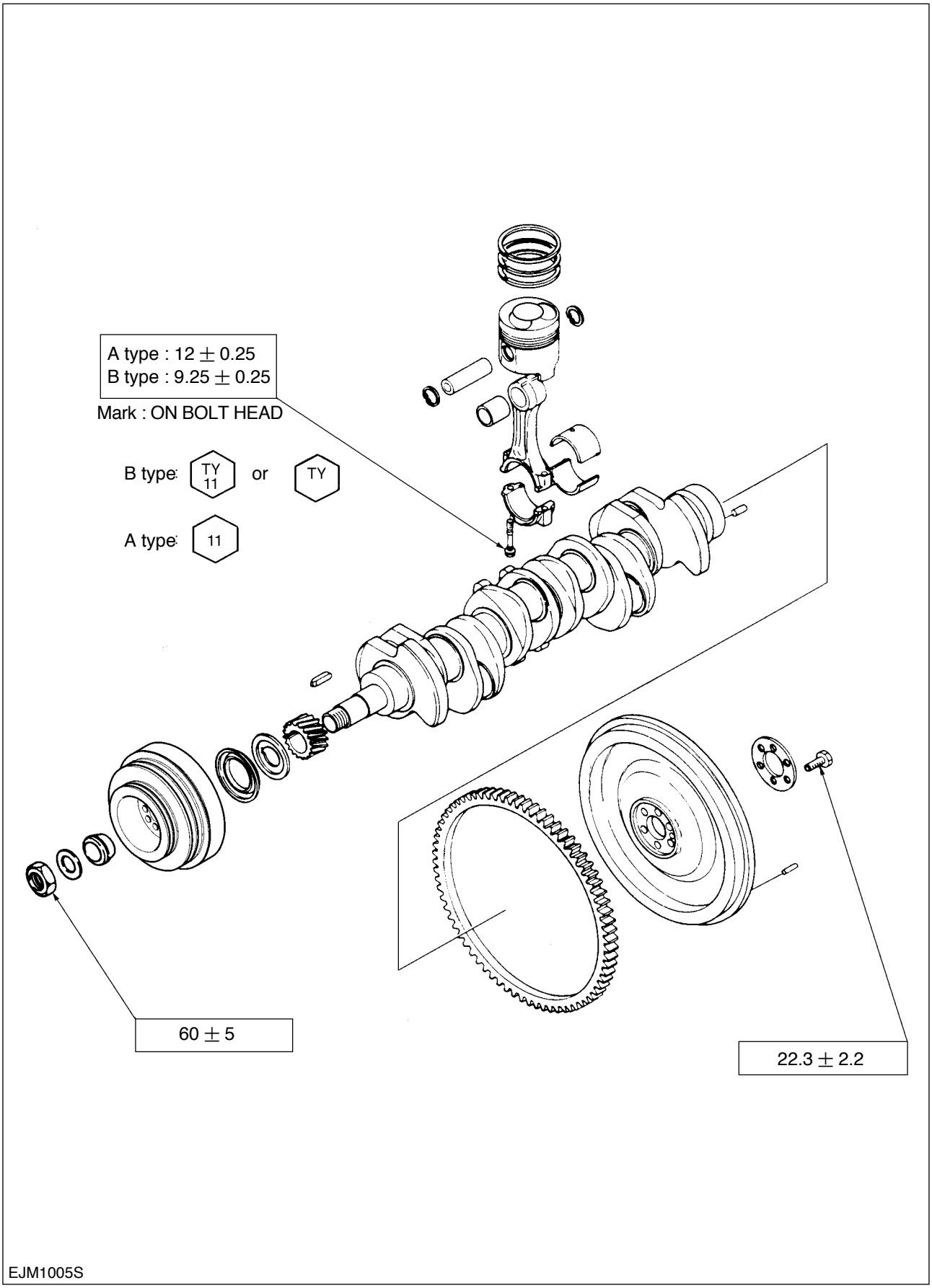

https://truckmanualshub.com/

• **Thermostat and Thermostat Housing**

(Unit : kg•m)

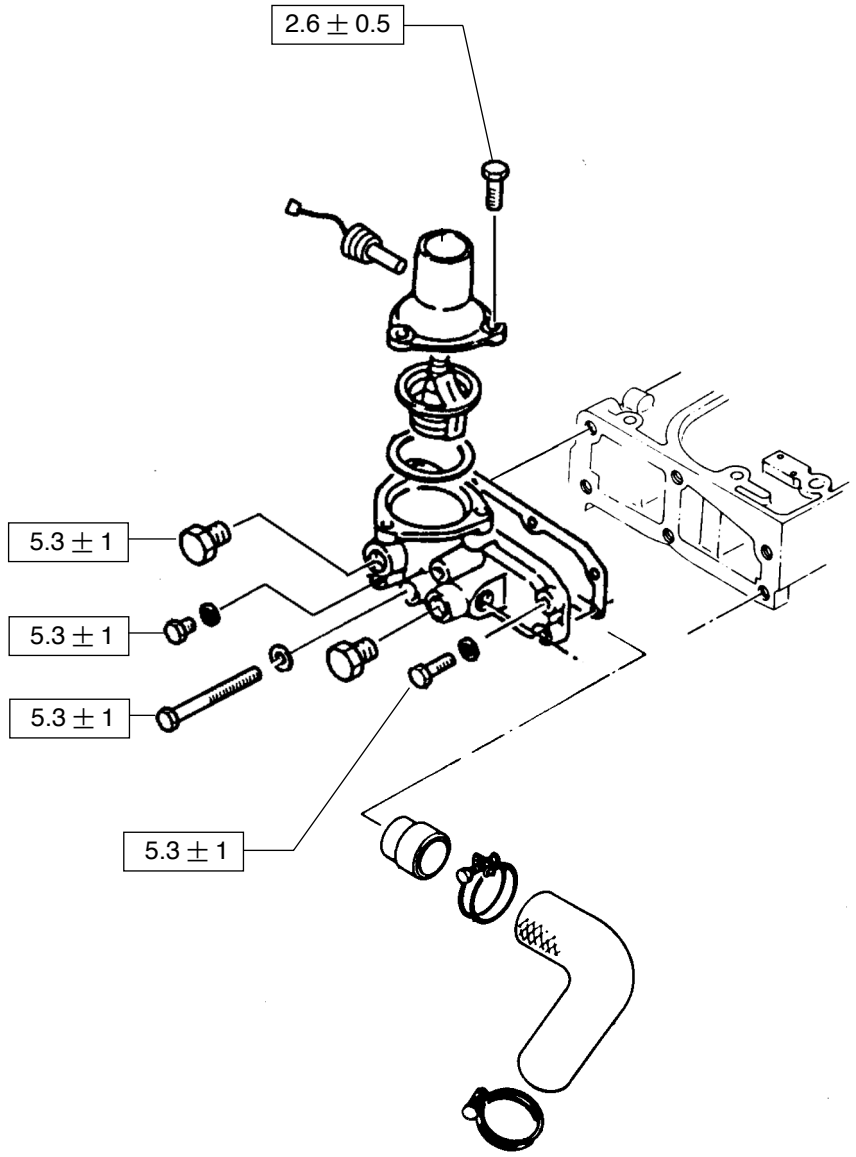

EJM1006S

https://truckmanualshub.com/

• Timing Gear Case and Flywheel Housing

(Unit : kg•m)

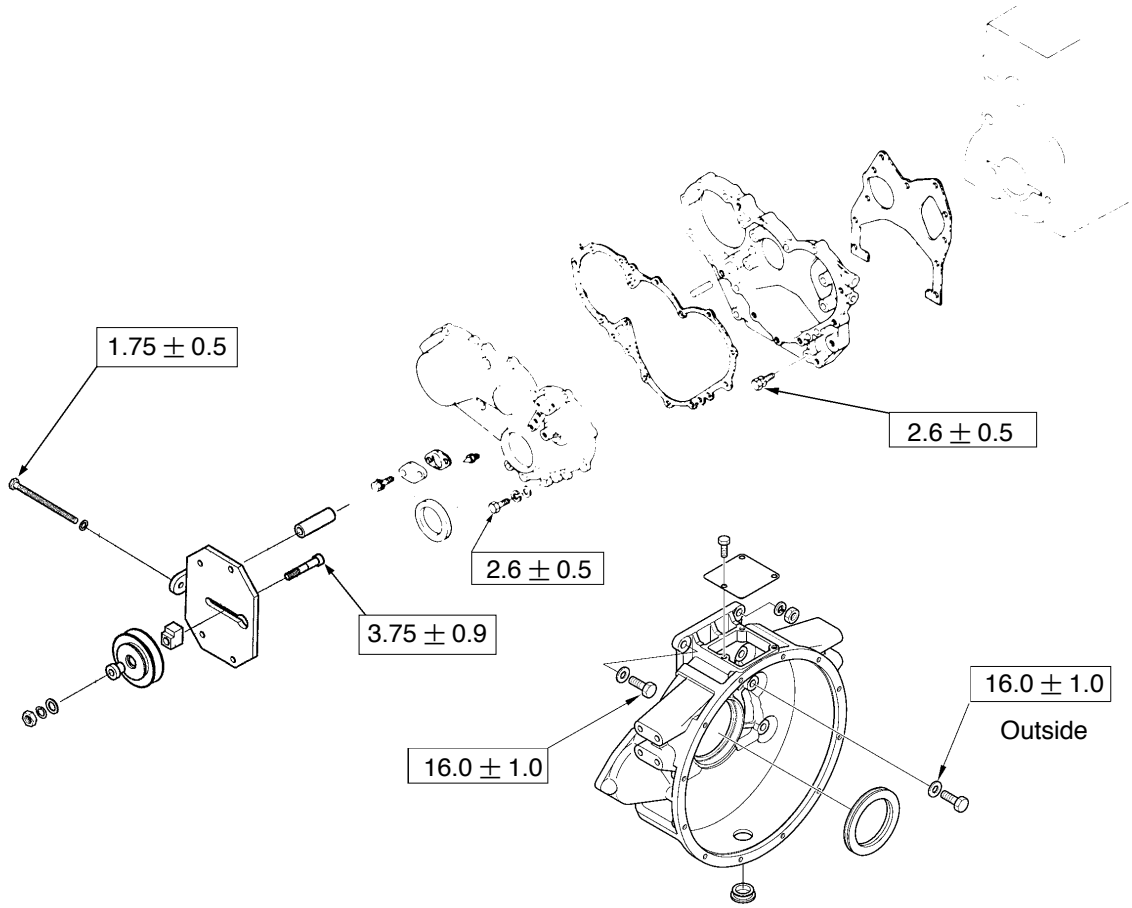

EJM1010S

• **Oil Cooler, Oil Filter and Oil Pump**

(Unit : kg•m)

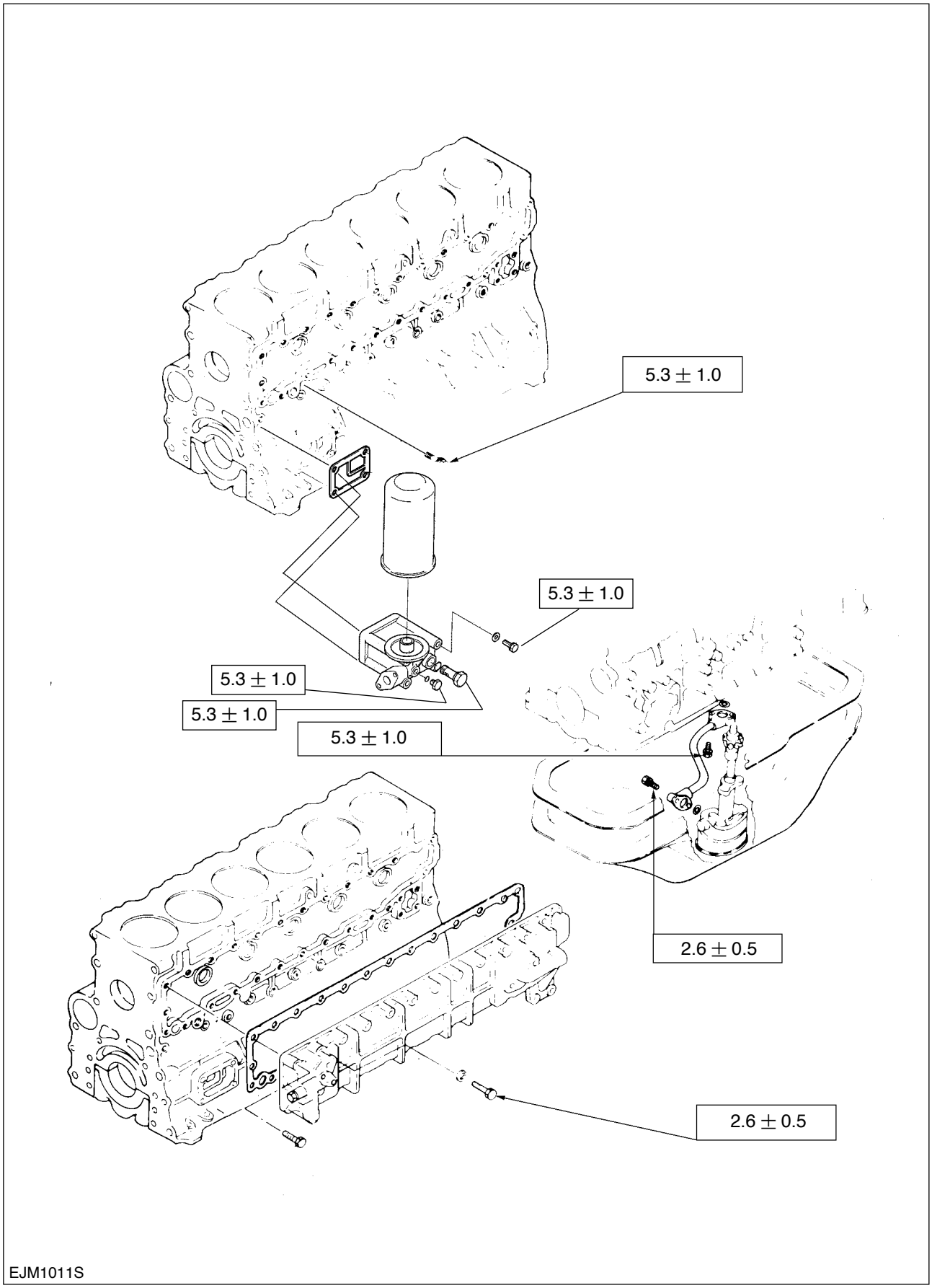

https://truckmanualshub.com/

• **Fuel System**

(Unit : kg•m)

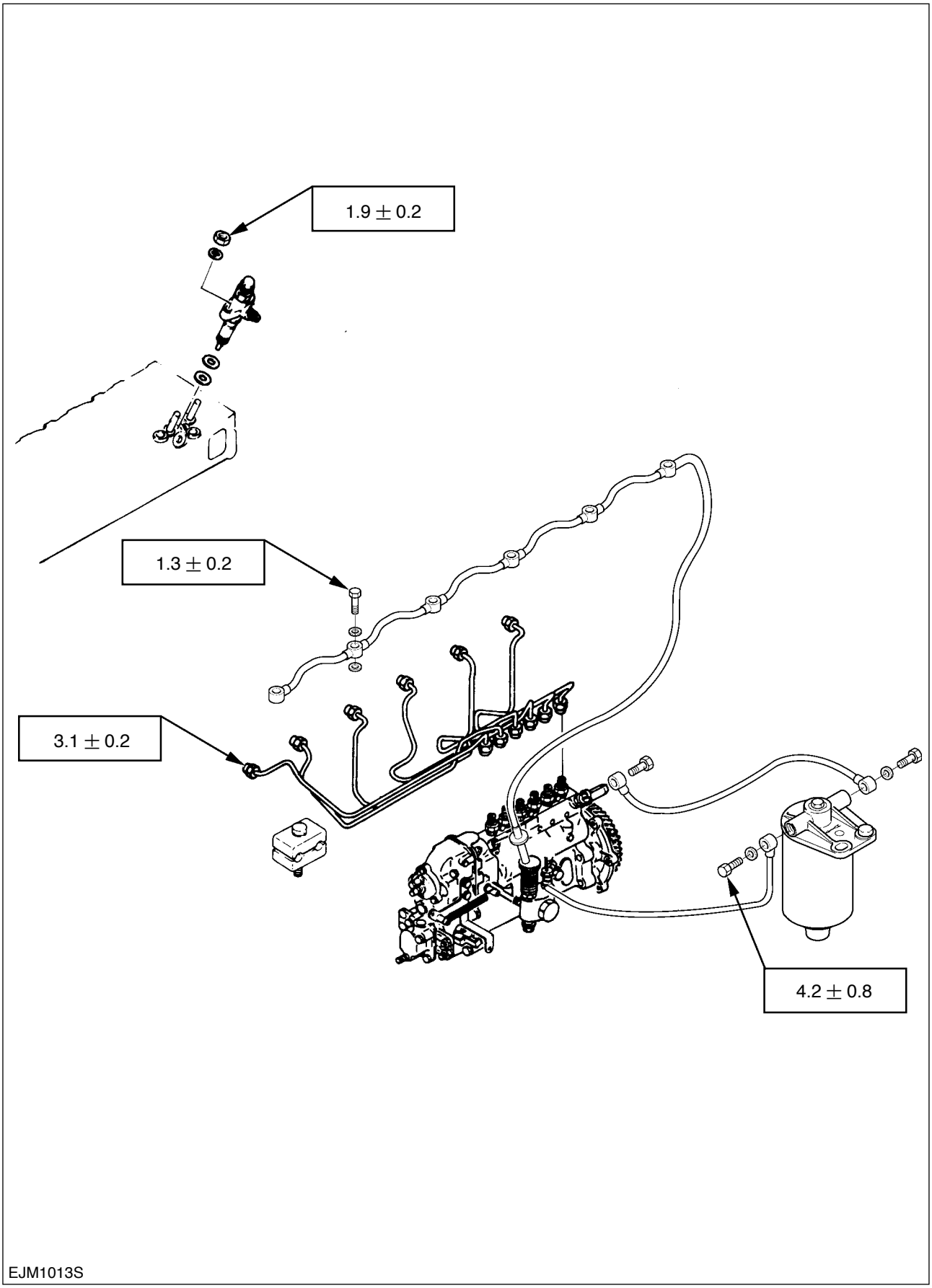

https://truckmanualshub.com/

1.5. Maintenance

1.5.1. Replacement of Oil Filter

- **Removal**

<Remover and Installer>

1) Remove filter as turning it counterclock wise.
2) Do not reuse the used filter.

- **Assembly**

1) Wipe the oil filter mounting face with a clean rag to install a new filter.
2) Lightly oil the O-ring part.
3) Turn the new oil filter until the sealing face is fitted against the O-ring.
4) Additionally tighten the oil filter by 3/4 of one turn.
5) Check the engine oil level and replenish to the specified level if necessary.
6) Check the leakage at the replaced filter as operating the engine.

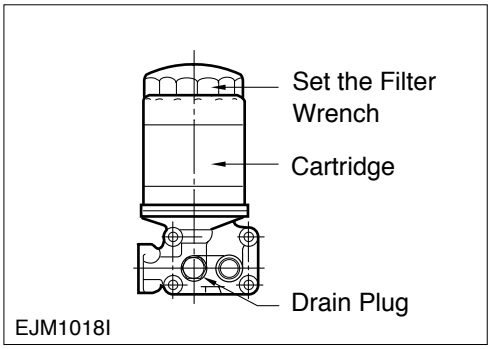

<Upword type>

1.5.2. Replacement of Fuel Filter

Cartridge (Spin-On) Type

<Removal>

1) Remove the filter as turning it counterclock wise.
2) Do not reuse the used filter.

<Assembly>

1) Wipe the fuel filter mounting face with clean rag to install a new filter.
2) Lightly oil the O-ring part.
3) Inject fuel to the new fileter to be easily discharged an air.
4) Turn the new fuel filter until the sealing face is filted against the O-ring.
5) Additionally tighten the fuel filter by 3/4 of one turn.

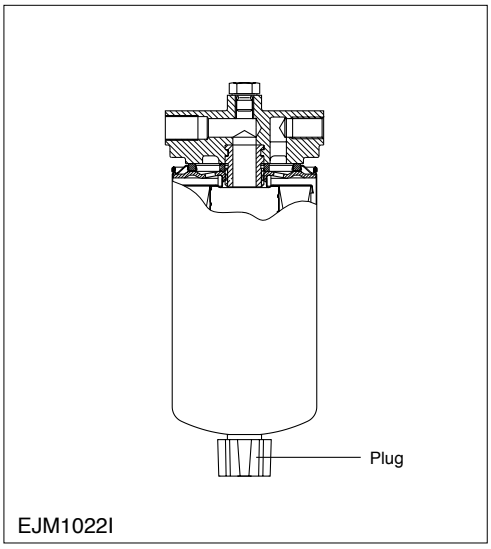

https://truckmanualshub.com/

1.5.3. Water separator

1) Drain plug should be loosened to remove water in fuel filter if necessary.
2) When assembling plug, make to surely keep the forque to be 1.2 ± 0.3 kg • m

1.5.4. Injection Nozzle

• Disassembly Procedure

1) Fix the injection nozzle with a vise.
2) Release nozzle holder cap with a wrench.
3) Disassemble the injection nozzle holder from a vise.

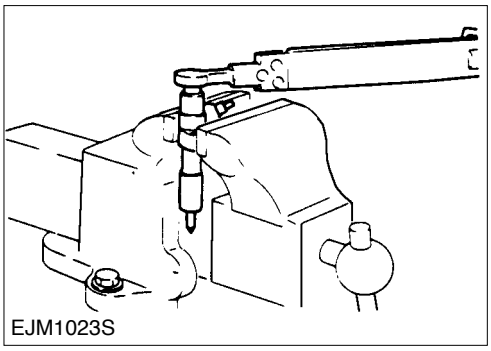
EJM1023S

• Adjusting Procedure

Injection Opening Pressure Check.

1) Assemble nozzle holder at nozzle tester.
2) Release adjustment screw (1), As shown in fig.
3) Check injection opening pressure.
4) Adjust injection nozzle opening pressure if necessary with nozzle tester.

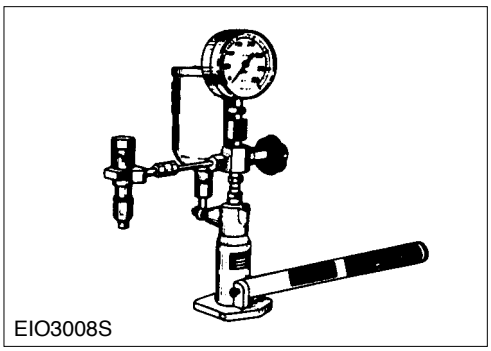
EIO3008S

	DB58
Injection Opening Pressure	220 kg/cm^2

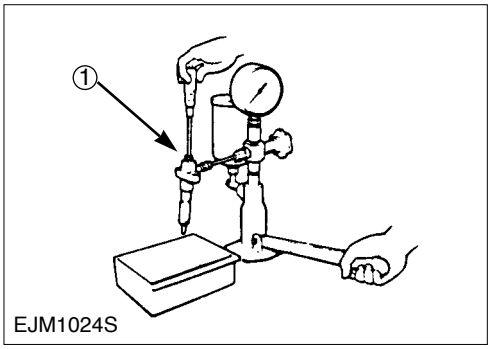

EJM1024S

https://truckmanualshub.com/

⚠【CAUTION】 Carefully keep away from skin and keep off from tester because pressure of nozzle tester is very high when inject.

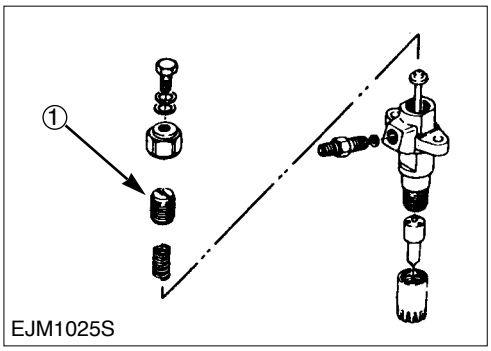

EJM1025S

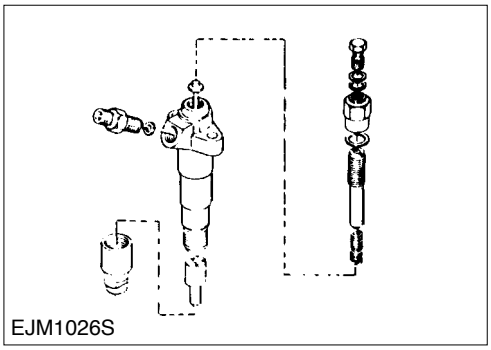
EJM1026S

Injection Condition Check (Operating the Nozzle Tester)

1) Tighten cap nut (1)
2) Check injection nozzle opening pressure
3) Check the injection nozzle sparay condition

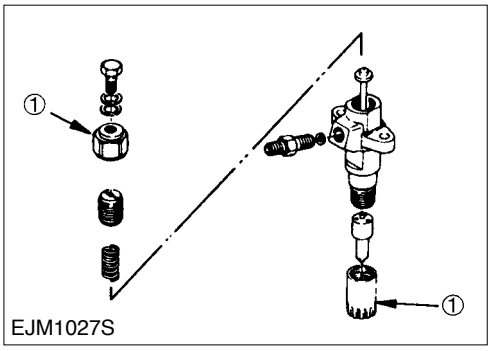

EJM1027S

Prior to injecting the fuel completely, compress 4~6 times and finally inject.
See figure for injection condition.

1) Good
2) Inferiority (orifice)
3) Inferiority (dripping)

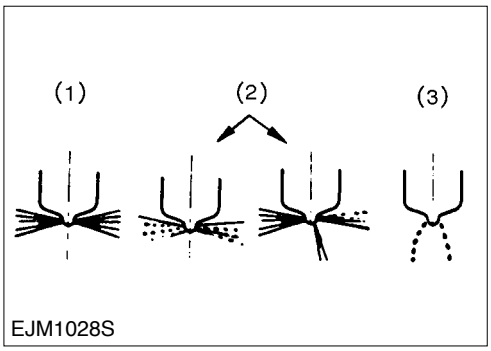

EJM1028S

https://truckmanualshub.com/

1.5.5. Feed Pump Strainer

1) Release joint bolt A
2) Remove strainer with screwdriver, and wash strainer with light gasoline if necessary.

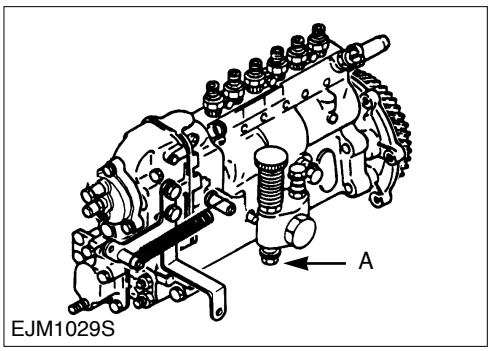

EJM1029S

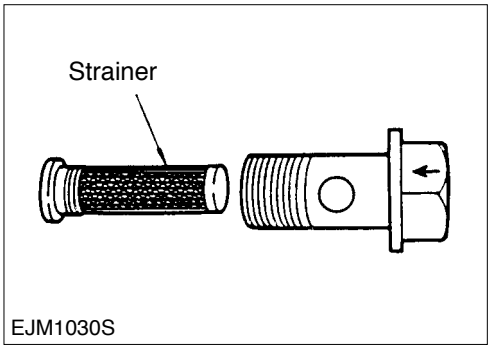

EJM1030S

1.5.6. Air Bleeding

1) Release the feed pump cap (1) on the Injection pump.
2) Release an air bleed nut (2) on the Injection pump.
3) Operate feed pump as visually seeing until completely remove an air.
4) Tighten air bleed nut (2).
5) Make sure to check leakage of Injection pump & filter after operating feed pump many times.

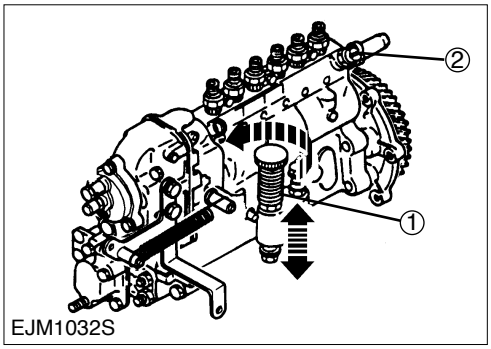

EJM1032S

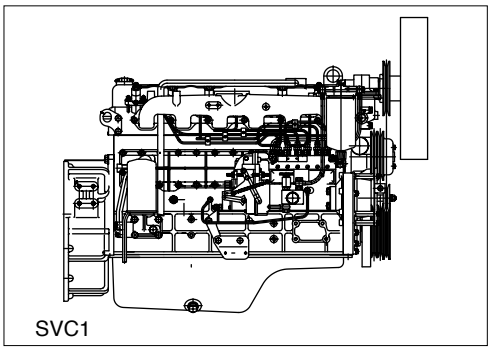
SVC1

https://truckmanualshub.com/

1.5.7. Cooling System

- **Cooling Fan Belt Adjustment**

1) Check cooling fan belt for cracking and damage.
2) Check the drive belt deflection by applying a force of 10kg midway between the water pump pulley (2) and the alternator pulley (3).
3) Adjust the belt tension by loosening the alternator mounting bolt and the alternator adjusting bolt and pivoting the alternator.
   Be sure to retighten the bolts after adjusting the belt tension.

Cooling Fan Belt Deflection	8.0 ~ 12.0 mm

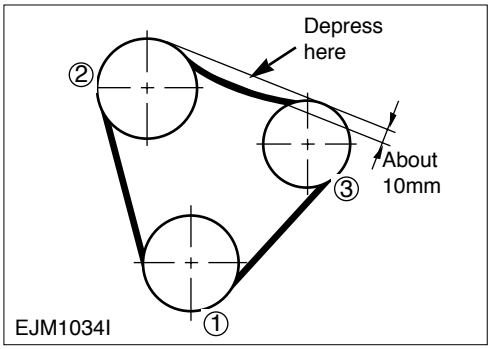

1.5.8. Thermostat

- **Inspection**

Visualy inspect the thermostat.
When inspect,if excessive wear or damage is discovered, replace the thermostat.

- **measure the valve lift.**

Amount of Valve Lift	10.0 mm (Full)

Valve Opening Temperature	70 ~ 73 ℃
Full Opening Temperature	84 ~ 86 ℃

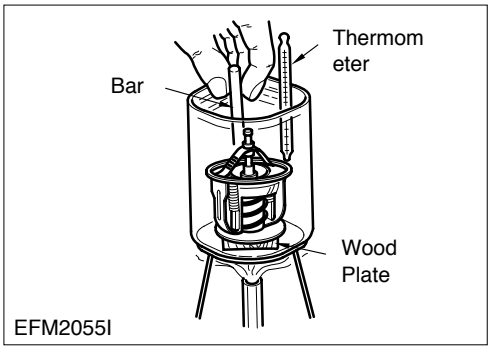

1.5.9. Valve Clearance and Adjustment

⚠【CAUTION】 **Make sure to adjust the valve clearance after tightening cylinder head bolts.**

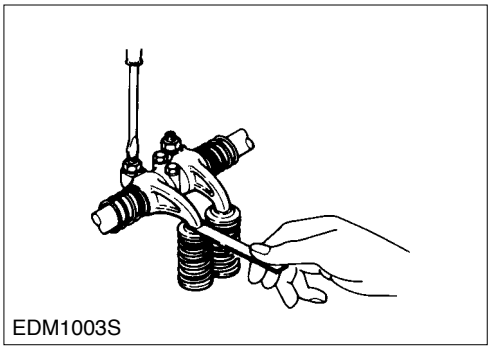

https://truckmanualshub.com/

1) Bring the piston in either the #1 cylinder or the #6 cylinder to Top dead Center on the compression stroke by turning the crankshaft until the TDC notchecd line on the crankshaft pulley is aligned with the timing pointer.
   Check to see if there is play in the #1 intake and exhaust valve rocker arms.
   If the #1 cylinder intake and exhaust valve rocker arms have play, the #1 piston is at TDC on the compression stroke.
   If the #1 cylinder intake and exhaust valve rocker arms are fixed, the #6 piston is at TDC on the compression stroke.

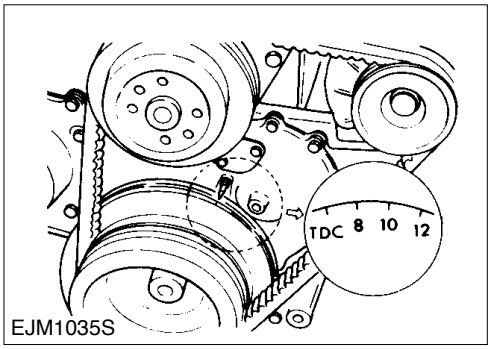

EJM1035S

2) Adjust valve clearances when #1 or #6 piston is TDC on compression stroke.

Intake and Exhaust Valve Clearance(cold)	0.40 mm

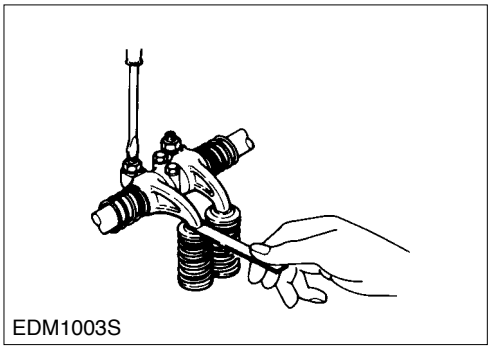
EDM1003S

3) Release adjusted screw. See figure.
4) Insert a 0.4mm feeler gauge between rocker arm and valve stem end.
5) Turn the valve clearance adjusting screw until slight drag can be felt on the feeler gauge.
6) Tighten lock nut.
7) Rotate crankshaft 360˚ for crankshaft pulley TDC notched line to be realigned with timing pointer.
8) Adjust Other valve clearances as shown in figure.

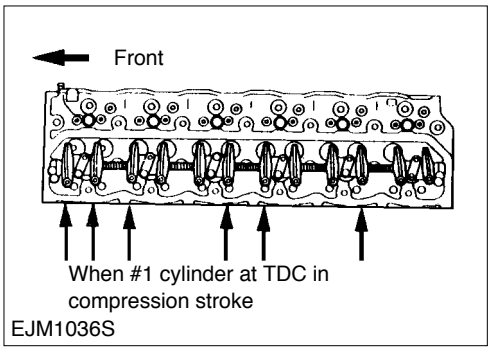

EJM1036S

Rocker Arm Screw Lock Nut Torque	2.6 ± 0.5 kg•m

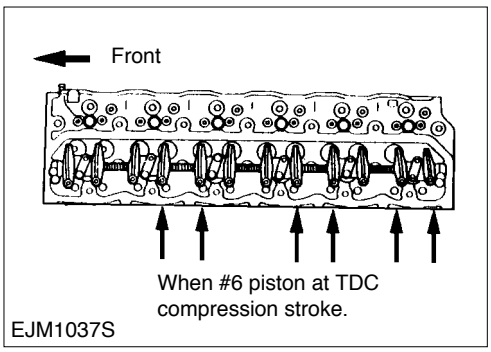

EJM1037S

https://truckmanualshub.com/

1.5.10. Injection Timing

【CAUTION】 Carefully keep away dust or foreign articles not to be entered into injection pump when adjusting injection timing.

- **Checking Procedure**

1) Align the crankshaft pulley TDC mark with the pointer.
   Remove the inspection hole cover at the front of the injection pump on the timing gear case cover.
   Check the alignment between the pointer (4) on the injection pump gear nut lock plate and the projection area mark (3) on the injection pump gear case.
   If it is in misalignment, recheck with turning the crankshaft pulley one more turn to repeat the foregoing procedure to align the mark.
   Check the alignment of the notched lines (1) and (2). (These notched lines were aligned at the plant to set injection pump body and mounting flange.)
2) Turn the crankshaft pulley counterclockwise about 30˚crankangle.

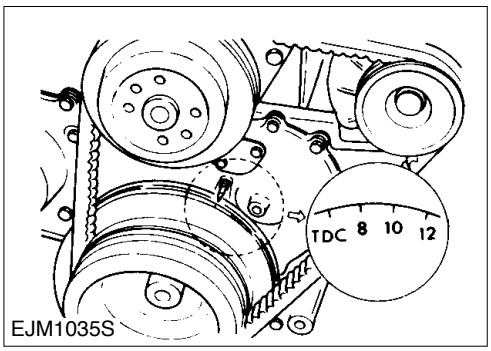

EJM1035S

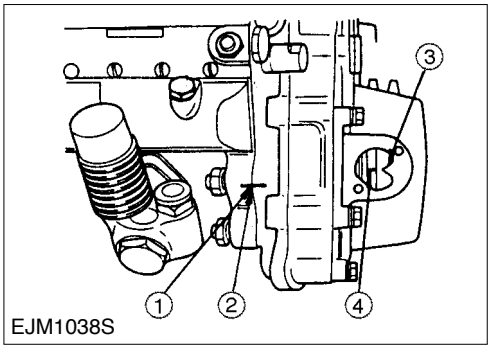

EJM1038S

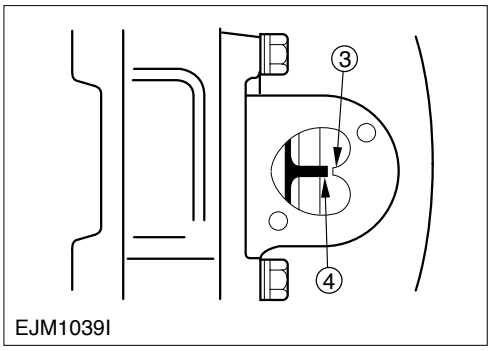

EJM1039I

3) #1 plunger of injection can be visually sured when disconnecting injection pipe.

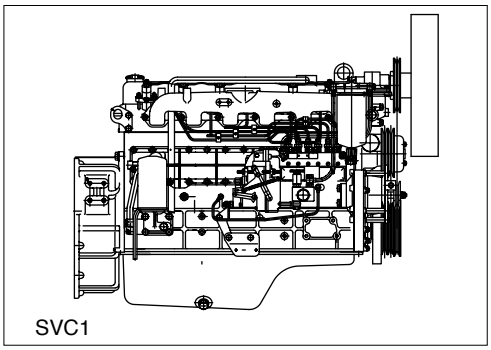
SVC1

https://truckmanualshub.com/

4) Remove the delivery valve holder (1), the valve seat (2), valve spring (3), the delivery valve (4) from the #1 plunger.
5) Assemble the delivery holder (1) and tighten specified torque.
   Do not assemble valve spring, valve seat and delivery valve.
   These parts will be reassembled later.

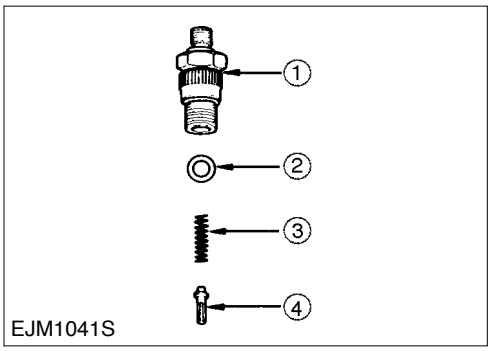

6) Position fuel control lever at the wholly opened position.

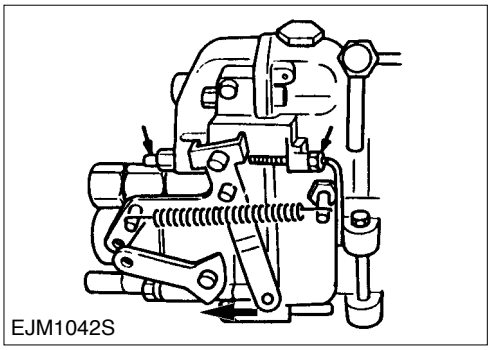

7) Continuely feed fuel with pumping priming pump as slowly turning crankshaft clockwise.
   Immediately stop turning the crankshaft when fuel stop from #1 devilvery valve holder.
   This crankangle position is the injection starting of the engine.

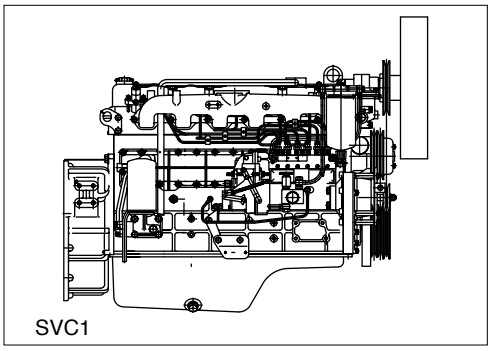

8) Make sure that crankshaft pulley and point is specifically on injection starting angle line.
   Blow out remained fuel from delivery valve holder.

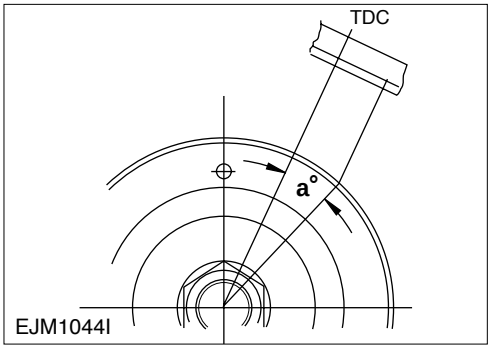

9) Remove delivery valve holder from #1 plunger.
10) Assemble the delivery valve intenal parts at the devilvery valve holder.
11) Assemble the delivery valve holder assembly to #1 plunger and tighten with the specified torque.

Delivery Valve Holder Torque	4.25 ± 0.25 kg•m

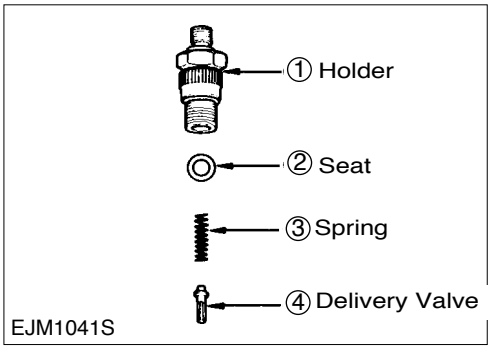

12) Assemble the #1 cylinder injection pipe and tighten with the specified torque.

Injection Pipe Nut Torque	3.1 ± 0.2 kg•m

• **Adjusting Procedure**
1) Release injection pump mounting nuts.
2) To advance injection timing, rotate injection pump for injection pump notch line to be toward below.
To retard the injection timing, rotate injection pump in reverse direction.

【Note】 When rotating injection pump by 1mm, injection timing differ about 2°.

3) Fix the injection pump mounting nuts.

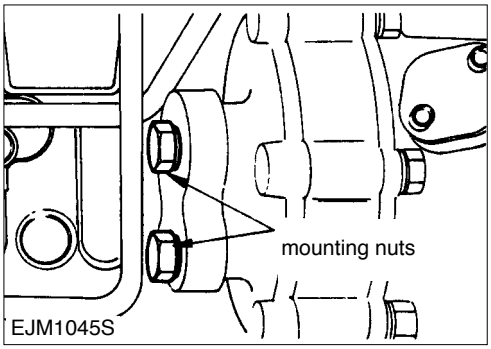

1.5.11. Compression Pressure Measurement

1) Warm-up engine till coolant temperature is up to 75℃.
2) Remove the preheating plug and injection pipe.
3) Assemble the compression gauge at the position of preheating plug and injection pipe.

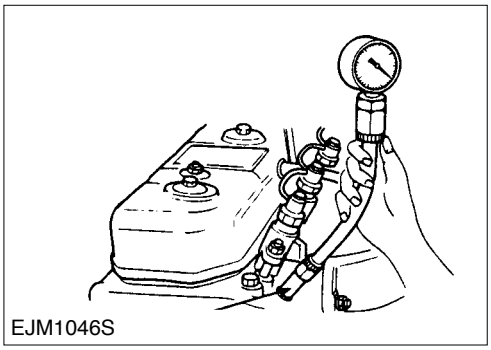

4) Read the calibration of compressed gauge as rotating engine with start motor.

Standard	Limit
31.0 kg/cm²(at 200 rpm)	26.0 kg/cm²(at 200 rpm)

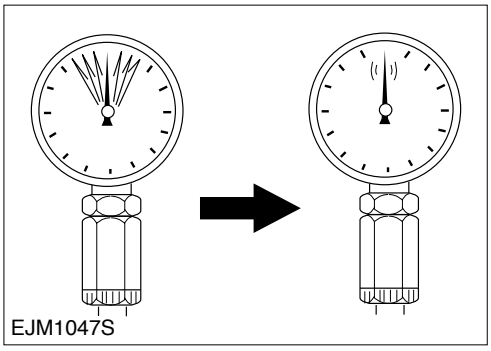

5) Practice other cylinder as same sequence.
Every compression pressure should be alike.
Allowable Inequality of compression is 2.0 kg/cm².
If more, check related parts and replace it.

1.6. Engine Repair Parts

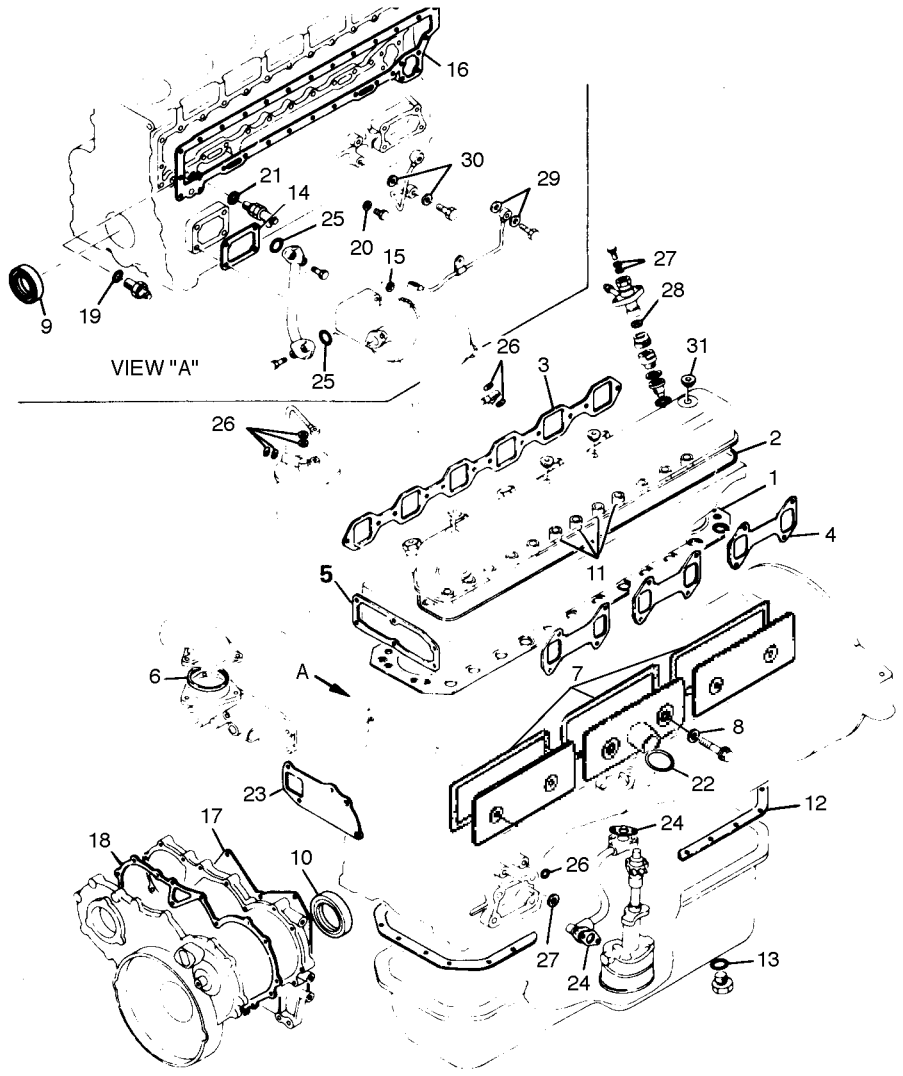

EJM1053S

1. Cylinder head gasket
2. Cylinder head cover gasket
3. Inlet manifold gasket
4. Exhaust manifold gasket
5. Thermostat housing gasket
6. Thermostat gasket
7. Tappet chamber cover gasket
8. Tappet cover fixing bolt gasket
9. Crankshaft rear oil seal
10. Timing gear case oil seal
11. Valve guide oil seal
12. Oil pan gasket
13. Drain plug gasket
14. Oil filter cover gasket
15. Oil filter fixing bolt gasket
16. Oil cooler gasket
17. Gear case to cylinder block gasket
18. Cover to timing gear case gasket
19. Relief valve O-ring
20. Cylinder block side plug gasket
21. Water drain valve gasket
22. Oil pump hole cover gasket
23. Wate pump gasket
24. Oil pipe gasket
25. Oil pipe gasket
26. Fuel pipe joint bolt gasket
27. Leak off pipe joint bolt gasket
28. Injection nozzle gasket
29. Injection pump oil gasket
30. injection pump oil pipe gasket
31. Cylinder head cover nut gasket

https://truckmanualshub.com/

2. Engine Disassembly and Assembly

2.1. Engine External Parts

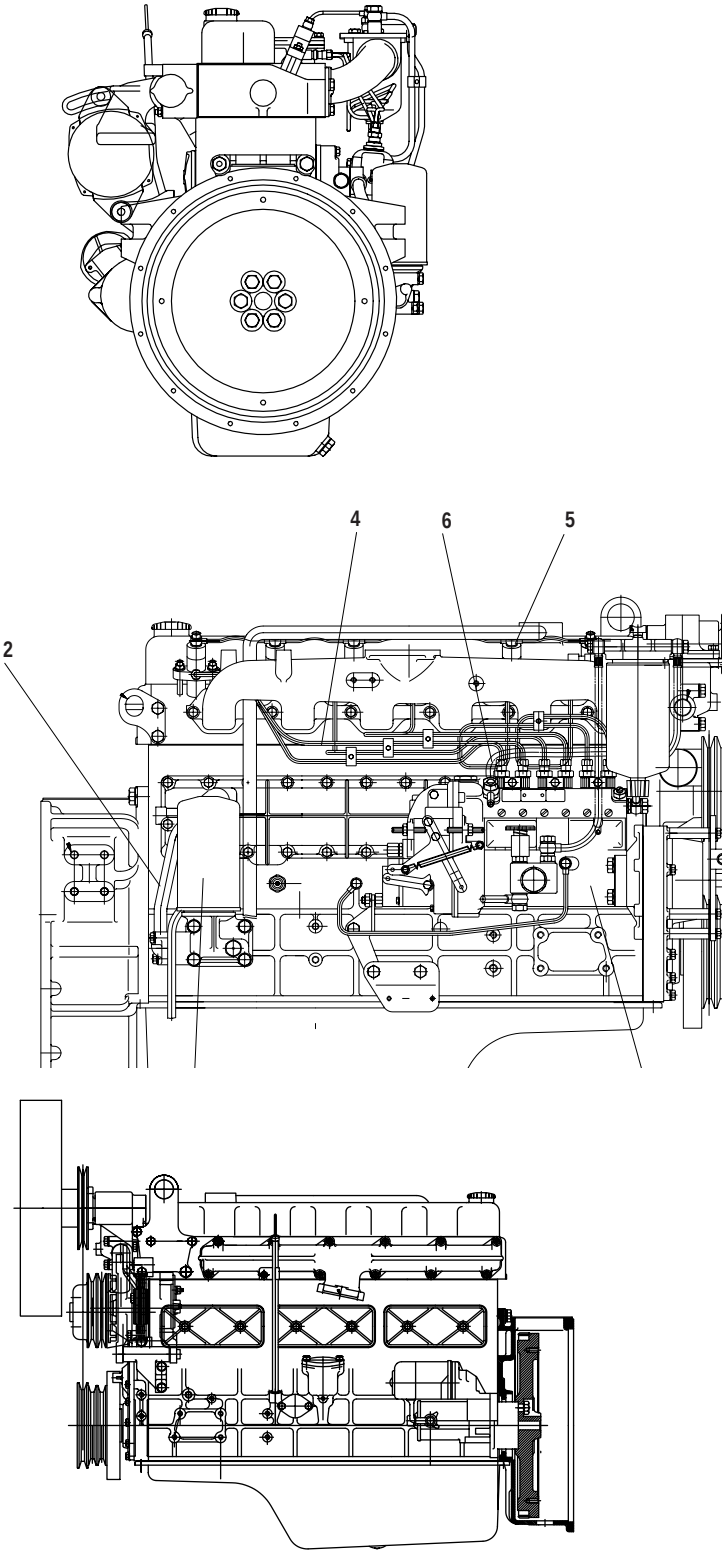

EJM2001I

https://truckmanualshub.com/

2.2. Disassembly

2.2.1. External Parts

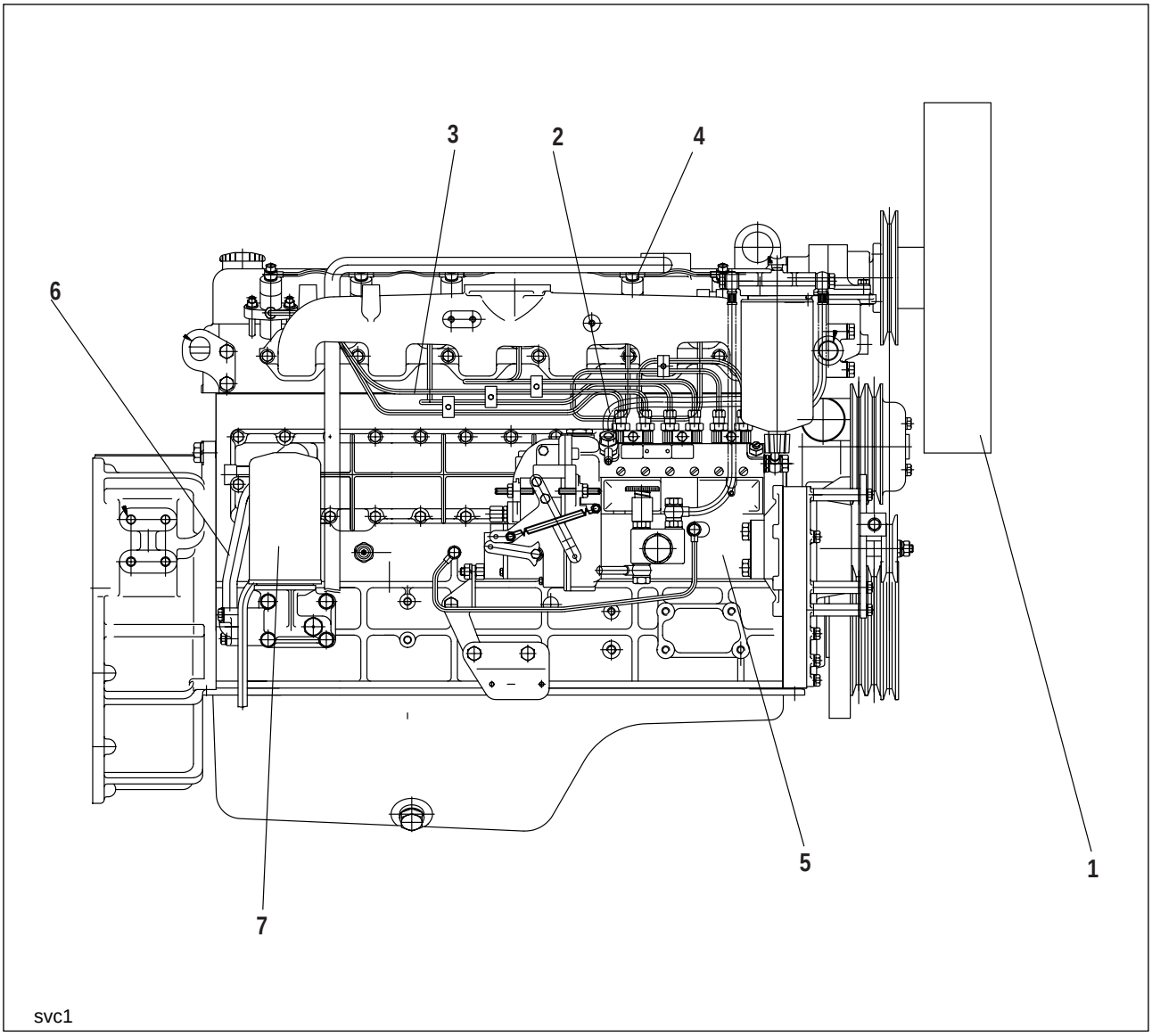

<Disassembly Steps>

1. Cooling fan
2. Fuel retrun pipe
3. Injection pipe
4. Injection nozzle
5. Injection pump
6. Oil pipe (Oil filter to oil cooler)
7. Oil filter

2.2.2. External Parts Disassembly Steps

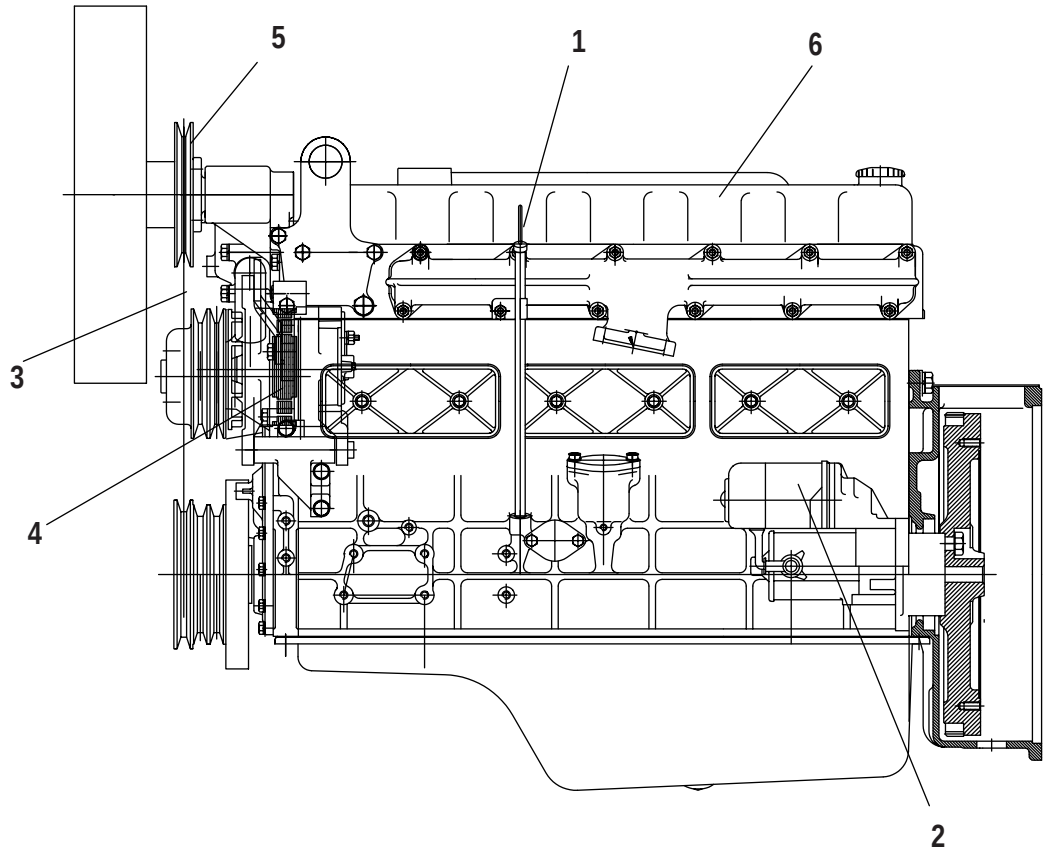

SVC2

<Disassembly Steps>

1. Dipstick and guide tube
2. Starter motor
3. Fan belt
4. Generator
5. Fan pulley
6. Cylinder Head cover

2.2.3. Major Structured Parts I

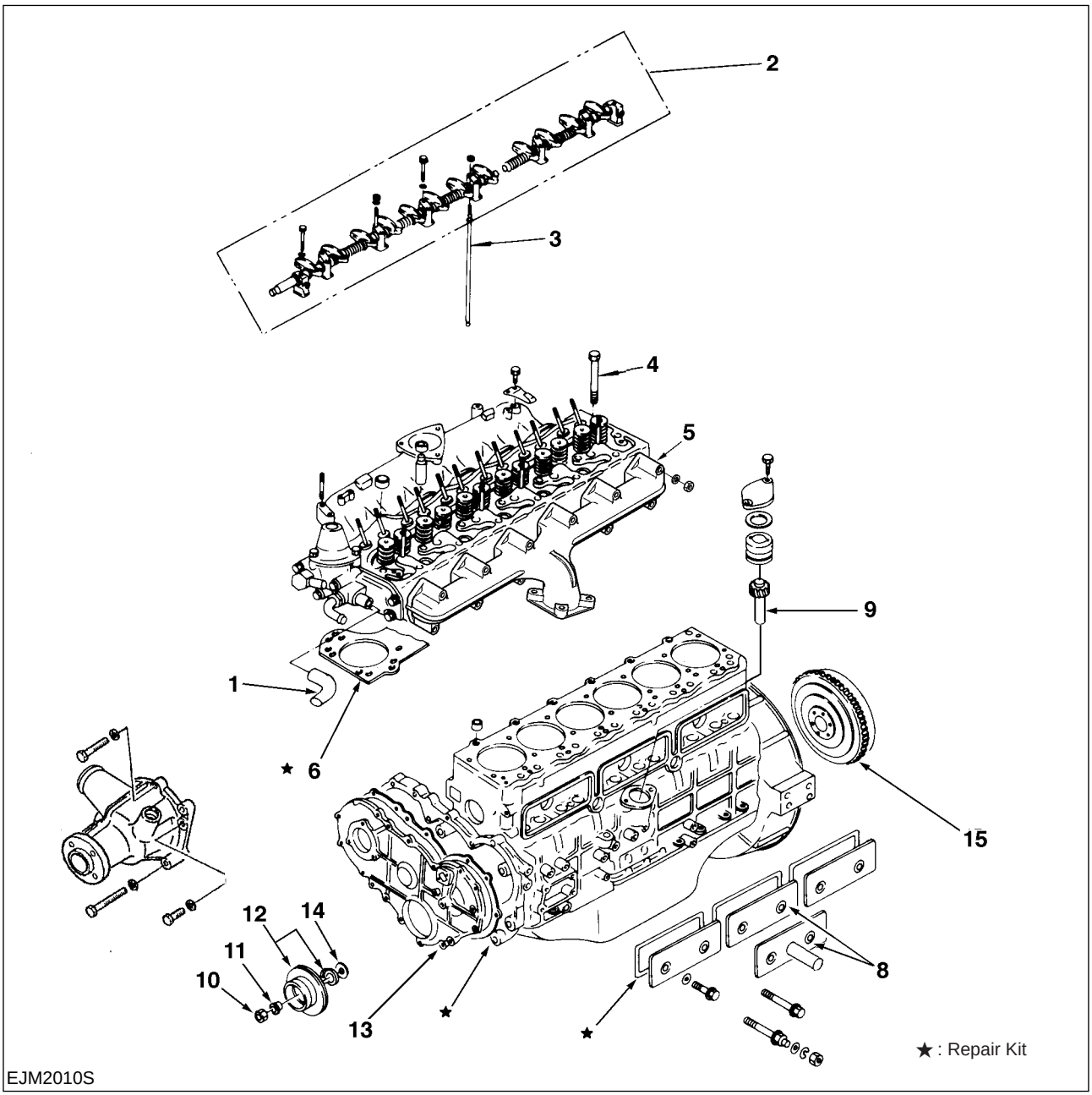

<Diassembly Steps>

1. Rubber hose ; coolant by-pass
2. Rocker arm shaft assembly
3. Push rod
4. Cylinder head bolt
5. Cylinder head assembly
6. Cylinder head gasket
7. Coolant pump assembly
8. Tappet chamber cover
9. Oil pump driving pinion
10. Starting handle nut
11. Taper bushing
12. Crankshaft pulley and dust thrower
13. Timing gear cover
14. Oil thrower
15. Fly wheel

https://truckmanualshub.com/

- **Rocker Arm Shaft**

Orderly release rocker arm shaft fixed bolts.(as shown in figure)

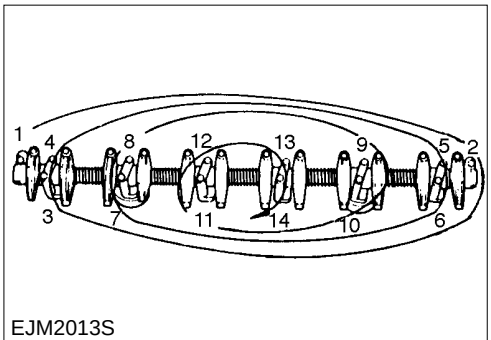

EJM2013S

- **Cylinder Head Bolts**

Orderly release cylinder head bolts.(as shown in figure)

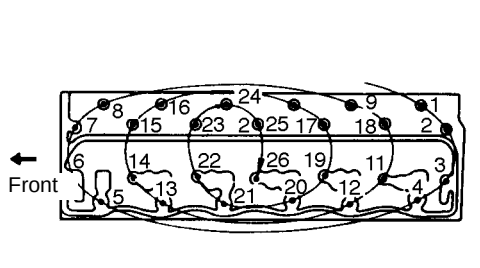

EJM2014S

- **Crankshaft Pulley Nuts**

Use 54mm wrench when removing the crank shaft pulley nut.

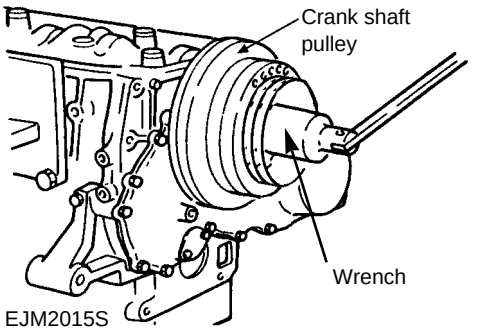

EJM2015S

- **Taper Bushing**

Use the taper bushing remover as shown in figure tool when removing the crank shaft pulley bushing.

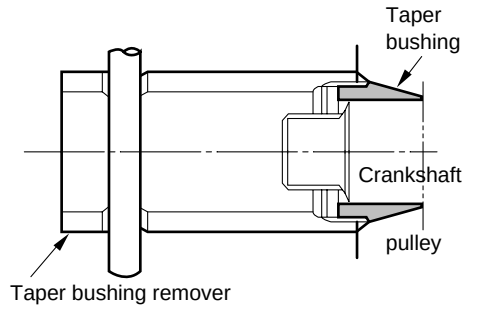

EJM2016I

- **Flywheel**

Orderly release the fly wheel mounting bolts.(as shown in figure)

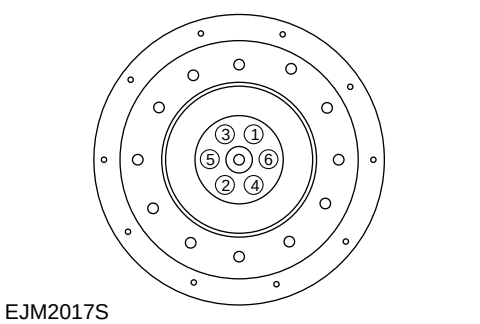

EJM2017S

2.2.4. Major Structured Parts II

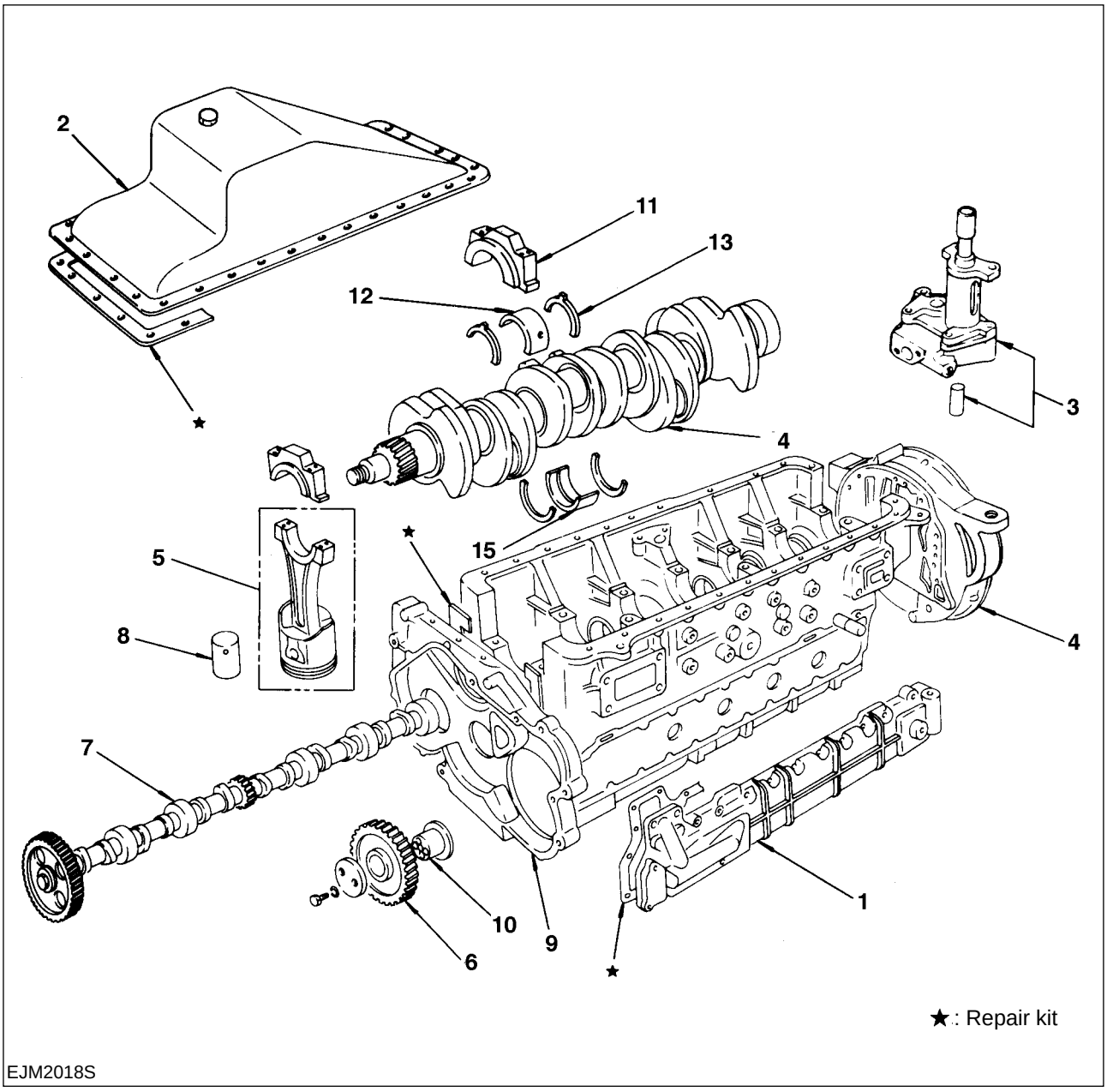

<Diassembly Steps>

1. Oil Cooler
2. Oil Pan
3. Oil Pump and Coupling
4. Fly wheel housing
5. Piston Ass'y
6. Idle gear
7. Cam shaft
8. Tappet
9. Timing gear case
10. Idle gear shaft
11. Crank shaft bearing cap
12. Crank shaft bearing (lower part)
13. Thrust bearing
14. Crank shaft
15. Crank shaft bearing (upper part)

https://truckmanualshub.com/

Idler Gear
Prior to disassembly, measure as following.

	Standard	Limit
Idle Gear End Play	0.058-0.115 mm	0.2 mm

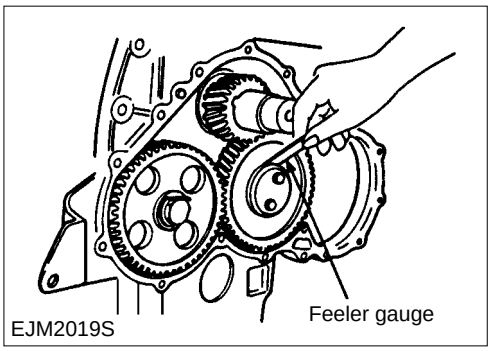

	Standard	Limit
Timing Gears Backlash	0.10-0.17 mm	0.3 mm

The backlash of crank shaft gear & cam shaft gear is equal to idle gear backlash.

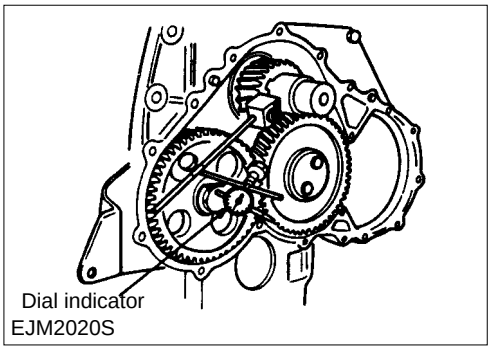

• **Cam Shaft**
Prior to disassembly, measure as following.

	Standard	Limit
Cam Gear End Play	0.050-0.114 mm	0.2 mm

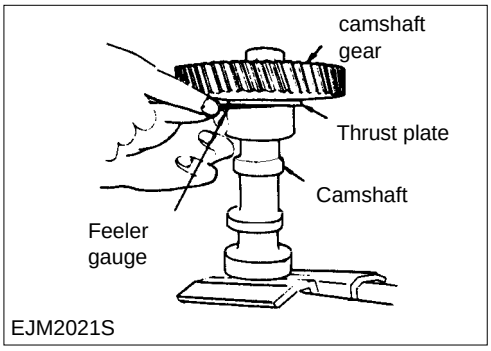

• **Crankshaft Bearing Cap**
Prior to disassembly, measure the crankshaft end play at the thrust bearing.

	Standard	Limit
Crankshaft End Play	0.15-0.33 mm	0.4 mm

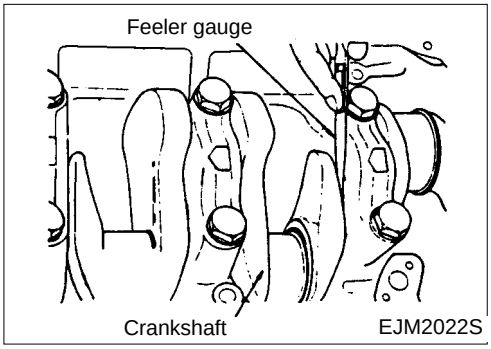

2.2.5. Rocker Arm, and Rocker Arm Shaft Disassembly Steps

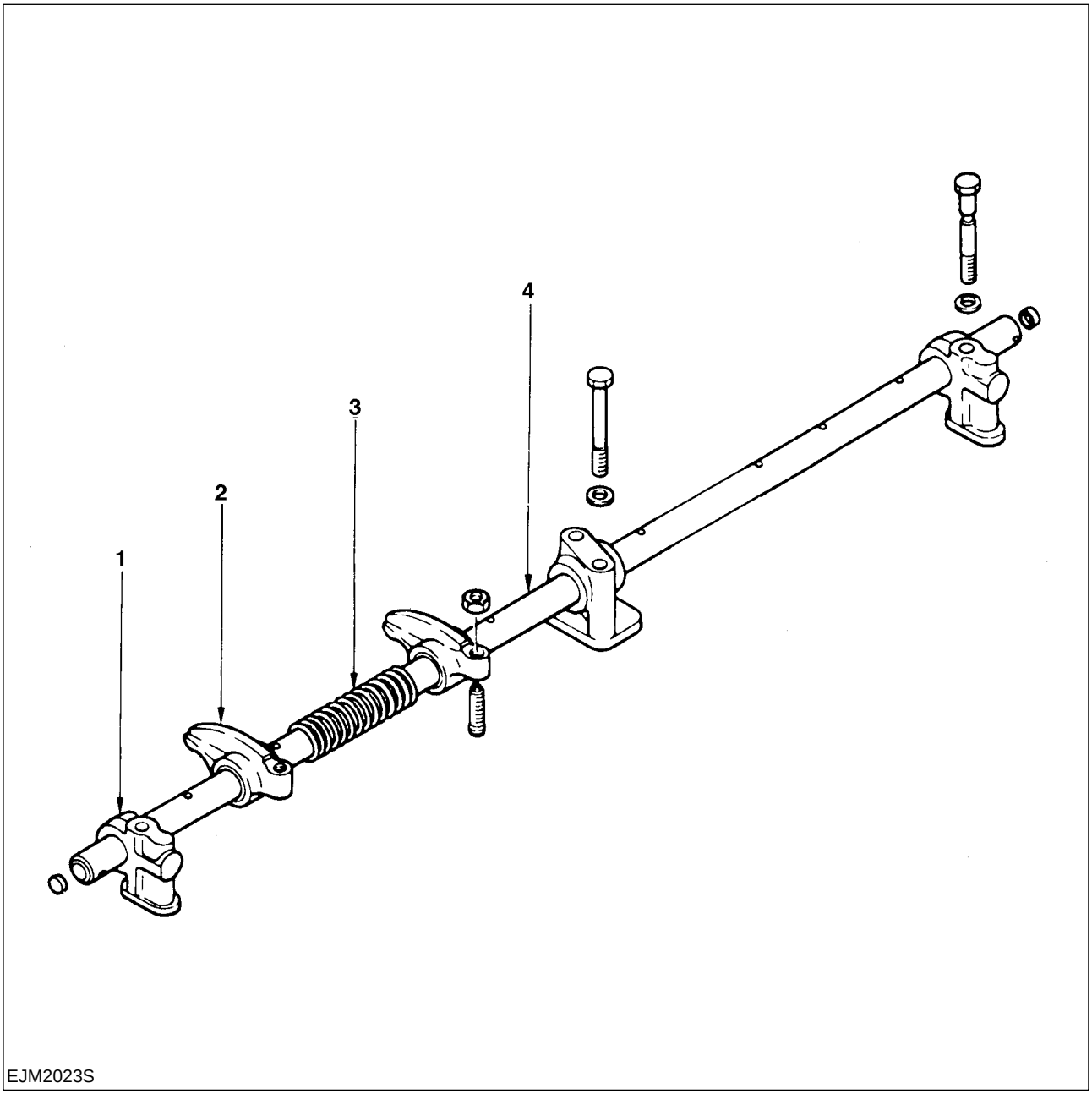

<Disassembly Steps>

1. Bracket
2. Rocker arm
3. Spring
4. Rocker arm shaft

2.2.6. Cylinder Head Disassembly Steps

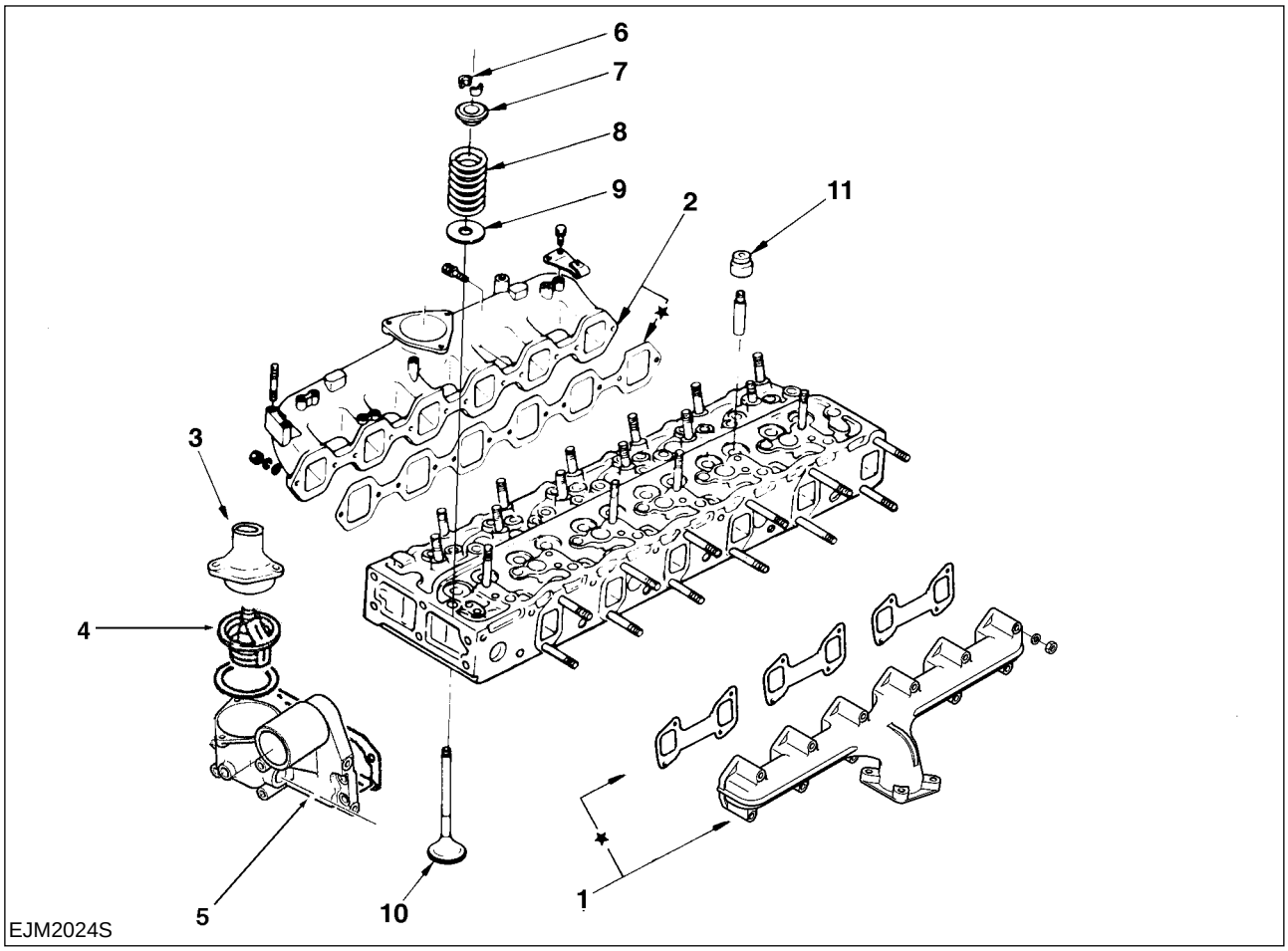

<Disassembly Steps>

1. Exhaust manifold and gasket
2. Intake manifold and gasket
3. Coolant outlet pipe
4. Thermostat
5. Thermostat housing and gasket
6. Key
7. Spring seat (upper) or *Valve rotator
8. Valve spring
9. Spring seat (lower)
10. Valve
11. Valve stem oil seal

• **Key**
Use the valve spring compressor when removing key

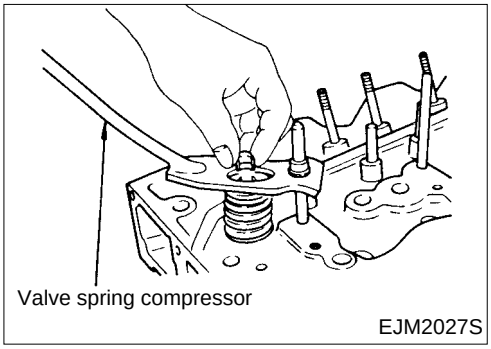

2.2.7. Piston and Connecting Rod Disassembly Steps

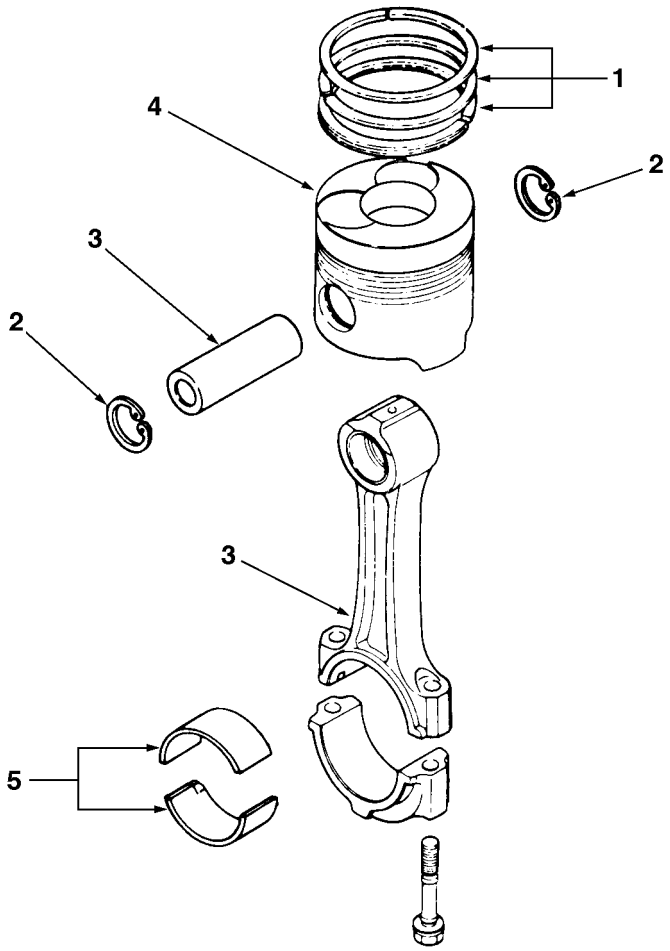

EJM2028S

<Disassembly Steps>

1. Piston rings
2. Snap ring
3. Piston pin and connecting rod
4. Piston
5. Connceting rod bearing

https://truckmanualshub.com/

【CAUTION】 Remove the piled up carbon at the upper of cylinder bore to prevent damage of piston when removing it.

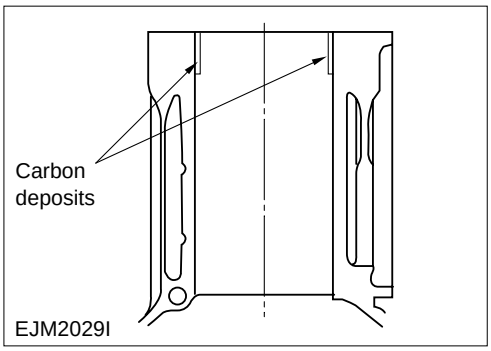

• **Piston Rings**

Remove the piston ring with piston ring remover.

• **Snap Ring and Piston Pin**

1) Use the snap ring pliers when removing the snap ring.

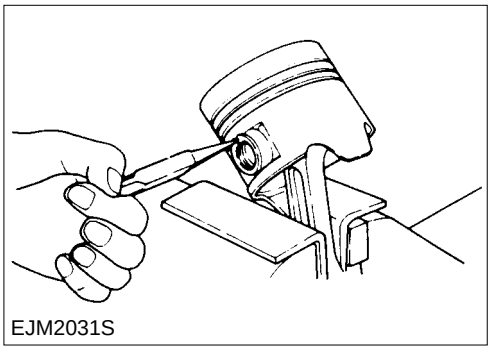

2) Pull out piston pin as tapping with hammer and brass bar.

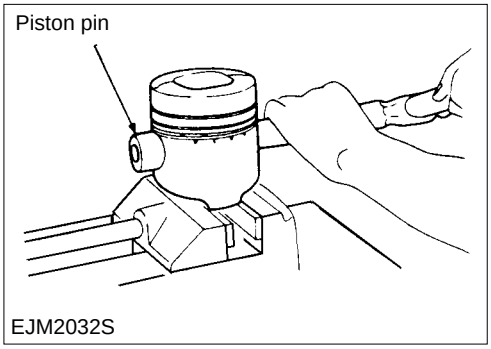

https://truckmanualshub.com/

2.3. Inspection and Repair

Adjust and repair if necessary, and replace the excessively worn or damaged parts which were found at inspction.

2.3.1. Cylinder Head

- **Lower face flatness**

1) Use a straight edge and a feeler guage to measure the four sides and the two diagonals of the cylinder head lower face.
2) You must grind when flatness is more than normal, however, replace the cylinder head if the grinding scope is out of specification.

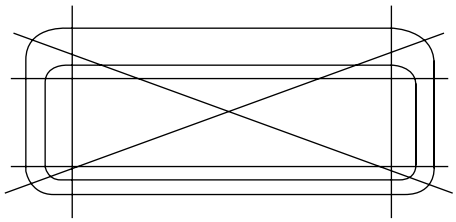
EJM2033I

<Flatness of Cylinder Head>

Standard	Limit	Max. Grinding
0.05 mm	0.2 mm	0.3 mm

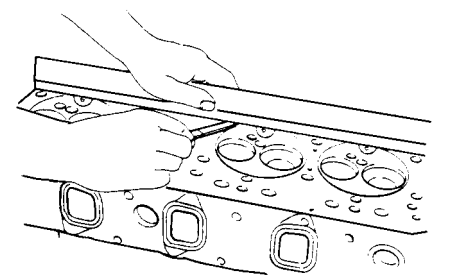
EJM2034S

<Height of Cylinder Head>

Standard	Limit
89.95-90.05 mm	89.65 mm

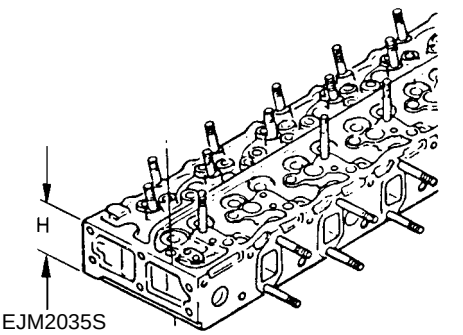

EJM2035S

- **Test of Water Pressure for Water Jacket**

Water pressure of water Jacket should be maintained by 5Kg/cm^2 for 3 minutes.
Generally check for the coolant leakage.

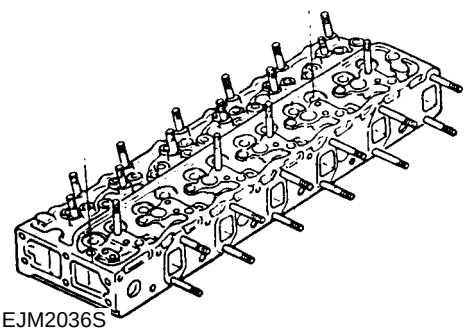
EJM2036S

https://truckmanualshub.com/

2.3.2. Valve Stem and Valve Guide Clearance

• **Measuring Method-1**

1) Install of dial gauge needle with valve stem assembled as figure.
   Set up calibrator to "O".
2) Shake well valve head.
   Record total dial indicator reading.
   Valve and guide set must be replaced if measured value was exceeded the specified limit.
   The gap of outside valve stem diameter and inside guide diameter is valve stem clearance.

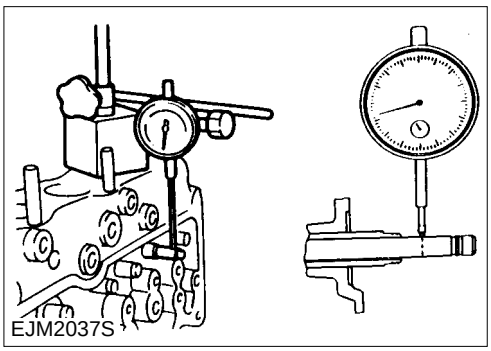
EJM2037S

• **Valve Stem Clearance**

	Standard	Limit
Intake Side TIR	0.039-0.068 mm	0.20 mm
Exhaust Side TIR	0.064-0.093 mm	0.25 mm

• **Measuring Method-II**

1) Measure valve stem outside diameter.
2) Measure valve guide inside diameter with a caliper calibrator or telescoping gauge.
   The gap of outside valve stem diameter and inside guide diameter is valve stem clearance.

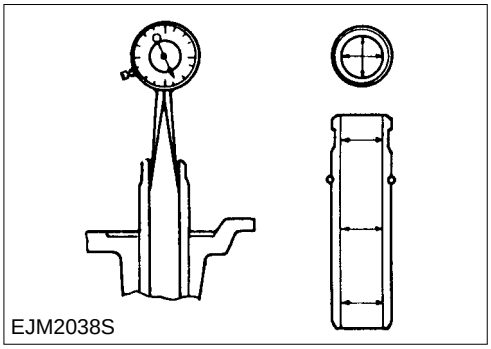
EJM2038S

• **Replacement of Valve Guide**

<Removal of Valve Guide>

Pull out the valve guide with hammer and valve guide remover from bottom of cylinder head.

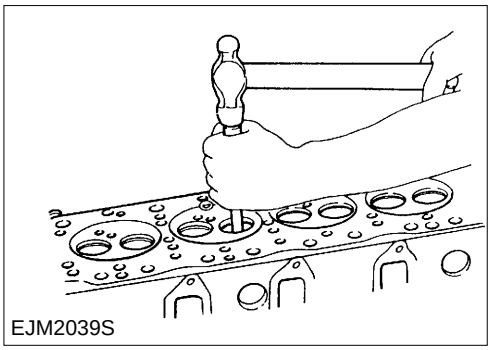
EJM2039S

The distance is 14.1 mm from the bottom of the cylinder head to the edge of valve guide top.

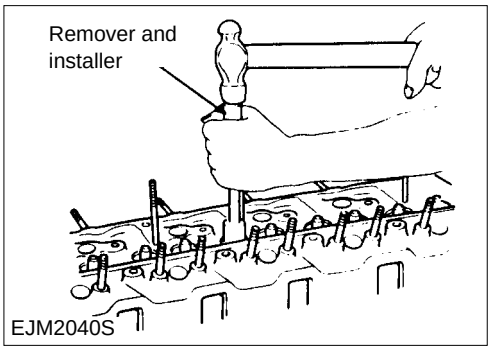

EJM2040S

https://truckmanualshub.com/

• **Valve Depression**

1) Install the valve (1) to the cylinder head (2).
2) Measure valve depression with a depth gauge or calibrator from the bottom of cylinder head.
   Seat insert and valve must be replaced if the measured value exceeds the specified limit.
   When replacing valve, the valve guide must be surely replaced.

	Standard	Limit
Intake and Exhaust Valve Depression	1.0 mm	2.5 mm

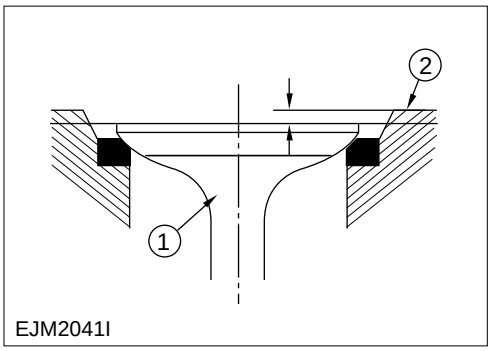

EJM2041I

• **Width of Valve Contact**

1) Inspect the valve contact faces for the roughness and unevenness.
   Make valve contact surfaces smoothly.
2) Measure width of valve contact.
   Seat insert must be replaced if the measured value exceeds the specified limit.

	Standard	Limit
Valve Contact Width	1.5 mm	2.0 mm

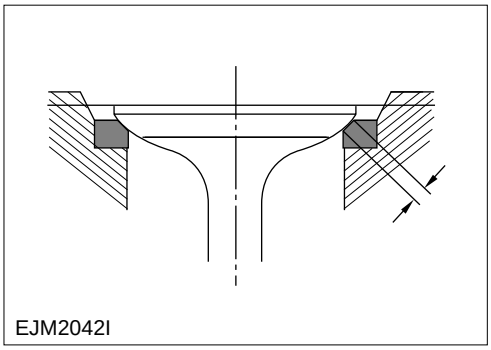
EJM2042I

• **Replacement of Valve Seat Insert**

<Removal of Valve Seat Insert>

1) Arc weld entire inside circumference of the valve seat insert (2).(See figure)
2) Cool valve seat insert for a few minutes to be easily pulled out.
3) Pull out the valve seat insert with a screw driver.

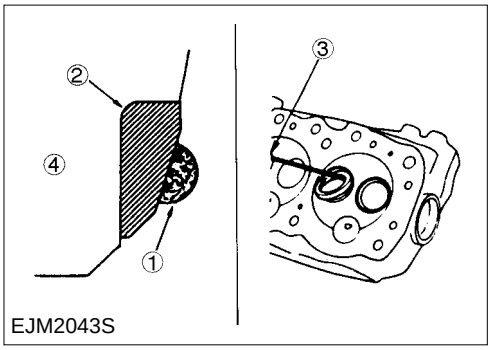

EJM2043S

<Installation of Valve Seat>

1) Carefully place Jig (1).

⚠【CAUTION】 Contact smoothly face of valve seat insert.

2) Assemble valve insert by slow pressing against the jig with the bench press.
   (To need press 25000 Kg more)

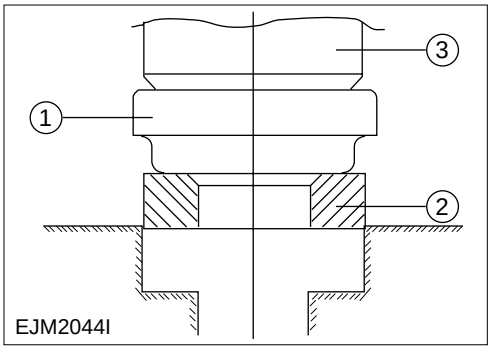

EJM2044I

https://truckmanualshub.com/

• **Correction of Valve Seat Insert**

1) Remove the carbon deposits from the valve seat insert surface.
2) Remove the rough areas with a valve cutter (15˚, 30˚ or 75˚)
   Do not cut the valve seat insert too much.

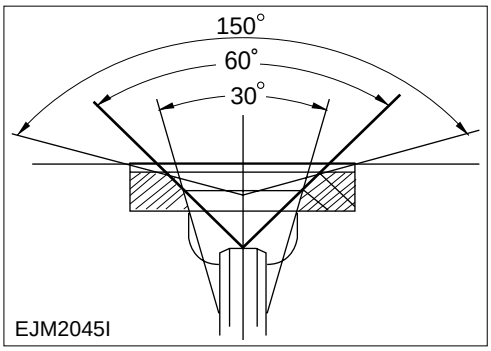

Contacting Angle(B)	Standard
Intake Valve Seat	45˚
Exhaust Valve Seat	45˚

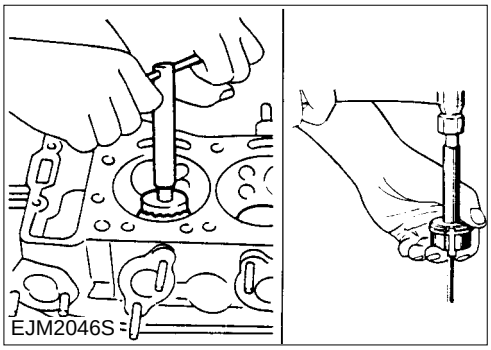

3) Spread compound on the surface of valve seat insert.
4) Grind the valve and valve seat with the lapping cup.
5) Insert valve into valve guide.
6) Check contact surface of valve whether good or not.
7) Check the contact condition of valve seat insert.

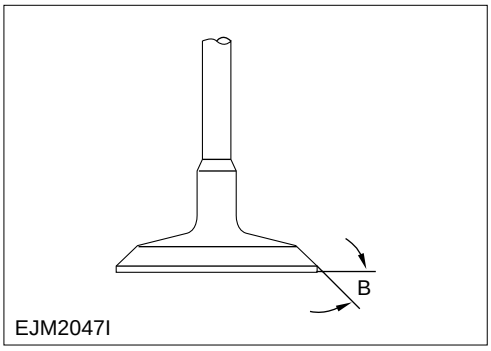

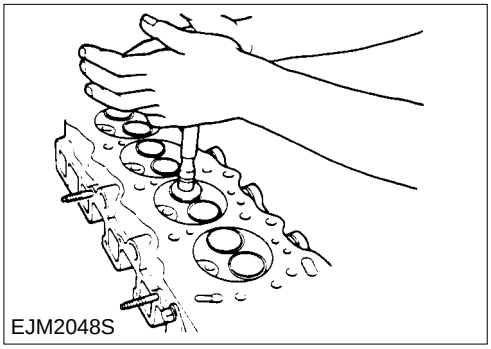

https://truckmanualshub.com/

2.3.3. Valve Spring

• Valve Spring Free Length

Measure the valve spring with the vernier caliper. Replace the spring if the measured value is out of the specified limit.

	Standard	Limit
Exhaust and Intake Valve Spring Free Length	49.0 mm	47.0 mm

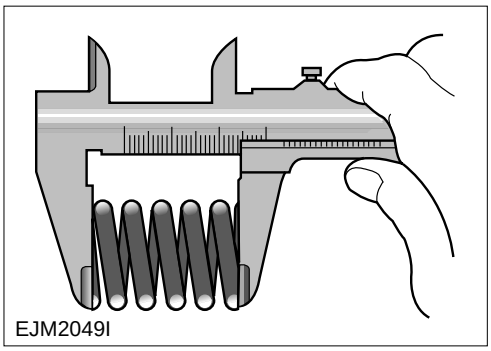
EJM2049I

• Gradient of Valve Spring

Measure the valve spring gradient with a square. Replace the valve spring if the measured value is excessive from the specified limit.

	Standard	Limit
Valve Spring Gradient	below 1.3 mm	2.7 mm

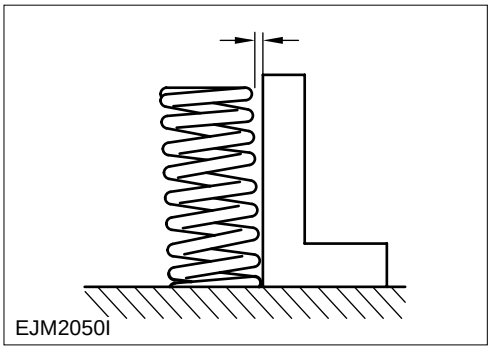
EJM2050I

•Tension of Valve Spring

Measure the valve tension with a tension measure. Replace the valve spring if the measured value is out of the specified limit.

	Standard	Limit
Valve Spring Tension at 40 mm Set Length	14.5 kg	11.5 kg

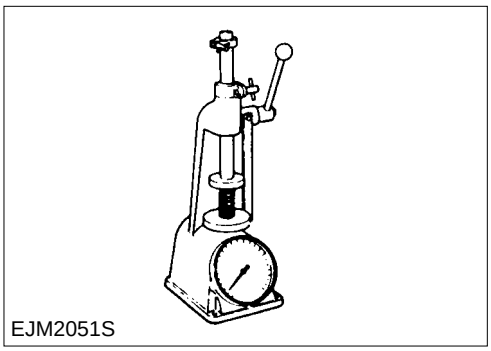
EJM2051S

https://truckmanualshub.com/

2.3.4. Tappet

Check the valve tappets whether excessive wear and damage or not.

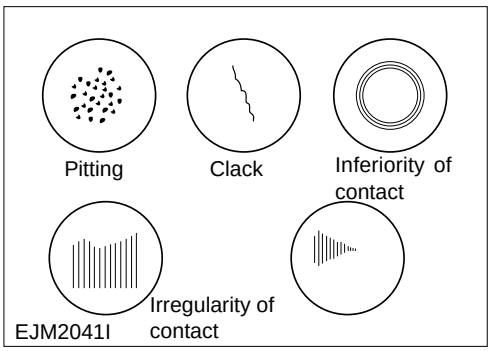

Measure the outside diameter of tappets with a micrometer.

	Standard	Limit
Tappet Outside Diameter	27.97-27.98mm	27.92mm

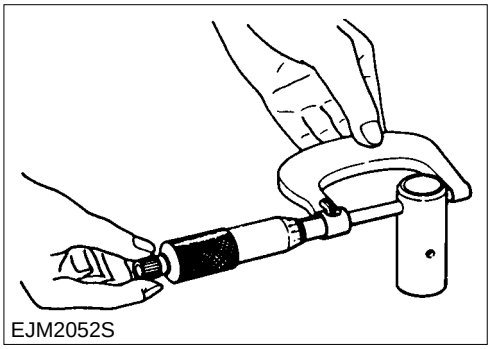

Measure the clearance between tappets and cylinder hole with a dial indicator

	Standard	Limit
Tappet and Tappet Travelling Bore Clearance	0.020~0.054 mm	0.1 mm

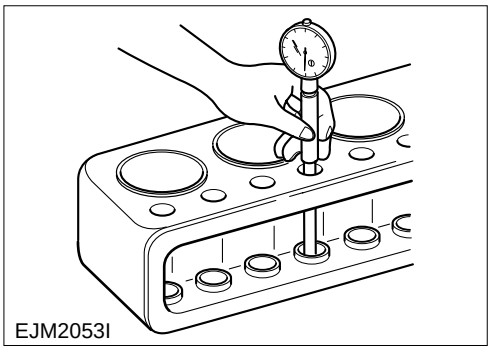

2.3.5. Push Rod

Measure the flatness of push rod with a feeler gauge. Measure it by slowly rolling push rod on the flat desk by hand. (See figure)

	Limit
Push Rod Flatness	0.3 mm

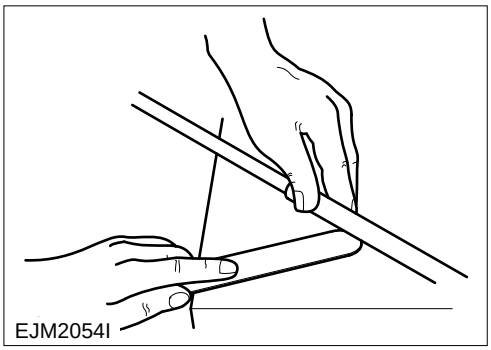

https://truckmanualshub.com/

2.3.6. Rocker Arm Correction

Check the valve stem contact part of roker arm.
Grind contact surface with an abrasive if it is irregularly contacted.
Replace the rocker arm if it is extremely damaged.

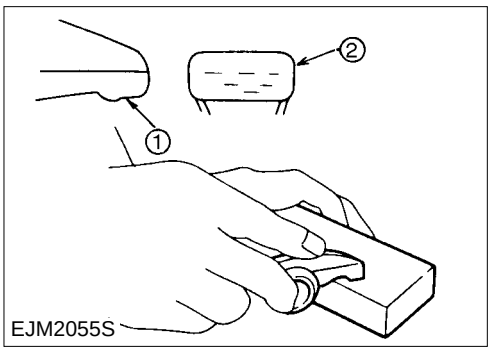

EJM2055S

• **Rockder Arm Shaft and Rocker Arm**

Check the disassembled parts whether damaged or not.

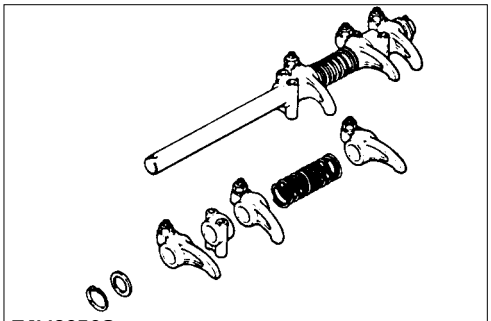
EJM2056S

• **Outside Diameter of Rocker Arm Shaft**

Measure the outside diameter of rocker arm shaft with a micrometer.
Replace shaft if the measured value is out of the specified limit.

	Standard	Limit
Outside Diameter of Rocker Arm Shaft	18.98-19.00 mm	18.85 mm

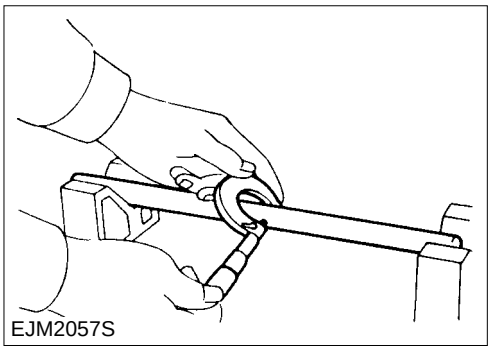
EJM2057S

Clearance of Rocker Arm Shaft and Rccker Arm

1) Measure the inside diameter of rocker arm bushing with tne vernier caliper.
2) Measure the outside diameter of rocker arm.
   Replace the rocker arm or rocker arm shaft if the measured value is out of the specified limit.

	Standard	Limit
Inside Diameter of Rocker Arm Bushing	19.01-19.03 mm	19.05 mm

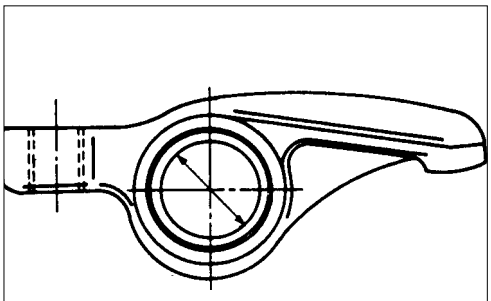
EJM2058S

https://truckmanualshub.com/

	Standard	Limit
Clearance Between Rocker Arm Bushing and Shaft	0.01-0.05 mm	0.2 mm

3) Check the rocker arm shaft oil port whether alien substance is in it or not.
   Clean the rocker arm shaft oil port with an air if necessary.

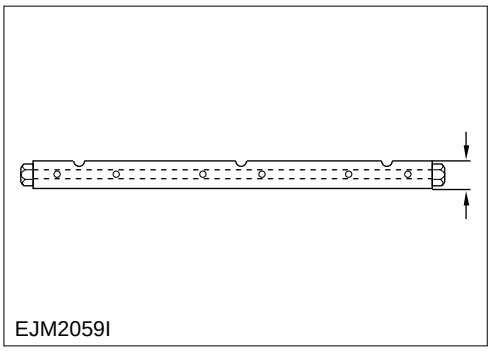
EJM2059I

2.3.7. Idle Gear and Idle Gear Shaft

1) Replace the idler gear shaft if the measured value is out of the specified limit.

	Standard	Limit
Outside Diameter of Idle Gear Shaft	44.945-44.975 mm	44.9 mm

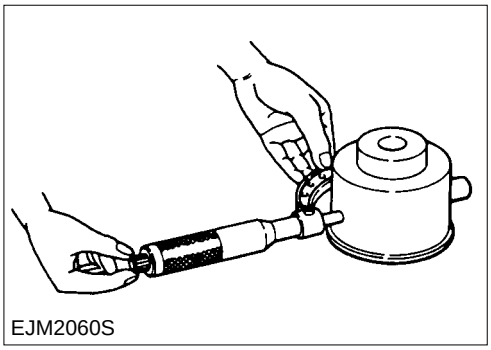
EJM2060S

2) Measure the inside diameter of idler gear with the dial indicator.

	Standard	Limit
Clearnance between Idler Gear and Idler Gear Shaft	0.025-0.085 mm	0.2 mm

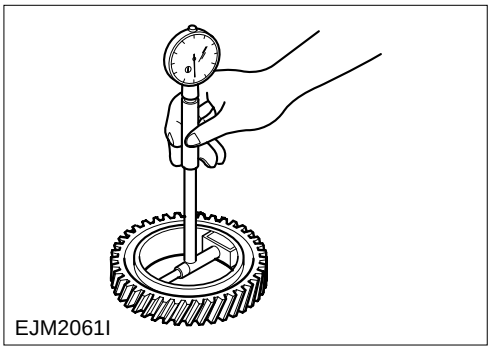
EJM2061I

2.3.8. Cam Shaft

1) Use the jig when installing or overhauling cam shaft.
   Camp shaft bearing. Special jig of cam shaft bearing : 9-8523-1810-0
2) Measure clearance between cam journal and cam shaft bearing.

	Standard	Limit
Clearance Between Cam Journaly and Cam Bearing	0.03–0.09 mm	0.15 mm

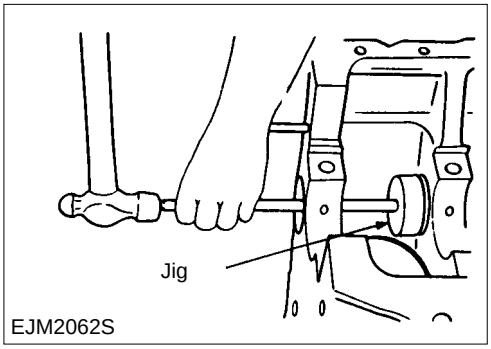

EJM2062S

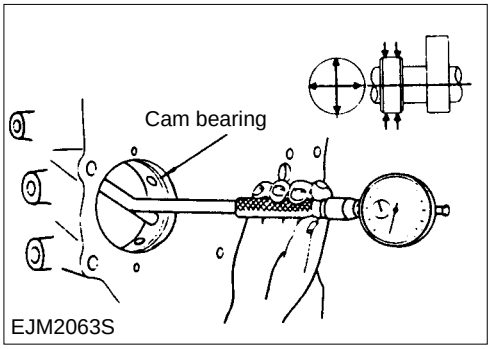

EJM2063S

3) Align oil port of the cam shaft and the cylinder oil port.

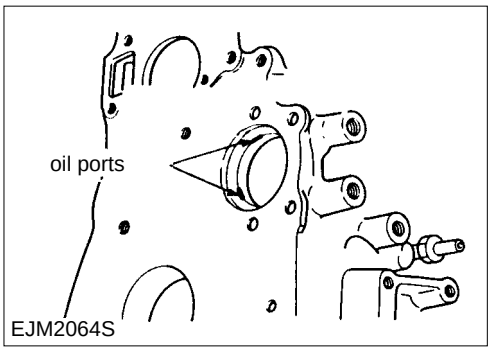

EJM2064S

4) Measure the cam lobe with the micrometer.
Replace the cam shaft if the measured value is out of the specified limit.

	Standard	Limit
Cam Lobe Height (C-D)	7.71 mm	7.21 mm
Cam Journal Diameter	56.0 mm	55.6 mm

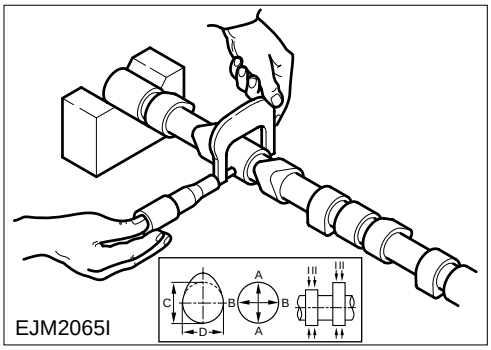

EJM2065I

5) Set up the cam shaft at the measured jig.
Measure the run out of cam shaft with the dial indicator.
Record the measured value (TIR)
Replace the cam shaft if the measured value is out of the specified limit.

	Limit
Camshaft Run-Out (TIR)	0.12 mm

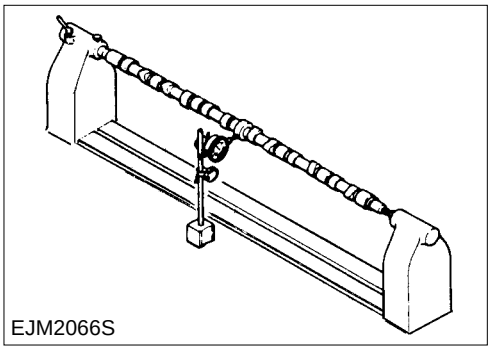
EJM2066S

2.3.9. Cylinder Block and Liner

Measurement of the Cylinder Liner Bore
Measure the bore from measuring location (1) to direction of the crank shaft (3) and counter direction (2).
Measuring location : 20mm far away from the top of liner to bottom. (Max. worn part)
Replace the cylinder liner if the measured valve is out of specified limit.

	Standard	Limit
Diameter of Cylinder Liner Bore	102.021-102.060 mm	102.20 mm

【CAUTION】 Scarred or damaged liner must be replaced.
The casted liner is specially procedured honing without the plating with chromium inside, so that ring plated with chromium (Top ring and oil ring) must be used.

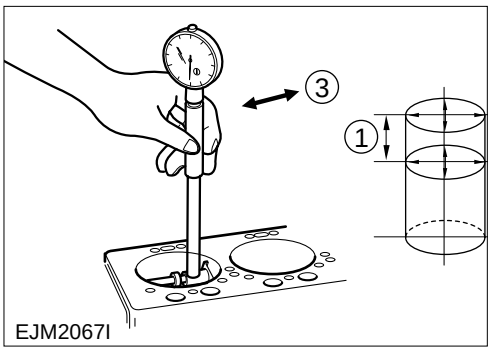

EJM2067I

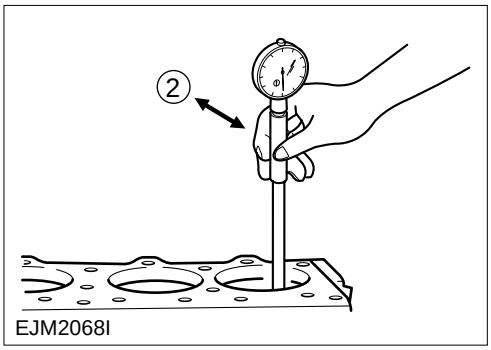

EJM2068I

https://truckmanualshub.com/

• Inspection of the Cylinder Liner Projection

1) Set up the straight measure (1) at the top part of liner.
2) Measure liner projection with the feeler gauge (2).

	Limit
Projection of cylinder Liner	0.03-0.10 mm

Inequality of liner projection to other clylinder must be less than 0.03mm.

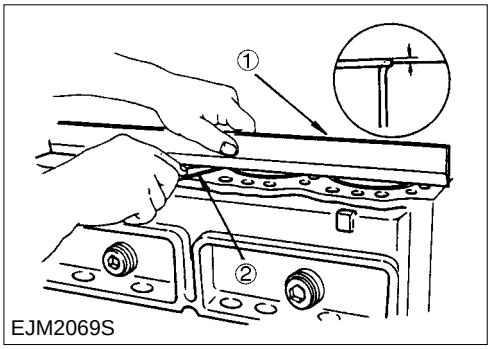

EJM2069S

• Replacement of the Cylinder Liner

<Removal of Cylinder Liner>

1) Set up remover of the cylinder liner to cylinder liner.
2) Make sure to set up remover of the cylinder liner at bottom of cylinder liner.

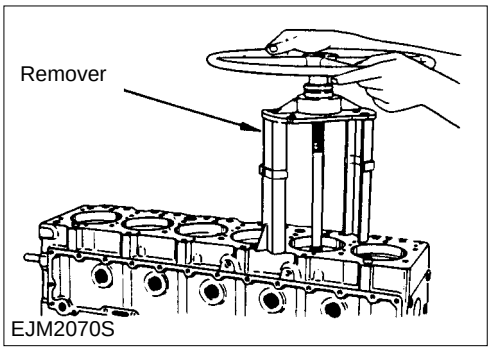

EJM2070S

3) Slowly turn the remover shaft handle counter clock wise to pull out the cylinder liner.

⚠【CAUTION】 Make sure not to damage the cylinder block when removing the cylinder liner.

• Measurement of Cylinder Block Inside Diameter

1) Measure from measuring point (1) toward W-W, X-X, Y-Y, Z-Z.
   (1) Measuring Point: 115 mm
2) Average value for 4 measurements should be used to moderately determine the liner grade.

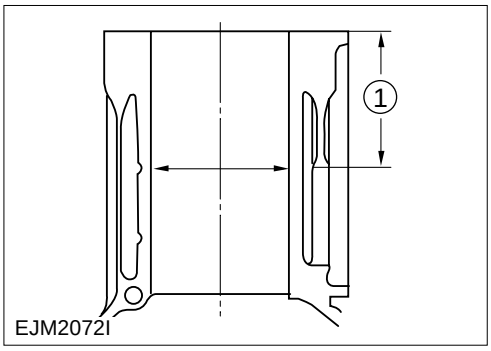

EJM2072I

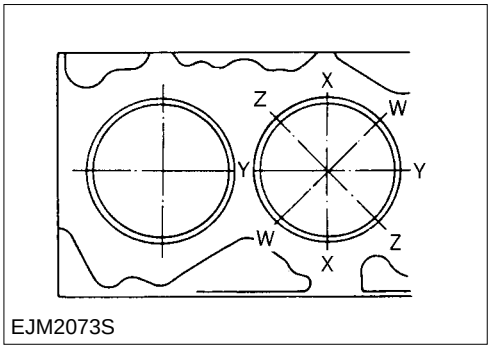

EJM2073S

https://truckmanualshub.com/

• **Measurement of Cylinder Liner Outside Diameter**

1) Measure the liner outside diameter from (1), (2) & (3) measuring point toward X-X, Y-Y.
   Location of the Measuring point.
   (1) 20.0
   (2) 105.0
   (3) 195.0

2) Average value for 6 measurements should be used to moderately determine the liner grade.
   Combination of the cylinder bore and the cylinder liner outside.

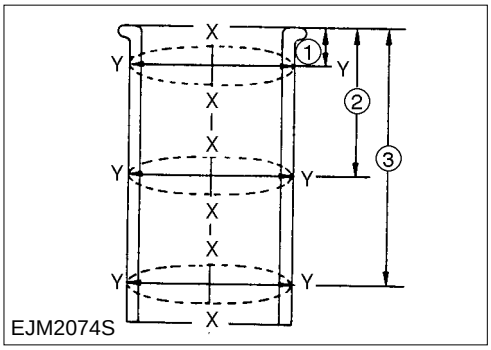

<Cylinder bore and cylinder liner outside diameter>

Grade	Cylinder Bore	Outside Diameter
1	105.990-106.000	105.973-105.984
2	106.00-106.010	105.984-105.995

• **Assembley of the Cylinder Liner**

1) Cleanly wash both of the cylinder liner inside & outside and block inside.
2) Cleanly wash both of liner and bore surface with the light gasoline and the kerosene.
3) Cleanly wash tracks with the rag which was printed when washing.
4) Insert the liner (1) to cyliner block (2).

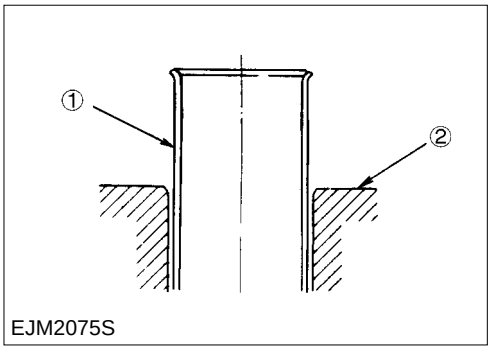

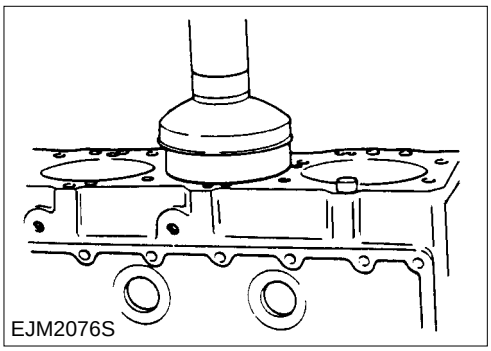

https://truckmanualshub.com/

2.3.10. Piston

• **Selection of Piston Grade**

Correctly selected pistion grade to operate engine efficiently.
Meassure the bore after assembling the cylinder liner.
Determine piston grade after assembling liner.

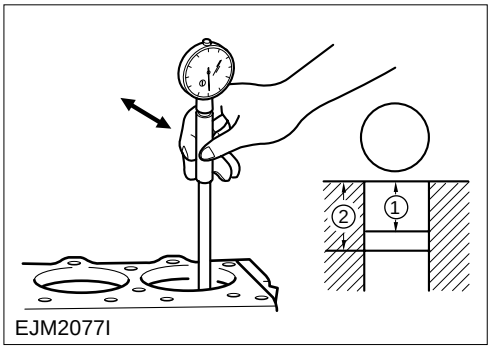

EJM2077I

• **Measurement of Cylinder Liner Bore**

1) To be measured at 2 points.
   Cylinder Liner Bore Measuring Point (1) : 20mm
   Cylinder Liner Bore Measuring Point (2) : 105mm
2) Measure cylinder liner bore from (1), (2) & (3) measuring point toward X-X, Y-Y, W-W, Z-Z in 2.3.9. section.
3) Average value for 8 measurements.

Limit of Cylinder Liner Bore
102.021-102.060 mm

【CAUTION】 It is most important to correctly grade combination.
Otherwise, It will be resulted a seizure.

• **Outside Diameter of Piston**

1) Piston outside diameter vary depending on the piston type to be used.
2) Measure the piston outside diameter. (see figure) (2) : 82mm
3) Piston Grade

Grade	Limit
A	101.955-101.974 mm
B	101.975-101.994 mm

Cylinder Liner Bore and Piston Clearance :
0.053~0.077 mm

【CAUTION】 The cylinder liner pistonkit clearances are preset. However, the clylinder liner installation procedure may result in slight decrease in the cylinder liner bore clearances.
Correctly combinate piston after measuring the cylinder liner bore clearance.

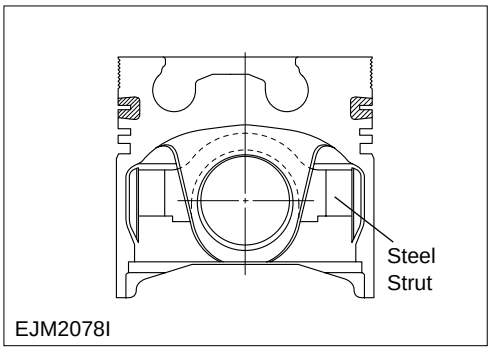

EJM2078I

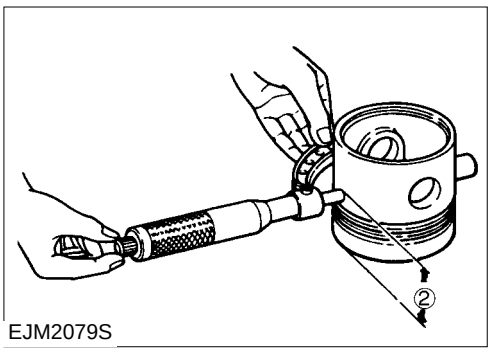

EJM2079S

https://truckmanualshub.com/

- **Piston Ring and Piston Ring Groove Clearance**

Measure the piston ring and the piston ring groove clearance with a feeler gauge.
Measure it around of the piston.
Replace the piston ring if the measured value is out of the specified limit.

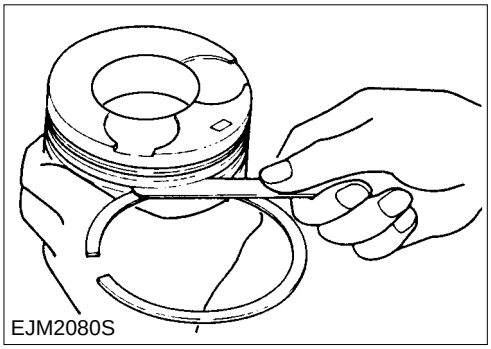
EJM2080S

- **Piston Ring and Piston Ring Groove Clearance**

	Standard	Limit
Top Ring	0.085-0.110 mm	0.20 mm
2nd Ring	0.030-0.055 mm	0.15 mm
Oil Ring	0.030-0.070 mm	0.15 mm

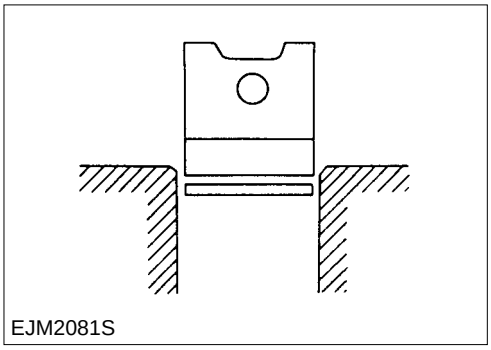
EJM2081S

- **Piston Ring Gap**

1) Horizontally assemble the piston ring into cylinder liner.(original place).
2) Push inverted piston ring to be reached (1) & (2)
   The cylinder liner diameter is the smallest at these two points.
   Perfectly horizontalize to be set up without a slant.
   Cylinder Liner Measuring Point (1) ; 10mm
   Cylinder Liner Measuring Point (2) ; 130mm
3) Measure piston ring gap with a feeler gauge.
   Replace piston ring if the measured value is out of the specified limit.

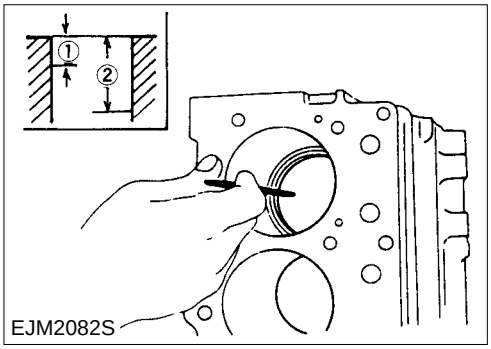

EJM2082S

	Standard	Limit
Top Ring Gap	0.25-0.45 mm	1. 50 mm
2nd Ring Gap	0.20-0.40 mm	1. 50 mm
Oil Ring Gap	0.20-0.40 mm	1. 50 mm

https://truckmanualshub.com/

- **Piston Pin**

Measure the pin outside diameter with micrometer. Replace the pin if the measured value is out of the specified limit.

	Standard	Limit
Piston Pin Outside Diameter	36.000-36.005 mm	35.95 mm

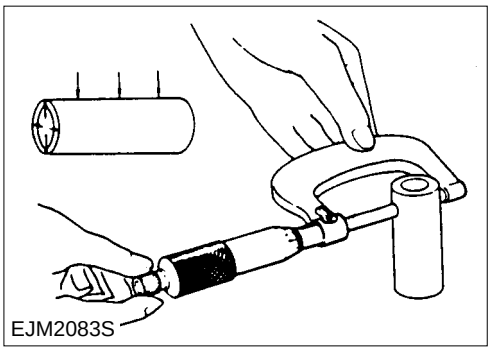
EJM2083S

- **Piston Pin Hole**

Measure diameter of the pin hole with inside dial gauge.

Standard
36.000-36.008 mm

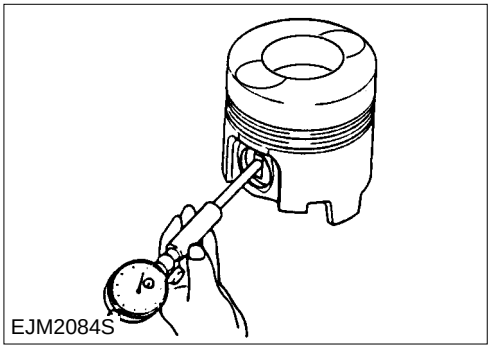
EJM2084S

- **Clearance between Piston Pin and Piston Pin Hole**

Measure the clearance between piston pin and piston pin hole by measuring pin hole diameter and pin outside.

	Limit
Clearance between Piston Pin and Piston Pin Hole	0.050 mm

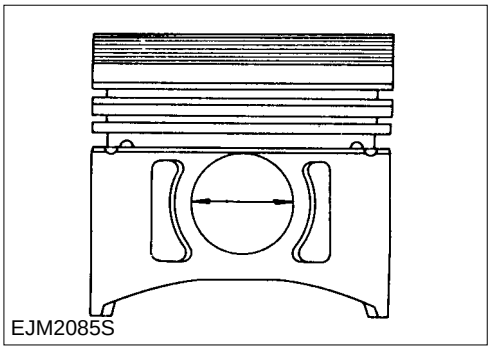
EJM2085S

https://truckmanualshub.com/

2.3.11. Connecting Rod

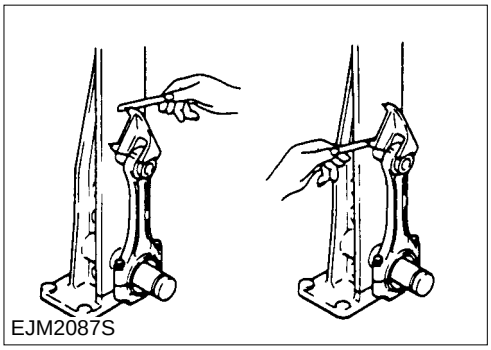
EJM2087S

- **Connecting Rod Alignment**

Measure the alignment between big end and small end with connecting rod balancer.
Replace the connecting rod if the measured value is out of the specified limit.
Connecting Rod alignment (at 100 mm distance)

	Standard	Limit
Alignment	0.05 mm	0.20 mm

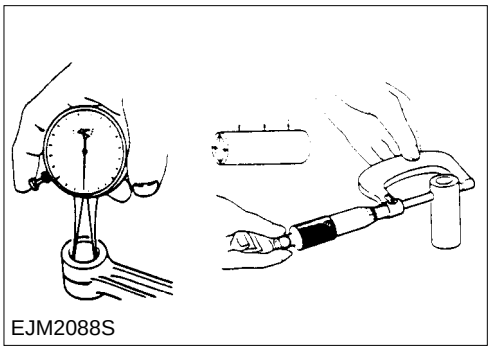
EJM2088S

- **Piston Pin and Small End Bushing clearance**

Measure the inside of small end bushing and outside of pin with the caliper gauge and micrometer.
Replace a connecting rod bush or piston pin if the measured value is out of the specified limit.

	Standard	Limit
Clearance of Piston Pin & Bushing	0.010-0.030 mm	0.05 mm

- **Disassembly of Connecting Rod Bush**

1) Fix connecting rod with a vice.
2) Pull out connecting rod bush with brass rod and the Press or hammer.

- **Assemble of Connecting Rod Bush**

Use special jig when assemble connecting rod bush.

⚠ **【CAUTION】 Align connecting rod bush oil port and connecting rod oil port.**

3) Grind the piston pin hole with grinder or adjustable pilot reamer.

	Standard
Connecting Rod Bush Inside Diameter	35.017-35.025 mm

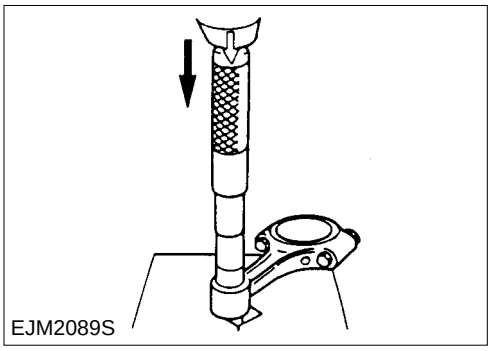
EJM2089S

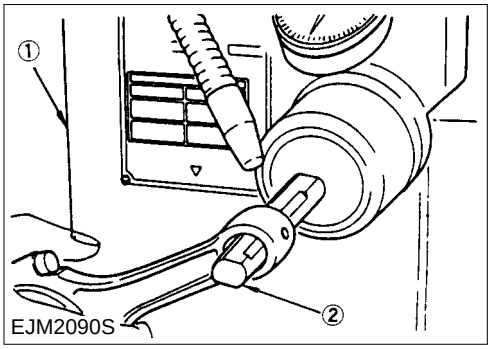

EJM2090S

- **Check of Connecting Rod Bearing**

1) Assemble the bearing to connecting rod cap.
2) Check the tension of connecting rod bearing.
   Replace the bearing if the tension is lack.
3) Tighten the connecting rod bearing cap to the specified bolt torque.

	A type	B type
Bolt Torque	12 ± 0.25	9.75 ± 0.25

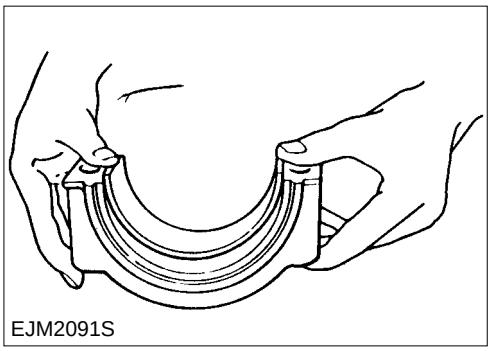
EJM2091S

[Classification]

- A type : 11 marked on bolt head
- B type : TY 11T or TY 12T

4) Measure the inside of connecting rod bearing with an inside dial gauge.

Inside of connecting rod bearing	64 mm

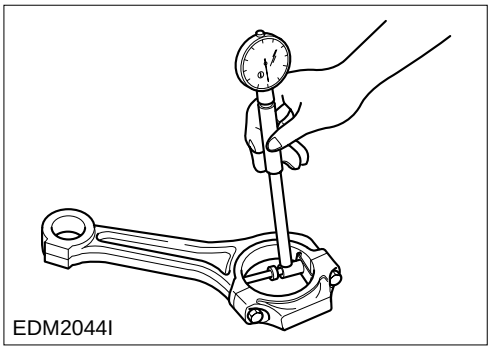
EDM2044I

2.3.12. Crankshaft

- **Crank shaft Inspection**

1) Check the crank shaft journal surface and pin part whether there are excessive wear or damage or not.
2) Check assembled front & rear end oil seal part whether there are excessive wear or damage or not.
3) Replace or repair the crank shaft if excessive wear or damage is on crankshaft.
4) Check the obstruction of crank shaft oil port.
5) Blow high pressured air into oil port if necessary.

- **Crank shaft Journal and Crank pin Outside Diameter**

1) Measure the crank shaft journal outside diameter with the micrometer torward (1)-(1) and (2)-(2).
2) Measure at 2 point (3) & (4).
3) Repeatedly practice (1) & (2) on each jounal.
   Grind the pin and journal if measured value is out of the specified limit.

Classification	Standard
Crankshaft Journal outside Diameter	79.905-79.925mm
Crankshaft Pin outside Diameter	63.924-63.944mm

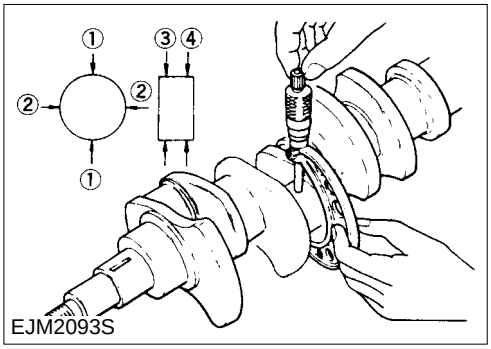

EJM2093S

- **Crankshaft Main Bearing Inside Diameter**

1) Tighten to the specified torque after assembling cap for the arrow of the bearing cap to be toward front of engine.
2) Measure main bearing diameter with a inside dial gauge.

Main Bearing Cap Torque	24.1±1 kg•m

Main Bearing Diameter	80 mm

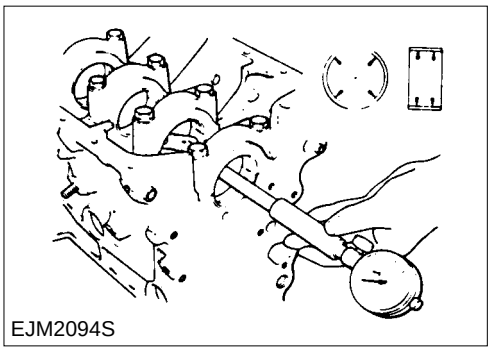
EJM2094S

- **Connecting Rod Bearing Inside Diameter.**

Measure the bearing inside diameter a the specified dial gauge after tightening connecting rod cap bolts.

	A type	B type
Connecting Rod Cap Bolt Torpue	12 ± 0.25	9.75 ± 0.25
Classification	11	TY 11T, TY 12T
Connecting Rod Bearing Diameter	64.0 mm	

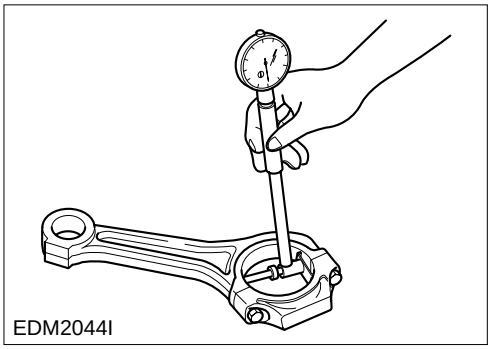
EDM2044I

- **Clearance**

Determine the bearing clearance after measure crank shaft journal outside diameter (or outside pin) and inner diameter of bearing.
Grind the crank shaft or replace bearing if the crank shaft journal and bearing clearance is out of specified limit.

	Standard	Limit
Crankshaft Journal and Main Bearing Clearance	0.039-0.098 mm	0.11 mm
Crank pin and Connecting Rod Bearing clearance	0.03-0.07 mm	0.10 mm

https://truckmanualshub.com/

- **Crankshaft Run-Out**

1) Mount the crankshaft on a set of V-blocks.
2) Set up the dial indicator to the center of crankshaft journal.
3) Slowly rotate the crank shaft.
   Read the dial indicator (TIR) as you turn the crankshaft.
   Replace the crank shaft if the crank shaft measured value is out of the specified limit.

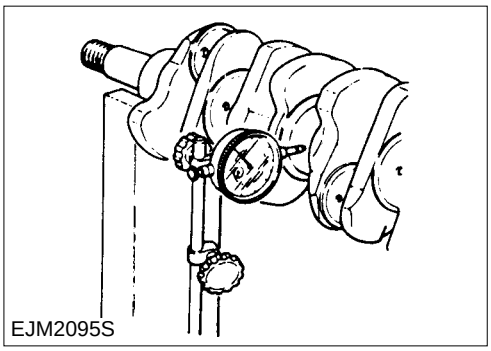
EJM2095S

	Standard	Limit
Crankshaft Run-Out	0.05 mm	0.40 mm

Check the repaired crank shaft after repaired, and replace it if any damaged or cracked part is found.

- **Main Bearing and Connecting Rod Bearing Tension**

Check main bearing to be maintained tension enough, and set up its regular position with the finger pressure.

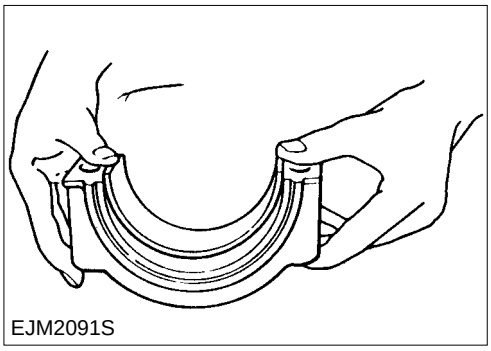
EJM2091S

- **Crankshaft Grinding**

Pay attention the below described in order to reuse the regrinded crank shaft.

Undersize Bearing	0.25 mm	0.50 mm

- **Procedure of Crankshaft grinding**

1) Grind the crank shaft journal part and pin part.
2) Grind "R" part of journl and pin to meet min R3.5 ± 0.2.
3) Make journal, pin and oil hole with R1, and finish it with soft cotton.

Journal and Pin Roughness	0.4 μ or less

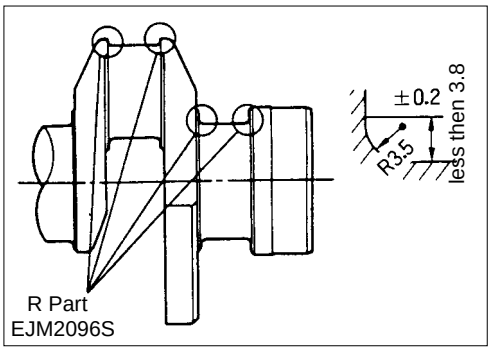

EJM2096S

4) Measure the size of jounal, pin, main bearing, con-rod bearing.
5) Measure the crank shaft run-out.

https://truckmanualshub.com/

- **Grinding Limit of Crankshaft**

Classification	Limit
Crank Jouranl Outside Diameter	79.405 mm
Crank pin Outside Diameter	63.424mm

Use the undersize bearing (0.25, 0.5 mm) when the main bearing clearance was in excess of limit.
Regrind the crank shaft in comply with below standard if undersize bearing is used.

	Standard	Limit
Main Bearing Clearance	0.039-0.098 mm	0.11 mm

Use the undersize bearing (0.25, 0.5mm) when the connecting rod bearing clearance was in excess of limit.
Regrind the crank shaft if undersize bearing is used.

	Standard	Limit
Connecting Rod Bearing Clearance	0.03-0.07 mm	0.10 mm

- **Crank Shaft Gear**

1) Disassemble the crank shaft gear with a crank shaft remover.
   Visually inspect the crankshaft gear.
   Replace the crankshaft gear if excessive wear or damage is discovered.

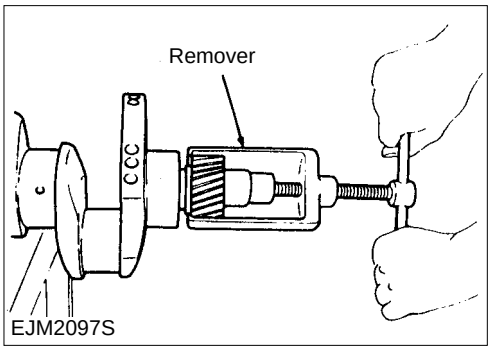

2) Use installer for installation when installing crank shaft gear.

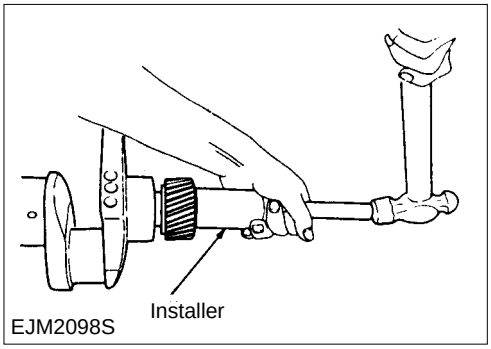

https://truckmanualshub.com/

2.3.13. Flywheel and Flywheel Housing (Rear Oil Seal)

- **Inspection of Ring Gear**

Replace the ring gear when wear of damage is found.
If the ring gear tooth are broken or excessively worn, the ring gear must be replaced.

- **Disassembly of Ring Gear**

Disassemble the ring gear with a hammer and a chisel.

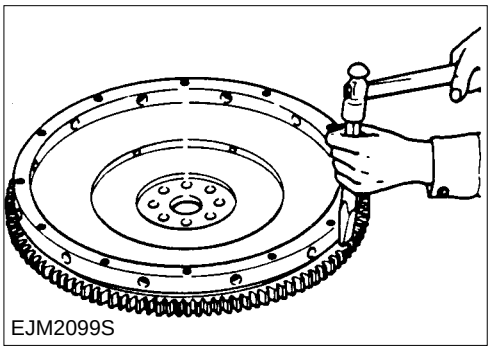
EJM2099S

- **Assemble of Ring Gear**

1) Make thermal expansion as heating ring gear.
   Pay attention that temperature of ring gear is not higher than 200˚C.
2) Assemble ring gear to flywheel as tapping with a hammer when it is heated enough.

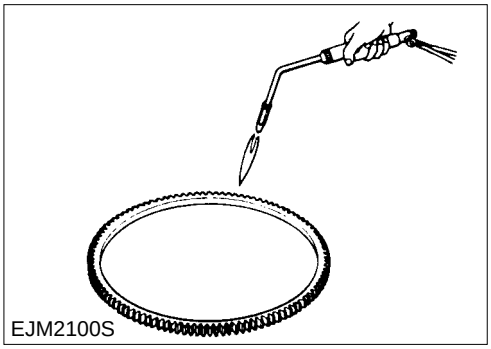
EJM2100S

- **Rear Oil Seal**

Disassemble oil seal from fly wheel with proper tool.
Assemble the oil seal to fly wheel housing with oil seal installer.

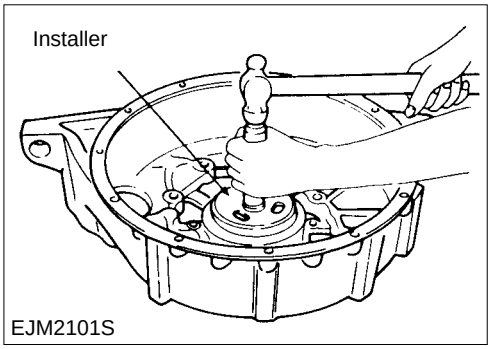

EJM2101S

2.3.14. Timing Gear Case Cover

- **Front Oil Seal**

Remove the oil seal with a hammer.
Assemble the oil seal with a assemble jig.

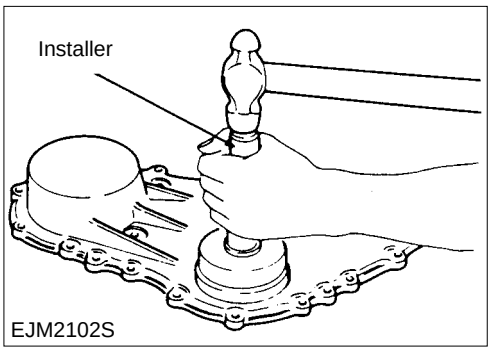

EJM2102S

https://truckmanualshub.com/

2.4. Reassembly

2.4.1. General Parts

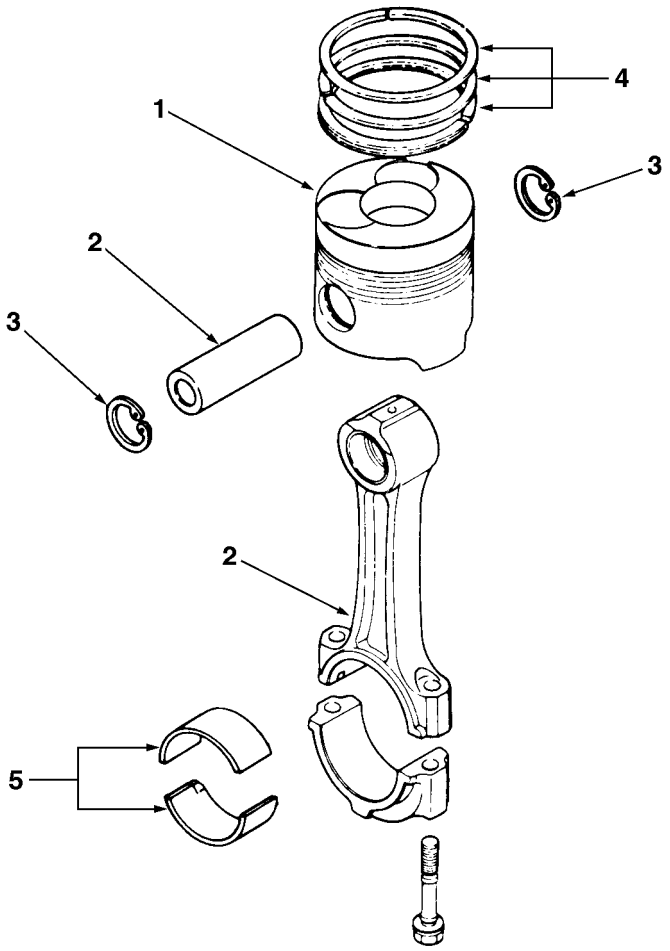

EJM2103S

<Order of Assembly >

1. Piston
2. Piston pin and connecting rod
3. Snap ring
4. Piston ring
5. Connecting rod bearing

https://truckmanualshub.com/

- **Piston and Connecting Rod**

Heat piston approximately 60˚C.

1) Assemble the piston and connecting rod with the pin.

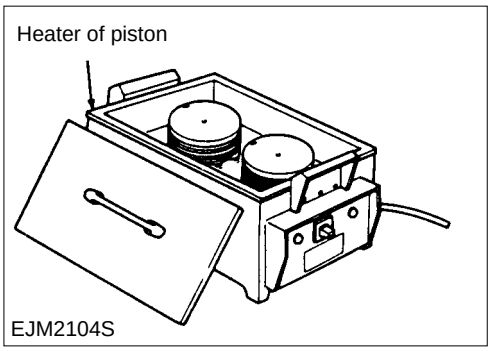

- **Piston Pin Snap Ring**

1) Assemble the piston pin and piston ring with snap ring plier.
2) Check it whether the piston and piston pin are smoothly operated or not.

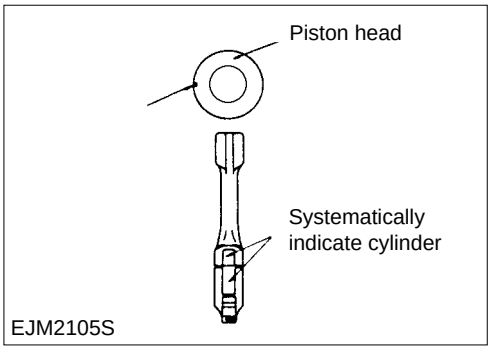

- **Piston Ring**

1) Assemble the piston ring with piston ring assembly jig.
   Assemble piston ring as follows:
   (1) Oil ring
   (2) 2nd compressed ring
   (3) 1st compressed ring
   Make sure the direction of 1st and 2nd compressed ring as shown in figure.
2) Spread engine oil to surface of piston ring.
3) Check it whether piston ring is smoothly rotating at the inside of piston ring groove or not.

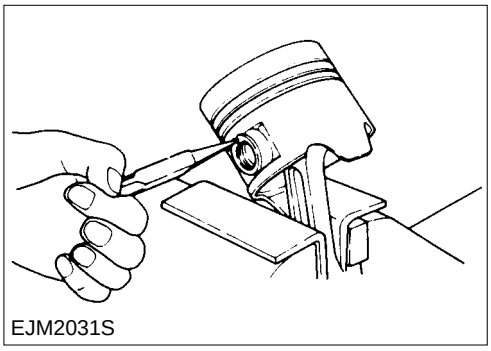

- **Connecting Rod Bearing**

1) Assemble the connecting rod bearing to big end and cap.
2) Assemble the connecting rod and connecting rod bearing, and tighten cap bolt to the specific torque.
3) Spread the engine oil to bearing.

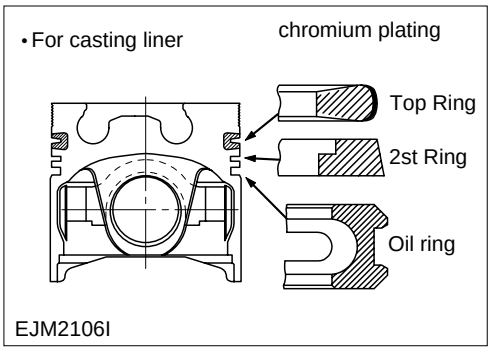

- **Assembly parts of Cylinder Head**

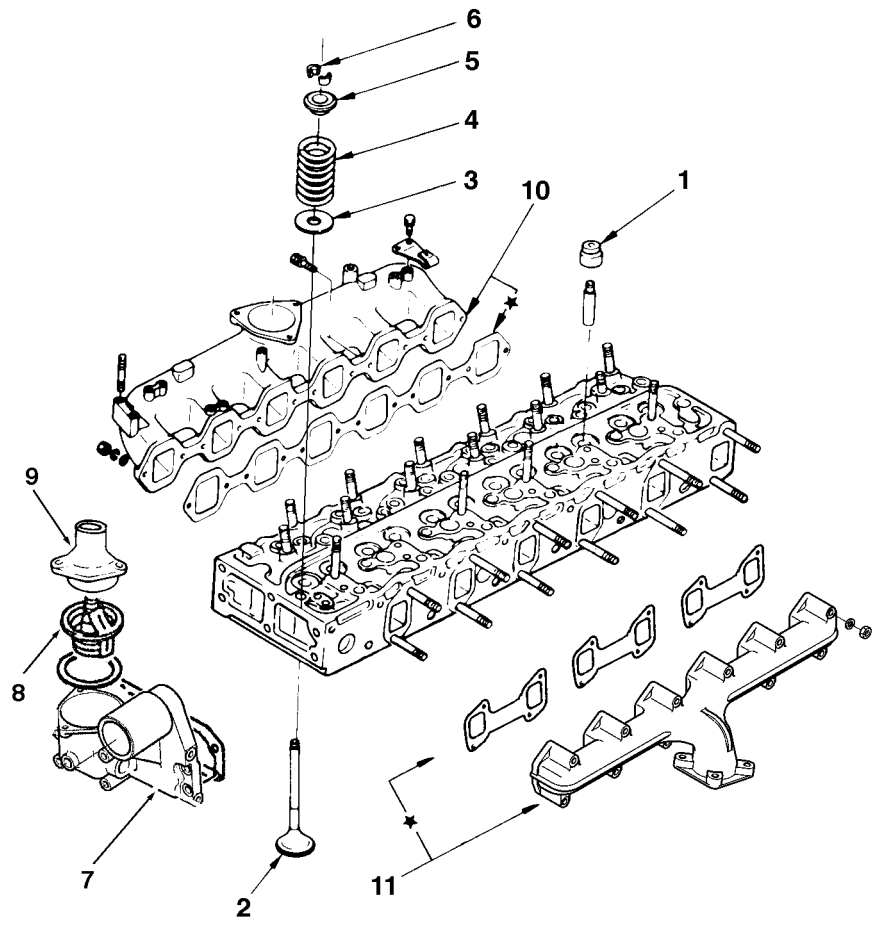

EJM2107S

★ : Repair Kit

<Order of Assembly>

1. Valve stem oil seal
2. Intake and exhaust valves
3. Spring seat(Lower)
4. Intake and exhaust valve sping
5. Spring seat(Upper)
6. Key
7. Thermostat housing and gasket
8. Thermostat
9. Coolant outlet pipe
10. Intake manifold and gasket
11. Exhaust manifold and gasket

- **Valve Stem Oil Seal**

1) Spread the engine oil to oil seal and the assembled part.
2) Assemble the valve stem oil seal.

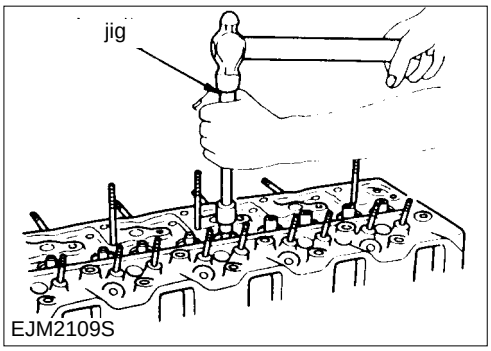

EJM2109S

- **Intake and Exhaust Valves**

1) Put the cylinder head on plate.
2) Spread the engine oil to valve stem.
3) Assemble valves in guicle.

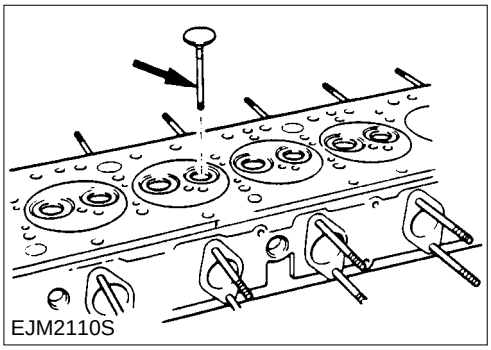
EJM2110S

- **Spring of Intake and Exhaust Vavle**

Assemble the valve spring of which painted direction is toward bottom.

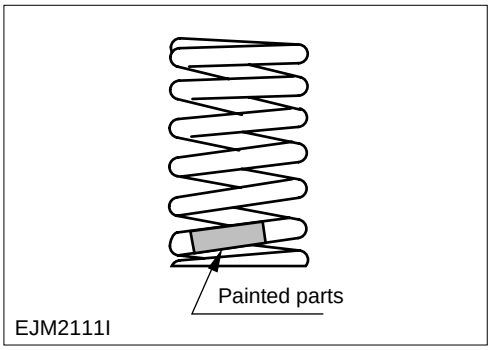

EJM2111I

- **Spring Seat Split Pin**

1) Assemble the split pin with the spring compressor.
2) After assembling split pin, completely assemble split pin with the rubber hammer.

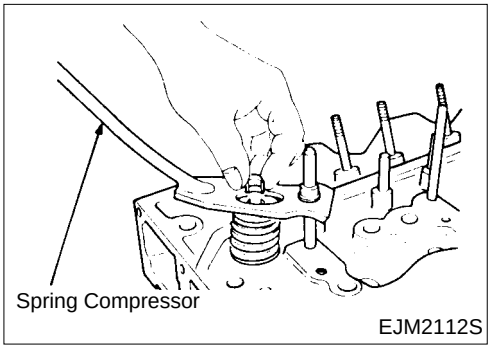

EJM2112S

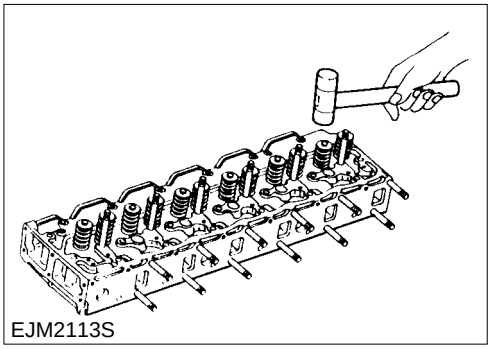
EJM2113S

https://truckmanualshub.com/

- **Intake Manifold and Gasket**

1) Assemble the intake manifold of which unchamfered corner is toward up and rear of engine.
2) After assembling intake manifold, and assemble the bolt to the specified torque in order. (see figure)

Intake Manifold Bolt Torque	2. 6 ± 0.5 kg•m

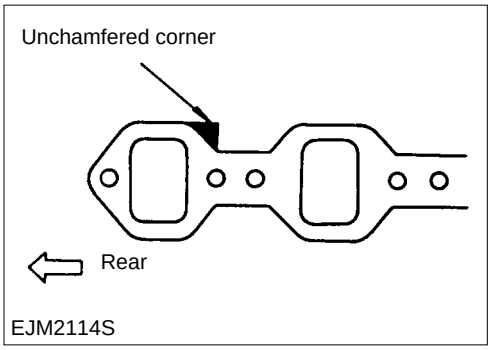

EJM2114S

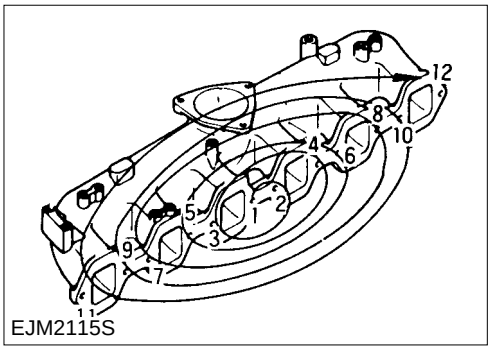

EJM2115S

- **Exhaust Manifold and Gasket**

1) Assemble the exhaust manifold and gasket of which "TOP" mark is shown.
2) After assembling the exhaust manifold, assemble blots to the specified torque in order.(see figure)

Exhaust Manifold Bolt Torque	2. 9 ± 0.5 kg•m

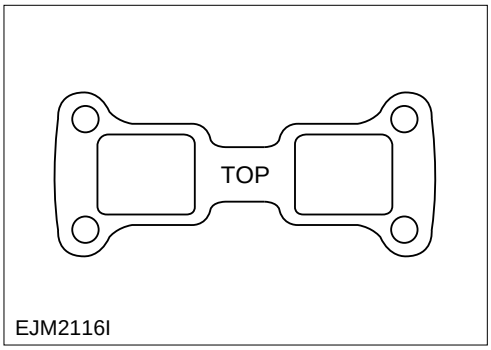

EJM2116I

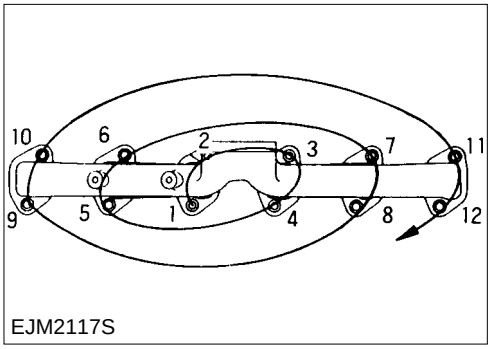

EJM2117S

- **Assembly of Rocker Arm and Rocker Arm Shaft**

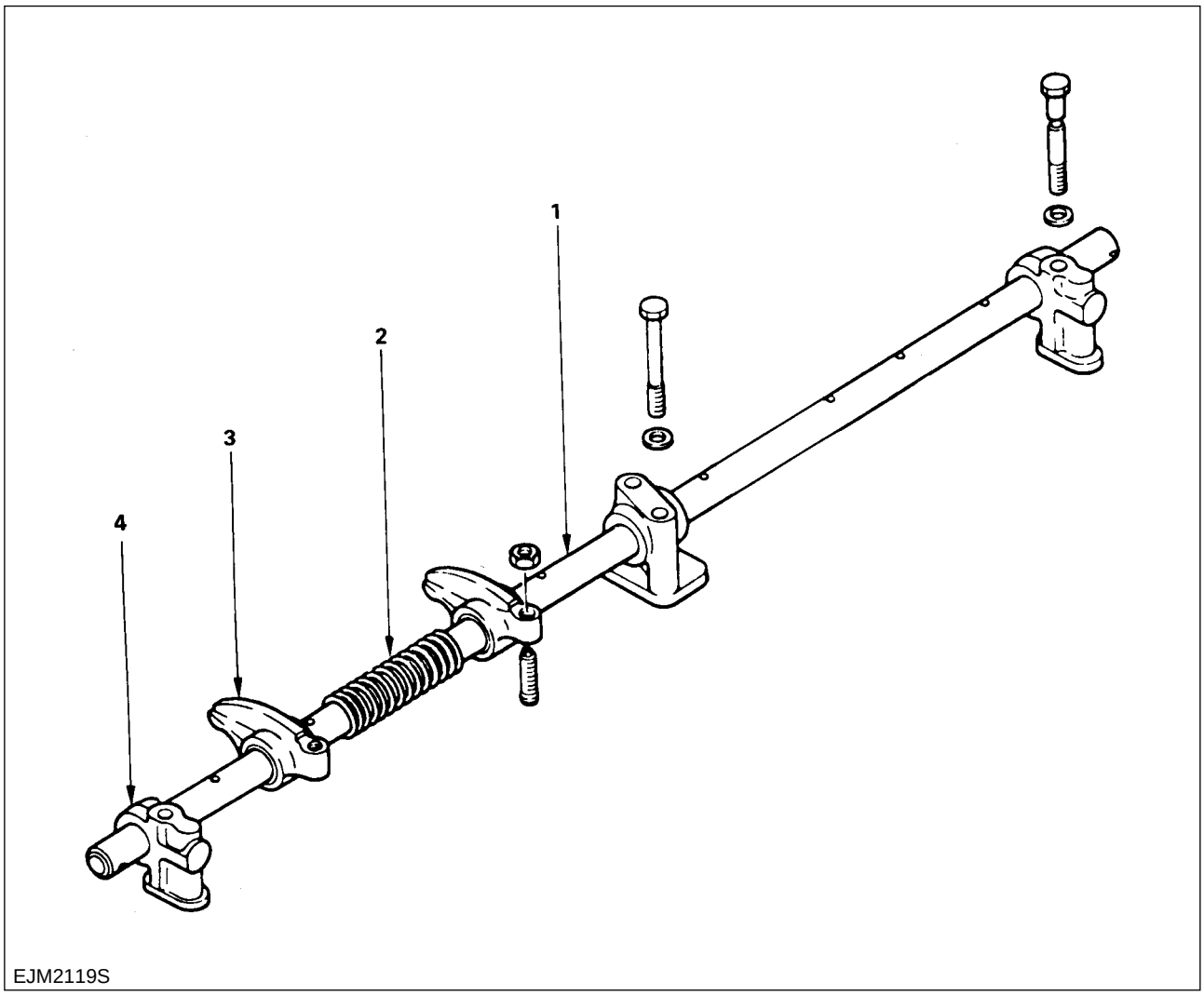

<Order of Assembly>

1. Rocker arm shaft
2. Spring
3. Rocker arm
4. Bracket

- **Rocker Arm Shaft**

Assemble the rocker arm shaft of which oil hole is toward up.

2.4.2. Inside parts

- **Main Components (I)**

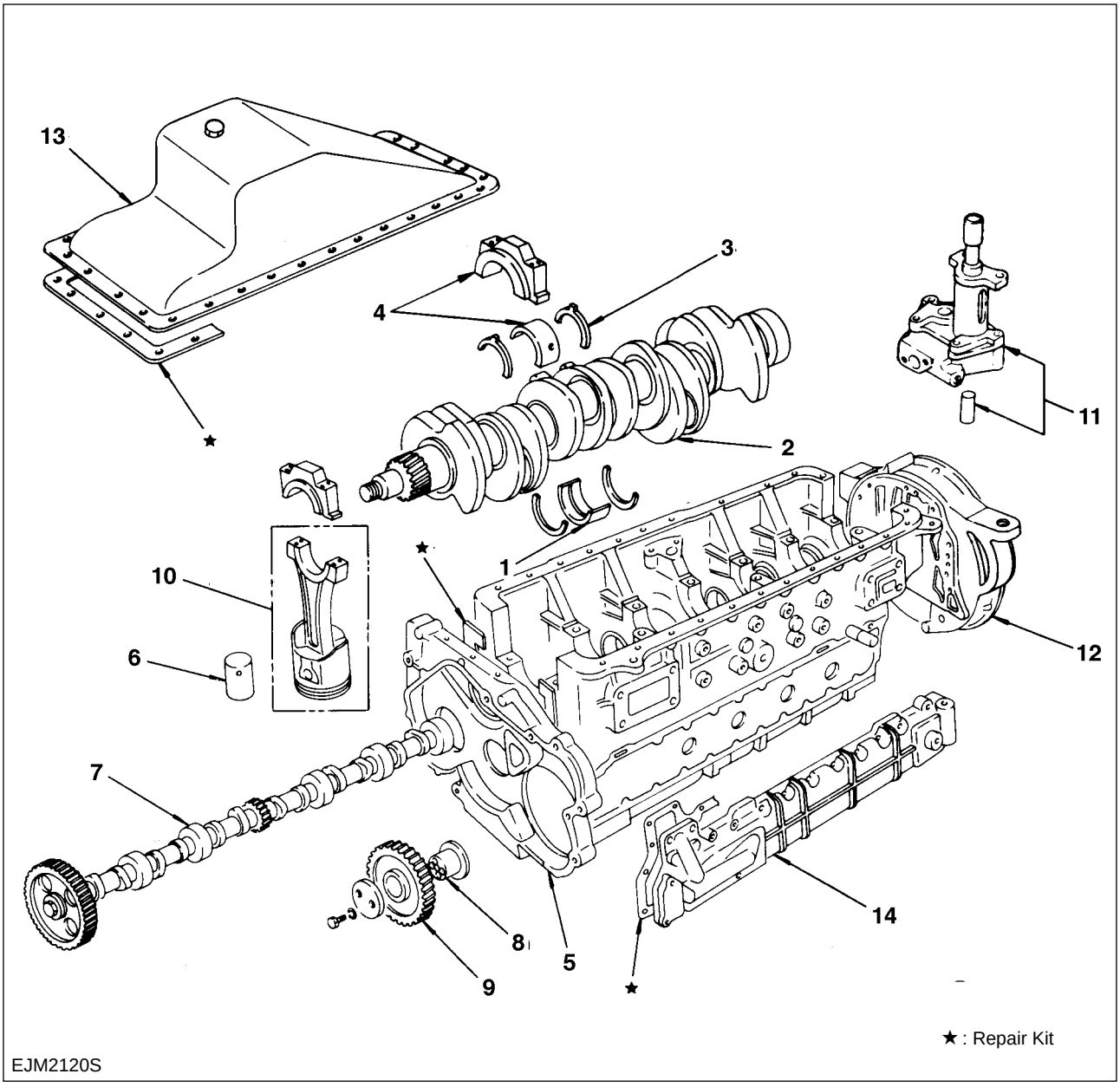

<Order of Assembly>

1. Crank shaft bearing
2. Crank shaft
3. Thrust bearing
4. Crankshaft bearing and crank shaft bearing cap
5. Timing gear case
6. Tappet
7. Camshaft
8. Idler gear shaft
9. Idler gear
10. Piston and ocnnecting rod
11. Oil pump and coupling
12. Flywheel housing
13. Oil pan
14. Oil cooler

https://truckmanualshub.com/

Caution

- **Crank shaft Bearing (Upper Half)**

All upper bearing have oil port and groove.

- **Crank shaft Bearing(Lower Half)**

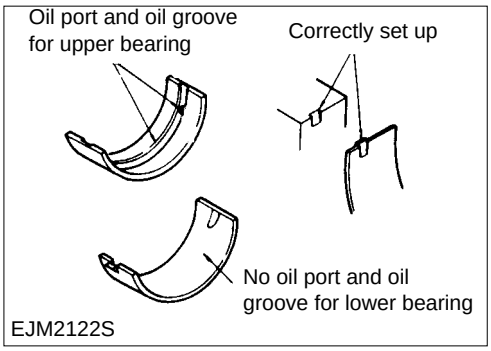

- **Crank shaft**

Assemble the crank shaft of which gear is toward front of engine.

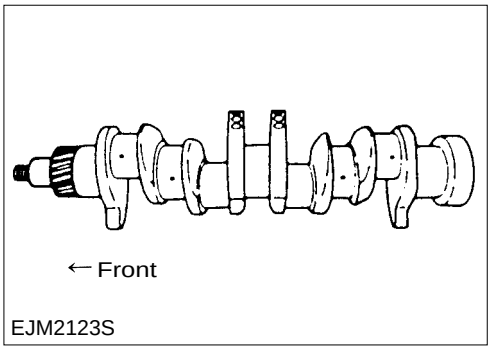

- **Thrust washer**

Assemble thrust washer of which oil groove side is toward crank shaft side.

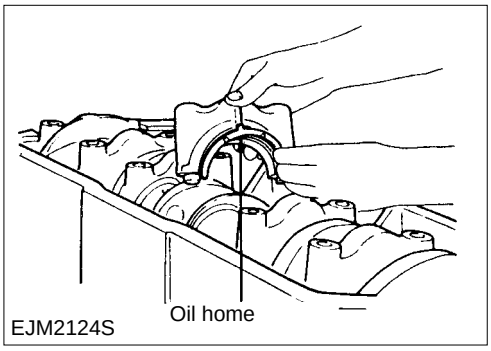

- **Crank shaft Bearing Cap**

1) Spread the engine oil at the bearing cap bolt.
2) Assemble the bearing cap at the crank shaft.
   Make sure the direction of arrow is toward front of engine.
3) Torque bearing cap bolt to specified torque in order. (see figure)

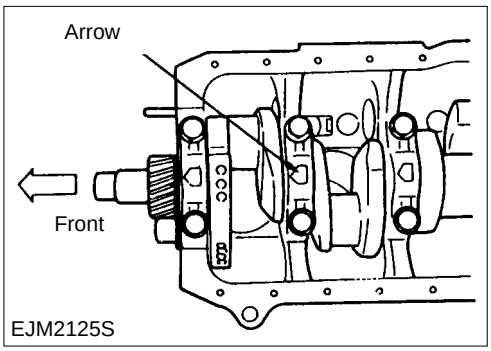

https://truckmanualshub.com/

Tightened Torque	24. 0 ± 1 kg•m

4) Check it whether the crank shaft is smoothly rotated by hand or not.

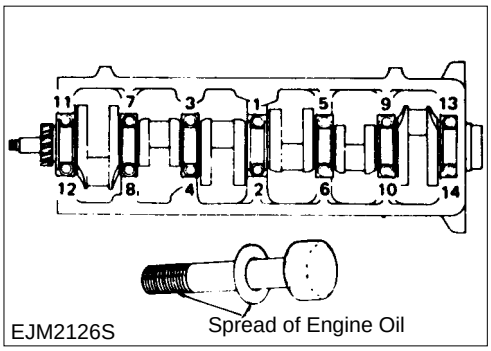

EJM2126S

- **Timing Gear Case**

Tighten timing gear case bolt to the specified torque.

Tightened Torque	2.6 ± 0.5 kg•m

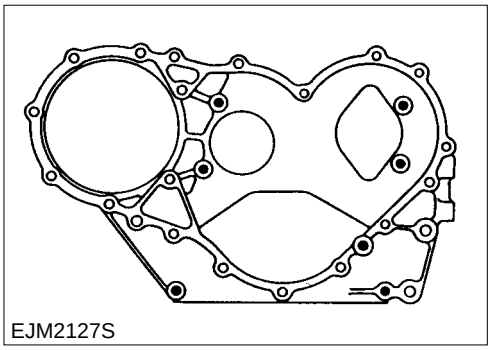
EJM2127S

- **Cam shaft**

Tighten thrust plate bolt to be aligned to cam shaft gear hole.

Thrust Plate Bolt Torque	2.6 ± 0.5 kg•m

Camshaft Gear Bolt Torque	16 ± 1.5 kg•m

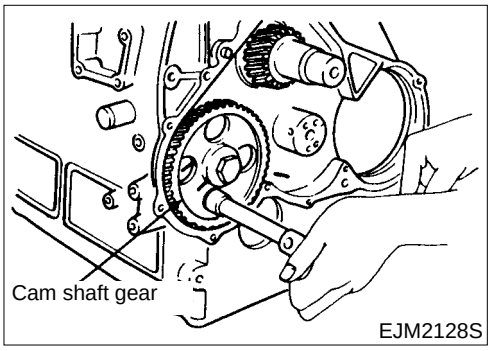

EJM2128S

- **Idle Gear Shaft**

Assemble the idle gear shaft with thrust washer fixing bolt for oil port of idle shaft to be toward cam shaft.

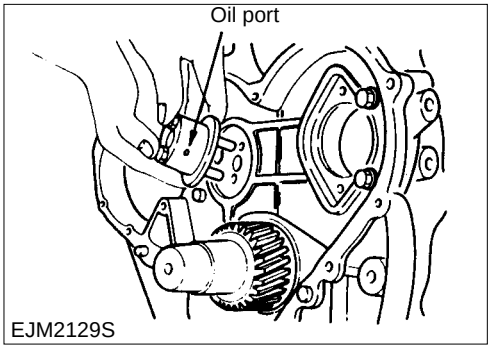

EJM2129S

- **Idle Gear**

Assemble the gear so as to be aligned with every timing mark of A,B,C.
Assemble thrust washer of which the chamfered side is toward front side.

Torque	5.5 ± 1 kg•m

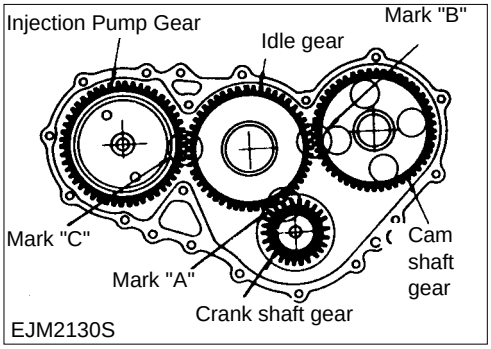

EJM2130S

https://truckmanualshub.com/

- **Piston and Connecting Rod**

1) Fix the position of piston ring (see figure)
2) Spread engine oil to piston, pinston ring, connecting rod bearing.
3) Piston front mark should be directed to front of engine.

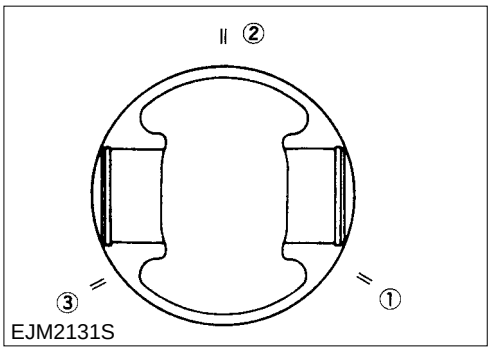

EJM2131S

4) Use the piston ring compressor when assembling pistion.
5) Push piston in position until con-rod touch the crank pin.

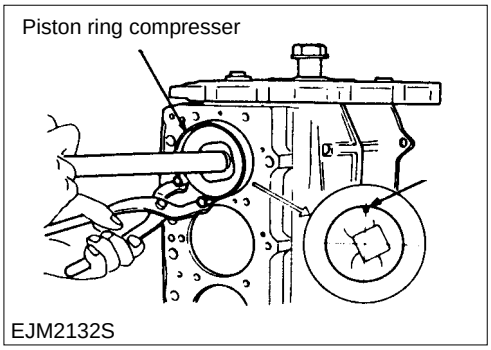

EJM2132S

6) Assemble the connecting rod bearing cap to the connecting rod, idenfifying cylinder NO.

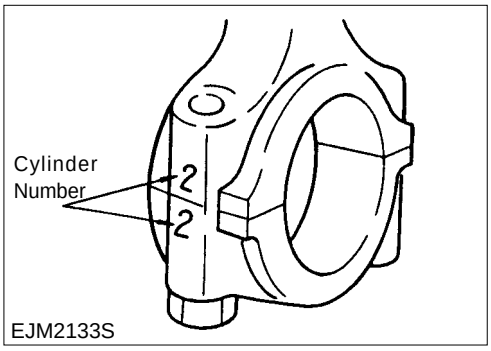

EJM2133S

Torque the bolt to below spec.

Torque(kg • m)	12 ± 0.25	9.75 ± 0.25
Bolt head	11	TY 11T / TY 12T
surface treatment	oxidized steel	phosphoric acid & basic film.

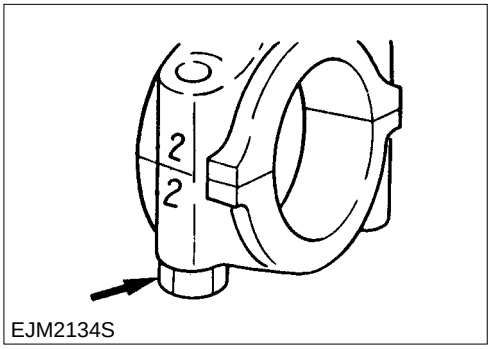

EJM2134S

- **Oil Pump**

Fill up oil when assembling the oil pump.

https://truckmanualshub.com/

Oil Pump mounting Bolt Torque	5.3 ± 1.0 kg•m

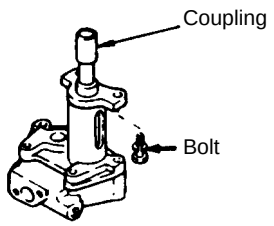

EJM2135S

- **Flywheel Housing**

Tighten bolt to specified torque after liquid gusket is applied on the gasket.

Bolt Torque	16.1± 1 kg•m

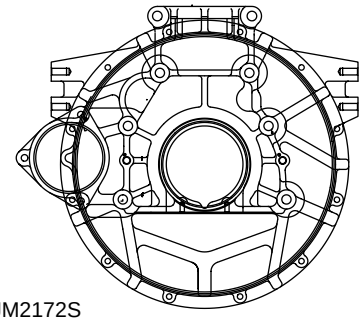
EJM2172S

- **Oil Pan**

1) Install an oil fan after putting on oil fan gasket and liquid gasket between cyliner block and oil fan.

Torque	2.6 ± 0.5 kg•m

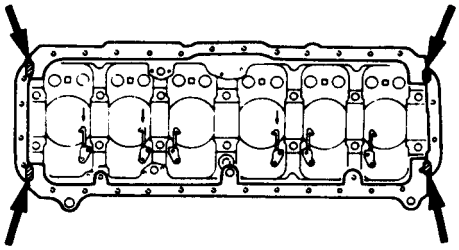
EJM2137S

- **Oil Cooler**

Assemble the oil cooler bolt in order(figure) after putting liquid gasket and the oil cooler gasekt on the block.

Torque	2.6 ± 0.5 kg•m

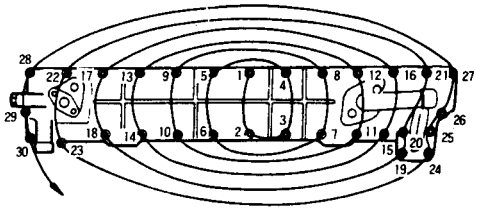
EJM2138S

• Major Component Reassembly Parts (II)

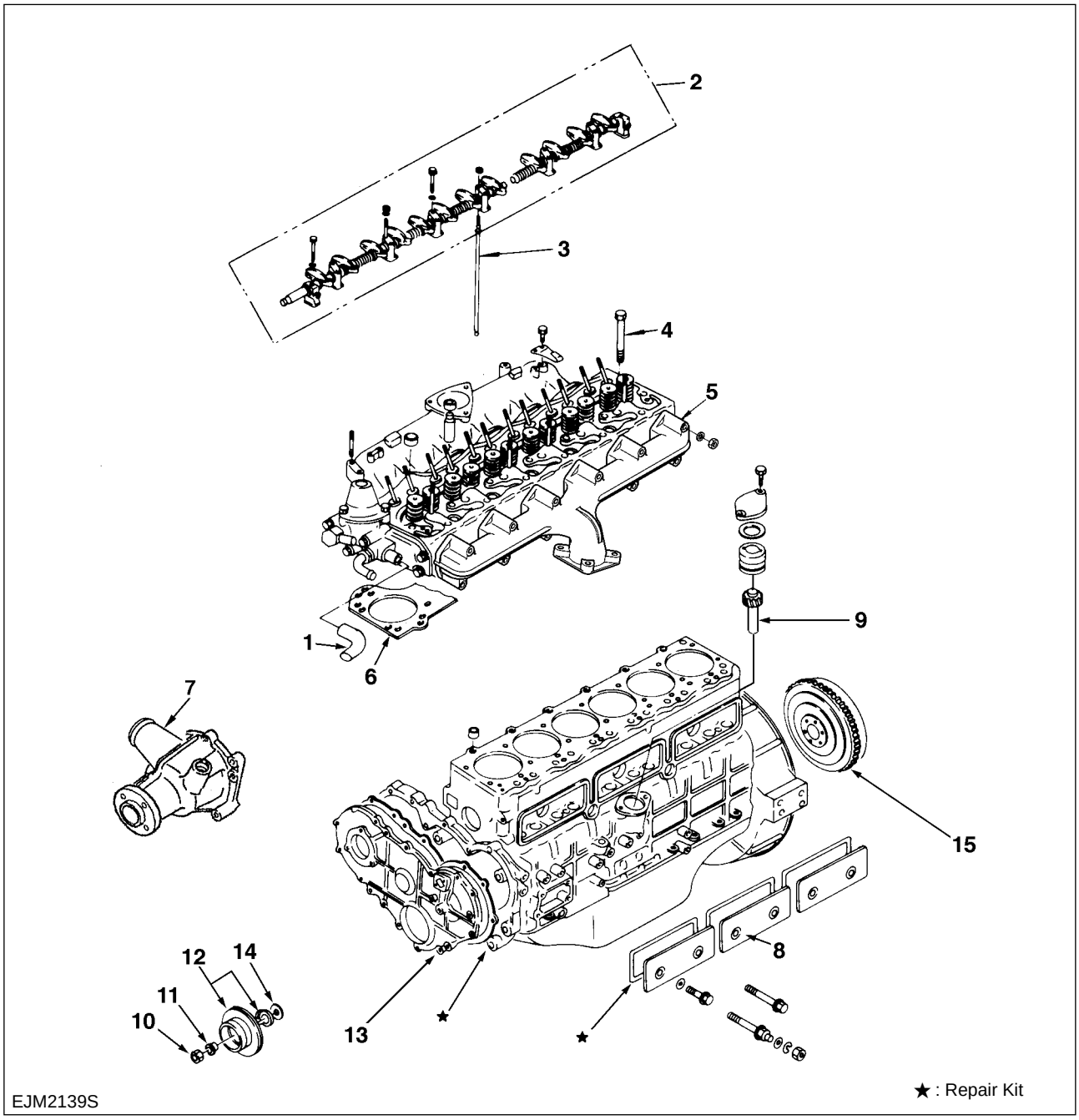

<Reassembly Steps>

1. Rubber hose
2. Push rod
3. Rocker arm and rocker arm shaft
4. Cylinder head bolt
5. Cylinder head ass'y
6. Cylinder head gasket
7. Water pump
8. Tappet chamber cover
9. Oil pump driving pinion
10. Crankshaft pulley nut
11. Taper bushing
12. Crankshaft pulley and dust thrower
13. Timing gear cover
14. Oil thrower
15. Flywheel

https://truckmanualshub.com/

- **Flywheel**

1) Apply engine oil on the flywheel bolt.
2) Orderly tighten the fly wheel bolt.(see figure)

Bolt Torque	22.3 ± 2.2 kg•m

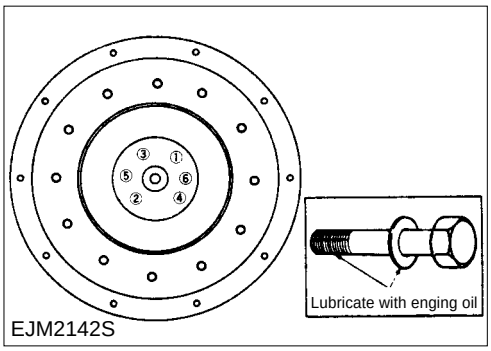

- **Injection Pump**

Tighten the injection pump bolts to a specified torgue for "C" marks of injection pump gear and idle gear to be aligned each other.

Bolt Torque	2.6 ± 0.5 kg•m

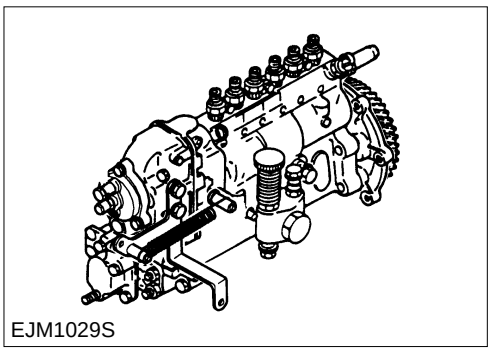

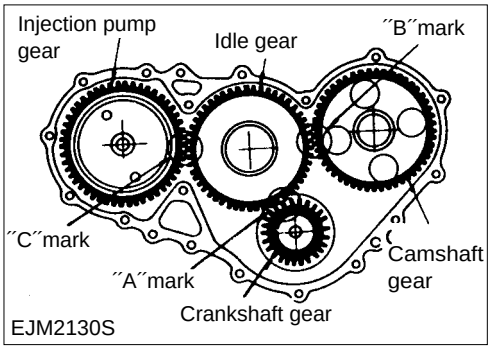

- **Crank shaft pulley nut**

Tighten a nut with wrench.

Torque	60.0 ± 5.0 kg•m

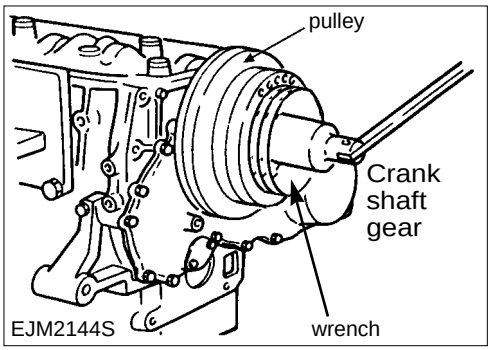

- **Tappet Chamber Cover**

Tighten a bolt with gasket and liquid gasket.

Torque	2.6 ± 0.5 kg•m

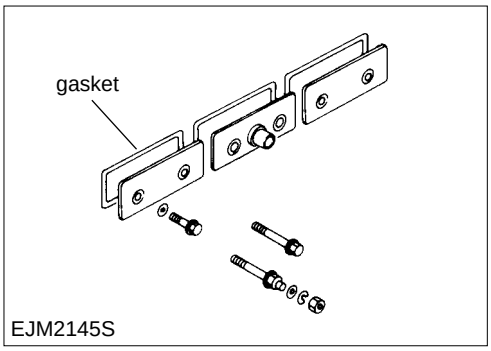

https://truckmanualshub.com/

- **Water Pump**

Prior to putting the gasket, spread a liquid gasket.

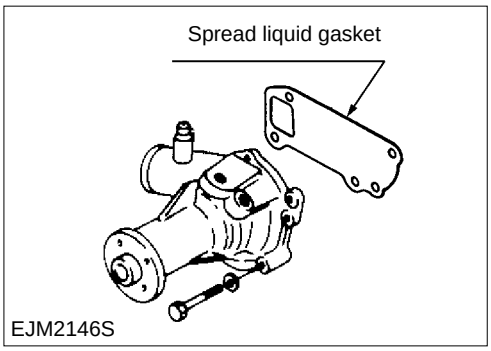

- **Cylinder Head Gasket**

Make sure mark "Top" is up and mark "Front" is down.

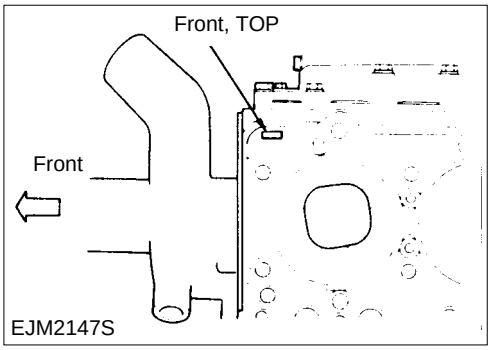

- **Assembled Cylinder Head**

Orderly and repeatedly tighten bolts with engine oil at the cylinder head, as shown in figure.

		1st step	2nd step	3nd step
torque	dodecagon bolt	4.0 kg•m	90°	60°(0~30°)

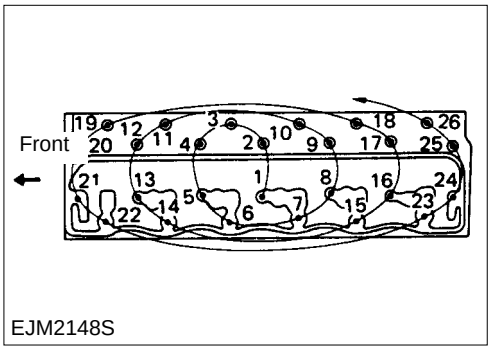

- **Assembly Rocker Arm Shaft**

Orderly tighten the rocker arm bolt as shown in figure.

Torque	3.1 ± 0.5 kg•m

Adjust valve clearance
Refer to section 1.5.9

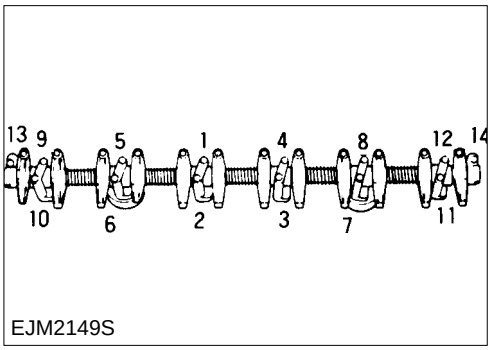

https://truckmanualshub.com/

2.4.3. External Parts(A)

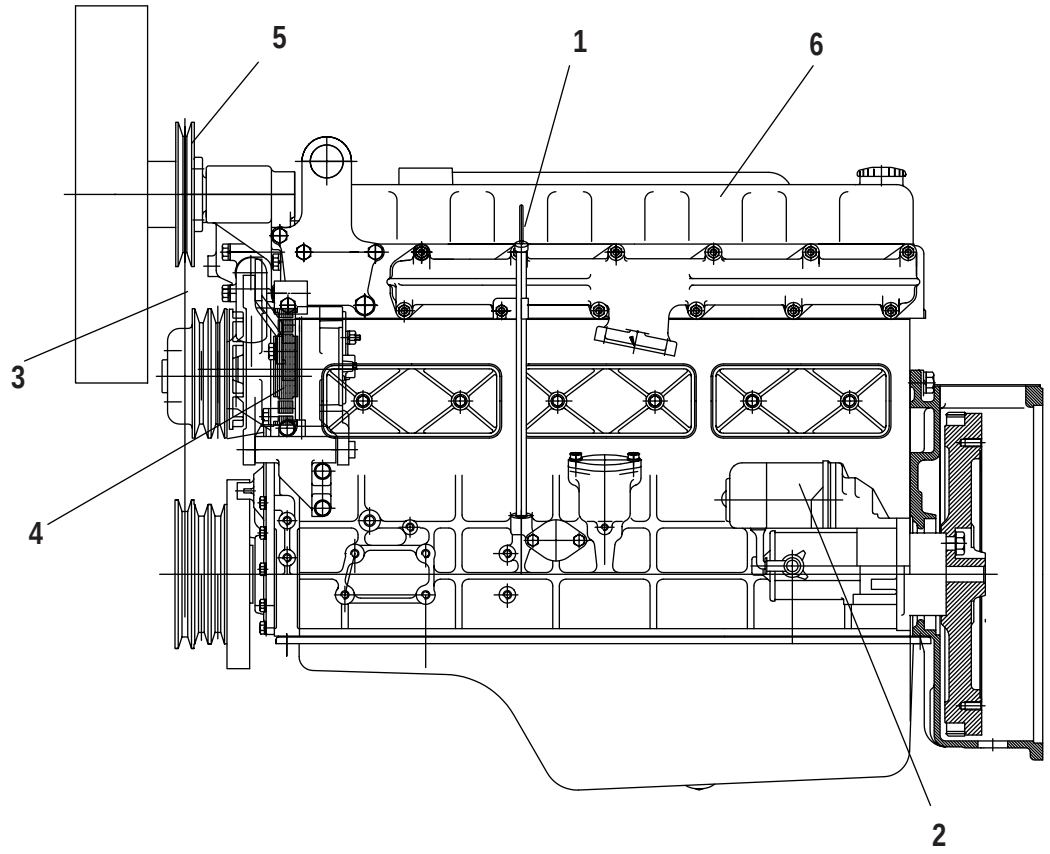

SVC2

<Reassembly Steps>

1. Cylinder head cover
2. Fan pulley
3. Generater
4. Fan belt
5. Starter motor
6. Dipstick and guide tube

https://truckmanualshub.com/

- **Cylinder Head Cover**

Orderly tighten the bolt as it is shown in figure.

Bolt Torque	2.1 ± 0.5 kg•m

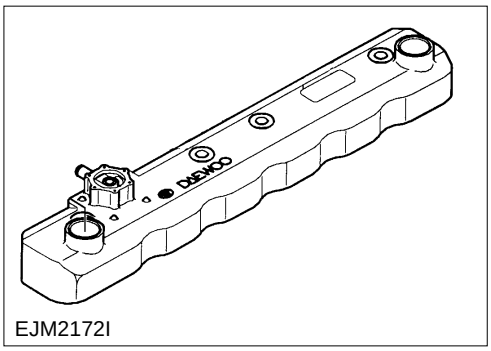

EJM2172I

- **Fan Belt**

Adjust the fan belt tension
See the 1.5.7. colling fan belt.

- **Starter Motor**

Tighten bolts to the specified torque after assembling a starter motor to fly wheel housing.

Torque	8.4 kg•m

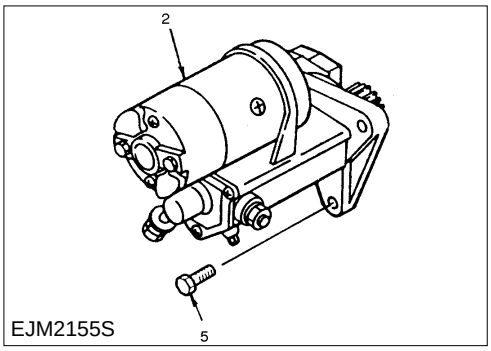

EJM2155S

https://truckmanualshub.com/

2.4.4. External Parts (B)

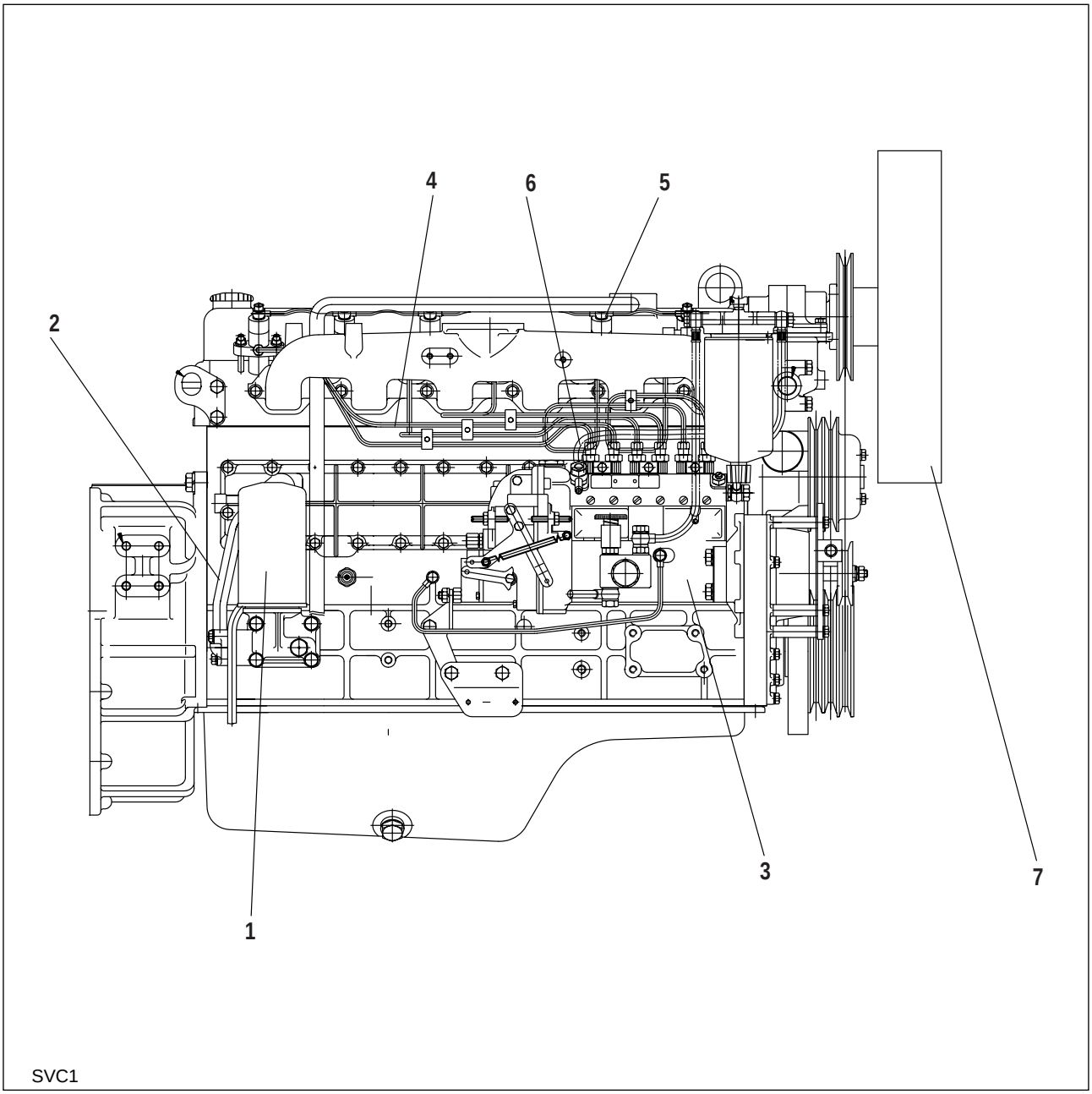

<Reassembly Steps>

1. Oil filter
2. Oil pipe (Oil filter to oil cooler)
3. Injection pump
4. Injection pipe
5. Injection nozzle
6. Fuel return pipe
7. Cooling fan

- **Injection Nozzle**

Ajdust the injection opening pressure with an adjustment screw.
Use a new gasket and dust cover when assembling the nozzle.

Torque	1.9 ± 0.2 kg•m

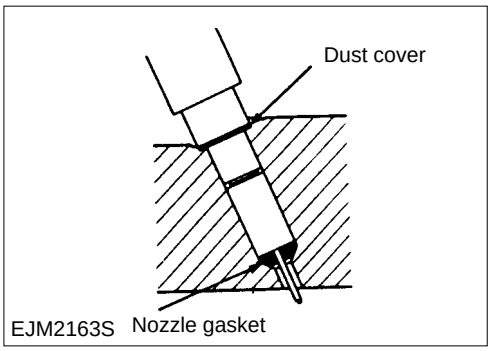

EJM2163S

- **Fuel Injection Pipe**

Surely tighten the delivery valve holder to a specified torque.
It will be a reason for leakage from the control rack and pipe if it is in excessive tightening.

Bolt Torque	3.1 ± 0.2 kg•m

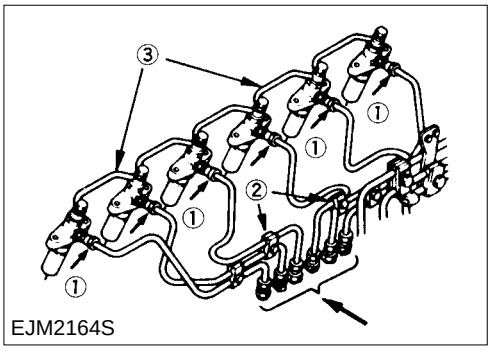

EJM2164S

- **Oil Filter**

Torque	4.3 ~ 6.3 kg•m

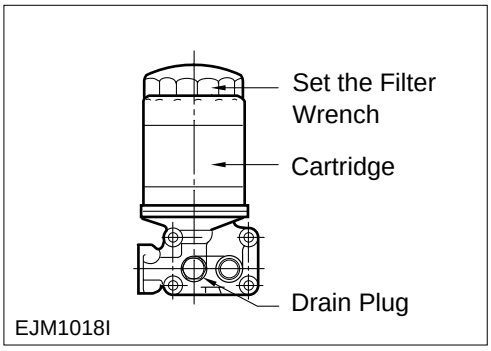

EJM1018I

- **Fuel Pipe**

Make sure not to use different joint bolt when assembling it.
Torque joint bolts to specified torque.

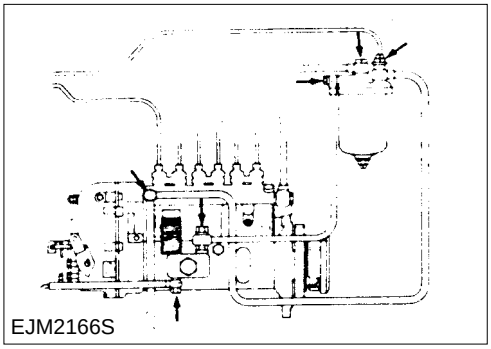
EJM2166S

- **Intake Stake**

Torque	2.6 ± 0.5 kg•m

- **Adjustment of Injection Timing**

See 1.5.10. Injection Timing.

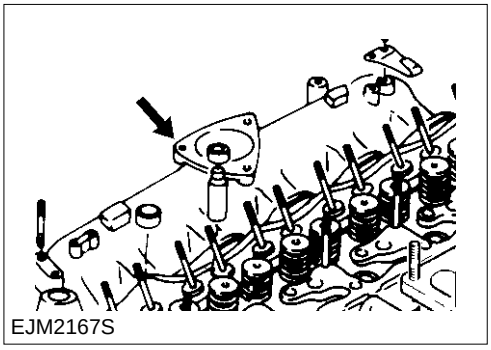
EJM2167S

https://truckmanualshub.com/

3. System of Lubrication

3.1. General Description

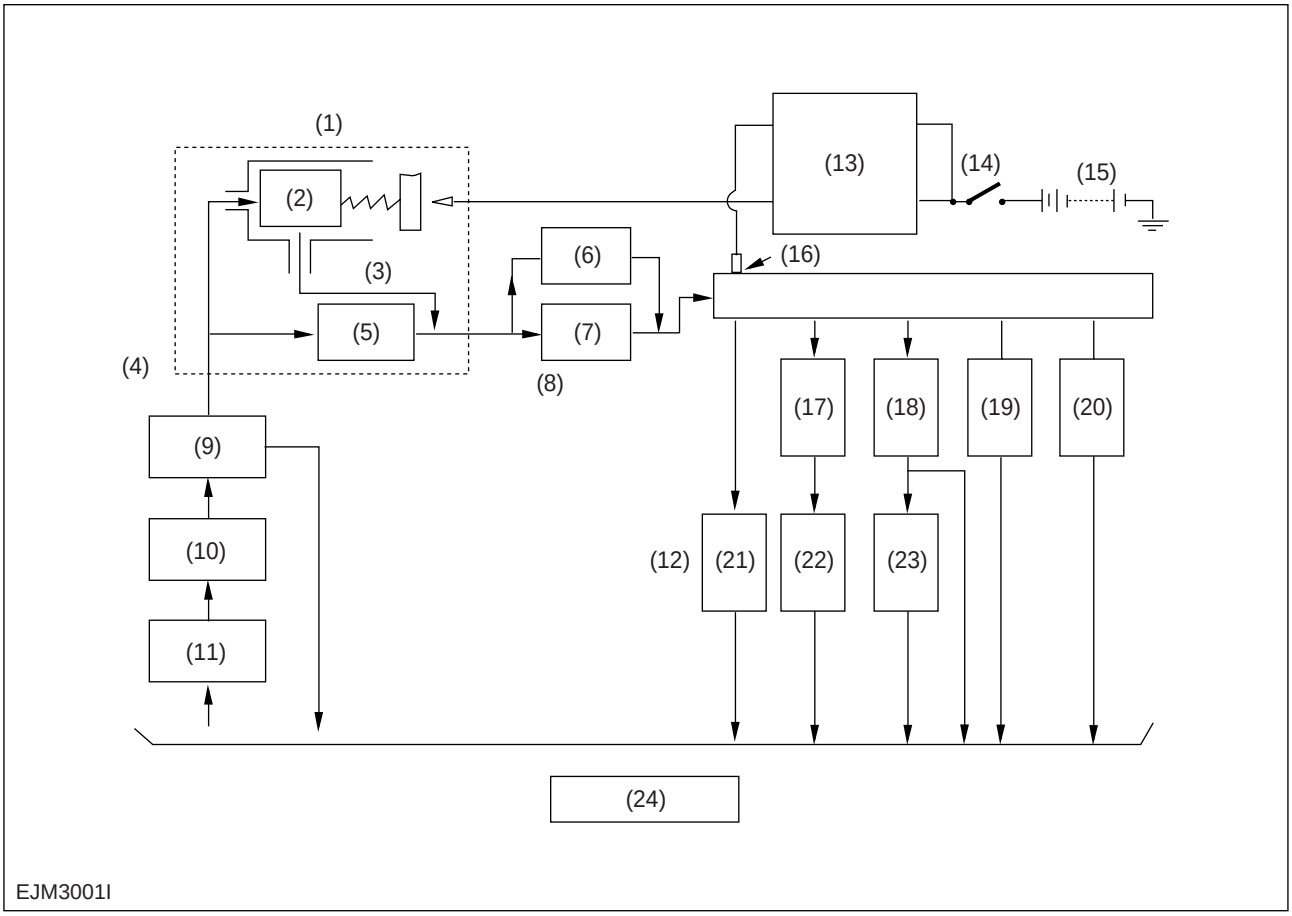

(1) Full flow filter
(2) By-pass valve
(3) Valve opening pressure 1kg/cm^2
(4) Valve opening pressure 8kg/cm^2
(5) Paper filter
(6) By-pass valve
(7) Oil cooler
(8) Valve opening pressure 2kg/cm^2
(9) Oil relief
(10) Oil pump
(11) Oil strainer
(12) Valve opening pressure 4.5kg/cm^2
(13) Oil pressure and oil filter warning lamp
(14) Starter switch
(15) Battery
(16) Oil pressure switch
(17) Crank shaft bearings
(18) Cam-shaft bearings
(19) Timing dile gear
(20) Injection Pump
(21) Oil relief valve
(22) Conn. rod bearings
(23) Cyl. head valve system
(24) Oil pan

3.2. Oil Pump

• Disassembly

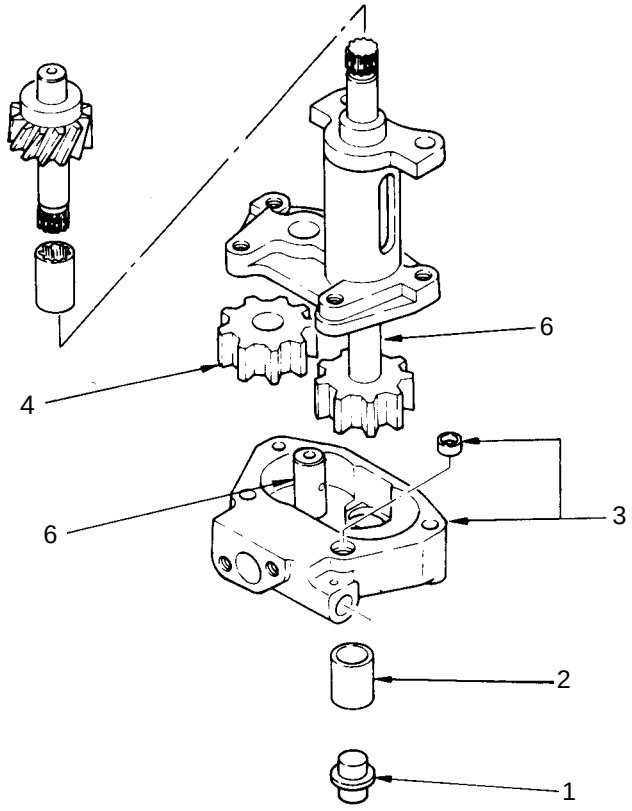

EJM3002S

<Order of disassembly>

1. Strainer
2. Suction pipe
3. Cover and dowel
4. Pinion
5. Drive shaft and gear
6. Pinion gear shaft

https://truckmanualshub.com/

• Inspection and repair

Visually Inspect the disassembled parts whether there are excessive wear or damage.

Use a feeler gauge to measure the clearance between the oil pump cover (oil pump case) inside surface and the driven gear.

If the clearance exceeds the specified limit, the drive gear and/or the oil pump cover must be replaced.

Clearance between oil pump drive gear and inside of cover is as follows.

Limit of Oil Pump Cover and Oil Pump Drive Gear Clearance	0.18 mm

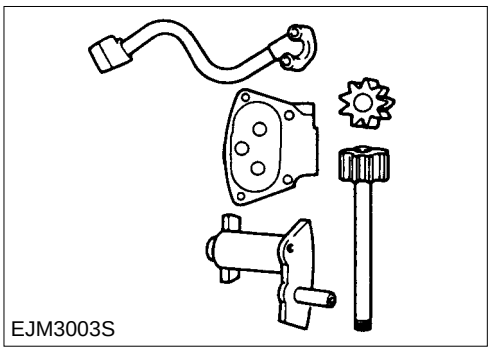
EJM3003S

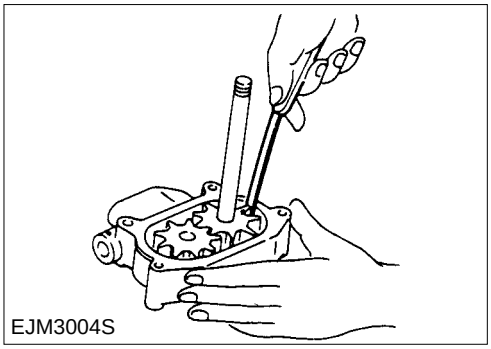
EJM3004S

Axial Clearance of oil Pump Driven Gear and oil pump body

Limit	0.12 mm

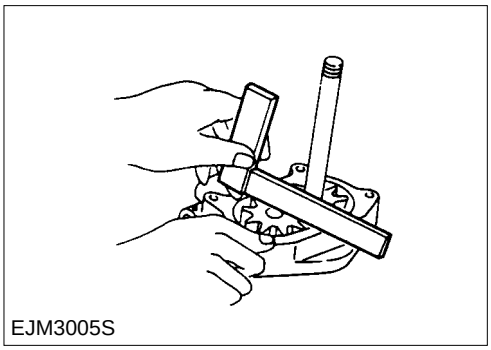
EJM3005S

Reassembly

Reassembly is reverse order of disassembly.

https://truckmanualshub.com/

3.3. Oil Cooler

• **Disassembly**

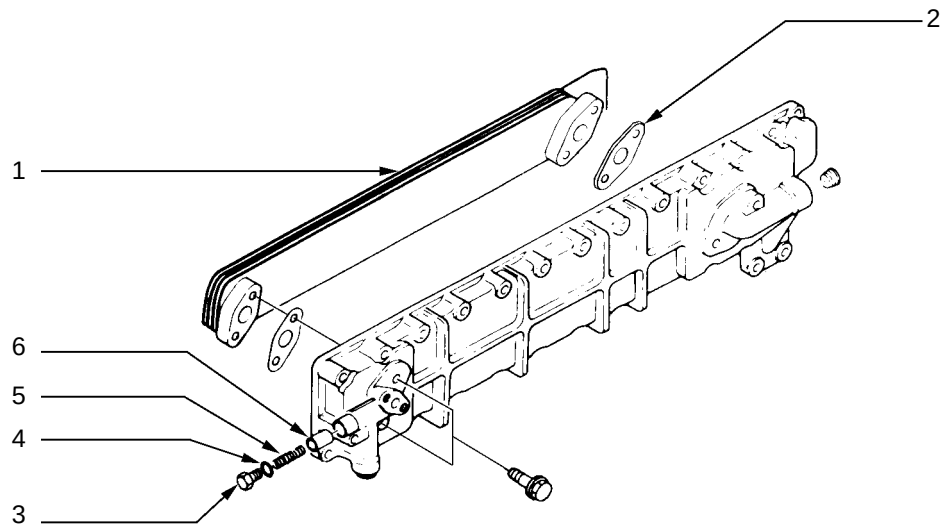

EJM3008S

<System of Disassembly>

1. Element.
2. Element gasket
3. By-pass vlave plug
4. O-ring ; plug
5. By-pass valve spring
6. By-pass valve

Inspection and Repair
Correct and replace it if there are worn or defect parts.

• Reassembly

Reassembly is reverse order of disassembly.

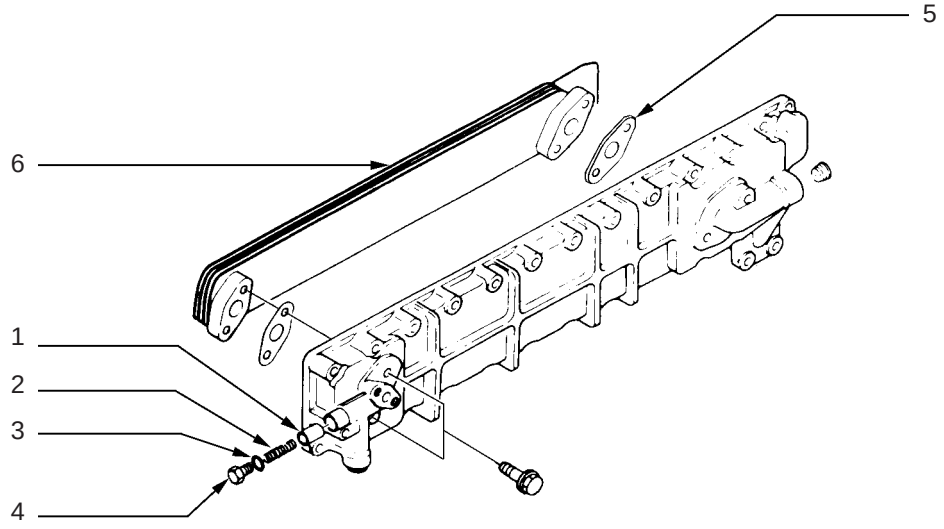

EJM3009S

<Reassembly order>

1. By-pass valve
2. By-pass valve spring
3. O-ring : plug
4. By-pass valve plug
5. Element gasket
6. Element.

• Oil cooler element tigthening bolts

Tighten the bolts with the specified torque after assembling an oil cooler element.

Torque	2.6 ± 0.5 kg•m

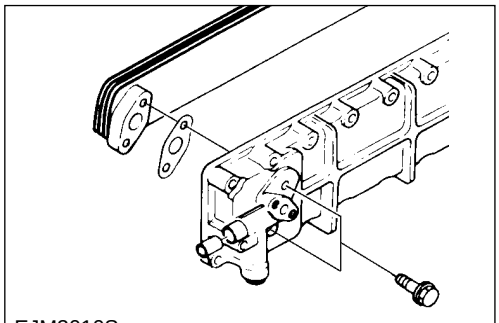

EJM3010S

https://truckmanualshub.com/

4. Cooling System

4.1. General Description

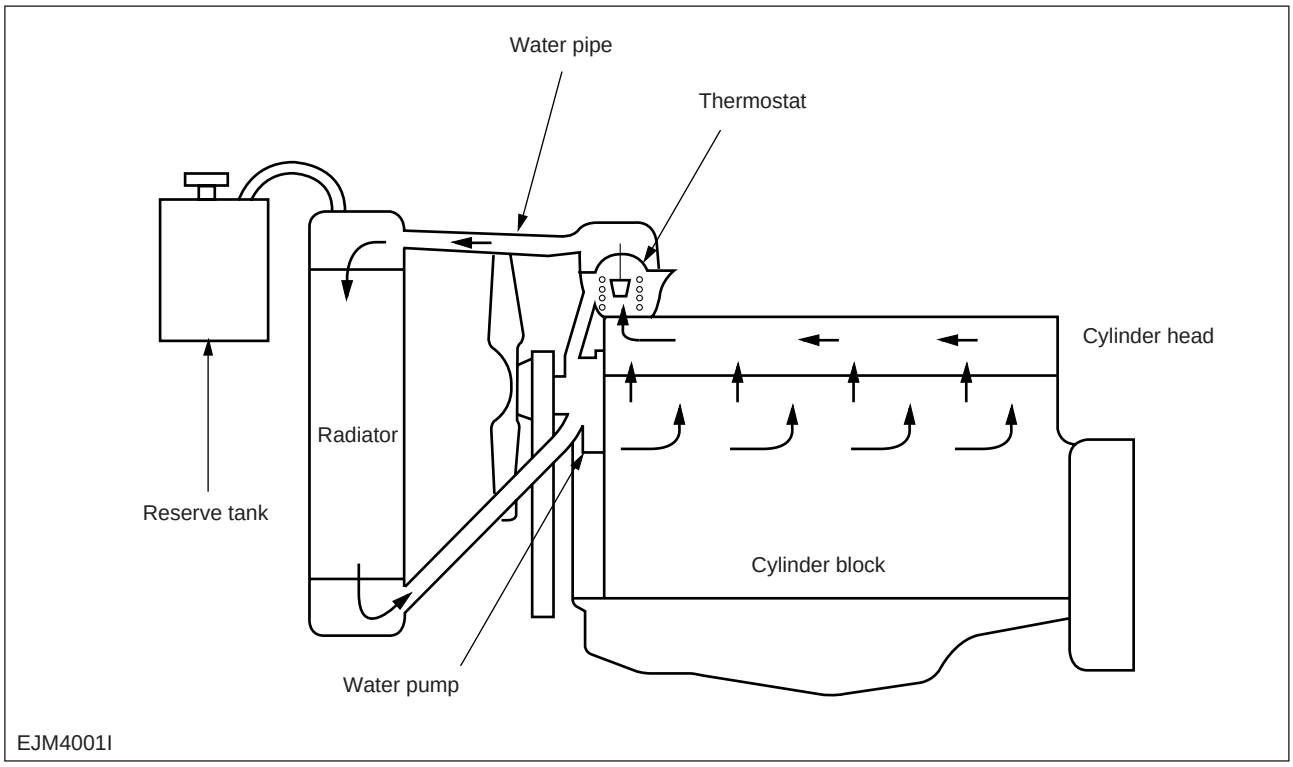

4.2. Coolant Pump

- **Disassembly**

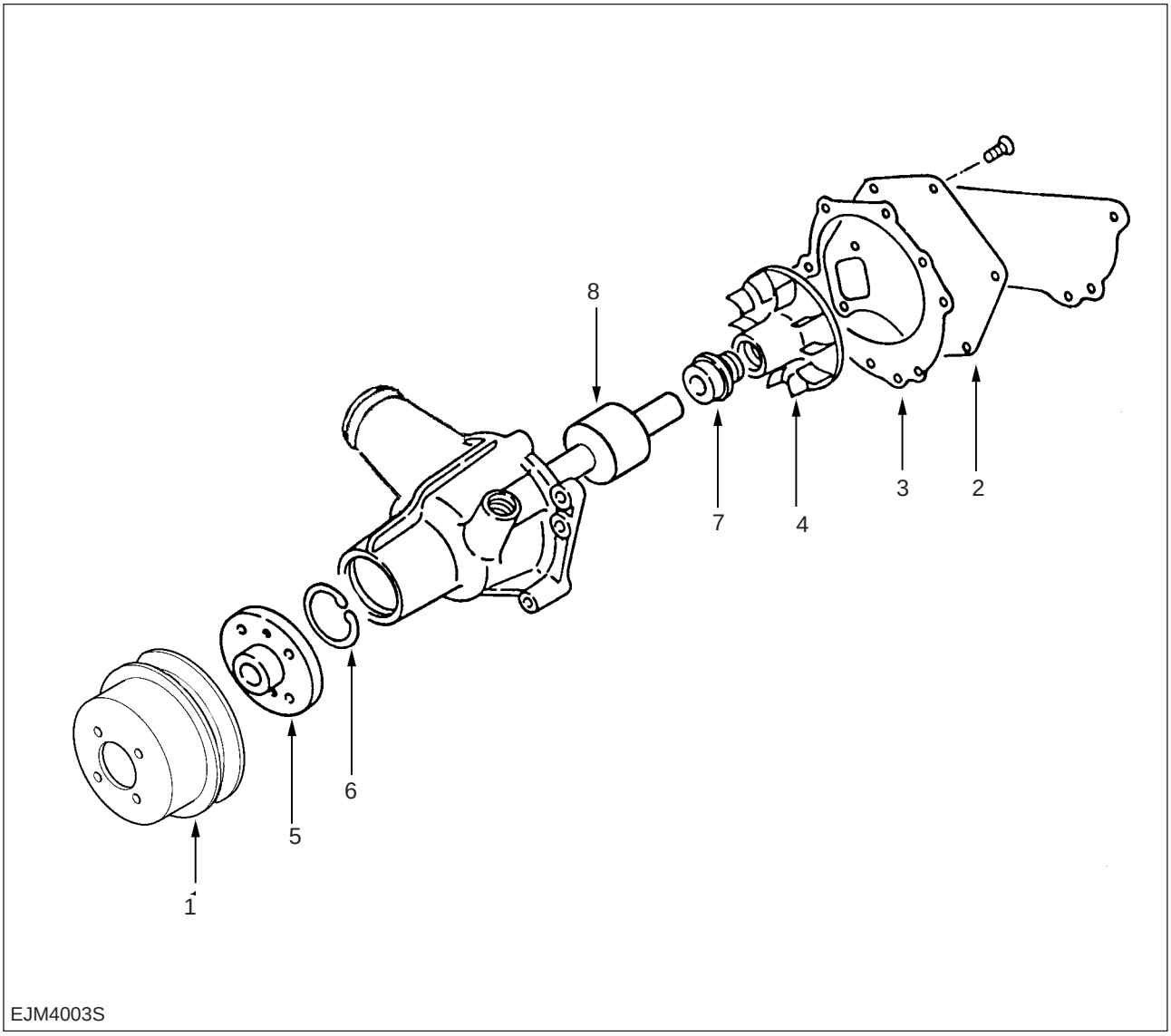

<Disassembly order>

1. Pulley
2. Cover
3. Gasket
4. Impeller
5. Pulley Flange
6. Snap ring
7. Seal
8. Impeller shaft

https://truckmanualshub.com/

- **Impeller**

Remove the impeller with a jig.

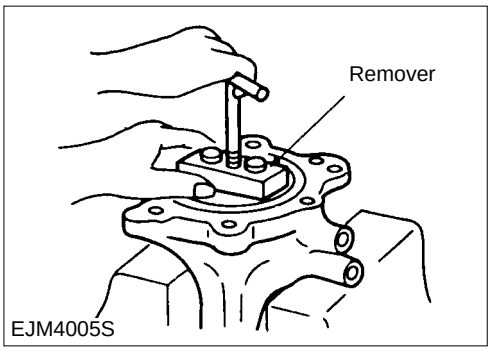

- **Hub**

Remove the bearing by pressing with a bench press.

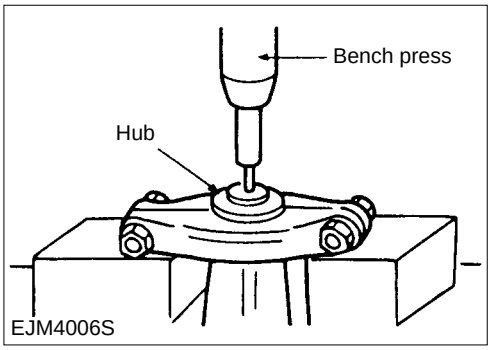

- **Snap Ring**

Remove the snap ring with a snap ring plier.

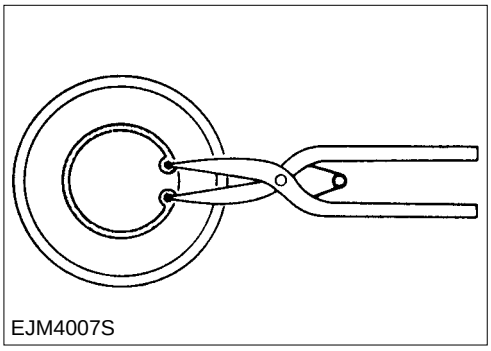

- **Seal Unit and Washer Seal**

Remove the seal unit with a hammer.

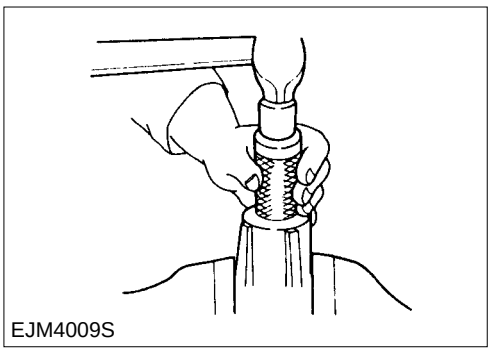

- **Inspection And Repair**

Correct and replace it if there are worn or defect part.

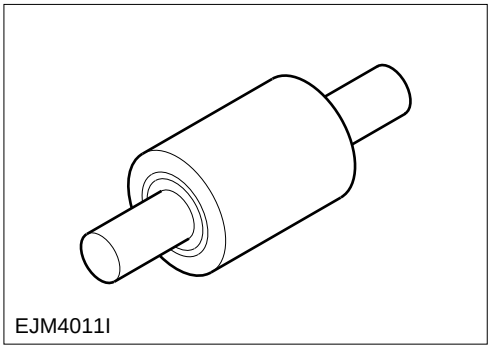

• Reassembly

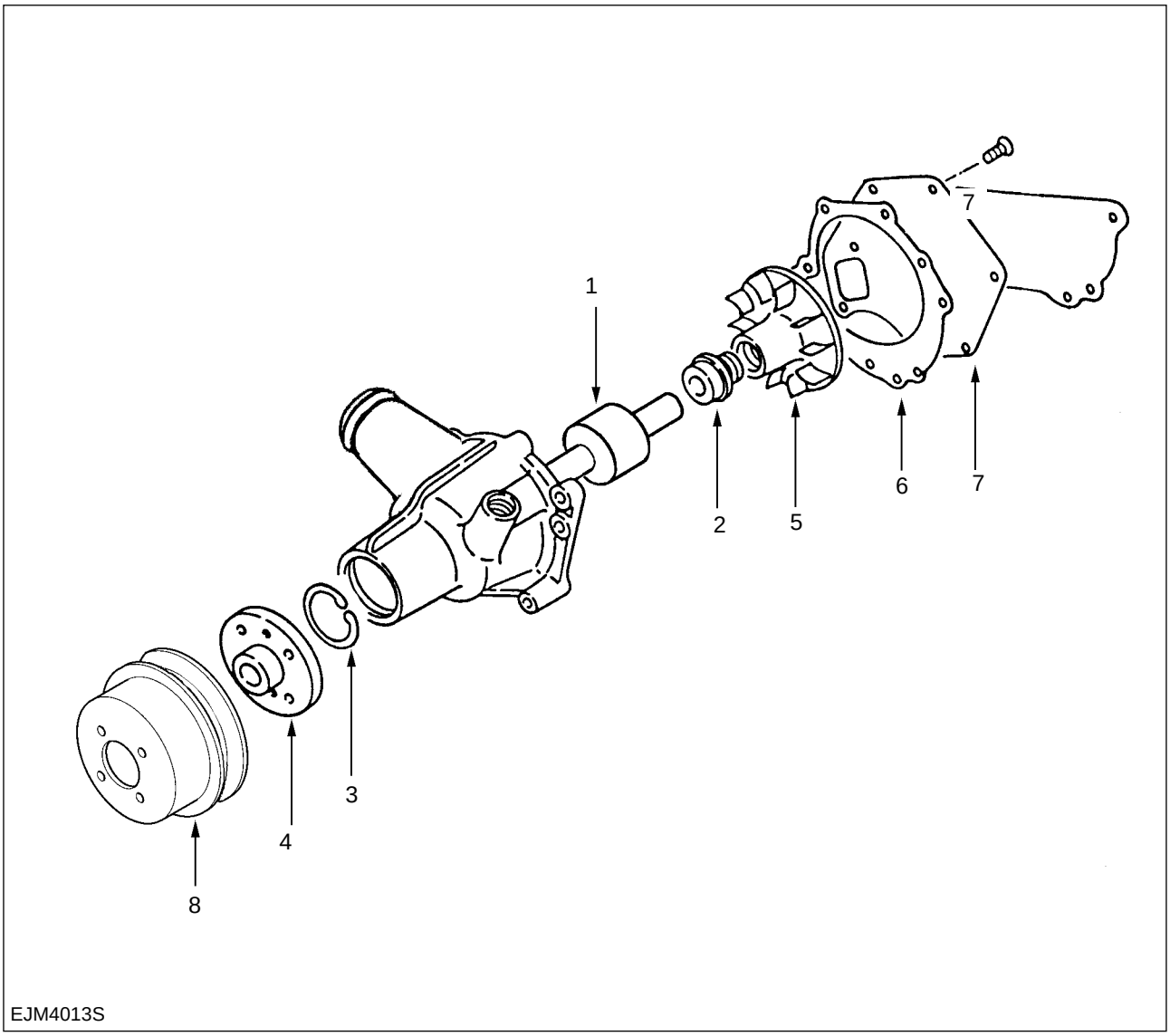

<Reassembly order>

1. Unit Bearing
2. Seal
3. Snap Ring
4. Pulley Fiange
5. Impeller
6. Gasket
7. Cover
8. Pulley

- **Unit Bearing**

With bench press, set up the unit bearing at the pump.

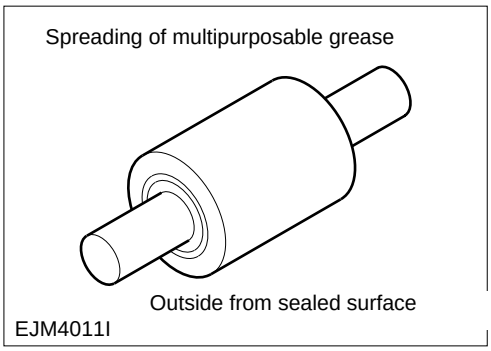

- **Snap Ring**

Assemble the snap ring with a snap ring plier.

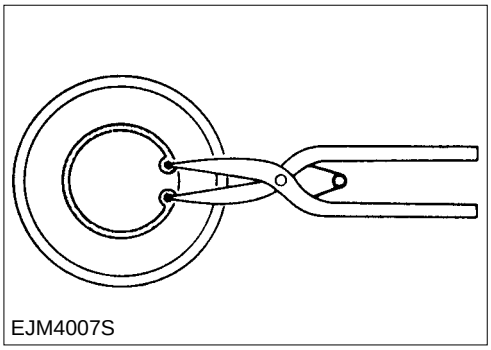

- **Pulley Center**

Assemble pulley center with a bench press.

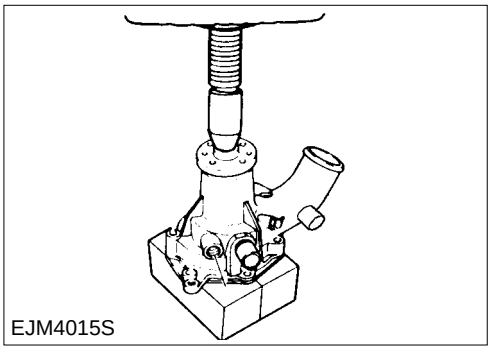

- **Washer and Seal Unit**

Assemble it with a bench press after putting liguid gasket to the pump body contacting surface.

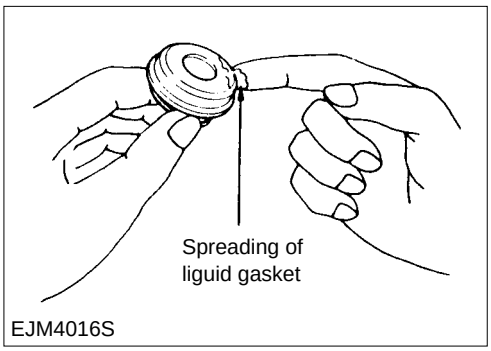

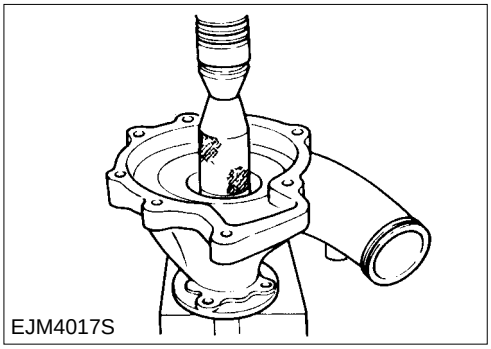

https://truckmanualshub.com/

5. Fuel System

5.1. General Description

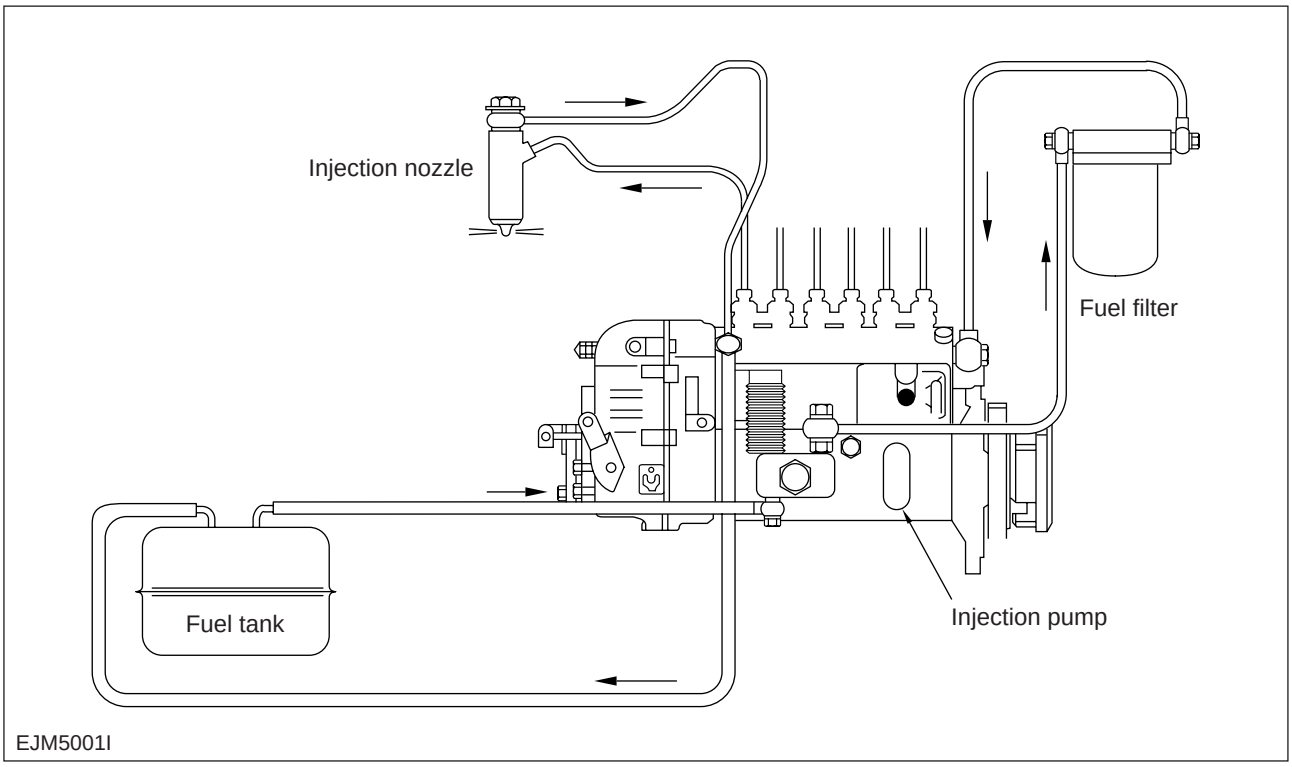

https://truckmanualshub.com/

5.2. Fuel Filter

• Disassembly

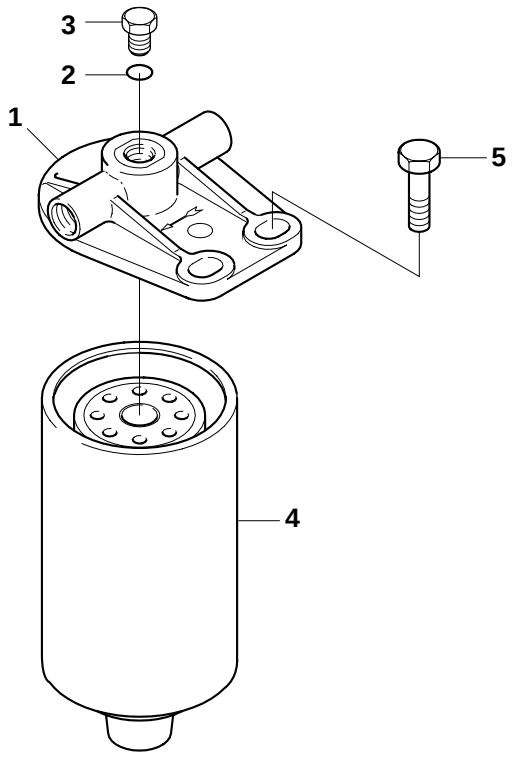

EJM5020S

<Disassembly>

1. Cover
2. Seal ring
3. Plug screw
4. Cartriage
5. Bolt ass'y

Refer to section 1.5.2., 1.5.3. for information on the cartridge type fuel filter.

Inspection and repair

Make the necessary adjustments, rapairs, and part replacements if excessive wear or damage is discovered during inspection.

Reassembly

To reassemble the fuel filter, assemble fuel filter in reverse order of disassembly.

https://truckmanualshub.com/

5.3. Injection Nozzle

• Disassembly

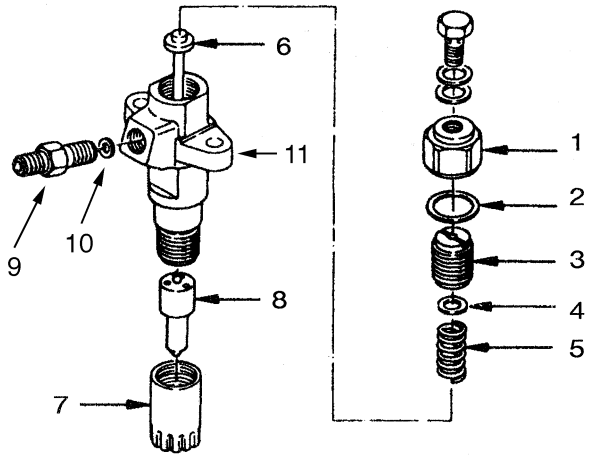

EJM5003S

<Disassembly>

1. Nozzle holder cap nut.
2. Cap nut gasket.
3. Nozzle adjusting screw.
4. Spring seat.
5. Push rod spring.
6. Nozzle holder push rod.
7. Retaining nut.
8. Injection nozzle.
9. Injection pipe connector.
10. Connector gasket.
11. Nozzle holder body.

• Nozzle
In order to maintain needle valve, disassemble nozzle ass'y from body.

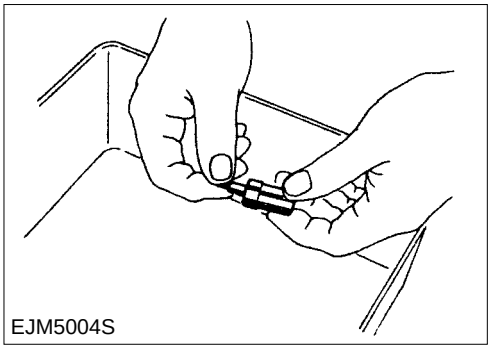

EJM5004S

https://truckmanualshub.com/

Inspection and Repair
Correct and replace it if there are worn or defect parts.

• Push Rod Spring
Check wear, damage and corrosion, etc.

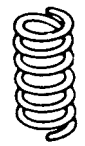

EJM5005S

• Nozzle Holder Push Rod
1. Check the nozzle holder push rod curvature.
2. Check whether connected surface with needle valve is damaged or not.

EJM5006S

• Injection Nozzle
Check the needle valve, valve seat, nozzle hole whethere it is contaminated with the carbon or not, if so, replace the nozzle and needle valve.

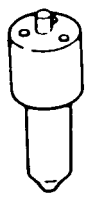

EJM5007S

• Reassembly

Reassembly is reverse order of disassembly.

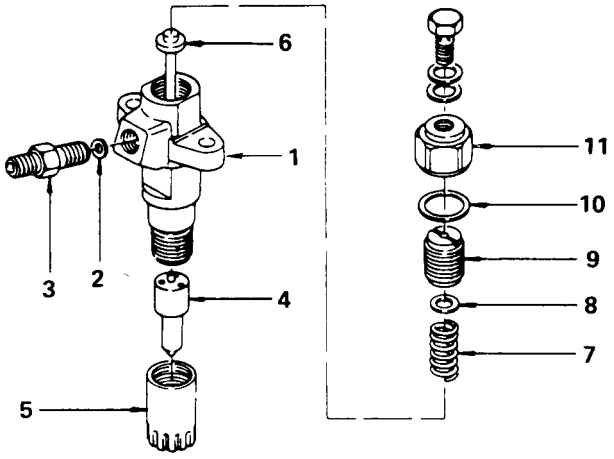

EJM5008S

<Reassembly order>

1. Nozzle holder body
2. Connector gasket
3. Injection pipe connector
4. Injectin nozzle
5. Retaining nut
6. Nozzle holder push rod
7. Pushrod spring
8. Spring seat
9. Nozzle adjusting screw
10. Cap nut gasket
11. Nozzle holder cap nut

Nozzle Connector Torque	5.5±0.5 kg • m

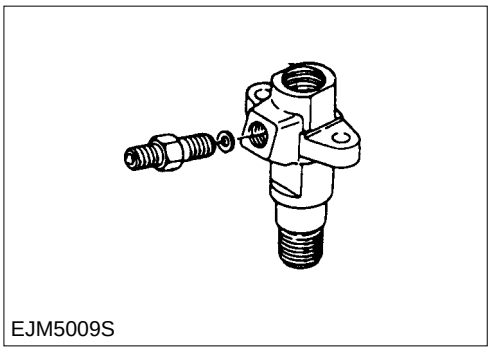
EJM5009S

• Injection Nozzle
Clean injection nozzle
Assemble nozzle to be correctly fixed to dowel pin on nozzle hold body.

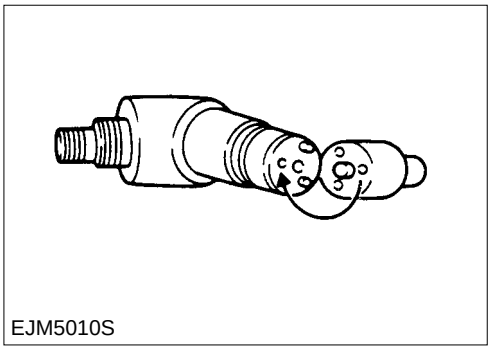
EJM5010S

• Retaining Nut

Torque	7±1 kg • m

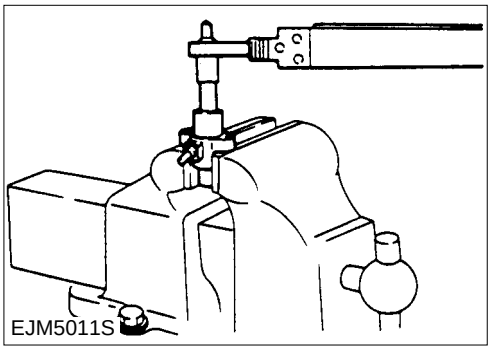
EJM5011S

• Adjustment of Screw
Adjust with the adjustment screw.

Injection Opening Pressure	220 kg/cm^2

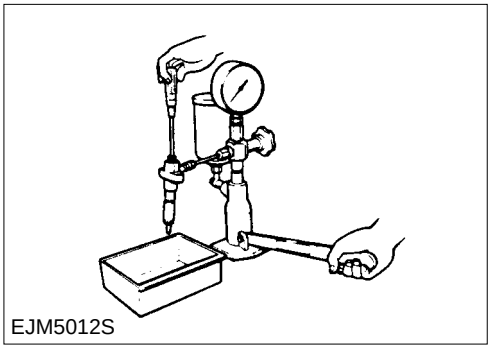
EJM5012S

• Nozzle Holder Cap Nut

Cap Nut Torque	4.5±0.5 kg•m

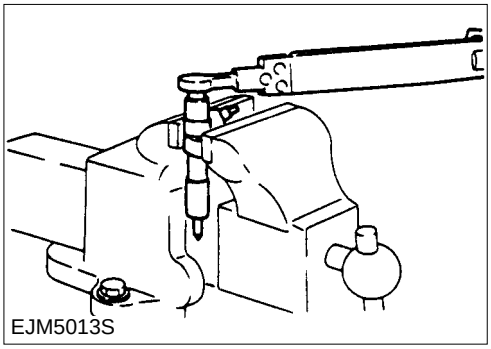
EJM5013S

5.4. Injection Pump

5.4.1. Adjustment of Injection quantity.

【CAUTION】 Injection quantity shonld be adjusted, seeing adjustment data of injection pump model as described below.

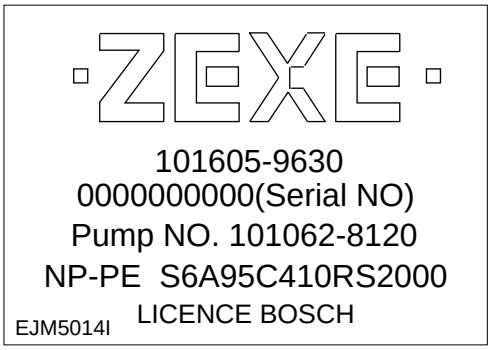

5.3.2. Calibration data

<Test conditions>

Injection pump	101605-9630
Injection nozzle	D.P.I.C. No. 105025-138A
Injection nozzle holder	D.P.I.C. No. 105160-465A
Nozzle opening pressure	220 kg/cm^2
Injection pipe demensions	INNER DIA. 1.6mmXOUTER DIA. 6 mm - LENGTH 580 mm
Transter pump pressure	1.6 kg/cm^2
Testing diesel fuel ISO	4
Operating temperature	40~50°C

<Governor Adjustment>

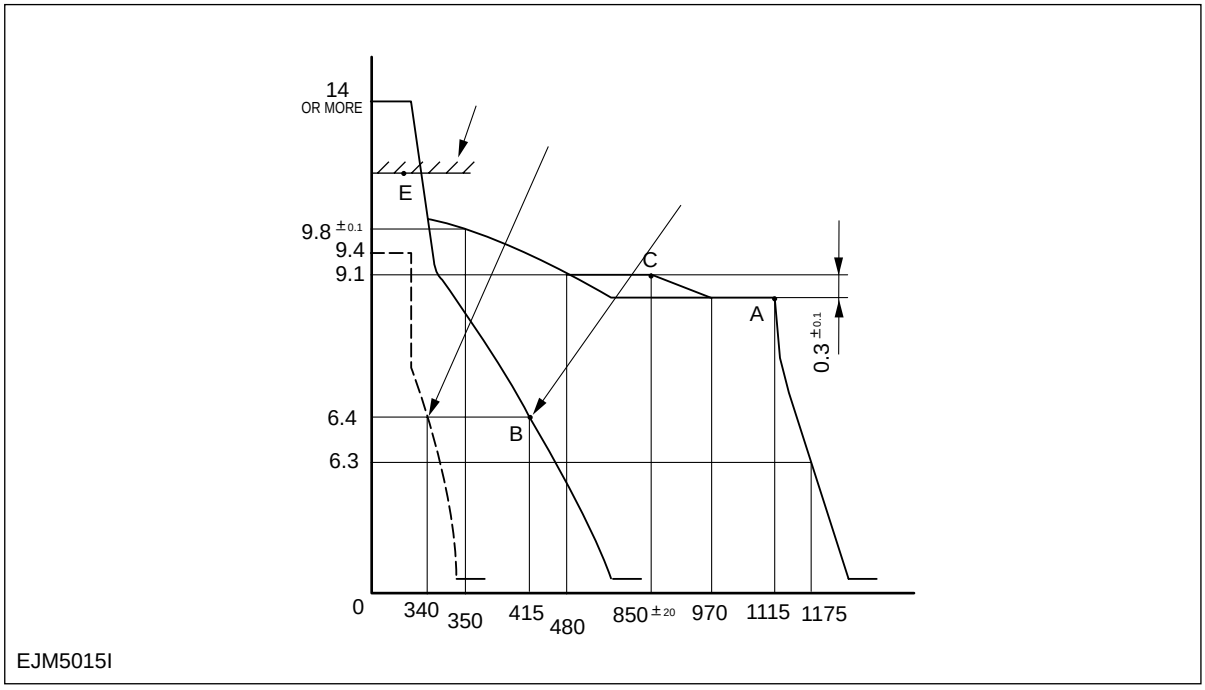

5.4.2. Injection Pump Disassembly

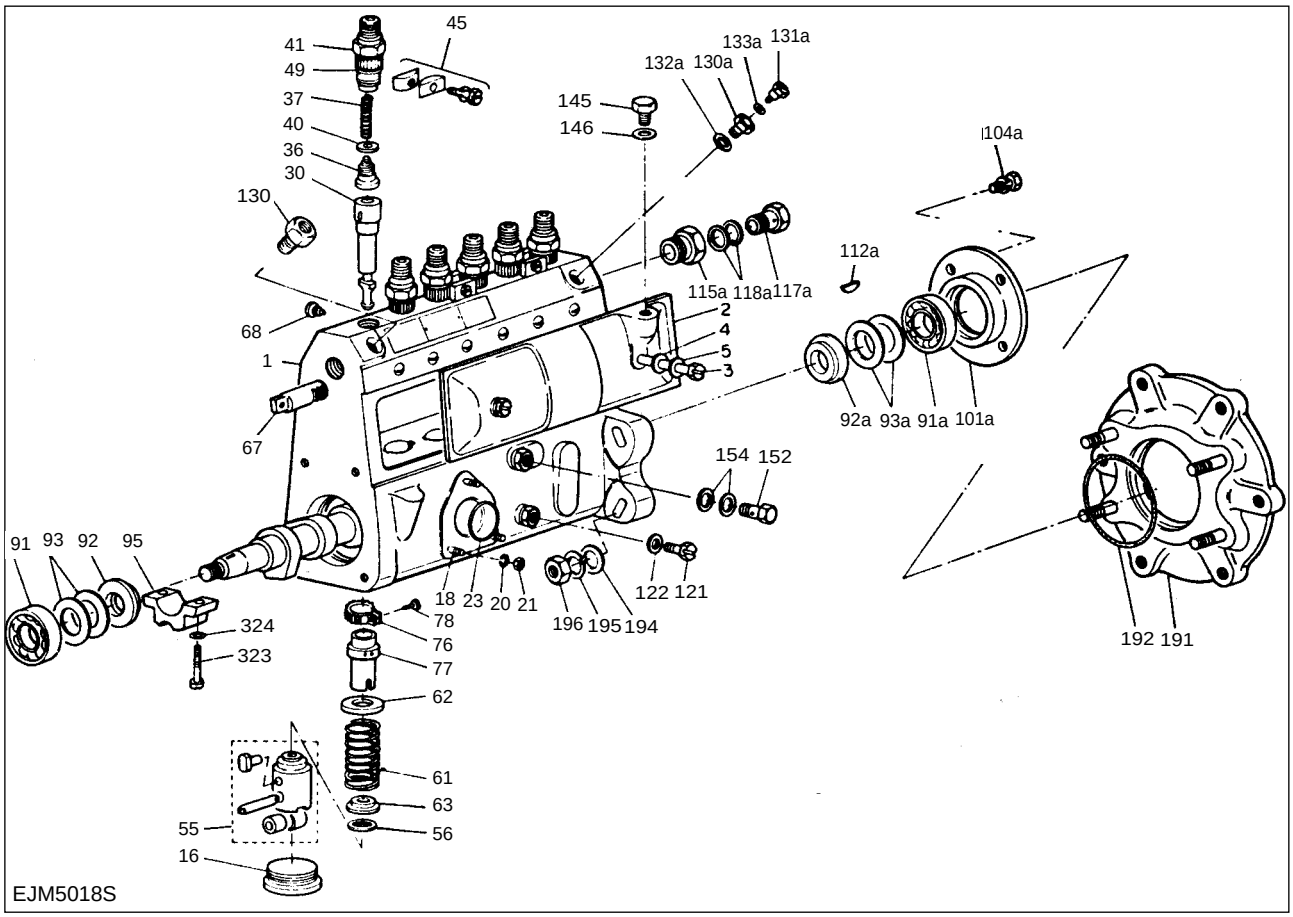

1. Pump Housing
2. Cove assembly
3. Bolt : Cover
4. O-ring
5. Gasket
16. Screw plug
18. Stud bot
20. Spring washer
21. Nut
23. O-ring
30. Plunger
36. Delivery valve
37. Delivery valve spring
40. Delivery valve gasket
41. Delivery valve holder
45. Valve Holder lock plate assembly
49. O-ring
55. Tappet
56. Shim
61. Plunger spring
62. Seat : plunger spring(Upper)
63. Seat : plunger spring(Lower)
67. Control rack
68. Rack stop bolt
76. Pinion
77. Sleeve ; control
78. Bolt ; pinion clamp
90. Camshaft
91.91a. Taper roller bearing
92.92a. Camshaft ring
93.93a. Shim
95. Center bearing
101a. Bearing cover
104a. Bolt
112a. Woodruf key
115a. Adapter
117a. Pipe connectin bolt
118a. Gasket
121. Screw Plug
122. Gasket
130. Connector
130a. Adapter air breather
131a. Bolt
132a. Gasket
133a. Gasket
145. Screw Plug
146. Gasket
152. Pipe connection bolt
154. Packing
191. Bracket
192. O-ring
194. Washer
195. Spring washer
196. Nut

5.4.3. Governor Disassembly

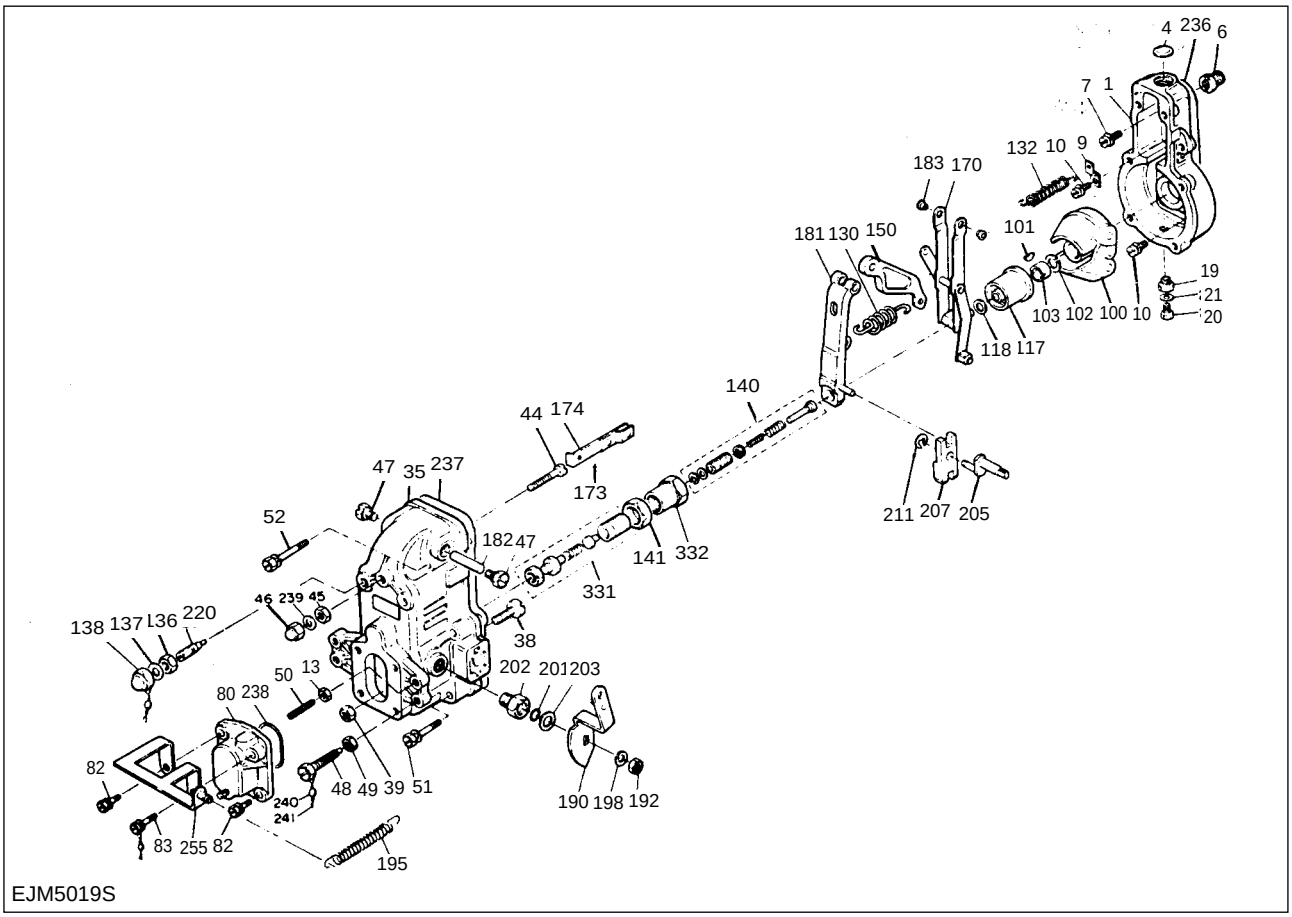

1. Governor housing
4. Plate
6. Adapter ; pump housing
7. Bolt
9. Spring eye
10. Bolt
13. Nut
19. Adaptor
20. Bolt
21. Gasket
35. Governor cover
38. Tension lever bolt
39. Nut
44. Speed lever stop bolt
46. Cap
47. Tension lever shaft plug
48. Full-load adjusting bolt
49. Nut
50. Lever stop bolt
51. Bolt
52. Bolt
80. Cover
82. Bolt
83. Bolt
100. Fly weight
101. Woodruf key
102. Spring washer
103. Nut
117. Sleeve
118. Shim
130. Governor spring
132. Starting spring
136. Nut
137. Gasket
138. Cap
140. Idling spring assembly
141. Nut
150. Speed setting lever
170. Guide leve assembly
173. Split pin
174. Floating leve link
181. Tension lever
182. Tension lever shaft
183.Collar
190. Control-lever
192. Nut
195. Return spring
198. Spring washer
201. O-ring
202. Bush
203. Shim
205. Shaft lever
207. Support lever
211. Snap ring
220. Damper spring
236. Gasket
239. Gasket
240. Lead seal
241. Wire : lead seal
255. Bracket
331. Angleich spring assembly
332. Connection nut

https://truckmanualshub.com/

6. Cause of Trouble, Diagnosis and Troubleshooting

1) Starting Trouble

Statement	Cause	Remedy
Start Motor	(1) Magenetic switch does not operate when turn starter swicth	Trouble of circuit
	1. Distribution inferiority, disconnection, connection inferiority,	Correction
	2. starter switch connection inferiority	Replacement
	3.Coil disconnection of magenetic switch, strain	Replacement
	4. bend of flanger shaft	Correction or replacement
	5. fixed humidity part of flanger.	Correction or replacement
	(2) Magnetic switch operate, but pinion does not clamp with ring gear	
	1. Defect of amateur shaft bearing	Correction or replacement
	2. Pinion & ring gear was excessive wore, changed.	Correction or replacement
	3. Shortage of battery	Charge or replacement
	4. Inferiority of Pinion moving	Wash
	5. Flanger & connector shaft fixed	Correction or replacement
	(3) Pinion clamped with ring gear, but engine does not turn	
	1. Pinion clutch skip	Replacement
	2. Amateur field coil strain	Replacement
	3. Brush & communicator inferiority	Correction or replacement
	4. Shortage of battery	Charge or replacement
	5. Earth inferiority	correction
Fuel System Trouble	(1) Fuel does not feed from feed pump	
	1. No fuel	Replenish
	2. Clogged fuel tank strainer	Wash
	3. Clogged fuel tank or air in fuel line	correction
	4. Defect of fuel feed pump valve	Replacement
	5. Feed pump piston & push rod fixed	Correction or replacement
	6. Clogged fuel pump strainer	Wash
	(2) Fuel does not inject from injection pump	
	1. Clogged fuel filter element	Replacement
	2. Continually opened over flow valve of fuel filter	Replacement
	3. Air in fuel filter or injection pump	Removal air
	4. flanger, delivery valve fixed	Correction or replacement
	(3) Unfitness of fuel injector	
	1. Injection timing Inferiority	correction
	2. Unfitness of fuel timing	correction
	3. cam or cam shaft excessive wore	Replacement
	(4) Injection nozzle does not operate	
	1. Needle valve fixed	Correction or replacement
	2. Leakage between nozzle and needle valve	Correction or replacement
	3. Unfitness of injection pressure	

Statement	Cause	Remedy
Insufficient of compression pressure	(1) Damage of cylinder head gasket,	replacement
	(2) Piston, piston ring or cylinder liner wore,	replacement
	(3) Piston ring Strain,	replacement
	(4) Unfitness of valve clearance,	adjustment
	(5) Valve and seat connection inferiority,	adjustment
	(6) Valve stem attachment	replacement
	(7) Wearing tension of valve spring or damage	replacement

2) Abnormal of Operation

Statement	Cause	Remedy
Abnormal of idle	(1) Injection timing inferiority,	adjustment
	(2) Injection pipe relax	adjustment
	(3) Injection nozzle defect	correction or replacement
	(4) Unequal fuel injection volume	correction
	(5) Slow motion of control rack	correction or replacement
	(6) Unsmooth of flanger operation	correction or replacement
	(7) Correctlnessless connection of Control pinion and control rack	correction or replacement
	(8) Air suction of injection pump	removal
Abnorml drive at Low intermediate speed	(1) Governer idling spring bend	correction or replacement
	(2) Governer spring tension weakness	correction or replacement
Unstopable at high speed drive	(1) Bend of linkage cable between accel pedal and injection pump	correction
	(2) Bend of injection pump control	correction

3) Shortage of Engine out put

Statement	Cause	Remedy
Continuelly short of eingine out put	(1). Uncorrection of valve clearance	correction
	(2) Valve closing inferiority	correction or replacement
	(3) Defect of cylinder head gasket	replacement
	(4) Piston ring wear and fix	correction
	(5) Uncorrection of injection timing	correction
	(6) Shortage of fuel valume	correction
	(7) Unsuitable of nozzle injection presure or strain	correction or replacement
	(8) Defect of fuel feed	correction or replacement
	(9) Fuel pipe system clog	correction
	(10) Shortage of suction valume	Maintain of air cleaner
	(11) Throttle valve operation inferiority	correction or replacement
	(12) Clutch skip	correction or replacement
	(13) Brake inferiority	correction or replacement
Shortage of out put when accelerate	(1) Shortage of compression pressure	Engine overhaul
	(2) Unsuitable of injection timing	adjustment
	(3) Unfuction of injection pump timer	correction or replacement

Statement	Cause	Remedy
	(4) Nozzle injection pressure or unsuitable of injection angle	correction or replacement
	(5) Decline function feed pump	correction or replacement
	(6) Shortage of suction valume	Maitenance of air cleaner
	(7) Throttle valve fix	correction or replacement
Overheat	(1) Shortage of coolant	Suppliment & check of leakage
	(2) Weakness of tension of radiator cap pressure valve spring	replacement
	(3) Radiator core system clog	correction or replacement
	(4) Oil cooler system clog	replacement
	(5) Fan belt release, wear or damage	correction or replacement
	(6) Thermostat operation inferiority	replacement
	(7) Water pump operation inferiority	replacement
	(8) Uncorrect of injection timing	adjustment
	(9) Cylinder head gasket defect	replacement

4) Noise of Engine

Statement	Cause	Remedy
Crank shaft bearing	(1) bigger of oil clearance due to bearing or crank shaft wear	grind crank shaft or replacement
	(2) Crank shaft side wear	grind crank shaft or replacement
	(3) Oil port system clog	Wash
	(4) Bearing strain	replacement & grind crank shaft
Conn. rod & bearing	(1) Connecting rod bearing wear	replacement
	(2) Crank pin side wear	grind or replacement
	(3) Connecting rod bend	replacement
	(4) Bearing seize	grind or replacement
Piston, piston pin and pinston ring	(1) Piston & bigger of oil clearance due to piston ring wear	crank shaft grind or replacement
	(2) Piston or piston pin wear	replacement
	(3) Piston strain	replacement
	(4) Piston ring damage	replacement
Other	(1) crank shaft throttle bearing wear	replacement
	(2) cam shaft end pulley bigger	replacement throttle bearing
	(3) Idle gear end pulley bigger	replacement throttle collar
	(4) Timing gear backlash being excessive	replacement
	(5) Uncorrect of valve clearance	adjustment
	(6) valve strained into valve guide	replacement
	(7) Valve spring damage	replacement
	(8) valve seat insert defect	adjustment
	(9) Tappet, cam excessive wear	replacement
	(10) rokcer arm & rocker am shaft excessiver wear	replacement

5) Fuel consumption excessive

Statement	Cause	Remedy
Trouble of fuel system	(1) Uncorrect of injection timing	adjustment
	(2) Fuel injection excessive valume	adjustment
Other	(1) clutch skip	correction or replacement
	(2) brake inferiority	correction or replacement
	(3) unsuitable tire pressure	adjustment
	(4) unsuitable of gear selection	seelection gear due to load

6) Excessive oil consumption

Statement	Cause	Remedy
Oil leakage	(1) release of every connected parts	tighten
	(2) gasket inferiority	replacement
	(3) cylinder head gasket defect	replacement
Lack of oil	(1) valve stem and oil seal inferiority	replacement
	(2) valve stem or valve guide excessive wear	replacement
Plenfitul of oil	(1) excessive clearance between piston and cylinder wall	replacement
	(2) piston ring and ring home excessive wear	replacement
	(3) piston ring damage, wear or fix	replacement
	(4) Uncorrect setting of piston ring gap	adjustment
	(5) Uncorrect set up of piston ring	adjustment
	(6) Oil controlling return home clog	replacement
	(7) air breather clog	wash

7) Exhaust Escessive Smoke

Statement	Cause	Remedy
Excessive white smoke	(1) Too late of injection timing	adjustment
	(2) lack of compressor pressure	mentioned "difficult of start"
	(3) Mixed water in fuel	replacement fuel
	(4) leakage of oil due to lose of fuel	correction
	(5) Engine and excessive cooling drive	adjustment
	(6) fuel injection excessive volume	adjustment
Ecessive black smoke	(1) air cleaner element clog	wash or replacement
	(2) completely unopended Intake shutter valve	replacement or adjustment
	(3) Screwed intake house or to be flatted	adjustment or replacement
	(4) lact of compression pressure	mentioned "engine out put lack
	(5) Too fast of injection timing	adjustment
	(6) fuel injection excessive volume	adjustment or replacement
	(7) Injection shape inferiority of nozzle	adjdustment or repalcement
	(8) unsuitable of valve clearance	adjustment
	(9) Use of inferiority fuel	replacement

https://truckmanualshub.com/

SB2134E00
Oct.1998

Service Manual

DAEWOO Automotive Comp.Ltd.
HC45 Series Alternators

https://truckmanualshub.com/

Important Safety Information

Most accidents involving product operation, maintenance and repair are caused by failure to observe basic safety rules or precautions. An accident can often be avoided by recognizing potentially hazardous situations before an accident occurs. A person must be alert to potential hazards. This person should also have the necessary training, skills and tools to perform these functions properly.

Read and understand all safety precautions and warnings before operating or performing lubrication, maintenance and repair on this product.

Basic safety precautions are listed in the “Safety” section of the Service or Technical Manual. Additional safety precautions are listed in the “Safety” section of the owner/operation/maintenance publication.
Specific safety warnings for all these publications are provided in the description of operations where hazards exist. WARNING labels have also been put on the product to provide instructions and to identify specific hazards. If these hazard warnings are not heeded, bodily injury or death could occur to you or other persons. Warnings in this publication and on the product labels are identified by the following symbol.

⚠ WARNING

Improper operation, lubrication, maintenance or repair of this product can be dangerous and could result in injury or death.
Do not operate or perform any lubrication, maintenance or repair on this product, until you have read and understood the operation, lubrication, maintenance and repair information.

Operations that may cause product damage are identified by NOTICE labels on the product and in this publication.

DAEWOO cannot anticipate every possible circumstance that might involve a potential hazard. The warnings in this publication and on the product are therefore not all inclusive. If a tool, procedure, work method or operating technique not specifically recommended by DAEWOO is used, you must satisfy yourself that it is safe for you and others. You should also ensure that the product will not be damaged or made unsafe by the operation, lubrication, maintenance or repair procedures you choose.

The information, specifications, and illustrations in this publication are on the basis of information available at the time it was written. The specifications, torques, pressures, measurements, adjustments, illustrations, and other items can change at any time. These changes can affect the service given to the product. Obtain the complete and most current information before starting any job. DAEWOO dealers have the most current information available.

https://truckmanualshub.com/

https://truckmanualshub.com/

Index

Specifications

Alternator 5

Systems Operation

Alternator 6
HC 45 Alternator Operation 6
Alternator Components 7
Alternator Operation Schematic 9
Introduction 6

Testing And Adjusting

Alternator 11
Alternator Output Test 11
Machine Test 11

Troubleshooting 10
Troubleshooting Problem List 10
Troubleshooting Problems 10

https://truckmanualshub.com/

https://truckmanualshub.com/

Specifications

Alternator

D.A.C. ALTERNATOR COVERAGE CHART			
DAEWOO Part No.	**D.A.C. Part No.**	**Series**	**Voltage**
A124041	219154	HC45	24V

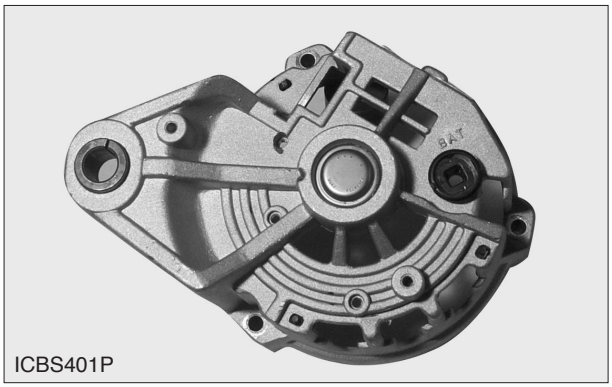

HC45 Alternator End View

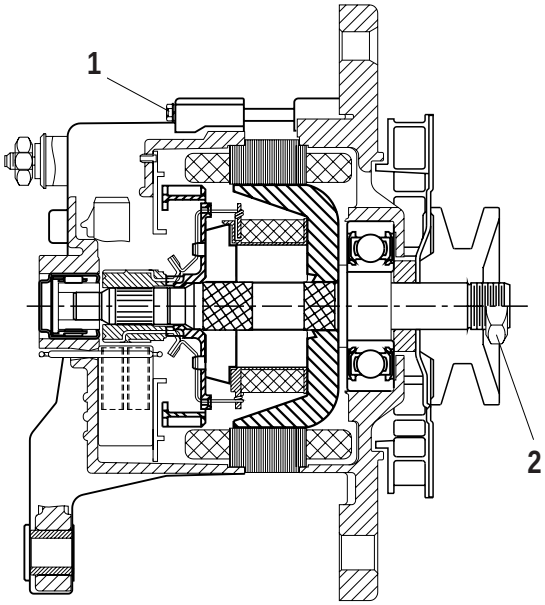

HC45 Alternator Cross-Sectional View

ALTERNATOR SPECIFICATIONS	
DAEWOO Part No.	**A124041**
D.A.C.	HC45
Voltage Rating	24V
Polarity	Neg. Gnd.
Rotation	CW
Test Speed	5000 rpm
Rated Output (Cold)	45A
Output Voltage	28.5 ± 0.4V
Rotor Field Winding Resistance [At 27℃(80°F)]	-
Field Current [At 14.0V or 27.5V and 27℃(80°F)]	-
Stator Winding Resistance	-
Turn On Speed (Max.)	-
Slip Rings : Maximum Runout (TIR)	-
Minimum Diameter	-
Brush Length (Measured On Longest Side) : New	-
Minimum	
Pulley Nut (2) Torque	80~110 N·m (60~82.5 lb·ft)
Thru Bolt (1) Torque	-
Terminal Torques : Bat	8.0 N·m max (6 lb·ft max)
Gnd	-

https://truckmanualshub.com/

Systems Operation

Alternator

Introduction

The HC45 D.A.C. Alternators have three phase, full-wave, rectified output.

HC45 Alternator Operation

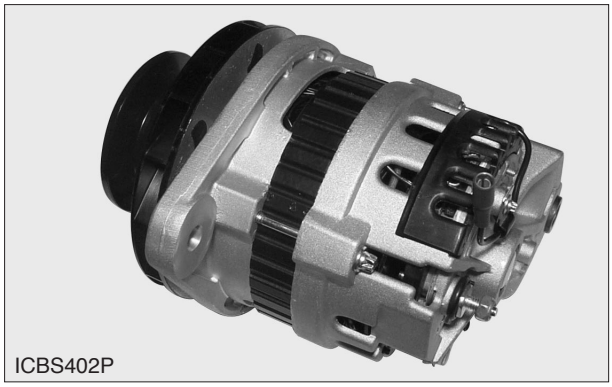

D.A.C. HC45 Alternator

The alternator is an electrical and mechanical component driven by belt rotation from the engine.

It is used to charge the storage battery during engine operation. This alternator is cooled by two fans that are a part of the alternator. The external fan is mounted behind the pulley. The fan pulls air through holes in the back of the alternator. The air exits the front of the alternator, cooling it in the process.

The internal fan is mounted on the rotor. This fan pulls air through the holes in the back of the alternator to cool the rectifier bridge and regulator. The air exits the front of the alternator.

The alternator converts mechanical and magnetic energy to alternating current (AC) and voltage. This process is done by rotating a direct current (DC) electromagnetic field (rotor) inside a three phase stator. The alternating current and voltage (generated by the stator) are changed to direct current by a three phase, full wave rectifier system using six silicone rectifier diodes. This circuit produces the sine wave signals through P terminal. The Tachometer is operated by this signal. This alternator have a diode trio.

A solid state regulator is installed in the back of the alternator. Two brushes conduct current through two slip rings to the field coil on the rotor.

There is also a capacitor mounted in the back of the alternator. The capacitor protects the rectifier from high voltages. It also suppresses electrical noise through a radio, if equipped.

The alternator is connected to the battery through terminal “L” and the ignition or key start switch for alternator turn-on. Therefore, alternator excitation occurs when the switch is turned on.

https://truckmanualshub.com/

Alternator Components

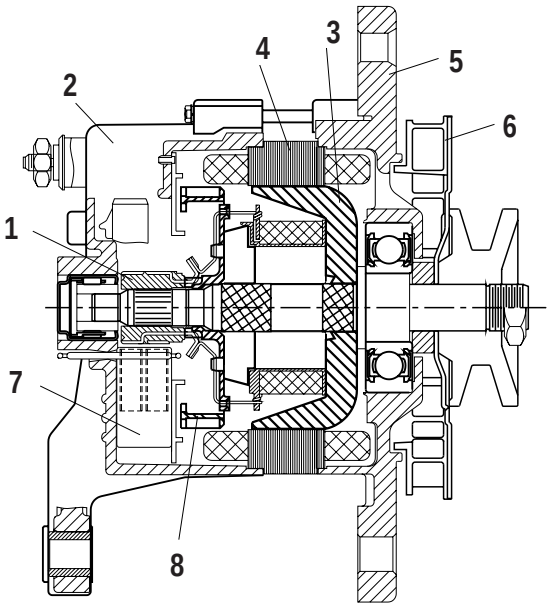

ICBS401I

Alternator Components-Cross-Sectional View
(1) Slip rings. (2) Rear frame. (3) Rotor. (4) Stator.
(5) Drive end frame. (6) External fan. (7) Brush holder.
(8) Internal fan.

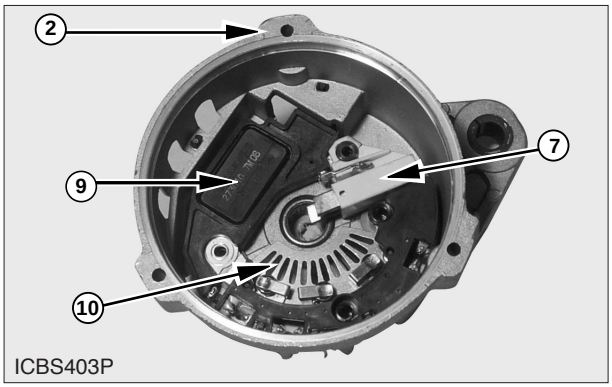

ICBS403P

Alternator Components-Inside View of Rear Frame
(2) Rear frame. (7) Brush holder. (9) Regulator.
(10) Rectifier.

The major components of the alternator are stator (4), rotor (3), rectifier (10), regulator (9), brush holder (7) and frames (2) and (5). The HC45 alternators feature a high ampere output per pound of weight, with a totally new and different regulator. A wye wound stator, rectifier bridge, rotor with slip rings and brushes are electrically similar to the CS-121 series alternators. The HC stands for heavy duty charging system. The 45 denotes the output (A) of the alternators. This series of alternators has two fans for cooling the alternator.

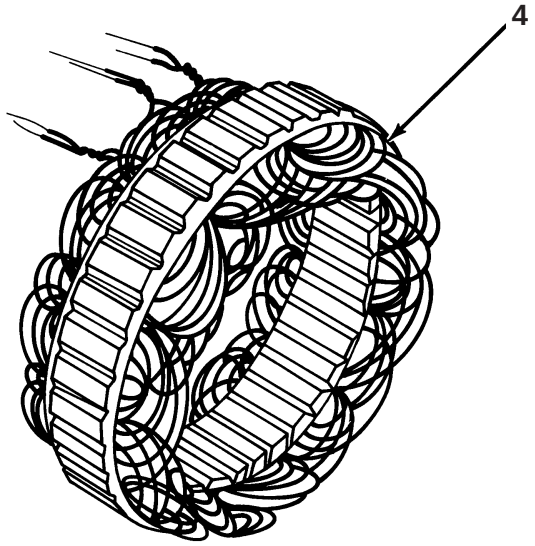

ICBS401S

Stator
(4) Stator.

Stator (4) consists of a stator core and coils. As the rotor turns, its varying magnetic field causes the stator coil to produce three phase alternating current (AC).

https://truckmanualshub.com/

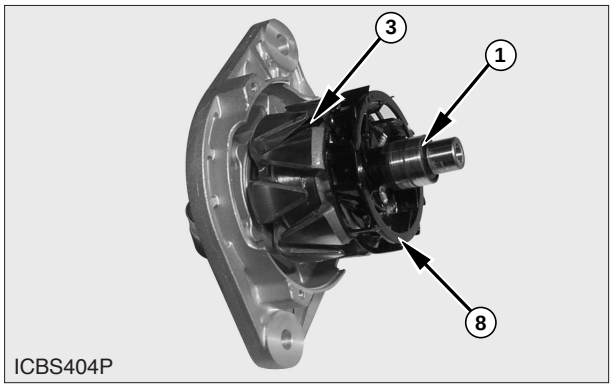

Rotor
(1) Slip rings. (3) Rotor. (8) Internal fan.

Rotor (3) consists of a core, coils and slip rings (1). The rotor provides the magnetic field between the rotor field winding and the stator. Slip rings (1) provide the surfaces for brush contact. Internal fan (8) pulls air through the rear frame to cool the rectifier bridge and regulator.

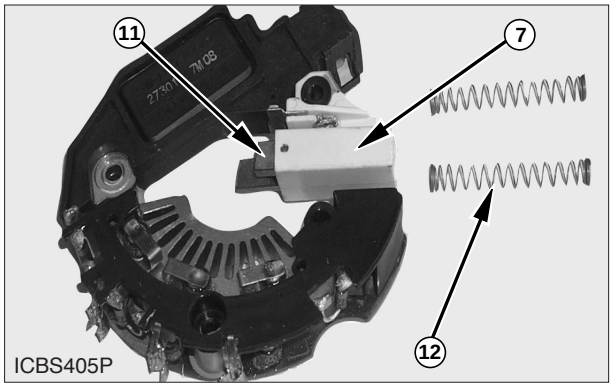

Brush Holder
(7) Brush holder. (11) Brushes. (12) Spring.

Brush holder (7) contains two brushes (11). They contact the two rotating slip rings on the rotor. Current flows to the rotor coil through the brushes and slip rings. There is one positive (+) and one negative (-) brush. The brush material is copper graphite.

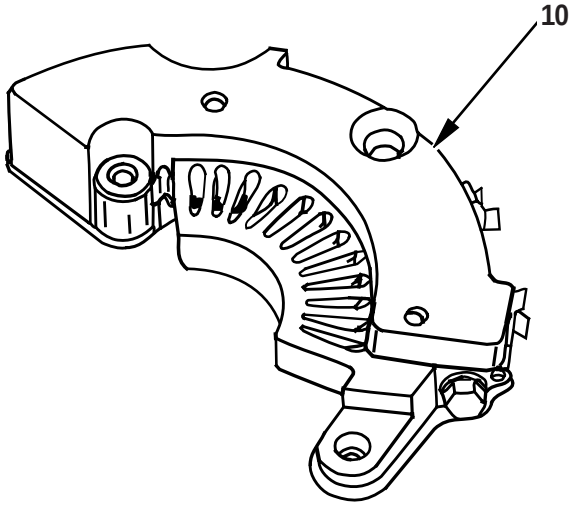

Rectifier
(10) Rectifier.

Rectifier (10) contains three positive (+) and three negative (-) diodes to form the full wave rectifier bridge which is connected to the stator. Rectifier (10) changes or rectifies three phase AC to DC.

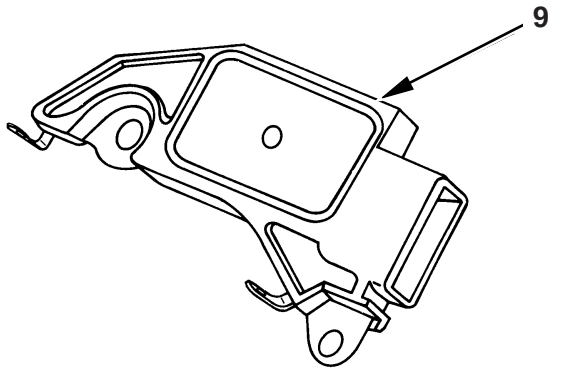

Regulator
(9) Regulator.

Regulator (9) controls alternator output. Most regulators limit the alternator voltage to a preset value by controlling the field current. It operates electronically to alternately "turn off" and "turn on" the voltage across the field winding. By varying the on-off time, the correct average field current for proper system voltage control is obtained. The regulator is mounted in the back of the alternator.

https://truckmanualshub.com/

Alternator Operation Schematic

The integral charging system schematic and explanation that follow indicate the terminals and basic circuitry for the HC45 series alternator.

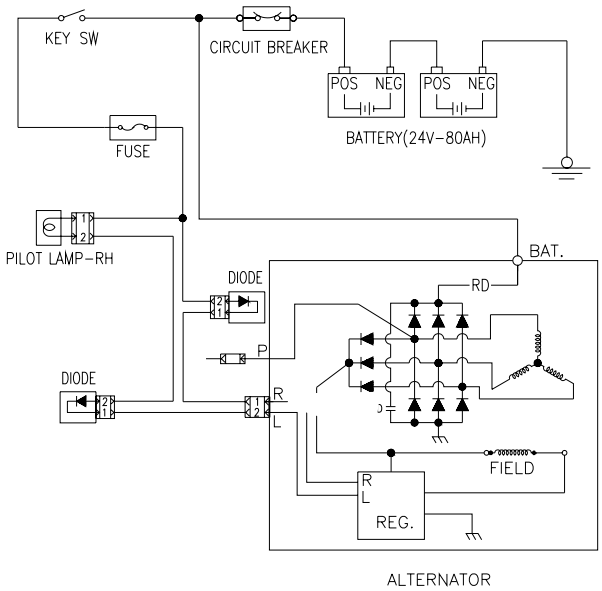

ICBS402I

HC45 Integral Charging System Schematic

When the switch is closed, the indicator lamp turns on and a voltage is applied to the regulator at the "L" terminal to cause transistor to rapidly "turn on" and "turn off". The battery will supply field current which will flow into “L” terminal or Bat terminal and then through transistor and the field coil to ground.

The field current is sufficient to cause the alternator to turn on when the engine is started. At engine idle speeds, voltage induced in the stator will cause the stator to supply field current and also output voltage and current at the Bat terminal for the vehicle electrical system.

On some models, a resistor is used in parallel with the indicator lamp. This feature insures alternator turn-on in the event the lamp burns out. The zener diodes in the rectifier bridge protect the system against high voltages in the stator.

Most regulators are temperature compensated to provide the maximum voltage needed for battery charging. As the temperature increases, the voltage setting will decrease. Under cold weather conditions, the regulator will operate at a higher voltage setting to provide the higher voltage required by the battery for charging under these conditions.

https://truckmanualshub.com/

Testing And Adjusting

Troubleshooting

Troubleshooting can be difficult. On the page that follows is a list of possible problems. To make a repair to a problem, make reference to the probable cause.

This list of problems and probable causes will only give an indication of where a possible problem can be and what repairs are needed. Sometimes more or other repair work is needed beyond the recommendations in the list. Remember that a problem is not normally caused by one part, but by the relation of one part with other parts. This list cannot give all possible problems and probable causes. The serviceman must find the problem and its source, then make the necessary repairs.

NOTE : The HC45 alternator is only serviced as a complete unit. If the alternator has any internal problems, the alternator must be replaced.

Troubleshooting Problem List

1. Alternator Does Not Charge.

2. Alternator Charge Rate is Low Or Not Regular.

3. Alternator Charges Too Much.

4. Alternator is Noisy.

Troubleshooting Problems

Problem 1: Alternator Does Not Charge

Probable Cause:

1. Loose Drive Belt For Alternator :
Adjust the alternator drive belt.

2. Loose Alternator Drive Pulley :

Check the pulley for wear. If it is worn, install a new pulley. Tighten the pulley nut to the correct torque shown in Specifications.

3. Charging Or Ground Return Circuit Or Battery Connection Are Defective:
Inspect all cables and connections. Clean and tighten all connections. Replace defective parts.

4. Rotor Field Winding Or Regulator Is Defective:
Install a new rotor or regulator.

Problem 2: Alternator Charge Rate Is Low Or Not Regular

Probable Cause:

1. Loose Drive Belt For Alternator:
Adjust the alternator drive belt.

2. Loose Alternator Drive Pulley:
Check the pulley for wear. If it is worn, install a new pulley. Tighten the pulley nut to the correct torque shown in Specifications.

3. Charging Or Ground Return Circuit Or Battery Connections Defective:
Inspect all cables and connections. Clean and tighten all connections. Replace defective parts.

4. Regulator Is Defective:
Replace the regulator.

5. Rectifier Is Defective:
Replace the rectifier.

6. Brushes Are Worn Or Dirty:
Install a new brush.

Problem 3: Alternator Charges Too Much

Probable Cause:

1. Alternator Or Regulator Has Loose Connections:
Tighten all connections to alternator or regulator.

2. Regulator Is Defective:
Install a new regulator.

Problem 4: Alternator Is Noisy

Probable Cause:

1. Drive Belt For Alternator Is Worn Or Defective:
Install a new drive belt for the alternator.

2. Loose Alternator Drive Pulley:
Check the pulley for wear. If it is worn, install a new pulley. Tighten the pulley nut to the correct torque shown in Specifications.

3. Drive Belt And Drive Pulley For Alternator Are Not In Alignment:
Make an adjustment to put the drive belt and drive pulley in correct alignment.

4. Alternator Bearings Are Worn:
Install new bearings in the alternator.

https://truckmanualshub.com/

Alternator

Alternator Output Test

NOTE: If the HC45 alternator fails this test, it must be replaced. It is only serviced as a complete unit.

Tools Needed	
Digital Multimeter or Equivalent	1
AC/DC Clamp-On Ammeter	1

Machine Test

1. Put the multimeter positive (+) lead on the Bat terminal of the alternator. Put the negative (-) lead on the ground terminal or the frame of the alternator. Put the clamp-on ammeter around the positive output wire of the alternator.

2. Turn off all electrical accessories. With the fuel off, crank the engine for 30 seconds. Wait two minutes to let the starter cool. If the system appears to be up to specifications, crank the engine again for 30 seconds.

NOTE: Cranking the engine for 30 seconds partially discharges the batteries in order to do a charging test. If the battery is already low in charge, skip this step. Jump-start engine or charge as required.

3. Start the engine and run at approximately 1/2 throttle.

4. Immediately check output current. This initial charging current should be equal to or greater than the full output current shown below:

5. Within approximately 10 minutes at 1/2 throttle (possible longer, depending upon battery size, condition and alternator rating), the alternator output voltage should be as follows to indicate the alternator is performing within spec. See the Fault Conditions And Possible Causes Chart.
24V System ..... 28.5 $\pm$ 0.4V

6. The charging current during this period should taper off the less than approximately 10 Amps, depending again upon battery and alternator capacities. See the Fault Conditions And Possible Causes Chart.

https://truckmanualshub.com/

FAULT CONDITIONS AND POSSIBLE CAUSES CHART			
Current At Start-Up	**Voltage After About 10 Min. Is Below Spec.**	**Voltage After About 10 Min. Is In Spec.**	**Voltage After About 10 Min. Is Above Spec.**
Below Specification.	Repair alternator (Defective regulator, open stator phase, and/or rectifier). Check ignition or key start switch circuit.*	Turn on all accessories. If voltage drops below spec., repair alternator (Open rectifier and/or stator phase).	-
Reached Specification and then tapered off.	Repair alternator (Defective regulator).	Alternator and battery in spec. Turn on all accessories to verify. Voltage must stay in spec.	Repair alternator (Shorted regulator).
Exceeds Specification and stays high.	Check battery.	Alternator in spec. Check battery.	Repair alternator (Shorted regulator). Also check battery for possible damage.

* Some models that have the HC45 alternator do not have a resistor in the ignition of key start switch circuit, if the indicator lamp is burned out, the alternator cannot turn on. Also, if a machine is jump started because the battery is too low, the alternator may not have any output. This is because the battery may be too low to send current to the alternator. The alternator needs current to start the charging process.

https://truckmanualshub.com/

SB2135E00
Oct.1998

Service Manual

Poong Sung R4.5
Reduction Starting Motor

https://truckmanualshub.com/

Important Safety Information

Most accidents involving product operation, maintenance and repair are caused by failure to observe basic safety rules or precautions. An accident can often be avoided by recognizing potentially hazardous situations before an accident occurs. A person must be alert to potential hazards. This person should also have the necessary training, skills and tools to perform these functions properly.

Read and understand all safety precautions and warnings before operating or performing lubrication, maintenance and repair on this product.

Basic safety precautions are listed in the “Safety” section of the Service or Technical Manual. Additional safety precautions are listed in the “Safety” section of the owner/operation/maintenance publication.
Specific safety warnings for all these publications are provided in the description of operations where hazards exist. WARNING labels have also been put on the product to provide instructions and to identify specific hazards. If these hazard warnings are not heeded, bodily injury or death could occur to you or other persons. Warnings in this publication and on the product labels are identified by the following symbol.

⚠ WARNING

Improper operation, lubrication, maintenance or repair of this product can be dangerous and could result in injury or death.
Do not operate or perform any lubrication, maintenance or repair on this product, until you have read and understood the operation, lubrication, maintenance and repair information.

Operations that may cause product damage are identified by NOTICE labels on the product and in this publication.

DAEWOO cannot anticipate every possible circumstance that might involve a potential hazard. The warnings in this publication and on the product are therefore not all inclusive. If a tool, procedure, work method or operating technique not specifically recommended by DAEWOO is used, you must satisfy yourself that it is safe for you and others. You should also ensure that the product will not be damaged or made unsafe by the operation, lubrication, maintenance or repair procedures you choose.

The information, specifications, and illustrations in this publication are on the basis of information available at the time it was written. The specifications, torques, pressures, measurements, adjustments, illustrations, and other items can change at any time. These changes can affect the service given to the product. Obtain the complete and most current information before starting any job. DAEWOO dealers have the most current information available.

https://truckmanualshub.com/

https://truckmanualshub.com/

Index

Specifications

Starting Motor 5

Systems Operation

Starting Motor 7
Introduction 7
Starting Motor Operation Diagrams 10

Testing And Adjusting

Starting Motor 14
Off Machine No Load Test 17
On Machine Starting Motor Diagnosis Procedure 14
Starting Motor Component Tests 18

Troubleshooting 13
Troubleshooting Problem List 13
Troubleshooting Problems 13

Disassembly And Assembly

Starting Motor 23
Assemble Starting Motor 26
Disassemble Starting Motor 23

https://truckmanualshub.com/

https://truckmanualshub.com/

Specification

Starting Motor

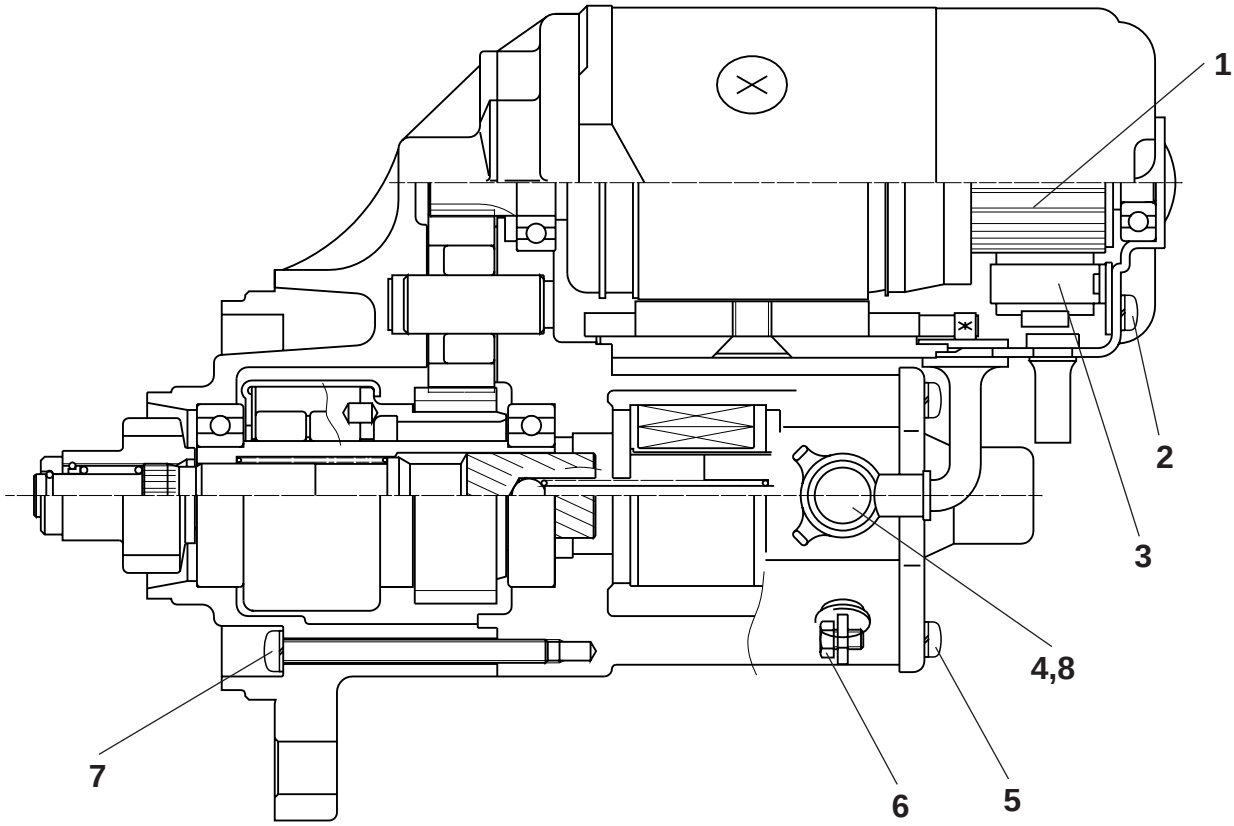

ICBS403I

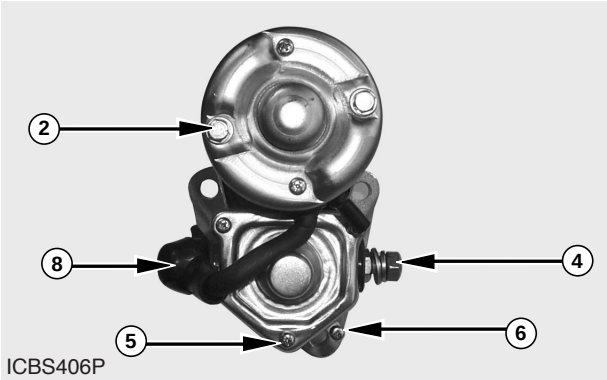

ICBS406P

https://truckmanualshub.com/

REDUCTION STARTING MOTOR SPECIFICATIONS	
Starting Motor Series	R4.5
Rated Voltage	24 V
Solenoid (Switch): Pull-In Winding Resistance	0.86 Ω
Hold-In Winding Resistance	2.88 Ω
Pull-In Winding Current Draw at 24V	45 A
Hold-In Winding Current Draw at 24V	15 A
No Load Test: Minimum Voltage	24 V
Minimum Speed	3500 rpm
Maximum Current Draw	90 A
Load Test: Minimum Voltage	18.5 V
Minimum Speed	1080 rpm
Maximum Current Draw	450 A
Commutator(1) New Diameter	36 mm (1.42 in)
Minimum Diameter	35 mm (1.38 in)
Minimum Mica Depth	0.2 mm (0.008 in)
Maximum TIR	0.05 mm (0.002 in)
Brush (3) Length: New Length	19.5 mm (0.77 in)
Minimum Length	13 mm (0.51 in)
Torques: Battery (Bat) Terminal (4)	17.6 to 24.5 N•m (157 to 218 lb•in)
Ground (G) Terminal	–
Switch (S) Terminal (6)	1.7 ± 0.25 N•m (15 ± 2 lb•in)
Motor (Mtr) Terminal (8)	17.6 to 24.5 N•m (157 to 218 lb•in)
Through Bolts (2)	6.9 to 11.8 N•m (61 to 105 lb•in)
Bolts (7)	6.9 to 11.8 N•m (61 to 105 lb•in)
Screws (5)	2.6 to 4.6 N•m (23 to 41 lb•in)

https://truckmanualshub.com/

Systems Operation

Starting Motor

Introduction

The Poong Sung Reduction Starting Motor is a medium duty unit that is offered in 24 Volt versions.

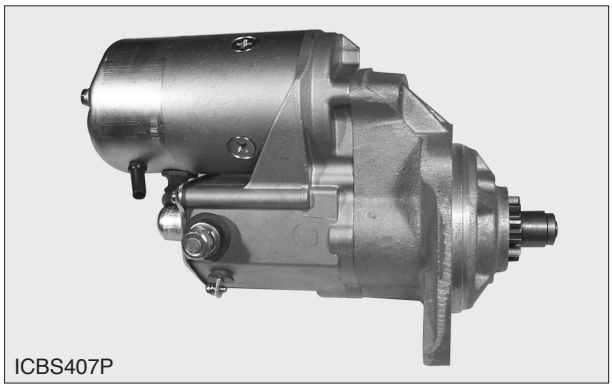

Poong Sung Starting Motor

The starting Motor is used to turn the engine flywheel fast enough to make the engine run. The starting motor has a solenoid. When the ignition or key start switch is activated, electricity from the electrical system will cause the solenoid to move the pinion toward the flywheel ring gear of the engine. The electrical contacts in the solenoid close the circuit between the battery and starting motor just before the pinion engages the ring gear. This causes the starting motor to rotate. This type of motor "turn on" is a positive shift starting motor.

When the engine begins to run, the overrunning clutch prevents damage to the armature caused by excessive speeds. The clutch does this by breaking the mechanical connection. The pinion will stay meshed with the ring gear however, until the ignition or key start switch is released. A return spring in the overrunning clutch returns the clutch to its rest position.

https://truckmanualshub.com/

Starting Motor Components

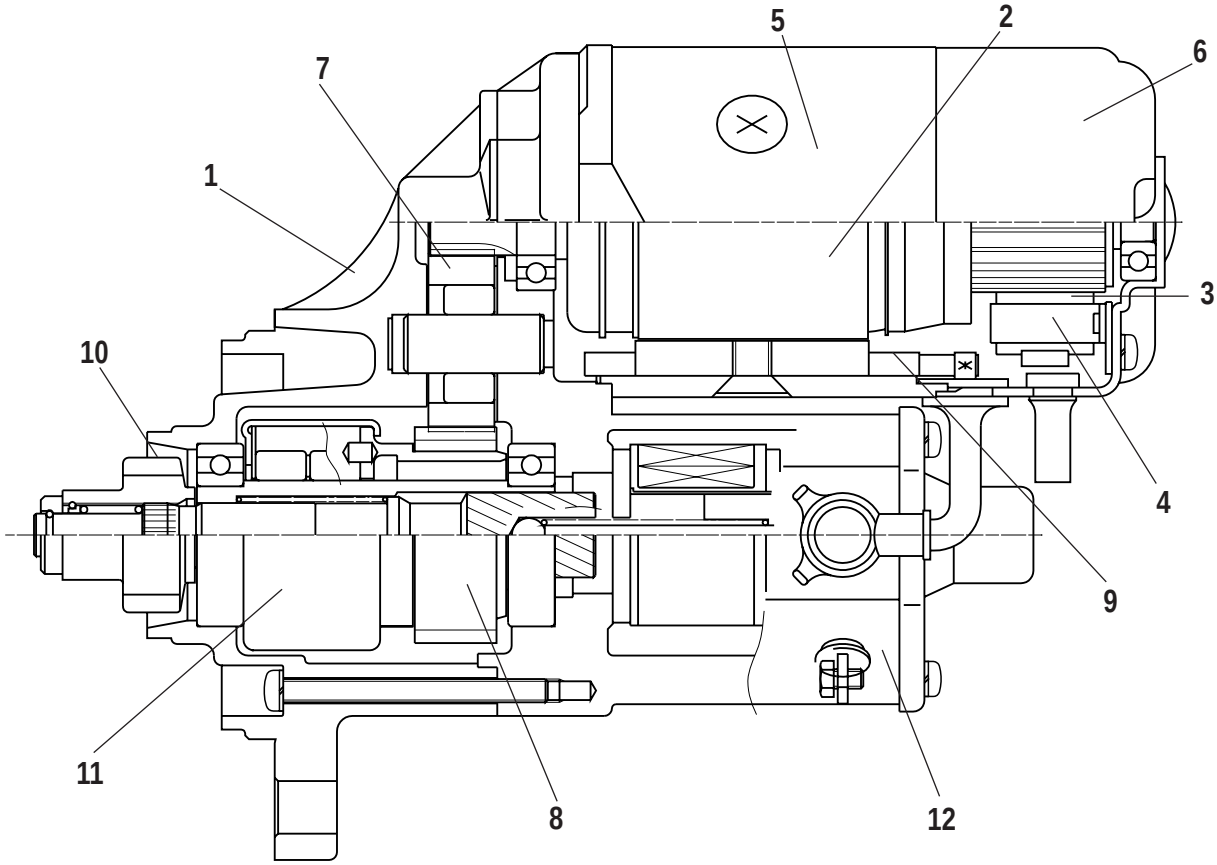

ICBS403I

Starting Motor Components
(1) Housing. (2) Armature. (3) Brushes. (4) Brush holder. (5) Starting motor case. (6) Frame. (7) Idler reduction gear.
(8) Overrunning clutch gear. (9) Field winding. (10) Pinion gear. (11) Overrunning clutch. (12) Solenoid (switch).

The major components of the starting motor are case (5), field winding (9), armature (2), brushes (3), brush holder (4), gears (7) and (8), pinion gear (10), overrunning clutch (11) and solenoid (switch) (12).

The reduction starting motor operates a little differently than the conventional starting motor. Solenoid (12), overrunning clutch (11) and pinion gear (10) are mounted below armature (2) and field winding (9). When the starting motor is activated, armature reduction gear will turn clockwise. Idler reduction gear (7) will turn counterclockwise and overrunning clutch gear (8) with pinion gear (10) will turn clockwise. In the reduction starting motor, the armature speed is reduced by about one-fourth to one-third speed of pinion gear (10) by reduction gears (7) and (8).

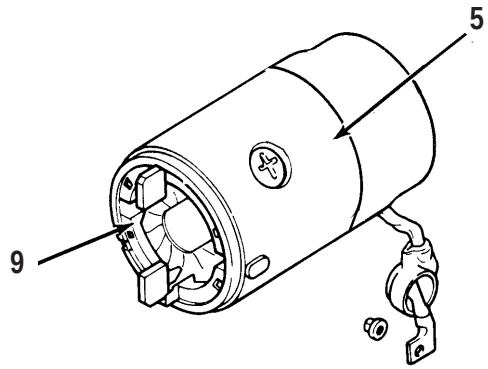

ICBS404S

Field Winding And Starting Motor Case
(5) Starting motor case. (9) Field winding.

Starting motor case (5) supports field winding (9), the brush holder and brushes. The two positive (+) brushes are welded to the field winding leads. Field winding (9) provides the magnetic field for the armature.

https://truckmanualshub.com/

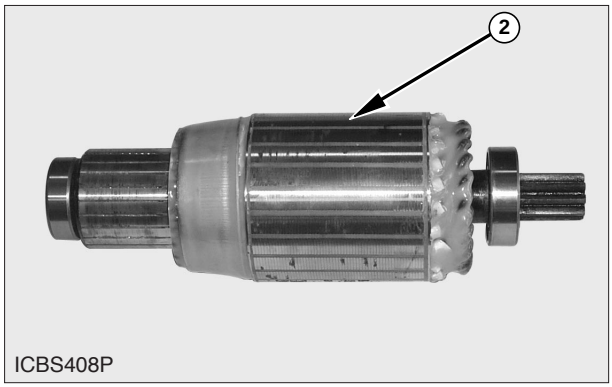

Armature
(2) Armature.

Armature (2) consists of a laminated iron core which is assembled on the armature shaft. The armature also has a commutator on one end which is make of copper segments (bars) insulated from each other and the armature shaft. The armature windings are wound in the slots of the core and connected to the commutator segments.

The armature is positioned in the field winding and is supported by bearings in the starting motor case. The armature and field winding are connected in series so the same current flows through both of them, generating high torque especially when the motor is first started.

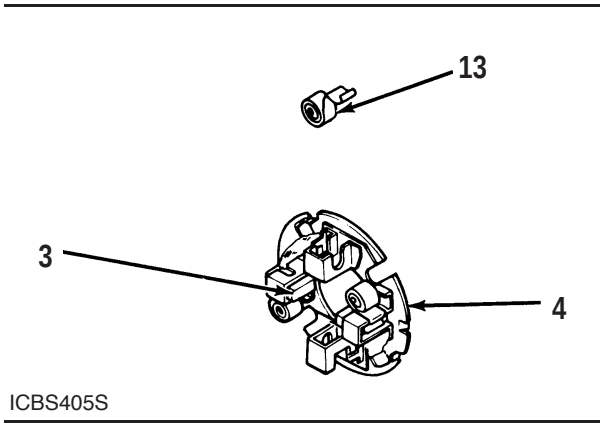

Brush Holder
(3) Brushes. (4) Brush holder. (13) Brush springs.

Brush holder (4) is mounted over the commutator to the starting motor case. Four brushes are held against the commutator. Brush springs (13) keep pressure on the brushes so they stay in contact with the commutator.

Brushes (3) are made of carbon and conduct electricity. The brushes transmit current from the field winding to the commutator. There are four brushes. Two of the brushes are positive (+) and are welded to the field winding leads. Two of the brushes are negative and are connected to case ground.

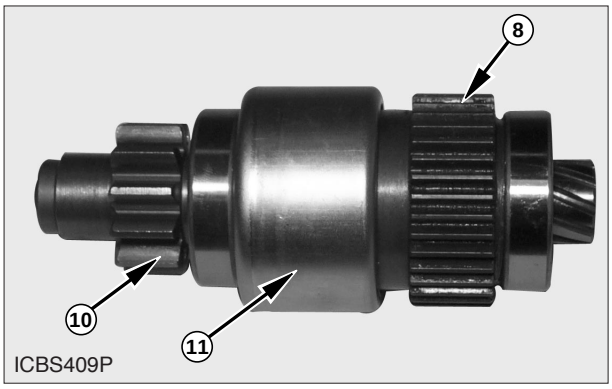

Overrunning Clutch Components
(8) Overrunning clutch gear. (10) Pinion gear.
(11) Overrunning clutch.

Overrunning clutch consists of pinion gear (10), overrunning clutch gear (8) and ball bearings. The one way outer-roller type clutch works the same way as the one used in the conventional starting motor. Due to the screw splines cut on the pinion shaft, the pinion gear advances while in rotation, instead of using a shift lever to move the pinion.

As the engine starts to run, its speed eventually exceeds the starting motor speed. Overrunning clutch (11) protects the starting motor from this overspeed condition by disengaging the mechanical connection between the engine flywheel and starting motor.
Pinion gear (10) engages the flywheel ring gear. In case of butt engagement the pinion gear will stop. As a result, the overrunning clutch spring is compressed until the solenoid contacts meet the solenoid terminals. The starting motor is now turned on which turns the pinion gear until it meshes with the ring gear to turn the engine.

https://truckmanualshub.com/

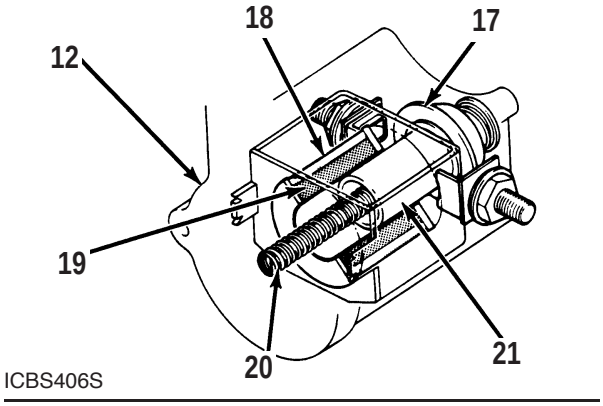

Solenoid (Switch)
(12) Solenoid. (17) Solenoid contacts. (18) Hold-in coil.
(19) Pull-in coil. (20) Return spring. (21) Plunger.

Solenoid (12) contains solenoid contacts (17), hold-in coil (18), pull-in coil (19), return spring (20) and plunger (21). When the ignition or key start switch is closed, pull-in coil (19) and hold-in coil (18) are energized. This moves plunger (21), which in turn, moves the pinion. When solenoid contacts (17) close, full battery current is sent to the motor and the engine begins to crank.

When the engine starts, the overrunning clutch protects the armature from excessive speed until the ignition or key start switch is released. After the switch is released, return spring (20) moves over to disengage the pinion.

Starting Motor Operation Diagrams

NOTE: The brushes location on the diagrams that follow are at the back of the armature. On some starting motors, the brushes are at the front of the armature. The electrical operation of the motor is the same for all motors.

General Information

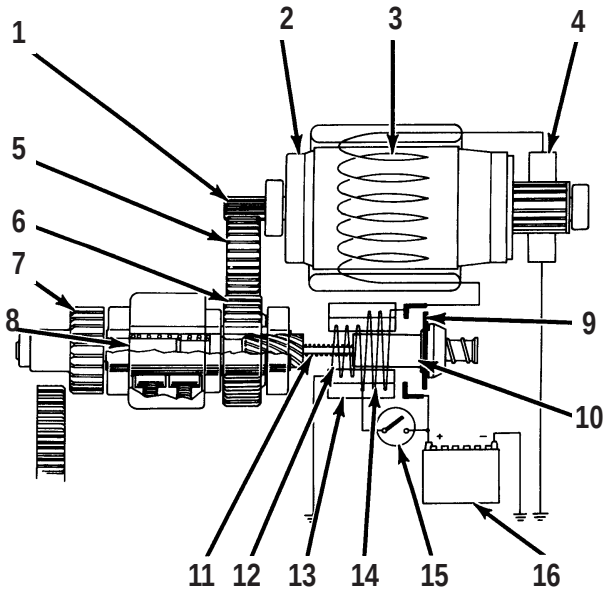

Rest Position
(1) Armature reduction gear. (2) Armature. (3) Field winding.
(4) Brushes. (5) Idler reduction gear.
(6) Overrunning clutch gear. (7) Pinion. (8) Overrunning clutch.
(9) Solenoid contacts. (10)Plunger. (11) Return spring.
(12) Hold-in winding. (13) Solenoid. (14) Pull-in winding.
(15) Ignition or key start switch. (16) Battery.

A DC Series wound motor is used as the starting motor. It has field (3) and armature (2) windings. The excitation and armature windings are connected in series. The armature drives overrunning clutch (8) through gears (1), (5) and (6). The clutch end of solenoid (13) has splines for overrunning clutch (8).

The solenoid is an integral part of the starting motor. It pushes overrunning clutch (8) with pinion (7) toward the flywheel ring gear. The end of plunger (10) is a spool which is connected to the overrunning clutch through splines. Return spring (11) helps return the overrunning clutch to its rest position after ignition or key start switch (15) is released and solenoid contacts (9) are opened.

Overrunning clutch (8) protects armature (2) from an overspeed condition. The clutch also allows a smooth engagement of pinion (7) into the flywheel ring gear. The overrunning clutch is held on the splines of solenoid. The speed of pinion (7) is about one-fourth to one-third of the armature speed due to the reduction gears.

https://truckmanualshub.com/

Operation

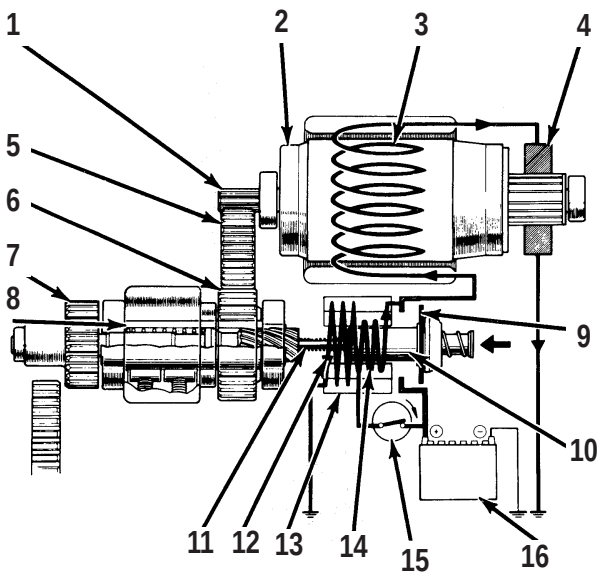

ICBS408S

Ignition Or Key Start Switch Closed
(1) Armature reduction gear. (2) Armature. (3) Field winding.
(4) Brushes. (5) Idler reduction gear.
(6) Overrunning clutch gear. (7) Pinion. (8) Overrunning clutch.
(9) Solenoid contacts. (10) Plunger. (11) Return spring.
(12) Hold-in winding. (13) Solenoid. (14) Pull-in winding.
(15) Ignition or key start switch. (16) Battery.

When switch (15) is closed, battery current will flow in two directions. Current flows from battery (16) to switch (15). It then flows through pull-in winding (14), field winding (3), armature (2), brushes (4) and then to ground. Current also flows through hold-in winding (12) to ground.

The activation of pull-in winding (14) and hold-in winding (12) produces a magnetic force, which in turn pulls plunger (10) to the left. This moves clutch (8) and pinion (7) toward the flywheel ring gear.

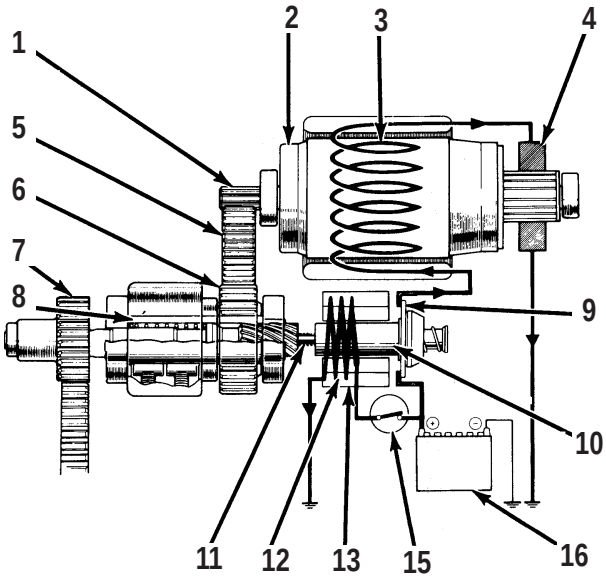

ICBS409S

Solenoid Contacts Closed
(1) Armature reduction gear. (2) Armature. (3) Field winding.
(4) Brushes. (5) Idler reduction gear.
(6) Overrunning clutch gear. (7) Pinion. (8) Overrunning clutch.
(9) Solenoid contacts. (10) Plunger. (11) Return spring.
(12) Hold-in winding. (13) Solenoid.
(15) Ignition or key start switch. (16) Battery.

When plunger (10) is pulled to the left, solenoid contacts (9) close. At this point, pinion (7) is just about to mesh with the flywheel ring gear. When this happens, pull-in winding (14) is shorted which causes current to flow through solenoid contacts (9) to field winding (3), armature (2), brushes (4) to ground. Current still flows through hold-in winding (12) to ground. The starting motor is turned ON, the pinion engages the flywheel ring gear and the engine begins to crank.

At this time the plunger is kept in the pull-in position only by the magnetic force of hold-in winding (12).

https://truckmanualshub.com/

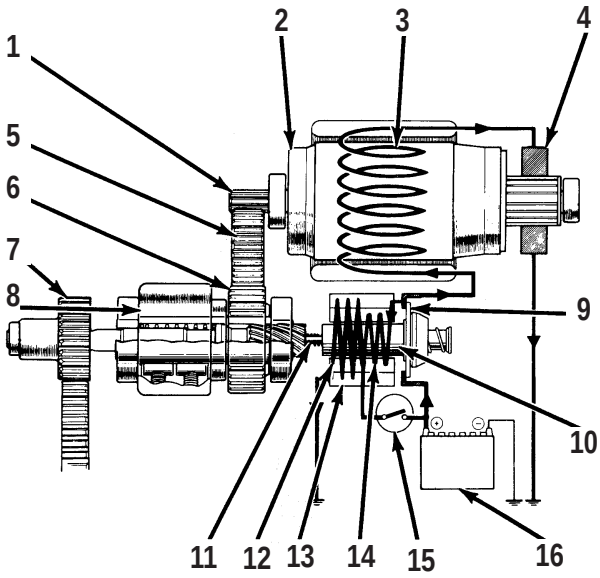

ICBS410S

Ignition Or Key Start Switch Released
(1) Armature reduction gear. (2) Armature. (3) Field winding.
(4) Brushes. (5) Idler reduction gear.
(6) Overrunning clutch gear. (7) Pinion. (8) Overrunning clutch.
(9) Solenoid contacts. (10) Plunger. (11) Return spring.
(12) Hold-in winding. (13) Solenoid. (14) Pull-in winding.
(15) Ignition or key start switch. (16) Battery.

As soon as the engine starts, the flywheel ring gear turns pinion (7) faster than the starting motor. Overrunning clutch (8) breaks the mechanical connection between the clutch and the starting motor. When switch (15) is released, current now flows through both hold-in winding (12) and pull-in winding (14) in the same direction. This causes the hold-in winding magnetic force to be reduced. Solenoid contacts (9) are opened. Plunger (10) and overrunning clutch (8) are pulled back to their original position by the force of return spring (11). The rotating armature stops. The motor is now turned OFF.

https://truckmanualshub.com/

Testing And Adjusting

Troubleshooting

Troubleshooting can be difficult. Following is a list of possible problems. To make a repair to a problem, refer to the probable cause.

This list of problems and probable causes will only give an indication of where a possible problem can be and what repairs are needed. Sometimes more or other repair work is needed beyond the recommendations in the list. Remember that a problem is not normally caused by one part, but by the relation of one part with other parts. This list cannot give all possible problems and probable causes. The serviceman must find the problem and its source, then make the necessary repairs.

Troubleshooting Problem List

1. Starting motor does not turn or turns too slow.

2. Armature turns, but pinion does not engage flywheel ring gear.

3. Armature turns, and pinion engages ring gear, but engine does not crank.

4. Starting motor continues to run after ignition or key start switch has been released.

5. Pinion does not disengage after engine starts to run.

Troubleshooting Problems

Problem 1: Starting motor does not turn or turns too slow.

Probable Cause:

1. Battery is discharged:
Charge battery.

2. Battery is defective:
Replace Battery.

3. Battery cable terminals loose, corroded or poor ground connection:
Tighten cable terminals, clean terminals and battery posts if corroded and apply anti-acid grease.

4. Solenoid contacts burnt or worn out:
Replace the solenoid (switch).

5. Solenoid windings disconnected or short circuited:
Replace the solenoid (switch).

6. Ignition or key start switch or solenoid or relay (if equipped) damaged:
Replace ignition or key start switch or solenoid or relay as needed.

7. Excessive voltage drop in cables or damaged cables or loose cable connections or corroded terminal connections:
Check starting motor cables and their connections.

8. Brushes worn or shorted:
Replace the brush holder and/or starting motor case.

9. Commutator is worn:
Undercut the mica.

10. Field winding shorted or grounded:
Replace the starting motor case.

11. Armature winding shorted or grounded:
Replace the armature.

12. Not enough brush spring tension:
Check brush spring tension. Replace the springs if necessary.

13. Poor contact between solenoid and field winding:
Repair connections.

14. Armature contacts field winding because of worn bearing or bent armature:
Replace the bearing or armature.

15. Overrunning clutch is defective:
Replace the overrunning clutch.

Problem 2: Armature turns, but pinion does not engage flywheel ring gear.

Probable Cause:

1. Overrunning clutch is defective or pinion teeth are worn:
Replace the overrunning clutch.

2. Overrunning clutch does move freely on splines of the solenoid:
Remove dirt and foreign material on the solenoid splines.

3. Damaged flywheel ring gear:
Replace flywheel ring gear.

4. Damaged or broken solenoid:
Replace solenoid.

https://truckmanualshub.com/

5. Damaged or broken armature or idler or clutch gear:
Replace armature or idler gear or overrunning clutch as needed.

Problem 3: Armature turns and pinion engages ring gear, but engine does not crank.

Probable Cause:

1. Low battery:
Charge battery.

2. Not enough brush spring tension:
Check brush spring tension. Replace the springs if necessary.

3. Relay mounted away from starting motor (if equipped) is defective:
Replace relay.

4. Excessive voltage drop in cables:
Check cables and their connections.

5. Overrunning clutch slips:
Replace overrunning clutch.

Problem 4: Starting motor continues to run after ignition or key start switch has been released.

Probable Cause:

1. Defective ignition or key start switch or solenoid or relay.
Replace ignition or key start switch or solenoid or relay as needed.

Problem 5: Pinion does not disengage after engine starts to run.

Probable Cause:

1. Solenoid return spring is weak or broken:
Replace solenoid.

2. Defective ignition or key start switch or relay:
Replace ignition or key start switch or relay.

Starting Motor

On Machine Starting Motor Diagnosis Procedure

The following is a simplified procedure intended to help the serviceman to determine if a starting motor needs to be removed and replaced or repaired. It is not intended to cover all possible problems and conditions, but to serve only as a guide.

https://truckmanualshub.com/

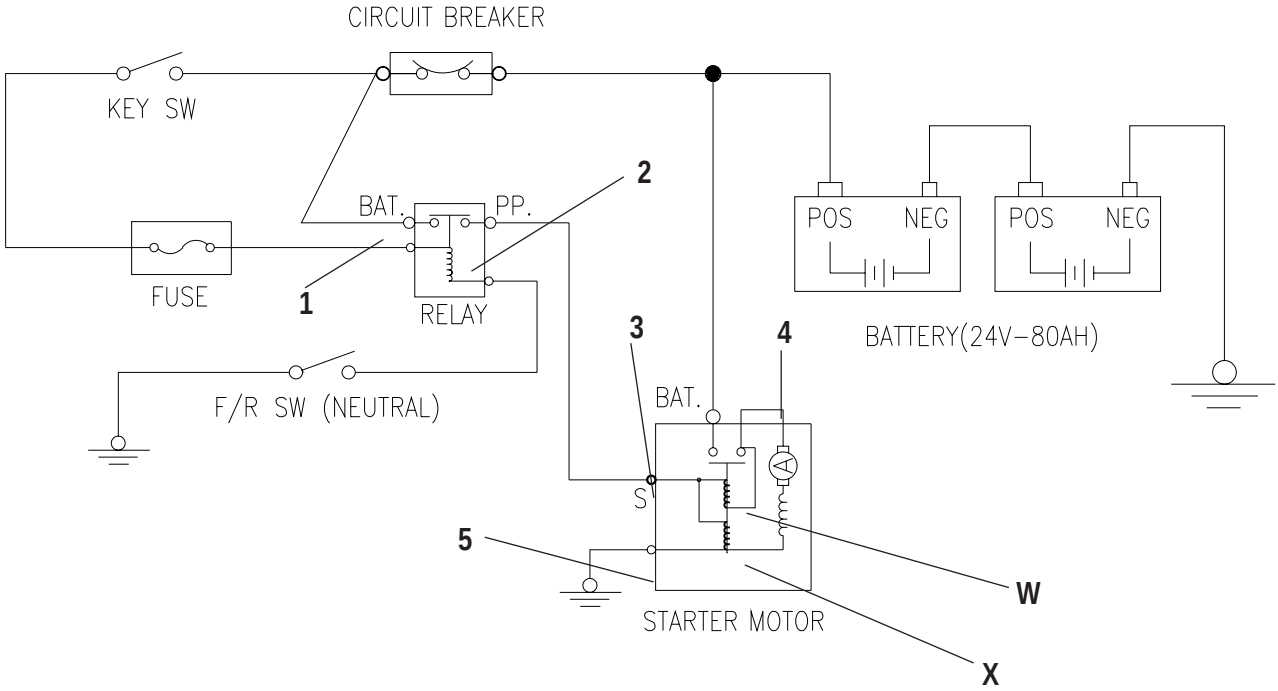

Typical Starting Circuit
(1) Test point. (2) Test point. (3) Test point. (4) Test point. (5) Test point. (W) Pull-in coil. (X) Hold-in coil.

General Information

All starting systems are made up of four elements. They are the ignition or key start switch, start relay, the starting motor solenoid and starting motor. The only exception to this is that on some small engines the start relay may not be required. In this case, the start switch powers the starting motor solenoid directly.

Start switches are relatively low current devices. They are rated to switch approximately 5 to 20 amps. Because the coil of a start relay [between test point (1) and (2)] draws about 1 amp, the start switch can easily turn on the start relay and have long life.

The switch contacts of a typical start relay are rated to switch between 100 and 300 amps.

Because a solenoid requires 5 to 50 amps, the start relay can easily switch this load.

The starting motor solenoid has two functions: 1) it engages the pinion with the flywheel, and 2) it is a high current switch rated about 1000 amps that actually turns on the starting motor.

The starting motor solenoid has two coils. Pull-in coil (W) draws about 40 amps and hold-in coil (X) requires about 5 amps. The instant the start relay closes, both coils (W) and (X) receive power. Battery voltage is applied to the high end of both coils and at test point (3) which is the start (S) terminal. The low end of hold-in coil (X) is permanently grounded to the ground post of the starting motor. Grounding for the low end, test point (4), of pull-in coil (W) is momentary, and takes place through the DC resistance of the starting motor. As soon as magnetic force builds in both coils, the pinion moves toward the flywheel ring gear. The pinion will stop short of engaging the flywheel ring gear. Only then will the solenoid contacts close to power the starting motor. This temporarily removes the ground from pull-coil (W), and puts battery voltage on both ends of it while the motor cranks. During this period, the pull-in coil is out of the circuit. Cranking continues until power to the solenoid is broken by releasing the ignition or key start switch.

The purpose of these switches and relays is to permit a 5 amp dash-mounted switch to turn on a 500 to 1000 amp motor used to crank an engine.

https://truckmanualshub.com/

Battery voltage (power) available during cranking varies according to the temperature of the batteries. The following chart is a guide as to what to expect from a normal system.

TYPICAL SYSTEM VOLTAGE DURING CRANKING AT VARIOUS AMBIENT TEMPERATURES		
Temperature	**24V System**	**12V System**
-23 to -7ºC (-10 to 20ºF)	12 to 16 Volts	6 to 8 Volts
-7 to 10ºC (20 to 50ºF)	14 to 18 Volts	7 to 9 Volts
10 to 27ºC (50 to 80ºF)	16 to 20 Volts	8 to 10 Volts

Figure 1

The next chart shows maximum acceptable voltage loss in the high current battery circuit feeding the starting motor. These values are maximums for machines of approximately 2000 SMH and up. Newer machines would be less than those shown.

MAXIMUM ACCEPTABLE SYSTEM VOLTAGE DROPS DURING CRANKING		
Circuit	24V System	12V System
Battery (-) post to starting motor (-) terminal	1.4 Volts	0.7 Volts
Battery (+) post to solenoid (+) terminal	1.0 Volts	0.5 Volts
Solenoid Bat terminal to solenoid Mtr terminal	0.8 Volts	0.4 Volts

Figure 2

Voltages greater than those shown are most often caused by loose and/or corroded connections or defective switch contacts.

Diagnosis Procedure

Tools Needed	
Digital Multimeter or Equivalent	1
AC/DC Clamp-On Ammeter or Equivalent	1

NOTICE

Do not operate the starting motor for more than 30 seconds at a time. After 30 seconds, the cranking must be stopped for two minutes to allow the starting motor to cool. This will prevent damage to the starting motor due to excessive heat buildup.

If the starting motor cranks real slow or not at all, do the following procedure:

1. Measure battery voltage at the battery posts with the multimeter while cranking or attempting to crank the engine. Make sure to measure the battery posts. Do not measure on the cable post clamps.

2. Is battery voltage equal to or greater than shown in Figure 1?

a. If the battery voltage is OK, go to Step 3.

NOTE: Low batteries can be caused by battery condition or a shorted starter.

3. Measure current draw on the (+) battery cable between the battery and the starting motor solenoid with the clamp-on ammeter. The maximum current draw and minimum voltage allowed are shown in Specifications under Load Test.

The figures shown in Specifications are taken at a temperature of 27ºC (80ºF). At temperatures below 27ºC (80ºF), the voltage will be less and the current draw will be higher. If current draw is too much, the starting motor has a problem and must be removed for repair or replacement.

NOTE: If voltage at the battery post is within approximately 2 volts of the lowest value in the applicable temperature range of Figure 1 and if the large starting motor cables get hot, then the starting motor has problem and the Ammeter is not needed.

4. Measure starting motor voltage from test point (4) to (5) with the multimeter while cranking or attempting to crank the engine.

5. Is voltage equal to or greater than shown in Figure 1?

a. If the starting motor voltage is OK, the batteries and starting motor cables down to the motor are within specifications, Go to Step 8.
b. If the starting motor voltage is low, the voltage drop between the batteries and the starting motor is too great. Go to Step 6.

6. Measure the voltage drops in the cranking circuits with the multimeter. Compare the results with maximum voltage drops allowed in Figure 2.

7. Are all the voltages within specifications?

a. If the voltage drops are OK, go to Step 8, to check the engine.
b. If the voltage drops are too high, repair and/or replace the faulty electrical component.

https://truckmanualshub.com/

8. Turn the engine over by hand to make sure it is not locked up. Check oil viscosity and any external loads that would affect engine rotation.

9. Is the engine locked up and/or hard to turn?

a. If it is, repair the engine as required.

b. If the engine is not hard to turn over, go to Step 10.

10. Does the starting motor crank?

a. If it does crank, remove the starting motor for repair and/or replacement.

b. If it does not crank, check for blocked engagement of the pinion and flywheel ring gear.

NOTE: Blocked engagement and open solenoid contacts will give the same electrical symptoms.

Off Machine No Load Test

Tools Needed	
Digital Multimeter or Equivalent	1
AC/DC Clamp-On Ammeter or Equivalent	1

Do the procedure that follows to perform a no load test after the starting motor has been repaired or removed from the machine. It should be noted to completely check a starting motor, the complete procedure should be done as shown in On Machine Starting Motor Diagnosis Procedure. To check the starting motor components, see Starting Motor Component Tests.

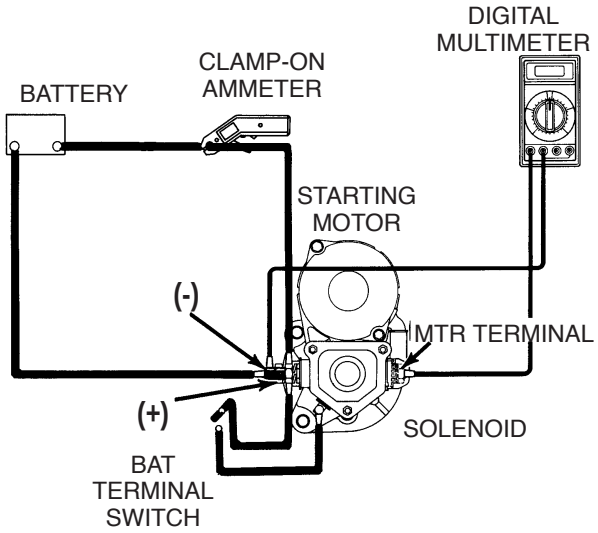

ICBS411S

No Load Test Diagram

1. Connect fully charged 12 volt batteries to the starting motor as shown. Connect the (+) battery cable to the Bat terminal of the starting motor solenoid. Connect the (-) battery cable to the starting motor negative (-) terminal.

2. Connect an open switch between the S terminal and Bat terminal of the solenoid as shown.

3. Connect the multimeter red lead to the Mtr terminal of the solenoid. Connect the black lead to the starting motor negative (-) terminal.

4. Use an rpm indicator or photo tach to measure armature speed.

5. Close the switch. The maximum current draw and minimum voltage allowed are shown in Specifications under No Load Test.

6. If the voltage is below the minimum, the battery are low and need to be charged. It should be noted that if the voltage is higher, the speed will be proportionally higher.

https://truckmanualshub.com/

No Load Test Results

Following are some no load test results that could be seen and corresponding possible problems.

1. Rated current draw and no load speed indicates normal starting motor condition.

2. Low free speed and high current draw indicate:

- **a.** Too much friction caused by tight, dirty, worn bearings, bent armature or loose field pole shoes that allow armature to drag.
- **b.** Shorted armature. This can be further checked on a growler after disassembly.
- **c.** Grounded armature or field winding. Check for grounds after disassembly.

3. Failure to operate with high current draw indicates:

- **a.** A direct ground in the terminal or field windings.
- **b.** Frozen bearings. This can be seen by turning the armature by hand.

4. Failure to operate with no current draw indicates:

- **a.** Open field circuit. This can be checked with the multimeter after disassembly.
- **b.** Open armature. Inspect the commutator for badly burned bars.
- **c.** Broken brush springs, worn brushes or high insulation between the commutator bars which prevents good contact between the brushes and commutator.

5. Low no load speed and low current draw indicate:

- **a.** High internal resistance due to poor connections, defective leads, dirty commutator and/or causes listed in Step 4.

6. High free speed and high current draw indicate:

- **a.** Shorted field circuit. Check the field winding for shorts after disassembly.

Starting Motor Component Tests

Tools Needed	
Digital Multimeter or Equivalent	1
Growler Tester	1

Field Winding Tests

Visually check the field windings first. Check for wear and damage. Check all connections for clean and tight solder joints.

Field Winding Ground Test

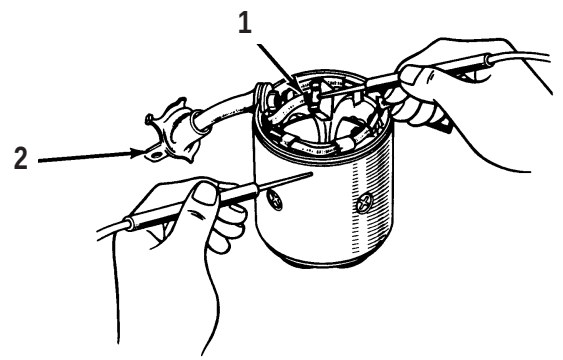

ICBS412S

Field Winding Ground Test
(1) Field winding leads. (2) Motor (Mtr) terminal lead.

1. Put the multimeter on the 20M resistance (Ω) scale. Touch the meter leads between each field winding lead (1) and the starting motor case.

2. Touch the meter leads between motor (Mtr) terminal lead (2) and the starting motor case.

3. Each reading should be greater than 100,000 ohms.

4. If the meter reading is less than 100,000 ohms, the field winding is grounded and the starting motor case and field windings must be replaced.

https://truckmanualshub.com/

Field Winding Continuity Test

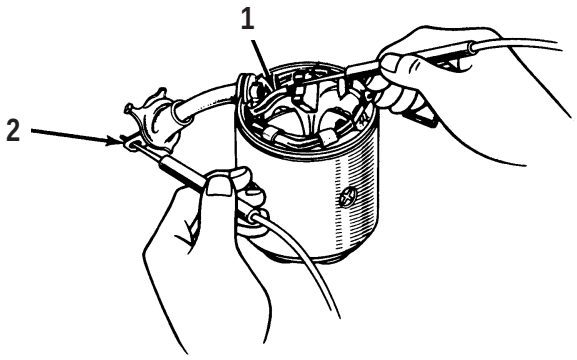

ICBS413S

Field Winding Continuity Test
(1) Field winding leads. (2) Motor (Mtr) terminal lead.

1. Put the multimeter on the 200 ohm resistance (Ω) scale. Touch the meter leads between field winding leads(1).
2. Touch the meter leads between each field winding lead (1) and motor (Mtr) terminal lead (2).
3. Each reading should be 0.0 to 0.1 ohms.
4. If the meter reading is higher than shown in Step 3, there is an open in the field winding and the starting motor case and field windings must be replaced.

Armature Tests

Armature Short Circuit Test

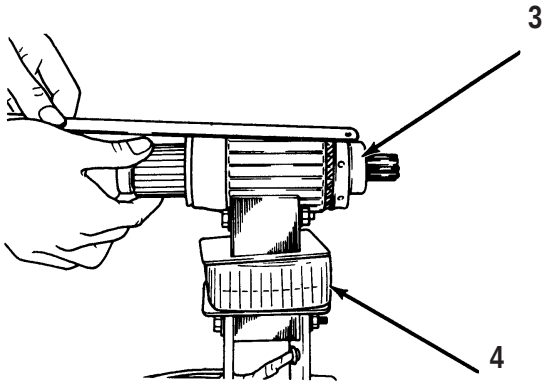

ICBS414S

Armature Short Circuit Check
(3) Armature. (4) Growler tester.

1. Place armature (3) on growler tester (4). Turn the tester on.
2. Hold a hacksaw blade against the armature core while slowly rotating the armature.
3. The blade should not vibrate or be attracted to the armature core.
4. If the blade does vibrate or is attracted to the core, the armature has a short and must be rebuilt or replaced.

https://truckmanualshub.com/

Armature Ground Test

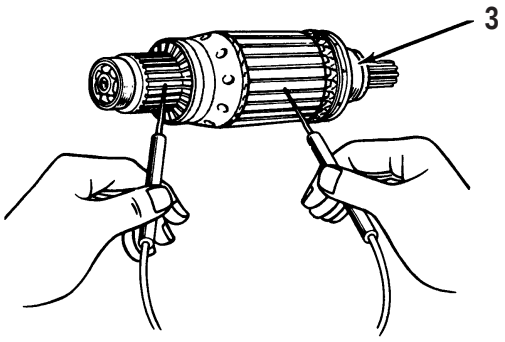

ICBS415S

Armature Winding Ground Test
(3) Armature.

1. Put the multimeter on the 20M resistance (Ω) scale. Touch one meter lead on each commutator bar and the other lead on the armature core.
2. Each reading should be greater than 100,000 ohms.
3. If the meter reading is lower than 100,000 ohms, the armature is grounded and must be rebuilt or replaced.

Armature Continuity Test

To test the armature for an open is difficult without special equipment. If the commutator shows signs of pitting or any of the commutator bars are black (burned), the armature has an open circuit and must be replaced.

Armature Runout Check

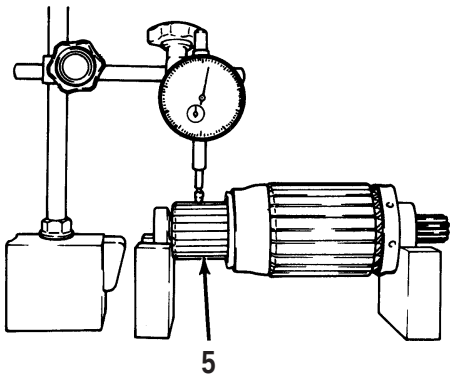

ICBS416S

Armature Runout Check
(5) Commutator.

1. Check the armature runout (TIR) of commutator (5). The maximum TIR allowed is 0.05mm (.002 in.).
2. If the TIR is too much, the armature must be replaced.

Commutator Outside Diameter Check

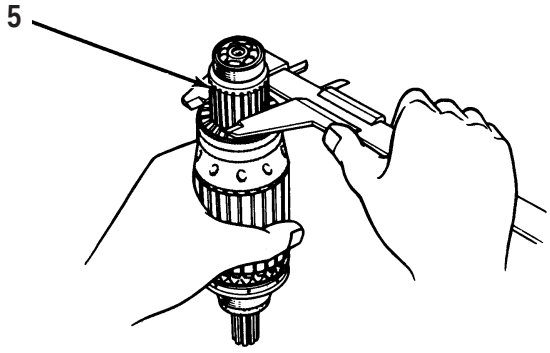

ICBS417S

Commutator Outside Diameter Check
(5) Commutator.

1. Check the outside diameter of commutator (5). The new and minimum diameters are shown in Specifications under Commutator.
2. If the commutator is worn, It must be replaced.

https://truckmanualshub.com/

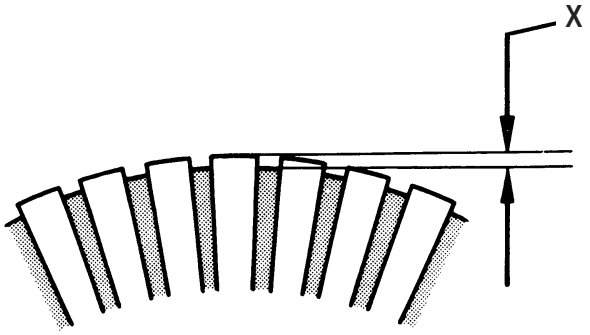

ICBS418S

Depth Of Segment Mica
(X) Depth of segment mica.

3. Measure the depth of commutator segment mica. The minimum depth should be 0.20 mm (.008 in.)

NOTICE

Failure to remove the insulation shavings and particles will cause the brushes to wear at a fast rate.

4. If the depth is under the minimum, the mica can be undercut. If the mica is undercut, make sure to remove all shavings and mica particles.

Brush and Brush Holder Checks

Brush Holder Test

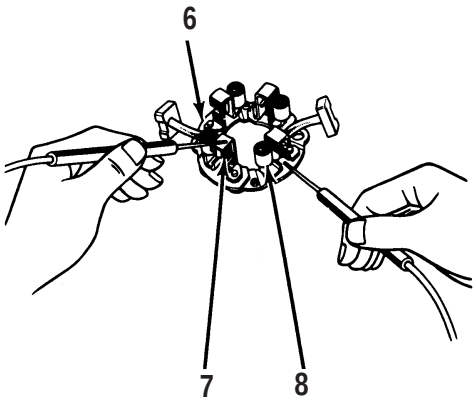

ICBS419S

Brush Holder Insulation Test
(6) Brush holder plate. (7) Brush holder. (8) Brush spring.

1. Check brush holder springs (8) for damage or rust. Replace them if necessary.

2. Put the multimeter on the 20M resistance (Ω) scale. Touch one meter lead to each positive (+) brush holder (7) and the other lead to brush holder plate (6). Check both positive brush holders.

3. Each reading should be greater than 100,000 ohms.

4. If the meter reading is less than 100,000 ohms, the brush holder is grounded and must be replaced.

https://truckmanualshub.com/

Brush Length Check

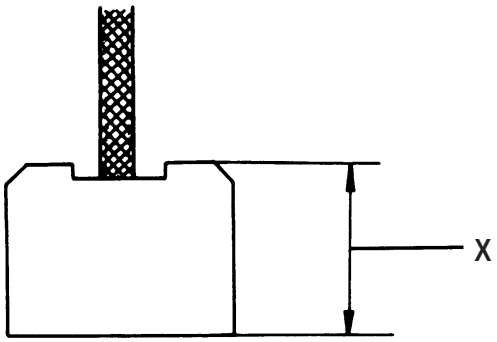

ICBS420S

Brush Length Measurement
(X) Brush Length.

1. Measure brush length (X) for wear. The new and minimum brush lengths are shown in Specifications under Brush Length.
2. If the brushes are worn below the minimum length, replace the brush.

Overrunning Clutch Check

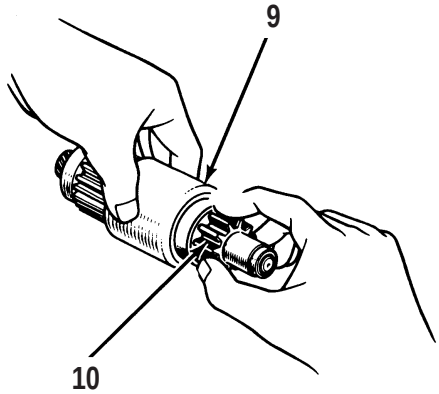

ICBS421S

Overrunning Clutch Check.
(9) Housing. (10) Pinion.

1. Visually inspect the overrunning clutch for damage.
2. Hold housing (9) and turn pinion (10) in the direction of operation. A clicking noise should be heard during this check.
3. Hold housing (9) and turn pinion (10) in the opposite direction of operation. The pinion should be locked which will not allow rotation.
4. Hold housing (9) and press pinion (10) into the housing as far as it will go, then release the pinion. The pinion must spring back into its rest position.
5. If any of the checks in steps 1-4 are not correct, replace the overrunning clutch.

https://truckmanualshub.com/

Disassembly And Assembly

Starting Motor

NOTE: The disassembly and assembly that follows is of a R2.0 series starting motor. The other motors are similar.

Disassemble Starting Motor

Start By:

a. remove starting motor

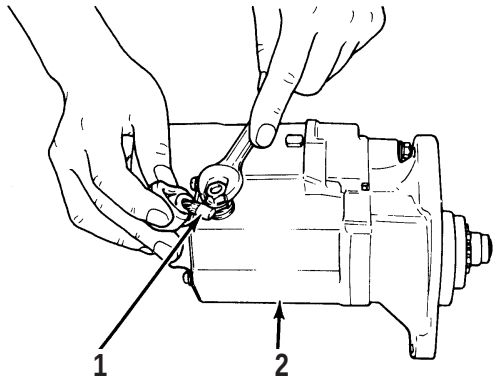

ICBD401S

1. Disconnect motor (Mtr) terminal lead wire (1) from solenoid (2).

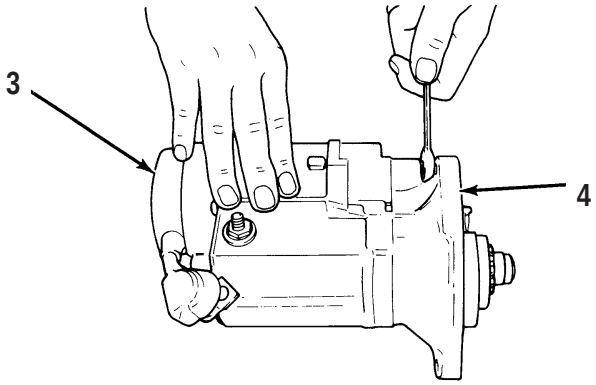

ICBD402S

2. Remove the through bolts from drive end housing (4) that hold starting motor case (3) onto the solenoid.

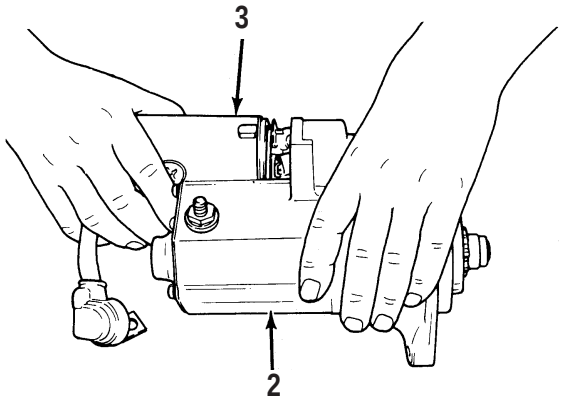

ICBD403S

3. Remove motor case (3) from solenoid (2).

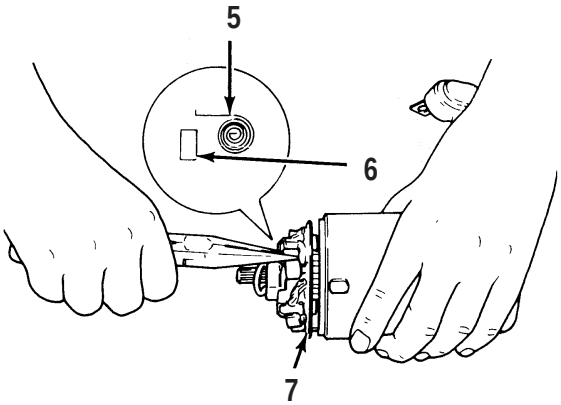

ICBD404S

4. If the motor case has an end frame, remove it. Release the tension of brush springs (5) with a pair of long nosed pliers. Pull brushes (6) away from the commutator. Remove brush holder (7).

https://truckmanualshub.com/

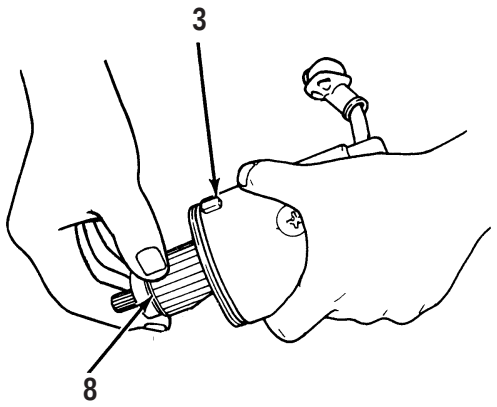

ICBD405S

5. Remove armature (8) from motor case (3). It may be necessary to use a plastic or rubber hammer to drive the case from the armature.

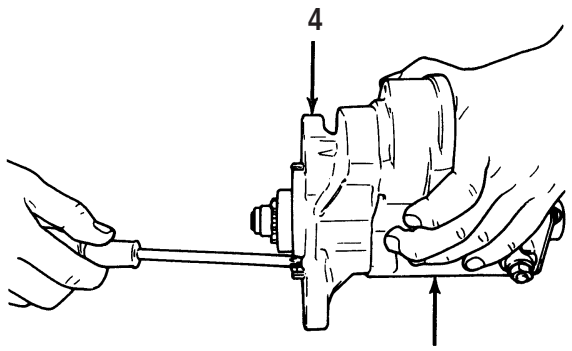

ICBD406S

6. Remove the screws that hold drive end housing (4) to solenoid (2).

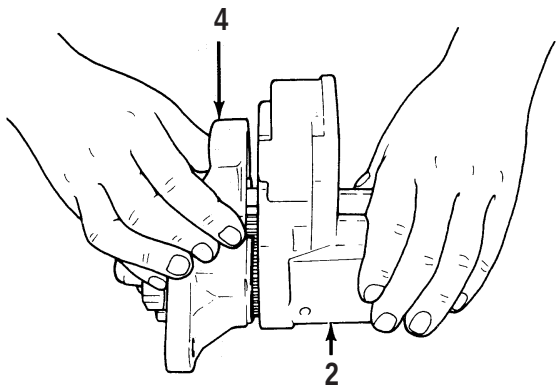

ICBD407S

7. Remove housing (4) from solenoid (2).

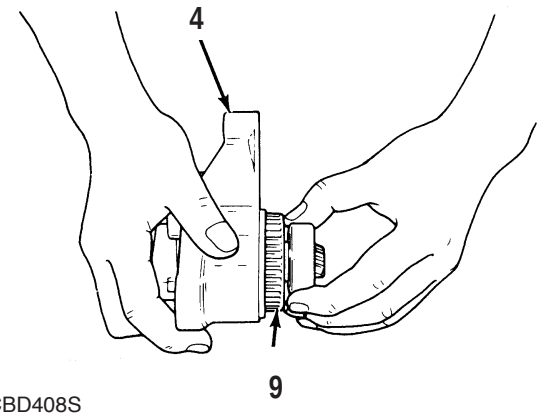

ICBD408S

8. Remove overrunning clutch (9) from the housing (4).

https://truckmanualshub.com/

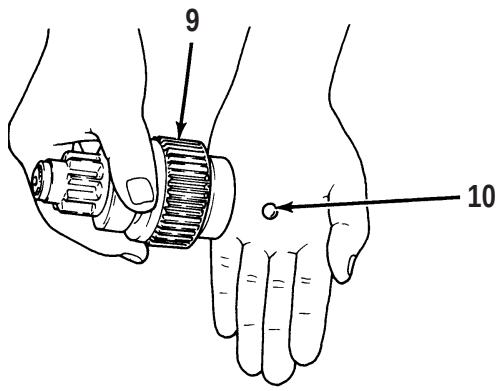

ICBD409S

9. Remove steel ball (10) from overrunning clutch (9).

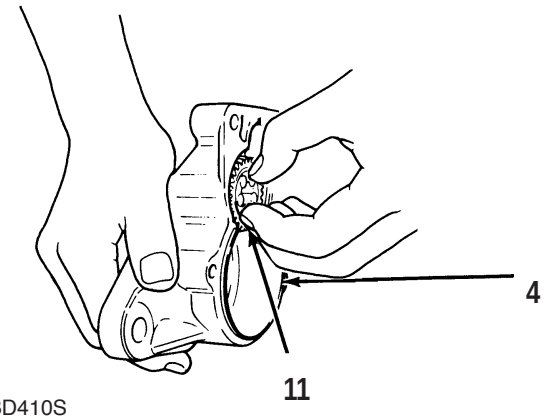

ICBD410S

10. Remove idler gear (11) from housing (4).

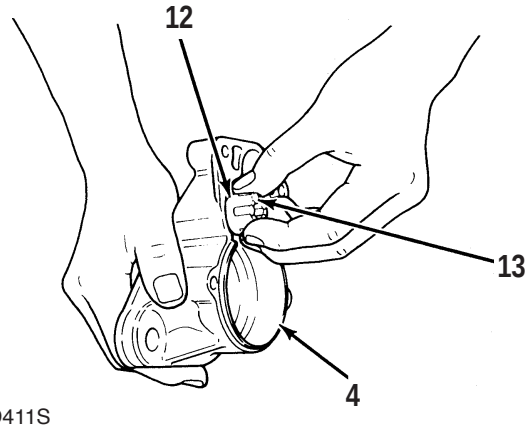

ICBD411S

11. Remove retainer (12) and rollers (13) from housing (4).

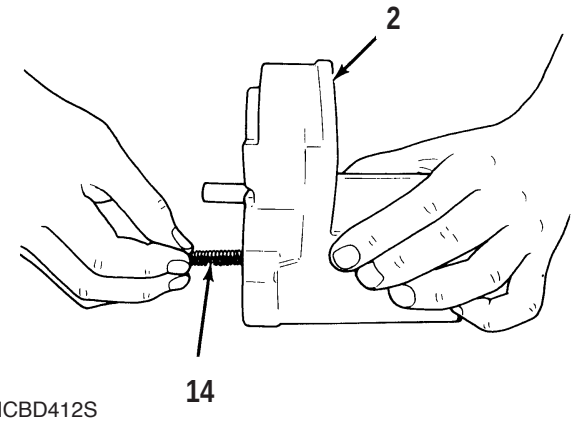

ICBD412S

12. Remove return spring (14) from solenoid (2).

NOTICE

Do not use a liquid cleaning agent to clean the armature, field winding, or overrunning clutch. A liquid cleaning agent can damage the insulation in the armature and field windings. It could also dissolve the grease in the overrunning clutch.

13. Clean the armature, field winding and overrunning clutch with mineral spirits and a brush.

14. If the commutator is dirty, it may be cleaned with No. 00 sandpaper. Do not use emery cloth.

15. Inspect all parts for wear and damage.

https://truckmanualshub.com/

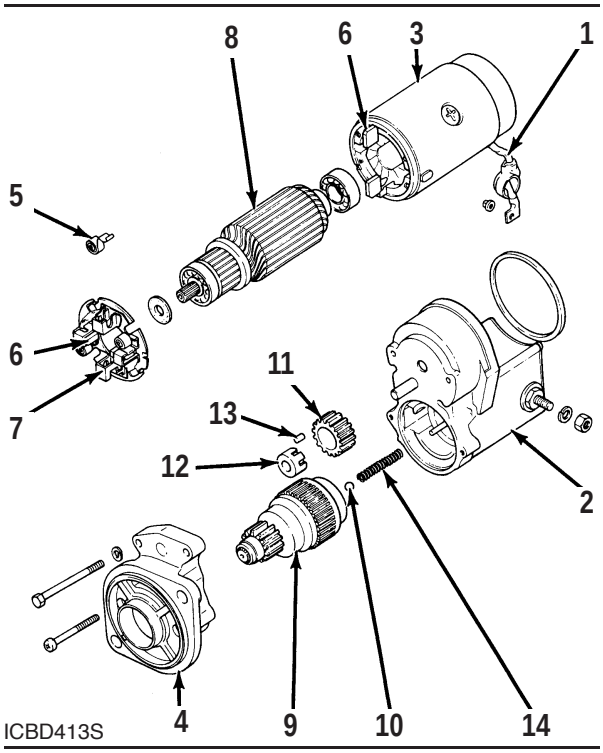

R2.0 Series Reduction Starting Motor
(1) Motor (Mtr) Terminal Lead Wire. (2) Solenoid.
(3) Starting Motor Case. (4) Drive End Housing.
(5) Brush Springs.
(6) Brushes. (7) Brush Holder. (8) Armature.
(9) Overrunning Clutch. (10) Steel Ball.
(11) Idler Gear. (12) Retainer. (13) Roller.
(14) Return Spring.

Assemble Starting Motor

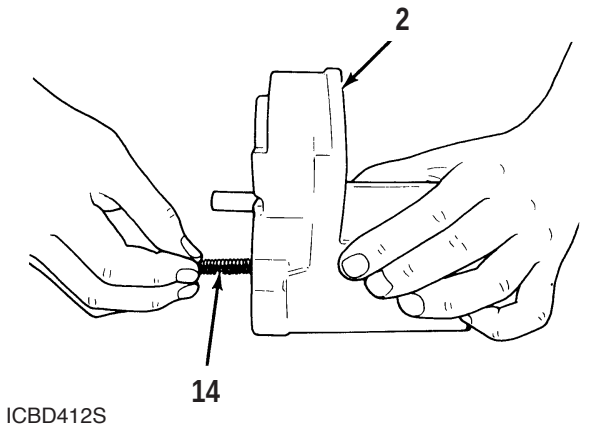

1. Install return spring (14) into solenoid (2).

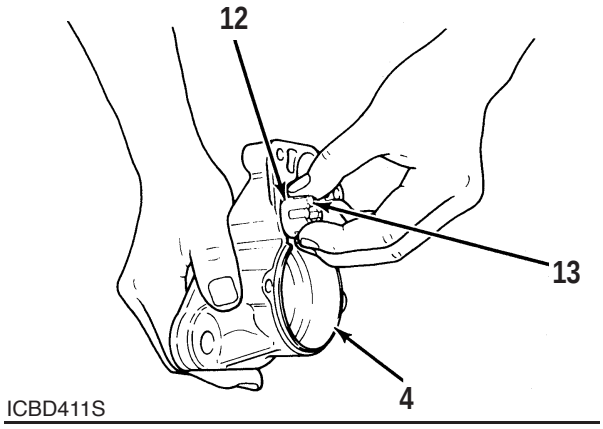

2. Install rollers (13) and retainer (12) into drive end housing (4).

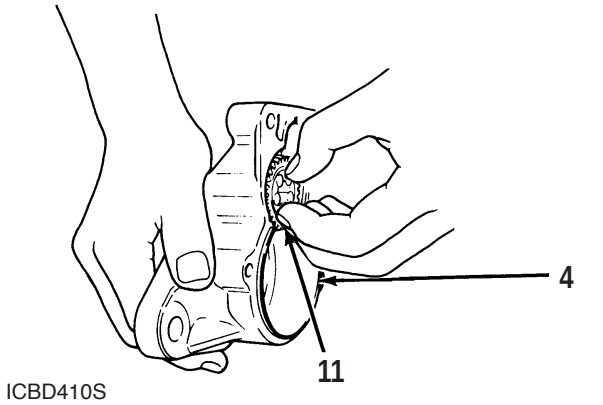

3. Put idler gear (11) on housing (4).

https://truckmanualshub.com/

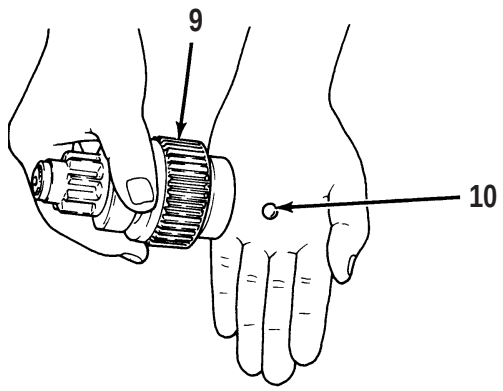

ICBD409S

4. Put steel ball (10) into overrunning clutch (9).

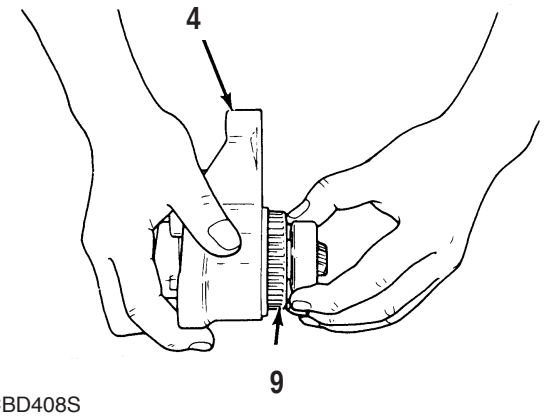

ICBD408S

5. Put overrunning clutch (9) into housing (4).

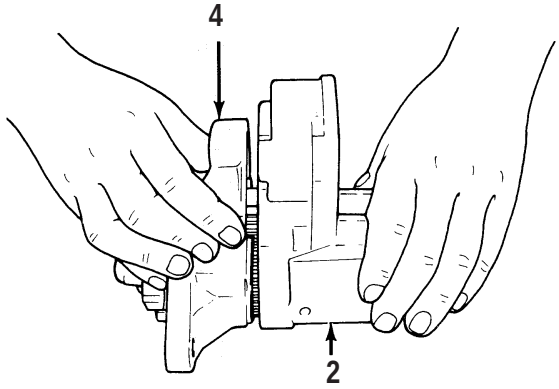

ICBD407S

6. Put drive end housing (4) on solenoid (2) and install the screws. Tighten the screws to a torque of 0.6 to 0.9 N•m (5 to 8 lb•in).

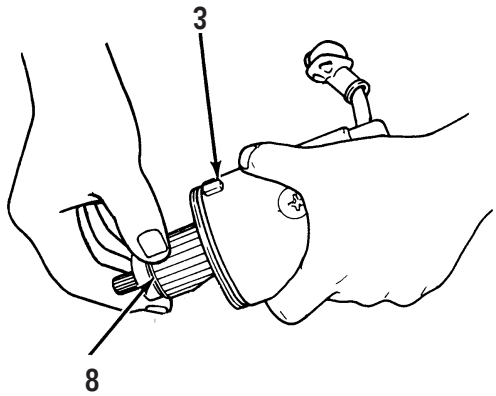

ICBD405S

7. Put armature (8) into starting motor case (3).

https://truckmanualshub.com/

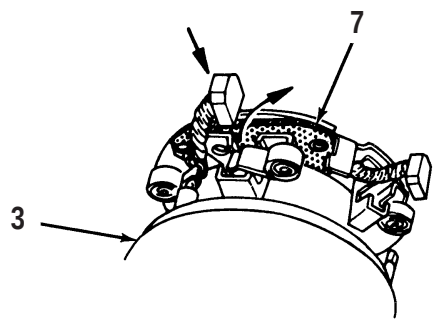

ICBD414S

8. Put brush holder (7) in position over the commutator. Put the positive brushes [connected to motor case (3)] in the positive holders (separated from the plate with insulator). Put the negative brushes [connected to brush holder (7)] in the negative holders (not insulated).

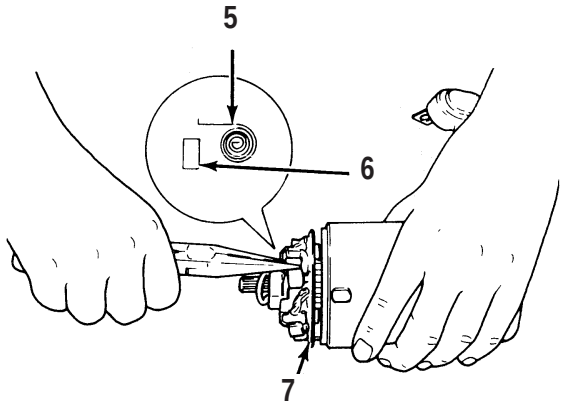

ICBD404S

9. Make sure the positive brush lead wires are not grounded. Put brush springs (5) on top of brushes (6) with a pair of long nosed pliers. Make sure there is no oil on brush holder (7) or the commutator.

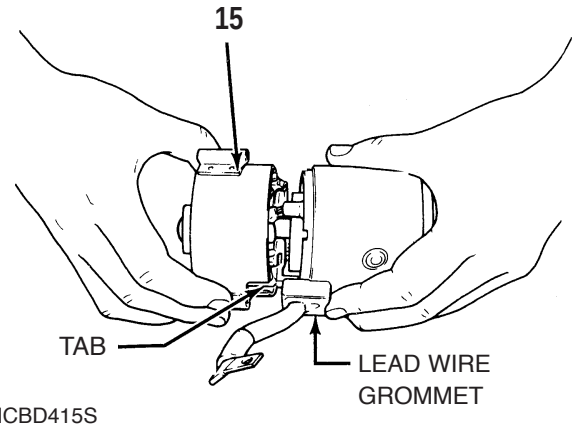

ICBD415S

10. If the motor case has an end frame (15), install it onto the case. Engage the tab on the end frame with the lead wire grommet on the motor case.

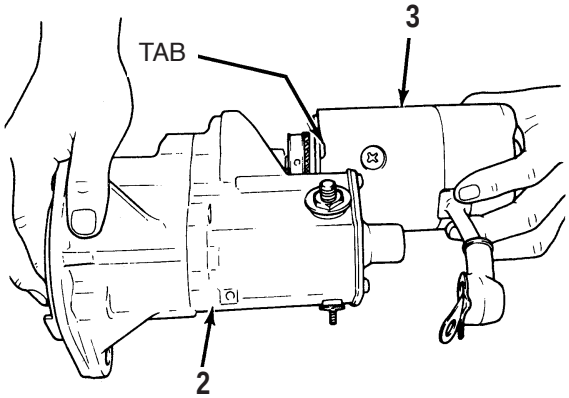

ICBD416S

11. Put motor case (3) in position onto solenoid (2). Engage the tab on the case with the notch in the solenoid. Install the through bolts. Tighten them to a torque of 1.5 to 2.4 N•m (13 to 21 lb•in).

https://truckmanualshub.com/

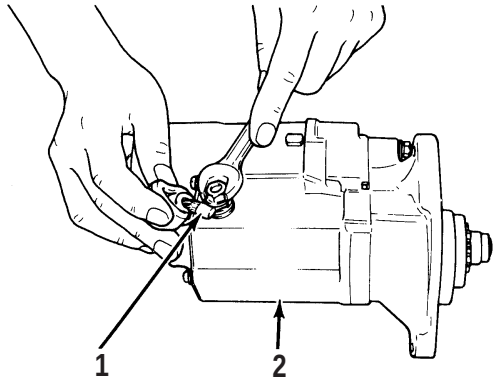

ICBD401S

12. Connect lead wire (1) to the motor (Mtr) terminal of solenoid (2).

End By:

a. install starting motor

https://truckmanualshub.com/

SB2110E00
Feg. 1998

Specifications
Systems Operation
Testing & Adjusting

Gasoline Engine
GM Vortec V6 (4.3 Liter)

https://truckmanualshub.com/

Important Safety Information

Most accidents involving product operation, maintenance and repair are caused by failure to observe basic safety rules or precautions. An accident can often be avoided by recognizing potentially hazardous situations before an accident occurs. A person must be alert to potential hazards. This person should also have the necessary training, skills and tools to perform these functions properly.

Improper operation, lubrication, maintenance or repair of this product can be dangerous and could result in injury or death.

Do not operate or perform any lubrication, maintenance or repair on this product, until you have read and understood the operation, lubrication, maintenance and repair information.

Safety precautions and warnings are provided in this manual and on the product. If these hazard warnings are not heeded, bodily injury or death could occur to you or other persons.

The hazards are identified by the "Safety Alert Symbol" and followed by a "Signal Word" such as "WARNING" as shown below.

⚠ WARNING

The meaning of this safety alert symbol is as follows :

Attention! Become Alert! Your Safety is Involved.

The Message that appears under the warning, explaining the hazard, can be either written or pictorially presented.

Operations that may cause product damage are identified by NOTICE labels on the product and in this publication.

DAEWOO cannot anticipate every possible circumstance that might involve a potential hazard. The warnings in this publication and on the product are therefore not all inclusive. If a tool, procedure, work method or operating technique not specifically recommended by DAEWOO is used, you must satisfy yourself that it is safe for you and others. You should also ensure that the product will not be damaged or made unsafe by the operation, lubrication, maintenance or repair procedures you choose.

The information, specifications, and illustrations in this publication are on the basis of information available at the time it was written. The specifications, torques, pressures, measurements, adjustments, illustrations, and other items can change at any time. These changes can affect the service given to the product.
Obtain the complete and most current information before starting any job. DAEWOO dealers have the most current information available.

https://truckmanualshub.com/

https://truckmanualshub.com/

Index

Specifications

Alternator 13
Balance Shaft.....16
Belt Tension 13
Camshaft.....16
Carburetors 7
Cylinder Heads 18
Distributor.....8
Electric Fuelock.....7
Engine Assembly 19
Engine Mount Groups 13
Exhaust Manifolds.....12
Fastener Tightening 19
Flywheel.....14
Flywheel Face Runout 14
Flywheel Housing.....14
Front Gear Cover 17
Ignition Coil 5
Ignition Sequence (Firing Order).....5
Ignition Timing.....5
Intake Manifolds.....12
LP Converter.....6
LP Governor.....6
LP Oil Pressure Switch 6
Oil Filter.....11
Oil Pan 11
Oil Pump 11
Pressure Cap 15
Spark Plug & Spark Plug Wires 7
Starting Motor 10
Valve Clearence.....18
Water Temperature Regulator(Thermostat).....15

Systems Operation

Air Velocity Governor Operating Principal 26
Description 26
Distributor Vacuum Control Unit 27
Governor Operation 26
Partially Closed Throttle Control 26

Electrical System 30
Alternators.....31
Circuit Breaker 32
Starting Motor 30

General Information 21

Ignition System 29
Breakerless Ignition System 29
Liquid Petroleum Fuel System 22
Carburetor.....25
Converter 23
Electric Fuelock Models 22
Fuel Tank 24
LP Relief Valve 24
Lubrication System 28

Timing Gears & Chain.....33

Trancemission Oil Cooler.....34
2 Speed Power Shift Transmission.....34

Testing And Adjusting

Accelerator Linkage Adjustment
(G35S & G40S).....55

Air Inlet & Exhaust System 66
Cylinder Head Check 68
Cylinder Leakage Test 66
Flywheel & Flywheel Housing 69
Restriction Of Air Inlet & Exhaust.....66

Cooling System.....60
Cooling System Tests 60
Cooling System Visual Inspection.....60

Cooling System Heat Problems 62
Cooling System Recommendation.....63

Delco Electronic Spark Timing
(EST) Distributor 51
Delco Distributor Component Testing 52
Delco Distributor Module Testing.....52
Description 51
Engine RPM Check.....54
Ignition Coil Testing 53
Pickup Coil Testing 53
Electrical System 71
Alternators.....75
Battery.....71
Srart Relay Tests 75
Starting Motor 72

https://truckmanualshub.com/

Governor Adjustment 56
Velocity Governor 56

Ignition System 48
Ignition Component Checks 48
Ignition Timing Check & Adjust 50
Spark Plug Gap Check 49

Liquid Petroleum Fuel System 56
Carburetor Adjustments 56
Converter Pressure Test 59
Fuel Filter Check 58
Inner Fuel System Leak Check 59
Outer Fuel System Leak Check 58
Recommendation For LP Fuel Systems 59

Lubrication System 64
Lubrication System Problems 64
Oil Pressure Check 65

Troubleshooting 35
Gasoline Fuel System 35
Liquid Petroleum Fuel System 45

https://truckmanualshub.com/

Specifications

Ignition Timing

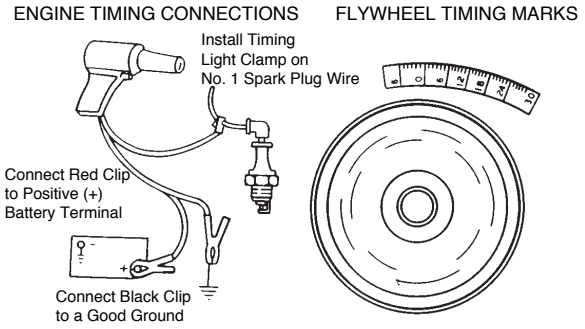

IAGS001S

The correct timing is when the flywheel housing pointer is in alignment with the correct mark on the flywheel or when the single digit mark on the flywheel is in alignment with the correct timing mark on the timing plate.

LP fuel engines @ 700 ±25 rpm .....4° BTDC

NOTE : In order to set the timing correctly, it is necessary to lock out the automatic electronic spark-advance feature. This is done using the timing connector plug which is attached to the distributor. This two-pronged connection is marked as shown.

NOTICE

Failure to place the timing plug back to the "run" position after timing the engine will cause lack of power and high fuel consumption.

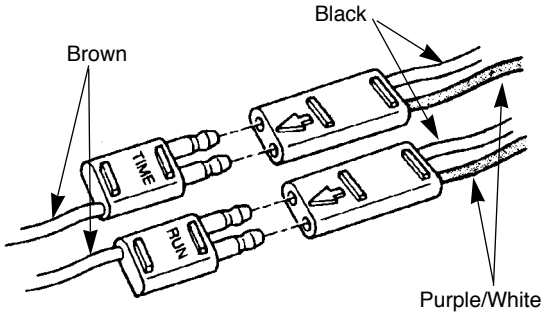

IAGS002S

Ignition Sequence (Firing Order)

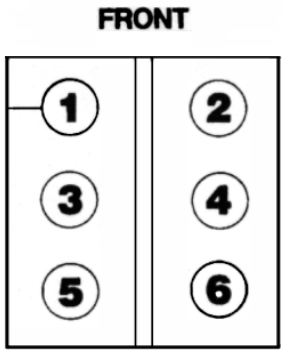

IAGS003S

Engine firing order 1-6-5-4-3-2

Ignition Coil

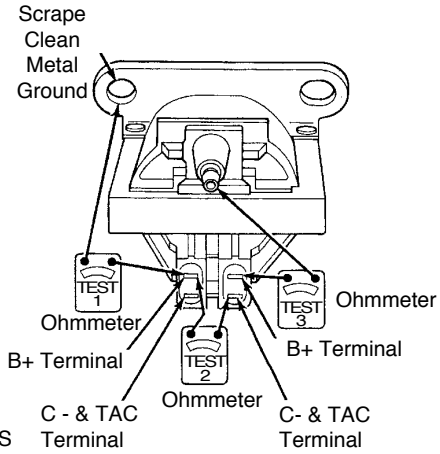

IAGS004S

Rating .....12 Volts

Resistance between B+ and ground (coil mounting bracket) .....in finite

Resistance between B+ and C- .....0.4 ohms

Resistance between B+ coil high voltage tower .....8,000 ohms

https://truckmanualshub.com/

LP Governor

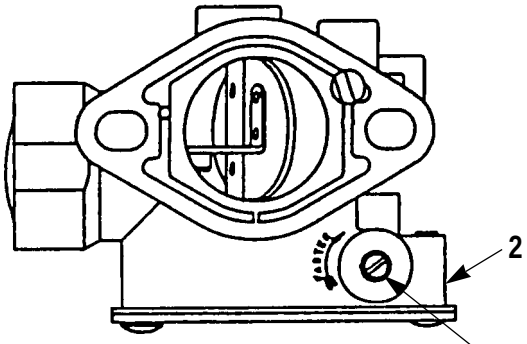

IAGS005S

(1) Adjust the LP high idle speed .....2600 ± 50 rpm

NOTE : Clockwise rotation of the main adjusting screw will increase the engine speed, and counterclockwise will reduce the engine speed. When the desired speed is reached seal the main adjustment screw. Use the Hoof seal kit 200-940 if available or you can use Silicon Sealer to complete the task. Always end each adjustment with a clockwise adjustment.

(2) Clockwise adjustments of the sensitivity screw about a 1/4 turn should remove any hunting or surging from the engine. Reset high idle once this has been completed. Always end each adjustment with a clockwise adjustment.

NOTE : You must remove the Welch plug covering the sensitivity screw before any adjustments can be performed. A 1/8 hole must be drilled in the plug to remove it. Care should be exercised in drilling the hole as not to damage the screw.

LP Converter

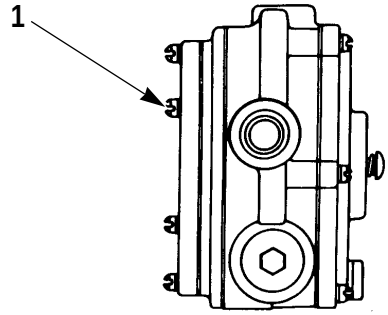

IAGS006S

(1) Turn all the screws in until contact is made with cover, then tighten screws thoroughly from one side to the opposite side until all the screws have a good seat.

With a maximum of 725 kPa (120 psi) of air put into fuelock or converter, there should be no air leaks in ten minutes.

See Converter And Vacuum Fuelock Pressure Test in the Testing And Adjusting section.

Tighten nylon vacuum fittings (not shown) finger tight plus an additional 360˚ (one full turn). Then turn farther to desired location.

LP Oil Pressure Switch

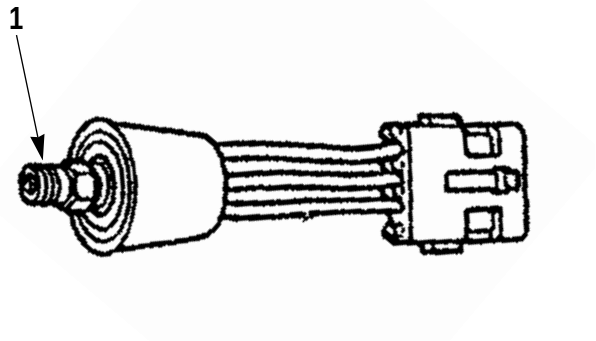

IAGS007S

(1) Tighten sending unit to engine .....22 ± 3 N • m (16 ± 2 lb • ft)

Actuation pressure .....103.4 kPa (15 psi)

Deactivation pressure .....34.5 kPa (5 psi)

Switch is normally CLOSED below activation pressure.

https://truckmanualshub.com/

Electric Fuelock

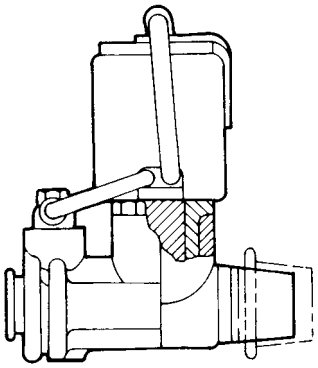

IAGS008S

Resistance of solenoid .....18 ohms

Spark Plug & Spark Plug Wires

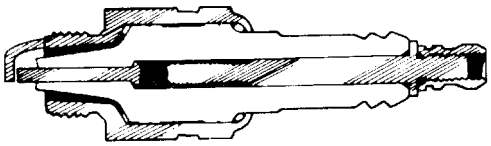

IAGS009S

Spark plug gap (gasoline & LP) .....1.5 mm (.06 in)

Torque for spark plugs (New Head)
.....30 N • m (22 lb • ft)

Torque for spark plugs (all subsequent installations)
.....20 N • m (15 lb • ft)

0-15 .....3,000-10,000 ohms

15-25 .....4,000-15,000 ohms

25-35 .....6,000-20,000 ohms

Carburetors

Low Idle Setting

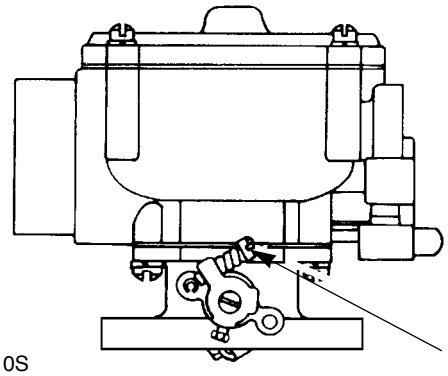

IAGS010S

(1) Adjust the LP low idle speed to.....700 ± 25 rpm.

Idle Mixture Setting

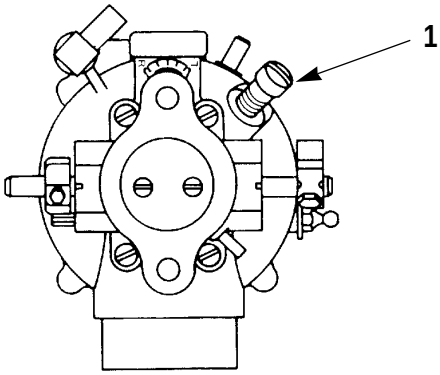

IAGS011S

See Carburetor Adjustments of the Liquid Petroleum Fuel System in the Testing And Adjusting section.

https://truckmanualshub.com/

Power Mixture Setting

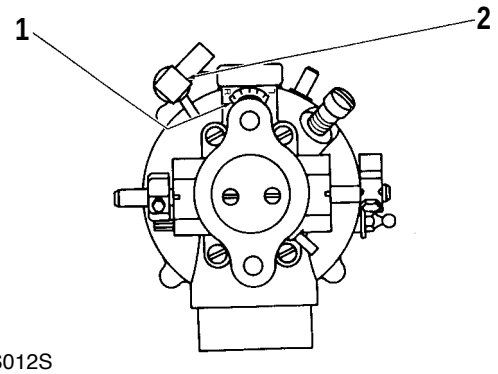

IAGS012S

(1) Adjust power mixture to maximum rich (R) setting (initial setting).

(2) Tighten nylon vacuum fitting finger tight plus an additional 360˚ (one full turn). Then turn farther to desired location.

See Carburetor Adjustments of the Liquid Petroleum Fuel System in the Testing And Adjusting section.

Distributor

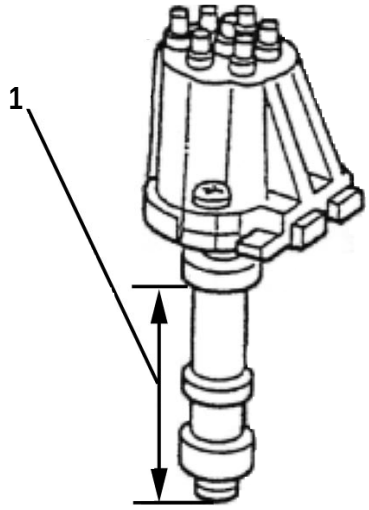

IAGS013S

(1) Shaft end play.....197 to 198 mm (7.75 to 7.80 in)

The distributor end play will be checked with the distributor in an inverted position from normal. Measure from the mounting surface to the face of the gear.

https://truckmanualshub.com/

Sensor Gap

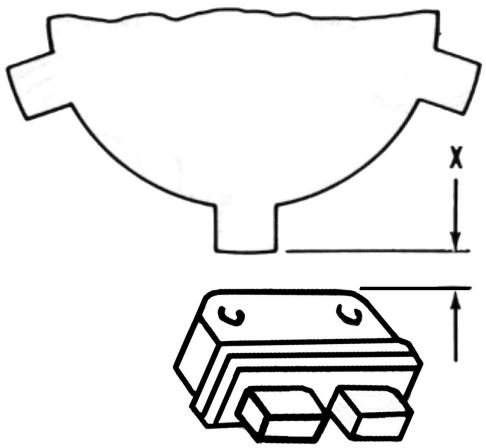

IAGS014S

The Air gap (X) between the trigger wheel and the module is preset by General Motors. Therefore no adjustment can be made or is required.

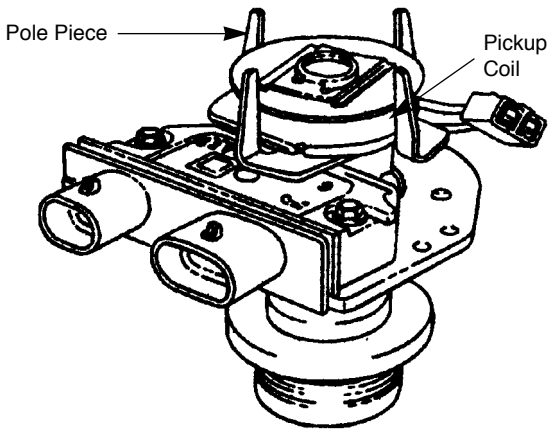

IAGS015S

https://truckmanualshub.com/

Starting Motor

Delco Remy PG260

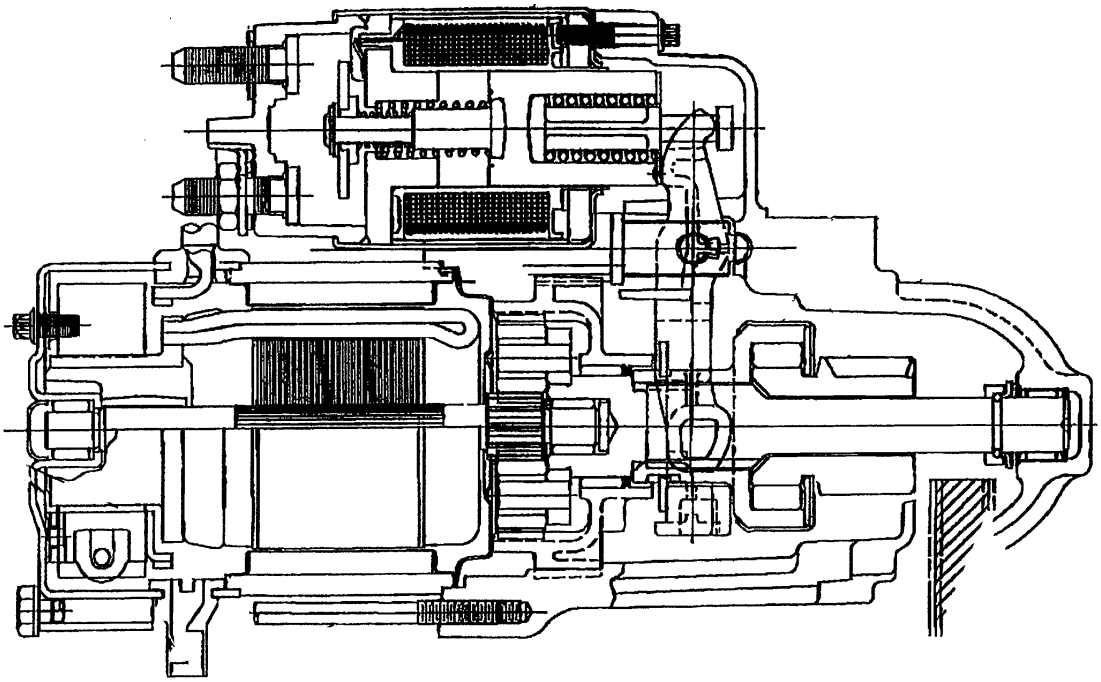

IAGS016S

Rotation is Clockwise When Seen From the Drive End.

For complete specifications on the starting motors, see the Starting Motor Coverage chart for the correct Service Module.

STARTING MOTOR COVERAGE	
Starting Motor Part Number	Manufacturer/Series
A232158	Reduction

Minimum speed with no load.....2925 rpm

Current consumption (draw) at no load .....96 amps

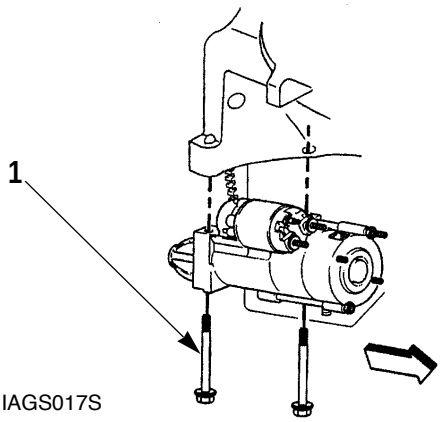

IAGS017S

(1) Torque for the starting motor mounting bolts .....45 N • m (33 lb • ft)

https://truckmanualshub.com/

Oil Pan

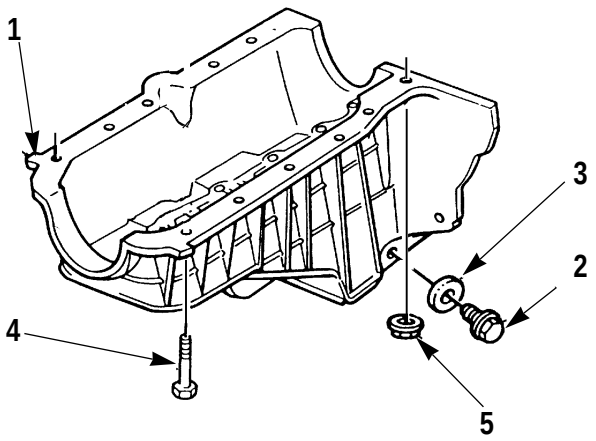

IAGS018S

Tightning Specifications for Oil Pan

(1) .....Oil Pan

(2) Torque for Plug.....45 N • m (33 lb • ft)

(4) Torque for ten bolts .....25 N • m (18 lb • ft)

(5) Torque for two nuts .....25 N • m (18 lb • ft)

Oil Pump

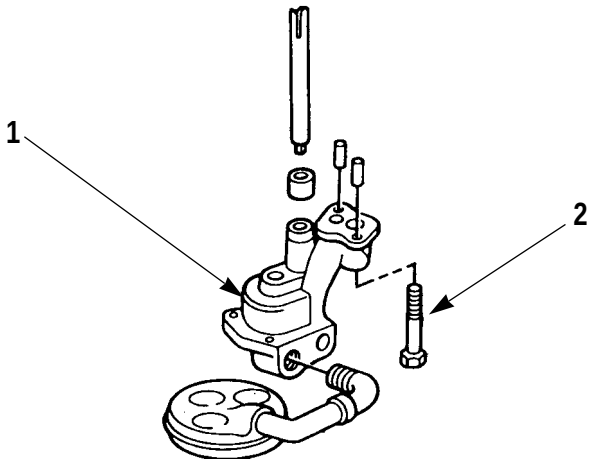

IAGS019S

Tightning Specifications for Oil Pump to Main Bearing Cap Bolt

(1) .....Oil Pump

(2) Torque for bolt .....90 N • m (66 lb • ft)

Oil Filter

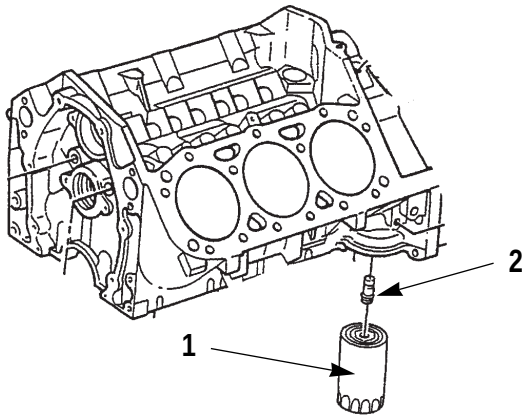

IAGS020S

Tightning Specifications for Oil Filter

(1) Wipe clean the filter adapter in the area that the new filter makes contact. Put clean engine oil on the new filter gasket. Install filter until contack is made the tighten 3/4 turn more.

(2) Torque for adapter is .....54 ± 14 N • m (40 ± 10 lb • ft)

https://truckmanualshub.com/

Exhaust Manifolds

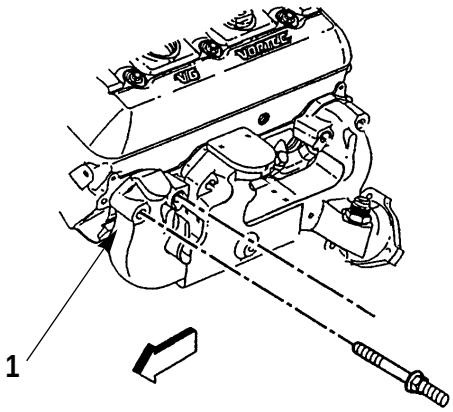

IAGS021S

Exhaust Manifold Left Side

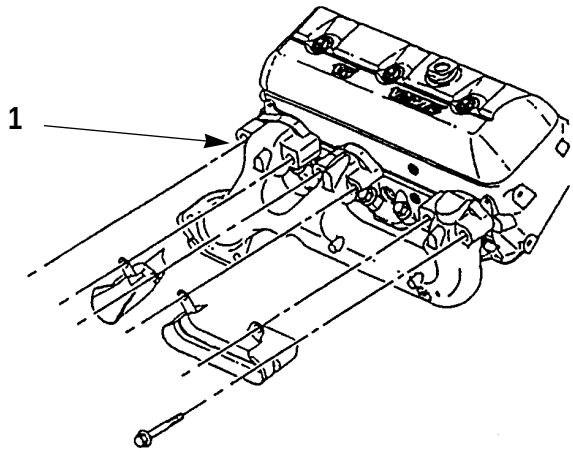

IAGS022S

Exhaust Manifold Right Side

Tightning Specifications for Exhaust Manifold. Exhaust manifold tighten bolts in two steps, begin with the center bolts.

(1) Torque for exhaust manifold bolts .....15 N • m (11 lb • ft)

(2) Torque for exhaust manifold bolts (second pass) .....30 N • m (22 lb • ft)

Intake Manifolds

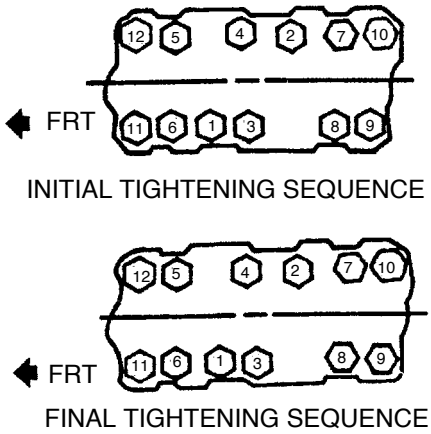

IAGS023S

Tightning Specifications for Intake Manifolds

Intake manifold bolt in three steps using sequence shown in IAGS023S

First pass .....3 N • m (27 lb • ft)

Second pass .....12 N • m (106 lb • ft)

Third pass .....15 N • m (11 lb • ft)

https://truckmanualshub.com/

Belt Tension

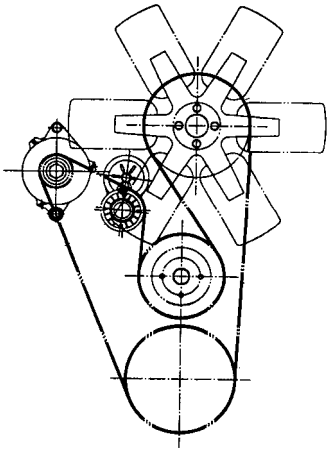

IAGS024S

Belt tension is preset at the factory and cannot be changed.

Engine Mount Groups

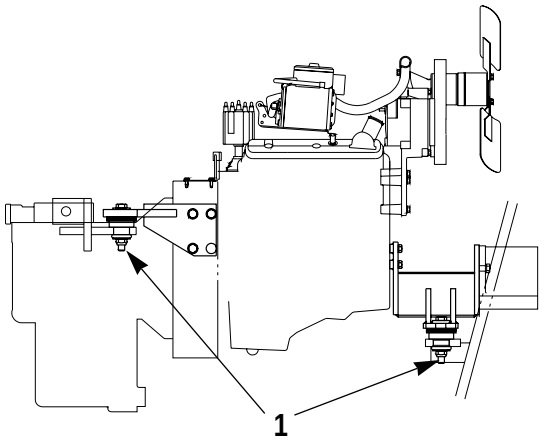

IAGS025S

(1) Torque for engine mount nuts
.....115 ±7 N • m (83 ±6 lb • ft)

Alternator

For complete alternator specifications, see the Alternator Coverage chart for the correct Service Module

ALTERNATOR COVERAGE	
Alternator Part Number	Manufacturer/Series
8C5510	Delco Remy/CS-121

Delco Remy CS-121 Series

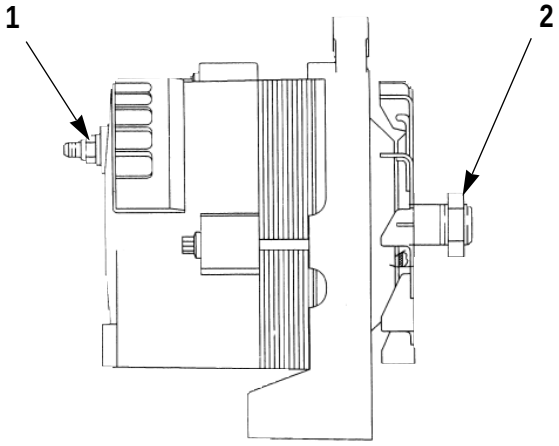

IAGS026S

8C551010-Delco Remy Number 1101291

Rated voltage .....12 Volts
Polarity is negative ground.
Rotation is clockwise.
Output at 650 rpm (cold).....61 amps
Output voltage .....14.0 ±0.5 Volts

(1) Torque for battery terminal nuts ....3.6 ±0.8 N • m (32 ±7 lb • in)

(2) Torque for pulley nut.....100 ±7 N • m (75 ±5 lb • ft)

https://truckmanualshub.com/

Flywheel Housing

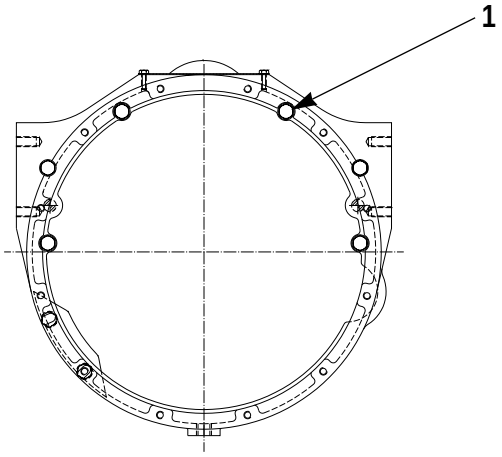

IAGS027S

(1) Flywheel housing bolts should be torqued to .....40 to 45 N • m (30 to 35 lb • ft)

Flywheel Face Runout

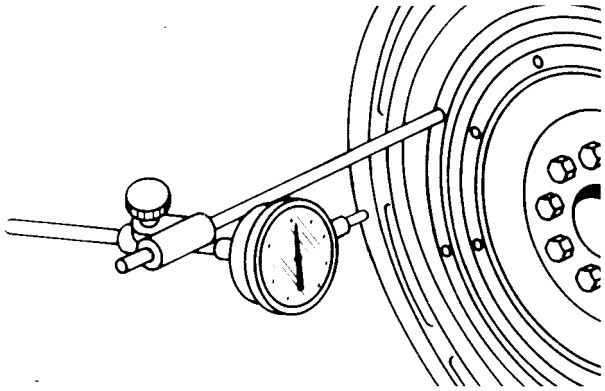

IAGS028S

Face Runout Check

Maximum permissible face runout of the flywheel housing.....0.20 mm (.008 in) (See Flywheel Housing Checks in Testing And Adjusting).

Flywheel

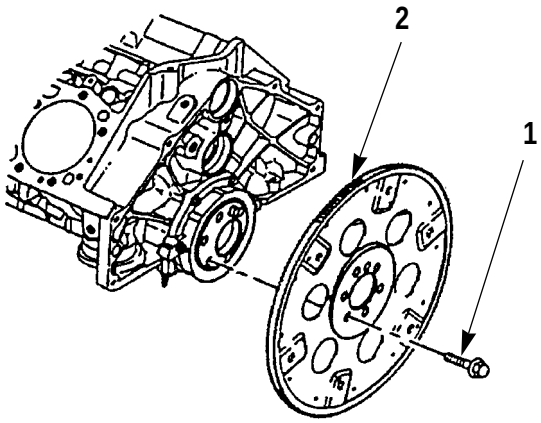

IAGS029S

(1) Torque for the bolts that hold the flyweel to the crankshaft .....100 N • m (74 lb • ft)

(2) Use a torch. Heat the ring around the entire circumference, then drive the gear off the flywheel using care not to damage the flywheel

NOTICE

Never heat the ring to a red hot condition this will change the metal structure

Uniformly heat the ring gear to a temperature that will expand the gear to permit installation. Temperature must not exceed **204 ℃ (400 ℉)**.

As soon as the ring gear has been heated install it on the flywheel.

https://truckmanualshub.com/

Flywheel Runout

For checking procedure, see Flywheel And Flywheel Housing in the Testing And Adjusting section.

Face Runout (Axial Eccentricity).

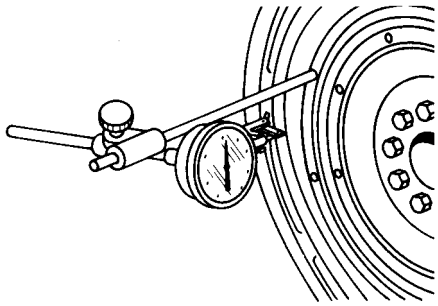

IAGS030S

Maximum permissible face runout of the flywheel .....0.19 mm (.0075 in)

Outside Diameter Runout (Radial Eccentricity)

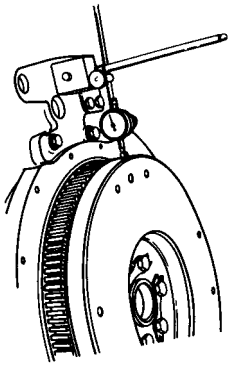

IAGS031S

Outside Diameter Runout Check

Maximum permissible outside diameter runout of the flywheel .....0.1 mm (.004 in)

Pressure Cap

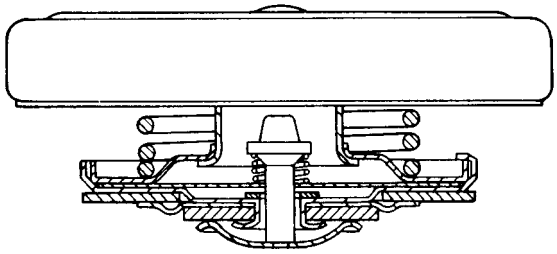

IAGS032S

For testing procedure, see Cooling System Tests in the Testing And Adjusting section.

Pressure valve opening pressure .....85 to 110 kPa (12 to 16 psi)

Vacuum valve opening pressure .....0 to 5 kPa (0 to 0.7 psi)

Water Temperature Regulator (Thermostat)

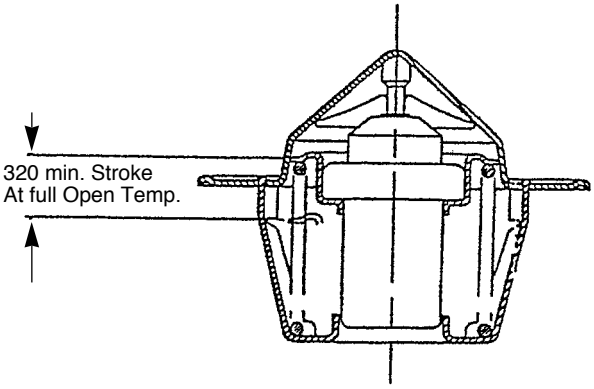

IAGS033S

Opening temperature.....66℃ (170°F)

Full open temperature.....85 to 95℃ (185 to 195°F)

Camshaft

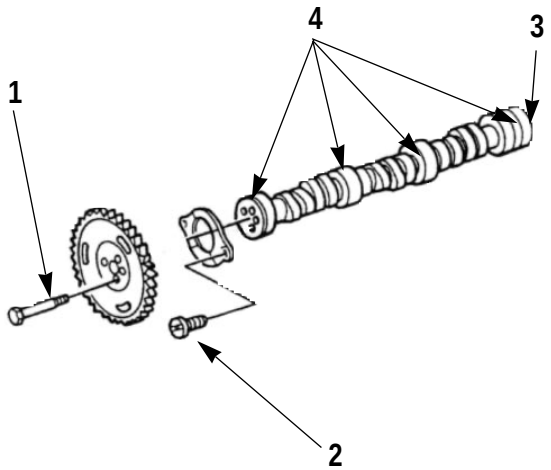

IAGS034S

(1) Torque for camshaft sprocket bolts
.....20 N • m (15 lb • ft)

(2) Torque for retainer mounting bolts
.....12 N • m (106 lb • ft)

(3) End play for the camshaft
.....0.0254 to .02286 mm (.001 to .009 in)

(4) Diameter of the surface journals for the camshaft bearings new
.....51.03 to 51.05 mm (2.009 to 2.010 in)

Balance Shaft

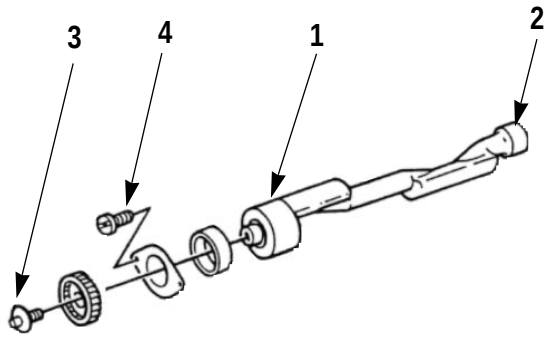

IAGS035S

(1) Front Bearing Journal Diameter
.....55.985 to 55.001 mm (2.1648 to 2.1654 in)

(2) Rear Bearing Journal Diameter
.....38.084 to 38.100 mm (1.4994 to 1.500 in)
Rear Bearing Journal Clearence
.....0.0254 to 0.09144 mm (.001 to .0036 in)

(3) Balance Shaft Drive Gear Bolt
.....20 N • m (15 lb • ft)
Torque plus 35 Degrees

(4) Balance Shaft Retainer Bolt
.....14 N • m (124 lb • in)

NOTE : Balance shaft must be timed to camshaft gear.

https://truckmanualshub.com/

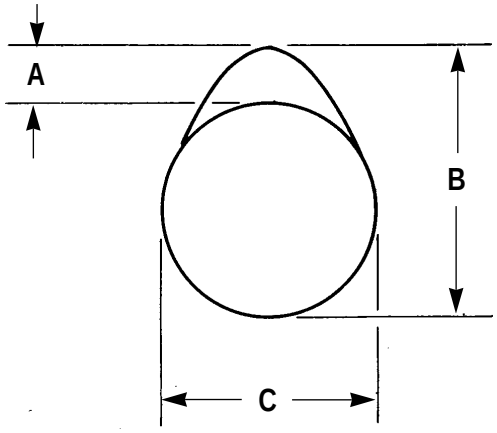

IAGS036S

Height of camshaft lobes.

(A) Intake lobe .....7.018 mm (.2763 in.)

(B) Exhaust lobe .....7.252 mm (.2855 in.)

(C) Maximum permissible difference actual & specified lobe lift.....±0.05 mm (.022 in)

See procedure under Testing And Adjusting section of manual on to due measurements

Front Gear Cover

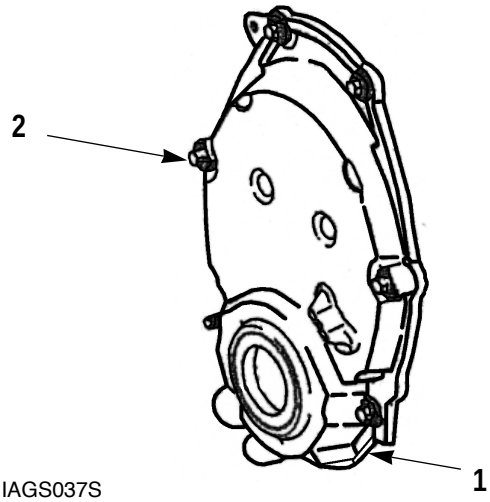

IAGS037S

(1) The front gear cover (1) of the engine must be replaced if it is removed for any reason. The cover is made of high impact plastic but can warp do to heat. To prevent oil leaks replace the cover.

(2) The front gear cover bolts should be torqued to .....15 N • m (11 lb • ft)

https://truckmanualshub.com/

Cylinder Heads

Tools Needed	A
Torque Angle Meter	1

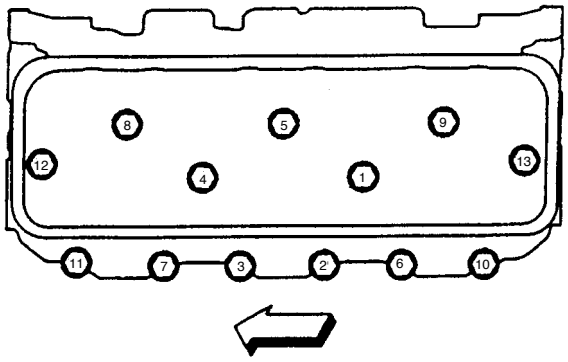

IAGS038S

NOTE : When installing the cylinder heads use a new head gasket. Do not use sealer on the composite gasket.

Tighten the cylinder head bolts in the following sequence.

All bolts are torqued to a torque of **30 N • m (22 lb • ft)**. On the second pass a tool A degree wheel must be used.

Bolts in sequence.

1. Short length bolts (11, 7, 3, 2, 6, 10) 55 degrees

2. Medium length bolts (12, 13) 65 degrees

3. Long length bolts (1, 4, 8, 5, 9) 75 degrees

Valve Clearence

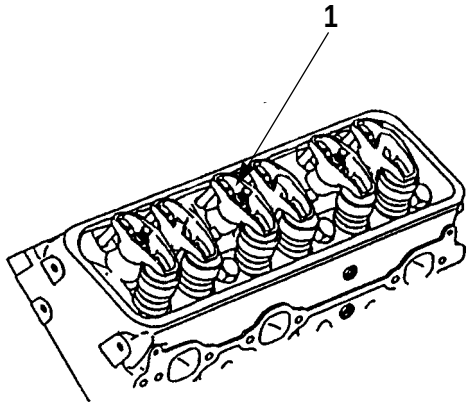

IAGS039S

(1) The 4.3 liter engine has screw-in rocker arm studs with positive stop shoulders, NO valve adjustment is necessary. When the valve train requires service you simply tighten the rocker arm nuts to **25 N • m (18 lb • ft).**

Fastener Tightening

Balance Shaft Driven Gear Bolt
.....20 N • m (15 lb • ft) (Plus 35 Degrees)
Camshaft Retainer Bolt.....12 N • m (106 lb • in)
Camshaft Sprocket Bolts .....28 N • m (21 lb • ft)
Coolant Sensor .....20 N • m (15 lb • ft)
Connecting Rod Nut
.....27 N • m (20 lb • ft) (Plus 70 Degrees)
Crankshaft Balancer Bolt .....100 N • m (74 lb • ft)
Crankshaft Bearing Cap Bolt .....105 N • m (77 lb • ft)
Crankshaft Position Sensor Bolt ....9 N • m (80 lb • in)
Crankshaft Rear Oil Seal Housing
Nut and Bolt .....15 N • m (11 lb • ft)
Crankshaft Rear Oil Seal Housing Stud
.....4 N • m (35 lb • in)
Cylinder Head Bolt
First Pass.....30 N • m (22 lb • ft)
Second Pass Torque Angle all Bolts in Sequence:
Short Length Bolt.....55 Degrees
Medium Length Bolt.....65 Degrees
Long Length Bolt .....75 Degrees
Distributor Clamp Bolt.....25 N • m (18 lb • ft)
EGR Valve Bolt
First Pass.....10 N • m (89 lb • in)
Final Pass.....25 N • m (18 lb • ft)
EGR Valve Pipe Bracket Bolt .....25 N • m (18 lb • ft)
EGR Valve Inlet Pipe Nut .....35 N • m (26 lb • ft)
Engine Block Drain Plug .....20 N • m (15 lb • ft)
Engine Block Oil Gallery Plug Left Rear
.....20 N • m (15 lb • ft)
Engine Block Oil Gallery Plug Right Rear
.....25 N • m (18 lb • ft)
Engine Block Oil Gallery Plug Left Side Rear
.....20 N • m (15 lb • ft)
Engine Front Cover Bolt.....12 N • m (106 lb • in)
Exhaust Manifold Stud and Bolt
First Pass.....15 N • m (11 lb • ft)
Final Pass.....30 N • m (22 lb • ft)
Engine Flywheel Bolt .....100 N • m (74 lb • ft)
Front Lift Bracket Stud .....40 N • m (30 lb • ft)
Ignition Coil Bolt .....11 N • m (97 lb • in)
Intake Manifold Bolts
First Pass.....3 N • m (27 lb • in)
Second Pass.....12 N • m (106 lb • in)
Final Pass.....15 N • m (11 lb • ft)

Knock Sensor .....20 N • m (15 lb • ft)
Oil Filter Bypass Valve Bolt .....27 N • m (20 lb • ft)
Oil Level Indicator Tube Bolt.....12 N • m (106 lb • in)
OII Pan Nuts .....23 N • m (17 lb • ft)
Bolts.....25 N • m (18 lb • ft)
Studs in Engine Block.....25 N • m (18 lb • ft)
Oil Pan Drain Plug .....25 N • m (18 lb • ft)
Oil Pump Bolt.....90 N • m (66 lb • ft)
OII Pump Cover Bolt .....12 N • m (106 lb • in)
Oxygen Sensor Wire Support Bracket Nut
.....11 N • m (97 lb • in)
Spark Plugs
Cylinder Head (New) .....30 N • m (22 lb • ft)
Cylinder Head (All Subsequent Installation)
.....20 N • m (15 lb • ft)
Spark Plug Wire Support .....12 N • m (106 lb • in)
Valve Lifter Guide Retainer Bolt ...16 N • m (12 lb • ft)
Valve Rocker Arm Cover Bolts ..12 N • m (106 lb • in)
Water Outlet Bolt .....25 N • m (18 lb • ft)
Water Pump Bolt.....41 N • m (30 lb • ft)

Engine Assembly

General

Type .....90 Degree V6
Displacement.....4.3L (262 CID)
RPO (VIN Code).....L35 (W), LF6 (X)
Bore.....101.6 mm (4.00 in)
Stroke.....88.39 mm (3.480 in)
Compression Ratio.....9.2:1
Firing Order 1-6-5-4-3-2

Lubrication System

Oil Capacity
Without Filter Change .....3.75 Liters (4 Qts.)
With Filter Change Add .....0.398 Liters (0.42 Qts.)
Oil Pressure (Minimum Hot)
.....41.4 kPa (6.0 psi) at 1,000 engine rpm
.....124.1 kPa (18.0 psi) at 2,000 engine rpm
.....165.5 kPa (24.0 psi) at 4,000 engine rpm
OII Filter System .....Full Flow
OII Pump Type .....Gear Driven

Cylinder Bore

Diameter .....101.618-101.643 mm (4.0007-4.0017 in)
Out-of Round .....0.0508 m (.002 in) MAX.
Taper.....0.0254 mm (.001 in) MAX

Piston

Piston Bore Clearance
.....0.06096 mm (.0024 in) MAX.

Piston Rings

Piston Compression Ring
Groove Clearance.....0.010668 mm (.0042 in)
Gap .....0.889 mm (.035 in) MAX.
Piston Oil Ring
Groove Clearance.....0.2032 mm (.008 in) MAX.
Gap .....1.651 mm (.065 in)

Oil Pan

Engine Block Clearance
Tolerance .....0.254 mm (.010 in) MAX.

Piston Pin
Diameter .....23.545-23.548 mm (.927-.926 in)
Clearance in Piston.....0.0254 mm (.001 in) MAX.
Fit In Connecting Rod
.....0.02032-0.04064 mm (.0008-.0016 in) Interference

Exhaust Manifold
Surface Flatness .....0.254 mm (.010 in) MAX.

Intake Manifold
Surface Flatness .....0.254 mm (.010 in) MAX.

Cylinder Head
Surface Flatness .....0.1016 mm (.004 in) MAX.

Crankshaft
Crankshaft Journal
Diameter #1
.....62.199-62.217 mm (2.4488-2.4495 in)
Diameter 2, #3
.....62.192-62.215 mm (2.4485-2.4494 in)
Diameter #4
.....62.180-62.202 mm (2.4480-2.4489 in)
Taper.....0.0254 mm (.001 in.) MAX.
Out-of Round .....0.025 mm (.0010 in.) MAX.
Crankshaft Bearing Clearance
Bearing #1
.....0.0254-0.0381 mm (.0010-.0015 in)
Bearing #2, #3
.....0.0254-0.0635 mm (.0010-.0025 in)
Bearing #4
.....0.0635-0.0889 mm (.0025-.0035 in)
Crankshaft End Play
.....0.0508-0.2032 mm (.002-.008 in)

Connecting Rod
Connecting Rod Journal
Diameter.....57.117-57.142 mm (2.2487-2.2497 in)
Taper.....0.0254 mm (.001 in) MAX.
Out-of-Round .....0.0254 mm (.001 in) MAX.
Rod Bearing Clearance
.....0.0254-0.0762 mm (.0010-.0030 in)
Rod Side Clearance
.....0.1524-0.4318 mm (.006-.017 in)

Camshaft
Journal Diameter
.....47.440-47.490 mm (1.8677-1.8697 in)
End Play .....0.0254-0.2286 mm (.001-0.009 in)
Lobe Lift .....± 0.05 mm (.002 in)
Intake .....7.018 mm (0.2763 in)
Exhaust.....7.252 mm (0.2855 in)

Balance Shaft
Front Bearing Journal Diameter
.....55.985-55.001 mm (2.1648-2.1654 in)
Rear Bearing Journal Diameter
.....38.084-38.100 mm (1.4994-1.500 in)
Rear Bearing Journal Clearance
.....0.0254-0.09144 mm (.001-.0036 in)

Valve System
Valve Lifter .....Hydraulic Roller
Valve Rocker Arm Ratio 1.50:1
Valve Lash.....Net Lash No Adjustment
Face Angle .....45 degree
Seat Angle.....46 degree
Seat Runout .....0.0508 mm (.002 in) MAX.
Seat Width Intake
.....1.016-1.651 mm (.040-.065 in)
Exhaust .....1.651-2.489 mm (.065-.098 in)
Stem Clearance
Intake
.....High Limit Production + 0.0257 mm (.001 in)
Exhaust
.....High Limit Production + 0.0508 mm (2.03 in)
Valve Spring Free Length .....52 mm (2.03 in)
Pressure
Closed
.....338-374 N at 43 mm (76-84 lb. at 1.70 in)
Open
.....832-903 N at 32 mm (187-203 lb. at 1.27 in)
Installed Height
.....42.92-43.43 mm (1.690-1.710 in)
Valve Lift
Intake .....10.51 mm (.414 in)
Exhaust.....10.87 mm (.428 in)

https://truckmanualshub.com/

Systems Operation

General Information

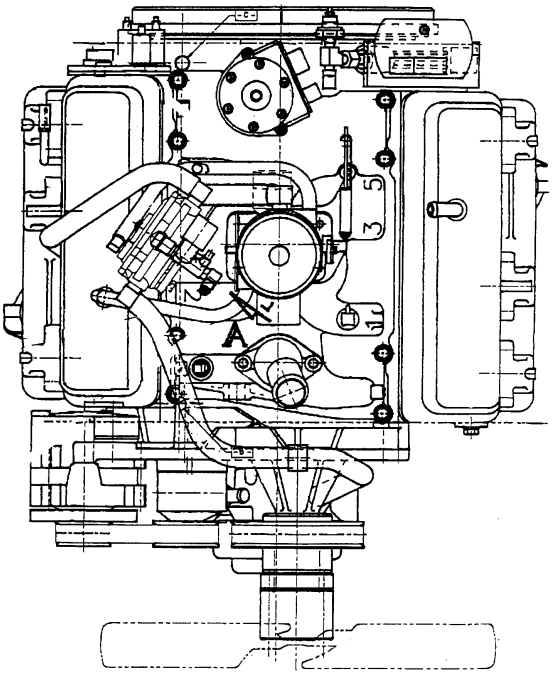

IAGS040S

Basic Vortec 4.3 Liter V6 Engine

Bore.....101.6 mm (4.00 in)

Stroke.....88.39 mm (3.480 in)

Cubic Capacity.....4.3 L (262 CID)

Number and Arrangement of Cylinders.....1-6

Firing Order 1-6-5-4-3-2

Rotation of Crankshaft (when seen from the front) .....Clockwise

Rotation of Camshaft (when seen from the front) .....Clockwise

NOTE : Front of engine is oposite to flywheel end

https://truckmanualshub.com/

Liquid Petroleum Fuel System

Electric Fuelock Models

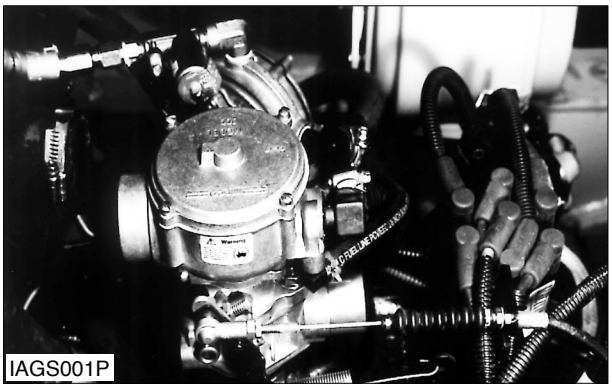

LP Fuel System Components

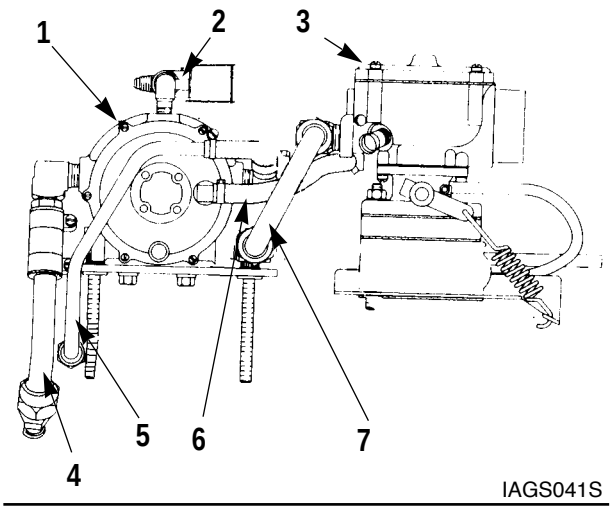

LP Fuel System Components
(1) Converter. (2) Fuelock. (3) Carburetor.
(5) Coolant inlet Line. (6) Balance hose.
(7) LP fuel line to carburetor.

The basic components of this liquid petroleum (LP) fuel system are: the fuel tank, the fuel filter and relief valve, fuelock (2), converter (1) and carburetor (3).

Liquid fuel is sent to fuelock (2) by the pressure in the fuel tank, which is approximately 1030 kPa(150psi). Fuelock (4) permits fuel flow to the converter when electrically activated by the oil pressure switch. LP fuel flows into converter (1), which changes the fuel to a vapor. The fuel receives heat in the converter from the engine coolant that flows in line (5) and out line (4). Carburetor vacuum activates the converters operation and the fuel flows to the carburetor through line (7). From carburetor (3) , the vapor fuel goes through the inlet manifold to the combustion chamber of the engine. In the combustion chamber, the spark made by the spark plug will "ignite" (cause to burn) this vapor. Balance hose (6) keeps the correct air and fuel mixture in the carbureteor when there is some restriction in the air cleaner.

https://truckmanualshub.com/

Electric Fuelock

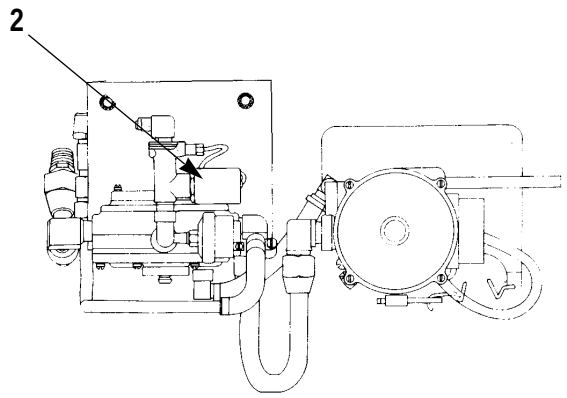

IAGS042S

Electric Fuelock
(2) Fuelock.

Fuelock (2) is electrically activated by an oil pressure switch. When the engine is stopped, or if the engine oil pressure gets lower than the pressure for operation, the oil pressure switch will open. When the oil pressure switch opens, it will close the fuelock, which stops the supply of fuel to the converter.

Fuel Filter

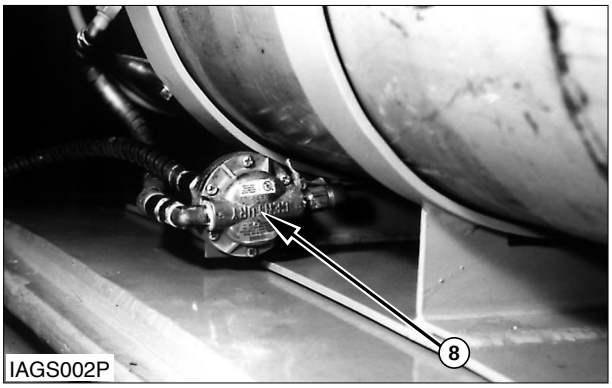

Fuel Filter
(8) Fuel filter

On electric fuelock models, fuel filter (8) is mounted near the fuel tank. It cleans the fuel before it gets to the fuelock and converter.

Converter

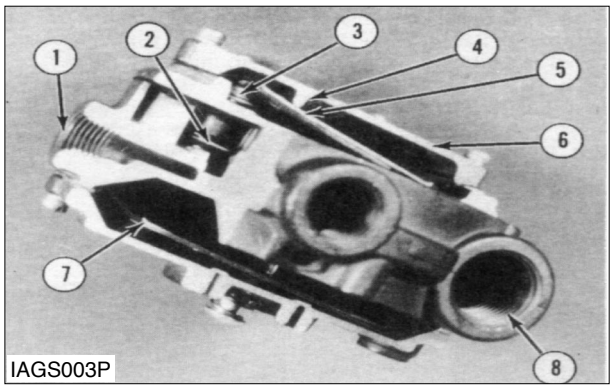

Converter Components
(1) LP fuel inlet opening. (2) Primary regulator valve.
(3) Primary valve pin. (4) Fulcrum.
(5) Primary diaphragm with lever. (6) Cover.
(7) Secondary diaphragm. (8) LP fuel outlet opening.

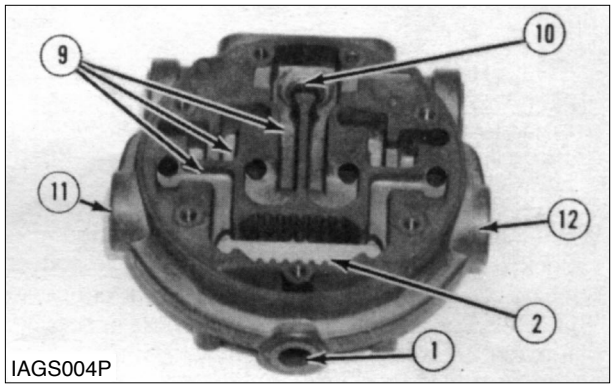

Converter Vaporized Chamber
(1) LP fuel inlet opening. (2) Primary regulator valve.
(9) Vaporizing chamber. (10) Vapor fuel outlet opening.
(11) Coolant outlet opening. (12) Coolant inlet opening.

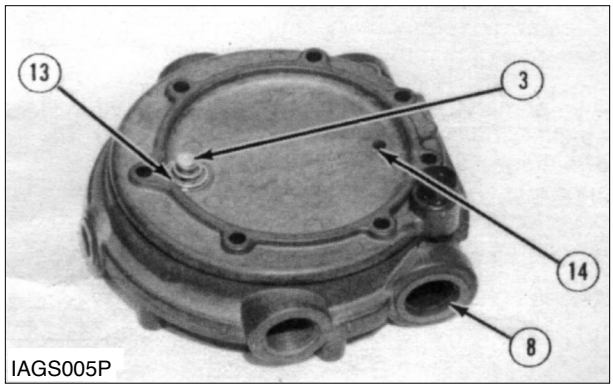

Converter Primary Components
(3) Primary valve pin. (8) LP fuel outlet opening. (13) Primary regulator spring. (14) Sensing opening.

The converter is a combination regulator and vaporizer. It receives liquid fuel through opening (1) at tank pressure from the fuelock. The fuel is available inside converter vaporizing chamber (9) when carburetor vacuum is felt in converter opening (8). When vacuum is not available at the fuelock or opening (8), primary valve pin (3) puts a force on primary regulator valve (2) that makes a seat against an inner passage for the fuel inlet. The pin action is controlled by primary diaphragm with lever (5) and cover (6). Primary spring (13) is in compression when vacuum is not available.

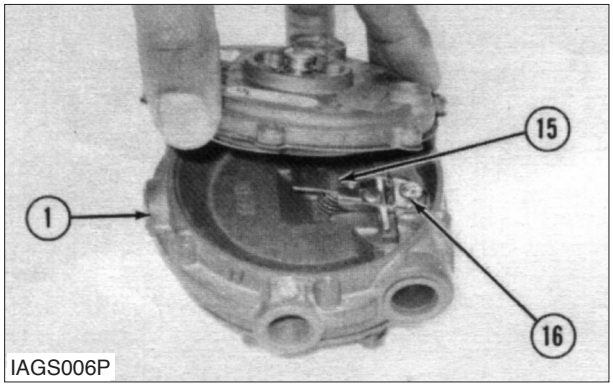

Converter Secondary Components
(1) LP fuel inlet opening. (15) Secondary lever assembly.
(16) Secondary regulator seat.

When the engine is running, the solenoid on the fuelock allows fuel to flow from the fuelock to converter opening (1). Vacuum is felt through converter opening (8) from the carburetor. This vacuum pulls in secondary diaphragm (7) with the diaphragm link, which moves secondary lever assembly (15). The secondary lever assembly moves secondary regulator seat (16) that opens fuel flow passage in chamber (9). At the same time, the vacuum flows through sensing opening (14) that causes primary diaphragm with lever (5) to pull in. This causes the diaphragm lever to make a pivot on cover (6) fulcrum (pivot point) (4). Primary valve pin (3) moves away from primary regulator valve (2) with the assistance of primary regulator spring (13).

When primary regulator valve (2) is off its seat, fuel is permitted to flow into vaporizing chambers (9). The fuel flows around and through the passages of the vaporizing chambers while the heat through the converter body is being taken in by the fuel which causes fuel to vaporize. The heat is a product of the engine coolant that goes in opening (12) and out opening (11). The flow of vapor fuel goes out opening (10) in the converter body, activated by open secondary regulator seat (16) to fuel outlet opening (8), through the fuel line to the carburetor.

The vaporizing chamber decreases LP fuel pressure from the tank to less than atmospheric pressure. This expansion of the pressurized liquid fuel into vapor, can result in freezing the heat from the engine coolant increases the temperature of the fuel in vaporizing chamber (9) from approximately -42℃ (-44°F) to +2℃ (+40°F).

Fuel Tank

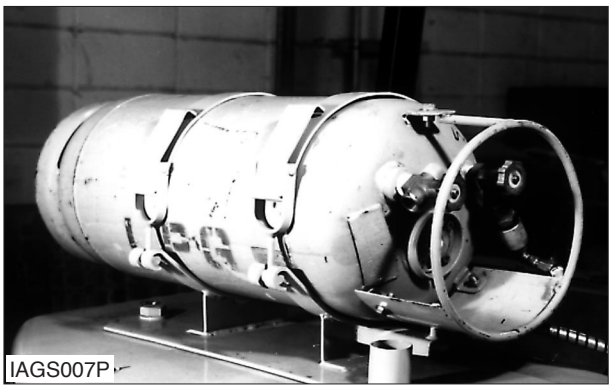

LP Fuel Tank

The fuel tank is made of heavy steel. The specific size of the tank is measured by the design of the lift truck, desired period of time the lift truck is to be operated before the tank has to be filled and how near an available supply of fuel is.

LP Relief Valve

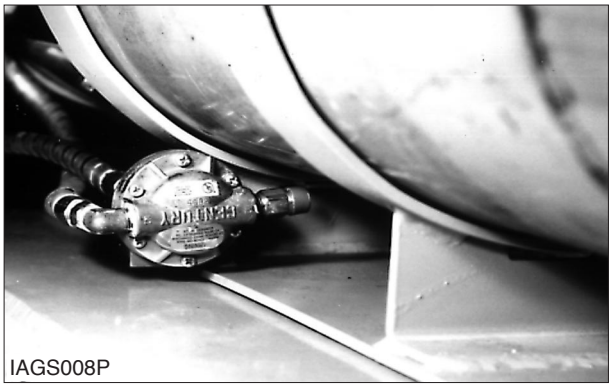

Relief Valve

When the pressure in the LP fuel system gets too high, the relief valve releases the pressure to the

atmosphere. the action of the relief valve prevents damage to the fuel lines and other components of the fuel system. The position of the valve is in a direction that the fuel will not get on the operator when the valve is activated.

Carburetor

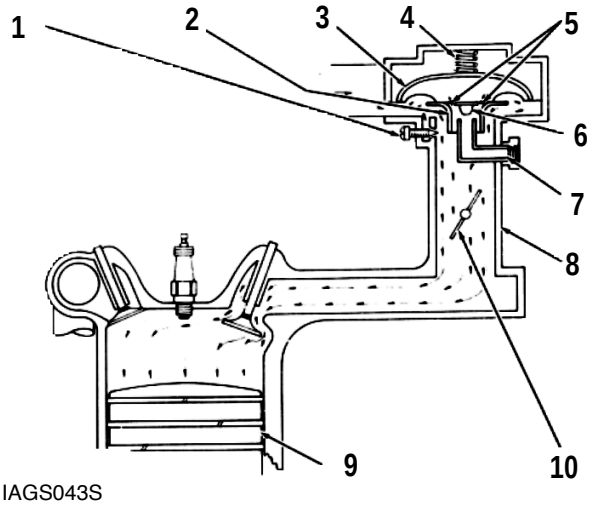

IAGS043S

LP Fuel Carburetor Schematic
(1) Idle air screw. (2) Air valve. (3) Diaphragm.
(4) Metering spring. (5) Passage.
(6) LP gas metering valve. (7) Power mixture adjustment.
(8) Carburetor. (9) Piston. (10) Throttle valve.

Lift trucks with LP (Liquid Petroleum) fuel system use an air valve type of carburetor (8). The operation of the carburetor controls the fuel mixture flow into the engine with the movement of the throttle valve (10) and mixes the air flow with the LP fuel flow.

The air flow is measured by the operation of air valve (2) in the carburetor bowl. The stronger the air flow through the carburetor, the higher the air valve moves up. LP gas metering valve (6) is connected directly to air valve (2). As the air valve moves up, LP gas metering vavle (6) also moves up. LP gas metering valve (6) is shaped to let in the correct amount of LP gas at any height related to air valve (2) upper movement. The air valve activates a pressure drop which gives a very high metering force (measured suction) to the fuel that flows in the carburetor at low engine speeds and it permits easy starting. At full engine speeds, the air valve is at the top of its upper movement. The valve then becomes an inverted (up side down) venturi and will let a large amount of air pass through.

When starting the engine, the intake stroke of piston (9) causes lower than atmosphere pressure (vacuum) in the carburetor. The vacuum is felt through passage (5) in air valve (2) and in the upper side of diaphragm (3). As a result, the atmospheric pressure flows in the carburetor and pushes up on the diaphragm.

Diaphragm (3) is lifted against the down pressure of metering spring (4). The vacuum that is felt on diaphragm (3) is variable according to engine speed and the position of throttle valve (10) opening. Air valve (2) measures the air flow that goes into the engine, respective to the demands of the engine and throttle valve (10) position.

The air pressure drop of 1.3 to 2.7 kPa (0.2 to 0.4 psi) is controlled by metering spring (4) which permits the force necessary to pull in the fuel into the air flow. LP gas metering valve (6) is connected to the air valve and lets in the correct amount of fuel from the LP converter to mix with the air at any opening of the air valve.

The carburetor is equipped with two limited mixture adjustments. Idle air screw (1) directs atmosphere (air) around the opening of air valve (2). As the idle air screw is adjusted open, the air valve loses a little more and causes the gas metering valve to close. The result will be less fuel in the mixture at idle. The second adjustment is power mixture adjustment (7). It controls the fuel mixture when gas metering valve (6) is fully in the up position. This adjustment is done only when the engine is at a load condition. A CO meter or exhaust analyzer is used for the power mixture adjustment. This adjustment has no effect at idle or in the light load range.

https://truckmanualshub.com/

Air Velocity Governor Operating Principal

Description

The velocity governor is a maximum speed type and operates by metering the gasoline/air mixture flow from the carburetor. It is designed to limit the engine speed to a predetermined maximum number of revolutions per minute.

The governor is installed between the carburetor and the intake manifold. It contains a disc valve mounted on a shaft which is similar in appearance to a carburetor butterfly valve. However, unlike a butterfly valve, the governor shaft is mounted off-center in the governor bore.

The only external connections to the governor are two vacuum tubes; one from the carburetor and the other from the distributor vacuum control diaphragm. If effect, the original vacuum tube from the carburetor to the distributor is interrupted by the governor, which takes over control of the distributor vacuum unit by means of a small sliding piston valve in the governor.

Governor Operation

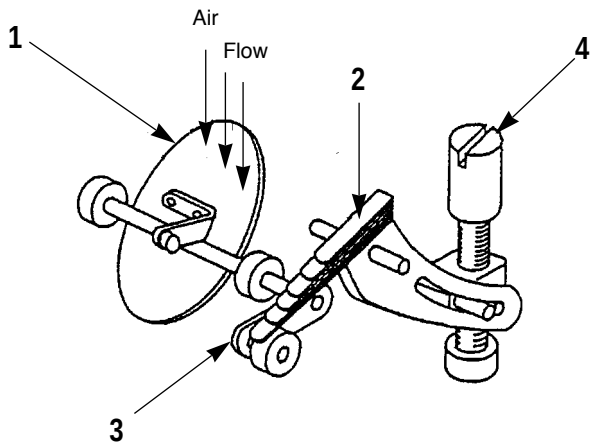

IAGS044S

Velocity Governor Operation
(1) Valve. (2) Cantilever Spring. (3) Lever.
(4) Adjustment Screw.

When the engine is running, the gasoline/air mixture passing through the governor bore impinges on the valve (1) and attempts to close it, the closing force increasing with the engine speed. The closing action of the valve is opposed by a cantilever spring (2) which acts on the lever (3) fixed to the end of the valve shaft. The tension of the cantilever spring is adjusted by means of the main adjustment screw (4). When the air velocity force acting on the valve equals the opposing spring force, the valve assumes a position which controls the amount of fuel reaching the engine. The maximum engine speed is thus governed by the pre-setting of the cantilever spring tension. When a load is applied, the engine speed drops and the velocity of the fuel mixture flowing through the governor decreases. Pressure against the governor valve drops, and the springs force causes the valve to open wider, thus admitting more fuel to the engine. The engine accelerates to keep the load from stalling the engine, and finds a speed at which the force between the governor valve and the cantilever spring are again in balance.

Partially Closed Throttle Control

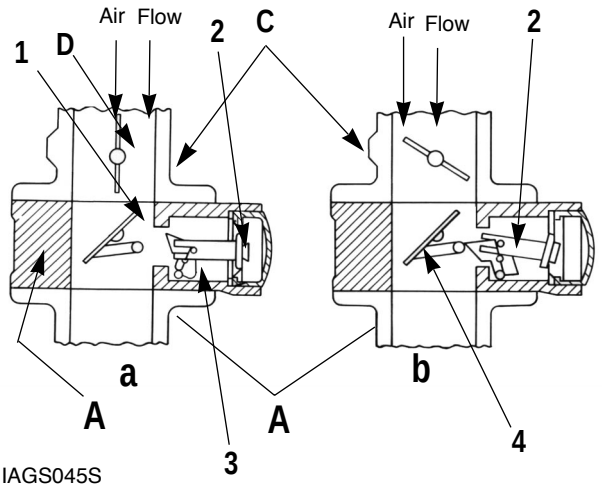

IAGS045S

Partially Closed Throttle Control *
(1) Valve. (2) Diaphragm. (3) Lever. (4) Arm.
(a) Intake Manifold. (b) Governor. (c) Carburetor.
(d) To distributor vacuum control unit.

In a fully open throttle condition illustrated at (a), there is a slight vacuum below the partially closed governor valve (1); this tends to close the valve but is prevented from doing so by the normal compensating action of the cantilever spring. If the carburetor butterfly valve is partly closed, as illustrated at (b), a vacuum above the governor is created which is greater than the vacuum below it; the valve would then tend to open wider, thus allowing the engine speed to exceed its preset governed speed. Under these conditions, the diaphragm (2) is forced inward as shown, by the increased vacuum and starts to close the valve again by means of the pivoted lever (3) acting on the arm (4) which is attached to the governor valve.

https://truckmanualshub.com/

Distributor Vacuum Control Unit

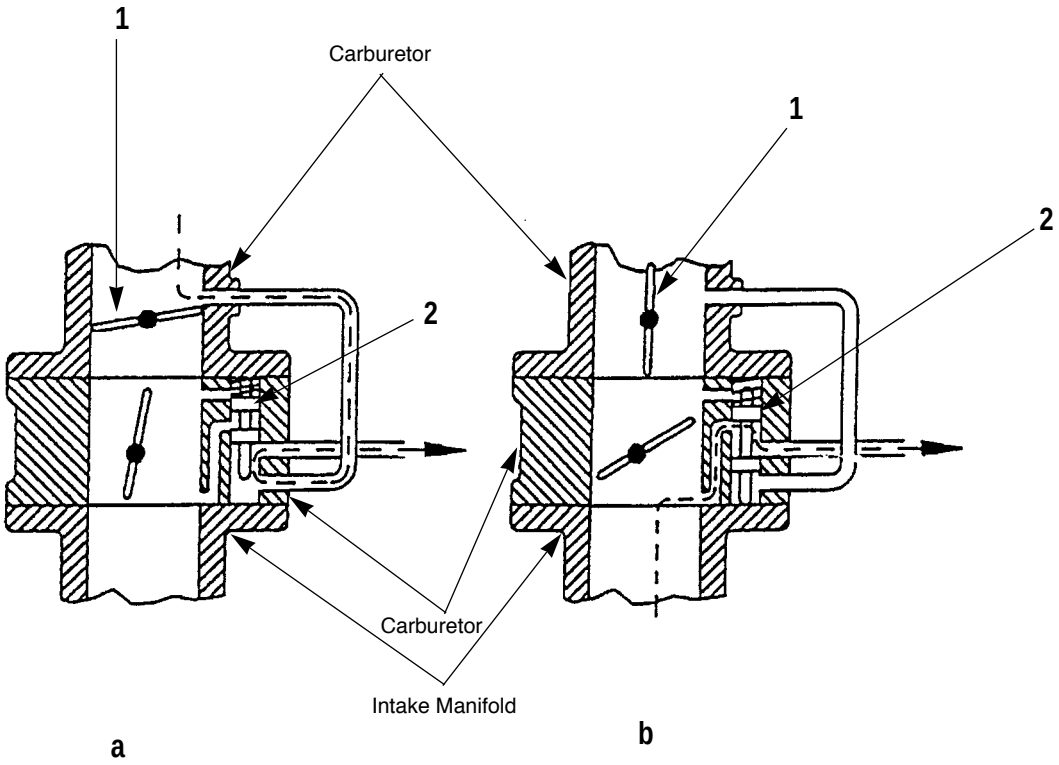

IAGS046S

Distributor Vacuum Control
(1) Carburetor butterfly valve. (2) Valve.

When the carburetor butterfly valve (1) is closed, as illustrated in (a), the vacuum below it causes the piston valve (2) in the governor to move against its spring; the distributor vacuum control unit is then connected to the Carburetor vacuum control port as shown by the dotted path.

When the carburetor butterfly valve (1) is opened, as illustrated at (b), there is no significant vacuum below it, and so the valve (2) returns to its original position. The manifold vacuum from below the governor can now operate directly on the distributor vacuum control unit, shown by the dotted path.

In this way, when the engine is operating at a speed below the governor set speed, the carburetor will control the distributor vacuum control unit. When the engine is under governor control, the governor will control the distributor vacuum control unit by providing vacuum from under the governor, thus insuring a properly advanced distributor under all operating conditions and speeds.

https://truckmanualshub.com/

Lubrication System

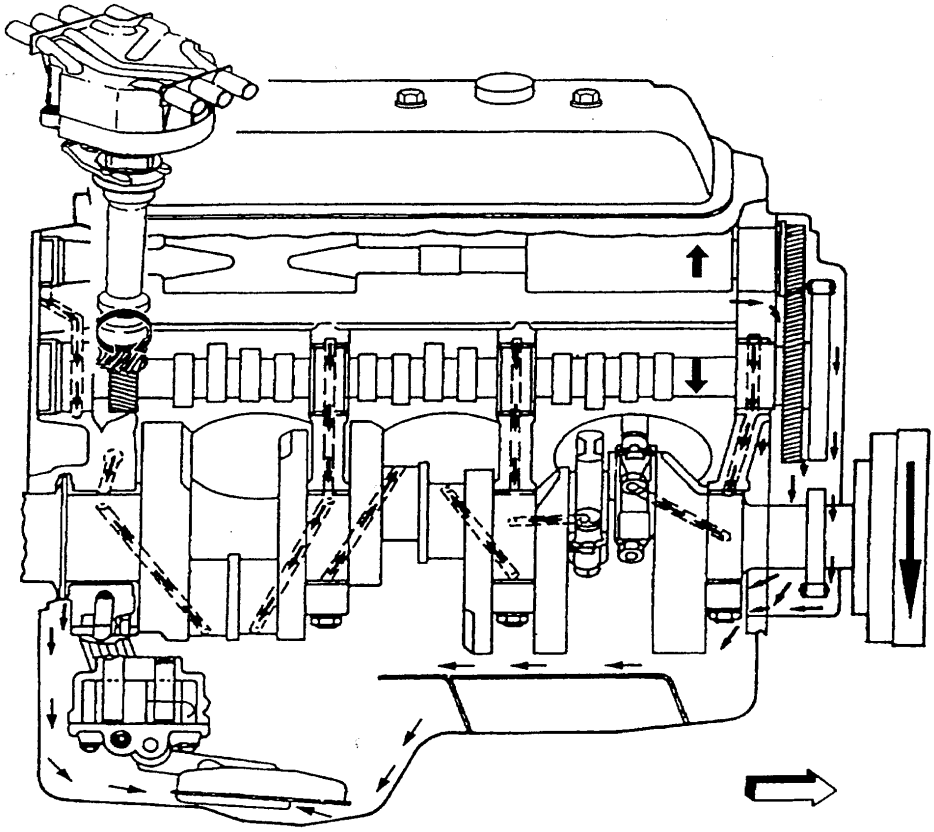

IAGS047S

Engine Lubrication Diagram

A Lubrication schematic is shown in IAGS047S. The gear type oil pump is driven from the distributor shaft, which is gear driven from the camshaft. Oil is drawn into the oil pump through a pickup screen and pipe.

Pressurized oil is routed to the oil filter. In case of excessive oil pressure, a bypass valve is provided. Filered oil flows into the main gallery and then to the camshaft, balance shaft rear bearing, and crankshaft bearings. The valve lifter oil gallery supplies oil to the valve lifters. Oil flows from the valve lifters through the hollow pushrods to the valve rocker arms. Oil from over head drains back to the crankcase through the oil drain holes.

The timing chain is drip fed from the front camshaft bearing. The pistons and piston pins are lubricated by oil splash.

Ignition System

Breakerless Ignition System

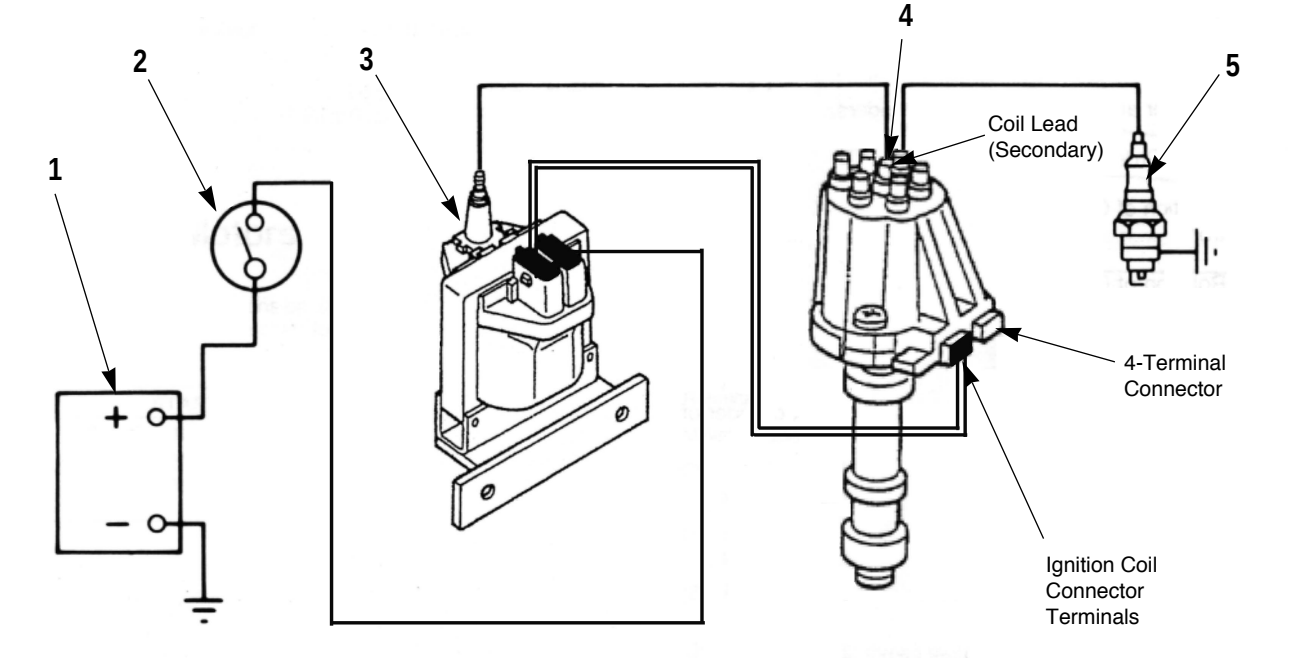

Ignition System Schematic
(1) Battery. (2) Ignition switch. (3) Coil. (4) Distributor. (5) Spark plug.

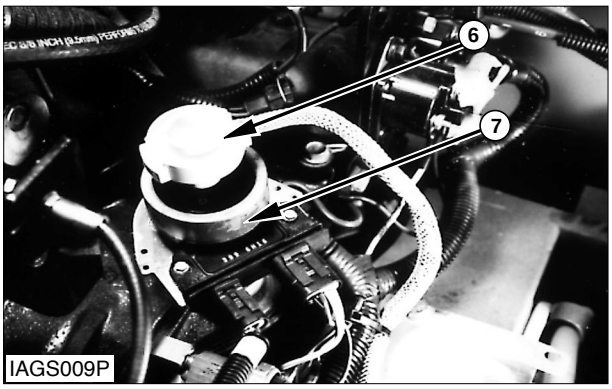

Distributor Components
(6) Sensor. (7) Trigger wheel

The ignition system has battery (1), ignition switch (2), coil (3), distributor (4) with inner electronics circuits and spark plugs (5). The battery and ignition switch have terminals and closed contacts to permit battery current flow through the ignition system. These components must have closed current connections to complete the operation of the ignition circuit. Coil (3) and spark plugs (5) are of the standard type. The ignition coil changes the low voltage current into high voltage current to make a spark at the gap of the spark plug. The coil has two windings around a soft iron core. The primary has a small number of turns of heavy wire, and the secondary has many thousand turns of a very fine wire. The primary winding is on the outside of the secondary windings. The distributor has a sensor (6), trigger wheel (7) with lobes and the electric circuit that is a sealed unit inside the distributor housing.

Operation

The ignition system can be divided into two parts, the primary (low voltage) and the secondary (high voltage) circuits.

The primary circuit has battery (1), ignition switch (2), the primary windings of coil (3), the electronic circuit in distributor (4), sensor (6) and trigger wheel (7).

The secondary circuit has the secondary windings of coil (3), distributor (4) the distributor cap and rotor and spark plugs (5).

The operation is similar to a standard ignition system except that this system does not have ignition contacts (points) and no adjustment is necessary.

Battery voltage (primary voltage) is supplied to the positive (+) terminal of coil (3). Primary voltage is also supplied to the electronic circuit, the sensor and the trigger wheel.

The coil negative (-) terminal is connected also to the electronic circuit. Secondary voltage from the coil flows to the distributor, cap and rotor and spark plug (5).

When the engine is started and is running, battery current flows through the primary windings of coil (3). This causes the development of a magnetic field inside the coil as the trigger wheel lobe is not in alignment with sensor (6). When the trigger wheel lobe moves is alignment with the sensor, a signal is sent to the electronic circuit which opens an electronic switch in the circuit. When the electronic switch opens, the primary current flow collapses (breaks down) in the coil across the secondary windings. This causes the induction of high voltage in the secondary winding of the coil. The high voltage goes to the distributor cap. From there it is sent to the correct spark plug by the rotor. When the lobe of the trigger wheel is not in alignment with the sensor, the electronic circuit switch closes and the development of the magnetic field is made again in the primary windings.

Electrical System

The electrical system is a 12 volt, negative ground system that has two basic circuits. The two circuits are the starting circuit and the charging circuit. The charging circuit includes the low amperage circuit with warning lights and gauges. Some of the electrical components are used in more than one circuit.

The starting circuit is in operation when the ignition switch is turned to the START position. In some cases, the transmission neutral switch or hand brake switch must be closed before the starting motor solenoid is energized.

The charging circuit is in operation when the engine is running. The alternator gives direct current (DC) to the electrical system. The battery stores the direct current. A voltage regulator controls the amount of direct current output to the battery. The ampere light or ammeter indicates current flow between the battery and the alternator.

Starting Motor

For complete specifications on the starting motors, see the Starting Motor Coverage chart for the correct Service Module.

Starting Motor Coverage	
Starting Motor Part Number	Manufaturer/ Series
A232158	Reduction

https://truckmanualshub.com/

Delco Remy PG260

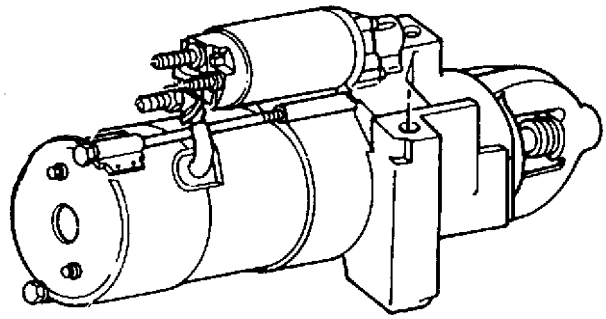

IAGS049S

Rotation is clockwise when seen from the drive end.

The starting motor is used to turn the engine flywheel fast enough to make the engine run. The starting motor has a solenoid. When the ignition switch is activated, voltage from the electrical system will cause the solenoid to move the pinion toward the flywheel ring gear of the engine. The electrical contacts in the solenoid close the circuit between the battery and the starting motor just before the pinion engages the ring gear. This causes the starting motor to rotate. This type of motor "turn on" is a positive shift starting motor.

When the engine begins to run, the overrunning clutch portion of the pinion drive prevents damage to the armature caused by excessive speeds. The clutch does this by breaking the mechanical connection. The pinion will stay meshed with the ring gear until the ignition switch is released. A return spring in the overrunning clutch returns the clutch to its rest position.

Alternators

The alternators used on these engines have three phase, full-wave. rectified output. They are the brush type. Refer to the Alternator Coverage chart for detailed systems operation information

Alternator Coverage	
Alternator Part Number	Manufaturer/ Series
8C5510	Delco Remy/CS-121

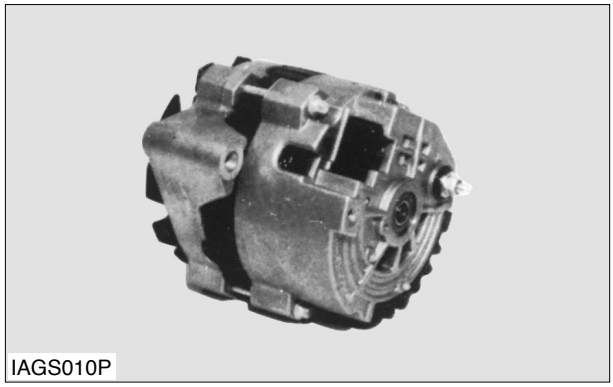

IAGS010P

Delco Remy CS-121 Alternator

The alternator is an electrical and mechanical component driven by a belt from engine rotation. It is used to charge the storage battery during the engine operation. The alternator is cooled by an external fan mounted behind the pulley. The fan pulls air through the holes in the back of the alternator. The air exits the front of the alternator, cooling it in the process. The Delco Remy CS-121 series also has an internal fan. This fan is mounted on the rotor. This fan pulls air through the holes in the back of the alternator to cool the rectifier bridge and regulator. The air exits the front of the alternator.

The alternator converts mechanical and magnetic energy to alternating current (AC) and voltage. This process is done by rotating a direct current (DC) electromagnetic field (rotor) inside a three phase stator. The alternating current and voltage (generated by the stator) are changed to direct current by a three phase, full wave rectifier system using six silicone rectifier diodes. Some alternators have three exciter diodes or a diode trio. They rectify the current needed to start the charging process. Direct current flows to the alternator output terminal.

https://truckmanualshub.com/

A solid state regulator is installed in or on the back of the alternator. Two brushes conduct current, through two slip rings, to the rotor field. Some alternators have a capacitor mounted on them. The capacitor protects the rectifier from high voltages. It also suppresses electrical noise through a radio, if equipped.

The alternator is connected to the battery through the ignition switch for alternator turn on. Therefore, alternator excitation occurs when the switch is turned on.

Circuit Breaker

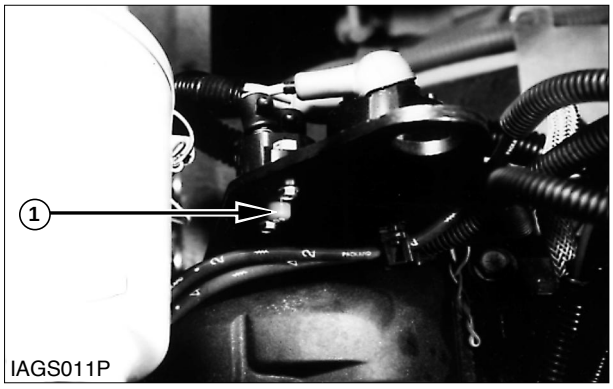

Circuit Breaker
(1) Reset button.

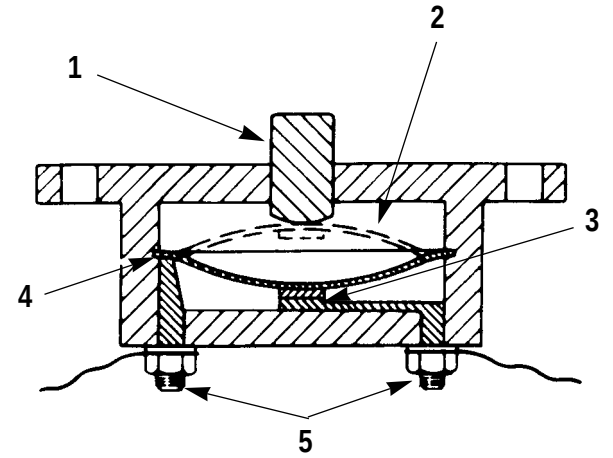

Circuit Breaker Schematic
(1) Reset button. (2) Disc in open position. (3) Contacts.
(4) Disc. (5) Battery circuit terminals.

The circuit breaker is a switch that opens the battery circuit if the current in the electrical system goes higher than the rating of the circuit breaker.

Heat activated metal disc (2) with contact points completes the electrical circuit through the circuit breaker. If the current in the electrical system gets too high, it causes the metal disc to get hot. This heat causes a distortion of the metal disc. This will open the contact points and open the circuit. A circuit breaker that is open can be set again after it cools. Push reset button (1) to close the contact points and set the circuit breaker again.

https://truckmanualshub.com/

Timing Gears & Chain

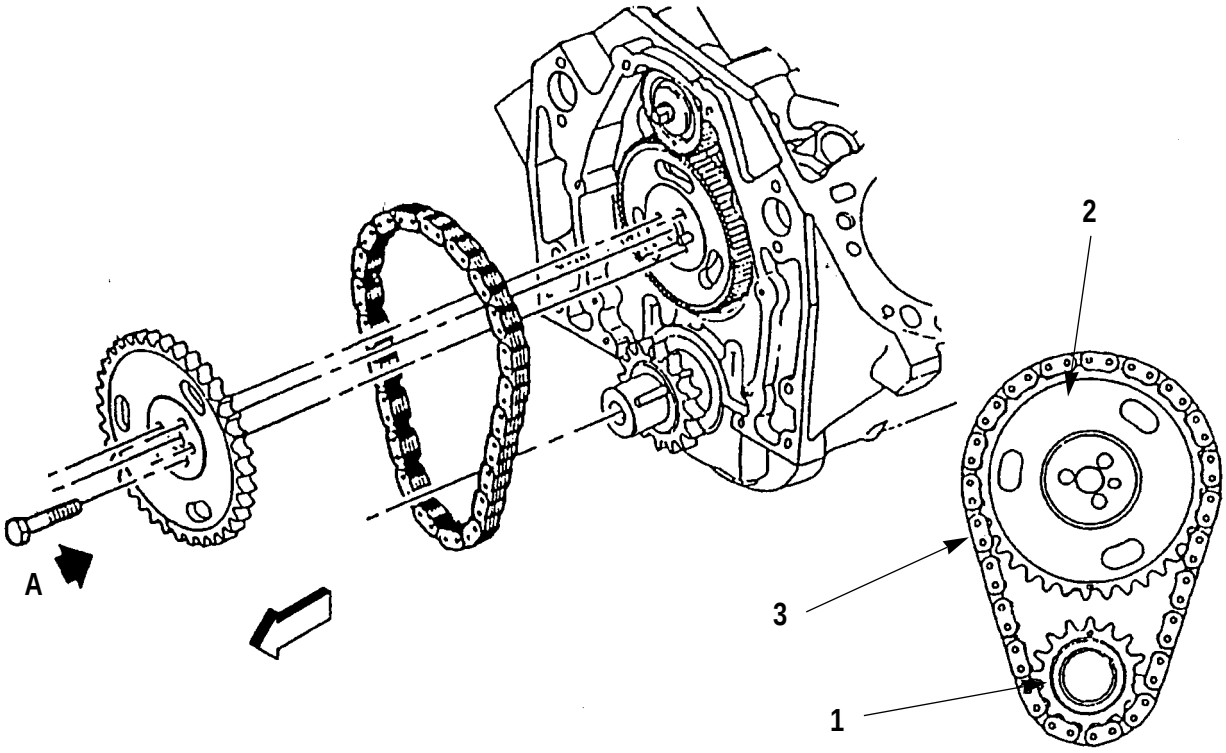

IAGS051S

Camshaft Timing Chain and Sprockets
(1) Crankshaft gear. (2) Camshaft gear. (3) Timing chain.

There are two timing gears and one timing chain on this model. The two gears are the crankshaft gear (1) and the (2) camshaft gear. The timing chain (3) connects the two gears together. The crankshaft gear drives the camshaft gear and camshaft which controls the valve mechanisms.

The hydraulic pump is driven by a short U-joint connected to the crankshaft pulley. The velocity governor is mounted to the intake manifold. Therefore, there is no idler gear or accessory drive gear.

https://truckmanualshub.com/

Transmission Oil Cooler

2 Speed Power Shift Transmission

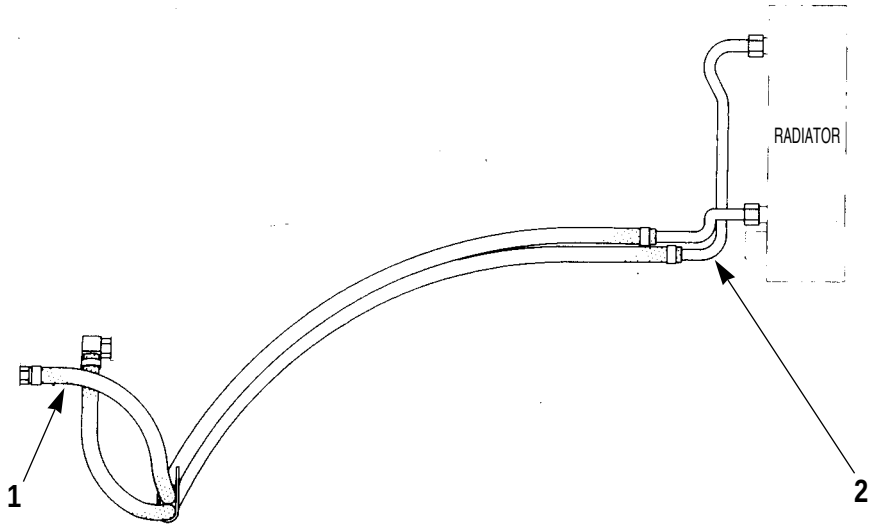

IAGS052S

Transmission Oil Cooler (D35S, D40S, G35S, G40S)
(1) Oil line. (2) OIl line.

On models equipped with a power shift transmission the oil cooler is located in the outlet section of the radiator, Oil flows from the rear housing (torque converter area) through line (2) into the cooler. The cool oil returns the line (1) to the transmission.

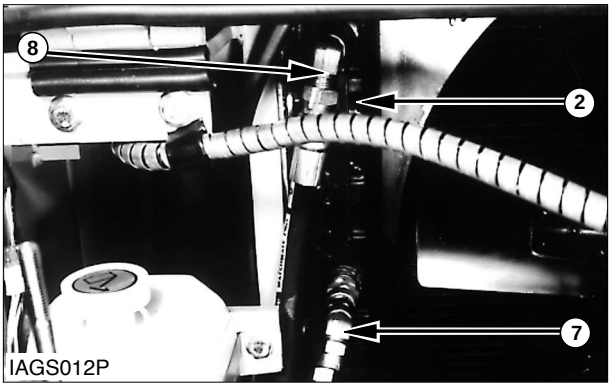

Transmission Oil Cooler Lines
(Cross Flow Radiator)
(2) Radiator. (7) Oil line from transmission.
(8) Oil line to transmission.

When the machine is equipped with a hydrostatic, power shift transmission or transaxle, a transmission oil cooler lis installed in the outlet section of radiator (2). The radiator coolant flows around the tubes of the cooler and cools the transmission oil as it flows through the cooler. The transmission oil then returns to the transmission inlet (power shift or transaxle) or reservoir (hydrostatic) through line (8).

The oil from the pump flows through line (7) into the cooler. The oil then returns to the pump and transmission through line (8).

https://truckmanualshub.com/

Testing And Adjusting

Troubleshooting

Adhere to the following warnings when performing any tests or adjustments while the engine is running.

⚠ WARNING

Work carefully around an engine that is running. Engine parts that are hot, or part that are moving, can cause personal injury.

⚠ WARNING

Exhaust fumes contain carbon monoxide (CO) which can cause personal injury or death. Start and operate the engine in a well ventilated area only. In an enclosed area, vent the exhaust to the outside.

Troubleshooting can be difficult. On the pages that follow is a list of possible problems. To make a repair to a problem, make reference to the probable cause.

This list of problems, causes and corrections will only give an indication of where a possible problem can be and what repairs are needed. Normally, more or other repair work is needed beyond the recommendations in the list. Remember that a problem is not normally caused only by one part, but by the relation of one part with the other parts. This list cannot give all possible problems and probable causes. The serviceman must find the problem and its source, then make the necessary repairs.

There is a troubleshooting problem list for the gasoline fuel system, liquid petroleum fuel system and dual fuel system.

For problems with the gasoline portion of a Dual Fuel System, see Troubleshooting Problem List : Gasoline Fuel System. For problems with the LP portion of a Dual Fuel System, see Troubleshooting Problem List: LP Fuel System.

Troubleshooting Problem List: Gasoline Fuel System

1. Engine crankshaft will not turn when the ignition switch is turned to the start position.

2. Engine will not start.

3. Engine misfires or runs rough.

4. Engine idle not constant.

5. Stall at low engine speed (rpm).

6. Sudden changes in engine speed (rpm).

7. Not enough power.

8. Too much vibration.

9. Loud combustion noise.

10. Loud noise from valve compartment.

11. Oil in cooling system.

12. Mechanical noise in engine.

13. Fuel consumption too high.

14. Loud noise from valves or valve drive components.

15. Little movement of valve and too much valve clearance.

16. Valve spring lock is free.

17. Oil at the exhaust.

18. Little or no valve clearance.

19. Engine has early wear.

20. Coolant in lubrication oil.

21. Too much black or gray smoke

22. Too much white or blue smoke.

23. Engine has low oil pressure.

24. Engine uses too much lubrication oil.

25. Enigne coolant is too hot.

26. Short spark plug life.

27. Early combustion.

28. Starting motor does not turn or turns too slow.

29. Armature turns, but pinion does not engage flywheel ring gear.

30. With starting motor on, pinion engages ring gear, but engine does not crank.

31. Starting motor continues to run after ignition switch has been released.

32. Pinion does not disengage after engine starts to run.

33. Alternator does not charge.

34. Alternator charge rate is low or not regular.

35. Alternator charges too much.

36. Alternator is noisy.

Troubleshooting Problems: Gasoline Fuel System

Problem 1: Engine crankshaft will not turn when the ignition switch is turned to the start position.

Probable Cause :

1. Battery has low output :
Make reference to Problem 34.

2. Circuit breaker open:
Push in the re-set button.

3. Wiring, ignition switch or directional control switch has defect :
Check all the wiring and connections. Make an electrical test of the components parts for defects.

4. Starting motor has a defect:
Make reference to Problem 29.

5. Starting motor has a defect:
Make reference to Problem 28.

6. Inside problem prevents engine crankshaft from turning:
If the crankshaft cannot be turned after disconnecting the driven equipment, remove the spark plugs and check for fluid in the cylinders while turning the crankshaft. If fluid in the cylinders is not the problem, the engine must be disassembled to check for other inside problems. Some of these inside problems are bearing seizure, piston seizure, wrong pistons installed in the engine.

Problem 2: Engine will not start.

Probable Cause :

1. Slow cranking speed :
Make reference to Problem 28.

2. No fuel to cylinders :
Check gas supply.

Check carburetor throttle, and linkage between the carburetor and the governor.

3. Weak or no spark to combustion chambers :
Check the wiring for cracks and the connections for opens.

Check coil resistance.

Check distributor cap for cracks and sensors for defects.

Make sure the battery has good voltage.

Check the spark plugs and the ignition coil for correct operation.

See the test procedure for the respective Ignition System in Testing And Adjusting.

4. Dirty air filter :
Check air intake filter for a dirty filter.
See the Operation & Maintenance Manual for the respective model.

5. Dirty fuel filter :
Install a new fuel filter element.

6. Dirty or broken fuel lines :
Clean or install new fuel lines as necessary.

7. Check governor to make sure spring is not broken.
The governor throttle plate will remain closed if the spring is broken and will not permitt the engine to start.

8. Bad quality fuel :
Remove the fuel from the fuel tank. Install a new fuel filter element. Put a good grade of clean fuel in the fuel tank.

9. Wrong ignition timing :
Set engine timing.
See Ignition Timing Check And Adjustment in Testing And Adjusting.

10. Loose wiring connection in the starting system :
Check and repair all wiring connections.

Problem 3: Engine misfires or runs rough.

Probable Cause :

1. Weak spark to combustion chambers :
See Problem 2 for correction.

2. Spark plug wires, in firing order sequence, are next to each other :
Place wires so they are not parallel with each other and are not next to each other in the firing sequence.

3. Carburetor adjustment not correct :
Make adjustment as necessary.
See Carburetor Adjustments in Testing And Adjusting.

4. Cross-firing (ignition voltage discharge) in distributor cap :
Clean spark plug tip and check gap.

Measure spark plug resistance (5K ohm max).

Check fuel mixture for being too lean under a load condition.

Clean inside and outside of distributor cap.

Check and replace spark plug wires if necessary.

5. Fuel pressure is low :
Make sure there is fuel in the fuel tank.

Look for leaks or bad bends in the fuel lines.

Look for air in the fuel system.

Check fuel flow.
See Fuel Flow System Test (Gasoline Fuel System) in Testing And Adjusting.

6. Engine timing is not correct :
Set engine timing.
See Ignition Timing Check And Adjustment in Testing And Adjusting.

7. Ignition system problem :
See Ignition System Test in Testing And Adjusting.

8. Valve clearance is not correct :
Make adjustment to valve clearance.
See Valve Clearance Adjustment in Testing And Adjusting. Torque values to **25 N • m (18 lb • ft)**.
"0" clearance.

9. Intake or Exhaust valve leaks :
Do a leak down test.
See Cylinder Leakage Test in Testing And Adjusting.

Make a replacement or correction of the valves.

10. Head gasket leaks :
Make a replacement of the gasket and other components as needed.

11. Bent or broken push rod :
Make a replacement of the push rod.

12. Hot engine temperatures :
Check the water pump operation.
See Cooling System in Testing And Adjusting.

13. Check resistor sending unit and power lines to coils (LP only).
See Resistor Sending Unit in Specifications.

Problem 4: Engine idle not constant.

Probable Cause :

1. Air leaks to and around carburetor :
Tighten all screws.

Make sure the gaskets have a good seal.

Check the lines and connections for air leakage.

2. Carburetor idle speed adjustment is not correct :
Make an adjustment to carburetor idle speed.
See Low Idle Speed Adjustment in Testing And Adjusting.

3. Carburetor idle mixture adjustment needs adjustment :
Make an adjustment to the idle mixture setting.
See Idle Mixture Adjustment in Testing And Adjusting.

4. Intake air restriction in the air intake system :
Check air intake filter for a dirt filter.
See the Operation & Maintenance Manual for the respective model.

5. Operation of carburetor components is not correct :
Inspect the carburetor operation, replace the components that are worn and are damaged.

6. Fuel pressure is low :
Make sure there is fuel in the fuel tank.

Look for leaks or bad bends in the fuel line.

Look for air in the fuel system.

Check fuel flow.
See Fuel Flow System Test (Gasoline Fuel System) in Testing And Adjusting.

Problem 5 : Stall at low engine speed (rpm).

Probable Cause :

1. Fuel pressure is low :
Make sure there is fuel in the fuel tank (LP)

Make sure tank is mounted on truck correctly.

Look for leaks or bad bends in the fuel lines.

Look for air in the fuel system.

Check fuel flow.
See Fuel Flow System Test (Gasoline Fuel System) in Testing And Adjusting.

2. Idle rpm too low :
Make adjustment to get the correct low idle speed.
See Low Idle Speed Adjustment in Testing And Adjusting.

3. Carburetor adjustments not correct :
Make adjustments as necessary.
See Carburetor Adjustments in Testing And Adjusting.

4. Carburetor and accelerator linkage adjustment are not correct :
Adjust the linkage, see Accelerator Linkage Adjustment in Testing And Adjusting.

Problem 6 : Sudden changes in engine speed (rpm)

Probable Cause :

1. Failure of governor :
Install new parts for those that have defects or are damaged.

2. Damaged accelerator or carburetor linkage :
Repair or replace damaged components and adjust the linkage.
See Accelerator Linkage Adjustment in Testing And Adjusting.

Problem 7 : Not enough power.

Probable Cause :

1. Failure of governor :
Install new parts for those that have defects or are damaged.

2. Bad quality fuel :
Remove the fuel from the fuel tank. Install a new fuel filter element. Put a good grade of clean fuel in the fuel tank.

3. Weak spark to combustion chambers :
Check the wiring for cracks and the connections for opens.

Check distributor cap for cracks and sensors for defects.

Make sure the battery has good voltage.

Check the spark plugs and the ignition coil for correct operation.

See the test procedure for the respective Ignition System in Testing And Adjusting.

4. Adjustment of carburetor not correct :
Make adjustment to carburetor.
See Carburetor Adjustments in Testing And Adjusting.

5. Wrong ignition timing :
Make adjustment to ignition timing.
See Ignition Timing Check And Adjustment in Testing And Adjusting.

6. Engine is too hot :
Make reference to Problem 25.

7. Leaks in air inlet system :
Check for leakage at gaskets for inlet manifold and carburetor.

Look for restrictions in the air cleaner or air inlet hoses.

8. Wrong valve clearance :
Make adjustment to the valve clearance.
See Valve Clearance Adjustment in Testing And Adjusting. Torque values to **25 N • m (18 lb • ft)**.

9. Restriction in exhaust system :
Check for bad muffler and exhaust pipes.

10. Fuel pressure is low :
Make sure there is fuel in the fuel tank.

Look for leaks, or bad bends in the fuel lines.

Look for air in the fuel system.

Check fuel flow.
See Fuel Flow System Test (Gasoline Fuel System) in Testing And Adjusting.

Problem 8 : Too much vibration.

Probable Cause :

1. Loose bolts or nuts that hold pulleys onto crankshaft :

2. Pulley has a defect :
Install a new pulley.

3. Fan blade not in balance :
Loosen or remove fan belts and operate engine for a short time at the rpm that the vibration was present. If vibration is not still present, make a replacement of the fan assembly.

4. Engine supports are loose, worn, or have a defect :
Tighten all mounting bolts. Install new components if necessary.

5. Engine misfires or runs rough :
Make reference to Problem 3.

Problem 9 : Loud combustion noise (detonation).

Probable Cause :

1. Bad quality fuel :
Remove the fuel from the fuel tank. Install a new fuel filter element. Put a good grade of clean fuel in the fuel tank.

2. Wrong ignition timing :
Make adjustment to ignition timing.
See Ignition Timing Check And Adjustment in Testing And Adjusting.

Problem 10 : Loud noise from valve compartment.

Probable Cause :

1. Damage to valve spring(s) or locks :
Install new parts where necessary.

2. Too much valve clearance :
Make adjustment to valve clearance.
See Valve Clearance Adjustment in Testing And Adjusting. Torque values to **25 N • m (18 lb • ft).**

3. Not enough lubrication :
Check lubrication in valve compartment. There must be a constant flow of oil at engine high rpm, but only a small flow of oil at low rpm. Oil passages must be clean, especially those that send oil to and from the cylinder head.

Problem 11 : Oil in cooling system.

Probable Cause :

1. Defect in head gasket :
Install a new head gasket.

2. Oil cooler leak :
Repair or replace the radiator oil cooler.

Problem 12 : Mechanical noise in engine.

Probable Cause :

1. Failure of connecting rod and/or main bearings :
Inspect the bearings and the bearing surface on the crankshaft. Install new parts when necessary
See Crankshaft in Specifications.

2. Damage to timing gears :
Install new parts where necessary.
See Timing Gears in Specifications.

3. Damage to crankshaft :
Make replacement of the crankshaft.

4. Loose or broken pin in piston :
Make replacement of parts as necessary.
See Pistons And Rings in Specifications.

Problem 13 : Fuel consumption too high.

Probable Cause :

1. Fuel system leaks :
Large changes in fuel consumption may be the result. Make replacement of parts as necessary.

2. Bad spark plugs :
Clean or make replacement as necessary.

3. Wrong ignition timing :
Make an adjustment to ignition timing.
See Ignition Timing Check And Adjustment in Testing And Adjusting.

4. Worn piston rings :
Install new parts as necessary.
See Pistons And Rings in Specifications.

5. Check carburetor adjustments.

Problem 14 : Loud noise from valves or valve drive components.

Probable Cause :

1. Damage to valve springs :
Make replacement of parts with damage.

2. Damage to camshaft :
Make replacement of parts with damage. Clean engine thoroughly.

3. Damage to tappet (valve lifter) :
Clean engine thoroughly.

Make a replacement of the camshaft and tappets (valve lifters).

Look for valves that do not move freely.

Make an adjustment to valve clearance.
See Valve Clearance Adjustment in Testing And Adjusting.

4. Damage to valves :
Make replacement of parts with damage.

Problem 15 : Little movement of valves and too much valve clearance.

Probable Cause :

1. Too much valve clearance :
Make adjustment according to Valve Clearance Adjustment in Testing And Adjusting. Torque values to **25 N • m (18 lb • ft).**

2. End of valve stem worn :
If there is too much wear, install new valves. See Valves in Specifications. Make adjustment of valve clearance according to Valve Clearance Adjustment in Testing And Adjusting.

3. Tappets (valve lifters) worn :
If there is too much wear, install new tappets (valve lifters). See Rocker Arms and Valve Lifters in Specifications. Make adjustment of valve clearance according to Valve Clearance Adjustment in Testing And Adjusting.

4. Damage to tappets (valve lifters) :
Install new tappets (valve lifters).

Check camshaft for wear.
See Camshaft Lobe Measurement in Testing And Adjusting.

Check for free movement of valve or bent valve stem.

Clean engine thoroughly.

Make adjustment of valve clearance according to Valve Clearance Adjustment in Testing And Adjusting. Torgue values to **25 N • m (18 lb • ft).**

5. Worn lobes on camshaft :
Check valve clearance.
See Valve Clearance Adjustment in Testing And Adjusting.

Check for free movement of valves or bent valve stems.

Check for tappet (valve lifter) wear.
See Rocker Arms And Valve Lifters in Specifications.

Install a new camshaft.

Make adjustment of valve clearance according to Valve Clearance Adjustment in Testing And Adjusting.

6. Worn push rods :
If there is too much wear, install new push rods. Make adjustment of valve clearance according to Valve Clearance Adjustment in Testing And Adjusting.

7. Rocker arm worn at face that makes contact with valve stem :
If there is too much wear, install new rocker arms. Make adjustment of valve clearance according to Valve Clearance Adjustment in Testing And Adjusting. Torque values to **25 N • m (18 lb • ft).**

8. Not enough lubrication :
Check lubrication in valve compartment. There must be a constant flow of oil at engine high rpm, but only a small flow of oil at low rpm. Oil passages must be clean, especially those that send oil to and from the cylinder head.

Problem 16 : Valve spring lock is free.

Probable Cause :

1. Damage to locks :
Locks with damage can cause the valve to be loose. Install new parts as necessary.

2. Damage to valve spring (s) :
Install new valve spring (s).

Problem 17 : Oil at the exhaust.

Probable Cause :

1. Worn exhaust valve seats :
Install new exhaust valve seats.

2. Damaged or worn exhaust valve seals :
Inspect and install new parts as needed.

3. Too much oil in the valve compartment :
Check return passages to oil pan.

4. Worn piston rings :
Inspect and install new piston rings.
See Cylinder Leakage Check in Testing And Adjusting.

Problem 18 : Little or no valve clearance.

Probable Cause :

1. Worn valve seat or face of valve :
Reconditioning of valves and valve seats is needed. Make adjustment of valve clearance according to Valve Clearance Adjustment in Testing And Adjusting.

Problem 19 : Engine has early wear.

Probable Cause :

1. Dirt in lubrication oil :
Remove dirty lubrication oil

Install a new filter element.

Put clean oil in the engine.

2. Air inlet leaks :
Inspect all gaskets and connections. Make repairs if leaks are present.

Problem 20 : Coolant in lubrication oil.

Probable Cause :

1. Failure of cylinder head gasket :
Install a new cylinder head gasket. Tighten the bolts that hold the cylinder head, according to Specifications.

2. Crack or defect in cylinder head :
Install a new cylinder head.

3. Crack or defect in cylinder block :
Install a new cylinder block.

Problem 21 : Too much black or gray smoke.

Probable Cause :

1. Timing advance does not operate correctly :
See Ignition Timing Check And Adjustment in Testing And Adjusting. Make a replacement of the advance timing components, if necessary.

2. Not enough air for combustion :
Check air cleaner for restrictions.

Check air inlet hose and air horn for restriction.

3. Low quality of fuel :
Remove the fuel from fuel tank or replace LP tank.

Install a new fuel filter element.

Put a good grade of clean fuel in the fuel tank.

4. Wrong ignition timing :
Make adjustment to timing.
See Ignition Timing Check And Adjustment in Testing And Adjusting.

5. Valve adjustment not correct :
Make adjustment according to Valve Clearance Adjustment in Testing And Adjusting.

6. Carburetor has wrong adjustments :
Make adjustments to carburetor.
See Carburetor Adjustments in Testing And Adjusting.

7. Exhaust system restriction :
Make visual inspection of exhaust system.

Check the back pressure in the exhaust system.
See Air Inlet And Exhaust System in Testing And Adjusting.

Problem 22 : Too much white or blue smoke.

Probable Cause :

1. Too much lubricating oil in engine :
Remove extra oil.
See the Operation & Maintenance Manual for the respective model.

2. Engine misfires or runs rough :
Make reference to Problem 3.

3. Wrong ignition timing :
Make adjustment to timing.
See Ignition Timing Check And Adjustment in Testing And Adjusting.

4. Timing advance does not operate correctly :
See Ignition Timing Check And Adjustment in Testing And Adjusting. Replace the advance timing components, if necessary.

5. Coolant in combustion system :
Check for cracked head.

6. Worn piston rings :
Install new piston rings.

7. Carburetor has wrong adjustments :
Make adjustment to carburetor.
See Carburetor Adjustments in Testing And Adjusting.

8. Plugged positive crankcase ventilation valve :
Install a new PCV valve for crankcase ventilation.

Problem 23 : Engine has low oil pressure.

Probable Cause :

Install new light, gauge, or instrument panel.

1. Not enough oil in system :
Add oil to the crankcase.
See the Operation & Maintenance Manual for the respective model.

2. Dirty oil :
Remove dirty oil from engine.

Install new oil filter element.

Put clean oil in engine.

Check the oil filter assembly for defects. Install new parts if necessary.

3. Defect in oil pressure light or gauge :

4. Broken shaft for oil pump drive :
Install new parts as necessary.

5. Dirty screen on oil pump suction bell :
Clean screen.

Remove dirty oil from engine.

Put clean oil in engine.

6. Relief valve for oil pump does not operate correctly :
Clean valve and housing. Install new parts as necessary.

7. Oil pump has a defect :
Make repair or replacement of oil pump if necessary.

8. Too much clearance between crankshaft and crankshaft bearings :
Install new crankshaft or crankshaft bearings if necessary.

9. Too much clearance between camshaft and camshaft bearings :
Install new camshaft or camshaft bearings if necessary.

Problem 24 : Engine uses too much lubrication oil.

Probable Cause :

1. Too much lubrication oil in engine :
Remove extra oil.
See the Operation & maintenance Manual for the respective model.

2. Oil leaks :
Find all oil leaks. Make repairs as needed.

3. Oil temperature is too high :
Make reference to Problem 25.

4. Worn piston rings :
Install new parts if necessary.

5. Too much oil in valve compartment :
Look at return passages to oil pan.

Problem 25 : Engine coolant is too hot.

Probable Cause :

1. Dirty radiator (plugged cores) :

⚠ WARNING

To prevent personal injury, never use air pressure that is more than 205 kPa (30 psi).

Remove the dirt with an air hose in the direction opposite fan air flow.

2. Loose or missing fan shrouds :
Shrouds are very important for cooling of the lift truck engine. Make sure the fan is centered in the shroud and is tightly fastened.

3. Loose or worn fan belts and worn pulleys :
Replace any worn belts or pulleys.
See Belt Adjustment in Testing And Adjusting.

4. Loose or defective radiator cap or low water level in radiator :
Tighten or test the radiator cap.
See Cooling System Tests in Testing And Adjusting.

Fill the radiator with coolant to the correct level.

Check hoses and connections for high pressure leaks.
Replace the parts that have wear.
See Cooling System Tests in Testing And Adjusting.

5. Thermostat has a defect :
Check and replace thermostat if defective.
See Cooling System Tests in Testing And Adjusting.

6. Combustion gases in coolant :
Find out where gases get into cooling system.
Make replacement or repairs as needed.

7. Water pump has a defect :
Make replacement or repairs as needed.

8. Too much load on the lift truck :
Decrease the load.

9. Wrong ignition timing :
Make adjustment to the timing.
See Ignition Timing Check And Adjustment in Testing And Adjusting.

10. Transmission not operating correctly that causes as increase in the coolant temperature :
Make correction to the transmission.
See respective Power Train or Transmission service module.

11. Water temperature light or gauge has a defect :
Install a new light, gauge or instrument panel.

Problem 26 : Short spark plug life.

Probable Cause :

1. Wire on wrong spark plug :
Make reference to Ignition Sequence (Firing Order) in Specifications.

2. Spark plug gap too wide :
Make adjustment to the gap for the spark plug.
See Spark Plug in Specifications.

3. Wrong spark plugs in engine :
Install the correct spark plugs.

4. Reverse Polarity :
If the polarity at the ignition coil is wrong, reverse the position of the wires on the ignition coil.

Problem 27 : Early combustion.

Probable Cause :

1. Wrong ignition timing :
Make adjustment to timing.
See Ignition Timing Check And Adjustment in Testing And Adjusting.

2. Fuel octane ration (too low) :
Use a good grade of clean fuel.

3. BTU content of fuel too low :
Use the correct grade of fuel.

4. High cooling system temperature :
Refer to problem 25.

5. Carburetor adjustment not correct :
Make adjustments as necessary.
See Carburetor Adjustments in Testing And Adjusting.

6. Too much load on engine :
Make a reduction to load on engine.

7. Deposits in combustion chamber :
Remove deposits from combustion chamber.

Problem 28 : Starting motor does not turn or turns too slow.

Probable Cause :

1. Battery is discharged :
Charge battery.

2. Battery is defective :
Replace battery.

3. Battery cable terminals loose, corroded or poor ground connection :
Tighten cable terminals, clean them and battery posts if corroded and apply anti-acid grease.

4. Starting motor terminals or brushes have short circuit to ground :
Remove short circuit.

5. Brushes do not seat against commutator correctly. They stick in their holders, are worn, broken, oily or dirty :
Check brushes, clean or replace them, Clean brush holders if necessary.

6. Ignition switch or solenoid damaged (burned or loose parts) :
   Replace ignition switch or solenoid.

7. Excessive voltage drop in cables, damaged cables, loose cable connections, or terminal connections corroded :
   Check starting motor cables and their connections.

NOTE: For more information on the starting motor, see the respective starting motor service module : Nippondenso Reduction Starting Motors.

Problem 29 : Armature turns, but pinion does not engage flywheel ring gear.

Probable Cause :

1. Pinion drive/overrunning clutch is defective :
   Replace pinion drive/overrunning clutch.

2. Damaged flywheel ring gear :
   Replace flywheel ring gear.

3. Damaged or broken shift lever :
   Replace shift lever.

4. Damaged or broken solenoid:
   Replace solenoid.

5. Damaged or broken armature, idler or clutch gear :
   Replace armature or idler gear or overrunning clutch as needed.

NOTE: For more information on the starting motor, see the respective starting motor service module : Nippondenso Reduction Starting Motors.

Problem 30 : With starting motor on, pinion engages ring gear, but engine does not crank.

Probable Cause :

1. Low battery :
   Charge battery.

2. Not enough brush pressure on commutator :
   Check brush spring tension. Check brushes and clean or replace them.

3. Excessive voltage drop in cables :
   Check cables and their connections.

4. Clutch section of pinion drive/overrunning clutch slips :
   Replace pinion drive/overrunning clutch.

NOTE: For more information on the starting motor, see the respective starting motor service module : Nippondenso Reduction Starting Motors.

Problem 31 : Starting motor continues to run after ignition switch has been released.

Probable Cause :

1. Defective ignition switch or solenoid :
   Replace ignition switch or solenoid.

Problem 32 : Pinion does not disengage after engines starts to run.

Probable Cause :

1. Solenoid return spring weak or broken :
   Replace solenoid return spring.

2. Shift lever is binding or broken :
   Find cause of binding. Replace the shift lever if broken.

3. Defective ignition switch :
   Replace ignition switch.

NOTE: For more information on the starting motor, see the respective starting motor service module : Nippondenso Reduction Starting Motors.

Problem 33 : Alternator does not charge.

Probable Cause :

1. Loose drive belt for alternator :
   Adjust the alternator drive belt.
   See Belt Adjustment in Testing And Adjusting.

2. Loose alternator drive pulley :
   Check the pulley for wear. If it is worn, install a new pulley. Tighten the pulley nut to the correct torque shown in Specifications.

3. Charging or ground return circuit or battery connections are defective :
   Inspect all cables and connections. Clean and tighten all connections. Replace defective parts.

4. Rotor field winding or regulator is defective :
   Replace the rotor or regulator.

NOTE: For more information on the alternator, see the respective alternator service module : Delco Remy CS-121 Series Alternators.

Problem 34 : Alternator charge rate is low or not regular.

Probable Cause :

1. Loose drive belt for alternator :
Adjust the alternator drive belt.
See Belt Adjustment in Testing And Adjusting.

2. Loose alternator drive pulley :
Check the pulley for wear. If it is worn, install a new pulley. Tighten the pulley nut to the correct torque shown in Specifications.

3. Charging or ground return circuit or battery connections defective :
Inspect all cables and connections. Clean and tighten all connections. Replace defective parts.

4. Regulator is defective :
Replace the regulator.

5. Rectifier is defective :
Replace the rectifier.

6. Brushes are worn or dirty :
Replace the brushes.

NOTE: For more information on the alternator, see the respective alternator service module : Delco Remy CS-121 Series Alternators.

Problem 35 : Alternator charges too much.

Probable Cause :

1. Alternator or regulator has loose connections :
Tighten all connections to alternator or regulator.

2. Regulator is defective :
Replace the regulator.

NOTE: For more information on the alternator, see the respective alternator service module : Delco Remy CS-121 Series Alternators.

Problem 36 : Alternator is noisy.

Probable Cause :

1. Drive belt for alternator is worn or defective :
Install a new drive belt for the alternator.

2. Loose alternator drive pulley :
Check the pulley for wear. If it is worn, install a new pulley. Tighten the pulley nut to the correct torque shown in Specifications.

3. Drive belt and drive pulley for alternator are not in alignment :
Make an adjustment to put the drive belt and drive pulley in correct alignment.

4. Alternator bearings are worn :
Replace the bearings in the alternator.

NOTE: For more information on the alternator, see the respective alternator service module : Delco Remy CS-121 Series Alternators.

Troubleshooting Problem LIst : Liquid Petroleum Fuel System

1. Engine will not start.

2. Engine runs, but loses power.

3. No fuel from converter to carburetor.

4. Converter leaks fuel into carburetor with too much primary pressure.

5. Converter leaks fuel into carburetor with normal primary pressure.

6. Converter is freezing during normal operation.

7. Fuelock is freezing during engine operation.

8. No fuel flow to converter.

NOTE : Other problems that have a relation with the engine can be found in the Gasoline Fuel System troubleshooting.

Troubleshooting Problems : Liquid Petroleum Fuel System

Problem 1 : Engine will not start.

Probable Cause :

1. Battery has low output :
Check condition of battery. Charge battery or make replacement as necessary.

2. Dirty fuel filter :
Clean or replace the fuel filter.

3. Starting motor solenoid has a defect :
Make reference to Problem 29 in Gasoline Fuel System troubleshooting.

4. Starting motor has a defect :
Make reference to Problem 28 in Gasoline Fuel System troubleshooting.

5. No fuel in LP tank :
Check fuel tank supply.

6. Weak or no spark to combustion chambers :
For correction, see Problem 2 in Gasoline Fuel System troubleshooting.

7. Wrong ignition timing :
Make adjustment to timing. See Ignition Timing Check And Adjustment in Testing And Adjusting.

8. Carburetor component parts have wear or have foreign deposit :
Make a replacement of the parts if necessary, or clean the part with brush and kerosene.

9. Over flow valve in tank closed (can happen soon after filling a tank which was low on fuel) :
Close fuel tank valve and open again slowly.

10. Fuel line between tank and filterlock or fuelock has damage (pinched) :
Replace fuel line.

11. Operation of the fuelock or vacuum switch not correct :
Make repair or replacement if necessary.

12. Operation of the converter not correct :
Make repair of replacement if necessary.

13. Quick disconnect coupling, at fuel tank, not fully engaged :
Check the coupling.

14. Fuel tank valve not open :
Open the valve.

15. Worn or damaged exhaust valves :
Replace the exhaust valve. make a diagnosis of the cause for the damaged valves.

Problem 2 : Engine runs, but loses power.

Probable Cause :

1. Engine backfires :
Check for oil spark plugs or bad resistors in plugs. Check ignition and power wires for breaks. Replace if defective.
Check ignition timing. Check for leaks in the head gasket.
See Ignition Timing Check And Adjustment in Testing And Adjusting.

2. Fuel system has a restriction :
Check the system. Clean the system if necessary.

3. Too much heat in the intake air :
Make sure intake air is being pulled in from outside the engine compartment.

4. Fuel system is in contact with too much heat that causes vaporization (vapor in the fuel system) :
Check the lift truck for components that are too close to the fuel system. Remove the problem that causes the heat.

5. Dirty fuel filter :
Clean or replace filter if necessary.

6. Fuel system has some freezing.
Coolant level too low and check for a restriction in the cooling system.

7. Engine is too hot :
Make reference to Problem 25 in Gasoline Fuel System troubleshooting.

8. Fuel air mixture too lean :
Make adjustment to carburetor.
See Carburetor Adjustments in Testing And Adjusting.

Problem 3 : No fuel from converter to carburetor.

Probable Cause :

1. Dirty fuel filter :
Clean or replace the filter if necessary.

2. Converter primary regulator spring is weak or has been removed :
Replace the spring.

3. Converter secondary valve seat not operating correctly (stuck) :
Repair the valve seat.

4. No carburetor vacuum to the converter and no manifold vacuum to the vacuum switch :
Check for vacuum leak between the carburetor and converter or the manifold and vacuum switch.

5. Carburetor adjustment not correct :
Make adjustment to carburetor.
See Carburetor Adjustments in Testing And Adjusting.

6. Converter primary or secondary diaphragm is worn:
Make replacement of parts as necessary.

7. Converter primary regulator valve not operating correctly (stuck) :
Repair the valve seat or replace if necessary.

8. Fuel flow restriction in the fuel line :
Check for bad bend, Partially closed (pinched) fuel lines.

Problem 4 : Converter leaks fuel into carburetor with too much primary pressure.

Probable Cause :

1. Primary valve seat is dirty or has damage :
Clean or replace the valve seat.

2. Primary valve lever has damage or is worn :
Replace the valve lever.

3. Pivot pin in primary valve lever is loose :
Replace the valve lever.

4. Secondary valve seat has damage (stuck open) :
Replace secondary valve seat.

Problem 5 : Converter leaks fuel in carburetor with normal primary pressure.

Probable Cause :

1. Secondary valve seat is dirty :
Clean or replace the valve seat.

2. Secondary spring has damage, or is removed :
Replace the spring.

3. Primary stays activated.
Check the primer spring.

Problem 6 : Converter is freezing during normal operation.

Probable Cause :

1. Low coolant level :
Fill radiator. If there is leakage, repair.

2. Coolant lines have restriction :
Repair or replace water hoses, lines or fittings if too small for adequate water flow.

3. Air in converter :
Remove air from the coolant outlet hose.

4. Water pump has a defect or drive belt loose :
Check drive belt. Repair or replace water pump.

5. Thermostat has a defect or is removed :
Install a new thermostat.
See Cooling System Tests in Testing And Adjusting.

6. Restriction in water passage of converter :
Clean out rust or deposits.

7. Secondary regulator diaphragm has damage :
Remove and make inspection.

8. Not enough antifreeze in coolant :
Add antifreeze as needed.

9. Internal fuel leak :
Make inspection, replace the component that leaks if necessary.

Problem 7 : Fuelock is freezing during engine operation.

Probable Cause :

1. Fuelock valve outlet opening has a restriction :
Clean or make replacement of the parts as necessary.

https://truckmanualshub.com/

Ignition System

Adhere to the following warnings when performing any tests or adjustments while the engine is running.

⚠ WARNING

Work carefully around an engine that is running. Engine parts that are hot, or parts that are moving, can cause personal injury.

⚠ WARNING

Exhaust fumes contain carbon monoxide (CO) which can cause personal injury or death. Start and operate the engine in a well ventilated area only. In an enclosed area, vent the exhaust to the outside.

If the engine will not start, do the steps for Ignition Component Checks. Check the starting and the fuel systems for correct operation. If these systems are correct, use the procedures given in Ignition System Test to check the ignition system.

Ignition Component Checks

Distributor Cap Inspection
(1) Distributor cap.

The procedures that follow are given as a guide. Use these procedures to find possible solutions for ignition problems.

Tools Needed	
Digital Multimeter or Equivalent	1

1. Inspect distributor cap (1). Look for breaks, cracks or dirt inside and on the outside. Clean the distributor cap inside and out.

Inspection of Distributor Rotor
(2) Distributor rotor.

NOTE : Current models do not have a resistor in the rotor and do not need to be checked for resistance.

2. Inspect the rotor (2) for breaks and cracks. Check the rotor blade and the spring for tension. Check the rotor for fit on the distributor shaft. Replace the rotor if the spring tensionor its fit on the distributor is not correct

For the correct resistance value of rotor, see Distributer in Specifications.

Spark Plug Wires Inspection

3. Inspect the spark plug wires and the ignition coil wire for wear, burnt and high voltage leaks. Check the resistance of the spark plug wires, with a Digital Multimeter.

For the correct resistance value, see Spark Plug And Spark Plug Wires in Specifications.

https://truckmanualshub.com/

NOTE : The Electrical System Analyzer can be used on the ohmmeter scale for the spark plug resistance test.

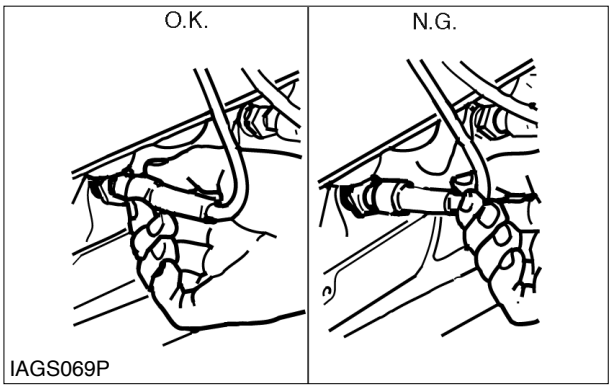

Spark Plug Inspection
(3) Spark plug.

4. During installation of the spark plug wires, make sure the wire terminals make good connections in the distributor cap and on the spark plugs. Inspect spark plug (3) insulator for cracks. Clean the spark plug of any oil or dirt before installation.

Spark Plug Gap Check

1. Clean the engine block in the area around the spark plugs.

2. Remove the spark plugs from the engine.

3. Clean any deposits of carbon from inside of the spark plugs. Make a replacement of the spark plug if too much carbon, or burnt electrode is present.

NOTE : Do not use a spark plug that has a defect.

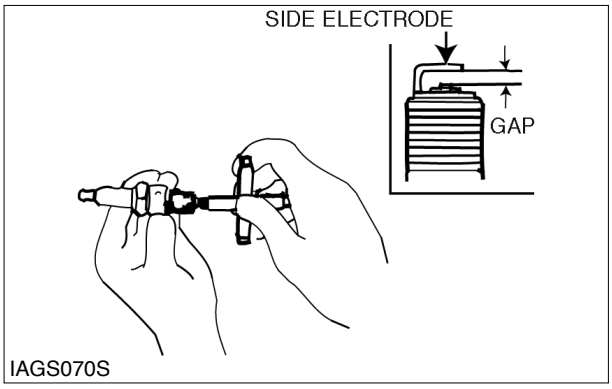

Spark Plug Gap Check

4. Check the spark plug gap. The correct gap for the spark plug are.

LP .....1.52mm (.060 in)

Make an adjustment to the gap as necessary.

5. Install the spark plug and tighten it to a torque of **30 N • m (22 lb • ft).**

https://truckmanualshub.com/

Ignition Timing Check and Adjust

1. The timing wire plug on the 1996 4.3liter engine must be unplugged and reconnected as shown before the engine can be timed.

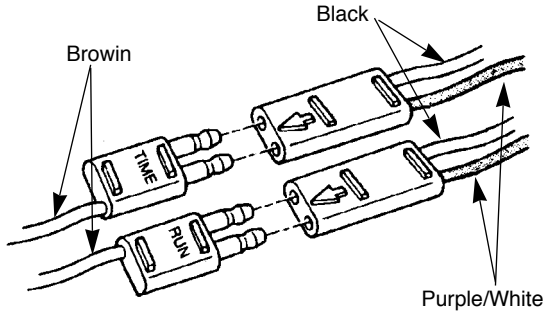

IAGS002S

Standard EST Timing Plug

NOTICE

When the BROWN lead from plug connected to distributor housing is in line with the PURPLE/WHITE (T) lead or with the label (TIME), the electronic spark advance is disabled and the initial spark timing can be checked and adjusted at this point if necessary.

2. Connect the timing light as per the following

a. Connect the inductive pick-up wire to the number #1 cylinder wire.

b. Connect the Red wire to battery positive +. Connect the Black wire to battery negative -.

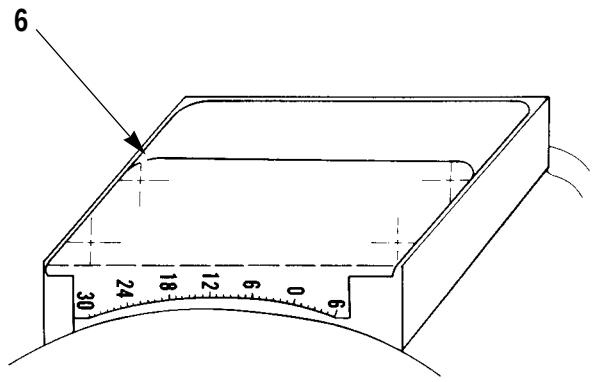

IAGS053S

Timing Plate In Stored Position
(6) Timing Plate.

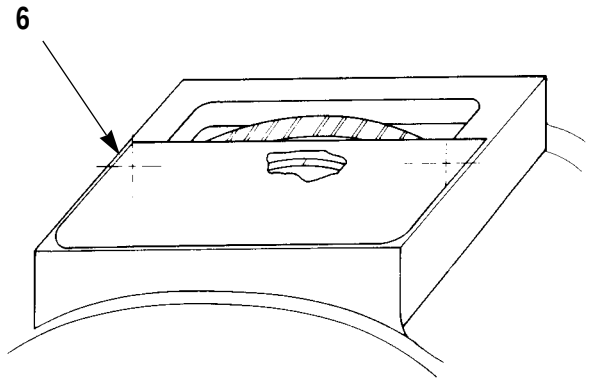

IAGS054S

Timing Plate Rotated 180˚
(6) Timing Plate.

3. Remove the timing plate (6) from the converter housing. The flywheel should have a single mark on it. Put a white chalk mark on it, so it can be seen more easily.

Rotate the timing plate (6) 180˚ and mount it on the converter housing again, using the existing mounting hardware. When plate (6) is mounted, the timing marks should be close to the flywheel as shown.

4. Start the engine and adjust the low idle speed to 700 rpm.

See RPM Check in Testing And Adjusting.

5. Put the timing light in position over the stationary timing marks.

6. As the timing light "flashes" (goes ON and OFF), look at the alignment of the stationary timing mark (s) with the flywheel timing marks (s).

7. The correct timing for the LP model truck is as follows

LP fuel engine @ 700 rpm.....4˚BTDC.

8. Make adjustments to the ignition timing as follows :

a. Loosen bolt that holds distributor to engine.

b. To make an increase (advance) to the ignition timing, turn the distributor clockwise a small amount. To make a decrease (retard) to the ignition timing, turn the distributor counterclockwise a small amount.

c. When the timing is correct, tighten the distributor mounting bolt securely to hold the distributor in place. Recheck the timing to make sure the distributor did not move.

9. Increase the engine speed to 2200 rpm and observe the change in the timing. If the timing does not change (advance) to correct amount, the operation of the electronic advance system is not correct in the distributor

a. The correct advance for the LP engine is 20˚ BTDC

10. When the correct timing adjustment is completed unplug the timing plug and reconnect it in it's correct position.

Delco Electronic Spark Timing (EST) Distributor

Description

The Delco EST ignition system consists of the distributor, ignition coil, wiring and spark plugs. The distributor contains a module, pickup coil and conventional cap and rotor. There are no points or condenser to adjust or change and no moving parts except for the distributor shaft and rotor. Spark advance and dwell are controlled by the distributor module. The distributor module and pickup coil are self-contained solid-state devices which are not repairable. If necessary, they may be replaced separately but must be serviced as a complete unit.

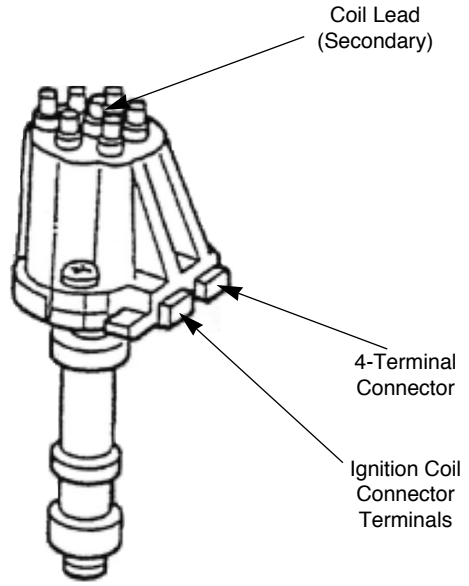

IAGS055S

Timing Plate In Stored Position
(6) Timing Plate.

https://truckmanualshub.com/

Delco Distributor Component Testing

NOTICE

In the test procedures that follow, check the ignition coil and each component of the distributor separately to identify defective or good components. These tests can be made with the distributor and coil mounted on the engine or on the repair bench.

Delco Distributor Module Testing

NOTICE

An approved module tester must be used in order to check the module. Use a Kent-Moore Module Tester or equivalent.

1. Remove module from distributor.
2. Connect red battery-cable clamp to positive (+) terminal and black battery-cable clamp to negative (-) terminal of a fully charged 12V battery.
3. Connect the adapter to yellow 2-way terminal connector, and the adapter to black 3-way connector of the tester (IAGS054S).
4. Connect black 4-way and 2-way connectors to module terminals. Connect yellow 2-way connector to yellow module terminals and engage locking tabs.
5. Connect module ground clip of the tester to the metal base of the module.
6. Hold the toggle switch in the 3-terminal test position. If a momentary indication of the red "Fail" light and then a steady indication of the green "Pass" light occurs, go on to the next step. If a steady indication of the red "Fail" light occurs, the module is defective and should be replaced.
7. Disconnect black 4-way connector from module. Disconnect yellow 2-way connector, rotate it 180 degrees so the lock and tab are opposite each other, and reconnect it to the module terminals (IAGS058S).
8. Hold the toggle switch in the 3-terminal test position. A momentary indication of the red "Fail" light and then a steady indication of the green "Pass" light mean the module is good. A steady indication of the red "Fail" light means the module is defective and should be replaced.

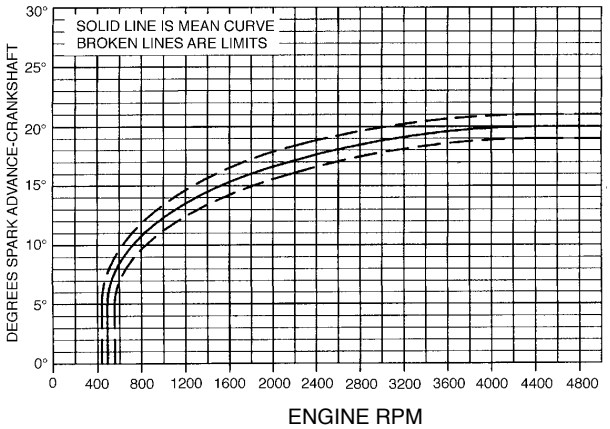

IAGS056S

Delco EST Distributor Spark Advance Curve (Stand-alone Mode)

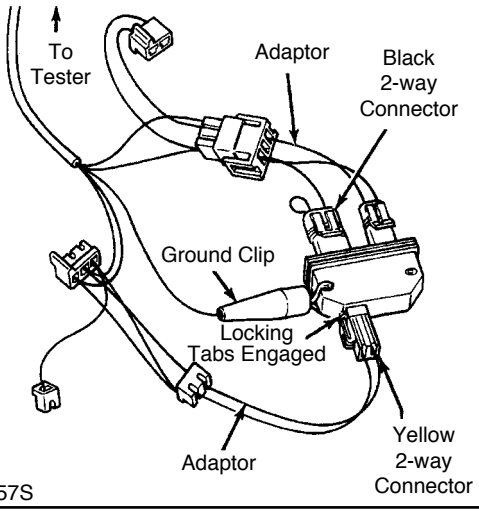

IAGS057S

Test 1 Tester Connections

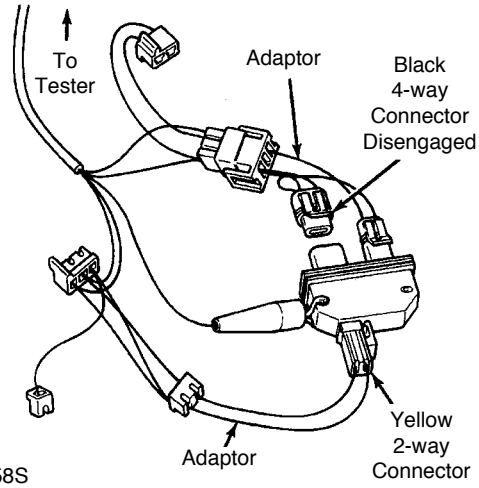

IAGS058S

Test 2 Tester Connections

https://truckmanualshub.com/

Pickup Coil Testing

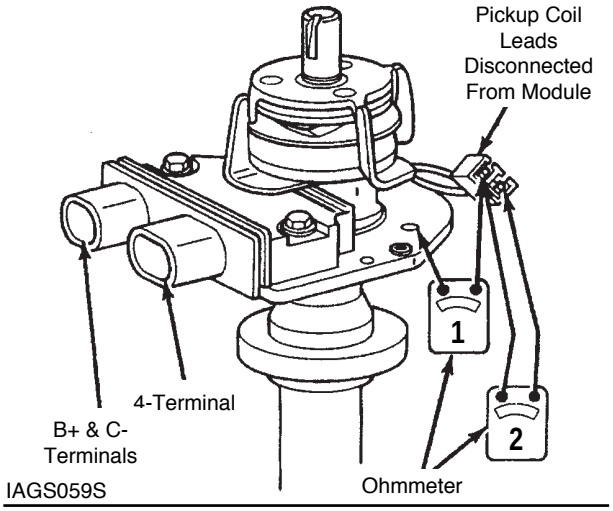

Testing Pickup Coil

1. Remove The distributor cap and rotor.
2. Disconnect the pickup coil leads from the module.
3. Connect an ohmmeter between the pickup coil lead and housing (test 1, IAGS059S).
   Reding should be infinite (no continuity).
4. Connect an ohmmeter to both pickup coil leads (test 2, IAGS059S). Reading should be a constant, unchanging value between 500-1500 ohms. Flex leads by hand at coil and connector to locate intermittent opens. Replace pickup coil if not within specifications.

Ignition Coil Testing

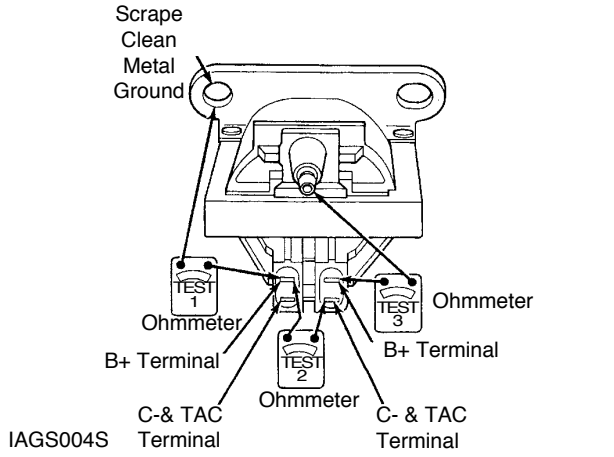

Testing Ignition Coil

1. Connect ohmmeter between "B+" or "C-" terminals and ground (coil-mounting bracket). On high scale, reading should be infinite (test 1, IAGS004S).
2. Connect ohmmeter between "B+" and "C-" terminals. On low scale, reading should be nearly zero (approximately 0.4 ohm) (test 2, IAGS004S).
3. Connect ohmmeter between "B+" or "C-" terminals and coil high-voltage tower. On high scale, reading should be approximately 8000 ohms. Reading should not be infinite(test 3, IAGS004S).

NOTICE

On tests 2 and 3, reading may vary slightly depending on coil temperature.

4. If reading is not within specification, replace coil.

https://truckmanualshub.com/

Engine RPM Check

Engine RPM Check

Tools Needed	
Electrical System Analyzer	1

NOTE : When testing distributorless ignition systems with an inductive pick-up, rpm reading must be divided by two.

1. Turn analyzer power switch "On".
2. Turn the analyzer selector switch to the "Lo" for low idle rpm, to "Hi" for high idle rpm.
3. Clip inductive pick-up onto any spark plug wire with the arrow pointing to the spark plug.
4. Start the engine and check low or high idle speed.

https://truckmanualshub.com/

Accelerator Linkage Adjustment (G35S & G40S)

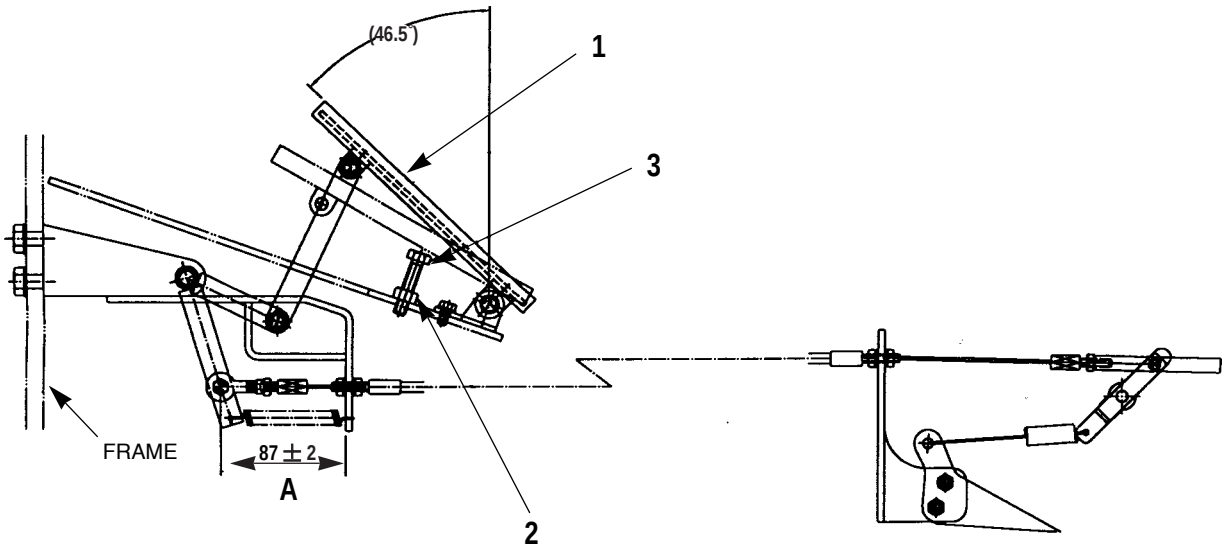

IAGS060S

Accelerator Linkage Adjustment
(1) Accelerator pedal. (2) Nut. (3) Bolt

To adjust the accelerator linkage, do the steps that follows :

1. With the engine OFF and the accelerator pedal (1) in the UP position with Dimension (A) 87mm (3.43 in), loosen nut (2).
2. Adjust throttle stop bolt (3) so that pedal (1) rests on the bolt (3) at FULL throttle.
3. Tighten nut (2) to hold the adjustment.

https://truckmanualshub.com/

Governor Adjustments

Velocity Governor

High Idle Speed Adjustment-Hoof Governor

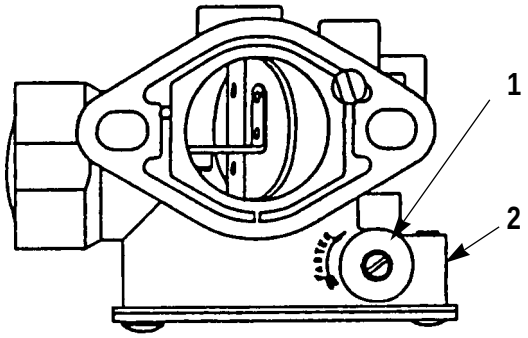

IAGS061S

Hoof Velocity Governor
(1) High idle adjustment screw.
(2) Sensitivity screw.

Tools Needed	
Electrical System Analyzer	1

1. Connect the Electrical System Analyzer as shown in Engine RPM Cheek in the Testing And Adjusting.
2. Run the engine until it is at normal temperature of operation.
3. Run the engine at high idle speed. Take note of the rpm indication on the analyzer.
4. The correct high idle is .....2600 ±50 rpm
5. If the high idle is not correct, do the procedure that follows :

a. Clockwise rotation of the main adjustment will increase the engine speed and counterclockwise will decrease the engine speed. Always end each adjustment with fininshed seal the governor using Hoof seal kit 200-940 if available or use Silicon sealer.

b. Clockwise adjustment of the sensitivity screw about 1/4 turn should remove any hunting or surging from the engine. Reset high idle once this has been completed. Always end each adjustment with a clockwise adjustment.

Liquid Petroleum Fuel System

Adhere to the following warnings when performing any tests or adjustments while the engine is running :

⚠ WARNING

Work carefully around an engine that is running. Engine parts that are hot, or part that are moving, can cause personal injury.

⚠ WARNING

Exhaust fumes contain carbon monoxide (CO) which can cause personal injury or death. Start and operate the engine in a well ventilated area only. In an enclosed area, vent the exhaust to the outside.

NOTE : The governor and accelerator linkage adjustments for the LP Fuel System are the same as those for the Gasoline Fuel System. For Governor and Accelerator Linkage Adjustments, see Gasoline Fuel System in the Testing And Adjusting.

Carburetor Adjustments

Low Idle Speed Adjustment

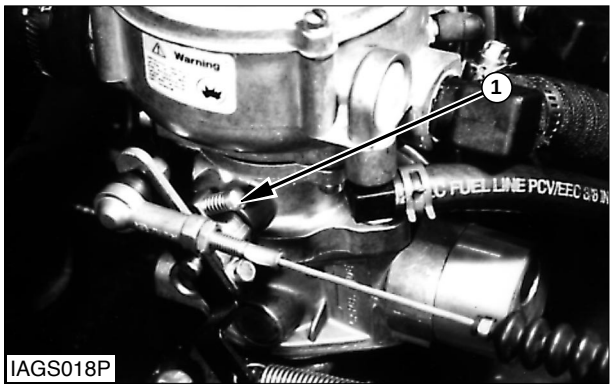

IAGS018P

Low Idle Speed Adjustment
(1) Idle speed screw.

https://truckmanualshub.com/

Tools Needed	
Electrical System Analyzer	1

1. Make sure the setting for ignition timing is correct.

   See Ignition Timing in the Testing And Adjusting.

2. Connect the Electrical System Analyzer as shown in Engine RPM Check in the Testing And Adjusting.

3. Start and run the engine until the engine reaches normal operating temperature.

4. Adjust screw (1) to get the correct low idle speed.

5. Check low idle speed. The correct low idle speed is :
   .....700 ±25 rpm

Idle Mixture Adjustment

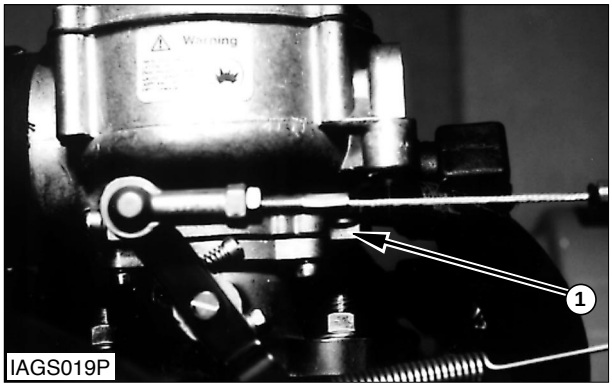

Mixture Adjustments
(2) Power mixture knob.

1. Connect the Electrical System Analyzer to read engine rpm.

   See Engine RPM Check in the Testing And Adjusting.

2. Check to be sure the ignition timing is set correctly.

   See Ignition Timing Check And Adjustment in the Testing And Adjusting.

3. Run the engine until normal operating temperature is reached.

4. Check to be sure the low idle speed is set correctly.

   See Low Idle Speed Adjustment in Testing And Adjusting.

5. Turn idle mixture screw clockwise or counterclockwise to obtain the maximum smooth rpm.

6. Check and readjust (if required) to low idle speed again.

   See Low Idle Speed Adjustment in Testing And Adjusting.

Power Mixture Adjustment

The method of adjustment depends upon the test equipment that is available. The power mixture can be adjusted using a CO meter, vacuum gauge or electrical system analyzer. The CO meter method is the preferred method for reduced emissions. The vacuum gauge method is the next most accurate method if CO measuring equipment is not available. The engine speed method is the easiest but least accurate method.

Engine Speed Method

Tools Needed	
Electrical System Analyzer	1

1. Connect the Electrical System Analyzer to read engine rpm.

   See Engine RPM Check in Testing And Adjusting.

2. Check to be sure the ignition timing is set correctly.

   See Ignition Timing Check And Adjustment in Testing And Adjusting.

3. Run the engine until normal operating temperature is reached.

4. Turn the power mixture knob (2) midway between lean (L) and rich (R).

5. Accelerate the engine to high idle rpm. Put a load on engine by holding the tilt cylinder against relief.

6. Turn the power mixture knob toward lean (L) until engine rpm drops.

7. Turn the power mixture knob toward rich (R) until the rpm recovers.

https://truckmanualshub.com/

8. The correct mixture will be that setting just before the engine rpm drops.

CO Meter Method

Tools Needed	
CO Meter or Exhaust Analyzer Testing Equipment	1

The power mixture adjustment must be done with the engine in a load condition. A CO meter or exhaust analyzer testing equipment must be used to measure the CO content in the exhaust fumes. To adjust the power mixture, turn knob (2) either toward the "L" (lean) or "R" (rich) fuel flow mixture for a 1.0 to 1.5 percent CO indication on the test equipment. Start the adjustment with knob (2) in the maximum "R" (rich) position.

NOTE : A lift truck, that does not operate with a heavy load all the time, can operate efficiently with a leaner power mixture setting (less than 1.0 to 1.5 percent CO). This is because the truck will not be in operation constantly in a load condition for a long period of time During heavy load and high speed conditions the lift truck requires a richer power mixture setting (1.0 to 1.5 percent CO).

Vacuum Gauge Method

Tools Needed	
Vacuum Gauge	1

1. Connect the vacuum gauge to the intake manifold. Start and run the engine until normal operating temperature is reached.
2. Run the engine at high idle. Turn power mixture knob (2) to the maximum "R" (rich) position.
3. Put a load on the engine by operating the hydraulic system.
4. Monitor the vacuum gauge reading. Turn power mixture adjustment knob (2) toward the "L" (lean) position, until the vacuum starts to drop. The correct mixture is the point at which the vacuum starts to drop.

Outer Fuel System Leak Check

⚠ WARNING

LP gas is highly flammable. To prevent personal injury, keep fire and flammable materials away from the lift truck when work is done on the fuel system.

Combustion gases from LP gas fuel system can be a danger. To find LP gas leaks, use soap and water solution or other foaming bubble solvent around fuel line connections and on other components that possibly cause LP gas leaks. The soap and water method is the best, use this method after repair completion on the fuel system or after the fuel system has been connected together again.

Fuel Filter Check

An indication of a dirty fuel filter that needs replacement is when frost (freezing vapor) is seen on the filter housing or the housing is very cold to touch. A dirty filter causes a fuel pressure drop across the filter, the fuel becomes a vapor and freezes. In this condition, engine power output decreases because of the lesser fuel flow. To replace the filter, see the Operation & Maintenance Manual for the respective model.

https://truckmanualshub.com/

Inner Fuel System Leak Check

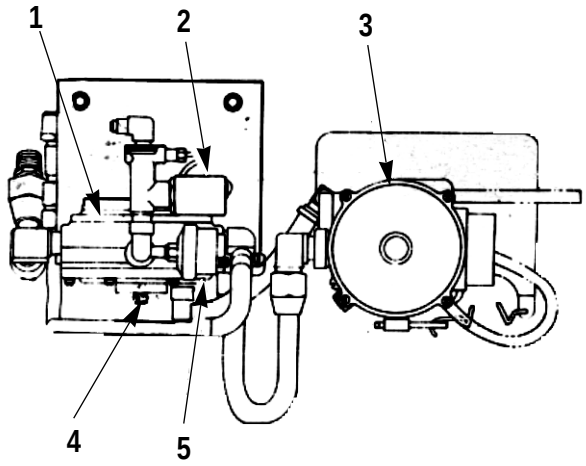

IAGS062S

Inner Fuel System Leakage Check (Electric Fuelock).
(1) Converter. (2) Fuelock. (3) Carburetor cover.
(4) Primer button. (5) Low pressure fuel switch.

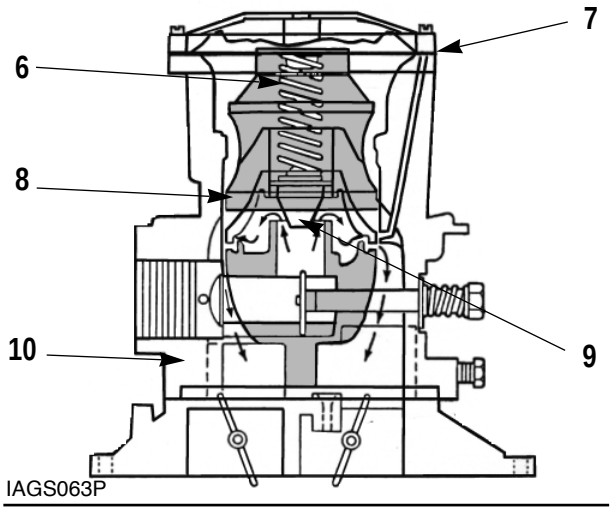

IAGS063P

Carburetor Components (Carburetor Shown Removed For Better Illustration)
(6) Spring. (7) Backup plate and diaphragm
(8) Air valve ring. (9) Air-gas valve assembly.
(10) Inner carburetor body.

1. Remove carburetor cover (3), Spring (6), backup plate and diaphragm (7), air valve ring (8) and air gas valve assembly (9).
2. Slowly turn the LP fuel ON at the tank.
3. Check the inlet fuel jet for fuel flow (leakage) in carburetor body (10).
4. If the operation of fuelock (2) and converter (1) are correct, there will be no fuel flow.
5. If there is fuel flow, the leakage problem must be found either in the fuelock or the converter.
6. Push in primer button (4) on the converter to open the converter fuel regulator valve.
7. A small amount of fuel will flow through the carburetor inlet fuel jet as the fuel from fuelock (2) flows out of the hose.
8. If the operation of fuelock (2) is correct, the fuel flow will stop as soon as the system is empty.
9. On vacuum fuelock models, remove fuelock vacuum hose (5) at the carburetor. Push in on converter primer button (4) and then make a light suction on the fuelock vacuum hose.
10. If the fuel flows immediately and stops when the suction is removed, then the converter operation is not correct.

Converter Pressure Test

To check the converter for leakage after repair, do the procedure that follows :

1. Put a plug in the fuel outlet openings.
2. Put compressed air in the fuel inlet openings, up to a maximum of 725 kPa (120 psi).
3. Wait ten minutes and then check the converter or fuelock for air leaks. Listen for air to come out around gaskets or seals.
4. If there are no air leaks, then the converter is good.
5. If air does come out, then the converter will have to be disassembled to find the problem.

Recommendation For LP Fuel Systems

In freezing temperature conditions run the engine at fast idle until the engine coolant temperature is between 10˚ to 16℃ (50˚ to 60℉). A low idle in cold temperature conditions can damage the engine because of poor circulation of the engine oil. Running the engine to move the lift truck short distances and then stopping the engine without the coolant being heated can cause the LP fuel to be trapped (cannot be released) in the converter. As this trapped fuel changes to a vapor with the engine stopped, this change causes too much pressure in the converter. The force from the pressure is put on the primary regulator valve against its seat. If this occurs often, the primary regulator valve in the vaporized area of the converter will be damaged.

https://truckmanualshub.com/

Cooling System

Adhere to the following warnings when performing any tests or adjustments while the engine is running :

⚠ WARNING

Work carefully around an engine that is running. Engine parts that are hot, or part that are moving, can cause personal injury.

⚠ WARNING

Exhaust fumes contain carbon monoxide (CO) which can cause personal injury or death. Start and operate the engine in a well ventilated area only. In an enclosed area, vent the exhaust to the outside.

This engine has a pressure type cooling system. A pressure type cooling system gives two advantages. The first advantage is that the cooling system can have safe operation at a temperature that is higher than the normal boiling (steam) point of water. The second advantage is that this type system prevents cavitation (the sudden making of low pressure bubbles in liquids by mechanical forces) in the water pump. With this type system, it is more difficult for an air or steam pocket to be made in the cooling system.

The cause for an engine getting too hot is generally because regular inspections of the cooling system were not made. Make a visual inspection of the cooling system before testing with testing equipment.

Cooling System Visual Inspection

⚠ WARNING

Do not loosen the filler cap or pressure cap on a hot engine. Steam or hot coolant can cause severe burns.

1. After the engine is cool, loosen the filler cap (on a radiator with a pressure cap, turn it to the first stop) to let pressure out of the cooling system. Then remove filler or pressure cap.
2. Check coolant level in the cooling system.
3. Look for leaks in the system.
4. Look for bent radiator fins. be sure that air flow through the radiator does not have a restriction.
5. Inspect the drive belts for the fan.
6. Check for damage to the fan blades.
7. Look for air or combustion gas in the cooling system.
8. Inspect the filler cap and the surface that seals the cap. This surface must be clean.
9. Look for a large amount of dirt in the radiator core and on the engine.
10. Check for loose or mission fan shrouds that cause poor flow of cooling air.

Cooling System Tests

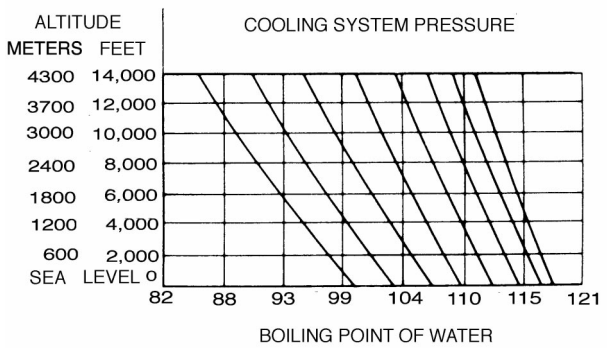

IAGS064S

Remember that temperature and pressure work together. When making a diagnosis of a cooling system problem, temperature and pressure must both be checked. Cooling system pressure will have an effect on cooling system temperatures. For an example, look at the chart to see the effect of pressure and height above sea level on the boiling (steam) point of water.

Pressure Cap Test

Tools Needed	
Cooling System Pressurizing Pump Group	1

https://truckmanualshub.com/

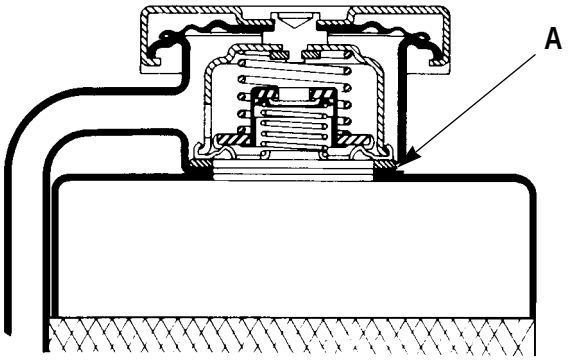

IAGS065S

Pressure Cap Diagram
(A) Sealing surface of cap and radiator.

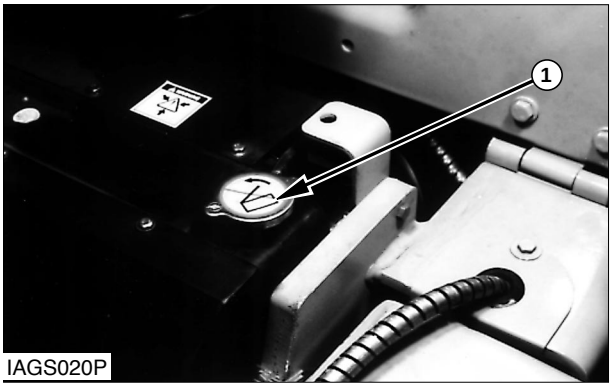

IAGS020P

Pressure Cap
(1) Pressure cap

One cause for a pressure loss in the cooling system can be a bad seal on the pressure cap of the system. Inspect the pressure cap carefully. Look for damage to the seal or the sealing surface. Any foreign material or deposits on the cap, seal or sealing surface must be removed.

To check the pressure cap opening pressure, do the following procedure.

⚠ WARNING

If the engine has been in operation and the coolant is hot, slowly loosen the pressure cap to the first stop and let the pressure out of the cooling system, then remove the pressure cap.

1. Remove pressure cap (1) from the radiator.

IAGS021P

Pressure Cap Test

2. Put the pressure cap on the Cooling System Pressurizing Pump Group.

3. Look at the gauge for the pressure that makes the pressure cap open. It must be as follows :

Cap 9Y1791 .....85 to 110 kPa (12 to 16 psi)

NOTE : Current Models have two radiator caps. The larger cap is to be used only for radiator fill. The smaller cap is connected to the recovery tank (coolant recovery tank).

4. If the pressure cap is bad, install a new pressure cap.

Cooling System Leak Check

To test the cooling system for leaks, use the following procedure :

Tools Needed	
Electrical System Analyzer	1

⚠ WARNING

If the engine has been in operation and the coolant is hot, slowly loosen the pressure cap to the first stop and let the pressure out of the cooling system, then remove the pressure cap.

1. Remove pressure cap (1) from the radiator.

2. Make sure the radiator is full (hot) or nearly full (cold) of coolant.

https://truckmanualshub.com/

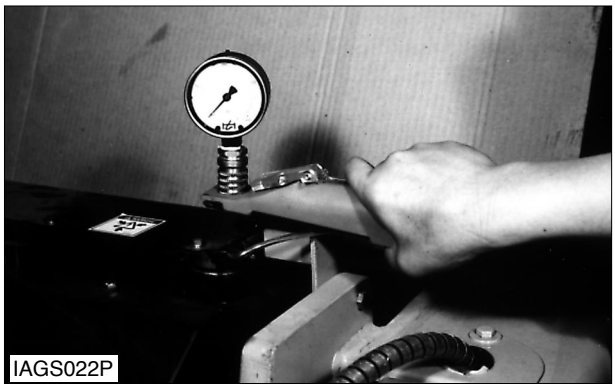

Cooling System Leak Check

3. Attach the Cooling System Pressurizing Pump Group to the radiator filler neck.

4 Pump the pressure to 20 kPa (3 psi) more than the rated pressure of the cap.

5. Check the radiator for outside leakage.

6. Check all connections and hoses of the cooling system for outside leakage.

7. If there is no outside leakage and the pressure reading on the gauge is still the same after 5 minutes, the radiator and cooling system do not have leakage. If the reading on the gauge goes down and there is no outside leakage, there is leakage on the inside of the cooling system. Make repairs as necessary.

Thermostat Test

To test the thermostat opening temperature, use the following procedure :

⚠ WARNING

The pan, water and thermostat will be very hot and can cause burns. Do not touch the pan, water or thermostat. Handle the components with an insulated device for protection.

---

1. Remove the thermostat from the engine.

2. Hang the thermostat in a pan of water. Put a thermometer in the water. Put the thermostat completely under water. Do not let the thermostat make contact with the pan.

3. Put heat to the pan of water. Make the water in the pan move around. This keeps all of the water at the same temperature.

4. The thermostat must start to open when the temperature is 80 to 80 to 84℃ (176 to 184℉). the thermostat must be fully open at 94℃ (202℉).

Cooling System Heat Problems

To check if there is a good reason for heat problems do the checks that follow :

1. The indications of a heat problem are as follows :

a. High coolant temperature indicator light is on or needle of coolant temperature gauge is in red range.

b. Coolant boils out (comes out because of too much heat) of the cooling system during operations.

c. Coolant boils out on the floor when the engine is stopped.

d. Coolant must be added at the end of each shift but Steps b and c are not present.

2. If indication in Step **1a** is only present. it is possible the problem is only a damaged gauge, light or sender. make a replacement of the defective part.

3. If indication in Step **1b** is present, do the procedure that follows :

a. Run the engine at medium idle (1200 rpm) for three minutes after high idle operation. This cools off the hottest parts of the engine before it is stopped.

b. Install a coolant recovery system on the truck, if not already equipped.

4. If indications in Step **1b**, **1c** or **1d** are present, but Step **1a** is not and the high temperature indicator light does work, the problem can be a damaged radiator cap seal or there can be a leak in the cooling system. Complete the procedure that follows :

a. Do the Pressure Cap Test, Cooling System Leak Check, Thermostat Test and Belt Adjustment in the Testing And Adjusting.

b. Clean the radiator with hot water (steam clean) at low pressure and use detergent or air according to the different types of debris that caused the radiator to be dirty (plugged).

c. Check the engine high idle setting.

See High Idle Speed Adjustment in the Testing And Adjusting.

NOTE : Another condition that can cause heat problems is the ignition timing. Retarded (late) timing causes the engine to send more heat to the cooling system. Advanced (early) timing causes the engine to send less heat to the cooling system.

Cooling System Recommendation

Coolant Information

NOTICE

DAEWOO recommends that the coolant mix contain 50% commercially available automotive antifreeze, or equivalent.

To prevent damage to your engine, never add coolant to an overheated engine. Allow the engine to cool first.

Dowtherm 209 full-fill coolant will lower the water pump cavitation temperature and coolant boiling point. These lowered temperatures will cause overheating at a lower ambient temperature than an ethylene glycol and water mix. If Dowtherm is used, follow the instructions provided and use only the inhibitor package recommended by the supplier.

If the lift truck is to be stored in, or shipped to, an area with freezing temperatures, the cooling system must be protected to the lowest expected outside (ambient) temperature.

The engine cooling system is protected with a commercially available automotive antifreeze, when shipped from the factory.

Check the specific gravity of the coolant solution frequently in cold weather to ensure adequate protection.

Clean the cooling system if it is contaminated, if the engine overheats or if foaming is observed in the radiator.

Coolant should be drained, system cleaned and new coolant added as recommended with the commercially available automotive antifreezes that is being used.

Filling at over 20 liters (5 U.S. gallons) per minute can cause air pockets in the cooling system.

After draining and refilling the cooling system, operate the engine with the radiator cap removed until the coolant reaches normal operating temperature and the coolant level stabilizes. Add coolant as necessary to fill the system to the proper level.

Operate with a thermostat in the cooling system all year-round. Cooling system problems can arise without a thermostat.

Coolant Water

Hard water, or water with high levels of calcium and magnesium ions, encourages the formation of insoluble chemical compounds by combining with cooling system additives such as silicates and phosphates.

The tendency of silicates and phosphates to precipitate out-of-solution increases with increasing water hardness. Hard water, or water with high levels of calcium and magnesium ions encourages the formation of insoluble chemicals, especially after a number of heating and cooling cycles.

DAEWOO prefers the use of distilled water or deionized water to reduce the potential and severity of chemical insolubility.

MINIMUM ACCEPTABLE WATER	
Water Content	**Limits gr/gal(ppm)**
Chlorides (Cl)	2.4 (40) maximum
Sulfates (SO_4)	5.9 (100) maximum
Total Hardness	10 (170) maximum
Total Solids	20 (340) maximum
pH	5.5 to 9.0

ppm = parts per million

Using water that meets the minimum acceptable water requirement may not prevent drop-out of these chemical compounds totally, but should minimize the rate to acceptable levels.

Antifreeze

NOTICE

DAEWOO recommends that the coolant mix contain 50% commercially available automotive antifreeze, or equivalent, and acceptable water to maintain an adequate water pump cavitation temperature for efficient water pump performance.

Premix coolant solution to provide protection to the lowest expected outside (ambient) temperature. Pure undiluted antifreeze will freeze at -23℃ (-10℉).

Only use a greater concentration (above 50%) of commercially available automotive antifreeze as needed for anticipated outside (ambient) temperatures. Do not exceed the recommendations, provided with the commercially available automotive antifreeze, regarding the coolant mixture of antifreeze to water.

https://truckmanualshub.com/

Most commercial antifreezes are formulated for gasoline engine applications and will, therefore, have high silicate content.

Make proper antifreeze additions.

Adding pure antifreeze as a makeup solution for cooling system top-up is an unacceptable practice. It increases the concentration of antifreeze in the cooling system which increases the concentration of dissolved solids and undissolved chemical inhibitors in the cooling system. Add antifreeze mixed with water to the same freeze protection as your cooling system.

Lubrication System

Adhere to the following warnings when performing any tests or adjustments while the engine is running :

⚠ WARNING

Work carefully around an engine that is running. Engine parts that are hot, or part that are moving, can cause personal injury.

⚠ WARNING

Exhaust fumes contain carbon monoxide (CO) which can cause personal injury or death. Start and operate the engine in a well ventilated area only. In an enclosed area, vent the exhaust to the outside.

Lubrication System Problems

One of the problems in the list that follows will generally be an indication of a problem in the lubrication system for the engine.

- Too much oil consumption.
- Low oil pressure.
- High oil pressure.
- Too much component wear.

Too Much Oil Consumption

- Engine outside oil leakage

Check for leakage at the seals at each end of the crankshaft. Look for leakage at the oil pan gasket and all lubrication system connections. Check to see if oil comes out of the crankcase breather. This can be caused by combustion gas leakage around the pistons. A dirty crankcase breather will cause high pressure in the crankcase, and this will cause gasket and seal leakage.

- Combustion area oil leakage

https://truckmanualshub.com/

Oil leakage into the combustion area if the cylinders can be the cause of blue smoke. There are three possible ways for oil leakage into the combustion area of the cylinders :

1. Oil leakage between worn valve guides and valve stems.
2. Worn or damaged piston rings, or dirty oil return holes.
3. Compression ring and /or intermediate ring not installed correctly.

NOTE : Too much oil consumption can also be the result if oil with the wrong viscosity is used. Oil with a thin viscosity can be caused by fuel leakage into the crankcase, or by increased engine temperature.

Low Oil Pressure

If the oil light comes on, indicating the pressure is low, check for the causes that follow :

1. Low oil level in the crankcase.
2. Defect in the oil pressure indicator light or oil pressure sensor unit.
3. Restriction to oil pump screen.
4. Leakage at the oil line connections.
5. Worn connecting rod or main bearings. Worn gears in the oil pump.
6. Oil pressure relief valve worn or stuck in the OPEN position.
7. Oil filter bypass valve stuck open. Oil filter is restricted. Replace oil filter.

High Oil Pressure

Oil pressure will be high if the oil pressure relief valve in the oil pump cannot move from the closed position.

Too Much Component Wear

When some components of the engine show bearing wear in a short time, the cause can be a restriction in an oil passage. A broken oil passage can also be the cause.

If an oil pressure check is done and the oil pressure is correct, but a components is worn because it does not get enough lubrication, look at the passage for oil supply to that component. A restriction in a supply passage will not let enough lubrication get to a component and this will cause early wear.

Oil Pressure Check

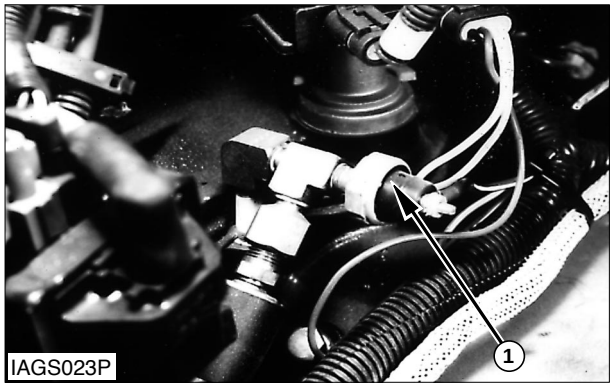

Oil Pressure Check
(1) Oil pressure sender.

Tools Needed	
Electrical System Analyzer	1
Fittings Group	1
Pressure Gauge	1

1. With the engine OFF, make sure the oil level is correct. Connect the analyzer to the engine as shown in Engine RPM Check in the Testing And Adjusting.

⚠ WARNING

Before the oil pressure sender is removed, the engine must be stopped. Make sure oil pressure is released to prevent personal injury.

2. Remove oil pressure sender (1) or switch. Install the pressure gauge in oil filter adapter (2).
3. Start the engine and allow it to warm up to normal operating temperature.
4. Run the engine 1000 rpm. Read the pressure on the gauge.
5. The oil pressure must be approximately 345 kPa (50 psi) at 1000 rpm. There is no adjustment to the oil pressure relief valve. If the pressure is less than 41.4 kPa (6psi).

For the possible cause see Lubrication System Problems in Troubleshooting.

NOTE : A lower pressure indication, 50 kPa (7 psi), is normal at low idle speed.

https://truckmanualshub.com/

Air Inlet And Exhaust System

Adhere to the following warnings when performing any tests or adjustments while the engine is running :

⚠ WARNING

Work carefully around an engine that is running. Engine parts that are hot, or part that are moving, can cause personal injury.

⚠ WARNING

Exhaust fumes contain carbon monoxide (CO) which can cause personal injury or death. Start and operate the engine in a well ventilated area only. In an enclosed area, vent the exhaust to the outside.

Restriction Of Air Inlet And Exhaust

There will be a reduction of engine power and efficiency of the engine if there is a restriction in the air inlet or exhaust system.

Air flow through the air cleaner must not have a restriction of more than 381 mm (15 in) of water difference at 2200 rpm in pressure.

Back pressure from the exhaust (pressure difference measurement between exhaust outlet elbow and atmosphere) must not be more than 864 mm (34 in) of water.

Cylinder Leakage Test

An engine that runs rough can have a leak at the valves, or a valve that need adjustment. Run the engine at the speed that gives rough running. To find the cylinder that has low compression or does not have good fuel ignition, use special insulated pliers to remove the spark plug wire from each cylinder, one at a time. This will cause that cylinder to stop firing. Do this for each cylinder until a removed spark plug wire makes no difference in the engines rough running. This could be the cylinder with low compression or a bad spark plug or spark plug wire. Be sure to reinstall each plug wire before the next spark plug wire is removed.

The cylinder leakage test is a way of finding the smallest of cylinder leaks. Air is applied to the cylinder at a controlled volume and pressure measures the percentage of air leakage. It is normal for an engine to leak a small amount of air past the rings into the crankcase. However, any leak through an intake valve, an exhaust valve, head gasket, head, or block and excessive leakage past the piston rings indicates trouble. To perform a cylinder leakage test use the procedure that follows :

Tools Needed	
Cylinder Leakage Tester	1

1. Run the engine at the speed that gives rough running until it is at normal temperature for operation. Stop the engine.

2. Clean the area around the spark plugs. Put identification on the spark plug wires. Remove the wires and the spark plugs.

3. Remove the crankcase oil filler cap and the radiator filler cap.

4. Set the cylinder leakage tester by adjusting the air supply to the correct pressure at the input air connection.

5. Adjust the regulator on the pressure tester to give zero (0) leakage reading on the gauge.

6.Select the proper adapter and install adapter in the spark plug hole of cylinder number 1.

7. Rotate crankshaft by hand until the cylinder being tested is at top center (TC) on the compression stroke. In this position the valves of the cylinder will be against their seats.

8. Connect the tester hose to the adapter hose and note the percentage of leakage on the tester gauge.

9. Listen for escaping air through the carburetor, the exhaust or tail pipe, and the crankcase filler location. Check for bubbles in the radiator.

10. Disconnect the tester hose from the adaptor and rotate the engine for inspection of the next cylinder.

11. Remove the adapter and install it in the next cylinder to be tested.

12. Continue this procedure until all cylinders have been tested. Record the readings from each cylinder so that they may be analyzed to determine the condition of the engine.

https://truckmanualshub.com/

13. Gauge readings should be about the same for all cylinders. Readings of 20 Percent leakage or more indicate excessive leakage and loss in compression.

14. Air escaping through the carburetor indicates a leaking intake valve. Air escaping through the exhaust pipe indicates a leaking exhaust valve.

15. High leakage on cylinders next to each other can be caused by a leaking head gasket or a crack in the cylinder head.

16. Air escaping through the radiator indicates cylinder is leaking into the water jacket.

17. Air escaping through the crankcase filler indicates a crankcase leak, the result of worn piston rings.

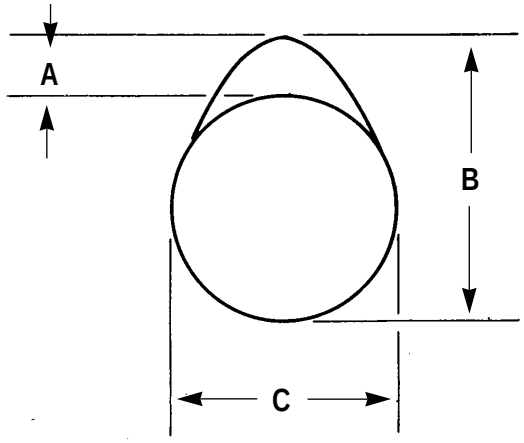

IAGS036S

Camshaft Lobe Measurement
(A) Lobe lift. (B) Lobe height. (C) Base circle.

To find lobe lift (A) of the camshaft, use the following procedure :

1. Measure lobe height (B) of one exhaust and one intake lobe.

2. Measure base circle (C) of one exhaust and one intake lobe.

3. Subtract base circle (C) dimension (Step 2) from lobe height (B) dimension (Step 1). The difference is actual lobe lift (A).

4. The specified (new) lobe lift (A) is :

Exhaust lob .....7.252 mm (.2855 in)
Intake lob .....7.018 mm (.2763 in)

5. The Maximum permissible difference between actual lobe lift (Step 3) and specified lobe lift (Step 4) is ± 0.05mm (.002 in).

https://truckmanualshub.com/

Cylinder Head Check

Tools Needed	
Cylinder Head Stand	1

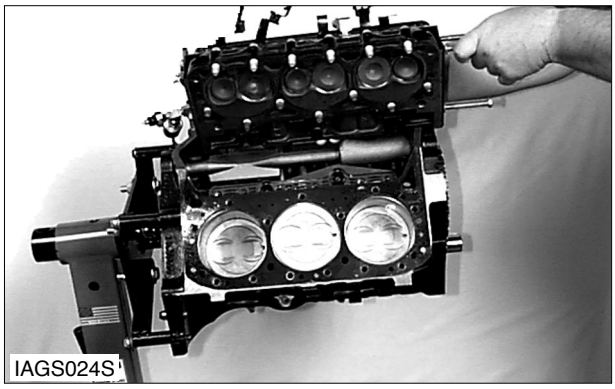

Cylinder Head Check
(A) Cylinder Head Stand.

1. After removal of the cylinder head place it on a cylinder head stand.
2. Clean the cylinder head thoroughly. Make sure the contact surface of the cylinder head and cylinder block are clean, smooth and flat.

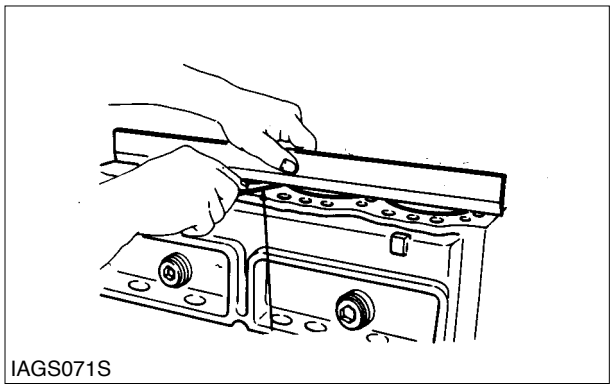

End to End Check
(1) Straight edge. (2) Feeler gauge.

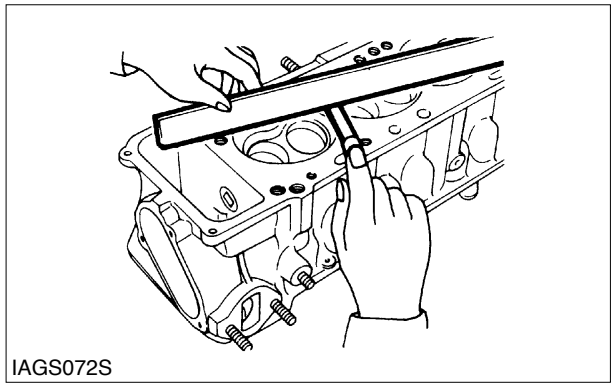

Side To Side Check
(1) Straight edge. (2) Feeler gauge.

3. To check the cylinder head for being flat, use a straight edge (1) and a feeler gauge (2).
4. Check the cylinder head from end to end and side to side.
5. The cylinder head must not be out of flat more than 0.05mm (.002 in) per any six inches of length of width. The maximum permissible out of flat for the total length or width must be 0.10 mm (.004 in). The out of flat condition must be gradual from end to end and side to side. Low or high places must not be more than 0.05mm (.002 in).

https://truckmanualshub.com/

Flywheel And Flywheel Housing

Tools Needed	
Dial Indicator Test Group	1

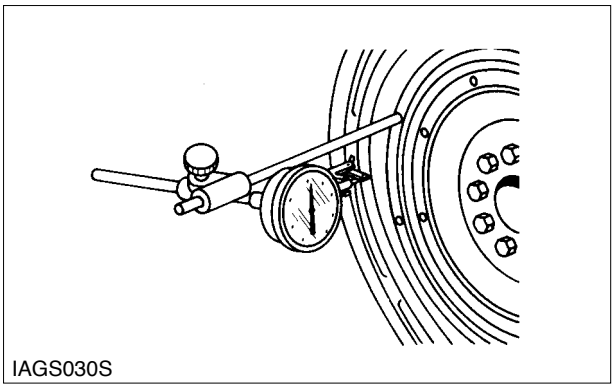
IAGS030S

Flywheel Housing Face Runout Tooling Set Up

NOTE : Remove the spark plugs so the flywheel will turn freely.

If any method other than given here is used, always remember main bearing clearance must be removed to get correct measurements.

1. Fasten the dial indicator to the crankshaft flange so the anvil of the indicator will touch the face of the flywheel housing.
2. Force the crankshaft to the rear before the indication is taken at each point.

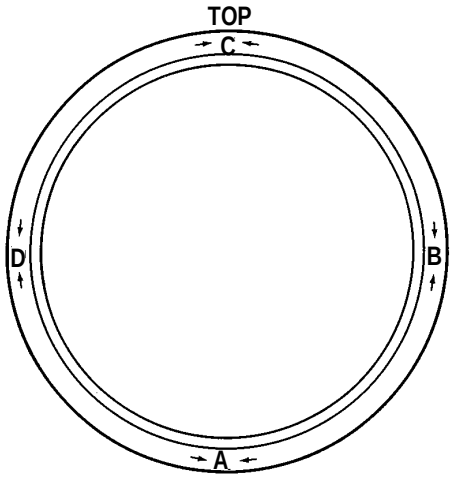

IAGS066S

Flywheel Housing Face Runout Check
(A) Bottom. (B) Right side. (C) Top. (D) Left side.

3. With dial indicator set at 0.0mm (.000 in) at location (A), turn the crankshaft and read the indicator at locations (B), (C) and (D).
4. The difference between lower and higher measurements taken at all four points must not be more than 0.20 mm (.008 in), which is the maximum permissible face runout (axial eccentricity) of the flywheel housing.

https://truckmanualshub.com/

Flywheel Checks

Face Runout Check

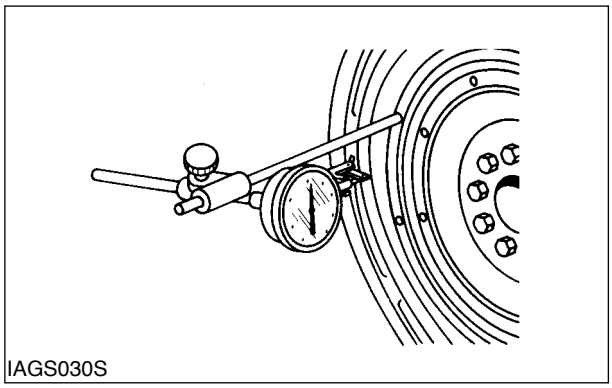

Flywheel Face Runout Check

1. Install the dial indicator as shown. Force the crankshaft to the rear to remove the main bearing clearance before the measurement is taken at each point.
2. Set the dial indicator at 0.0mm (0.00 in)
3. Turn the flywheel and read the indicator every 90˚.
4. The difference between the lower and higher measurements taken at all four points must not be more than 0.19mm (.0075), which is the maximum permissible runout of the flywheel.

Outside Diameter Check

NOTE : The flywheel housing may have to be removed to make this runout check.

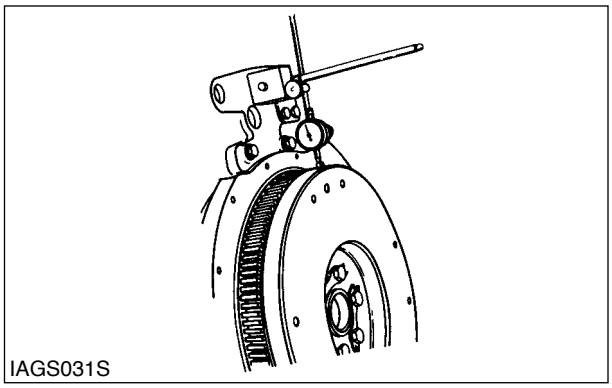

Flywheel Outside Diameter Runout Check

1. Install the dial indicator at the top dead center of the flywheel as shown. Mount the dial indicator to the flywheel housing or the engine block.
2. Set the dial indicator at 0.0mm (0.00un).
3. Turn the flywheel and read the indicator every 90˚.
4. The difference between the lower and higher measurements taken at all four points must not be more than 0.10mm (.0040), which is the maximum permissible runout of the flywhelel.

https://truckmanualshub.com/

Electrical System

Most of the electrical system components can be tested on the engine. The wiring insulation must be in good condition. The wire and cable connections must be clean and tight and the battery fully charged. If the on engine test shows a defective component, the component must be removed for more tests.

Adhere to the following warnings when performing any tests or adjustments while the engine is running :

⚠ WARNING

Work carefully around an engine that is running. Engine parts that are hot, or part that are moving, can cause personal injury.

⚠ WARNING

Exhaust fumes contain carbon monoxide (CO) which can cause personal injury or death. Start and operate the engine in a well ventilated area only. In an enclosed area, vent the exhaust to the outside.

Battery

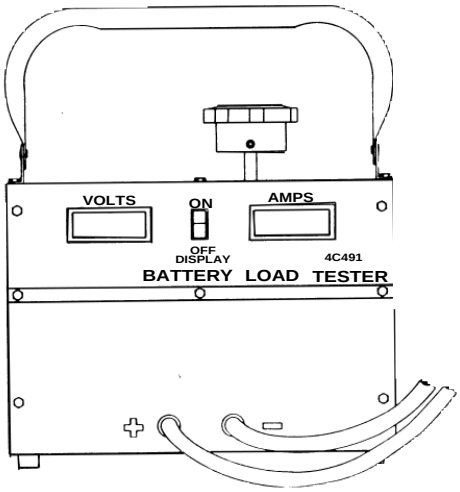

IAGS067S

battery Load Tester

Tools Needed	
Battery Load Test	1

The battery Load Tester is a portable unit in a metal case for use under field conditions and high temperatures. It can be used to load test all 6, 8 and 12V batteries. This tester has two heavy-duty load cables that can easily be fastened to the battery terminals. A load adjustment knob on the top permits the current to be adjusted to a maximum of 1000 amperes. The tester is cooled by and internal fan that automatically activates when a load is applied.

The tester has a built in LCD digital voltmeter and amperage meter. The digital voltmeter accurately measures the battery voltage at the battery through tracer wired buried inside the load cables. The digital amperage meter accurately displays the current being drawn from the battery under test.

https://truckmanualshub.com/

⚠ WARNING

Never disconnect any charging unit circuit or battery circuit cable from the battery when the charging unit is operated. A spark can cause an explosion from the flammable vapor mixture of hydrogen and oxygen that is released from the electrolyte through the battery outlets. Injury to personnel can be the result.

The battery circuit is an electrical load on the charging unit. The load is variable because of the condition of the charge in the battery. Damage to the charging unit will result, if the connections. (either positive or negative) between the battery and charging unit are broken while the charging unit is charging. This is because the battery load is lost and there is an increase in charging voltage. High voltage will damage, not only the charging unit but also, the regulator and other electrical components.

Use the Battery Load Tester to load test a battery that does not hold a charge when in use.

Starting Motor

For detailed testing and adjusting information, see the Starting Motor Coverage chart for the correct Service Module.

STARTING MOTOR COVERAGE		
Starting Motor Part Number	Manufacturer/ Series	Service Module Form Number
A232158	Reduction	

https://truckmanualshub.com/

On Machine Starting Motor Diagnosis Procedure

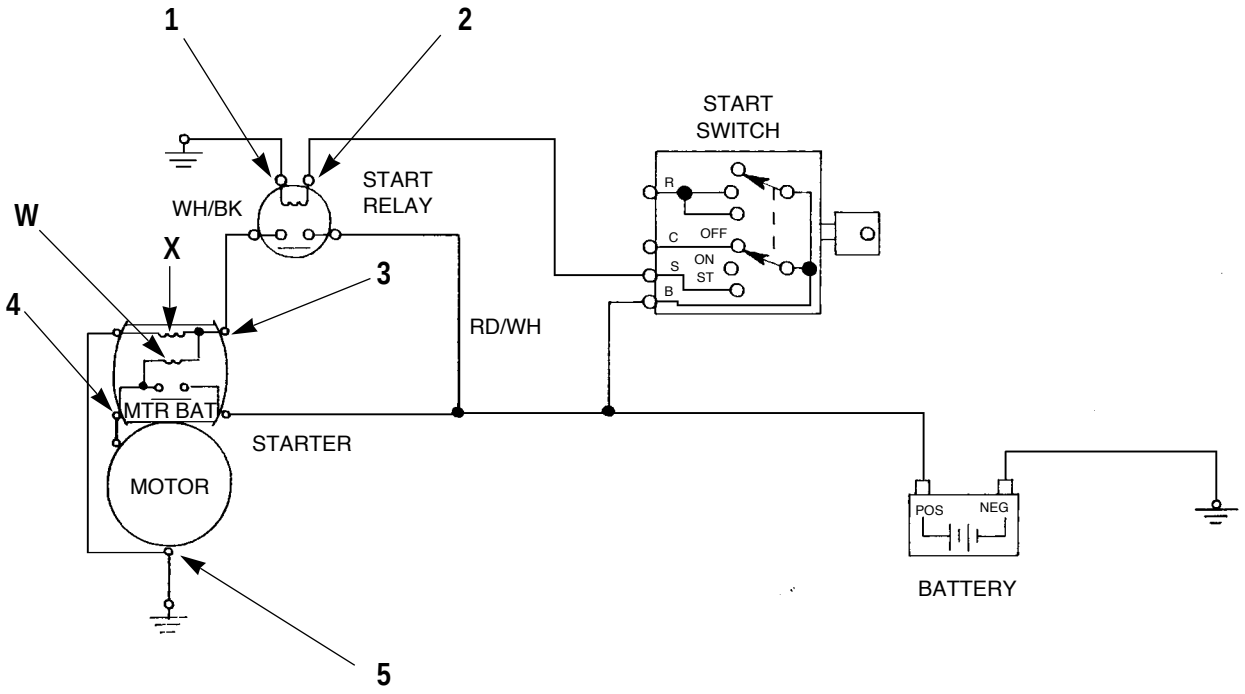

IAGS068S

Typical 12 Volt Starting Circuit
(1) Test point. (2) Test point. (3) Test Point. (4) Test Point. (5) Test Point. (X) Hold-in coil. (W) Pull-in coil

The following simplified procedure is intended to help the serviceman determine if a starting motor needs to be removed and replaced or repaired. It is not intended to cover all possible problems and conditions, but to serve only as a guide. The most common 12 volt circuit is shown and discussed.

General Information

All starting systems are made up of four elements. they are the ignition switch, start relay, the starting motor solenoid and starting motor.

Start switches are relatively low current devices. They are rated to switch approximately 5 to 20 amps. Because the coil of a start relay [between test point (1) and (2)] draws about 1 amp, the start switch can easily turn on the start relay and have long lift.

The switch contacts of a typical start relay are rated to switch 30 amps. Because the solenoid requires 5 to 20 amps, the start relay can easily switch this load.

The starting motor solenoid has two functions :

1. Engages the pinion with the flywheel.
2. Is a high current switch rated about 1000 amps that actually turns on the starting motor.

The starting motor solenoid has two coils. Pull-in coil (W) draws about 40 amps and hold-in coil (X) requires about 5 amp. The instant the start relay closes, both coils (W) and (X) receive power. Battery voltage is applied to the high end of both coils, at test point (3) which is the start (S) terminal. The low end of hold-in coil (X) is permanently grounded to the ground post or motor housing of the starting motor. Grounding for the low end, test point (4), of pull-in coil (W) is momentary, and takes place through the DC resistance of the starting motor. As soon as magnetic force builds in both coils, the pinion moves toward the flywheel ring gear. The pinion will stop short of engagement of the flywheel ring gear. Only then will the solenoid contacts close to power the starting motor. This temporarily removes the ground from pull-in coil (W), and puts battery voltage on both ends of it while the starting motor cranks. During this period, the pull-in coil is out of the circuit. Cranking continues until power to the solenoid is broken by releasing the ignition switch.

The result of these switches and relays is to permit a 5 amp dash-mounted switch to turn on a 500 to 1000 amp motor used to crank an engine.

Battery voltage (power) available during cranking varies according to the temperature of the batteries. the following chart is a guide as to what to expect from a normal system.

TYPICAL SYSTEM VOLTAGE DURING CRANKING AT VARIOUS AMBIENT TEMPERATURES	
Temperature	**12V System**
-23 to -7℃ (-10 to 20℉)	5 to 8 Volts
-7 to 10℃ (20 to 50℉)	6 to 9 Volts
10 to -27℃ (50 to 80℉)	7 to 11 Volts

The next chart shows maximum acceptable voltage loss in the high current battery circuit feeding the starting motor. These values are maximums for machines of approximately 2000 SMH and up. Newer machines would be less than those shown.

MAXIMUM ACCEPTABLE SYSTEM VOLTAGE DROPS DURING CRANKING	
Circuit	12V System
Battery (-) post to starting motor (-) terminal	0.7 Volts
Battery (+) post to solenoid (+) terminal	0.5 Volts
Solenoid Bat terminal to solenoid Mtr terminal	0.4 Volts

Voltages greater than those shown are most often caused by loose and/or corroded connections or defective switch contacts.

Diagnosis Procedure

Tools Needed	
Digital Multimeter or Equivalent	1
DC Clamp-On Ammeter or Equivalent	1

NOTICE

Do not operate the starting motor for more than 30 seconds at a time. After 30 seconds, the cranking must be stopped for two minutes to allow the starting motor to cool. This will prevent damage to the starting motor due to excessive heat buildup.

If the starting motor cranks real slow or does not crank at all, do the following procedure :

1. Measure battery voltage at the battery posts with the multimeter while cranking or attempting to crank the engine. Make sure to measure the battery posts. Do not measure the cable post clamps.

2. Is battery voltage equal to or greater than shown in Figure 1?

a. If the battery voltage is correct, go to Step 3.

b. If the battery voltage is too low, Charge or replace the battery.

NOTE : A low battery can be caused by battery condition or a shorted starting motor.

3. Measure current draw on the (+) battery cable between the battery and the starting motor solenoid with the clamp-on ammeter. The maximum current draw allowed is 350 Amp. At temperatures below 27 ℃ (80 ℉), the voltage will be less and the current draw will be higher. If current draw is too much, the starting motor has a problem and must be removed for repair or replacement.

NOTE : If voltage at the battery post is within approximately 2 volts of the lowest value in the applicable temperature range of Figure 1 and if the large starting motor cables get hot, then the starting motor has a problem and the Ammeter test is not needed.

4. Measure starting motor voltage from test point (4) to (5) with the multimeter while cranking or attempting to crank the engine.

5. Is voltage equal to or greater than shown in Figure 1 ?

a. If the starting motor voltage is correct, the battery and starting motor cables down to the motor are within specifications. Go to Step 8.

b. If the starting motor voltage is low, the voltage drop between the battery and the starting motor is too great. Go to Step 6.

6. Measure the voltage drops in the cranking circuits with the multimeter. Compare the results with maximum voltage drops allowed in Figure 2.

7. Are all the voltages within specifications ?

a. If the voltage drops are correct, go to Step 8, to check the engine.

b. If the voltage drops air too high, repair and/or replace the faulty electrical component.

8. Rotate the crankshaft by hand to make sure it is not locked up. Check oil viscosity and any external loads that would affect engine rotation.

9. Is the engine locked up or hard to turn?

a. If it is, repair the engine as required.

10. Dose the starting motor crank ?

a. If it does crank, remove the starting motor for repair and/or replacement.

b. If it does not crank, check for blocked engagement of the pinion and flywheel ring gear.

NOTE : Blocked engagement and open solenoid contacts will give the same electrical stmptoms.

Start Relay Tests

1. Put the multimeter on the 200 ohm scale.

2. Put the multimeter lead to the 85 and 86 terminals.

3. The indication on the meter must be 82 ± 5 ohms. If the indication is not correct, the start relay must be replacde.

4. Put the multimeter leads to the 30 and 87 terminals.

5. The indication must be “OL”(Over Load). If the indication is not correct, the start relay must be replaced.

6. Connect WH wire to 86 and BK wire to 85 terminal with the ignition switch to start position. Put the meter lead to 30 and 87 terminal.

7. The indication must be Zero ohm. If the indication is not correct the start relay must be replaced.

Alternators

For complete testing and adjusting information, see the Alternator Coverage chart for the correct Service Module.

ALTERNATOR COVERAGE	
Alternator Part Number	**Manufacturer/ Series**
8C5510	Delco Remy/CS-121

https://truckmanualshub.com/

SB2111E00
Feg. 1998

Disassembly & Assembly

Gasoline Engine
GM Vortec V6 (4.3 Liter)

https://truckmanualshub.com/

Important Safety Information

Most accidents involving product operation, maintenance and repair are caused by failure to observe basic safety rules or precautions. An accident can often be avoided by recognizing potentially hazardous situations before an accident occurs. A person must be alert to potential hazards. This person should also have the necessary training, skills and tools to perform these functions properly.

Improper operation, lubrication, maintenance or repair of this product can be dangerous and could result in injury or death.

Do not operate or perform any lubrication, maintenance or repair on this product, until you have read and understood the operation, lubrication, maintenance and repair information.

Safety precautions and warnings are provided in this manual and on the product. If these hazard warnings are not heeded, bodily injury or death could occur to you or other persons.

The hazards are identified by the "Safety Alert Symbol" and followed by a "Signal Word" such as "WARNING" as shown below.

⚠ WARNING

The meaning of this safety alert symbol is as follows :

Attention! Become Alert! Your Safety is Involved.

The Message that appears under the warning, explaining the hazard, can be either written or pictorially presented.

Operations that may cause product damage are identified by NOTICE labels on the product and in this publication.

DAEWOO cannot anticipate every possible circumstance that might involve a potential hazard. The warnings in this publication and on the product are therefore not all inclusive. If a tool, procedure, work method or operating technique not specifically recommended by DAEWOO is used, you must satisfy yourself that it is safe for you and others. You should also ensure that the product will not be damaged or made unsafe by the operation, lubrication, maintenance or repair procedures you choose.

The information, specifications, and illustrations in this publication are on the basis of information available at the time it was written. The specifications, torques, pressures, measurements, adjustments, illustrations, and other items can change at any time. These changes can affect the service given to the product.

Obtain the complete and most current information before starting any job. DAEWOO dealers have the most current information available.

https://truckmanualshub.com/

https://truckmanualshub.com/

Index

General Information

Engine Assembly 6
Engine Characteristics 5

Fastener Tightening 6

General Description 5
General Repair Instruction 5

GM 4.3 Liter V6 Gasoline Engine

Air Cleaner Housing Assembly 9
Alternator 12

Balance Shaft 40

Camshaft 38
Camshaft Bearings 39
Coil 22
Crankshaft 47
Crankshaft Pulley 20
Crankshaft Rear Oil Seal 44
Crankshaft Sprocket 41
Cylinder Heads 30

Distributor 23

Engine 10
Engine Flywheel 22
Exhaust Manifold 27

Fan 11
Fan Belt 11
Flywheel Housing 23
Flywheel Ring Gear 23
Front Cover 36

Governor 16

High Mounted Fan Bracket 20

Intake Manifold 26

LP Fuel Shut-Off Switch 17
LP Gas Carburetor 14
LP Gas Converter 14
LP Gas Fuelock 13
Oil Pan 33
Oil Pressure Alarm Sender 17
Oil Pump 35

Pistons & Connecting Rods 41

Rocker Arms & Push Rod 28

Starter Motor 12
Starter Relay 13

Timing Chain 37
Torsional Damper 21

Valve Covers 28
Valve Lifters 29
Valves 32

Water Pump 18
Water Temperature Regulator 19

https://truckmanualshub.com/

https://truckmanualshub.com/

General Information

General Repair Instructions

1. The use of proper tools and special tools where specified, is important to efficient and reliable service operation.
2. Use genuine Daewoo parts.
3. Used cotter pins, gaskets, O-rings, oil seals, lock washers and self lock nuts should be discarded and new ones should be prepared for installation as normal function of the parts can not be maintained if these parts are reused.
4. To facilitate proper and smooth reassembly operation, keep disassembled parts neatly in groups. Keeping fixing bolts and nuts separate is very important as they vary in hardness and design depending on position of installation.
5. Clean the parts before inspection or reassembly. Also clean oil ports, etc. using compressed air to make certain they are free from restrictions.
6. Lubricate rotating and sliding faces of the parts with oil or grease before installation.
7. When necessary, use a sealer on gaskets to prevent leakage.
8. Carefully observe all specifications for bolt and nut torques.
9. When service operation is completed,k make a final check to be sure service has been done properly.

General Description

Model D1146 is 6-cylinder, 4-cycle, in-line, vertical type engine. The D1146 is water-cooled and use Toroidal combustion system.

Engine Characteristics

The engine operates according to the Toroidal combustion system developed by Daewoo Heavy Industrial Co. of Korea and AVL Co. of Austria.

The main design features of this system are the combustion chamber arranged in the center of the piston and the swirling passage in the cylinder head.

Due to the swirling passage, the air entering the cylinder through the helical port designed specially during intake stroke is imparted a strong rotary motion in the combustion chamber and the complicated turbulence motion created by the swirl produced during compression stroke and strong squish flow makes the fuel be mixed more sufficiently with air.

During power stroke the fuel injected from a multi-orifice nozzle is mixed sufficiently with air for complete combustion, so that the improvement of performance is achieved.

Engines with the Toroidal combustion system are characterized by their quiet running, high flexibility and very low specific fuel and oil consumption.

Fastener Tightening

Balance Shaft Driven Gear Bolt
.....20 N•m (15 lb•ft) (Plus 35 Degrees)
Camshaft Retainer Bolt.....12 N•m (106 lb•in)
Camshaft Sprocket Bolts .....28 N•m (21 lb•ft)
Coolant Sensor .....20 N•m (15 lb•ft)
Connecting Rod Nut
.....27 N•m (20 lb•ft) (Plus 70 Degrees)
Crankshaft Balancer Bolt.....100 N•m (74 lb•ft)
Crankshaft Bearing Cap Bolt .....105 N•m (77 lb•ft)
Crankshaft Position Sensor Bolt .....9 N•m (80 lb•in)
Crankshaft Rear Oil Seal Housing
Nut and Bolt .....15 N•m (11 lb•ft)
Crankshaft Rear Oil Seal Housing Stud
.....4 N•m (35 lb•in)
Cylinder Head Bolt
First Pass .....30 N•m (22 lb•ft)
Second Pass Torque Angle all Bolts in Sequence:
Short Length Bolt.....55 Degrees
Medium Length Bolt .....65 Degrees
Long Length Bolt .....75 Degrees
Distributor Clamp Bolt.....25 N•m (18 lb•ft)
EGR Valve Bolt
First Pass.....10 N•m (89 lb•in)
Final Pass.....25 N•m (18 lb•ft)
EGR Valve Pipe Bracket Bolt .....25 N•m (18 lb•ft)
EGR Valve Inlet Pipe Nut .....35 N•m (26 lb•ft)
Engine Block Drain Plug.....20 N•m (15 lb•ft)
Engine Block Oil Gallery Plug Left Rear
.....20 N•m (15 lb•ft)
Engine Block Oil Gallery Plug Right Rear
.....25 N•m (18 lb•ft)
Engine Block Oil Gallery Plug Left Side Rear
.....20 N•m (15 lb•ft)
Engine Front Cover Bolt .....12 N•m (106 lb•in)
Exhaust Manifold Stud and Bolt
First Pass.....15 N•m (11 lb•ft)
Final Pass.....30 N•m (22 lb•ft)
Engine Flywheel Bolt .....100 N•m (74 lb•ft)
Front Lift Bracket Stud.....40 N•m (30 lb•ft)
Ignition Coil Bolt .....11 N•m (97 lb•in)
Intake Manifold Bolts
First Pass.....3 N•m (27 lb•in)
Second Pass .....12 N•m (106 lb•in)
Final Pass.....15 N•m (11 lb•ft)

Knock Sensor .....20 N•m (15 lb•ft)
Oil Filter Bypass Valve Bolt .....27 N•m (20 lb•ft)
Oil Level Indicator Tube Bolt.....12 N•m (106 lb•in)
OII Pan Nuts .....23 N•m (17 lb•ft)
Bolts.....25 N•m (18 lb•ft)
Studs in Engine Block .....25 N•m (18 lb•ft)
Oil Pan Drain Plug .....25 N•m (18 lb•ft)
Oil Pump Bolt.....90 N•m (66 lb•ft)
OII Pump Cover Bolt .....12 N•m (106 lb•in)
Oxygen Sensor Wire Support Bracket Nut
.....11 N•m (97 lb•in)
Spark Plugs
Cylinder Head (New) .....30 N•m (22 lb•ft)
Cylinder Head (All Subsequent Installation)
.....20 N•m (15 lb¶Uft)
Spark Plug Wire Support .....12 N•m (106 lb•in)
Valve Lifter Guide Retainer Bolt .....16 N•m (12 lb•ft)
Valve Rocker Arm Cover Bolts.....12 N•m (106 lb•in)
Water Outlet Bolt .....25 N•m (18 lb•ft)
Water Pump Bolt.....41 N•m (30 lb•ft)

Engine Assembly

General

Type .....90 Degree V6
Displacement.....4.3L (262 CID)
RPO (VIN Code) .....L35 (W), LF6 (X)
Bore .....101.6 mm (4.00 in)
Stroke .....88.39 mm (3.480 in)
Compression Ratio.....9.2:1
Firing Order 1-6-5-4-3-2

Lubrication System

Oil Capacity
Without Filter Change.....3.75 Liters (4 Qts.)
With Filter Change Add ....0.398 Liters (0.42 Qts.)
Oil Pressure (Minimum Hot)
.....41.4 kPa (6.0 psi) at 1,000 engine rpm
.....124.1 kPa (18.0 psi) at 2,000 engine rpm
.....165.5 kPa (24.0 psi) at 4,000 engine rpm
OII Filter System .....Full Flow
OII Pump Type.....Gear Driven

Cylinder Bore

Diameter....101.618-101.643 mm (4.0007-4.0017 in)
Out-of Round.....0.0508 m (.002 in) MAX.
Taper .....0.0254 mm (.001 in) MAX

Piston

Piston Bore Clearance
.....0.06096 mm (.0024 in) MAX.

Piston Rings

Piston Compression Ring
Groove Clearance .....0.010668 mm (.0042 in)
Gap.....0.889 mm (.035 in) MAX.
Piston Oil Ring
Groove Clearance .....0.2032 mm (.008 in) MAX.
Gap.....1.651 mm (.065 in)

Oil Pan

Engine Block Clearance
Tolerance.....0.254 mm (.010 in) MAX.

Piston Pin
Diameter.....23.545-23.548 mm (.927-.926 in)
Clearance in Piston.....0.0254 mm (.001 in) MAX.
Fit In Connecting Rod
.....0.02032-0.04064 mm (.0008-.0016 in) Interference

Exhaust Manifold
Surface Flatness .....0.254 mm (.010 in) MAX.

Intake Manifold
Surface Flatness .....0.254 mm (.010 in) MAX.

Cylinder Head
Surface Flatness .....0.1016 mm (.004 in) MAX.

Crankshaft
Crankshaft Journal
Diameter #1
.....62.199-62.217 mm (2.4488-2.4495 in)
Diameter 2, #3
.....62.192-62.215 mm (2.4485-2.4494 in)
Diameter #4
.....62.180-62.202 mm (2.4480-2.4489 in)
Taper .....0.0254 mm (.001 in.) MAX.
Out-of Round.....0.025 mm (.0010 in.) MAX.
Crankshaft Bearing Clearance
Bearing #1
.....0.0254-0.0381 mm (.0010-.0015 in)
Bearing #2, #3
.....0.0254-0.0635 mm (.0010-.0025 in)
Bearing #4
.....0.0635-0.0889 mm (.0025-.0035 in)
Crankshaft End Play
.....0.0508-0.2032 mm (.002-.008 in)

Connecting Rod
Connecting Rod Journal
Diameter....57.117-57.142 mm (2.2487-2.2497 in)
Taper .....0.0254 mm (.001 in) MAX.
Out-of-Round.....0.0254 mm (.001 in) MAX.
Rod Bearing Clearance
.....0.0254-0.0762 mm (.0010-.0030 in)
Rod Side Clearance
.....0.1524-0.4318 mm (.006-.017 in)

Camshaft
Journal Diameter
47.440-47.490 mm (1.8677-1.8697 in)
End Play.....0.0254-0.2286 mm (.001-0.009 in)
Lobe Lift.....±0.05 mm (.002 in)
Intake.....7.018 mm (0.2763 in)
Exhaust .....7.252 mm (0.2855 in)

Balance Shaft
Front Bearing Journal Diameter
.....55.985-55.001 mm (2.1648-2.1654 in)
Rear Bearing Journal Diameter
.....38.084-38.100 mm (1.4994-1.500 in)
Rear Bearing Journal Clearance
.....0.0254-0.09144 mm (.001-.0036 in)

Valve System
Valve Lifter.....Hydraulic Roller
Valve Rocker Arm Ratio.....1.50:1
Valve Lash.....Net Lash No Adjustment
Face Angle.....45 degree
Seat Angle .....46 degree
Seat Runout.....0.0508 mm (.002 in) MAX.
Seat Width Intake
.....1.016-1.651 mm (.040-.065 in)
Exhaust.....1.651-2.489 mm (.065-.098 in)
Stem Clearance
Intake
.....High Limit Production + 0.0257 mm (.001 in)
Exhaust
.....High Limit Production + 0.0508 mm (2.03 in)
Valve Spring Free Length.....52 mm (2.03 in)
Pressure
Closed
.....338-374 N at 43 mm (76-84 lb. at 1.70 in)
Open
...832-903 N at 32 mm (187-203 lb. at 1.27 in)
Installed Height
.....42.92-43.43 mm (1.690-1.710 in)
Valve Lift
Intake.....10.51 mm (.414 in)
Exhaust .....10.87 mm (.428 in)

https://truckmanualshub.com/

General tightening torque for bolts, nuts and taperlock studs

The following charts give the standard toque values for bolts, nuts and taperlock studs of SAE Grade 5 or better quality. Exceptions are given in other sections of the Service Manual where needed.

	thread size	standard torque	
	inches	lb.ft.	N•m*
Use these torques for bolts and nuts with standard threads (conversions are approximate). 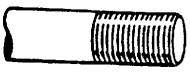 standard thread	1/4	9 ± 3	12 ± 4
	5/16	18 ± 5	25 ± 7
	3/8	32 ± 5	45 ± 7
	7/16	50 ± 10	70 ± 15
	1/2	75 ± 20	100 ± 15
	9/16	110 ± 15	150 ± 20
	5/8	150 ± 20	200 ± 25
	3/4	265 ± 35	360 ± 50
	7/8	420 ± 60	570 ± 80
	1	640 ± 80	875 ± 100
	1-1/8	800 ± 100	1100 ± 150
	1-1/4	1000 ± 120	1350 ± 175
	1-3/8	1200 ± 150	1600 ± 200
	1-1/2	1500 ± 200	2000 ± 275
Use these torques for bolts and nuts on hydraulic valve bodies.	5/16	13 ± 2	20 ± 3
	3/8	24 ± 2	35 ± 3
	7/16	39 ± 2	50 ± 3
	1/2	60 ± 3	80 ± 4
	5/8	118 ± 4	160 ± 6
Use these torques for studs with taperlock threads. taperlock stud	1/4	5 ± 2	7 ± 3
	5/16	10 ± 3	15 ± 5
	3/8	20 ± 3	30 ± 5
	7/16	30 ± 5	40 ± 10
	1/2	40 ± 5	55 ± 10
	9/16	60 ± 10	80 ± 15
	5/8	75 ± 10	100 ± 15
	3/4	110 ± 15	150 ± 20
	7/8	170 ± 20	230 ± 30
	1	260 ± 30	350 ± 40
	1-1/8	320 ± 30	400 ± 40
	1-1/4	400 ± 40	550 ± 50
	1-3/8	480 ± 40	650 ± 50
	1-1/2	550 ± 50	750 ± 70

*1 newton meter (N.m) is approximately the same as 0.1 mkg. B80625X1

https://truckmanualshub.com/

GM 4.3 Liter V6 Gasoline Engine

NOTE: The following information is provided for trained repair personnel as an aid in disassembly and assembly of this engine. The order was chosen as a matter of convenience. The photo's were taken to visually represent the detail being illustrated and may not be representative of the actual view the repair person will observe.

Air Cleaner Housing Assembly

Remove Air Cleaner Housing Assembly A31999-02

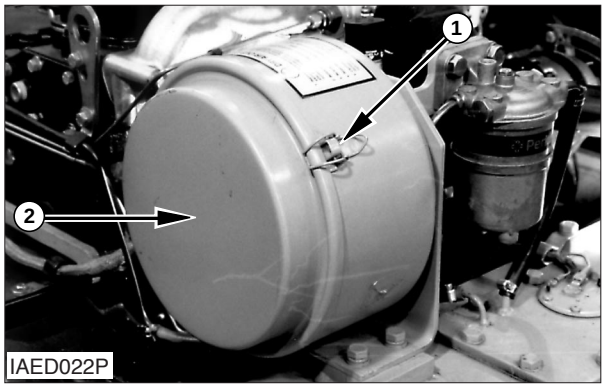

1. Remove Clips (2) and cover assembly (1).

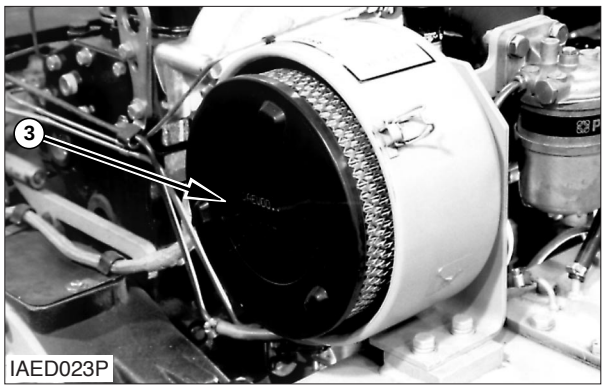

2. Remove the outer element (3) from the housing.

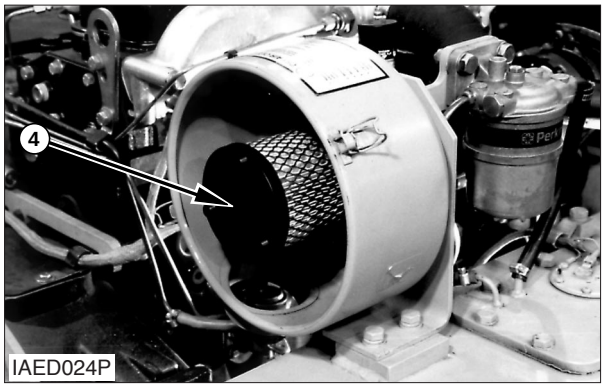

3. Remove inner element (4).

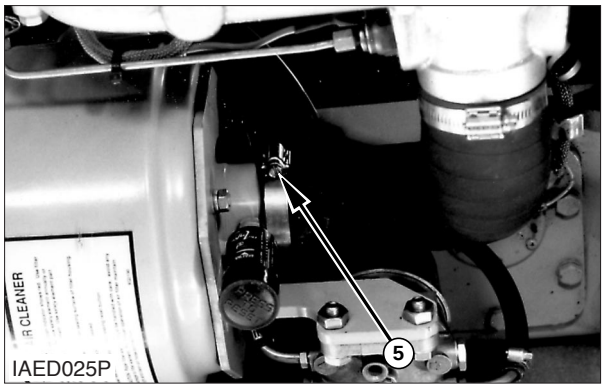

4. Loosen hose clamps (5) and pull hose off of the air cleaner housing.

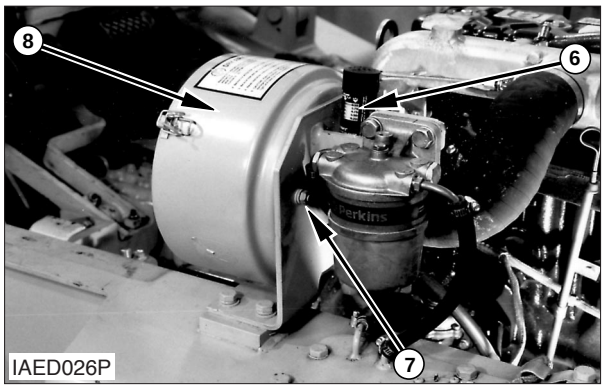

5. Remove pressure indicator (6). Remove three nuts (7) that hold the air cleaner housing.

6. Remove air cleaner housing (8) from the support assembly.

https://truckmanualshub.com/

Install Air Cleaner Housing Assembly A31999-03

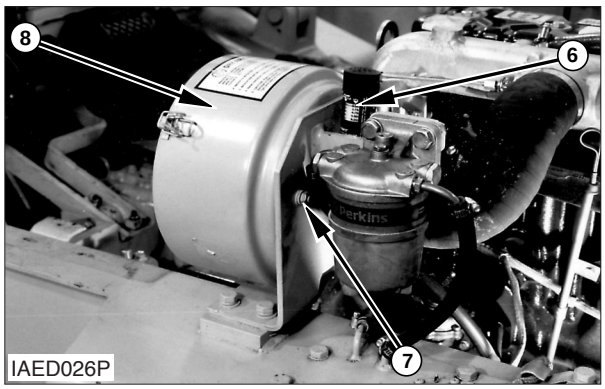

1. Put air cleaner housing (8) in position and install the three nuts (7) that hold it. Install pressure indicator (6).

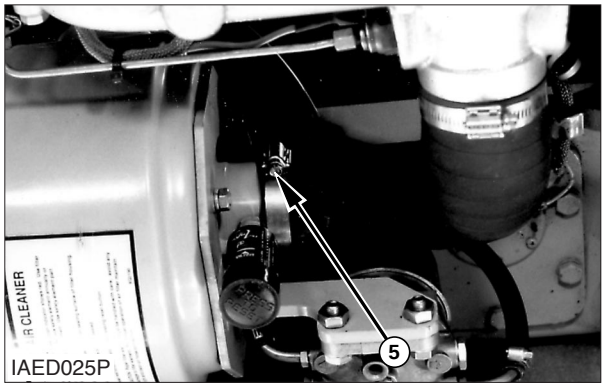

2. Push hose on to the housing and tighten clamp (5).

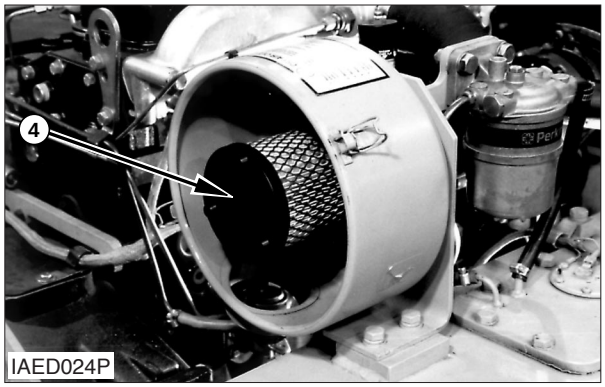

3. Install inner filter element (4).

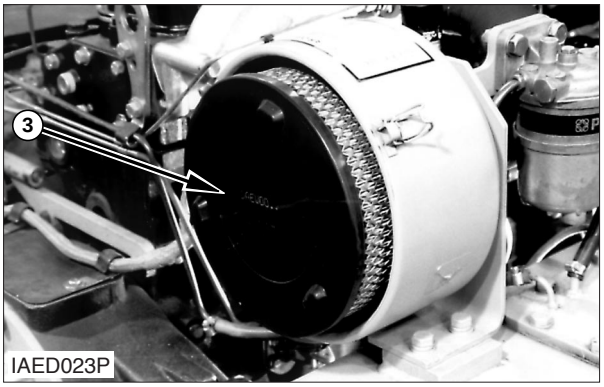

4. Install outer filter element (3) in the housing.

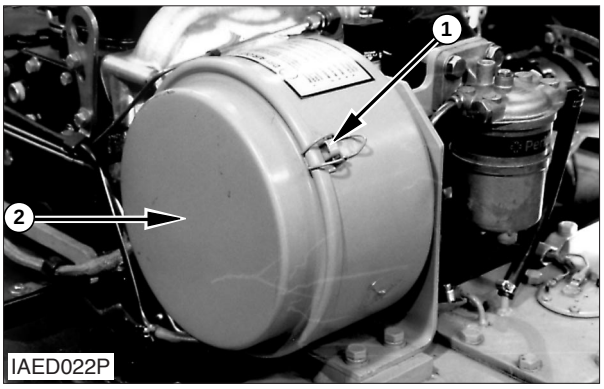

5. Install cover assembly (2) and tighten clips (1).

Engine

Remove & Install Engine A10999-01

1. Disconnect the battery.
2. Drain coolant & drain engine oil.
3. Unplug main engine wiring harness connector from chassis harness.
4. Disconnect: Hoses, linkage, fuel lines, exhaust pipe, motor mounts and transmission, then remove engine.

NOTE: For the Installation of the engine, reverse the removal steps.

https://truckmanualshub.com/

Fan

Remove & Install Fan A51342-01

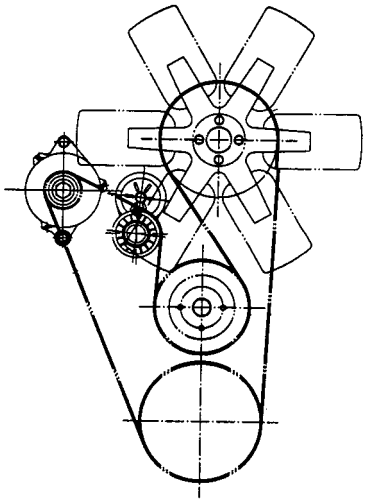

IAGS024S

1. Remove the four bolts (2) and lock washers.
2. Remove the fan (1).

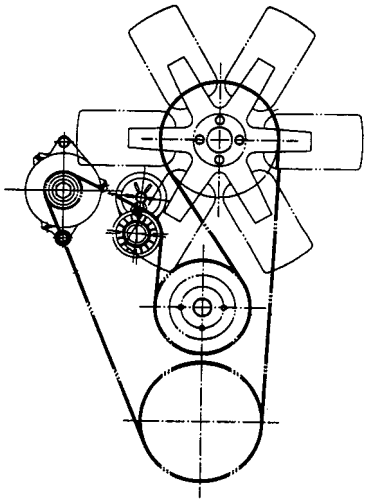

IAGS024S

3. Place fan to position.
4. Install four lock washers & bolts, torque bolts (2) to **25 ± 6 N•m (18 ± 4.5 lb•ft)**.

Fan Belt

Remove & Install Fan Belt A51087-01

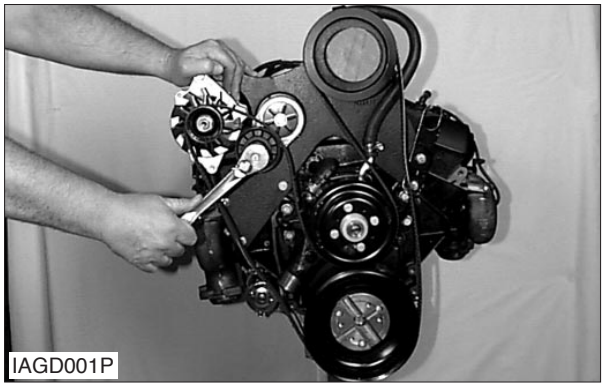

IAGD001P

1. Reposition belt tensioner.

⚠ CAUTION

This tensioner is spring loaded.

2. Remove belt from location (Serpentine Belt) being careful to observe the correct routing.
3. Replace belt to correct position and reposition belt tensioner. (Belt tensioner is pre-set and spring loaded).

https://truckmanualshub.com/

Alternator

Remove & Install Alternator B31018-01

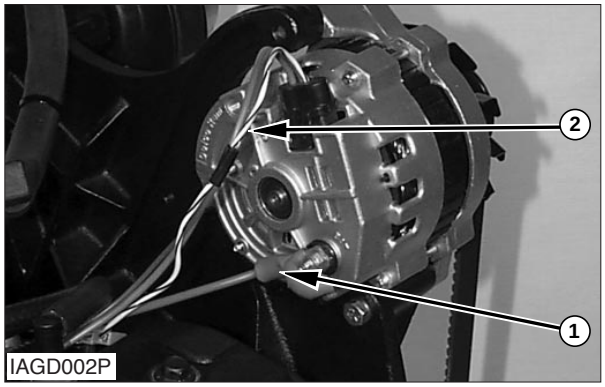

1. Disconnect wire (1) and wire (2).

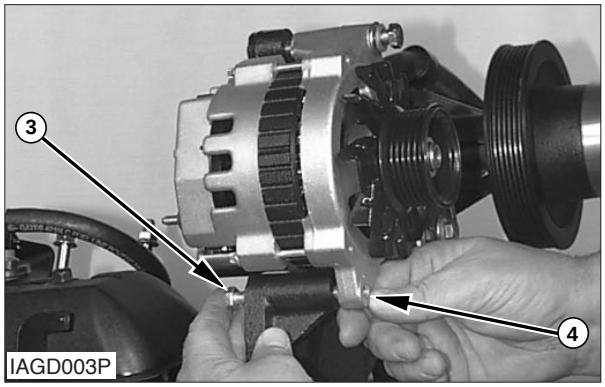

2. Remove bolts and washers (3), & (4) and the alternator.

NOTE: For the installation of the alternator, reverse the removal steps.

3. Torque bolts to standard values.

Starter Motor

Remove & Install Starter Motor A61564-01

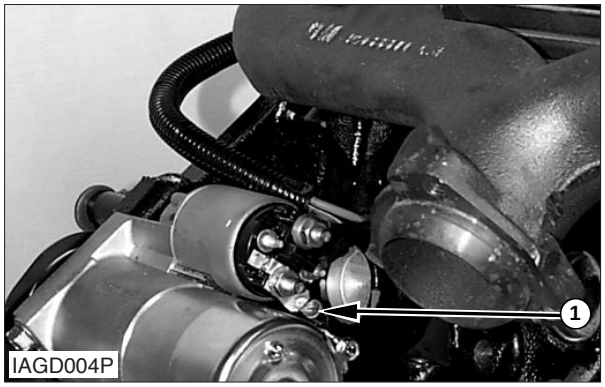

1. Remove wires (1) from the starting motor

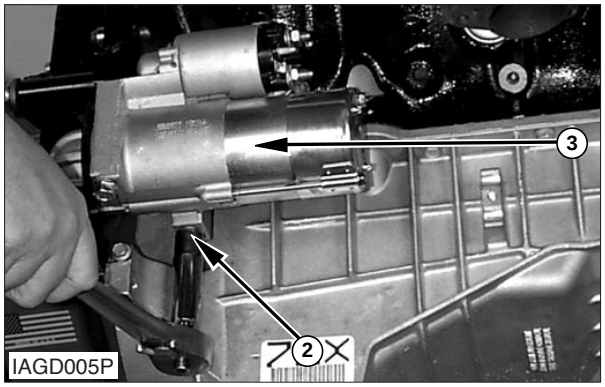

2. Remove two bolts (2) and the starting motor (3) from the engine.

NOTE: For the Installation of the starting motor, reverse the removal steps.

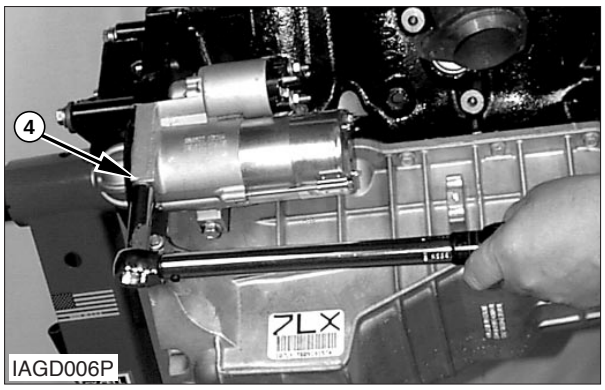

3. Apply a torque of: 40 N•m (30 lb•ft.) to the mounting bolts (4) .

https://truckmanualshub.com/

Starter Relay

Remove & Install Starter Relay A61999-01

1. Remove four (1) wires from the relay.

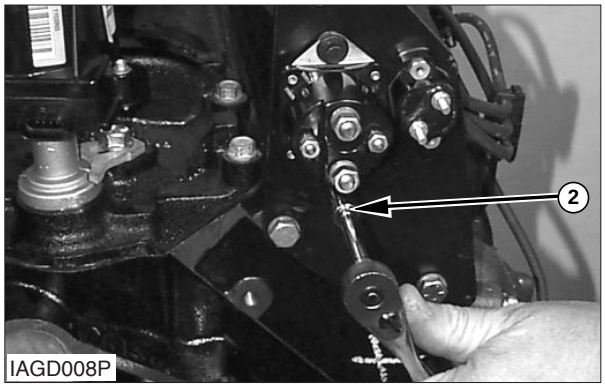

2. Remove two (2) bolts and the relay from the engine.

NOTE: For the Installation of the relay, reverse the removal steps.

LP Gas Fuelock

Remove & Install LP Gas Fuelock A2C885-01

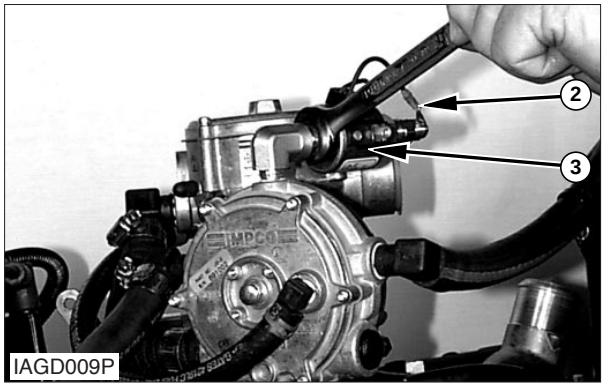

1. Disconnect fuel line (1).

2. Disconnect wire (2).

3. Remove fuelock (3)

NOTE: For the installation of the LP gas fuelock, reverse the removal steps.

https://truckmanualshub.com/

LP Gas Converter

Remove & Install LP Gas Converter A2C241-01

Start By: Removing LP Gas Fuelock

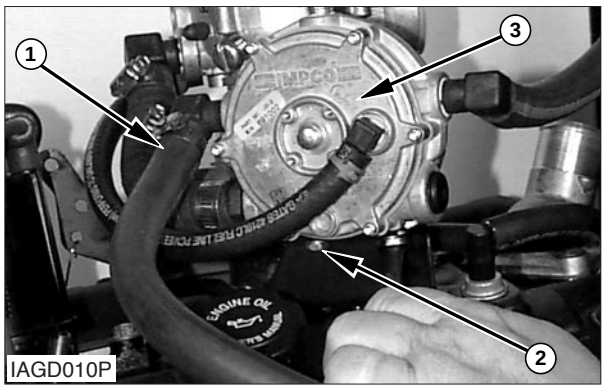

1. Remove lines (1).

2. Remove two bolts and washers (2).

3. Remove LP gas converter (3).

NOTE: For the installation of the LP gas converter, reverse the removal steps.

LP Gas Carburetor

Remove and install LP Gas Carburetor A27186-01

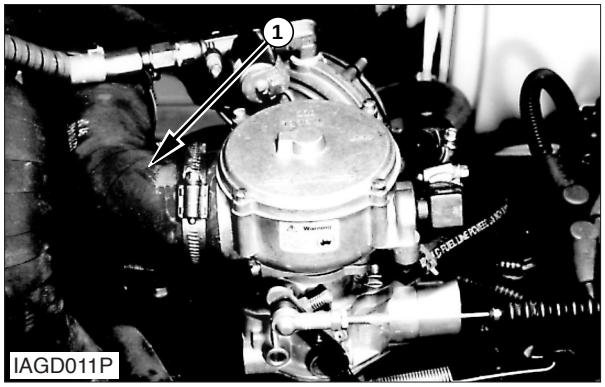

1. Disconnect hose (1).

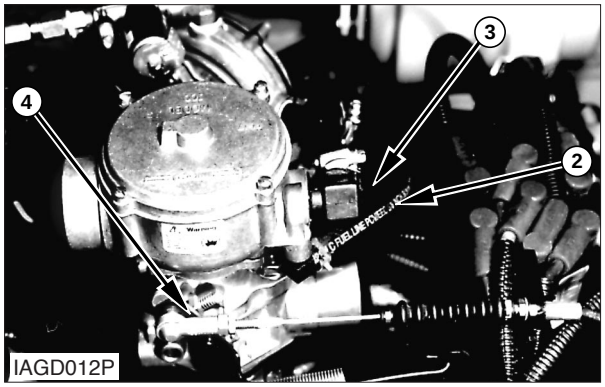

2. Disconnect two lines from (2) & (3).

3. Disconnect linkage (4) if still connected.

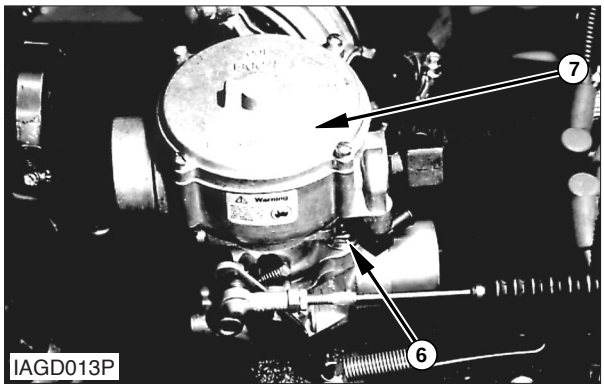

4. Remove two nuts and washers (6).

5. Remove carburetor (7) and the gasket.

https://truckmanualshub.com/

NOTE: For installation of the LP gas carburetor, reverse the removal steps.

6. Inspect and replace the gasket if necessary.

Disassemble LP Gas Carburetor A21786-07

Start By: Remove LP Gas Carburetor

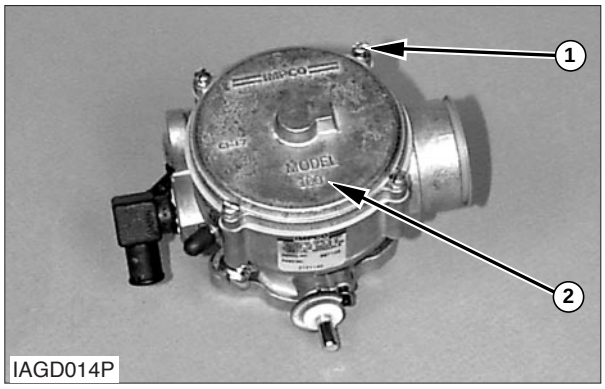

1. Remove four screws (1) and cover (2).

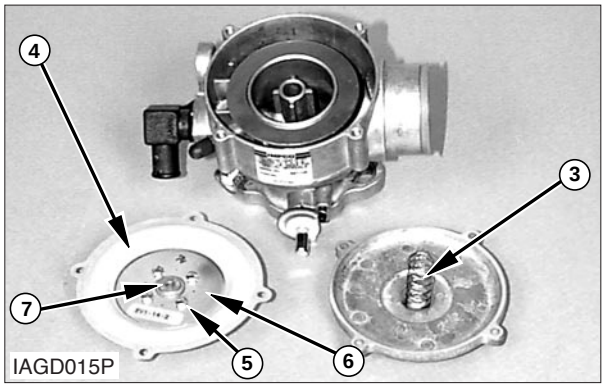

2. Remove spring (3). Remove diaphragm assembly (4).

3. Remove four screws (5), backup plate (6), diaphragm (7).

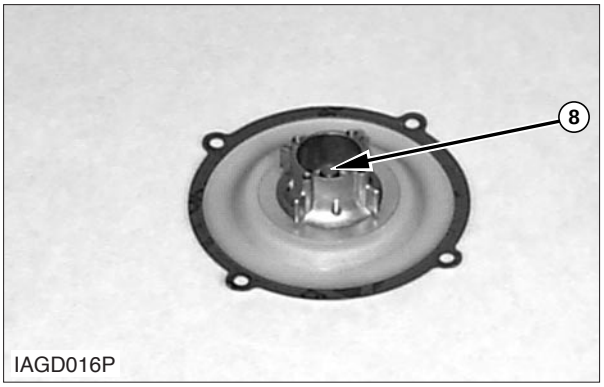

4. The air valve ring (8) from the inner carburetor body will be seperated from the diaphragm.

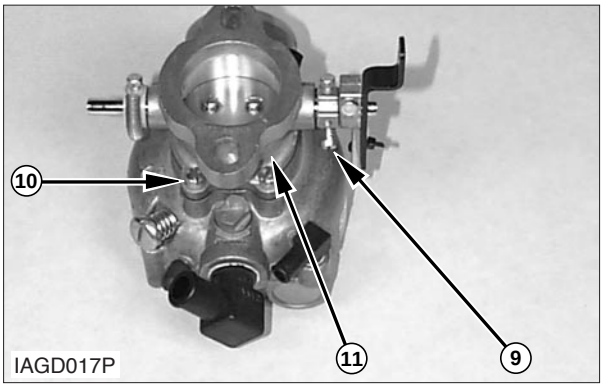

5. Remove power mixture screw idle mixture screw (9) and the spring. Remove four screws (10). Remove the throttle body assembly (11) and the gasket.

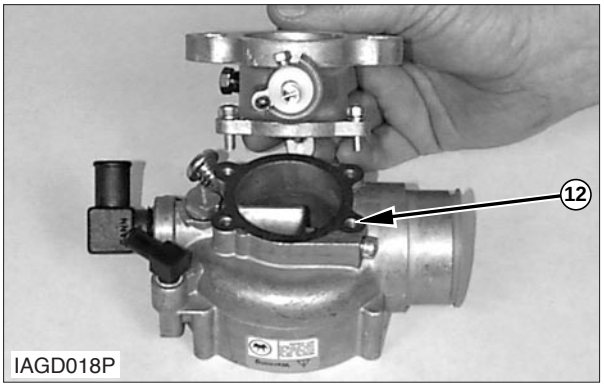

6. Remove the four screws, adapter plate (12) and the gasket.

https://truckmanualshub.com/

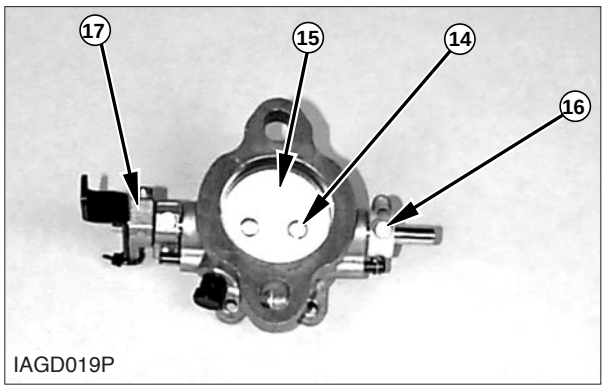

7. Loosen the bolt and remove stop (16).

8. Remove two screws (14). Remove throttle plate (15).

9. Remove shaft assembly (17) from the throttle body.

Assemble LP Gas Carburetor A27186-08

NOTE: For the re-assembly of the LP gas carburetor, reverse the removal steps.

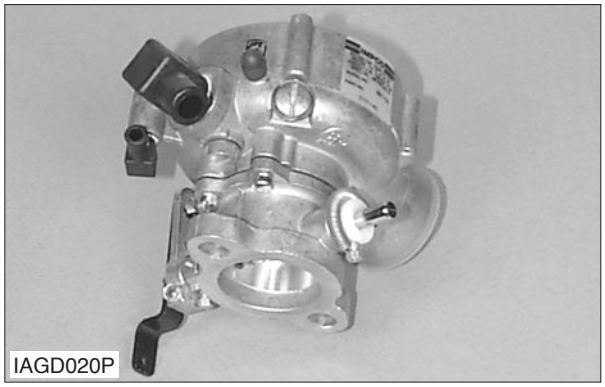

1. Check all parts for damage. Replace damaged parts with new as necessary.

2. Make sure all parts are clean and free of dirt and foreign material.

NOTE: Make sure diaphragm position mark is turned toward fuel inlet opening.

3. See Testing & Adjusting Manual for proper adjustment procedures.

Governor

Remove and Install Governor A25396-1

Start By: Remove accelerator rod, fuel and air intake lines from carburetor.

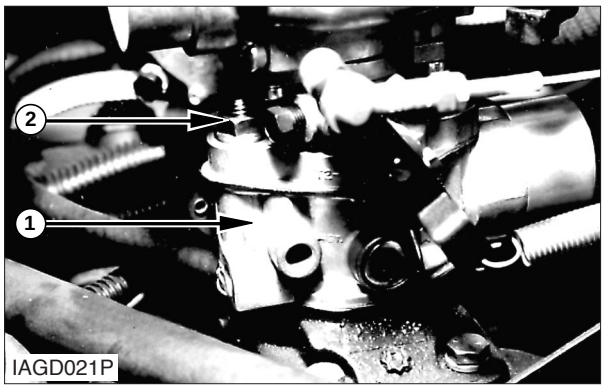

1. Remove nuts (2) from carburetor then remove carburetor (1).

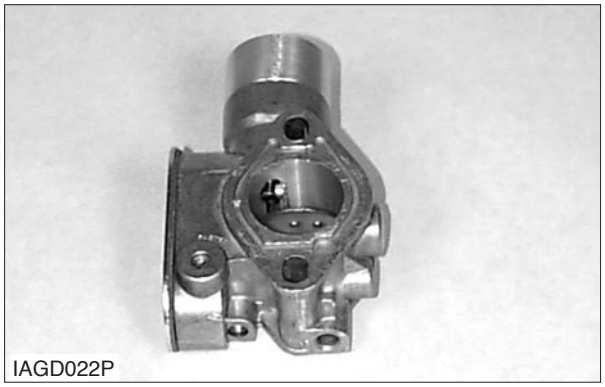

2. Then remove governor and gasket from engine

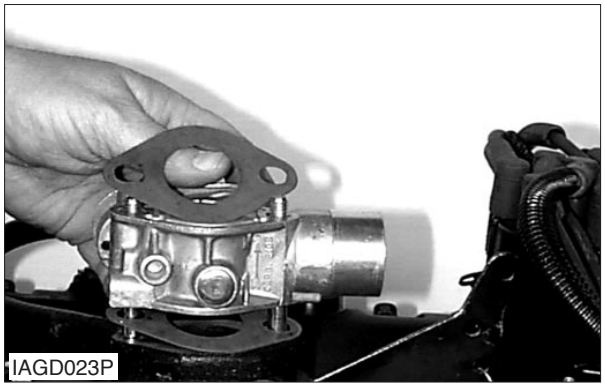

1. Assemble new gasket and governor to engine.

2. Install new gasket and existing carburetor to engine. Assemble locknuts to carburetor.

https://truckmanualshub.com/

LP Fuel Shut-off Switch

Remove & Install LP Fuel Shut-off Switch A29992-01

IAGD024P

1. Disconnect The plug from the wiring harness.

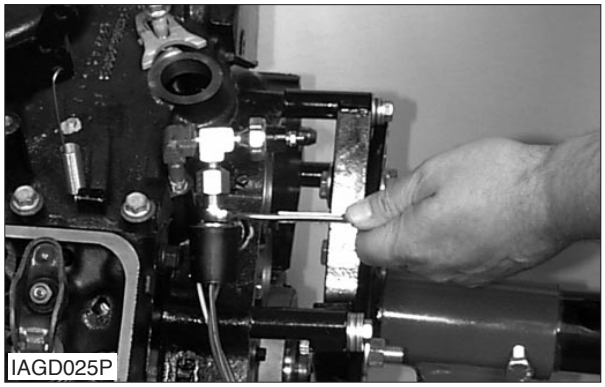
IAGD025P

2. Remove switch from engine.

NOTE: For the installation of the LP fuel shut-off switch, reverse the removal steps.

Oil Pressure Alarm Sender

Remove & Install Oil Pressure Sensor Switch

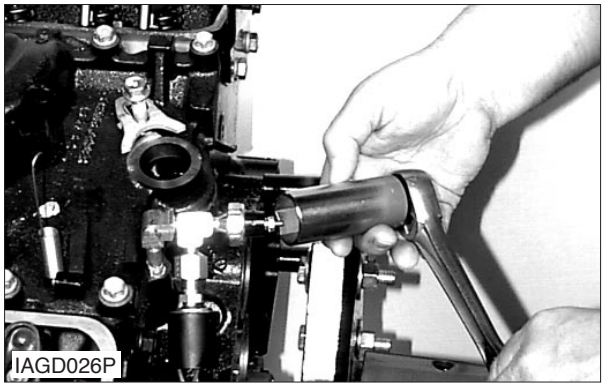
IAGD026P

1. Disconnect The wire from the sending unit.

2. Remove switch from engine.

NOTE: For the installation of the oil pressure alarm sender, reverse the removal steps.

Water Temperature Sensor

Remove & Install Water Temperature Sensor B36735-01

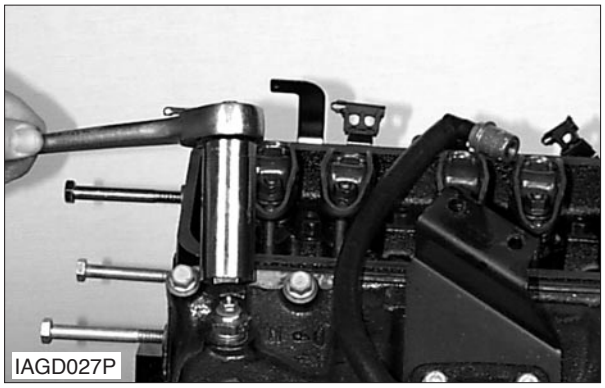
IAGD027P

1. Disconnect one wire connector.

2. Remove water temperature sensor.

NOTE: For the installation of the water temperature sensor, reverse the removal steps.

3. Use thread sealant on the water temperature sensor threads.

https://truckmanualshub.com/

Water Pump

Remove & Install Water Pump A55360-01

Start By:
a. Draining coolant from radiator.
b. Remove by-pass hose and
c. LP hose from pump.
d. Remove fan belt.

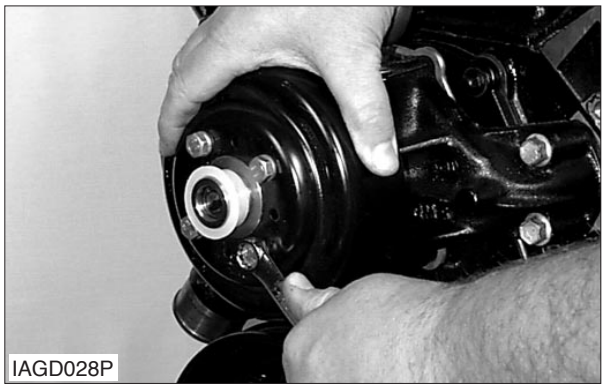
IAGD028P

1. Remove bolts from pump pulley.

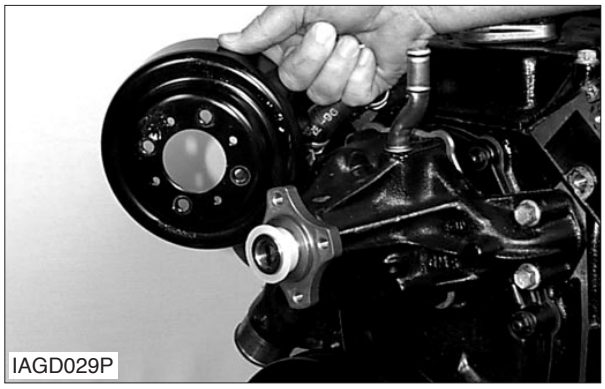
IAGD029P

2. Remove pulley from pump.

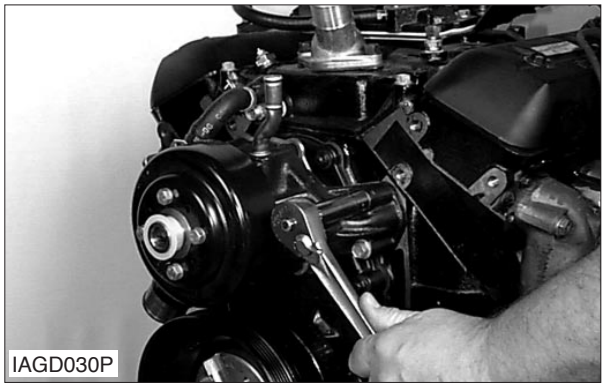
IAGD030P

3. Remove bolts from pump.

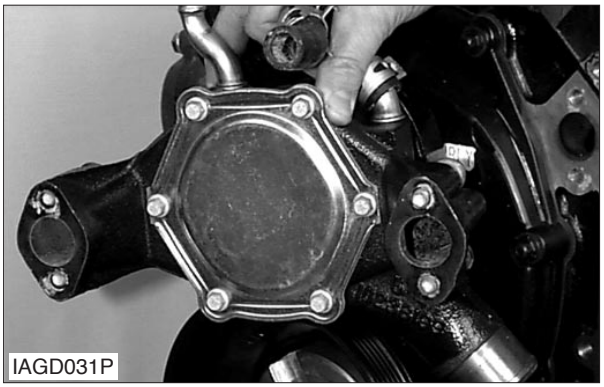
IAGD031P

4. Remove pump from engine.

5. Remove gasket and clean surface.

NOTE: For the installation of the Water Pump, reverse the removal steps.

1. Install gasket to block

2. Install pump to location.

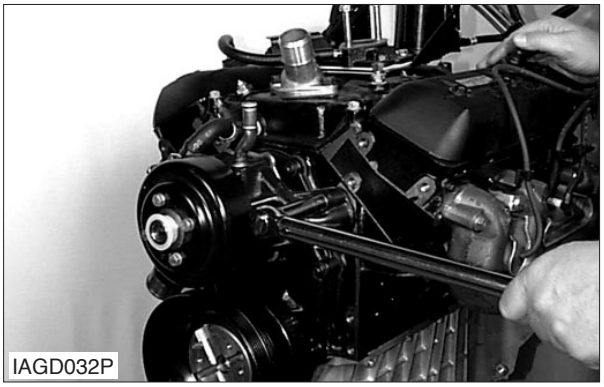
IAGD032P

3. Assemble bolts to pump and torque to: **40 N•m (30 lb•ft.)**

4. Assemble pulley to pump.

5. Assemble bolts to pulley and torque to: **25 N•m ± 6 (18.0 ± 4.5 lb•ft.)**

https://truckmanualshub.com/

Water Temperature Regulator

Remove & Install Water Temperature Regulator A56681-01

Start By:

a. Draining coolant from radiator.
b. Removing upper radiator hose from thermostat housing.

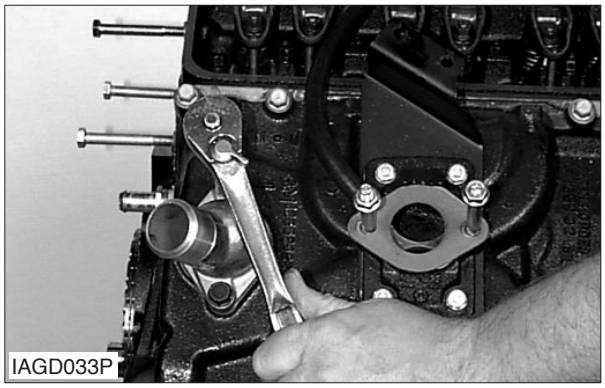
IAGD033P

1. Remove bolts. Remove thermostat housing and gasket.

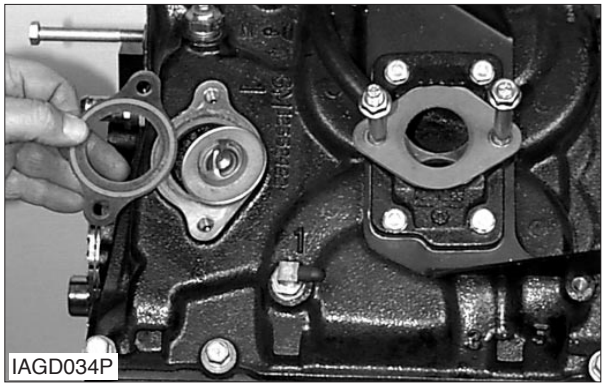
IAGD034P

2. Remove failed thermostat.
3. Clean both mounting surfaces, engine and thermostat housing of any gasket material.

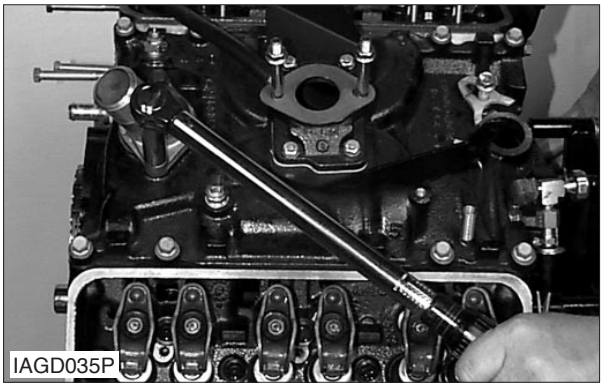
IAGD035P

NOTE: For installation of the thermostat, reverse the removal steps and torque mounting bolts to **25 N•m (18 lb•ft.).**

NOTICE

Make sure clean coolant has been added to the radiator before the engine is started.

https://truckmanualshub.com/

High Mounted Fan Bracket

Remove & Install High Mounted Fan Bracket

Start By:
a. Remove fan belt.
b. Remove wires from alternator.

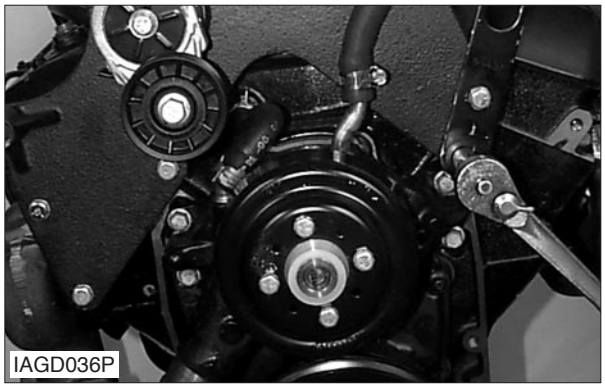
IAGD036P

1. Remove (5) Bolts from bracket.

2. Remove the bracket assembly.

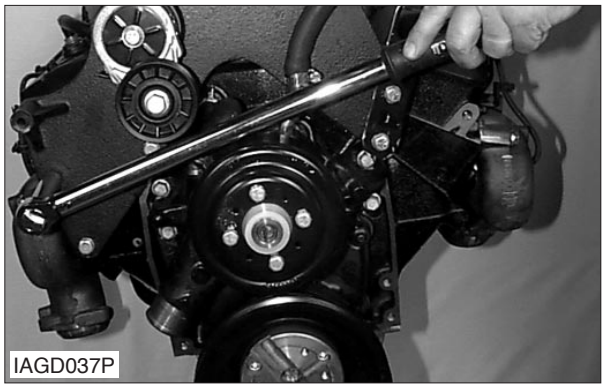
IAGD037P

NOTE: For installation of the fan bracket, reverse the removal steps and torque mounting bolts to **50 N•m (37 lb•ft.).**

Crankshaft Pulley

Remove & Install Crankshaft Pulley A12660-01

Start By: Removing fan belt

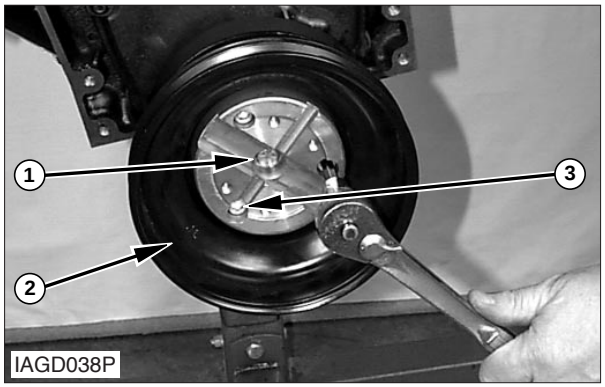

IAGD038P

1. Remove three allen head bolts (3) and one center bolt (1) from pulley (2).

2. Remove pulley and adapter

NOTE: For installation of the crankshaft pulley, reverse the removal steps and torque:
a. Three allen head bolts (3) to **28 ± 7 N•m (20 ± 5 lb•ft.)**
b. One center bolt (1) to **55 ± 10 N•m (40 ± 7 lb•ft.).**

https://truckmanualshub.com/

Torsional Damper

Remove Torsional Damper From Engine A12661-02

NOTICE

The inertial weight section of the torsion damper assembles to the hub with a rubber sleeve.
The removal procedure must be followed (with the proper tools) or movement of the inertia weight section of the hub will destroy the tuning of the torsional damper and the engine timing reference.

Start By: Removing crankshaft pulley.

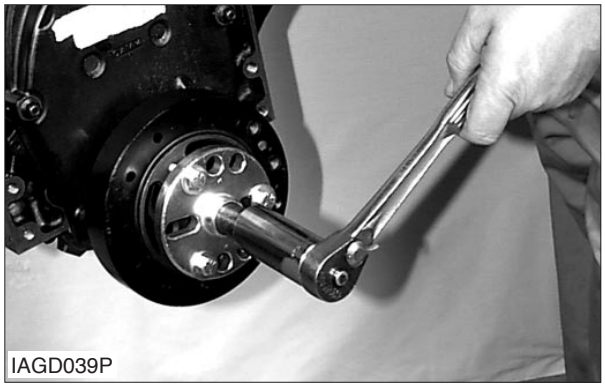
IAGD039P

2. Remove the torsional damper using Crankshaft Balancer Puller and Installer.
3. Remove crankshaft key.

Install Torsional Damper To Engine A12661-03

Start By: Apply RTV sealant GM P/N 12345739 to keyway and crankshaft key.

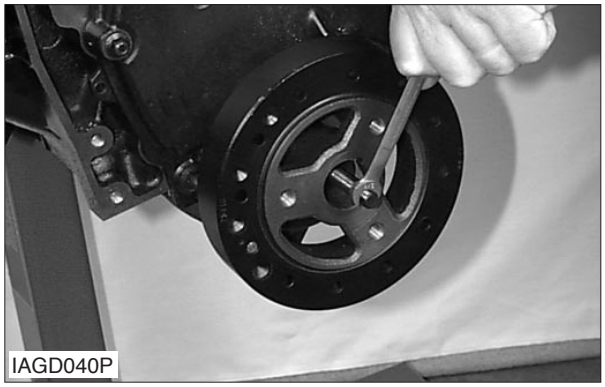
IAGD040P

1. Install the stud(part of J39046) to the crankshaft. Thread the stud fully into the tapped hole in the crankshaft.

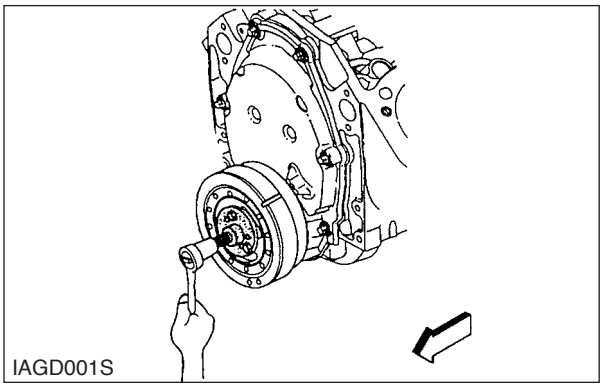
IAGD001S

2. Place the crankshaft balancer over the end of the stud. Align the keyway in the torsion damper shaft with the crankshaft key.

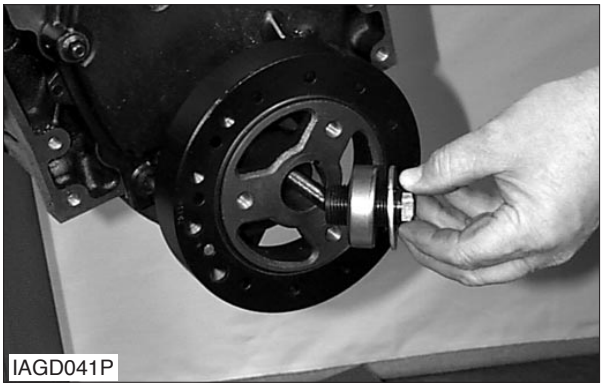
IAGD041P

3. Install the bearing , washer and nut (part of the tool) to the stud.

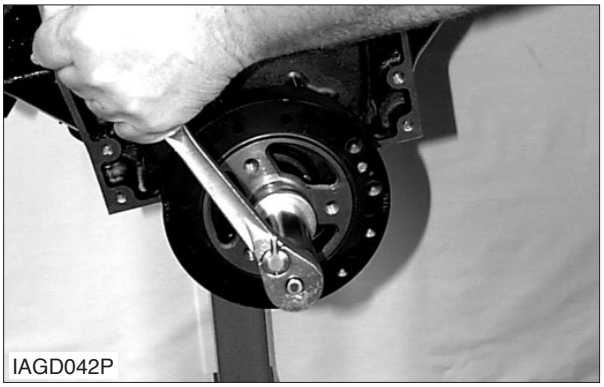
IAGD042P

4. Turn the nut to pull the torsional damper into place then remove the tool.
5. Install the crankshaft pulley.

https://truckmanualshub.com/

Coil

Remove & Install Coil B33222-01

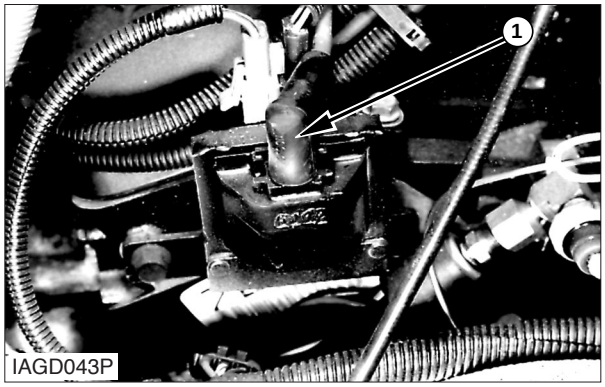

IAGD043P

1. Disconnect wire connectors (1) from the coil.

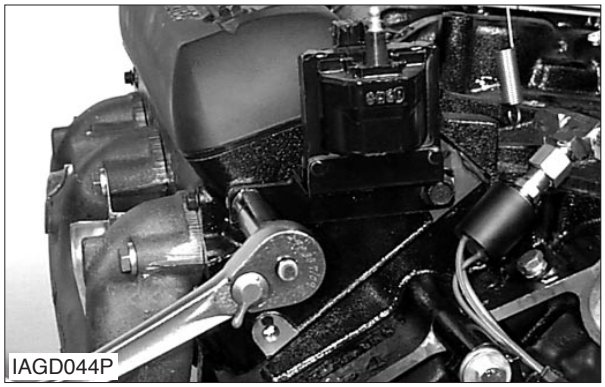
IAGD044P

2. Remove two bolts from coil mounting bracket and remove the coil.

NOTE: For installation of the coil, reverse the removal steps.

Engine Flywheel

Engine Flywheel Removal A13366-02

Start By: Separating the engine and transmission.

NOTE: The engine has been removed for better photo illustration.

1. Fasten a link bracket to the flywheel and attach a hoist to support the weight.

2. Remove six bolts from flywheel and remove the flywheel from the engine. The weight of the flywheel is **92.4 kg (42 lb.)**

Engine Flywheel Installed A13366-03

1. Fasten a link bracket to the flywheel and hoist.

2. Place Flywheel to position

3. Install six bolts to flywheel and torque to **100 N•m (74 lb•ft.).**

NOTE: See Testing and Adjusting for the procedure tocheck the flywheel runout.

https://truckmanualshub.com/

Flywheel Ring Gear

Remove & Install Flywheel Ring Gear A13387-01

Start By: Removing the flywheel.

1. Use a torch to heat the ring gear around the entire circumference. Remove flywheel ring gear from flywheel. Care should be exercised not to damage the flywheel.

NOTICE

Never heat the new ring gear to red hot as this will change the metal structure.

2. Uniformly heat the ring gear to a temperature that will expand the gear to permit installation. Temperatures must not exceed 204℃(400℉)
3. As soon as the ring gear has been heated, install it on the flywheel.

Flywheel Housing

Remove Flywheel Housing A11453-02

Start By: Removing flywheel.

1. Remove eight Bolts and eight washers from flywheel housing. Then remove flywheel housing from engine.

Install Flywheel Housing A11453-03

1. Place the new flywheel housing to location.
2. Install the eight bolts that hold the flywheel housing to location. Tighten the bolts to a torque of **40 to 45 N•m (30 to 35 lb•ft.).**
3. See Testing and Adjusting for correct procedure to check flywheel housing runout.

Distributor

Remove Distributor B33300-02

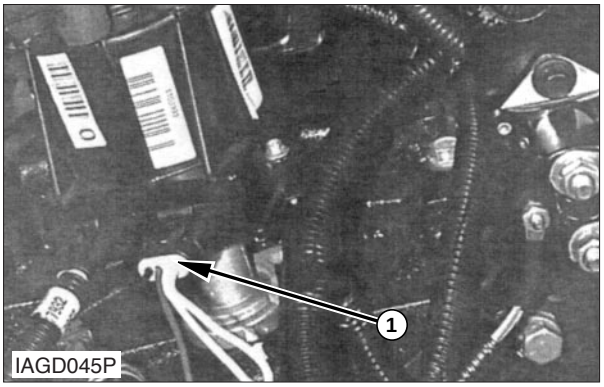

1. Disconnect coil harness (1) from distributor.
2. Bring the engine to TDC on the compression stroke before removing the distributor.

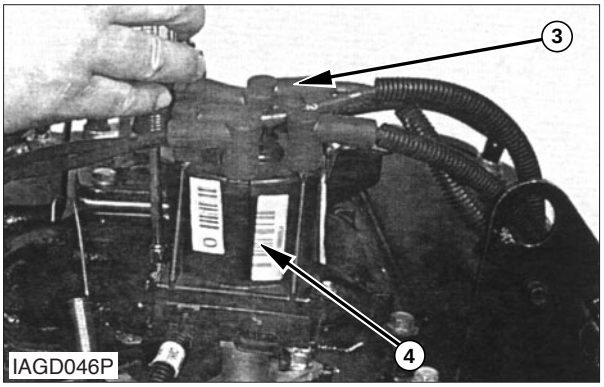

3. Remove the coil wire, spark plug wires (3) and cap (4) from the distributor.

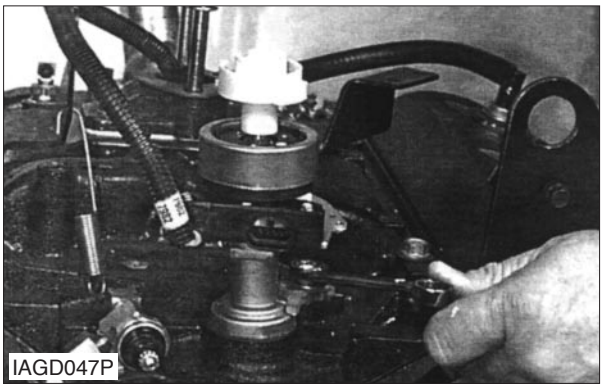

NOTE: Scribe an alignment mark on the distributor and intake manifold to show the position of the rotor.

4. Remove the bolt, distributor clamp, and distributor.

https://truckmanualshub.com/

Install Distributor B33300-03

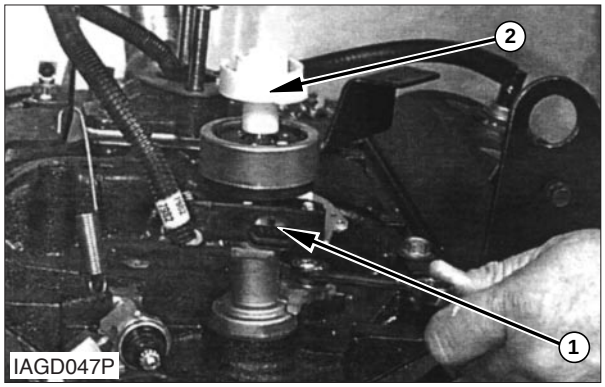

1. Install the distributor (1) in position in the intake manifold. Make sure that the rotor (2) is in alignment with the scribe mark and number one cylinder.
2. Install the distributor clamp and bolt to the distributor.

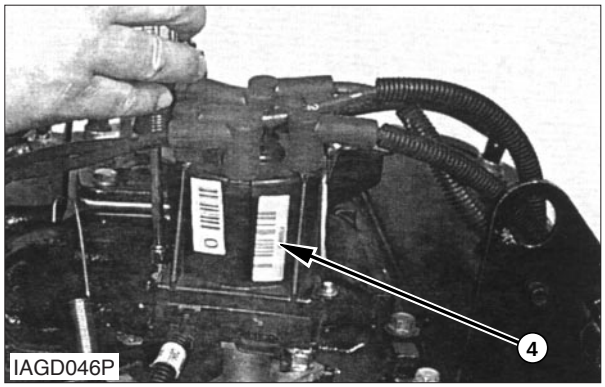

3. Install cap (4) and plug and coil wires to the distributor.

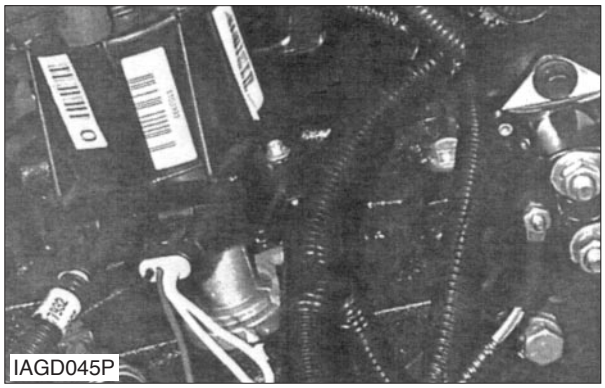

4. Connect the coil harness to the distributor and the coil wire to the coil.
5. Check the ignition timing. (See Test and Adjustment)

Disassemble Distributor B33300-07

Start By: Removing the distributor.

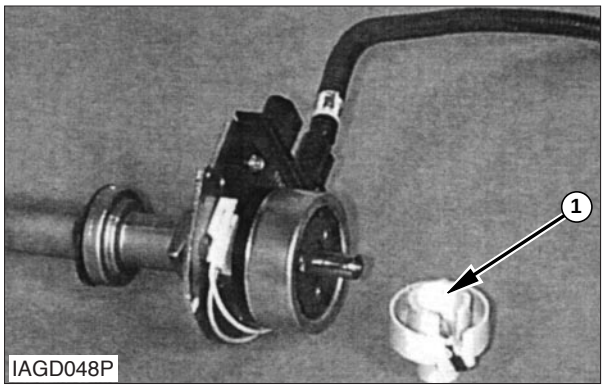

1. Remove rotor (1)

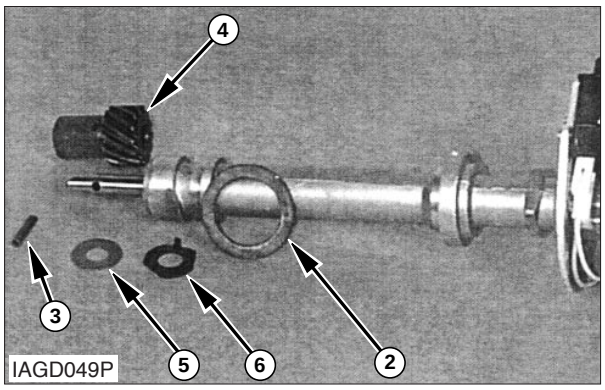

2. Remove gasket (2) from location.
3. Drive roll pin (3) from gear (4).
4. Remove gear (4), thrustwasher (5) and tabbed thrustwasher (6).

NOTE: mark gear and shaft for correct assembly.

https://truckmanualshub.com/

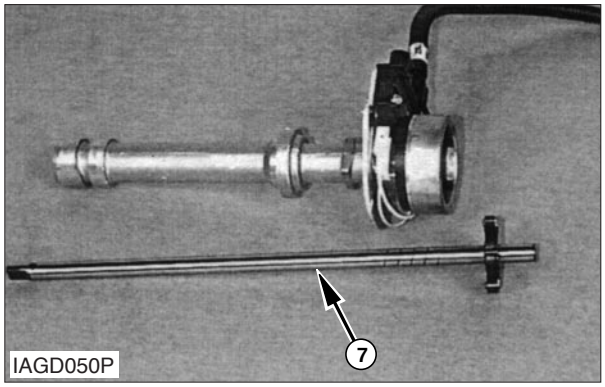

5. Remove shaft assembly (7).

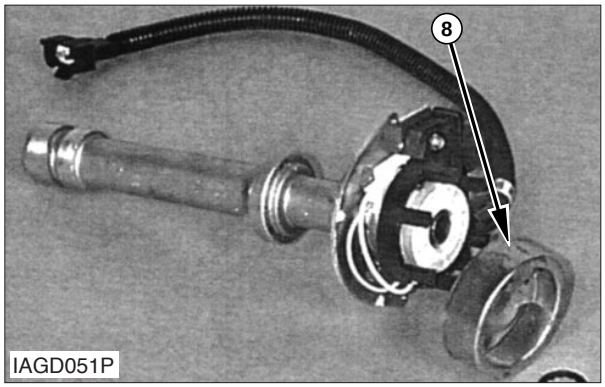

6. Pry off spring washer and remove retainer (8).

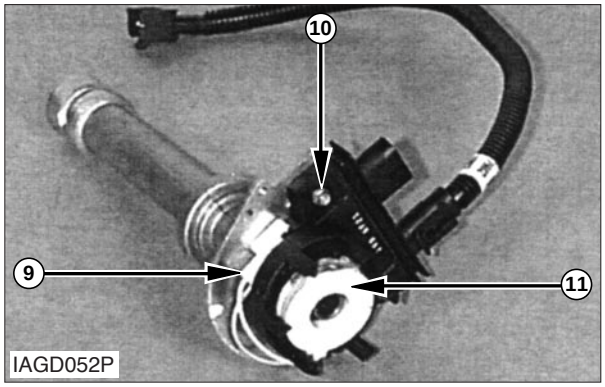

7. Unplug and remove the pickup coil (9).

8. Remove two screws (10) and remove pickup module (11).

Assemble Distributor B33300-08

9. Wipe distributor base and module clean, apply silicone lubricant between module and base for heat dissipation.

10. Attach module (11) to base with two screws (10). Connect pickup coil (9) connector to module and mount coil.

11. Assemble retainer (8) and fasten with a new spring washer (7).

12. Assemble shaft , thrust washers, gear and roll pin in proper alignment.

13. Spin shaft to ensure that teeth to not touch.

14. Install rotor.

https://truckmanualshub.com/

Intake Manifold

Remove Intake Manifold A32549-02

Start By:
a. Remove fuel lines and linkage from carburetor.
b. Remove coolant bypass line from manifold.
c. Remove the distributor from the manifold.

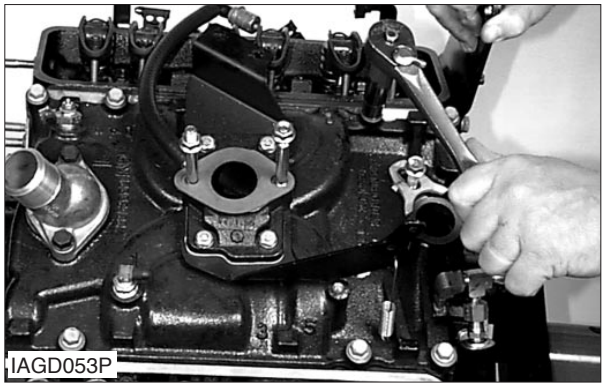
IAGD053P

1. Remove the bolts from manifold.

IAGD054P

2. Remove the intake manifold from the engine.

3. Remove the intake manifold gaskets from location.

4. Clean mounting surface where RTV sealant was used.

Install the Intake Manifold A32549-03

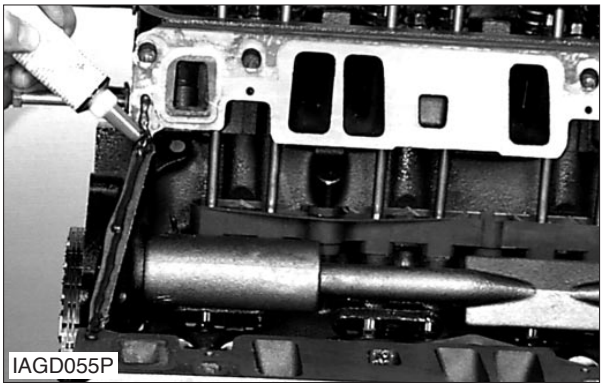
IAGD055P

1. Apply RTV sealant to the front and rear of engine block extending 1.5 inches up the port faces as shown.

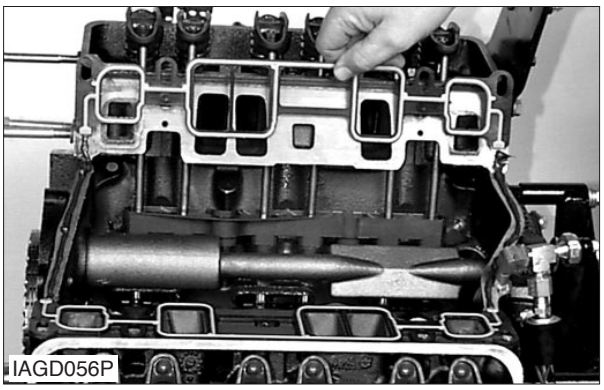
IAGD056P

2. Assemble new gaskets to the engine.

IAGD054P

3. Assemble intake manifold to engine.

https://truckmanualshub.com/

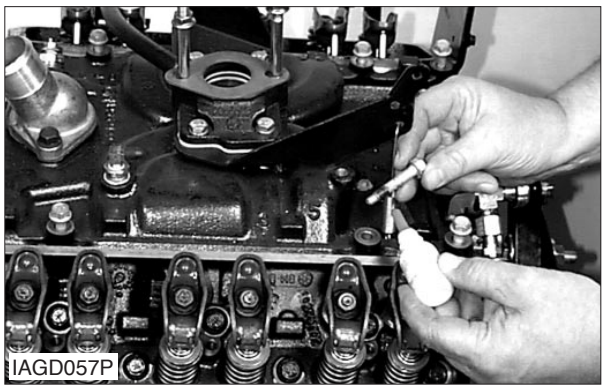
IAGD057P

4. Apply thread lock and assemble bolts to intake manifold.

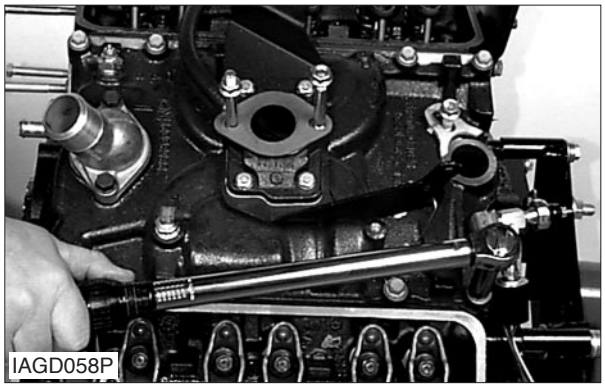
IAGD058P

5. Torque in sequence as shown in IAGD002S.
   First pass .....**3 N•m (27 lb•in.)**
   Second pass .....**12 N•m (106 lb•in.)**
   Third pass15 .....**N•m (11 ft•lb.)**

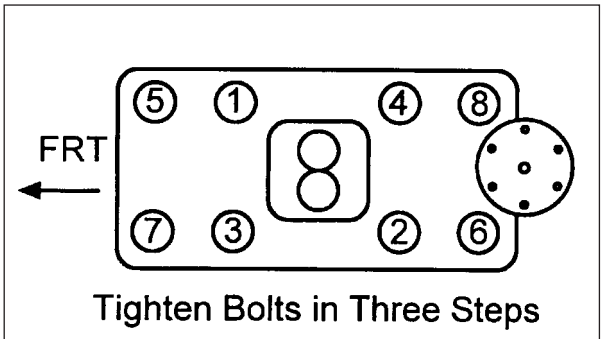

IAGD002S

Exhaust Manifold

Remove Exhaust Manifold

Start By: Remove the crossover pipe from the intake manifolds.

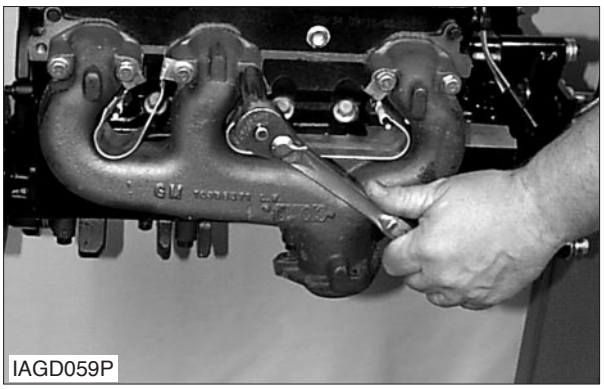
IAGD059P

1. Remove the bolts from the exhaust(s) manifolds.
2. Remove the manifold(s) from the engine

Install Exhaust Manifold A32549-03

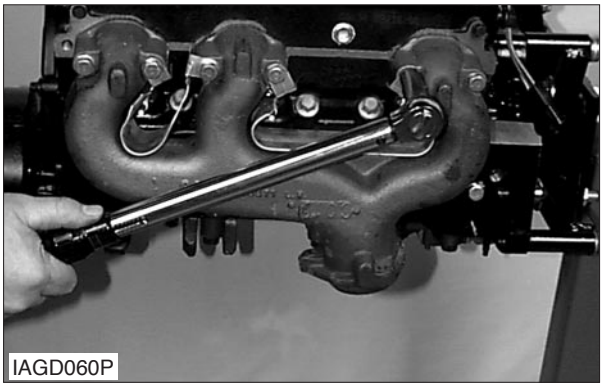
IAGD060P

1. Install manifold(s) to engine (there is no gasket required).
2. Install bolts to manifold(s) and torque, beginning with the two center bolts.
   First Pass: .....**15 N•m (11 lb•ft.)**
   Second Pass: .....**30 N•m (22 lb•ft.)**

https://truckmanualshub.com/

Valve Covers

Remove Valve Covers A17257-02

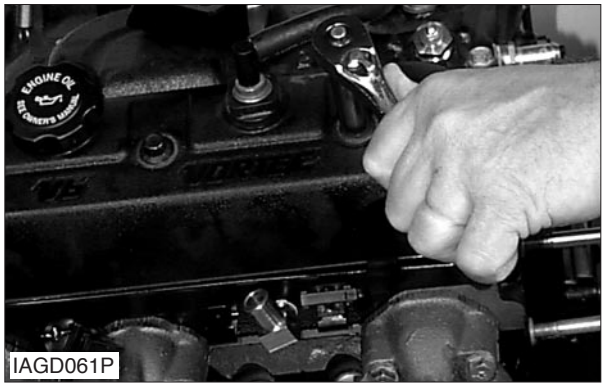

IAGD061P

1. Remove three bolts and washers from each cover.

2. Remove valve covers and gaskets from engine

Install Valve Covers A17257-03

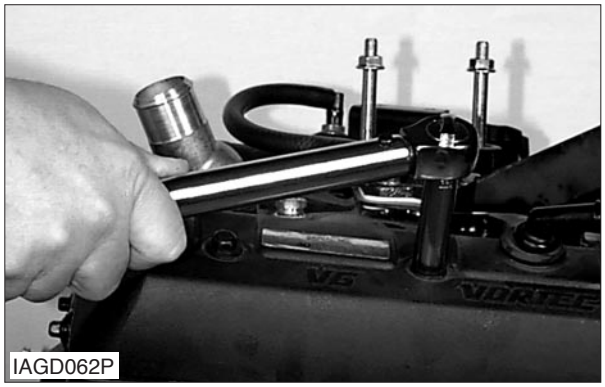

IAGD062P

1. Put new gaskets and valve covers in position.

2. Install the washers and bolts that hold the covers in position Tighten the bolts to a torque of: **12 N•m (106 lb•in.).**

Rocker Arms & Push Rods

Remove Valve Rocker Arms & Push Rods A17702-02

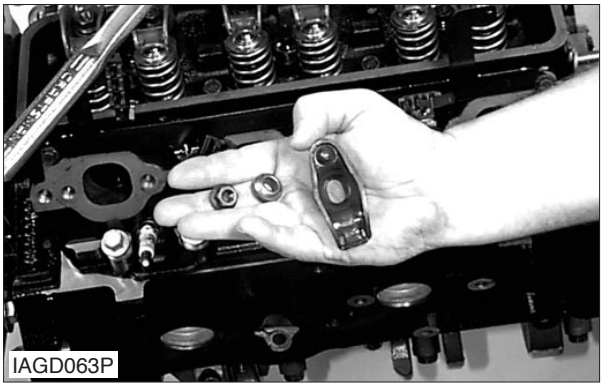
IAGD063P

1. Remove nut, ball, rocker arm.

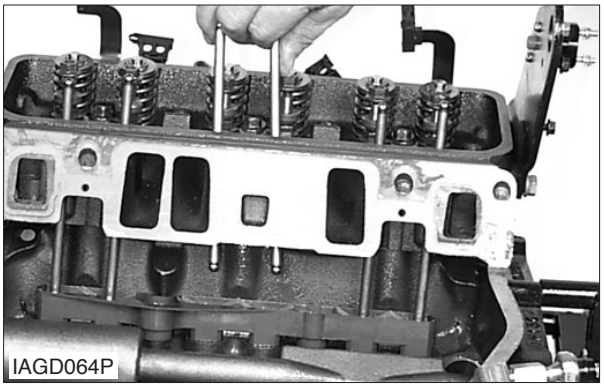
IAGD064P

2. Remove push rods.

https://truckmanualshub.com/

Install Valve Rocker Arms & Push Rods A17702-03

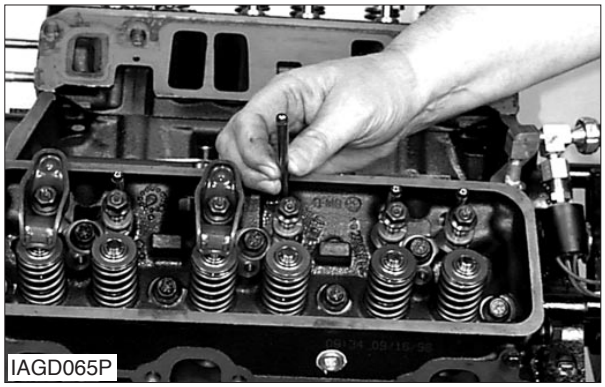
IAGD065P

1. Install push rods

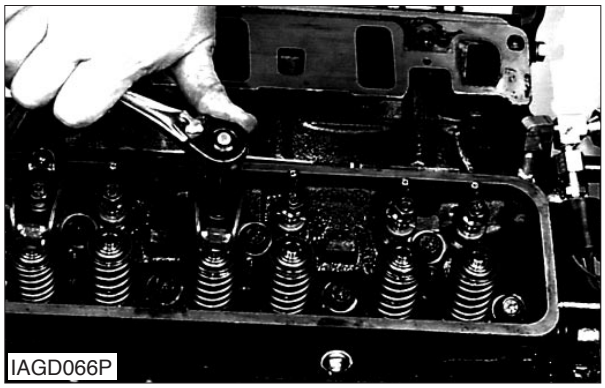
IAGD066P

2. Install rocker arm, ball, nut. Tighten nut enough to secure rocker arm.

NOTE: The valve clearance to pre-set to “O” degrees

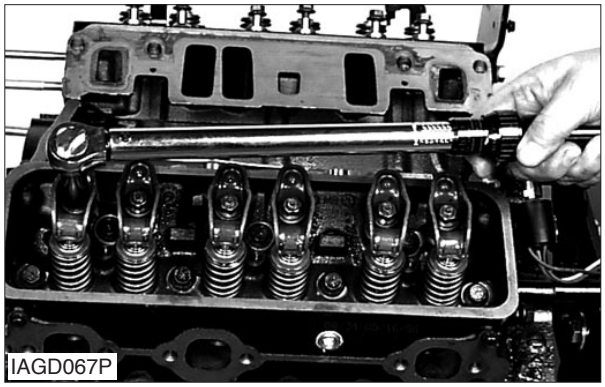
IAGD067P

3. Torque nut(S) to: **25 N•m (20 f•lb.).**

Valve Lifters

Remove Valve Retainers & Lifters

Start By:
a. Removing valve covers
b. Removing intake manifold
c. Removing rocker arms & push rods

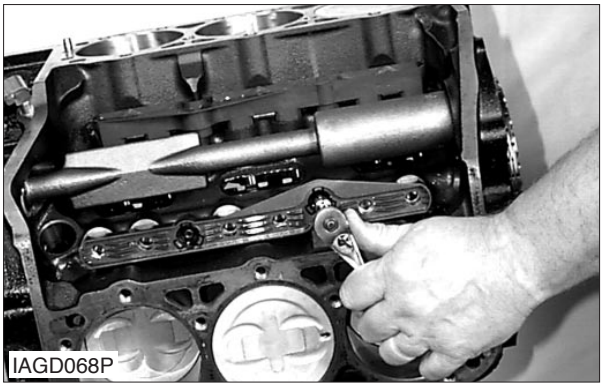
IAGD068P

1. Remove three bolts from the valve lifter retainers.

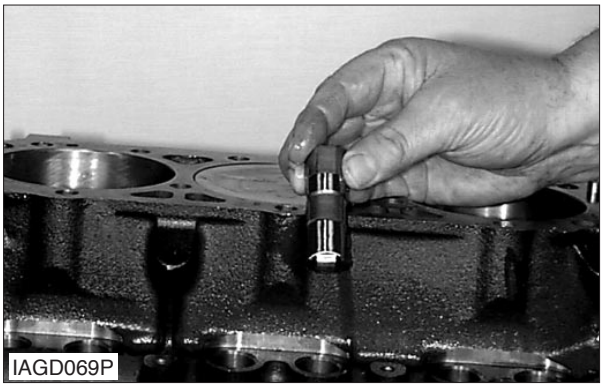
IAGD069P

2. Remove the valve lifters from the engine.

NOTICE

Check the valve lifter body for scuffing or scoring. If the lifter body wall is damaged, the mating bore must be checked also. Check the rollers to make sure they move freely.

https://truckmanualshub.com/

Install Valve Retainers & Lifters

NOTE: When new lifters or a new camshaft has been installed, change the oil and filter. Add engine oil supplement GM P/N 1052367 or equivalent to the new oil.

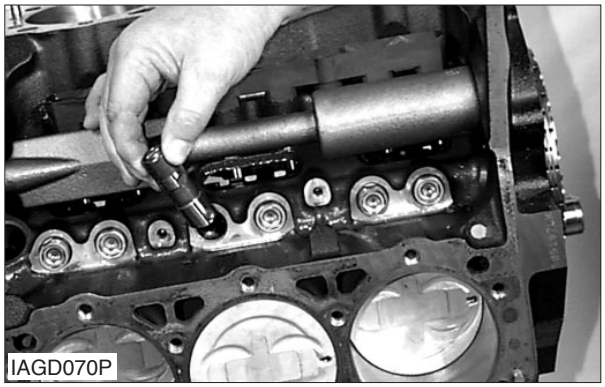
IAGD070P

1. Install new lifters to engine. Lubricate the lifters prior to assembly with high viscosity oil containing zinc. GM P/N 12345501 or equivalent.

IAGD071P

2. Install valve lift retainer bracket(s) with three bolts.

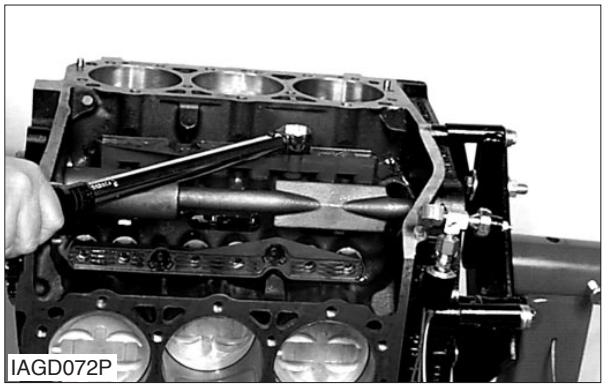
IAGD072P

3. Torque bolts to: **16 N•m (12 lb•ft.).**

Cylinder Heads

Remove Cylinder Heads Assemblies A17429-02

Start By:

a. Removing high mounted fan bracket.
b. Remove distributor from intake manifold.
c. Remove intake manifold assembly.
d. Remove exhaust manifold assemblies.
e. Remove rocker arm assemblies.

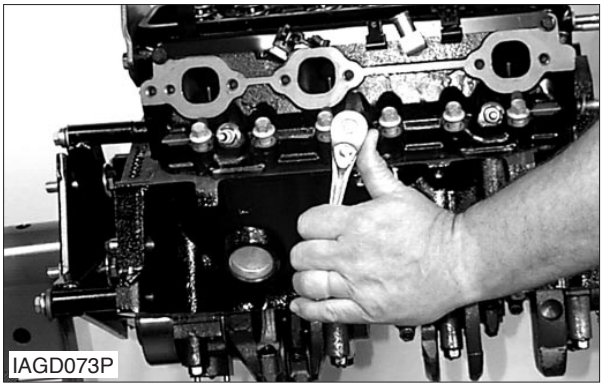
IAGD073P

1. Remove spark plugs from cylinder head assemblies.

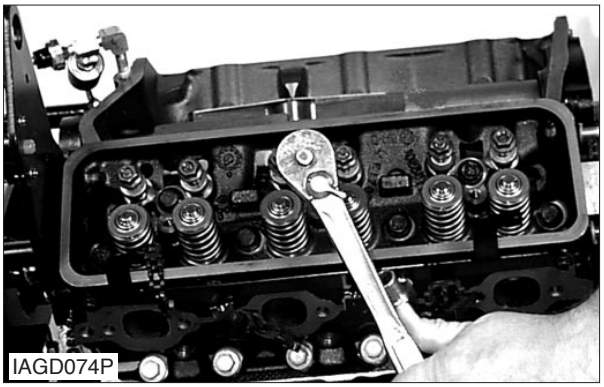
IAGD074P

2. Remove bolts from cylinder head.

https://truckmanualshub.com/

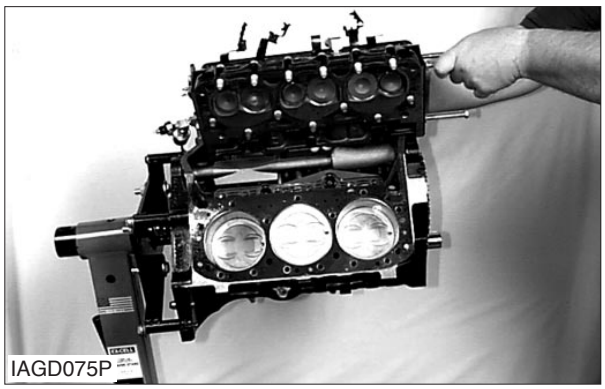
IAGD075P

3. Remove cylinder heads from block.

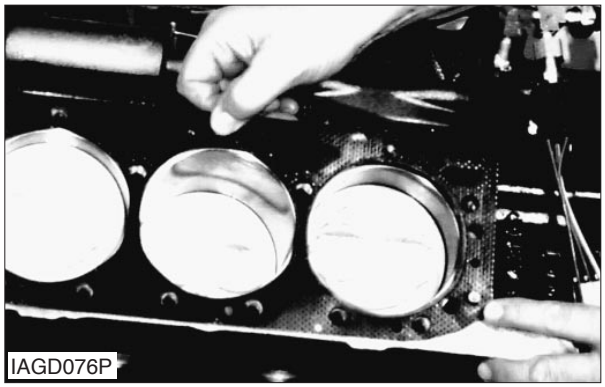
IAGD076P

4. Remove head gasket.

Install Cylinder Heads Assemblies A17429-03

NOTICE

Make sure gasket surface is clean. Do not use gasket sealer on head gasket.

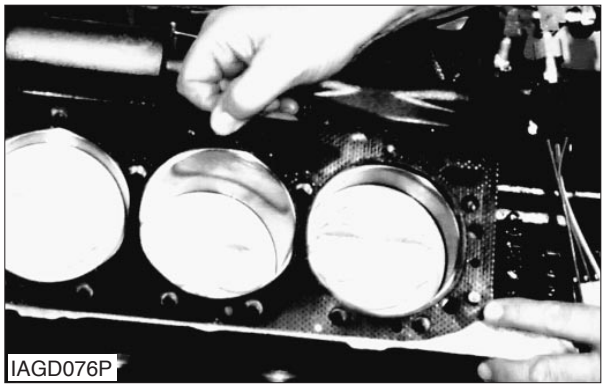
IAGD076P

1. Assemble head gaskets to block with dowel pins.

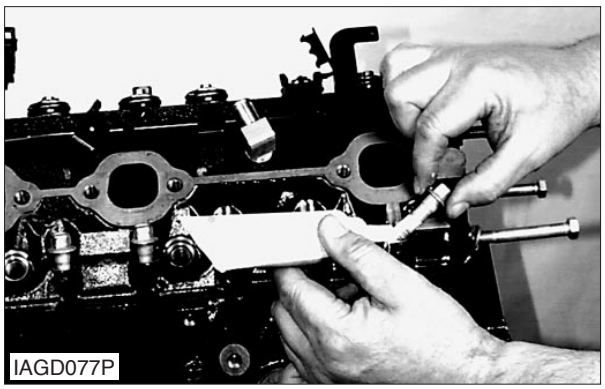
IAGD077P

2. Assemble cylinder heads to block

3. Apply sealing compound (GM P/N 12346004) to the threads of the bolts, then assemble bolts to cylinder head.

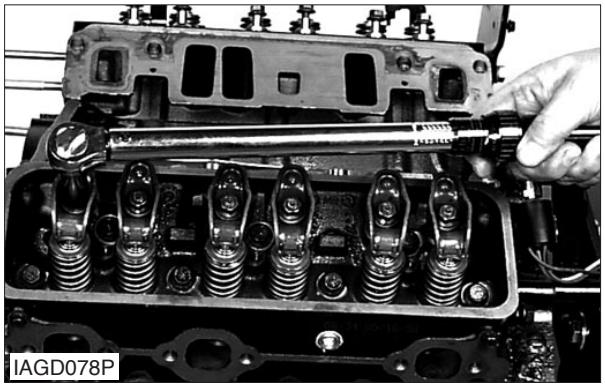
IAGD078P

4. Torque the bolts in sequence on the first pass to: **30 N•m (22 lb•ft.)**

5. Short bolts (11,7,3,2,6,10,) plus an additional 55°.
Medium length bolts (12,13,) plus an additional 75°.
Long length bolts (1,4,8,5,9,) plus an additional 75°.

https://truckmanualshub.com/

Valves

Remove valves

Start By: Removing the cylinder head

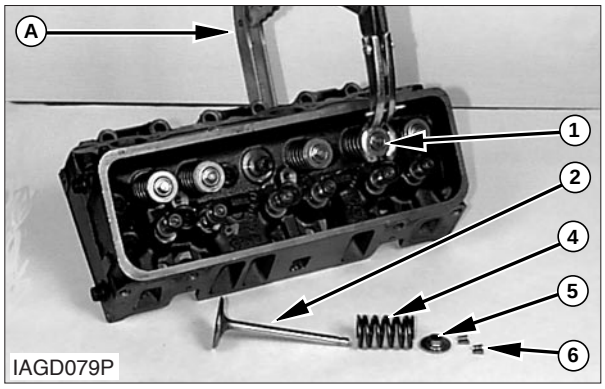

1. Compress valve spring (1) with valve compression spring tool (A).
2. Remove key (6), cap (5), spring (4), seal (3) and valve (2) from the cylinder head.

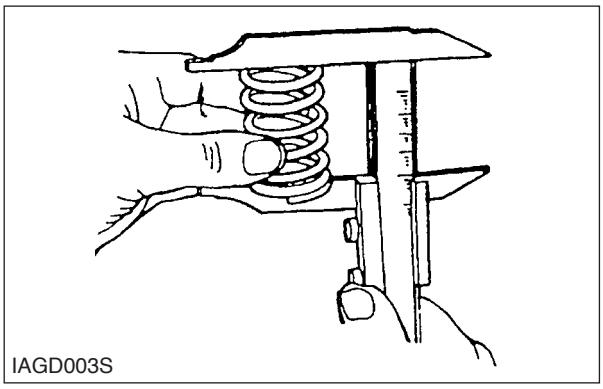

3. Check the spring free length to make sure it is 52 mm (2.03 in).
   See System Operation, Testing, and Adjusting for complete test procedures.
4. Do steps 1 through 3 again for the remainder of the valves.

Install valves

1. Check all parts for damage. If any parts are damaged or worn, use new parts for replacement.
2. Make sure all parts are clean and free of dirt and foreign material.
3. Put valve in position in cylinder head applying oil to each valve before installing.
4. Install spring and valve spring cap.
5. Compress the spring with the tool and install the retaining keys (6).
6. Release the compression on the spring slowly, making sure the keys seat properly, and remove the spring compressor tool.

https://truckmanualshub.com/

Oil Pan

Remove Oil Pan A43591-02

Start By: Placing truck on jack for safety.

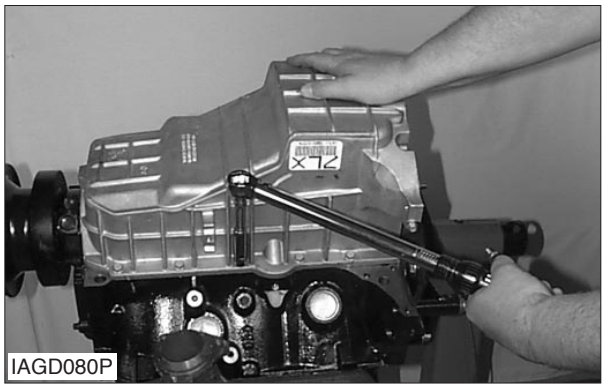
IAGD080P

1. Remove ten bolts and two nuts from the oil pan.

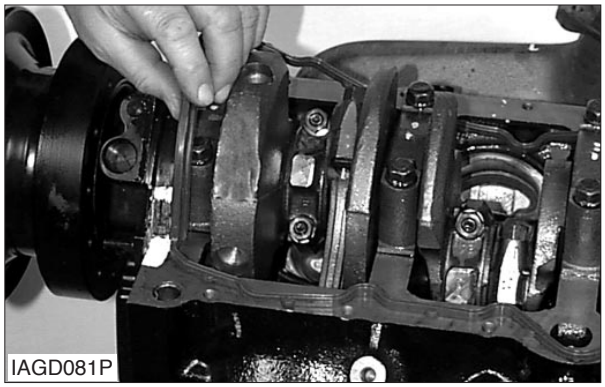
IAGD081P

2. Remove gasket from oil pan.

Install Oil Pan A43591-03

IAGD082P

1. Place new gasket to oil pan.

IAGD083P

2. Apply sealant to the four locations .

NOTICE

Apply RTV sealant (GM P/N 12346141) or equivalent to the front cover to block joint and to the crankshaft rear retainer seal to block joint.
Apply the sealant about 25 mm (1.00 in) in both directions from each of the four corners.

https://truckmanualshub.com/

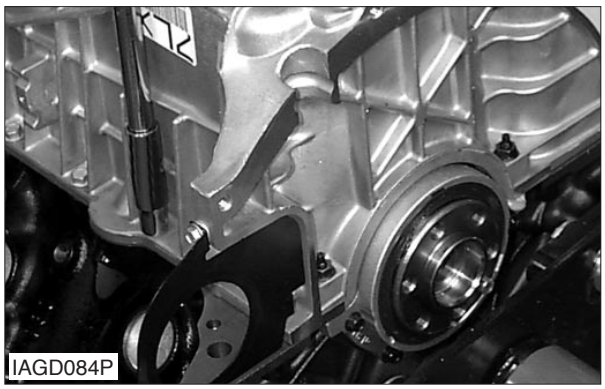

3. Place oil pan in location, assemble ten bolts and two nuts to mount the oil pan in place. Do not tighten at this time.

NOTICE

The alignment between the rear of the oil pan and the rear of the block flange is critical.
The two surfaces must be flush to provide a ridged engine-to- transmission alignment with the transmission bell housing.

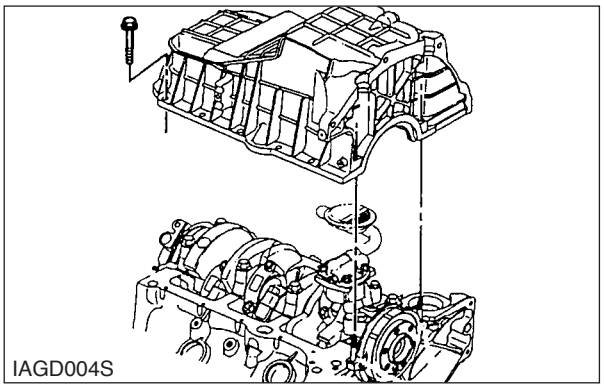

4. Slide the oil pan so the rear machined surface is flush with the machined edge of the block within 0.254 mm (0.010 in.), tighten bolts to secure in place.

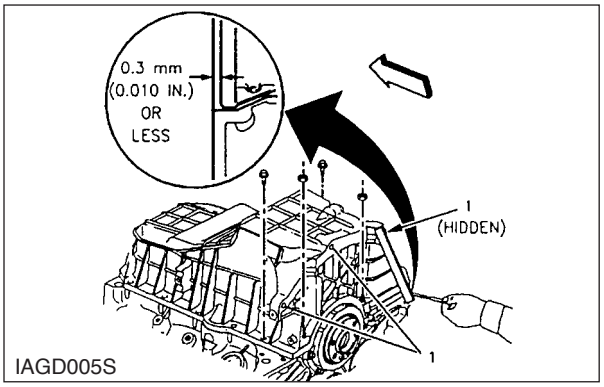

5. Use a feeler gauge to check the clearance between the oil pan-to-transmission bell housing contact points as shown. If clearance exceeds 0.254 mm (0.010) the pan must be removed and the procedure performed again.

NOTICE

If the clearance is more than 0.254 mm (0.010 in) power train durability may be impacted.

6. Torque nuts and bolts to **25 N•m (18 lb•ft)**
   Figure 1 RTV Sealant Points Front of Oil Pan
   Figure 2 RTV Sealant Points Rear of Oil Pan

https://truckmanualshub.com/

Oil Pump

Remove Oil Pump A41663-02

Start By: Remove oil pan.

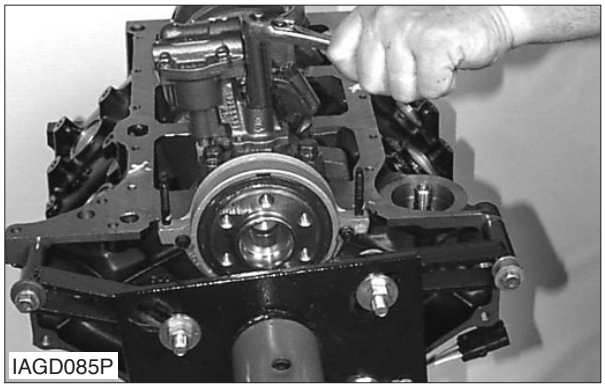
IAGD085P

1. Remove bolt from oil pump and main bearing cap.

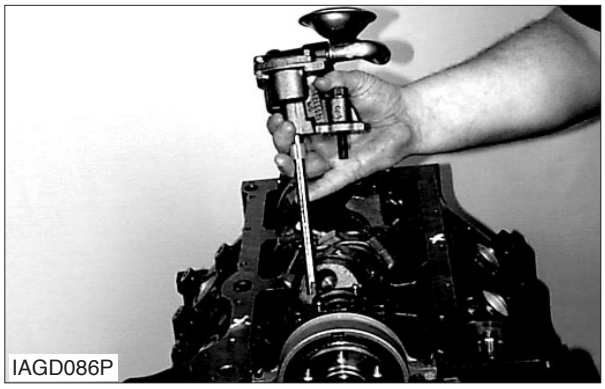
IAGD086P

2. Remove oil pump from engine

3. Remove pump drive shaft and retainer

Replace Oil Pump A41663-03

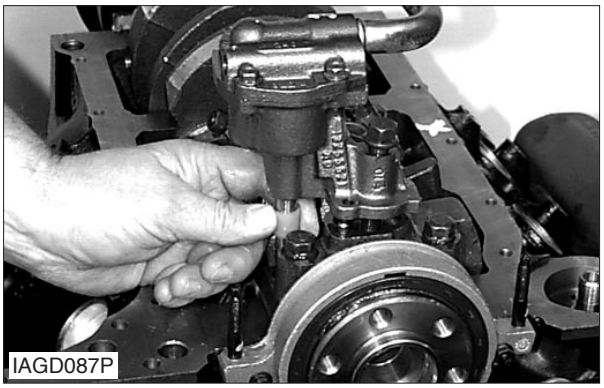
IAGD087P

1. Replace oil pump, retainer and pump drive shaft to engine. Make sure that the slot on the pump drive shaft is aligned with the tang on the distributor shaft.

IAGD088P

2. Assemble bolt to pump. Torque bolt to **90 N•m (66 ft•lb.).**

https://truckmanualshub.com/

Front Cover

Remove Front Cover A16999-02

NOTICE

Any time the front cover is removed, the cover must be replaced upon re-assembly. If the cover that was removed is reinstalled, oil leaks may develop.

Start By:
a. Removing crankshaft pulley.
b. Remove crankshaft balancer.

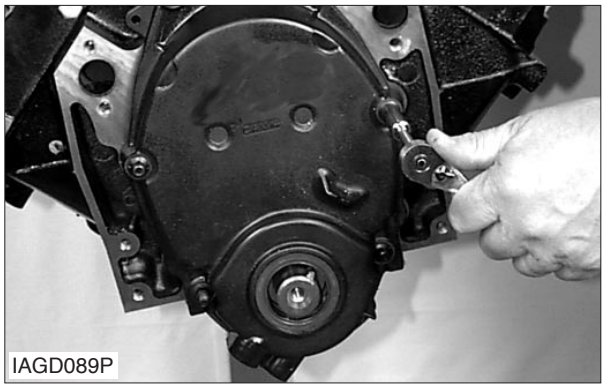
IAGD089P

1. Remove bolts from cover.

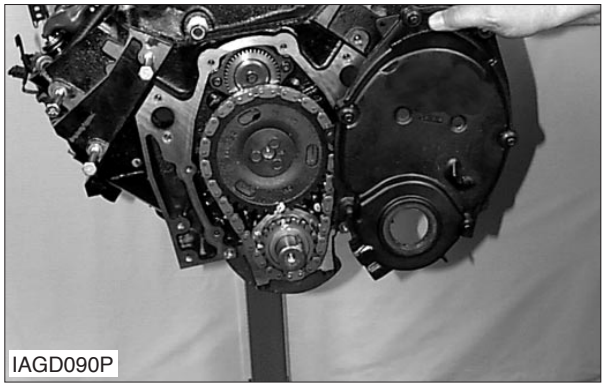
IAGD090P

2. Remove cover from engine.

Install Front Cover A16999-03

1. Install new front cover to engine.

NOTICE

Any time the front cover is removed, the cover must be replaced upon re-assembly. If the cover that was removed is reinstalled, oil leaks may develop.

2. Install bolts to front cover.

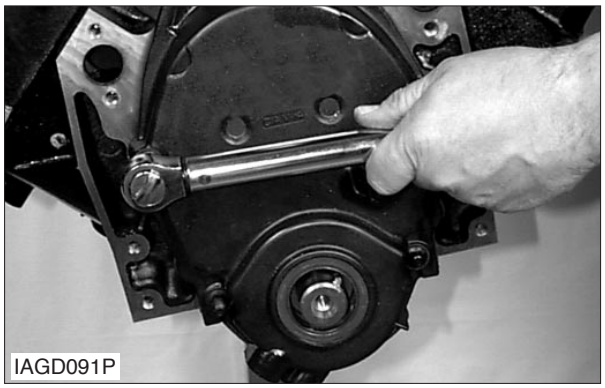
IAGD091P

3. Torque bolts to **9 N•m (80 lb•in.)**

https://truckmanualshub.com/

Timing Chain

Remove Timing Chain A16387-02

Start By:
a. Bring engine number 1 cylinder to TDC.
b. Removing front cover from engine.

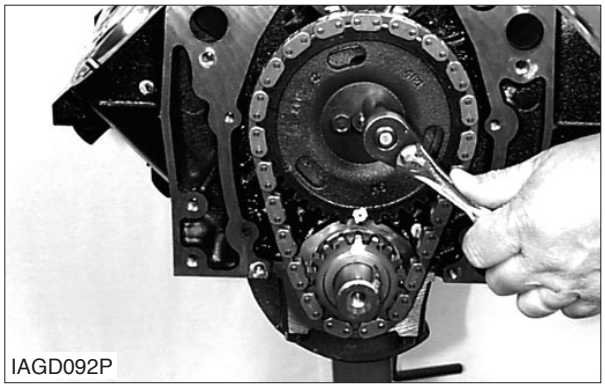
IAGD092P

1. Removing Camshaft Gear and bolts

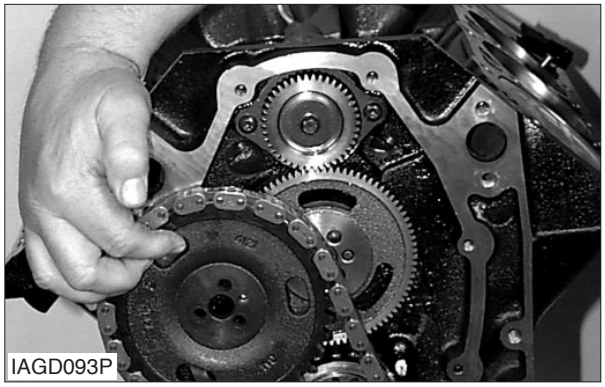
IAGD093P

2. Remove timing Chain.

Install Timing Chain A16387-03

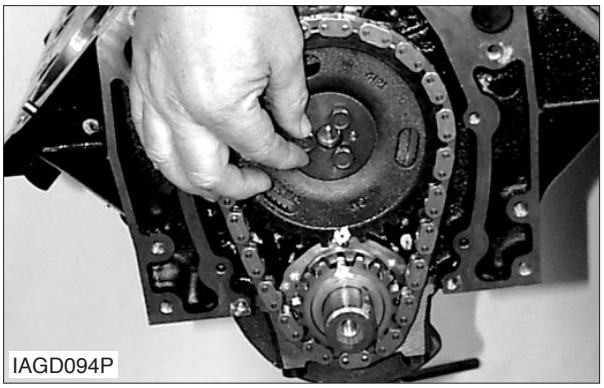
IAGD094P

1. Align all timing marks.

2. Install camshaft gear and chain to location.

3. Install bolts to camshaft gear.

NOTE: Make sure that you check all timing marks.

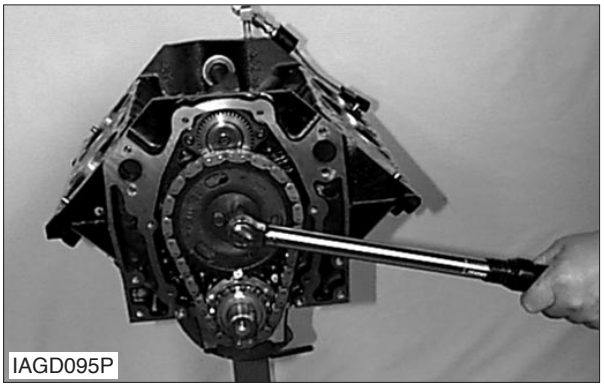
IAGD095P

4. Torque the camshaft gear mounting bolts to: **28 N•m (21 lb•ft.)**

5. Install NEW FRONT COVER and torque bolts to **9 N•m (80 lb•in.)**

https://truckmanualshub.com/

Camshaft

Remove Camshaft A17174-02

Start By:
a. Removing Camshaft Gear and bolts
b. Removing Timing Chain.

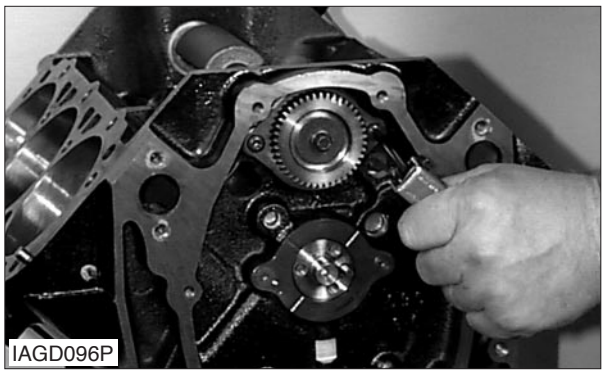
IAGD096P

1. Remove camshaft retainer screws and camshaft retainer

NOTE: Screws are held in place with thread lock.

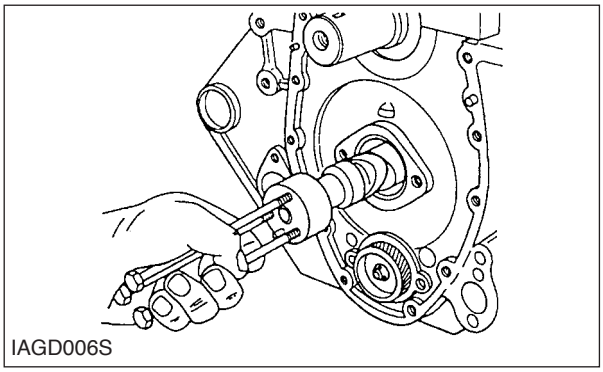
IAGD006S

2. Install 2 or 3 7.9375 mm (0.3125 “X 18 bolts) by 125 mm (3.937 in to 4.921) in length to camshaft. Use these bolts to handle the camshaft.
3. Remove the camshaft from the engine. Be careful not to damage the lobes of the camshaft or the bearings.

Install Camshaft A17174-03

Start By:
a. Coat camshaft lobes and journals with Engine Oil Supplement (GM P/N 1052367) or equivalent.
b. Apply Engine Oil Supplement (GM P/N 1052367) or equivalent, to all the teeth on the distributor and the retainer screws

1. Install 2 or 3 7.9375 mm (0.3125 “X” 18 bolts) by 125 mm (3.937 in to 4.921) in length to camshaft. Use these bolts to handle the camshaft.

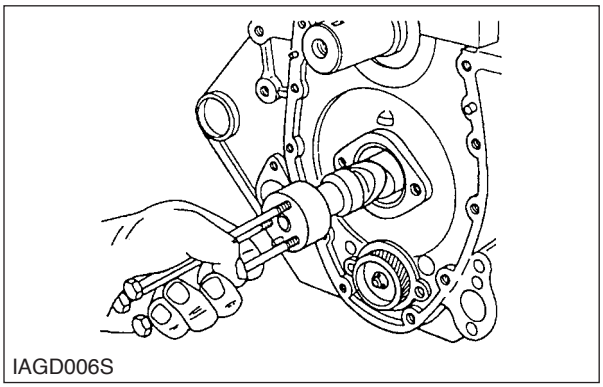
IAGD006S

2. Assemble the camshaft to the engine. Be careful not to damage the lobes or gears.
3. Install screws to the camshaft retainer and torque to **14 N•m (124 lb•in.).**

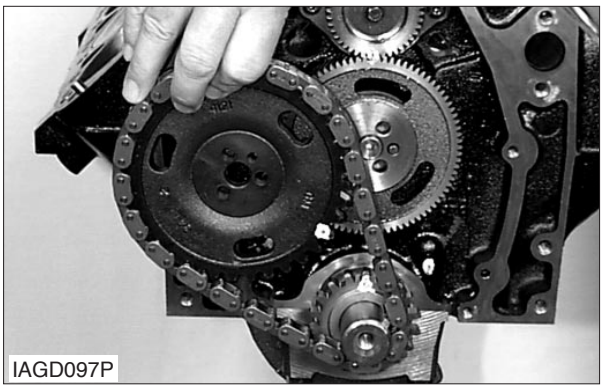
IAGD097P

5. Install Camshaft sprocket, timing chain and bolts to camshaft. Make sure all the timing marks are in the correct orientation. The number 4 cylinder will be at top dead center on the compression stroke with the timing marks in this position.
6. Torque camshaft sprocket bolts to **28 N•m (21 lb•ft.).**

https://truckmanualshub.com/

Camshaft Bearings

Remove Camshaft Bearings A17174-02

Start By: Remove camshaft from engine .

1. Remove rear camshaft plug.

2. Use tool to remove all camshaft bearings IAGD007S.

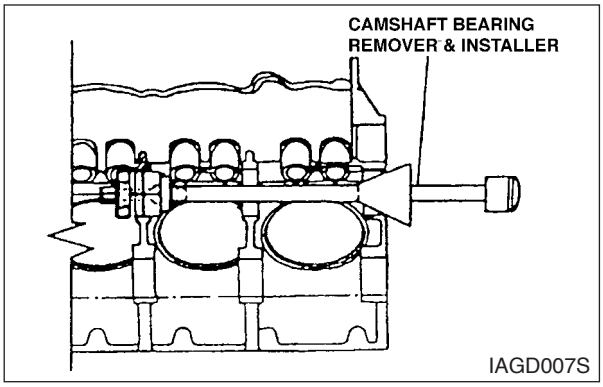

a. Insert the tool with the correct collet into the camshaft bearing you want to replace.

b. Turn the tool until the collet has tightened in the bearing.

c. Push the center cone against the block and into thebearing bore to center the tool .

d. Drive the bearing from the block.

e. Repeat this procedure to remove the remaining inner camshaft bearings.

NOTICE

The rear bearing must be removed from the front of the block and the frontbearing, from the rear. This allows the tool to remain centered.

Install Camshaft Bearings A17174-03

NOTICE

The outer camshaft bearing must be installed first. These bearings serve as a guide for the pilot, and help center the inner bearings during the installation process.

NOTICE

Make sure to fit the correct camshaft bearings into the bore. The camshaft bearing bores vary in size.

1. Install rear camshaft bearing from the front of the block. Drive the bearing into place using tool.

NOTICE

Make sure the camshaft bearing oil hole(or holes) align with the hole (or holes) in the block. Insert a 2 mm rod through the oil holes to check alignment.

2. Install the front camshaft bearing from the rear of the block using tool.

3. Install inner camshaft bearing using tool.

4. Install camshaft rear plug
   a. Coat the new camshaft plug with sealer GM P/N 12345493 or equivalent.
   b. Install the plug to the block. The plug must be installed deep enough in the camshaft bore to prevent leakage.

https://truckmanualshub.com/

Balance Shaft

Remove Balance Shaft

Start By:
a. Removing Timing chain.
b. Removing Camshaft Gear and bolts.

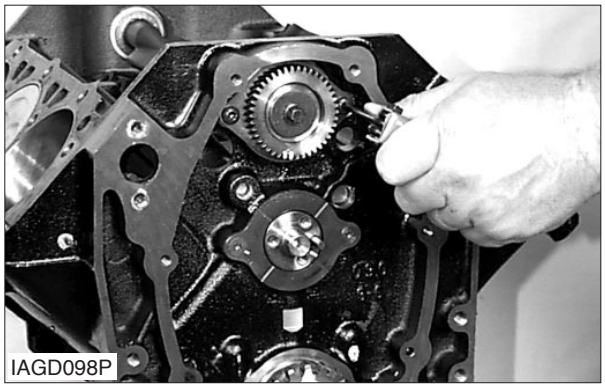
IAGD098P

1. Remove screws from flange.

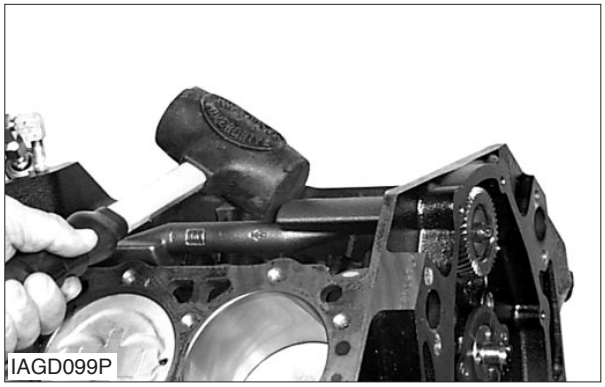
IAGD099P

2. Remove the balance shaft from the engine.

Install Balance Shaft

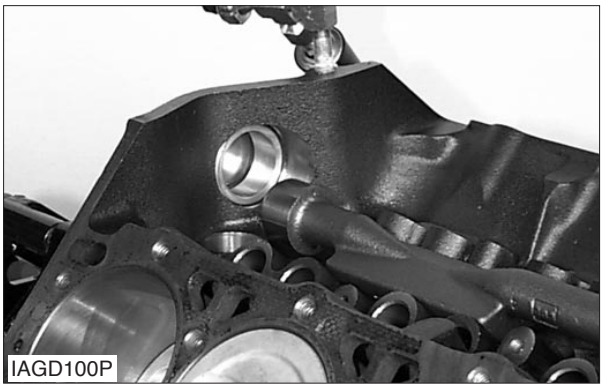
IAGD100P

NOTICE

During installation of balance shaft be careful not to damage bearings.

IAGD101P

1. Install balance shaft to engine

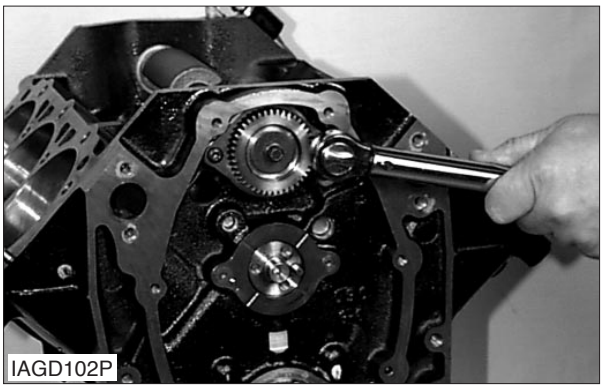
IAGD102P

2. Install screw to flange.

3. Torque screws to: **14 N•m (124 lb•in).**

https://truckmanualshub.com/

Crankshaft Sprocket

Remove The Crankshaft Sprocket

Start By: Removing Crankshaft pulley and Damper Assembly.

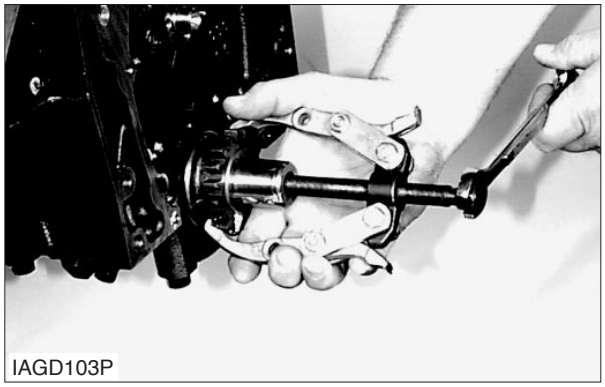
IAGD103P

1. Remove the crankshaft sprocket.

2. Remove the crankshaft key if necessary

Install The Crankshaft Sprocket

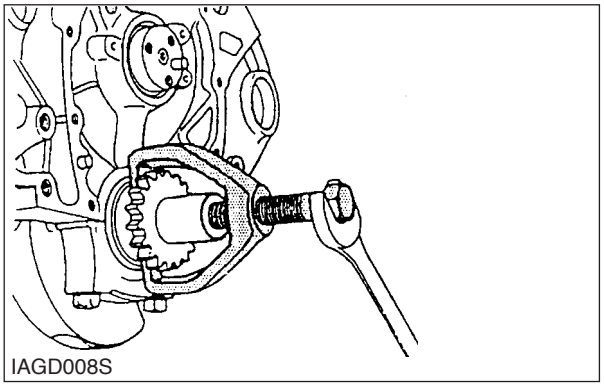
IAGD008S

1. Install the crankshaft key to the crankshaft.

2. Install crankshaft sprocket.

Pistons & Connecting Rods

Remove Pistons & Connecting Rods A14999-02

Start By:
a. Remove cylinder head assembly
b. Remove oil pump.

NOTE: The Piston Rod Bearings were marked with a punch for correct re-assembly. Original engines will not be so marked.

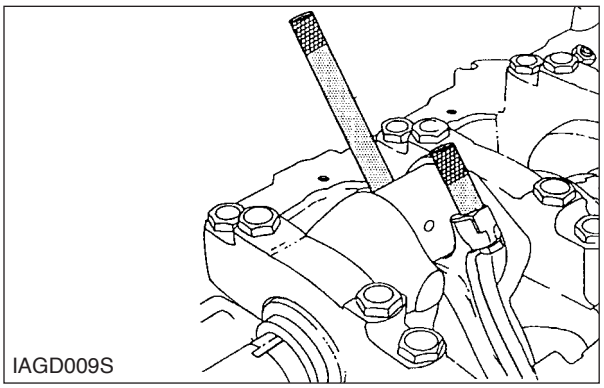
IAGD009S

1. Use tool to remove the cylinder wall ring ridge This operation will prevent damage to the pistons during removal.

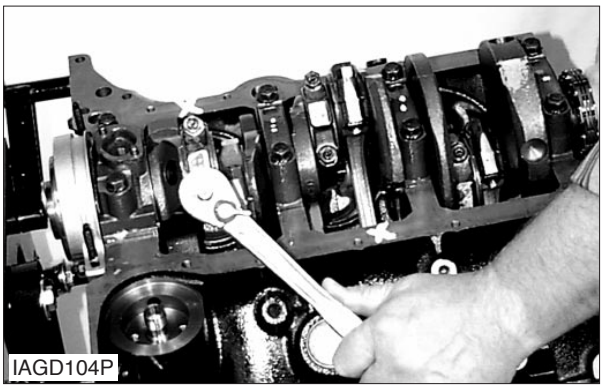
IAGD104P

2. Turn the crankshaft until two pistons are at the bottom of their stroke. Make a note of piston identification.

3. Remove the caps from the connecting rods of the two pistons.

https://truckmanualshub.com/

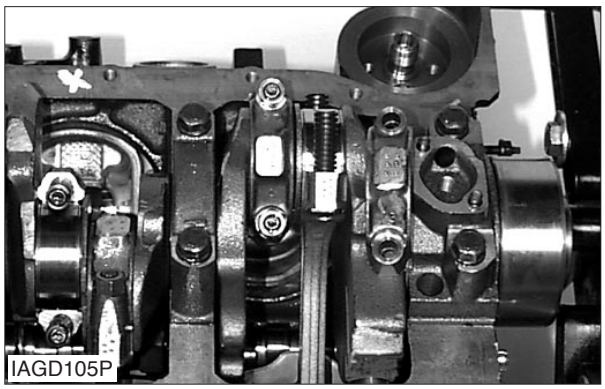
IAGD105P

4. Put tape or rubber hose (1) over the connecting rod threads to prevent damage to the crankshaft when the connecting rod and piston is being removed.

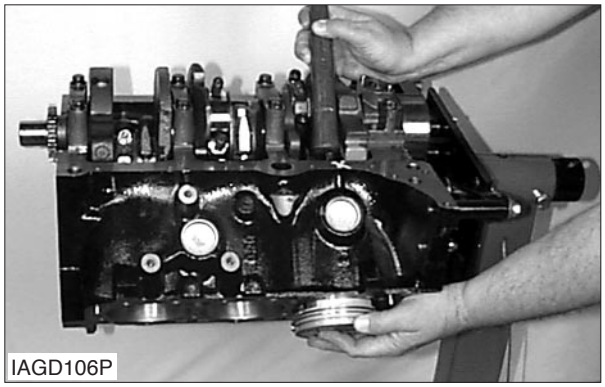
IAGD106P

5. Push the piston up until piston rings are free of the cylinder walls.
6. Remove the two pistons and connecting rods from the engine.
7. Follow steps 1 through 4 to remove the other pistons.

Install Pistons & Connecting Rods A14999-03

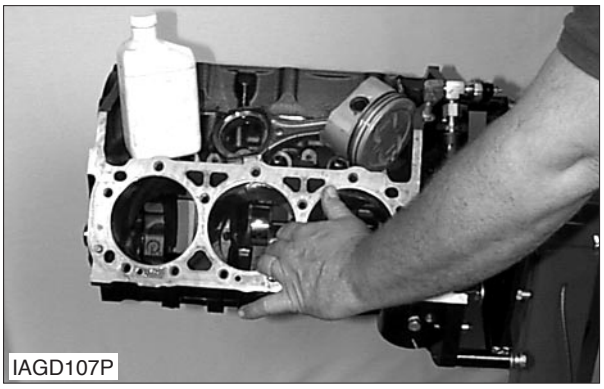
IAGD107P

1. Put tape or rubber hose over the connecting rod bolts.
2. Put clean engine oil on the pistons, piston rings, cylinder walls and connecting rod bearings.

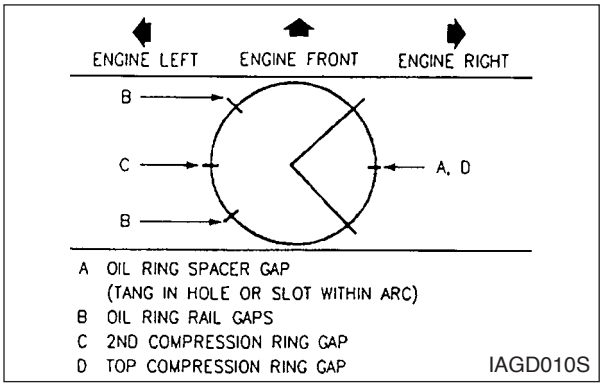

3. Locate the piston ring end gap as shown in figure 73..

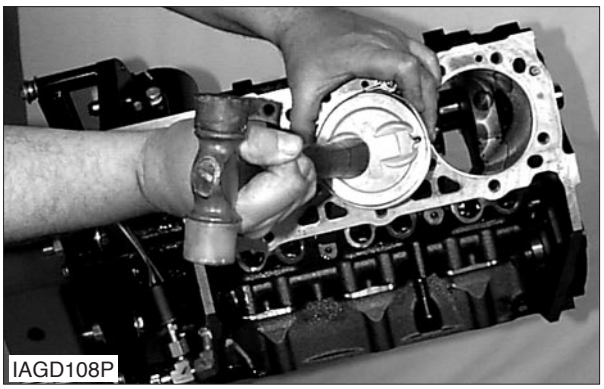
IAGD108P

4. Without disturbing the ring end gap location, Adjust a ring compressor to the piston and rings.

https://truckmanualshub.com/

NOTICE

The piston must be installed so the notch in the piston faces the front of the engine.

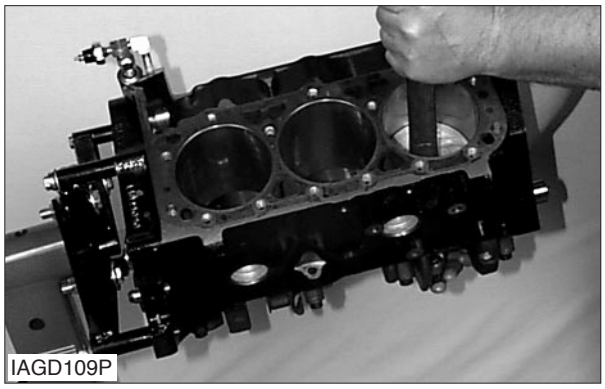
IAGD109P

5. Place the piston in its matching bore. The connecting rod bearing tang slots must be on the same side opposite the camshaft. Using light blows with a hammer handle, tap the piston down into place.

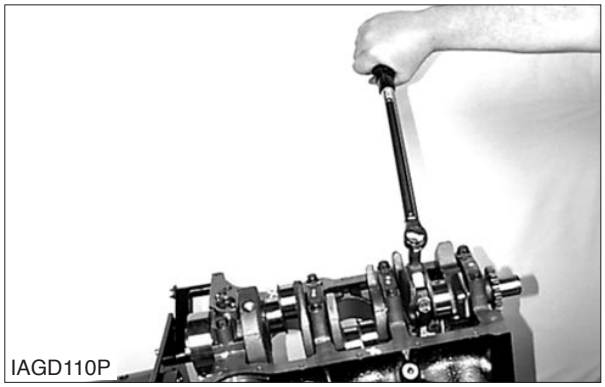
IAGD110P

6. Torque the connecting rod bolt nuts to: **27 N•m (20 lb•ft.) PLUS 70 DEGREES.**

Disassemble Pistons & Connecting Rods A14999-07

Start By: Remove pistons and connecting rods.

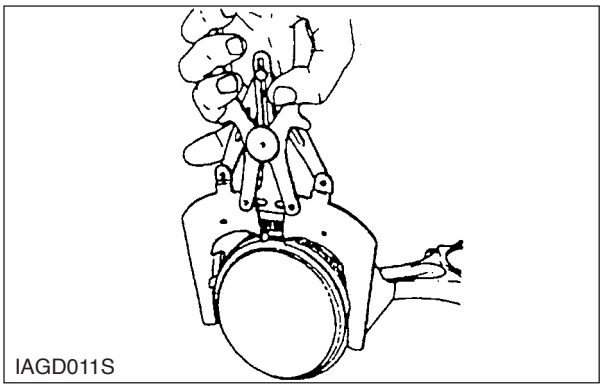
IAGD011S

1. Remove the rings from the piston with a ring expander.

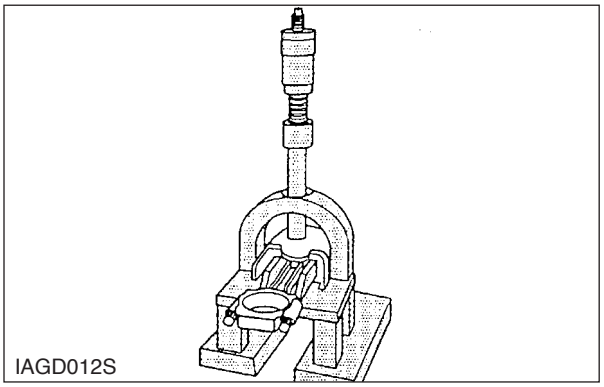
IAGD012S

2. Remove the piston pin from the piston. Then remove the rod and make a note of the rod number position in the piston.

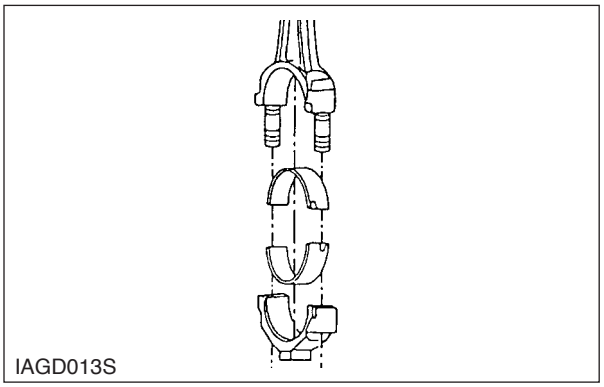
IAGD013S

3. Remove the rod pin bearing from the connecting rod by using an arbor press.

NOTE: Check the condition of the pistons and the connecting rods at this time.

https://truckmanualshub.com/

Assemble Pistons & Connecting Rods

1. Check all parts for damage. If any parts are damaged use new parts for replacement.
2. Make sure all parts are clean free of dirt and foreign material.
3. Install a new rod pin bearing in the connecting rod with a press and driver. Use a pin bore machine to make the bearing the correct size.
4. Put the connecting rod in the piston with the bearing tab groove opposite the camshaft. Install the piston pin to the rod.
5. Install new piston rings to piston as shown.

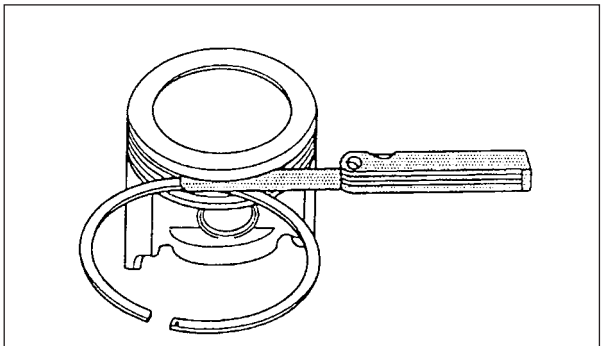

IAGD014S

6. Check the clearance between the piston ring grooves and the rings The maximum permissible clearance between the top compression ring and the grove is 0.10668 mm (0.0042 in) and 0.2032 mm (0.008 in) for the other two rings.
7. The maximum end gap clearance for worn compression rings cylinder bore is compression ring 0.889 mm (0.035 in) MAX. and the oil rings are 1.651 mm (0.065 in). Make sure the ring gaps are in the correct position before pistons are installed.

Crankshaft Rear Oil Seal

Remove Crankshaft Rear Oil Seal A1226-02

Start By: Removing the engine from the truck.

NOTICE

Take care when removing the rear crankshaft oil seal so not to damage the crankshaft sealing surface.

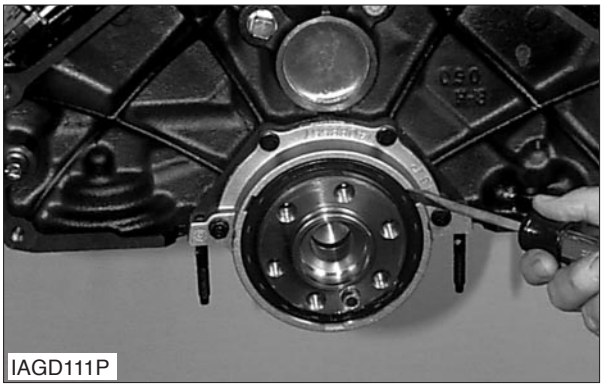

IAGD111P

1. Insert a screwdriver into the notches provided in the seal retainer and pry the seal out.

https://truckmanualshub.com/

Install Crankshaft Rear Oil Seal A1226-03

Tool Required: Seal Installer

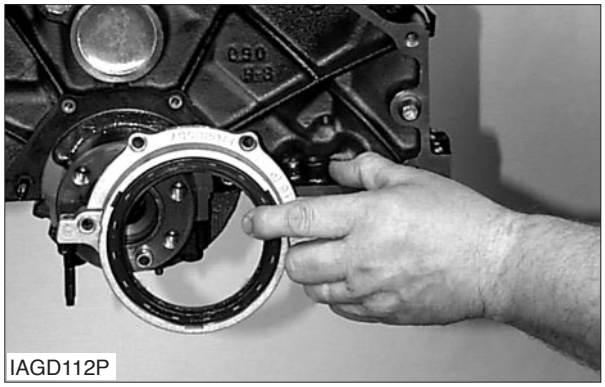
IAGD112P

1. Lubricate the inner and outer diameter of the seal with engine oil.

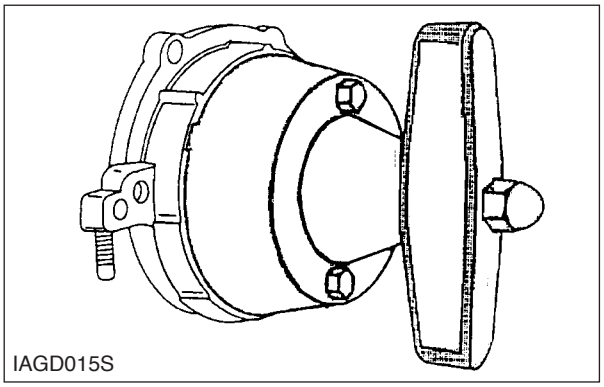
IAGD015S

2. Install the seal on seal installer.

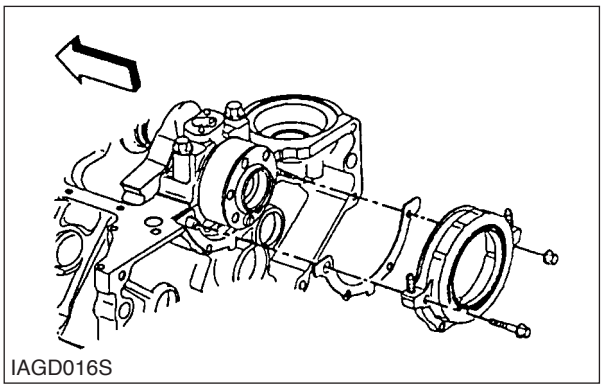
IAGD016S

3. Position seal installer against the crankshaft. Thread the attaching screws into the tapped holes in the crankshaft.

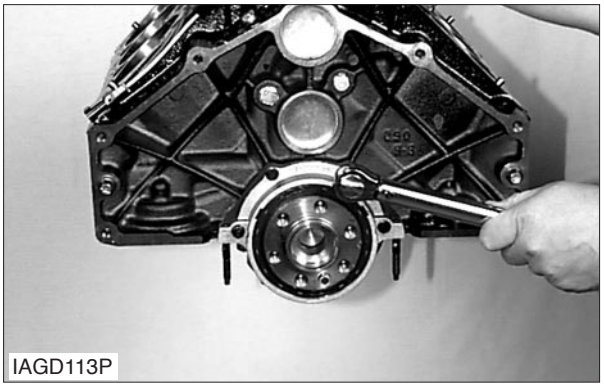
IAGD113P

4. Tighten the screws securely with a screwdriver. This will ensure that the seal is installed squarely over the crankshaft.
5. Turn the handle on the tool until it bottoms. Then remove the tool.

https://truckmanualshub.com/

Remove The Crankshaft Rear Oil Seal Housing A1226-02

Start By:
a. Removing the engine from the truck.
b. Then remove the oil pan.

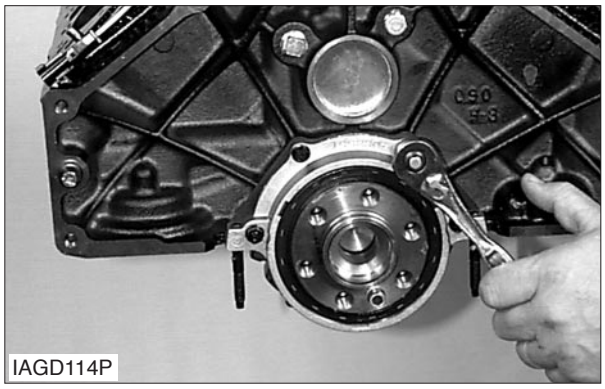
IAGD114P

1. Remove the bolts and nuts from the housing.

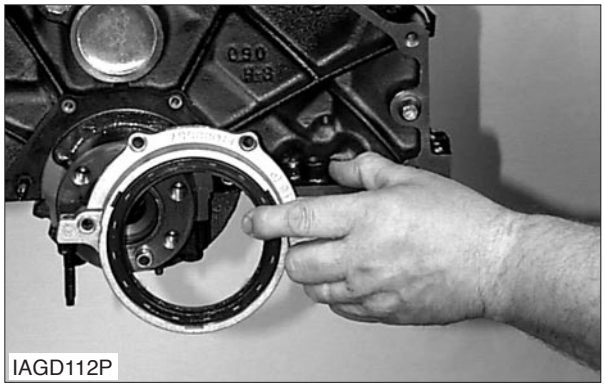
IAGD112P

2. Remove the oil seal housing.

3. Remove the gasket.

Install The Crankshaft Rear Oil Seal Housing A1226-03

Start By: Clean the gasket surface.

1. Install a new gasket to the block.

NOTE: It is not necessary to use sealant to hold the gasket in place.

2. Install the rear oil seal housing to engine.

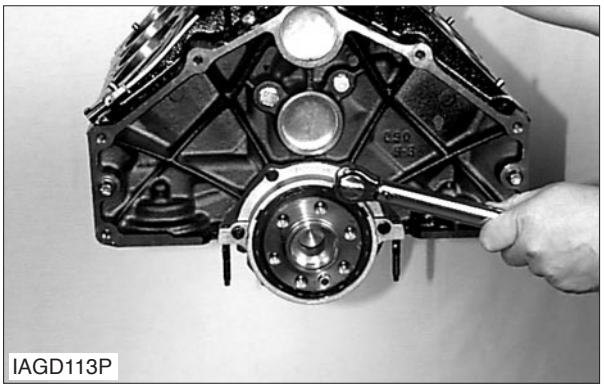
IAGD113P

3. Install bolts and nut to location. Torque the bolts and nuts to: **15 N•m (11 lb•ft.)**

NOTICE

Oil pan must be installed to proper location before the (2) nuts can be installed.

https://truckmanualshub.com/

Crankshaft

Remove The Crankshaft A12264-01

Start By:
a. Removing engine from truck
b. Remove oil pan.
c. Remove connecting rods and bearings

NOTICE

Be sure to mark bearings, rod and piston assemblies so when they are installed they will be in the correct location.

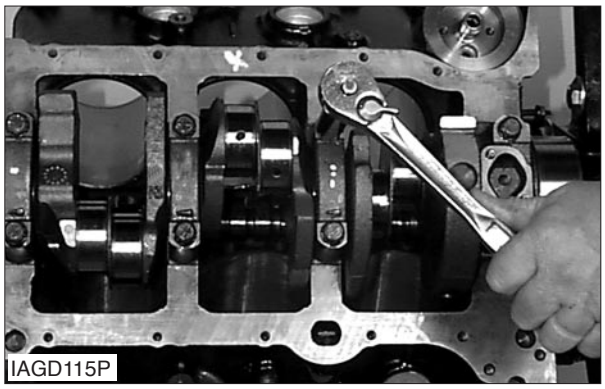
IAGD115P

1. Remove crankshaft bearing cap bolts.

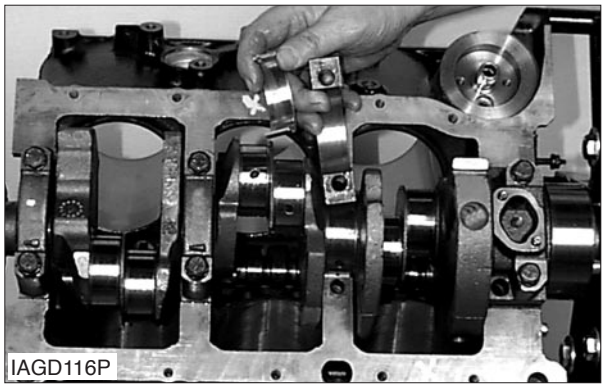
IAGD116P

2. Remove the crankshaft bearings and lower bearing inserts

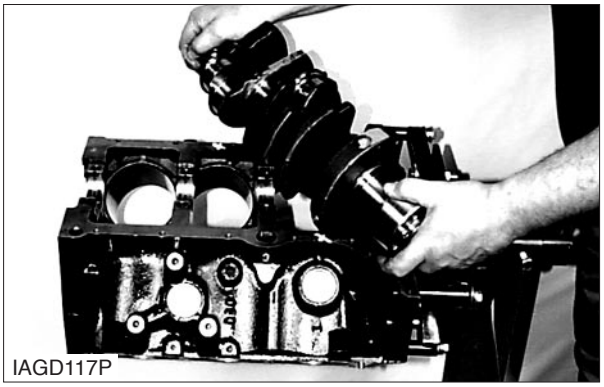
IAGD117P

3. Remove the crankshaft from the cylinder block with extreme care, take care to avoid damage to crankshaft journals and thrust flange surfaces.

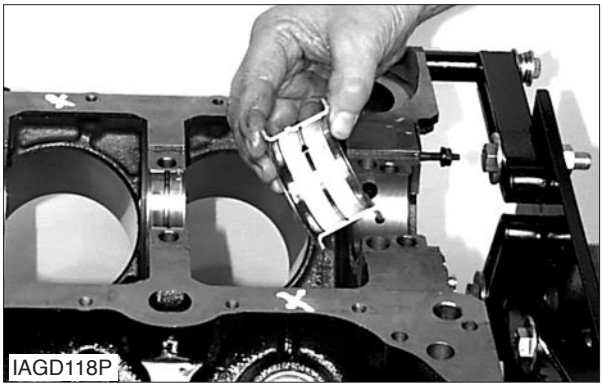
IAGD118P

4. Remove upper main bearing inserts.

https://truckmanualshub.com/

Install The Crankshaft A12264-03

Start By:

a. Making sure everything is clean.
b. Then lubricate all moving parts before they are installed.

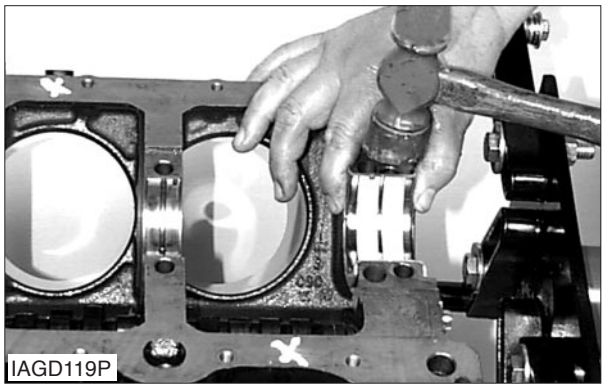
IAGD119P

1. Install upper crankshaft bearings to the block.

NOTICE

If any undersized bearings are used, they must be fitted to the proper journals.

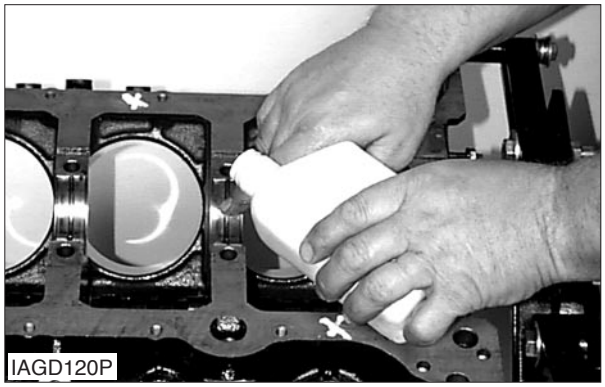
IAGD120P

2. Lubricate all moving parts lightly with engine oil or engine assembly lubricant.

3. Install crankshaft to cylinder block.

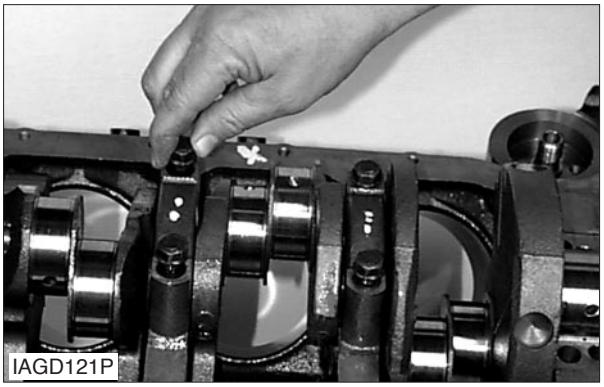
IAGD121P

4. Assemble lower crankshaft bearings to crankshaft bearing caps.

5. Install crankshaft bearing caps (except rear cap) and bolts to the block.

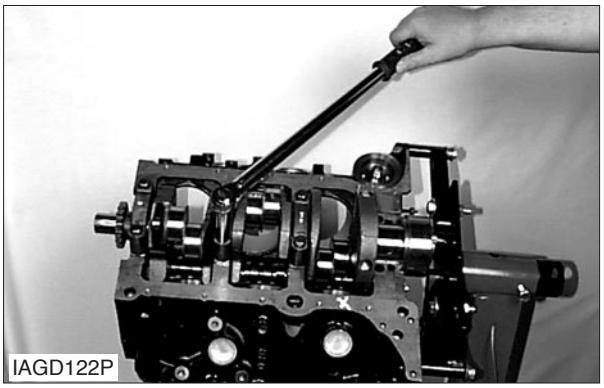
IAGD122P

6. Torque crankshaft bearing cap bolts (except rear cap) to: **105 N•m (77 lb•ft.).**

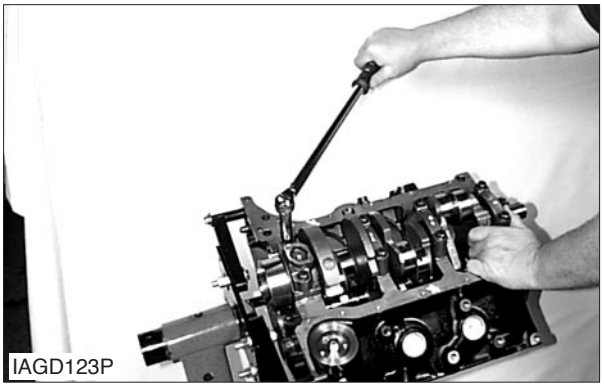
IAGD123P

7. Install rear crankshaft bearing and bolts Torque to: **105 N•m (77 lb•ft.).**

https://truckmanualshub.com/

SB2202E00
Jun. 1999

Specifications
Systems Operation
Testing & Adjusting
Disassembly & Assembly

Lift Trucks Power Train

D35S-2,	D40S-2,	D45S-2
D40SC-2,	D45SC-2,	D50SC-2
G35S-2,	G40S-2,	G45S-2
G40SC-2,	G45SC-2,	G50SC-2

https://truckmanualshub.com/

Important Safety Information

Most accidents involving product operation, maintenance and repair are caused by failure to observe basic safety rules or precautions. An accident can often be avoided by recognizing potentially hazardous situations before an accident occurs. A person must be alert to potential hazards. This person should also have the necessary training, skills and tools to perform these functions properly.

Read and understand all safety precautions and warnings before operating or performing lubrication, maintenance and repair on this product.

Basic safety precautions are listed in the “Safety” section of the Service or Technical Manual. Additional safety precautions are listed in the “Safety” section of the owner/operation/maintenance publication.
Specific safety warnings for all these publications are provided in the description of operations where hazards exist. WARNING labels have also been put on the product to provide instructions and to identify specific hazards. If these hazard warnings are not heeded, bodily injury or death could occur to you or other persons. Warnings in this publication and on the product labels are identified by the following symbol.

⚠ WARNING

Improper operation, lubrication, maintenance or repair of this product can be dangerous and could result in injury or death.
Do not operate or perform any lubrication, maintenance or repair on this product, until you have read and understood the operation, lubrication, maintenance and repair information.

Operations that may cause product damage are identified by NOTICE labels on the product and in this publication.

DAEWOO cannot anticipate every possible circumstance that might involve a potential hazard. The warnings in this publication and on the product are therefore not all inclusive. If a tool, procedure, work method or operating technique not specifically recommended by DAEWOO is used, you must satisfy yourself that it is safe for you and others. You should also ensure that the product will not be damaged or made unsafe by the operation, lubrication, maintenance or repair procedures you choose.

The information, specifications, and illustrations in this publication are on the basis of information available at the time it was written. The specifications, torques, pressures, measurements, adjustments, illustrations, and other items can change at any time. These changes can affect the service given to the product. Obtain the complete and most current information before starting any job. DAEWOO dealers have the most current information available.

https://truckmanualshub.com/

https://truckmanualshub.com/

Index

Specifications

Brake Drum Diameter 8

Differential 7

Drive Axle 8

Drive Axle Mounting Group 7

Drive Wheel Installation 7

Torque Converter 6

Transmission 7

Transmission Pump 6

Wheel Brakes 8

Systems Operation

Drive Axle 16
- Automatic Adjustment 17
- Wheel Brake Components 17

General Information 9

Power Shift Transmission 11
- Power Flow in High Speed Forward 15
- Power Flow in High Speed Reverse 13
- Power Flow in Low Speed Forward 14
- Power Flow in Low Speed Reverse 12

Torque Converter 10

Transmission Hydraulic System 18
- High Speed Forward 24
- High Speed Reverse 28
- Inching Valve Operation 30
- Low Speed Forward 22
- Low Speed Reverse 26
- Neutral Position 20
- Valve Function Chart 31

Testing And Adjusting

Additional Checks (Electrical System) 46

Inching Pedal Adjustment 42

Power Shift Transmission 37
- Converter Staal Test 39
- Shimming of Transmission Shaft Assembly 40
- Transmission Pressure Tests 37

Solenoid Test 46

Solenoid Voltage Check 45

Transmission Electrical System Troubleshooting 44

Troubleshooting 32
- Checks During Operation 32
- Differential 36
- Visual Checks 32

Wheel Brakes Adjustment 41

Disassembly and Assembly

Drive Axle 63

Torque Converter 47

Transmission 51

Transmission Control Valve 48

https://truckmanualshub.com/

https://truckmanualshub.com/

Specifications

General Tightening Torque

GENERAL TIGHTENING TORQUE FOR BOLTS, NUTS AND TAPERLOCK STUDS

The following charts give the standard torque values for bolts, nuts and taperlock studs of SAE Grade 5 or better quality. Exceptions are given in other sections of Service Manual where needed.

THREAD DIAMETER		STANDARD TORQUE	
inches	millimeters	lb•ft	N•m*
Standard thread 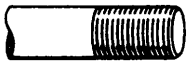		Use these torques for bolts and nuts with standard threads(conversions are approximate).	
1/14	6.35	9 ± 3	12 ± 4
5/16	7.94	18 ± 5	25 ± 7
3/8	9.53	32 ± 5	45 ± 7
7/16	11.11	50 ± 10	70 ± 15
1/2	12.70	75 ± 10	100 ± 15
9/16	14.29	110 ± 15	150 ± 20
5/8	15.88	150 ± 20	200 ± 25
3/4	19.05	265 ± 35	360 ± 50
7/8	22.23	420 ± 60	570 ± 80
1	25.40	640 ± 80	875 ± 100
1 1/8	28.58	800 ± 100	1100 ± 150
1 1/4	31.75	1000 ± 120	1350 ± 175
1 3/8	34.93	1200 ± 150	1600 ± 200
1 1/2	38.10	1500 ± 200	2000 ± 275
		Use these torques for bolts and nuts on hydraulic valve bodies.	
5/16	7.94	13 ± 2	20 ± 3
3/8	9.53	24 ± 2	35 ± 3
7/16	11.11	39 ± 2	50 ± 3
1/2	12.70	60 ± 3	80 ± 4
5/8	15.88	118 ± 4	160 ± 6
Taperlock stud		Use these torques for studs with Taperlock threads	
1/4	6.35	6 ± 2	8 ± 3
5/16	7.94	13 ± 4	17 ± 5
3/8	9.53	26 ± 4	35 ± 5
7/16	11.11	33 ± 7	45 ± 10
1/2	12.70	48 ± 7	65 ± 10
9/16	14.29	65 ± 11	90 ± 15
5/8	15.88	80 ± 11	110 ± 15
3/4	19.05	125 ± 15	170 ± 20
7/8	22.23	190 ± 22	260 ± 30
1	25.40	300 ± 30	400 ± 40
1 1/8	28.58	370 ± 30	500 ± 40
1 1/4	31.75	480 ± 37	650 ± 50
1 3/8	34.93	550 ± 37	750 ± 50
1 1/2	38.10	650 ± 37	870 ± 50

*1 newton meter(N•m) is approximately the same as 0.1kg•m

https://truckmanualshub.com/

Torque Converter

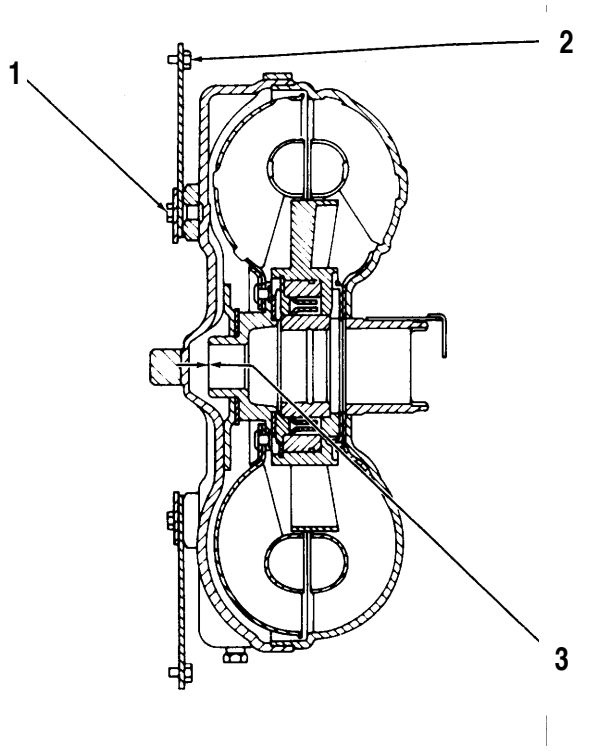

(1) Torque for bolts
(plate to torque converter.....45 ± 7 N•m
(33 ± 5 lb•ft)
Apply LOCTITE NO. 292 sealant to threads of bolts.

(2) Torque for bolts
(plate to flywheel).....25 ± 7N•m (18 ± 5 lb•ft)

(3) End play of turbine hub
(new).....0 to 0.99mm (0 to 0.039 in)
Maximum end play of turbine
hub(worn).....1.65mm (.065 in)

NOTE : For Torque values not given, see the page of specifications for general tightening torques.

Transmission Pump

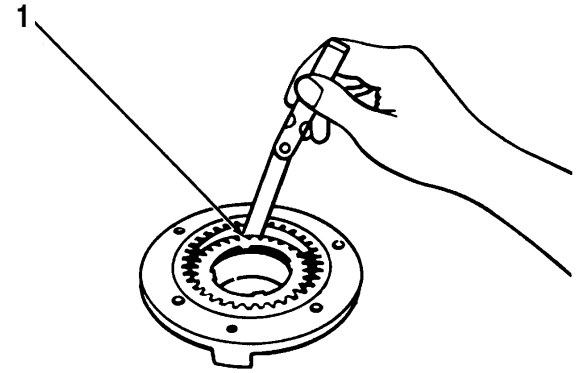

(1) Clearance between outside of drive gear and crescent .....0.36 to 0.43mm(.014 to .017 in)

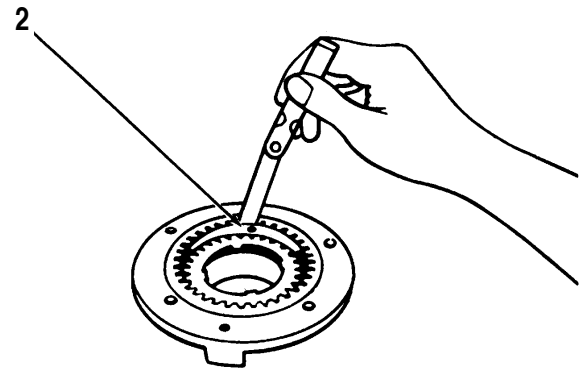

(2) Clearance between inside of driven gear and crescent .....0.25 to 0.33mm(.010 to .013 in)

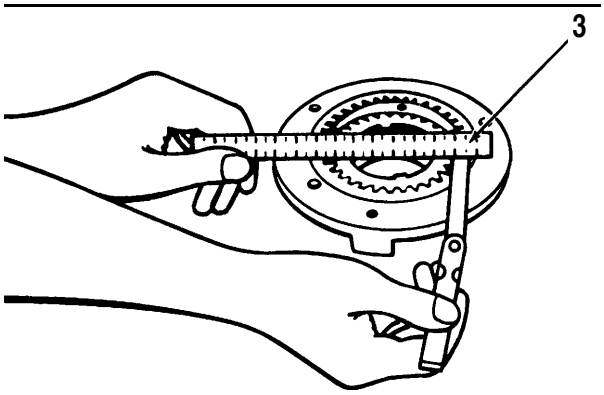

(3) Gear end play .....0.025 to 0.064 mm
(.0010 to .0025 in)

https://truckmanualshub.com/

Transmission

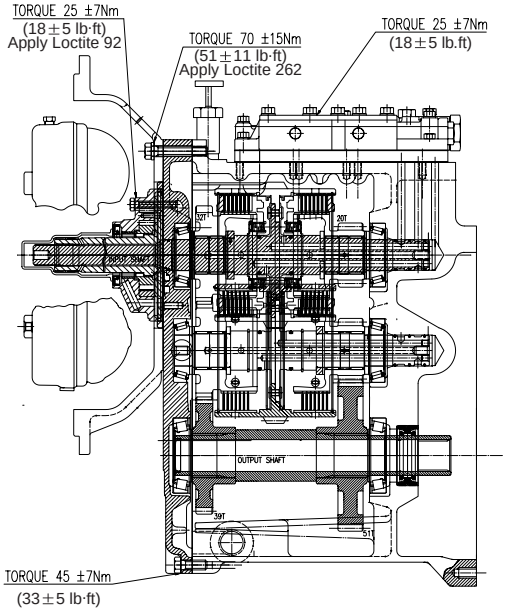

Drive Wheel Installation

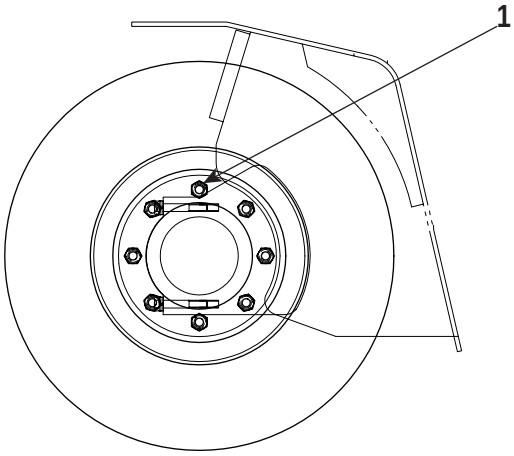

(1) Tighten wheel mounting nuts to a torque of .....600 ± 90 N•m (440 ± 60 lb•ft)

Drive Axle Mounting Group

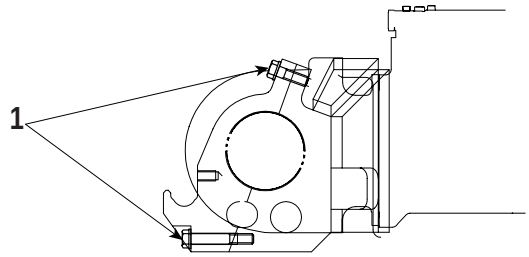

(1) Torque for bolts .....600 ± 50 N•m (440 ± 35 lb•ft)

Apply LOCTITE NO. 292 sealant to threads of bolts.

Differential

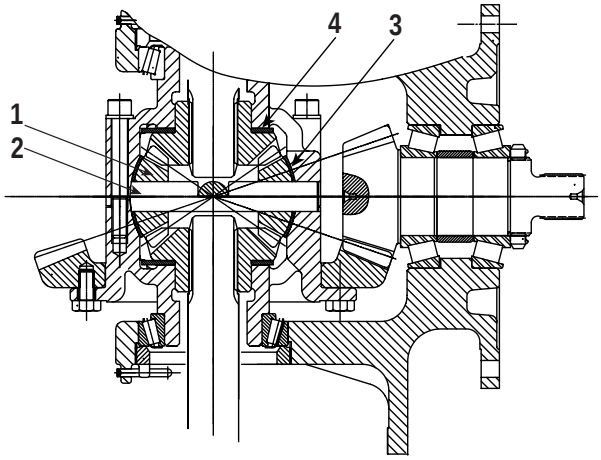

1) Pinion gear
   Inside diameter .....23.0 mm (0.906 in)
   Wear limit .....23.25 mm (0.915 in)

2) Spider
   Outside diameter.....23.0 mm (0.906 in)
   Wear limit .....22.75 mm (0.896 in)

3) Thrust washer
   Thickness .....2.0 mm (0.0787 in)
   Wear limit .....1.7 mm (0.0669 in)

4) Thrust washer
   Thickness .....3.2 mm (0.1260 in)
   Wear limit .....2.9 mm (0.1142 in)

https://truckmanualshub.com/

Drive Axle

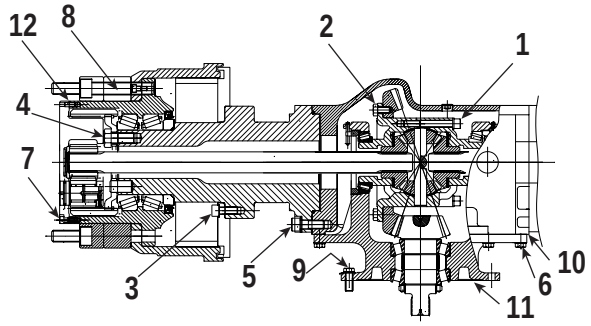

(1) Torque for bolts.....145 N•m (107 lb•ft)
Apply Loctite 262 to threads.

(2) Torque for bolts.....120 N•m (88 lb•ft)
Apply Loctite 262 to threads.

(3) Torque for bolts.....200 N•m (147lb•ft)
Apply Loctite 262 to threads.

(4) Torque for bolts.....690 N•m (510 lb•ft)
Apply Loctite 262 to threads.

(5) Torque for bolts.....270 N•m (200 lb•ft)
Apply Loctite 262 to threads.

(6) Torque for bolts.....54 N•m (40 lb•ft)

(7) Torque for bolts.....42 N•m (31 lb•ft)

(8) Torque for bolts(dual tire only).....950 N•m (700 lb•ft)
Apply Loctite 262 to threads

(9) Torque for bolts.....100 N•m(74 lb•ft)

(10) Apply Loctite 587 to the surface.

(11) Apply Loctite 17430 to the surface.

(12) Apply Loctite 515 to the surface.

Wheel Brakes

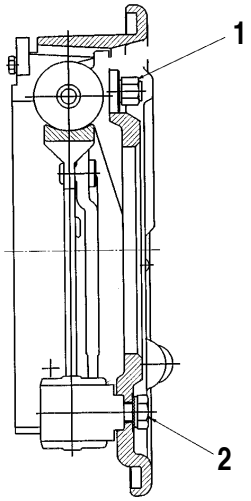

(1) Torque for bolts .....19 to 22 N•m (14 to 16 lb• ft)

(2) Torque for bolts .....120 ± 20 N•m (90 ± 15lb•ft)

Brake Drum Diameter

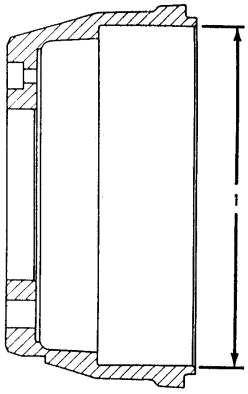

(1) Brake drum diameter.....315.0 to 315.2 mm (12.402 to 12.409 in)

Maximum total diameter of brake drums can be machined from the original diameter.....2.0 mm (0.079 in)

https://truckmanualshub.com/

Systems Operation

General Information

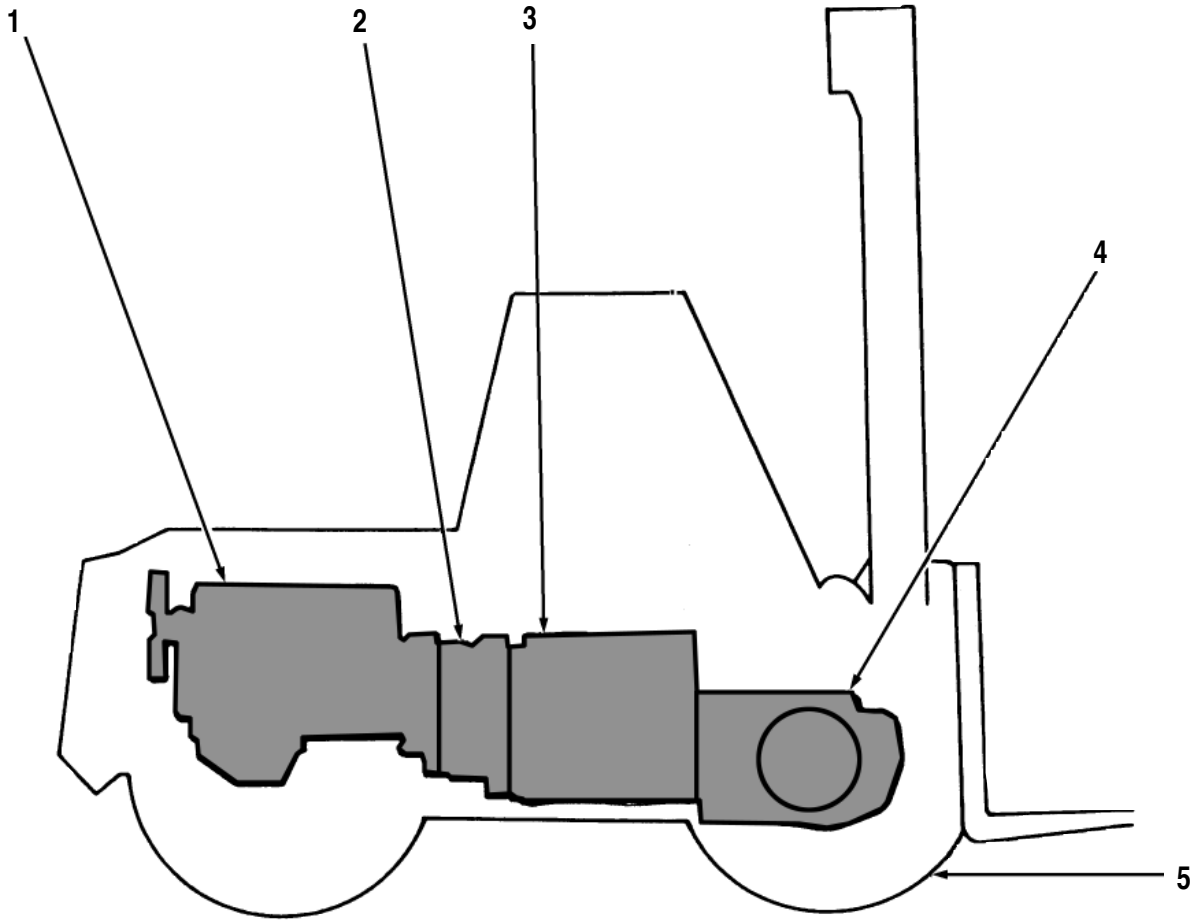

Power Shift Transmission
(1) Engine. (2) Torque converter. (3) Power Shift transmission. (4) Drive axle. (5) Drive wheels.

The basic components of the power train are : engine (1), torque converter (2), power shift transmission (3), drive axle (4) and drive wheels (5).

Power from the engine flywheel goes from the torque converter to the input shaft of the transmission. The power shift transmission is a constant mesh countershaft type and has four hydraulically operated clutches that are spring released. The transmission has two speeds in forward and two speeds in reverse.

Power from the transmission is sent through its output gear through the spiral bevel gear set to the differential. The differential sends power out the axles and to the wheels.

CAUTION

Damage can be caused to the transmission if the truck is moved with the engine not running. There will be no lubrication to the transmission components.

https://truckmanualshub.com/

Torque Converter

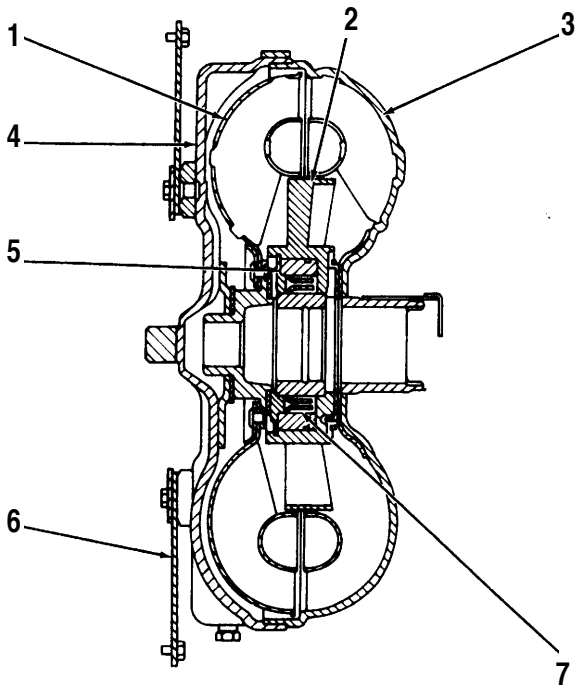

Torque Converter
(1) Turbine. (2) Stator. (3) Impeller. (4) Housing.
(5) Stator support. (6) Flex plate. (7) Stator clutch.

The torque converter hydraulically connects the engine to the transmission. There is no direct mechanical connection between the engine and the transmission.

When the machine works against a load, the torque converter can multiply the torque from the engine and send a higher torque to the transmission.

The oil for the operation of the torque converter comes from the transmission oil pump. The oil flows through a small passage in stator support (5) around the shaft of the stator support and into the converter. Outlet oil from the converter flows through the transmission oil cooler and into the lubrication system.

The torque converter has four main parts : housing (4), impeller(pump) (3), turbine (1) and stator (2). The housing is connected to the engine flywheel through flex plate (6). Impeller (3) and housing (4) are connected and turn with the engine flywheel at engine speed. Turbine (1) turns the transmission input shaft.
Stator (2) is installed stationary on stator support (5). Impeller (3), which turns with housing (4) at engine speed, directs the oil toward the outside of the impeller and against the blades of turbine (1). When the oil hits the turbine blades, it causes turbine (1) and the input shaft to turn. This sends torque to the transmission.

Oil returns through the stator vanes to the impeller. The stator vanes direct the oil back to the impeller that causes a torque increase. When the speed of turbine (1) is the same as the speed of impeller (3) stator clutch (7) permits the stator to turn freely with engine rotation but it locks(holds), to prevent opposite rotation to engine rotation. The free rotation of the stator helps also to decrease the sudden or fast movement of the oil which can cause aeration(air bubbles) in the hydraulic system.

When the turbine speed is less than the speed of impeller (3), stator (2) holds in place. Torque is multiplied only when the stator is held in place.

https://truckmanualshub.com/

Power Shift Transmission

The transmission is a constant mesh power shift transmission and gives two forward and two reverse speeds. The transmission has four clutches that are engaged hydraulically and released by spring force. The direction and speed are changed electrically.

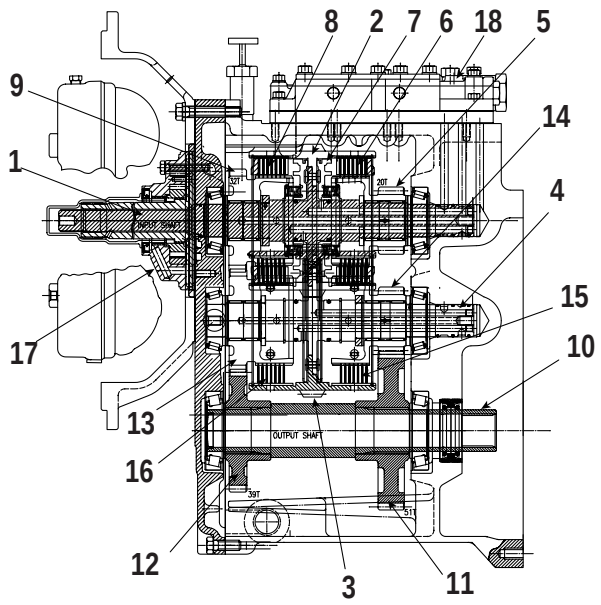

Power Shift Transmission
(1) Input shaft. (2) Cylinder clutch(reverse).
(3) Cylinder clutch (Forward). (4) Counter shaft.
(5) Gear(Reverse low). (6) Clutch(Reverse low). (7) Piston.
(8) Clutch(Reverse high). (9) Gear(Reverse high).
(10) Output shaft. (11) Output gear(low).
(12) Output gear(high). (13) Gear(Forward high).
(14) Gear(Forward low). (15) Clutch(Forward low).
(16) Clutch(Forward high). (17) Pump ass'y. (18) Valve ass'y.

In the power flow diagrams that follow, the components are shown in a position to make it easier to follow the power flow through the transmission. ILLUSTRATION A shows the transmission from the drive axle end with the correct location of the components.

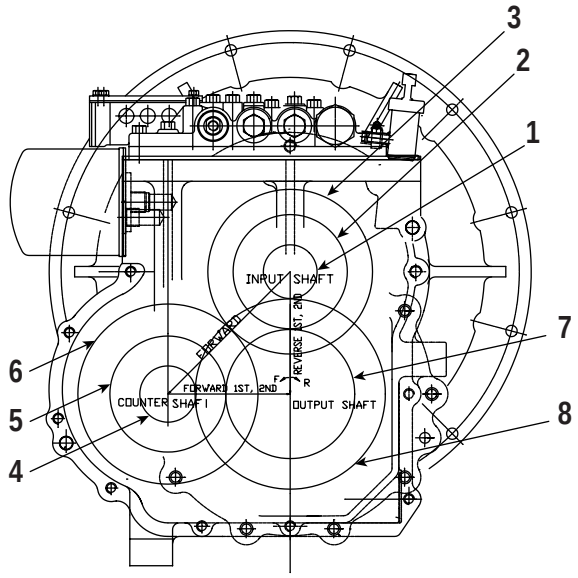

Illustration A
(1) Gear(Reverse low). (2) Gear(Reverse high).
(3) Cylinder clutch(Reverse). (4) Gear(Forward low).
(5) Gear(Forward high). (6) Cylinder clutch(Forward).
(7) Output gear(high). (8) Output gear(low).

Most all of the components inside the transmission turn when the controls are in either of the FORWARD or REVERSE speeds.

https://truckmanualshub.com/

Power Flow In Low Speed Reverse

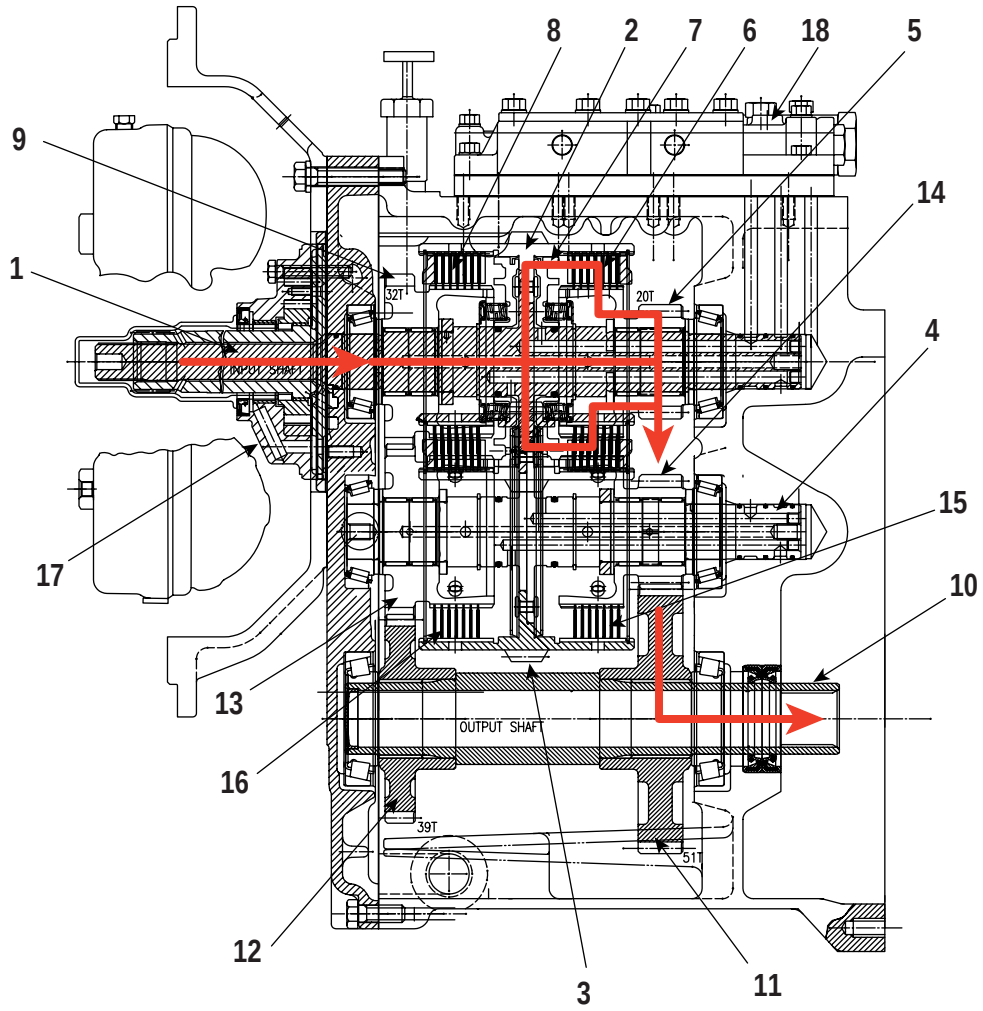

Power Flow in Low Speed Reverse.
(1) Input shaft. (2) Cylinder clutch(reverse). (3) Cylinder clutch (Forward). (4) Counter shaft. (5) Gear(Reverse low). (6) Clutch(Reverse low). (7) Piston. (8) Clutch(Reverse high). (9) Gear(Reverse high). (10) Output shaft. (11) Output gear(low). (12) Output gear(high). (13) Gear(Forward high). (14) Gear(Forward low). (15) Clutch(Forward low). (16) Clutch(Forward high). (17) Pump ass'y. (18) Valve ass'y.

Input shaft (1) of the transmission is turned by the turbine of the torque converter. The clutch cylinder (2) for the reverse clutches is connected to the input shaft by rivets.

When REVERSE low clutch (6) is engaged, gear (5) is turned through the clutch. Gear (5) is engaged with gear (11) and turns gear (11) [gear (11) is connected to output shaft (10) by splines]. Output shaft (10) sends the power to the drive axle.

https://truckmanualshub.com/

Power Flow In High Speed Reverse

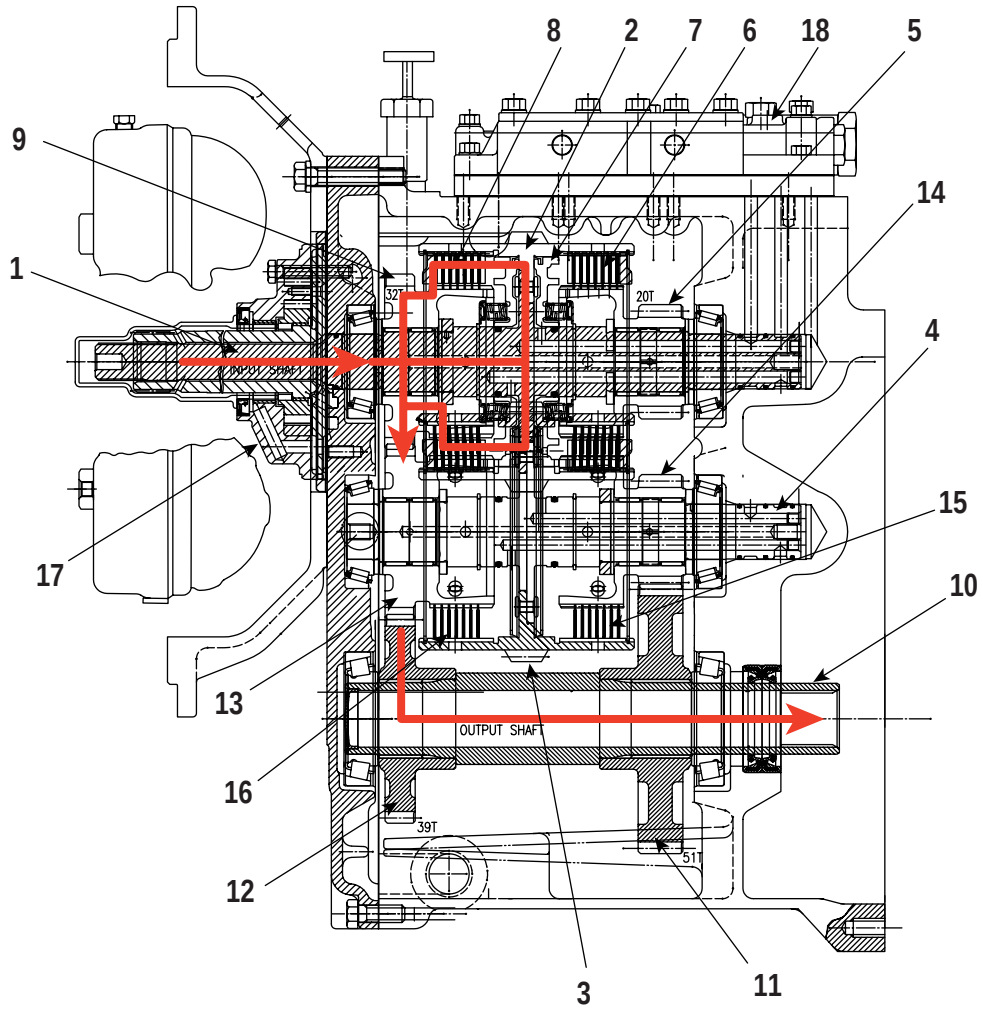

Power Flow in High Speed Reverse
(1) Input shaft. (2) Cylinder clutch(reverse). (3) Cylinder clutch (Forward). (4) Counter shaft. (5) Gear(Reverse low). (6) Clutch(Reverse low). (7) Piston. (8) Clutch(Reverse high). (9) Gear(Reverse high). (10) Output shaft. (11) Output gear(low). (12) Output gear(high). (13) Gear(Forward high). (14) Gear(Forward low). (15) Clutch(Forward low). (16) Clutch(Forward high). (17) Pump ass'y. (18) Valve ass'y.

Input shaft (1) of the transmission is turned by the turbine of the torque converter. The clutch cylinder (2) for the reverse clutches is connected to the input shaft by rivets.

When REVERSE high clutch (8) is engaged, gear (9) is turned through the clutch. Gear (9) is engaged with gear (12) and turns gear (12). [gear (12) is connected to output shaft (10) by splines]. Output shaft (10) sends the power to the drive axle.

https://truckmanualshub.com/

Power Flow In Low Speed Forward

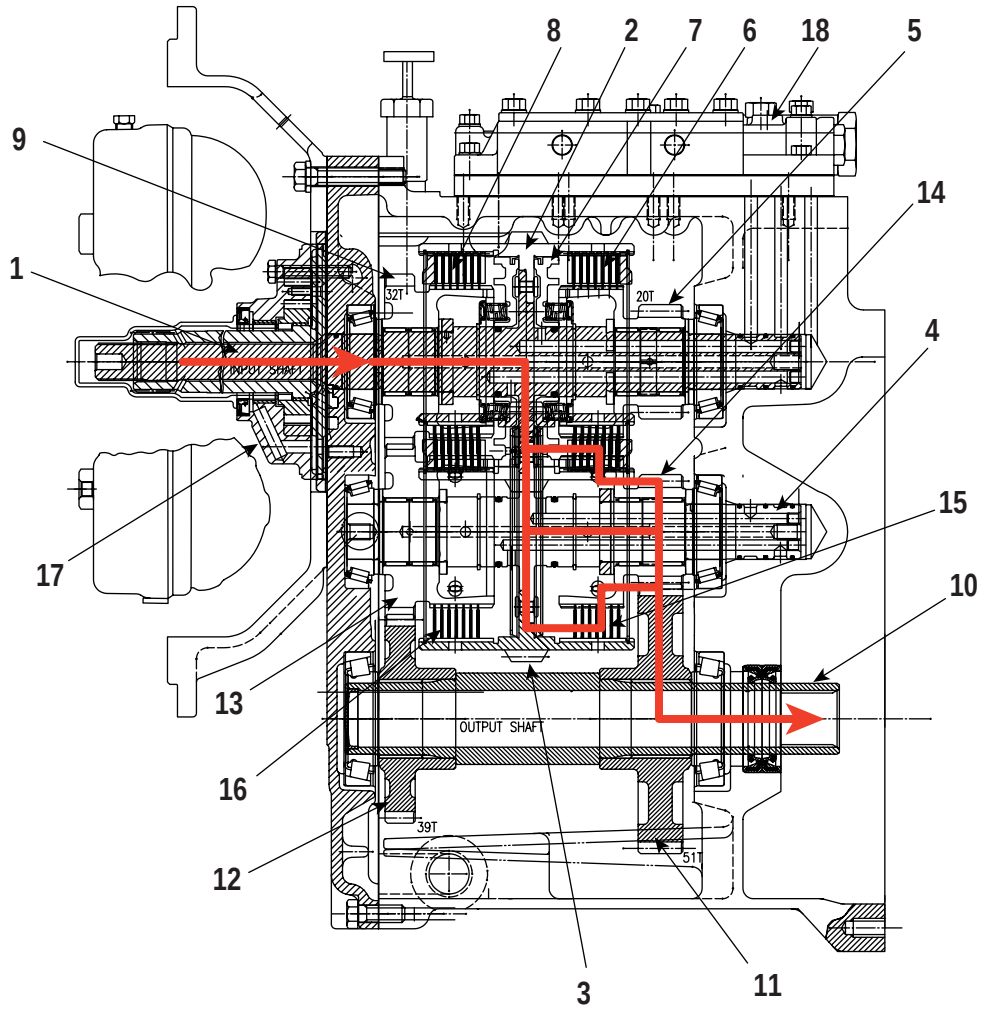

Power Flow in Low Speed Forward
(1) Input shaft. (2) Cylinder clutch(reverse). (3) Cylinder clutch (Forward). (4) Counter shaft. (5) Gear(Reverse low). (6) Clutch(Reverse low). (7) Piston. (8) Clutch(Reverse high). (9) Gear(Reverse high). (10) Output shaft. (11) Output gear(low). (12) Output gear(high). (13) Gear(Forward high). (14) Gear(Forward low). (15) Clutch(Forward low). (16) Clutch(Forward high). (17) Pump ass'y. (18) Valve ass'y.

Input shaft (1) of the transmission is turned by the turbine of the torque converter. The clutch cylinder (2) for the reverse clutches is connected to the input shaft by rivets. Clutch cylinder (2) is engaged with and turns clutch cylinder (3).

When FORWARD low clutch (15) is engaged, gear (14) is turned through the clutch. Gear (14) is engaged with gear (11) and turns gear (11). [gear (11) is connected to output shaft (10) by splines]. Output shaft (10) sends the power to the drive axle.

https://truckmanualshub.com/

Power Flow In High Speed Forward

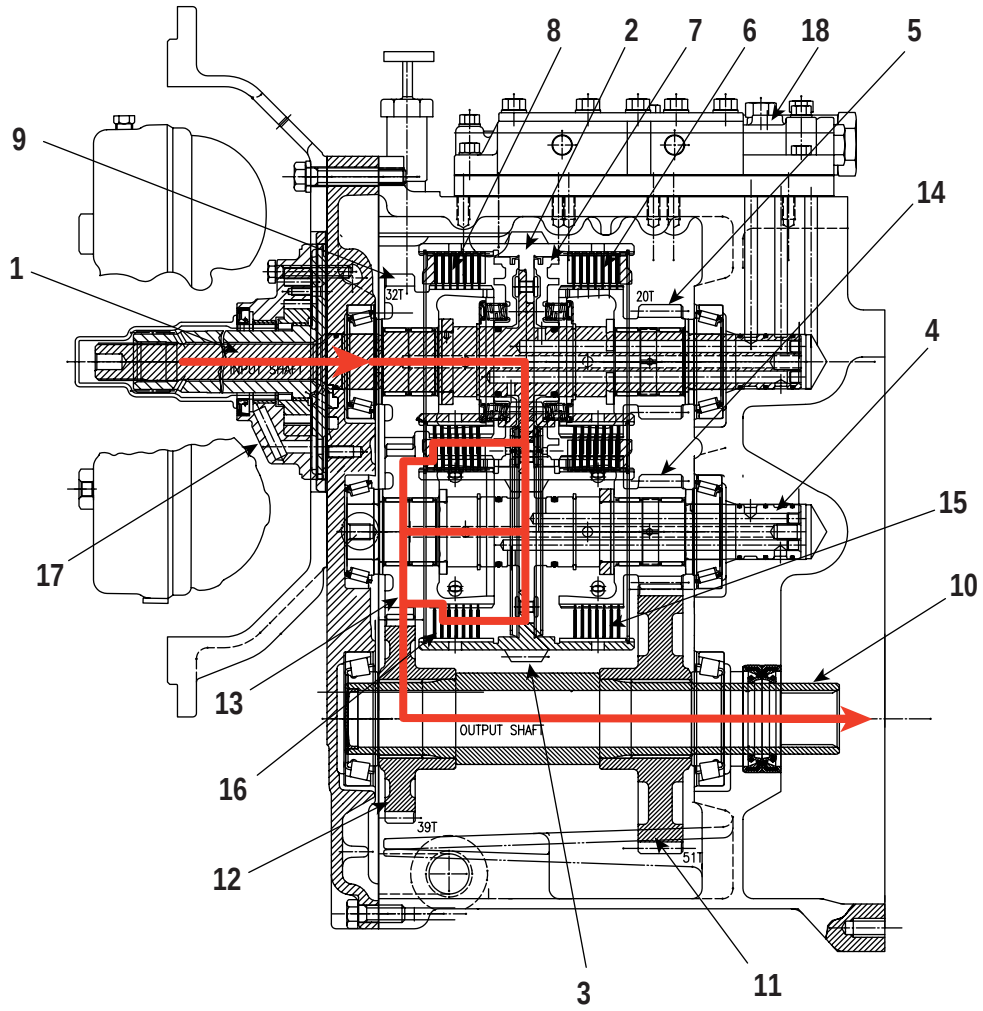

Power Flow in High Speed Forward
(1) Input shaft. (2) Cylinder clutch(reverse). (3) Cylinder clutch (Forward). (4) Counter shaft. (5) Gear(Reverse low). (6) Clutch(Reverse low). (7) Piston. (8) Clutch(Reverse high). (9) Gear(Reverse high). (10) Output shaft. (11) Output gear(low). (12) Output gear(high). (13) Gear(Forward high). (14) Gear(Forward low). (15) Clutch(Forward low). (16) Clutch(Forward high). (17) Pump ass'y. (18) Valve ass'y.

Input shaft (1) of the transmission is turned by the turbine of the torque converter. The clutch cylinder (2) for the reverse clutches is connected to the input shaft by rivets. Clutch cylinder (2) is engaged with and turns clutch cylinder (3).

When FORWARD high clutch (16) is engaged, gear (13) is turned through the clutch. Gear (13) is engaged with gear (12) and turns gear (12). [gear (12) is connected to output shaft (10) by splines]. Output shaft (10) sends the power to the drive axle.

https://truckmanualshub.com/

Drive Axle

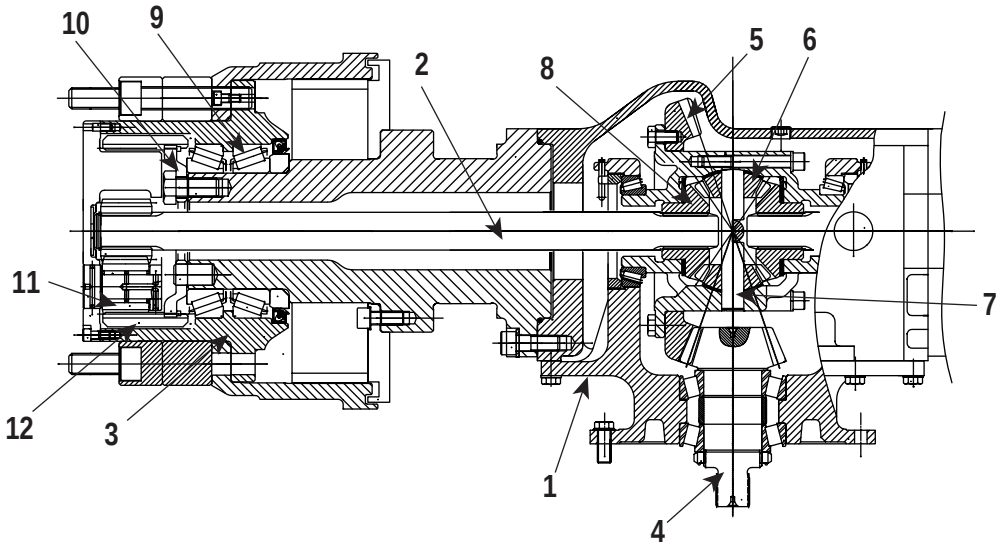

(1) Carrier Assembly. (2) Drvie Shaft. (3) Hub Assembly. (4) Pinion Gear. (5) Ring Gear. (6) Differential Pinion Gears. (7) Spider. (8) Side Gears. (9) Bearings. (10) Plate. (11) Planetary Gears. (12) Planetary Carrier.

The main components of the drive axle are : Carrier assembly (1), drive shaft (2) and hub assemnbly (3). The pinion gear (4) is splined to output shaft of the transmission.
Power from the transmission goes to the pinion (4) and ring gear (5) of the differential.
The differential turns the drive shafts (2). The differential is used to send the power from the transmission to the wheels. When one wheel is turned slower than the other, the differential lets the inside wheel stop or turn slower in relation to the outside wheel.

The differential has four pinions (6), spider (7) and two side gears (8).
The connection between four pinions (6) and two side gears (8) is at right angles through a gear mesh. Splines make the connection between side gears (8) and the drive shafts (2).
The drive shafts (2) are connected through planetary gears (11) and carrier (12) to the wheel hubs (3) and drive the wheels.

The wheel hubs run on tapered roller bearings (9). The hub bearings are held in position by plate (10) and bolts. The hub and bearings are turned by drive shaft (2) and planetary gears (11) through planetary carrier (12).

https://truckmanualshub.com/

Wheel Brake Components.

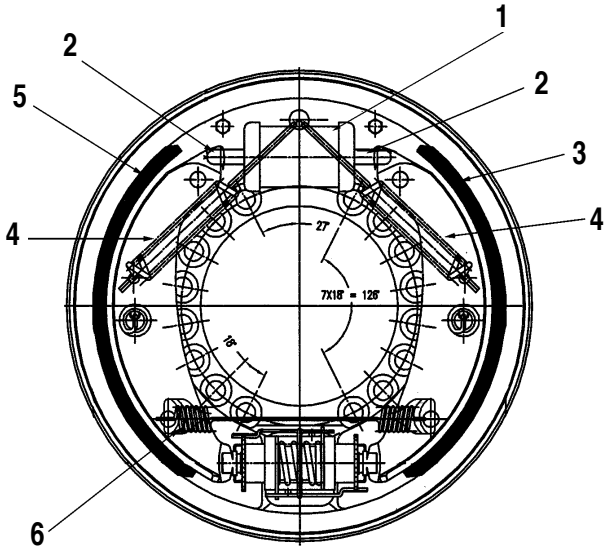

ICPS017S

(1) Wheel Cylinder. (2) Wheel Cylinder Pistons.
(3) Secondary Shoe. (4) Return Springs. (5) Primary Shoe.
(6) Return Spring.

When the brake pedal is pushed down, the master cylinder sends brake oil (hydraulic oil) to wheel cylinder (1). Wheel cylinder pistons (2) are pushed out and move primary shoe (5) and secondary shoe (3). The brake shoes move out until they make contact with brake drum.

When the brake action first starts, primary shoe (5) comes in contact with the rotating brake drum. This contact of the primary shoe puts some force on secondary shoe (3) to help put it in position against the drum. As a result, the braking action is increased.

When the brake pedal is released, brake shoe return springs (6) and (4) pull brake shoes (3) and (5) away from the drum surface. They also push wheel cylinder pistons (2) back into wheel cylinder (1).

NOTICE

The brake oil used in the truck is hydraulic oil. The hydraulic oil is replenished automatically from the hydraulic oil tank through the hydraulic line when the additional oil is needed.

Automatic Adjustment

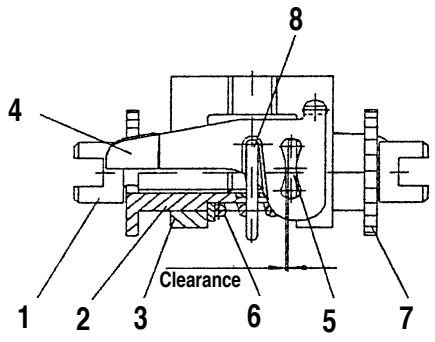

ICPS023S

Brake Adjuster
(1) Adjusting Bolt. (2) Sleeve. (3) U-shaped bracket.
(4) Adjusting Lever. (5) Adjusting Screw (6) Spring.
(7) Adjusting Wheel (8) Spring.

By means of an adjusting bolt (1), the primary shoe pushes a sleeve (2) through a U-shaped bracket (3), which at the same time acts as the bearing bracket.This thrust movement causes the adjusting lever (4) to be actuated by means of an adjusting disc (5) and to migrate to the side as the result of transmission. As soon as the braking process and the associated movement of the brake shoes have finished, and the shoes have returned to their idle position supported by the compression spring (6) which at the same time serves as a centering point, a toothed adjusting wheel (7) is indexed on as a result of engagement by the adjusting lever which is tensioned by compressed spring (8) and which is restored by the support of the compression spring (6) and the adjusting disc (5). In this way, the adjusting bolt (1), in which the brake shoe is mounted, is unscrewed. This adjusting process per braking action is repeated until the sliding movement of the primary brake shoe is no longer sufficient to overcome a fixed clearance marked in the adjusting lever.
This set clearance ensures that the diameter of the brake remains constantly adjustable at a certain dimension.

https://truckmanualshub.com/

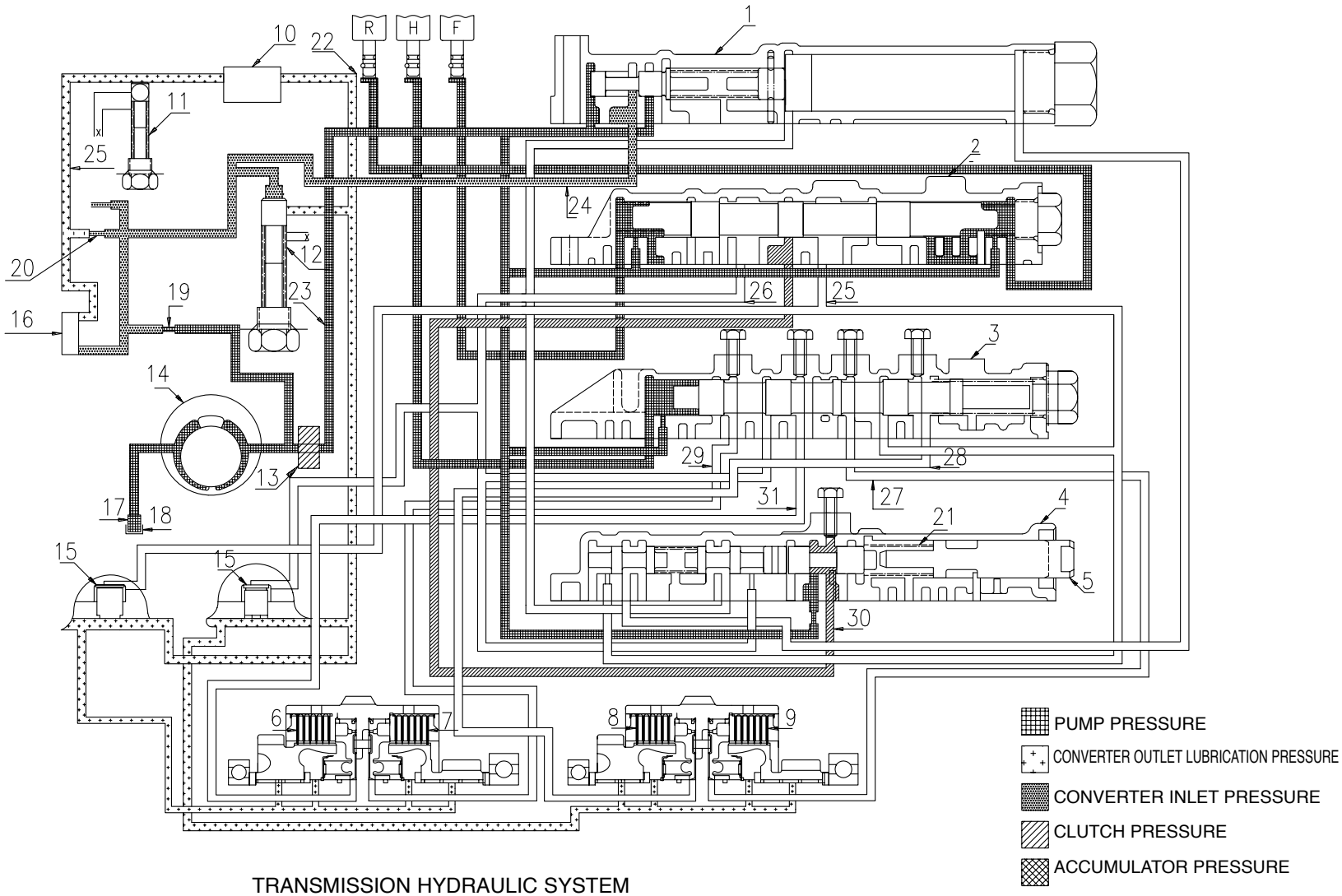

TRANSMISSION HYDRAULIC SYSTEM

1. Main regulator volve.
2. Directional selector valve.
3. Speed selector valve.
4. Inching valve.
5. Inching plunger.
6. Reverse high clutch.
7. Reverse low clutch.
8. Forward high clutch.
9. Forward low clutch.
10. Oil cooler.
11. Oil cooler bypass valve.
12. Converter regulator valve.
13. Filter.
14. Pump.
15. Lube priority valve.
16. Torque converter.
17. Strainer.
18. Reservoir.
19. Orifice.
20. Orifice.
21. Inching valve spring.
22. Passage.
23. Passage.
24. Passage.
25. Passage.
26. Passage.
27. Passage.
28. Passage.
29. Passage.
30. Passage.
31. Passage.

https://truckmanualshub.com/

Transmission Hydraulic System
(1) Main regulator valve. (2) Directional selector valve.
(3) Speed selector valve. (4) Inching valve.
(5) Inching plunger. (6) Reverse high clutch.
(7) Reverse low clutch. (8) Forward high clutch.
(9) Forward low clutch. (10) Oil cooler.
(11) Oil cooler bypass valve. (12) Converter regulator valve.
(13) Filter. (14) Pump. (15) Lube priority valve.
(16) Torque converter. (17) Strainer. (18) Reservoir.
(19) Orifice. (20) Orifice. (21) Inching valve spring.
(22) Passage. (23) Passage. (24) Passage.
(25) Passage. (26) Passage. (27) Passage. (28) Passage.
(29) Passage. (30) Passage. (31) Passage.

The basic components of the hydraulic system for the operation of the transmission and torque converter (16) are oil reservoir (18) and the oil screen (17), oil pump (14), oil filter (13), cooler bypass valve (11), oil cooler (10) and the transmission control valve. All oil passages are inside the transmission case and the transmission control valve body, except the transmission hydraulic lines connected to oil cooler (10).

On the pages that follow are descriptions of the transmission's three basic operational systems. 1. transmission pump (14), filter (13), torque converter (16) and oil cooler (10) systems. 2. transmission lubrication system and 3. transmission hydraulic control system which gives the lift truck direction and speed control.

Transmission Pump, Filter, Torque Converter and Oil Cooler Systems

The oil for the operation and lubrication of the transmission and torque converter (16) is made available by internal gear pump (14). The pump is bolted on the front transmission cover and is turned by tangs on the impeller housing of the torque converter

Oil reservoir (18) for the transmission is in the bottom of the transmission case. Oil from the reservoir flows through the screen and the case passages to the suction side of the positive displacement pump.
The oil from pump (14) flows in two directions, most of the oil flow goes to the filter and back to the transmission hydraulic control valve.
If there is a restriction in the oil filter, or if the viscosity of the oil is very high, the bypass valve in the filter housing will open. This will let the oil flow go onto the transmission control valve. The remainder, flows in the case inner passage through orifice (19), which gives a reduction to the oil pressure, and to torque converter (16). The purpose of this orifice is to supply oil to the torque converter at low speeds and especially during cold oil start ups.

From the outlet of the torque converter the oil goes past cooler bypass valve (11), through the oil cooler external inlet line and into oil cooler (10). Cooler bypass valve (11) will release oil back to the reservoir if the oil pressure is 480 kPa (70 psi) or more, for an example if the oil cooler has a restriction or if the oil is cold and thick.

Transmission Lubrication System

Oil for lubrication of the clutch shaft bearings(on either end of the clutches) and cooling the clutch discs and plates comes from the outlet of oil cooler (10) through passage (22) to reverse high clutch (6), reverse low clutch (7), forward high clutch (8) and forward low clutch (9). The lubrication oil flow is especially important for cooling the clutches. High temperatures can be caused during inching of the lift truck (partial oil pressure to the clutches causes clutch discs and plates to slide against each other).

Transmission Hydraulic Control System

The basic components of the transmission control valve are : main regulator valve (1), inching valve (4), directional selector valve (2) and speed selector valve (3).

https://truckmanualshub.com/

Neutral Position

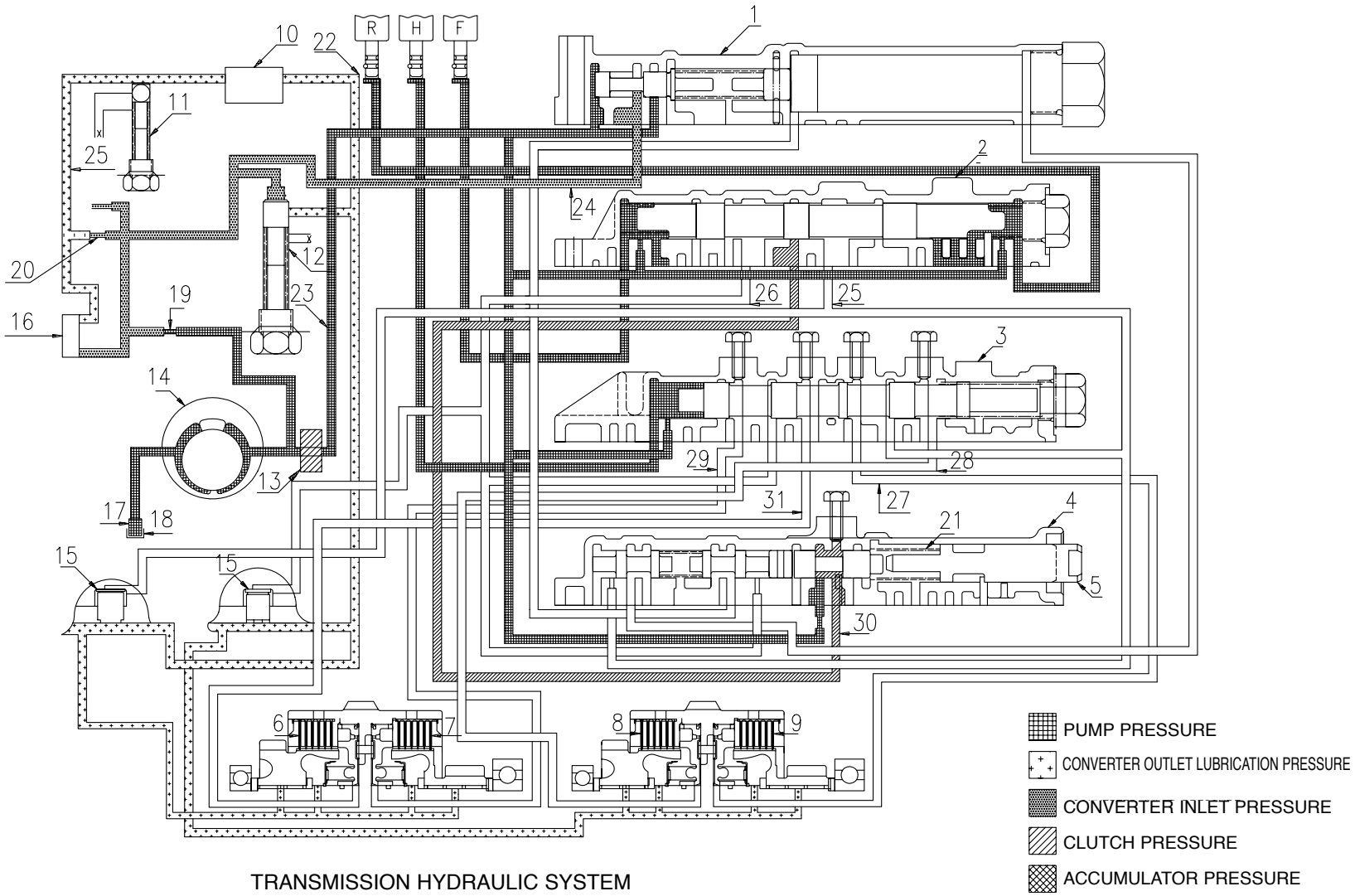

TRANSMISSION HYDRAULIC SYSTEM

1. Main regulator volve.
2. Directional selector valve.
3. Speed selector valve.
4. Inching valve.
5. Inching plunger.
6. Reverse high clutch.
7. Reverse low clutch.
8. Forward high clutch.
9. Forward low clutch.
10. Oil cooler.
11. Oil cooler bypass valve.
12. Converter regulator valve.
13. Filter.
14. Pump.
15. Lube priority valve.
16. Torque converter.
17. Strainer.
18. Reservoir.
19. Orifice.
20. Orifice.
21. Inching valve spring.
22. Passage.
23. Passage.
24. Passage.
25. Passage.
26. Passage.
27. Passage.
28. Passage.
29. Passage.
30. Passage.
31. Passage.

https://truckmanualshub.com/

Transmission Hydraulic Controls-Neutral
(1) Main regulator valve. (2) Directional selector valve.
(3) Speed selector valve. (4) Inching valve. (5) Inching plunger
(6) Reverse high clutch. (7) Reverse low clutch.
(8) Forward high clutch. (9) Forward low clutch. (10) Oil cooler.
(11) Oil cooler bypass valve. (12) Converter regulator valve.
(13) Filter. (14) Pump. (15) Lube priority valve.
(16) Torque converter. (17) Strainer. (18) Reservoir.
(19) Orifice. (20) Orifice. (21) Inching valve spring.
(22) Passage. (23) Passage. (24) Passage. (25) Passage.
(26) Passage. (27) Passage. (28) Passage. (29) Passage.
(30) Passage. (31) Passage.

When the hydraulic controls are in NEUTRAL position with the engine running. Oil is pulled from reservoir (18) through the screen to pump (14). From there pump oil flows through filter (13), passage (23) to inching valve (4), main regulator valve (1), directional selector valve (2) and speed selector valve (3). Oil will also flow through orifice (19) to lubricate the torque converter at low engine speed.

The main regulator valve controls main line pressure at 860 kPa (125 psi). When main line pressure reaches 860 kPa (125 psi), the spool of main regulator valve (1) will move to the right and pressure oil will flow through passage (24) to torque converter (16). Oil can also bypass the torque converter through orifice (20).
The purpose of orifice (20) is to prevent too much of a pressure load being put on the torque converter.

Oil flows from the torque converter through passage (25) to oil cooler (10). Oil then flows through passage (22) to cool and lubricate the clutches and shaft bearings.

In NEUTRAL position, pressure oil also flows into inching valve (4) and allows oil to flow to directional selector valve (2) through passage (30).
The spool of directional selector valve (2) will not let oil flow to the speed selector valve (3) through passages (25) or (26). The spool of speed selector valve will move to the right.

https://truckmanualshub.com/

Low Speed Forward

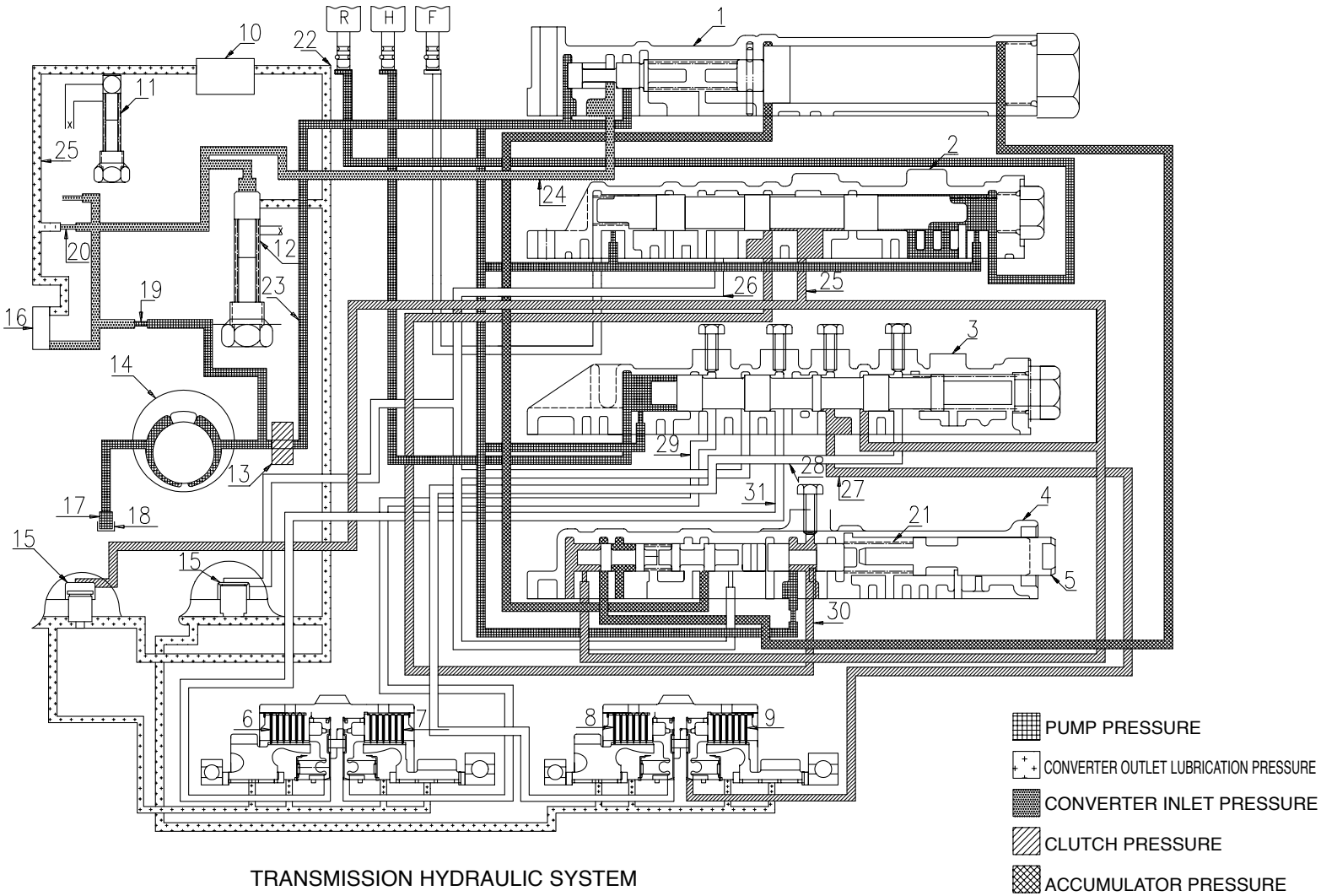

TRANSMISSION HYDRAULIC SYSTEM

1. Main regulator volve.
2. Directional selector valve.
3. Speed selector valve.
4. Inching valve.
5. Inching plunger.
6. Reverse high clutch.
7. Reverse low clutch.
8. Forward high clutch.
9. Forward low clutch.
10. Oil cooler.
11. Oil cooler bypass valve.
12. Converter regulator valve.
13. Filter.
14. Pump.
15. Lube priority valve.
16. Torque converter.
17. Strainer.
18. Reservoir.
19. Orifice.
20. Orifice.
21. Inching valve spring.
22. Passage.
23. Passage.
24. Passage.
25. Passage.
26. Passage.
27. Passage.
28. Passage.
29. Passage.
30. Passage.
31. Passage.

https://truckmanualshub.com/

Transmission Hydraulic Controls-Low Speed Forward
(1) Main regulator valve. (2) Directional selector valve.
(3) Speed selector valve. (4) Inching valve.
(5) Inching plunger. (6) Reverse high clutch.
(7) Reverse low clutch. (8) Forward high clutch.
(9) Forward low clutch. (10) Oil cooler.
(11) Oil cooler bypass valve. (12) converter regulator valve.
(13) Filter. (14) Pump. (15) Lube priority valve.
(16) Torque converter. (17) Strainer. (18) Reservoir.
(19) Orifice. (20) Orifice. (21) Inching valve spring.
(22) Passage. (23) Passage. (24) Passage. (25) Passage.
(26) Passage. (27) Passage. (28) Passage. (29) Passage.
(30) Passage. (31) Passage.

When a shift is made to the LOW SPEED and FORWARD direction, the spool in directional selector valve (2) will move to the left and will let oil flow to speed selector valve (3), inching valve (4) and lube priority valve (15) through passage (25). The spool in speed selector valve (3) will move to the right.

The position of the spool in speed selector valve (3) will allow pressure oil to flow through passage (27) to engage FORWARD LOW clutch (9). Pressure oil from directional selector valve (2) also flows to lube priority valve (15) to flow more oil to the engaged shaft(FORWARD).

https://truckmanualshub.com/

High Speed Forward

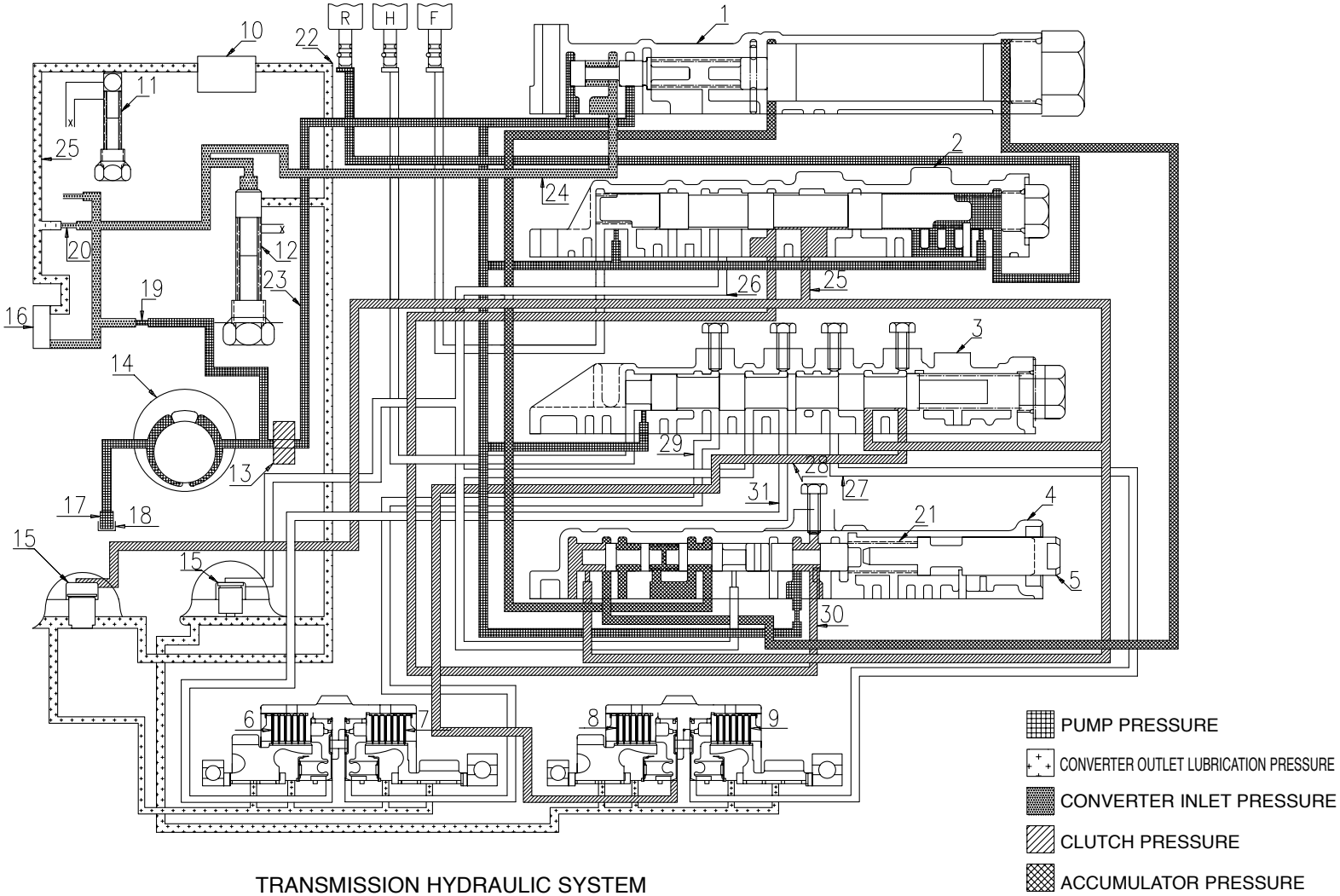

TRANSMISSION HYDRAULIC SYSTEM

1. Main regulator volve.
2. Directional selector valve.
3. Speed selector valve.
4. Inching valve.
5. Inching plunger.
6. Reverse high clutch.
7. Reverse low clutch.
8. Forward high clutch.
9. Forward low clutch.
10. Oil cooler.
11. Oil cooler bypass valve.
12. Converter regulator valve.
13. Filter.
14. Pump.
15. Lube priority valve.
16. Torque converter.
17. Strainer.
18. Reservoir.
19. Orifice.
20. Orifice.
21. Inching valve spring.
22. Passage.
23. Passage.
24. Passage.
25. Passage.
26. Passage.
27. Passage.
28. Passage.
29. Passage.
30. Passage.
31. Passage.

https://truckmanualshub.com/

Transmission Hydraulic Controls-High Speed Forward
(1) Main regulator valve. (2) Directional selector valve.
(3) Speed selector valve. (4) Inching valve. (5) Inching plunger.
(6) Reverse high clutch. (7) Reverse low clutch.
(8) Forward high clutch. (9) Forward low clutch.
(10) Oil cooler. (11) Oil cooler bypass valve.
(12) Converter regulator valve. (13) Filter. (14) Pump.
(15) Lube priority valve. (16) Torque converter. (17) Strainer.
(18) Reservoir. (19) Orifice. (20) Orifice.
(21) Inching valve spring. (22) Passage. (23) Passage.
(24) Passage. (25) Passage. (26) Passage. (27) Passage.
(28) Passage. (29) Passage. (30) Passage. (31) Passage.

When a shift is made to the HIGH SPEED and FORWARD direction, the spool in directional selector valve (2) will move to the left and will let oil flow to speed selector valve (3), inching valve (4) and lube priority valve (15) through passage (25). The spool in speed selector valve (3) will move to the left.

The position of the spool in speed selector valve (3) will allow pressure oil to flow through passage (28) to engage FORWARD HIGH clutch (8). Pressure oil from directional selector valve (2) also flows to lube priority valve (15) to flow more oil to the engaged shaft(FORWARD).

https://truckmanualshub.com/

Low Speed Reverse

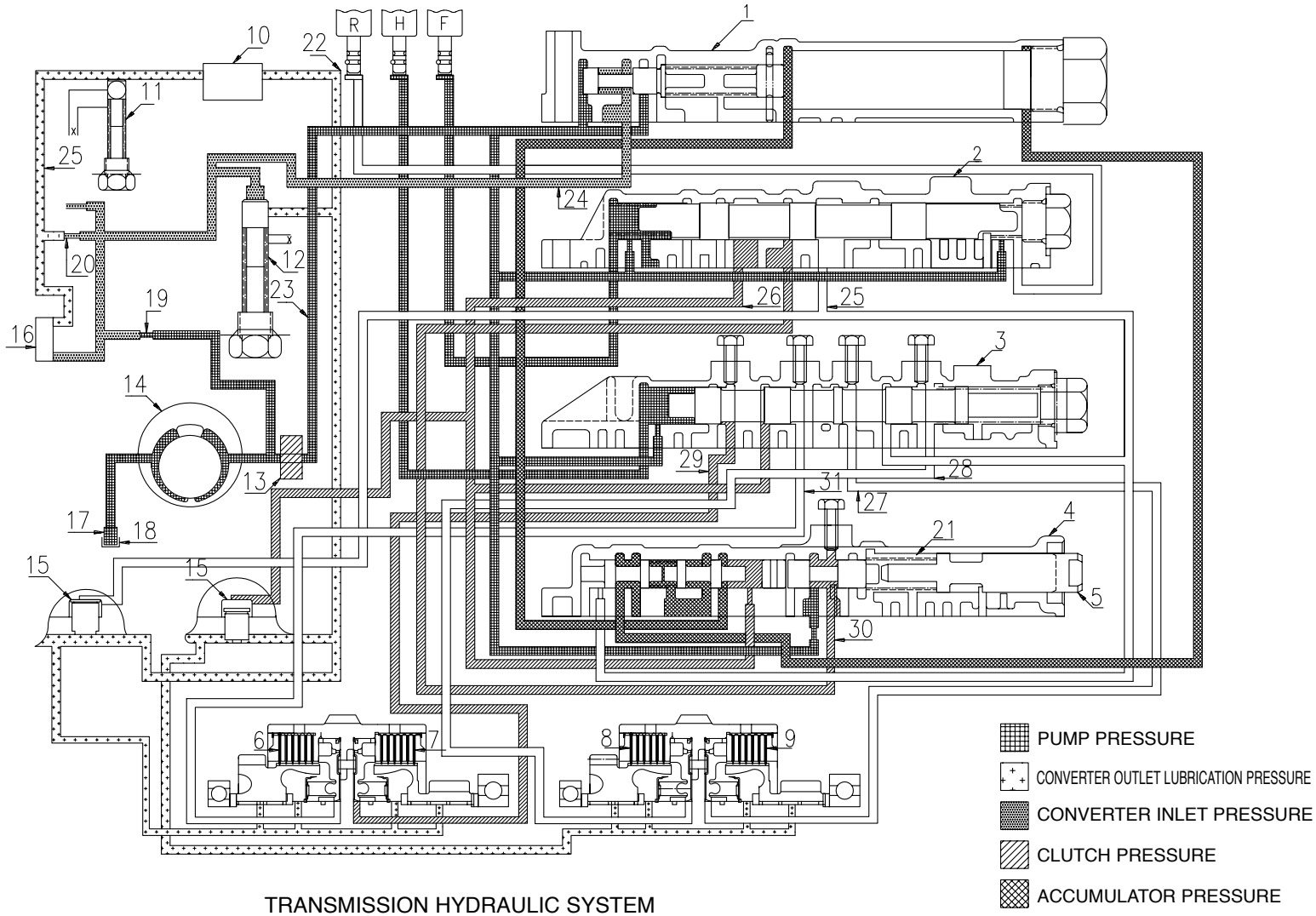

TRANSMISSION HYDRAULIC SYSTEM

1. Main regulator volve.
2. Directional selector valve.
3. Speed selector valve.
4. Inching valve.
5. Inching plunger.
6. Reverse high clutch.
7. Reverse low clutch.
8. Forward high clutch.
9. Forward low clutch.
10. Oil cooler.
11. Oil cooler bypass valve.
12. Converter regulator valve.
13. Filter.
14. Pump.
15. Lube priority valve.
16. Torque converter.
17. Strainer.
18. Reservoir.
19. Orifice.
20. Orifice.
21. Inching valve spring.
22. Passage.
23. Passage.
24. Passage.
25. Passage.
26. Passage.
27. Passage.
28. Passage.
29. Passage.
30. Passage.
31. Passage.

https://truckmanualshub.com/

Transmission Hydraulic Controls-Low Speed Reverse
(1) Main regulator valve. (2) Directional selector valve.
(3) Speed selector valve. (4) Inching valve.
(5) Inching plunger. (6) Reverse high clutch.
(7) Reverse low clutch. (8) Forward high clutch.
(9) Forward low clutch. (10) Oil cooler.
(11) Oil cooler bypass valve. (12) Converter regulator valve.
(13) Filter. (14) Pump. (15) Lube priority valve.
(16) Torque converter. (17) Strainer. (18) Reservoir.
(19) Orifice. (20) Orifice. (21) Inching valve spring.
(22) Passage. (23) Passage. (24) Passage. (25) Passage.
(26) Passage. (27) Passage. (28) Passage. (29) Passage.
(30) Passage. (31) Passage.

When a shift is made to the LOW SPEED and REVERSE direction, the spool in directional selector valve (2) will move to the right and will let oil flow to speed selector valve (3), inching valve (4) and lube priority valve (15) through passage (26). The spool in speed selector valve (3) will move to th right.

The position of the spool in speed selector valve (3) will allow pressure oil to flow through passage (29) to engage REVERSE LOW clutch (7). Pressure oil from directional selector valve (2) also flows to lube priority valve (15) to flow more oil to the engaged shaft (REVERSE).

https://truckmanualshub.com/

High Speed Reverse

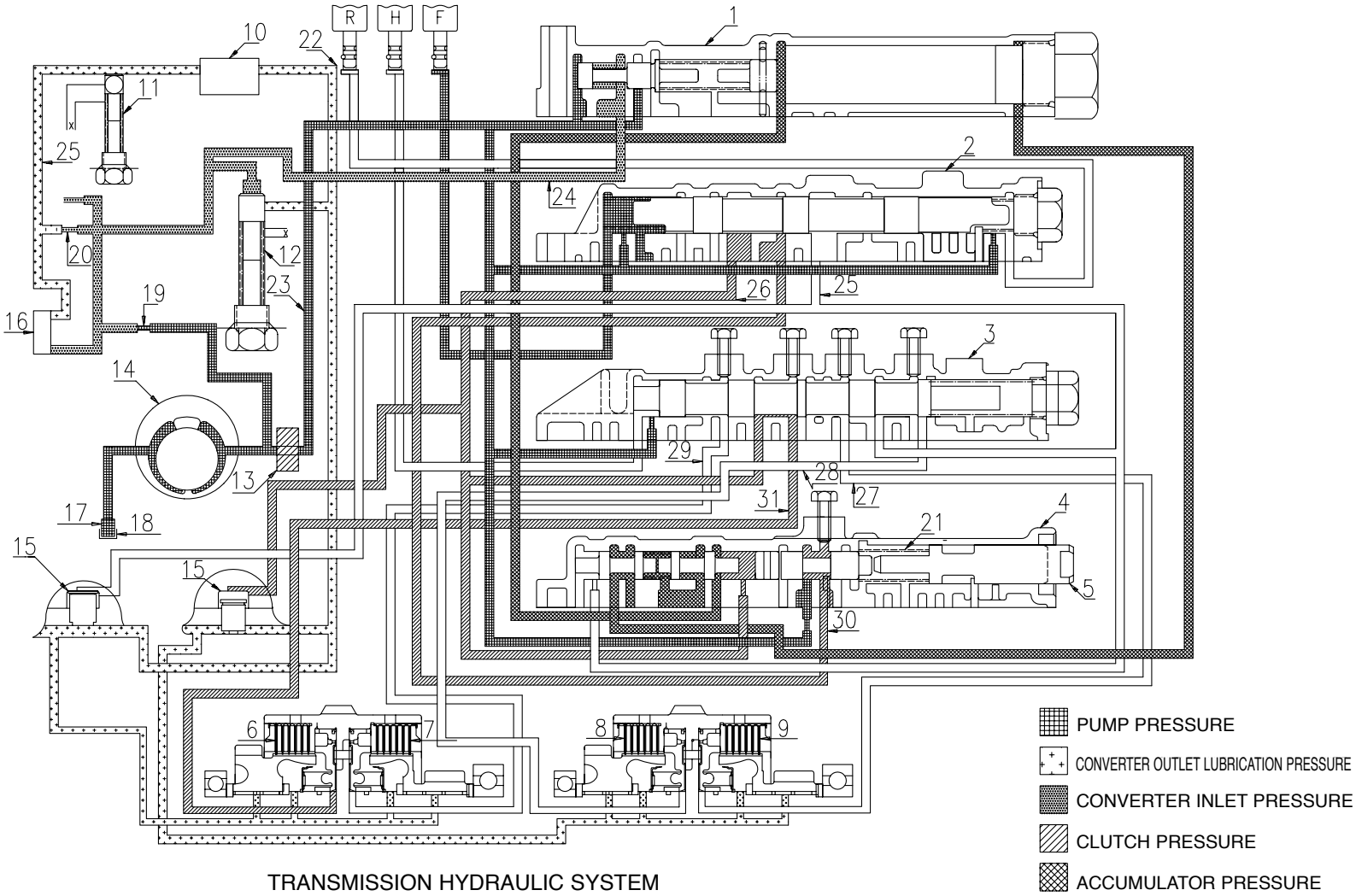

TRANSMISSION HYDRAULIC SYSTEM

1. Main regulator volve.
2. Directional selector valve.
3. Speed selector valve.
4. Inching valve.
5. Inching plunger.
6. Reverse high clutch.
7. Reverse low clutch.
8. Forward high clutch.
9. Forward low clutch.
10. Oil cooler.
11. Oil cooler bypass valve.
12. Converter regulator valve.
13. Filter.
14. Pump.
15. Lube priority valve.
16. Torque converter.
17. Strainer.
18. Reservoir.
19. Orifice.
20. Orifice.
21. Inching valve spring.
22. Passage.
23. Passage.
24. Passage.
25. Passage.
26. Passage.
27. Passage.
28. Passage.
29. Passage.
30. Passage.
31. Passage.

https://truckmanualshub.com/

Transmission Hydraulic Controls-High Speed Reverse
(1) Main regulator valve. (2) Directional selector valve.
(3) Speed selector valve. (4) Inching valve. (5) Inching plunger.
(6) Reverse high clutch. (7) Reverse low clutch.
(8) Forward high clutch. (9) Forward low clutch.
(10) Oil cooler. (11) Oil cooler bypass valve.
(12) Converter regulator valve. (13) Filter. (14) Pump.
(15) Lube priority valve. (16) Torque converter. (17) Strainer.
(18) Reservoir. (19) Orifice. (20) Orifice.
(21) Inching valve spring. (22) Passage. (23) Passage.
(24) Passage. (25) Passage. (26) Passage. (27) Passage.
(28) Passage. (29) Passage. (30) Passage. (31) Passage.

When a shift is made to the HIGH SPEED and REVERSE direction, the spool in directional selector valve (2) will move to the right and will let oil flow to speed selector valve (3), inching valve (4) and lube priority valve (15) through passage (26). The spool in speed selector valve (3) will move to the left.

The position of the spool in speed selector valve (3) will allow pressure oil to flow through passage (31) to engage REVERSE HIGH clutch (6). Pressure oil from directional selector valve (2) also flows to lube priority valve (15) to flow more oil to the engaged shaft(REVERSE).

https://truckmanualshub.com/

Inching Valve Operation

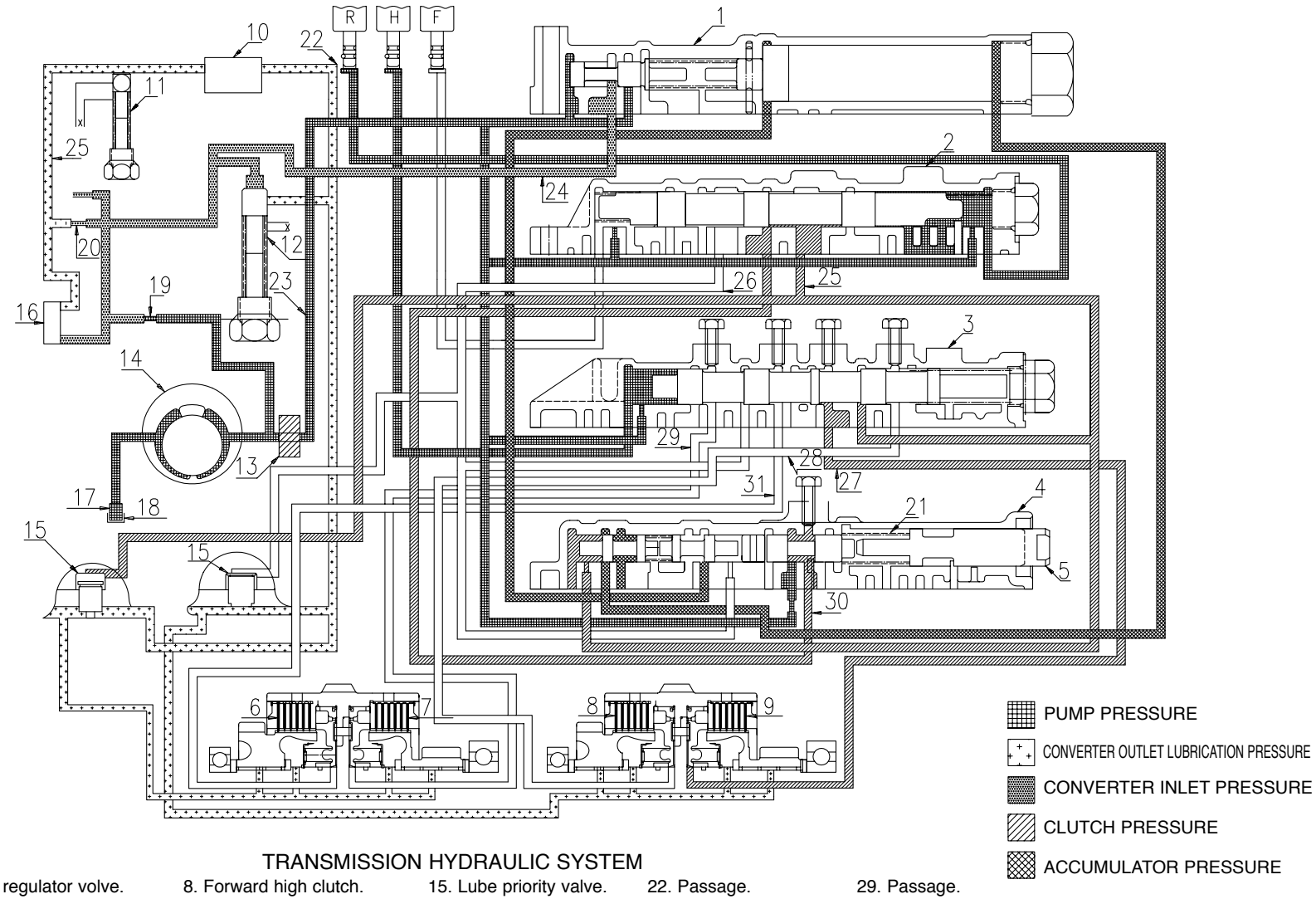

TRANSMISSION HYDRAULIC SYSTEM

1. Main regulator volve.
2. Directional selector valve.
3. Speed selector valve.
4. Inching valve.
5. Inching plunger.
6. Reverse high clutch.
7. Reverse low clutch.
8. Forward high clutch.
9. Forward low clutch.
10. Oil cooler.
11. Oil cooler bypass valve.
12. Converter regulator valve.
13. Filter.
14. Pump.
15. Lube priority valve.
16. Torque converter.
17. Strainer.
18. Reservoir.
19. Orifice.
20. Orifice.
21. Inching valve spring.
22. Passage.
23. Passage.
24. Passage.
25. Passage.
26. Passage.
27. Passage.
28. Passage.
29. Passage.
30. Passage.
31. Passage.

https://truckmanualshub.com/

Transmission Hydraulic Controls-Inching Valve Operation(In Low Speed FORWARD)

(1) Main regulator valve. (2) Directional selector valve.
(3) Speed selector valve. (4) Inching valve.
(5) Inching plunger. (6) Reverse high clutch.
(7) Reverse low clutch. (8) Forward high clutch.
(9) Forward low clutch. (10) Oil cooler.
(11) Oil cooler bypass valve. (12) Converter regulator valve.
(13) Filter. (14) Pump. (15) Lube priority valve.
(16) Torque converter. (17) Strainer. (18) Reservoir.
(19) Orifice. (20) Orifice. (21) Inching valve spring.
(22) Passage. (23) Passage. (24) Passage. (25) Passage.
(26) Passage. (27) Passage. (28) Passage. (29) Passage.
(30) Passage. (31) Passage.

Inching valve (4) lets the operator control the oil pressure to the directional selector valve, which permits a gradual engagement of the clutches. Through the use of the inching valve, the lift truck can move slowly while the engine is at higher speeds. This lets the operator move the lift truck slowly up to a load while the mast is raised rapidly.

When the operator pushes the inching pedal part of the way down, inching plunger (5) moves out of the control valve body. This reduces the force of spring (21) and less pressure is required to balance inching valve (4). This reduced pressure goes through directional selector valve (2), through passages and partially engages the clutch. As a result of the slippage of the discs and plates of the engaged clutch, the truck will have an operator controlled movement (inching). The amount of oil pressure to the directional selector valve depends on the position of inching plunger (5). As the plunger is pulled out completely, directional clutch pressure drops to 0 kPa(0 psi) which completely stops the lift truck.

Valve Function Chart

This chart gives a description of the function of the valves in the hydraulic control valve.

VALVE	FUNCTION
Cooler Bypass Valve(11)	Gives protection to the oil cooler at pressure of 480 kPa (70 psi) or more.
Main Regulator Valve(1)	Controls main line pressure to speed selector valve, directional selector valve and inching valve. Valve will open at 860 kPa(125 psi) to allow oil to go to the torque converter.
Directional Selector Valve(2)	Allows pressure oil to flow to speed selector valve in NEUTRAL.
Speed Selector Valve(3)	Allows pressure oil to flow to clutches.
Inching Valve(4)	Reduces main line pressure.

https://truckmanualshub.com/

Testing And Adjusting

Troubleshooting

Troubleshooting can be difficult. A list of possible problems and corrections is on the pages that follow.

Use this as a reference for the location and correction of problems in the transmission. When more testing and adjusting is necessary. use the procedures that are given in Transmission Pressure Tests, Inching Pedal Adjustments and Converter Stall Tests, Always make visual checks first, operation checks second and then make checks on the transmission with instruments.

⚠ WARNING

When testing and adjusting the power train, move the machine to an area clear of obstructions, and with safe ventilation for the exhaust. To prevent personal injury when drive wheels are off the ground for testing, keep away from wheels that are in rotation.

Operate the machine in each direction. Make note of all noises that are not normal and find their source. If the operation is not correct, make reference to the troubleshooting chart for “problems” and “probable causes”

Visual Checks

1. Check the oil level in the transmission with the engine running and with the transmission in NEUTRAL.

2. Check all oil lines, hoses and connections for leaks and damage. Look for oil on the ground under the machine.

3. Move and turn the lever for the speed control and the direction control to all REVERSE and FORWARD positions. The detents must be felt in each position.

4. Check the strainer behind the transmission oil plug and the filter foreign material.

   a. Particles of friction paper material give an indication of a clutch failure.
   b. Metallic(metal) particles in the filter give an indication of wear or mechanical failure in the transmission.
   c. Rubber particles give an indication of seal or hose failure.
   d. Aluminum particles give an indication of a torque converter or control valve failure.

If metal or rubber particles are found, all components of the transmission hydraulic system must be flushed. Make a replacement of all parts that show damage.

Checks During Operation

NOTICE

Before these checks are started, fill the transmission with oil to the correct level. Improper oil level can cause damage to the transmission components.

With the engine running and brakes on, move the selector lever for transmission speeds to all positions. The detents must be felt in each position.
Operate the machine in each direction and in all speeds. Make note of all noises that are not normal and find their sources. If the operation is not correct, make reference to the CHECK LIST DURING OPERATION for “problems” and “probable causes”.

Check List During Operation

Problem : Transmission does not operate in any speed or does not engage(slips) in all speeds.

Probable Cause :

1. Low oil pressure or no oil pressure caused by :

   a. Low oil, no oil, or thick oil.
   b. Inching control valve linkage loose, broken or adjustment is not correct.
   c. Inching valve spool stuck(held) open.
   d. Failure of the oil pump or a defect in the oil pump.
   e. Converter drive tangs worn off or not engaged into pump.
   f. Main regulator valve stuck open.
   g. Restriction in the oil flow circuit such as dirty oil screen.

https://truckmanualshub.com/

h. Leakage inside the transmission.
  1. Control valve gasket has damage.
  2. Worn or broken metal seal rings on clutch shaft.
  3. Worn or broken seals around clutch piston.
i. Control valve gasket is worn that causes leakage.

2. Cooler external lines are not connected correctly.

3. Mechanical failure in the transmission.

Problem : Transmission does not shift.

Probable Cause :

1. Low oil pressure.

2. Main regulator valve will not move(stuck).

3. Solenoids or related electric components are out of order.

Problem : Transmission gets hot.

Probable Cause :

1. Restriction in cooling circuit.

2. Oil level too high or too low.

3. Low pump pressure -worn or damaged pump.

4. Converter one way clutch worn and slipping.

5. Air mixed in the oil. Air leaks on the intake side of the pump.

6. Low oil flow through converter.

7. Wrong application for vehicle, (loads are too heavy for the lift truck).

8. Too much inching operation(slipping the clutch plates and discs).

9. Too much stalling of torque converter.

10. Cooler bypass valve stuck (held) open, full oil flow does not go through oil cooler.

Problem : Clutch engagement is slow or loss of power during engagement.

Probable Cause :

1. Low oil pressure.

2. Low converter pressure.

3. Air mixed in the oil.

  a. Air leaks on suction side of pump.
  b. Low oil level also causes aeration.

4. Inching valve linkage adjustment is not correct.

Problem : Transmission operates in forward speeds only.

Probable Cause :

1. Discs and plates have too much wear in reverse direction clutches.

2. Leakage at the seals.

3. Reverse clutch components have damage.

  a. Leakage caused by worn or broken metal sealing rings.
  b. Leakage caused by worn or broken seal around clutch piston.
  c. Failure of other components.

4. Solenoids or related electric components are out of order.

Problem : Transmission operates in reverse speeds only

Probable Cause :

1. Discs and plates have too much wear in forward direction clutches.

2. Leakage at the seals.

3. Forward clutch components have damage.

  a. Leakage caused by worn or broken seal around metal sealing rings.
  b. Leakage caused by worn or broken seal around clutch piston.
  c. Failure of other components.

4. Solenoids or related electric components are out of order.

https://truckmanualshub.com/

Problem : Low stall speed.

Probable Cause :

1. Engine performance is not correct.

2. The one-way clutch of the torque converter does not hold.

Problem : High stall speed in all transmission speeds and directions.

Probable Cause :

1. Low oil level.

2. Air in the oil.

3. Clutches slip(clutch plates slide in relation to one another).
4. Torque converter failure.

Problem : High stall speed in one speed or one direction.

Probable Cause :

1. There is a leak in that clutch circuit.

2. There is a failure of the clutch in that speed or direction.

Problem : Clutch engagement is slow and makes rough shifts.

Probable Cause :

1. Inching valve adjustment is not correct.

2. Inching valve is not completely closed or orifice has dirt(plugged).

3. Low main pressure.

4. Low directional clutch pressure.

5. Internal oil leaks.

6. Valve spool springs are weak or have damage.

Problem : Vehicle operates in one direction and creeps in that direction in NEUTRAL. Engine stalls when shifted to the other direction.

Probable Cause :

1. Failure of clutch in the direction the lift truck moves. Clutch discs or plates are warped(damaged) or held together because of too much heat.

2. Failure of the valve spool in the direction the lift truck moves. The spool stuck(held) in the engaged position possibly caused by metal burrs(particles) or dirt.

Check List From Operation Noises

Problem : Noise in NEUTRAL only.

Probable Cause :

1. Worn bushing in pump assembly.

2. Worn one-way clutch in torque converter.

3. Oil level low.

4. Converter housing or converter tangs not in alignment with engine or transmission pump.

Problem : Pump noise not normal.

Probable Cause :

1. A loud sound at short time periods gives an indication that foreign material is in the transmission hydraulic system.

2. A constant loud noise is an indication of pump failure.

Problem : Noise in the transmission that is not normal.

Probable Cause :

1. Converter housing or converter tangs not in alignment with engine or transmission pump.

2. Transmission components have wear or damage.

a. Damaged gears.
b. Worn teeth or clutch plates and/or clutch discs.
c. Slipping clutch plates and discs noise.
d. Failure of the thrust washers.
e. Other component parts have wear or damage.

https://truckmanualshub.com/

Problem : Noise in the control valve.

Probable Cause :

1. Air in the hydraulic system.

- **a.** Air leakage on suction side of the pump.
- **b.** Low oil level that causes aeration.

2. Restrictions in oil passage.

3. Valve spools movement has restriction.

Check List From Pressure Test

Problem : Low pressure to FORWARD and REVERSE clutches.

Probable Cause :

1. Inching valve linkage adjustment is not correct.

2. Inching valve spool held(stuck) open.

3. Clutch piston seals cause leakages.

4. A defective regulator valve spring.

5. Low oil pressure, see Probable Cause for Low Oil Pressure.

6. Cooler external lines are not connected correctly.

Problem : Clutch pressure and main pressure are high.

Probable Cause :

1. Pressure regulator valve is not free to move(stuck).

2. A restriction in the hydraulic circuit.

Problem : Pressure to one clutch is low.

Probable Cause :

1. Clutch piston seal alignment is not correct, oil leaks through.

2. Seal rings on shaft or clutch piston seals are broken or worn.

3. Control valve surface not flat or gasket has damage.

Problem : Low main line pressure.

Probable Cause :

1. Low oil level.

2. Main regulator valve movement is restricted.

3. Transmission pump is worn.

4. Inner oil leakage.

5. Low oil pressure.

Problem : Low lubrication pressure or no lubrication pressure

Probable Cause :

1. Low oil pressure or no oil pressure caused by :

- **a.** Failure of the oil pump or a defect in the oil pump
- **b.** Restriction in the oil flow circuit such as a dirt, oil screen.
- **c.** Converter drive tangs worn off or not engaged in pump.
- **d.** Main regulator valve spool stuck closed.
- **e.** Leakage inside of the transmission caused by component defect.

2. Oil cooler has restriction to oil flow.

Problem : High lubrication pressure.

Probable Cause :

1. High converter inlet pressure.

2. Cooler and oil filter external lines are not connected correctly.

Problem : High converter pressure.

Probable Cause :

1. Main regulator valve stuck open so most of the flow goes to the converter.

2. A restriction inside the converter assembly.

3. A plugged(restriction) oil flow passage.

https://truckmanualshub.com/

Problem : Low converter pressure.

Probable Cause :

1. Main regulator valve movement is restricted.

Problem : Converter outlet pressure or cooler inlet pressure is low.

Probable Cause :

1. Low oil pressure.

2. Cooler bypass valve stuck open.

Problem : Converter outlet pressure or cooler inlet pressure too high.

Probable Cause :

1. Restriction in oil cooler lines or a plugged oil cooler.

Differential

Problem : Constant noise in differential.

Probable Cause :

1. Lubricant not to the specific level.

2. Wrong type of lubricant.

3. Wheel bearings out of adjustment or have a defect.

4. Drive gear and pinion not in adjustment for correct tooth contact.

5. Teeth of drive gear and pinion have damage or wear.

6. Too much or too little pinion to gear backlash.

7. Loose or worn pinion bearings.

8. Loose or worn side bearing.

Problem : Noise at different intervals.

Probable Cause :

1. Ring gear does not run even.

a. bolts on drive gear not tightened correctly.
b. Drive gear has a defect(warped)

2. Loose or broken differential bearings.

Problem : Noise on turns only.

Probable Cause :

1. Differential pinion gears tight on the spider or the pinion shaft.

2. Side gears tight in differential case.

3. Differential pinion or side gears have a defect.

4. Thrust washers worn or have a damage.

5. Too much clearance(backlash) between side gears and pinions.

Problem : Leakage of lubricant.

Probable Cause :

1. Loss through axle hub carrier

a. Lubricant above specification level.
b. Wrong kind of lubricant.
c. Restriction of axle housing breather.

2. Loss at pinion shaft.

a. Lubricant above specification level.
b. wrong kind of lubricant.
c. Restriction of axle housing breather.
d. Oil seal worn or not installed correctly.

https://truckmanualshub.com/

Problem : Drive wheels do not turn(drive shaft turning).

Probable Cause :

1. Broken axle shaft.

- **a.** Loose wheel bearings.
- **b.** Axle shaft too short.
- **c.** Loose flange studs or nuts.

2. Drive gear teeth have damage.

3. Side gear on differential pinion broken.

4. Differential pinion shaft or spider broken.

Power Shift Transmission

Transmission Pressure Tests

Raise the front of the lift truck off of the floor. Put wood blocks or jack stands of the correct capacity under it to hold it in this position while pressure tests are performed.

⚠ WARNING

When the transmission is tested, move the truck to a clear area that is level. Keep all other personnel away from the lift truck.
Make sure the drive wheels do not touch the floor. To prevent personal injury, keep feet and hands away from the turning drive wheels.

When the transmission tests are made, the transmission oil must be at the correct level. The pressures given in the chart are taken with transmission oil at the normal temperature for operation, 82 ± 6 °C (180 ± 10 °F). If the temperature is lower than 77 °C (170 °F), the pressure will be higher than that shown. If the temperature is higher than 88 °C (190 °F), the pressure will be lower than that shown.

A problem in the hydraulic circuit to the clutches can normally be found when the main line pressure is checked. If more information is necessary, gauges can be installed at each pressure tap.

⚠ WARNING

Before any pressure tap plugs or connections are removed, the engine must be stopped with the transmission controls in neutral. This will release hydraulic pressure in the transmission.

Check the transmission pressure at the pressure taps shown. Check main line pressure in both transmission speeds and both directions. If the pressure in one speed or one direction drops 70 to 140 kPa (10 to 20 psi), there is a leak in that clutch circuit. EXAMPLE : If the pressure drops when in low speed forward, the low speed forward clutch circuit has a leak. Also check clutches in both directions and speeds. Check the converter inlet and lubrication pressures with the transmission in neutral.

Leaks in the clutch circuit can be caused by : seal rings on shaft or clutch piston are broken or worn, control valve plate or transmission face not flat.

https://truckmanualshub.com/

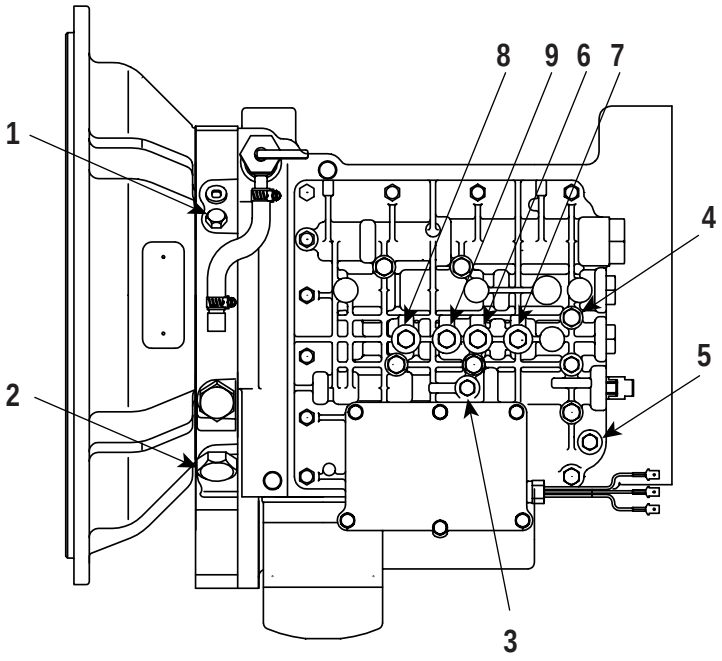

Transmission Pressure Taps
(1) Converter pressure tap. (2) Main line pressure tap. (3) Inching pressure tap. (4) Reverse lube pressure tap.
(5) Forward lube pressure tap. (6) Forward low clutch pressure tap. (7) Forward high clutch pressure tap.
(8) Reverse low clutch pressure tap. (9) Reverse high clutch pressure tap.

Transmission Pressures													
Engine RPM	Unit	Main Line (Neutral)		Converter (Neutral)		Forward Low Clutch		Forward High Clutch		Reverse Low Clutch		Reverse High Clutch	
		Min	Max	Min	Max	Min	Max	Min	Max	Min	Max	Min	Max
Idle	Psi	70	120	30	80	50	100	50	100	50	100	50	100
1300	Psi	100	160	50	120	65	140	65	140	65	140	65	140
2500	Psi	100	200	80	150	90	170	90	170	90	170	90	170
Idle	kPa	480	830	210	550	345	690	345	690	345	690	345	690
1300	kPa	690	1100	345	830	450	960	450	960	450	960	450	960
2500	kPa	690	1370	550	1030	620	1170	620	1170	620	1170	620	1170

https://truckmanualshub.com/

Converter Stall Test

The converter stall test is a test to check engine power. It can also be used to locate a problem in the transmission when the condition of the engine is known. An engine which does not have correct performance will give an indication of a stall speed that is not correct. If the engine performance is correct, and the stall speed is not correct, the problem in the converter or transmission can be found with this test.

The test checks the maximum RPM that the engine, at full throttle, can turn the converter with the turbine held stationary. To hold the converter turbine, engage the brakes with the transmission in either FORWARD or REVERSE and in HIGH speed.

The drive wheels must not turn during the stall test. Put a heavy load on the forks and put the truck in position against a solid object that will not move(such as a loading dock). Engage the parking brake.
When the tests are made, the wheel brakes must be engaged with the left foot ; the accelerator pedal can be operated with the right foot. Make sure that the transmission oil is at the correct temperature for operation before tests are made.

Check the high idle setting before the stall test is made. The high idle on the LP and diesel engines is shown in the chart below.

High Idle Settings	
Engine	**High Idle RPM**
DB58 Diesel	2370 ± 50
GM 4.3ℓ LP	2600 ± 50

⚠ WARNING

Make tests in a clear, level area only, There must be one operator. Keep all other personnel away from the lift truck. Check to be sure the operation of the brakes is correct before the tests are made.

1. Connect a tachometer to the engine. Start the engine and move the control levers to the FORWARD direction and HIGH speed.

2. Engage the wheel brakes and push the accelerator pedal down completely. Read the RPM on the tachometer, then release the accelerator pedal.
   Turn the speed control lever to LOW. Push the accelerator pedal down completely and read the RPM again. Release the accelerator pedal.

NOTICE

To make sure that the transmission oil does not get hot, do not hold the transmission in a stall condition for more than ten seconds. After the transmission is stalled, put the controls in NEUTRAL and run the engine at 1200 to 1500 RPM to cool the oil.

3. Repeat the procedure above for both REVERSE speeds.

4. The stall speeds for the different trucks are in the chart below.

Stall Speed		
Engine	**RPM ± 75 without power Brakes Applied**	**RPM ± 75 with power Brakes Applied**
DB58 Diesel	1800	1750
GM 4.3ℓ LP	1700	1650

https://truckmanualshub.com/

Stall speeds that are low are an indication that the engine performance is not correct or the one-way clutch of the torque converter does not hold in reverse direction. If the one-way clutch has a defect, the stall speed will probably be more than 800 RPM low.

The stall speed must be the same in all forward and reverse speeds, If the stall speed is high in all forward and reverse speeds, one or more of the problems that follow can be present ; low oil level, air in the oil, a torque converter failure, or low oil pressure to all clutches.

If the stall speed is high in both speeds in one direction, check the clutch operation for that direction. If the stall speed is high in one speed only, both forward and reverse, check the clutch operation for that speed.

Shimming of Transmission Shaft Assembly

1. Assemble shaft assembly (including taper bearing cone and cup).

2. Insert shaft assembly into transmission case.

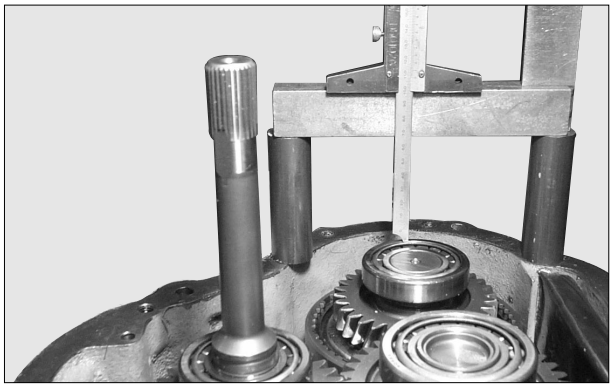

3. Measure the dimension ‘X’ from surface of transmission case to surface of bearing cup.

NOTE : Use depth gage and block gage because the height of bearing cup is higher than surface of transmission case.

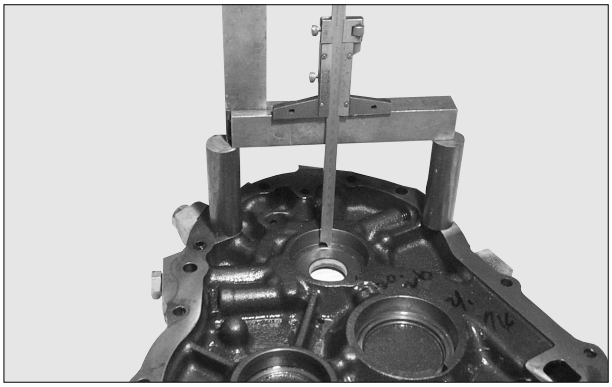

4. Measure the dimension ‘Y’ from surface of transmission cover to bottom of bore where bearing cup is installed.

5. Calculate required shim thickness as following formula. Required shim thickness ‘Z’ = Y - X + 0.33 mm

6. Select shims to have 0 to 0.05mm (0 to 0.002 in) of axial tightness.

7. Assemble transmission case, cover and gasket.

8. Set up transmission assembly vertically.

9. If you reshim input shaft or counter shaft, turn transmission input shaft by hand. It should be turned smoothly.
If you reshim output shaft, turn output shaft by hand.
It should be turned smoothly.

10. If the input shaft or output shaft does not turn smoothly, remove shims about 0.025 - 0.05 mm.

https://truckmanualshub.com/

Wheel Brakes Adjustment

The brakes make an adjustment automatically when an application is made in forward and reverse. With each application, there will be an adjustment made, until the lining-to-drum clearance is made small enough to stop the movement of the automatic adjuster.

Brake setting is essential when :

1. Enewing, removing or mounting the automatic adjuster.

2. Mounting new brake shoes and brake drums at all stages of repair.

3. Repair work on the brake, where by the basic setting of the threaded bolts has been altered at the automatic adjuster.

Setting work, as well as checking of the clearance between the brake shoes and brake drum must be carried out when the brake is cold.
The driving and parking brake must always be adjusted together.

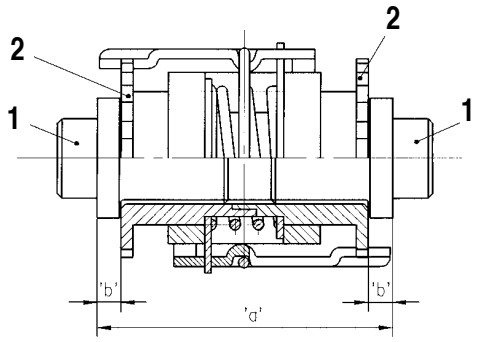

Brake Adjuster
(1) Adjusting Screws. (2) Adjusting Wheels.

Setting Procedure

During setting, the parking brake must be released i. e. the cables should not be tensioned.

1. Jack up the vehicle

2. Release the brake cables

3. Remove the brake drum

4. Carefully raise the adjusting lever using a screw driver or similar tool through the opening in the brake plate to permit the adjusting wheel to turn freely.

5. Adjust the brake diameter to meet diameter = $\phi 313^{+0.2}_{0}$ mm by turning the adjusting wheel.

Remark:

6. During this setting work, take care to ensure an even distance “b” of the adjusting screws (1) to the relevant adjusting wheel (2).

Remark:

Precise adjustment of the relevant brake diameter is of decisive importance for the function of the automatic adjuster. An insufficiently high setting could result in damage to the adjuster.

7. Adjust the brake cables in such a way that the relevant brake diameter is not altered.

Remark:

The brake cables may not be pretensioned, as otherwise it is not possible to guarantee perfect function of the adjuster.

8. Mount the brake drum.

9. Release hexagonal for fastening the automatic adjuster.

10. Actuate the brake several times to centre the brake shoes/ the adjuster in the brake drum.

11. Afterwards tighten hexagonal screw to a torque of 120 + 20 N•m (88.6 + 14.7 lb•ft).

12. Tighten the hands brake lever. The wheels should be equally difficult to turn in this setting.

https://truckmanualshub.com/

CAUTION : Correction of wheels which are not equally difficult to turn may only be carried out at the brake cables and not at the automatic adjuster.

13. Lower the vehicle

⚠ WARNING

After new adjustment of brake diameter, it will take times until the lining-to-drum clearance is made small enough to stop the movement of the automatic adjuster.
So, please keep enough brake distance to avoid possible accident.

14. Carry out appr, 10 braking processes (not emergency braking) with a starting speed of around 10 kph in forward/reverse travel, observing the braking characteristics of the vehicle. The automatic adjuster is then ideally set.

This setting procedure must always be carried out at all the brakes of the vehicle.

Inching Pedal Adjustment

To check the inching valve adjustment and operation do the procedure that follows.

⚠ WARNING

When this procedure is used, the lift truck must be in an area clear of obstructions. There must be only one operator with all other personnel away from the lift truck. Check to be sure the operation of the bakes is correct before the test is made.

1. With the engine at idle speed, put the transmission controls in LOW SPEED FORWARD.

2. Slowly push down on inching pedal until the movement of the brake pedal causes brake shoes to have contact (small drag) with the brake drum.

3. Increase the engine speed, the truck must not move as the engine speed increases to high idle.

If the operation or test of the inching valve is not correct, stop the engine and do the procedure as follows :

https://truckmanualshub.com/

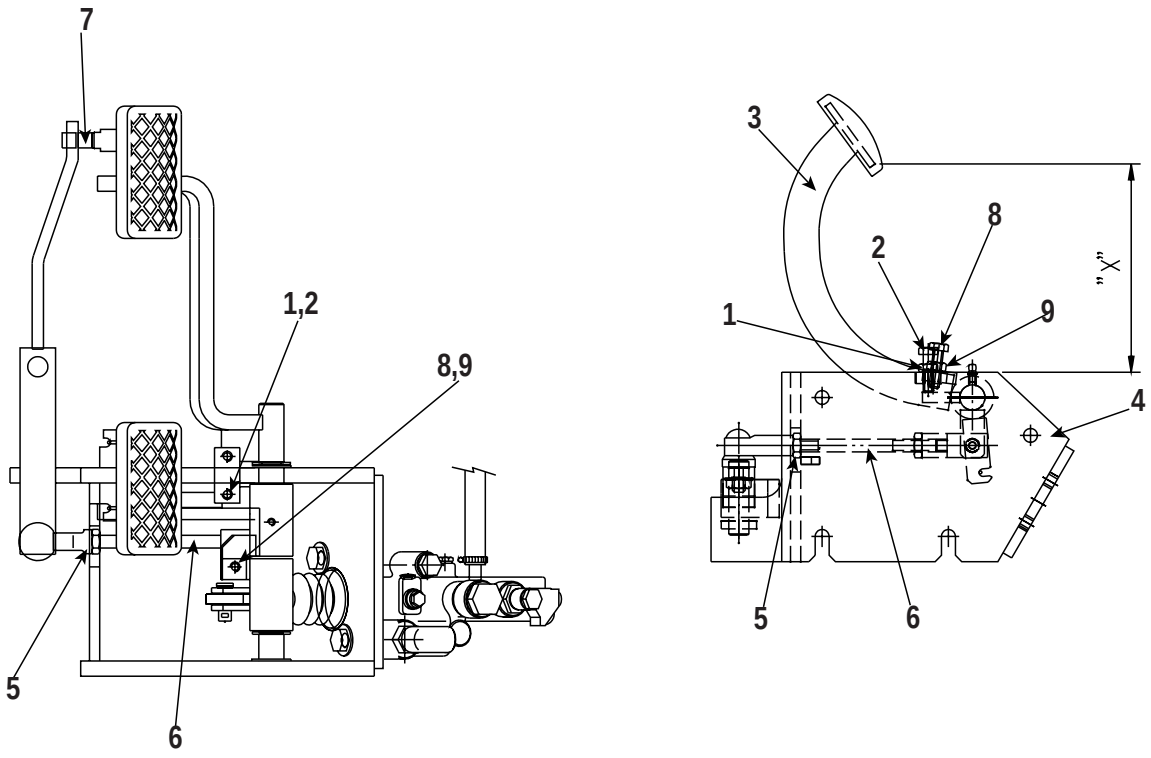

Inching Pedal Adjustment
(1) Locknut. (2) Setscrew. (3) Pedal. (4) Pedal Mounting Bracket. (5) Locknut. (6) Rod. (7) Inching Spool. (8) Stetscrew.
(9) Locknut. (X) 165 mm (6.5 in)

1. With the inching pedal in the released position. loosen locknut (1).

2. Adjust setscrew (2) until the distance between the pedal (3) and pedal mounting bracket (4) is (X) 165mm(6.5 in).

3. Tighten locknut (1) to hold the adjustment.

4. With the inching pedal in the released position, loosen locknut (5).

5. Adjust rod (6) until the inching spool (7) is fully pushed.

6. Tighten locknut (5) to hold the adjustment.

7. Make an application of the inching pedal. With the pedal all the way down, the transmission must be disengaged and the brakes applied.

8. If the transmission is still engaged, make an adjustment to setscrew (8) until it is not engaged.

9. When the inching pedal is in the released position, inching valve should not be pushed by linkage. Make an adjustment to setscrew (8) or rod (6) if necessary.

10. Tighten locknut (9) to hold the adjustment.

https://truckmanualshub.com/

Transmission Electrical System Troubleshooting

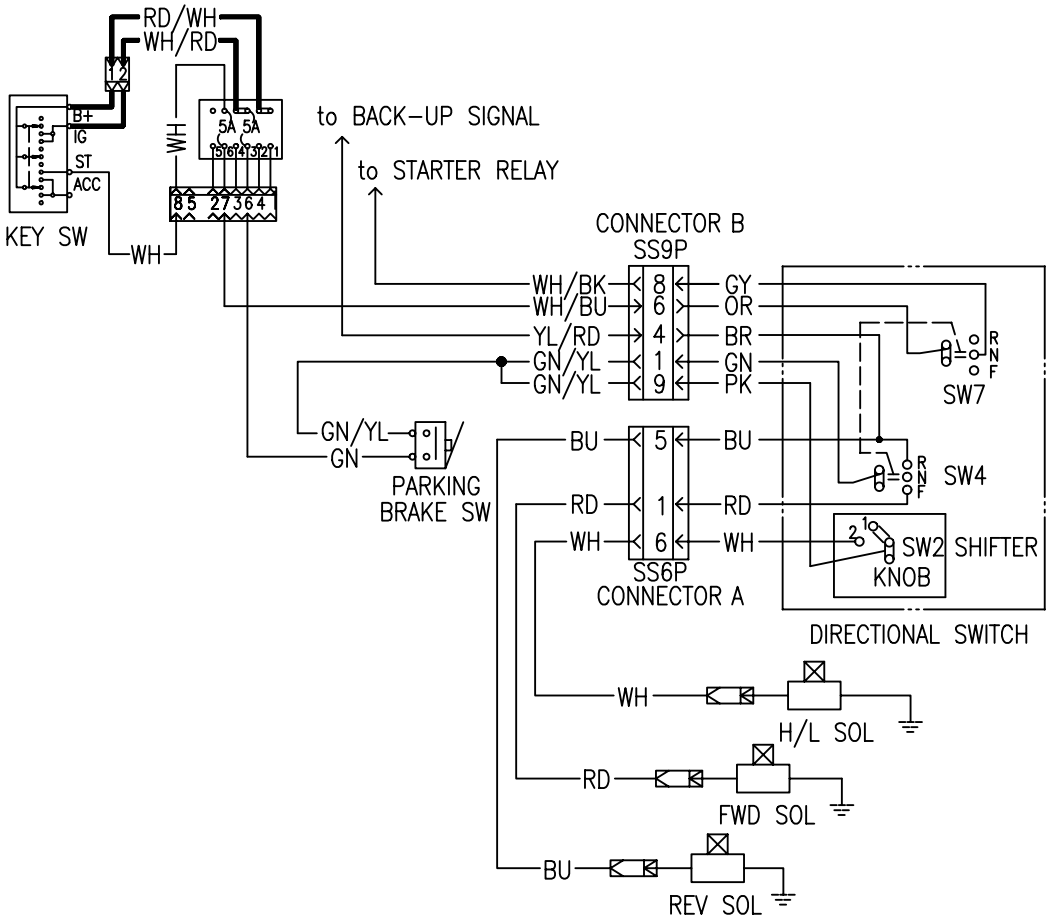

Transmission Control Schematic
(1) Connector A. (2) Connector B.

Function		Conn A	Conn B
Neutral Start		None	Pin 6 (WH/BU) and Pin 8 (WH/BK)
D(G)35/40/45S-2	Forward	Pin 1 (RD)	Pin 1 (GN/YL)
D(G)40/45/50SC-2	Reverse	Pin 5 (BU)	Pin 1 (GN/YL)
2nd Speed		Pin 6 (WH)	Pin 9 (GN/YL)
Back-Up Signal		None	Pin 1 (GN/YL) and Pin 4 (YL/RD)

Most of the electrical connectors between components are “Sure-Seal” connectors. If the connections are not made properly, they can cause either continuous or intermittent problems. Make sure all connectors in a problem circuit are fastened correctly before tests are performed.

The chart gives the pin numbers across which a continuity measurement should be taken when the gear selector is in the gear shown.

https://truckmanualshub.com/

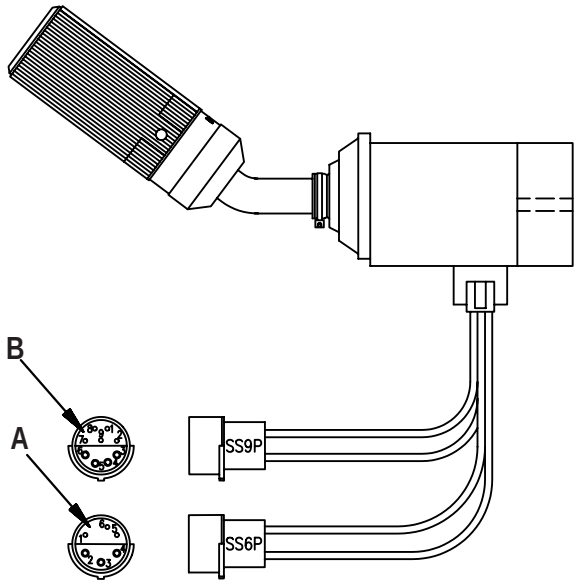

Wiring Harness From Transmission Selector Lever
(A) Connector A. (B) Connector B.

Solenoids Voltage Check

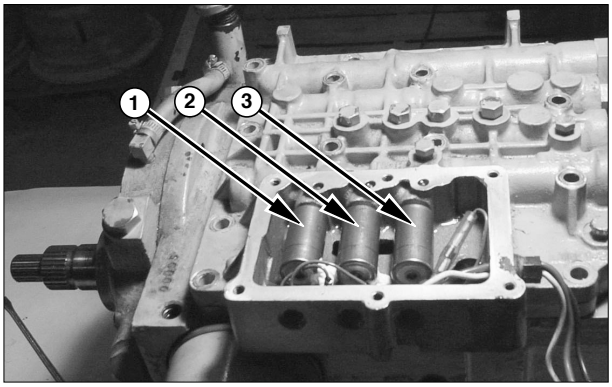

Solenoids Voltage Check
(1) Forward solenoid. (2) High and Low solenoid.
(3) Reverse solenoid.

Reverse : System voltage between reverse solenoid (BU wire) and battery negative.

Forward : System voltage between forward solenoid (RD wire) and battery negative.

2nd Speed : System voltage between H/L solenoid (WH wire) and battery negative.

https://truckmanualshub.com/

Additional Checks

System Voltage Check

If the transmission will not operate, one of the first checks that should be performed is a check of the system voltage. The control solenoids require a minimum of 18 volts to energize for diesel trucks (9 volts for gasoline trucks). If the system voltage is below this, the solenoids will not energize and the transmission will not engage.

Neutral Start

This check is to be performed on the nine pin connector coming from the shift control.

With the shift control lever in NEUTRAL, there must be continuity between pin 6 and pin 8. This indicates the ability to start the vehicle. If there is no continuity, the vehicle will not start and the shift control must be replaced.

Back-Up Alarm

This check is to be performed on the nine pin connector coming from the shaft control.

With the shift control lever in REVERSE, there must be continuity between pin 1 and pin 4. This activates the back-up alarm. If there is no continuity, the back-up alarm will not work and the shift control must be replaced.

Input Voltage To Shift Control

This check to be performed on the nine pin connector coming from the vehicle harness.

Input voltage to the shift control can be checked on the vehicle side of the nine pin connector between pin 1 or pin 6 or pin 9 and battery negative.
The voltage measured should be equal to the vehicle system voltage.

Solenoid Test

This test will determine if the soldnoid coil is energizing and the plunger is shifting to permit oil flow.

Hearing a solenoid click or checking to see if the coil is energized by checking magnetically with a screw driver.

If the screwdriver indicates that the coil is energized, the problem is in the solenoid. The problem could be a bent stem, dirty or clogged screen.

If the screwdrive does not indicate that the coil is energized, the problem is in the electrical circuit. Possible problems include a bad solenoid coil, a bad connection in a connector, a broken wire or a faulty shift control group.

Measure the resistance value of solenoids with multimeter.
(SPEC : 40 $\pm$ 0.1 ohms @77˚F (25˚C) for diesel trucks.)
(SPEC : 9.7 $\pm$ 0.1 ohms @77˚F(25˚C) for gasoline trucks.)

https://truckmanualshub.com/

Disassembly & Assembly

Torque Converter

Remove And Install torque Converter

Tools Needed	A	B
Link Bracket	1	
Forged Eyebolt		1

Start By:

a. separation of transaxle and torque converter from engine.

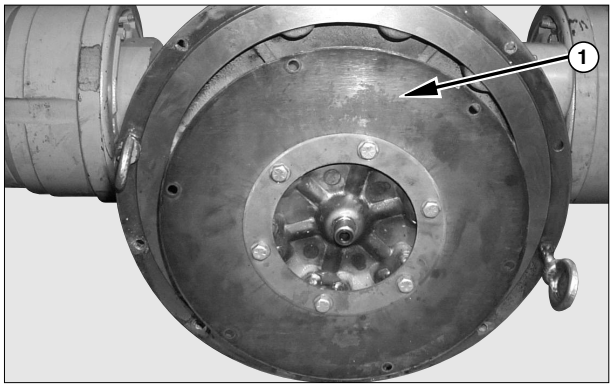

1. Fasten tooling (A) to the transmission and a hoist for support. Put a block into position under the transmission to prevent movement.

NOTICE

Be careful that the tines (tangs) at the center of the converter hub do not damage the lip type seal in the transmission.

2. Pull torque converter (1) straight forward and remove from the transmission.

NOTE: The following steps are for installation of the torque converter.

3. Put clean transmission oil on the tines (tangs) and on the lip of the lip type seal.

4. Carefully move the converter into position in the transmission. Be careful not to cause damage to the lip type seal.

5. Turn the torque converter to make sure that the tines on the converter engage the oil pump in the transmission.

End By:

a. connection of transaxle and torque converter to engine.

https://truckmanualshub.com/

Transmission Control Valve

Disassemble Transmission Control Valve

Start By:

a. Remove transmission control valve, [See the topic, Disassemble Transmission]

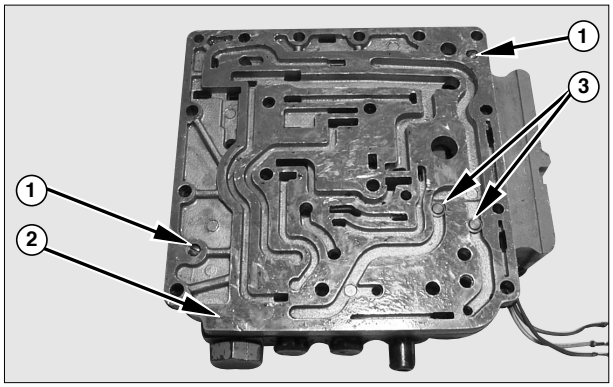

1. Remove screws (1) that hold the separator plate (2) to the valve body.

2. Remove the separator plate (2), lube valve (3) and gasket from the valve body.

NOTICE

Do not turn the valve body over while the separator plate removed from the valve body. The keepers for the selector valves can fall out of their respective locations if the valve body is turned over. If the keepers are not installed in their correct locations, it is possible that the control valve can not operate correctly.

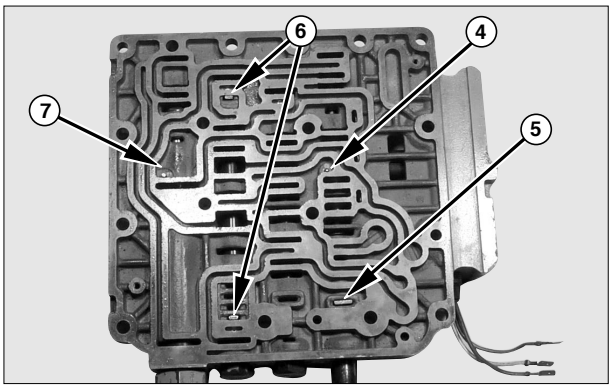

3. Put identification on each of the five valve keepers (pin and stop) as to their location in the control valve.

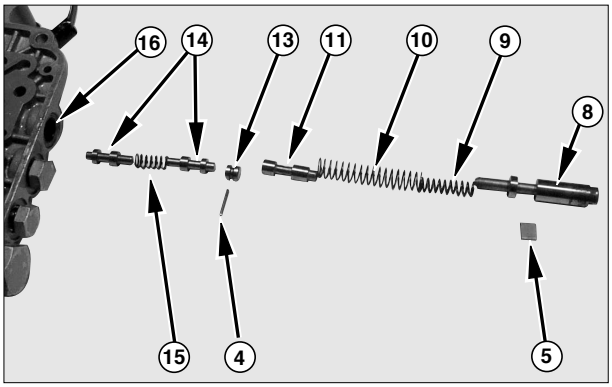

4. Remove valve stop (5), inching plunger (8), spring (9), spring (10), inching valve (11).

5. Remove pin (4), stop (13), accumulator valve (14) and spring (15).

6. Inspect lip type seal (16). Remove the lip type seal if a replacement is need.

https://truckmanualshub.com/

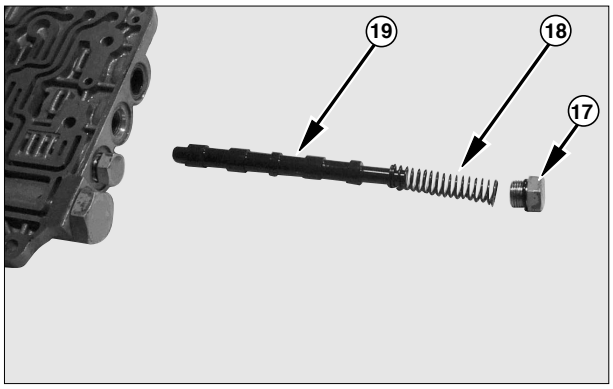

7. Remove plug and o-ring (17). Remove spring (18) and selector valve (19).

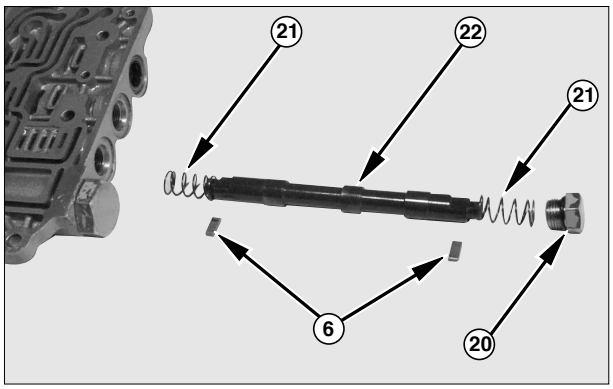

8. Remove stop (6), plug (20) and o-ring, spring (21) and selector valve (22).

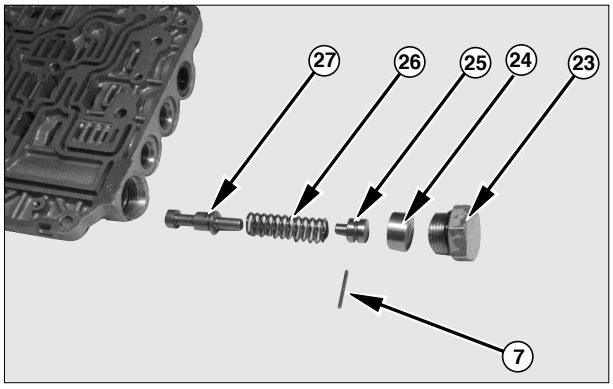

9. Remove plug (23) and o-ring, accumulator valve (24). Remove pin (7), stop (25), spring (26) and regulator valve (27).

Assemble Transmission Control Valve

Tools Needed	A
T011 Seal Installer	1

1. Thoroughly clean all the parts of the transmission control valve. Put clean transmission oil on all of the parts of valve body.

2. If the lip type seal was removed, use tool (A) and install lip type seal for inching plunger.

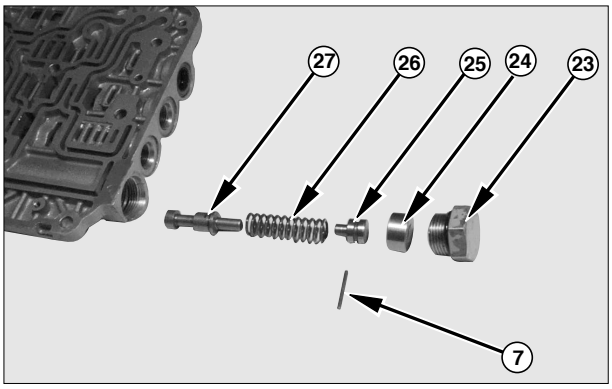

3. Put regulator valve (27), spring (26) and stop (25) in position in the valve body. Push the end of the stop until the groove of the stop is in alignment with the opening in the top of the valve body and slide the pin (7).

4. Install accumulator valve (24), plug (23) and o-ring.

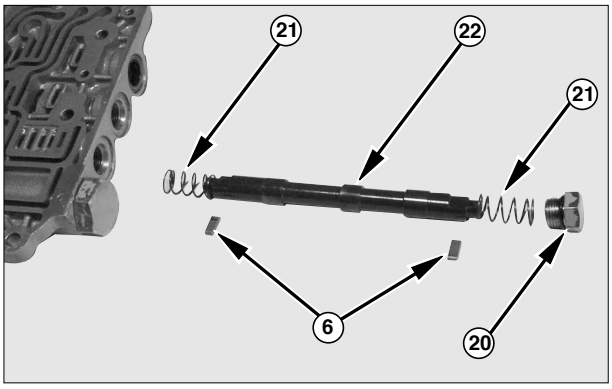

5. Put spring (21) and selector valve (22) in the same bore from which it was removed. Turn the valve in the bore so the grooves for the stops are toward the opening in the top of the valve body.

6. Install stops (6), spring (21), plug (20) and o-ring.

https://truckmanualshub.com/

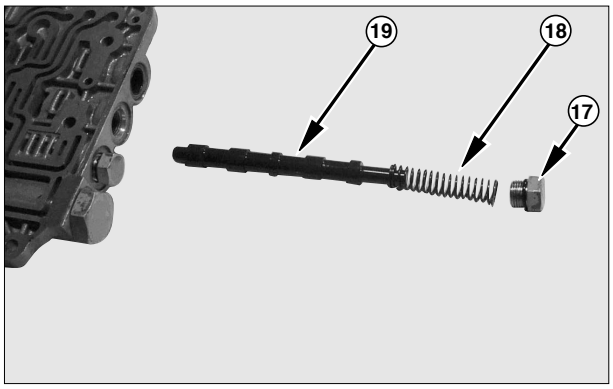

7. Put selector valve (19) in the same bore from which it was removed. Install spring (18), plug (17) and o-ring.

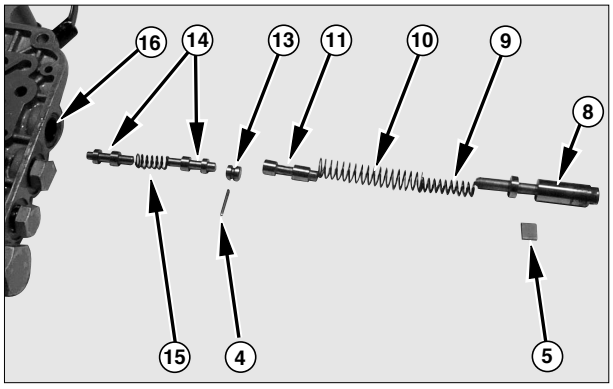

8. Put accumulator valves (14), spring (15) and stop (13) in position in the valve body. Push the end of the stop until the groove of the stop is in alignment with the opening in the top of the valve body and slide the pin (4).

9. Install inching valve (11), spring (10), spring (9) and inching plunger (8).

10. Push in on the inching plunger, install stop (5).

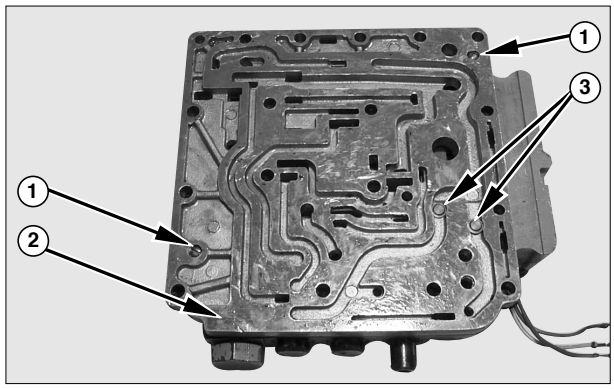

11. Put lube valves (3), separator plate (2) and gasket in position on the valve body.

12. Install screws (1) that hold the separator plate and valve body together.

End By:

a. Install transmission control valve [See Assemble Transmission].

https://truckmanualshub.com/

Transmission

Disassemble Transmission

Tools Needed

Tools Needed	A
Eye Bolt	2

Start By:

a. Remove torque converter

b. Remove drive axle

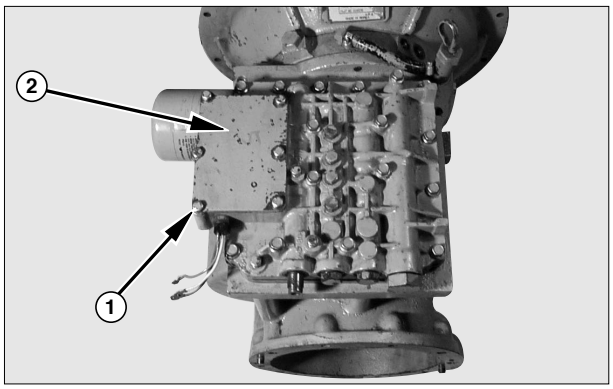

1. Remove bolts (1) and washes, cover (2) and gasket.

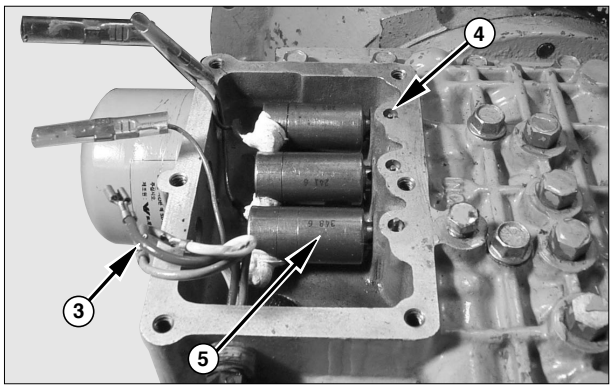

2. Put identification on wiring (3) and disconnect the wiring from the solenoids (5).

3. Remove pins (4) and solenoids (5).

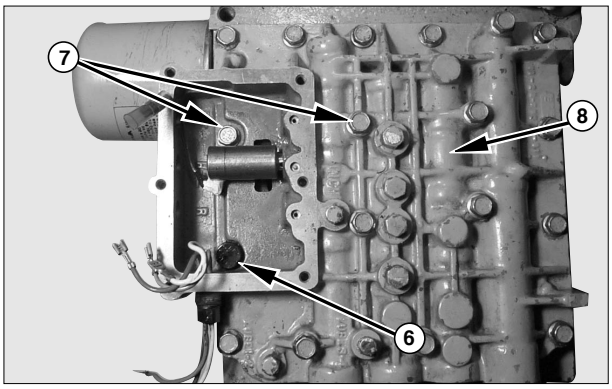

4. Remove rubber caps (6) ad bolts (7).

5. Remove control valve (8) and the separator plate from the transmission.
Remove the gasket for the separator plate.

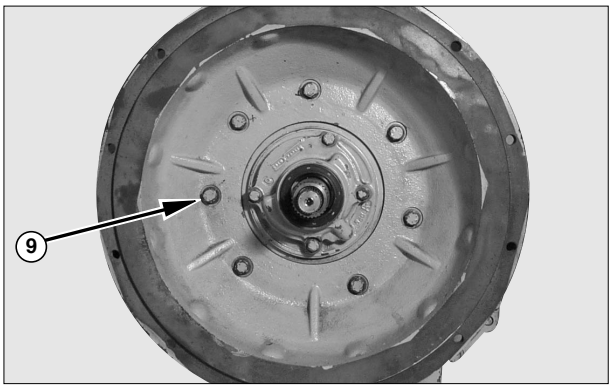

6. Remove bolts (9) and washes.
Remove the housing from the transmission.

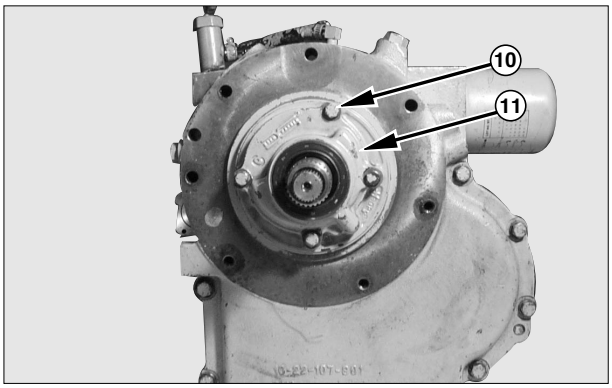

7. Remove four bolts (10) that hold oil pump (11) in position on the transmission. Remove the oil pump (11).

https://truckmanualshub.com/

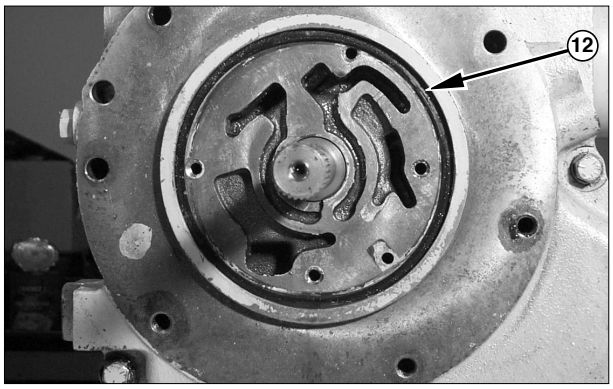

8. Remove gasket (12) for the oil pump.

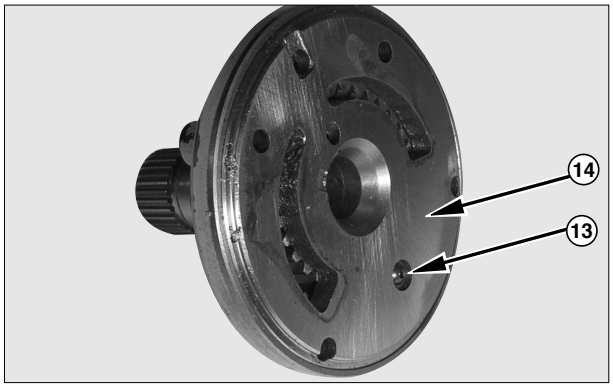

9. Remove screw (13) that holds the stator support (14) to the pump body.

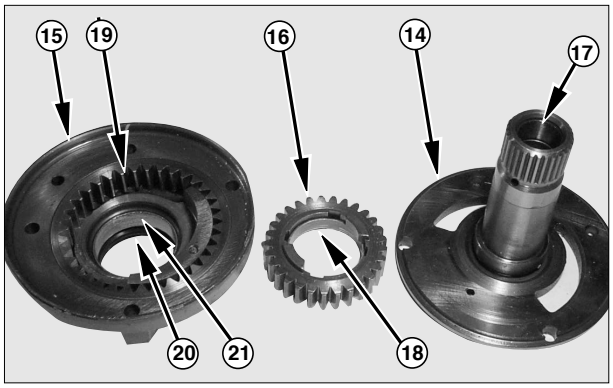

10. Remove stator support (14) from pump body (15).

11. Remove drive gear (16) from stator support (14).

12. Inspect the bushing (17) in the stator support. If the bushing has a large amount of wear, make a replacement of the bushing and stator support as a unit. The parts can not be ordered separately.

13. Inspect the bushing (18) in the drive gear. If the bushing has a large amount of wear, make a replacement of the bushing and drive gear as a unit. The parts can not be ordered separately.

14. Remove driven gear (19) from pump body. Remove lip type seal (20).

15. Inspect the bushing (21) in the pump body. If the bushing has a large amount of wear, make a replacement of the bushing and pump body as a unit. The parts can not be ordered separately.

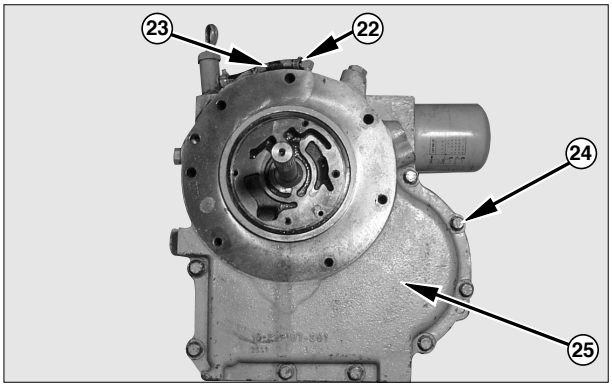

16. Loosen clamp (22) that hold hose (23), remove the hose.

17. Remove two bolts that hold the transmission case cover. Install tools (A) and fasten a hoist. Put the transmission in position on stand.

18. Remove bolts (24) that hold cover to the transmission case. Carefully lift the cover off of the case as straight as possible.
Remove the cover (25) and gasket.

NOTICE

Be extra careful during removal of the cover. Do not tilt the cover during removal, damage to the seal rings on the input shaft can be result

---

https://truckmanualshub.com/

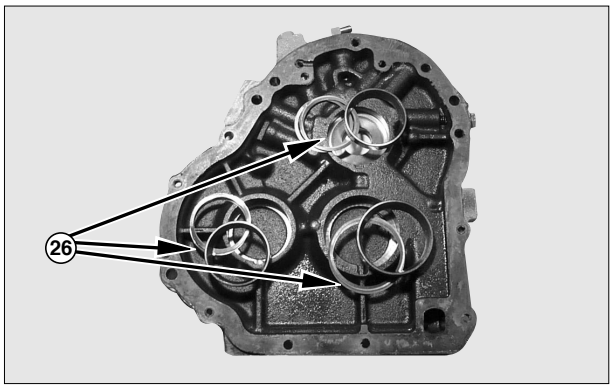

19. Remove bearing cups and shims (26).

NOTE : Bearing cups and their shims will be in cover or on the shafts in transmission case. Put identification on each of bearing cups and shims as to their location on transmission cover or shaft in transmission case.

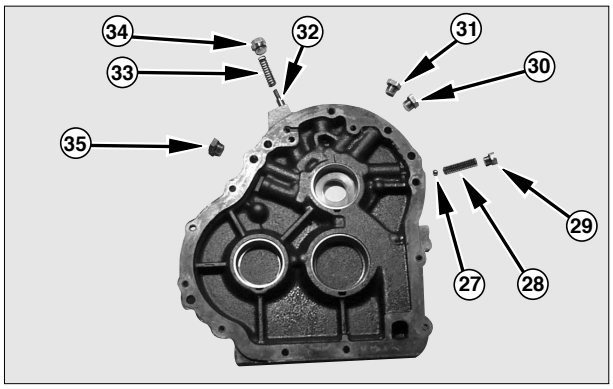

20. Remove plug (29) and o-ring, spring (28) and ball (27) from the cover.

21. Remove plug (30) and o-ring.

22. Remove plug (31) and o-ring.

23. Remove plug (34) and o-ring, spring (33) and valve (32).

24. Remove plug (35) and o-ring.

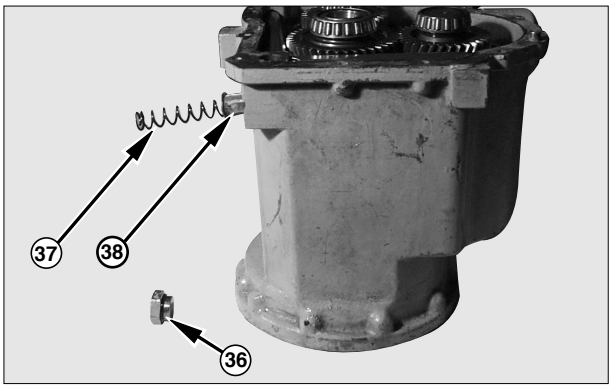

25. Remove plug (36) and o-ring, spring (37) and screen (38) from the case.

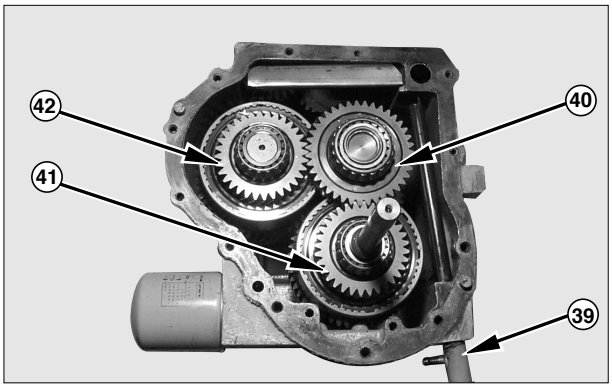

26. Use the plastic hammer to push tube (39) out of the transmission case. Remove the tube.

27. Remove output shaft assembly (40), input shaft assembly (41), and counter shaft assembly (42).

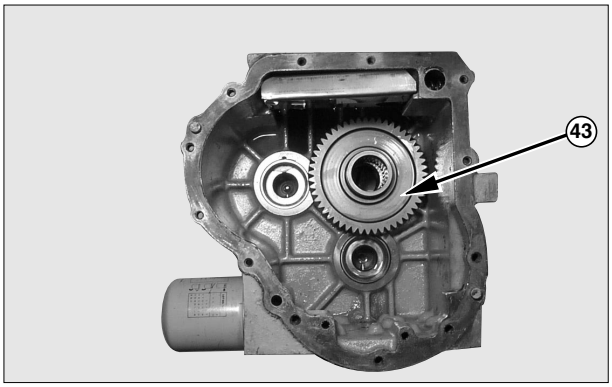

28. Remove the gear assembly (43) from the transmission case.

https://truckmanualshub.com/

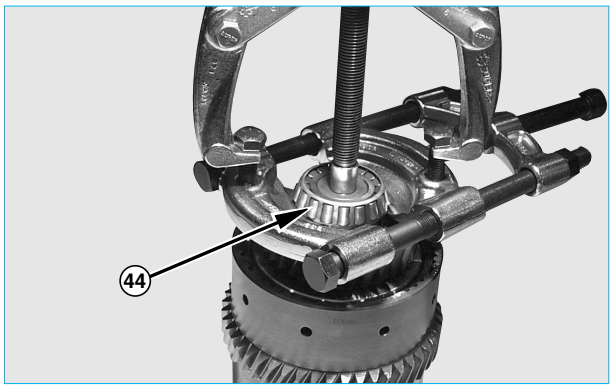

29. For high speed forward clutch assembly, remove bearing cone (44) with gear pulley.

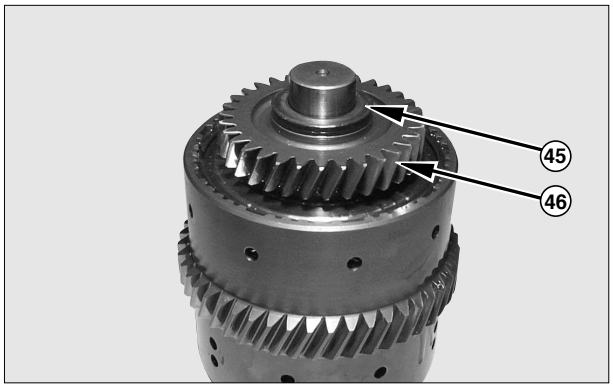

30. Remove two thrust washes (45) and gear (46).

31. Remove needle bearings and thrust washer from the forward shaft of high speed clutch side.

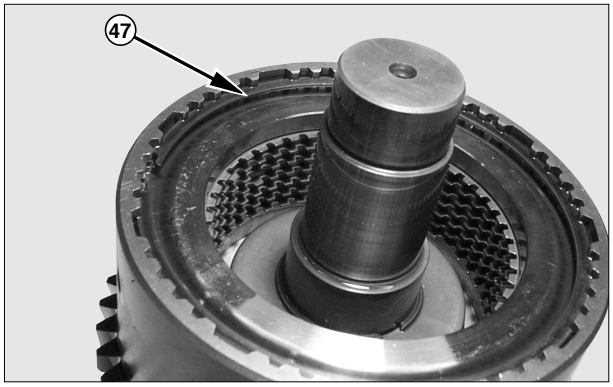

32. Use a screwdriver and Remove snap ring (47) from the cylinder.

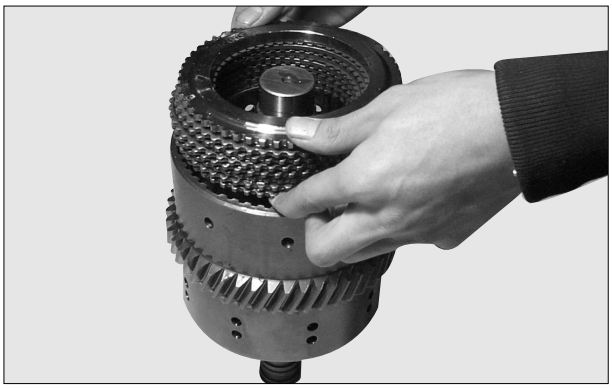

33. Remove a pressure plate, seven clutch discs and seven clutch plates from the cylinder.

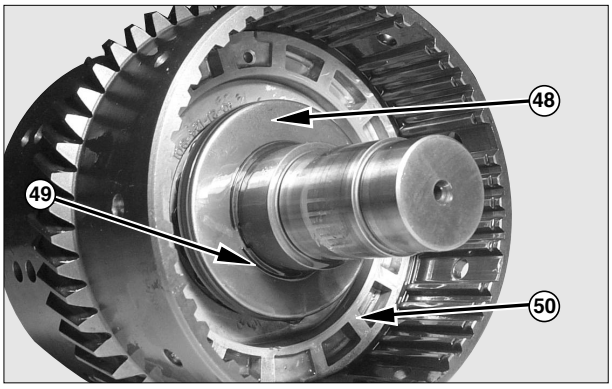

34. Push down on the retainer (48) by a press and remove snap ring (49) with a screwdriver. Slowly release the tension on the spring assembly.

35. Remove retainer (48) and spring assembly from cylinder.

36. Remove piston (50) by using compressed air. Remove o-ring from the shaft.

https://truckmanualshub.com/

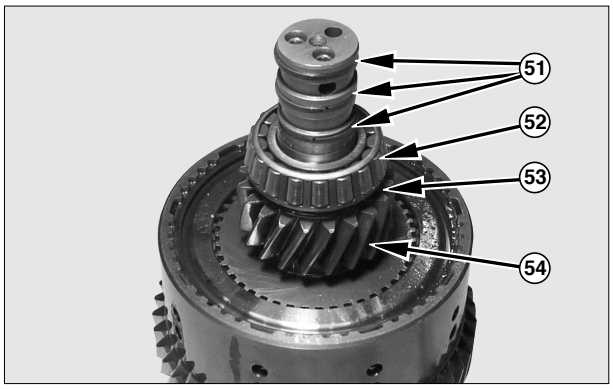

37. For low speed forward clutch assembly, remove seal rings (51) from shaft.
Remove bearing (52), thrust washer (53), gear (54), needle bearing, spacer and needle bearing.

38. Remove snap ring (55).
Remove a pressure plate seven clutch discs and seven clutch plates from the cylinder.

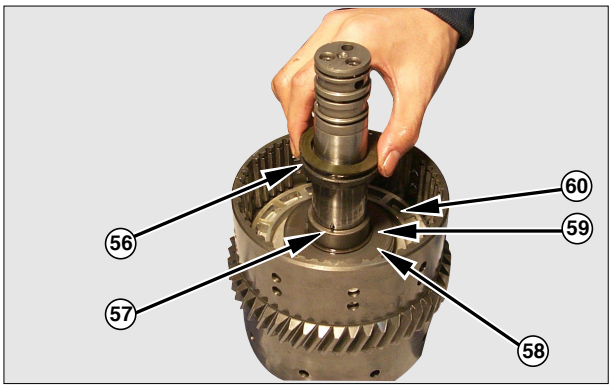

39. Remove two thrust washes (56) and pin (57).

40. Push down on the retainer (58) by a press and remove snap ring (59). Slowly release the tension on the spring assembly.
Remove retainer (58) and spring assembly.

41. Remove piston (60) by using compressed air.
Remove o-ring from the shaft.

NOTE: Disassembling procedure of input shaft assembly is the same as counter shaft assembly.

42. Disassemble input shaft assembly.

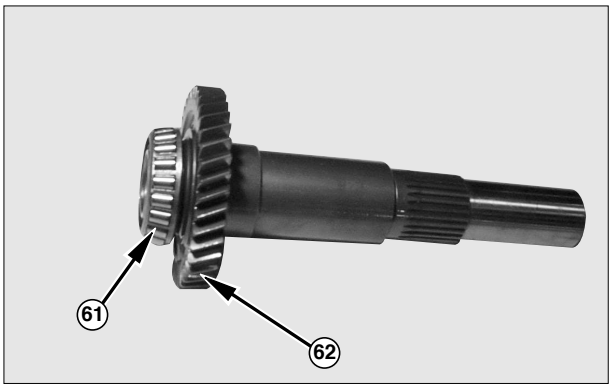

43. For output shaft assembly, remove the bearing (61) and gear (62).

https://truckmanualshub.com/

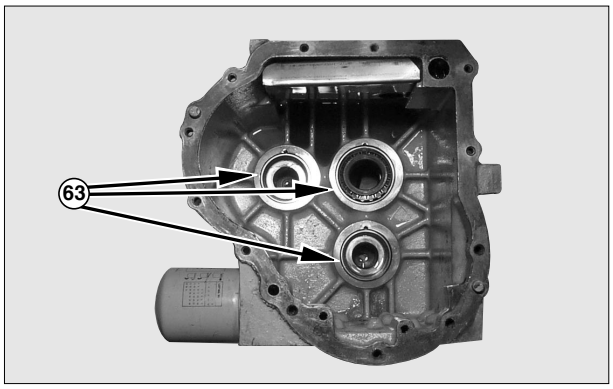

44. Remove bearing cups (63) from the transmission case.

NOTE: Put identification on bearing cups to use at assembly.

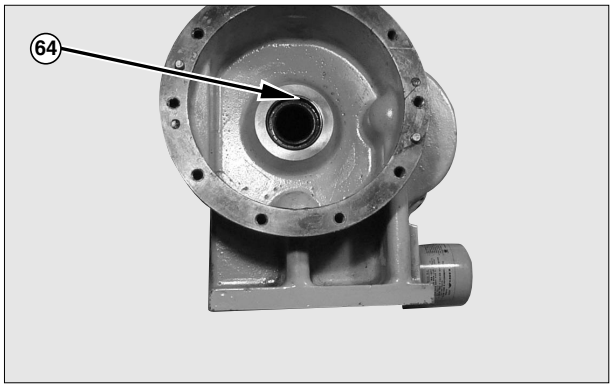

45. Remove lip type oil seal (64) from the transmission case.

Assemble Transmission

1. Thoroughly clean all the parts of the transmission. Put clean transmission oil on all of the inner parts.

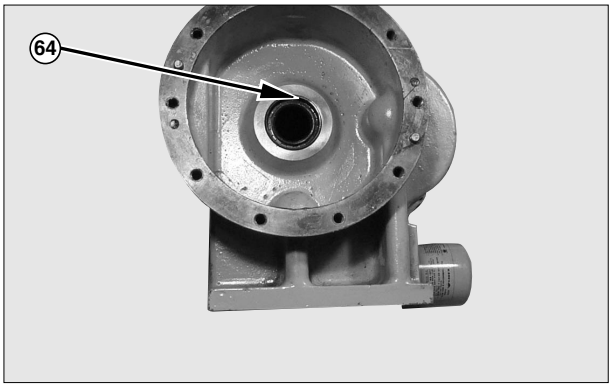

2. Put lip type oil seals (64) in position on the case with the spring loaded lip of the inside seal toward the inside of the transmission case and with the lip of the outside seal toward the outside of the transmission case.

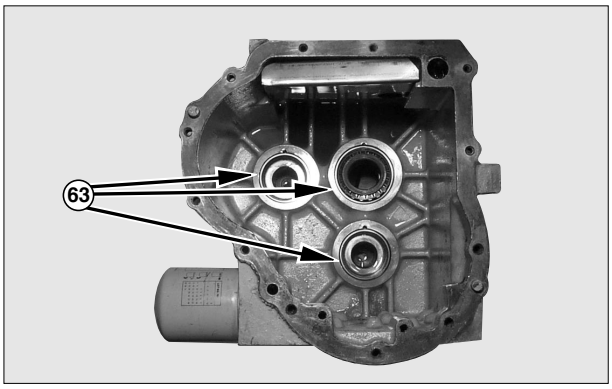

3. Install bearing cups (63) in position on the transmission case.

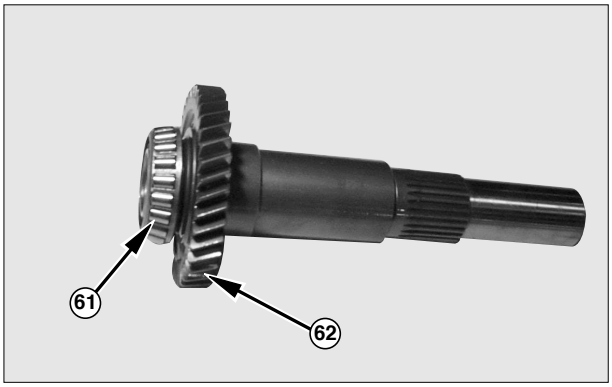

4. Install gear (62) and bearing (61) on the output shaft assembly.

https://truckmanualshub.com/

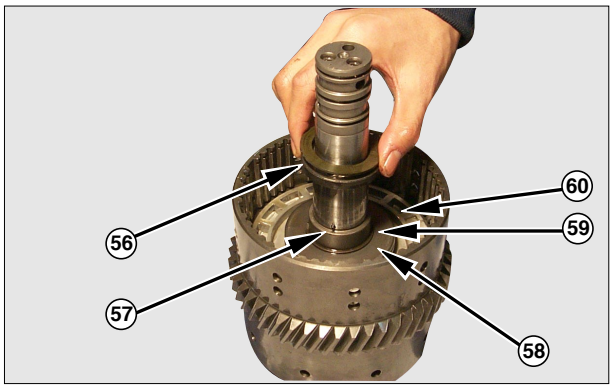

5. Install seal ring on the piston (60). Put clean transmission oil on the seal ring.

6. Install piston with seal ring in cylinder.

NOTICE

Be extra careful during installation of the piston. Broken seal rings can be the result.

---

7. Put spring assembly and retainer (58) in position in the cylinder.

8. Put the shaft assembly in a press. Push down on the retainer and install snap ring (59) with a screwdriver.

9. Install pin (57) and two thrust washes (56) in the counter shaft of low speed clutch side.

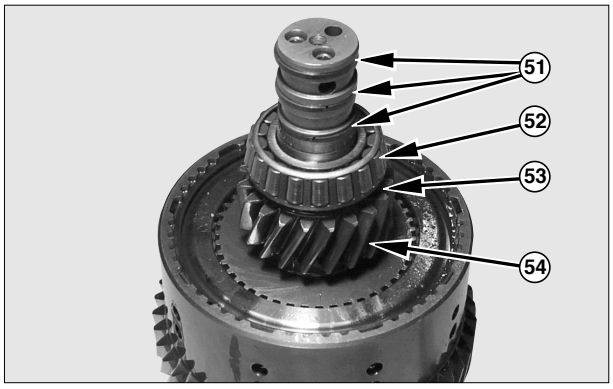

10. Install needle bearing, spacer, needle bearing gear (54), thrust washer (53) and bearing (52).

11. Put clean transmission oil on each side of the clutch plates and clutch discs. Install seven clutch plates, seven clutch discs in the cylinder with the following procedure.

a. Install a clutch plate first, that has teeth on its outside diameter.
b. Next, install a clutch disc that has teeth on its inside diameter.
c. Follow steps a and b again until all of the clutch plates and discs are installed in the cylinder.

12. Put pressure plate in position in the cylinder.

13. Use a screwdriver and install snap ring (55) that holds the pressure plate in position in the cylinder.

14. Install three seal rings (51) on the shaft.

NOTICE

Be careful not to cause damage to the seal rings (51)

---

15. For the other side of the counter shaft assembly, follow the procedure in steps 5 through 8.

https://truckmanualshub.com/

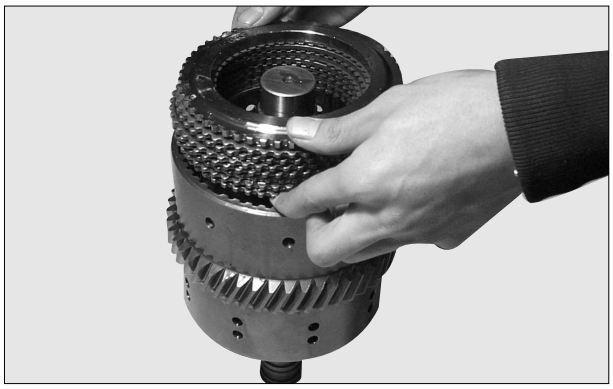

16. Put clean transmission oil on each side of the clutch plates, and clutch discs. Install seven clutch plates, seven clutch discs in the cylinder with the following procedure.

- **a.** Install a clutch plate first, that has teeth on its outside diameter.
- **b.** Next, install a clutch disc that has teeth on its inside diameter.
- **c.** Follow steps a and b again until all of the clutch plates and discs are installed in the cylinder.

17. Put pressure plate in position in the cylinder.

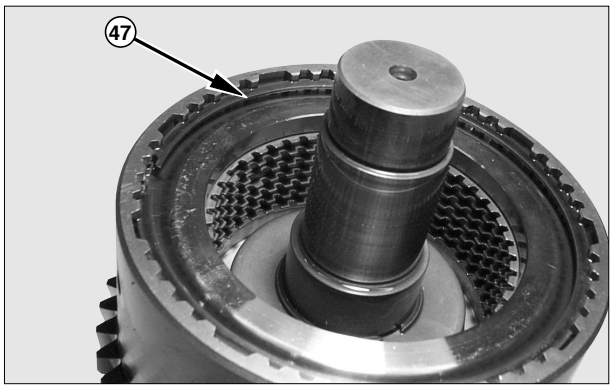

18. Use a screwdriver and install snap ring (47) that holds the pressure plate in position in the cylinder.

19. Install thrust washer and needle bearings on the counter shaft of high speed clutch side.

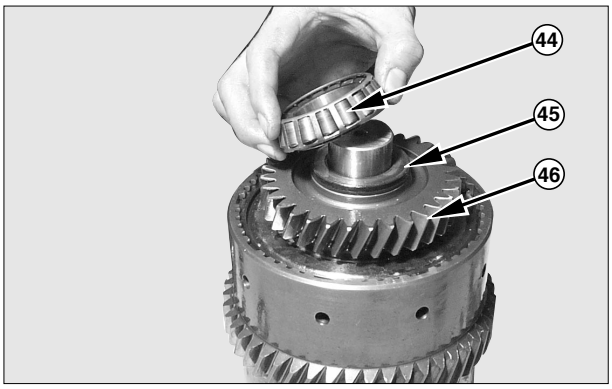

20. Install gear (46), thrust washes (45) and bearing cone (44) with tool.

NOTICE

Do not use force to install the gear. Move the gear backward and forward while the gear is pushed into the clutch assembly until the teeth on the clutch discs are in alignment with the splines on the gear.

21. Assemble input shaft assembly with the same procedure as counter shaft assembly.

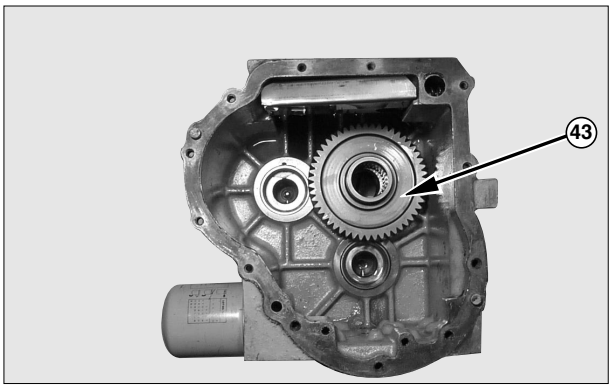

22. Install the gear assembly (43) into transmission case.

https://truckmanualshub.com/

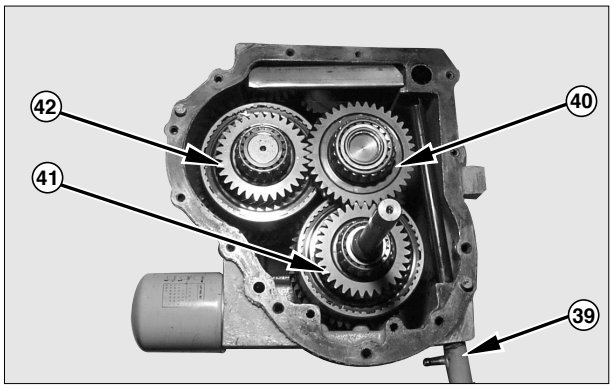

23. Carefully put the counter shaft assembly (42) in position in the transmission case.

24. Carefully put the input shaft assembly (41) in position in the transmission case.
Install output shaft assembly (40) into output gear assembly (43).
Turn the gear until the teeth are in alignment with gears of another shaft assembly.

25. Use the plastic hammer and install tube (39) in the transmission case.

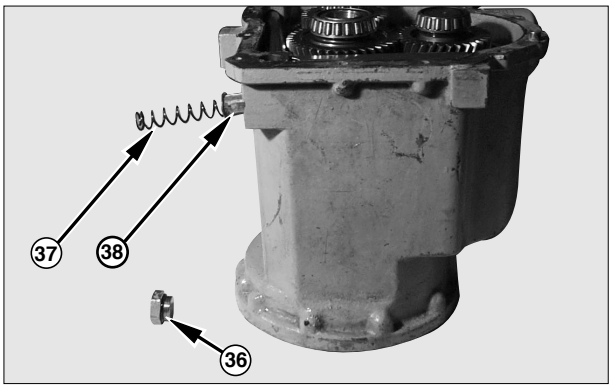

26. Install screen (38), spring (37) and plug (36), in the transmission case.

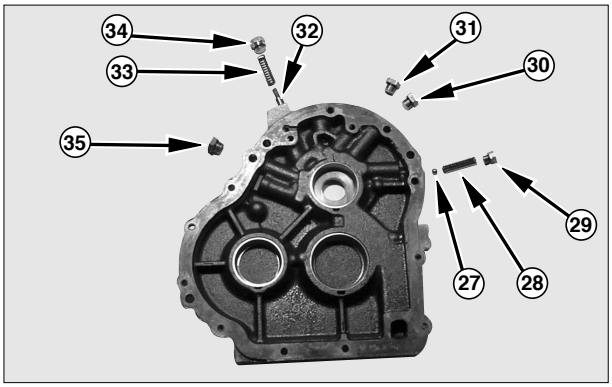

27. Install plug (35) and o-ring in the transmission cover.

28. Install valve (32), spring (33), plug (34) and o-ring in the transmission cover.

29. Install plug (31) and o-ring.

30. Install plug (30) and o-ring.

31. Install ball (27), spring (28), plug (29) and o-ring in the transmission cover.

https://truckmanualshub.com/

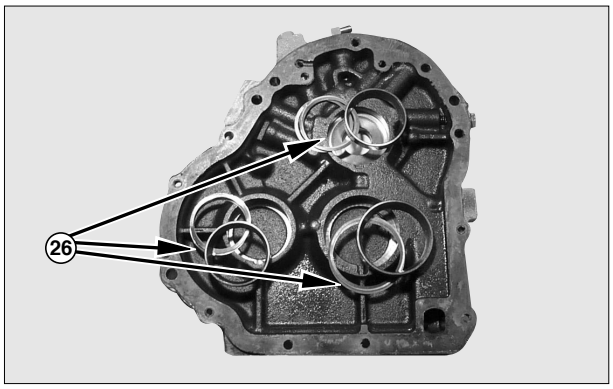

32. Put bearing cups and their shins (26) in the transmission cover.

NOTE: Bearing cups and their shims should be put into their location on transmission cover so as to fit on their shafts in transmission case.

33. When new parts are used, required shim thickness should be calculated as follows .

1) Assemble shaft assembly (including taper bearing cone and cup).

2) Insert shaft assembly into transmission case.

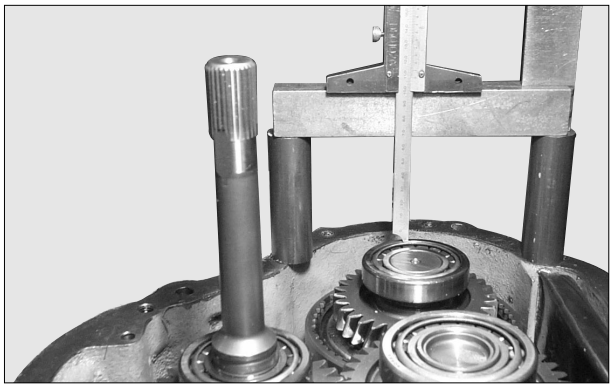

3) Measure the dimension ‘X’ from surface of transmission case to surface of bearing cup.

NOTE : Use depth gage and block gage because the height of bearing cup is higher than surface of transmission case.

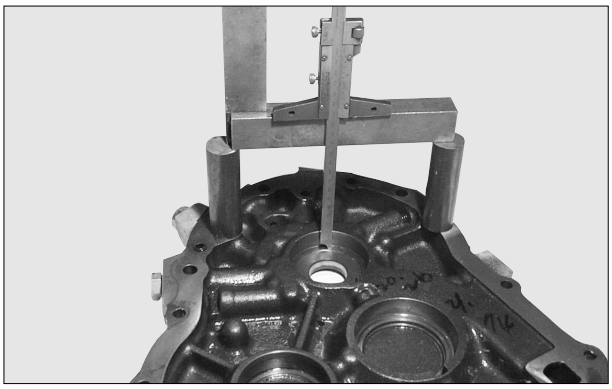

4) Measure the dimension ‘Y’ from surface of transmission cover to bottom of bore where bearing cup is installed.

5) Calculate required shim thickness as following formula. Required shim thickness ‘Z’ = Y - X + 0.33 mm

6) Select shims to have 0 to 0.05mm (0 to 0.002 in) of axial tightness.

7) Assemble transmission case, cover and gasket.

8) Set up transmission assembly vertically.

9) If you reshim input shaft or counter shaft, turn transmission input shaft by hand. It should be turned smoothly.
If you reshim output shaft, turn output shaft by hand.
It should be turned smoothly.

10) If the input shaft or output shaft does not turn smoothly, remove shims about 0.025 - 0.05 mm.

https://truckmanualshub.com/

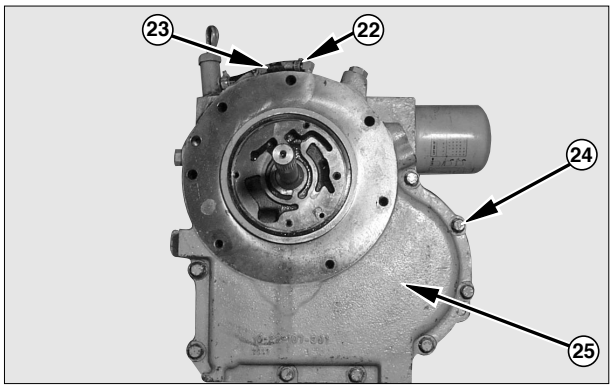

34. Put a new gasket for the transmission cover (25) in position on the transmission case. Carefully put transmission cover (25) in on the case as straight as possible.

NOTICE

Be extra careful during installation of the cover. Do not tilt the cover during installation, damage to the seal rings on the input shaft can be result.

---

35. Install bolts (24). Tighten the bolts to a torque of 45 ± 7 N•m (33 ± 5 lb•ft)

36. Put hose (23) in place and tighten the hose clamp (22).

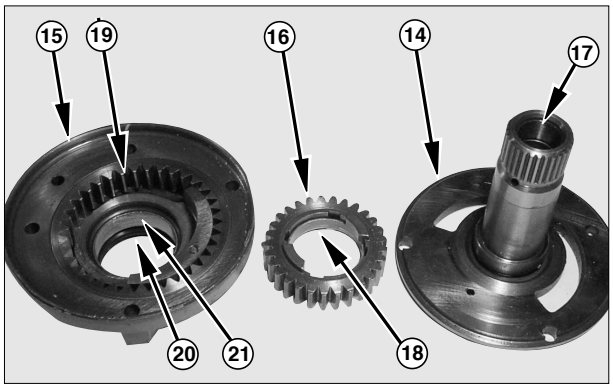

37. Install the seal (20) in the pump body with tool. The lip of the seal must be toward the inside of the pump body. Put clean transmission oil on the lip of the seal.

38. Put driven gear (19) in the pump body.

39. Put drive gear (16) in the pump body (15).

40. Put stator support (14) in position in the pump body (15).

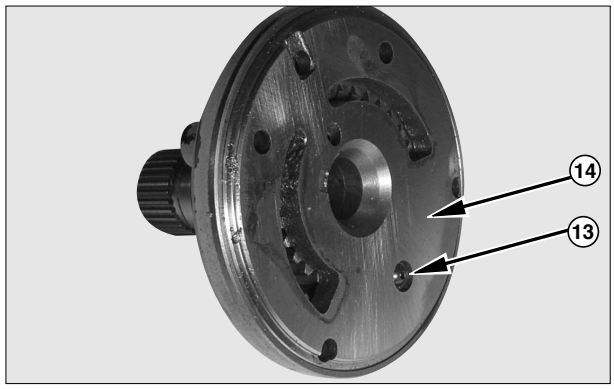

41. Install screw (13) that holds the stator support (14) to the pump body.

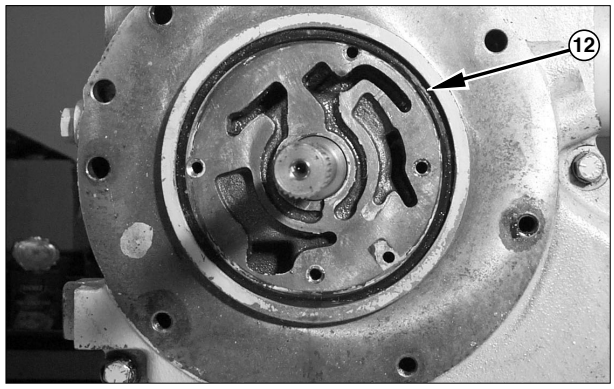

42. Put a gasket (12) on the transmission case for the oil pump.

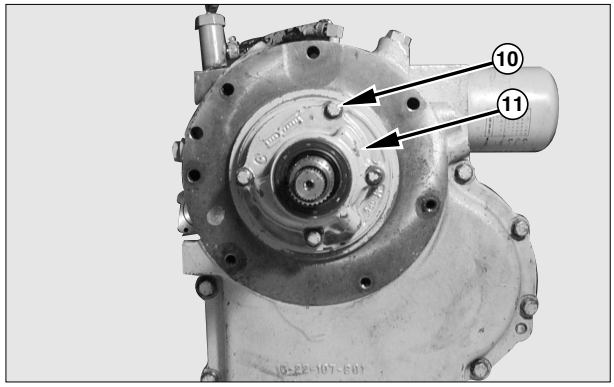

43. Install oil pump (11) in position on the transmission case. Install four bolts (10) that hold oil pump in position on the transmission. Tighten the bolts to a torque of 25 ± 7 N•m (18 ± 5 lb•ft).

https://truckmanualshub.com/

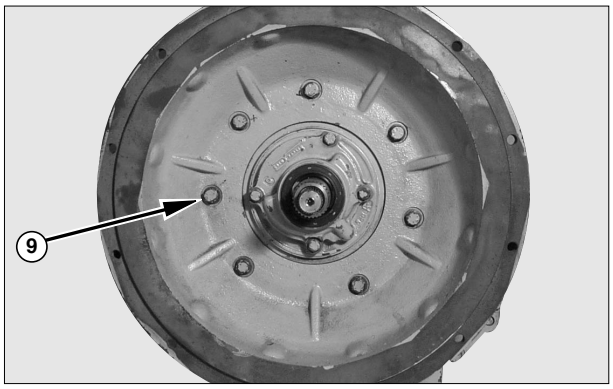

44. Install torque converter housing in position. Install bolts (9) and washes that hold torque converter housing to the transmission. Tighten the bolts to a torque of 70 ± 15 N•m (51 ± 11 lb•ft).

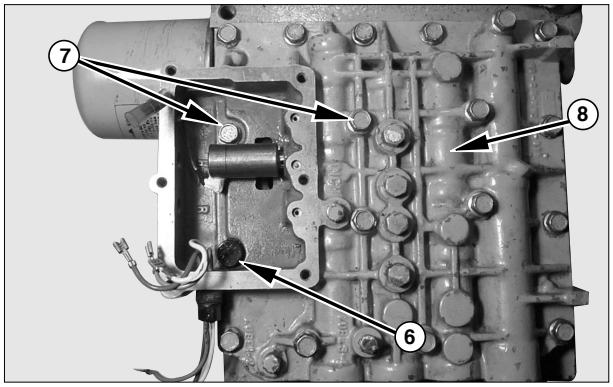

45. Put a new gasket in position and install the separator plate and control valve (8). Tighten the bolts (7) to a torque of 25 ± 7 N•m (18 ± 5 lb•ft).

46. Install two rubber caps (6).

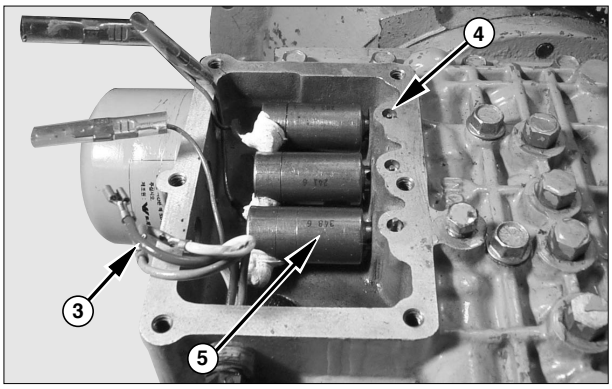

47. Put solenoids (5) and o-ring into position on the valve body. Slide pins (4) in position.

48. Connect the wires (3) to the solenoids in position.

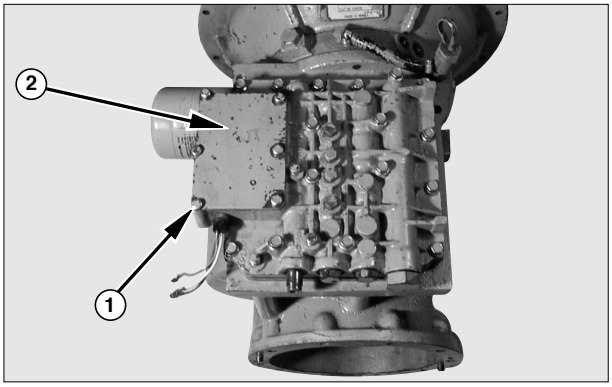

49. Install cover (2), gasket, bolts (1) and washes. Tighten the bolts (1) to a torque of 12 N•m (9 lb•ft).

End By:

a. Install drive axle.

b. Install torque converter.

https://truckmanualshub.com/

Drive Axle

Disassembly

Prior to disassembly clean axle housing carefully. A great help is a bright, spacious working place, free of dirt and chips. The necessary working steps are described and illustrated in the correct sequence. **Parts only available as assembly groups will not be stripped any further.**

Removal And Strip Down of Wheel Hub

1. Loosen oil drain plug on axle housing and drain oil.

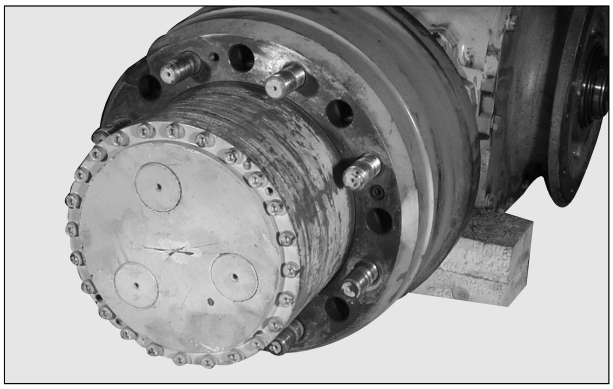

2. Loosen and remove two cylindrical bolts from brake drum.
Loosen brake drum by slightly beating with a plastic hammer onto the outer diameter and remove it.

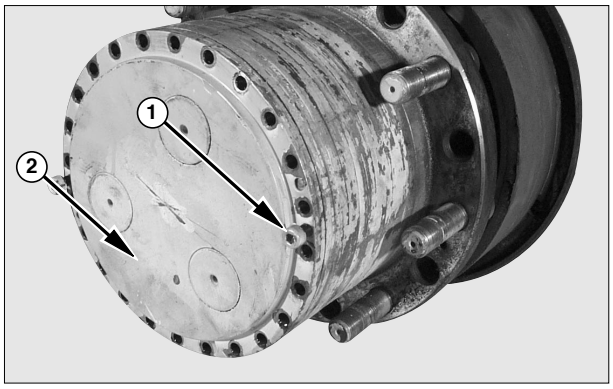

3. Loosen cylindrical bolts (1) and remove planetary carrier (2).

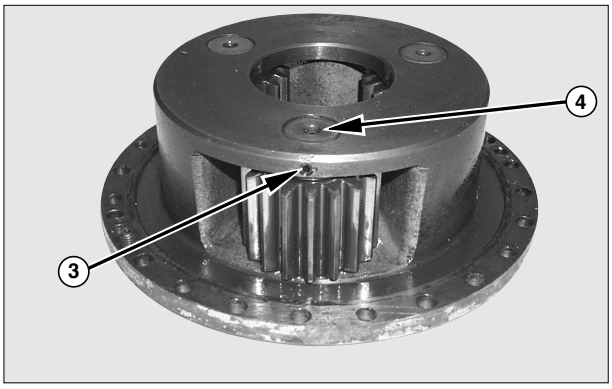

4. Drive spring pins (3) into planetary pins (4).

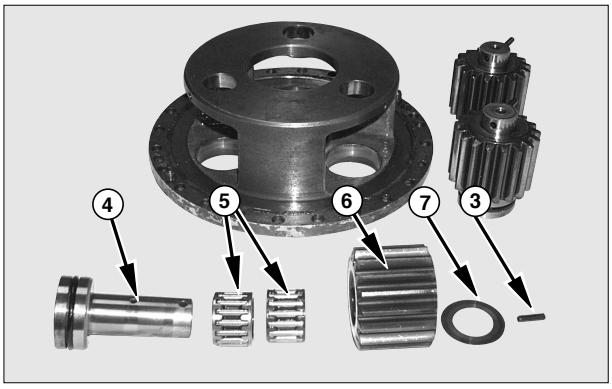

5. Remove pin (4), needle bearings (5), gear (6) and thrust washer (7). Remove spring pin (3) from planetary pin (4).

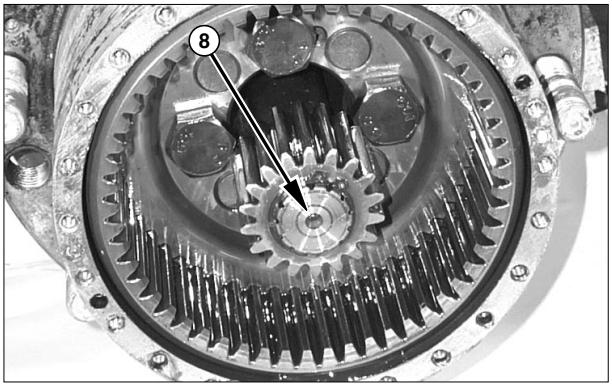

6. Remove axle shaft (8) with sun gear.

https://truckmanualshub.com/

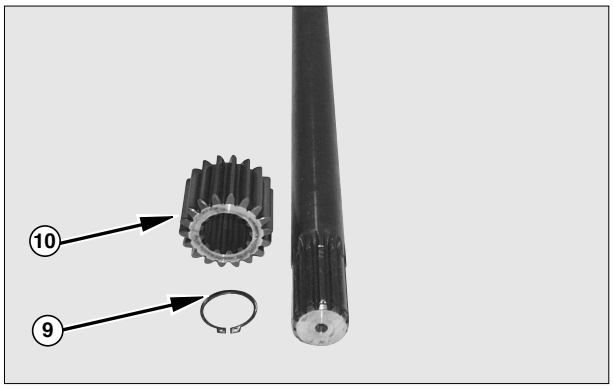

7. Remove stop ring (9) and pull off sun gear (10) from the axle shaft.

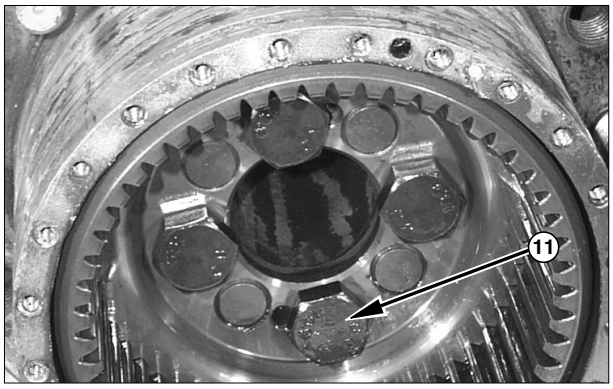

8. Loosen the bolts (11) and remove them.

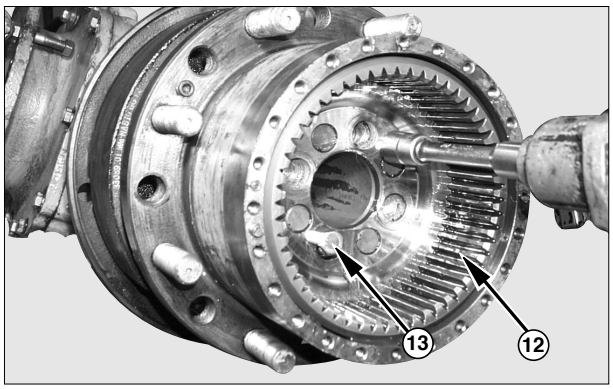

9. Remove ring gear and torque plate assembly (12) by using two jackbolts (13).
Remove shims from axle tube.

10. Remove snap ring from the ring gear and pull torque plate out of the ring gear.

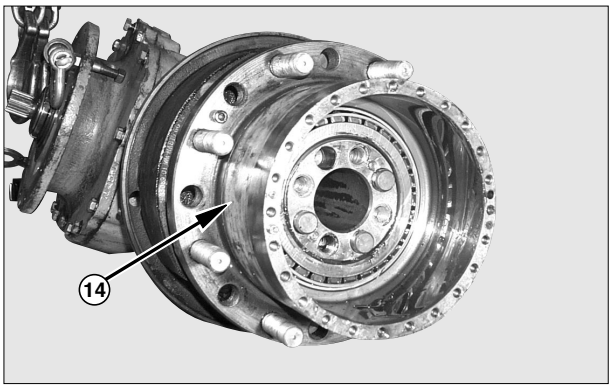

11. Remove wheel hub assembly (14) from the axle flange by using bearing puller.

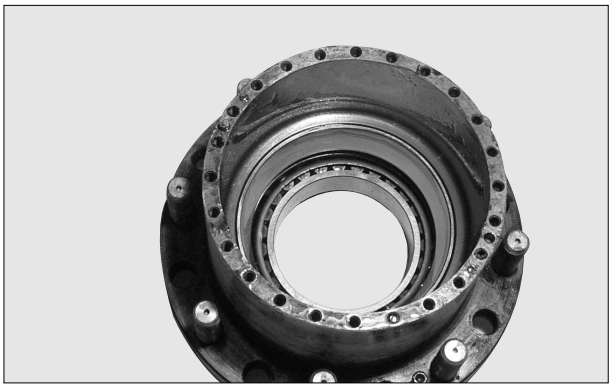

12. With the aid of a copper mandrel and a hammer drive bearings out of the wheel hub.
Due to this the radial shaft seal will be damaged.

NOTE : Use a new radial shaft seal for reassembly!

13. Turn wheel hub.
With the aid of a copper mandrel and a hammer drive bearing outer race out of the wheel hub.

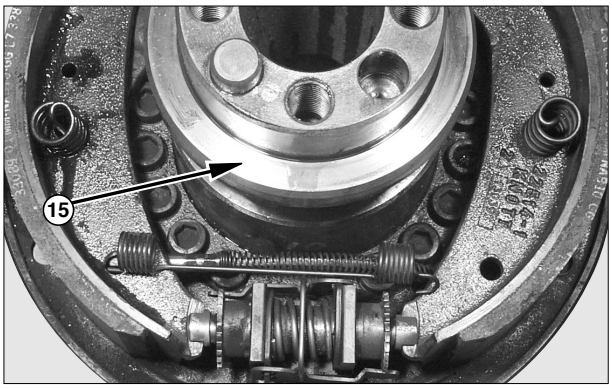

14. Remove seal race (15), O-ring and spring pins that hold seal race.

https://truckmanualshub.com/

Removal And Strip Down Of The Brake

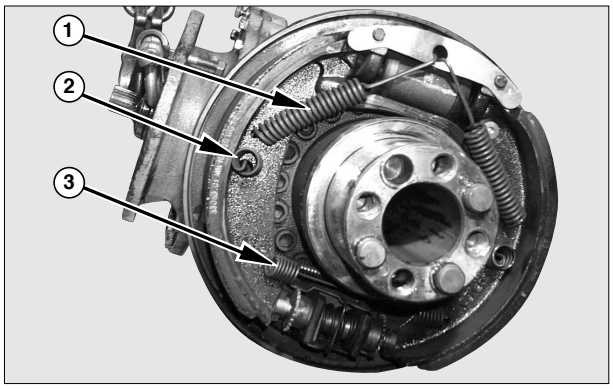

1. Remove the 2 tension springs (1) with the aid of pliers or a screwdriver from the brake downholding.

2. Squeeze, unhook and remove compression springs (2). Remove spring (3). Unhook and remove the two brake shoes. Then unhook the brake cable at the pressure rod of the brake shoes and remove it.

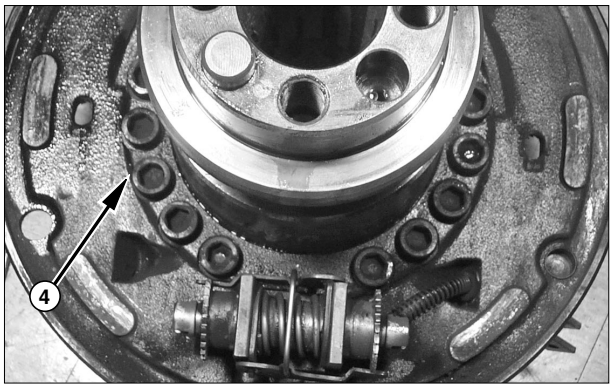

3. Loosen the 16 cylindrical bolts (4).
Detach and remove brake plate from axle flange.

NOTE : Make the same steps on the second side of the wheel hub !

Removal and strip down of the axle housing

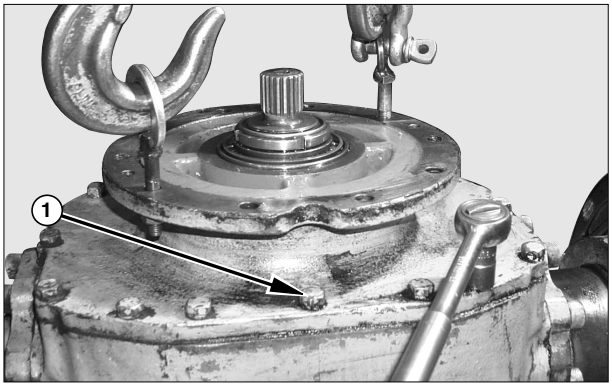

1. Loosen the bolts (1) and remove them.
Fasten link bracket to the housing and a hoist. Lift the carrier assembly out of the housing.

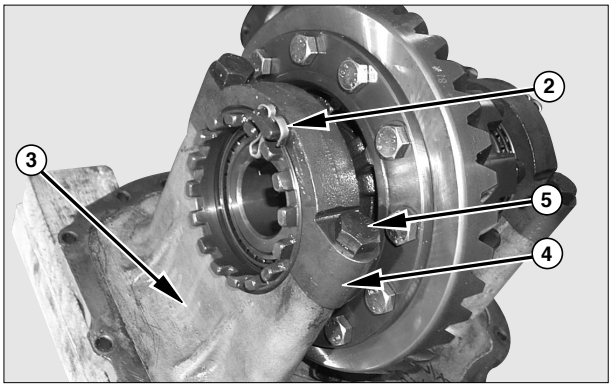

2. Measure rolling registance of differential assembly and record it for the purpose of reassembly.
Remove the locking cotter pins (2).

3. Prior to remove the differential assembly from the carrier (3), note the mounting position of the caps (4) to the carrier. If not existing, identify mounting position with a mark.

4. Loosen the 4 hexagon bolts (5).
Remove both caps (4).

5. Lift differential assembly out of the carrier.

https://truckmanualshub.com/

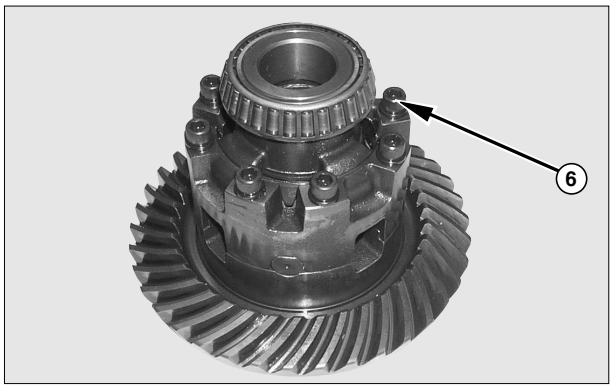

6. Loosen and remove the bolts (6) on the differential housing.

7. Open differential housing halves.
Observe marking prior to opening, as this one must be brought to the same position for reassembly.

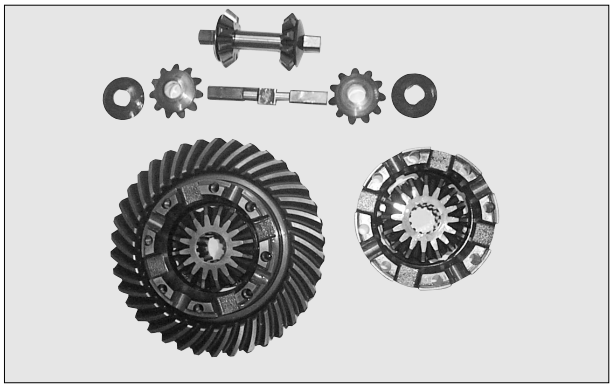

8. Take out thrust washers, side gears, pinion gears and spider and keep them on a clean place.

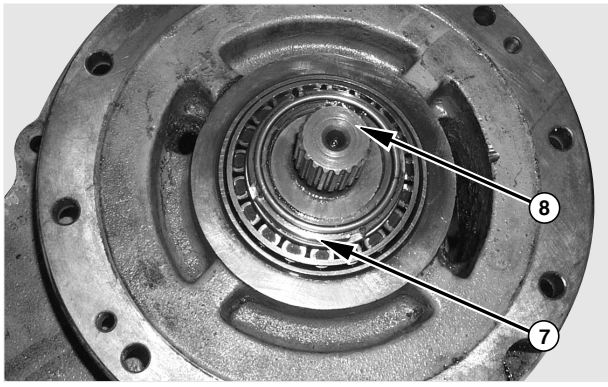

9. Loosen locknut (7).

10. By means of a plastic hammer drive bevel pinion shaft (8) carefully out of the bearing seat.

NOTE : Take care that bevel pinion shaft is not damaged when driving it out.

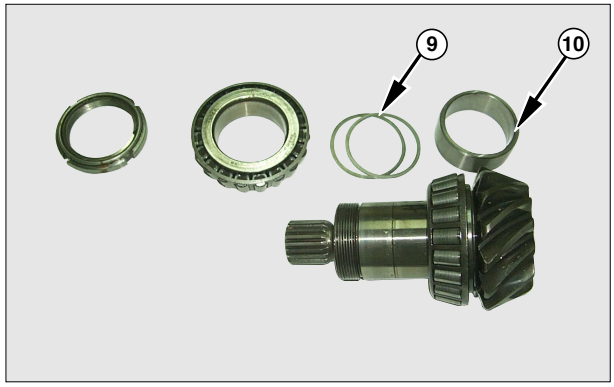

11. Remove shims (9) and spacer (10) from the pinion shaft. Pull off the tapered roller bearing inner race from the bevel pinion shaft with the aid of a special bearing puller.

https://truckmanualshub.com/

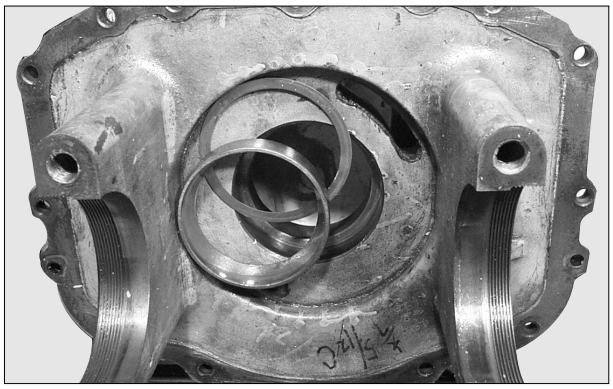

12. With the aid of a copper mandrel and a hammer drive the tapered roller bearing outer race and shims out of the housing.
Do not reuse deformed shims.

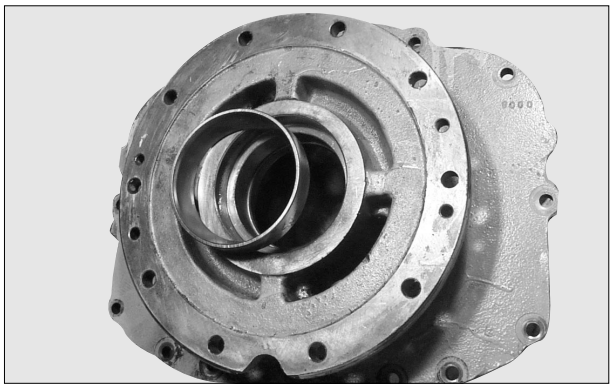

13. Tapered roller bearing outer race on the opposite side has to be driven out.

Reassembly

Clean all parts with a suitable cleaning agent and remove residues of LOCTITE.

⚠ WARNING

Keep away cleaning agent from your skin, do not drink it or inhale its vapours !
Wear safety gloves and goggles! In case of skin contact rinse immediately with a lot of water! If by mistake the cleaning agent was swallowed, call medical aid immediately! Observe regulations for prevention of accidents!

Check all parts for wear, damages and cracks, if required replace them.
In case of damaged running teeth, the gear set parts have to be replaced per set.
Always replace damaged tapered roller bearings (inner-and outer race).
Do not reuse deformed shim rings and worn thrust washers.
Touch up seal faces or smoothen with a fine file.

https://truckmanualshub.com/

Determination of Installation Dimension For Bevel Pinion Shaft

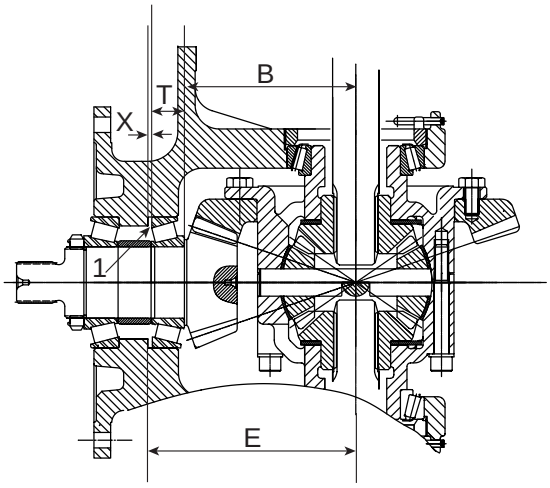

1. The bevel gear set consisting of bevel gear shaft and bevel gear, is provided with certain installation dimensions. The correct adjustment of the bevel pinion shaft is required for an exact setting of the contact pattern and the torsional backlash.
Shim ring thickness and the correct adjustment of the bevel pinion shaft can be determined according to the following method :

•Measure housing dimension E on the housing.

By the equation **X=E-B-T**, it is possible to calculate the thickness of the shim rings (1).

Which means :
B = Mounting distance stamped on the endface of the pinion shaft.
T = Bearing width of the bearing
Add shim rings according to thickness X.

Example :
Dim. E measured on the housing .....174.70 mm (6.880 in)
Dim. T measured on the bearing.....29.75 mm (1.171 in)
Dim. B Stamped on the shaft .....144.00 mm (5.669 in)

X = 174.7 - 144.0 - 29.75 = 0.95 mm
(X = 6.880 - 5.669 - 1.171 = 0.40 in)

NOTE : In case of damages on the running teeth replace bevel gear shaft and bevel gear only per set. Do not reuse or install deformed shim rings or damaged bearings.

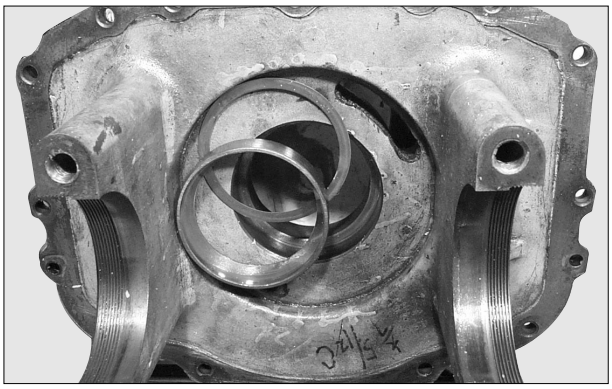

2. Shim ring thickness determined has to be obtained by combining shim rings of variable thickness. Place shim rings into bearing seat. With the aid of a copper mandrel drive bearing outer race into the bearing seat of the housing until contact.

3. Heat bearing inner race up to max. 100˚C (212˚F) and place onto bevel pinion shaft until contact. Install subsequently until contact after cooling down !

https://truckmanualshub.com/

Measurement Bearing Play of Bevel Pinion Shaft

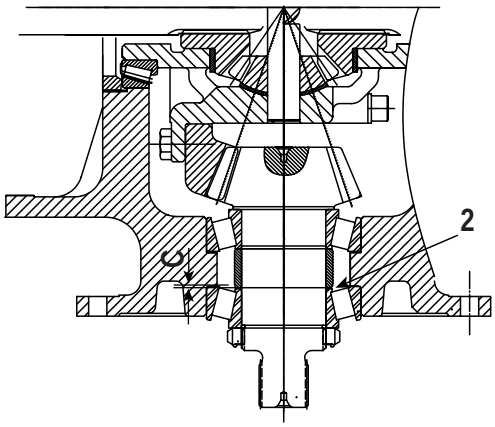

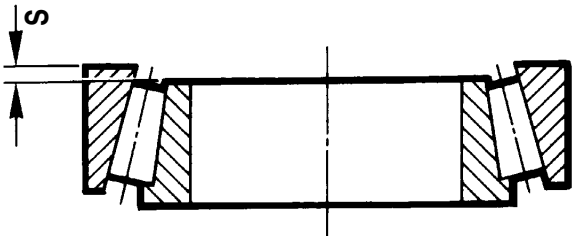

With the following method the dimensions can be used to determine the shim ring (2) thickness.

Dim. C = Distance from spacer surface to seat of bearing outer race.
Dim. S = Distance from plane face of bearing outer race to place face of bearing inner race.

Calculate shim ring thickness (2) by means of equation

Z = S + C

Example :
C = 0.5 mm (0.020 in) measured on housing
S = 1.75 mm (0.069 in) measured on bearing
Z = 1.75 - 0.5 = 1.25 mm
(Z = 0.069 - 0.020 = 0.049 in)

Adjustment Of Bearing Preload On Bevel Pinion Shaft

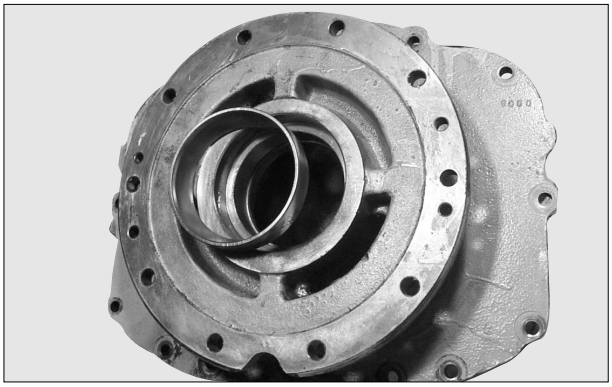

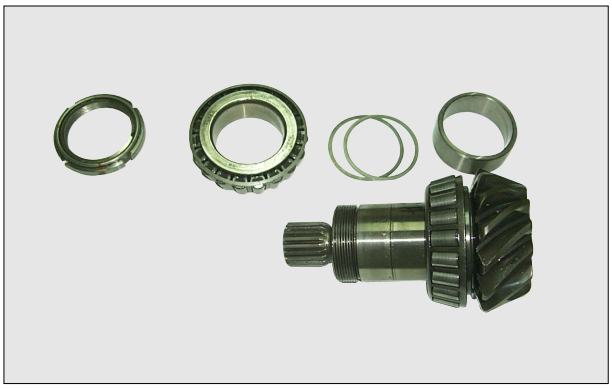

1. Install bearing cup.
Put the spacer into the pinion shaft and place shims determined on the spacer.

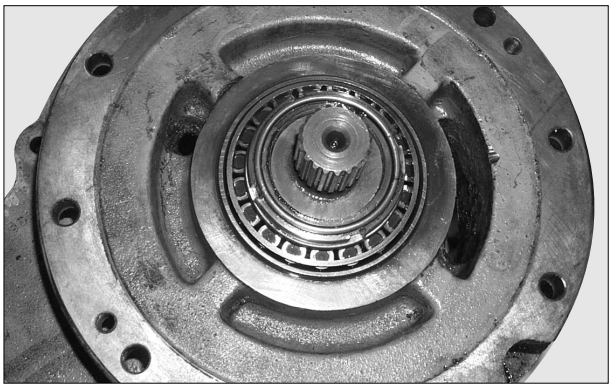

2. Put the pinion shaft into the carrier.
Install bearing cone and lock nut.
Tighten locknut to a torque of 490 N•m (360 lb•ft).
Measure rolling resistance of pinion shaft. Adjust shim thickness until rolling resistance is 1.7 to 2.5 N•m (15 to 22 lb•in).
Stake locknut into a slot of pinion shaft.

https://truckmanualshub.com/

Presassembly Differential

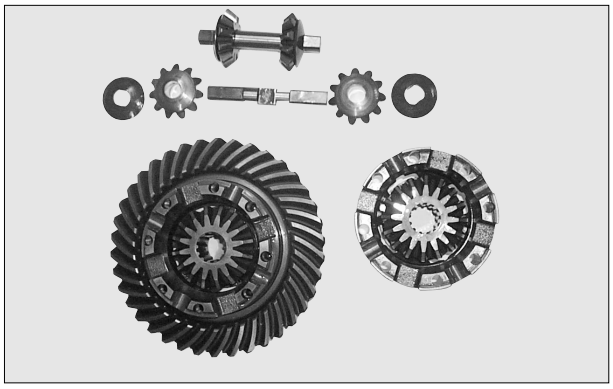

1. Place thrust washer, side gear, spiders with gears and washers, side gear and thrust washer into one differential housing half.

2. Join differential housing halves.

NOTE : Observe marking when housing halves are joined ! Markings must be in the same position.

3. Connect differential housing halves with bolts. Apply LOCTITE 262 onto threads of the bolts. Tighten bolts.
Tightening torque .....145 N•m (107 lb•ft)

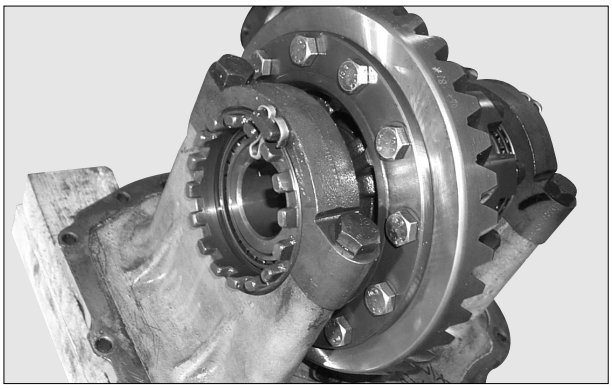

4. Place differential assembly into the carrier. Locate bearing cups and screws into the housing halves. It is advantageous to fix the torsional backlash now. This is done by means of the screws. Position dial gauge with magnetic stand right-angled to a tooth flank and measure the torsional backlash rotating the bevel gear.

Torsional backlash .....0.15 - 0.25 mm (0.006 - 0.010 in)

5. Locate bearing caps.

NOTE : Consider same marking on caps to the housing.

Fasten bearing caps with hexagon bolts slightly.

Tightening torque .....100 N•m (74 lb•ft)

Measure the rolling resistance of the taper roller bearings. Proper rolling resistance of new parts is 6.3 to 9.3 N•m (4.7 to 6.8 N•m).

6. Check if screw fits closely with the bearing.

7. Check torsional backlash once more, as described before. (Bearing caps are tightened) In case of deviations it is possible to correct those over screws. Apply Loctite 262 onto threads of the bolts (5). Tighten the bolts to a torque of 295 N•m (218 lb•ft).

8. Install locking cotter pins (2).

NOTE : Make the same step on the second side !

9. Apply marking ink onto 3-4 tooth flanks of the crown gear and have it to get in mesh with the bevel pinion several times. Check contact pattern as described under next section.

https://truckmanualshub.com/

Contact Pattern Check

For a contact pattern check it is necessary to apply marking ink onto 3-4 tooth flanks of the crown gear. Have the ink-marked tooth flanks get into mesh with the bevel pinion several times. A better recognition of the contact pattern is possible, when the bevel pinion is braked slightly. The contact patterns obtained have to be compared with the specified contact pattern as regards size and position. The specified contact patterns are indicated in below diagram.
Insignificant deviations of the ideal shape are possible and permissible. These deviations are firstly due to the varying contact pressures during contact pattern checking.
If there are considerable deviations it has to be checked if the installation dimensions were correctly kept. As a rule wrong installation dimensions are the cause for wrong contact patterns.
Only when at a repeated checking of the installation dimensions no correct contact patterns are obtainable, the position of the contact pattern should be corrected according to the diagram as shown below.

Installation Specifications

Correct contact pattern

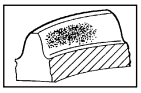

(1) Contact on tip

(2) Contact on root

(3) “Toes” - contact

(4) “Heel” - contact

Setting Specifications :

On principle all gear sets have to be mounted in accordance with the installation dimension.
Only in case of incorrect contact patterns the installation dimension has to be changed.
The extent of a change depends on the position of contact pattern.

Assembly Of Carrier Into Axle Housing

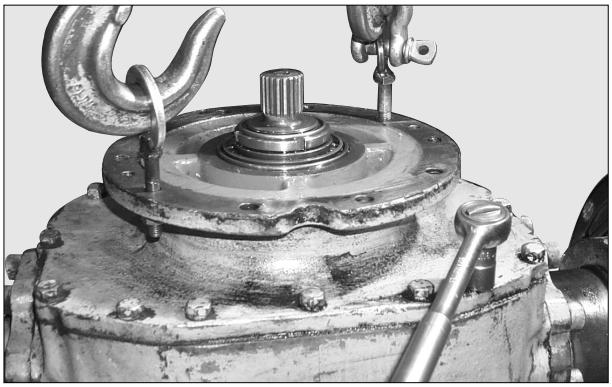

1. Apply Loctite 587 on the housing face.

2. Install carrier assembly into axle housing

3. Connect carrier assembly on axle housing with the hexagon bolts.

Tightening torque .....54 N•m (40 lb•ft)

Mounting Of Brake And Wheel Hub to The Axle Housing

1. Apply Loctite 262 onto threads of the bolts (1). Fasten brake plate and axle flange with cylindrical bolts (1) and lock washers to the axle housing.

Tightening torque .....200 N•m (147 lb•ft)

https://truckmanualshub.com/

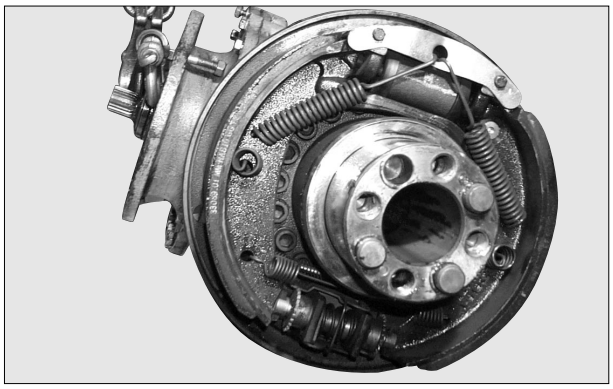

2. Lead brake cable through the provided borehole of the brake carrier and hook it on the pressure rod of the brake shoes.
Assemble brake shoes, compression springs and tension springs as described in the Disassembly Section in reverse order.

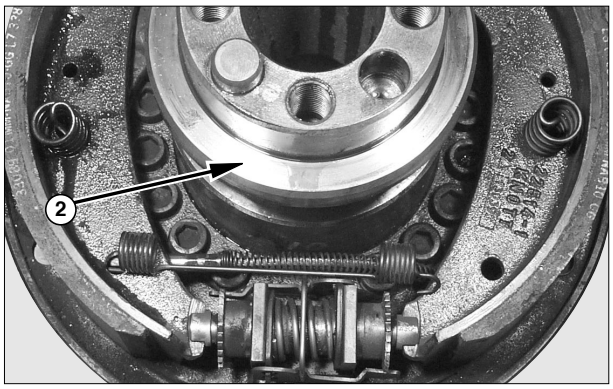

3. Install spring pins into axle tube and O-ring and seal race (2).

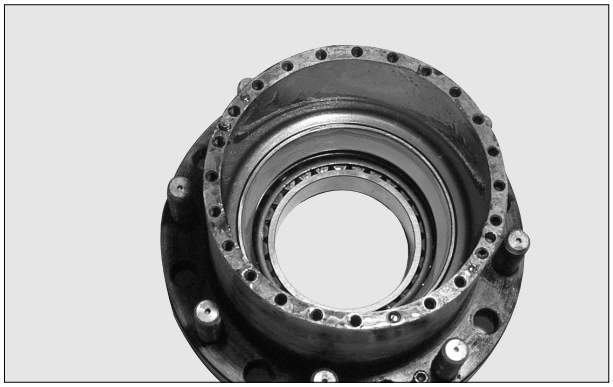

4. Drive bearings into the wheel hub until contact.

NOTE : Then, Install the radial shaft seal with the lip of the seal toward the outside of the wheel hub.

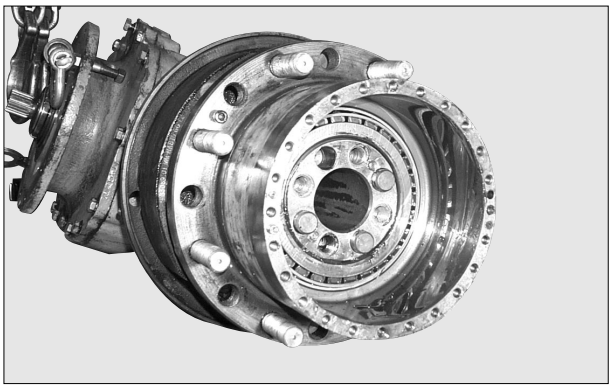

5. Install preassembled wheel hub onto axle flange until contact. Insert bearing cone.

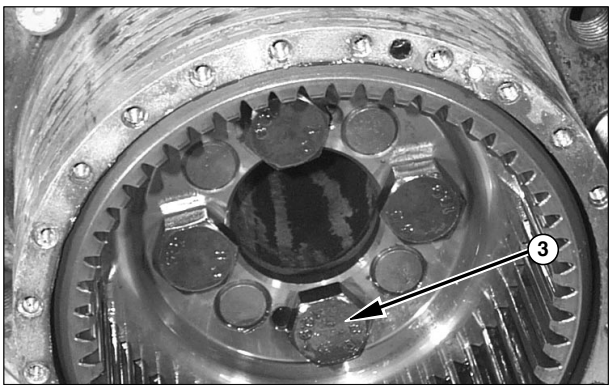

6. Insert pins into axle tube. Install shims on the pins. Assemble torque plate into ring gear with snap ring and install the ring gear and torque plate assembly onto the axle tube. Apply Loctite 262 to the threads of the bolts (3). Tighten the bolts to a torque of 690 N•m (510 lb•ft).

https://truckmanualshub.com/

When new parts are used, shim thickness should be determined as follows.

a. Place the axle tube and wheel hub assembly in a position with wheel hub torward the upside of the assembly.

b. Measure distance from axle tube face to inner bearing face of wheel hub outside.

c. Subtract 0.175 mm (0.007 in) from measured distance. This is shim thickness.

d. Insert shims determined and install the ring gear assembly with the bolts.

e. Measure rolling resistance of the bearings. Adjust shim thickness until rolling resistance is 8.9 to 11.8 N•m (6.6 to 8.7 lb•ft).

f. If rolling ressistance is correct, loosen the bolts and install pins.
Apply Loctite 262 to the threads of the bolts and tighten the bolts to a specified torque.

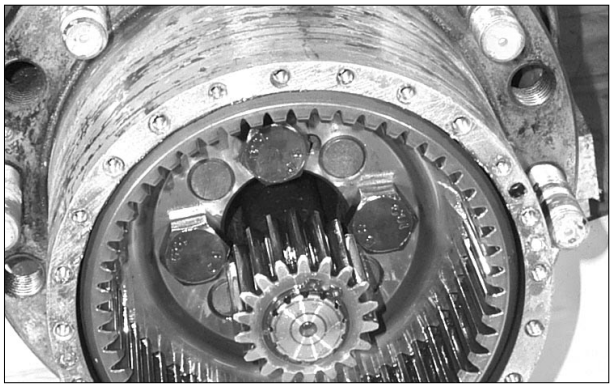

7. Insert sun gear into axle shaft and hold it with stop ring.

8. Insert axle shaft assembly into the axle.

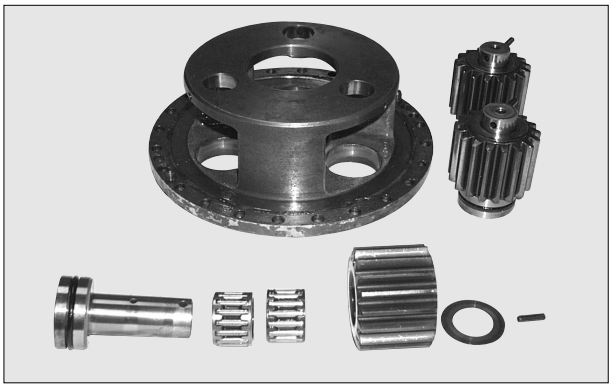

9. Install all inner parts into the planetary carrier in the reverse order of removal.

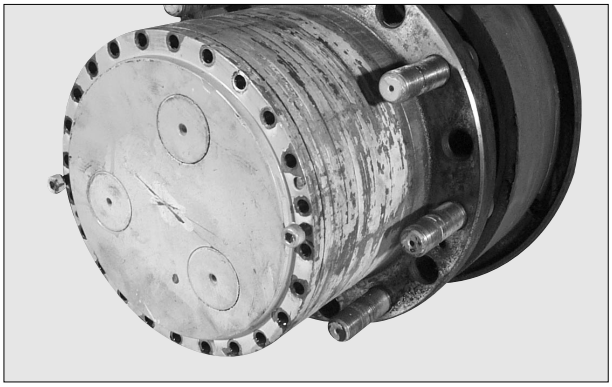

10. Install the planetary carrier assembly on the wheel hub. Tighten the bolts to a torque of 42 N•m (31 lb•ft).

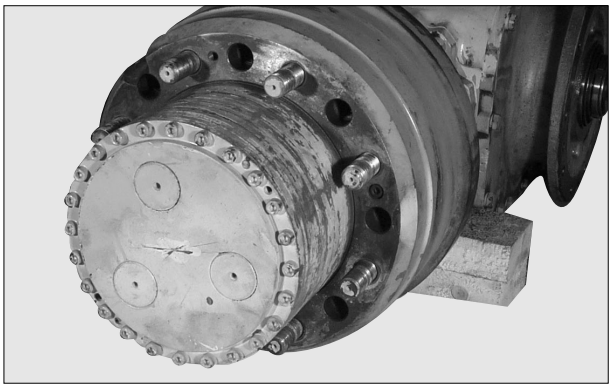

11. Install brake drum and tighten the bolts.

https://truckmanualshub.com/

SB2203E00
Jun. 1999

Specifications Systems Operation Testing & Adjusting

Lift Trucks Vehicle Systems

D35S-2, D40S-2, D45S-2
D40SC-2, D45SC-2, D50SC-2
G35S-2, G40S-2, G45S-2
G40SC-2, G45SC-2, G50SC-2

https://truckmanualshub.com/

Important Safety Information

Most accidents involving product operation, maintenance and repair are caused by failure to observe basic safety rules or precautions. An accident can often be avoided by recognizing potentially hazardous situations before an accident occurs. A person must be alert to potential hazards. This person should also have the necessary training, skills and tools to perform these functions properly.

Read and understand all safety precautions and warnings before operating or performing lubrication, maintenance and repair on this product.

Basic safety precautions are listed in the “Safety” section of the Service or Technical Manual. Additional safety precautions are listed in the “Safety” section of the owner/operation/maintenance publication.
Specific safety warnings for all these publications are provided in the description of operations where hazards exist. WARNING labels have also been put on the product to provide instructions and to identify specific hazards. If these hazard warnings are not heeded, bodily injury or death could occur to you or other persons. Warnings in this publication and on the product labels are identified by the following symbol.

⚠ WARNING

Improper operation, lubrication, maintenance or repair of this product can be dangerous and could result in injury or death.
Do not operate or perform any lubrication, maintenance or repair on this product, until you have read and understood the operation, lubrication, maintenance and repair information.

Operations that may cause product damage are identified by NOTICE labels on the product and in this publication.

DAEWOO cannot anticipate every possible circumstance that might involve a potential hazard. The warnings in this publication and on the product are therefore not all inclusive. If a tool, procedure, work method or operating technique not specifically recommended by DAEWOO is used, you must satisfy yourself that it is safe for you and others. You should also ensure that the product will not be damaged or made unsafe by the operation, lubrication, maintenance or repair procedures you choose.

The information, specifications, and illustrations in this publication are on the basis of information available at the time it was written. The specifications, torques, pressures, measurements, adjustments, illustrations, and other items can change at any time. These changes can affect the service given to the product. Obtain the complete and most current information before starting any job. DAEWOO dealers have the most current information available.

https://truckmanualshub.com/

https://truckmanualshub.com/

Index

Specifications

Booster-Brake 6
Hydraulic Control Valve 5
Hydraulic Pump 6
Steering Gear 7
Steering Wheel And Gear Group 7
Steer Wheels And Steer Axle 7
Tilt Cylinder 6
Tilt Cylinder Installation 6

Systems Operation

Brake System 21
Control Valve 10
Hydraulic System 8
Steering System 17
Steering Unit 18

Testing And Adjusting

Brake System 33
- Brake System Air Removal 33
- Parking Brake Adjustment 33
- Parking Brake Test 34

Hydraulic System 28
- Relief Valve Pressure Check 28

Steering System 29
- Steer Axle Stop Adjustment 30
- Steer Wheel Bearing Adjustment 29
- Steering System Air Removal 31
- Steering System Pressure Check 32

Tilt Cylinder Alignment 34
Troubleshooting 22
- Brake System 27
- Hydraulic System and Mast 23
- Operation Checks 22
- Steering System 26
- Visual Checks 22

https://truckmanualshub.com/

https://truckmanualshub.com/

Specifications

Hydraulic Control Valve

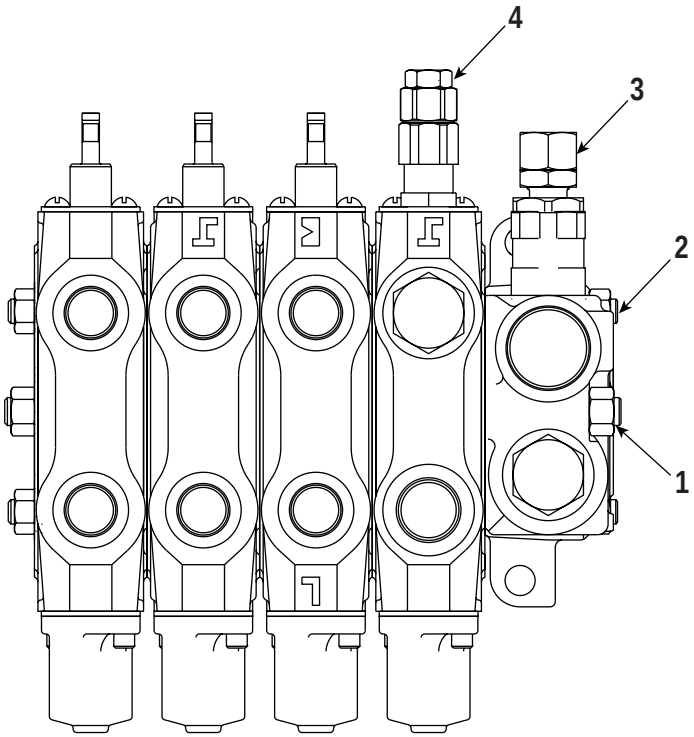

IACS101I

(1) Torque for nuts that hold control valve sections together.....100 N•m (885 lb•in)

(2) Torque for nuts that hold control valve sections together.....65 N•m (575 lb•in)

(3) Torque for main relief valve .....65 N•m (575 lb•in)

(4) Torque for secondary relief valve.....45 N•m (398 lb•in)

Main relief valve pressure (3)
(D35S-2, D40S-2, D40SC-2) .....19400 ± 250 kPa
(G35S-2, G40S-2, G40SC-2) (2813 ± 36 psi)

Main relief valve pressure (3)
(D45S-2, D45SC-2, D50SC-2).....21400 ± 250 kPa
(G45S-2, G45SC-2, G50SC-2) (3103 ± 36 psi)

Secondary relief valve pressure (4)...14000 ± 250 kPa (2030 ± 36 psi)

https://truckmanualshub.com/

Hydraulic Pump

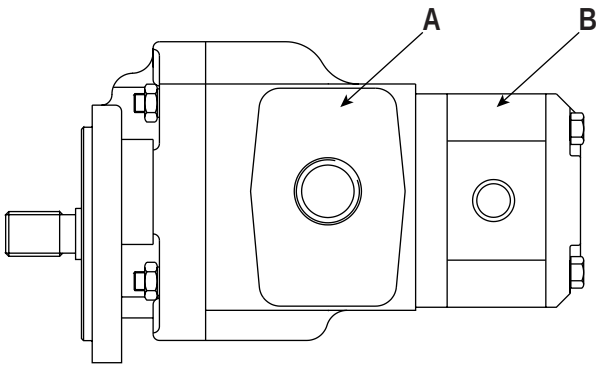

IACS102I

Large Section Of Pump (Hydraulic Controls and Steering) : A

Small Section Of Pump (Brake) : B

Rotation : Anti-Clockwise
Displacement
Diesel truck : 46 cc/rev(Main), 9cc/rev(Brake)
Gasoline truck : 41 cc/rev(Main), 9cc/rev(Brake)

Maximum continuous pressure : 210 Bar
Maximum speed ..... 3000 rpm
Minimum speed ..... 500 rpm

Tilt Cylinder

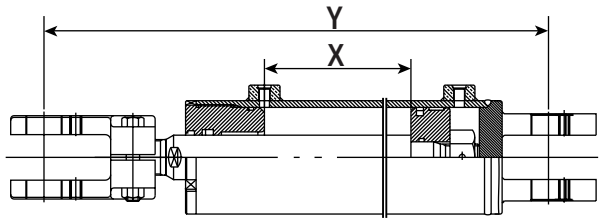

IACS103I

Cylinder stroke (X) = 211 mm (8.3 in)
Cylinder closed length (Y) = 531 mm (20.9 in)

Tilt Cylinder Installation

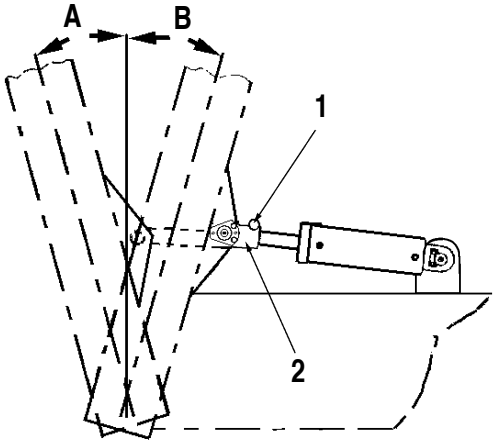

ICCS033S

1. Adjust clevises (2) to have Forward Tilt Angle (A) and backward Tilt Angle (B) as per Tilt Cylinder specifications.
2. Both clevises (2) must also be adjusted so both cylinder rods stop evenly and have the same length.
3. After clevis adjustment, tighten bolt (1) to a torque of.....115.6 ~ 133.3 N•m (86 ~ 99 lb•ft)

Booster-Brake

⚠ WARNING

Improper adjustment could result result in injury or death. It has to be adjusted by 99mm on free condition. For safe, don't unfasten clevis and nut. It has to be adjusted by trained personnel.

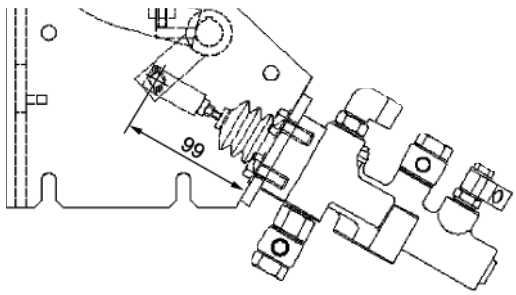

IA3M1016

Located inside Brake Pedal box.

https://truckmanualshub.com/

Steering Wheel And Gear Group

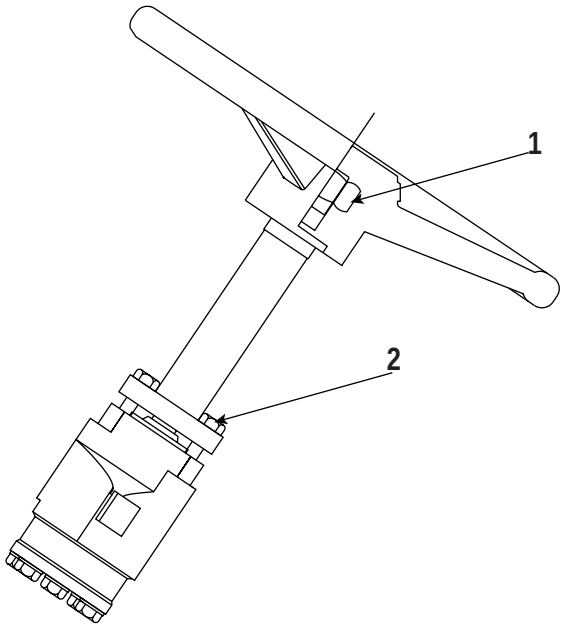

IACS104I

(1) Torque for nut.....80 ± 7 N•m (60 ± 5 lb•ft)

(2) Torque for bolts that hold the steering gear to the column.....15 ± 2 N•m (11 ± 1.4 lb•ft)

Steering Gear

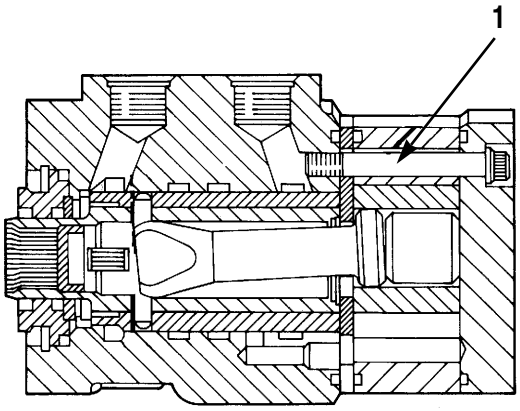

ICCS006S

(1) Torque for bolts .....30 ± 5 N•m (22 ± 4 lb•ft)

Steer Wheels And Steer Axle

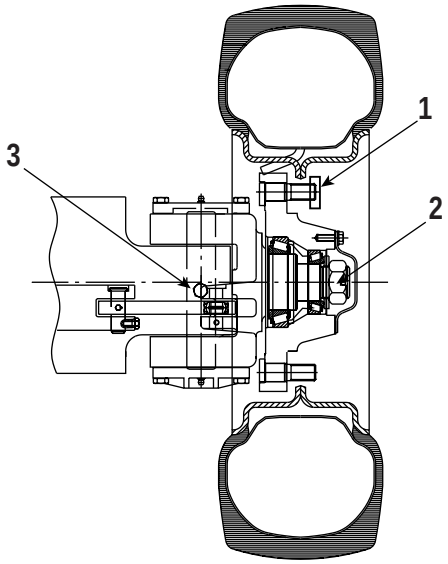

IACS105I

(1) Torque for nut .....430 ± 35 N•m (317 ± 26 lb•ft)

(2) Steer wheel bearing adjustment :

a. Tighten nut that holds the hub on the spindle to a torque of.....135 ± 5 N•m (100 ± 4 lb•ft)

b. Loosen the nut to one-fourth of one turn.

c. Fix the nut by using cotter pin.

(3) Torque for nuts .....10 ~ 12 N•m (7 ~ 9 lb•ft)

See Steer Wheel Bearing Adjustment in Testing & Adjusting.

https://truckmanualshub.com/

Systems Operation

Hydraulic System

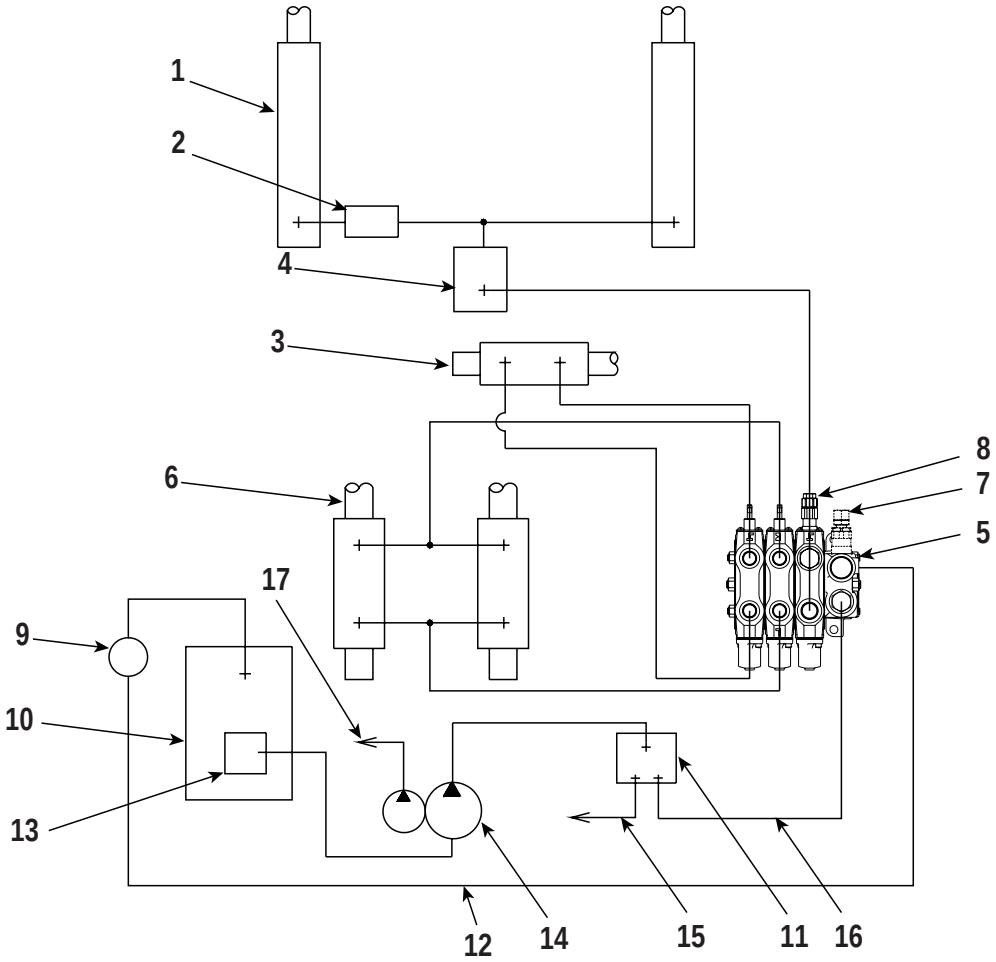

IACS106I

Basic Hydraulic Schematic.
(1) Lift Cylinders. (2) Excess Flow Protector. (3) Sideshift Cylinder(Option). (4) Flow Regulator. (5) Hydraulic Control Valve. (6) Tilt Cylinders. (7) Relief Valve (Lift). (8) Relief Valve (Tilt and sideshift). (9) Hydraulic Oil Filter. (10) Hydraulic Oil Tank. (11) Priority Valve. (12) Oil Line. (13) Hydraulic Strainer. (14) Hydraulic Pump. (15) Oil line to Steering Unit. (16) Oil Line. (17) Oil Line to Brake Booster.

The hydraulic system has hydraulic oil tank (10) which holds the oil for gear type hydraulic pump (14). Hydraulic pump (14) sends pressure oil to hydraulic, steering and brake systems.
Oil flows from pump (14) to priority valve (11) where the oil flow divides to the steering unit through line (15) and hydraulic control valve (5) through line (16).

The control valve levers move the valve spools in control valve (5) to let the pump oil in the control valve go to lift cylinders (1), tilt cylinders (6) or sideshift cylinder (3).

The return hydraulic oil from the cylinders flows through hydraulic control valve (5), line (12), into filter (9) and hydraulic tank (10). Relief valve (7) in the control valve body will make the control valve release extra pressure to the hydraulic tank when the pressure in the lift circuits goes higher than relief valve pressure shown in the control valve section of Specifications. Relief valve (8) does the same thing for the tilt and sideshift circuit when it goes higher than the secondary relief valve pressure shown in the control valve section of Specifications.

https://truckmanualshub.com/

The maximum speed when the lift cylinders are lowered is controlled by flow regulator (4).

Excess flow protector (2) will act as flow regulator if an oil line between protector and flow regulator (4) is broken when the mast is raised or lowered. This prevents a sudden fall of the mast or carriage if an oil line is broken.

REFERENCE : For the Hydraulic Systems Schematics.

https://truckmanualshub.com/

Control Valve

Lift Valve Neutral Position

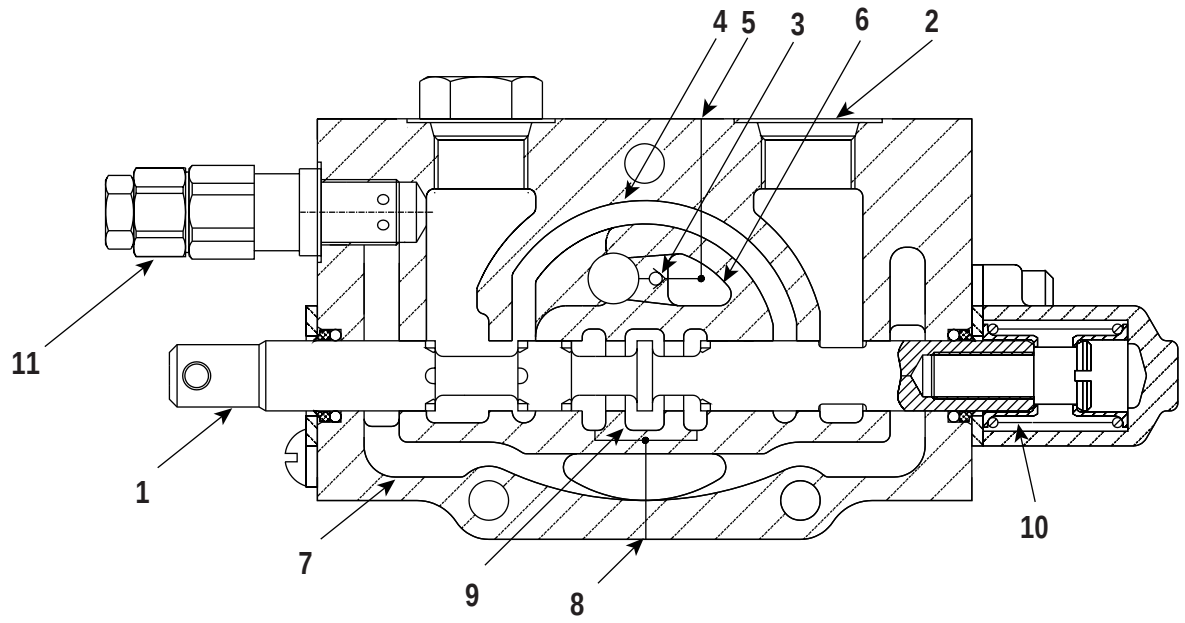

IACS107I

Control Valve for Lift (Shown in NEUTRAL Position)
(1) Spool. (2) Outlet to Head end of Lift Cylinders. (3) Load Check Valve. (4) Passage. (5) Inlet Passage for Pump Oil. (6) Chamber. (7) Passage for Return Oil. (8) Passage. (9) Chamber. (10) Spring. (11) Secondary Relief Valve.

Oil from pump enters the valve through a passage in the inlet section. From there it goes to both chamber (6) and chamber (9). Since spool (1) is in the NEUTRAL position, the only path the oil can take is from chamber (9) into the tilt valve. It would go out through passage (8).

The mast can be stopped and held in any position when the lift control valve is in neutral. This is because the flow to and from the cylinders is stopped by spool (1). In the NEUTRAL position, oil can not flow from passage (4) to outlet (2) or back.

https://truckmanualshub.com/

Lift Position

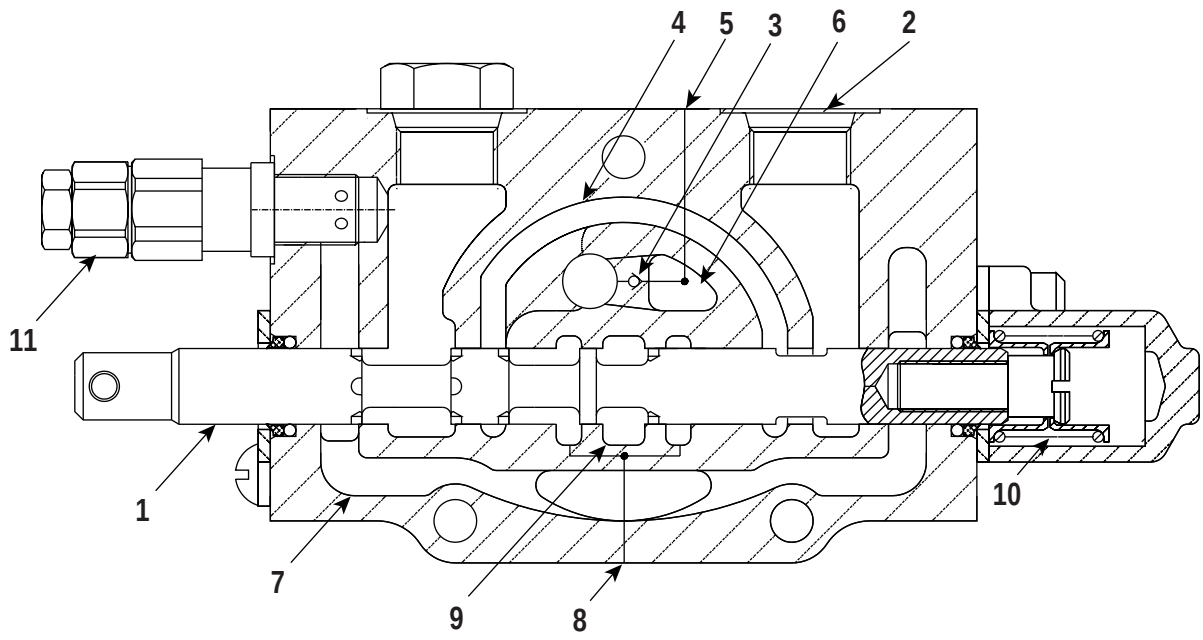

IACS108I

Control Valve for Lift (Shown in LIFT Position)
(1) Spool. (2) Outlet to Head end of Lift Cylinders. (3) Load Check Valve. (4) Passage. (5) Inlet Passage for Pump Oil.
(6) Chamber. (7) Passage For Return Oil. (8) Passage. (9) Chamber. (10) Spring. (11) Secondary Relief Valve.

When the control lever is moved to the LIFT position, lift spool (1) is moved into the valve. Movement of spool (1) opens a path for oil to flow from chamber (6) through load check valve (3) into passage (4). From passage (4) the oil goes to outlet (2) and then to the lift cylinders. Pressure oil to the head end of the lift cylinders moves the rod up and the mast will raise.

https://truckmanualshub.com/

Lower Position

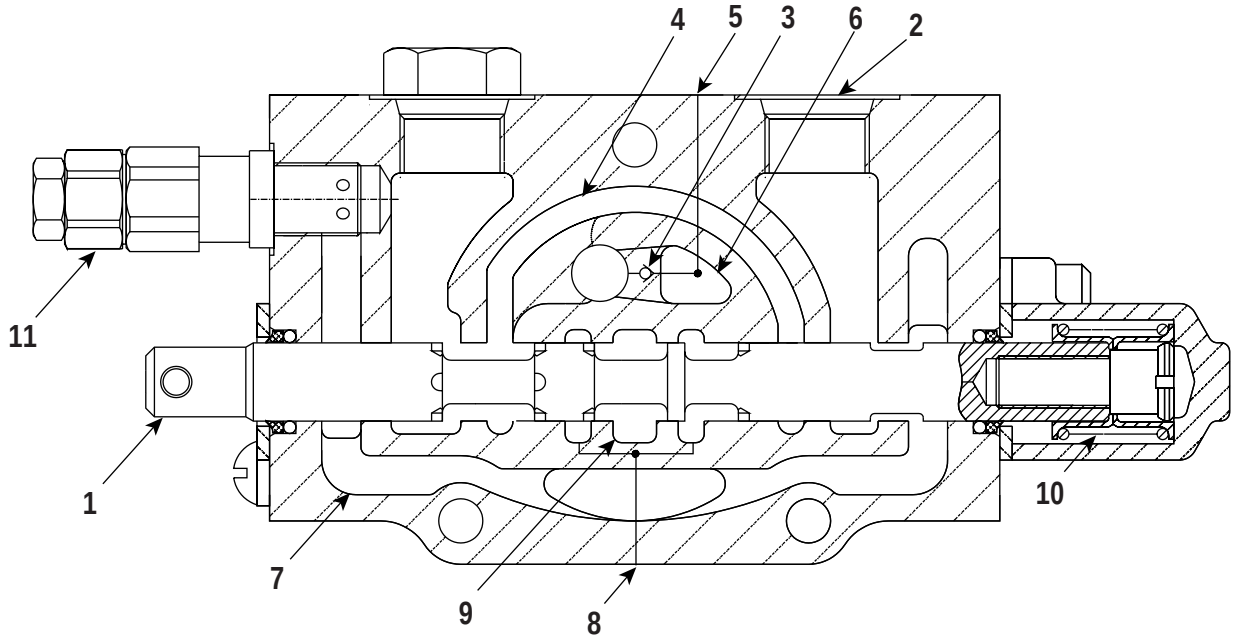

IACS109I

Control Valve for Lift (Shown in LOWER Postion)
(1) Spool. (2) Outlet to Head end of Lift Cylinders. (3) Load Check Valve. (4) Passage. (5) Inlet Passage for Pump Oil.
(6) Chamber. (7) Passage for Return Oil. (8) Passage. (9) Chamber. (10) Spring. (11) Secondary Relief Valve

When the control lever for lift is moved to the LOWER position, lift spool (1) moves until a path is opened between outlet (2) and passage for return oil (7).

https://truckmanualshub.com/

Tilt Neutral Position

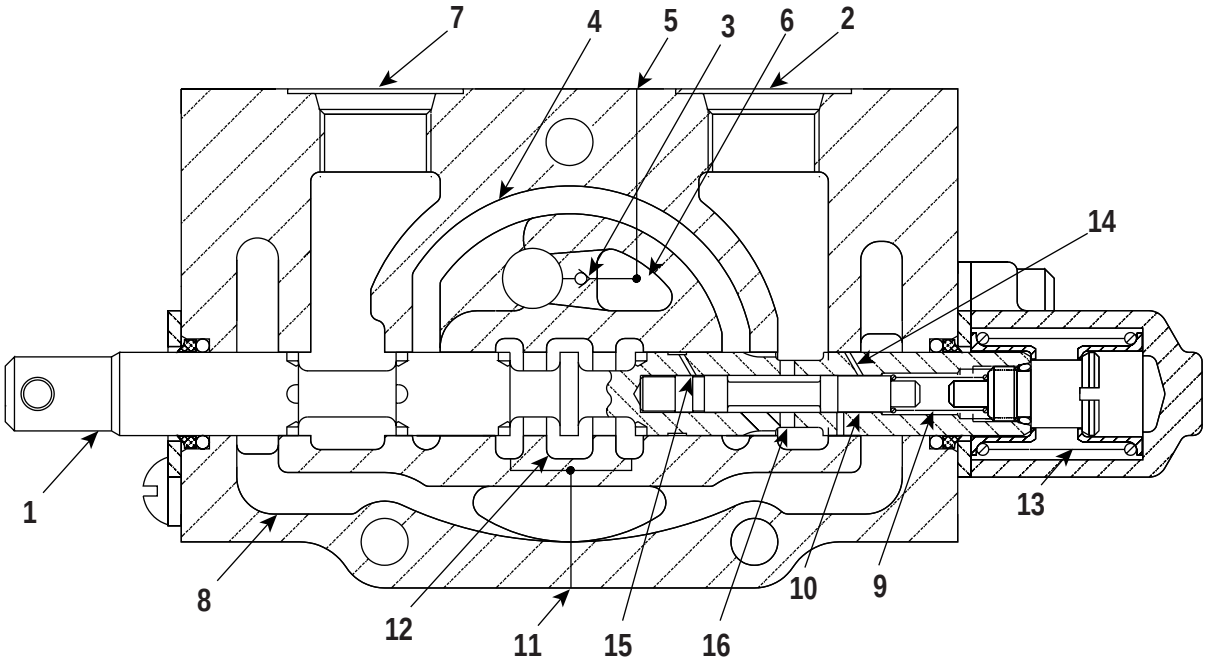

IACS110I

Tilt Spool in Neutral Position
(1) Spool. (2) Outlet to Rod end of Tilt Cylinders. (3) Load Check Valve. (4) Passage. (5) Inlet Passage for Pump Oil. (6) Chamber. (7) Outlet to Head end of Tilt Cylinders. (8) Passage for Return Oil. (9) Spring. (10) Spool. (11) Passage. (12) Chamber. (13) Spring. (14) Orifice. (15) Orifice. (16) Passage.

Oil from lift valve goes to both chamber (6) and (12). Since spool (1) is in the NEUTRAL position, the only path the oil can take is from chamber (12) to tank through passage (11).

The mast can be stopped and held in any position when the tilt control valve is in neutral. This is because the flow to and from the tilt cylinders is stopped by spool (1). In the NEUTRAL position, oil can not flow from passage (4) to outlet (2) or (7).

https://truckmanualshub.com/

Tilt Forward Position

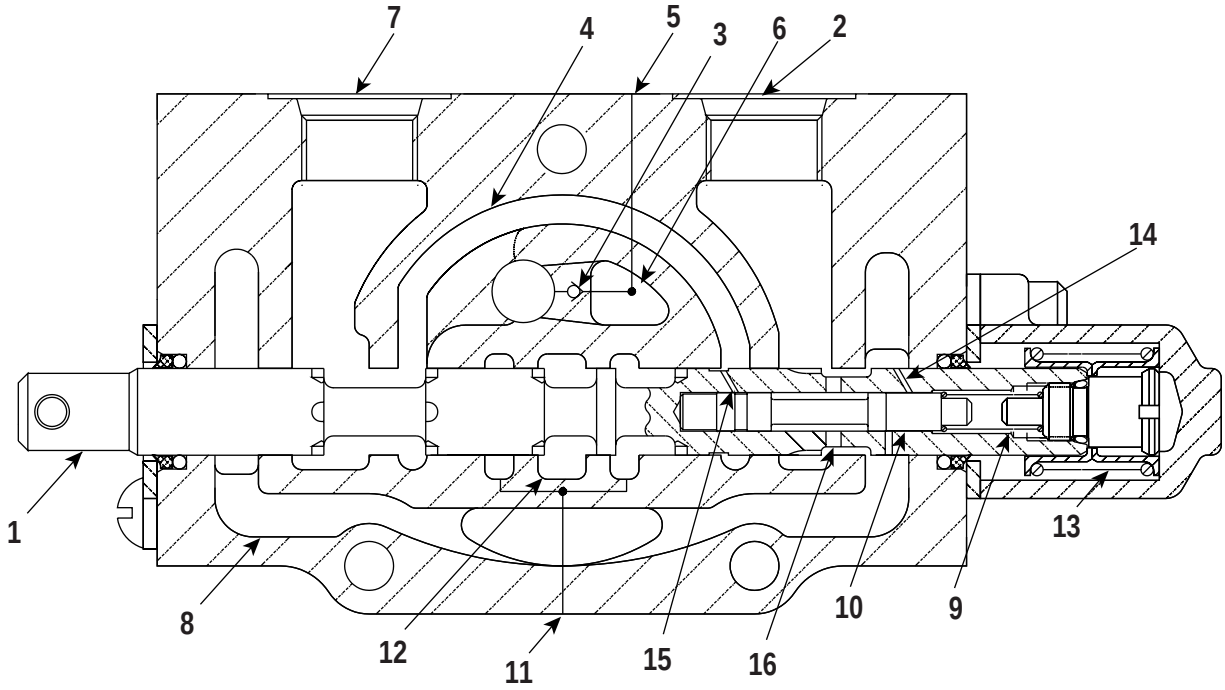

IACS111I

Tilt Spool in Forward Position
(1) Spool. (2) Outlet to Rod end of Tilt Cylinders. (3) Load Check Valve. (4) Passage. (5) Inlet Passage for Pump Oil. (6) Chamber. (7) Outlet to Head end of Tilt Cylinders. (8) Passage for Return Oil. (9) Spring. (10) Spool. (11) Passage. (12) Chamber. (13) Spring. (14) Orifice. (15) Orifice. (16) Passage.

When the control lever for tilt is moved to TILT FORWARD position, spool (1) is moved until a path is opened between passage (4) and outlet (7) and oil flow from chamber (12) to passage (11) is stopped. This causes the oil pressure to increase and open load check valve (3). The pressure oil from the pump can now flow from passage(4) to outlet (7). It then flows to the head end of the tilt cylinders and the mast tilts forward. Return oil from the rod end of the tilt cylinders flows into the valve through outlet (2) in to passage (8) and then to tank.

As tilt spool (1) is moved to the TILT FORWARD position, two paths are opened for the flow of oil to the tilt cylinders. One is from passage (4) to outlet (7), which allows pressure oil to go to the head end of the tilt cylinders. The other path is for return oil from the rod end of the tilt cylinders. As spool (1) moves, orifice (15) moves into position to send pressure oil to the chamber behind spool (10). Spool (10) moves against the force of spring (9) and opens a path for return oil between passage (16) and orifice (14). This has the effect of slowing down the flow of oil from the rod end of the tilt cylinders and preventing cavitation in the head end. If pump flow (pressure) is lost, for any reason, spool (10) will return to the NEUTRAL position and the path for return oil is closed.

https://truckmanualshub.com/

Tilt Back Position

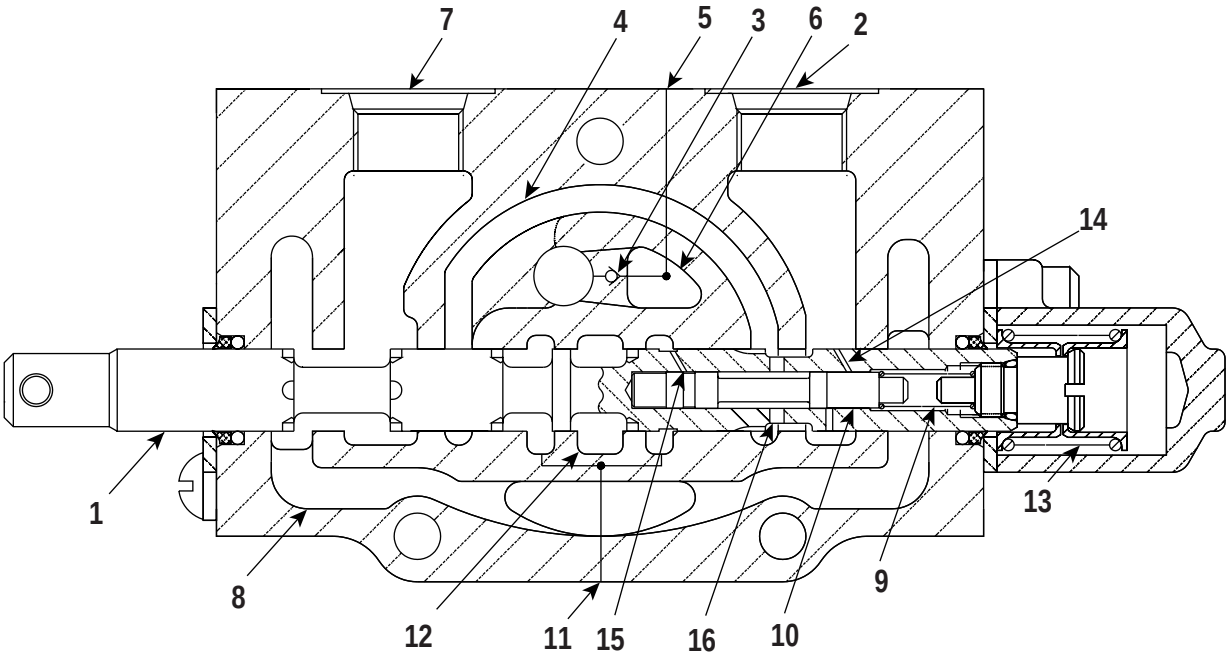

Tilt Spool in Tilt Back Position
(1) Spool. (2) Outlet to Rod end of Tilt Cylinders. (3) Load Check Valve. (4) Passage. (5) Inlet Passage for Pump Oil. (6) Chamber. (7) Outlet to Head end of Tilt Cylinders. (8) Passage for Return Oil. (9) Spring. (10) Spool. (11) Passage. (12) Chamber. (13) Spring. (14) Orifice. (15) Orifice. (16) Passage.

When the control lever for tilt is moved to TILT BACK position, tilt spool (1) is moved until a path is opened between passage (4) and outlet (2), and oil flow from chamber (12) to passage (11) is stopped. This causes the oil pressure to increase and open load check valve (3). The pressure oil from the pump can now flow from passage (4) to outlet (2). It then flows to the rod end of the tilt cylinders and the mast tilts back.
Return oil from the head end of the tilt cylinders flows into the valve through outlet (7) into passage (8) and then to tank.

https://truckmanualshub.com/

Relief Valve

If the control lever is held in the end position after the cylinder rod is fully extended or retracted, the flow of oil from outlet to the cylinders is stopped. The oil under pressure must be released. The pressure oil flows through relief valve, then returns to tank. This flow of pressure oil will continue until the control lever is moved to NEUTRAL position.

https://truckmanualshub.com/

Steering System

Hydraulic Operation (Load Sensing Closed Center Steering System)

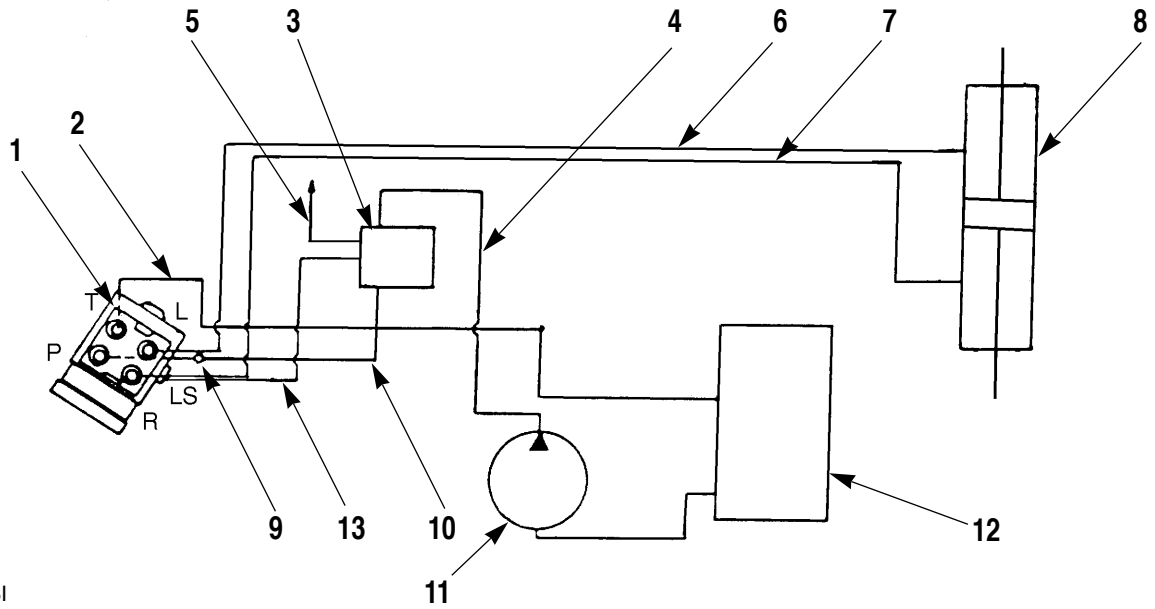

Steering System Schematic
(1) Steering Unit. (2) Hose (To Hydraulic Tank). (3) Priority Valve. (4) Hose (From Hydraulic Pump). (5) Hose (to Control Valve). (6) Hose. (7) Hose. (8) Steering Cylinder. (9) Check Valve (in Steering Unit). (10) Hose (From Priority Valve). (11) Hydraulic Main Pump. (12) Hydraulic Tank. (13) Hose (load sensing).

REFERENCE : For the Hydraulic System Schematics.

The steering system is a load sensing closed center type and uses hydraulic oil for its operation. Oil flow through the steering system is closed unless the steering wheel is turned. The flow through the steering gear is sensed by the priority valve, which then allows additional oil flow to the steering system.

Hydraulic oil is pulled from hydraulic tank (12) through a strainer to hydraulic pump (11). The pump sends the oil through hose (4) to priority valve (3). When the steering unit is in NEUTRAL position, pressure in hose (10) and the priority valve internal sensing line rises. When this pressure rises more than load sensing signal hose (13) the priority valve metering spool shifts to stop oil flow to the steering unit. Oil flows hose (5) to the hydraulic control vavle.

When the steering gear is moved, oil starts to flow to steering cylinder (8). The pressure in line (10) and the priority valve internal sensing line will drop. As pressure drops in these lines, the priority valve metering spool will shift to meet the flow demand. As the metering spool shifts, more oil flow is diverted to hose (10) than to hose (5). The priority valve metering spool will shift back and forth to meet the steering flow demand while maintaining the Load Sensing Pressure between load sense hose (13) and the priority valve internal sensing line. At times flow to hose (5) will be closed completely. The combination of flow restrictors in the lines and spring tension on the priority valve metering spool work together to maintain this balance.

Check valve (9) is in the steering unit to prevent oil flow back to priority valve (3), which could cause a sudden jerk of the steering wheel.

Relief valve in steering gear valve body will open if the steering pressure goes above 16000 kPa (2280 psi).

https://truckmanualshub.com/

Steering Unit

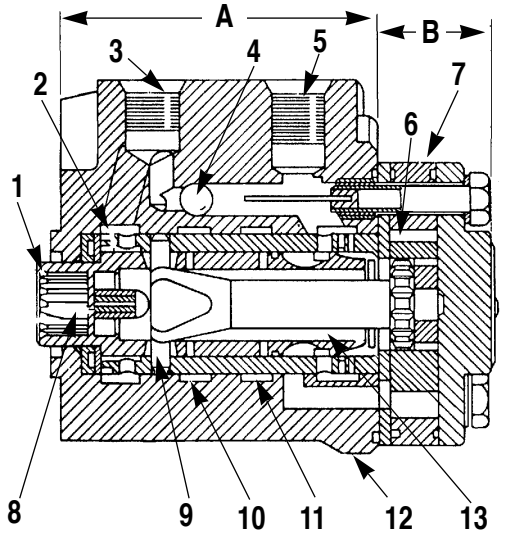

ICCS016S

Steering Unit
A. Control Section. B. Metering Section.
(1) Spool. (2) Sleeve. (3) Outlet to Tank. (4) Check Valve.
(5) Inlet From Pump. (6) Rotor. (7) Stator.
(8) Centering Springs. (9) Pin. (10) Left Turn Port.
(11) Right turn Port. (12) Body. (13) Drive.

The steering unit has two main sections ; control section (A) and pump or metering section (B). These two sections work together to send oil to the steering cylinder.

Oil from the priority valve enters the steering unit through inlet (5) into the control section. When the steering wheel is turned, the control section sends the oil to and from the metering section, and also to and from the steering cylinder.

The metering section is a small hydraulic pump. It meters the oil that goes to the steering cylinder, As the steering wheel is turned faster, there is an increase in the flow of oil to the steering cylinder. This increased flow causes the steering cylinder to move farther and faster. As the steering cylinder moves farther, more oil can flow from the metering section to the steering cylinder and a faster turn is made.

Oil Flow

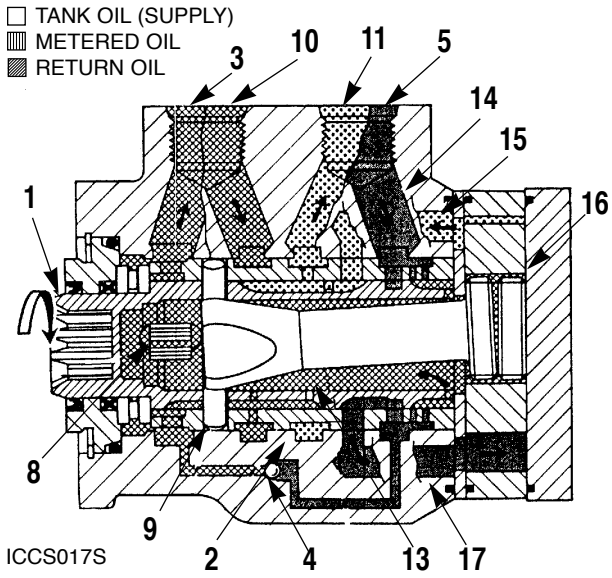

ICCS017S

Steering Unit (Shown in RIGHT TURN Position)
(1) Spool. (2) Sleeve. (3) Outlet to Tank. (4) Check Valve.
(5) Inlet from Pump. (8) Centering Springs. (9) Pin.
(10) Left Turn Port. (11) Right Turn Port. (13) Drive.
(14) Passage. (15) Passage. (16) Gerotor. (17) Passage.

When the steering wheel is turned for a right turn, pump oil flows into the STEERING UNIT through inlet (5) and passage (14). From passage (14) it goes into the gerotor through passage (17). With the steering wheel turning, gerotor (16) is turning and pumping oil. The Metered flow comes out through passage (15), where it is directed out to the steering cylinder through right turn port (11). When the steering wheel started to turn ; spool (1), pin (9) and drive (13) also started to turn. Sleeve (2) did not start to turn at the same time as the spool because the diameter of the holes in the sleeve are slightly larger than the diameter of pin (9). This allows spool (1) to turn inside of sleeve (2) enough to put the small holes in sleeve (2) in line with the grooves in spool (1). The alignment of the small holes in the sleeve with the grooves in the spool provides the path for oil flow to gerotor (16) and also to the steering cylinder. Centering springs (8) are compressed when the spool moves in relation to the sleeve. When the steering wheel is no longer turning, the springs will bring the spool and sleeve back to a NEUTRAL position. This means that the wheels will stay in the position they were in when the steering effort stopped. The steering wheel must be turned in the opposite direction to bring the wheels back to straight ahead, or to make a left turn. As the metered oil goes out to the cylinder through outlet (11) for a right turn, return oil from the cylinder is coming back into the STEERING UNIT through outlet (10). This oil is sent to the tank.

https://truckmanualshub.com/

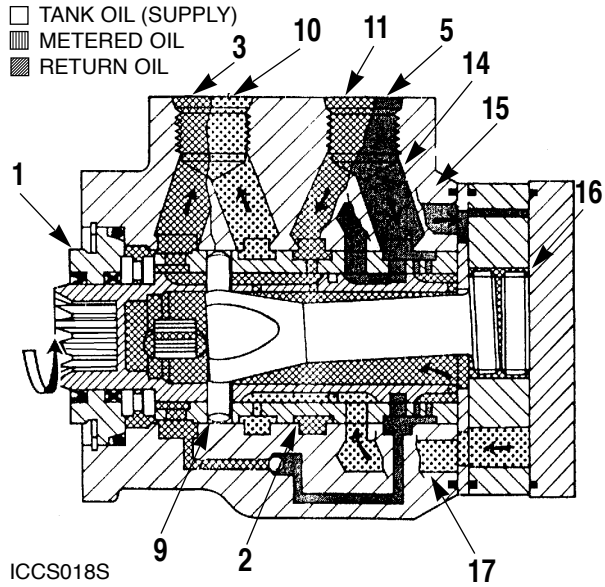

Steering Unit (Shown in a LEFT TURN Position)
(1) Spool. (2) Sleeve. (3) Outlet to Tank. (5) Inlet From Pump. (9) Pin. (10) Left Turn Port. (1) Right Rurn Port. (13) Drive. (14) Passage. (15) Passage. (16) Gerotor. (17) Passage.

When the steering wheel is turned to the left, spool (1), pin (9) and drive (13) turn with it. After spool (1) has turned a small amount pin (9) will cause sleeve (2) to move with the spool. They will rotate together but will be a few degrees apart.

The flow of oil through the STEERING UNIT is in the opposite direction to that of a right turn. It comes in through inlet (5) and passage (14) and then goses into gerotor (16) through passage (15). From the gerotor, the oil leaves through passage (17), goes through the sleeve spool combination and then to left turn port (10). From the left turn port it goes to the steering cylinder.

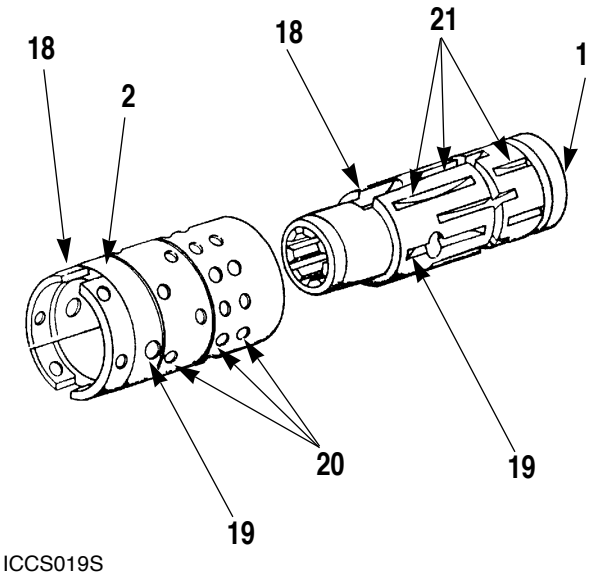

Spool And Sleeve
(1) Spool. (2) Sleeve. (18) Slots for Spring. (19) Holes For pin. (20) Small Holes for Oil Flow. (21) Grooves for Oil Flow.

The rate of flow the gerotor sections is determined by how fast the steering wheel is turned. The faster the steering wheel turns, the greater the flow and the faster the vehicle will turn.

https://truckmanualshub.com/

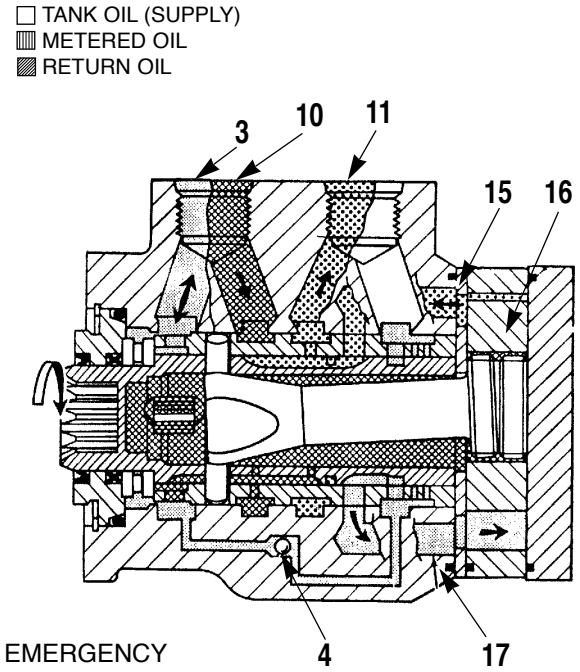

ICCS020S

Steering Unit
(3) Outlet to Tank. (4) Check Valve. (10) Left Turn Port.
(11) Right Turn Port. (15) Passage. (16) Gerotor.
(17) Passage.

If there is a pump failure or the engine stops and can not be started again, the STEERING UNIT can be manually operated. Turning the steering wheel will take oil from the tank and bring it in through outlet (3). It will then open check valve (4) and go to the gerotor (16) through passage (17). It will come out of (16) through passage (15) and go to the right turn port (11). This is the flow for a right turn. It would be reversed for a left turn.

During normal operation, check valve (4) will be held closed by pressure oil from the pump.

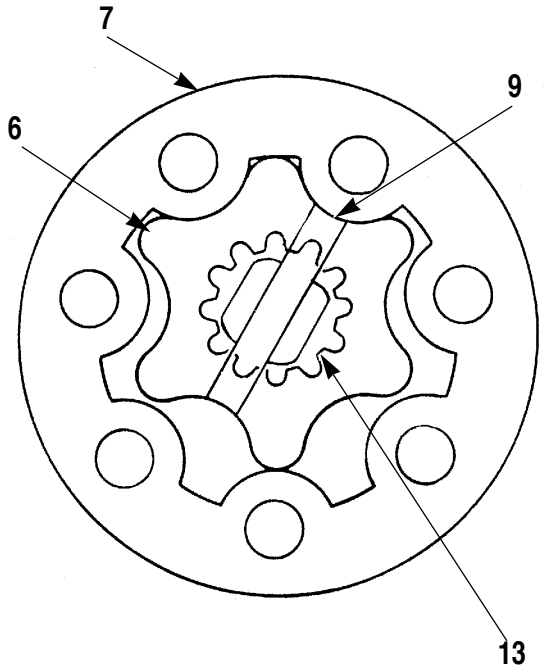

ICCS021S

Pump Gears In The Metering Section
(6) Rotor. (7) Stator. (9) Pin. (13) Drive.

When the steering wheel is turned, in either direction, pin (9) turns with the sleeve and spool and causes drive (13) to turn also. The drive cause rotation of rotor (6) inside of stator (7). This rotation of the rotor sends a controlled (metered) flow of oil back to the spool sleeve combination where it is then directed to either port (10) or (11) and then to the steering cylinder.

If the unit is taken apart for any reason, it must be put back together with the relationship between pin (9) and rotor (6) as shown.

https://truckmanualshub.com/

Brake System

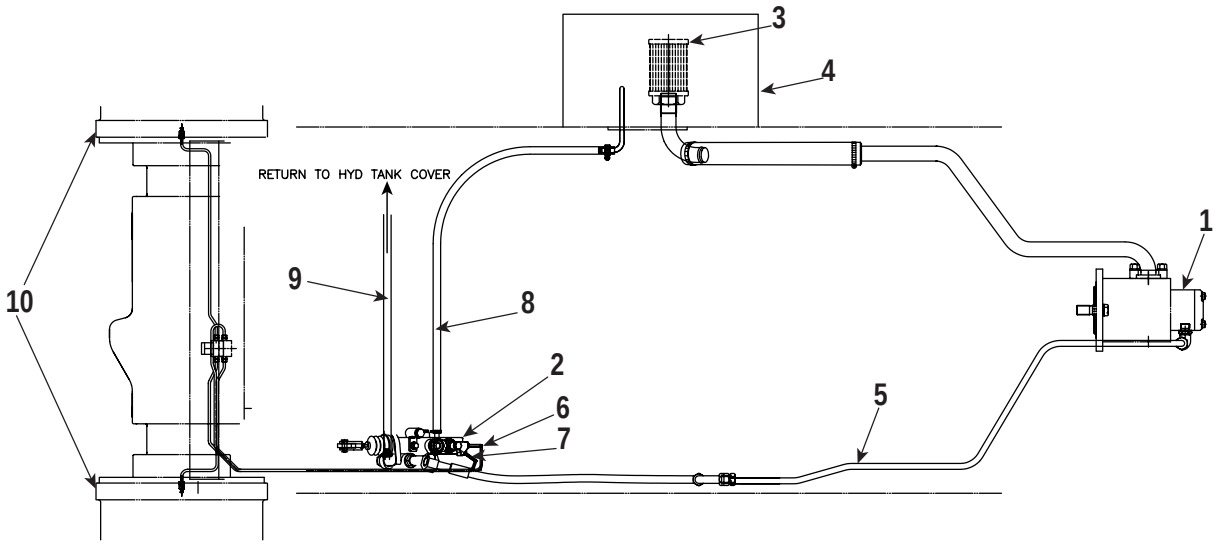

Brake System Schematic
(1) Hydraulic Pump. (2) Hydraulic Booster. (3) Suction Filter. (4) Hydraulic Oil Tank.
(5) Hydraulic Line (from Pump to Hydraulic Booster). (6), (7) Hydraulic Line (from Hydraulic Booster to Brake).
(8) Hydraulic Line (from Hydraulic Booster to Filter). (9) Hydraulic Line (from Hydraulic Booster to Hydraulic Oil Tank). (10) Brake.

The hydraulic pump (1) is connected to the engine power take off and supply the hydraulic oil to the hydraulic booster (2) through the hydraulic line (5). When the brake pedal is released, hydraulic oil flows to the hydraulic tank (4) through the hydraulic booster (2), the hydraulic line (9) and the sump return filter. When the brake pedal is pushed, the hydraulic booster (2) restricts the oil flow from hydraulic pump (1) to hydraulic oil tank (4) and these restricted oil add the pressure build in hydraulic booster (2). The pressurized oil is supplied to the brake of axle (10) through the hydraulic lines (6, 7).

The master cylinder section in the hydraulic booster (2) and the brake line (6, 7) and the wheel cylinders in the brake (10) are replenished from the hydraulic oil tank (4) through the hydraulic line (8) when the additional oil needed in themselves.

https://truckmanualshub.com/

Testing & Adjusting

Troubleshooting

Troubleshooting can be difficult. A list of possible problems and probable causes are on the pages that follow.

This list of problems and probable causes will give an indication of where a problem can be and what repairs are needed. Normally, more or other repair work is needed beyond the recommendations on the list. Remember that a problem is not necessarily caused only by one part, but by the relation of one part with other parts. This list cannot give all possible problems and causes. The serviceman must find the problem and its source, then make the necessary repairs.

The Fittings Group can be used to make the pressure tests of the hydraulic system. Before any test is made, visually inspect the complete hydraulic system for oil leakage and damaged parts.

⚠ WARNING

To prevent personal injury when testing and adjusting the hydraulic system, move the lift truck to a smooth horizontal location and lower the mast and carriage to the ground. If the mast and carriage cannot be on the ground, make sure they are blocked correctly to prevent a fall that is not expected. Move away from other machines and personnel that are at work. There must be only one operator. Keep all other personnel away from the lift truck or where the operator can see the other personnel. Before any pressure hose, line, fitting or plug is removed, make sure all hydraulic pressure is released.

1. Move the machine to a smooth horizontal location.

2. Permit only one operator on the machine.

3. Activate the parking brake.

4. Move the hydraulic control levers to all positions to release the pressure in the hydraulic system.

Visual Checks

A visual inspection is the first step when diagnosis of a problem is made of the hydraulic system, hydraulic brake systems and their components. Lower the mast and carriage to the ground. If the mast and carriage cannot be on the ground, make sure they are blocked correctly to prevent a fall that is not expected.

1. Measure the oil level in the tank. Look for air bubbles in the oil.

2. Remove the filter element and look for particles removed from the oil by the filter element. A magnet will separate ferrous particles from nonferrous particles (piston rings, O-ring seals, etc.).

3. Check all oil lines and connections for damage or leaks.

4. Inspect the hydraulic control valve linkage for bent, broken or damaged components.

5. Check the lift chains and the mast and carriage welds for wear or damage.

Operation Checks

The operation checks can be used to find leakage in the system. They can also be used to find a bad valve or pump. The speed of rod movement when the cylinders move can be used to check the condition of the cylinders and the pump.

Lift, lower, tilt forward and tilt backward the forks several times.

1. Watch the cylinders as they are extended and retracted. Movement must be smooth and regular.

2. Listen for noise from the pump.

3. Listen for the sound of the relief valve. If must not open except when the cylinders are fully extended or retracted, when the forks are empty.

https://truckmanualshub.com/

Hydraulic Oil Temperature (Too Hot).

When the temperature of the hydraulic oil gets over 98.8˚C(210˚F), polyurethane seals in the system start to fail. Following are some reasons why the oil temperature will get this hot.

1. Hydraulic pump is badly worn.

2. Heavy hydraulic loads that cause the relief valve to open.

3. The setting on the relief valve is too low.

4. Too many restrictions in the system.

5. Hydraulic oil level in the tank is too low.

6. High pressure oil leak in one or more circuits.

7. Very dirty oil.

8. Air in the hydraulic oil.
- **a.** Return oil to the tank goes in above the level of the oil in the tank.
- **b.** Air leaks in the oil suction line between the pump and the tank.

NOTE : If the problem is because of air in the oil, it must be corrected before the system will operate at normal temperatures.

Hydraulic System and Mast

During a diagnosis of the hydraulic system, remember that correct oil flow and pressure are necessary for correct operation. The output of the pump (oil flow) increases with an increase in engine speed (rpm) and decreases when engine speed (rpm) is decreased. Oil pressure is caused by resistance to the flow of oil.

Visual checks and measurements are the first step when troubleshooting a possible problem. Then do the Operation Checks and finally, do instrument tests with pressure gauges.

Use the Fittings Group, a stop watch, a magnet, a thermometer and a mm (inch) ruler for basic tests to measure :

1. The pressure of the oil to open the relief valve. Relief valve pressures that are too low will cause a decrease in the lift and the tilt characteristics of the lift truck. Pressures that are too high will cause a decrease in the life of hoses and components.

2. Drift rates in the cylinders. Cylinder drift is caused by a leakage past cylinder pistons, O-ring seals in the control valve, check valves that do not seat correctly or poor adjustment or fit in the control valve spools.

3. Cycle times in the lift and tilt circuits. Cycle times that are too long are the result of leakage, pump wear and/or pump speed (rpm).

Mast And Carriage

Problem : The hydraulic system will not lift the load.

Probable Hydraulic Cause :

1. There is an air leak, which lets air into the hydraulic system on the inlet side of the hydraulic pump.

2. The relief valve opens at low oil pressure.

3. The hydraulic pump has too much wear.

4. The load is not correct (too heavy).

Probable Mechanical Cause :

1. The mast is not in alignment with the other lifting components and does not slide freely.

2. Not enough lubricant on the parts of the mast that slide.

3. The carriage or mast rollers and bearings are worn and do not move (seized).

Problem : The mast does not tilt correctly or moves too slowly.

Probable Hydraulic Cause :

1. There is an air leak, which lets air into the hydraulic system on the inlet side of the hydraulic pump.

2. The relief valve opens at low oil pressure.

3. The hydraulic pump has too much wear.

4. Oil leakage around spools has filled caps which cause a restriction of spool movement.

5. Oil leakage through tilt cylinder piston seals.

https://truckmanualshub.com/

Probable Mechanical Cause :

1. Damage or failure of the piston rods on the tilt cylinders.

Problem : The carriage will not lower correctly.

Probable Hydraulic Cause :

1. There are restrictions in the lift line.
2. The lift spool in the control valve has a restriction caused by foreign material or hydraulic leakage in the caps.
3. The lift cylinder flow control valve has a restriction.

Probable Mechanical Cause :

1. The mast is not in alignment with the other lifting components and does not slide freely.
2. Carriage chains need an adjustment.
3. Not enough lubricant on the part of the mast that slides.
4. The carriage or mast rollers and bearings are worn and do not move (seized).

Problem : The lift or tilt cylinders do not hold their position with the valve control levers in neutral position.

Probable Cause :

1. The valve spools do not hold their positions because the springs for the valve spools are week or broken.
2. Control valve leakage caused by worn valve spools.
3. The check valves in the control valve are bad.
4. Leakage of the cylinder lines or piston seals.
5. Dirt or foreign particles between check valve poppet and its seat.

Hydraulic Control Valve

Problem : The control spools do not move freely.

Probable Cause :

1. The viscosity of the oil is too high.
2. There is foreign material in the oil.
3. The fitting connections in the valve body are too tight.
4. The fastening bolts of the valve assembly are too tight and have twisted the body.
5. Linkage of the lift and tilt levers does not operate smoothly.
6. Bent lift or tilt spools.
7. Damage to the return springs of the spools.
8. The valve is not at operating temperature.

Problem : Control valve spools have leakage around the seals.

Probable Cause :

1. There is foreign material under the seal.
2. The valve spools are worn.
3. The seal plates are loose.
4. The seals have damage or are badly worn.

Problem : The load lowers when the lift spool is moved from the NEUTRAL position to the RAISE position.

Probable Cause :

1. There is foreign material in the check valve area.
2. The check valve poppet and seat show wear.
3. Sudden loss of pump oil pressure.
4. Damage to the relief valve which causes low oil pressure.

https://truckmanualshub.com/

Problem : Spools do not return to neutral.

Probable Cause :

1. The springs are broken.

2. The spool is bent.

3. The system or valve has foreign particles in it.

4. The control linkage is not in alignment.

5. The fastening bolts of the valve have too much torque.

Problem : No motion or slow, then a too sudden action of the hydraulic system.

Probable Cause :

1. The relief valve is not correctly set, or will not move in base and/or is worn.

2. There is air in the system.

3. Dirt or foreign particles between relief valve control poppet and its seat.

4. Valve body has a crack inside.

5. Spool not moved to a full stroke.

Problem : No relief valve action (high pressure).

Probable Cause :

1. Small particle of dirt stopping (plugging) orifice in relief valve assembly.

Lift And Tilt Cylinders

Problem : There is leakage of oil inside the cylinder or loss of lift or tilt power.

Probable Cause :

1. The piston seals are worn and let oil go through.

2. Cylinder has damage.

Problem : The tilt piston rods show wear.

Probable Cause :

1. The cylinders are not in correct alignment.

Problem : Foreign material behind the wiper rings which causes scratches on the cylinder rod.

Probable Cause :

1. The wiper rings shown wear and do not remove dirt and foreign material.

Problem : Too much tilt drift.

Probable Cause :

1. Defective tilt cylinder seals.

Hydraulic Pump

Problem : Noise in the pump

Probable Cause :

1. The oil level is low.

2. The oil is thick (viscosity too high).

3. The pump inlet line has a restriction.

4. Worn parts in the pump.

5. Dirt in the filter.

6. Air leaks into the inlet line.

Problem : The oil temperature is too high.

Probable Cause :

1. The oil level is low.

2. There is a restriction in an oil passage.

3. The relief valve setting is too low.

4. The oil is too thin.

5. There is air leakage in the system.

6. The pump has too much wear.

7. The load on the system is too high.

https://truckmanualshub.com/

Problem : Leakage on the shaft seal.

Probable Cause :

1. The shaft seal is worn.

2. The inner parts of the pump body are worn.

3. Operation with too low oil level in tank which causes suction on the seal.

4. Seal cut on shoulder of pump or keyway during installation.

5. Seal lips are dry and harden from heat.

Problem : There is failure of the pump to deliver fluid.

Probable Cause :

1. The oil level is low.

2. There is a restriction in the pump inlet line.

3. There is air leakage into the pump inlet line.

4. The viscosity of the oil is wrong.

5. The pump has too much wear.

6. Failure of the pump shaft or coupling.

7. Vane or vanes stuck in rotor grooves.

8. Pressure plate not flat against rotor ring.

9. Pump rotor ring has wear.

Steering System

Problem : Pump makes noise and the steering cylinder rod does not move smoothly.

Probable Cause :

1. Air in the steering hydraulic circuit.

2. The pump has too much wear.

3. Loose connection of the oil line on the inlet side of the pump.

4. The relief valve opens at low oil pressure.

5. The oil level in the tank is low.

Problem : Too much force needed to turn steering wheel.

Probable Cause :

1. Relief valve is open.

2. Low oil level in hydraulic tank.

3. Pump oil pressure is low, worn pump.

4. Steering unit covers are too tight.

5. Steering column not aligned with steering unit.

6. Steering axle without lubrication.

7. Steering gear has defects.

8. Steering cylinder has failures.

9. Restriction in the steer axle linkage.

10. Priority valve spool is held in one position.

Problem : Lift truck does not turn when steering wheel is slowly turned.

Probable Cause :

1. The oil level of the tank is low.

2. There is air in the steering system.

3. The pump operation is not correct.

4. Dirt in the steering system.

5. Steering unit operation is not correct.

6. Steering cylinder has worn parts.

7. Restriction in the steer axle linkage.

Problem : Steering wheel does not return to center position correctly.

Probable Cause :

1. Steering unit covers are too tight.

2. Steering column is not in correct alignment.

3. Valve spool in the steering unit has a restriction.

https://truckmanualshub.com/

Problem : Oil leakage at the pump

Probable Cause :

1. Loose hose connections.

2. Bad shaft seal.

Problem : Low oil pressure.

Probable Cause :

1. Low oil level.

2. Oil leakage inside or outside of the system.

3. Bad pump.

4. Steering flow control valve has a defect.

5. Steering unit has worn parts.

6. Steering cylinder has worn seals or rings.

7. Steering relief valve has a defect, constantly open.

Problem : The temperature of the oil is too hot.

Probable Cause :

1. The viscosity of the oil is wrong.

2. Air is mixed with the oil.

3. Steering relief valve has a defect.

4. There is a restriction in the line circuit.

Problem : Oil leakage at the cylinder.

Probable Cause :

1. Loose hose connections.

2. Bad seals at the piston rod end of the cylinder.

3. Piston rod has damage.

Brake System

Problem : Brake engagement is slow (hard brake pedal).

Probable Cause :

1. Low supply of hydraulic fluid in the system.

2. A collapsed (damaged) hose or tubing in the lines.

3. Brakes not adjusted correctly.

4. Adjustment of brake pedal linkage is not correct.

5. Hydraulic lines or fittings have leakage.

6. Brake hydraulic booster does not operate correctly.

Problem : Hydraulic system trouble.

Probable Cause :

1. Hydraulic booster or wheel cylinders do not have the correct operation.

2. Hydraulic fluid leakage.

3. Not enough hydraulic fluid in the system.

4. Restriction in the hydraulic lines.

5. Brake pedal linkage not correct.

6. Restriction in the hydraulic passage in the brake hydraulic booster.

Problem : Brakes will not release.

Probable Cause :

1. Adjustment of brake pedal linkage is not correct or there is an interference.

2. Brakes have a defect.

3. Brake hydraulic booster does not operate correctly.

4. Brake system pressure too high.

Problem : Brakes will not hold (insufficient brakes).

Probable Cause :

1. Low on hydraulic fluid in the system.

2. Adjustment of the brakes not correct.

https://truckmanualshub.com/

3. Oil or grease on the brake linings.

4. Pedal linkage out of adjustment.

5. Brake lines have damage.

6. Not enough pressure in the brake hydraulic booster.

7. Brake shoes or wheel drum are damaged.

8. Brake hydraulic booster has a defect.

Problem : Brakes will not release completely.

Probable Cause :

1. Adjustment of brakes not correct.

2. Brakes have a defect.

3. Pedal linkage out of adjustment.

4. Wheel Cylinders have a defect.

5. Air in the brake lines.

6. Brake hydraulic booster has a defect.

7. A restriction in the return line.

Problem : No brakes.

Probable Cause :

1. No oil in the hydraulic system.

2. Pedal linkage out of adjustment.

3. Brake lines are broken or have damage.

4. Adjustment of brakes not correct.

5. Hydraulic booster check valve has a defect.

6. Restriction in the hydraulic passage in the hydraulic booster.

7. Brakes are worn or have a defect.

8. Hydraulic booster has a defect.

Problem : Parking brake does not hold.

Probable Cause :

1. Brake needs adjustment.

2. Too much wear on brake linings.

3. Oil or grease on drum or linings.

Hydraulic System

Relief Valve Pressure Check

⚠ WARNING

Hydraulic oil, under pressure can remain in the hydraulic system after the engine and pump have been stopped. Personal injury can be caused if this pressure is not released before any work is done on the hydraulic system. To prevent possible injury, lower the carriage to the ground. Turn the engine off and move the control levers to make sure all hydraulic pressure is released before any fitting, plug, hose or component is loosened, tightened removed or adjusted. Always move the lift truck to a clean and level location away from the travel of other machines. Be sure that other personnel are not near the machine when the engine is running and tests or adjustments are made.

1. With the engine off, remove plug (1) from the elbow of control valve. Install pressure-checking adapter (4), connect pressure-tube (5) and pressure gage (6). Pressure gage has a range of 28000 kPa (4000psi).

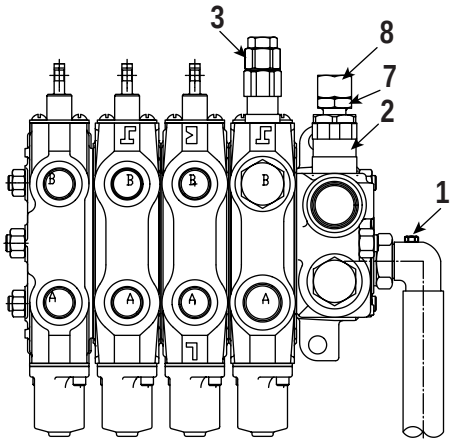

IACS115I

Pressure Tap Location
(1) Plug. (2) Main Relief Valve for Lift.
(3) Secondary Relief Valve for Tilt And Attachment.
(7) Acorn Nut. (8) Adjusting Screw.

2. For adjustment of main relief valve for lift, do the steps 3~5.

3. Start the engine and raise the mast to the end of its travel.

https://truckmanualshub.com/

4. With the engine at high idle, hold the lift control lever in the lift up position and watch the gauge. The gauge shows relief valve opening pressure. The correct pressure setting is 19,400 (±250) kPa (2,813(±36) psi) for D35S-2/D40S-2/ D40SC-2, G35S-2/G40S-2/G40SC-2 model or 21,400 (±250) kPa (3,103(±36) psi) for D45S-2/D45SC-2/D50SC-2, G45S-2/G45SC-2/G50SC-2 model.

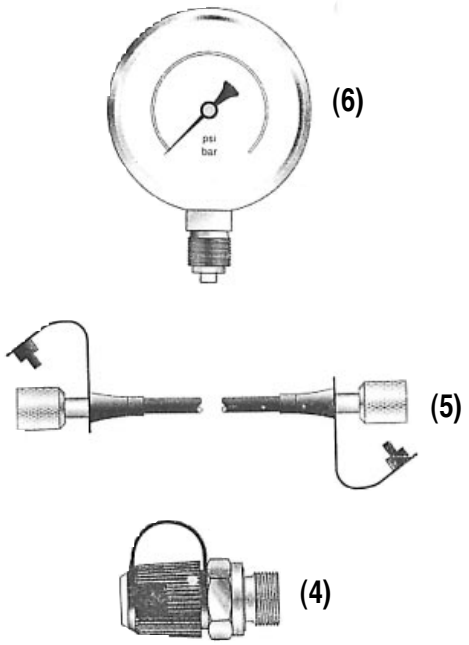

ICCS024S

(4) Pressure-Checking Adapter. (5) Pressure-Tube.
(6) Pressure Gauge.

5. If an adjustment to the main relief valve pressure is necessary, do the steps that follow.
   a. Remove the out-cap (acorn nut) (7) and jam nut from the relief valve.
   b. Turn the adjusting screw (8) either clockwise for an increase or counter-clockwise for a decrease.
   c. Check the relief pressure again.

6. For adjustment of secondary relief valve for tilt and attachment, do the steps 7~9.

7. Start the engine and tilt the mast back to the end of its travel.

8. With the engine at high idle, hold the tilt control lever in the TILT BACK position and watch the gauge. The gauge shows relief valve opening pressure. The correct pressure setting is 14,000 (±250) kPa (2,030 (±36) psi).

9. If an adjustment to the secondary relief valve pressure is necessary, do the same steps for the adjustment of main relief valve pressure.

Steering System

Steer Wheel Bearing Adjustment

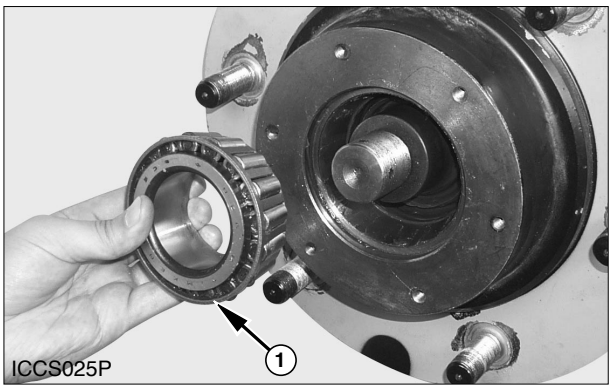

Outer Wheel Bearing
(1) Outer Wheel Bearing.

1. Install outer wheel bearing (1). Be sure the wheel bearings have the correct lubrication.

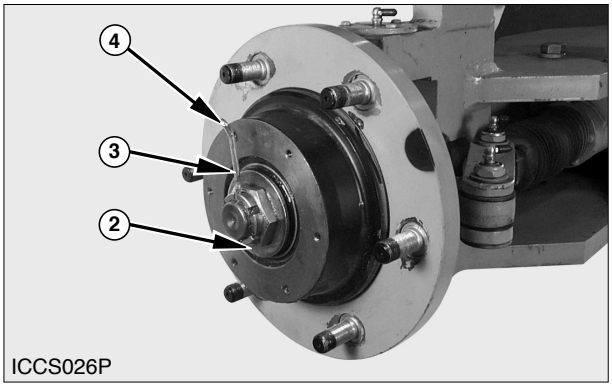

Locknut Installation
(2) Washer. (3) Nut-Castle. (4) Pin-Cotter.

2. Install washer (2) and Nut-Castle (3).

3. Tighten Nut-Castle (3) to 135 ± 5 N•m while the wheel is turned to put bearing (1) in position.

4. Loosen the nut (3) by one-fourth turn of one torn.

5. Install Pin-Cotter (4) to locking position and lock it.

https://truckmanualshub.com/

Steer Axle Stop Adjustment

⚠ WARNING

To prevent personal injury, apply the parking brakes and put blocks in front of drive wheels to stop any movement of the truck.

1. Raise the steer wheels just enough from the floor so steer wheels can be turned freely.

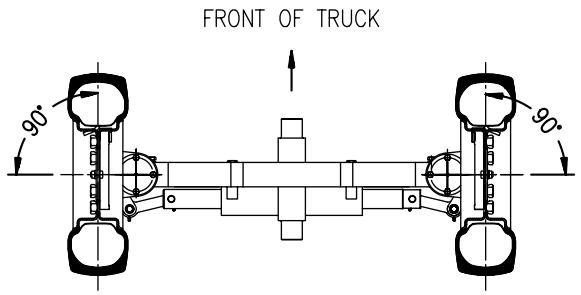

IACS116I

Steer Wheels In Straight Ahead Position

2. Turn the steer wheels in a straight ahead position. Put a straight line with chalk, in parallel with the axle beam, across the width of the tires. Make a line at a 90° angle toward the center of each tire. Make a line around the center of each steer tire.

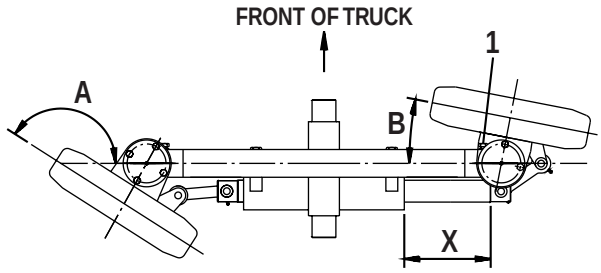

IACS117I

Steer Wheels In Right Turn
(1) Right Forward Stop. (A) 151° (B) 11°
(X) 218.0 ± 0.5 mm (8.58 ± 0.02 in).

3. Start the engine and turn the steering wheel to the right, so the steering cylinder is extended to the right, and retracted at the left side. Measure dimension (X) from the face of steering cylinder to the end of the steering cylinder rod. This dimension must be 218.0 ± 0.5 mm (8.58 ± 0.02 in).

4. If dimension (X) is greater than the specified dimension, adjust nut and bolt at stop (1). Dimension (A) and (B) is the amount of turn in degrees, in either direction, when contact is made on the stops. This dimension is the degree of turn from the center line of axle beam to the center line of each tire, in either a right or a left turn. Measurement (A) is 151° and measurement (B) is 11°.

NOTE : Each steering knuckle must contact the stop during a full turn.

https://truckmanualshub.com/

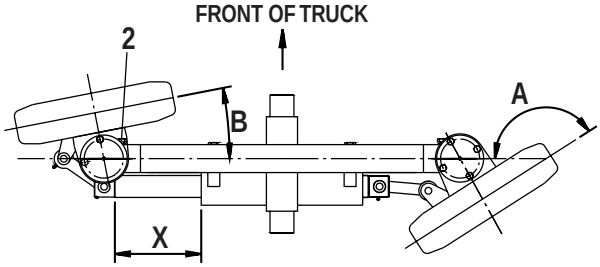

IACS118I

Steer Wheels In Right Turn
(2) Left Forward Stop. (A) 151°
(B) 11° (X) 218.0 ± 0.5 mm (8.58 ± 0.02 in).

5. Turn the steering wheel to the left to extend the steering cylinder to the left. Measure dimension (X) from the face of the steering cylinder to end of the cylinder rod. This dimension must be 218.0 ± 0.5 mm (8.58 ± 0.02 in).

NOTE : Each steering knuckle must contact the stop during a full turn.

6. If an adjustment of the stops is needed, adjust nut and bolt at stop (2) until the correct dimension is measured with the cylinder extended and the stops touching.

Steering System Air Removal

NOTICE

To prevent damage to the hydraulic pump, keep the oil level in the hydraulic tank above the outlet to the pump.

1. Fill the hydraulic tank nearly full. Be ready to add oil when the engine is started. Do not let oil level go below the outlet to the pump.

2. Start the engine. Add oil immediately to the tank as needed.

NOTE : The oil will now flow from the pump, through the priority valve and the steering gear, then back to the flow control, hydraulic control valve, hydraulic tank and finally to the pump again. When no more oil can be added and oil is clear, do the steps that follow :

3. Lift a capacity load to take the weight off of the steer axle. Turn the steering wheel as rapidly as possible to remove the air in the steering cylinder and lines.

4. Add oil immediately when the valve spool of the metering pump is activated to replace oil that flows through the circuit.

NOTICE

Do not hold steer wheels against stops for an extended period of time. This will cause the oil to get hot and damage the components.

5. Turn the steer wheels until they have reached the stop in one direction. Then quickly turn the steering wheel in the opposite direction to the opposite stop.

6. This procedure must go on approximately 15 to 20 times, to remove the air from the system. Add oil as required.

NOTE : The oil in the lines to the steering cylinder stops at the piston. The oil in the cylinder does not flow in a circuit. As the piston moves backward and forward, the oil moves backward and forward in the lines. Air in these lines. Air in these lines, and in the cylinder, may move slowly into the steering gear and then to the tank.

⚠ WARNING

Personal injury can result if loss of steering occurs. Do not operate the vehicle until the air is removed.

7. When the oil in the tank is clear (not cloudy), the system is free of air.

8. Fill the tank to the recommended level.

https://truckmanualshub.com/

Steering System Pressure Check

If the steering system does not work correctly, check the hydraulic tank for the correct oil level and the hoses and connections for leakage. If all these items are correct, use the Pressure Gauge Kit to check the steering hydraulic system and its relief pressure setting.

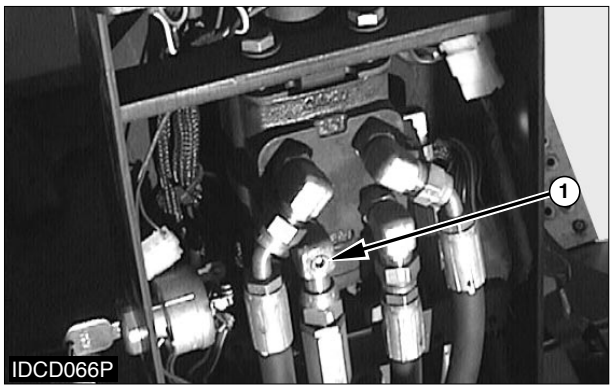

Hydraulic Steering Gear
(1) Elbow (Pressure line from priority valve).

⚠ WARNING

Hydraulic pressure can cause personal injury. Before any steering system hydraulic lines or components are disconnected, make sure all hydraulic pressure is released in the steering system. Move the steer wheels to the left and right and then to the straight forward direction.

Check steering system relief pressure as follows:

1. Turn the engine off.

2. Remove plug from elbow(1)
Install pressure-checking adapter(4) and connect pressure-tube (5) and pressure gage (6). Pressure gage(6) has a range of 28000 kpa (4000psi).

3. Move the seat to the normal position for operation, turn the key switch to the ON position and activate the hydraulic controls until the oil is at a temperature for normal operation.

4. Turn the steer wheels to the left or right against the stops and make a note of the indication on the pressure gauge.

5. The indication on the pressure gauge is the steering relief setting pressure of 16000 kPa (2280 psi). If the indication is correct and a problem exists, then there is possibly a mechanical failure in the steering system.

6. If the indication is not correct, then there is steering hydraulic failure in the components.

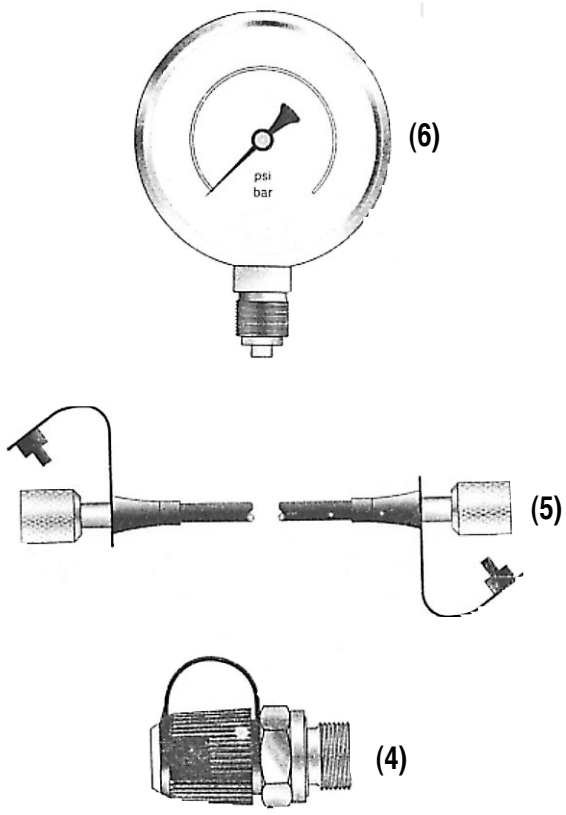

IDCS134S

(4) Pressure-Checking Adapter. (5) Pressure-Tube.
(6) Pressure Gauge.

7. If the steering unit and the priority valve are working properly, the steering cylinder is defective and must be repaired.

8. Correct the problem and check steering relief valve pressure again.

https://truckmanualshub.com/

Brake System

Brake System Air Removal

When the brake pedal resistance is spongy (not solid) it is usually an indication that there is air in the brake hydraulic system. The cause may be low fluid or oil level, leakage in the system, a broken brake line or a brake line that is not connected.

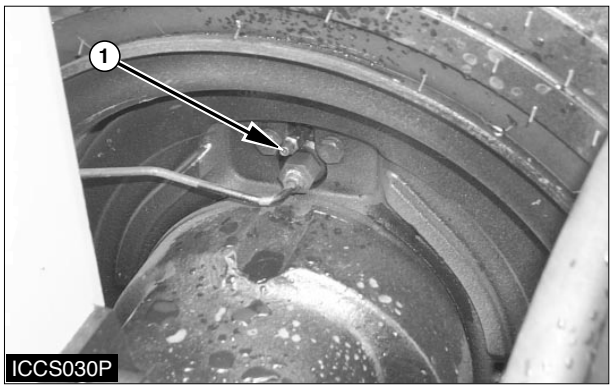

Left Bleed Screw Location (Right Not Shown)
(1) Bleed Screw.

1. Check the hydraulic oil level and fill if needed. See Operation and Maintenance Manual.

2. Start the Engine and keep it at low idle.

3. Put pressure on the brake pedal and open bleed screw (1) to let air out of the system. Close bleed screw (1), while pressure is still on the brake pedal, then let the pedal return to the original position.

4. Do Step 3 again as many times as necessary until the brake liquid is free of air.

5. Use the procedure in Steps 3 and 4 again at right bleed screw (not shown).

6. Check the hydraulic oil level and fill as required. See Operation and Maintenance Manual.

Parking Brake Adjustment

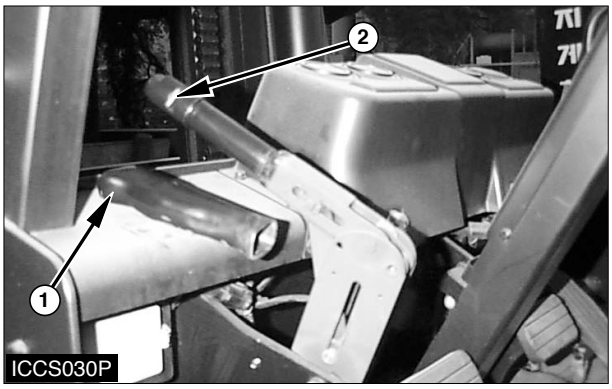

Control Lever Adjustment
(1) Knob-Cover. (2) Knob

1. Put the control lever in the released position.

2. Remove knob-cover (1).

3. Turn knob (2) in clockwise direction to tighten the cable assembly.

4. Turn knob (2) in counter-clockwise direction to loosen the cable assembly.

5. Install knob-cover to the knob.

https://truckmanualshub.com/

Parking Brake Test

Parking Brake Test (Typical Example)

1. Drive the lift truck fully loaded up a 15% incline.
2. Halfway up the incline stop the lift truck with the service brake. Apply the parking brakes.
3. If the parking brakes have the correct adjustment, the lift truck will be held in this position.

⚠ WARNING

The operator must be ready to use the service brakes if the parking brakes are not adjusted correctly and the lift truck starts to move.

4. If the parking brakes do not hold, repeat the Steps in Parking Brake Adjustment.

Tilt Cylinder Alignment

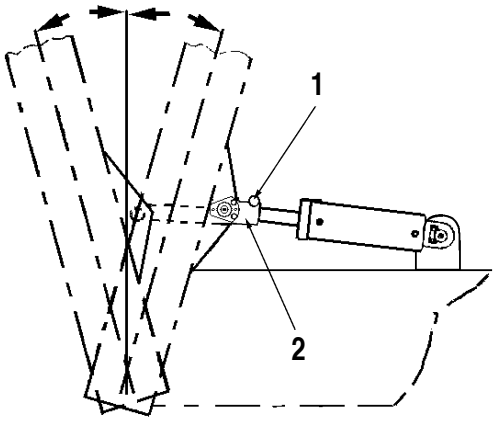

ICCS033S

Mast Tilt Degrees.
(1) Bolt. (2) Clevis. (A) Forward tilt Angle.
(B) Backward Tilt Angle.

If the tilt cylinders are out of alignment, extra stresses in the mast assembly and the mast hinge area will be occurred. To prevent damage, the tilt cylinders must stop evenly at the end of the tilt back and tilt forward strokes.

https://truckmanualshub.com/

SB2204E00
Jun. 1999

Disassembly & Assembly

Lift Trucks Vehicle Systems

D35S-2, D40S-2, D45S-2
D40SC-2, D45SC-2, D50SC-2
G35S-2, G40S-2, G45S-2
G40SC-2, G45SC-2, G50SC-2

https://truckmanualshub.com/

Important Safety Information

Most accidents involving product operation, maintenance and repair are caused by failure to observe basic safety rules or precautions. An accident can often be avoided by recognizing potentially hazardous situations before an accident occurs. A person must be alert to potential hazards. This person should also have the necessary training, skills and tools to perform these functions properly.

Read and understand all safety precautions and warnings before operating or performing lubrication, maintenance and repair on this product.

Basic safety precautions are listed in the “Safety” section of the Service or Technical Manual. Additional safety precautions are listed in the “Safety” section of the owner/operation/maintenance publication.
Specific safety warnings for all these publications are provided in the description of operations where hazards exist. WARNING labels have also been put on the product to provide instructions and to identify specific hazards. If these hazard warnings are not heeded, bodily injury or death could occur to you or other persons. Warnings in this publication and on the product labels are identified by the following symbol.

⚠ WARNING

Improper operation, lubrication, maintenance or repair of this product can be dangerous and could result in injury or death.
Do not operate or perform any lubrication, maintenance or repair on this product, until you have read and understood the operation, lubrication, maintenance and repair information.

Operations that may cause product damage are identified by NOTICE labels on the product and in this publication.

DAEWOO cannot anticipate every possible circumstance that might involve a potential hazard. The warnings in this publication and on the product are therefore not all inclusive. If a tool, procedure, work method or operating technique not specifically recommended by DAEWOO is used, you must satisfy yourself that it is safe for you and others. You should also ensure that the product will not be damaged or made unsafe by the operation, lubrication, maintenance or repair procedures you choose.

The information, specifications, and illustrations in this publication are on the basis of information available at the time it was written. The specifications, torques, pressures, measurements, adjustments, illustrations, and other items can change at any time. These changes can affect the service given to the product. Obtain the complete and most current information before starting any job. DAEWOO dealers have the most current information available.

https://truckmanualshub.com/

https://truckmanualshub.com/

Index

Brake Hydraulic Booster.....21
Counterweight.....36
Engine.....39
Hood Assembly.....5
Hydraulic Control Valve 27
Hydraulic Oil Filter Assembly.....37
Hydraulic Pump 33
Overhead Guard 6
Primary Lift Cylinder 12
Secondary Lift Cylinders.....9
Steer Axle 23
Steering Cylinder 24
Steering Knuckles, Kingpins And Bearings 22
Steering Unit.....15
Steering Wheel 15
Tie Rods.....21
Tilt Cylinders 7
Tires And Rims (Steer) 26
Transaxle 37

https://truckmanualshub.com/

https://truckmanualshub.com/

Disassembly & Assembly

Hood (with seat) Assembly

Remove & Install Hood (with seat) Assembly

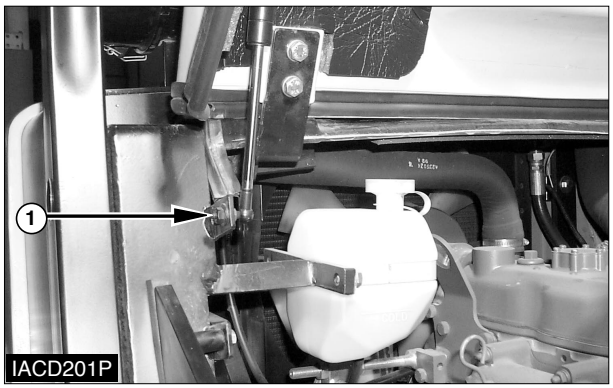

WARNING

The hood and seat assembly can fall when nut (1) is removed from the support cylinder rod. To avoid personal injury, support the seat and hood assembly before removing nut (1).

1. Raise the hood. Support the hood with a hoist.

2. Remove nut (1) from the support cylinder. Remove the cylinder rod from the bracket.

3. Lower the hood.

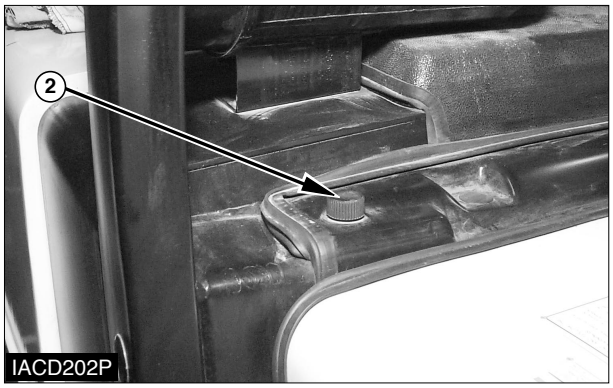

4. Remove the bolts (2) from the cover. Remove cover.

5. Remove the washers and four bolts (3).

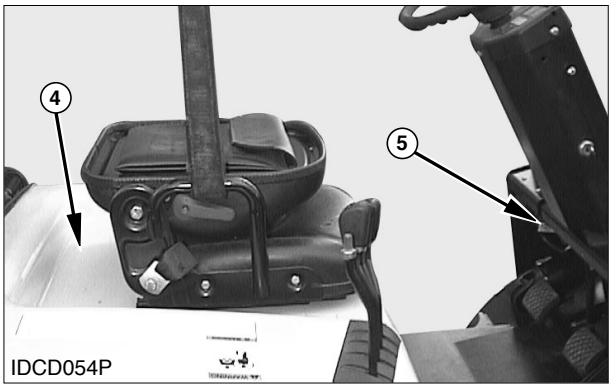

6. Release latch (5). Use the hoist to remove hood and seat assembly (4). The hood and seat assembly weighs 52 kg (115 lb).

7. Install the hood and seat assembly in the reverse order of removal.

https://truckmanualshub.com/

Overhead Guard

Remove & Install Overhead Guard

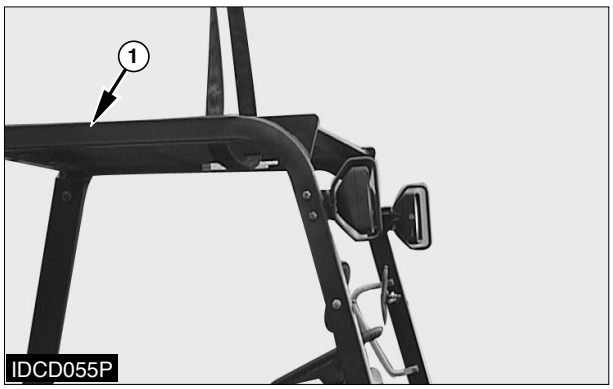

1. Support overhead guard (1) with lifting straps and a hoist.

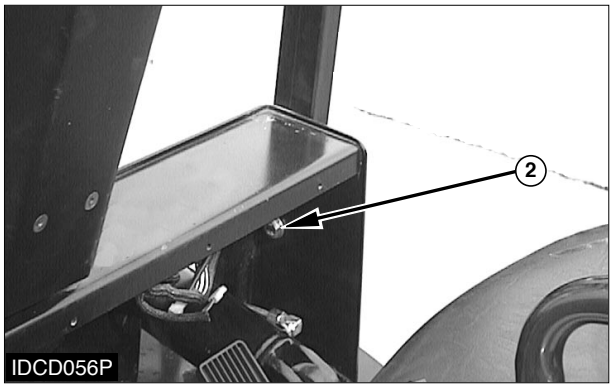

2. Remove the washers, nuts, and two bolts (2).

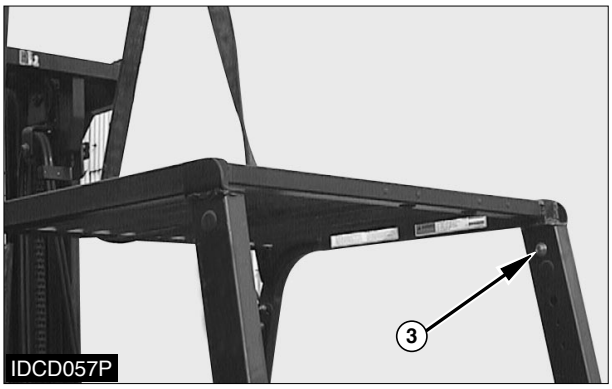

3. Remove the washers, nuts, and two bolts (3).

4. Remove front overhead guard (1), Front overhead guard (1) weighs 30 kg (66 lb).

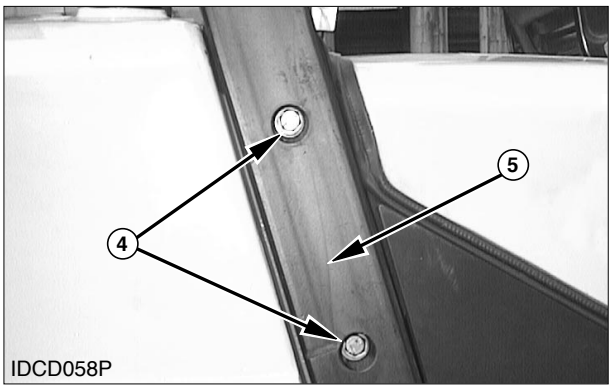

5. Remove the washers, nuts, and four bolts (4).

6. Remove rear Leg (5).

7. Install front overhead guard (1) and rear leg (5) in the reverse order of removal.

https://truckmanualshub.com/

Tilt Cylinders

Remove & Install Tilt Cylinders

NOTE : The procedure for removing and installing the tilt cylinders is the same for both cylinders.

⚠ WARNING

If both tilt cylinders are removed at the same time the mast can fall. To avoid possible personal injury, make sure the mast is securely held in place or supported by a hoist before removing the tilt cylinders.

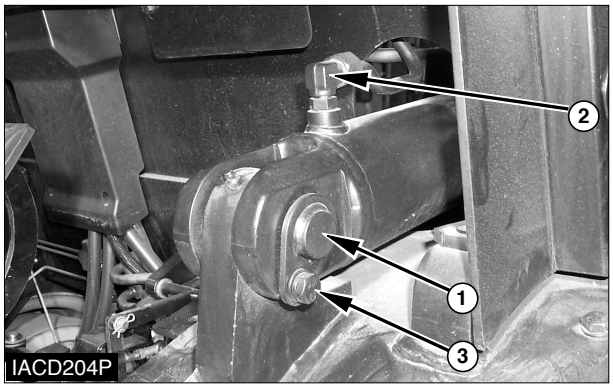

⚠ WARNING

To prevent personal injury, move the control levers backward and forward to release any pressure in hydraulic system. Slowly loosen the cap of the hydraulic tank to release any pressure in the tank. Be cautious of hot hydraulic oil when any lines are disconnected in the hydraulic system.

1. Disconnect elbow (2). Remove retainer bolt (3) and pin (1).

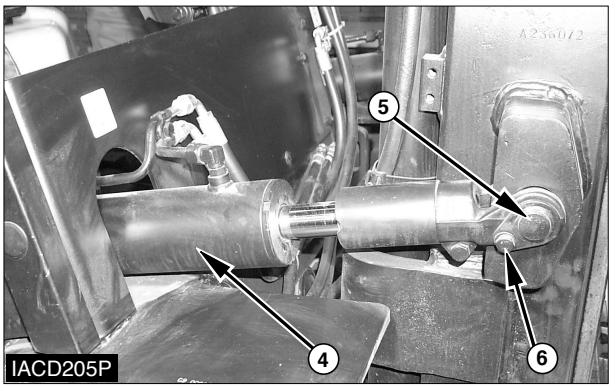

2. Remove retainer bolt (6) from pin (5). Remove pin (5).
3. Remove tilt cylinder (4).
4. Install the tilt cylinder in the reverse order of removal.

https://truckmanualshub.com/

Disassemble & Assemble Tilt Cylinders

Start By:

a. Remove tilt cylinder.

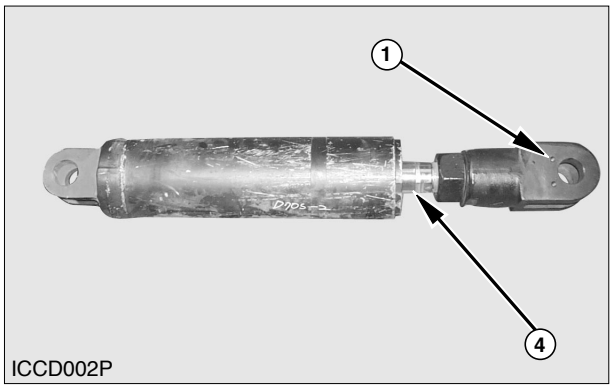

1. Remove eye (1) from the rod assembly (4).

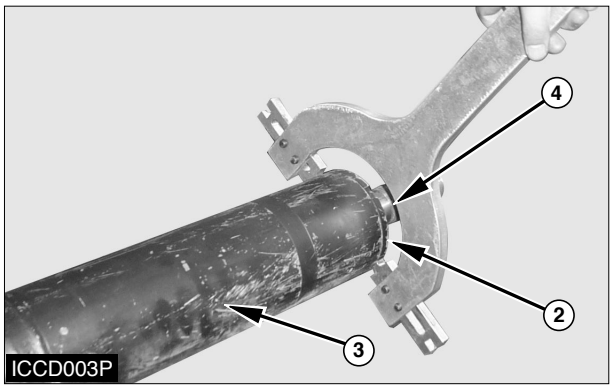

2. Remove rod cover (2) from the cylinder tube (3) using a spanner wrench.

NOTICE

Use extra care not to damage the highly finished surface of the cylinder rod and the bore of the clylinder tube during disassembly and assembly of the tilt cylinder.

---

3. Remove rod assembly (4) from the cylinder body.

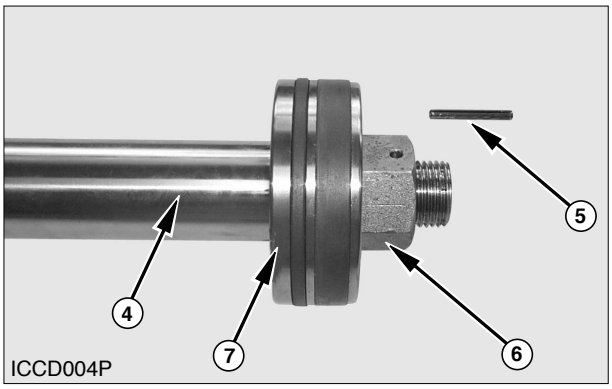

4. Remove pin (5) inside hole and nut (6) from the cylinder rod (4).

5. Remove piston (7) from the cylinder rod.

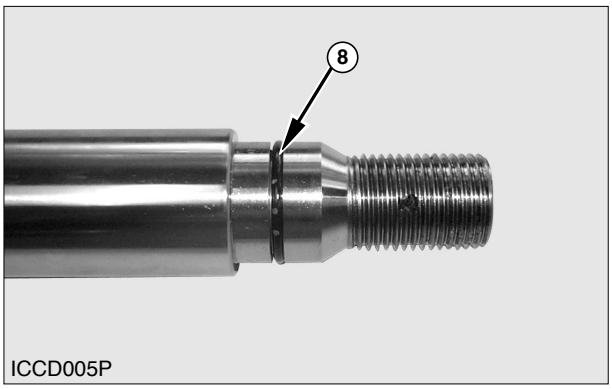

6. Remove O-ring seal (8) from the cylinder rod.

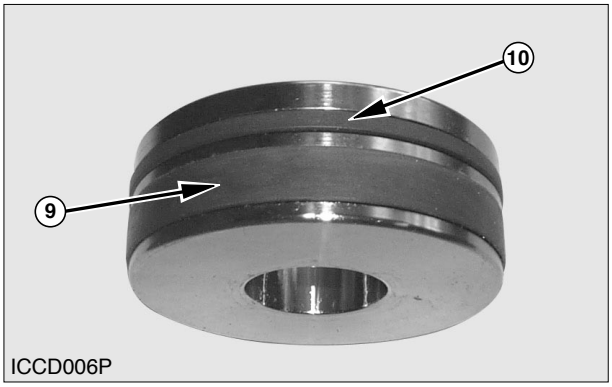

7. Remove wear ring (9) and slipper seal (10) from the piston.

https://truckmanualshub.com/

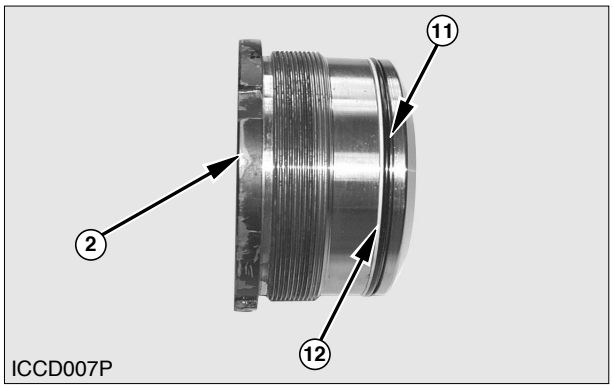

8. Remove O-ring seal (11) and backup ring (12) from the rod cover (2).

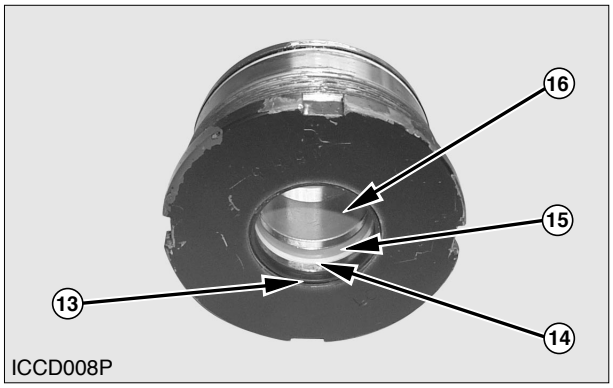

9. Remove wiper seal (13), backup ring (14), U-packing (15) and DU-bush (16) from the rod cover.

NOTE : Assemble the tilt cylinder in the reverse order of disassembly.

Secondary Lift Cylinders

Disassemble Secondary Lift Cylinders

Start By :

a. Remove secondary lift cylinders.

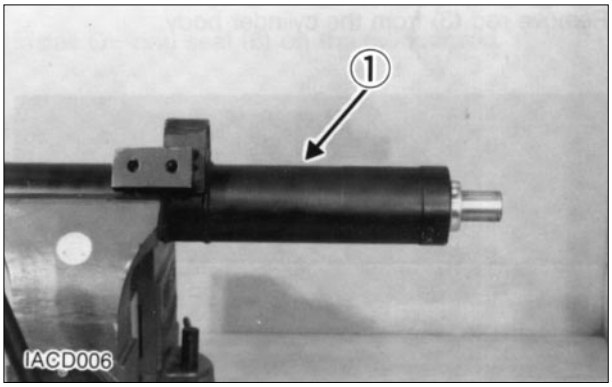

1. Put secondary lift cylinder (1) in position as shown.

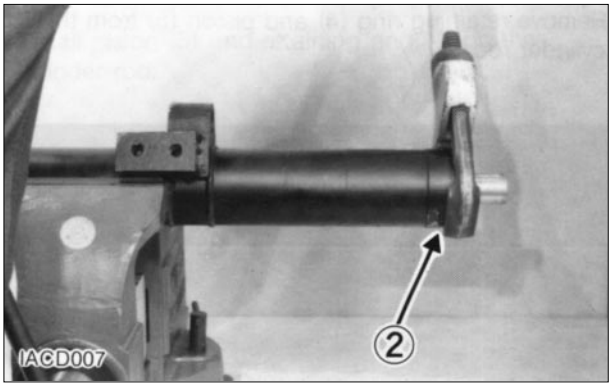

2. Remove head assembly (2) with tool.

https://truckmanualshub.com/

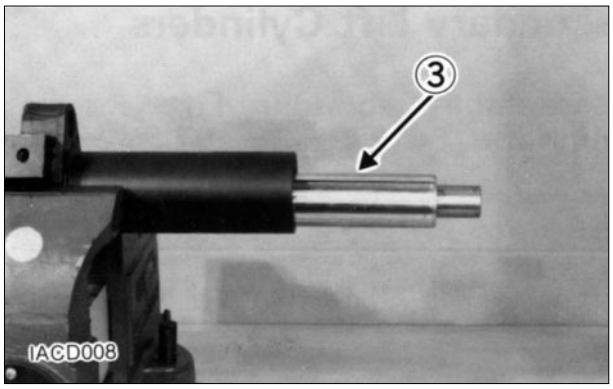

3. Remove rod (3) from the cylinder body.

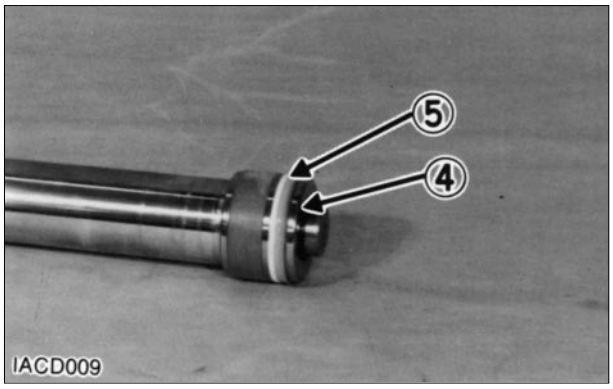

4. Remove retaining ring (4) and piston (5) from the cylinder rod.

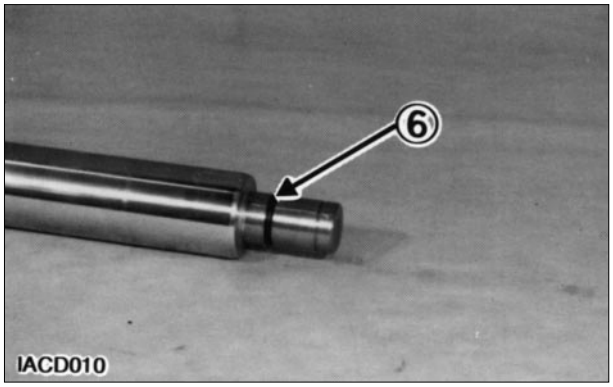

5. Remove O-ring seal (6) from the cylinder rod.

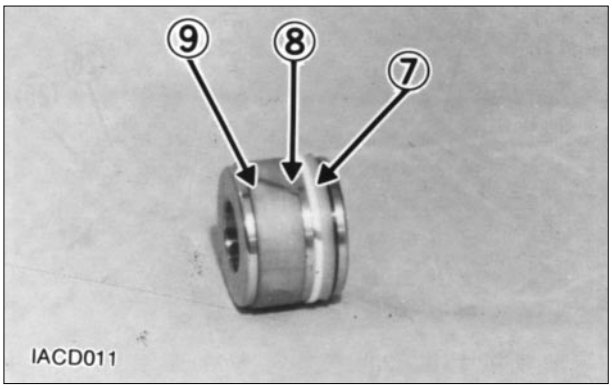

6. Remove O-ring seal (7), back-up ring (8) and seal (9) from the piston.

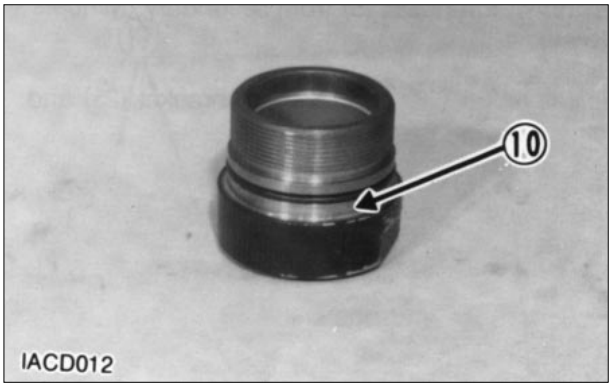

7. Remove O-ring seal (10) from the head assembly.

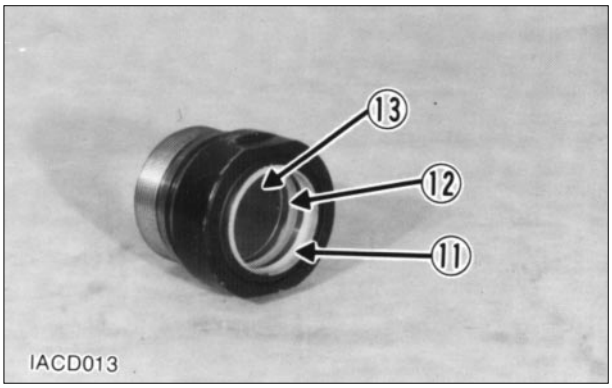

8. Remove wiper seal (11), seal (12) and bush (13) from the head assembly.

https://truckmanualshub.com/

Assemble Secondary Lift Cylinders

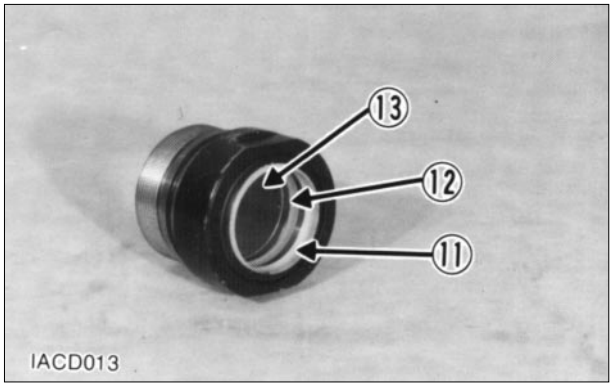

1. Install bush (13) and seal (12).

2. Install wiper seal (11). Install the seal with the lip toward the outside.

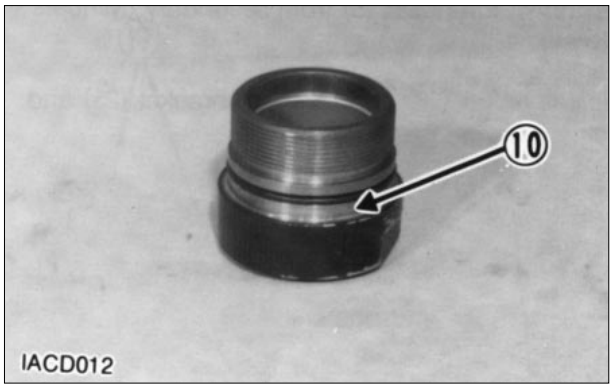

3. Install O-ring seal (10) onto the head assembly.

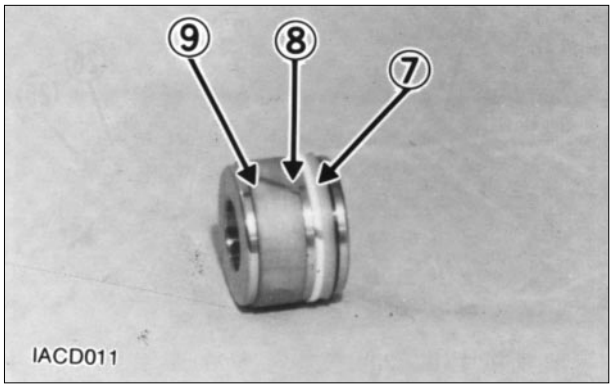

4. Install seal (9), back-up ring (8) and O-ring seal (7) on the piston.

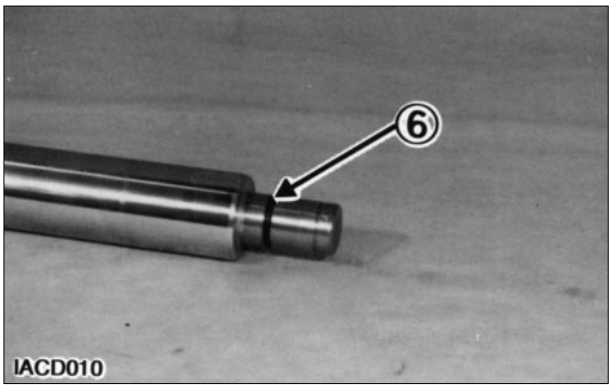

5. Install O-ring seal (6) on the cylinder rod.

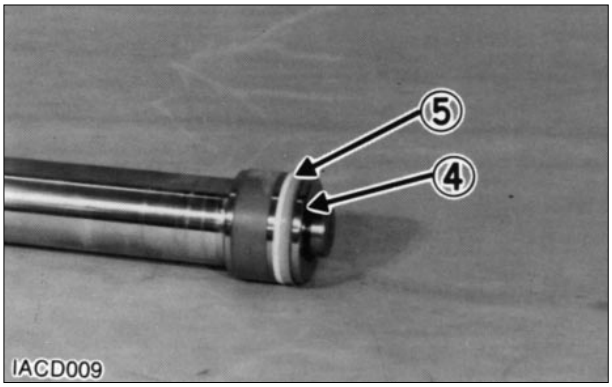

6. Install piston (5) and retaining ring (4) on the cylinder rod.

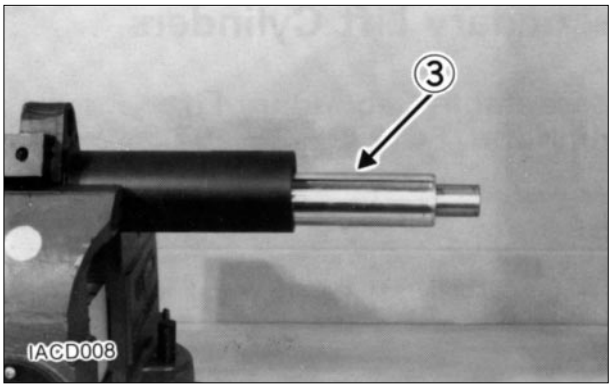

7. Install cylinder rod (3) in the cylinder body.

https://truckmanualshub.com/

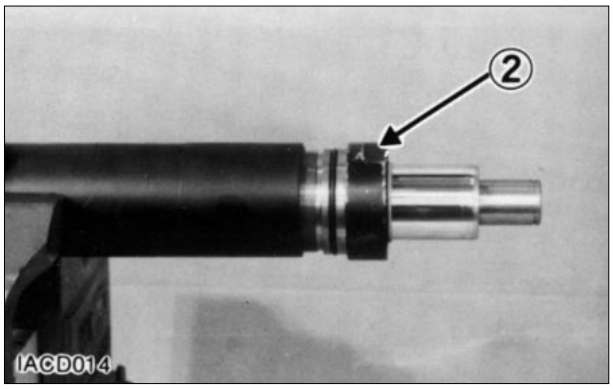

8. Install head assembly (2) on the cylinder rod and tighten using tool.

End By :

a. Install secondary lift cylinders.

Primary Lift Cylinder

Remove & Install Primary Lift Cylinder

Start By :

a. Remove carriage.

⚠ WARNING

To prevent personal injury, move the control levers backward and forward to release any pressure in hydraulic system. Slowly loosen the cap of the hydraulic tank to release any pressure in the tank. Be cautious of hot hydraulic oil when any lines are disconnected in the hydraulic system.

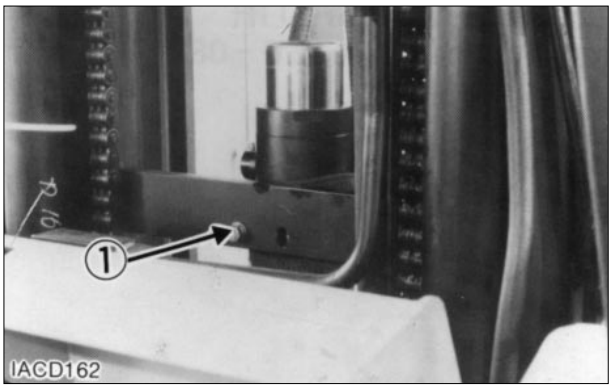

1. Fasten nylon straps and hoist to the primary lift cylinder.

2. Remove bolt (1).

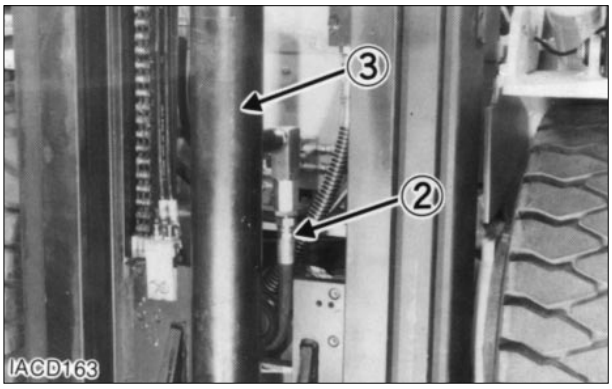

3. Pull the cylinder out far enough to disconnect hydraulic hose (2). Remove primary lift cylinder (3).

4. Install primary lift cylinder (3) in the reverse order of removal.

End By :

a. Install carriage.

https://truckmanualshub.com/

Disassemble Primary Lift Cylinder

Start By :

a. Remove primary lift cylinder.

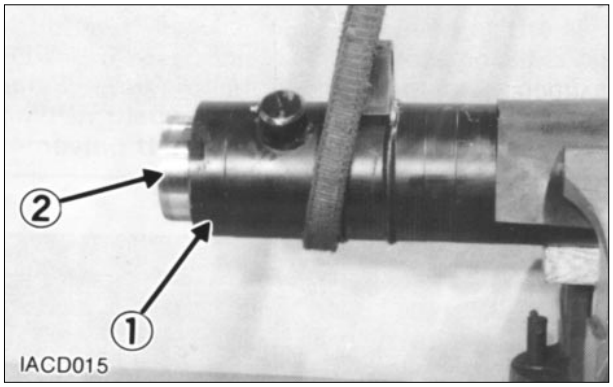

1. Remove bearing (1).

2. Remove rod (2) from the cylinder body.

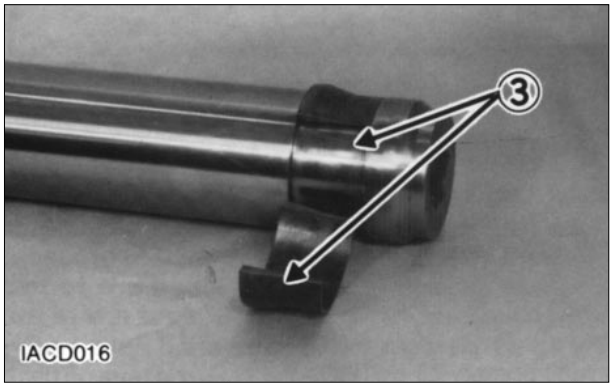

3. Remove split rings (3) from the cylinder rod.

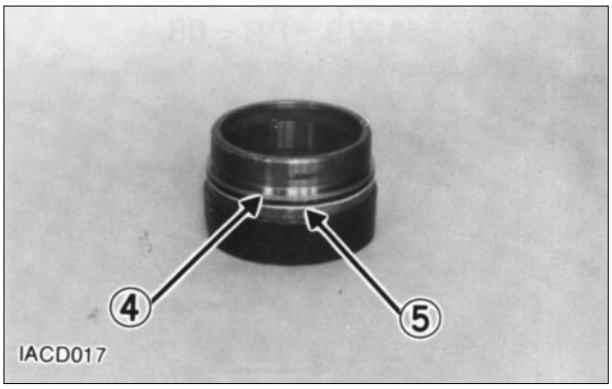

4. Remove O-ring seal (4) and back-up ring (5) from the bearing.

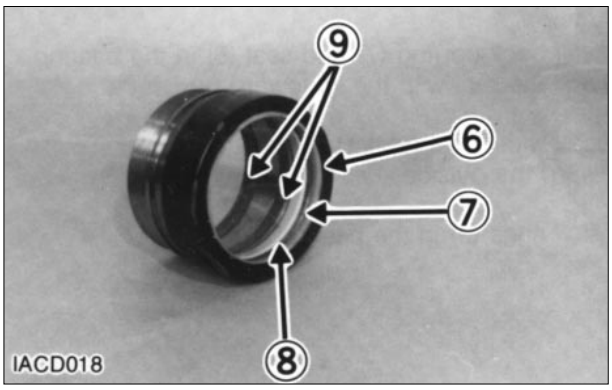

5. Remove wiper seal (6), back-up ring (7), seal (8) and rings (9) from the bearing.

https://truckmanualshub.com/

Assemble Primary Lift Cylinder

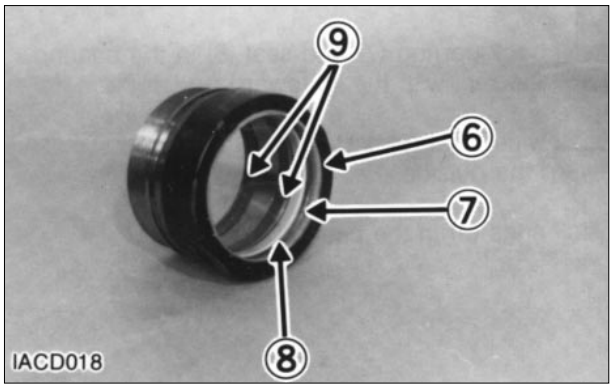

1. Install back-up ring (7) and seal (8) in the bearing. Install the seal with the lip toward the inside.

2. Install wiper seal (6). Install the seal with the lip toward the outside.

3. Install rings (9) in the bearing.

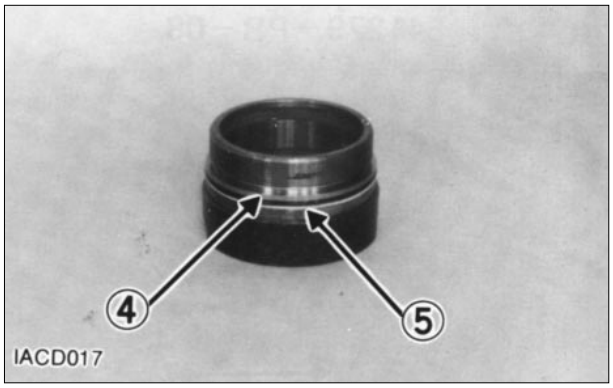

NOTE : Install the back-up ring with the curved side contacting the O-ring seal.

4. Install the back-up ring (5) and O-ring seal (4) on the bearing.

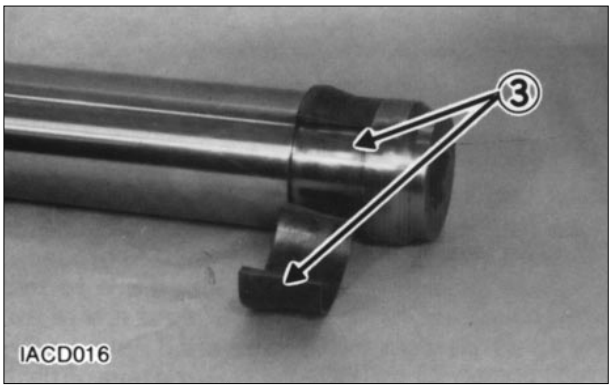

5. Install split rings (3) on the cylinder.

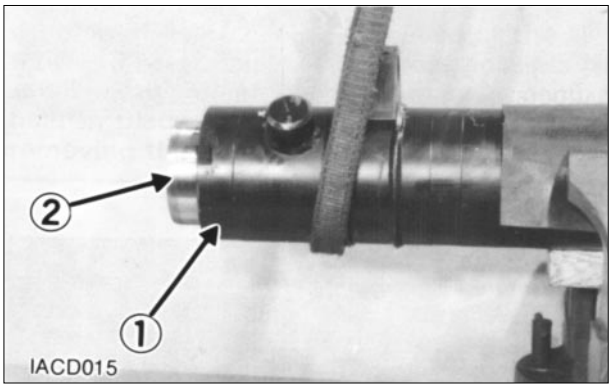

6. Install cylinder rod (2) in the cylinder body.

7. Install bearing (1) on the cylinder body. Tighten the bearing (1).

End By :

a. Install primary lift cylinder.

https://truckmanualshub.com/

Steering Wheel

Remove & Install Steering Wheel

1. Remove cap (1) from the steering wheel.

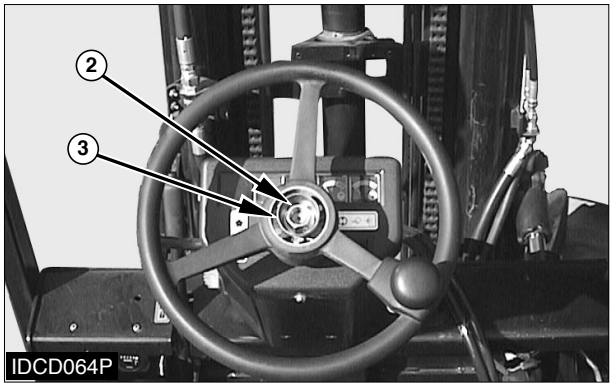

2. Remove nut (2) and cup (3) from the steering wheel shaft. Put location marks on the steering wheel and the steering wheel shaft for installation purposes.

3. Use hammer (A) to remove the steering wheel from the shaft.

NOTE : Use the following steps to install the steering wheel.

4. Put the steering wheel on the steering wheel shaft in its original position.

5. Install cup (3) and nut (2). Tighten nut (2) to a torque of 80 ± 7 N•m (60 ± 5 lb•ft).

6. Install cap (1).

Steering Unit

Remove & Install Steering Unit

Start By:

a. Remove steering wheel.

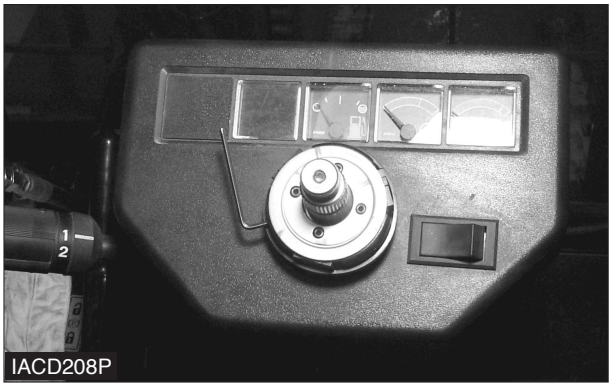

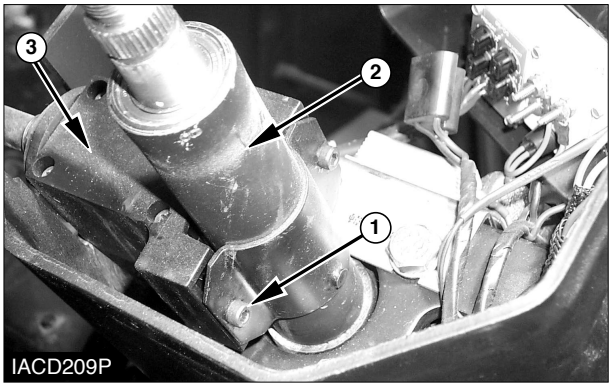

1. Open the access cover for the fuse panel. Remove horn switch and open the top cover.

2. Loosen two bolts (1). Slide directional control switch (3) off of steering column (2). Set switch (3) aside, clear of the steering column.

https://truckmanualshub.com/

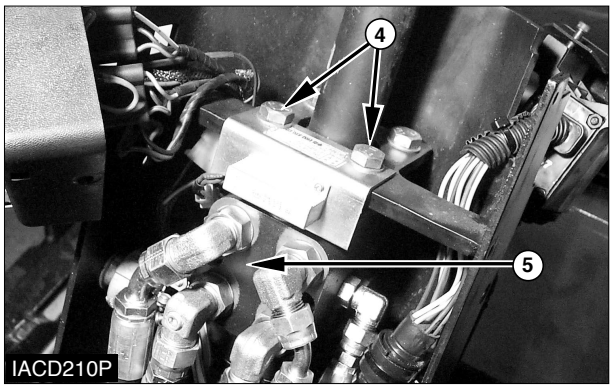

3. Remove two bolts (4).

⚠ WARNING

To prevent personal injury be sure pressure in the hydraulic system has been released before disconnecting any hydraulic lines. Slowly loosen the cap of the hydraulic tank to release any pressure in the tank. Be cautious of hot hydraulic oil when any lines are disconnected in the hydraulic system.

NOTE : Identify and mark all hydraulic hoses for purposes of reassembly.

4. Disconnect five hoses from steering unit (5).

NOTICE

Steering unit (5) and column (2) can separate after bolts (4) have all been removed, causing unit (5) to fall. To avoid damaging components, support the steering pump while removing bolts (4).

5. Support steering unit (5) while removing the remaining two bolts (4). Remove steering unit (5) and steering column (2).

6. Install the steering unit in the reverse order of removal.

End By :

a. Install steering wheel.

Disassemble & Assemble Steering Unit

Start By :

a. Remove steering unit from the truck.

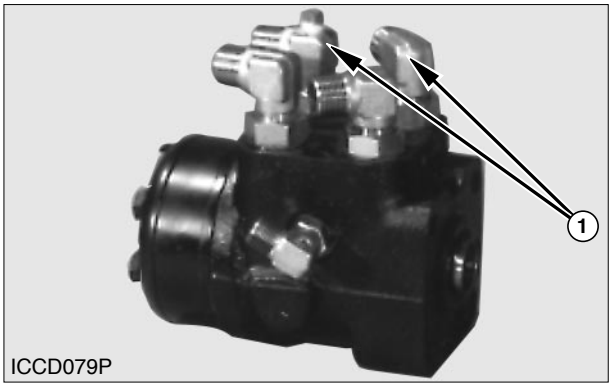

1. Remove the elbows (1) from the body.

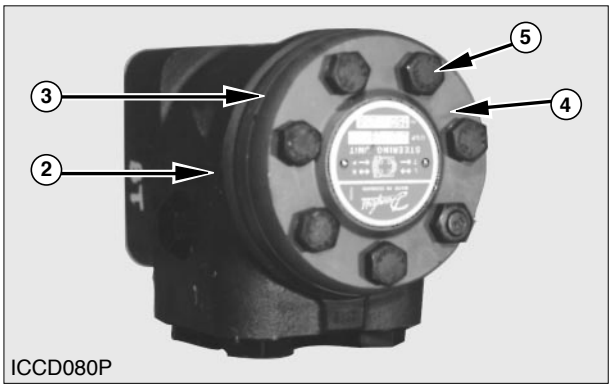

2. Remove seven bolts (5) from gerotor housing (3).

NOTICE

Make a note of the position of special bolt with a pin. It is located at a mark in line with check valve.

3. Separate housing (3) and cap (4) from steering unit body (2).

https://truckmanualshub.com/

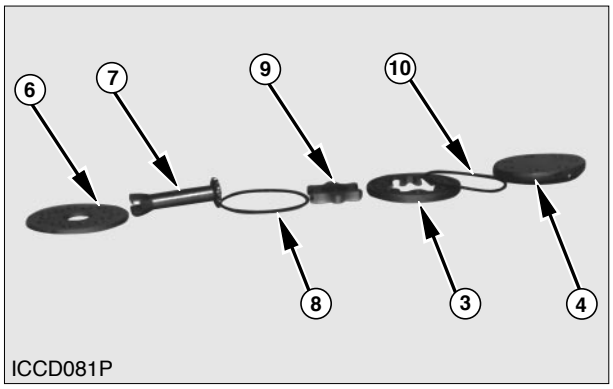

ICCD081P

4. Remove the components from housing (3) as follows:
- **a.** Remove plate (6) from housing (3).
- **b.** Remove shaft (7) from gerotor (9).
- **c.** Remove gerotor (9) from housing (3).
- **d.** Remove O-rings seal (8) from housing (3).
- **e.** Remove O-ring seal (10) from cap (4).

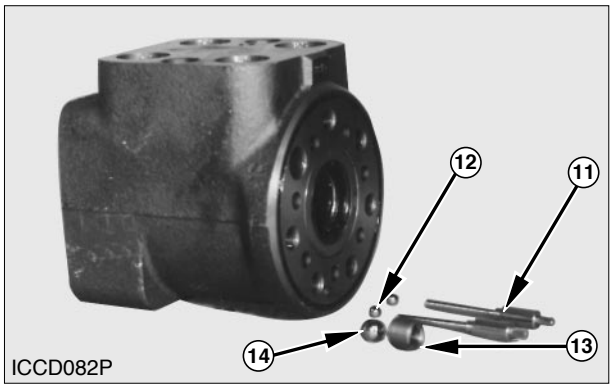

ICCD082P

5. Remove suction valve balls (12) and pins (11).

6. Remove screw (13) and check valve ball (14).

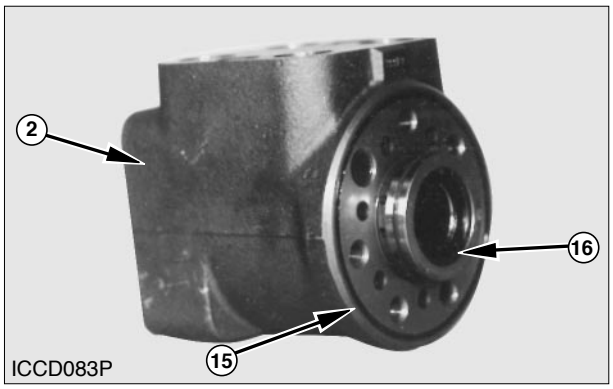

ICCD083P

7. Remove O-ring seal (15) from steering unit body (2).

8. Remove sleeve (16) from the body.

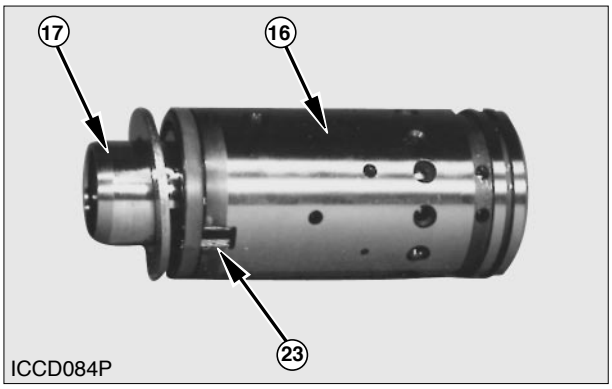

ICCD084P

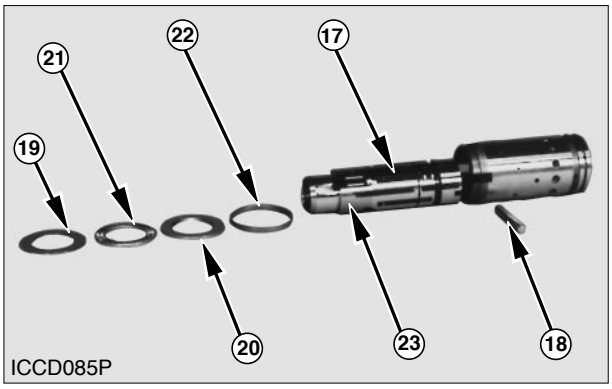

ICCD085P

9. Remove the components from sleeve (16) as follows :
- **a.** Remove pin (18) from spool (17) and sleeve (16).
- **b.** Remove spool (17) from sleeve (16).
- **c.** Remove two bearing races (19), (20) and bearing (21) from spool (17).
- **d.** Remove six springs (23) and ring (22) from spool (17).

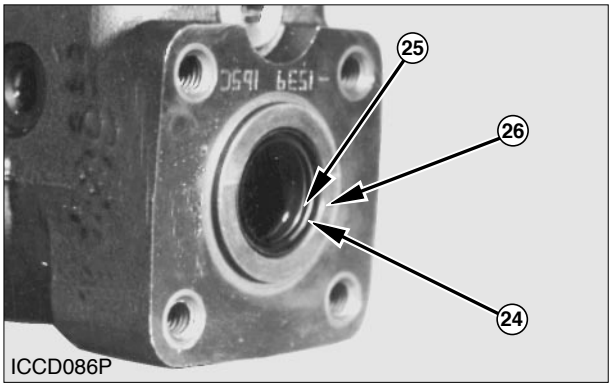

ICCD086P

10. Remove O-ring seal (24) and king-ring (25) from body.

11. Check the condition of dust seal ring(26). Replace seals with new if worn or damaged.

https://truckmanualshub.com/

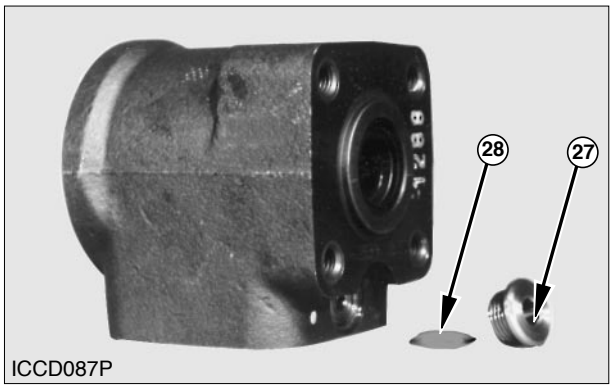

12. Remove plug (27) and washer (28) from steering unit body.

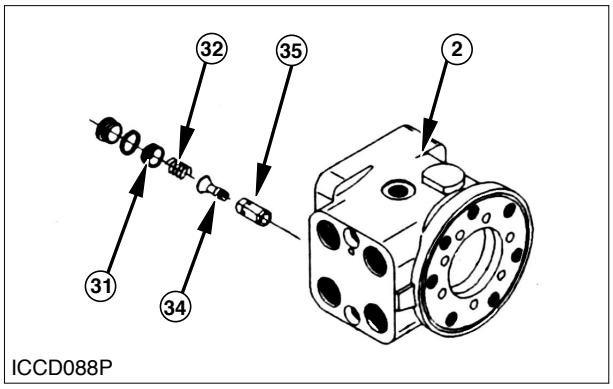

13. Remove plug (31) and spring (32) from the body (2).

14. Remove poppet (34) and relief valve housing (35) from the body.

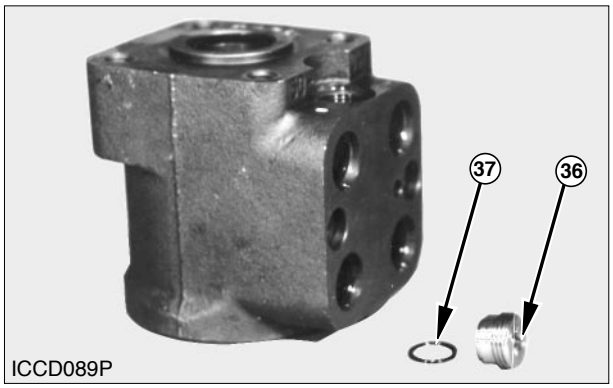

15. Remove plug (36) and washer (37) from the body.

NOTE : The following steps are for assembling the steering pump.

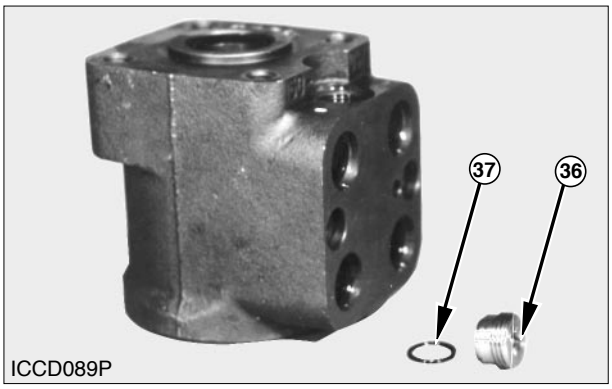

16. Install washer (37) and plug (36) into the steering unit body.

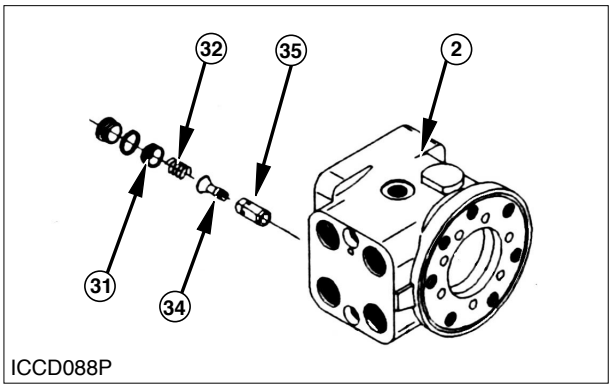

17. Install housing (35) and poppet (34) into the pump body.

18. Install spring (32) and plug (31) into body (2). Tighten plug (31) to a torque **50 N•m (37 lb•ft)**.

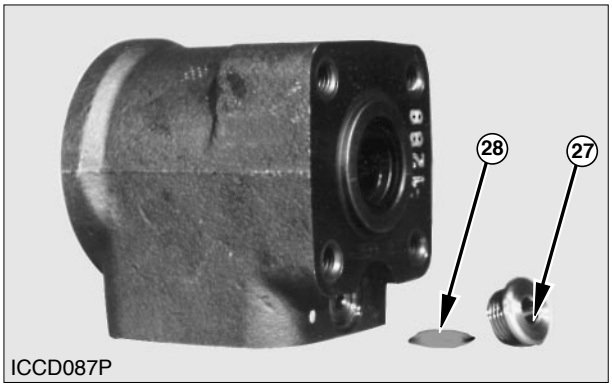

19. Install washer (28) and plug (27) into body (2). Tighten plugs to a torque **30 N•m (22 lb•ft)**.

https://truckmanualshub.com/

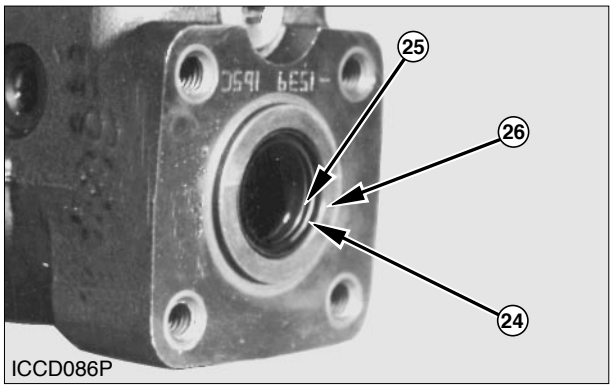

20. Install dust seal ring (26). Install O-ring seal (24) with king-ring (25) into body.

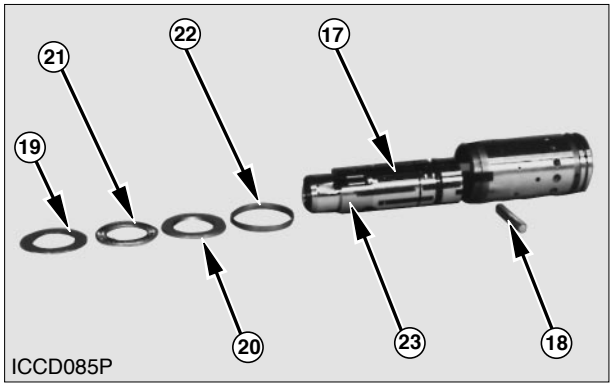

NOTICE

For purposes of installation, note that springs (23) are installed in two stacks of three. Make sure the curves of the two stacks are in contact and positioned in the center of spool (17). The notched side of springs (23) must be positioned toward sleeve (16).

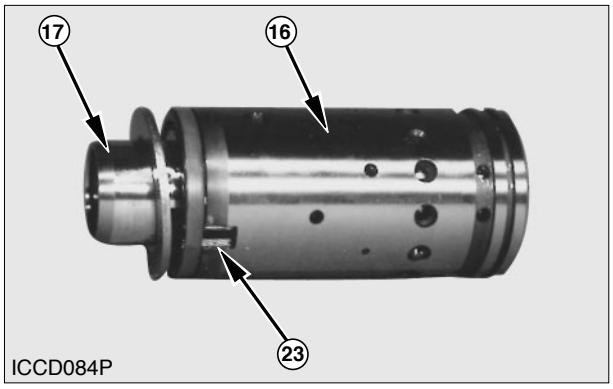

21. Install springs (23) into spool (17).

22. Install spool (17) into sleeve (16).

23. Install pin (18), ring (22), two bearing races (19), (20) and bearing (21) in their original positions on spool (17).

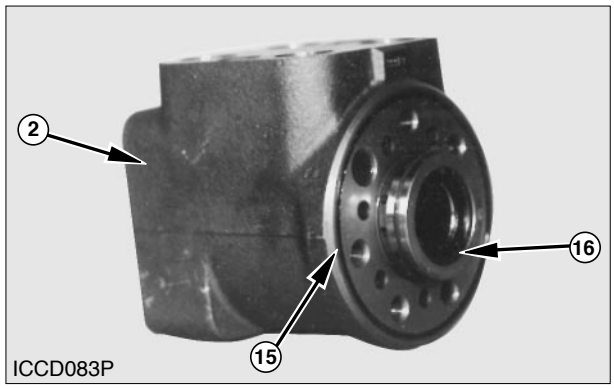

24. Install sleeve (16) into steering unit body (2).

25. Install O-ring seal (15) into body (2).

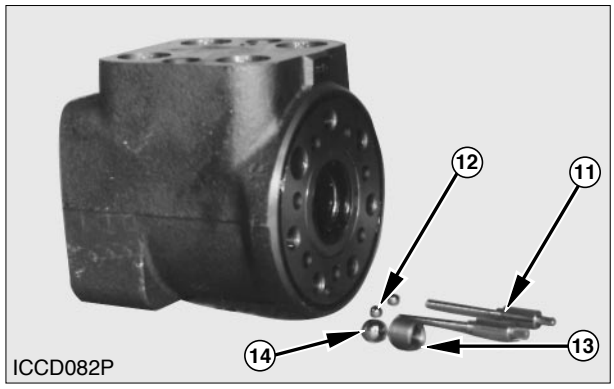

26. Install check valve ball (14) and screw (13). Tighten the screw (13).

27. Install suction valve balls (12) and pins (11) in their original positions into the steering unit body.

https://truckmanualshub.com/

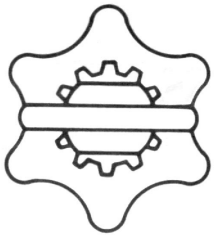

ICCD090P

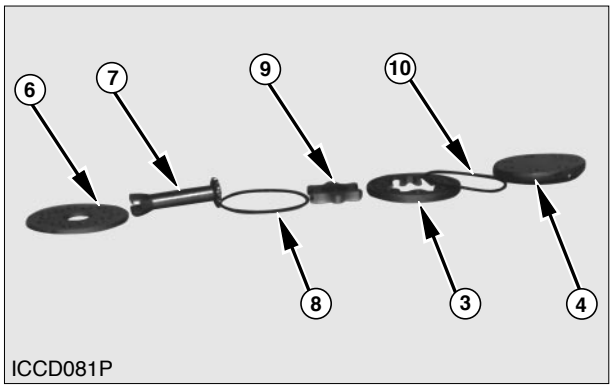

ICCD081P

28. Install plate (6) onto steering unit body.

NOTICE

Make sure the notch of shaft (7) properly seats on pin (18) when installed into body and spool (17).

---

29. Install shaft (7) into body (2) and spool (17).

NOTICE

Gerotor (9) must be aligned with shaft (7) and pin (18) as shown in the illustration.

---

30. Install O-ring seal (8) and housing (3).

31. Install O-ring seal (10) and cap (4).

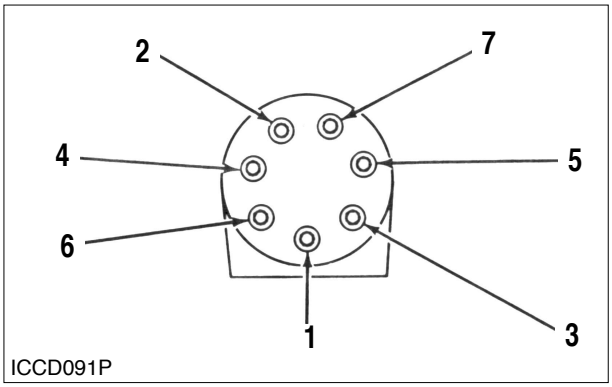

ICCD091P

NOTICE

To assure proper operation of the steering unit, make sure bolts (5) are clean and dry before installing. Tighten bolts (5) in the sequence shown in the illustration.

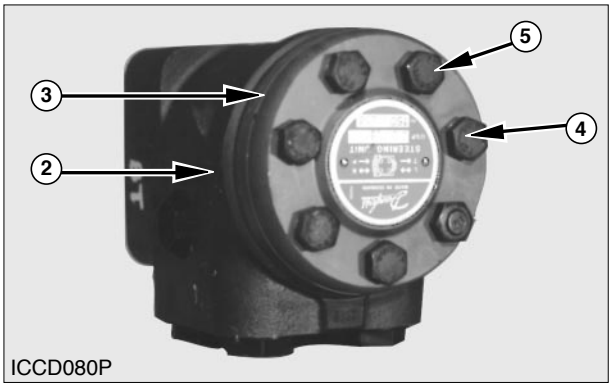

ICCD080P

32. Install bolts (5) into cap (4). Tighten bolts (5) in correct sequence to a torque of 30 ± 6 N•m (22 ± 4.4 lb•ft).

End by :

a. Install steering unit to the truck.

https://truckmanualshub.com/

Brake Hydraulic Booster

Remove And Install Brake Hydraulic Booster

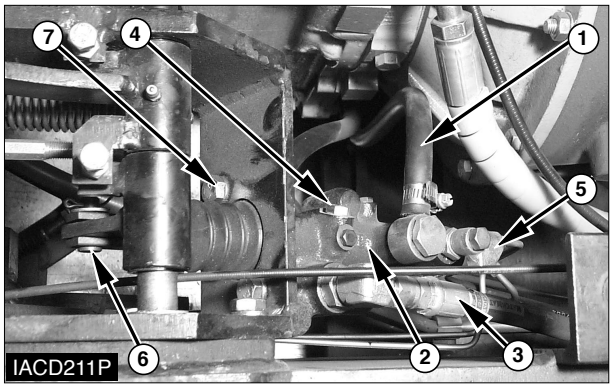

1. Remove the floor plate over the brake hydraulic booster.

2. Disconnect pressure line (3).

3. Disconnect return line (4) and supplement line (1).

4. Disconnect brake line (5).

5. Remove pin (6) and bolts (7).

6. Remove hydraulic booster (2).

NOTE : The following steps are for installation of the brake master cylinder.

NOTE : Installation is reverse order of removal.

7. Remove the air (bleed the brake lines). See the topic Brake System Air Removal in Testing And Adjusting.

8. Install the floor plate over the brake master cylinder.

Tie Rods

Remove And Install Tie Rods

Tools Needed	A	B
Floor Jack	1	
Drive Set		2

Start By :

a. Remove steer wheels.

NOTE : The procedure to remove and install the tie rod is the same for each steer wheel.

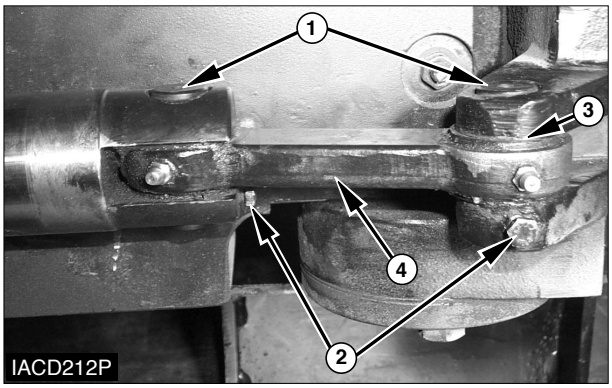

1. Support the steer axle with a floor jack (A). Position the wheel to gain access to the tie rods.

2. Remove two pin retaining bolts (2). Remove pins (1).

3. Remove tie rod (4) and dust seals (3).

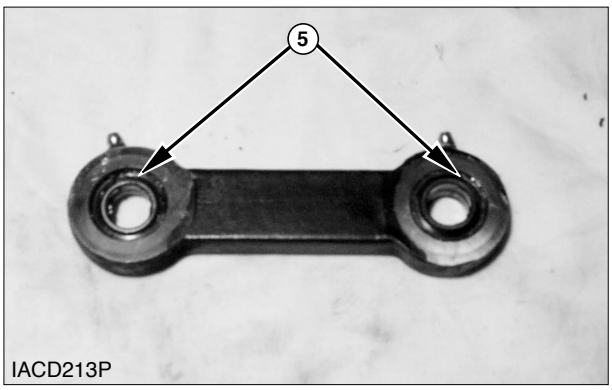

4. Use tooling (B) to remove bearings (5) from the tie rod.

5. Use tooling (B) to install new bearings (5) in the tie rod.

6. Install the tie rod in the reverse order of removal.

https://truckmanualshub.com/

Steering Knuckles, Kingpins, And Bearings

Remove And Install Steering Knuckles, King Pins And Bearings

Tools Needed	A
Drive Set	1

Start By:

a. remove steer wheels

NOTE : The procedure to remove and install the steering knuckles, kingpins, and bearings is the same for both sides of the lift truck.

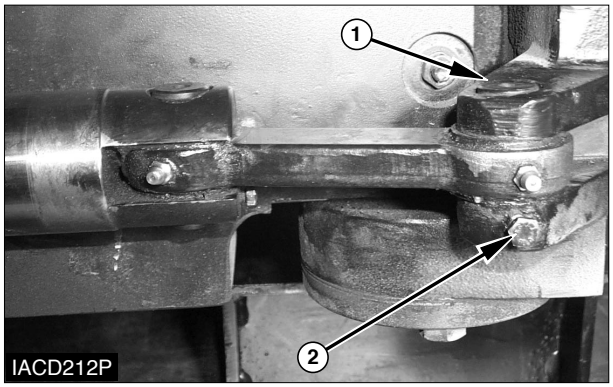

1. Remove pin retaining bolt (2). Remove pin (1).

2. Position the tie rod away from the steering knuckle.

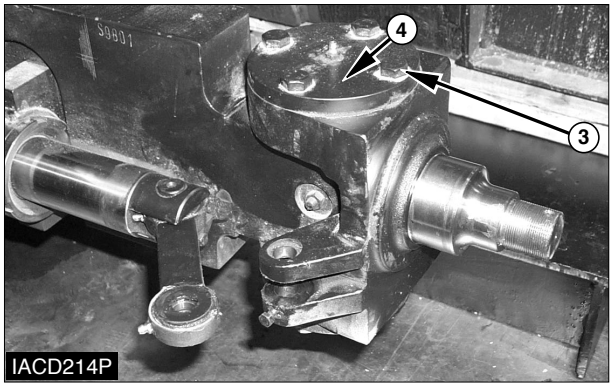

3. Remove four bolts (3) and cover (4).

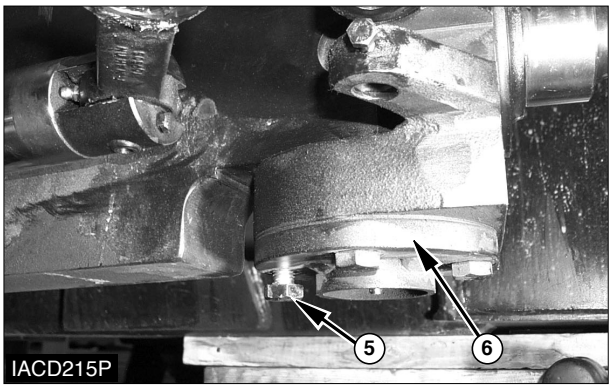

4. Remove four bolts (5) and cover (6).

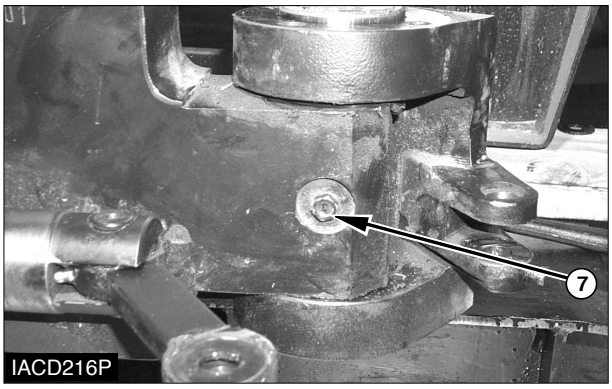

5. Remove the nut and bolt (7). For the purpose of reassembly, the torque for bolt (7) is 11 $\pm$ 1 N•m (8 $\pm$ 1 lb•ft).

https://truckmanualshub.com/

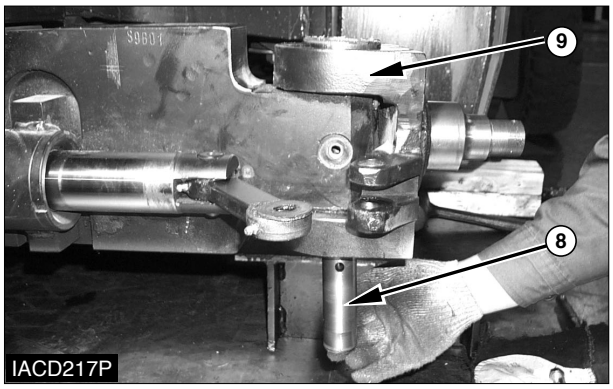

6. Remove kingpin (8) and knuckle (9).

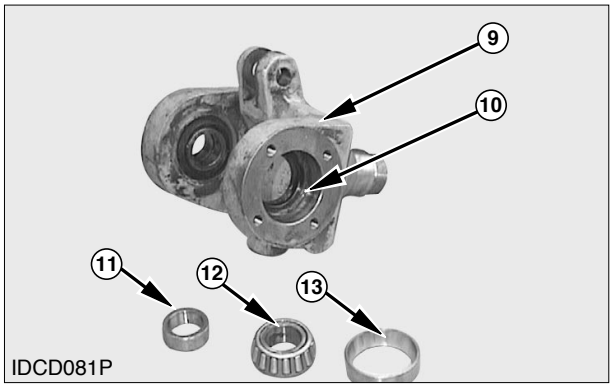

7. Remove spacer (11), bearing cup (13) and bearing cone (12).

8. Check the condition of lip type seal (10). Replace seal (10) with new if worn or damaged.

9. Repeat steps 7 and 8 for the remaining seal, bearing and spacer in the other side of knuckle (9).

NOTICE

Check the condition of all seals, bearings and components. If any parts are worn or damaged use new parts for replacement.

10. Lubricate the pins, king pins and bearings.

11. Install the steering knuckle, kingpins and bearings in the reverse order of removal.

End By:

a. Install steer wheels.

Steer Axle

Remove & Install Steer Axle

Tools Needed	A
Jack Stand	4

⚠ WARNING

Be sure the pressure in the hydraulic system is released before any lines or hoses have been disconnected.

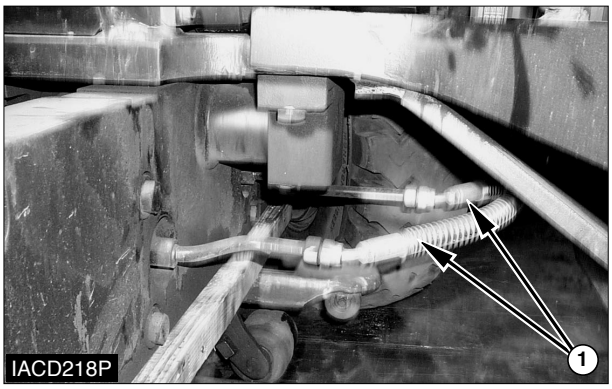

1. Put the lift truck in position on tooling (A).

2. For the purpose of reassembly, put identification marks on hoses (1). Disconnect hoses (1). Plug and cap all openings to prevent contamination and debris from entering the system.

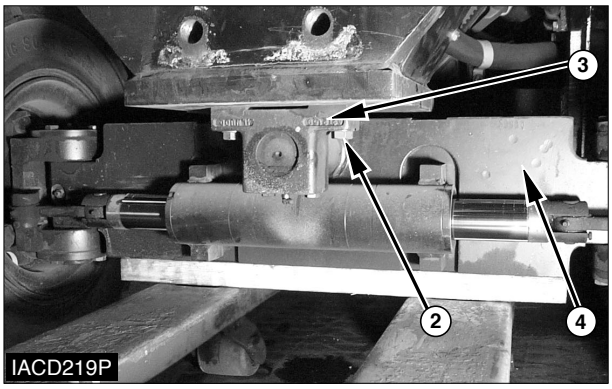

3. Support the steer axle with a floor jack.

4. Loosen mounting bolts (2) until approximately two bolt threads are left in the mounting bosses.

5. Lower the steer axle onto the bolt heads with the floor jack

https://truckmanualshub.com/

6. Remove bolts (2) and mounting caps (3) from the steer axle.

7. Remove steer axle (4). The steer axle weighs180 kg (400 lb).

NOTE : Use the following steps to install the steer axle.

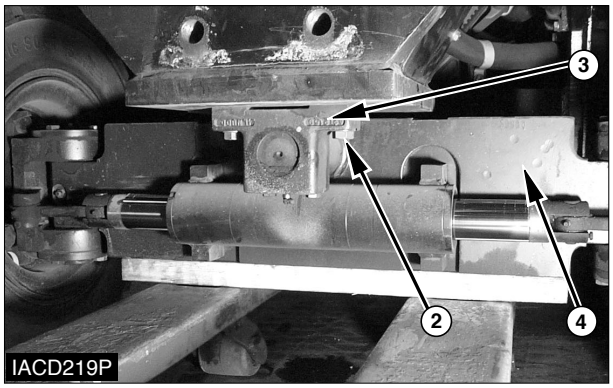

8. Use a floor jack to position steer axle (4).

NOTE : Use bolts (2) and cap (3) to align steer axle (4) with the mounting bosses while raising steer axle (4) into position with the floor jack.

9. Seat steer axle (4) as follows:
- **a.** Install bolts (2) through cap (3) and into the mounting bosses approximately two bolt threads.
- **b.** Use the floor jack to raise steer axle (4) into the mounting boss.
- **c.** Tighten bolts (2).

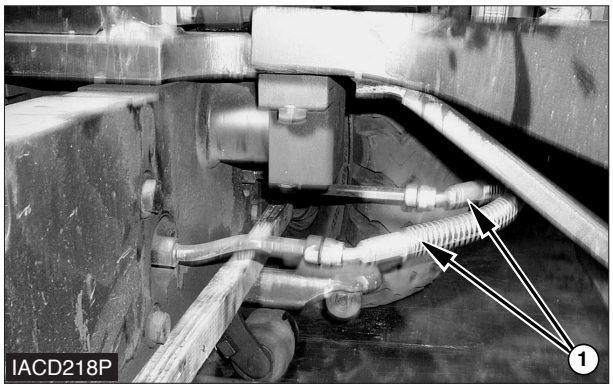

11. Connect hoses (1).

Steering Cylinder

Remove & Install Steering Cylinder

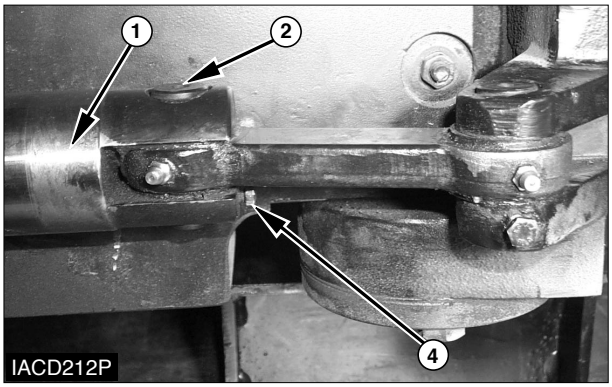

1. Remove the pin retaining bolt (4) and pin (2) from the tie rod at each end of steering cylinder (1).

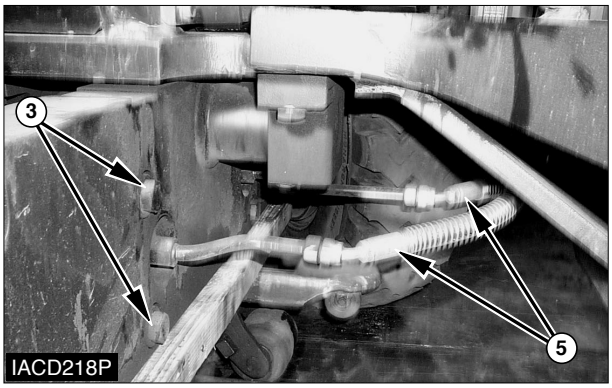

2. Disconnect two hoses (5).

3. Remove four bolts (3). For installation purposes, the torque for bolts (3) is **240 ± 30 N•m (178 ± 22 lb•ft)**.

4. Remove steering cylinder (1).

5. Install steering cylinder (1) in the reverse order of removal.

https://truckmanualshub.com/

Disassemble And Assemble Steering Cylinder

Start By :

a. Remove steering cylinder.

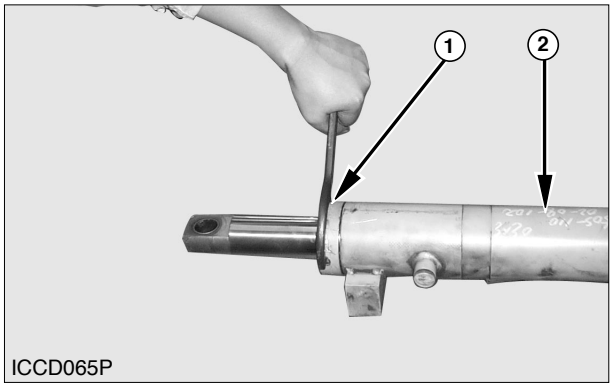

1. Put the steering cylinder in position in a vise.

2. Loosen head (1) from tube (2) with a spanner wrench.

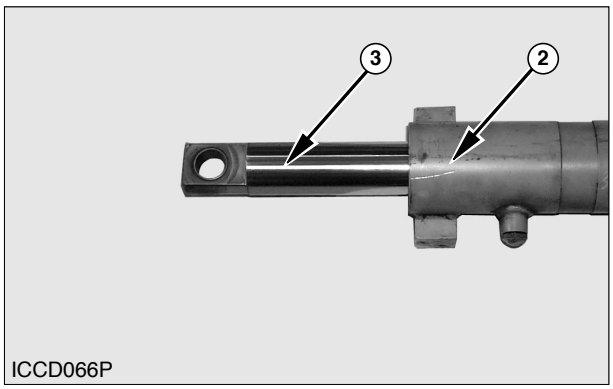

3. Remove rod assembly (3) from the tube (2).

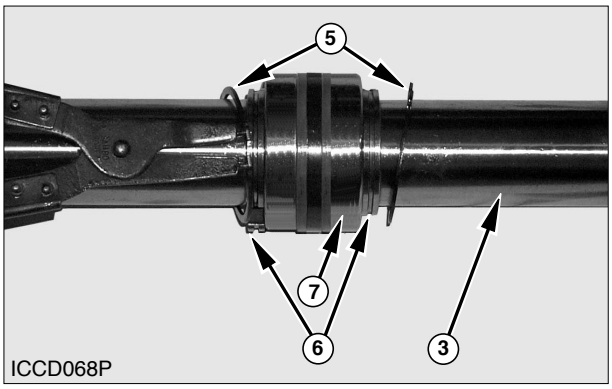

4. Remove retaining ring (5) with a plier and ring (6) from each side of piston (7) that holds piston in position on rod (3).

5. Remove piston (7) from the rod (3).

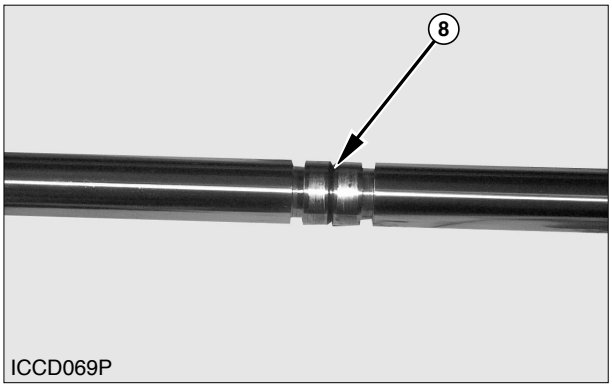

6. Remove O-ring seal (8) from the rod.

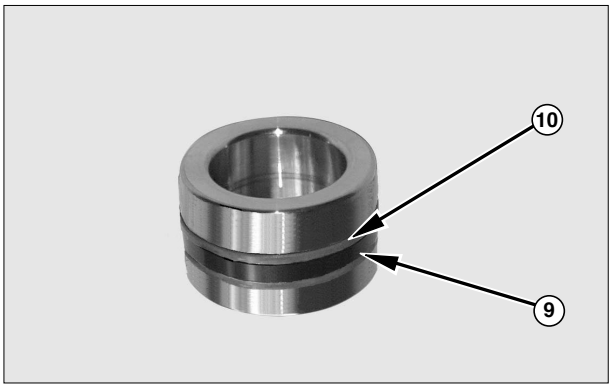

7. Remove seal ring (9) and backup seal (10) from the piston.

8. Loosen the head in the opposite end of the tube.

https://truckmanualshub.com/

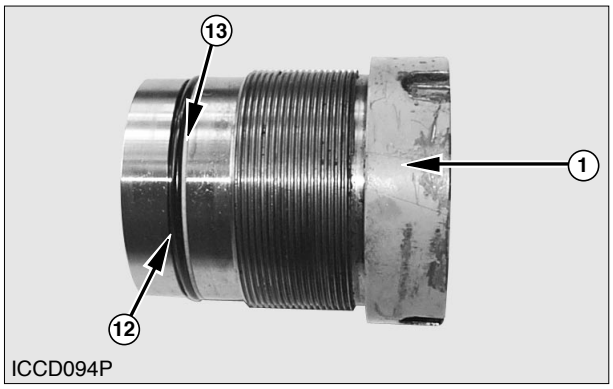

ICCD094P

9. Remove O-ring seal (12) and backup ring (13) from each head (1).

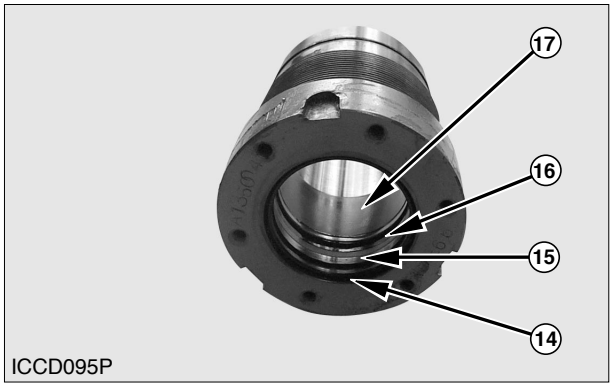

ICCD095P

10. Remove wiper seal (14), backup ring (15), U-packing (16) and DU-bush (17) from the bore of each head.

NOTE : Assemble the steering cylinder in the reverse order of disassembly.

Tires And Rims (Steer)

Remove And Install Tires And Rims (Steer)

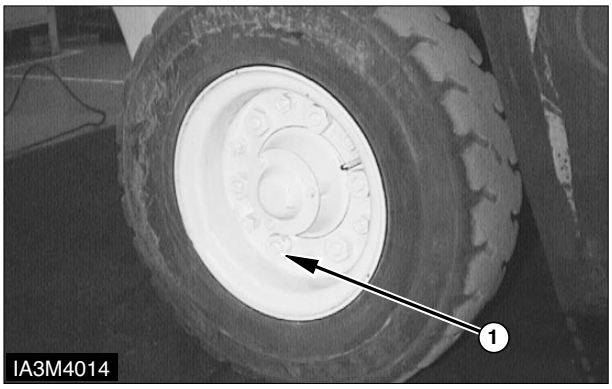

IA3M4014

1. Put a hydraulic jack in position under the steer axle.

2. Loosen nuts (1) that hold the tire and rim in place.

3. Lift the steer axle until the tire is clear of the ground. Remove nuts (1). Remove the tire and rim.

NOTE : The following steps are for installation of the tires and rims (steer).

4. Put the tire and rim in position on the hub.

5. Install nuts (1) that hold the tire and rim in place. Tighten the nuts to a torque of **430 ± 35 N•m (318 ± 25 lb•ft)**.

6. Lower the steer axle and remove the hydraulic jack.

https://truckmanualshub.com/

Hydraulic Control Valves

Remove And Install Hydraulic Control Valves

⚠ WARNING

Hydraulic oil under pressure can remain in the hydraulic system after the engine and pump have been stopped. Personal injury can result if the pressure is not released before any work is done to the hydraulic system. To prevent possible personal injury, turn the engine off and move the control levers to make sure the hydraulic pressure is released before any fitting, plug, hose or component is loosened, tightened, removed or adjusted. Always move the lift truck to a clean and level location away from the travel of other machines.

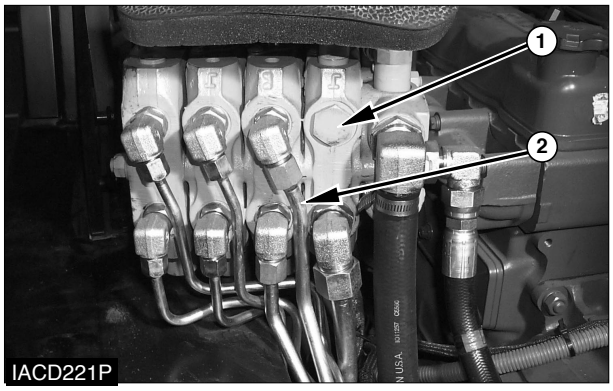

NOTE : For purposes of reassembly, put identification marks on all lines, tubes and hoses before any disconnections are made.

1. Disconnect hydraulic lines (2) from control valve (1).

2. Remove the cotter pins, washers and pins from linkages.

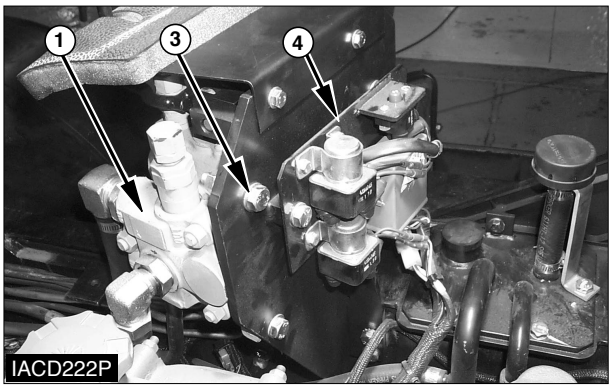

3. Support control valve (1). Remove circuit braker plate (4). Remove three bolts (3), nut and control valve (1).

4. Install the control valve in the reverse order of removal.

5. Fill the hydraulic tank to the correct level with fluid. Refer to the Operation And Maintenance Manual for further information.

https://truckmanualshub.com/

Disassemble Hydraulic Control Valve

Start By :

a. Remove hydraulic control valve.

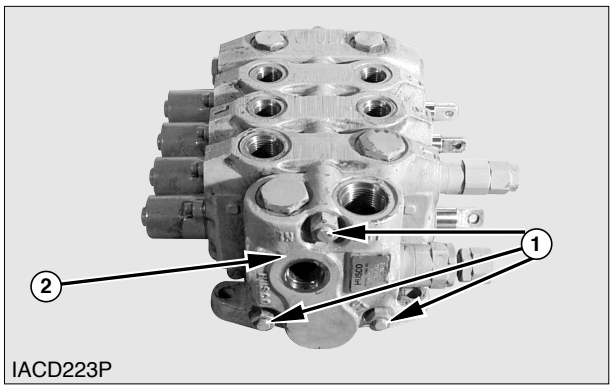

IACD223P

NOTE : For purpose of assembly, put identification marks on all valve sections.

1. Remove three nuts (1) to separate the valve sections.

2. Remove inlet section assembly (2) from the valve body.

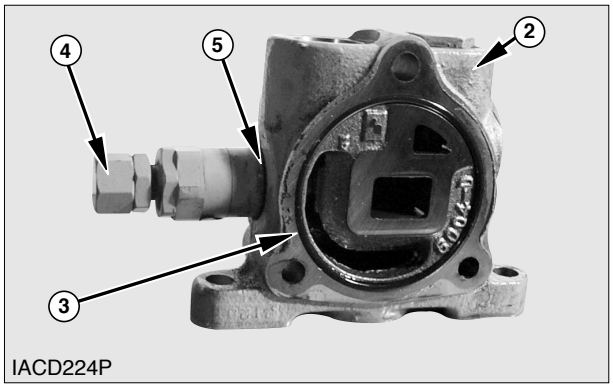

IACD224P

3. Remove O-ring (3) from inlet section assembly (2).

4. Remove relief valve (4) and O-ring (5).

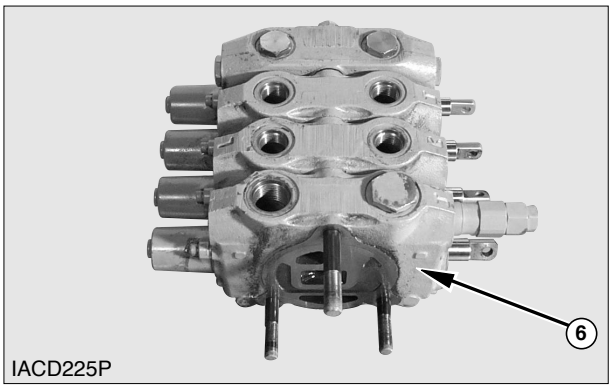

IACD225P

5. Remove lift section assembly (6) from the valve body.

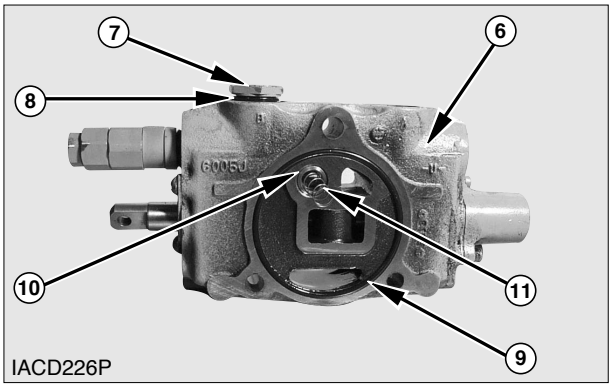

IACD226P

6. Remove plug (7) and O-ring (8) from the lift section assembly (6).

7. Remove O-ring (9), poppet (10) and spring (11) from the lift section assembly (6).

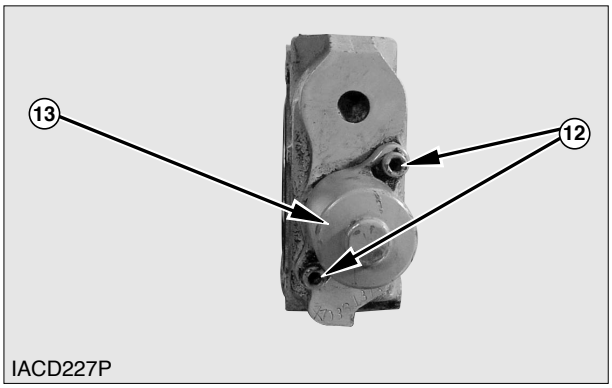

IACD227P

8. Remove two screws (12) and cap (13) from lift section assembly.

https://truckmanualshub.com/

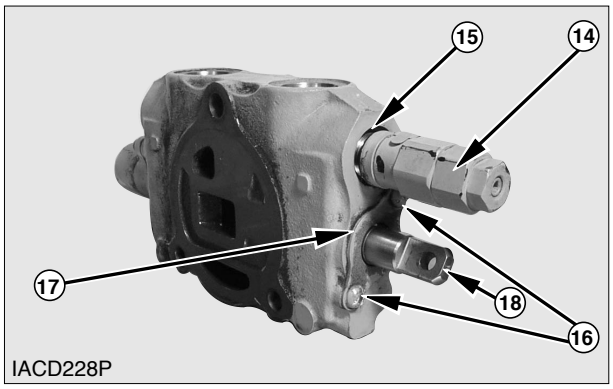

IACD228P

9. Remove relief valve (14) and O-ring (15) from lift section assembly.

10. Remove two screws (16) and seal plate (17).

11. Remove lift spool (18).

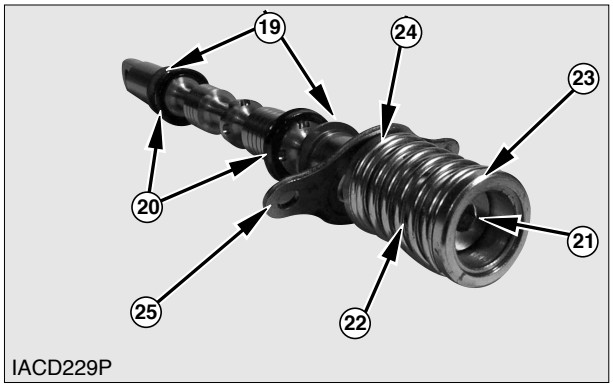

IACD229P

12. Remove the wiper seals (19) and O-rings (20) from the spool. Check the condition of O-rings and wiper seals and replace with new ones if needed.

NOTE : Remove the spool end (21) from the spool with a wrench. The centering spring (22) has a slight preload and will extend to its free length when the spool end is removed.

13. Remove the spring seats (23 and 24), centering spring (22) and seal plate (25).

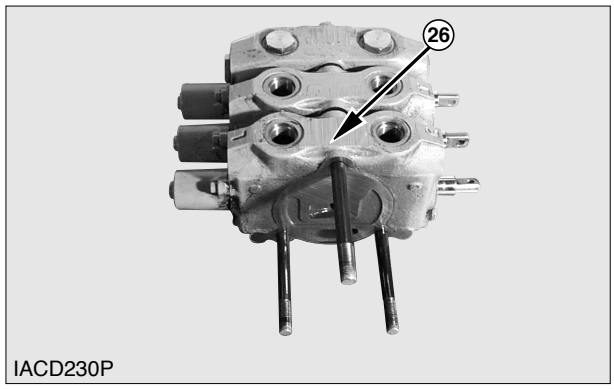

IACD230P

14. Remove tilt section assembly (26) from the valve body.

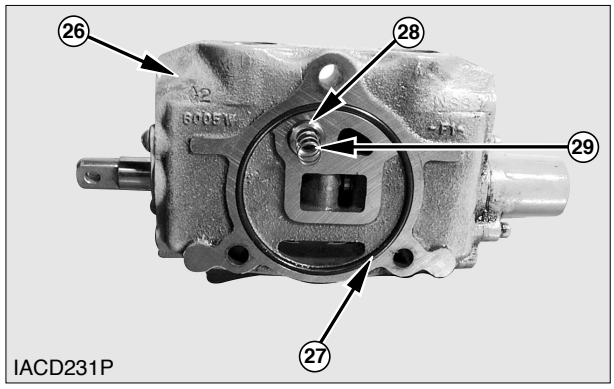

IACD231P

15. Remove O-ring (27), poppet (28) and spring (29) from tilt section assembly (26).

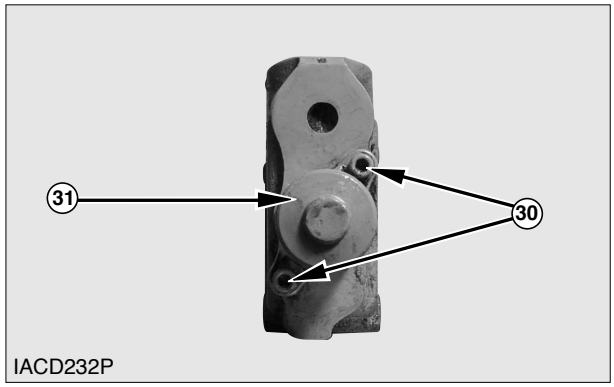

IACD232P

16. Remove two screws (30) and cap (31) from tilt section assembly.

https://truckmanualshub.com/

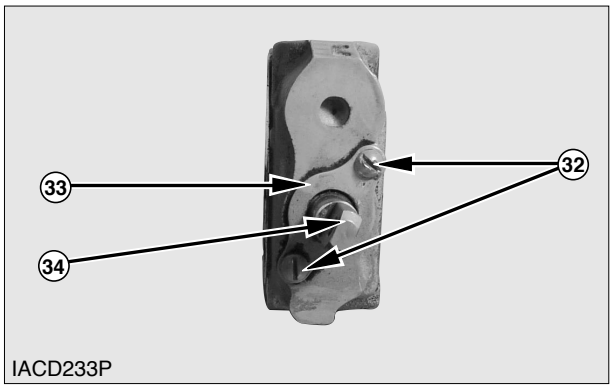

17. Remove two screws (32) and seal plate (33).

18. Remove tilt spool (34).

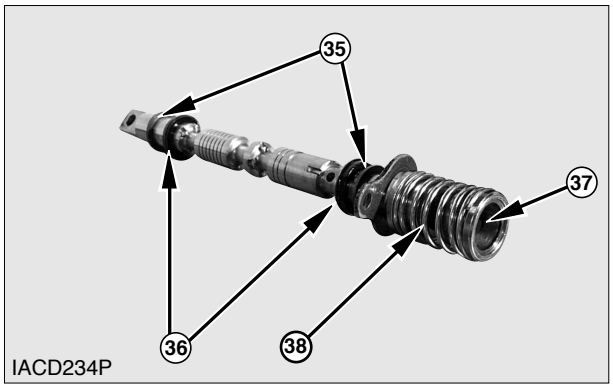

19. Remove the wiper seals (35) and O-rings (36). Check the condition of wiper seals and O-rings and replace with new ones if needed.

NOTE : Remove the spool end (37) from the spool. The centering spring (38) has a slight preload and will extend to its free length when the spool end is removed.

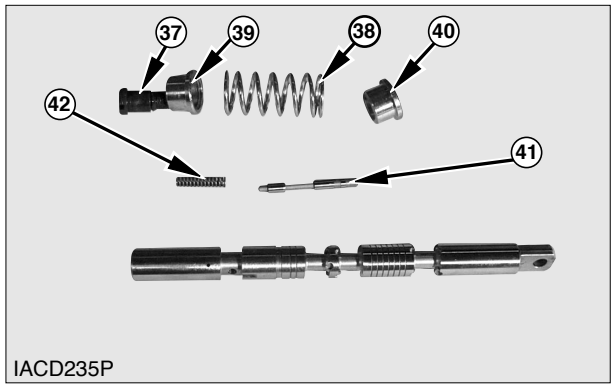

20. Remove spring seats (39 and 40), spring (38 and 42) and piston (41).

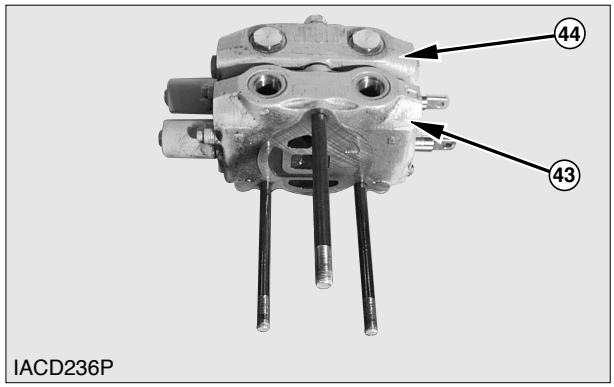

21. Remove side shift section assembly (43) and fourth section (44) from the valve body.

NOTE : Do step 7 through 13 except step 9 to disassemble valve spools of side shift and fourth section assembly.

https://truckmanualshub.com/

Assemble Hydraulic Control Valve

NOTICE

Do not use caustic (corrosive) materials to clean any parts in this valve group. Caustic materials will cause corrosion and damage to parts.

1. Make sure all valve parts are clean and free of dirt.

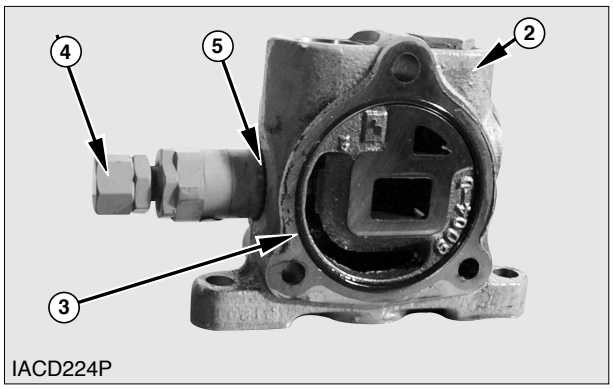

IACD224P

2. Install O-ring (3) to inlet section assembly (2).

3. Install relief valve (4) with O-ring (5) to inlet section assembly (2). The torque for the relief valve is **65 N•m (575 lb•in)**.

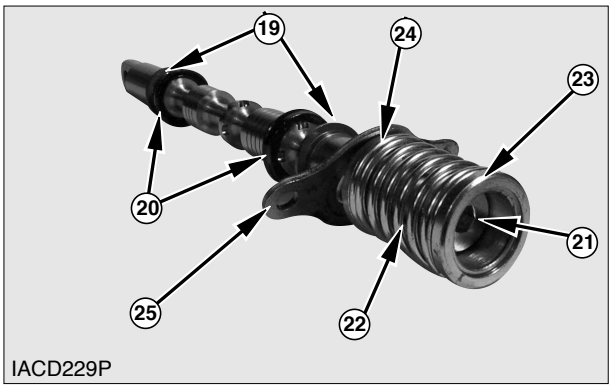

IACD229P

4. Install the spring seats (23 and 24), centering spring (22) and seal plate (25) on the lift spool.

5. Compress the spring with spool end (21) and tighten spool end. Torque the spool end to **8 ~ 11 N•m (70 ~ 97 lb•in)**.

6. Install the wiper seals (19) and O-ring (20) to the spool (18).

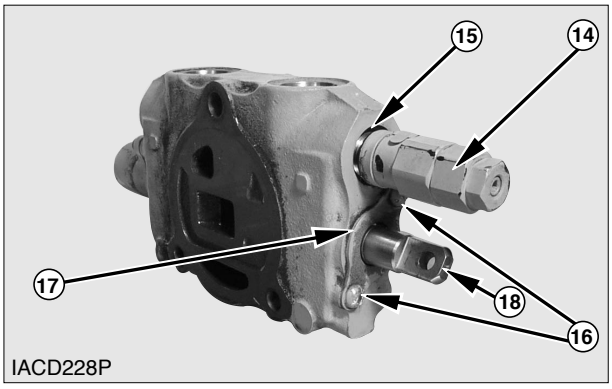

IACD228P

7. Install the spool (18), seal plate (17) and the screws (16).

8. Install relief valve (14) with O-ring (15) to lift section assembly. The torque for the relief valve is **45 N•m (398 lb•in)**.

https://truckmanualshub.com/

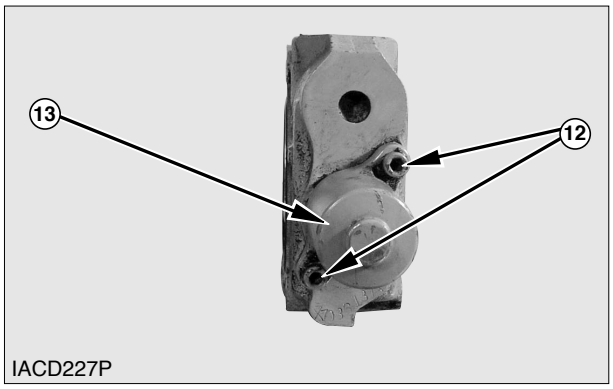

IACD227P

9. Install cap (13) and two screws (12).

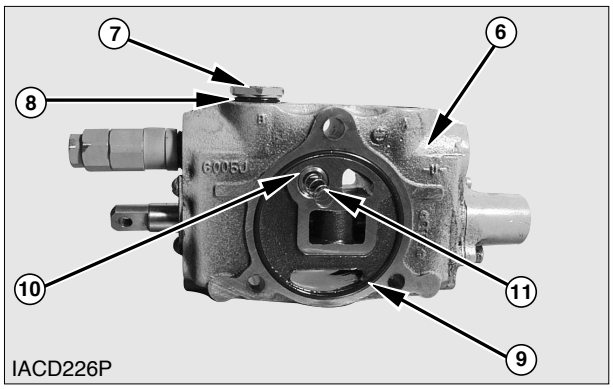

IACD226P

10. Install O-ring (9), poppet (10) and spring (11) to lift section assembly (6).

11. Install O-ring (8) and plug (7) to the lift section assembly.

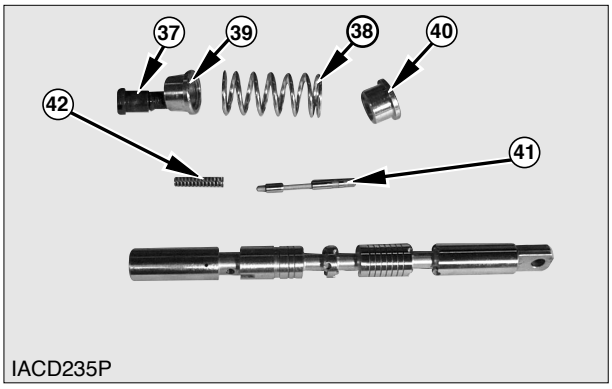

IACD235P

12. Install piston (41), spring (42), spring seats (39 and 40) and spring (38) on the tilt spool assembly.

13. Compress the spring with spool end (37).
Torque the spool end to **8 ~ 11 N•m (70 ~ 97 lb•in)**.

NOTE : Do step 6, 7, 9 and 10 to assemble the tilt spool to the tilt section assembly.

NOTE : Do same steps to assemble the side shift section and fourth section assembly.

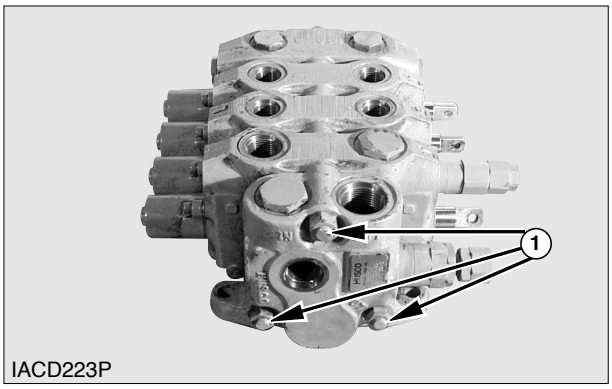

IACD223P

14. Assemble all the sections on the studs.

15. Install the nuts (1) that hold the valve sections together.
Tighten the single top nut to torque of **100 N•m (885 lb•in)** and two bottom nuts to torque of **65 N•m (575 lb•in)**.

End By :

a. Install hydraulic control valve.

https://truckmanualshub.com/

Hydraulic Pump

Remove and Install Hydraulic Pump

Start By :

a. Remove counterweight.

1. Drain the oil from the hydraulic tank.

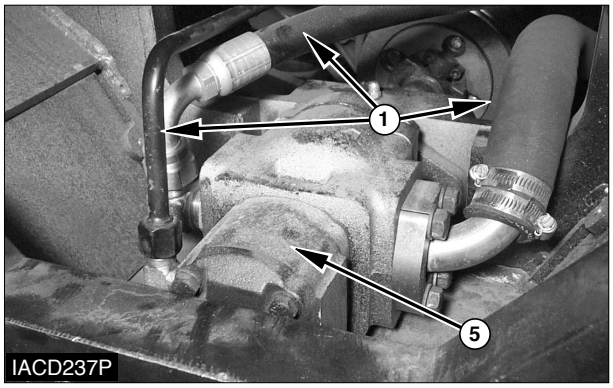

2. Disconnect three oil lines (1) from the pump elbows.

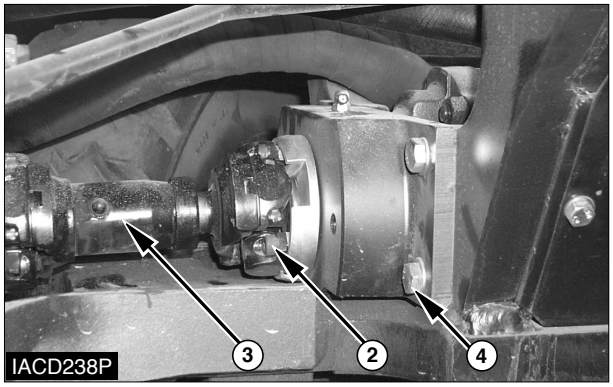

3. Remove bolts (2) and disconnect U-Joint (3).

4. Fasten a hoist to pump (5). Remove bolts (4) that hold the pump in place. Remove the pump and plate assembly. The weight of the pump is **30 kg (132 lb)**.

NOTE : The following steps are for installation of the hydraulic pump.

5. Inspect seals for damage. Install new seals, if needed.

6. Fasten a hoist to pump (5). Put the pump and plate assembly in position and install the bolts that hold the pump in place. The weight of the pump is **30 kg (132 lb)**.

7. Connect three oil lines (1) to the pump elbows.

8. Connect U-joint (3) in position and install bolts (2).

9. Fill the hydraulic tank with oil to the correct level. See the Operation and Maintenance Manual.

End By :

a. Install counterweight

https://truckmanualshub.com/

Disassemble And Assemble Hydraulic Pump

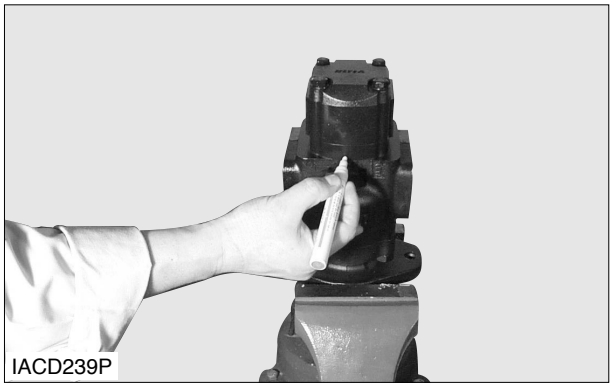
IACD239P

1. Position the pump vertically in the vise with the drive shaft facing down, and tighten the vise. Do not over-tighten. Take care to avoid damaging machined surfaces. Make a reference mark vertically down the pump to enable you to reassemble the pump sections in the same position.

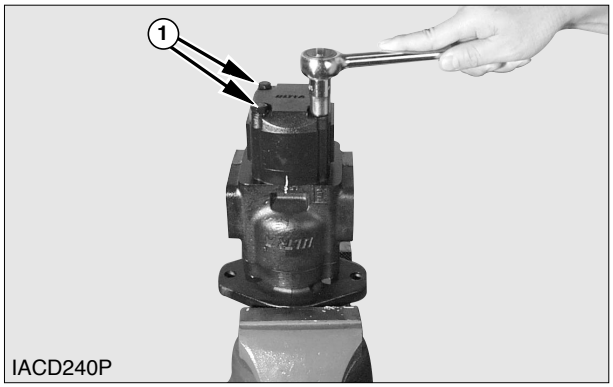

IACD240P

2. Use a wrench to remove four screws (1).

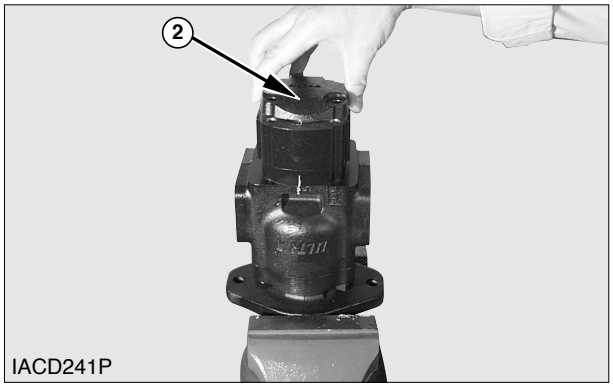

IACD241P

3. Remove the cover (2). Take care not to damage precision machined surfaces.

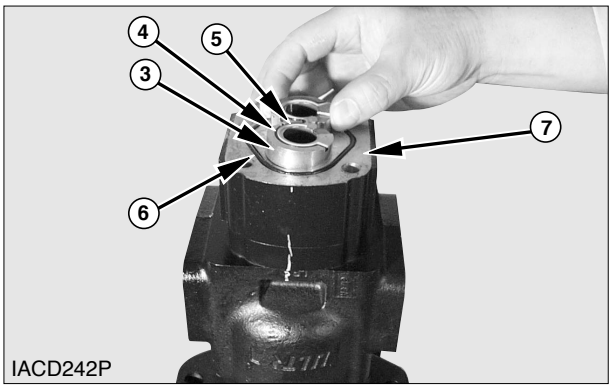

IACD242P

4. Remove the bush (3) and examine it carefully. Replace if damaged.

5. Remove seal (4) and backup seal (5) from the bush.

6. Remove O-ring (6) from the body (7).

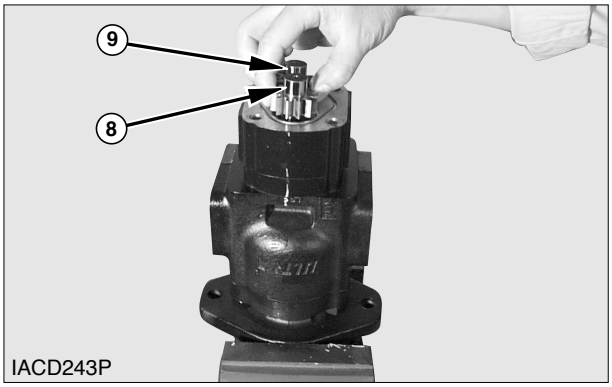

IACD243P

7. Carefully remove the drive gear (8) and idler gear (9). Take great care not to strike the shafts against hard surfaces which could damage the gear teeth.

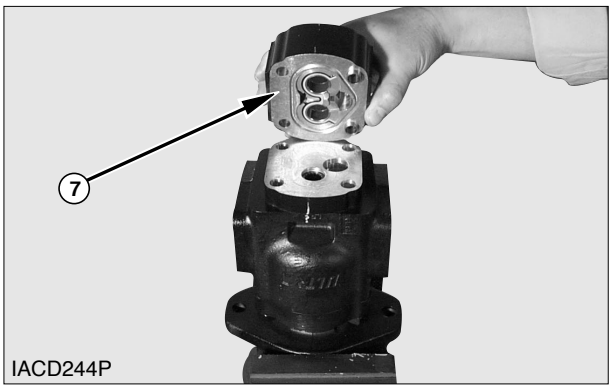

IACD244P

8. Remove the pump body (7). Take care not to damage precision machined surfaces. Carefully examine all components. Replace any damaged or worn ones.

https://truckmanualshub.com/

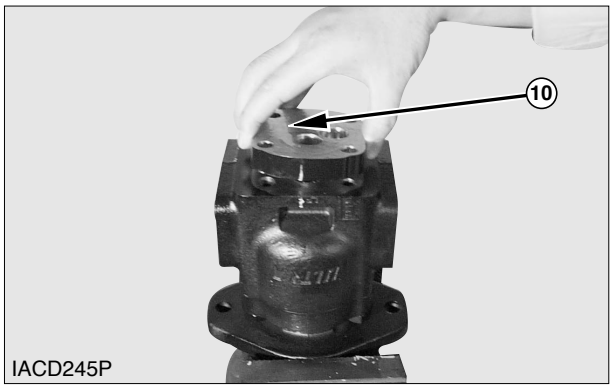

9. Remove the spacer (10).

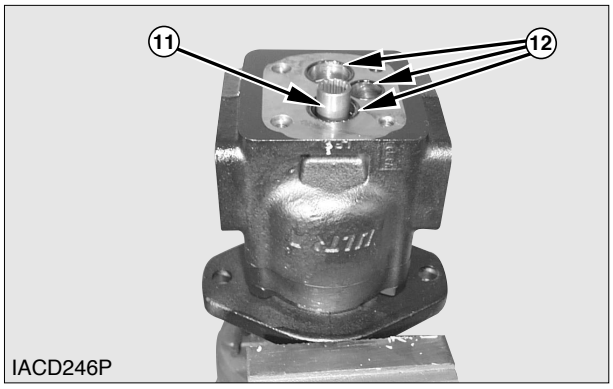

10. Remove splined coupling (11) and O-rings (12).

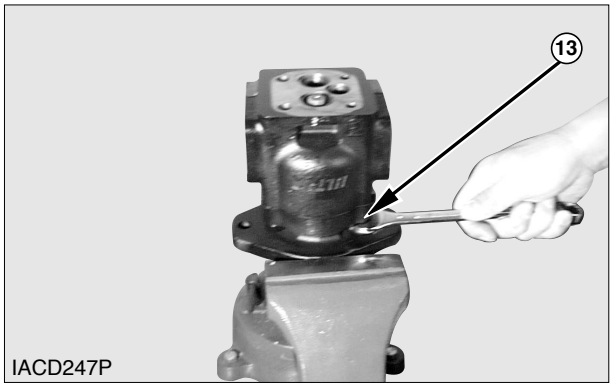

11. Remove four nuts (13) with a spanner.

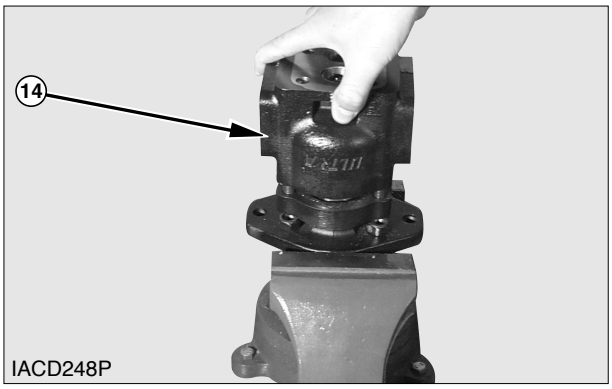

12. Remove the body (14). If necessary insert two screwdrivers in the recesses and lever upwards. Take care not to damage precision machined surfaces.

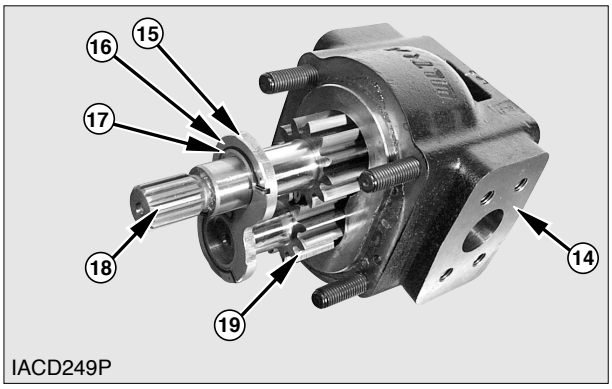

13. Remove balance plate (15), seal (16), backup seal (17), drive gear (18) and idler gear (19) from the body (14). Take great care not to strike the shafts against hard surfaces which could damage the gear teeth.

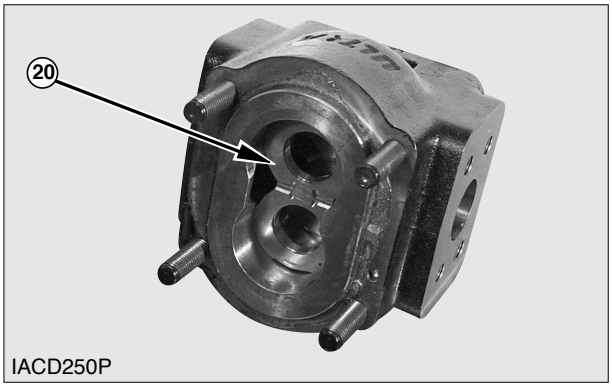

14. Remove the balance plate (20) and seals from the body.

https://truckmanualshub.com/

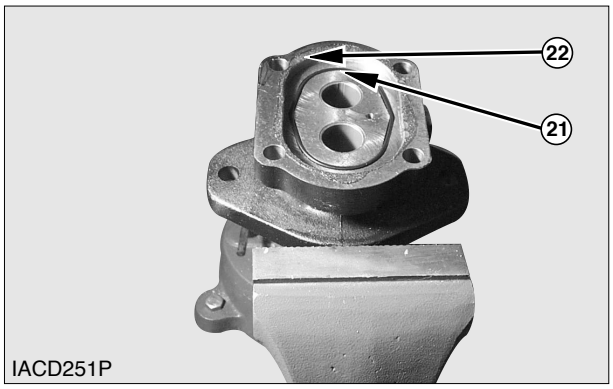

15. Remove O-ring (21) from the flange (22).

16. Remove the flange (22) from the vise.

17. Assemble the hydraulic pump in the reverse order of disassembly.

Counterweight

Remove And Install Counterweight

1. Install two eyebolts in the counterweight. Fasten a hoist to the eyebolts as shown.

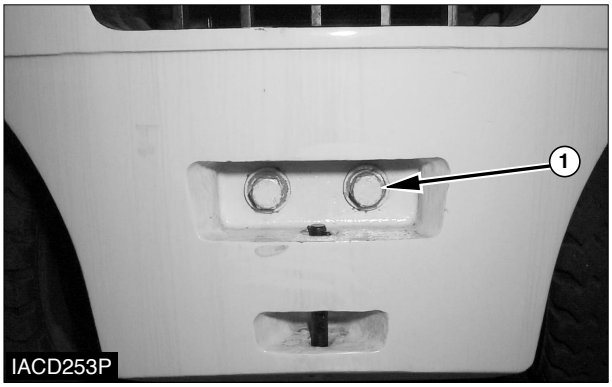

2. Remove two bolts (1), washers that hold the counterweight to the frame. Remove the counterweight. The weights of the different counterweight go from a minimum of **1650 kg (3630 lb)** to a maximum of **2350 kg (5170 lb)**.

NOTE : The following steps are for installation of the counterweight.

3. Install two eyebolts in the counterweight. Fasten a hoist to the eyebolts.

4. Put the counterweight in position on the frame and install bolts (1), washers that hold the counterweight in place. Tighten torque : **600 ± 50 N•m (442 ± 37 lb•ft)**.

https://truckmanualshub.com/

Hydraulic Oil Filter Assembly

Remove And Install Hydraulic Oil Filter Assembly

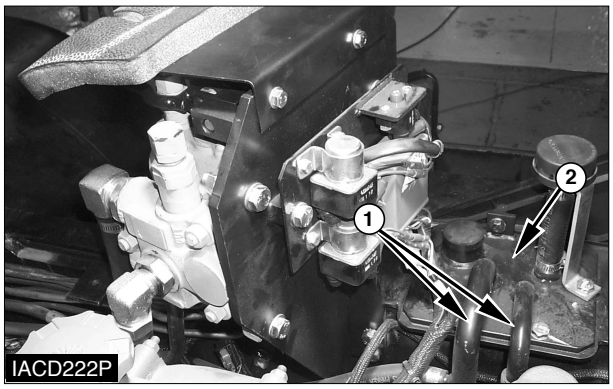

1. Disconnect four oil lines (1).

2. Remove hydraulic tank cover (2).

3. Remove the oil filter from hydraulic tank cover.

NOTE : The following steps are for installation of the hydraulic oil filter assembly.

4. Install the hydraulic oil filter assembly in position on hydraulic tank cover.

5. Install the hydraulic tank cover (2) with six bolts and washers.

6. Connect four oil lines (1).

7. Fill hydraulic oil tank to the correct level. See the Operation and Maintenance Manual.

Transaxle

Remove & Install Transaxle

Tools Needed	A	B
Stand	2	
Link Bracket		1

Start By :

a. Remove mast *

b. Remove floor plate

* Refer to the mast systems Disassembly & Assembly section for further information.

1. Raise the machine until tires are approximately 1 to 2 inches off of the floor. Position the machine on tooling (A).

NOTE : Put identification marks on all wiring, hoses and lines to assure proper installation.

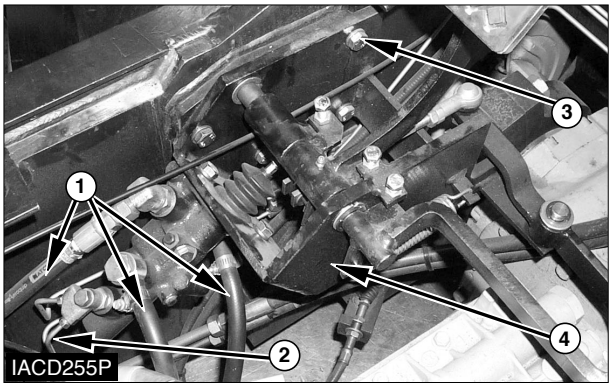

2. Disconnect hoses (1) and brake tubes (2). Loosen bolts (3) and remove pedal assembly (4).

https://truckmanualshub.com/

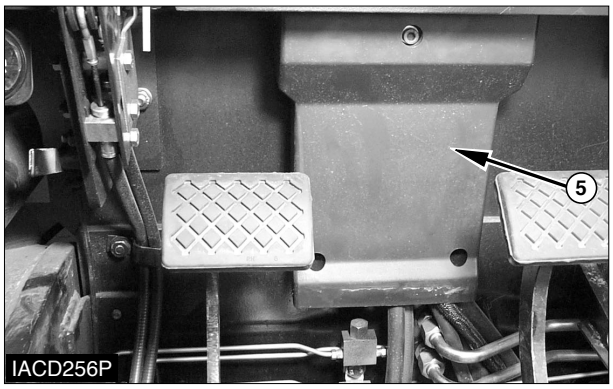

3. Remove cover (5).

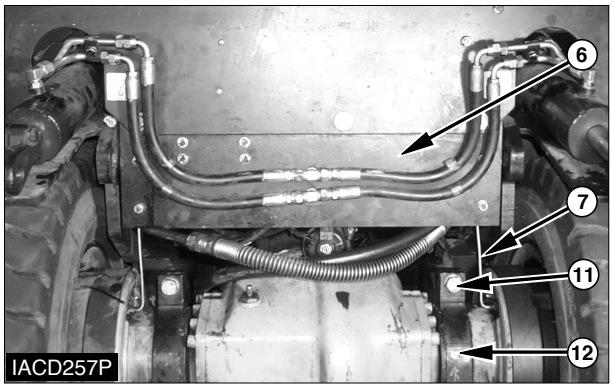

4. Remove cowl plate (6). Disconnect brake tubes (7) and parking cables from drive axle.

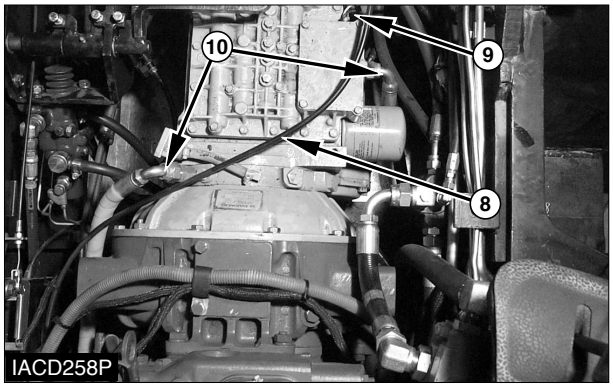

5. Disconnect accel cable (8).

6. Disconnect wires (9) from solenoid valves and wire from transmission temperature sender.

7. Disconnect two cooling hoses (10).

8. Loosen bolts (11) and remove drive axle mounting bracket (12).

9. Support the engine with a hoist and tooling (B).

10. Support transaxle assembly with a floor jack and wood block.

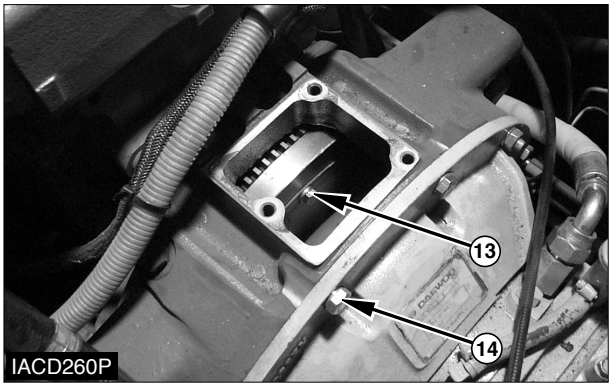

11. Remove housing cover.
Remove bolts (13) that hold the converter to the flywheel.

NOTE : At this point, make a final check to be sure all removals and disconnections have been made from the transaxle.

12. Remove bolts (14) and nuts from the converter housing.

13. Use the floor jack to move transaxle assembly from beneath the machine.

14. Install transaxle in the reverse order of removal.

15. Bleed the brake system.
Refer to the topic “Brake System Air removal” in the Testing and Adjusting section of Vehicle Systems.

16. Fill all fluids to their correct levels.

https://truckmanualshub.com/

End By :

a. Install floor plate.

b. Install mast *

* Refer to the Mast System Disassembly & Assembly Section for further information

Engine

Remove & Install Engine

Tools Needed	A
Link Bracket	1

NOTE : Procedures for LP gas and diesel engines are all similar. The engine shown in the following illustrations is for diesel engine.

Start By :

a. Remove overhead guard *

b. Remove hood (with seat) assembly *

c. Remove counterweight *

d. Remove floor plate.

e. Remove hydraulic control valve *

* Refer to the topics “Overhead Guard”, “Hood (with seat) Assembly”, “Counterweight” and “Hydraulic Control Valve” in this module.

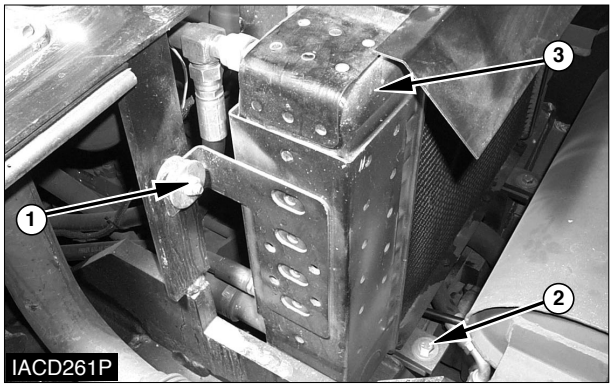

1. Disconnect all hoses from radiator (3). Loosen bolts (1) and (2) and remove radiator (3).

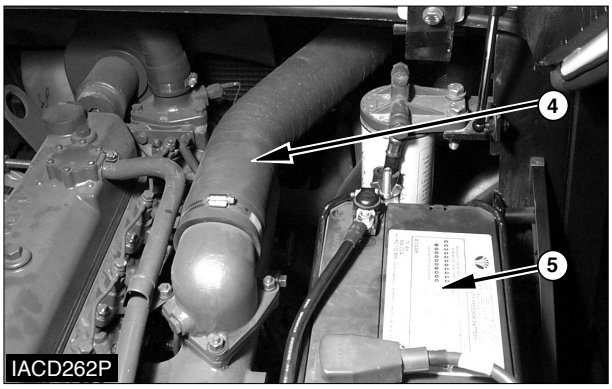

2. Disconnect air intake hose (4).

3. Disconnect battery cables and remove battery (5) and battery tray assembly.

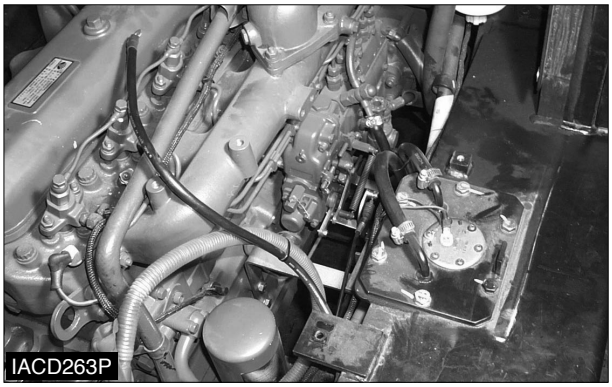

4. Disconnect fuel lines from the engine.

5. Disconnect accel cable and engine stop motor cable from the engine.

https://truckmanualshub.com/

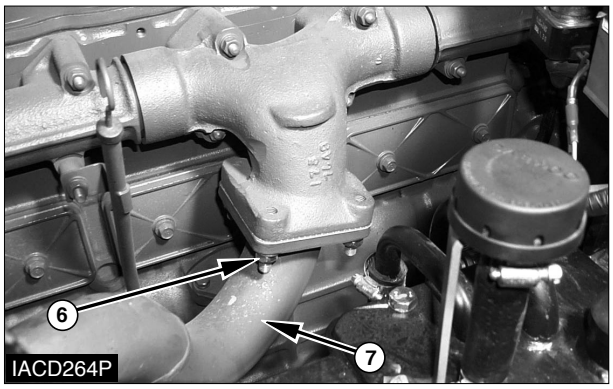

6. Loosen nuts (6) and disconnect exhaust tube (7).

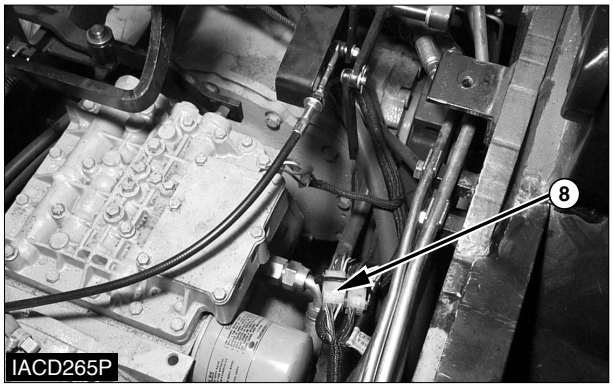

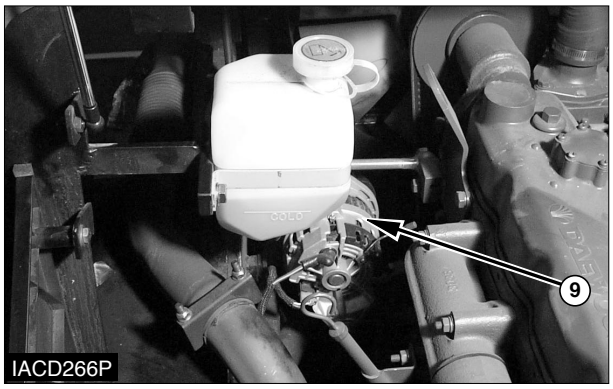

7. Disconnect engine wire harness (8). Disconnect wires from the alternator (9). To remove engine from the truck, other wires or connectors not shown should be disconnected.

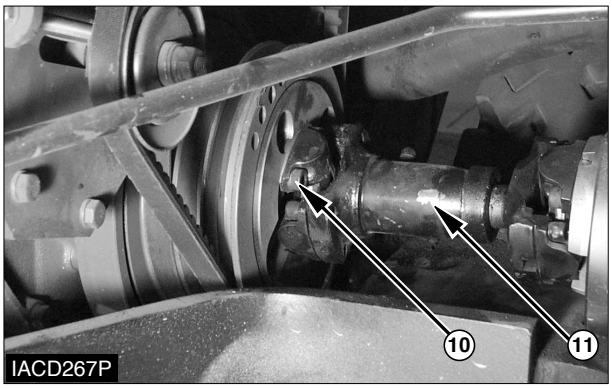

8. Remove bolts (10) and disconnect U-joint (11) from the engine

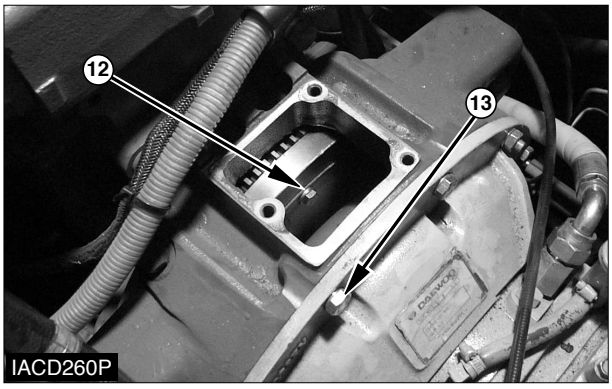

9. Remove housing cover.
Remove bolts (12) that hold the converter to the flywheel.

NOTE : At this point, make a final check to be sure all removals and disconnections have been made from the engine.

10. Support engine with a hoist and tooling (A). Support transaxle with wood block.

11. Remove bolts (13) and nuts from the converter housing.

https://truckmanualshub.com/

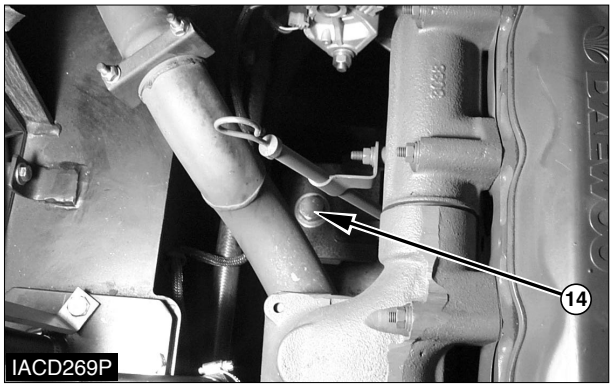

12. Remove bolts (14) and nuts from two engine mounts, located on each side of the engine.

NOTICE

Make sure the engine is supported underneath by suitable wooden blocks. Failure to support engine will result in possible damage.

---

13. Remove the engine with a hoist.

14. Install the engine in the reverse order of removal.

End By :

a. Install hydraulic control valve *

b. Install floor plate.

c. Install hood (with seat) assembly *

d. Install counterweight *

e. Install Overhead guard.*

***** Refer to the topics “Hydraulic Control Valve”, “Hood (with seat) Assembly”, “Counterweight” and “Overhead Guard”.

https://truckmanualshub.com/

DAEWOO

SB2205E00
Jun. 1999

Schematic

Lift Trucks Hydraulic System

D35S-2, D40S-2, D45S-2
D40SC-2, D45SC-2, D50SC-2
G35S-2, G40S-2, G45S-2
G40SC-2, G45SC-2, G50SC-2

https://truckmanualshub.com/

MODEL : D35S-2, D40S-2, D45S-2
D40SC-2, D45SC-2, D50SC-2
G35S-2, G40S-2, G45S-2
G40SC-2, G45SC-2, G50SC-2

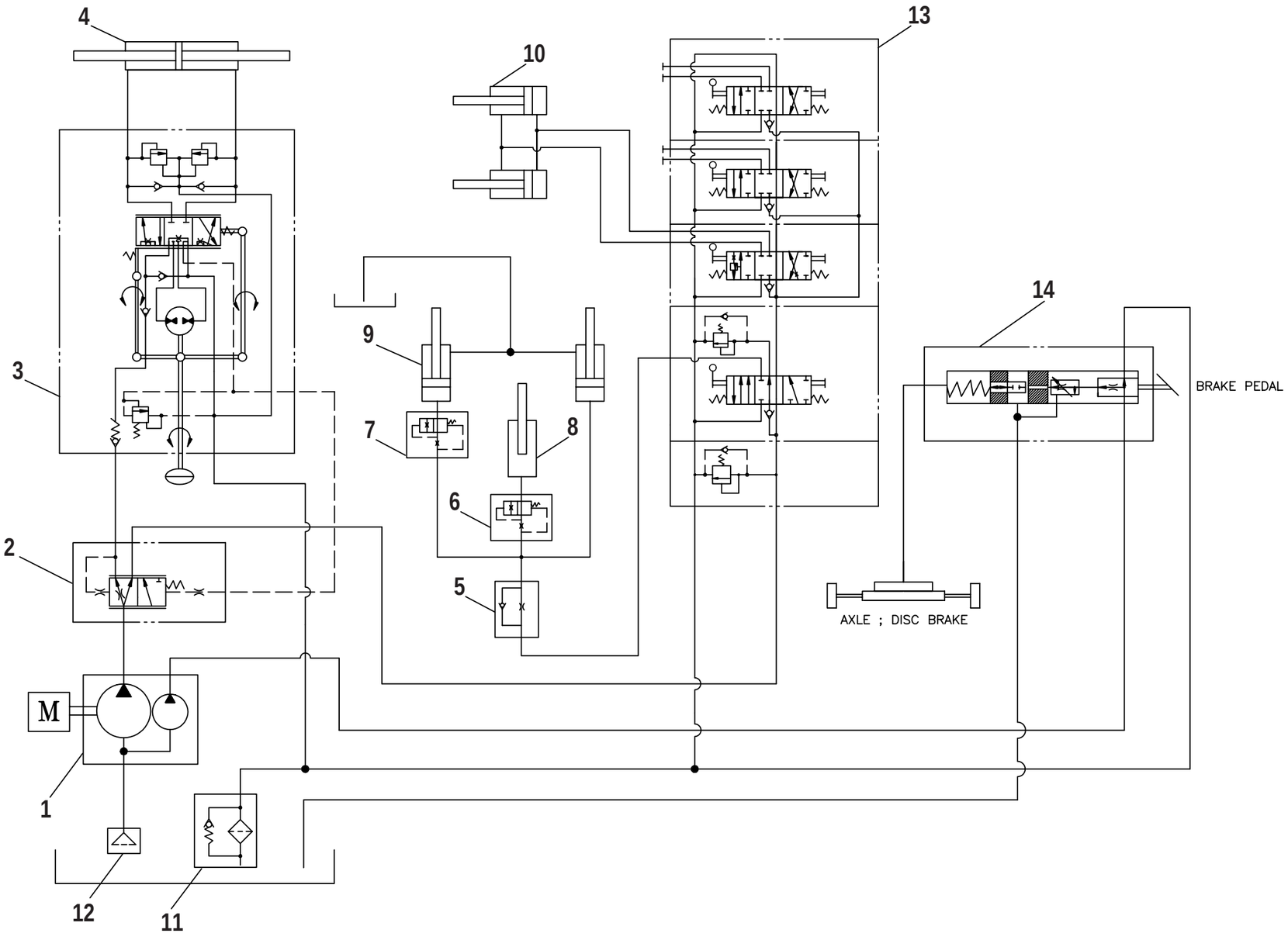

Item	Components
1	Hydraulic Pump
2	Priority Valve
3	Steering Unit
4	Steering Cylinder
5	Flow Regulator
6	Flow Protector-Primary
7	Flow Protector-Secondary, Standard
8	Lift Cylinder-Primary
9	Lift Cylinder-Secondary, Standard
10	Tilt Cylinder
11	Hydraulic Filter
12	Suction Strainer
13	Control Valve
14	Booster

https://truckmanualshub.com/

DAEWOO

SB2206E00
Jun. 1999

Schematic

Lift Trucks Electric System

D35S-2, D40S-2, D45S-2
D40SC-2, D45SC-2, D50SC-2
G35S-2, G40S-2, G45S-2
G40SC-2, G45SC-2, G50SC-2

https://truckmanualshub.com/

WIRING SCHEMATIC-ELEC
MODEL : D35S-2, D40S-2, D45S-2 D40SC-2, D45SC-2, D50SC-2 for DB58 E/G

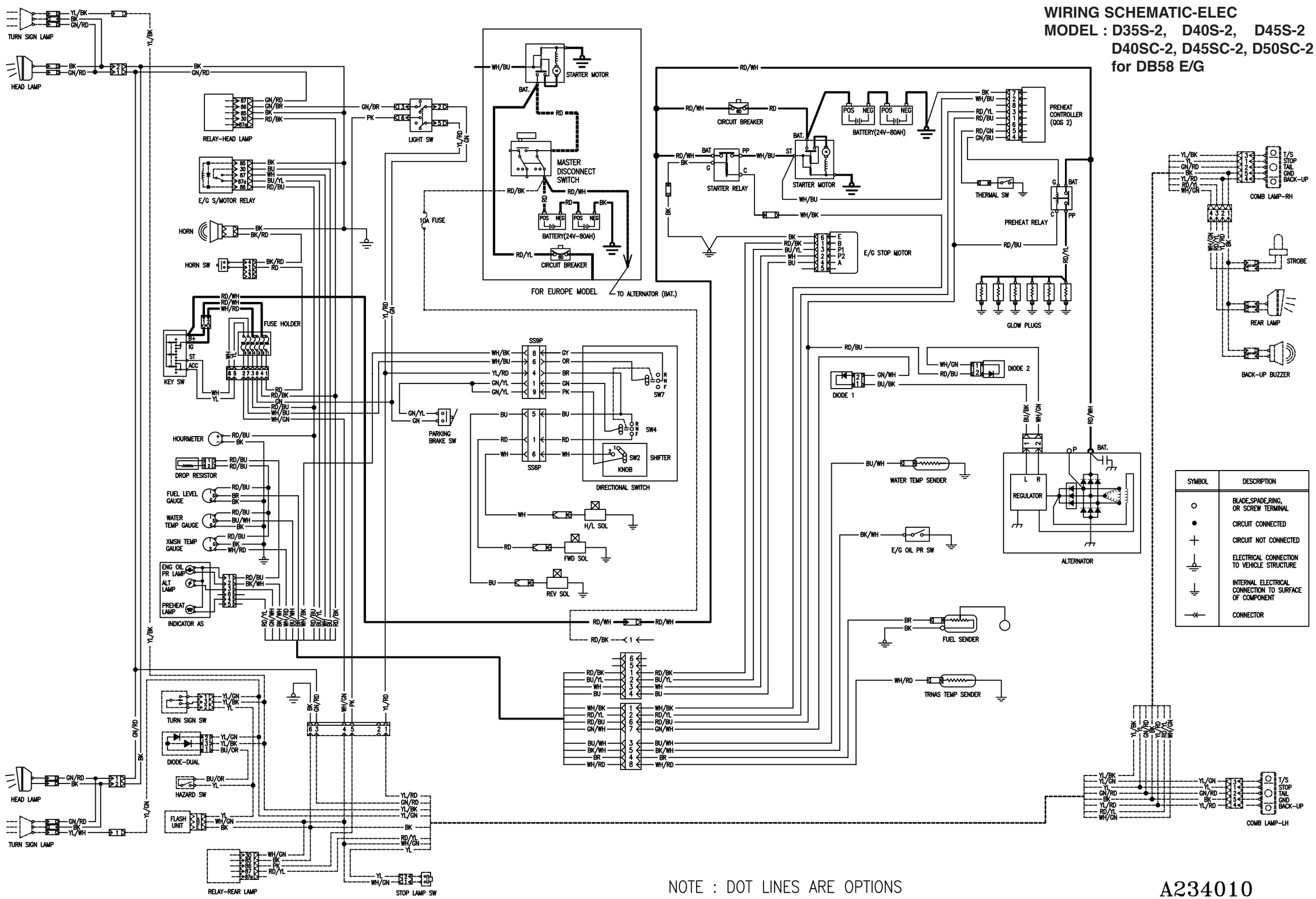

NOTE : DOT LINES ARE OPTIONS

A234010

https://truckmanualshub.com/

WIRING SCHEMATIC-ELEC
MODEL : G35S-2, G40S-2, G45S-2
G40SC-2, G45SC-2, G50SC-2
for GM VORTEC V6 E/G

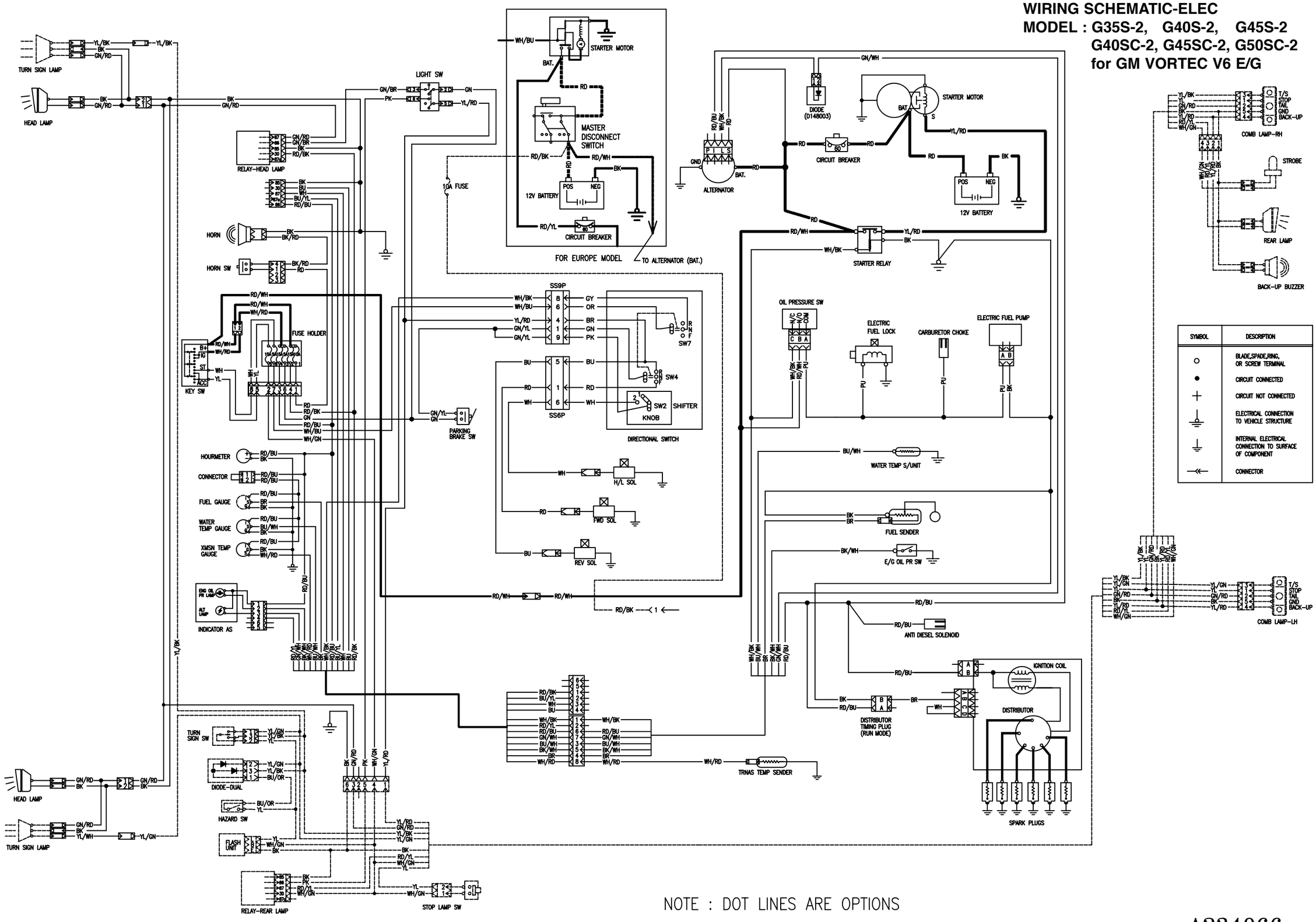

NOTE : DOT LINES ARE OPTIONS

A234066

https://truckmanualshub.com/

WIRING SCHEMATIC-ELEC
MODEL : D(G)35/40/45S-2, D(G)40/45/50SC-2
for OPTION

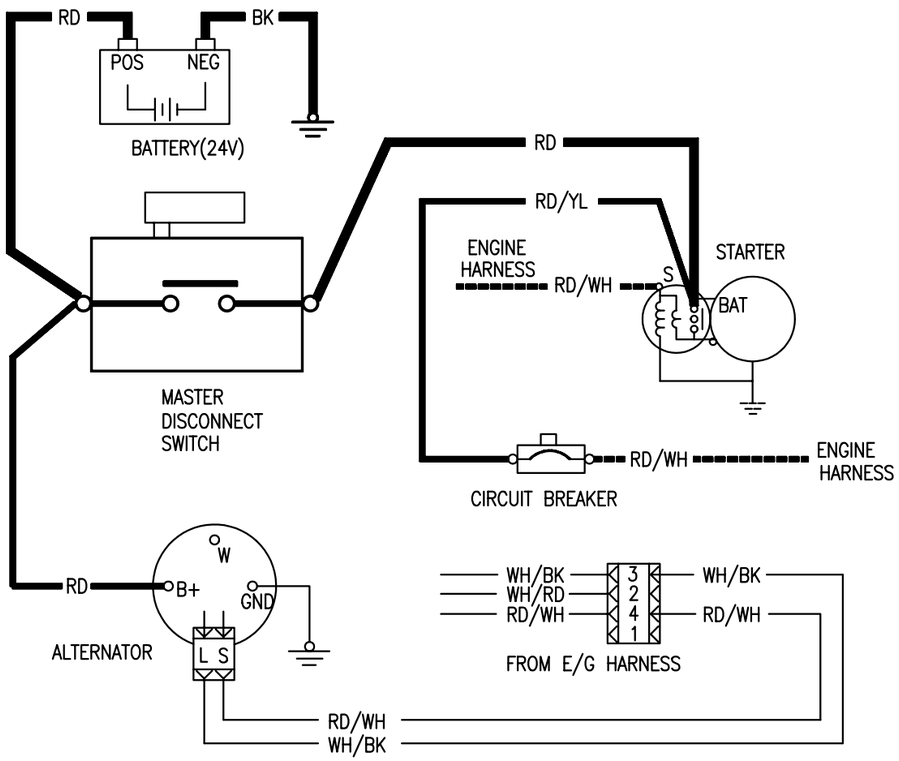

SAFETY TRUCK WIRING
(DS MODEL)

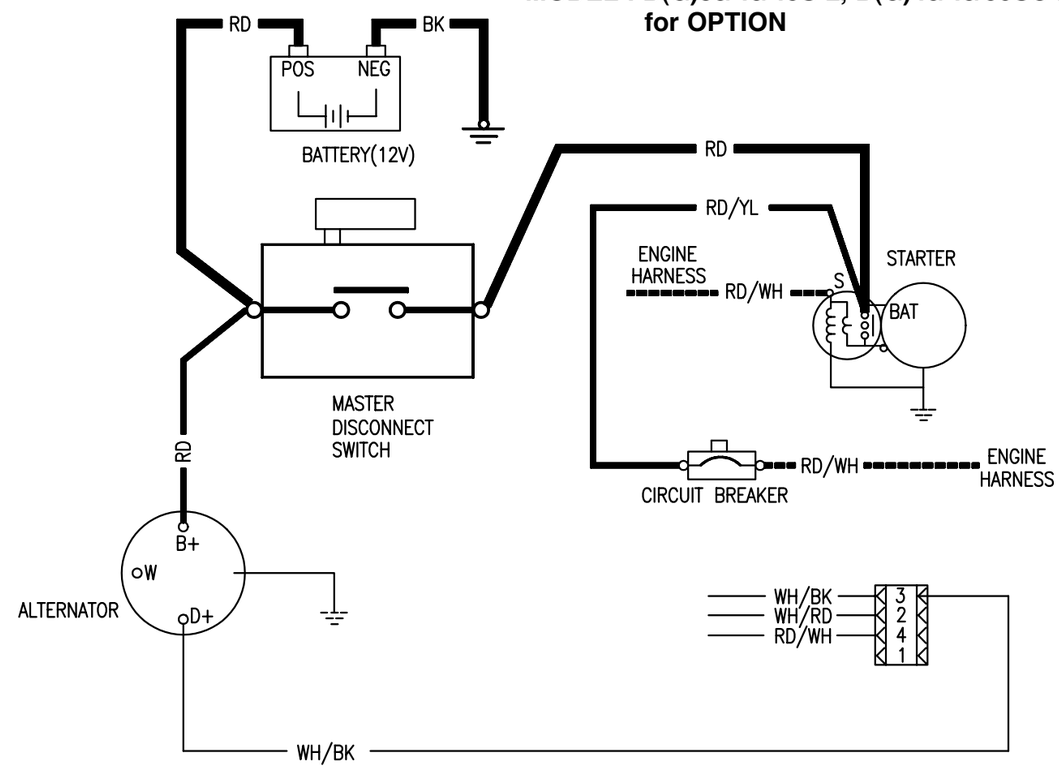

SAFETY TRUCK WIRING
(GS MODEL)

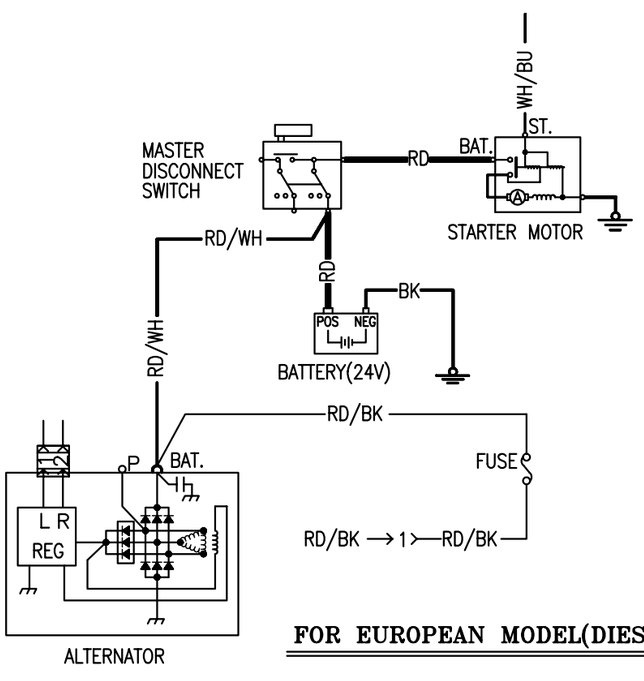

FOR EUROPEAN MODEL(DIESEL)

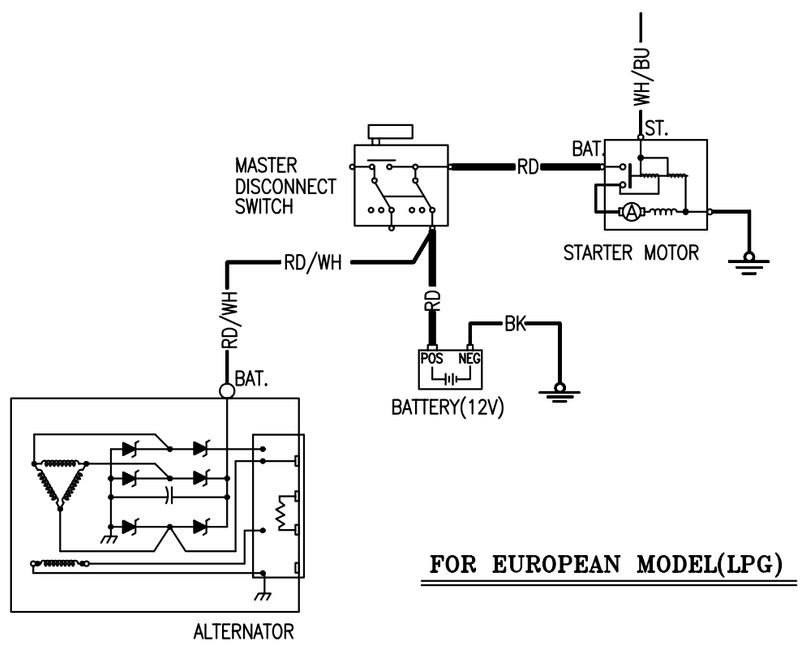

FOR EUROPEAN MODEL(LPG)

A234055

https://truckmanualshub.com/

SB2207E00
Jun. 1999

Disassembly & Assembly Testing & Adjusting

Lift Trucks Mast Systems

D35S-2, D40S-2, D45S-2
D40SC-2, D45SC-2, D50SC-2
G35S-2, G40S-2, G45S-2
G40SC-2, G45SC-2, G50SC-2

https://truckmanualshub.com/

Important Safety Information

Most accidents involving product operation, maintenance and repair are caused by failure to observe basic safety rules or precautions. An accident can often be avoided by recognizing potentially hazardous situations before an accident occurs. A person must be alert to potential hazards. This person should also have the necessary training, skills and tools to perform these functions properly.

Read and understand all safety precautions and warnings before operating or performing lubrication, maintenance and repair on this product.

Basic safety precautions are listed in the “Safety” section of the Service or Technical Manual. Additional safety precautions are listed in the “Safety” section of the owner/operation/maintenance publication.
Specific safety warnings for all these publications are provided in the description of operations where hazards exist. WARNING labels have also been put on the product to provide instructions and to identify specific hazards. If these hazard warnings are not heeded, bodily injury or death could occur to you or other persons. Warnings in this publication and on the product labels are identified by the following symbol.

⚠ WARNING

Improper operation, lubrication, maintenance or repair of this product can be dangerous and could result in injury or death.
Do not operate or perform any lubrication, maintenance or repair on this product, until you have read and understood the operation, lubrication, maintenance and repair information.

Operations that may cause product damage are identified by NOTICE labels on the product and in this publication.

DAEWOO cannot anticipate every possible circumstance that might involve a potential hazard. The warnings in this publication and on the product are therefore not all inclusive. If a tool, procedure, work method or operating technique not specifically recommended by DAEWOO is used, you must satisfy yourself that it is safe for you and others. You should also ensure that the product will not be damaged or made unsafe by the operation, lubrication, maintenance or repair procedures you choose.

The information, specifications, and illustrations in this publication are on the basis of information available at the time it was written. The specifications, torques, pressures, measurements, adjustments, illustrations, and other items can change at any time. These changes can affect the service given to the product. Obtain the complete and most current information before starting any job. DAEWOO dealers have the most current information available.

https://truckmanualshub.com/

https://truckmanualshub.com/

Index

Disassembly & Assembly

Backrest 5
Carriage 6
Forks 5
Mast 10

Testing & Adjusting

Carriage Adjustment 20
Carriage and Mast Height Adjustment.....21
Chain Adjustments.....20
Chain Wear Test 21
Drift Test.....23
Forks Parallel Check 22
Lift & Tilt Mounting Group Adjustment.....24
Mast mounting Group Adjustment 25
Tilt Cylinder Adjustment 23
Tilt Cylinder Alignment 22

https://truckmanualshub.com/

https://truckmanualshub.com/

Disassembly & Assembly

Forks

Remove & Install Forks

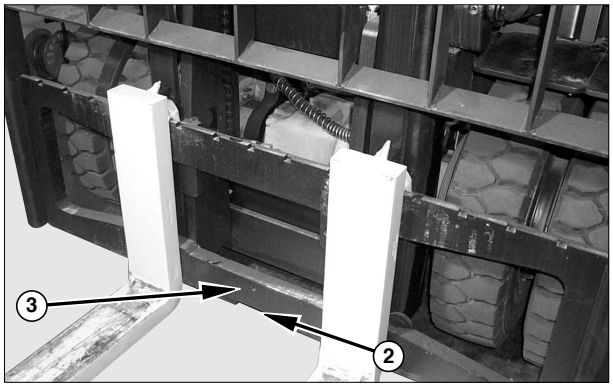

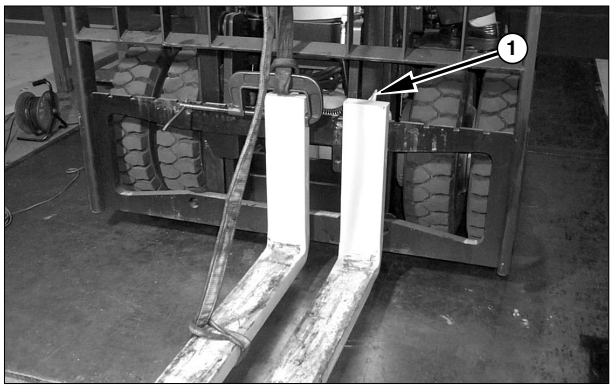

1. Remove stopper bolt and washer (3).

2. Lift fork pin (1).

3. Use a suitable C-clamp, strap and hoist to support the fork as shown.

4. Slide the fork to slot (2) in the middle of the carriage.

5. Remove the fork. The weight of the fork is 104 kg (229 lb).

6. Repeat steps 1 through 4 for the remaining fork.

7. Install the forks in the reverse order of removal.

8. Put the forks in position. Lower both fork pins(1) to lock the forks in position.

9. Install stopper bolt and washer (3).

Backrest

Remove & Install Backrest

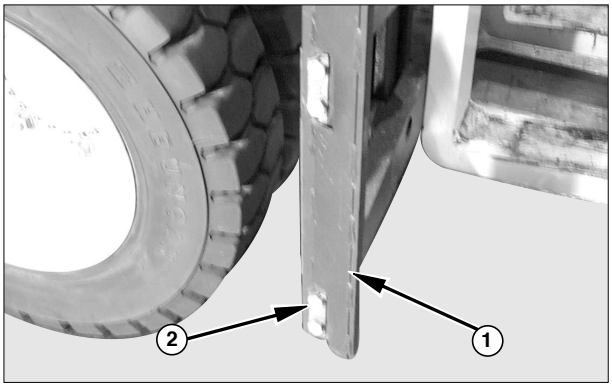

1. Fasten a hoist to the backrest. Remove bolts(2) that fasten the backrest to the carriage.

2. Remove backrest (1).
Backrest weighs 74 kg (163 lb).

3. Install backrest(1) in the reverse order of removal.

https://truckmanualshub.com/

Carriage

Remove & Install Carriage

Start By:

a. Remove forks.

b. Remove backrest.

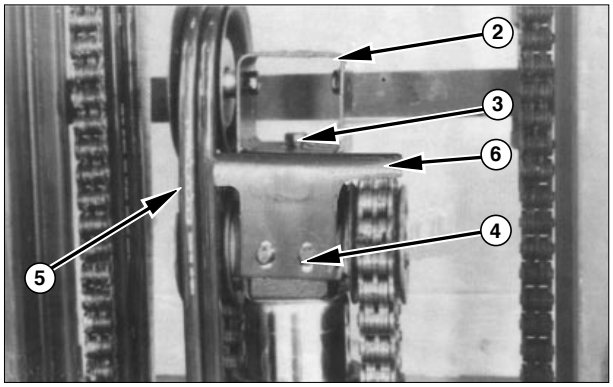

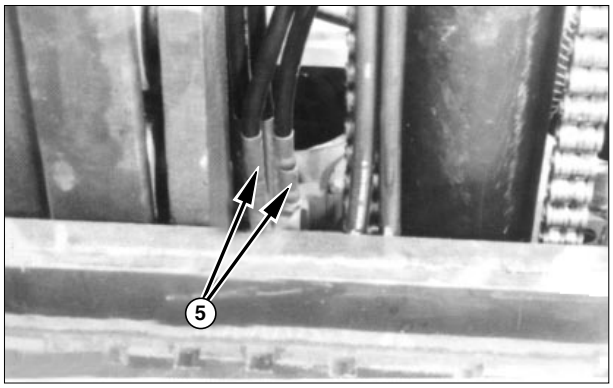

1. Remove bolt (3), four bolts (4) and two chain guards (6) from the hose support assembly (2).

2. Disconnect two hydraulic lines (5), remove hose clamp, set the hoses aside and clear of hose support assembly (2). Remove the hose support assembly (2) from cross head.

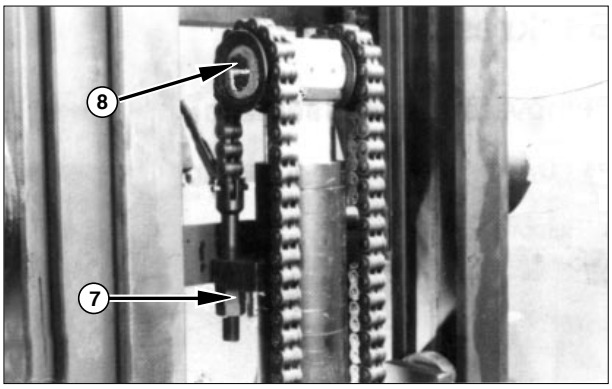

3. Remove four nuts (7) from the chain anchors. Set the chains aside, clear of the mast.

4. Remove cross head (8) from the primary cylinder.

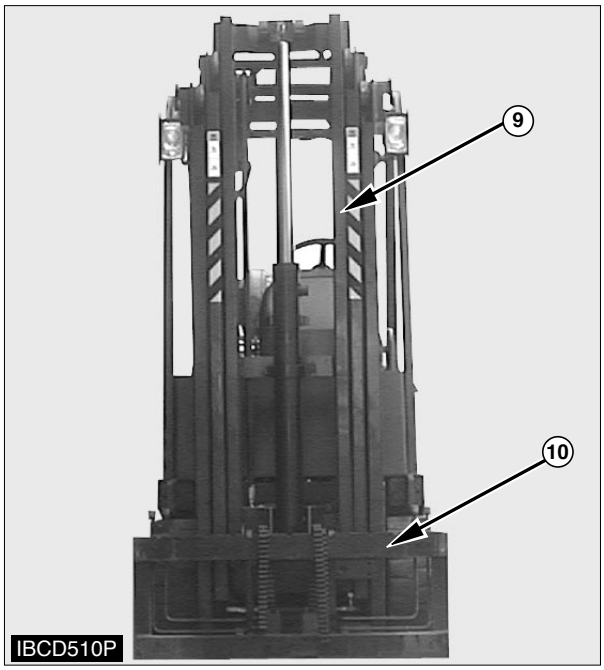

Typical Example

5. Raise the inner mast (9) to pull out carriage as shown.

6. Remove carriage from bottom of inner mast (9). Carriage weighs 299 kg (658 lb).

NOTE : Use the following steps to install the carriage

7. Raise the inner mast (9) to put in the carriage (10) onto the mast, and lower the inner mast to cover carriage bearing fully.

https://truckmanualshub.com/

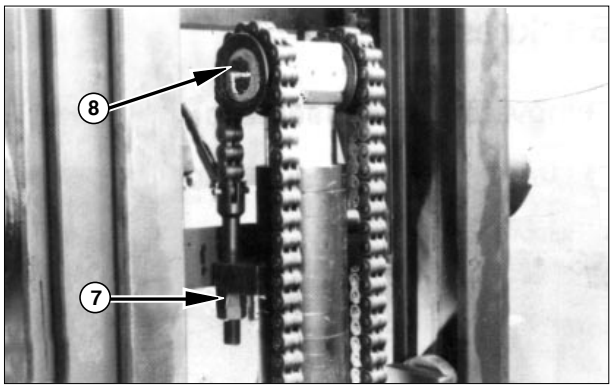

8. Install cross head (8) onto the primary cylinder.

9. Put the chains in position over cross head. (8). Install nuts (7) onto the chain anchors to a torque of **500 ± 70 N•m (370 ± 50 lb•ft)**.

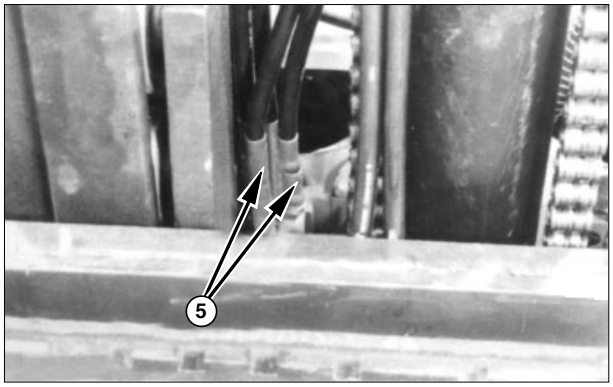

10. Install hoses (5).

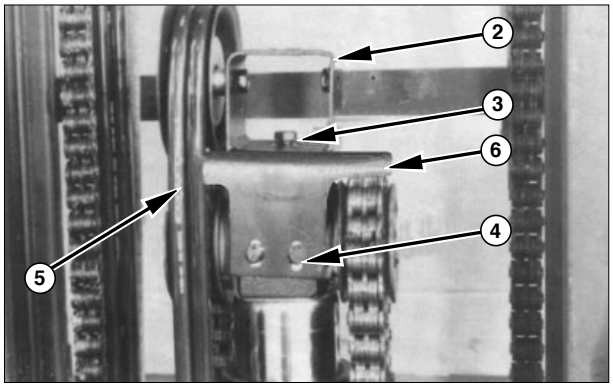

11. Install two chain guards (6), and hose support assembly (2), bolt (3) and four bolts (4).

End By :

a. Install backrest.

b. Install forks.

Disassemble Carriage

Start By :

a. Remove carriage.

b. Remove side shifter.

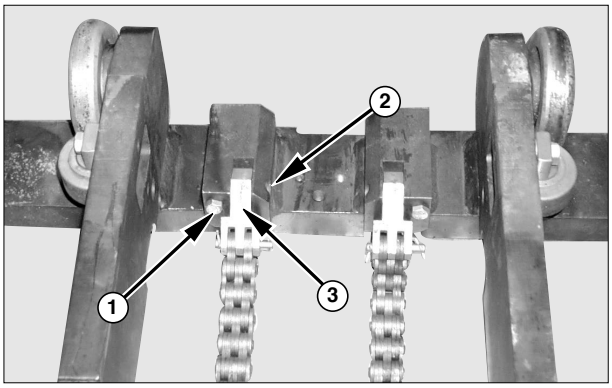

1. Remove the retainer bolts (1) and pins (2) to disconnect chain anchors (3) with chains.

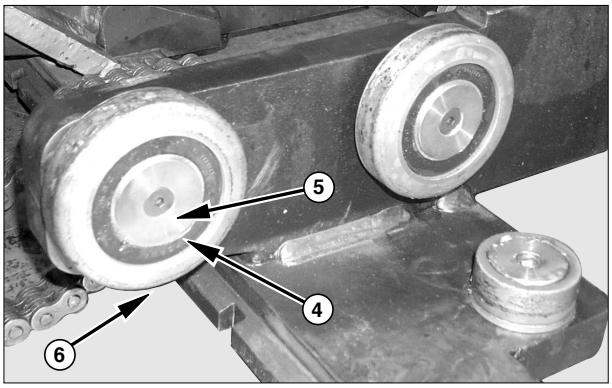

2. Remove screw (5) and retainer (4). Remove top roller bearings (6) and the shims.

https://truckmanualshub.com/

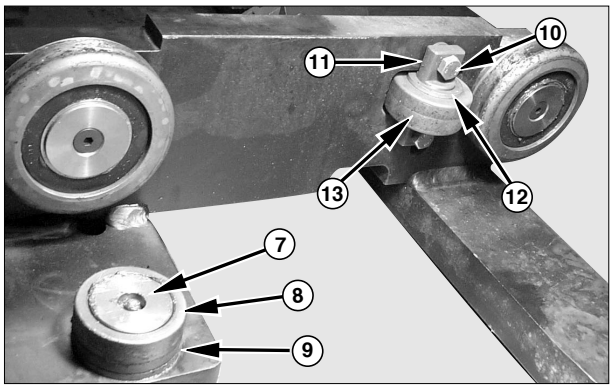

3. Remove nut (not shown), pin (7) roller (8) with bushing, washer (9) and washers from each side of carriage.

4. Remove bolts (10), pin assembly (11) and shims.

5. Remove washers (12) and roller (13) with bushing from pin assembly (11).

Assemble Carriage

NOTE : The standard, Full Free Lift and Full Free Triple Lift carriage load bearings are all adjusted the same way. The Full Free Triple Lift carriage is shown in the following illustrations.

To make the carriage clearance adjustments, carriage must be removed from the mast.

Use the procedure that follows to adjust carriage load bearings.

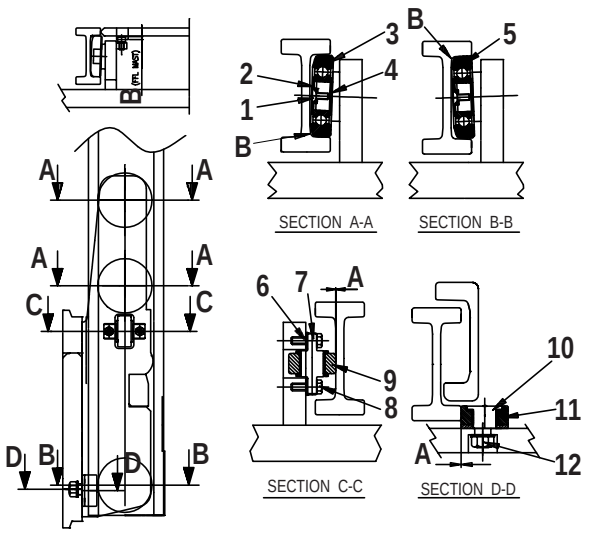

Carriage Adjustment
(1) screw. (2) Retainer. (3) Bearings. (4) Shims. (5) Bearings. (6) Shims. (7) Pin. (8) Bolt. (9) Roller. (10) Adjust Pin. (11) Roller. (12) Nut. (A) Zero Clearance. (B) 1.5 mm clearance.

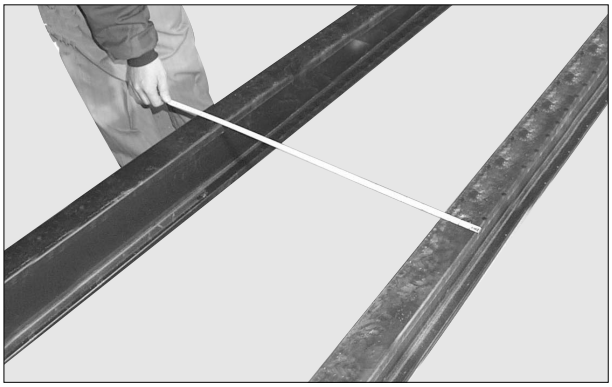

1. Find narrowest point by ruler on the inner mast in the area where the bearings make contact.

https://truckmanualshub.com/

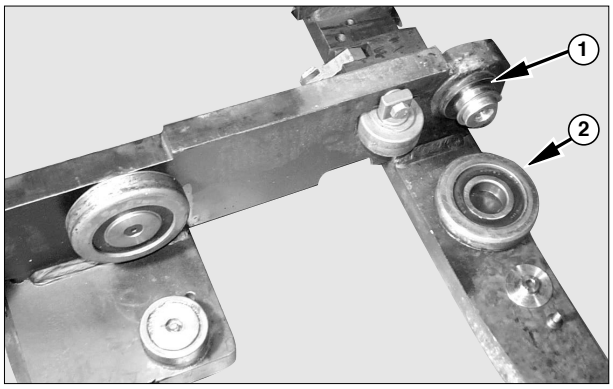

2. Install enough shims (1) that have been divided into two equal groups behind bearngs (2). At installation, there is to be 1.5 mm clearance [clearance (B)] between the bearings and the narrowest point of inner mast.

3. Do step 1 through 2 for other sets of bearings.

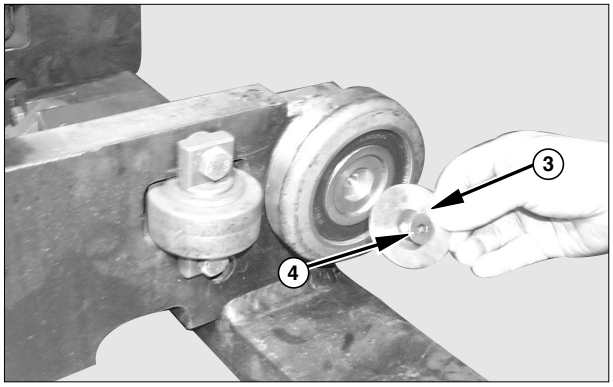

4. Install retainers (3) and screws (4). Tighten the screws that hold the rollers to a torque of **30 ± 7 N•m (22 ± 5 lb•ft)**.

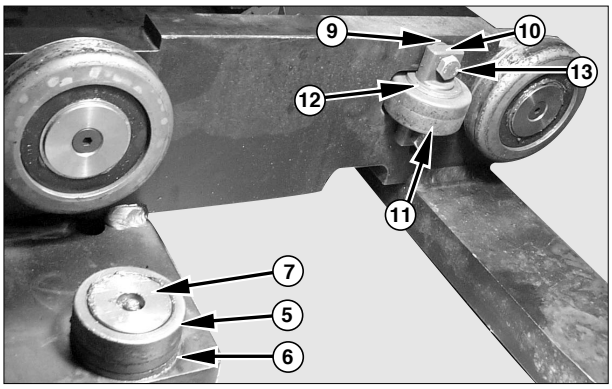

5. Install roller (5) with bushing and washer, washer (6), adjust pin (7) and nut on each side of the carriage.

6. Turn adjuster pin (7) until contact is made with the widest area of the inner mast. Tighten nut to a torque of 135 ± 14 N•m (100 ± 10 lb•ft) to hold the roller in position. Make an adjustment to the other roller the same way.

7. Install shims (9) and pin (10) with roller (11) and washers (12) on each side of the carriage.

8. Adjust the roller (11) with shims (9) until contact is made with the narrowest area of the inner mast. Tighten bolts (13) to hold the pin.

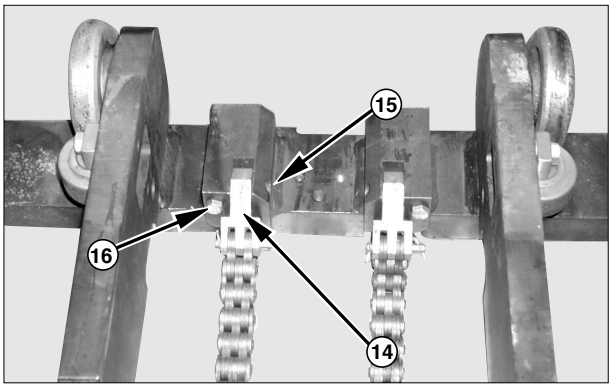

9. Position chain anchors (14) with chains on the carriage. Install pins (15) and tighten the bolts (16).

End By :

a. Install carriage, raise the inner mast and insert the carriage from the bottom of inner mast.

https://truckmanualshub.com/

Mast

Remove & Install Mast

Start By :

a. Remove forks.

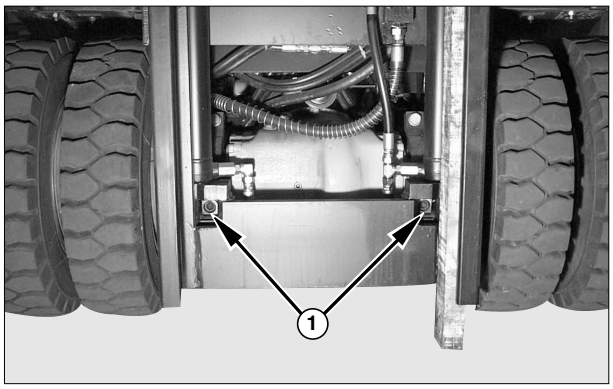

1. Raise the mast and position wooden blocks under intermediate mast channel as shown. Lower mast onto the wooden block.

2. Remove blocks and bolts (1).

3. Remove the wooden blocks and lower the mast.

4. Support mast assembly (2) with a hoist and two straps as shown.

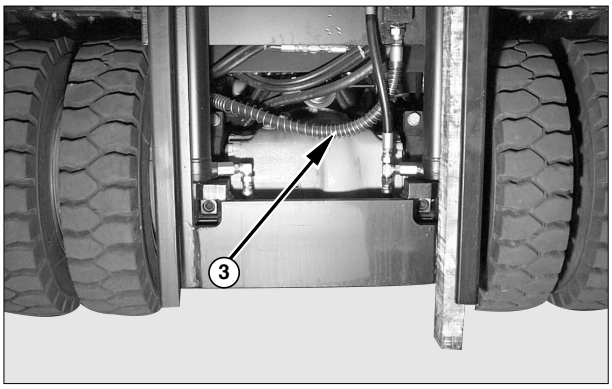

Typical Example

NOTICE

Place identification marks on all hydraulic connectors and hoses to assure prope installation. Plug and cap all hydraulic connectors and hoses to avoid debris and contamination from entering the system.

5. Disconnect hose (3) and return hose from lift cylinders.

6. Disconnect hydraulic lines for attachment if equipped.

⚠ WARNING

Tilt cylinders can drop when pin (5) is removed. To avoid component damage or personal injury, support tilt cylinder while removing pin (5).

https://truckmanualshub.com/

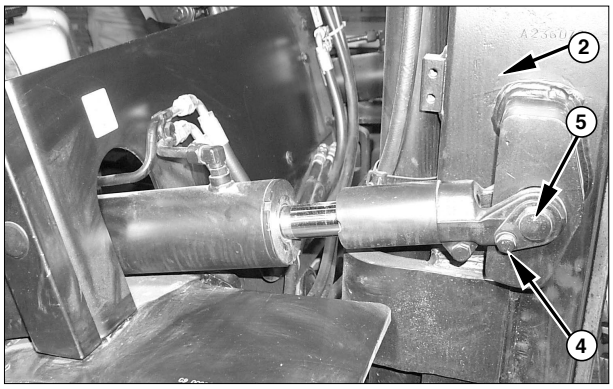

7. Remove bolt (4) from each side of mast assembly (2).

8. Remove pin (5) from the tilt cylinders on eash side of the mast assembly (2).

9. Use the hoist to remove mast assembly (2) from the machine.

10. Install the mast in the reverse order of removal.

End By :

a. Install forks.

Disassemble Mast

Start By :

a. Remove carriage and side shifter.

b. Remove mast.

NOTE : The following disassembly and assembly procedure is for a full free triple lift mast.

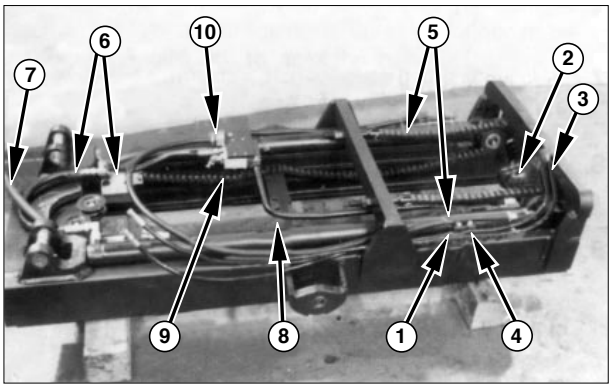

1. Remove hoses (1) and (2) along with the hose support clamp (4) and guide bracket (3).

2. Remove hose (5) with clamps.

3. Remove hoses (6), (7) and tube (8).

4. Remove block (9) and elbow (10) from mast.

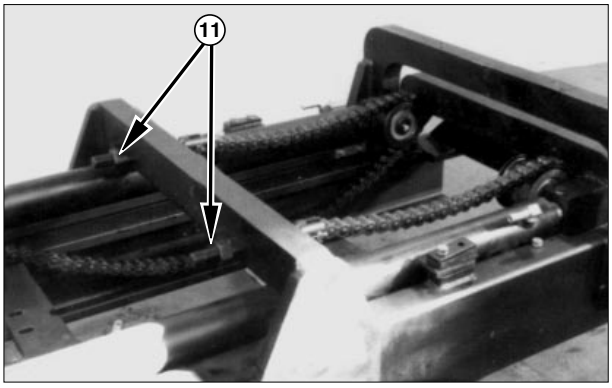

5. Remove chain nut (11) from the top of the mast (each side).

https://truckmanualshub.com/

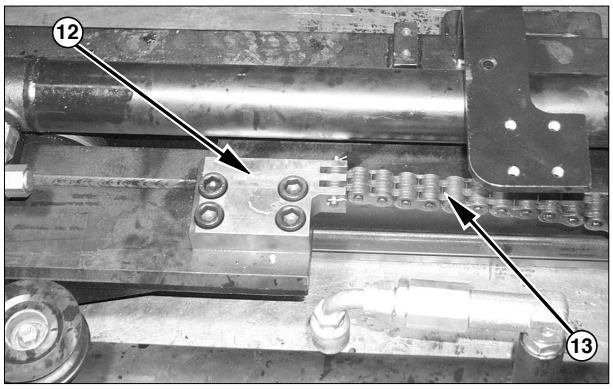

6. Loosen four bolts and remove chains (13) with anchor (12) from the bottom of the mast (each side).

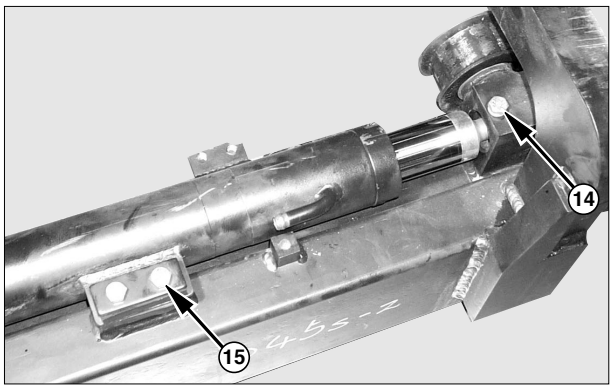

7. Remove top cylinder retainer bolt (14) and side cylinder retainer bolts (15) from each side of the mast.

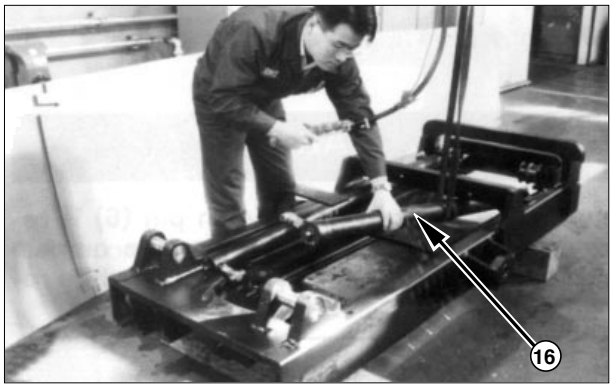

8. Fasten a nylon strap and hoist to secondary cylinder (16) as shown. Remove secondary cylinders (16). Each cylinder weights 83 kg (183 lb).

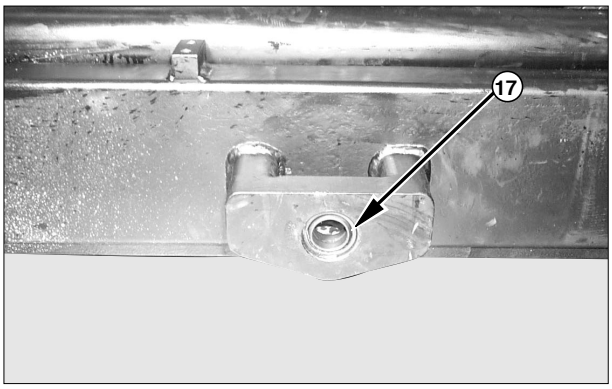

9. Check the condition of bearings (17) located in each of the tilt cylinder pin bores. Replace bearings (17) with new if worn or damaged.

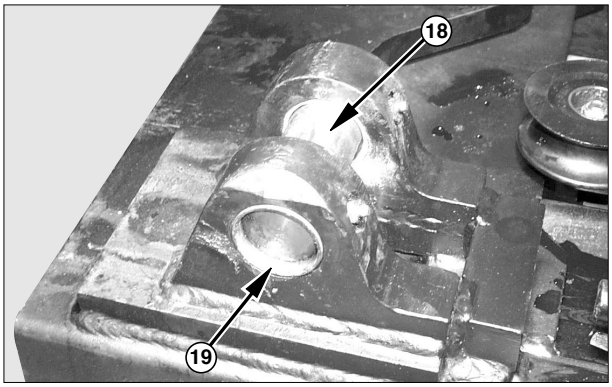

10. Remove mast mounting pins (18) from the mast mounting bores.

11. Check the condition of the busing (19) located in each of the mast mounting bores.
Replace the bushing (19) with new if worn or damaged.

NOTE : Turn over mast ass'y and lay down with hoist crane so that front of mast is faced to upper direction. When using hoist crane, should hold all upper stays of outer, intermediate and inner mast with straps.

12. Remove primary lift cylinder.

https://truckmanualshub.com/

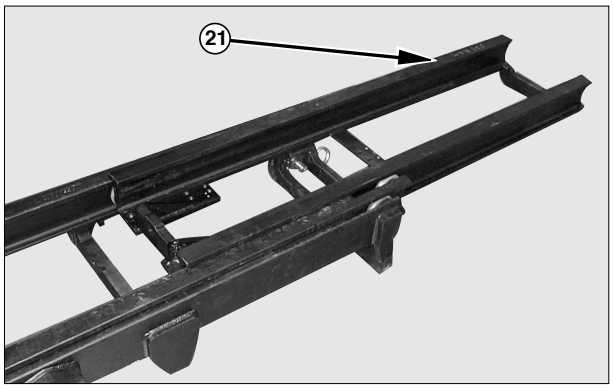

13. Move inner mast channel (21) upward.

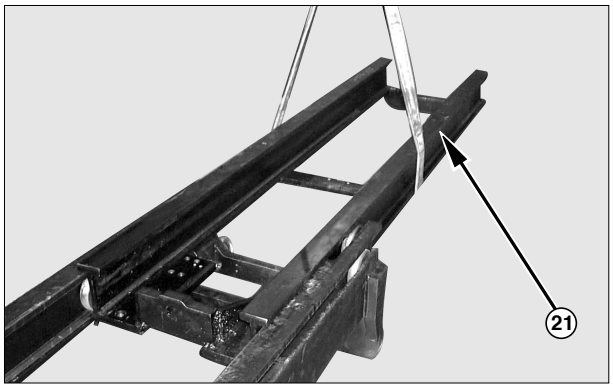

14. Fasten nylon straps and hoist to inner mast channel (21). Remove inner mast channel. The weight of the inner mast channel is 250 kg (550 lb).

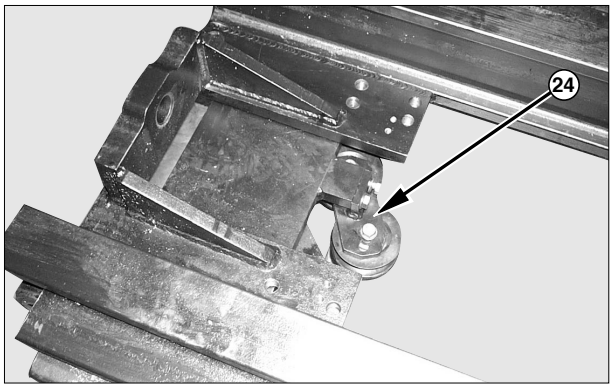

15. Remove bracket (24) with hose sheaves from intermediate mast channel.

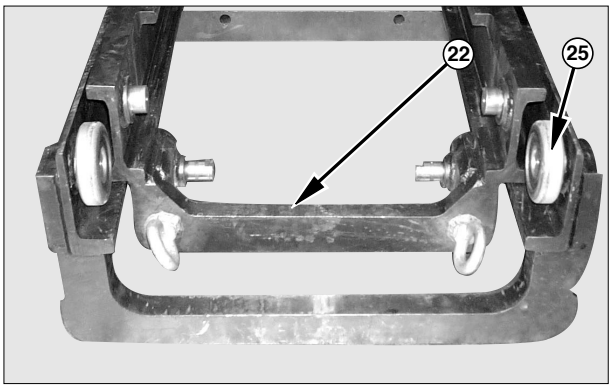

16. Move intermediate mast channel (22) downward.

17. Remove bearings (25) and the shims from the stationary mast channel.

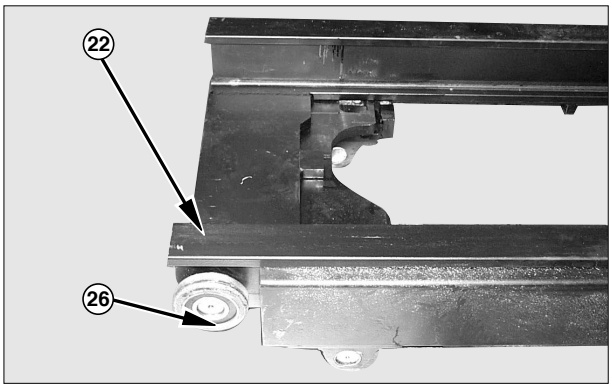

18. Remove bearings (26) and the shims from the intermediate mast channel (22).

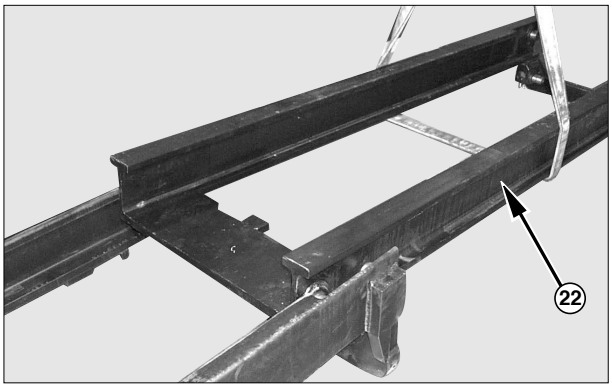

19. Fasten nylon straps and a hoist to the intermediate mast channel (22). Remove intermediate mast channel. The intermediate mast channel weighs **260 kg (572 lb)**.

https://truckmanualshub.com/

Assemble Mast

NOTE : The standard, Full Free Lift and Full Free Triple Lift mast load bearings are all adjusted the same way. The mast shown in the following illustrations is the Full Free Triple Lift mast.

1. Make sure all parts are clean and free of dirt and foreign material.

2. Check all parts for damage, If damaged, use new parts for replacement.

A. Lower Bearing Adjustment of Intermediate Mast

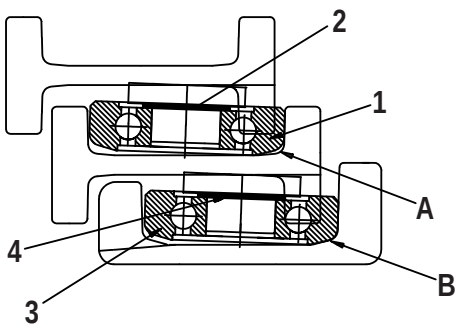

Mast Adjustment Lower Bearings
(A) Zero Clearance. (B) Zero Clearance.
(1) Bearing. (2) Shims. (3) Bearing. (4) Shims.

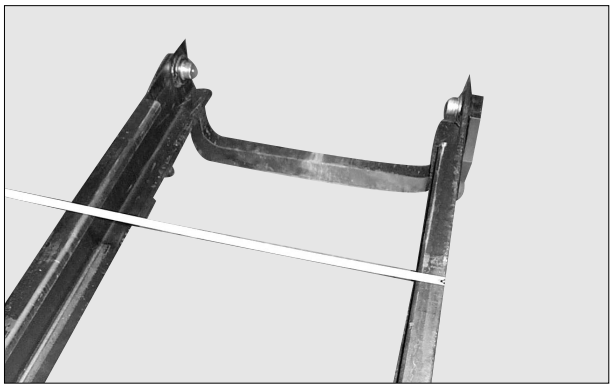

3. Find narrowest point by ruler on the stationary mast in the area where the bearings make contact at 650 mm (26 in) channel lap.

NOTICE

When the correct amount of shim has been installed behind bearings, there will be contact (zero clearance) between the bearings and the mast at most narrow point of mast.

***

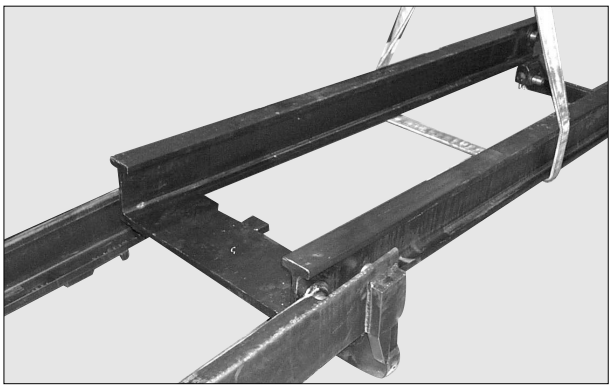

4. Lifting by crane, insert intermediate mast into stationary mast from the upper side.

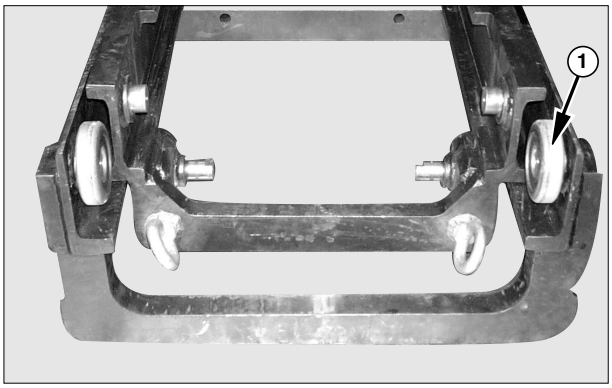

5. Install 1mm shim and bearing (1) of stationary upper basically.

https://truckmanualshub.com/

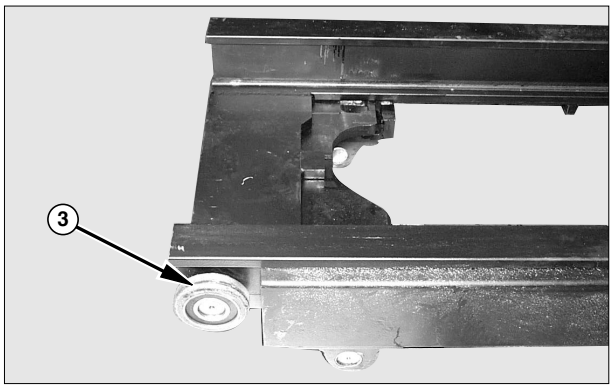

6. Install 1mm shim and bearing (3) of intermediate lower basically.

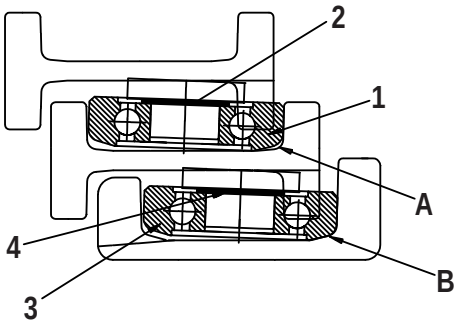

Mast Adjustment Lower Bearings
(A) Zero Clearance. (B) Zero Clearance. (1) Bearing.
(2) Shims. (3) Bearing. (4) Shims.

NOTE : When installing shims (5) behind bearings (4), make sure the amount of shim is divided equally when positioned behind each bearing (4).

7. Make sure intermediate mast lower bearings are properly shimmed in the stationary mast by rolling up and down and moving intermediate mast to right and left. If clearance between both masts can be detected, pull out the intermediate mast from the stationary mast with crane and add shim 0.5 mm or 1 mm to both intermediate lower bearings.

8. In case of standard and full free mast, inner lower bearings can be easily extruded by pulling down the inner mast from the bottom of stationary mast. If intermediate mast is stuck and cannot move by rolling up and down, there might be excessive shim. Pull out the intermediate mast from the stationary mast and remove shim 0.5 mm to both intermediate lower bearings. Repeat same procedure of above until properly shimmed. There is to be contact zero clearance (B) between intermediate lower bearings and stationary channel at approximately 650 mm (26 in) channel lap.

B. Upper Bearing Adjustment of Stationary Mast

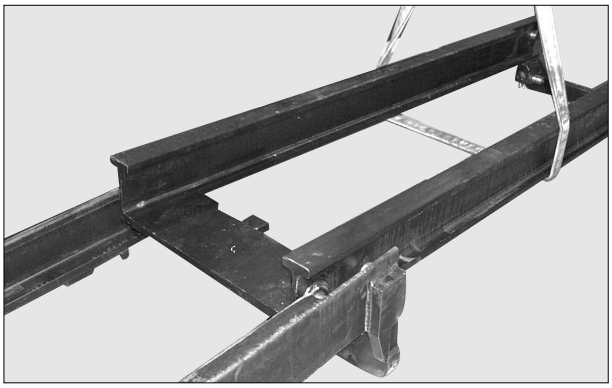

9. Lift by crane, insert intermediate mast into stationary mast from the upper side.

https://truckmanualshub.com/

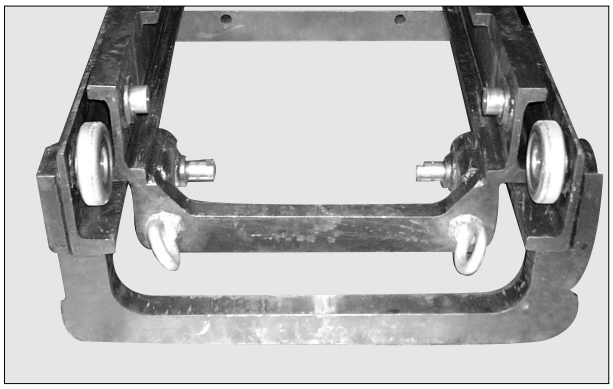

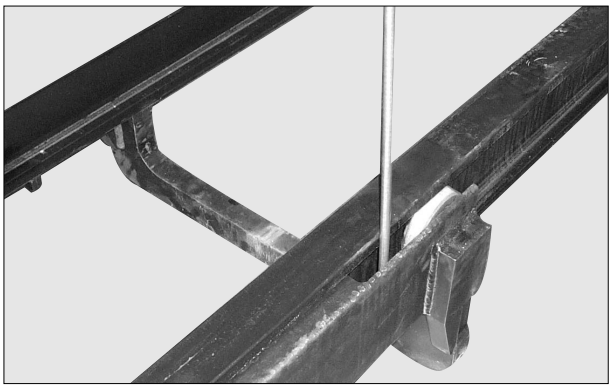

10. Install 1 mm shim to each bearing of stationary mast upper basically.

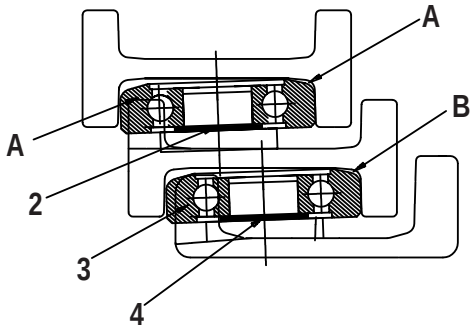

Mast Adjustment Upper Bearings.
(A) Zero Clearance. (B) Zero Clearonce. (1) Bearings.
(2) Shims. (3) Bearings. (4) Shims.

11. Make sure stationary mast upper bearings are properly shimmed by rolling up and down and moving intermediate mast to right and left. If clearance between both masts can be detected, pull out the intermediate mast from the stationary mast with crane and add shim 0.5 mm or 1 mm to both stationary upper bearings.

12. In case of standard and full free mast, stationary upper bearings can be easily extruded by pulling down the inner mast from the bottom of stationary mast. If intermediate mast is stuck and cannot move by rolling up and down, there might be excessive shim. Pull out the intermediate mast from the stationary mast and remove shim 0.5 mm to both stationary upper bearings. Repeat same procedure of above until properly shimmed. There is to be contact zero clearance (B) between stationary upper bearings and the widest point of intermediate mast to be checked in the area where the 650 mm (26 in) channel lap.

https://truckmanualshub.com/

C. Lower Bearing Adjustment of Inner Mast

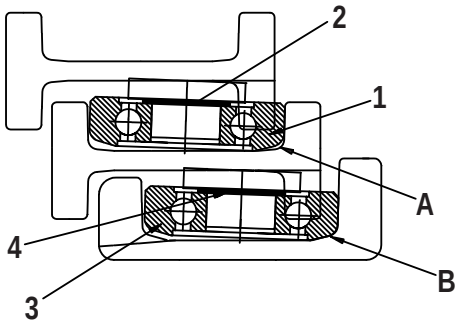

Mast Adjustment Lower Bearings
(A) Zero Clearance. (B) Zero Clearance. (1) Bearing.
(2) Shims. (3) Bearing. (4) Shims.

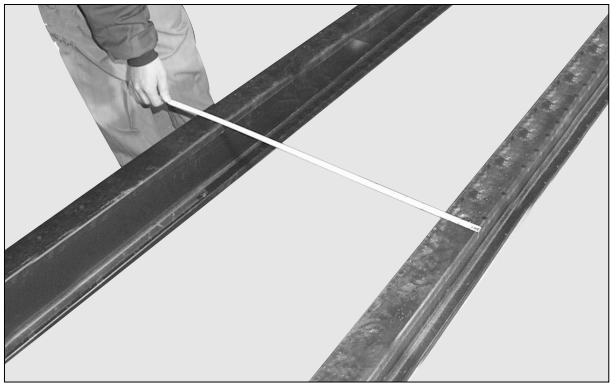

13. Find narrowest point by ruler on the intermediate mast in the area where the inner lower bearings make contact full length of intermediate mast excluding minimum channel lap 650 mm (26 in).

14. Install 1 mm shim and bearing (11) of intermediate upper basically.

15. Install 1mm shim and bearing (12) of inner lower basically.

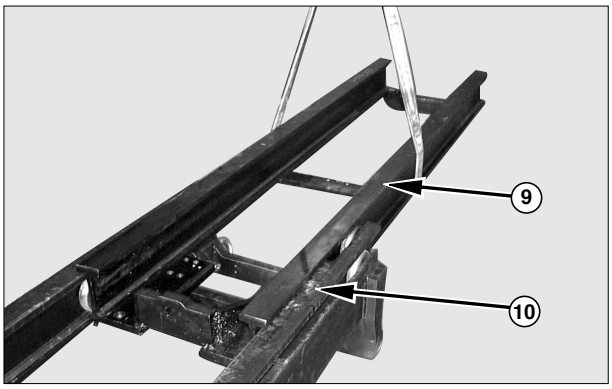

16. Lifting by crane, insert inner mast (9) into intermediate mast (10) from the upper side.

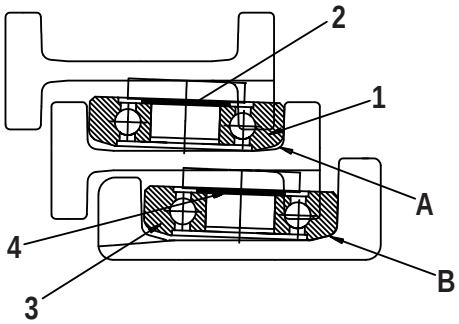

Mast Adjustment Lower Bearings.
(A) Zero Clearance. (B) Zero Clearance. (1) Bearings.
(2) Shims. (3) Bearings. (4) Shims.

17. Make sure inner mast lower bearings are properly shimmed in the intermediate mast by rolling up and down and moving inner mast to right and left. If clearance between both masts can be detected, pull down the inner mast from the bottom of intermediate mast. Inner lower bearings can be easily extruded. Add shim 0.5 mm or 1 mm to both inner lower bearings. If inner mast is stuck and cannot move by rolling up and down, there might be excessive shim. Pull out the inner mast from the intermediate mast and remove shim 0.5 mm to both inner lower bearings. Repeat same procedure of above until properly shimmed. There is to be contact zero clearance (A) between inner lower bearings and intermediate channel at narrowest point.

D. Upper Bearing Adjustment of intermediate Mast

Follow same procedure with above B.

E. Install primary lift cylinder.

https://truckmanualshub.com/

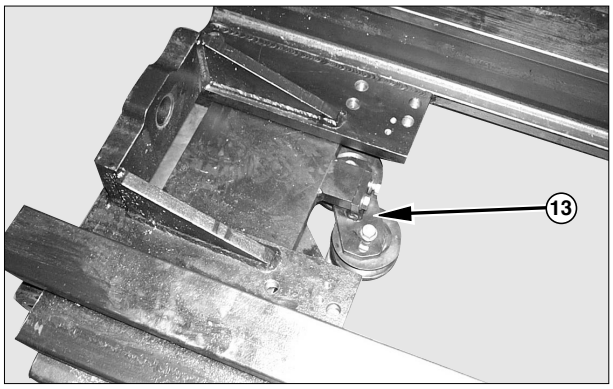

19. Install bracket (13) with hose sheaves on the intermediate mast.

NOTE : Turn over mast ass'y and lay down with hoist crane so that front of mast is faced to upper direction. When using hoist crane should hold all upper stays of outer, intermediate and inner mast with staps.

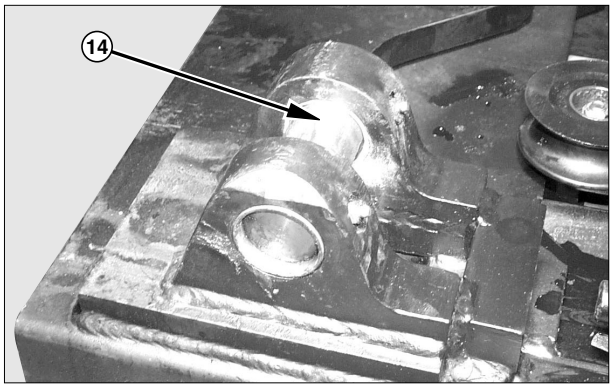

20. If bushings were removed from the mast mounting bores, install new ones.

21. Put a small amount of clean grease on mounting pins (14). Install mounting pins (14) into the mast mounting bores.

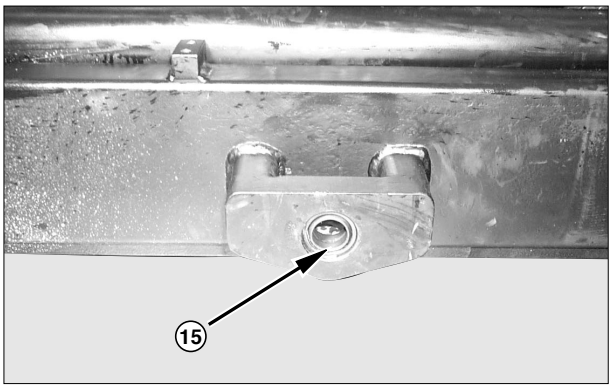

22. If the bearings (15) were removed from the tilt cylinder pin bores, install new ones.

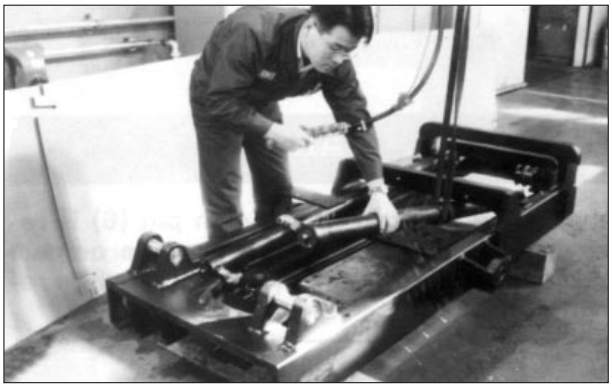

23. Fasten a hoist and nylon strap to secondary cylinders. Install secondary cylinders into the stationary mast. Each cylinder weights 83 kg (183 lb).

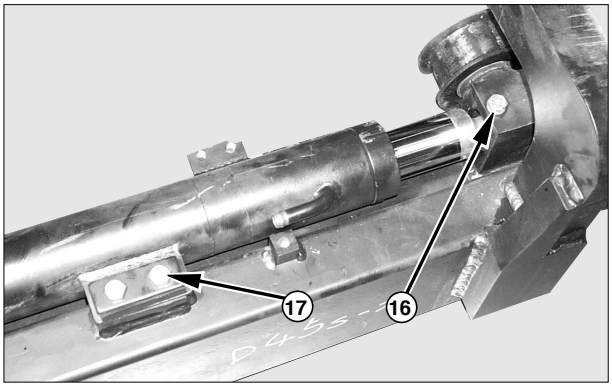

24. Install top retainer bolts (16) for the secondary cylinder.

25. Install side retainer bolts (17) for the secondary cylinders.

https://truckmanualshub.com/

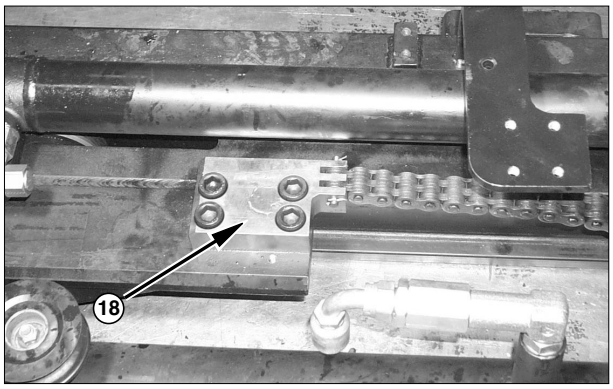

26. Install chain anchors (18) at the bottom of the intermediate mast. Tighten the bolts to a torque of **940 ± 60 N•m (694 ± 44 lb•ft)**.

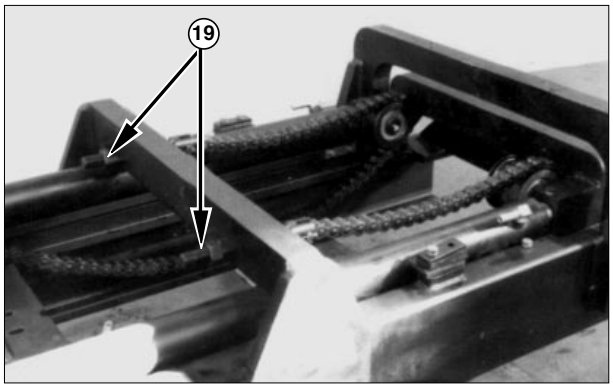

27. Install lift relay groups (19) on each side of the mast. Install nut onto the chain anchors to a torque of **500 ± 70 N•m (370 ± 50 lb•ft)**.

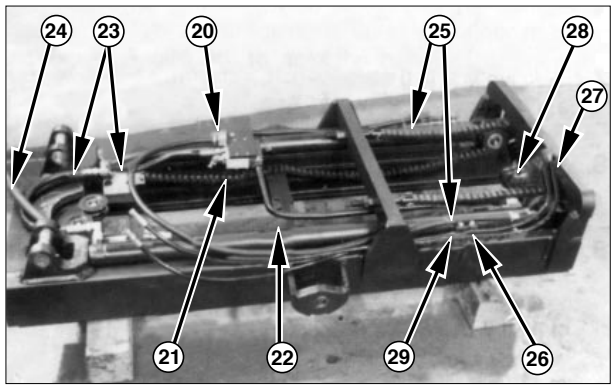

28. Install block (21) and elbow (20).

29. Connect the hoses (23), (24) and tube (22).

30. Connect the hoses (25) from secondary cylinders to elbow.

31. Install hoses (28) and (29) with bracket (27) and clamp (26).

End By :

a. Install mast.

b. Install carriage and side shifter.

https://truckmanualshub.com/

Testing & Adjusting

Carriage Adjustment

NOTE : The standard, Full Free Lift and Full Free Triple Lift carriage load bearings are all adjusted the same way. The Full Free Triple Lift carriage is shown in the following illustrations.

To make the carriage clearance adjustments, carriage must be removed from the mast.

Use the procedure that follows to adjust carriage load bearings.

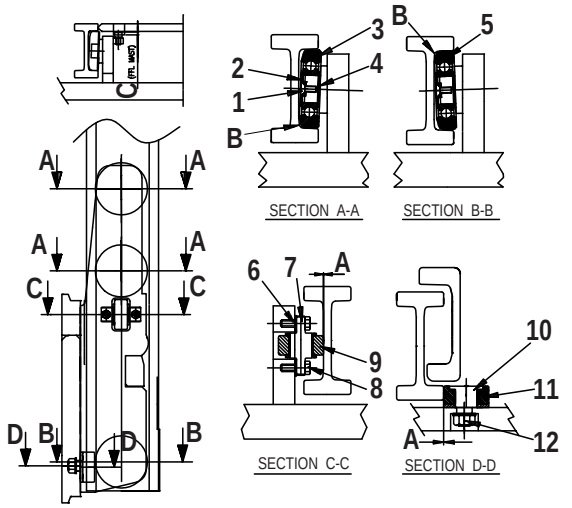

Carriage Adjustment
(1) Screw. (2) Retainer. (3) Bearing. (4) Shims. (5) Bearing.
(6) Shims. (7) Pin. (8) Bolt. (9) Roller. (10) Adjust Pin.
(11) Roller. (12) Nut. (13) Bolt. (A) Zero Clearance.
(B) 1.5 mm Clearance. (C) 9.0 to 12.0 mm overlap.

1. Equally shim both sides until clearance (B) is made (1.5 mm clearance) between bearings and inner mast at narrowest posit.

2. On full free lift model, shim bolt as needed to obtain a 9.0 to 12.0 mm (.354 to .472 in) overlap (C) between bolt (13) and the carriage stop on the inner upright.

3. Torque for screw (1) .....30 ± 7 N•m (22 ± 5 lb•ft)

4. Refer to “Carriage Assembly” of Disassembly & Assembly.

Chain Adjustments

Chain Adjustment Check

Lift the carriage and mast high enough to put their full weight on the carriage and mast chains. Check the chains, and make sure the tension is the same.

Chain Adjustment

If the tension is not the same on both chains, do the procedure that follows:

⚠ WARNING

Personal injury can be caused by sudden movement of the mast and carriage. Blocks must be used to prevent the mast and carriage from any movement while the adjustments are made. Keep hands and feet clear of any parts that can move.

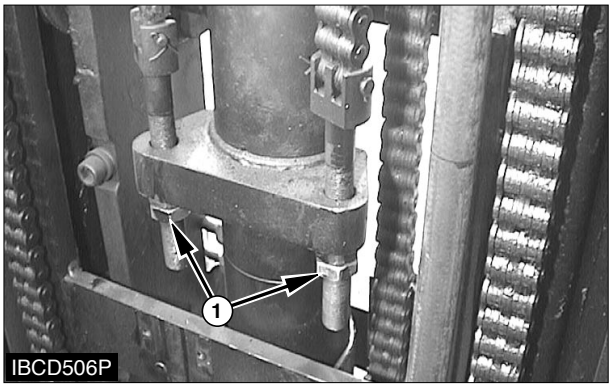

Inner Lift Chains
(1) Chain Anchor Nuts.

1. Lift the mast and carriage and put blocks under the mast and carriage to release the tension from the lift chains.

https://truckmanualshub.com/

2. Make adjustments to chain anchor nuts (1) or bolts (2) for equal tension of the mast and carriage chains.

3. Put LOCTITE NO.242 Thread Lock on the threads of the locknuts after the adjustment is completed.

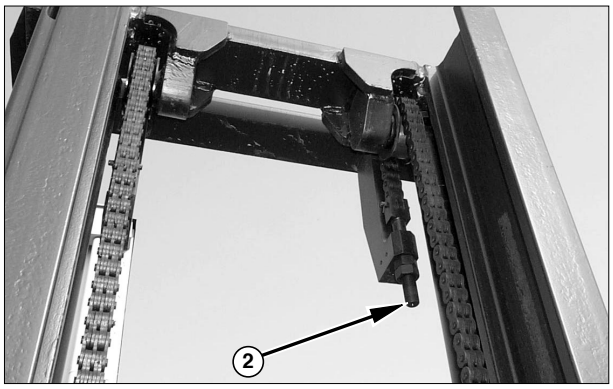

Outer Lift Chains
(2) Chain Anchor Bolts.

Chain Wear Test

Chain wear test is a measurement of wear of the chain links and pins. Do the steps that follow to check chain wear.

1. Lift the mast and carriage enough to put tension on the lift chains.

2. Measure precisely ten links of chain distance at the center of pins in millimeter.
   A chain wear gauge can also be used.

3. Calculate chain wear rate.

   New one pitch = 25.4 mm

   Chain wear rate (%)

$$= \frac{\text{Actual measurement - 254}}{254} \times 100$$

⚠ WARNING

Do not put a lift truck into service if the chain wear indication is 2% or more. A reading of 2% or more could cause damage or injury to persons.

4. If the chain wear indication is 2% or more, replace the lift chain.

Carriage and Mast Height Adjustment

1. Move the mast either forward or backward so it is in the vertical position.

2. Lower the carriage completely.

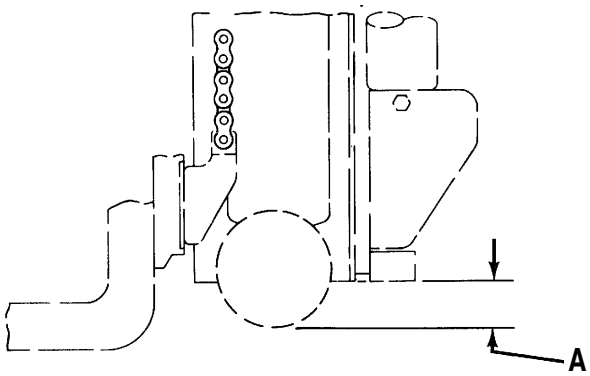

IDCS191S

3. On Full Free Lift and Full Free Triple Lift models, the bottom of the inner mast must be even with the bottom of the stationary mast.

4. Measure the distance from the bottom of the inner upright to the bottom of carriage bearing end.

5. The measurement (A) must be as follows:
   STD .....-7 ± 2 mm (-0.27 ± 0.07 in)
   FFL & FFTL .....43 ± 2 mm (1.69 ± 0.07 in)

If the above measurements are not correct, make adjustments to the chains to get the correct measurement. See Chain Adjustments in TESTING AND ADJUSTING.

https://truckmanualshub.com/

Forks Parallel Check

1. Lift the mast and operate the tilt control lever, until the top surface of the forks is parallel with the floor. Place two straight bars, that are the same width as the carriage, across the forks as shown. Measure the distance from the bottom of each end of the two bars to the floor. The forks must be parallel within 3 mm (.12 in) for Full Tapered and Polished (FTP) forks, all other forks 6.4 mm (.25 in), for their complete length.

2. If not parallel, determine which one is defective and replace it.

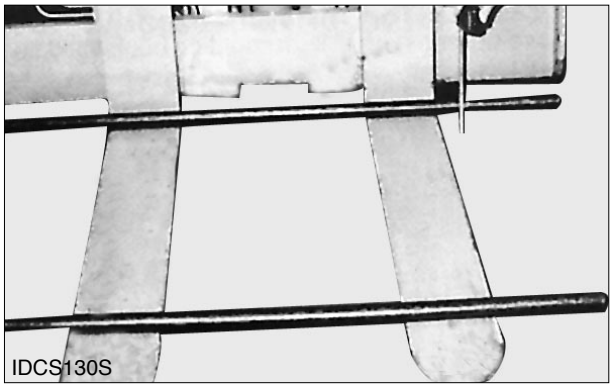

Forks Parallel Check
(Typical Example)

Tilt Cylinder Alignment

If the tilt cylinders are out of alignment, extra stresses in the mast assembly and the mast hinge area will result. To prevent damage, the tilt cylinders must stop evenly at the end of the tilt back and tilt forward strokes.

Tilt Angle Check

Tilt Angle Check (Typical Example)

The tilt angle of the mast must be checked in the full tilt back and full tilt forward positions. A tilt indicator or a protractor can be used to measure the angle. Both sides of the mast must be checked to make sure that the mast is not twisted.

The tilt angle is determined by the tilt cylinders used. See tilt cylinders in specifications to determine the tilt angle from the cylinder being used.

Tilt Cylinder Length Check

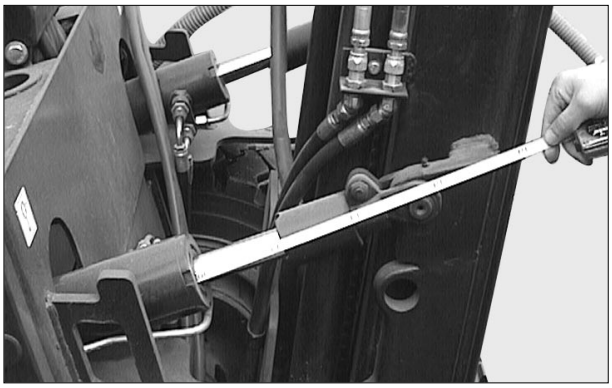

Typical Example

1. Tilt the mast to full forward position. Measure the extended length of the cylinder rods from the cylinder housing to the mast. The difference of length between the two cylinder rods must be within 3.18 mm (.125 in) of each other.

https://truckmanualshub.com/

Drift Test

Drift is movement of the mast or carriage that is the result of hydraulic leakage in the cylinders or control valve. Before testing the drift:

⚠ WARNING

Personal injury can be caused by sudden movement of the mast or carriage. Use wood blocks and clamps to hold the mast in this position. Keep hands and feet clear of any parts that can move.

1. Check the chain adjustment and tilt cylinder alignment and make necessary adjustments.
2. Lift the mast approximately 762 mm (30 in). Use wood blocks and clamps to hold the mast in this position.
3. Check the mast hinge bolts to make sure they are tight.
4. Remove the blocks and clamps and lower the mast.

Drift Test For Lift System

1. Secure a rated capacity load on the forks of the lift truck. Operate the lift truck through a complete lift and tilt cycle until the oil is at normal temperature of operation, 45 to 55 °C (113 to 131 °F).
2. Put the mast in a vertical position.
   Raise a rated capacity load to a sufficient height to test the lift cylinders.
3. Measure any drift of the carriage for a ten minute period. Drift for all models shall not exceed 100.0 mm (4.00 in).

Tilt Cylinder Adjustment

⚠ WARNING

Tilt cylinder pivot eyes can loosen if the torque on the pivot eye clamping bolt is not tight enough. This will let the tilt cylinder rod turn in the tilt cylinder eye. The cylinder rod may twist out of the pivot eye and the tilt cylinder will be out of alignment or may let the mast fall and cause personal injury or damage. When the rod lengths are made even, the tilt angle differences or the mast alignment will no longer be a problem.

To correct the tilt angle or tilt cylinder length, an adjustment must be made to the tilt cylinder as follows :

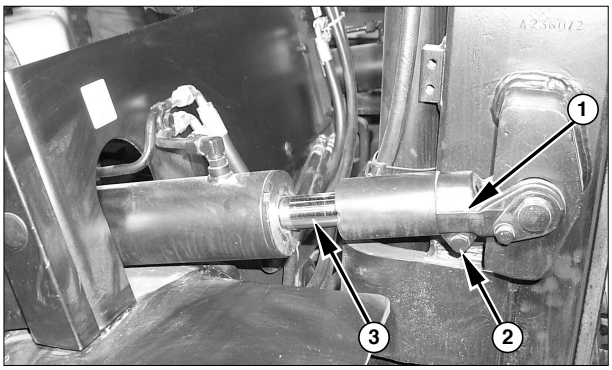

Tilt Cylinder Adjustment
(1) Pivot eye. (2) Bolt. (3) Rod.

1. Loosen bolt (2) at pivot eye (1).
2. Turn rod (3) into or out of pivot eye (1) to obtain the correct length. The minimum length from the end of rod to the rear face of eye is 32 mm (1.26 in).

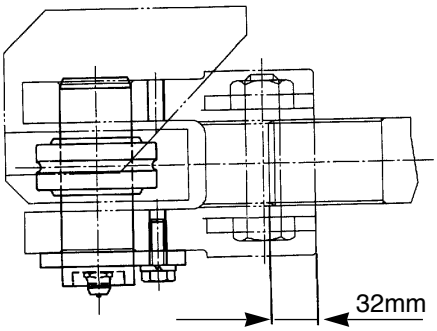

3. Tighten bolt (2) and the nut to a torque of 95 ± 15 N•m (70 ± 10 lb•ft).

https://truckmanualshub.com/

Lift & Tilt Mounting Group Adjustment

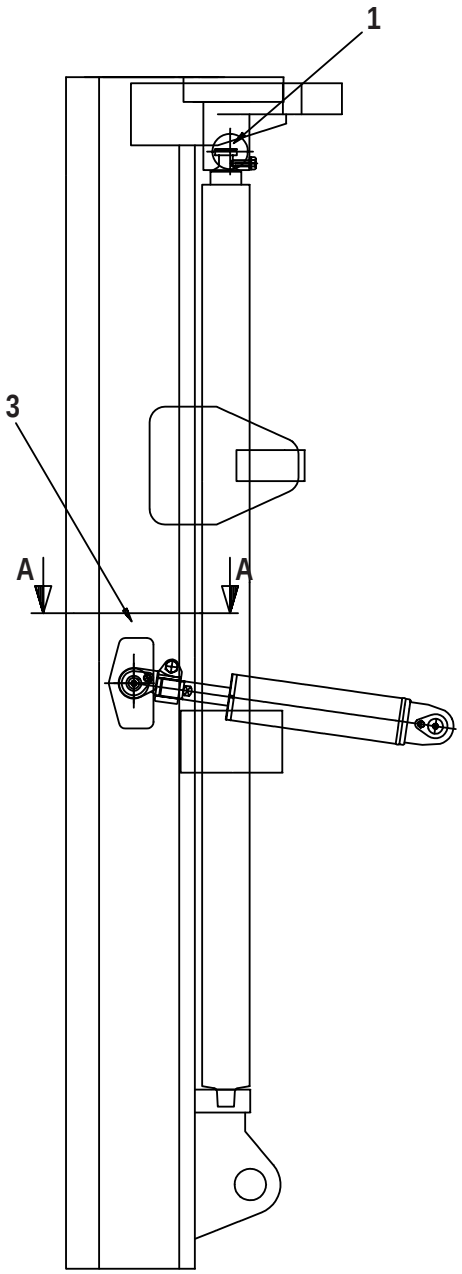

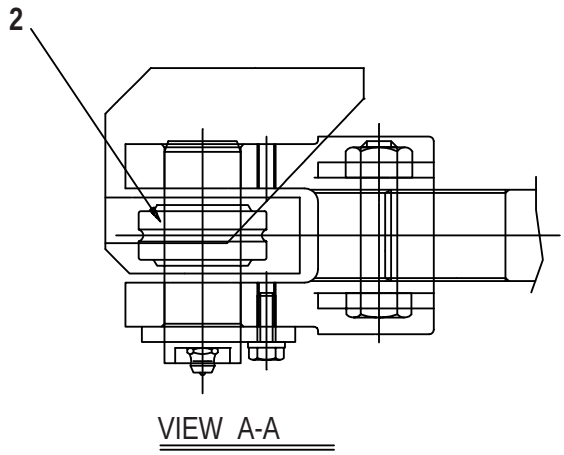

(1) With chains adjusted for equal tension, run mast to full lift. If mast does not kick (move) to one side, no shims are needed. If mast does kick (move) to one side, disconnect cylinder rod from the bolt on that side. Add shim, connect cylinder rod, adjust chains and run mast to full lift to check for kick. Repeat process if necessary. The total shim pack must not be more than three shims maximum.

(2) Install bearing outer race to a depth of (A) .....5.5 ± 0.8 mm (.22 ± 0.03 in).

(3) Tilt cylinder installation shown.

https://truckmanualshub.com/

Mast Mounting Group Adjustment

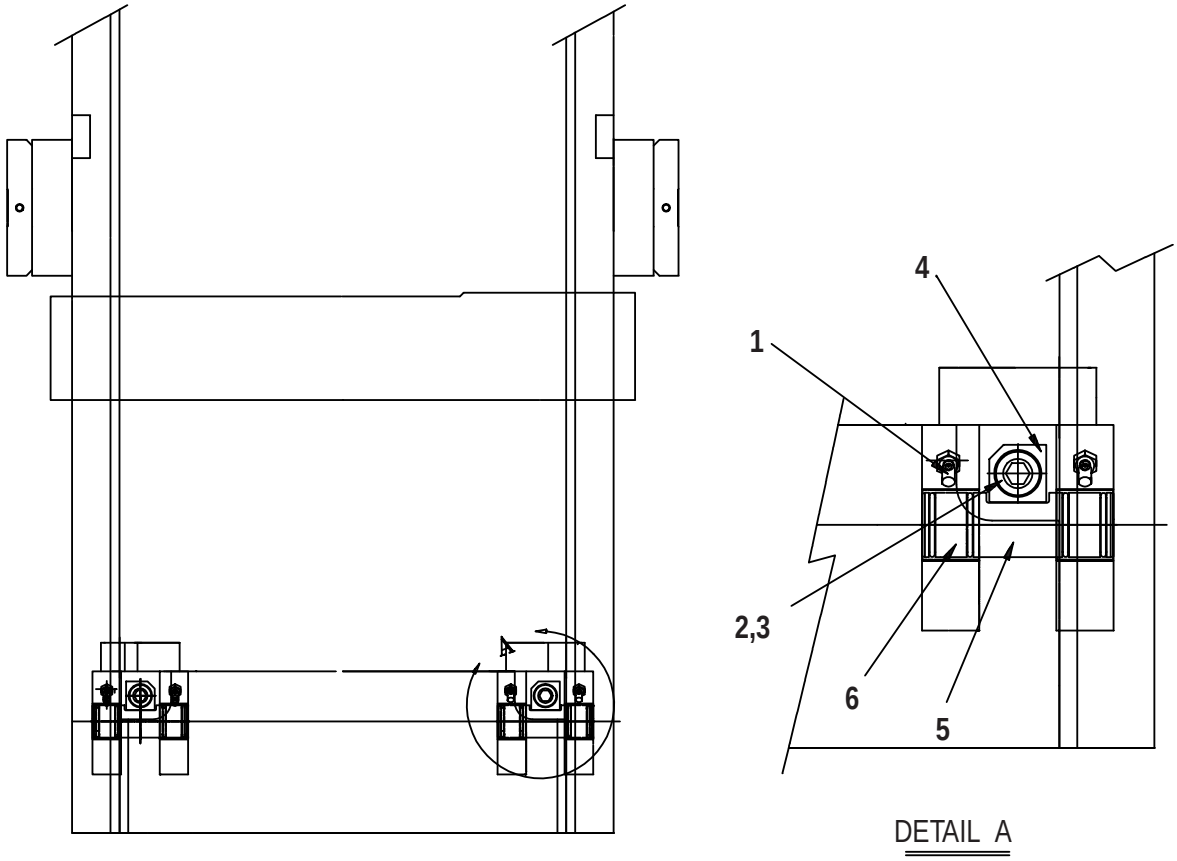

1. Apply clean grease to surface of bearing (6) before pin (5) installation.

2. Install block (4) with bolt (2) and washer (3). Tighten the bolt to a torque of 600 ± 70 N•m (440 ± 50 lb•ft).

3. Apply grease through fitting (1).

https://truckmanualshub.com/

SB2301E02

Operation & Maintenance Manual

LIFT TRUCKS

D35S-2, D40S-2, D45S-2

G35S-2, G40S-2, G45S-2

D40SC-2, D45SC-2, D50SC-2

G40SC-2, G45SC-2, G50SC-2

https://truckmanualshub.com/

WARNING

Do not start, operate or service this machine unless you have read and understood these instructions and received proper training.
Unsafe or improper use of the machine may cause serious injury or death.
Operators and maintenance personnel must read this manual and receive training before operating or maintaining the machine.
This manual should be kept with the machine for reference and periodically reviewed by the machine operator and by all personnel who will come into contact with it.

The following warning is provided pursuant to California Health & Safety Code Sections 25247.5 et, seq,

WARNING

California Proposition 65

Engine Exhaust, some of its constituents, and certain vehicle components contain or emit chemicals known to the State of California to cause cancer and birth defects or other reproductive harm.

Battery posts, terminals and related accessories contain lead and lead compounds, chemicals known to the State of California to cause cancer and birth defects or other reproductive harm.

WASH HANDS AFTER HANDLING.

https://truckmanualshub.com/

Table of Contents

Information Section

Foreword 2

Safety Section

Important Safety Information.....4
Safety 5
Warning Signs and Labels 5
General Hazard Information.....9
Operation Information 10
Maintenance Information 13
Operator Restraint System (If Equipped) 16
Avoiding Lift Truck Tipovers.....19
How to Survive in a Tipover (If Operator Restraint System Equipped) 24

General Section

Specifications 26
Noise and Vibration 28
Capacity Chart 29
Serial Number 37
Operator’s Warning and Identification Plate.....38

Operation Section

Operator's Station and Monitoring Systems.....40
Lift Truck Controls 43
Refueling 46
Before Starting the Engine.....49
Lift Fork Adjustment 51
Starting the Engine.....55
After Starting the Engine.....57
Lift Truck Operation.....58
Operating Techniques 63
Parking the Lift Truck 67
Storage Information.....68
Transportation Hints.....69
Towing Information 70

Maintenance Section

Tire Inflation Information.....71
Torque Specifications 72
Cooling System Specifications.....74
Fuel Specifications 76
Lubricant Specifications 78
Lubricant Viscosities and Refill Capacities 80
Maintenance Intervals 81
When Required 82
Every 10 Service Hours or Daily.....94
First 50 - 100 Service Hours 98
First 250 Service Hours.....101
Every 250 Service Hours or Monthly 103
Every 500 Service Hours or 3 Months.....109
Every 1000 Service Hours or 6 Months 115
Every 1500 Service Hours.....117
Every 2000 Service Hours or 1 Year.....118
Every 2500 Service Hours or 6 Months.....125

Environment Protection Section

Environment Protection.....126

Index Section

Index.....127

• Worldwide Network

https://truckmanualshub.com/

Foreword

Literature Information

This manual should be stored in the operator's compartment in the literature holder or seat back literature storage area.

This manual contains safety, operation, transportation, lubrication and maintenance information.

Some photographs or illustrations in this publication show details or attachments that can be different from your lift truck. Guards and covers might have been removed for illustrative purposes.

Continuing improvement and advancement of product design might have caused changes to your lift truck which are not included in this publication. Read, study and keep this manual with the lift truck.

Whenever a question arises regarding your lift truck, or this publication, please consult your DAEWOO dealer for the latest available information.

Safety

The Safety Section lists basic safety precautions. In addition, this section identifies the text and locations of warning signs and labels used on the lift truck. Read and understand the basic precautions listed in the Safety Section before operating or performing lubrication, maintenance and repair on this lift truck.

Operator Restraint System(If Equipped)

This manual contains safety, operation and maintenance information for the DAEWOO operator restraint system. Read, study and keep it handy.

⚠ WARNING

Your DAEWOO truck comes equipped with an operator restraint system. Should it become necessary to replace the seat for any reason, it should only be replaced with another DAEWOO operator restraint system.

Photographs or illustrations guide the operator through correct procedures of checking, operation and maintenance of the DAEWOO operator restraint system.

SAFE and EFFICIENT OPERATION of a lift truck depends to a great extent on the skill and alertness on the part of the operator. To develop this skill the operator should read and understand the Safe Driving Practices contained in this manual.

Forklift trucks seldom tipover, but in the rare event they do, the operator may be pinned to the ground by the lift truck or the overhead guard. This could result in serious injury or death.

Operator training and safety awareness is an effective way to prevent accidents, but accidents can still happen. The DAEWOO operator restraint system can minimize injuries. The DAEWOO operator restraint system keeps the operator substantially within the confines of the operator’s compartment and the overhead guard.

This manual contains information necessary for Safe Operation. Before operating a lift truck make sure that the necessary instructions are available and understood.

Operation

The Operation Section is a reference for the new operator and a refresher for the experienced one. This section includes a discussion of gauges, switches, lift truck controls, attachment controls, transportation and towing information.

Photographs and illustrations guide the operator through correct procedures of checking, starting, operating and stopping the lift truck.

Operating techniques outlined in this publication are basic. Skill and techniques develop as the operator gains knowledge of the lift truck and its capabilities.

https://truckmanualshub.com/

Maintenance

The Maintenance Section is a guide to equipment care. The illustrated, step-by-step instructions are grouped by servicing intervals. Items without specific intervals are listed under “When Required” topics. Items in the “Maintenance Intervals” chart are referenced to detailed instructions that follow.

Maintenance Intervals

Use the service hour meter to determine servicing intervals. Calendar intervals shown (daily, weekly, monthly, etc.) can be used instead of service hour meter intervals if they provide more convenient servicing schedules and approximate the indicated service hour meter reading. Recommended service should always be performed at the interval that occurs first.

Under extremely severe, dusty or wet operating conditions, more frequent lubrication than is specified in the “Maintenance Intervals” chart might be necessary.

Perform service on items at multiples of the original requirement. For example, at “Every 500 Service Hours or 3 Months”, also service those items listed under “Every 250 Service Hours or Monthly” and “Every 10 Service Hours or Daily”.

Environment Management

Note that DAEWOO INDUSTRIAL VEHICLE DIVISION is ISO 14001 certified which is harmonized with ISO 9001. Periodic ENVIRONMENTAL AUDITS & ENVIRONMENTAL PERFORMANCE EVALUATIONS have been made by internal and external inspection entities. LIFE-CYCLE ANALYSIS has also been made through out the total product life. ENVIRONMENT MANAGEMENT SYSTEM includes DESIGN FOR ENVIRONMENT from the initial stage of the design.
ENVIRONMENT MANAGEMENT SYSTEM considers environmental laws & regulations, reduction or elimination of resource consumption as well as environmental emission or pollution from industrial activities, energy saving, environment-friendly product design(lower noise, vibration, emission, smoke, heavy metal free, ozone depleting substance free, etc.), recycling, material cost reduction, and even environmentally oriented education for the employee.

https://truckmanualshub.com/

Important Safety Information

Most accidents involving product operation, maintenance and repair are caused by failure to observe basic safety rules or precautions. An accident can often be avoided by recognizing potentially hazardous situations before an accident occurs. A person must be alert to potential hazards, and use common sense. Persons must also have the necessary training, skills and tools before attempting to perform these functions.

Improper operation, lubrication, maintenance or repair of this product can be dangerous and could result in injury or death.

Do not operate or perform any lubrication, maintenance or repair on this product, until you have read and understood the operation, lubrication, maintenance and repair information.

Safety precautions and warnings are provided in this manual and on the product. If these hazard warnings are not heeded, bodily injury or death could occur to you or other persons.

The hazards are identified by the “Safety Alert Symbol” and followed by a “Signal Word” such as “WARNING” as shown below.

⚠ WARNING

The meaning of this safety alert symbol is as follows:

Attention! Become Alert! Your Safety is Involved.

The message that appears under the warning, explaining the hazard, can be either written or pictorially presented.

Operations that may cause product damage are identified by NOTICE labels on the product and in this publication.

DAEWOO cannot anticipate every possible circumstance that might involve a potential hazard, and common sense is always required. The warnings in this publication and on the product are therefore not all inclusive. Before any tool, procedure, work method or operating technique not specifically recommended by DAEWOO is used, you must be sure that it is safe for you and others. You should also ensure that the product will not be damaged or made unsafe by the operation, lubrication, maintenance or repair procedures you choose.

The information, specifications, and illustration in this publication are on the basis of information available at the time it was written. The specifications, torques, pressures, measurements, adjustments, illustrations, and other items can change at any time. These changes can affect the service given to the product. Obtain the complete and most current information before starting any job. DAEWOO dealers have the most current information available.

https://truckmanualshub.com/

Safety

The safety rules and regulations in this section are representative of some, but not all rules and regulations noted under the Occupational Safety and Health Act (OSHA) and are paraphrased without representation that the OSHA rules and regulations have been reproduced verbatim.

Please refer to 1910. 178 in Federal Register Vol. 37, No. 202, the National Fire Protection Association No. 505 (NFPA), American National Standard, ANSI B56. 1 Safety Standard for Low lift and High Lift Trucks and subsequent revisions for a complete list of OSHA rules and regulations as to the safe operation of powered industrial lift trucks. Since regulations vary from country to country outside in U.S.A., operate this lift truck in accordance with local regulations.

DAEWOO lift trucks are manufactured according to the regulations and standards laid down in EU Machinery Directive 98/37/EC and EMC directive 89/336/EC. Please refer to the Directives 89/655/EC and 89/391/EC and its amendments for the safe use of DAEWOO lift trucks.

The most effective method of preventing serious injury or death to the lift truck operator or others is for the lift truck operator to be familiar with the proper operation of the lift truck, to be alert and to avoid actions or conditions which can result in an accident.

Do not operate a lift truck if in need of repair, defective or in any way unsafe. Report all defects and unsafe conditions immediately. Do not attempt any adjustments or repairs unless trained and authorized to do so.

Warning Signs and Labels

There are several specific safety signs on your lift truck. Their exact location and description of the hazard are reviewed in this section. Please take the time to familiarize yourself with these safety signs.

Make sure that you can read all warning and instruction labels. Clean or replace these labels if you cannot read the words or see the pictures. When cleaning the labels use a cloth, water and soap. Do not use solvent, gasoline, etc.

You must replace a label if it is damaged, missing or cannot be read. If a label is on a part that is replaced, make sure a new label is installed on the replaced part. See your dealer for new labels.

Located on the right of the steering wheel.

⚠ WARNING

Improper operation or maintenance could result in injury or death. Do not operate or work on the lift truck unless you are properly trained. Read and understand the Operation and Maintenacne Manual. Additional manuals are available from DAEWOO Lift Truck dealers.

(This label also provides allowable lift truck capacity information.)

https://truckmanualshub.com/

Located on the right side of the operator's seat.

⚠ WARNING

Only trained and authorized personnel may operate this machine. For safe operation, read and follow the operation and maintenance Manual furnished with this lift truck and observe the following warnings:

1. Before starting machine. Check all controls and warning devices for proper operation.

2. Refer to machine identification plate for allowable machine capacity. Do not overload. Operate machines equipped with attachments as partially loaded machines when not handling a load.

3. Put directional control or shift lever in neutral before “ON – OFF” switch is turned on.

4. Start, turn and brake smoothly. Slow down for turns, slippery or uneven surfaces. Extremely poor surfaces should be repaired. Avoid running over loose objects or holes in the roadway surfaces. Use extreme caution when turning on inclines.

5. Travel with load as low as possible and tilted back. If load interferes with visibility, travel with load trailing.

6. On grade operations travel with load up grade.

7. Watch out for pedestrians and obstructions. Check overhead clearances.

8. Do not permit riders on forks or machine at any time.

9. Do not allow anyone to stand or pass under the elevated portion of any machine.

10. Be sure operating surface can safely support machine.

11. Operate machine and attachments only from operator's position.

12. Do not handle unstable or loosely stacked loads.

13. Use minimum tilt when picking up or depositing a load.

14. Use extreme care when handling long, high, or wide loads.

15. Forks should be completely under load and spread apart as far as load permits.

16. Machine should be equipped with overhead guard or equivalent protection. Where load requires it, use load backrest extension. Use extreme caution if operating without these devices.

17. Parking –Lower lifting mechanism to floor. Put directional control or shift lever in neutral. Set parking/secondary brake. Turn “ON – OFF” switch off. Check wheels if machine is on incline. Disconnect battery when storing electric machines.

18. Observe safety rules when handling fuel for engine powered machine and when changing batteries for electric machines.

https://truckmanualshub.com/

⚠ WARNING

Contents under pressure may be hot. Allow to cool before opening.

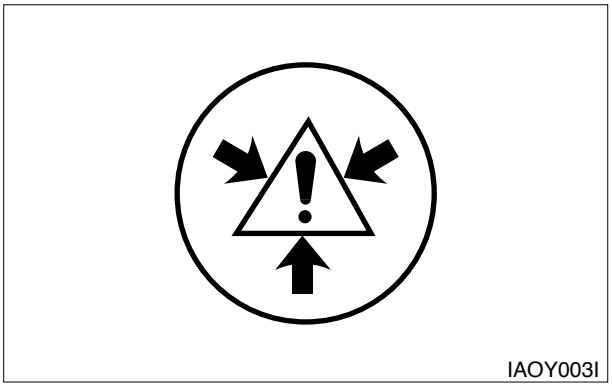

Located on the radiator top tank by the radiator cap.

⚠ WARNING

No hands. Do not place hands in this area.Do not touch, lean on, or reach through the mast or permit others to do so.

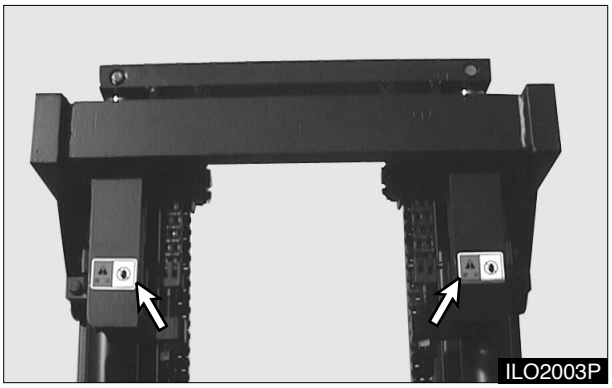

Located on the mast.

⚠ WARNING

Do not stand or ride on the forks. Do not stand or ride on a load or pallet on the forks. Do not stand or walk under the forks.

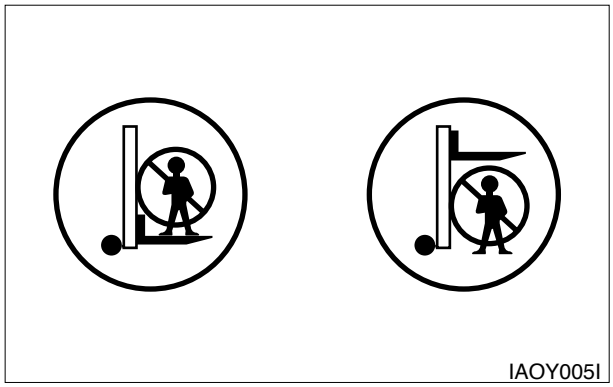

Located on the lift cylinder.

⚠ WARNING

Operation without this device in place may be hazardous.

Located on the load backrest.

https://truckmanualshub.com/

⚠ WARNING

Operation without this device in place may be hazardous.This guard conforms to A.N.S.I.B56.1 and F.E.M.Section IV.This design has been tested with an impact of (appropriate value).

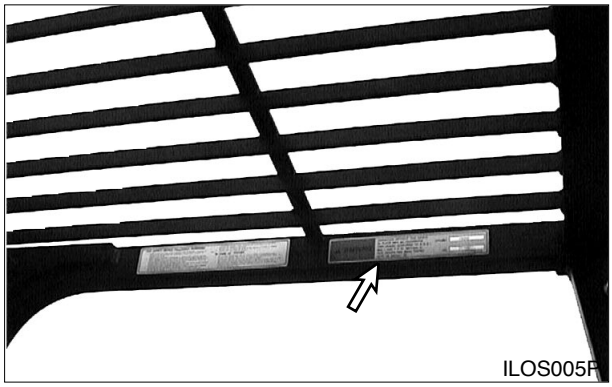

Located on the Overhead Guard.

⚠ WARNING

Improper adjustment could result in injury or death. it has to be adjusted by 99 mm on free condition. for safe, don't unfasten clevis and nut.
It has to be adjusted by trained personnel.

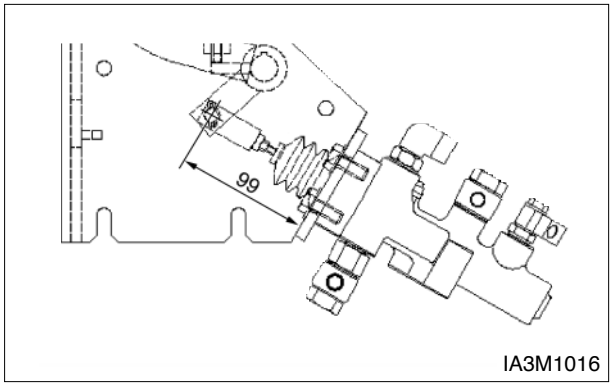

Located inside Brake pedal box.

⚠ WARNING

To avoid personal injury, allow no riders. A lift truck is designed for only one operator and no riders.

Located beside the operator's station.

⚠ WARNING

To avoid personal injury, stay clear of moving fan.

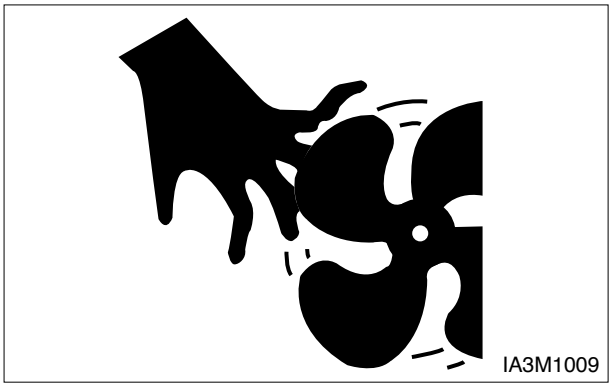

Located on the shroud and upper cover.

https://truckmanualshub.com/

General Hazard Information

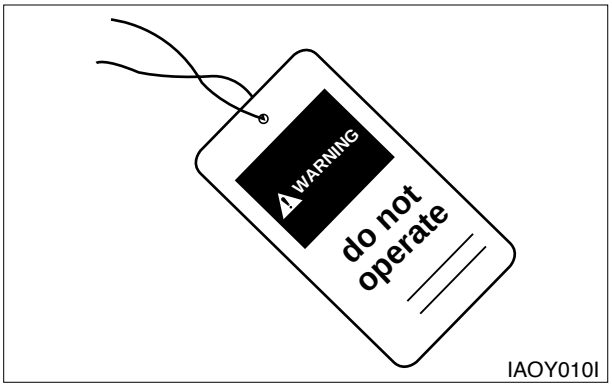

Attach a “Do Not Operate” or similar warning tag to start switch or controls before servicing or repairing the lift truck.

Do not start or service the lift truck when a “DO NOT OPERATE” or similar warning tag is attached to the start switch or controls.

Wear a hard hat, protective glasses and other protective equipment as required by job conditions.

Know the width of your attachments so proper clearance can be maintained when operating near fences, boundary obstacles, etc.

Do not wear loose clothing or jewelry that can catch on controls or other parts of the lift truck.

Keep the lift truck, especially the deck and steps, free of foreign material such as debris, oil tools and other items which are not part of the lift truck.

Secure all loose items such as lunch boxes, tools and other items which are not part of the lift truck.

Know the appropriate work-site hand signals and who gives them. Accept signals from one person only.

Always use the overhead guard. The overhead guard is intended to protect the lift truck operator from overhead obstructions and from falling objects.

A truck that is used for handing small objects or uneven loads must be fitted with a load backrest.

If the lift truck must be operated without the overhead guard in place due to low overhead clearance, use extreme care. Make sure there is no possibility of falling objects from any adjacent storage or work area. Make sure the load is stable and fully supported by the carriage and the load backrest extension (if equipped).

Do not raise loads any higher than necessary and never raise a load higher than 1830 mm (72 in) with the overhead guard removed.

Always use load backrest extension when the carriage or attachment does not fully support the load. The load backrest extension is intended to prevent the load or any part of the load from falling backwards into the operator's station.

When operation the lift truck, do not depend only on flashing lights or back-up alarm (if equipped) to warn pedestrians.

Always be aware of pedestrians and do not proceed until the pedestrians are aware of your presence and intended actions and have moved clear of the lift truck and/or load.

Do not drive lift truck up to anyone standing in front of an object.

Obey all traffic rules and warning signs.

Keep hands, feet and head inside the operator station. Do not hold onto the overhead guard while operating the lift truck. Do not climb on any part of the mast or overhead guard or permit others to do so.

Do not allow unauthorized personnel to ride on the forks or any other part of the lift truck, at any time.

When working in a building or dock, observe floor load limits and overhead clearances.

https://truckmanualshub.com/

Inhaling freon gas through a lit cigarette or other smoking method or inhaling fumes released from a flame contacting freon can cause bodily harm or death. Do not smoke when servicing air conditioners or wherever freon gas may be present.

Never put maintenance fluids into glass containers.

Use all cleaning solutions with care.

Do not use steam, solvent, or high pressure to clean electrical components.

Report all needed repairs.

Inspect the part of the chain that is normally operated over the crosshead roller. When the chain bends over the roller, the movement of the parts against each other causes wear.

Inspect to be sure that chain link pins do not extend outside of the bore hole.

If any single link pin is extended beyond its connecting corresponding link, it should be suspected of being broken inside of its bore hole.

Inspect the chain anchor and the anchor links for wear.

Operation Information

Mounting and Dismounting

Mount and dismount the lift truck carefully.

Clean your shoes and wipe your hands before mounting.

Face the lift truck when mounting and dismounting.

Use both hands face the lift truck when mounting and dismounting.

Use the handgrips for mounting and dismounting.

Do not try to climb on or off the lift truck when carrying tools or supplies.

Never get on or off a moving lift truck.

Do not use any controls as handholds when entering or leaving the operator's station.

Never get on or off a moving lift truck. Never jump off the lift truck.

Keep hands and steering wheel free of slippery material.

Before Starting the Lift Truck

Perform a walk-around inspection daily and at the start of each shift. Refer to the topic “Walk-around Inspection” in “Every 10 Service Hours or Daily” section of this manual.

Adjust the seat so that full brake pedal travel can be obtained with the operator's back against the seat back.

Make sure the lift truck is equipped with a lighting system as required by conditions.

Make sure all hydraulic controls are in the HOLD position.

Make sure the direction control lever is in the NEUTRAL position.

Make sure the parking brake is engaged.

Make sure no one is standing and/or working on,

https://truckmanualshub.com/

underneath or close to the lift truck before operating the lift truck.

Operate the lift truck and controls only from the operator's station.

Make sure the lift truck horn, lights, backup alarm (if equipped) and all other devices are working properly.

Check for proper operation of mast and attachments. Pay particular attention to unusual noises or erratic movement which might indicate a problem.

Make sure service and parking brakes, steering, and directional controls are operational.

Make sure all personnel are clear of lift truck and travel path.

Refer to the topic “Lift Truck Operation” in the “Operation Section” of this manual for specific starting instructions.

Starting the Lift truck

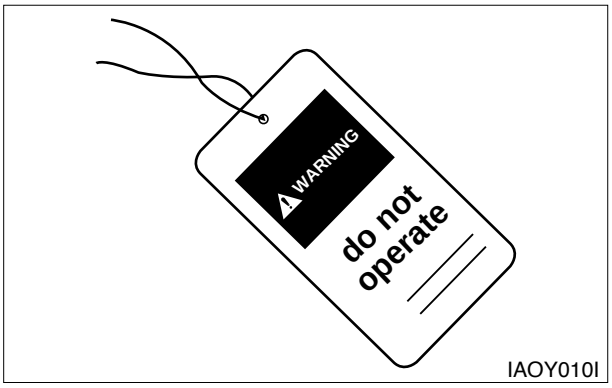

Do not start the engine or move any of the controls if there is a “DO NOT OPERATE” or similar warning tag attached to the start switch or controls.

Before Operating the Lift Truck

Test brakes, steering controls, horn and other devices for proper operation. Report faulty performance. Do not operate lift truck until repaired.

Learn how your lift truck operates. Know its safety devices. Know how the attachments work.
Before moving the lift truck, look around. Start, turn and brake smoothly.
An operator must constantly observe his lift truck for proper operation.

Operating the Lift Truck

Always keep the lift truck under control.

Obey all traffic rules and warning signs.

Never leave the lift truck with the engine operating, or with the parking brake disengaged.

Operate the engine only in a well ventilated area.

Lower mast, with or without load, before turning or traveling. Tip over could result. Watch out for overhead obstructions.

Always observe floor load limits and overhead clearance.

Start, turn, and brake smoothly, slow down for turns, grades, slippery or uneven surfaces.

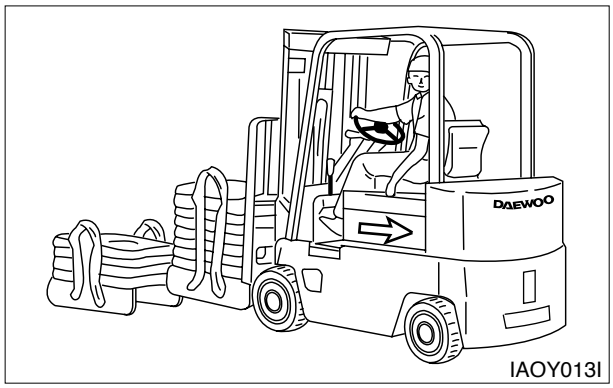

Use special care when operation on grades. Do not angle across or turn on grades. Do not use lift truck on slippery grades. Travel with forks downgrade when unloaded. Travel with load upgrade.

Do not overload, or handle offset, unstable, or loosely stacked loads. Refer to load capacity plate on the lift truck. Use extreme caution when handing suspended, long, high or wide load.

https://truckmanualshub.com/

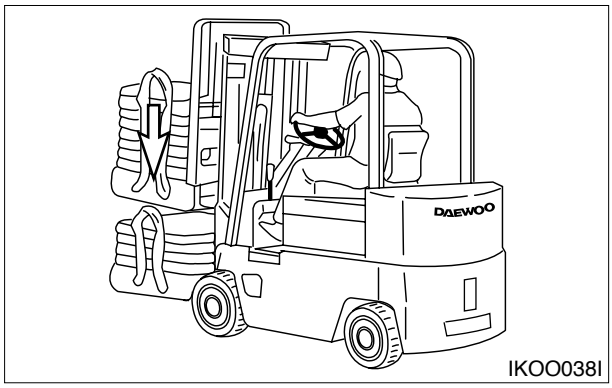

Tilt elevated load forward only when directly over unloading area and with load as low as possible.

Do not stunt ride or indulge in horseplay.

Always look and keep a clear view of the path of travel.

Travel in reverse if load or attachment obstructs visibility. Use extreme caution if visibility is obstructed.

Stay in designated travel path, clear of dock edges, ditches, other dropoffs and surfaces which cannot safely support the lift truck.

Slow down and use extra care through doorways, intersections and other location where visibility is reduceds.

Slow down for and avoid pedestrians, other vehicles, obstruction, pot holes and other hazards or objects in the path of travel.

Always use overhead guards except where operation conditions do not permit. Do not operate lift truck in high stacking areas without overhead guards.

When stacking, watch for falling objects. Use load backrest extension and overhead guard.

Refer to the topic “Operation Techniques” in the “Operation Section” of this manual.

Loading or Unloading Trucks/Trailers

Do not operate lift trucks on trucks or trailers which are not designed or intended for that purpose.
Be certain truck or trailer brakes are applied and wheel chocks in place (or be certain unit is locked to the loading dock) before entering onto trucks or trailers.

If trailer is not coupled to tractor, make sure the trailer landing gear is properly secured in place. On some trailers, extra supports may be needed to prevent upending or corner dipping.

Be certain dock plates are in good condition and properly placed and secured. Do not exceed the rated capacity of dock boards or bridge plates.

Lift Truck Parking

When leaving the operator station, park the lift truck in authorized areas only. Do not block traffic.

- Park the lift truck level, with the forks lowered and the mast tilted forward until the fork tips touch the floor.
- Move the direction control lever to NEUTRAL.
- Engage the parking brake.
- Turn the key switch off and remove the key.
- Turn the disconnect switch to OFF and remove the key (if equipped).
- Block the drive wheels when parking on an incline.

https://truckmanualshub.com/

Maintenance Information

Perform all maintenance unless otherwise specified as follows :

- Park the lift truck in authorized areas only.
- Park the lift truck level, with the forks lowered and the mast tilted forward until the fork tips touch the floor.
- Place the transmission controls in neutral.
- Engage the parking brake.
- Stop the engine.
- Remove the start switch key and turn the disconnect switch OFF (if equipped).
- Block the drive wheels when parking on an incline.

Pressure Air

Pressure air can cause personal infury. When using pressure air for cleaning, wear a protective face shield, protective clothing and protective shoes.

The maximum air pressure must be below 205 kPa (30 psi) for cleaning purposes.

Fluid Penetration

Always use a board or cardboard when checking for a leak. Escaping fluid under pressure, even a pinhole size leak, can penetrate body tissue, causing serious injury, and possible death. If fluid is injected into your skin, it must be treated by a doctor familiar with this type of injury immediately.

Crushing or Cutting Prevention

Support equipment and attachments properly when working beneath them. Do not depend on hydraulic cylinders to hold it up. Any attachment can fall if a control is moved, or if a hydraulic line breaks.

Never attempt adjustments while the lift truck is moving or the engine is running unless otherwise specified.

Where there are attachment linkages, the clearance in the linkage area will increase or decrease with movement of the attachment.

Stay clear of all rotating and moving parts.

Keep objects away from moving fan blades. They will throw or cut any object or tool that falls or is pushed into them.

Do not use a kinked or frayed wire rope cable. Wear gloves when handling the wire rope cable.

Retainer pins, when struck with force, can fly out and injure nearby persons. Make sure the area is clear of people when driving retainer pins.

Wear protective glasses when striking a retainer pin to avoid injury to your eyes.

Chips or other debris can fly off objects when struck. Make sure no one can be injured by flying debris before striking any object.

Falling Objects Protective Structure(FOPS)

This is an attached guard located above the operator's compartment and secured to the lift truck.

To avoid possible weakening of the Falling Objects Protective Structure (FOPS), consult a DAEWOO dealer before altering, by adding weight to, welding on, or cutting or drilling holes into the structure.

The overhead guard is not intended to protect against every possible impact. The overhead guard may not protect against some objects penetrating into the operator's station from the sides or ends of the lift truck.

The lift truck is equipped with an overhead guard and FOPS as standard. If there is a possibility of overhead objects falling through the guard, the guard must be equipped with smaller holes or a plexiglass cover.

Any altering done that is not specifically authorized by DAEWOO invalidates DAEWOO's FOPS certification. The protection offered by this FOPS will be impaired if it has been subjected to structural damage. Structural damage can be caused by an overturn accident, by falling objects, etc.

Do not mount any item such as fire extinguishers, first aid kits and lights by welding brackets to or drilling holes in any FOPS structure. See your DAEWOO dealer for mounting guidelines.

https://truckmanualshub.com/

Burn Prevention

Coolant

At operating temperature, the engine coolant is hot and under pressure. The radiator and all lines to heaters or the engine contain hot water or steam. Any contact can cause severe burns.

Steam can cause personal injury.

Check the coolant level only after engine has been stopped and the filler cap is cool enough to remove with your bare hand.

Remove the cooling system filler cap slowly to relieve pressure.

Cooling system additive contains alkali that can cause personal injury. Avoid contact with the skin and eyes and do not drink.

Allow cooling system components to cool before draining.

Oils

Hot oil and components can cause personal injury. Do not allow hot oil or components to contact the skin.

At operation temperature, the hydraulic tank is hot and can be under pressure.

Remove the hydraulic tank filler cap only after the engine has been stopped and the filler cap is cool enough to remove with your bare hand.

Remove the hydraulic tank filler cap slowly to relieve pressure.

Relieve all pressure in air, oil fuel or cooling systems before any lines, fittings or related items are disconnected or removed.

Batteries

Batteries give off flammable fumes which can explode.

Do not smoke when observing the battery electrolyte levels.

Electrolyte is an acid and can cause personal injury if it contacts skin or eyes.

Always wear protective glasses when working with batteries.

Fire or Explosion Prevention

All fuels, most lubricants and some coolant mixtures are flammable.

Fuel leaked or spilled onto hot surfaces or electrical components can cause a fire.

Do not smoke while refueling or in a refueling area.

Do not smoke in areas where batteries are charged, or where flammable materials are stored.

Batteries in series can be located in separate compartments. When using jumper cables always connect positive(+) cable to positive(+) terminal of battery connected to starter solenoid and negative(-) cable from external source to starter negative(-) terminal.
(If not equipped with starter negative(-) terminal, connect to engine block.)

See the Operation Section of this manual for specific starting instructions.

Clean and tighten all electrical connections. Check daily for loose or frayed electrical wires. Have all loose or frayed electrical wires tightened, repaired or replaced before operation the lift truck.

Keep all fuels and lubricants stored in properly marked containers and away from all unauthorized persons.

Store all oily rags or other flammable material in a protective container, in a safe place.

Do not weld or flame cut on pipes or tubes that contain flammable fluids. Clean them thoroughly with nonflammable solvent before welding or flame cutting on them.

Remove all flammable materials such as fuel, oil and other debris before they accumulate on the lift truck.

Do not expose the lift truck to flames, burning brush, etc., if at all possible.

Shields, which protect hot exhaust components from oil or fuel spray in the event of a line, tube or seal failure, must be installed correctly.

Do not operate in areas where explosive gases exist or are suspected.

https://truckmanualshub.com/

Fire Extinguisher

Have a fire extinguisher-type BC and 1.5KG minimum capacity-on rear overhead guard leg with latch and know how to use it. Inspect and have it serviced as recommended on its instruction plate.

Ether

Ether is poisonous and flammable.

Breathing ether vapors or repeated contact of ether with skin can cause personal injury.

Use ether only in well-ventilated areas.
Do not smoke while changing ether cylinders.

Use ether with care to avoid fires.

Do not store replacement ether cylinders in living areas or in the operator's compartment.

Do not store ether cylinders in direct sunlight or at temperatures above 39°C (102°F).

Discard cylinders in a safe place. Do not puncture or burn cylinders.

Keep ether cylinders out of the reach of unauthorized personnel.

Lines, Tubes and Hoses

Do not bend or strike high pressure lines. Do not install bent or damaged lines, tubes or hoses.

Repair any loose or damaged fuel and oil lines, tubes and hoses. Leaks can cause fires. Contact your DAEWOO dealer for repair or replacement.

Check lines, tubes and hoses carefully. Do not use your bare hand to check for leaks. Use a board or cardboard to check for leaks. See Fluid Penetration in the Safety Section for more details. Tighten all connections to the recommended torque. Replace if any of the following conditions are found.

- End fittings damaged or leaking.
- Outer covering chafed or cut and wire reinforcing exposed.
- Outer covering ballooning locally.
- Evidence of kinking or crushing of the flexible part of hose.
- Armouring embedded in the outer cover.
- End fittings displaced.

Make sure that all clamps, guards and heat shields are installed correctly to prevent vibration, rubbing against other parts, and excessive heat during operation.

Tire Information

Explosions of air-inflated tires have resulted from heat-induced gas combustion inside the tires. The heat, generated by welding or heating rim components, external fire, or excessive use of brakes can cause gaseous combustion.

A tire explosion is much more violent than a blowout. The explosion can propel the tire, rim and axle components as far as 500 m (1500 ft) or more from the lift truck. Both the force of the explosion and the flying debris can cause personal injury or death, and property damage.

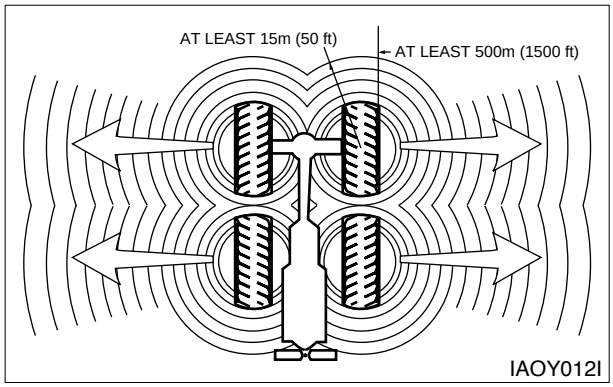

Do not approach a warm tire closer than the outside of the area represented by the shaded area in the above drawing.

https://truckmanualshub.com/

Dry nitrogen(N2) gas is recommended for inflation of tires. If the tires were originally inflated with air, nitrogen is still preferred for adjusting the pressure. Nitrogen mixes properly with air.

Nitrogen inflated tires reduce the potential of a tire explosion, because nitrogen does not support combustion. Also, nitrogen helps prevent oxidation and the resulting deterioration of rubber and corrosion of rim components.

Proper nitrogen inflation equipment and training in its use are necessary to avoid overinflation. A tire blowout or rim failure can result from improper or misused equipment.

Stand behind the tread and use a self-attaching chuck when inflation a tire.

Servicing, changing tires and rims can be dangerous and should be done only by trained personnel using proper tools and procedures. If correct procedures are not followed while servicing tires and rims, the assemblies could burst with explosive force and cause serious personal injury or death. Follow carefully the specific information provided by your tire or rim servicing personnel or dealer.

Operator Restraint System (If Equipped)

Warning Signs and Labels

Your DAEWOO lift truck has the following tipover warning decals.

Make sure that you can read all safety signs. Clean or replace these if you cannot read the words or see the pictures. when cleaning the labels use a cloth, water and soap. Do not use solvent, gasoline, etc. You must replace a label if it is damaged, missing or cannot be read. If a label is on a part that is replaced, make sure a new label is installed on the replaced part. See you DAEWOO Lift Truck dealer for new labels.
The most effective method of preventing serious injury or death to yourself or others is to familiarize yourself with the proper operation of the lift truck, to be alert, and to avoid actions or conditions which can result in an accident.

⚠ WARNING

Tipover can occur if the truck is improperly operated. In the event of a tipover, injury or death could result.

"Survive in tipover" decal

https://truckmanualshub.com/

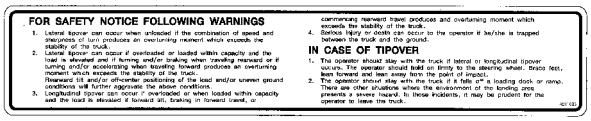
FOR SAFETY NOTICE FOLLOWING WARNINGS

1. Lateral tipover can occur when unloaded if the combination of speed and sharpness of turn produces an overturning moment which exceeds the stability of the truck.
2. Lateral tipover can occur if overloaded or loaded within capacity and the load is elevated. Lateral tipover can occur if turning and/or braking when traveling rearward or if turning and/or accelerating when traveling forward produces an overturning moment which exceeds the stability of the truck.
   Rearward tilt and/or off-center positioning of the load and/or uneven ground conditions will further aggravate the above conditions.
3. Longitudinal tipover can occur if overloaded or when loaded within capacity and the load is elevated if forward tilt, braking in forward travel, or commencing rearward travel produces and overturning moment which exceeds the stability of the truck.
4. Serious injury or death can occur to the operator if he/she is trapped between the truck and the ground.

IN CASE OF TIPOVER

1. The operator should stay with the truck if lateral or longitudinal tipover occurs. The operator should hold on firmly to the steering wheel. Brace feet, first forward and lean away from the point of impact.
2. The operator should stay with the truck if it falls off a loading dock or ramp. The operator should remain where the environment of the landing area presents a clearer hazard. In these incidents, it may be prudent for the operator to leave the truck.

"Survive in tipover" decal

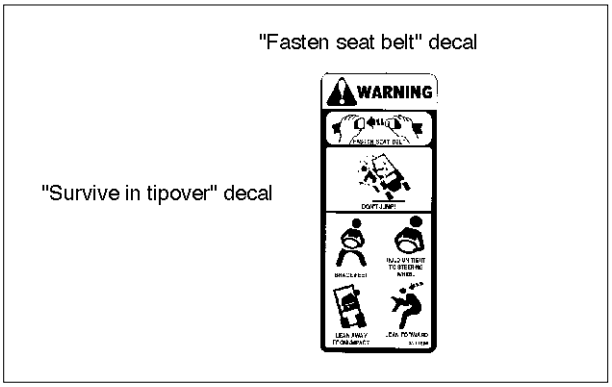

The “Survive in tipover” warning is located on the overhead guard. It shows the proper use of the operator restraint system.

Seat Adjustment

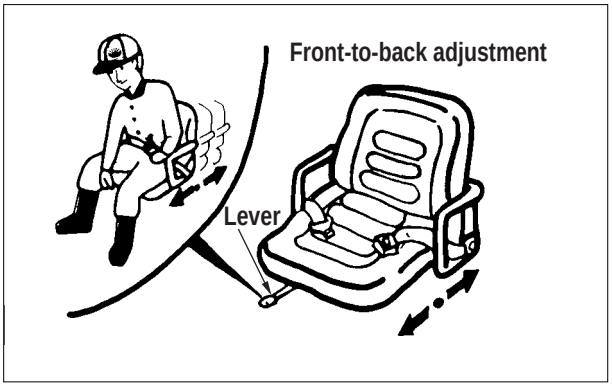

Move the lever, slide the seat to the desired position, and release the lever.

⚠ WARNING

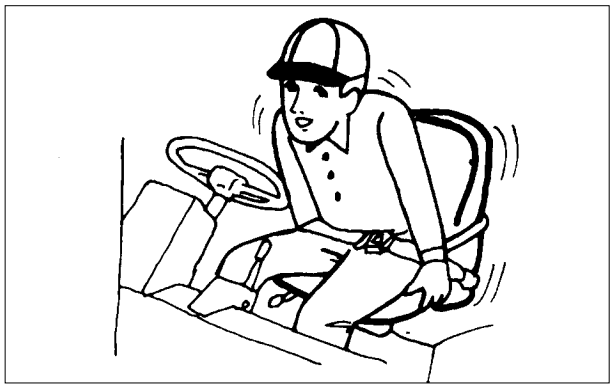

Adjust the seat before operating the lift truck. After adjusting, joggle the seat to make sure it is properly locked, DO NOT adjust the seat while the truck is in motion.

⚠ WARNING

Your DAEWOO truck comes equipped with a DAEWOO operator restraint system. Should it become necessary to replace the seat for any reason, it should only be replaced with another DAEWOO operator restraint system.

Seat Belt

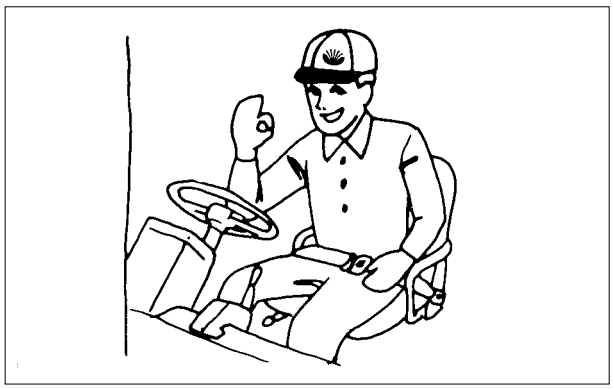

The Operator Restraint System, Prevents the operator from jumping from the operator’s compartment in the event of a forward or side tipover.

https://truckmanualshub.com/

The system is designed to keep the operator on the seat and in the operator's compartment in the event of a tipover.

Inspection

⚠ WARNING

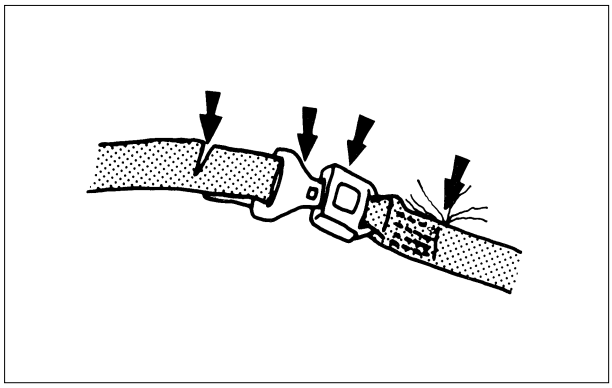

1. If the seat belt is torn, if pulling motion is interrupted during extension of the belt, or if the belt cannot be inserted into the buckle properly, replace the seat belt assembly.

⚠ WARNING

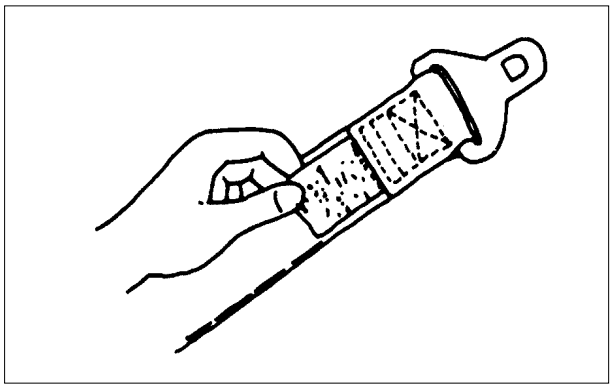

2. Replace the seat belt assembly every 3 years even if it passes visual inspection. For replacement, see the date of manufacture labelled on the back side of the belt.

⚠ WARNING

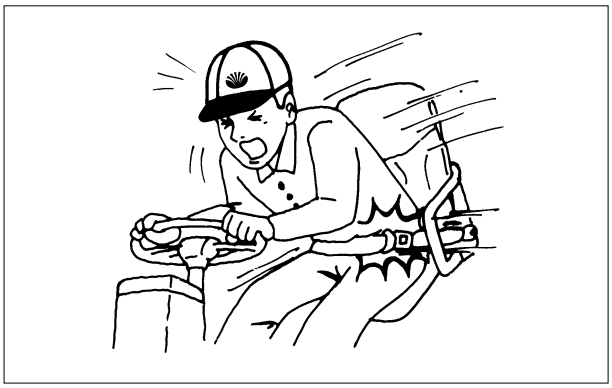

3. In the event of a tipover, the seat and restraint system should be inspected for damage and replaced, if necessary.

⚠ WARNING

The seat belt may cause the operator to bend at the waist. If you are pregnant of have suffered from some abdominal disease, consult a doctor before you use the seat belt.

Fasten the Seat Belt

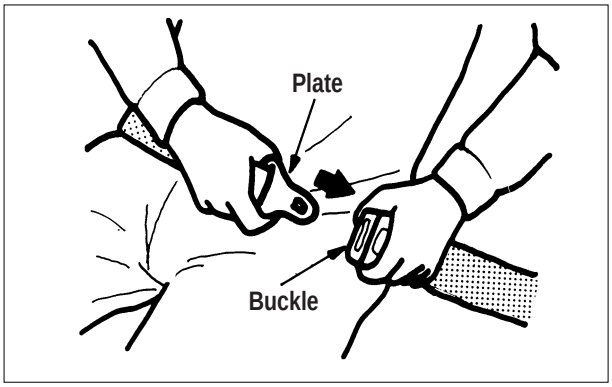

1. Grip the plate (connector) of the belt and pull the belt from the retractor. Then insert the plate into the slot of the buckle until a snap is heard. Pull on the belt to confirm it is latched.

2. Make sure the belt is not twisted.

https://truckmanualshub.com/

⚠ WARNING

If you fasten the belt across your abdomen, the belt may injure your abdomen in an accident.

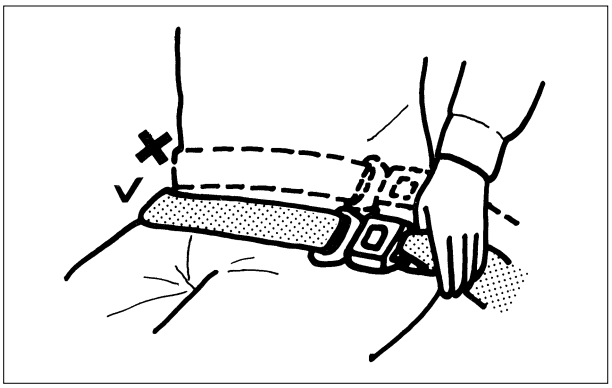

3. Be sure to fasten the belt across your hips, not across your abdomen.

NOTE : The belt is designed to automatically adjust to your size and movement. A quick pull on the belt will confirm that the automatic adjuster will hold the belt position in the event of an accident.

Release the Seat Belt

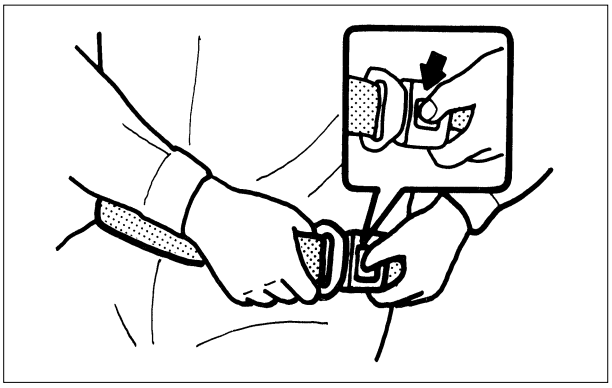

Push the button of the buckle to release the belt. The belt will automatically retract when released. Hold the plate of the belt and allow the belt to slowly retract.

Avoiding Lift Truck Tipovers

Lift Truck Stability

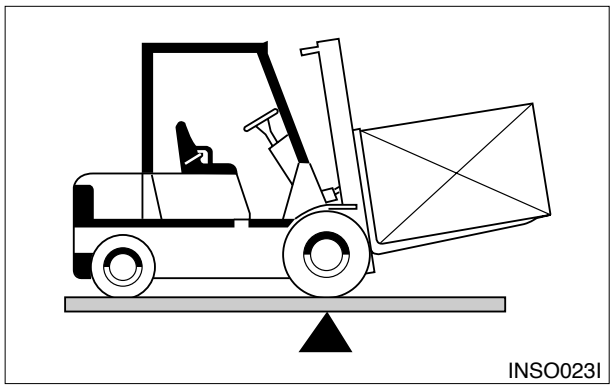

Counterbalanced lift truck design is based on the balance of two weights on opposite sides of a fulcrum (the front axle). The load on the forks must be balanced by the weight of the lift truck.
The location of the center of gravity of both the truck and the load is also a factor. This basic principle is used for picking up a load. The ability of the lift truck to handle a load is discussed in terms of center of gravity and both forward and sideways stability.

Center of Gravity (CG)

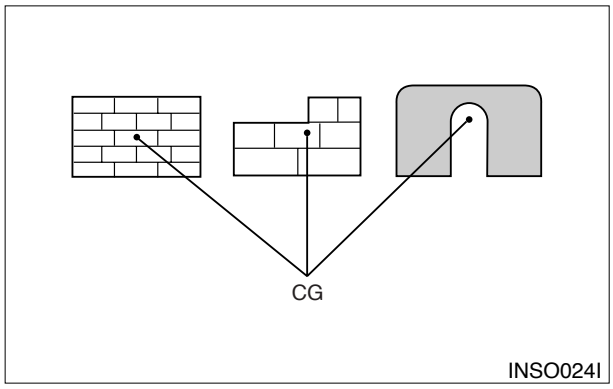

The point within an object, at which the whole weight of the object may be regarded as being concentrated, is called the center of gravity or CG. If the object is uniform, its geometric center will coincide with its CG. If it is not uniform, the CG could be at a point outside of the object. When the lift truck picks up a load, the truck and load have a new combined CG.

https://truckmanualshub.com/

Stability and Center of Gravity

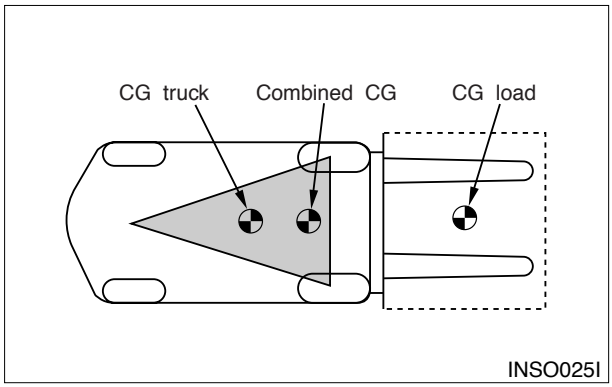

The stability of the lift truck is determined by the location of its CG; or, if the truck is loaded, the combined CG of the truck and load. The lift truck has moving parts and, therefore, has a CG that moves. The CG moves forward or backward as the mast is tilted forward or backward. The CG moves up or down as the mast moves up or down. The CG and, therefore, the stability of the loaded lift truck, is affected by a number of factors such as:

- the size, weight, shape and position of the load
- the height to which the load is lifted
- the amount of forward or backward tilt
- tire pressure
- dynamic forces created when the lift truck is accelerated, braked or turned
- condition and grade of surfaces on which the lift truck is operated

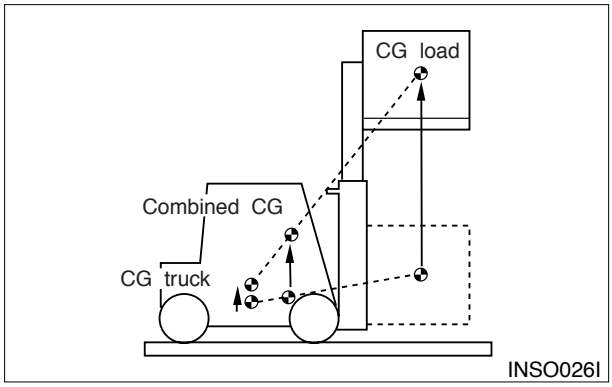

These same factors are also important for unloaded lift trucks. They tip over sideways easier than a loaded lift truck carrying its load in the lowered position.

Lift Truck Stability Base

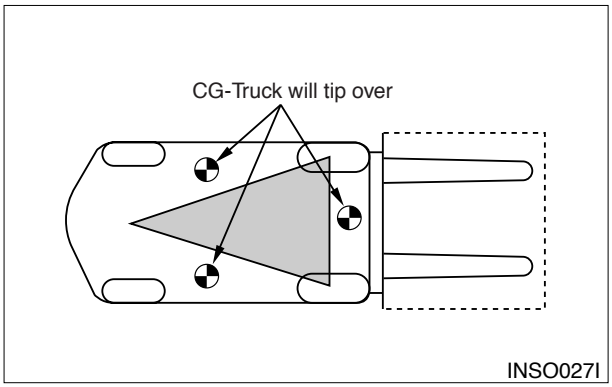

For the lift truck to be stable (not tip over forward or to the side), the CG must stay within the area of the lift truck stability base – a triangular area between the front wheels and the pivot of the steer wheels. If the CG moves forward of the front axle, the lift truck will tip forward. If the CG moves outside of the line on either side of the stability base, the lift truck will tip to the side.

⚠ WARNING

Dynamic forces (braking, acceleration, turning) also affect stability and can produce tipover even when the CG is within the stability triangle.

Capacity Load (Weight and Load Center)

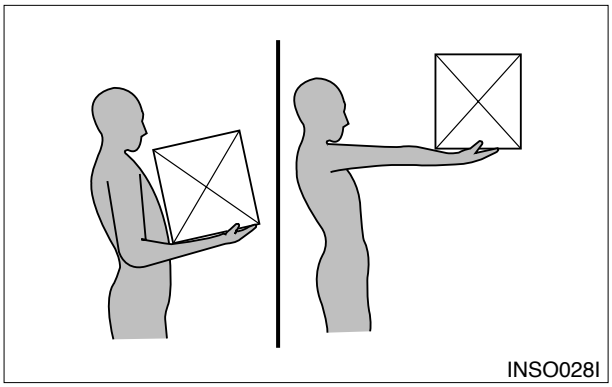

The capacity load of the lift truck is shown on the capacity/nameplate riveted to the truck. It is determined by the weight and load center. The load center is determined by the location of the CG of the load.

https://truckmanualshub.com/

The load center shown on the nameplate is the horizontal distance from the front face of the forks, or the load face of an attachment, to the CG of the load. The location of the CG in the vertical direction is the same as the horizontal dimension.

Remember that, unless otherwise indicated, the capacity load shown on the nameplate is for a standard lift truck with standard backrest, forks and mast, and having no special-purpose attachment. In addition, the capacity load assumes that the load center is no further from the top of the forks than it is from the face of the backrest. If these conditions do not exist, the operator may have to reduce the safe operating load because the truck stability may be reduced. The lift truck should not be operated if its capacity/nameplate does not indicate capacity load.

NOTE : If the load is not uniform, the heaviest portion should be placed closer to the backrest and centered on the forks.

NOTICE

1. **Capacity/Nameplates originally attached to forklifts sold by DAEWOO shall not be removed, altered or replaced without DAEWOO's approval.**
2. **DAEWOO assumes no responsibility for lift trucks placed in service without a valid DAEWOO Nameplate.**
3. **If necessary to change your specification, contact your DAEWOO lift truck dealer.**

Safe Driving Practices

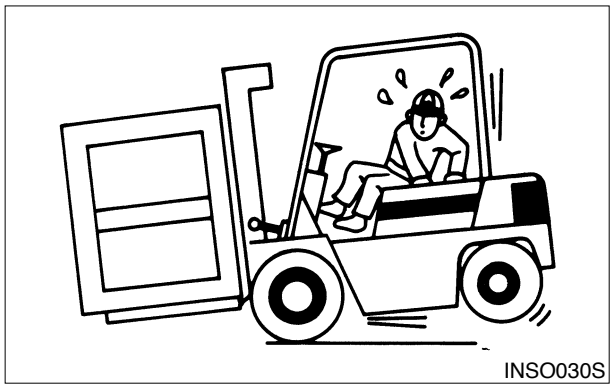

DON'T overload. Always handle loads within the rated capacity shown on the capacity plate.

DON'T go over rough terrain! If unavoidable, slow down.

https://truckmanualshub.com/

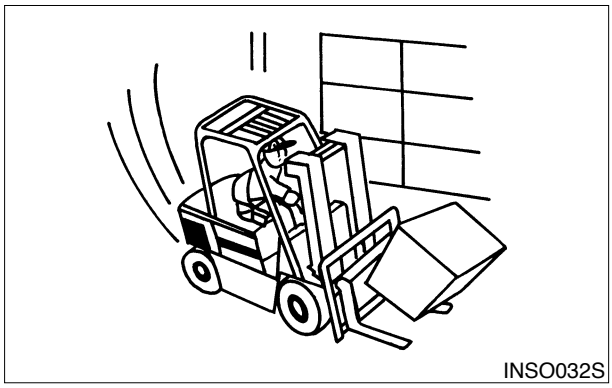

DON’T start, turn, or stop quickly.
Sudden movement can cause the lift truck to tipover.

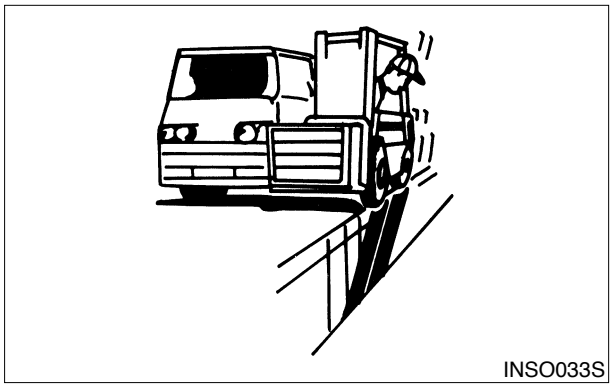

DON’T crowd. Maintain a safe distance from the edge of docks, ramps and platforms. Always watch “tail swing”

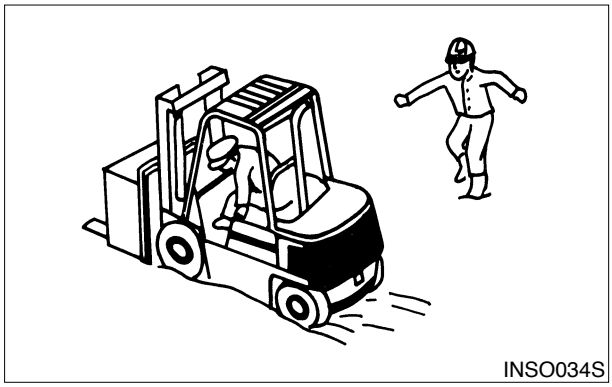

DON’T drive on soft ground.

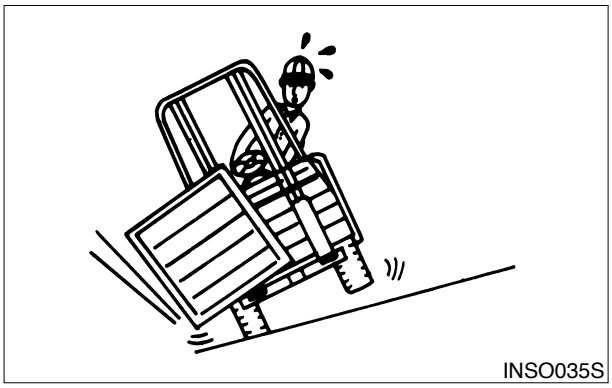

DON’T turn on, or drive across an incline.

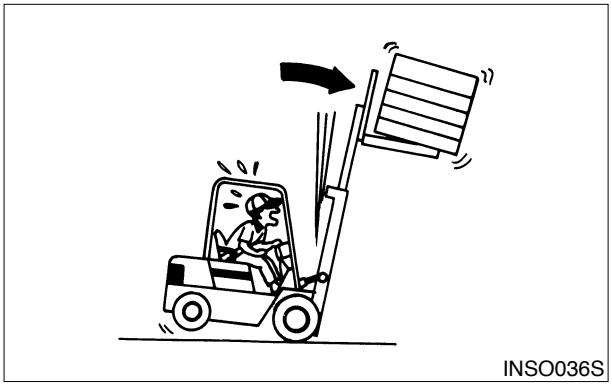

DON’T tilt elevated loads forwards! This can cause the lift truck to tipover forward.

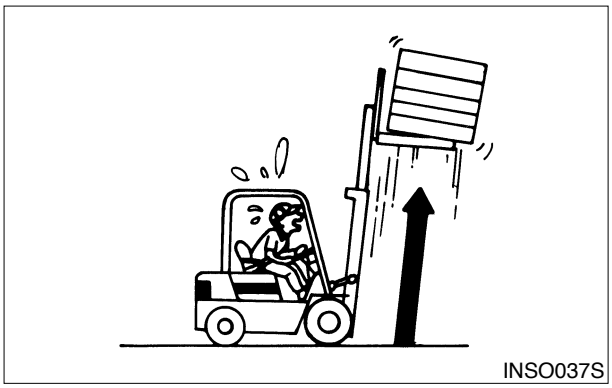

DON’T elevate tilted loads! This can also cause the lift truck to tipover forward.

https://truckmanualshub.com/

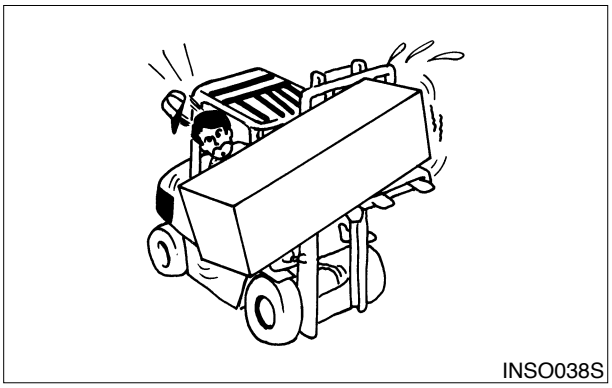

DON’T pick up an off center load! Such a load increases the possibility of a tipover to the side.

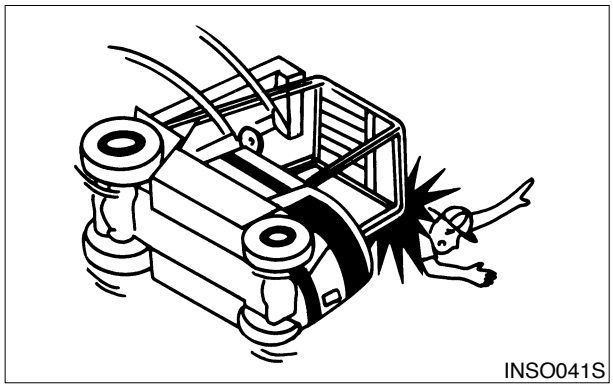

DON’T jump off if your truck starts to tipover! Stay in your seat to survive.

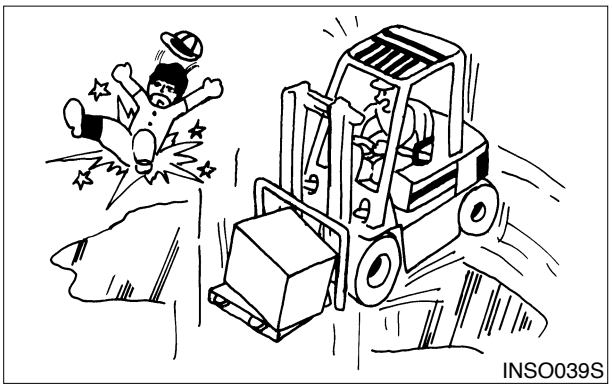

DON’T drive on slippery surfaces! Sand, gravel, ice or mud can cause a tipover. If unavoidable, slow down.

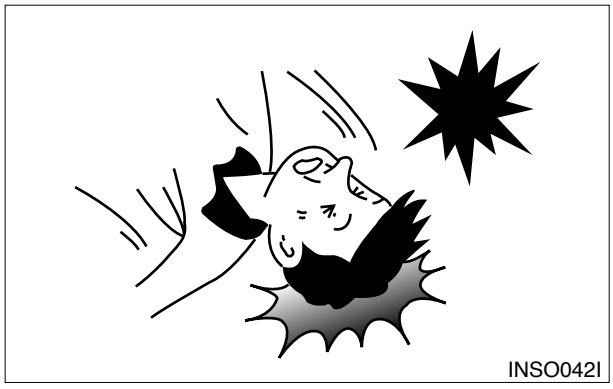

DON’T compromise safety. Wear a hard hat if required on your job site.

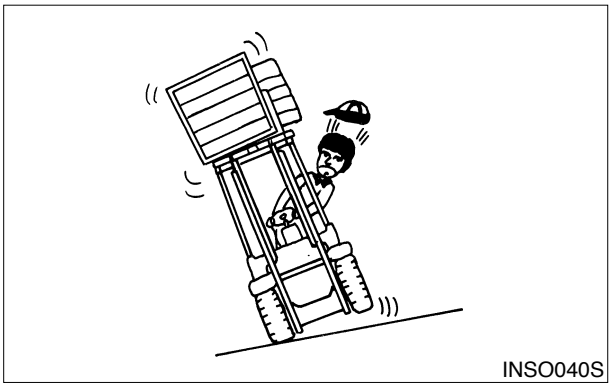

DON’T attempt to pick up or deposit a load unless the lift truck is level.

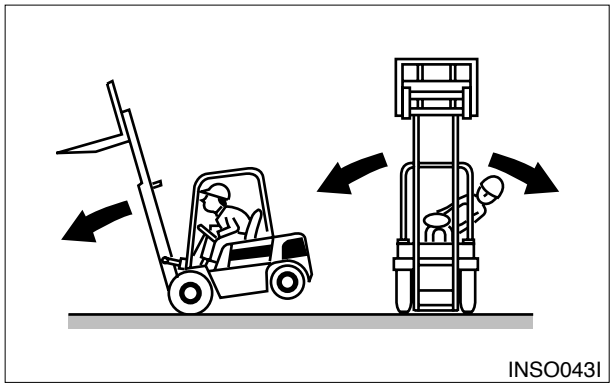

DON’T travel with the mast raised.

https://truckmanualshub.com/

How to Survive in a Tipover (If Operator Restraint System Equipped)

⚠ WARNING

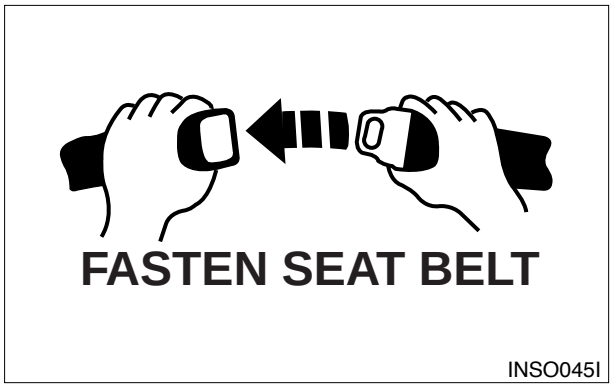

In the event of a tipover, the risk of serious injury or death will be reduced if the operator is using the operator restraint system and follows the instructions provided.

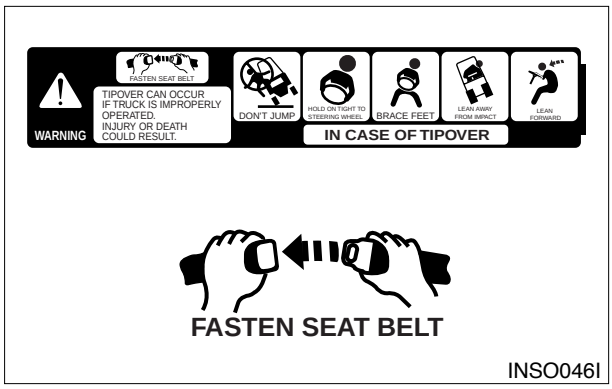

Always use operator restraint system.

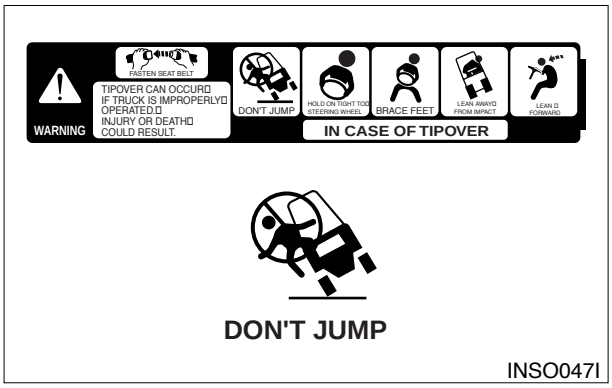

DON’T jump.

Hold on tight.

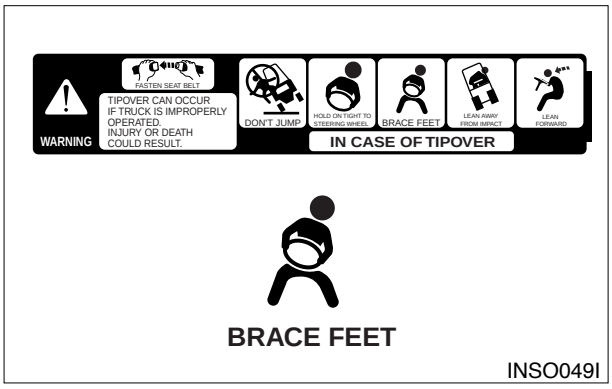

Brace your feet and keep them within the operator’s compartment.

https://truckmanualshub.com/

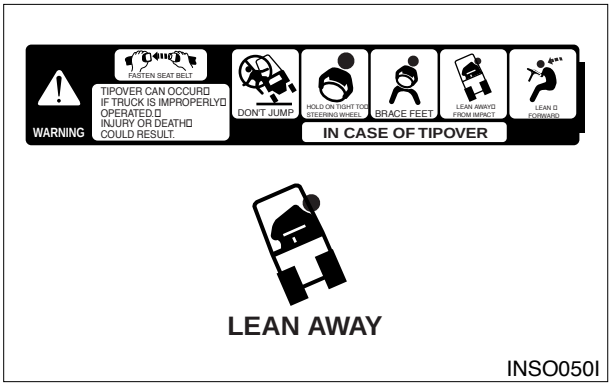

Lean away from the direction of fall.

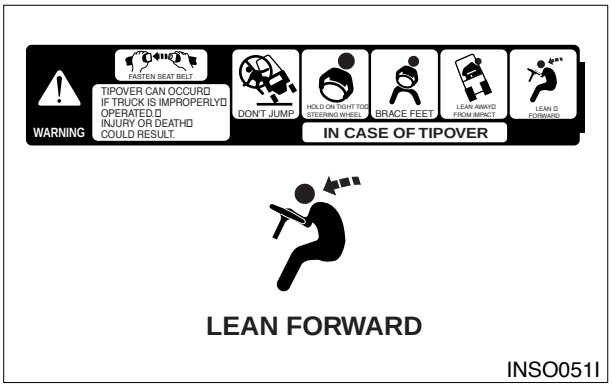

Lean forward.

https://truckmanualshub.com/

Specifications

CHARACTERISTICS								
Manufacturer		UNIT	DHI		DHI		DHI	
Model			**D(G)35S-2**		**D(G)40SC-2**		**D(G)40S-2**	
Capacity	at rated load center	kg	3500		4000		4000	
Load center	distance	mm	600		500		600	
Power type	electric, diesel, gas, lp-gas		diesel	LP-GAS	diesel	LP-GAS	diesel	LP-GAS
Operator type	stand-on, rider seated		rider-seated		rider-seated		rider-seated	
Tire type	c = cushion, p = pneumatic		p		p		p	
Wheels (x = driven)	number, front/rear		2/2		2/2		2/2	
DIMENSIONS								
Lift with STD two - stage mast	maximum fork height with rated load	mm	3000		3000		3000	
	free lift	mm	155		155		155	
	special free lift	mm						
Fork carriage	ISO class		III		III		III	
Forks	thickness X width X length	mm	50X150X1050		50X150X1050		50X150X1050	
Tilt of mast	foreward/backward	deg	8/10		8/10		8/10	
	length without forks	mm	3075		3075		3135	
Overall dimensions	width (standard tire)	mm	1365		1365		1445	
	(option : dual tire)	mm	1740		1740		1740	
	mast lowered height	mm	2225		2225		2230	
	mast extened height	mm	4265		4265		4270	
	overhead guard height	mm	2225		2225		2230	
	seat height	mm						
Outside turning radius		mm	2770		2770		2820	
Load moment constant (from center of front wheel to fork face)		mm	561		561		561	
90° stacking aisle	add load length and clearance	mm	3330		3330		3380	
90° intersecting aisle		mm	2345		2345		2400	
PERFORMANCE								
Speeds	travel, loaded / unloaded	km / h	24/25	21/22	24/25	20/21	24/25	20/21
	lift, loaded / unloaded	mm / s	520/540	500/540	520/540	500/540	520/540	500/540
	lowering, loaded / unloaded	mm / s	480/450		480/450		480/450	
Drawbar pull	at 1.6 km / h, loaded	kg	3300	3355	3300	3430	3300	3430
Gradeability	at 1.6 km / h, loaded	%	38	36	36	33.5	35	33.5
Acceleration time	travelling loaded / unloaded	s						
WEIGHT								
Total weight	unloaded	kg	5840		5840		6170	
Axle load	at loaded, front/rear	kg	8340/1000		8930/910		9050/1120	
	without loaded, front/rear	kg	2810/3030		2810/3030		2730/3440	
CHASSIS								
Tires	number of front / rear		2/2		2/2		2/2	
	size, front		8.25X15-14		8.25X15-14		300X15-18	
	size, rear		7.00X12-12		7.00X12-12		7.00X12-12	
Wheelbase		mm	2000		2000		2000	
Tread	front/rear (standard tire)	mm	1132/1115		1132/1115		1147/1115	
	(option dual tire)	mm	1290/1115		1290/1115		1290/1115	
Ground clearance	loaded, front/rear	mm	160		160		160	
	loaded, at center of wheelbase	mm	205		205		205	
Brakes	service brake		shoe		shoe		shoe	
	parking brake		toggle		toggle		toggle	
DRIVE								
Battey	voltage / capacity	v/ ah	24/75	12/75	24/75	12/75	24/75	12/75
Engine	manufacturer/model		DHI/DB58	GM V6 4.3L	DHI/DB58	GM V6 4.3L	DHI/DB58	GM V6 4.3L
	rated output (at rpm)	ps/rpm	92/2200	86.7/2400	92/2200	86.7/2400	92/2200	86.7/2400
	(DIN)	kW/Hp	68/91	63.8/85.5	68/91	63.8/85.5	68/91	63.8/85.5
	max. torque/rpm	kgm/rpm	31.5/1600	30.5/1400	31.5/1600	30.5/1400	31.5/1600	30.5/1400
	cycle / cylinders / displacement	cc	4/6/5785	4/6/4294	4/6/5785	4/6/4294	4/6/5785	4/6/4294
	fuel consumption	l/hr	6.5	-	6.5	-	6.5	-
Transmission	type		powershift		powershift		powershift	
	no. speeds forward / reverse		2/2		2/2		2/2	
Operating pressure	system / attachment	bar	190/140		190/140		190/140	

https://truckmanualshub.com/

DHI		DHI		DHI		1
D(G)45SC-2		**D(G)45S-2**		**D(G)50SC-2**		2
4500		4500		5000		3
500		600		500		4
diesel	LP-GAS	diesel	LP-GAS	diesel	LP-GAS	5
rider - seated		rider - seated		rider - seated		6
p		p		p		7
2/2		2/2		2/2		8
3000		3000		3000		9
155		155		155		10
						11
III		IV		IV		12
50 X 150 X 1050		50 X 150 X 1200		50 X 150 X 1200		13
8/10		8/10		8/10		14
3135		3190		3190		15
1445		1445		1445		16
1740		1740		1740		
2230		2230		2230		17
4470		4420		4420		18
2230		2230		2230		19
						20
2820		2865		2865		21
561		561		561		22
3380		3425		3425		23
2400		2460		2460		23a
24/25	20/21	24/25	20/21	24/25	20/21	24
520/540	500/540	520/540	500/540	510/540	490/540	25
480/450		480/450		490/450		26
3300	3410	3400	3410	3400	3400	28
33	30.7	32	30.7	32	29.4	30
						31
6170		6560		6560		32
9620/1050		9860/1200		10380/1180		33
2730/3440		2725/3835		2725/3830		34
2/2		2/2		2/2		35
300 X 15-18		300 X 15-18		300 X 15-18		36
7.00X 12-12		7.00X 12-12		7.00X 12-12		37
2000		2000		2000		38
1147/1115		1147/1115		1147/1115		39
1290/1115		1290/1115		1290/1115		
160		160		160		40
205		205		205		41
shoe		shoe		shoe		42
toggle		shoe		shoe		43
24/75	12/75	24/75	12/75	24/75	12/75	45
DHI/DB58	GM V6 4.3L	DHI/DB58	GM V6 4.3L	DHI/DB58	GM V6 4.3L	49
92/2200	86.7/2400	92/2200	86.7/2400	92/2200	86.7/2400	50
68/91	63.8/85.5	68/91	63.8/85.5	68/91	63.8/85.5	
31.5/1600	30.5/1400	31.5/1600	30.5/1400	31.5/1600	30.5/1400	
4/6/5785	4/6/4294	4/6/5785	4/6/4294	4/6/5785	4/6/4294	52
6.5	-	6.5	-	6.5	-	
Powershift		Powershift		Powershift		55
2/2		2/2		2/2		56
210/140		210/140		210/140		57

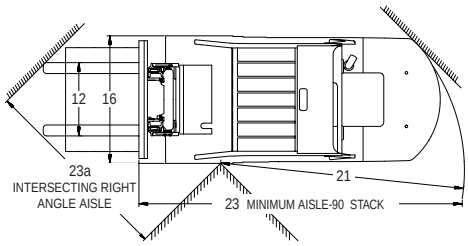

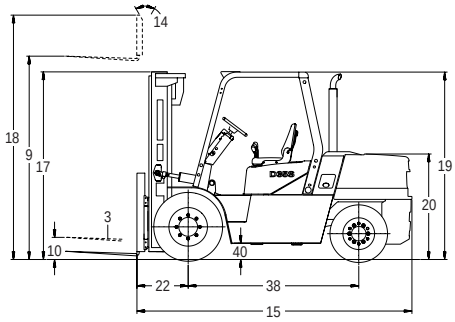

IA3M2008

https://truckmanualshub.com/

Noise and Vibration

Noise at operator ear (measured by prEN)

unit : dB (A)

Model	Sound level (Leg)
D35S-2 D40S-2 D45S-2 D40SC-2 D45SC-2 D50SC-2	86.5

unit : dB (A)

Model	Sound level (Leg)
G35S-2 G40S-2 G45S-2 G40SC-2 G45SC-2 G50SC-2	84.8

Sound power level

Model	Sound level (Leg)
D35S-2 D40S-2 D45S-2 D40SC-2 D45SC-2 D50SC-2	106.1

Vibration(weighted overall value)

unit : m/sec²

Model	Measuring place		
	Seat	Steering Wheel	Floor Plate
D35S-2 D40S-2 D45S-2 D40SC-2 D45SC-2 D50SC-2	1.02	0.97	1.06

unit : m/sec²

Model	Measuring place		
	Seat	Steering Wheel	Floor Plate
G35S-2 G40S-2 G45S-2 G40SC-2 G45SC-2 G50SC-2	0.6	0.7	0.9

https://truckmanualshub.com/

Capacity Chart

MODEL	SINGLE TIRE STD, FFL	SINGLE TIRE FFT
D(G)40SC-2	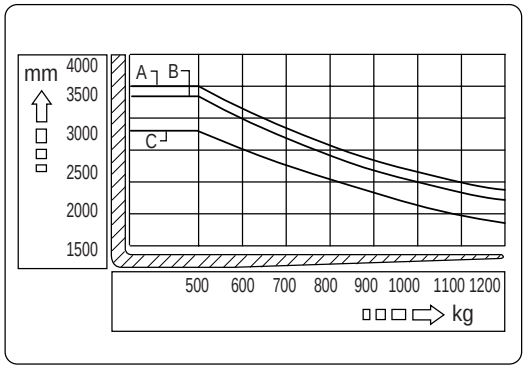 A. 3000, 3300, 3650, 4000mm MAST B. 4250mm MAST C. 4850mm MAST	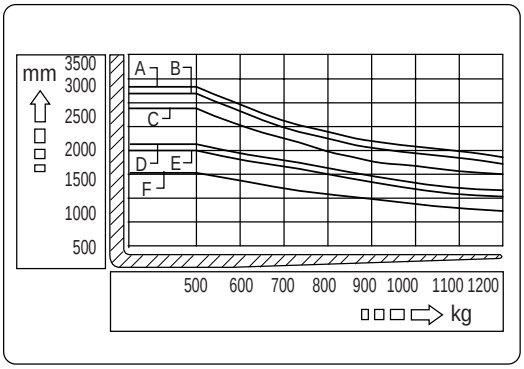 A. 4000mm MAST B. 4250mm MAST C. 4700mm MAST D. 5150mm MAST E. 5600mm MAST F. 6050mm MAST
D(G)45SC-2	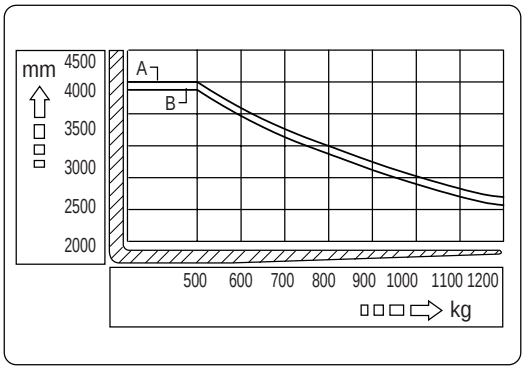 A. 3000, 3300, 3650, 4000, 4250mm MAST B. 4850mm MAST	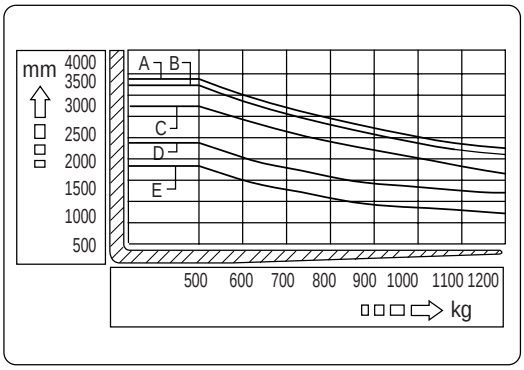 A. 4000, 4250mm MAST B. 4700mm MAST C. 5150mm MAST D. 5600mm MAST E. 6050mm MAST
D(G)50SC-2	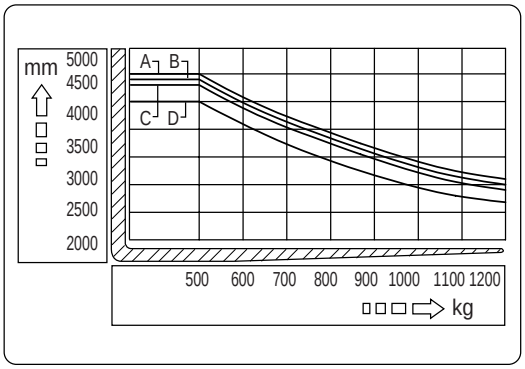 A. 3000, 3300, 3650mm MAST B. 4000mm MAST C. 4250mm MAST D. 4850mm MAST	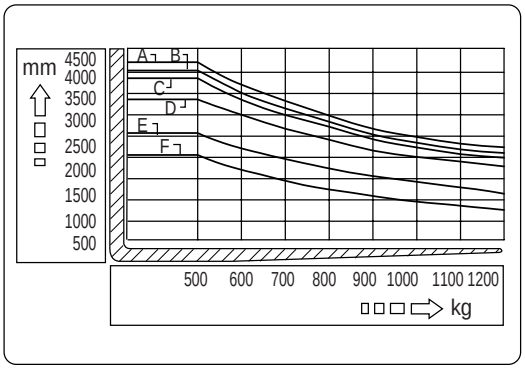 A. 4000mm MAST B. 4250mm MAST C. 4700mm MAST D. 5100mm MAST E. 5600mm MAST F. 6050mm MAST

IA3M2001

https://truckmanualshub.com/

Capacity Chart

MODEL	DOUBLE TIRE STD, FFL	DOUBLE TIRE FFT
D(G)40SC-2	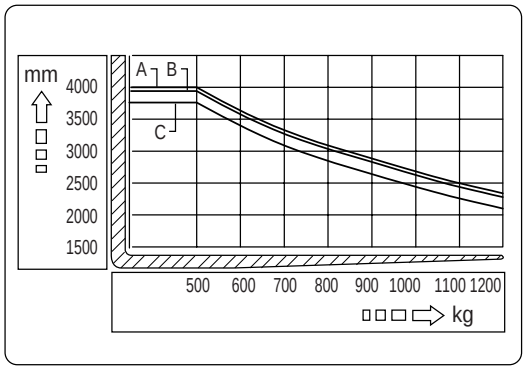 A. 3000, 3300, 3650, 4000mm MAST B. 4250mm MAST C. 4850mm MAST	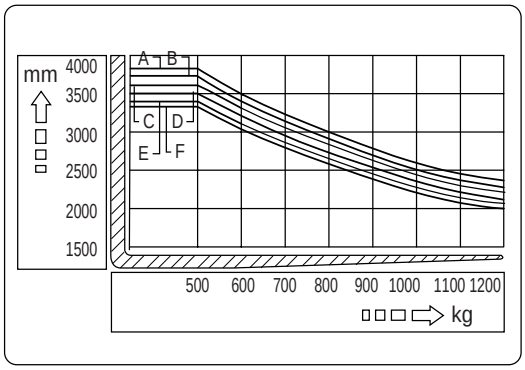 A. 4000mm MAST B. 4250mm MAST C. 4700mm MAST D. 5150mm MAST E. 5600mm MAST F. 6050mm MAST
D(G)45SC-2	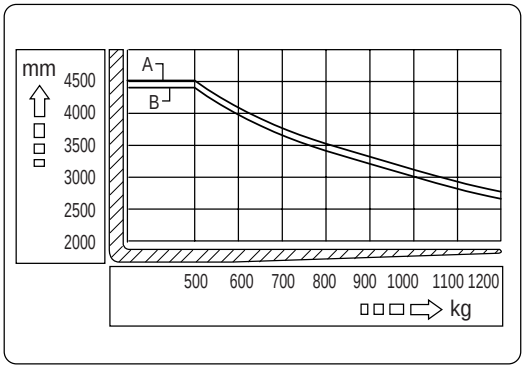 A. 3000, 3300, 3650, 4000, 4250mm MAST B. 4850mm MAST	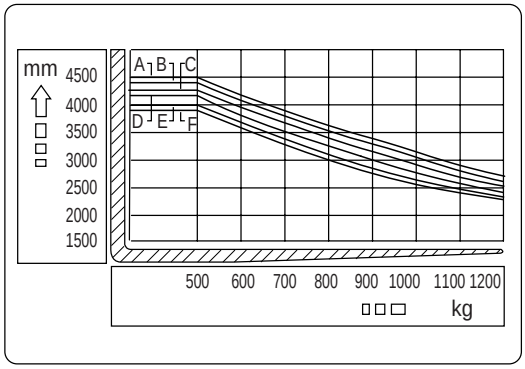 A. 4000mm MAST B. 4520mm MAST C. 4700mm MAST D. 5150mm MAST E. 5600mm MAST F. 6050mm MAST
D(G)50SC-2	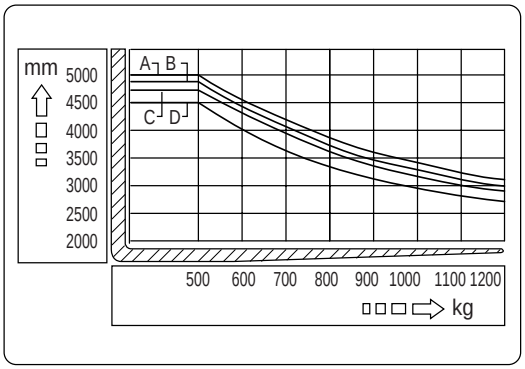 A. 3000, 3300, 3650mm MAST B. 4000mm MAST C. 4250mm MAST D. 4850mm MAST	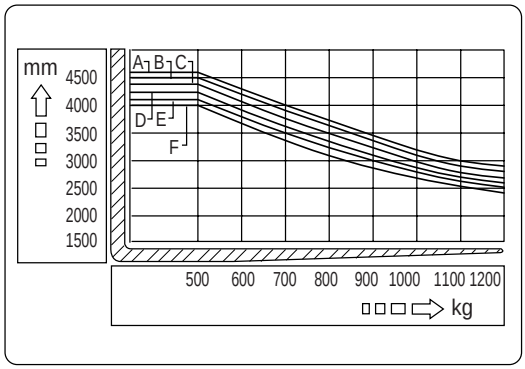 A. 4000mm MAST B. 4250mm MAST C. 4700mm MAST D. 5150mm MAST E. 5600mm MAST F. 6050mm MAST IA3M2002

https://truckmanualshub.com/

Capacity Chart (with Side Shifter)

MODEL	SINGLE TIRE STD, FFL	SINGLE TIRE FFT
D(G)40SC-2	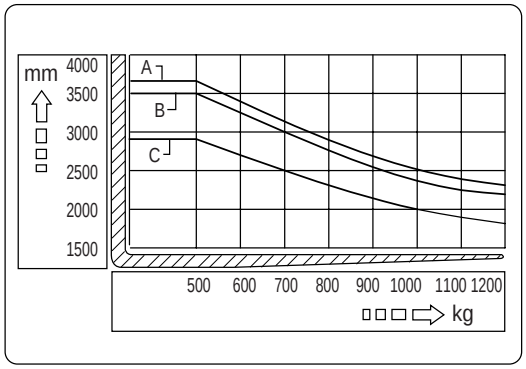 A. 3000, 3300, 3650, 4000mm MAST B. 4250mm MAST C. 4850mm MAST	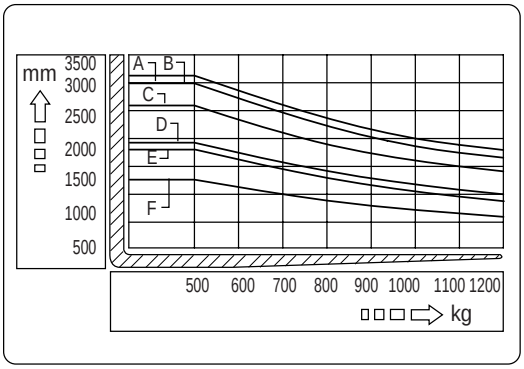 A. 4000mm MAST B. 4250mm MAST D. 5150mm MAST E. 5600mm MAST F. 6050mm MAST
D(G)45SC-2	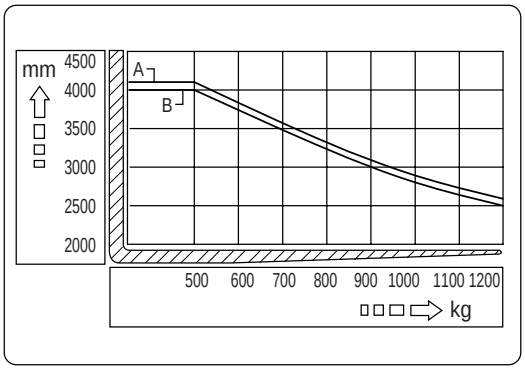 A. 3000, 3300, 3650, 4000, 4250mm MAST B. 4850mm MAST	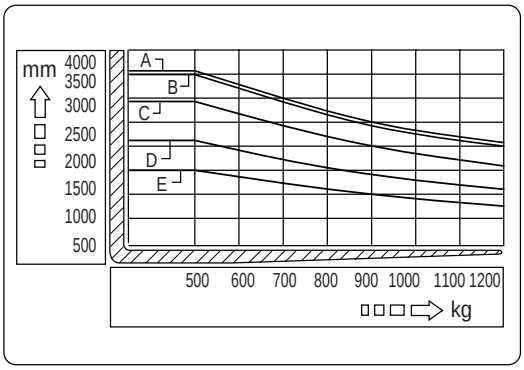 A. 4000, 4250mm MAST B. 4700mm MAST C. 5150mm MAST D. 5600mm MAST E. 6050mm MAST
D(G)50SC-2	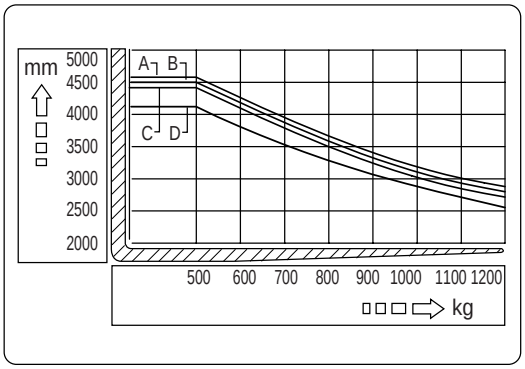 A. 3000, 3300, 3650mm MAST B. 4000mm MAST C. 4250mm MAST D. 4850mm MAST	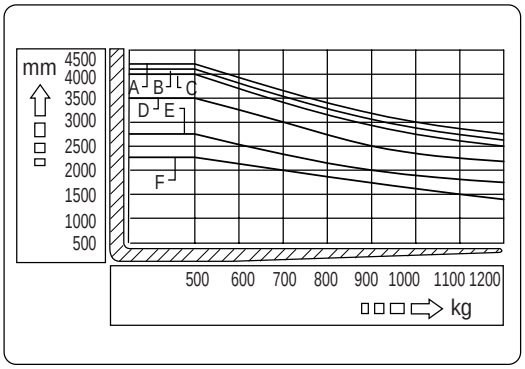 A. 4000mm MAST B. 4250mm MAST C. 4700mm MAST D. 5100mm MAST E. 5600mm MAST F. 6050mm MAST

IA3M2003

https://truckmanualshub.com/

Capacity Chart (with Side Shifter)

MODEL	DOUBLE TIRE STD, FFL	DOUBLE TIRE FFT
D(G)40SC-2	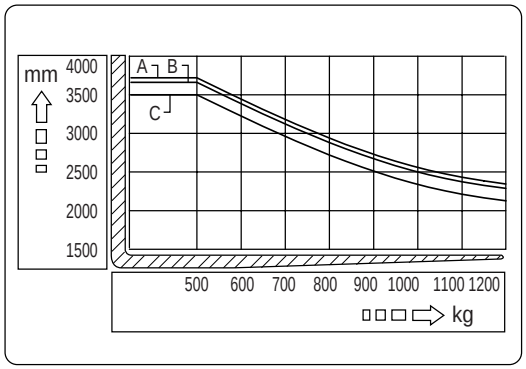 A. 3000, 3300, 3650, 4000mm MAST B. 4250mm MAST C. 4850mm MAST	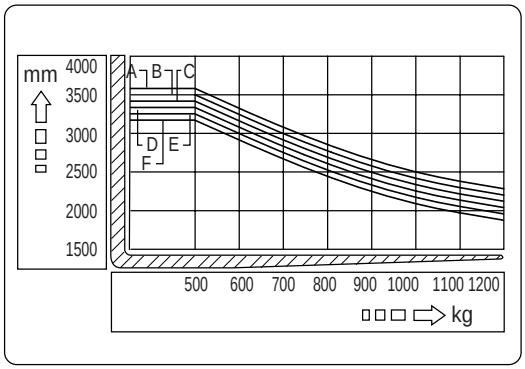 A. 4000mm MAST B. 4250mm MAST C. 4700mm MAST D. 5150mm MAST E. 5600mm MAST F. 6050mm MAST
D(G)45SC-2	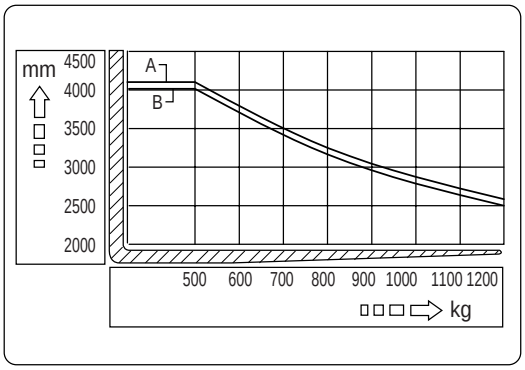 A. 3000, 3300, 3650, 4000, 4250mm MAST B. 4850mm MAST	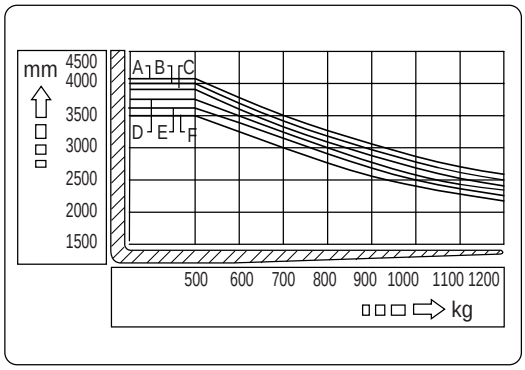 A. 4000mm MAST B. 4520mm MAST C. 4700mm MAST D. 5150mm MAST E. 5600mm MAST F. 6050mm MAST
D(G) 50SC-2	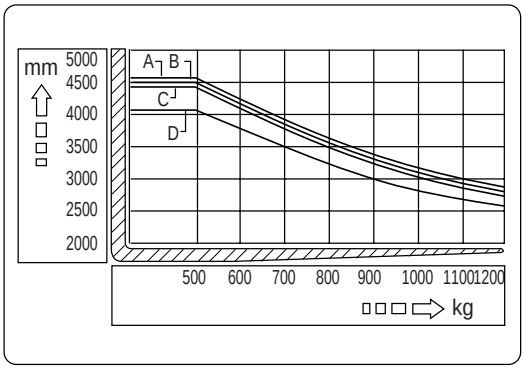 A. 3000, 3300, 3650mm MAST B. 4000mm MAST C. 4250mm MAST D. 4850mm MAST	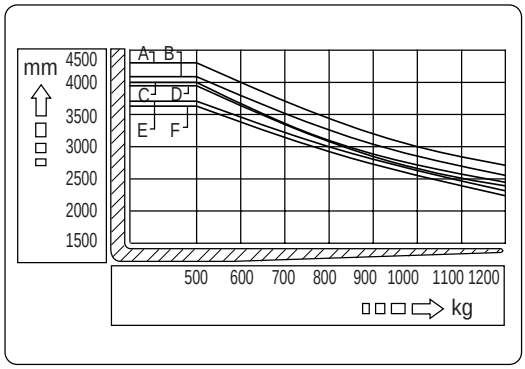 A. 4000mm MAST B. 4250mm MAST C. 4700mm MAST D. 5150mm MAST E. 5600mm MAST F. 6050mm MAST IA3M2004

https://truckmanualshub.com/

Capacity Chart

MODEL	SINGLE TIRE STD, FFL	SINGLE TIRE FFT
D(G)35S-2	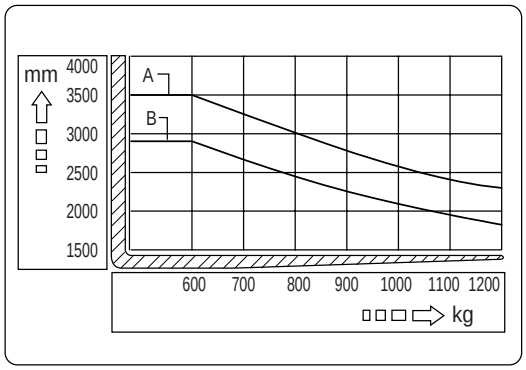 A. 3000, 3300, 3650, 4000, 4250mm MAST B. 4850mm MAST	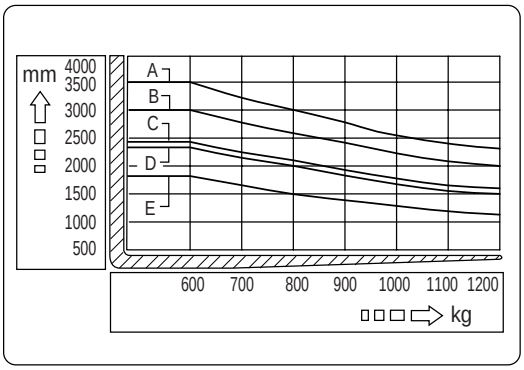 A. 4000, 4250mm MAST B. 4700mm MAST C. 5150mm MAST D. 5600mm MAST E. 6050mm MAST
D(G)40S-2	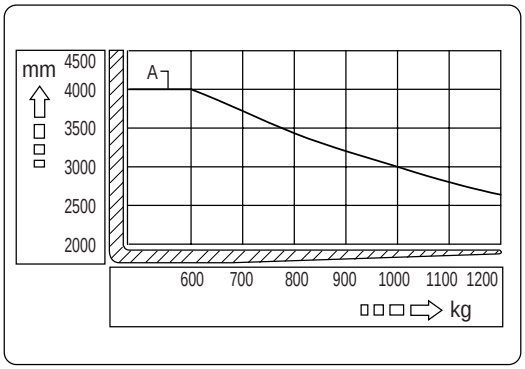 A. 3000, 3300, 3650, 4000, 4250, 4850mm MAST	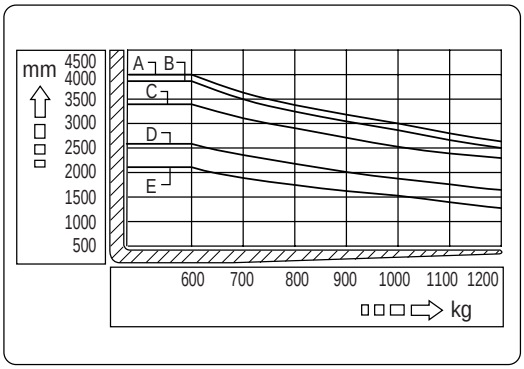 A. 4000, 4250mm MAST B. 4700mm MAST C. 5150mm MAST D. 5600mm MAST E. 6050mm MAST
D(G)45S-2	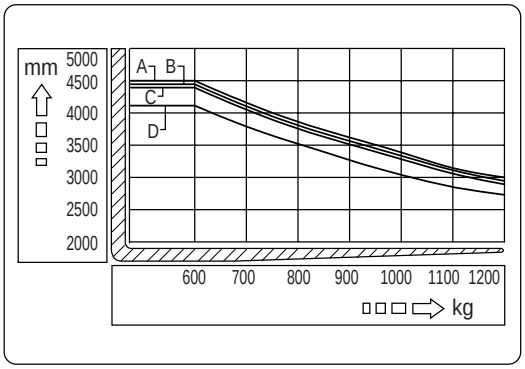 A. 3000, 3300, 3650mm MAST B. 4000mm MAST C. 4250mm MAST D. 4850mm MAST	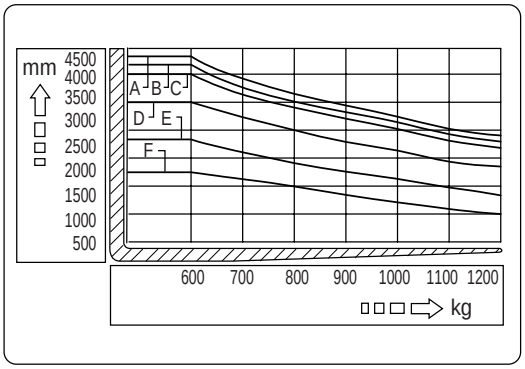 A. 4000mm MAST B. 4250mm MAST C. 4700mm MAST D. 5100mm MAST E. 5600mm MAST F. 6050mm MAST IA3M2005

https://truckmanualshub.com/

Capacity Chart

MODEL	DOUBLE TIRE STD, FFL	DOUBLE TIRE FFT
D(G)35S-2	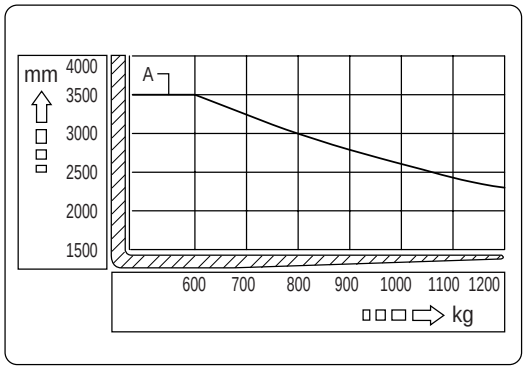 A. 3000, 3300, 3650, 4000, 4250, 4850mm MAST	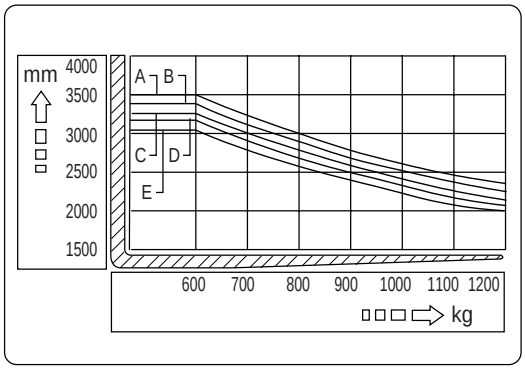 A. 4000, 4250mm MAST B. 4700mm MAST C. 5150mm MAST D. 5600mm MAST E. 6050mm MAST
D(G)40S-2	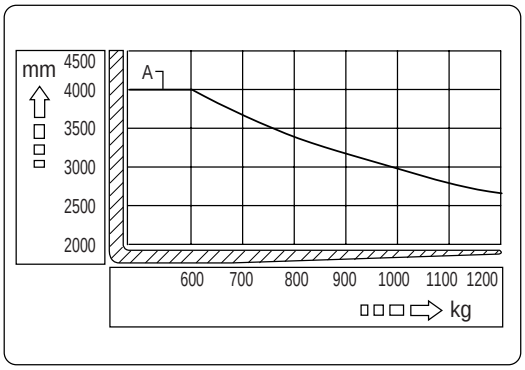 A. 3000, 3300, 3650, 4000, 4250, 4850mm MAST	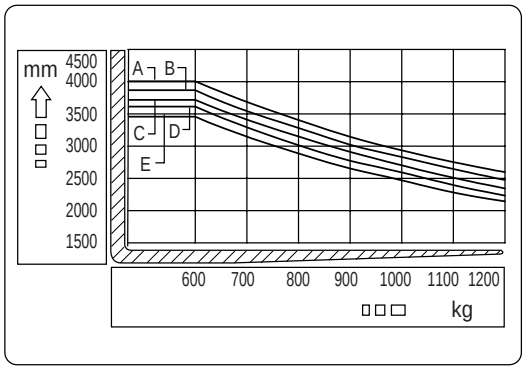 A. 4000, 4250mm MAST B. 4700mm MAST C. 5150mm MAST D. 5600mm MAST E. 6050mm MAST
D(G)45S-2	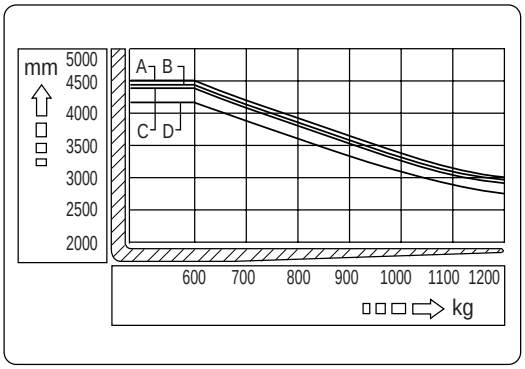 A. 3000, 3300, 3650mm MAST B. 4000mm MAST C. 4250mm MAST D. 4850mm MAST	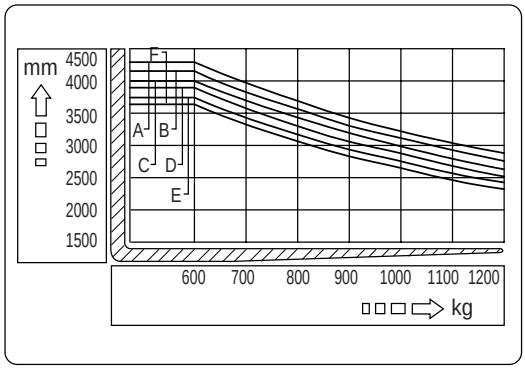 A. 4000mm MAST B. 4250mm MAST C. 4700mm MAST D. 5150mm MAST E. 5600mm MAST F. 6050mm MAST IA3M2006

https://truckmanualshub.com/

Capacity Chart (with Side Shifter)

MODEL	SINGLE TIRE STD, FFL	SINGLE TIRE FFT
D(G)35S-2	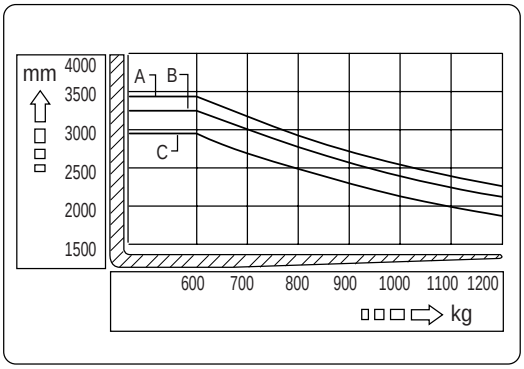 A. 3000, 3300, 3650, 4000mm MAST B. 4250mm MAST C. 4850mm MAST	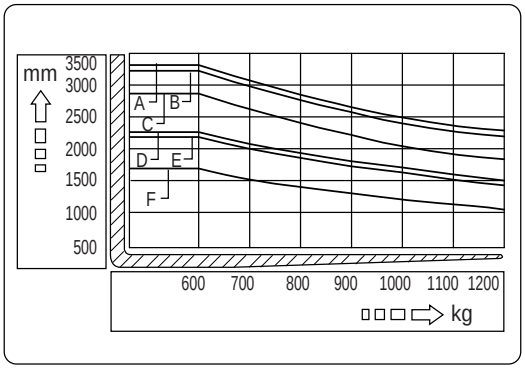 A. 4000mm MAST B. 4250mm MAST C. 4700mm MAST D. 5150mm MAST E. 5600mm MAST F. 6050mm MAST
D(G)40S-2	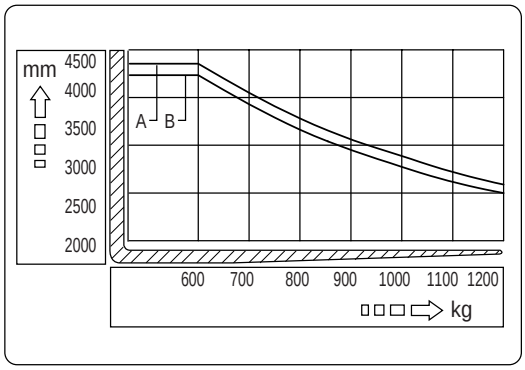 A. 3000, 3300, 3650, 4000, 4250mm MAST B. 4850mm MAST	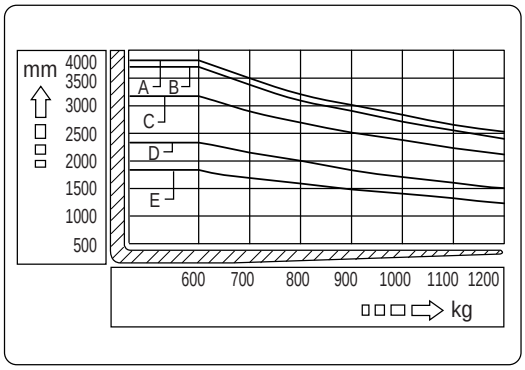 A. 4000, 4250mm MAST B. 4700mm MAST C. 5150mm MAST D. 5600mm MAST E. 6050mm MAST
D(G)45S-2	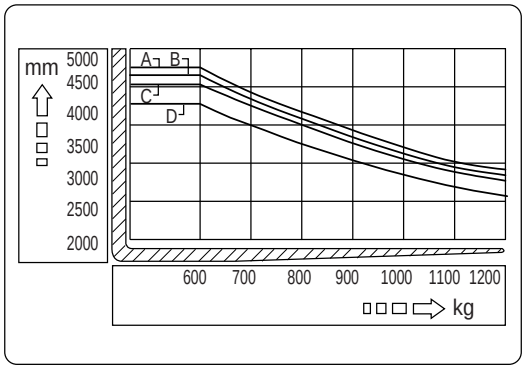 A. 3000, 3300, 3650mm MAST B. 4000mm MAST C. 4250mm MAST D. 4850mm MAST	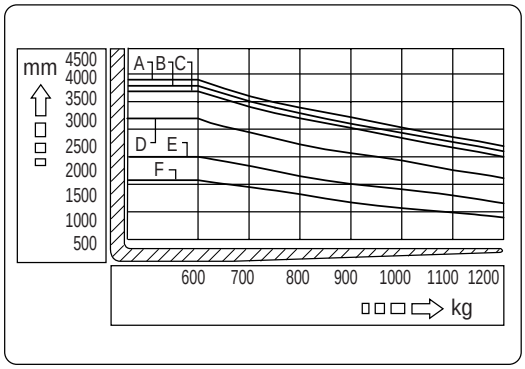 A. 4000mm MAST B. 4250mm MAST C. 4700mm MAST D. 5100mm MAST E. 5600mm MAST F. 6050mm MAST

IA3M2007

https://truckmanualshub.com/

Capacity Chart (with Side Shifter)

MODEL	DOUBLE TIRE STD, FFL	DOUBLE TIRE FFT
D(G)35S-2	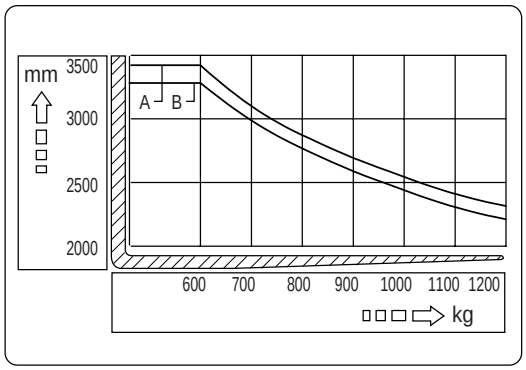 A. 3000, 3300, 3650, 4000, 4250mm MAST B. 3450mm MAST	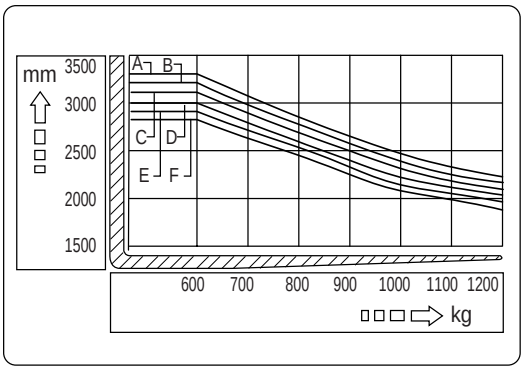 A. 4000mm MAST B. 4250mm MAST C. 4700mm MAST D. 5150mm MAST E. 5600mm MAST F. 6050mm MAST
D(G)40S-2	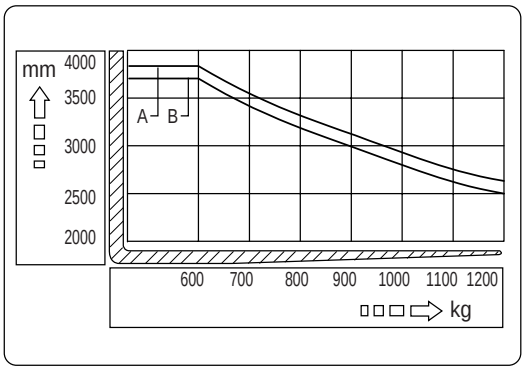 A. 3000, 3300, 3650, 4000, 4250mm MAST B. 3450mm MAST	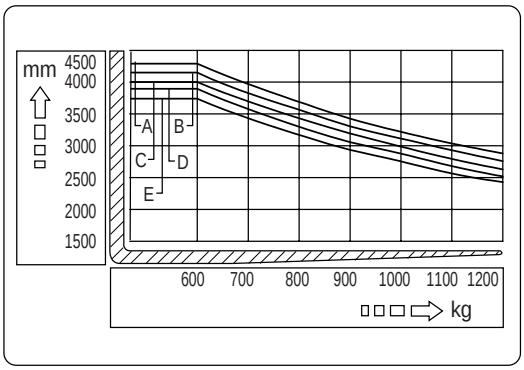 A. 4000, 4250mm MAST B. 4700mm MAST C. 5150mm MAST D. 5600mm MAST E. 6050mm MAST
D(G)45S-2	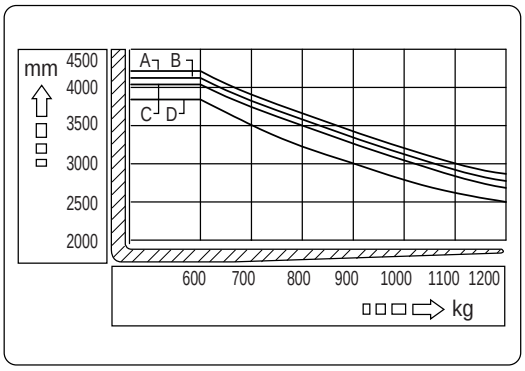 A. 3000, 3300, 3650mm MAST B. 4000mm MAST C. 4250mm MAST D. 4850mm MAST	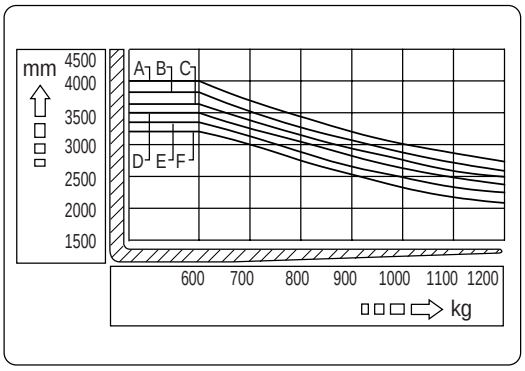 A. 4000mm MAST B. 4250mm MAST C. 4700mm MAST D. 5150mm MAST E. 5600mm MAST F. 6050mm MAST IA3M2014

https://truckmanualshub.com/

Serial Number

Serial Number Locations

For quick reference, record your lift truck's serial numbers in the spaces provided below the photographs.

Lift Truck Serial Number

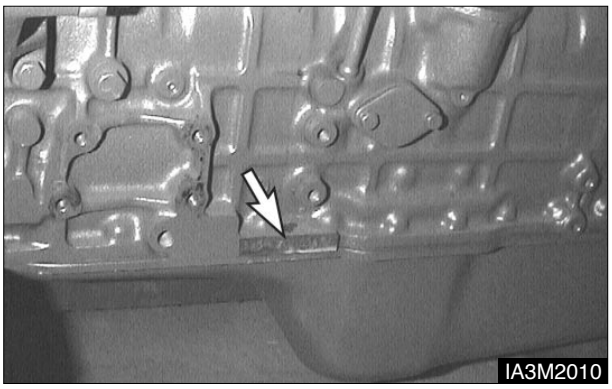

5.8. liter Diesel Engine Serial Number

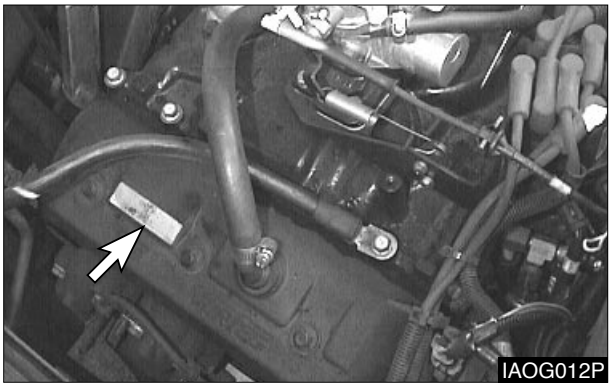

4.3. liter GM Vortec Engine Serial Number

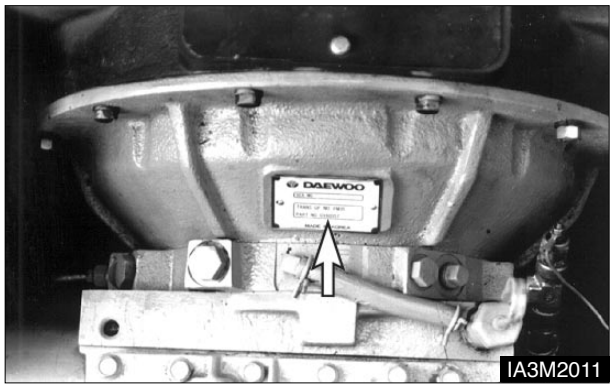

Transmission Serial Number

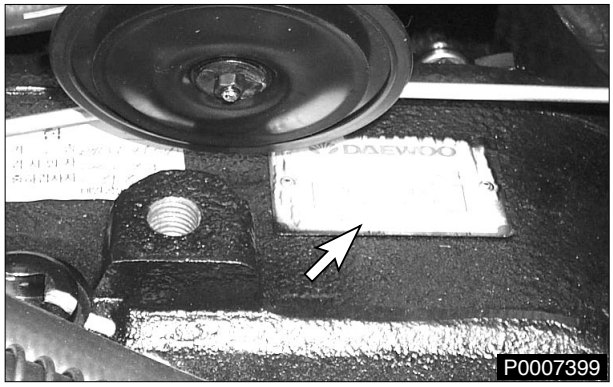

DRIVE AXLE Serial Number

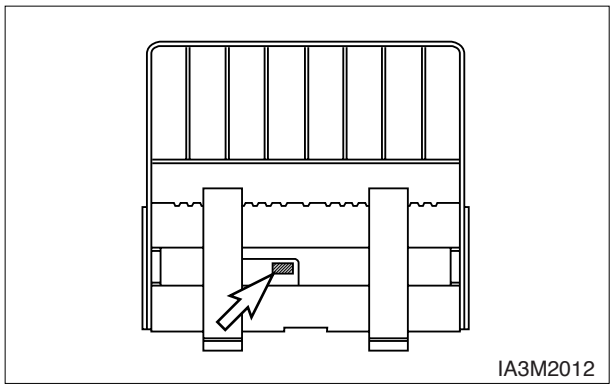

Typical Example

Side Shifter Serial Number

https://truckmanualshub.com/

Operator's Warning and Identification Plate

Familiarize yourself with the OPERATOR'S WARING, IDENTIFICATION, LIFT CAPACITY and ATTACHMENT PLATES. DO NOT exceed CAPACITY AS EQUPPED load ratings.

Operator’s Warning Plate

Located by the right side of the operator’s seat on the engine compartment cover.

Identification, Lift Capacity and Attachment Plate

Located on the cowl to the right side of the steering column.

Below are abbreviations that may appear on the IDENTIFICATION, LIFT CAPACITY and ATTACHMENT PLATES and their meanings.

Mast Abbreviations

STD-Standard Mast (single inner member, low free lift)

FF-Full Free Lift Mast (single inner member with high free lift duplex cylinder)

FFT-Triple Lift Mast (two inner members) with either low or full free lift characteristics.

QUAD-Quadruple (Quad) Mast (with three inner members)

NOTE : When only a mast-type is listed on the identification plate, a standard carriage and forks are used.

https://truckmanualshub.com/

Attachment Abbreviations (includes Special Forks)

SC-Special Carriage-increased width, height or outreach

SSS - Shaft-type Sideshift Carriage

HSS - Hook-type Sideshift Carriage (ITA)

CW - Counterweight

SF - Special Forks

SWS - Swing Shift, Sideshift

RAM - Ram or Boom

DBCBH - Double Cube Block Handler

HFP - Hydraulic Fork Positioner

CR - Crane Arm or Crane Boom

TH - Tire Handler

CTH - Container Handler

LPP - Load Push-Pull Device

CC - Carton Clamp

RC - Roll Clamp

LS - Load Stabilizer

PWH - Pulp Wood Handler

SS-ST - Sideshift-Side Tilt Carriage

https://truckmanualshub.com/

Operator’s Station and Monitoring Systems

Instrument Panel

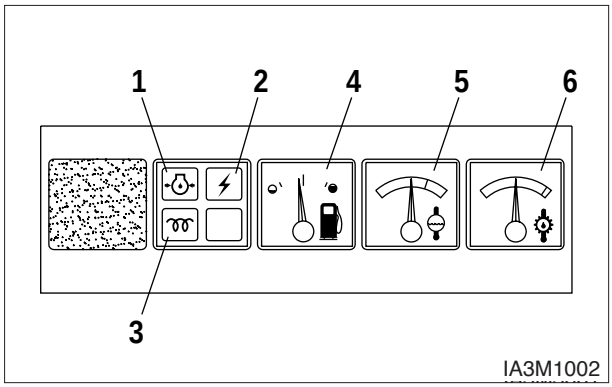

1. Engine Oil Indicator Light - Indicates insufficient engine oil pressure. The light will come on when the ignition switch is turned to the ON position. If the light turns on while operating the lift trucks, insufficient engine oil lubricating system pressure is indicated. Park the lift truck and stop the engine. Check the system for a malfunction. The light will turn on when the oil pressure drops to approximately 70kPa(10psi).

2. Alternator Indicator Light - Indicates if the battery charging system is operational. The light will come on when the ignition switch is turned to the ON position.

The light should go off after the engine is started, indicating the alternator is producing sufficient voltage to charge the battery. If the light turns on with the engine running, check the alternator charging system for a malfunction.

3. Diesel Engine Start Preheat Indicator Light - The light will come ON when the key is turned to the ON position from the OFF position. This indicates that the glow plugs are preheating the precombustion chambers for easier starting.

The amount of time needed to preheat the precombustion chambers is approximately seven seconds, depending on the surrounding air temperature. When the light goes OFF the maximum precombustion chamber temperature has been reached and the key can be turned to the START position to start the engine.

4. Fuel Level Gauge - Indicates fuel level. (Diesel and gasoline)

5. Engine Coolant Gauge - Indicates coolant temperature. If the pointer moves beyond the green band while operating the lift truck, overheating is indicated. Park the lift truck and stop the engine.

Check the cooling system for a malfunction. The pointer will be at the end of the green band when the coolant temperature reaches approximately 106°C (220°F) on all engines.

6. Transmission Oil Temperature Gauge - Indicates transmission oil temperature. If the pointer moves beyond the green band while operating the lift truck, excessive transmission oil temperature is indicated. Park the lift truck and stop the engine.

⚠ WARNING

Frequent rapid starts at 2nd speed can be the cause of overheating at torque converter. With this operating condition, the pointer can sometimes exceed the green band. If this situation occurs from time to time, please avoid this operating condition to protect the transmission and increase the work efficiency. That is, start the truck at 1st speed and shift to 2nd speed to increase the travel speed.

https://truckmanualshub.com/

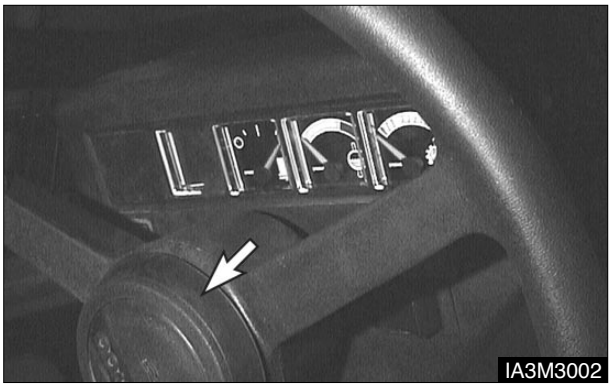

7. Horn Switch - Push on the horn button to sound the horn.

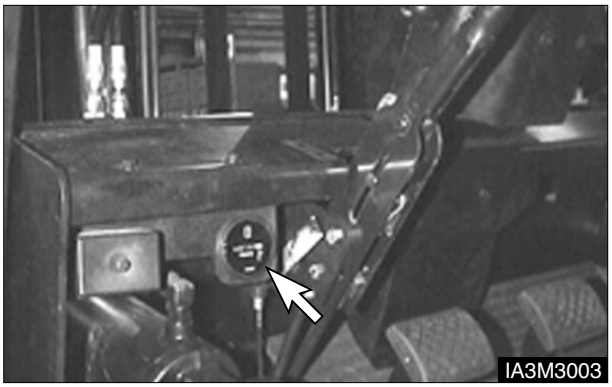

8. Service Hour Meter - Indicates the total number of hours the engine and the lift truck have operated. The hour meter will operate when the ignition switch is in the ON position, whether the engine is running or not. The hour meter is used to determine lubrication and maintenance intervals.

Engine Compartment

1. The engine compartment is accessible by pulling the latch and raising the hood and seat assembly.
(**Note** : unlock latch before pulling-if key equipped)

2. The hood and seat assembly is held up by a support cylinder. Make certain the air cylinder is operating properly and will hold the hood up before doing anything in the engine compartment.

https://truckmanualshub.com/

Circuit Breaker

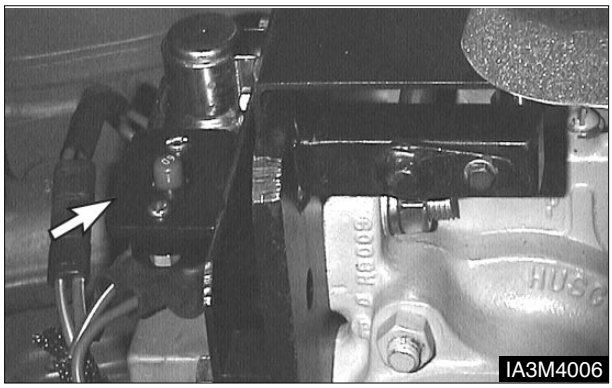

Diesel Truck

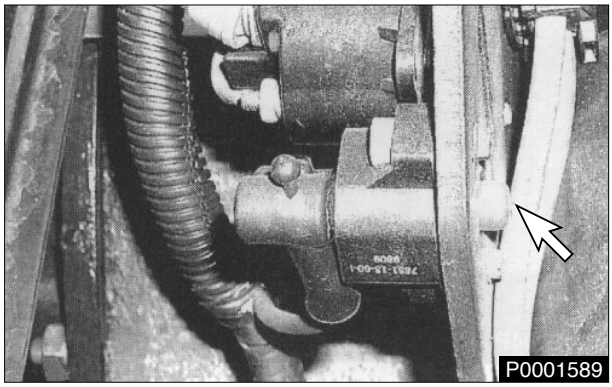

LPG Truck

Circuit Breaker - Protects the main electrical circuits. To reset the circuit breaker, push the button in. Located in the engine compartment.

Electrical Disconnect Switch (If Equipped)

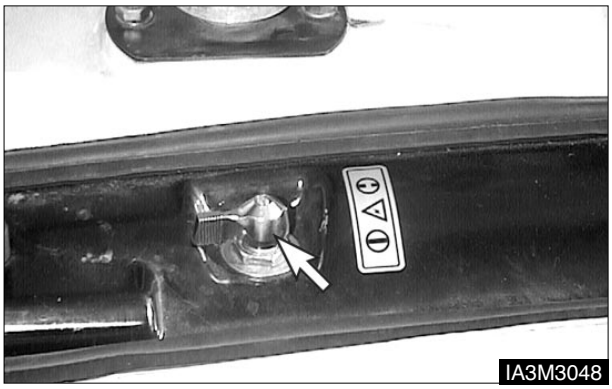

1. ON-Connects the battery for electrical power to all electrical circuits.

2. OFF-Disconnects the battery from all electrical circuits.

Seat

NOTE : Seat arrangments may vary. Basic operation will be similar.

Seat adjustment should be checked at the beginning of each shift and when operators change.

Lock the seat into position before operating, to prevent an unexpected seat change.

Adjust seat to allow full brake pedal travel with operator's back against seat back.

NOTE : The seat can only be correctly adjusted with the operator fully seated.

https://truckmanualshub.com/

Lift Truck Controls

Direction Control Lever

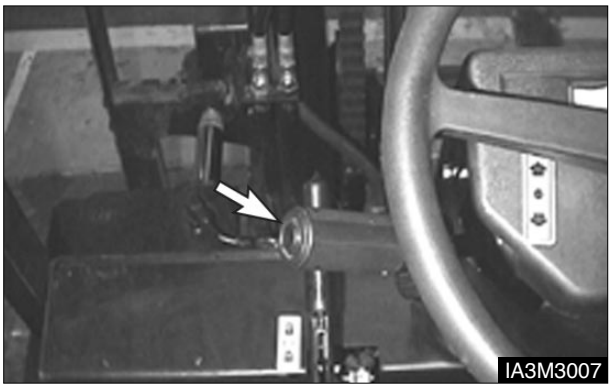

1. **Forward** - Push the lever forward for FORWARD direction travel.

2. **Neutra**l - Move the lever to center position for NEUTRAL.

3. **Reverse** - Pull the lever back for REVERSE direction travel.

Transmission Speed Range Lever

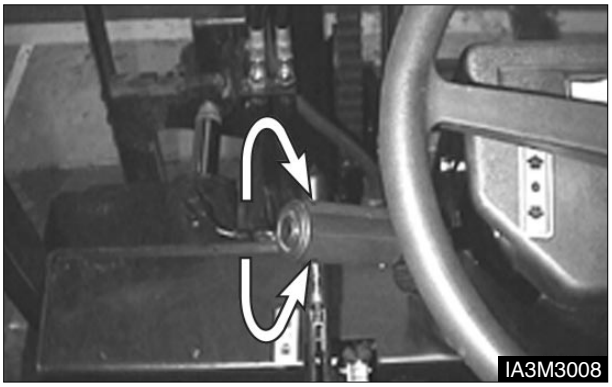

1. **High** - Rotate the lever counterclockwise for HIGH speed range.

2. **Low** - Rotate the lever clockwise for LOW speed range.

Transmission Inching Control Pedal

Inching Control Pedal - Pushing down on the inching pedal, modulates the hydraulic pressure to the clutch packs, permitting disc slippage.

Further pushing on the pedal completely relieves clutch pack pressure and applies the service brakes to stop and hold the lift truck.

NOTE : The purpose of the inching control pedal is to provide precise inching control at slow travel speed, with high engine rpm. This is used for fast hydraulic lift during load approach, pickup or positioning.

Plate for Function of Pedals (If Equipped)

It shows the function of each pedals (inching or clutch, brake and accelerator pedal).

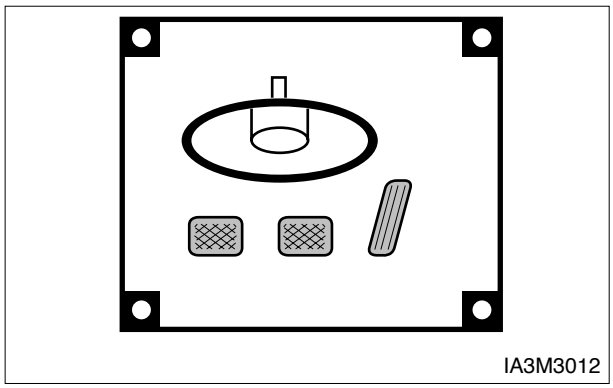

Located on the cowl.

https://truckmanualshub.com/

Service Brake Pedal

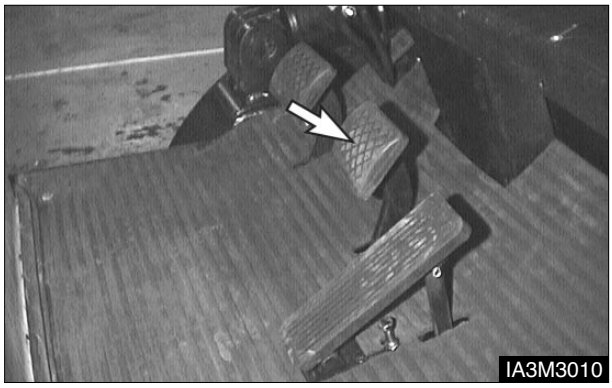

Push DOWN on the brake pedal to slow or stop the lift truck.

RELEASE the brake pedal to allow the lift truck to move.

Accelerator Pedal

Push DOWN on the pedal to increase engine rpm (speed).

RELEASE the pedal to decrease engine rpm (speed).

Parking Brake Lever

Pull the lever BACK to engage the parking brake.

Push the lever FORWARD to release the parking brake.

Lift Control

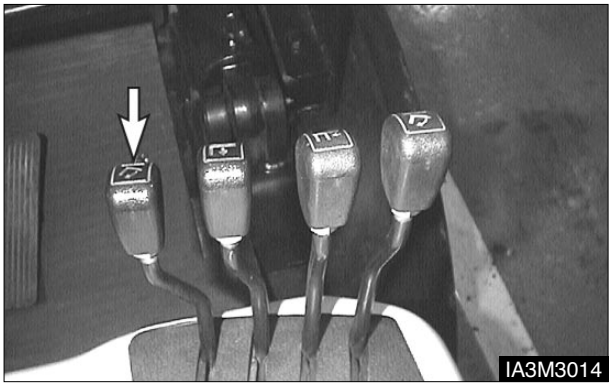

NOTE : To prevent a sudden change of position of the load, operater all lift, tilt and attachment controls smoothly.

1. **Lower Position** - Push the lever FORWARD smoothly to lower the load.

2. **Hold Position** - When the lever is released it will return to the HOLD or center position. Lifting or lowering action will stop.

3. **Lift Position** - Pull the lever BACK smoothly to lift the load.

https://truckmanualshub.com/

Tilt Control

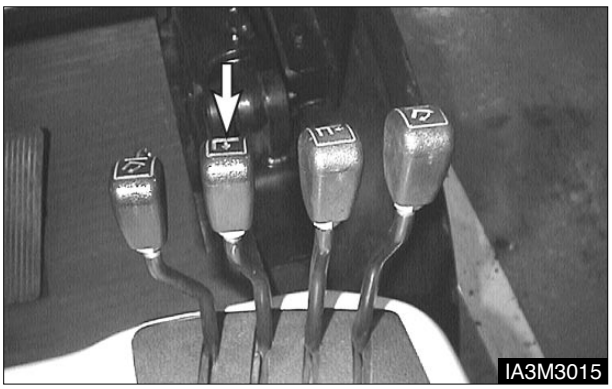

1. **Mast Tilt Forward** - Push the lever FORWARD smoothly to tilt the mast forward.

2. **Mast Hold** - When the lever is released it will return to the HOLD or center position. Tilting action will stop.

3. **Mast Tilt Back** - Pull the lever BACK smoothly to tilt the mast backward.

Sideshift Attachment (If Equipped)

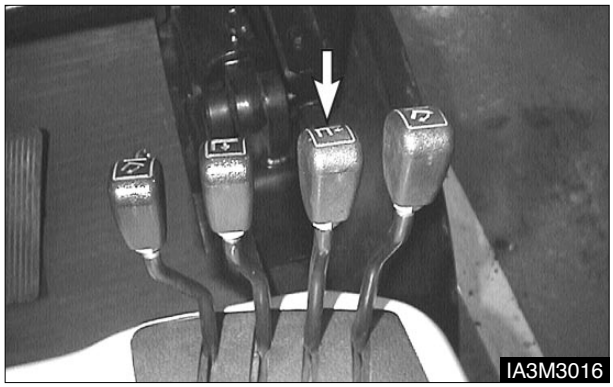

1. **Sideshift Left** - Push the lever FORWARD to shift the carriage to the left.

2. **Sideshift Hold** - When the lever is released it will return to the HOLD or center position. Sideshifting action will stop.

3. **Sideshift Right** - Pull the lever BACK to shift the carriage to the right.

https://truckmanualshub.com/

Refueling

Diesel Engine Equipped

⚠ WARNING

Explosive fumes may be present during refueling.

Do not smoke in refueling areas.

Lift truck should be refueled only at designated safe locations. Safe outdoor locations are preferable to those indoors.

Stop the engine and get off the lift truck during refueling.

NOTICE

Do not allow the lift truck to become low on fuel or completely run out of fuel. Sediment or other impurities in the fuel tank could be drawn into the fuel system. This could result in difficult starting or damage to components.

Fill the fuel tank at the end of each day of operation to drive out moisture laden air and to prevent condensation. In the cold weather, the moisture condensation can cause rust in the fuel system and hard starting due to it's freezing. Do not fill the tank to the top. Fuel expands when it gets warm and may overflow.

1. Park the lift truck only at a designated safe location. Place the transmission in NEUTRAL. Lower the forks to the ground. Engage the parking brake. Stop the engine.

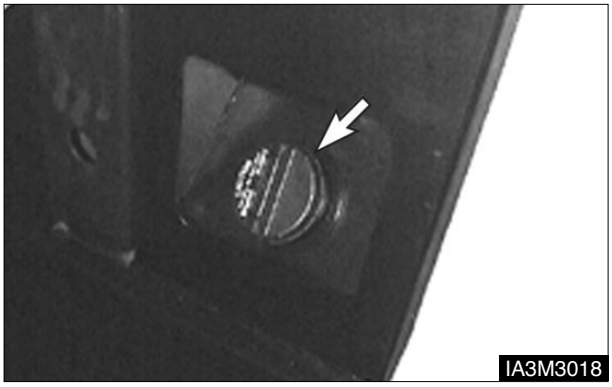

2. Remove the filler cap.

3. Fill the fuel tank slowly. Install the filler cap. If spillage occurs, wipe off excess fuel and wash down area with water.

NOTE : Drain water and sediment from fuel tank as required by prevailing conditions. Also, drain water and sediment from the main fuel storage tank weekly and before the tank is refilled. This will help prevent water or sediment being pumped from the storge tank into the lift truck fuel tank.

https://truckmanualshub.com/

Changing LP-Gas Tanks

1. Park the lift truck on level ground, with the parking brake applied, the transmission in NEUTRAL, the forks lowered and the engine running at low idle.

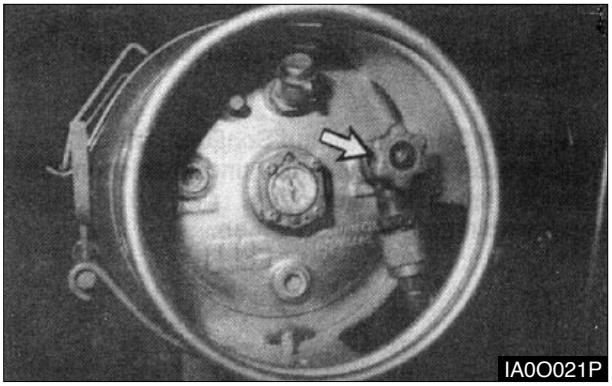

2. Close the fuel shut off valve at the LP - Gas tank. Run the engine until it stops, then turn off the ignition switch and the disconnect switch (if equipped).

3. Disconnect the fuel supply line.

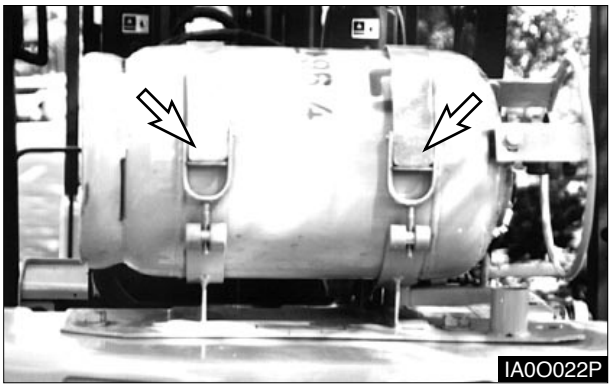

4. Loosen the retaining clamps and remove the tank.

NOTICE

If the location pin (dowel) is missing or broken, be sure the pin is replaced.

---

5. Check the mounting to be sure the locating pin (dowel) is not missing or broken.

6. Check to be sure that the LP-Gas warning plate is in position on the lift truck, and is legible.

7. Check to be sure the replacement tank is of the correct type.

8. Inspect the replacement tank for damage such as dents, scrapes or gouges and for indication of leakage at valves or threaded connections.

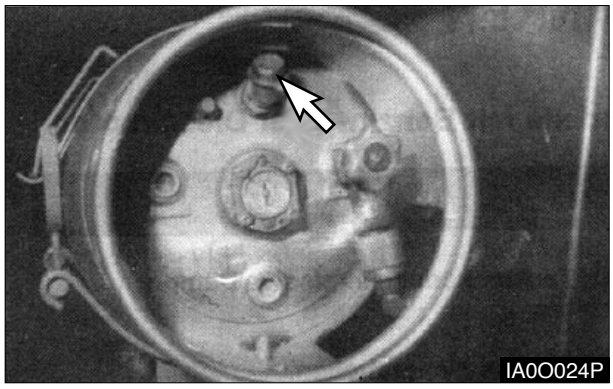

9. Check for debris in the relief valve, for damage to various valves and liquid level gauge.

10. Inspect the quick-disconnect couplings for deterioration, damage or missing flexible seals.

https://truckmanualshub.com/

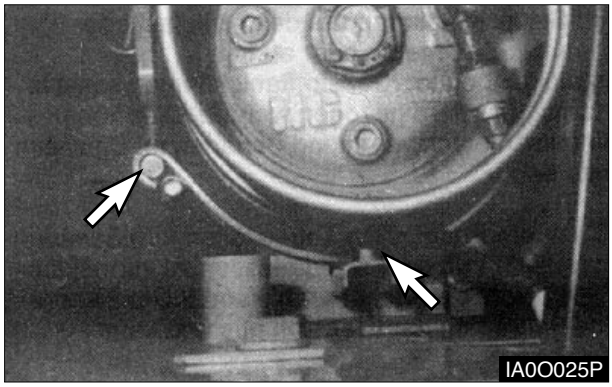

11. Position the replacement tank so that the locating pin (dowel) is in place.

12. Clamp the tank securely.

13. Connect the fuel supply line.

14. Open the fuel valve by slowly turning the valve counterclockwise. If the fuel valve is opened too quickly, a back pressure check valve will shut off the fuel supply. If this happens, close the fuel valve completely. Wait five seconds and then open the fuel valve very slowly.

15. Inspect the LP-Gas fuel lines and fittings with a soap solution after filling the tank or when looking for leaks.

https://truckmanualshub.com/

Before Starting the Engine

Walk-Around Inspection

Make a thorough walk-around inspection before mounting the lift truck or starting the engine. Look for such items as loose bolts, debris buildup, oil or coolant leaks. Check condition of tires, mast, carriage, forks or attachments. Have repairs made as needed and all debris removed.
Before starting the gas engine, push the accelerator pedal all the way down once and then slowly it to set the automatic choke.

1. Inspect the operator's compartment for loose items and cleanliness.

2. Inspect the instrument panel for broken or damaged indicator lights or gauges.

3. Test the horn and other safety devices for proper operation.

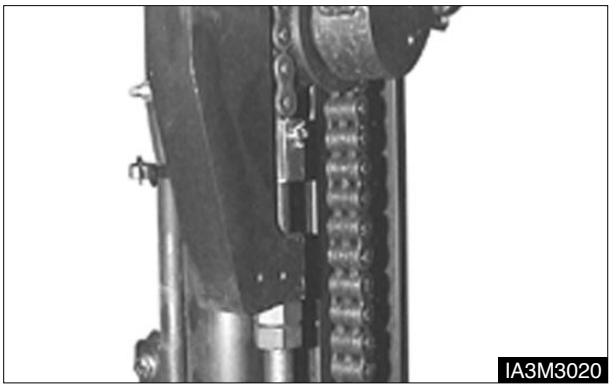

4. Inspect the mast and lift chains for wear, broken links, pins and loose rollers.

5. Inspect the carriage, forks or attachments for wear, damage and loose or missing bolts.

6. Inspect the tires and wheels for cuts, gouges, foreign objects, inflation pressure and loose or missing bolts.

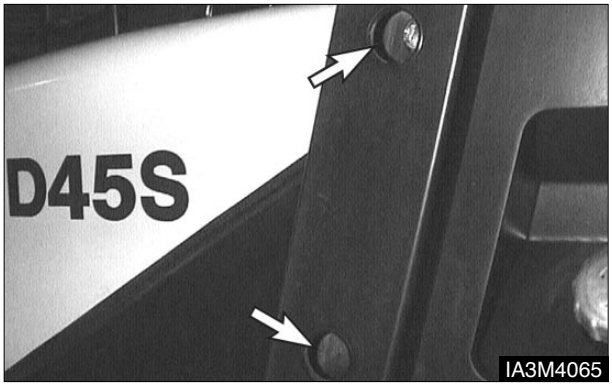

7. Inspect the overhead guard for damage and loose or missing mounting bolts.

8. Inspect the hydraulic system for leaks, worm hoses or damaged lines.

9. Look for transmission and drive axle leaks on the lift truck and on the ground.

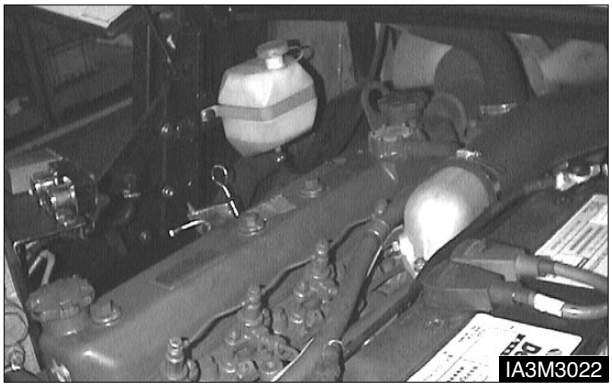

Diesel Truck

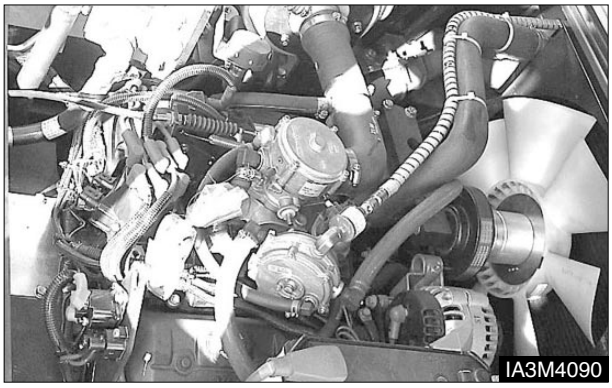

LPG Truck

https://truckmanualshub.com/

10. Inspect the engine compartment for oil, coolant and fuel leaks.

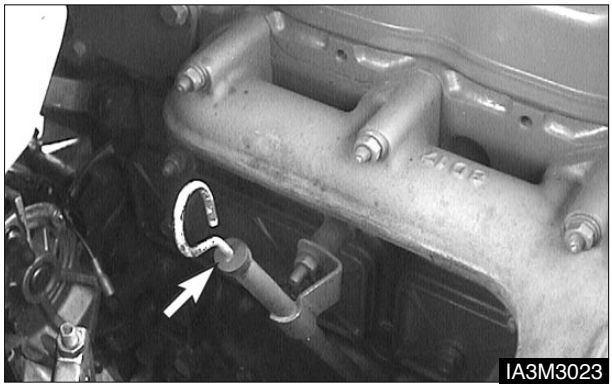

11. Measure the engine crankcase oil level with the dip stick. Maintain the oil level between the MAX. and MIN., (or FULL and ADD) notches on the dip stick.

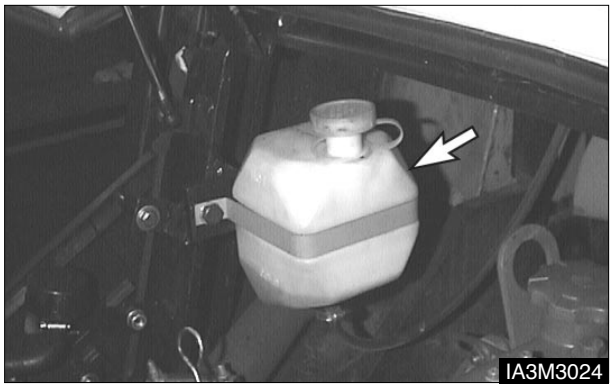

12. Observe the engine coolant level in the coolant recovery bottle. With the engine cold, maintain the level to the COLD mark. If the recovery bottle is empty, also fill the radiator at the top tank.

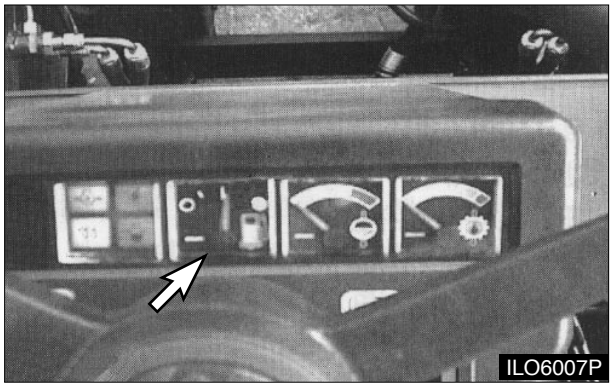

13. Observe the fuel level gauge after starting the truck. Add fuel if necessary.

14. In case of LPG truck, if needed, change LPG Fuel Tank as the procedure of changing LP-Gas tanks in Refueling Section.

⚠ WARNING

Personal injury may occur from accidents caused by improper seat adjustment. Always adjust the operator's seat before starting the lift truck engine.

Seat adjustment must be done at the beginning of each shift and when operators change.

15. To position the seat, PUSH the lever away from the seat track and move the seat forward or backward to a comfortable position.

https://truckmanualshub.com/

Lift Fork Adjustment

Hook-type Fork

For load stability, always adjust the forks as wide as possible. Position the load evenly on both forks.

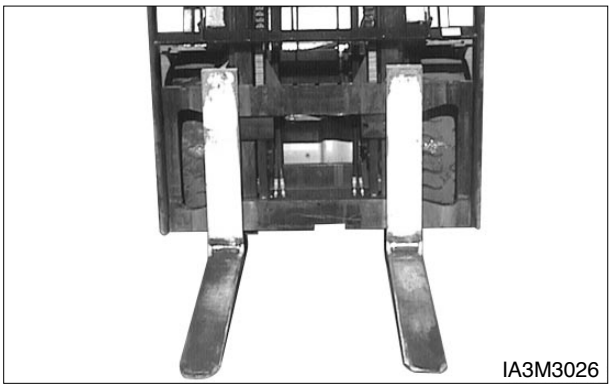

1. Lift the hook pin and slide the fork to the new position.

2. Secure the hook pin in the carriage slot. Follow the same procedure for the other fork.

Inspection, Maintenance and Repair of Lift Truck Forks

The following provides practical guidelines for inspection, maintenance and repair of lift truck forks. It also provides general information on the design and application of forks and the common cause fo fork failures.

Lift truck forks can be dangerously weakened by improper repair or modification. They can also be damaged by the cumulative effects of age, abrasion, corrosion, overloading and misuse.

A fork failure during use can cause damage to the equipment and the load. A fork failure can also cause serious injury.

A good fork inspection and maintenance program along with the proper application can be very effective in preventing sudden on the job failures.

Repairs and modifications should be done only by the fork manufacturer or a qualified technician knowledgeable of the material used and the required welding and heat treatment process.

Users should evaluate the economics of returning the forks to the manufacutrer for repairs or purchasing new forks. This will vary depending on many factors including the size and type of fork.

Forks should be properly sized to the weight and length of the loads, and to the size of the machine on which they are used. The general practice is to use a fork size such that the combined rated capacity of the number of forks used is equal to or greater than the “Standard (or rated) Capacity” of the lift truck.

The individual load rating, in most cases, will be stamped on the fork in a readily visible area. Generally on the top or side of the fork shank.

- A fork rated at 2200 pounds at 24 inch load center will be stamped 2200×24.

- A fork rated at 1200 kg at 500 mm load center wil be stamped 1200×500.

The manufacturer identification and year and date of manufacture is also usually shown.

Some countries have standards or regulations which apply specifically to the inspection and repair of forks.

Users countries have standards for regulations which apply specifically to the inspection and repair of forks.

Users may also refer to the International Organization For Standardization-ISO Technical Report 5057-Inspection and Repair of Fork Arms and ISO Standard 2330-Fork Arms-Technical Characteristics and Testing.

While there are no specific standards or regulations in the United States, users should be familiar with the requirements for inspection and maintenance of lift trucks as provided by the 29 Code Federal Register Safety Standard (s) B56.1, B56.5 or B56.6 as applicable to the type of machine (s) in use.

https://truckmanualshub.com/

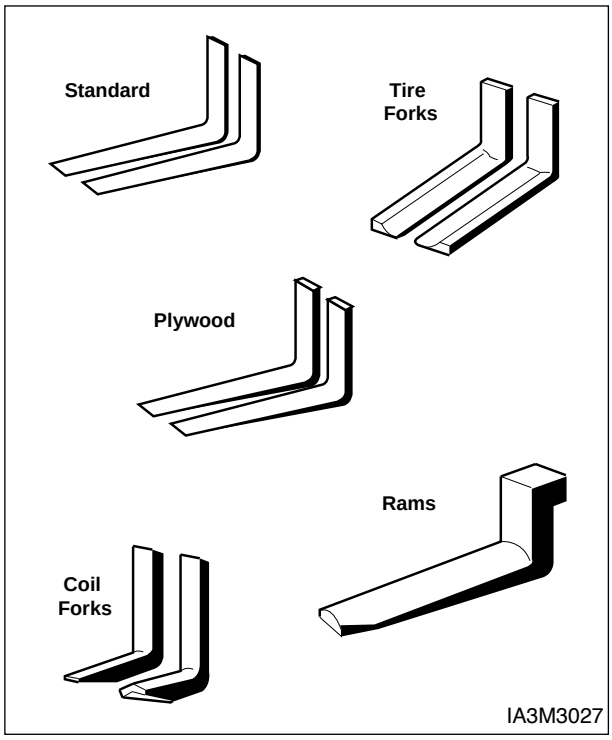

The most common lift truck forks are the standard pallet and the fully tapered forks. Other types of forks and similar engaging devices include lumber and plywood forks, tire forks, coil forks, conctrete block forks and ram forks. Forks may also be provided with special features such as high heat resistance for use in furnace charging or non-sparking for use in hazardous locations.

Forks may be made by several methods. In most cases heat treated alloy steels are used to achieve the desired toughness and strength. Special processes and inspection procedures are required for proper welding of the alloy steels. Welding and machining operations are done prior to heat treatment.

• Forks with forged upset heels

Most forks are made by this process. An upset forging press is used to gather extra steel into the fork heel section as the fork is bent to shape. This strengthens the highly stressed heel area.

• Fully forged forks

Some forks may be fully forged for the purpose of providing improved mechanical properties and in some cases to provide a unique shape or contour.

• Welded forks

A variety of devices such as rams, attachment platens, special purpose forks and some large forks may be fabricated from cold or hot rolled steel.

Causes of Fork Failure

1. Improper Modification or Repair. Fork failure can occur as a result of a field modification involving welding, flame cutting or other similar processes which affect the heat treatment and reduces the strength of the fork.

In most cases, specific processes and techniques are also required to achieve proper welding of the particular alloy steels involved. Critical areas most likely to be affected by improper processing are the heel section, the mounting components and the fork tip.

2. Bent or Twisted Forks. Forks. can be bent out of shape by extreme overloading, glancing blows against walls or other solid objects or using the fork tip as a pry bar.

Bent or twisted forks are much more likely to break and cause damage or injury. They should be removed from service immediately.

3. Fatigue. Parts which are subjected to repeated or fluctuating loads can fail after a large number of loading cycles even though the maximum stress was below the static strength of the part.

The first sign of a fatigue failure is usually a crack which starts in an area of high stress concentration This is usually in the heel section or on the fork mounting.

As the crack progresses under repetitive load cycling, the load bearing cross section of the remaining metal is decreased in size until it becomes insufficient to support the load and complete failure occurs.

Faigue failure is the most common mode of fork failure. It is also one which can be anticipated and prevented by recognizing the conditions which lead up to the failure and by removing the fork service prior to failing.

https://truckmanualshub.com/

• Repetitive Overloading

Repetitive cycling of loads which exceeds the fatigue strength of the material can lead to fatigue failure. The overload could be caused by loads in excess of the rated fork capacity and by use of the fork tips as pry bars. Also, by handling loads in an manner which cause the fork tips to spread and the forks to twist laterally about their mountings.

• Wear

Forks are constantly subjected to abrasion as they slide on floors and loads. The thickness of the fork blade is gradually reduced to the point where it may not be capable of handling the load for which it was designed.

• Stress Risers

Scratches, nicks and corrosion are points of high stress concentration where cracks can develop. These cracks can progress under repetitive loading in a typical mode of fatigue failue.

4. Overloading. Extreme overloading can cause permanent bending or immediate failure of the forks. Using forks of less capacity than the load or lift truck when lifting loads and using forks in a manner for which they were not designed are some common causes of overloading.

Fork Inspection

Establish a daily and 12 month inspection routine by keeping a record for the forks on each lift truck.

Initial information should include the machine serial number on which the forks are used, the fork manufacturer, type, original section size, original length and capacity. Also list any special characteristicsspecified in the fork design.Record the date and results of each inspection, making sure the following information is included :

• Actual wear conditions, such as percent of original blade thickness remaining.

• Any damage, failure or deformation which might impair the use of the truck.

• Note any repairs or maintenance.

An ongoing record of this information will help in idenitifying proper inspection intervals for each operation, in identifying and solving problem areas and in anticipating time replacement of the forks.

First Installation

1. Inspect forks to ensure they are the correct size for the truck on which they will be used. Make sure they are correct length and type for the loads to be handled.

If the forks have been previously used, perform the “12 Month Inspection.”

If the forks are rusted, see “Maintenance and Repair”

2. Make sure fork blades are level to each other within acceptable tolerances. See “Forks, Step 4,” in the “2000 Service Hours or 1 Year” in “Maintenance Intervals.”

3. Make sure positioning lock is in place and working. Lock forks in position before using truck. See “Forks, Step 7,” in the “2000 Service Hours or 1 Year” in “Maintenance Intervals”.

https://truckmanualshub.com/

Daily Inspection - Before First Use and at Each Preventive Maintenance Inspection

1. Visually inspect forks for cracks, especially in the hell section, around the mounting brackets, and all weld areas, Inspect for broken or jagged fork tips, bent or twisted blades and shanks.

2. Make sure positioning lock is in place and working. Lock the forks in position before using the truck. See “2000 Service Hours or 1 Year” in “Maintenance Intervals”.

3. Remove all defective forks from service.

12 Months Inspection

Forks should be inspected, at a minimum, every 12 months. If the truck is being used in a multi-shift or heavy duty operation, they should be checked every six months. See “Forks” in the Maintenance Section of this manual.

Maintenance and Repair

1. Repair forks only in accordance with the manufacturer's recommendations.

Most repairs or modifications should be done only by the original manufacturer of the forks or an expert knowledgeable of the materials, design, welding and heat treatment process.

2. The following repairs or modifications SHOULD NOT be attempted.

• Flame cutting holes or cutouts in fork blades.

• Welding on brackets or new mounting hangers.

• Repairing cracks or other damage by welding.

• Bending or resetting.

3. The following repairs MAY be performed.

• Forks may be sanded or lightlyground, to remove rust, corrosion or minor defects from the surfaces.

• Heel sections may be ground with a carbon stone to remove minor surface cracks or defects. Polish the inside radius of the heel section to increase the fatigue life of the fork. Always grind or polish in the direction of the blade and shank length.

• Repair or replace the positioning locks on hook type forks. Repair or replace most fork retention devices used with other fork types.

4. A fork should be load tested before being returned to service on completion of repairs authorized and done in accordance with the manufacturer's recommendations.

Most manufacturers and standards require the repaired fork to be tested with a load 3 times the specified capacity and at the load center marked on the fork arm.With the fork restrained in the same manner as its mounting on the lift truck, apply the test load twice, gradually and without shock. Maintain the test for 30 seconds each time.

Check the fork arm before and after the second application of the test load. It shall not show any permanent deformation.

Consult the fork manufacturer for further information as may be applicable to the specific fork involved.

Testing is not required for repairs to the positioning lock or the markings.

https://truckmanualshub.com/

Starting the Engine

Prestart Conditions

NOTE : The engine will not start unless the transmission directional control lever is in the NEUTRAL position.

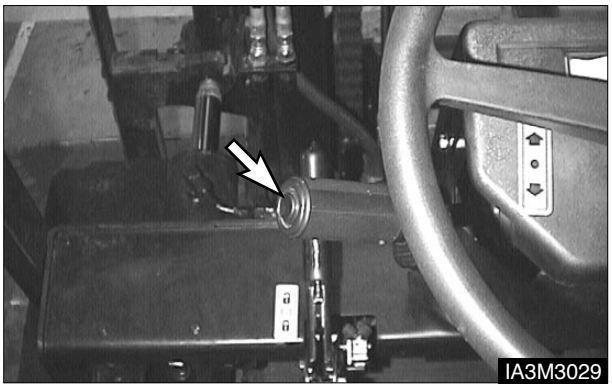

1. Engage the parking brake, if not already engaged. Place the transmission directional control lever in the NEUTRAL position.

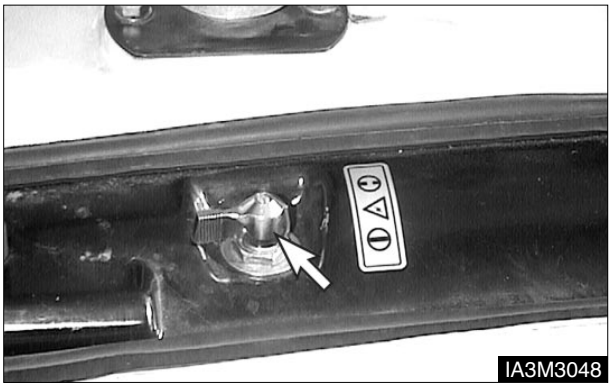

2. If Lift trucks equipped with electrical disconnect switches, the engine will not start unless the disconnect switch is in the ON (closed) position.

Starting a Cold Diesel Engine

1. Turn the key to the ON position. The start preheat light will come ON. The preheat light will stay ON approxmately seven seconds, depending on the surrounding air temperature.

NOTICE

Do not engage the starter for more than 10 seconds.

---

2. When the preheat light goes OFF, turn the key to the START position, with the accelerator pedal fully depressed.

3. Release the key when the engine starts and release the accelerator pedal to a low idle position.

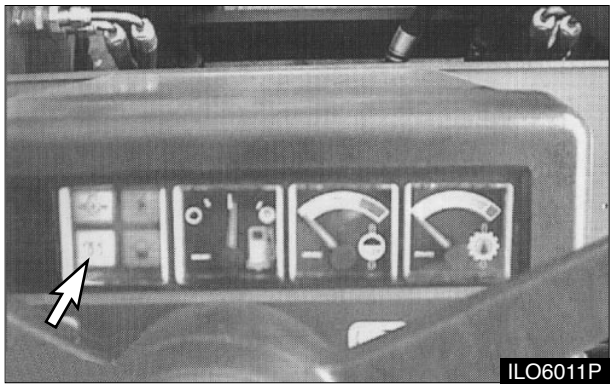

4. If the engine stalls or does not start, turn the key to the OFF position, then repeat steps 1 thru 3.

Starting a Warm Diesel Engine

1. Turn the key to the ON position and then to START position, without waiting for the preheat light to go OFF. At the same time fully depress the accelerator.

2. Release the key when the engine starts and release the accelerator pedal to a low idle position.

https://truckmanualshub.com/

LP-Gas Engine

⚠ WARNING

LP - Gas fuel is flammable and can cause personal injury.

Inspect LP - Gas fuel lines and fitting for leaks.

Inspect tank for secure mounting.

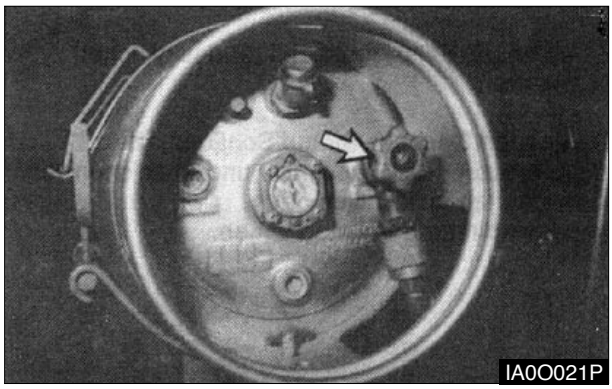

1. Open the tank fuel valve by slowly turning the valve counterclockwise. Observe the LP -Gas gauge(if equipped).

2. When starting a cold engine, push DOWN on the accelerator pedal completely, then release it.

3. Turn the ignition switch to the START position. Release it when the engine starts.

4. Allow the engine to warm up slowly.

Starting From a 12 Volt External Source

⚠ WARNING

Sparks occurring near the battery could cause vapors to explode.

Always connect the external power source ground cable to a point away from and below the battery, and well clear of fuel system components.

NOTICE

Do not reverse battery cables. It can cause damage to the alternator.

Always connect the external power source cables in parallel with the lift truck battery cables : POSITIVE(+) to POSITIVE(+) and NEGATIVE(-) to NEGATIVE(-).

Attach ground cable last, remove first. All lift trucks equipped with DAEWOO built internal combustion engines are NEGATIVE(-) ground.

https://truckmanualshub.com/

After Starting the Engine

Observe all indicator lights and gauges frequently during operation, to make sure all systems are working properly. All of the indicator lights will come ON with the ignition switch in the ON position before the engine is started.

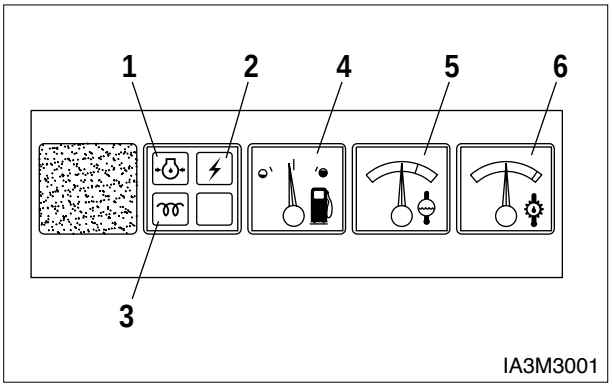

1. The engine oil pressure indicator light (1), will not come ON with the engine running, unless there is low or no oil pressure. Stop the engine immediately, if the light comes ON.

2. The alternator indicator light (2), should not come ON during normal operation. The alternator is not charging if the light comes ON with the engine running.

3. Observe the diesel or gasoline fuel level gauge (4) for fuel level in the tank.

4. The engine coolant gauge pointer (5), will be in the green band with the engine running, unless the coolant temperature is excessive.

5. The power shift transmission oil gauge pointer (6), will be in the green band with the engine running, unless the oil temperature is excessive.

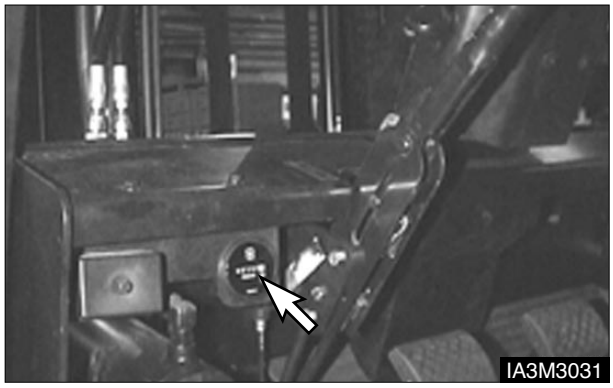

6. Observe the hour meter to make sure it is operating properly.

https://truckmanualshub.com/

Lift Truck Operation

Power Shift Transaxle

1. Start the engine. See topic “Starting the Engine”

2. Push down on the service brake pedal to hold the lift truck until ready to move it.

3. Release the parking brake.

NOTE : The parking brake must be released before the directional control can be used.

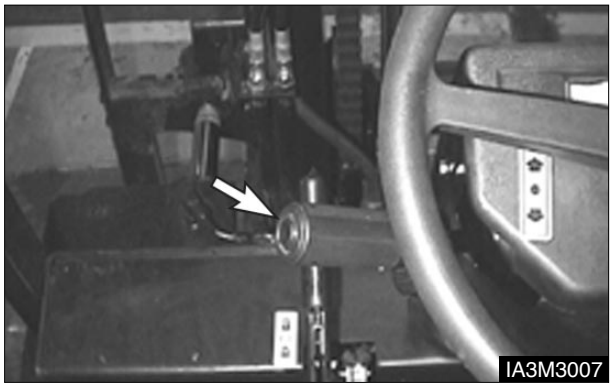

4. Select the direction of travel by pushing the directional lever FORWARD for forward direction or by pulling the lever BACK for reverse direction.

⚠ WARNING

A lift truck with the engine running but without an operator can move slowly (creep) if the transmission is engaged.

This could result in personal injury.

Always place the transmission control lever in the NEUTRAL (center) positon and apply the parking brake before dismounting the lift truck.

5. Release the service brake.

6. Push down on the accelerator pedal to obtain the desired travel speed. Release the pedal to decrease travel speed.

⚠ WARNING

Sudden reversal of a loaded lift truck traveling forward can cause the load to fall or the lift truck to tip.

Failure to comply could result in personal injury.

Stop the loaded lift truck completely, before shifting to reverse.

NOTE : Directional changes can be made under full power at speeds up to 8 km/h (5 mph). A speed of 8 km/h (5 mph) is a fast walk. Directional shift changes at speeds above 8 km/h (5 mph) are considered abusive.

https://truckmanualshub.com/

7. To change the lift truck direction of travel, release the accelerator pedal.

8. Push down on the service brake pedal to reduce the lift truck speed as necessary.

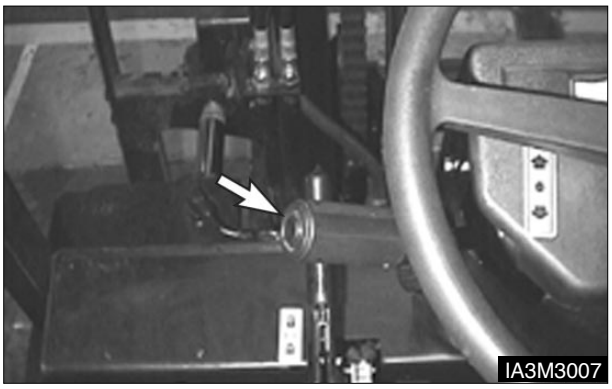

9. Move the directional lever to the desired direction of travel. Slowly push down on the accelerator pedal as the lift truck changes direction.

10. When the direction change is completed, continue to push down on the accelerator pedal to obtain the desired travel speed.

11. To stop the lift truck when traveling in either direction, release the accelerator pedal.

12. Push down on the service brake pedal and bring the lift truck to a smooth stop.

Inching

NOTE : The purpose of the inching pedal is to provide precise lift truck inching control at very slow travel speed and high engine rpm. This is used for fast hydraulic lift, during load approach, pick up or load positioning.

1. To inch (creep) in either direction, slowly push down on the inching pedal. This will start to apply the service brakes and allow the transmission clutch discs to slip.

2. Vary the position of the inching pedal and the acceleratror pedal to control the inching speed and distance.

3. Pushing down further on the inching pedal will disengage the transmission completely and apply the service brakes fully to stop and hold the lift truck. This will provide full engine power for fast hydraulic lift.

https://truckmanualshub.com/

Auto Shift Controller ASC - 200 (If Equipped)

Product Description

The Autoshift controller is an electrical control system, specially designed for use on forklift trucks with internal combustion engines.
Its primary purpose is to prevent the operator from operating the truck outside of the design parameters, e.g. selecting the reverse gear when travelling in excess of 8 km/h (5.0 mph) in a forward direcion, and vice versa.

The Autoshift controller is mounted on a convenient position away from excessive heat sources and retrofits into the truck's electrical system. An inductive speed sensor is mounted on the transmission case where it will pick up a pulse from a gear tooth pattern. This pulse is used to monitor the truck in motion and its travel speed. To enable the system to change gears smoothly, the shift points for offset speed are adjustable.

A operator no longer has to change gears with his hands, therefore he can be more productive.

The Autoshift controller prevents strain and abuse to the transmission by changing gears up and down automatically. It also prevents damage to the half shaft, excessive tire wear and heat to the transmission.

Features

1) 2 - speed auto shift control
2) Prevent downshifting at high speed
3) Inhibit selecting direction at high speed outside of the design parameters.

⚠ WARNING

Improper operation or maintenance could result in injury or death. Do not operate or work on the lift truck unless you are properly trained. For safe operation, carefully read and follow the Operation and Maintenance Manual furnished with lift truck.

Adjustments

SW1 (Low-High Shift Point)		SW2 (Direction Inhibit Point)	
NOTCH	Vehicle Speed	NOTCH	Vehicle Speed
0	1.5 km/h (0.9 mph)	0	3.5 km/h (2.2 mph)
1	2.0 km/h (1.2 mph)	1	4.0 km/h (2.5 mph)
2	2.5 km/h (1.5 mph)	2	4.5 km/h (2.8 mph)
3	3.0 km/h (1.9 mph)	3	5.0 km/h (3.1 mph)
4	3.5 km/h (2.2 mph)	4	5.5 km/h (3.4 mph)
5	4.0 km/h (2.5 mph)	5	6.0 km/h (3.7 mph)
6	4.5 km/h (2.8 mph)	6	6.5 km/h (4.0 mph)
7	5.0 km/h (3.1 mph)	7	7.0 km/h (4.4 mph)
8	5.5 km/h (3.4 mph)	8	7.5 km/h (4.7 mph)
9	6.0 km/h (3.7 mph)	9	8.0 km/h (5.0 mph)

Low-High Shift Point

- The SW1 switch is for adjustment of optimal Low-High Shift speed.

Direction Inhibit Point

- The SW2 switch is for adjustment of direction inhibit speed.

[Example]

- SW1 = 6 : Low-High Shift Speed = 4.50km/h (2.8mph)
- SW2 = 3 : Direction Inhibit Speed = 5.0km/h (3.1mph)

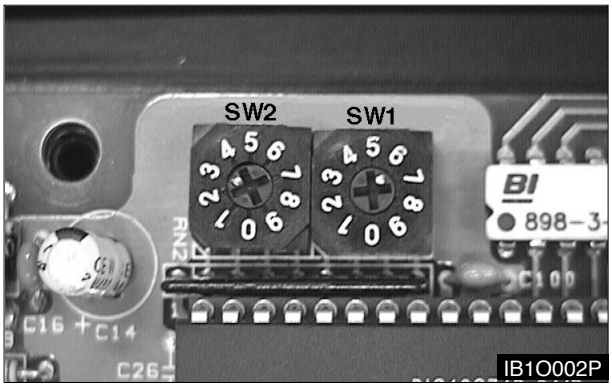

Adjustment Switch

https://truckmanualshub.com/

Diagnostics Features

ASC-200 has internal indicator on the right side of the controller for displaying the selected gear and the abnormal condition.

Below is a description applicable for many ASC-200 implementations.

Display for Operator

This information is given during normal operating when something special happens.
For example, on ASC-200's with the speed sensor, one of the indicators is used to indicate a sensor problem.

Display	Description	Remark
A	Automatic operation	
H	High speed	At 2nd shift gear
L	Low speed	At 1st shift gear
P	T/M Speed sensor open	Flashing
E	E/G Speed sensor open	Flashing
F	Controller fault	Flashing
5	H/L Sol. Short	Flashing
6	Forward Sol. Short	Flashing
7	Reverse Sol. Short	Flashing

Display for Troubleshooting

This information is input for signal diagnostics. This test is used to verify operaion of direction control lever.

Display	Description	Remark
A	Automatic operation	
2	High speed s/w input	Lever input test
3	Forward s/w input	Lever input test
4	Reverse s/w input	Lever input test

Operation

This system can basically operate in 2 preselected modes.

- Automatic mode : selected as factory-setting.
- Manual mode (Fail-Safe mode) : manual operation in emergency.

Automatic mode

- Start the engine. See topic " starting the engine."
- Push down on the service brake pedal to hold the lift truck until ready to move it.
- Release the parking brake.
- Check diagnostics display on controller
  See " Diagnostics Featrues"

NOTICE

The parking brake must be released before the direction control lever can be used.

- When the high speed gear (2nd gear) is selected. the controller will up shift or down shift the transmission automatically so that in every situation the ideal gear is engaged .
- The gear direction is selected with the direction control lever.
- If however, the turbine speed is higher than direction inhibit speed, though the reverse gear is selected by operator, the direction of travel of travel will not be changed, until the speed is reduced sufficiently by pushing down on the service brake pedal.

⚠ WARNING

When you want to change the direction of travel, you must push down on the service brake pedal to reduce the travel speed.
In automatic mode, the lift truck's stopping distance may be longer than in manual mode. BE CAUTIOUS!

- When the directional change is completed, continue to push down on the accelerator pedal to obtain the desired travel speed.

https://truckmanualshub.com/

Manual Mode (Fail-Safe mode)

The system still allows movement of the vehicle in case of controller breakdown by selecting the manual mode with the Fail-Safe mode Switch in the controller.

⚠ WARNING

In the manual mode, direction inhibition function can not be operated normally. The sudden reversal of a loaded lift truck traveling forward can cause the load to fall or the lift truck to tip.

If the controller fails

An operator can operate the truck manually by selecting the Manual mode with the Fail-Safe mode switches on the PCB (Printed Circuit Board).

With the switch (1) in “MANUAL” position, direction inhibit function is disable.
If an operator moves the switch (2) from “AUTO” position to “MANUAL” position, then 2-speed auto shift function will become disable.

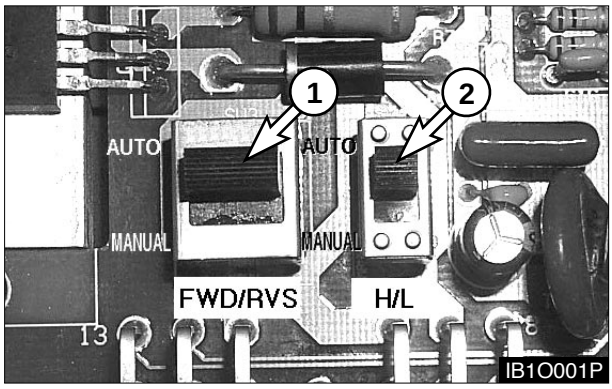

Fail-Safe mode switch

NOTICE

If you want to use automatic function, make sure to select this function on PCB by putting the Fail-Safe mode switches in the automatic mode.

https://truckmanualshub.com/

Operating Techniques

Inching into Loads

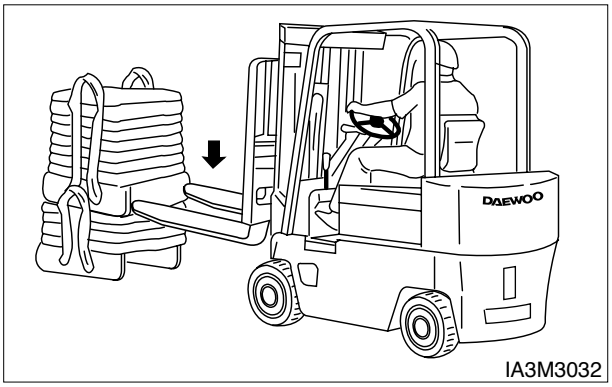

Typical Example

1. Move the lift truck slowly FORWARD into positon and engage the load. The lift truck should be square with load, forks spaced evenly between pallet stringers and as far apart as load permits.

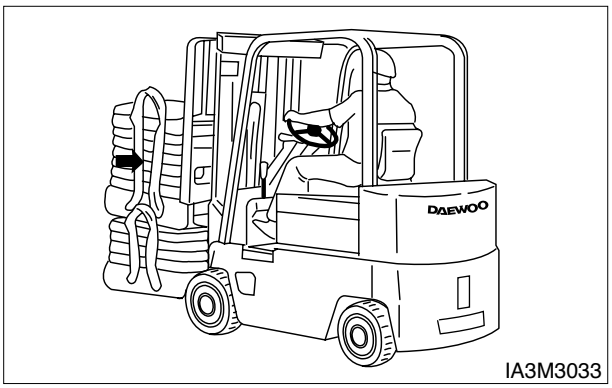

Typical Example

2. Move the lift truck FORWARD until the load touches the carriage.

Lifting the Load

1. Lift the load carefully and tilt the mast back a short distance.

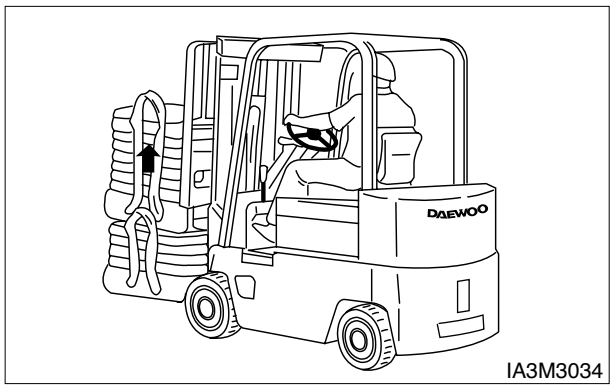

Typical Example

2. Tilt the mast further back to cradle the load.

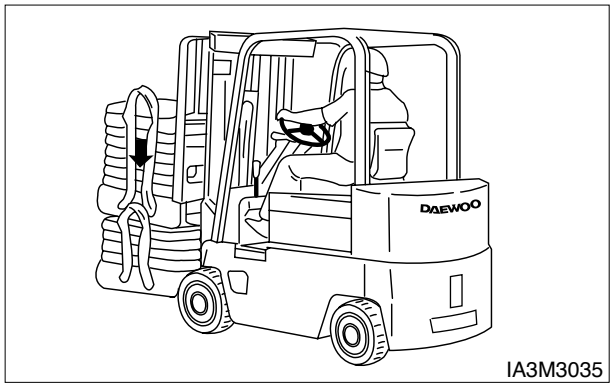

Typical Example

3. Operate the lift truck in reverse until the load is clear of the other material.

4. Lower the cradled load to the travel position.

NOTE : Lift and tilt speeds are controlled by engine rpm.

https://truckmanualshub.com/

Travelling With the Load

NOTICE

Travel with the load as low as possible, while still maintaining ground clearance.

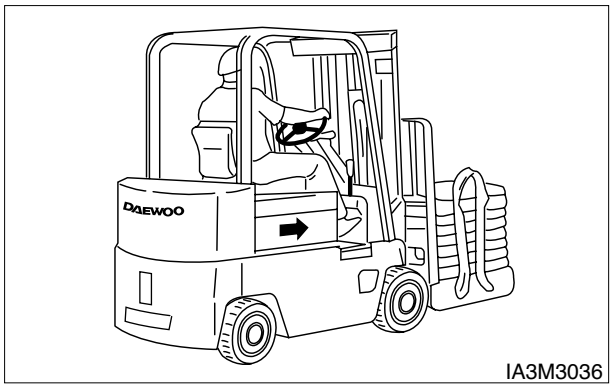

Typical Example

1. Travel with the load uphill on upgrades and downgrades.

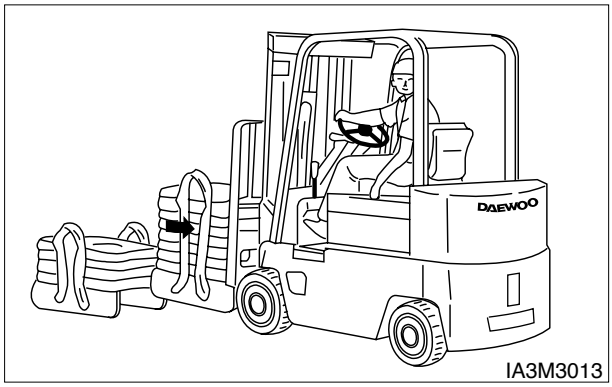

Typical Example

2. For better vision, travel in reverse with bulky loads.

Unloading

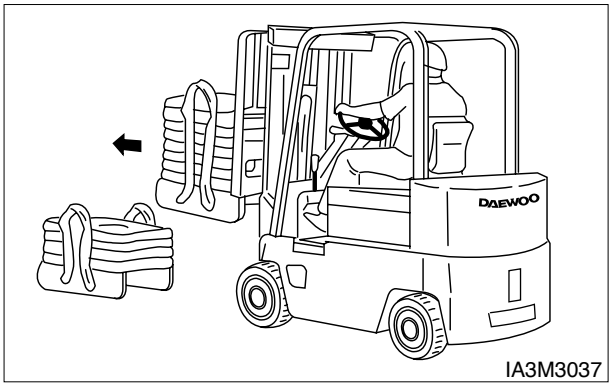

Typicl Example

1. Move the lift truck into the unloading position.

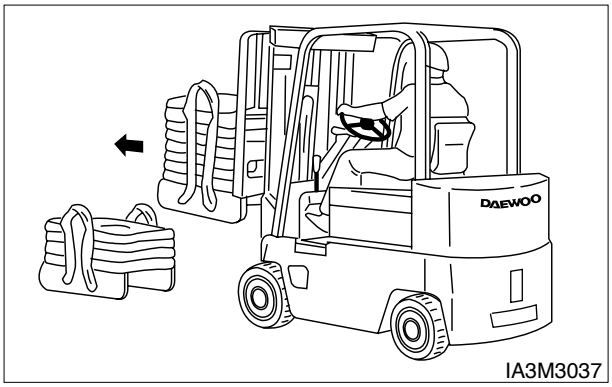

Typical Example

2. Tilt the mast FORWARD only when directly over the unloading area.

⚠ WARNING

Do not tilt the mast forward with the load unless directly over the unloading area, even if the power is off.

https://truckmanualshub.com/

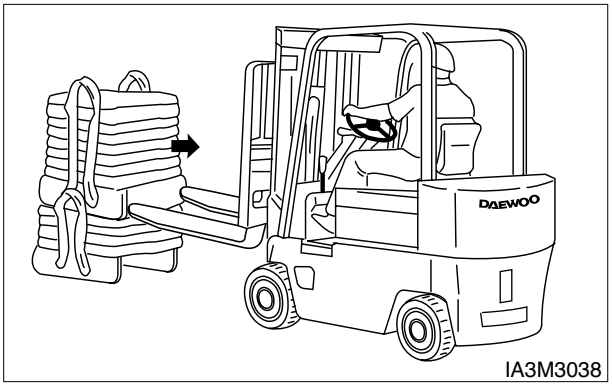

Typical Example

3. Deposit the load and BACK away carefully to disengage the forks.

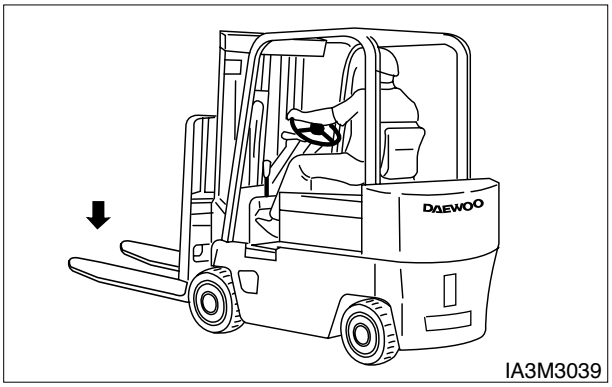

Typcial Example

4. Lower the carriage and forks to the travel position or to the park position.

Turning

1. When turning sharp corners, keep close to the inside corner. Begin the turn when the inside drive wheel meets the corner.

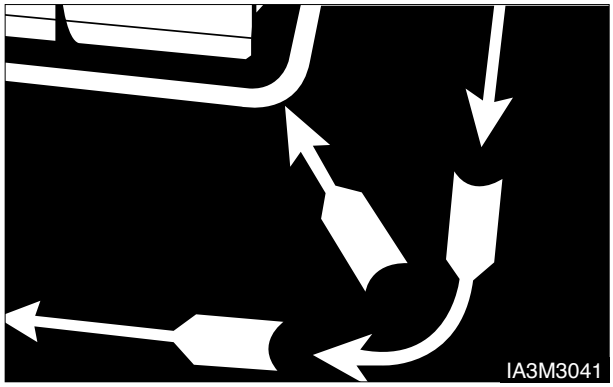

2. In narrow aisles, keep away from the stockpile when turning into the aisle. Allow for counterweight swing.

https://truckmanualshub.com/

Lifting Drums or Round Objects

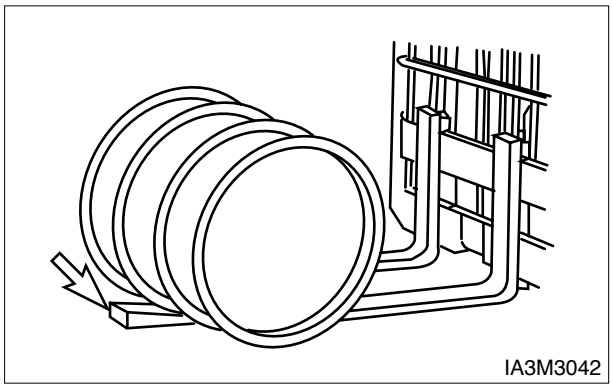

1. Block drums or round objects. Tilt the mast FORWARD and slide the fork tips along the floor to get under the load.

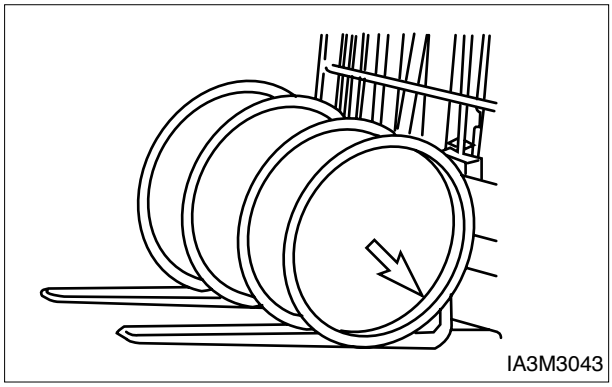

2. Before lifting, tilt the mast BACK slightly until the load is cradled on the forks.

Operating in hot weather

Keep the following points in mind when you operate the lift truck in hot weather.

1. Check the radiator. Clogging can cause overheating. Clean them out regularly with a blast of compressed air, also, check for leakage of water.

2. Check the fan belt tension and adjust to proper tension.

3. Even if the engine overheats and the coolant boils over, let the engine idle for a while with opening engine hood until temperature falls before shutting off the engine.

https://truckmanualshub.com/

Parking the Lift Truck

1. Park in an authorized area only. Do not block traffic.

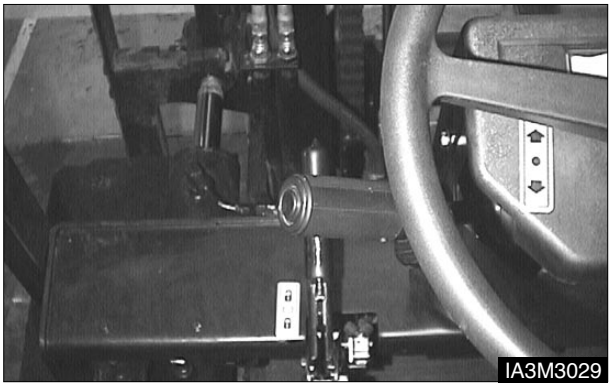

2. Place the transmission controls in NEUTRAL.

3. Engage the parking brake.

4. Lower the forks to the ground.

⚠ WARNING

Blocking the wheels will prevent unexpected lift truck movement, which could cause personal injury.

5. Turn the key in the ignition switch to the OFF position and remove the key.

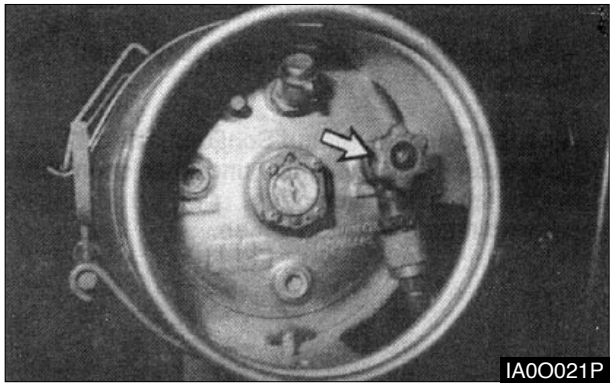

NOTE : If a LP - Gas equipped lift truck is stopped or parked for an indefinite or prolonged period of time, close the fuel shutoff valve on the LP-Gas tank. Run the engine until fuel in the line runs out and the engine stops. Turn off the ignition switch and disconnect switch (if equipped).

6. Actuate each loading lever several times to remove the residual pressure in the respective cylinders and hoses.

https://truckmanualshub.com/

Storage Information

Before Storage

Before storing your lift truck, clean and inspect as the following procedures.

- Wipe away grease, oil, etc. adhering to the body of the truck with waste cloth, and use water, if needed.
- While cleaning the truck, check general condition of the truck. Especially check the truck body for dents or damage and tires for wear or nails or stones in the tread.
- Fill the fuel tank with fuel specified.
- Check for leakage of hydraulic oil, engine oil, fuel, or coolant, etc.
- Apply grease, where needed.
- Check for looseness of nuts and bolts, especially hub nuts.
- Check mast rollers to see that they rotate smoothly.
- Prime the oil into the lift cylinders by actuating the lift lever all the way several times.
- Drain off coolant completely in cold weather, if antifreeze is not used.

Long Time Storage

Perform the following service and checks in addition to the “Parking the lift truck” services.

- Taking the rainy season into consideration, park the machine at a higher and hard ground.
- Avoid parking on soft grounds such as an asphalt ground in summer.
- Dismount the battery from the machine.
  Even though the machine is parked indoors, if the place is hot or humid, the battery should be kept in a dry, cool place. Charge the battery once a month.
- Apply antirust to the exposed parts which tend to rust.
- Cover components such as the breather and air cleaner which may be caught with humidity.
- The machine should be operated at least once a week. Fill the cooling system, if cooling water is discharged, and mount the battery. Start the engine and warm up thoroughly. Move the machine a little forwards and backwards. Operate the hydraulic controls several times.

To Operate the Lift Truck After a Long Time Storage

- remove covers and antirust from each of the components and exposed parts.
- Drain the engine crankcase, transmission (clutch type machine), differential and final reduction gear, clean the inside of them and add new oil.
- Drain off foreign matter and water from the hydraulic oil tank and fuel tank.
- Remove the head cover from the engine cylinder. Oil valves and rocker shaft and check each valve for proper operation.
- Add cooling water to the specified level.
- Charge the battery and mount it on the machine. Connect the cables.
- Perform pre - operational checks carefully. (refer to “Before Starting the Engine”)
- Warm up the machine.

https://truckmanualshub.com/

Transportation Hints

Lift Truck Shipping

Check travel route for overpass clearances. Make sure there is adequate clearance if the lift truck being transported is equipped with a high mast, overhead guard or cab.

To prevent the lift truck from slipping while loading, or shifting in transit, remove ice, snow or other slippery material from the loading dock and the truck bed before loading.

NOTICE

Obey all state and local lawsgoverning the height, weight, width and length of a load.

Observe all regulations governing wide loads.

NOTICE

Remove ice, snow or other slippery material from the shipping vehicle and the loading dock.

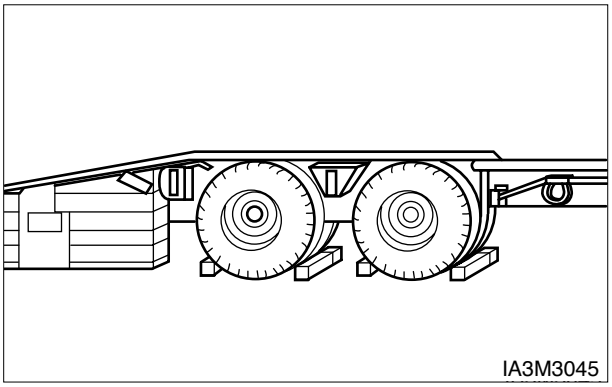

Always block the trailer or the rail car wheels before loading the lift truck.

Position the lift truck on the truck bed or the rail car.

Apply the parking brake and place the transmission control in NEUTRAL.

Turn the ignition switch to the OFF position and remove the key. If LP - Gas equipped, shut off the LP - Gas fuel tank.

Block the wheels and secure the lift truck with tiedowns.

Machine Lifting and Tiedown Information

NOTICE

Improper lifting or tiedowns can allow load to shift and cause injury and/or damage.

1. Weight and instructions given herein apply to lift trucks as manufactured by DAEWOO.

2. Use proper rated cables and slings for lifting. Position the crane for level lift truck lift.

3. Spreader bar widths should be sufficient to prevent contact with the lift truck.

4. Use the tiedown locations provided for lift truck tiedown.

Check the state and local laws governing weight, width and length of a load.

Contact your DAEWOO Lift Truck dealer for shipping instructions for your lift truck.

https://truckmanualshub.com/

Towing Information

⚠ WARNING

Personal injury or death could result when towing a disabled lift truck incorrectly.

Block the lift truck wheels to prevent movement before releasing the brakes. The lift truck can roll free if it is not blocked.

Follow the recommendations below, to properly perform the towing procedure.

These towing instructions are for moving a disabled lift truck a short distance, at low speed, no faster than 2 km/h (1.2 mph), to a convenient location for repair. These instructions are for emergencies only. Always haul the lift truck if long distance moving is required.

Shield must be provided on the towing lift truck to protect the operator if the tow line or bar should break.

Do not allow riders on the lift truck being towed unless the operator can control the steering and/or braking.

Before towing, make sure the tow line or bar is in good condition and has enough strength for the towing situation involved. Use a towing line or bar with a strength of at least 1.5 times the gross weight of the towing lift truck for a disabled lift truck stuck in the mud or when towing on a grade.

Keep the tow line angle to a minimum. Do not exceed a 30°angle from the straight ahead position. Connect the tow line as low as possible on the lift truck that is being towed.

Quick lift truck movement could overload the tow line or bar and cause it to break. Gradual and smooth lift truck movement will work better.

Normally, the towing lift truck should be as large as the disabled lift truck. Satisfy yourself that the towing lift truck has enough brake capacity, weight and power, to control both lift trucks for the grade and the distance involved.

To provide sufficient control and braking when moving a disabled lift truck downhill, a larger towing lift truck or additional lift trucks connected to the rear could be required. This will prevent uncontrolled rolling.

The different situation requirements cannot be given,as minimal towing lift truck capacity is required on smooth level surfaces to maximum on inclines or poor surface conditions.

Consult your DAEWOO Lift Tuck dealer for towing a disabled lift truck.

1. Release the parking brake.

NOTICE

Release the parking brake to prevent excessive wear and damage to the parking brake system.

---

2. Check that the service brake pedal is released.

3. Key switch is in the OFF position.

4. Direction control lever is in neutral.

5. Fasten the tow bar to the lift truck.

6. Remove the wheel blocks. Tow the lift truck slowly. Do not tow any faster than 2 km/h (1.2 mph).

⚠ WARNING

Be sure all necessary repairs and adjustments have been made before a lift truck that has been towed to a service area is put back into operation.

---

https://truckmanualshub.com/

Tire Inflation Information

Tire Inflation

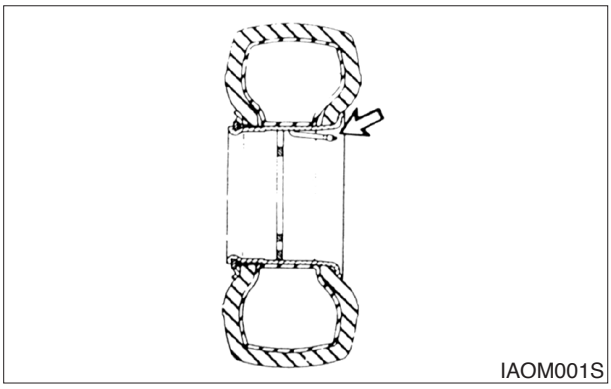

⚠ WARNING

Personal injury or death could result when tires are inflated incorrectly.

Use a self - attaching inflation chuck and stand behind the tread when inflating a tire.

Proper inflation equipment, and training in using the equipment, are necessary to avoid overinflation. A tire blowout or rim failure can result from improper or misused equipment.

NOTICE

Set the tire inflation equipment regulator at no more than 140 kPa (20 psi) over the recommended tire pressure.

Tire Shipping Pressure

The tire inflation pressures shown in the following chart are cold inflation shipping pressures.[1]

Size	Ply Rating or Strength Index	Shipping Pressure	
		kPa	psi
7.00X12 Steer	12	860	125
8.25X15 Drive	14	825	120
300X15 Drive	18	785	115
7.50X16 Drive dual	12	760	110

[1]Standard tire, ply rating and inflation pressures.

The operating inflation pressure is based on the weight of a ready - to - work machine without attachments, at rated payload, and in average operating conditions. Pressures for each application may vary and should always be obtained from your tire supplier.

NOTE : Fill tires to the recommended pressures listed ±35 kpa (5 psi). Tires can be filled with nitrogen.

Tire Inflation Pressures Adjustment

A tire inflation in a warm shop area, 18° to 21°C (65° to 70°F), will be underinflated if the lift truck works in freezing temperatures. Low pressure shortens the life of a tire.

https://truckmanualshub.com/

Torque Specifications

Metric Hardware - This lift truck is almost totally metric design. Specifications are given in metric and U.S.Customary measurement.
Metric hardware must be replaced with metric hardware. Check parts books for proper replacement.

NOTE : Use only metric tools on most hardware for proper fit. Other tools could slip and possibly cause injury.

Torques for Standard Hose Clamps-Worm Drive Band Type

NOTICE

The following chart gives the torques for initial installation of hose clamps on new hose and for reassembly or retightening of hose clamps on existing hose.

Clamp Width	Initial Installation Torque on New Hose	
	N•m*	lb•in
16 mm(.625 in)	7.5±0.5	65±5
13.5 mm(.531 in)	4.5±0.5	40±5
8 mm(.312 in)	0.9±0.2	8±2
Clamp Width	**Reassembly or Retightening Torque**	
	N•m*	**lb•in**
16 mm(.625 in)	4.5±0.5	40±5
13.5 mm(.531 in)	3.0±0.5	25±5
8 mm(.312 in)	0.7±0.2	6±2

*1 Newton meter (N•m) is approximately the same as 0.1 mkg.

Torques for Standard Bolts, Nuts and Taperlock Studs

NOTICE

The following charts give general torques for bolts, nuts and taperlock studs or SAE Grade 5 or better quality.

Torques for Bolts and Nuts With Standard Threads

Thread Size Inch	Standard Bolt & Nut Torque	
	N•m*	lb•ft
1/4	12±4	9±3
5/16	25±7	18±5
3/8	45±7	33±5
7/16	70±15	50±11
1/2	100±15	75±11
9/16	150±20	110±15
5/8	200±25	150±18
3/4	360±50	270±37
7/8	570±80	420±60
1	875±100	640±75
1+1/8	1100±150	820±110
1+1/4	1350±175	1000±130
1+3/8	1600±200	1180±150
1+1/2	2000±275	1480±200

*1 Newton meter (N•m) is approximately the same as 0.1 mkg.

https://truckmanualshub.com/

Torques for Taperlock Studs

Thread Size Inch	Standard Taperlock Studs Torque	
	N•m*	lb•ft
1/4	8±3	6±2
5/16	17±5	13±4
3/8	35±5	26±4
7/16	45±10	33±7
1/2	65±10	48±7
5/8	110±20	80±15
3/4	170±30	125±22
7/8	260±40	190±30
1	400±60	300±45
1 1/8	500±70	370±50
1 1/4	650±80	480±60
1 3/8	750±90	550±65
1 1/2	870±100	640±75

*1 Newton meter (N•m) is approximately the same as 0.1 mkg.

Metric ISO** Thread		
Thread Size Inch	Standard Torque	
	N•m*	lb•ft
M6	12±4	9±3
M8	25±7	18±5
M10	55±10	41±7
M12	95±15	70±11
M14	150±20	110±15
M16	220±30	160±22
M20	450±70	330±50
M24	775±100	570±75
M30	1600±200	1180±150
M36	2700±400	2000±300

*1 Newton meter (N•m) is approximately the same as 0.1 mkg.
**ISO-International Standard Organization.

Torques for Metric Fasteners

NOTICE

Be very careful never to mix metric with U.S. customary (standard) fasteners. Mismatched or incorrect fasteners will cause lift truck damage or malfunction and may even result in personal injury.

Original fasteners removed from the lift truck should be saved for reassembly whenever possible. If new fasteners are needed, they must be of the same size and grade as the ones that are being replaced.

The material strength identification is usually shown on the bolt head by numbers (8.8, 10.9, etc). The following chart gives standard torques for bolts and nuts with Grade 8.8.

NOTE : Metric hardware must be replaced with metric hardware. Check parts book for proper replacement

https://truckmanualshub.com/

Cooling System Specifications

Coolant Information

NOTE : The following information is generic and valid for lift trucks.

Engine operating temperatures have increased to improve engine efficiency. This means proper cooling system maintenance is especially important. Overheating, overcooling, pitting, cavitation erosion, cracked heads, piston seizures, and plugged radiators are classic cooling system failures. In fact, coolant is as important as the quality of fuel and lubricating oil.

NOTICE

DAEWOO recommends that the coolant mixture contain a minimum of 30% antifreeze or equivalent.

Never add coolant to an overheated engine, engine damage can result. Allow the engine to cool first.

All water is corrosive at engine operating temperature. The cooling system should be protected with a 3 to 6% concentration of liquid supplemental coolant additive at all times, regardless of the concentration of antifreeze.

Excessive supplemental coolant additive greater than the recommended 6%, together with concentrations of antifreeze greater than 65% can cause deposits to form and can result in radiator tube blockage, overheating, and/or water pump seal damage.

If the machine is to be stored in, or shipped to, an area with freezing temperatures, the cooling system must be protected to the lowest expected outside (ambient) temperature.

The engine cooling system is normally protected to -28°C(-20°F) with antifreeze, when shipped from the factory unless special requirements are defined.

Check the specific gravity of the coolant solution frequently in cold weather to ensure adequate protection.

Clean the cooling system if it is contaminated, if the engine overheats or if foaming is observed in the radiator.

Coolant should be drained, the system cleaned and new coolant added every 2000 service hours or two years.

Filling at over 20 liters (5 U.S. gallons) per minute can cause air pockets in the cooling system.

After draining and refilling the cooling system, operate the engine with the radiator cap removed until the coolant reaches normal operating temperature and the coolant level stabilizes. Add coolant as necessary to fill the system to the proper level.

Never operate without a thermostat in the cooling system. Cooling system problems can arise without a thermostat.

Coolant Water

Hard water, or water with high levels of calcium and magnesium ions, encourages the formation of insoluble chemical compounds by combining with cooling system additives such as silicates and phosphates.

The tendency of silicates and phosphates to precipitate out-of-solution increases with increasing water hardness. Hard water, or water with high levels of calcium and magnesium ions encourages the formation of insoluble chemicals, especially after a number of heating and cooling cycles.

DAEWOO prefers the use of distilled water or deionized water to reduce the potential and severity of chemical insolubilty.

https://truckmanualshub.com/

Minimum Acceptable Water	
Water Content	**Limits gr/gal (ppm)**
Chlorides	2.4 (40) maximum
Sulfates	5.9 (100) maximum
Total Hardness	10 (170) maximum
Total Solids	20 (340) maximum
pH	5.5 to 9.0

ppm = parts per million

Using water that meets the minimum acceptable water requirement may not prevent drop-out of these chemical compounds totally, but should minimize the rate to acceptable levels.

Antifreeze

Make proper antifreeze additions.

Adding pure antifreeze as a makeup solution for cooling system top-up is an unacceptable practice. It increases the concentration of antifreeze in the cooling system which increases the concentration of dissolved solids and undissolved chemical inhibitors in the cooling system. Add antifreeze mixed with water to the same freeze protection as your cooling system.

Use the chart below to assist in determining the concentration of antifreeze to use.

Antifreeze Concentrations	
Protection Temperature	**Concentration**
Protection to -15°C (5°F)	30% antifreeze and 70% water
Protection to -23°C (-10°F)	40% antifreeze and 60% water
Protection to -37°C (-34°F)	50% antifreeze and 50% water
Protection to -51°C (-60°F)	60% antifreeze and 40% water

https://truckmanualshub.com/

Fuel Specifications

Fuel Information

Use only fuel as recommended in this section.

NOTICE

Fill the fuel tank at the end of each day of operation to drive out moist air and to prevent condensation. Maintain a constant level near the top of the tank to avoid drawing moisture into the tank as the level decreases.

Do not fill the tank to the top. Fuel expands as it gets warm and can overflow.

Do not fill the fuel fillters with fuel before installing them. Contaminated fuel will cause accelerated wear to the fuel system parts.

Drain the water and sediment from any fuel storage tank before it is refilled. This will help prevent water and/or sendiment from being pumped from the fuel storage tank into the engine fuel tank.

Fuel Types

DAEWOO Diesel Engines have the ability to burn a wide variety of fuels. These fuels are divided into two general groups, preferred and permissible.

The **Preferred Fuels** provide maximum engine service life and performance. They are distillate fuels. They are commonly called diesel fuel, MDO diesel, furnace oil, gas oil or kerosene (for cold weather operation).

Experience has proven that distillate fuels meeting the following basic specifications will result in optimum engine performance and durability.

DAEWOO strongly encourages the use of fuels that meet the Preferred Fuels specification.

The permissible fuels are crude oils or blended fuels. Use of these fuels can result in higher maintenance costs and reduced engine service life.

Crude oil is used to describe oils/fuels that are not refined and are in the original state as when pumped from the ground.

PREFERRED DISTILLATE FUEL FOR DISEL ENGINES	
Specifications	**Requirements***
Aromatics (AST D1319)	35% Max.
Ash (ASTM D482)	0.02% Weight Max.
Cetane Number (ASTM D613)	35 Min. for 45 Max. 40 Min. for DI Engines
Cloud Point (ASTM D97)	Not Above Lowest Expected Ambient Temperature
Gravity API (ASTM D287)	30 Min. and 45 Max.
Pour Point (ASTM D97)	6°C (10°F) Below Ambient Min.
Sulfur (ASTM D2788, D3605 orD1552)	0.5% Max. (See Sulfur Topic)
Viscostiy, Kinematic @ 38°C (100°F) (ASTM D445)	20.0 cSt Max. 1.4 cSt Min.
Water & Sediment (ASTM D1796)	0.01% Max.

*As delivered to fuel system

https://truckmanualshub.com/

Fuel Sulfur Content

The percentage of sulfur in the fuel will affect the engine oil recommendations. Fuel sulfur is chemically changed during combustion to form both sulfurous and sulfuric acid. These acids chemically attack metal surfaces and cause corrosive wear.

Certain additives used in lubricating oils contain alkaline compounds that are formulated to neutralize these acids. The measure of this reserve alkalinity in a lubricating oil is known as its Total Base Number (TBN). TBN is essential to neutralize the acids from combustion gases and to minimize corrosive wear.

Any API classification performance oil should have sufficient TBN for fuels with less than 0.5% sulfur. For fuels with 0.5% to 1.5% sulfur by weight, engine oil must have a TBN of 20 times the percentage of fuel sulfur as measured by the ASTM (American Society of Testing Materials) D-2896 method. (ASTM D-2896 can normally be found at your local technological society, library or college).

DAEWOO recommends infrared analysis (in conjunction with wear metal analysis) of used oil in determining the effectiveness of oil TBN and acid neutralization.

For fuel with sulfur exceeding 1.5% by weight, use an oil with a TBN of 30 and reduce the oil change interval by one half. Also, infrared analysis and wear metal analysis should be used to establish oil change intervals.

Periodically request fuel sulfur content information from your fuel supplier. Fuel sulfur content can change with each bulk delivery.

https://truckmanualshub.com/

Lubricant Specifications

Lubricant Information

Certain abbreviations follow Society of Automotive Engineers (SAE) J754 nomenclature and some classifications follow SAE J183 abbreviations.

The MIL specifications are U.S.A. Military Specifications.

The recommended oil viscosities can be found in the Lubricant Viscosities chart in this publication.

Grease is classified by the National Lubricating Grease Institute (NLGI) based on ASTM D217-68 Worked Penetration characteristics which are given a defined consistency number.

Engine Oil (DEO and EO)

The following oil specifications provide guidelines for the selection of commercial products :

- Gasoline / LP-Gas Engine : API SH or SG
- Diesel Engine : API CF-4

NOTICE

Failure to follow the oil recommendations can cause shortened engine life due to carbon deposits or excessive wear.

Consult the EMA Lubricating Oils Data Book for a listing of oil brands.

NOTE : The percentage of sulfur in the fuel will affect the engine oil recommendations. For fuel sulfur effects, the Infrared Analysis or the ASTM D2896 procedure can be used to evaluate the residual neutralization properties of an engine oil. The sulfur products formation depends on the fuel sulfur content, oil formulation, crankcase blowby, engine operating conditions and ambient temperature.

Hydraulic Oil (HYDO)

The following commercial classifications can be used in the hydraulic system.

- API CF-4/SG, CF-4/SF, CE/SG, CE/SF, CD/SG, or CD/SF
- MIL-L-2104E or D

Industrial premium hydraulic oils that have passed the Vickers vane pump test (35VQ25) and/or have a minimum of 0.09% zinc additive may also be used. These oils should have antiwear, antifoam, antirust and antioxidation additives for heavy duty use as stated by the oil supplier. ISO viscosity grade of 32 would normally be selected.

Transmission Oil (TDTO)

NOTICE

This oil is formulated for transmissions and drive trains only, and should not be used in engines. Shortened engine life will result.

NOTE : Multi-grade oils are not blended by DAEWOO for use in transmissions. Multi-grade oils which use high molecular weight polymers as viscosity index improvers lose their viscosity effectiveness by permanent and temporary shear of the viscosity index improver and therefore, are not recommended for transmission and drive train compartments.

NOTE : Failure to follow this recommendation can cause shortened transmission life due to material incompatibility, inadequate frictional requirements for disk materials and/or excessive gear wear.

The API CD/TO-2 or CD/TO-4 specification or MIL-L 2104D,E or F oil could be used.

https://truckmanualshub.com/

Drive Axle Oil

NOTE : Do not use Gear Oil in the final drives or differentials. Gear Oil can cause seal material to fail and possibly leak oil.

NOTE : Failure to follow the recommendation will cause shortened life due to excessive gear wear.

The API CD/TO-2 or CD/TO-4 specification or MIL-L-2104D,E or F oils could be used.

NOTE : Multi-grade oils are not blended by DAEWOO for use in transmissions. Multi-grade oils which use high molecular weight polymers as viscosity index improvers lose their viscosity effectiveness by permanent and temporary shear of the viscosity index improver and therefore, are not recommended for transmission and drive train compartments.

Gear Oil

Select on oil that meets. API GL-5 spec or MIL-L-2105C spec.

https://truckmanualshub.com/

Lubricant Viscosities and Refill Capacities

Lubricant Viscosities

LUBRICANT VISCOSITIES FOR AMBIENT (OUTSIDE) TEMPERATURES					
Compartment or System	**Oill Viscosities**	**°C**		**°F**	
		Min	Max	Min	Max
Engine Crankcase (Gasoline and LP-Gas) and Lift Chains **API SH, SG**	SAE 10W30	-20	+40	-4	+104
	SAE 15W40	-15	+50	+5	+122
Engine Crankcase Diesel **API CF-4**	SAE 10W	-20	+10	-4	+50
	SAE 10W30	-20	+40	-4	+104
	SAE 15W40	-15	+50	+5	+122
Power Shift Transmission **API CD/TO-2**	SAE 10W	-20	+10	-4	+50
	SAE 30	0	+35	32	+95
Hydraulic and Power Steering System	SAE 10W	-20	+40	-4	+104
	SAE 10W30	-20	+40	-4	+104
	SAE 15W40	-15	+50	+5	+122
DIFFERENTIAL GO	SAE 80W90	-20	+50	-4	+122

The SAE grade number indicates the viscosity of oil. A proper SAE grade number should be selected according to ambient temperature.

Refill Capacities

REFILL CAPACITIES-(APPROXIMATE)			
Compartment or System		**Liters**	**U.S. Gal.**
Engine Crankcase W/Filter DHI DB58 Diesel		14.5	3.83
Engine Crakcase W/Filter Gasoline & LP - Gas		4.3	1.1
Cooling System	GAS	19.0	5.0
	Diesel	23	6.1
Fuel Tank		90.0	23.8
Drive Axle		11.6	3.1
Brake System		1.0	0.3
Power Shift Transmission		13.0	3.4
Power Steering & Hydraulic System		74.0	19.5

https://truckmanualshub.com/

Maintenance Intervals

NOTICE

All maintenance and repair, except Every 10 Service Hours or Daily, on the lift truck must be performed by qualified and authorized personnel only.

NOTICE

Careless disposal of waste oil can harm the environment and can be dangerous to persons. Always dispose of waste oil to an authorized personnel only.

When Required

Water Separator (Diesel Engine) - Drain 82
Carburetor (Gasoline and LP-Gas Engine) - Adjust 82
Fuel Filters - Check, Clean, Change 83
Priming the Fuel System (Diesel Engine) 84
Seat, Hood Latch & Cylinder - Check, Lubricate 85
Fuses, Bulbs and circuit Breaker - Change, Reset 85
Air Intake System - Check, Clean, Change 87
Distributor & Spark Plug - Check 91
Tires and Wheels - Check, Inspect 92
Ignition Timing (Gasoline and LP-Gas Engine) - Check, Adjust 92
Wheel Bolts and Nuts 93

Every 10 Service Hours or Daily

Engine Oil Level - Check 94
Coolant Level - Check, Clean, Change 94
Air Cleaner indicator - Check 95
Walk-Around Inspection - Inspect 96
Mast Channel - Lubricate 97
Transmission Oil Level - Check 97

First 50-100 Service Hours

Transmission Oil & Oil Filter & Strainer - Clean, Change 98
Drive Axle Oil - Change 99
Parking Brake - Test, Adjust 100

First 250 Service Hours

Hydraulic Return Filter - Change 101
Engine Valve Lash Adjustment - Check, Adjust (Diesel Engine) 102

Every 250 Sevice Hours or Monthly

Hydraulic Oil Level - Check 103
Drive Axle Oil Level - Check 103
Attachment & Mast - Inspect, Lubricate 104
Steering Mechanism - Check, Lubricate 105
Battery Terminal - Clean, Inspect 106
Engine Oil and Filter - Change 106
PCV Valve System - Inspect, Clean 108

Every 500 Service Hours or 3 Months

Belts (Diesel Engine) - Check, Adjust 109
Tilt Cylinders - Check, Adjust, Lubricate 110
Crosshead Rollers - Inspect 111
Carriage Roller, Side Thrust - Lubricate 111
Carriage Sideshifter (If Eqquiped) - Lubricate ..111
Parking Brake - Test, Adjust 112
Inching & Brake Control Shaft - Lubricate 113
Horn and Lights (If Eqquiped) - Check 113
Overhead Guard - Inspect 113
Steer Suspension - Inspect 114

Every 1000 Service Hours or 6 Months

Hydraulic Return Filter & Breather - Change ...115
Transmission Oil & Oil Filter & Strainer - Clean, Change 115
Lift Chains - Check, Adjust 116
Universal Joint - Inspect 116

Every 1500 Service Hours

Drive Axle Oil - Change 117

Every 2000 Service Hours or 1 Year

Steer Wheel Bearings - Repack 118
Cooling System - Clean, Change 119
Forks - Inspect 121

Every 2500 Service Hours or 6 Months

Hydraulic Oil - Check, Clean, Change 125

https://truckmanualshub.com/

When Required

You must read and understand the warnings and instructions contained in the Safety section of this manual, before performing any operation or maintenance procedures.

Water Separator (Diesel Engine) - Drain

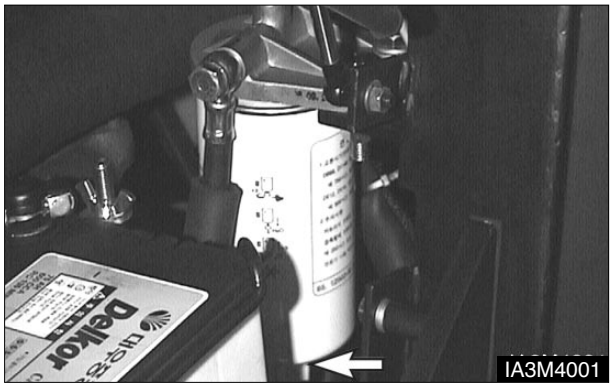

The water separator acts as a water trap to separate the water from the diesel fuel. If the engine fails to start or there is a loss of power, it may have to be drained.

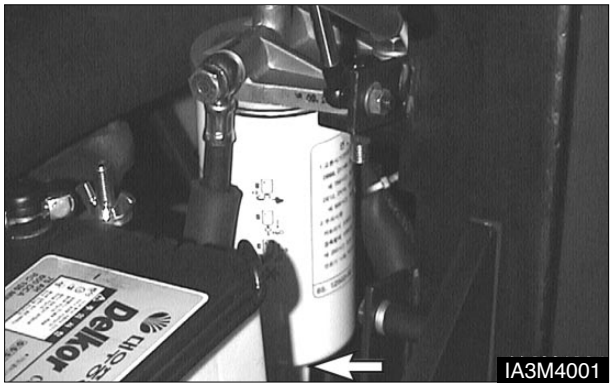

Remove plug at the bottom of the separator bowl and allow the water to drain and then install plug.

Carburetor (Gasoline and LP - Gas Engine) - Adjust

If the engine is hard to start or the exhaust is smoking, the carburetor may need adjusting.

Before adjusting the carburetor make sure the engine is at normal operating temperature. Park the lift truck with the forks lowered, parking brake applied, transmission in neutral and the engine stopped.
For the complete procedure and specifications for your specific engine, see the “ Service Manual ”.

https://truckmanualshub.com/

Fuel Filters - Check, Clean, Change

Diesel Engine-Change Filter Element

Park the lift truck with the forks lowered, parking brake applied, transmission in neutral, engine stopped and cool.

1. Raise the hood and seat assembly.Make sure the hood support latch is engaged in the bracket.

⚠ WARNING

Fuel leaked or spilled onto hot surfaces or electrical components can cause a fire.

Turn the disconnect switch OFF or disconnect the battery when changing fuel filters.

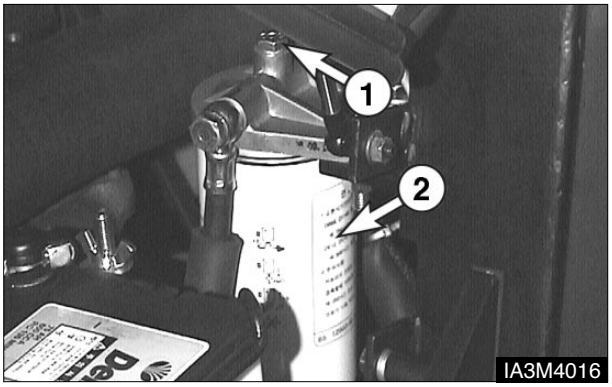

2. Loosen the plug (1) and remove cartridge (12) from head.

3. Fill up clean fuel to the new cartridge.

4. Replace the rubber packing and smear clean fuel to the rubber packing.

5. Install new cartridge and remove an air in the filter with a feed pump.

LP-Gas and Dual Fuel Engines - Clean, Replace

Park the lift truck in an authorized refueling area with the forks lowered, parking brake applied and the transmission in NEUTRAL.

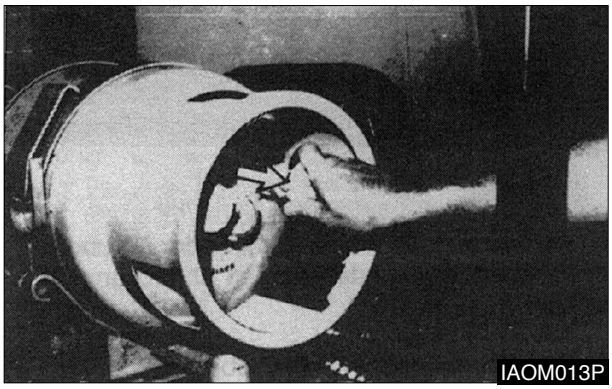

1. Close the fuel shutoff valve on the LP-Gas tank. Run the engine until fuel in the line runs out and the engine stops. Turn off the ignition switch and disconnect switch (if equipped).

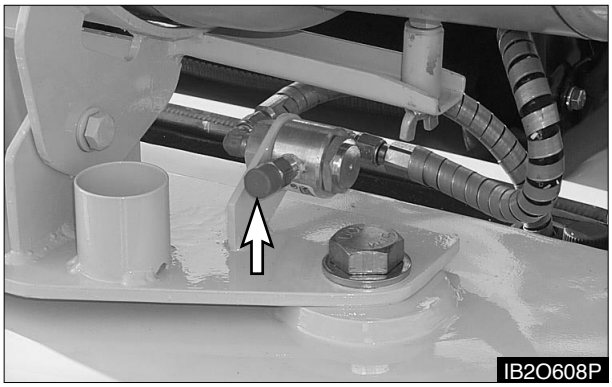

2. Scribe an line across the filter housing covers.

3. Remove the cover retaining screws.

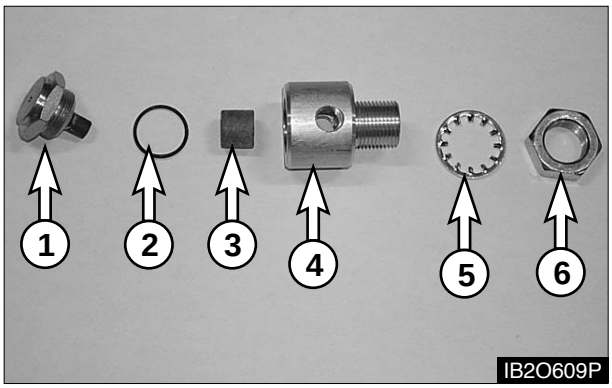

https://truckmanualshub.com/

4. Remove cover w/magnet (1), O-ring (2) and filter element (3) from bottom cover (4).

5. Wash the filter element (3) in clean, nonflammable solvent.

6. Dry the filter element with 205 kPa (30 psi) maximum air pressure.

7. Check bottom cover O-ring (2) for damage. Replace it if necessary.

8. Install the filter element (3), O-ring (2), and cover (1) on bottom cover (4).

9. Tighten the cover (1).

10. Install the filter by washer (5) and nut (6).

11. Open the fuel valve by slowly turning the valve counterclockwise.

12. Start engine and then turn the ignition key switch off.

13. Check the fuel lines and fittings with a soap solution. Make repairs if necessary.

Priming the Fuel System (Diesel Engine)

Bleeding the Fuel System

After changing the fuel filter, or after having serviced any part of the fuel system, make sure that the air is bled from the system.

1. Release the feed pump cap (1) on the injection pump.

2. Releace an air bleed nut (2) on the injection pump.

3. Operate feed pump vertical until completely remove an air.

4. Tighten air bleed nut (2).

5. Make sure to check leakage of injection pump & filter after operating feed pump many times.

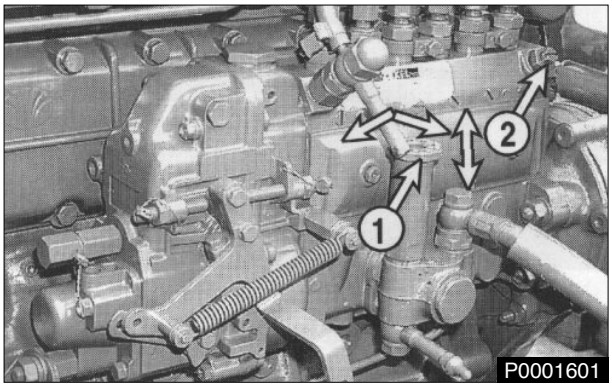

https://truckmanualshub.com/

Seat, Hood Latch & Cylinder - Check, Lubricate

1. Check the operation of the seat adjuster rod. Make sure that the seat slides freely on its track. Lightly oil the seat slider tracks if necessary.

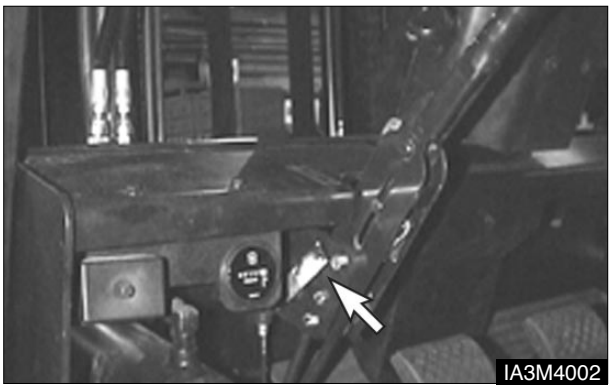

2. Push the lever down to raise the hood and seat assembly Make certain the support cylinder will hold the hood open.

3. Lightly oil the hood latch mechanism and the rod for the hood support cylinder.

Fuses, Bulbs and Circuit Breaker - Change, Reset

Fuses

NOTE : If a fuse filament separates, use only the same type and size fuses for replacement. If the filament in a new fuse separates, have the circuits and instruments checked.

NOTICE

Always replace fuses with ones of the correct ampere rating.

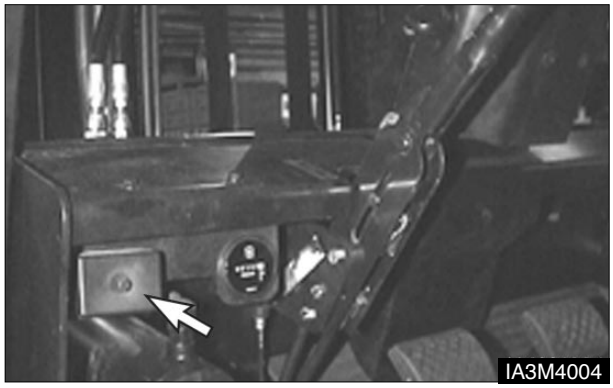

Remove the front cover from the fuse box are located under the cowl.

Fuse - Protects an eletrical circuit from an overload. Opens (filament separates) if an overload occurs.

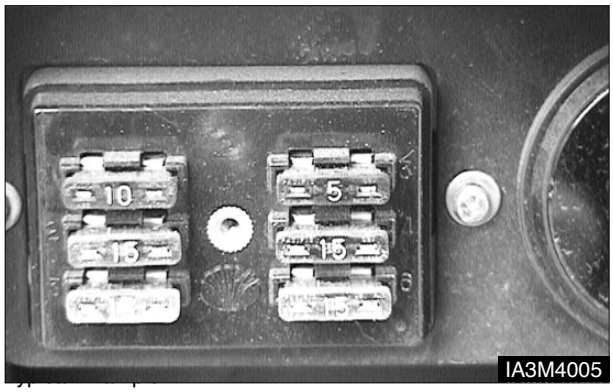

Check the fuses. Use a flashlight, if necessary.

https://truckmanualshub.com/

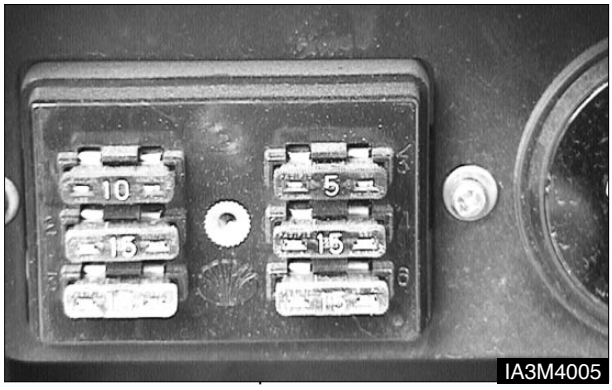

Typical Example

Fuses are identified as follows :

1. Horn - 10 amp.
2. Head/Rear Lamp - 15 amp
3. Fwd./Rev. Solenoid, lamp Relay & Back-up Lamp/alarm - 10 amp.
4. Instrument Panel & Fuel Shutoff - 15 amp.
5. Turn Signal Lamp, Stop/Strobe Lamp & - 15 amp
6. Start Relay - 5 amp

Bulbs

Bulbs are identifed as follows:

[Diesel Engine]

1. Bulb - head lamp halogen (24V - 55W)
*__2__. Bulb - back up (24V - 10W)
*__3__. Bulb - turn signal (24V - 25W)
*__4__. Bulb - stop & tail (24V - 25/10W)

[Gasoline & LP Gas Engine]

1. Bulb - head lamp halogen (12V - 35W)
*__2__. Bulb - back up (12V - 10W)
*__3__. Bulb - turn signal (12V - 23W)
*__4__. Bulb - stop & tail (12V - 23/8W)

*Optional lamp or light

Circuit Breaker

1. Raise the hood and seat assembly. Make sure the support cylinder securely holds the hood open.

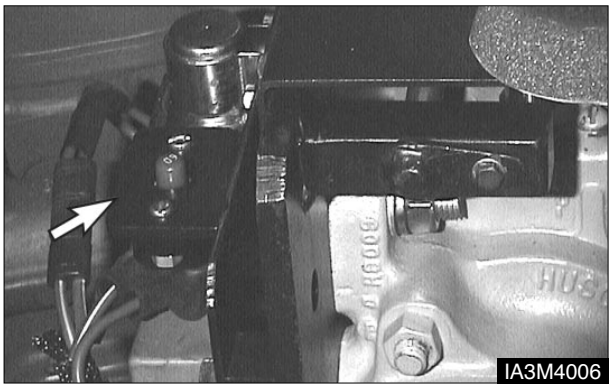

Diesel Truck

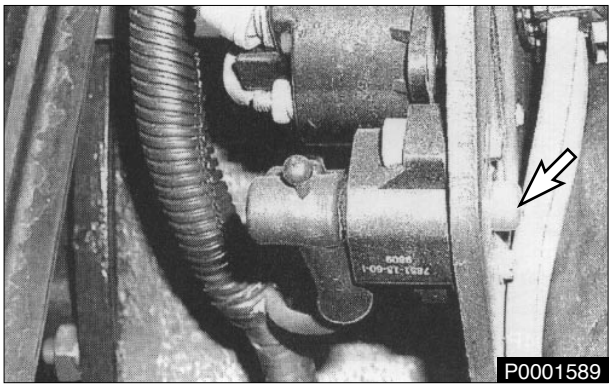

Gasoline & LPG Truck

2. The main circuit breaker is located on the rear of the support for the controls.

NOTE : To reset circuit breakers push in on the button. The button should stay in if the breaker is reset. If the button will not stay in, or comes out shortly after reset, have the circuits checked.

https://truckmanualshub.com/

Air Intake System - Check, Clean, Change

Precleaner (If Equipped)

NOTICE

Never service precleaner with the engine running.

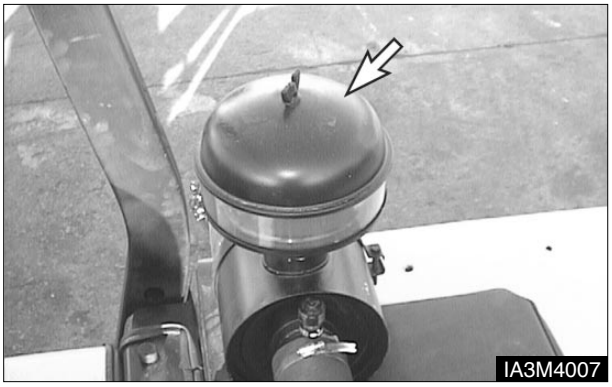

Diesel Truck

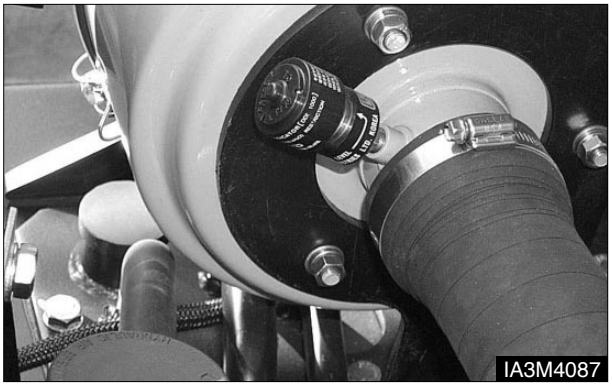

Gasoline & LPG Truck

1. Check the precleaner bowl for dirt build-up. If the dirt is up to the line, remove the precleaner bowl and empty it. Periodically wash the cover and bowl in water.

Changing Filter Element (Diesel Engine)

NOTICE

Never service precleaner with the engine running.

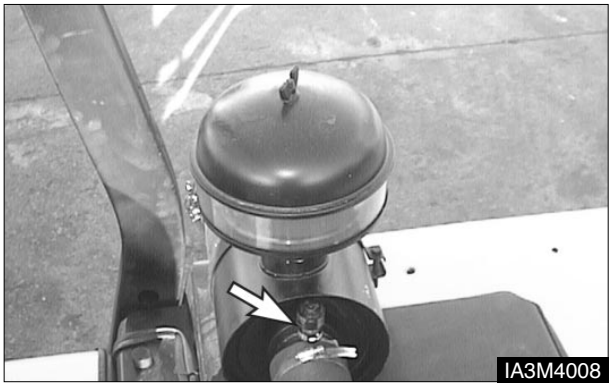

Service the air cleaner when the red taget in the service indicator stays locked in the visible position with the engine stopped.

1. To service the air cleaner, loosen the cover latches and remove the cover.

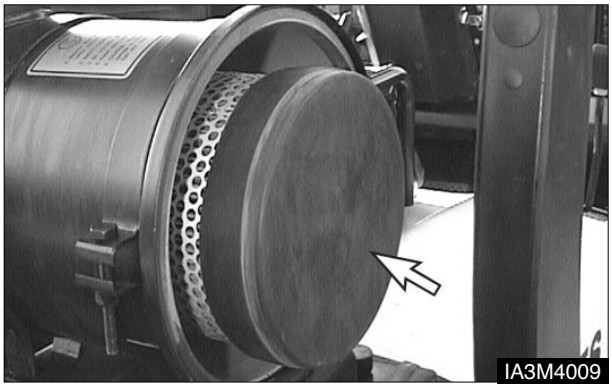

2. Rotate the element slightly to separate it from its base and remove it from the air cleaner housing.

3. Clean and inspect the element or replace with a new element. See topic, “ Cleaning Primary Filter Element ”.

4. Clean the inside of air cleaner housing and the cover. Inspect all connections between the air cleaner and engine. Check intake hose for cracks, damage and loose clamps. Tighten or replace parts as necessary to prevent leakage.

https://truckmanualshub.com/

NOTICE

Do not allow dirty air to enter the intake hose when cleaning the inside of the air cleaner housing.

5. Check the air cleaner housing for loose latches.

6. Reset the air cleaner service indicator.

7. Install the air filter element.

8. Install the cover and tighten the cover latches.

9. Start the engine and observe the position of the indicator. If the indicator shows RED after the installation of the primary element, install another clean or a new element.

10. Stop the engine and close the hood.

Changing Filter Element (LP Gas Engine)

NOTICE

Never service precleaner with the engine running.

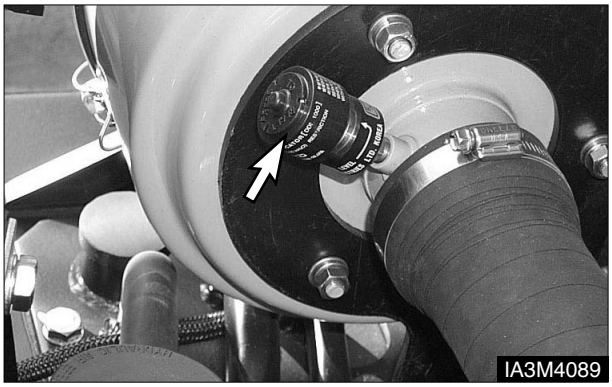

Service the air cleaner when the red target in the service the air cleaner when the red target in the service indicator stays locked in the visible position with the engine stopped.

1. To service the air cleaner, raise the hood and seat assembly.
Make certain the support cylinder securely holds the hood open. Loosen the cover latches.

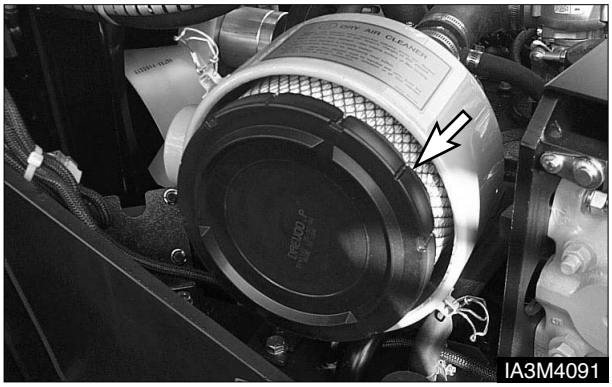

2. Rotate the element slightly to separate it from its base and remove it from the air cleaner housing.

3. Clean and inspect the element or replace with a new element. See topic, “ Cleaning Primary Filter Element ”.

https://truckmanualshub.com/

4. Clean the inside of air cleaner housing and the cover. Inspect all connections between the air cleaner and engine. Check intake hose for cracks, damage and loose clamps. Tighten or replace parts as necessary to prevent leakage.

NOTICE

Do not allow dirty air to enter the intake hose when cleaning the inside of the air cleaner housing.

5. Check the air cleaner housing for loose latches.

6. Reset the air cleaner service indicator.

7. Install the air filter element.

8. Install the cover and tighten the cover latches.

9. Start the engine and observe the position of the indicator. If the indicator shows RED after the installation of the primary element, install another clean or a new element or, replace the secondary element. See topic, “ Changing Secondary Element. ”

10. Stop the engine and close the hood and seat assembly.

Changing Secondary Element

Relace the secondary element after the primary element has been cleaned three times or yearly.

1. Remove the primary air cleaner element. See topic “ Servicing Filter Element ”. Clean the inside of the air cleaner housing and cover.

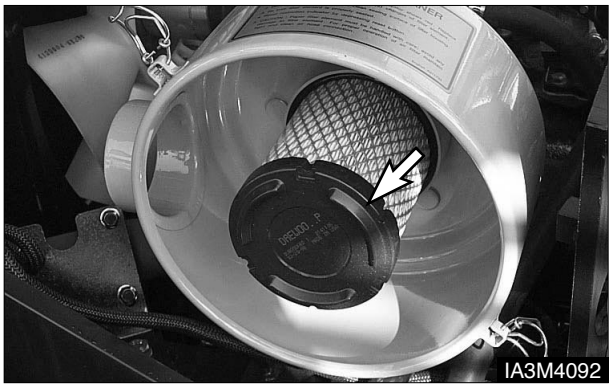

2. Remove the secondary element. Inspect the gasket between the air cleaner housing and the engine inlet. Replace the gasket if it is damaged.

NOTICE

Always replace the secondary element. Do not attempt to reuse it by cleaning.

3. Install a new secondary element. Install a new or cleaned primary element. Install the cover. Tighten the latches.

4. Start the engine and observe the air cleaner service indicator. If the indicator shows RED after installing a new secondary elemennt and a cleaned primary (outer) element, replace the cleaned primary filter with a new element.

5. Stop the engine. Close the hood and seat assembly.

https://truckmanualshub.com/

Clean Filter Elements

⚠ WARNING

Pressure air can cause personal injury.

When using pressure air for cleaning, wear a protective face shield, protective clothing and protective shoes.

The maximum air pressure must be below 205 kPa (30 psi) for cleaning purposes.

NOTICE

Do not clean the elements by bumping or tapping them.

Inspect filter elements after cleaning. Do not use a filter with damaged pleats, gaskets or seals.

When cleaning with pressure air, use 205 kPa (30 psi) maximum pressure to prevent filter element damage.

When cleaning with pressure water, use 280 kPa (40 psi) maximum pressure to prevent filter element damage.

Have spare elements on hand to use while cleaning used elements.

The primary element should be replaced after a year's service or after cleaning no more than 6 times.

Air-205 kPa (30 psi) Maximum Pressure

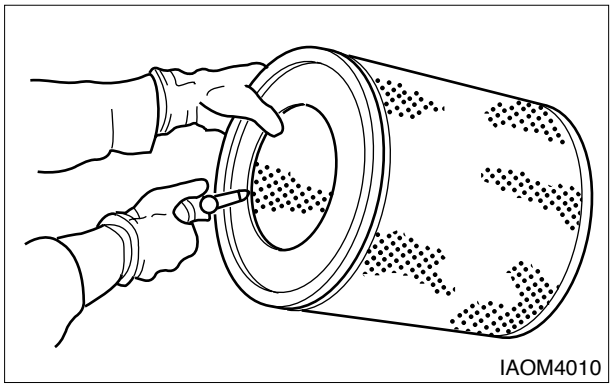
IAOM4010

Direct air on the inside and outside of the element along the lengh of the pleats. Check the element for any tears, rips or damage.

Water-280 kPa (40 psi) Maximum Pressure

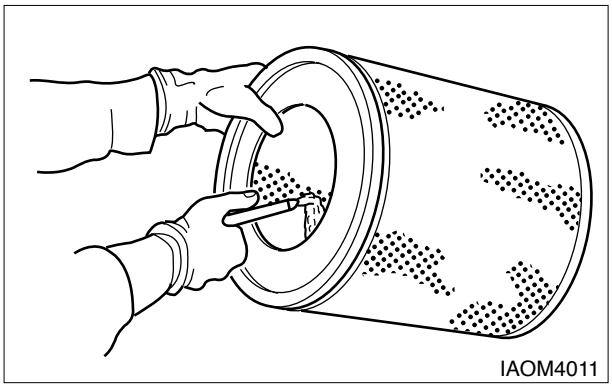
IAOM4011

Direct water on the inside and outside of the element along the length of the pleats. Air dry it thoroughly and then examine it.

Detergent

1. Wash the element in warm water and nonsudsing household detergent.

2. Rinse the element with clean water. See instructions in preceding topic for cleaning with water.

3. Air dry it thoroughly, and then examine it.

Checking Element

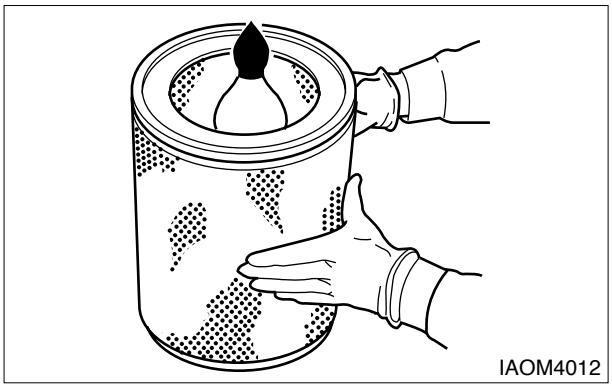
IAOM4012

1. Insert a light inside the clean dry element and examine it. Discard the element if tears, rips or damage are found.
2. Wrap and store good elements in a clean, dry place

https://truckmanualshub.com/

Distributor & Spark Plug - Check

Distributor (Gasoline and LP-Gas Engnes) - Check

Park the lift truck with the forks lowered, parking brake applied, transmission in neutral and the engine stopped.

1. Raise the hood and seat assembly.

2. Remove the distributor cap. Clean the distributor cap. Check the cap for cracks, carbon runners and corroded terminals. Replace the cap if necessary.

3. Remove the rotor. Check the rotor for burned and corroded contacts. Replace the rotor if necessary.

4. Install the rotor and distributor cap. Secure the distributor cap in position with the screws.

5. Close the hood and seat assembly.

Spark Plugs (Gasoline and LP-Gas Engines) - Check

Park the lift truck with the forks lowered, parking brake applied, transmission in neutral and the engine stopped.

1. Raise the hood and seat assembly.

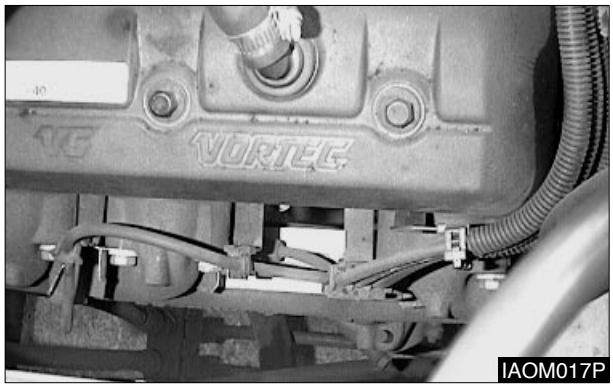

2. Disconnect the spark plug wires. Check the wires for cracks, wear, high voltage leaks or broken connectors.

3. Clean the engine block in the area around the spark plugs.

4. Remove the spark plugs. Inspect the porcelain for cracks and high voltage tracking. Check the electrodes for wear, carbon or corrosion. Replace plugs that are defective.

5. Clean the spark plugs. To set the electrode gaps for a particular engine, see the “ Service Manual ”. Install the plugs.

6. Close the hood and seat assembly.

https://truckmanualshub.com/

Tires and Wheels - Check, Inspect

⚠ WARNING

Servicing and changing tires and rims can be dangerous and should be done only by trained personnel using proper tools and procedures.

If correct procedures are not followed while servicing tires and rims, the assemblies could burst with explosive force and cause serious physical injury or death.

Follow carefully the specific information provided by your tire servicing man or dealer.

Inspect tires for wear, cuts, gouges and foreign objects. Look for bent rims and correct seating of locking ring.

Check tires for proper inflation. See “ Tire Inflation Pressures. ”

To inflate tires always use a clip-on chuck with a minimum 60 cm (24 inches) length of hose to an in-line valve and gauge.

Always stand behind the tread of the tire, NOT in front of the rim.

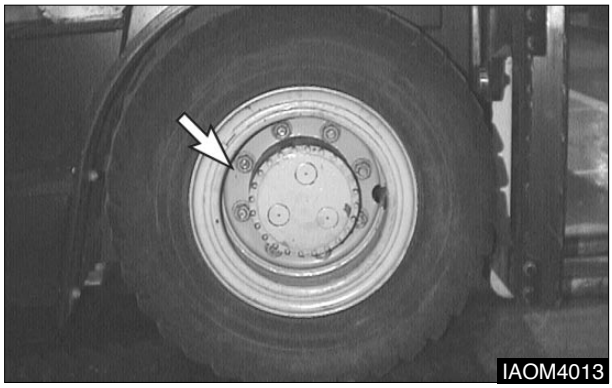

Do NOT reinflate a tire that has been run while flat or underinflated, without first checking to make sure the locking ring on the rim is not damaged and is in the correct position.

When tires are changed, be sure to clean all rim parts and, if necessary, repaint to stop detrimental effects of corrosion. Sand blasting is recommended for removal of rust.

Check all components carefully and replace any cracked, badly worn, damaged and severely rusted or corroded parts with new parts of the same size and type. If there is any doubt, reploace with new parts.

Do NOT, under any circumstances, attempt to rework, weld, heat or braze any rim components.

Ignition Timing (Gasoline and LP - Gas Engine) - Check, Adjust

Ignition timing for LPG engines must be set at 4° BTDC in Timing Mode.

https://truckmanualshub.com/

Wheel Bolts and Nuts - Inspect

Inspect Tightness

NOTICE

Do not lubricate ball seas of wheels or ball faces of wheel nuts.

Be sure mounting faces of hub, wheel nuts and flat mounting surfaces are clean.

Tighten wheel nuts again after 24 hours of operation.

NOTE : Always tighten wheel lug nuts in a sequence opposite (180°) each other.

If equipped with dual wheels, follow the same nut tightening sequence for both wheels.

Steer Wheels

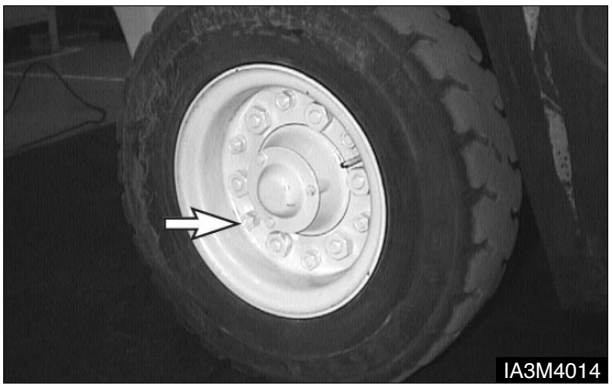

Install steer wheel. Put two nuts opposite (180°) each other. Tighten both.

Install remaining nuts. Tighten all nuts in a sequence opposite (180°) each other. Tighten to 440±35 N•m (325±25 lb•ft).

Drive Wheels

Install drive wheel. Put two nuts opposite (180°) each other. Tighten both.

Install the remaining nuts. Tighten all nuts in a sequence opposite (180°) each other. Tighten to 600±90 N•m (440±60 lb•ft).

https://truckmanualshub.com/

Every 10 Service Hours or Daily

You must read and understand the warnings and instructions contained in the Safety section of this manual, before performing any operation or maintenance procedures.

Engine Oil Level - Check

⚠ WARNING

Hot oil and components can cause personal injury. Do not allow hot oil or components to contact skin.

Park the lift truck level, with the forks lowered, parking brake applied, transmission in NEUTRAL and the engine stopped.

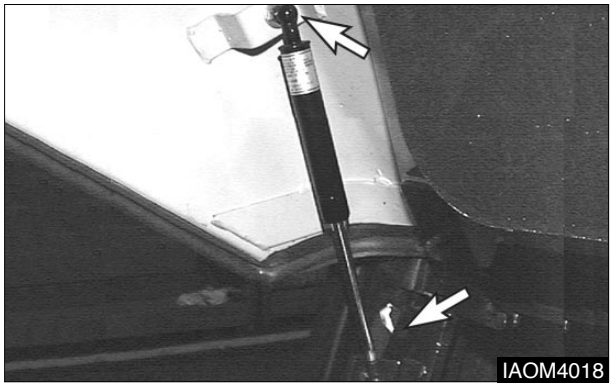

1. Raise the hood and seat assembly. Make certain the support cylinder securely holds the hood open.

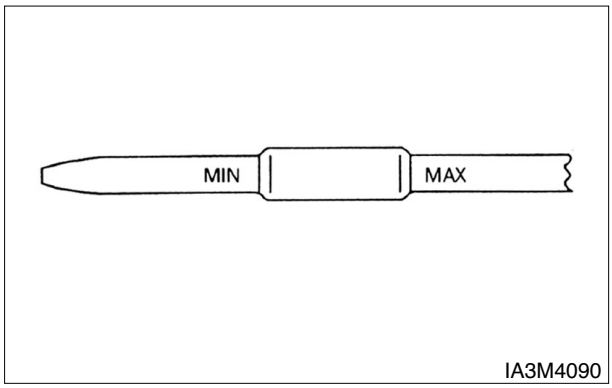

2. Maintain oil level between the MAX. and MIN. marks on the dipstick.

Coolant Level - Check, Clean, Change

Check Coolant Level

⚠ WARNING

At operating temperature, the engine coolant is hot and under pressure.

Steam can cause personal injury.

Check the coolant level only after the engine has been stopped and the filler cap is cool enough to touch with your bare hand.

Remove the filler cap slowly to relieve pressure.

Cooling system conditioner contains alkali. Avoid contact with the skin and eyes to prevent personal injury.

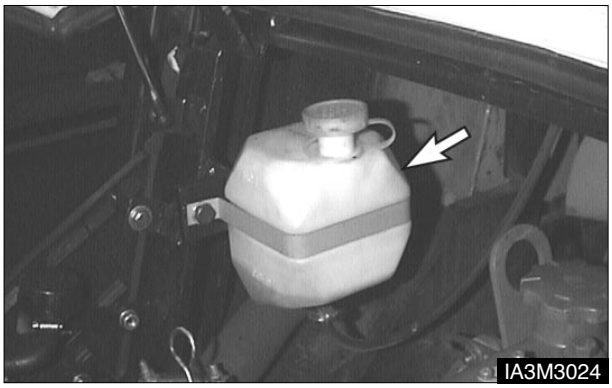

1. Observe the coolant level with engine cold. Maintain coolant level to the proper line on expansion bottle. If the expansion bottle has no coolant, it will be necessary to check coolant at the radiator filler neck.

2. Remove the radiator cap. Fill radiator to the top of the filler neck. Inspect radiator cap. Replace if damaged. Install the radiator cap.

https://truckmanualshub.com/

3. Start and run the engine to stabilize the coolant level in the filler neck. If low add coolant until it reaches the top of the filler neck. Install the radiator cap. Observe coolant level in the expansion bottle. If necessary, add coolant to bring the coolant to the appropriate line on the expansion bottle.

4. Stop the engine.

5. Inspect the cooling system for leaks, hose cracks or loose connections.

⚠ WARNING

Pressure air can cause personal injury.

When using pressure air for cleaning, wear a protective face shield, protective clothing and protective shoes.

Maximum air pressure must be less than 205 kPa (30 psi) for cleaning purposes.

---

6. Blow any dust and lint from the radiator fins.

Air Cleaner Indicator - Check

Checking Service Indicator

(Diesel Engine)

(Gasoline and LP-Gas Engine)

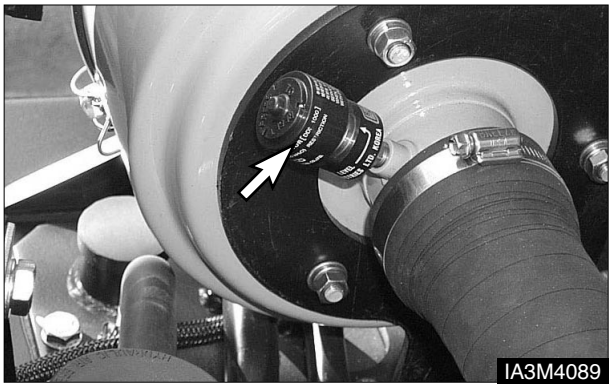

1. Observe the air cleaner service indicator.

2. Service the air cleaner when the RED band in the service indicator, lock in the visible position. See topic, “ Air Cleaner ” in “ When Required ”.

NOTE : Service the element more frequently, as required, in servere dust or lint conditions. Also, service it more frequently where the operator is required to wear a respirator.

3. Close hood and seat assembly.

https://truckmanualshub.com/

Walk - Around Inspection - Inspect

For maximum service life of the lift truck, make a thorough walk-around inspection.
Look around and under the truck for such items as loose or missing bolts, debris or dirt buildup, fuel, oil or coolant leaks and cut gouged tires.

Have any repairs made and debris removed, as needed.

1. Inspect the tires and wheels for cuts, gouges, foreign objects, inflation pressure and loose or missing bolts.

2. Inspect the mast and lift chains for wear, broken links, pins and loose rollers.

3. Inspect the hydraulic system for leaks, worn hoses or damaged lines.

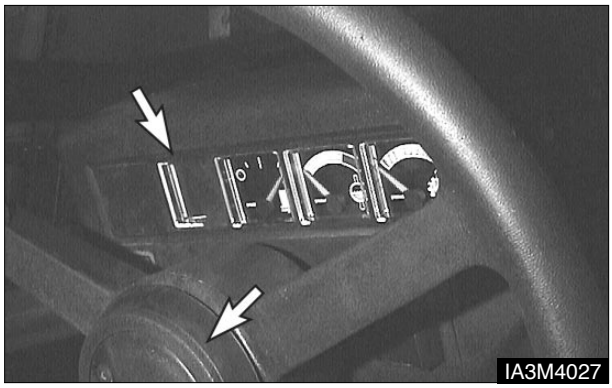

4. Look for transmission and differential leaks on the lift truck and on the ground.

5. Inspect the operator's compartment for loose items and cleanliness.

6. Inspect the instrument panel for broken gauges and indicator lights.

7. Test the horn and other safety devices for proper operation.

(Diesel Engine)

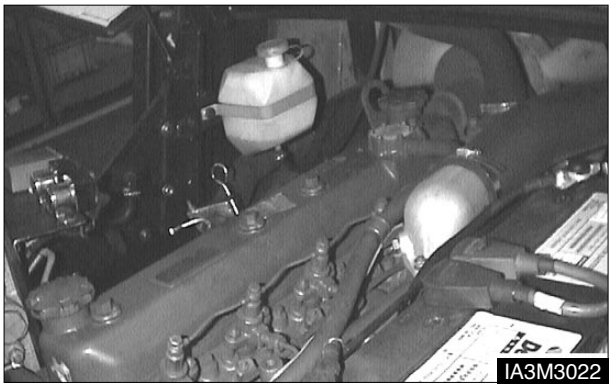

(LP-Gas Engine)

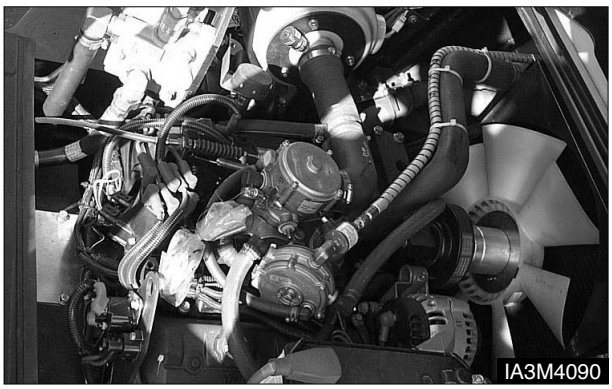

8. Inspect the cooling system for leaks, worn hoses and debris buildup.

9. Inspect engine compartment for oil, coolant and fuel leaks.

10. Inspect the forks.

- Visually inspect forks for cracks, especially in the heel section, around the mounting brackets, and all weld areas.
- Inspect for broken or jagged fork tips, bent or twisted blades and shanks.
- Make sure positioning lock is in place and working. Lock the forks in position before using the truck. See Step 7 of **" Forks " in " Every 2000 Service Hours or 1 Year. "**
- Remove all defective forks from service.

https://truckmanualshub.com/

Mast Channels - Lubricate

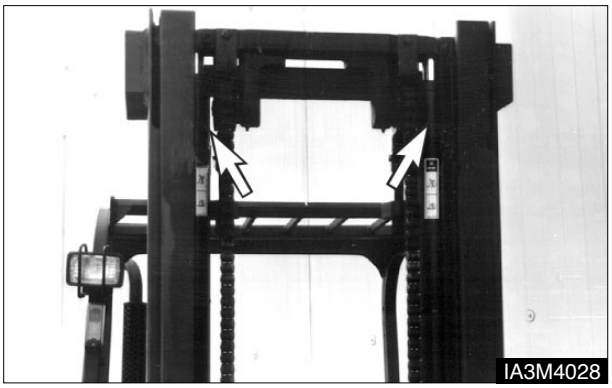

The channels on the roller-type mast require a break-in period. Apply a light film of lubricant on the channels where the rollers ride. This will prevent metal peel until the rollers set a pattern.

Transmission Oil Level - Check

⚠ WARNING

Hot oil and components can cause personal injury. Do not allow hot oil or components to contact skin.

---

1. Start and operate the lift truck until the engine reaches normal operating temperature.

2. Park the lift truck level with the forks lowered, parking brake applied and the transmission controls in NEUTRAL.

3. With the brake applied and the engine at low idle, shift the directional control lever to forward and then to reverse, to fill the clutches.

4. Shift the direction control lever to the NEUTRAL position.

5. Open the access door in floor plate.

6. Remove the dipstick/filler cap. Observe the oil level.

7. Maintain the oil level between the ADD and FULL marks on the dip stick/filler cap.

8. Close the access door in floor plate.

9. Stop the engine.

https://truckmanualshub.com/

First 50 - 100 Service Hours

You must read and understand the warnings and instructions contained in the Safety section of this manual, before performing any operation or maintenance procedures.

Transmission Oil & Oil Filter & Strainer - Clean, Change

⚠ WARNING

Hot oil and components can cause personal injury. Do not allow hot oil or components to contact skin.

Park the lift truck level, with the forks lowered, parking brake engaged, transmission in NEUTRAL and the engine stopped.

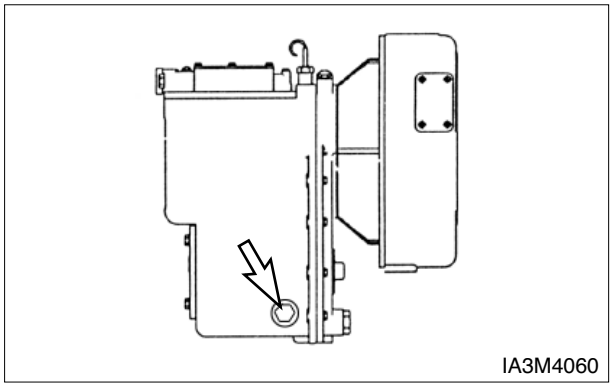

1. Remove the drain plug, spring and strainer. Allow the oil to drain.

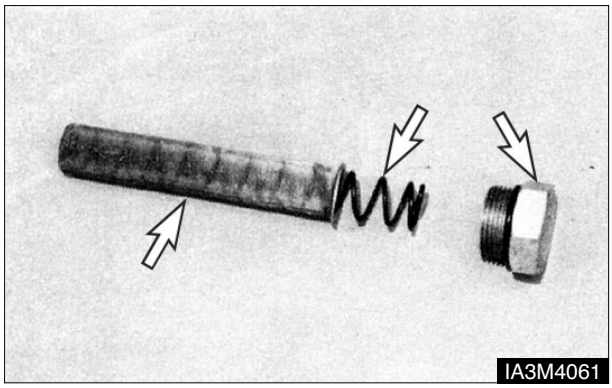

2. Wash the strainer (screen), spring and drain plug in clean, nonflammable solvent.Dry and install the strainer, spring and drain plug.

3. Remove blocking from the rear of the lift truck.Lower the lift truck to the floor.

4. Raise the hood and seat assembly.

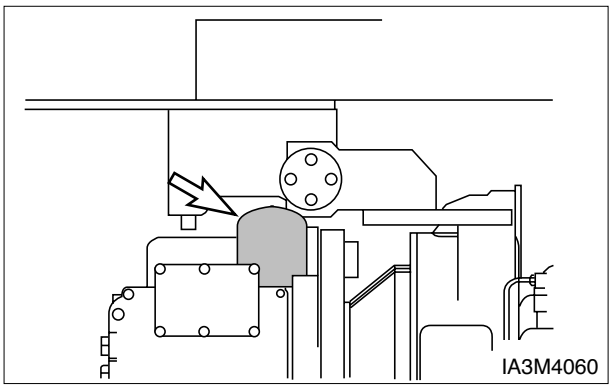

5. Remove and discard the oil filter. Wipe off the filter base. Make sure all of the old gasket is removed.

6. Put a small amount of clean oil on the gasket on the new filter. Install the filter by hand. When the filter contacts the base, tighten it an additional 3/4 turn.

7. Close the hood and seat assembly.

8. Open the access door in the floor plate.

9. Remove the dipstick/filler cap. Fill the transmission with oil. See “Refill Capacities” Install the dipstick/filler cap.

https://truckmanualshub.com/

10. Start the engine.

11. With the service brake applied and engine at low idle, shift the transmission to forward and reverse to fill the clutches.

12. Shift the transmission into NEUTRAL.Apply the parking brake.

13. Remove the dipstick/ filler cap.

14. Maintain oil level between the ADD and FULL marks on the dipstick filler cap. Close access door.

15. Check for oil leaks at the filter and drain plug.

16. Stop the engine.

Drive Axle Oil - Change

NOTE : Change the differential oil on lift trucks that are operated under wet conditions or measure oil level on lift trucks that operate under dry conditions. Clean the housing breather under either condition.

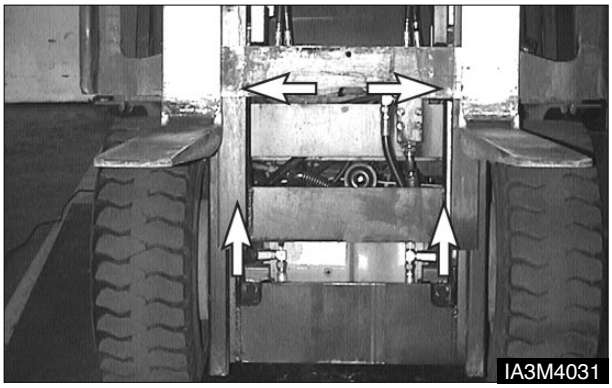

1. Lift the carriage high enough to gain access to the differential housing level-fill plug and breather.

2. Put blocks under the carriage.

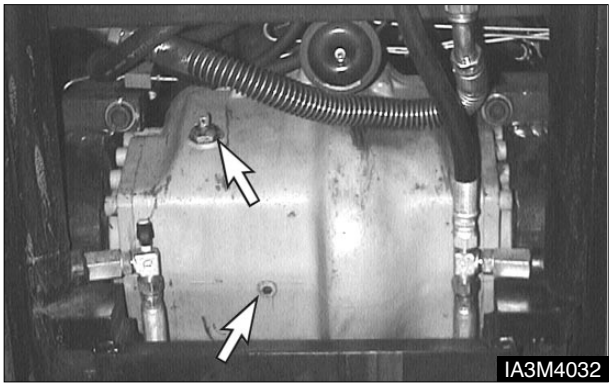

3. Remove the housing breather. Wash it in clean, nonflammable solvent.

4. Install the breather if the housing is not required to be drained.

5. Measure the differential lubricant level on lift trucks on which differentials are not required to be drained. See topic, “Drive Axle Oil Level” in “ Every 250 Service Hours or Monthly ”.

https://truckmanualshub.com/

6. To drain the differential housing, remove the housing drain plug. Allow the lubricant to drain.

7. Clean and install the housing drain plug.

8. Remove the oil level plug.

9. Fill the housing with lubricant to the bottom of the plug opening.

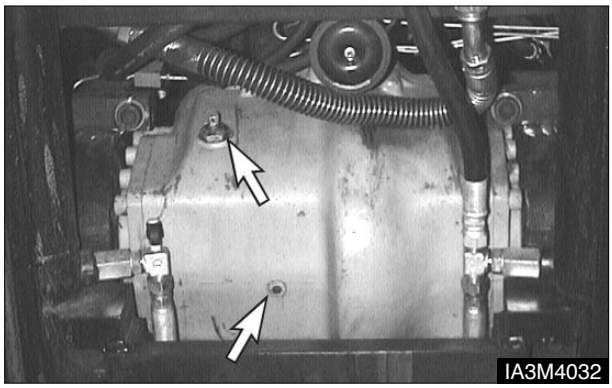

10. Clean and install the oil level plug or the elbow plug.

11. Install the breather.

12. Remove the blocks from under the carriage.Lower the carriage.

13. Operate the lift truck for a few minutes. Check for leakes.

Parking Brake - Test, Adjust

NOTE : Be sure area around the lift truck is clear of personnel and obstructions.

1. Drive the lift truck, fully loaded, forward up a 15% incline.

2. Halfway up the incline, stop the lift truck with the service brake.

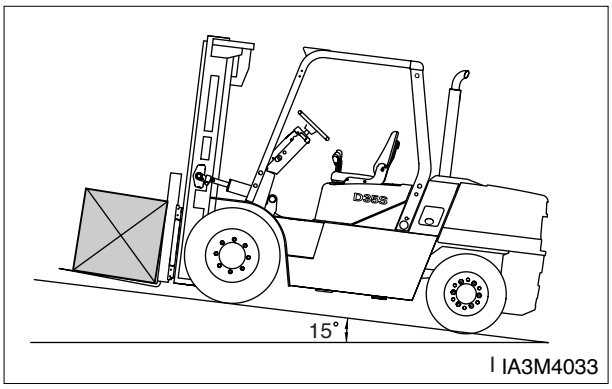

3. Apply the parking brake and slowly release the service brake.

4. The parking brake should hold the lift truck. If the lift truck starts to move, immediately apply the service brakes. Have the parking brake adjusted.

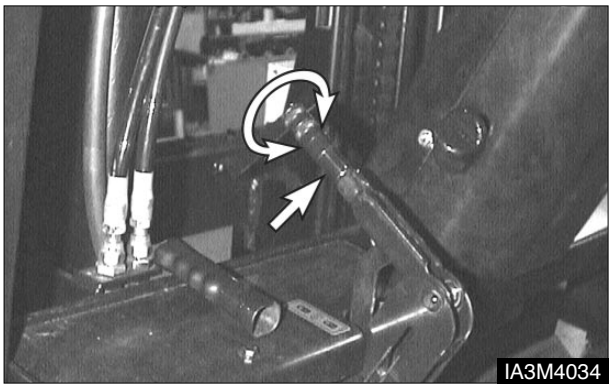

5. Turn adjusting screw on parking lever to the left side slightly.

6. Test the parking brake adjustment, with the lift truck fully loaded, on a 15% incline.

7. Repeat the adjustment procedure if necessary.

https://truckmanualshub.com/

First 250 Service Hours

You must read and understand the warnings and instructions contained in the Safety section of this manual, before performing any operation or maintenance procedures.

Hydraulic Return Filter - Change

⚠ WARNING

Hot oil and components can cause personal injury. Do not allow hot oil or components to contact skin.

Park the lift truck level with the forks lowered, parking brake engaged, transmission in NEUTRAL and the engine stopped.

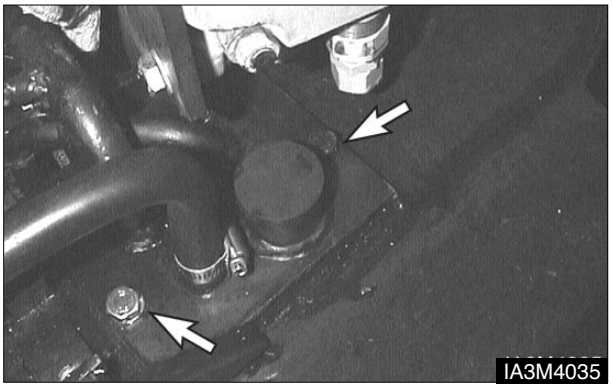

1. Raise the hood and seat assembly. Loosen the bolts of the hydraulic tank cover, and remove the hydraulic tnak cover with filter assembly.

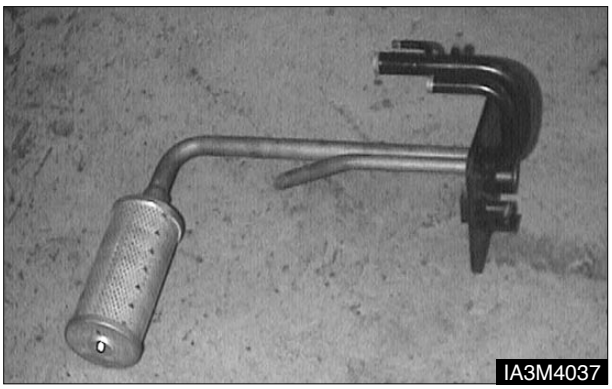

2. Remove filter assembly from the hydraulic tank cover.

3. Install new filter assembly in the hydraulic tank cover.

4. Inspect cover gasket for damage, replace it if necessary.

5. Clean and Install the cover and tighten retaining bolts.

6. Lower the hood and seat assembly.

https://truckmanualshub.com/

Engine Valve Lash Adjustment - Check, Adjust (Diesel Engine)

Park the lift truck with the forks lowered, parking brake applied, transmission in NEUTRAL and the engine stopped and cold.

NOTE : Initial valve lash adjustment on a new or rebuilt engine only, is recommended at the first scheduled oil change interval, due to initial wear and seating of valve train components.

⚠ WARNING

To prevent possible injury when adjusting diesel engines, do not use the starter motor to turn the flywheel.

Hot engine components can cause burns. Allow additional time for the engine to cool before measuring valve clearance.

NOTICE

Measure the valve lash with the engine stopped. TO obtain an accurate measurement, allow at least 20 minutes for the valves to cool the engine cylinder head and block temperature.

Set the clearance to the nominal appropriate clearance given in the “ Valve Clearance Setting ” chart shown below

Valve Clearances		
Engine	Valve	Clearances
DB58(Diesel)	Exhaust Valves	0.40mm(.16 in)
	Intake Valves	0.40mm(.16 in)

Refer to the “ Service Manual ” for the complete valve adjustment procedure.

NOTE : In case of Gasoline or LPG Engine, no valve adjustment is necessary.

https://truckmanualshub.com/

Every 250 Service Hours or Monthly

You must read and understand the warnings and instructions contained in the Safety section of this manual, before performing any operation or maintenance procedures.

Hydraulic Oil Level - Check

⚠ WARNING

At operating temperature, the hydraulic tank is hot and under pressure.

Hot oil can cause burns.

Remove the filler cap only when the engine is stopped, and the cap is cool enough to touch with your bare hand. Remove the filler cap slowly to relieve pressure.

---

1. Operate the lift truck for a few minutes to warm the oil. Park the lift truck on a level surface, with the forks lowered, mast tilted back, parking brake engaged, transmission in NEUTRAL and the engine stopped.

2. Raise the hood and seat assembly. Make sure the air lift cylinder securely holds the hood open.

3. Remove the dipstick/ filler cap. Maintain the oil level to the FULL mark on the breather/dip stick.

Drive Axle Oil Level - Check

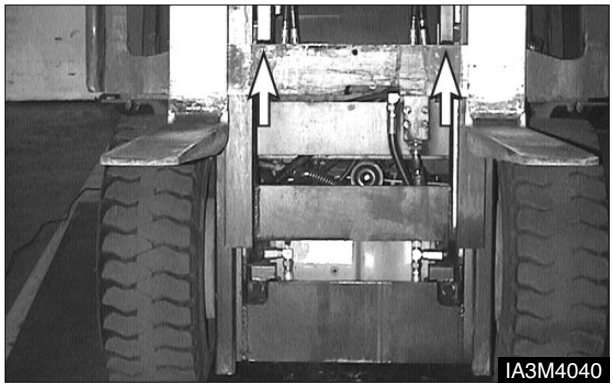

1. Lift the carriage high enough to gain access to the differential housing oil level plug and fill plug.

2. Put blocks under the carriage.

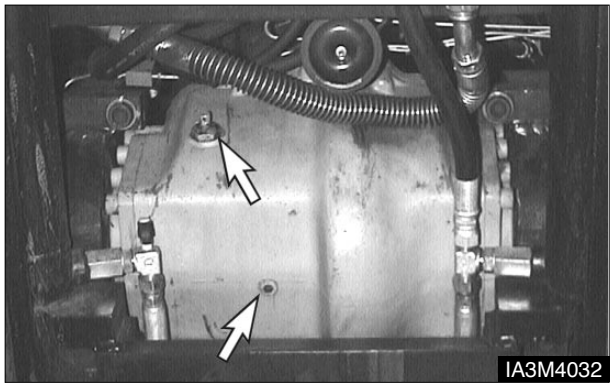

3. Remove the housing oil level plug and fill plug. Maintain the lubricant level to the bottom of the plug opening.

4. Clean and install the oil level plug and fill plug.

https://truckmanualshub.com/

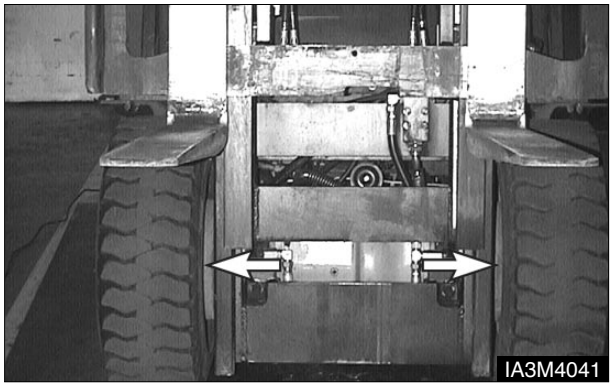

5. Remove the blocks from under the carriage. Lower the carriage.

Attachment & Mast - Inspect, Lubricate

1. Operate the lift, tilt and attachment controls. Listen for unusual noises. These may indicate a need for repair.

2. Check for loose bolts and nuts on the carriage. Remove any debris from the carriage and mast.

3. Check the forks and attachments for free operation and damage. Have repairs made if necessary.

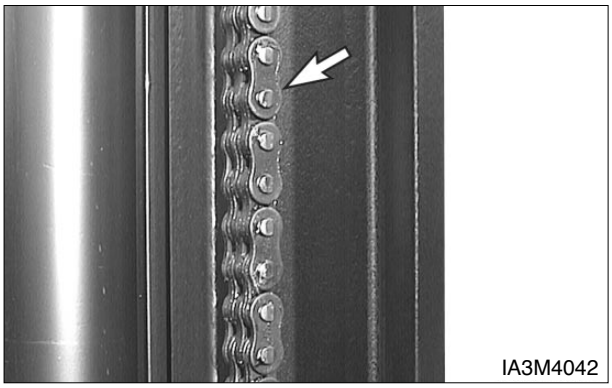

4. Brush a film of oil on all links of the chain.

5. Raise and lower the carriage a few times to work lubricant into the chain links.

NOTICE

Lubricate chains more frequently than normal in applications where the lift truck is operating in a atmosphere which could cause corrosion of components or when lift truck must work in rapid lift cycles.

---

6. Check the chain anchors and individual links for wear, loose pins or cracked leaves.

https://truckmanualshub.com/

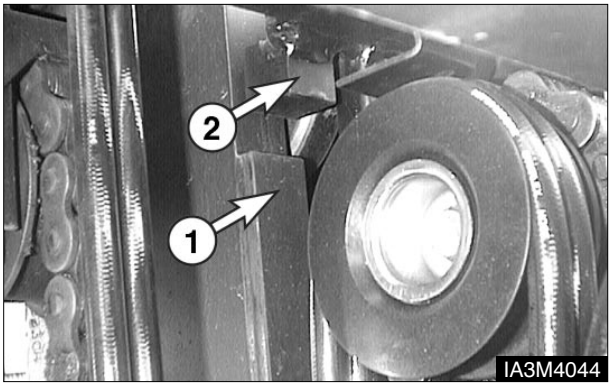

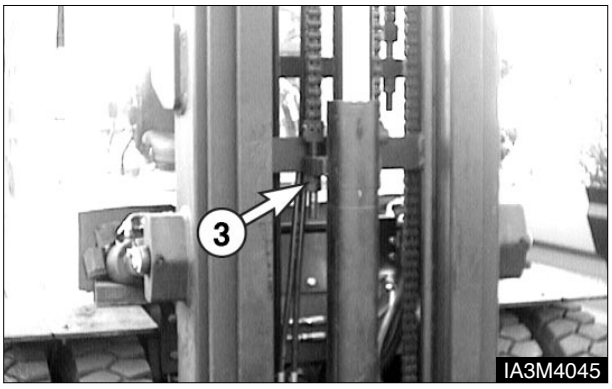

7. In case of Full Free Lift Mast, Extend the primary cylinder to full length and then check the clearance and over lapped dimension between carriage stopper bolt or block(1) and Inner mast stopper block (2). Adjust the chain anchor bolt (3) so that clearance should be 14•2mm.
And adjust the overlapped dimension to be 10•2mm by moving or inserting washer.

Steering Mechanism - Check, Lubricate

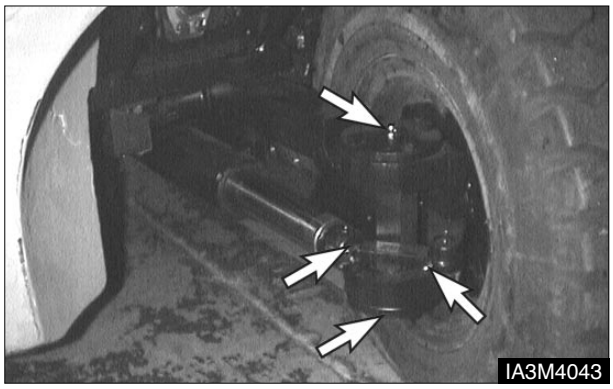

1. Lubricate the steer axle king pins, total of four fittings. Two on the right side and two on the left side.

2. Lubricate the steering link bearings, total of four fittings. Two on the right side and two on the left side.

3. Check for any worn or loose components of the steering mechanism. Remove any debris or trash as required.

https://truckmanualshub.com/

Battery Terminal - Clean, Inspect

⚠ WARNING

Batteries give off flammable fumes that can explode.

Do not smoke when observing the battery electrolyte levels.

Electrolyte is an acid and can cause personal injury if it contacts skin or eyes.

Always wear protective glasses when working with batteries.

(Diesel Engine - 12V X 2)

(LP - Gas Engine - 12V X 1)

1. Clean the top of the battery and terminals.

2. Check terminals for corrosion. Coat terminals with heavy grease.

Engine Oil and Filter - Change

Engine Crankcase (Diesel Engine)

The percentage of sulfur in the fuel will affect the engine oil recommendations. If the fuel has over 0.5% sulfur content, the CD engine oil must have a TBN of 20 times the percentage of fuel sulfur (TBN as measured by the ASTM D-2896 method). Your oil supplier should be able to furnish the correct oils.

1. Operate lift truck a few minutes to warm oil. Park the lift truck with the forks lowered, parking brake applied, Transmission in neutral and the engine stopped.

2. Raise rear of lift truck off ground and block securely.

⚠ WARNING

Hot oil and components can cause personal injury. Do not allow hot oil or components to contact skin.

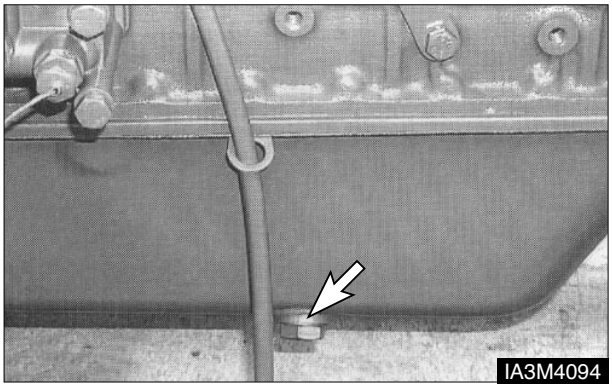

Typical Example

3. Remove the crankcase drain plug and allow oil to drain into a suitable container. Clean and install drain plug.

https://truckmanualshub.com/

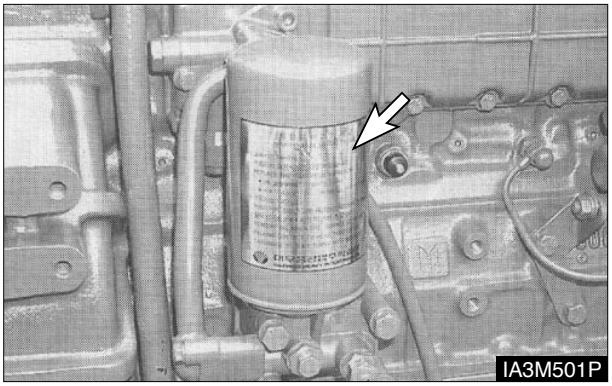

Typical Example

4. Remove and discard oil filter element.

5. Wipe sealing surface of oil filter element mounting base. Make sure all of the old gasket is removed.

6. Before installing a new filter element, apply a small amount of clean engine oil to the filter element gasket.

7. Install the new filter element. When the gasket contacts the base, tighten it 3/4 of a turn more. Do not overtighten.

8. Raise the lift truck, remove the blocking and lower the lift truck.

9. Raise the hood and seat assembly.

10. Fill the crankcase. See “ Refill Capacities ”.

11. Start the engine and allow the oil to fill the filter and passages.

12. Check for oil leaks.

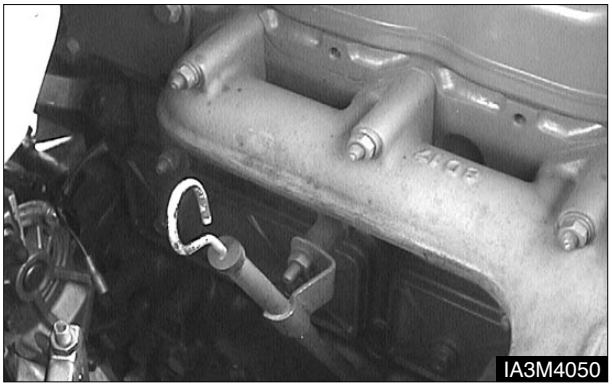

13. Stop the engine and measure the oil level. Maintain the oil level between the MAX. and MIN marks on dip stick.

14. Close hood and seat assembly.

NOTICE

Servicing of the engine oil and oil filter element has large affects on the engine performance as well as the engine life.
Engine oil and filter element must be changed after the first 50 hours

---

Engine Crankcase (Gasoline and LP - Gas Engine)

1. Operate lift truck a few minutes to warm oil. Park the lift truck with the forks lowered, parking brake applied, transmission in neutral and the engine stopped.

2. Raise rear of lift truck off ground and block securely.

⚠ WARNING

Hot oil and components can cause personal injury. Do not allow hot oil or components to contact skin.

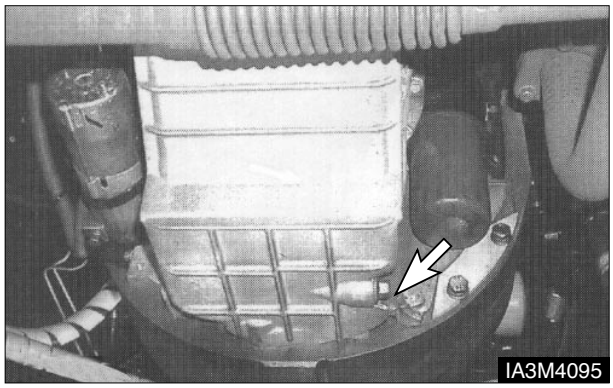

3. Remove the crankcase drain plug and allow oil to drain. Clean and install drain plug.

4. Raise the hood and seat assembly.

https://truckmanualshub.com/

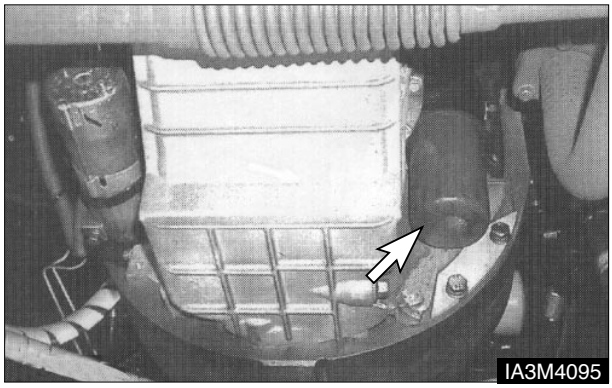

5. Remove and discard oil filter element.

6. Wipe sealing surface of oil filter element mounting base. Make sure all of the old gasket is removed.

7. Before installing a new filter element, apply a small amount of clean engine oil to the filter element gasket.

8. Install the new filter element. When the gasket contacts the base, tighten it 3/4 of a turn more. Do not overtighten.

9. Raise the lift truck, remove the blocking and lower the lift truck.

10. Fill the crankcase. See “ Refill Capacities ”.

11. Start the engine and allow the oil to fill the filter and passages.

12. Check for oil leaks.

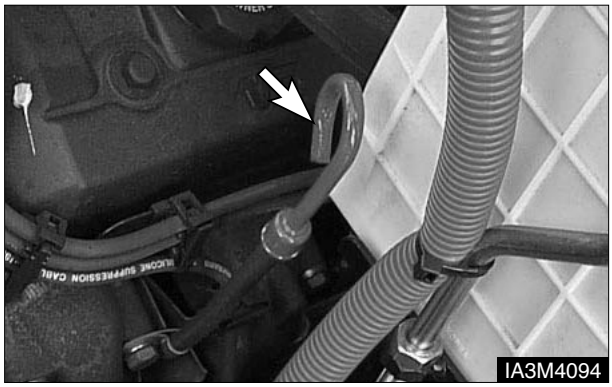

13. Stop the engine and measure the oil level. Maintain the oil level to the FULL mark on the dip stick.

14. Close hood and seat assembly.

PCV Valve System - Inspect, Clean

Gasoline and LP-Gas Engines

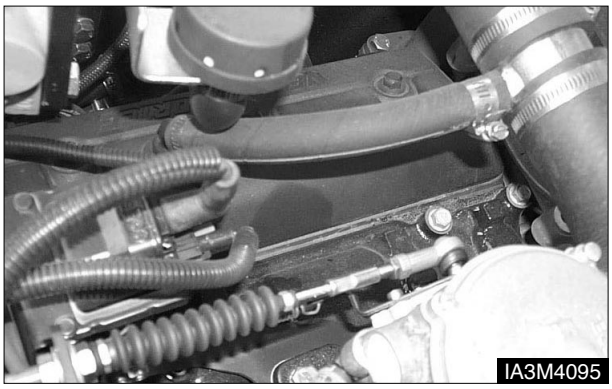

1. Loosen the hose clamps and remove the PCV valve.

2. Shake the PCV valve. If it rattles, reinstall it. If it does not rattle, replace it.

3. Tighten the hose clamps.

https://truckmanualshub.com/

Every 500 Service Hours or 3 Months

You must read and understand the warnings and instructions contained in the Safety section of this manual, before performing any operation or maintenance procedures.

Belts (Diesel Engine) - Check, Adjust

1. Raise the hood and seat assembly.

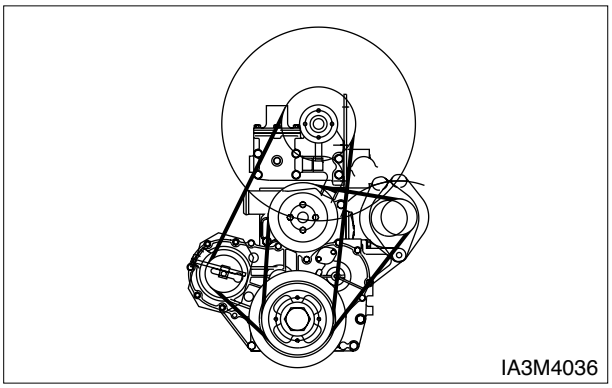

2. Check the condition and adjustment of the belts. Correct adjustment allows 10 mm (3/8 inch) deflection under 45N of force.

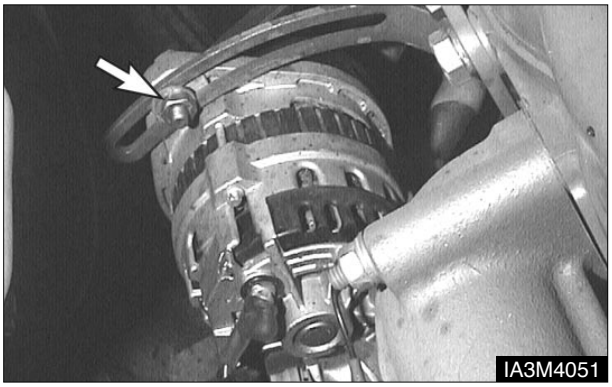

NOTICE

Failure to loosen the alternator mounting bolt will cause excessive stress and break the alternator mounting ear.

3. To adjust the alternator drive belt, loosen adjusting bracket bolt. Move the alternator in or out as required. Tighten bolts.

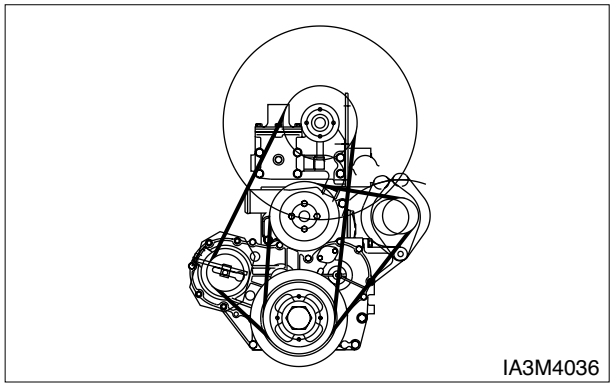

4. To adjust fan belt, loosen idler pulley mounting bolt. Move idler pulley in or out as requied. Tighten idler pulley mounting bolt.

5. Lower the hood and seat assembly.

Mast Hinge Pins - Lubricate

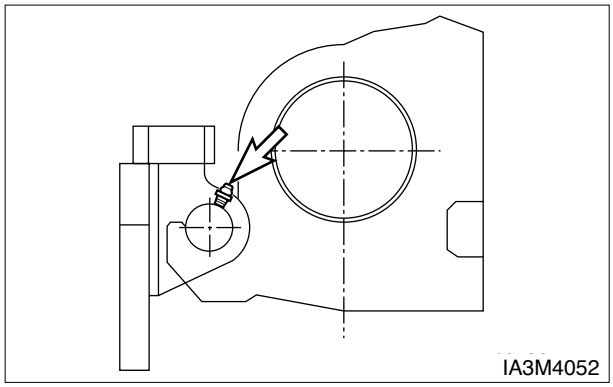

Typical Example

1. Lower the forks and tilt the mast forward.

2. Lubricate the two fittings for the mast hinge pins, one on each side of the mast.

https://truckmanualshub.com/

Tilt Cylinders - Check, Adjust, Lubricate

Chassis Pivot Eyebolts/Lubricate

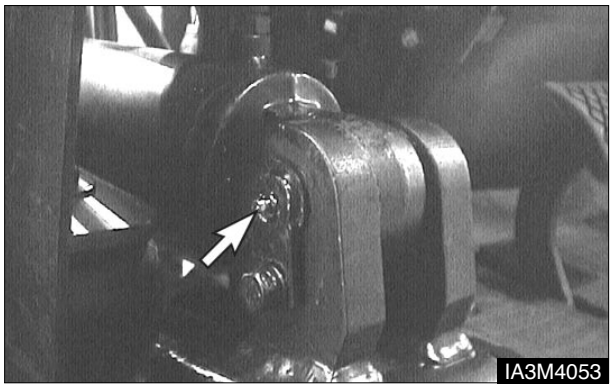

Typical Example

1. Lubricate two fittings for the pivot eyebolts, one on each tilt cylinder.

2. Check the pivot eye pins for loose retainer bolts and wear.

Mast Pivot Eyes-Check/Lubricate

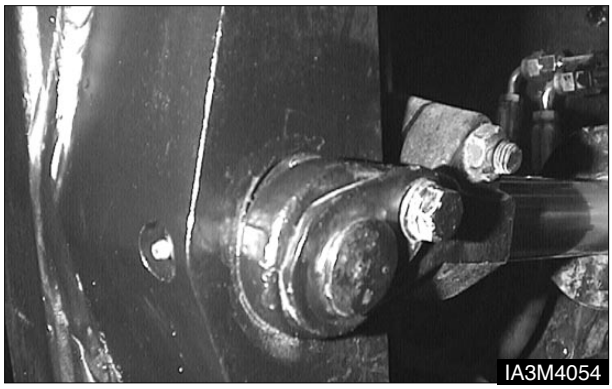

Typical Example

1. Lubricate two fittings for the mast pivot eyes, one on each side of the mast.

2. Check the pivot eye pins for loose retainer bolts and wear.

Cylinder Rod Extension - Adjust

NOTE : The following description is for forward tilt. For cylinder rod back tilt, the collar should be stationary by the tilt eye. If it is not, the O-ring inside the collar may need to be replaced. To adjust back tilt, spacers must be added or removed.

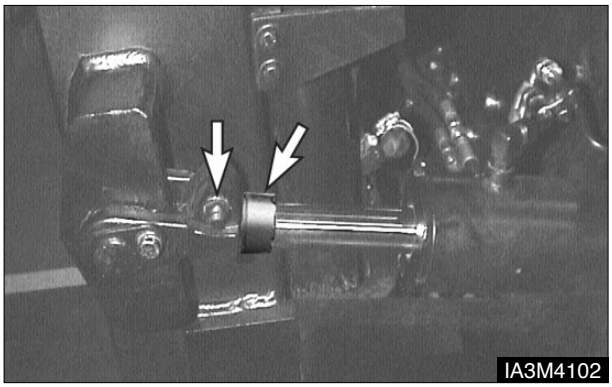

Typical Example

1. Check to make sure the tilt cylinders extend and retract evenly.

2. If one cylinder continues to move after the other cylinder has stopped in full forward or backward tilt, an adjustment must be made to one cylinder.

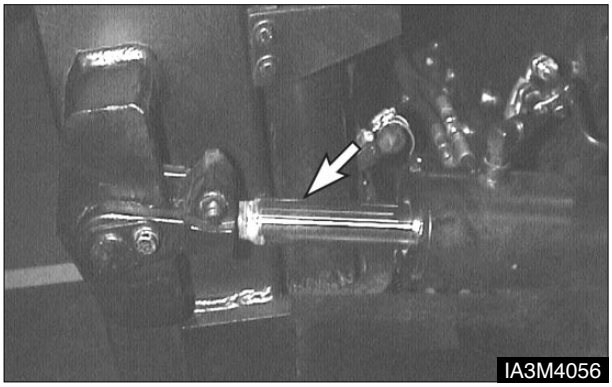

Typical Example

3. To adjust the cylinder rod extension, move the spacer to the rear and loosen the pinch bolt on the clevis.

4. Turn the cylinder rod in or out of the clevis to obtain the proper adjustment. Turning the rod into the clevis shortens the stroke. Turning the rod out of the clevis lengthens the stroke. When turning for extending rod, the overlapped length between clevis's thread and cylinder rod must be minimum 32 mm

5. Tighten the pinch bolts to a torque of 95±15 N•m (70±10 lb ft). Check the cylinder rods again for even travel.

https://truckmanualshub.com/

Crosshead Rollers - Inspect

1. Operate the mast through a lift cycle. Watch the chains move over the crosshead rollers. Make sure the chain is tracking over the rollers properly.

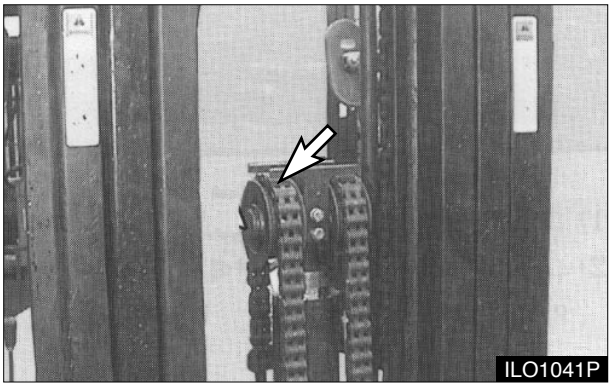

Typical Example

2. Check for damaged crosshead rollers, guards and retainer rings.

Carriage Rollers Side Thrust - Lubricate

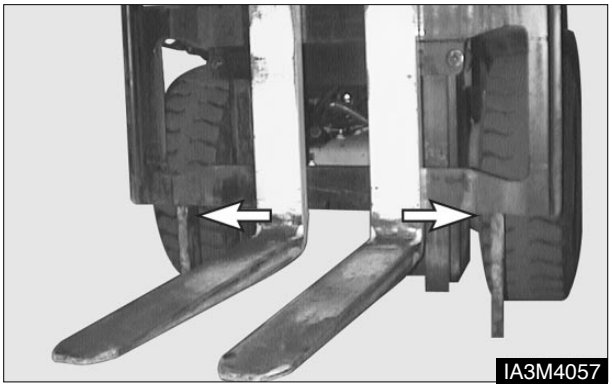

1. Raise the carriage high enough to gain access to the side thrust rollers on the back side of the carriage. Block the carriage in this position.

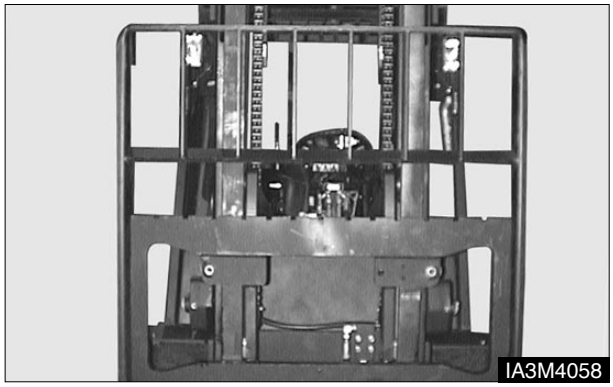

2. Lubricate 2 side thrust roller fittings, one on each side of the mast.

3. Raise the carriage, remove the blocking. Lower the carriage to the floor.

Carriage Sideshifter (If Equipped) - Lubricate

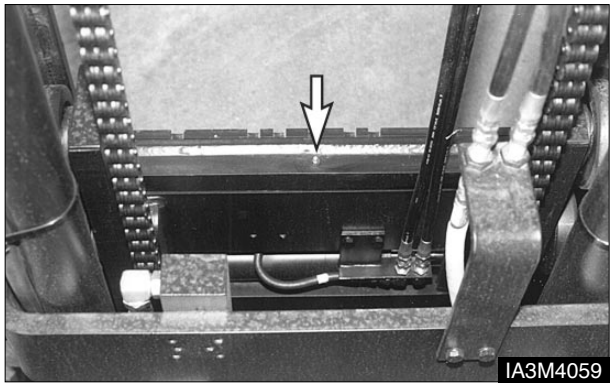

1. Lubricate 4 (6) fittings. The forks may have to be moved to gain access to all of the fittings.

2. Operate the sideshifter carriage through several complete cycles to distribute the grease.

https://truckmanualshub.com/

Parking Brake - Test, Adjust

NOTE : Be sure area around the lift truck is clear of personnel and obstructions.

1. Drive the lift truck, fully loaded, forward up a 15% incline.

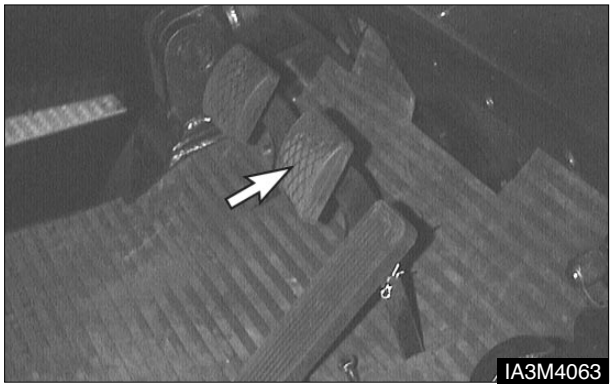

2. Halfway up the incline, stop the lift truck with the service brake.

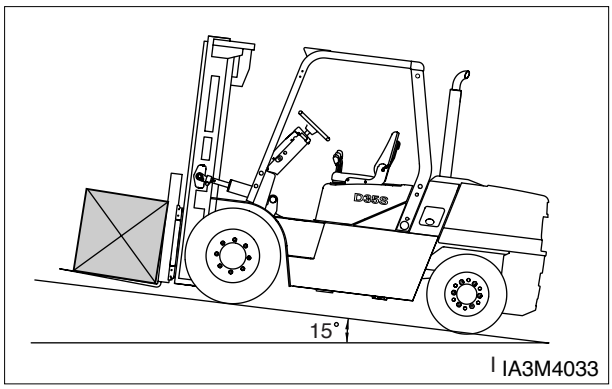

3. Apply the parking brake and slowly release the service brake.

4. The parking brake should hold the lift truck. If the lift truck starts to move, immediately apply the service brakes. Have the parking brake adjusted.

5. Turn adjusting screw on parking lever to the left side slightly

6. Test the parking brake adjustment, with the lift truck fully loaded, on a 15% incline.

7. Repeat the adjustment procedure if necessary.

https://truckmanualshub.com/

Inching & Brake Control shaft - Lubricate

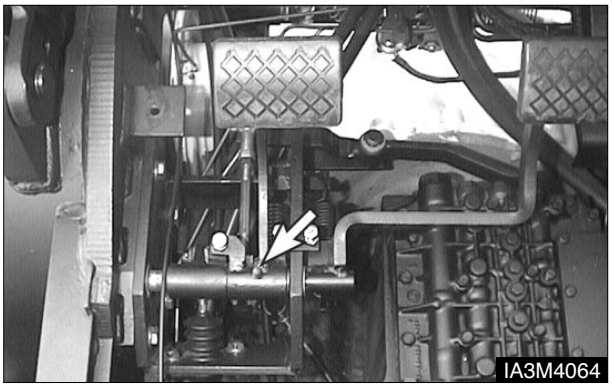

1. Lubricate two fittings for the inching and brake pedal control shaft.

Horn and Lights (If Equipped) - Check

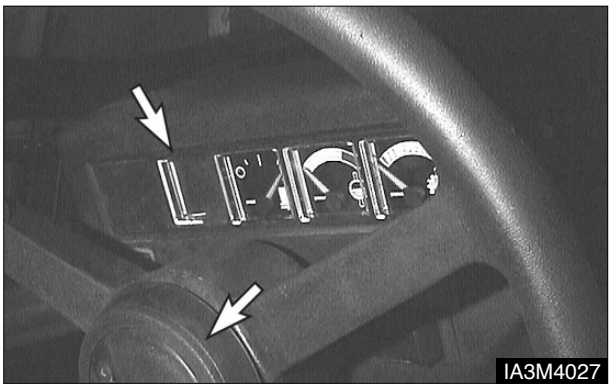

1. Press horn button, to determine if horn is operational.

2. Check and replace all defective gauges.

3. Check all lights such as warning, directional, backup, driving and flood lights for correct operation. Replace all burned out bulbs. Have repairs made if needed.

Overhead Guard - Inspect

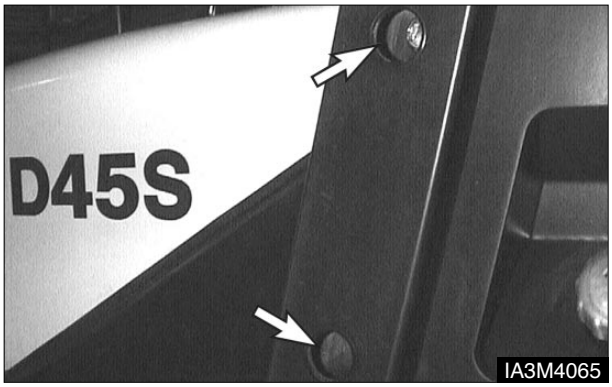

1. Check tightness of overhead guard mounting bolts at 80 N•m (60 lb•ft).

2. Check overhead guard for bent or cracked sections.Have repairs made if needed.

https://truckmanualshub.com/

Steer Suspension - Inspect

1. Inspect the suspension mounting bolts.Tighten suspension mounting bolts, if necessary, to 240±30 N•m (180±20 lb•ft).

2. Look for leaks at the power steering hose connections.

3. Remove any trash buildup on the suspension or the steer axle.

https://truckmanualshub.com/

Every 1000 Service Hours or 6 Months

You must read and understand the warnings and instructions contained in the Safety section of this manual, before performing any operation or maintenance procedures.

Hydraulic Return Filter & Breather - Change

⚠ WARNING

Hot oil and components can cause personal injury. Do not allow hot oil or components to contact skin.

Park the lift truck level with the forks lowered, parking brake engaged, transmission in NEUTRAL and the engine stopped.

1. Raise the hood and seat assembly.

2. Remove air breather.

3. Wash the air breather in clean, nonflammable solvent and dry it.

4. Loosen the bolts of the hyraulic tank cover and remove the hydraulic tank cover with filter assembly.

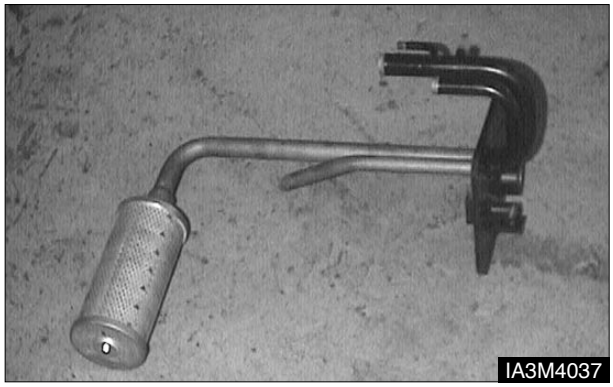

5. Remove filter assembly from the hydraulic tank cover.

6. Install new filter assembly in the hydraulic tank cover.

7. Inspect cover gasket for damage, replace it if necessary.

8. Clean and Install the cover and tighten retaining bolts.

9. Install the air breather.

10. Lower the hood and seat assembly.

Transmission Oil & Oil Filter & Strainer - Clean, Change

See topic, “ Tranmission Oil & Oil Filter & Strainer - Clean, Change ” in “ First 50 - 100 Service Hours ”

https://truckmanualshub.com/

Lift Chains - Check, Adjust

1. Check the lift chains for wear. Complete instructions on the use of the tool are furnished.

2. Lift the forks high enough to put their full weight on the carriage and chains.

3. Check the lift chains for equal tension. The tension on the chains must be equal.

4. If the chains are loose or the tension is not equal, have the chains adjusted.

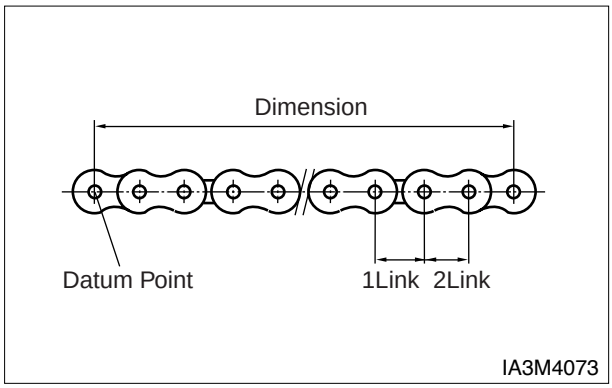

5. Measure the chain length for 12 link in the intermediate area of chain full length. If the dimension indicates longer than 310.9mm, replace the chains.

To Adjust

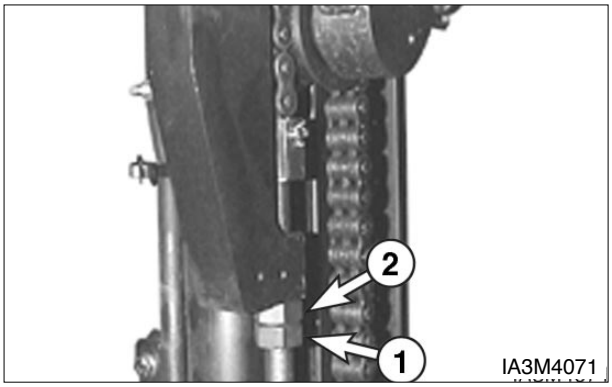

1. Loosen locknut(1) and turn nut(2), on the loose chain to equalize temsion on the lift chains.

2. Tighten locknut(1).

Universal Joint - Inspect

(Diesel Engine)

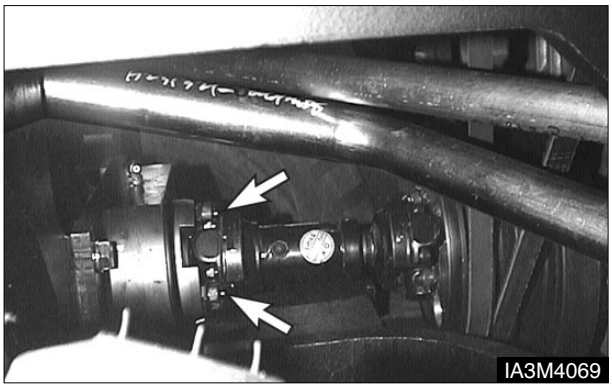

1. Inspect for loose retaining bolts. Check for worn or damaged bearings.

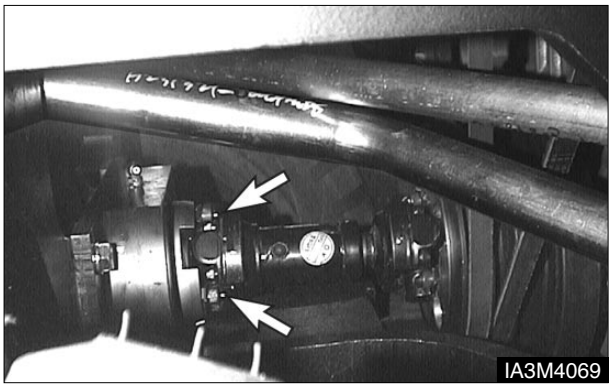

2. Have worn or damaged bearings replaced. Tighten the bolts if necessary.

https://truckmanualshub.com/

Every 1500 Service Hours

You must read and understand the warnings and instructions contained in the Safety section of this manual, before performing any operation or maintenance procedures.

Drive Axle Oil - Change

NOTE : Change the differential oil on lift trucks that are operated under wet conditions or measure oil level on lift trucks that operate under dry conditions. Clean the housing breather under either condition.

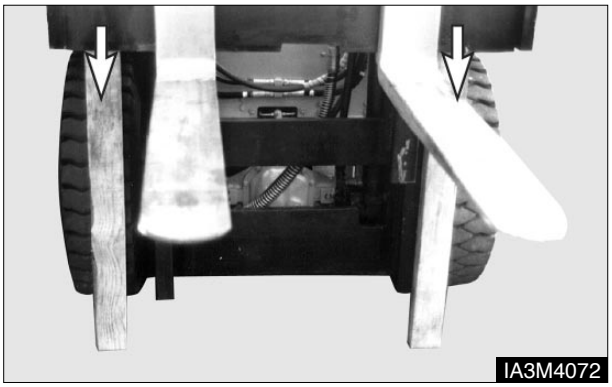

1. Lift the carriage high enough to gain access to the differential housing level-fill plug and breather.

2. Put blocks under the carriage.

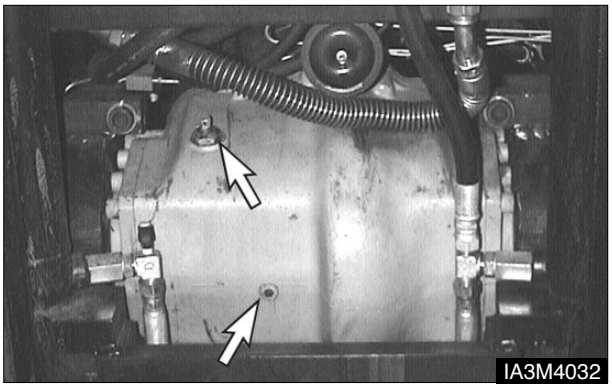

3. Remove the housing breather. Wash it in clean, nonflammable solvent.

4. Install the breather if the housing is not required to be drained.

5. Measure the differential lubricant level on lift trucks on which differentials are not required to be drained. See topic, “ Transmission Oil Level” in “Every 10 Service Hours or Daily ”

6. To drain the differential housing, remove the housing drain plug. Allow the lubricant to drain.

7. Clean and install the housing drain plug.

8. Remove the oil level plug.

9. Fill the housing with lubricant to the bottom of the oil level plug opening.

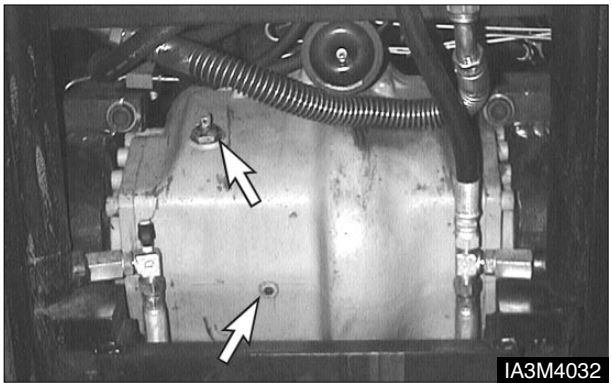

10. Clean and install the oil level plug .

11. Install the breather.

12. Remove the blocks from under the carriage.Lower the carriage.

13. Operate the lift truck for a few minutes. Check for leaks.

https://truckmanualshub.com/

Every 2000 Service Hours or 1 Year

You must read and understand the warnings and instructions contained in the Safety section of this manual, before performing any operation or maintenance procedures.

Steer Wheel Bearings - Repack

Park the lift truck level with the forks lowered, parking brake engaged, transmission in NEUTRAL and the engine stopped.

Typical Example

1. Lift the steer wheels off the ground. Place stands or blocking under the frame and steer axle to support the lift truck.

2. Remove the hub cap.

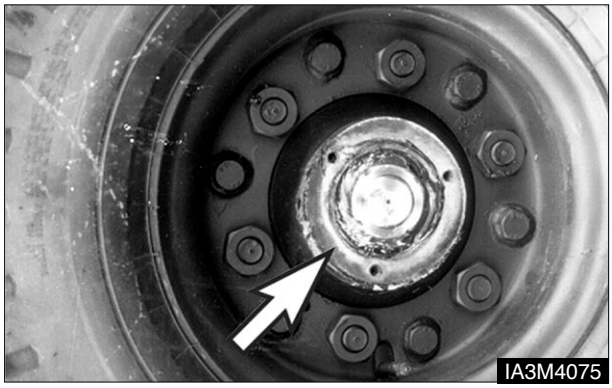

Typical Example

3. Straighten the lockwasher tangs.

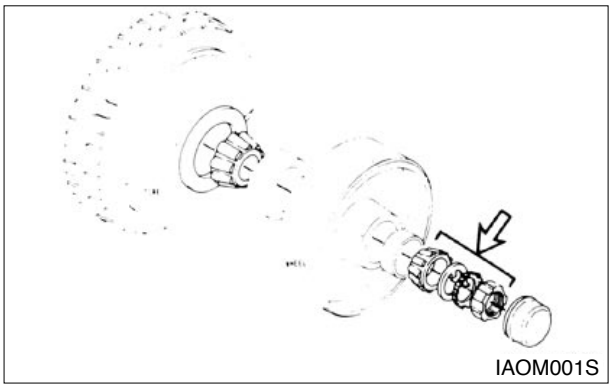

4. Remove the locknut, lockwasher and flat washer. Remove the outer wheel bearing.

5. Remove the wheel assembly. Examine the seal for damage and wear. Replace the seal if necessary.

6. Remove the inner bearing. Clean and lubricate the steering knuckle. Repack both the inner and outer bearing cones.

7. Install the inner bearing. Lubricate the seal and install the wheel assembly on the knuckle.

8. Install the outer wheel bearing and the outer washer. Install a new lockwasher and fit the locknut.

https://truckmanualshub.com/

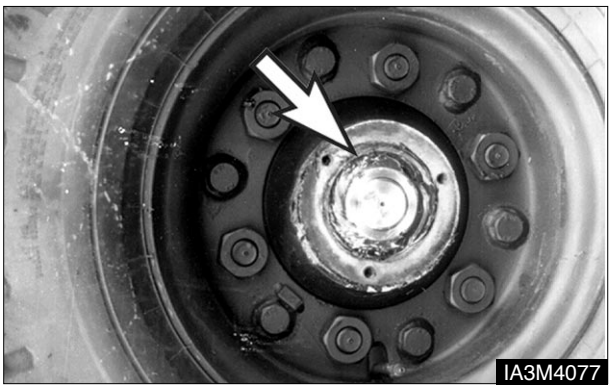

Typical Example

9. Tighten the locknut to 135 N•m (100 lb ft), while turning wheel hub to seat the bearing.

10. Loosen the locknut. Retorque it to 50±5N•m (37±4 lb•ft). Bend the lockwasher tang to secure locknut.

11. Install the hub cap.

12. Raise the lift truck and remove the blocking Lower the lift truck to the ground.

Cooling System - Clean, Change

⚠ WARNING

At operating temperature, the engine coolant is hot and under pressure.

Steam can cause personal injury.

Check the coolant level only after the engine has been stopped and the filler cap is cool enough to touch with your bare hand.

Remove the filler cap slowly to relieve pressure.

Cooling system conditioner contains alkali. Avoid contact with the skin and eyes to prevent personal injury.

Use all cleaning solutions with care.

The lift truck must be level, the forks lowered, the parking brake engaged, the transmission in NEUTRAL and the engine stopped and cool.

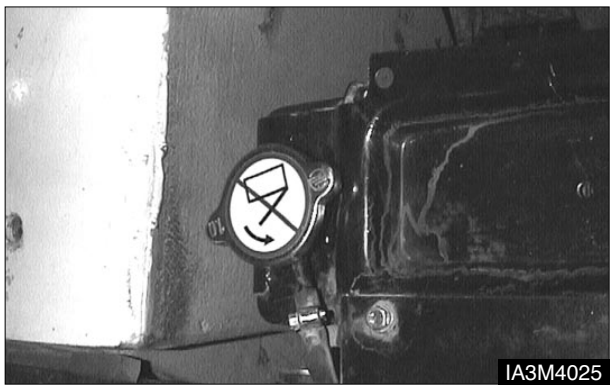

1. Turn the radiator cap slowly to relieve the pressure, then remove the cap.

2. Remove the block drain plug.

https://truckmanualshub.com/

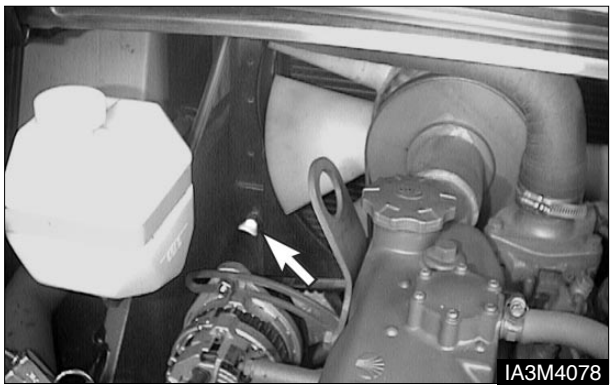

Typical Ewample

3. Open radiator drain valve. Allow the coolant to drain. Drain the recovery bottle.

4. Close radiator drain valve and install block drain plug. Fill the cooling system with 1 kg (2 lb) sodium bisulphate per 40 liters (10 gallons) of water. Most commercial cooling system cleaners can be used.

5. Start and run the engine for 30 minutes.

6. Stop the engine and drain the cleaning solution.

7. Flush the system with clean water, until draining water is clear.

8. Close the drain valve and install the block drain plug. Fill the system with neutralizing solution, 250 g (1/2 lb) sodium carbonate per 40 liters (10 gallons) of water.

9. Start and run the engine for 10 minutes.

10. Stop the engine and drain the neutralizing solution.

11. Flush the system with clean water until draining water is clear.

12. Close the drain valve and install the block drain plug. Add coolant to the top of the filler neck.

13. Start and run the engine to stabilize the coolant level. See “ Every 10 Service hours or Daily ”, “ Coolant Level-Check ”, in this manual.

https://truckmanualshub.com/

Forks - Inspect

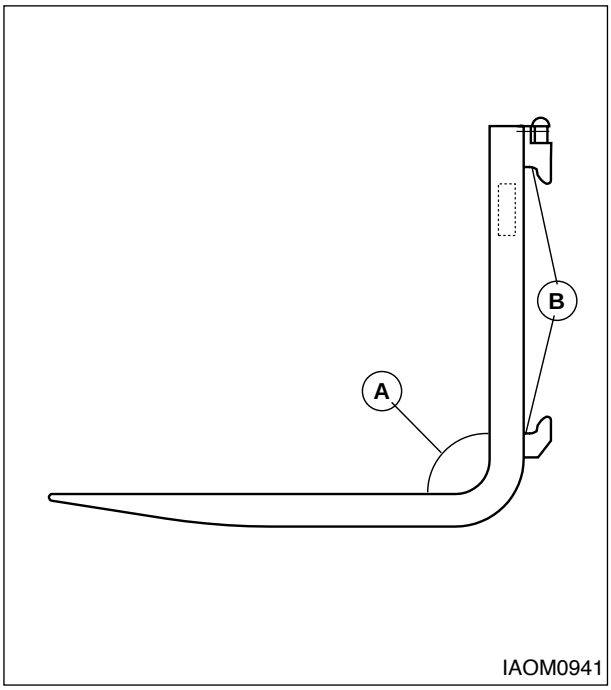

Forks should be inspected, at a minimum, every 12 months. If the truck is being used in a muti-shift or heavy duty operation, they should be checked every six months.

1. Inspect the forks carefully for cracks. Special attention should be given to the heel section (A), all weld areas and mounting brackets (B). Inspect the top and bottom hooks on forks used on hook type carriages and tubes on shaft mounted forks.

Forks with cracks should be removed from service.

“Wet Test” magnetic particle inspection is generally preferred due to its sensitivity and the ease of interpreting the results. Portable equipment is usually recommended so it can be moved to the lift truck.

Inspectors should be trained and qualified in accordance with **The American Societly for Non-Destructive Testing, Level II Qualifications.**

Contact your local DAEWOO Lift Truck Dealer for further information.

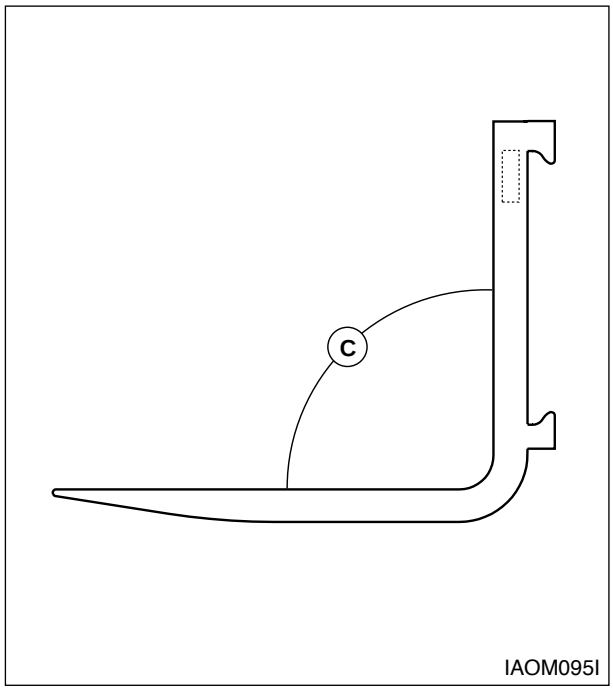

2. Check the angle between the upper face of the blade and the front face of the shank. The fork should be withdrawn from service if angle (C) exceeds 93 degrees or deviates by more than 3 degrees from an original angle other than 90 degrees, as may be found in some special application forks.

https://truckmanualshub.com/

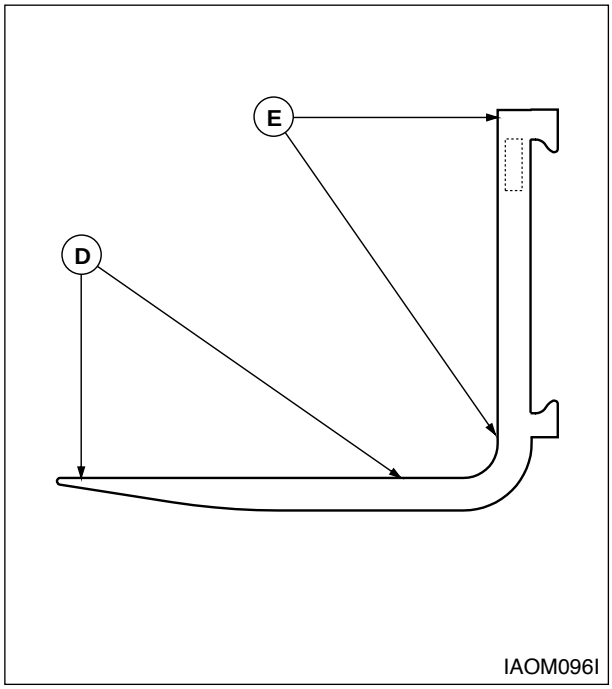

3. Check the straightness of the upper face of blade (D) and the front face of shank (E) with a straight edge.

The fork should be withdrawn from service if the deviation from straightness exceeds 0.5 percent of the length of the blade and/or the height of the shank respectively 5 mm/1000 mm (0.18”/36”).

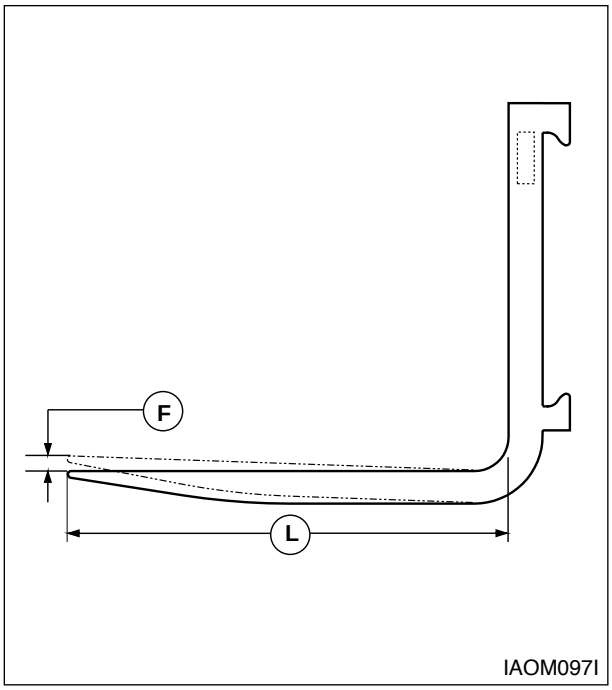

4. Check the difference in height of one fork tip to the other when mounted on the fork carrier.
A difference in fork tip height can result in uneven support of the load and cause problems with entering loads.

The maximum recommended difference in fork tip elevation (F) is 6.5 mm (0.25”) for pallet forks and **3** mm (0.125”) for fully tapered forks. The maximum allowable difference in fork tip elevation between the two or more forks is 3 percent of blade length (L).

Replace one or both forks when the difference in fork tip height exceeds the maximum allowable difference.

https://truckmanualshub.com/

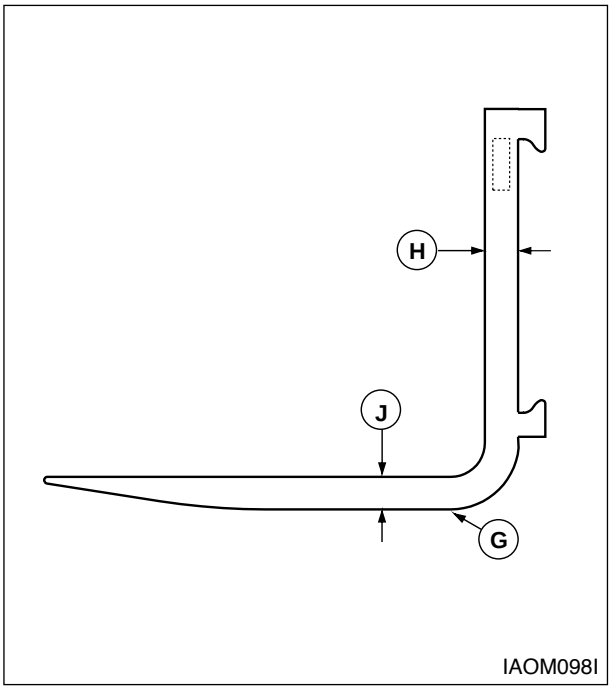

5. Check the fork blade (J) and shank (H) for wear with special attention to the heel (G). The fork should be withdrawn from service if the thickness is reduced to 90 percent or less of the original thickness.

Fork blade length may also be reduced by wear, especially on tapered forks and plates. Remove the forks from service when the blade length is no longer adequate for the intended loads.

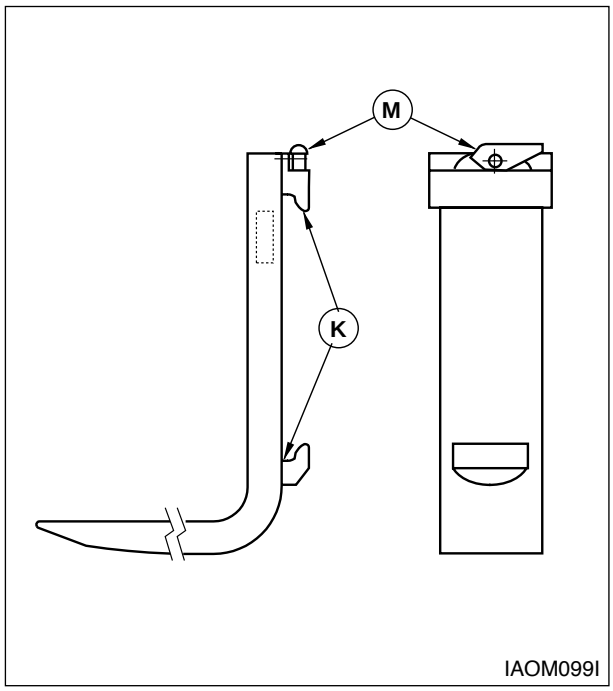

6. Check the fork mountings (K) for wear, crushing and other local deformation, which can cause excessive side to side wobble of the forks. Excessive clearance on hook type forks may allow them to fall from the carrier. Forks which show visible signs of such damage should be removed from service.

7. Check the positioning lock and other fork retention devices to make sure they are in place and working.

Hook type forks use a spring loaded pin (M), located in the top hook, to engage notches in the top carriage bar to hold the fork in place.

When adjusting the fork spacing, the forks are prevented from sliding off the end of the carriage by stop blocks. These stop blocks are at both ends of the carriage and in the path of the bottom fork hook. The load backrest extension may be used in place of the stop blocks in some cases.

Shaft mounted forks may use set collars or spacers on the shaft to either side of the fork. They may also use U bolts, pins, or similar devices which engage the fork through the top structure of the carriage.

https://truckmanualshub.com/

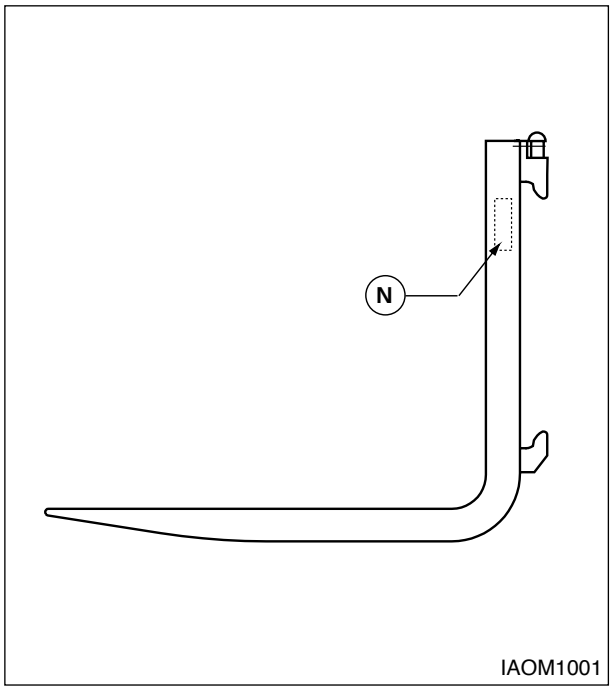

8. Check fork markings (N) for legibility. Renew markings as required to retain legibility.

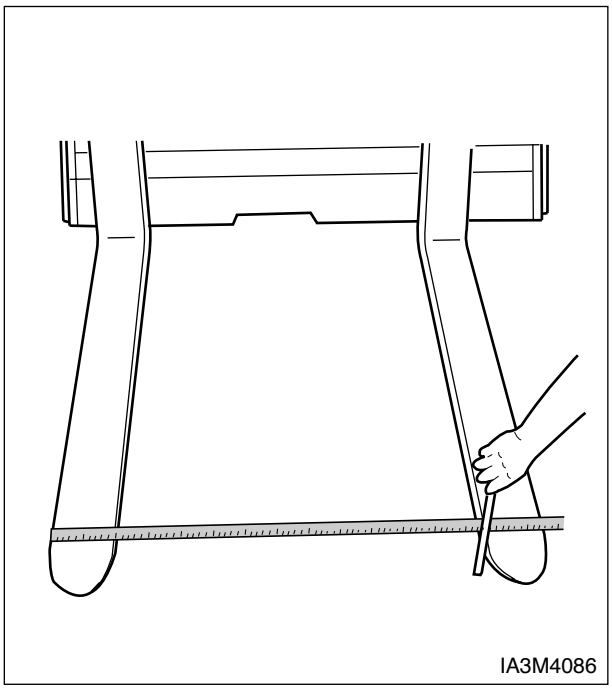

9. **a**. Lift the mast and operate the control lever, until the top surface of the forks is parallel with the floor. Place two straight bars that are the same width as the carriage, across the forks as shown.

b. Measure the distance from the bottom of each end of the two bars to the floor. The forks must be parallel within 3 mm (.12 in) for Tapered and Polished (FTP) forks, all other forks 6.4 mm (.25 in), for their completed length.

c. Put one fork, one third from the tip, under a fixture that will not move. Then operate the tilt control with caution until the rear of the truck lifts just off the floor. Follow the same procedure with the second fork. Repeat Step a.

https://truckmanualshub.com/

Every 2500 Service Hours or 6 Months

You must read and understand the warnings and instructions contained in the Safety section of this manual, before performing any operation or maintenance procedures.

Hydraulic Oil - Check, Clean, Change

⚠ WARNING

Hot oil and components can cause personal injury. Do not allow hot oil or components to contact skin.

Park the lift truck level with the forks lowered, mast tilted back (all cylinders retracted), parking brake engaged, transmission in NEUTRAL and the engine stopped.

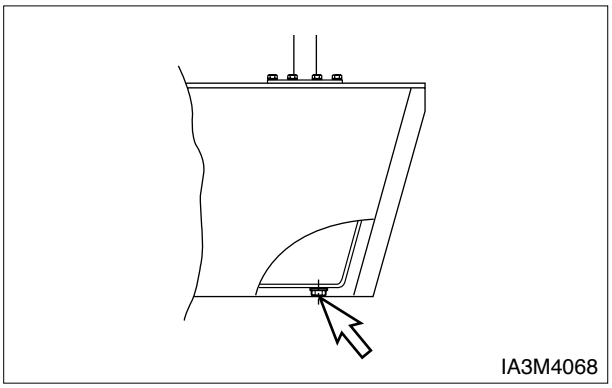

1. Remove the hydraulic tank drain plug. Allow the oil to drain. Clean and install the plug.

2. Raise the hood and seat assembly.

3. Remove dipstick/filler cap. Fill the hydraulic tank. See “Refill Capacities.” Install the breather/dipstick.

4. Lower the hood and seat assembly.

5. Start the engine and operate the hydraulic controls, and the steering system, through a few cycles to fill the lines. Look for oil leaks.

6. Stop the engine and check the oil level. With all cylinders retracted, maintain the oil level to the FULL mark on the dipstick.

https://truckmanualshub.com/

Environment Protection

When servicing this lift truck, use an authorized servicing area and an approved container to collect coolant, oil, fuel, grease, electrolyte and any other potential environmental pollutant before any lines, fittings or related items are disconnected or removed. After servicing, dispose of those materials in an authorized place and container. When cleaning the lift truck, be sure to use an authorized area.

https://truckmanualshub.com/

Index

A

Accelerator Pedal 44
After Starting the Engine 57
Air Cleaner Indicator - Check 95
Air Intake System - Check, Clean, Change 87
Precleaner(If Equipped) 87
Changing Filter Element (Diesel Engine) ... 87
Changing Filter Element (LPG Engine) 88
Changing Secondary Element 89
Checking Elements 90
Antifreeze 75
Attachment and Mast - Inspect, Lubricate 104
Avoiding Lift Truck Tipovers 19

B

Battery and Terminal - Clean, Inspect 106
Before Operating the Lift Truck 11
Before Starting the Engine 49
Before Starting the Lift Truck 10
Before Storage 68
Belts (Diesel Engine) - Check, Adjust 109
Bulbs 86
Burn Prevention 14

C

Carburetor (Gasoline, LP-Gas Engines) - Adjist 82
Capacity Chart 29
Carriage Rollers Side Thrust - Lubricate 111
Carriage Side Shifter (If Equipped) - Lubricate 111
Causes of Fork Failure 52
Changing LP-Gas Tanks 47
Circuit Breaker 42, 86
Coolant Information 74
Coolant Level - Check, Clean, Change 94
Coolant Water 74
Cooling System - Clean, Change 119
Cooling System Specifications 74
Crosshead Rollers - Inspect 111
Crushing or Cutting Prevention 13

D

Daily Inspection 54
Detergent 90
Distributor & Spark Plug - Check 91
Drive Axle Oil - Change 79, 99, 117
Drive Axle Oil Level - Check 103

E

Electrical Disconnect Switch (If Equipped) 42
Engine Compartment 41
Engine Valve Lash Adjustment
Check and Adjust (Diesel Engine) 102
Engine Oil(DEO and EO) 78
Engine Oil and Filter - Change 106
Engine Oil Level - Check 94
Every 10 Service Hours or Daily 94
Every 250 Service Hours or Monthly 103
Every 500 Service Hours or 3 Months 109
Every 1000 Service Hours or 6 Months 115
Every 1500 Service Hours 117
Every 2000 Service Hours or 1 Year 118
Every 2500 Service Hours 6 Months 125
Environment Protection 3, 126

F

Fire or Explosion Prevention 14
First 250 Service hours 101
Hydraulic Return Filter - Change 101
First 50-100 Service Hours 98
First Installation 53
Fluid Penetration 13
Foreword 2
Fork Inspection 53
Forks - Inspect 121
Fuel Filters - Check, Clean, Change 83
Fuel Specifications 76
Fuel Sulfur Content 77
Fuel Types 76
Fuses, Bulbe and Circuit breaker
Change/reset 85

G

General Hazard Information 9
Gear Oil 79

H

Hook-type Fork 51
Horn and Lights (If Equipped) - Check 113
How to Survive in a Tipover
(If Operator Restraint System Equipped) ... 24
Hydraulic Return Filter and Breather - Change 115
Hydraulic Oil (HYDO) 78
Hydraulic Oil - Check, Clean, Change 125
Hydraulic Oil Level - Check 103

https://truckmanualshub.com/

I

Ignition Timing (Gasoline, & LP-Gas Engines)
Check, Adjust 92
Important Safety Information 4
Inching 59
Inching into Loads 63
Inching & Brake Control Shaft - Lubricate 113
Information Section 2
Inspection, Maintenance and Repair of Lift Truck Forks 51
Instrument Panel 40

L

Lift Chains - Check, Adjust 116
Lift Control 44
Lift Fork Adjustment 51
Lift Truck Control 43
Lift Truck Operation 58
Lift Truck Parking 12
Lift Truck Shipping 69
Lifting Drums or Round Objects 66
Lifting the Load 63
Literature Information 2
Long Time Storage 68
LP-Gas Engine 56
Lubricant Information 78
Lubricant Specifications 78
Lubricant Viscosities 80
Lubricant Viscosities and Refill Capacities 80

M

Machine Lifting and Tiedown Information 69
Maintenance 3
Maintenance and Repair 54
Maintenance Information 13
Maintenance Intervals 3, 81
Mast Channels - Lubricate 97
Mast Hinge Pins - Lubricate 109
Mounting and Dismounting 10

N

Noise and Vibration 28

O

Operating Techniques 63
Operation the Lift Truck 11
Operating in hot weather 66
Operation 2
Operation Information 10
Operator Restraint System (If Equipped) 2,16
Operator's Station and Monitoring Systems 40
Operator's Warning, and Identification Plate 38
Attachment Plate Abbreviations 39
Operator's Warning Plate 38
Overhead Guard - Inspect 113

P

Parking Brake - Test, Adjust 100
Parking Brake Lever 44
Parking Brake - Test, Adjust 112
Parking the Lift Truck 67
PCV Valve System - Inspect, Clean 108
Plate for Function of Pedals (If Equipped) 43
Power shift Transaxle 58
Pressure Air 13
Prestart Conditions 55
Priming the Fuel System (Diesel Engine) 84
Bleeding the Fuel System 84

R

Refill Capacities 80
Refueling 46

S

Safety 2, 5
Seat 42
Seat Adjustment 17
Seat Belt 17
Seat, Hood Latch & Cylinder - Check,Lubricate. 85
Serial Number 37
Service Brake Pedal 44
Sideshift Attachment (If Equipped) 45
Specifications 26
Starting a Cold Diesel Engine 55
Starting a warm Diesel Engine 55
Starting From a 12 Volt External Source 56
Starting the Lift Truck 11

https://truckmanualshub.com/

Starting the Engine 55
Steer Suspension - Inspect 114
Steer Wheel Bearings - Repack 118
Steering Mechanism - Check, Lubricate 105
Storage Information 68

T

Tilt Control 45
Tilt Cylinders - Check, Adjust, Lubricate 110
Chassis Pivot Eyebolts / Lubricate 110
Mast Pivot Eyes - Check, Lubricate 110
Cylinder Rod Extension-Adjust 110
Tire Inflation Information 71
Tire Inflation 71
Tire Shipping Pressure 71
Tires and Wheels - Check, Inspect 92
Torque Specifications 72
Torques for Metric Fasteners 73
Torques for Standard Bolts, Nuts and
Taperlock Studs 73
Torques for Standard 72
Hose Clamps - Worm Drive Band Type
Towing Information 70
Transmission Inching Control Pedal 43
Transmission Oil (TDTO) 78
Transmission Speed Range Lever 43
Transportation Hints 69
Traveling With the Load 64
Turning 65
Transmission Oil & Oil Filter & Strainer
- Clean, Change 98, 115
Transmissian Oil Level - Check 97

U

Universal Joint - Inspect 116
Unloading 64

W

Walk-Around Inspection - Inspect 49, 96
Warning Signs and Labels 6, 16
Water Separator (Diesel Engine) - Drain 82
Wheel Bolts and Nuts
- Inspect Tightness 93
- Steer Wheels 93
- Drive Wheels 93
When Required 82