https://truckmanualshub.com/

TECHNICAL DATA 0
DIAGNOSTICS 1
COMPONENTS 2
WIRING REPAIR 3
BATTERIES 4
5
CONNECTION OF ACCESSORIES 6
READING DIAGRAMS 7
LOCATION OF COMPONENTS 8
LOCATION OF CONNECTORS 9
ELECTRICAL SYSTEM 10
CHANGES IN THE ELECTRICAL SYSTEM 11
ELECTRICAL SYSTEM: OPTIONS AND SPECIAL APPLICATIONS 12

https://truckmanualshub.com/

https://truckmanualshub.com/

CONTENTS

	Page	Date
1. COMPONENTS	1-1	200404
1.1 General	1-1	200404
1.2 Tightening torques	1-3	200404

https://truckmanualshub.com/

0

https://truckmanualshub.com/

1. COMPONENTS

1.1 GENERAL

Bulbs

Headlight (main beam)		halogen	70 W
Headlight (dipped beam)		halogen	70 W
Parking light		spherical bulb	5 W
Rear light		spherical bulb	2 x 5 W
Rear fog lamp		spherical bulb	21 W
Reversing light		spherical bulb	21 W
Stop light		spherical bulb	21 W
Direction indicator lamp		spherical bulb	21 W
Marker light		spherical bulb	5 W
Side marker light		special type	3 W
Combilamp:	fog lamp	halogen	70 W
	spotlight	halogen	70 W
Interior lighting		spherical bulb	10 and 21 W
Bunk light		spherical bulb	10 W
Stepwell lighting		spherical bulb	5 W
Marker light		spherical bulb	5 W
Work lamp:	white	halogen lamp	70 W
	yellow	spherical bulb	35 W

Max. current and wire diameter (mm^2)				
Wire diameter	**< 2 m**	**2 - 4 m**	**4 - 8 m**	**> 8 m**
1	9	5	4	
1.5	22.5	13.5	7.5	6
2.5	37.5	22.5	12.5	10
4	60	36	20	16
6	90	54	30	24
10	150	90	50	40
16	240	144	80	64
25	375	225	125	100
35	525	315	175	140
50	750	450	250	200
70	1050	630	350	280
95	1425	855	475	380
120	1800	1080	600	480

https://truckmanualshub.com/

0

Alternator

NCB1

Max. current	80 A
Rated voltage	28 V

NCB2

Max. current	100 A
Rated voltage	28 V

Micro relay

Maximum cut in current making connection between points 3 and 5:	10 A
Maximum cut out current breaking connection between points 3 and 4:	5 A

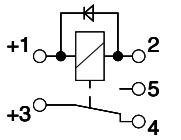

E500146

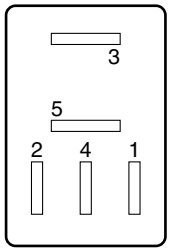

E500147

Mini relay

Maximum cut in current making connection between points 30 and 87:	20 A
Maximum cut out current breaking connection between points 30 and 87a:	10 A

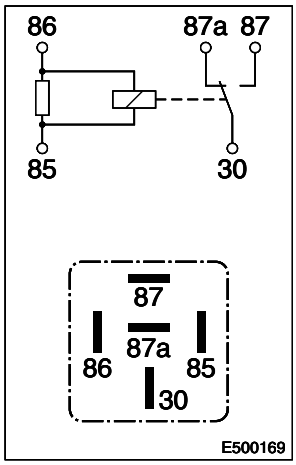

E500169

Handheld transmitter CDS

Battery type (2x)	CR1620, 3 V

https://truckmanualshub.com/

1.2 TIGHTENING TORQUES

Tightening torques

Drive pulley	80 Nm ± 5 Nm
B+ connection	15 Nm
Chassis earth connection	65 Nm

https://truckmanualshub.com/

0

https://truckmanualshub.com/

CONTENTS

		Page	Date
1.	**FAULT FINDING**	1-1	200520
1.1	Short circuits	1-2	200520
1.2	Open circuit	1-3	200520
1.3	Earthing problems	1-4	200520
2.	**BATTERIES**	2-1	200520
2.1	Fault-finding table	2-1	200520
2.2	Service life	2-4	200520
3.	**ALTERNATOR**	3-1	200520
3.1	Fault-finding table	3-1	200520
4.	**XENON LIGHTING**	4-1	200520
4.1	Fault-finding table	4-1	200520

https://truckmanualshub.com/

1

https://truckmanualshub.com/

1. FAULT FINDING

The following test equipment and tools can be used to trace faults.

1. The best instrument for this is a digital multimeter. This instrument can be used to measure voltages, currents and resistances avoiding reading errors, and it can be used to trace virtually any faults.
2. Many, but not all, faults are easily traced by means of warning lamps. Failures caused by poor earthing cannot normally be detected by a warning lamp or buzzer.

The most frequently occurring faults are:

a. short circuit
b. open circuits
c. earthing problems (poor earthing due to corrosion).

https://truckmanualshub.com/

1

1.1 SHORT CIRCUITS

A short circuit is caused by a positive wire shorting to earth somewhere. In most cases this will cause a fuse to blow.
To remedy this failure, use a test lamp of approximately 70W. First check the diagram to see which consumers are connected to the fuse in question, and then switch them all off.
Remove the fuse and connect the test lamp in its place. Now switch each of the consumers on and off one by one. If the lamp comes on very brightly when a consumer is switched on, the fault is almost certainly in the wiring of that consumer. Now check the diagram to see via which connectors the consumer is connected.
Now disconnect the first wiring connection (as seen from the fuse).
If the lamp is still bright, the fault is between the fuse and this wiring connection.

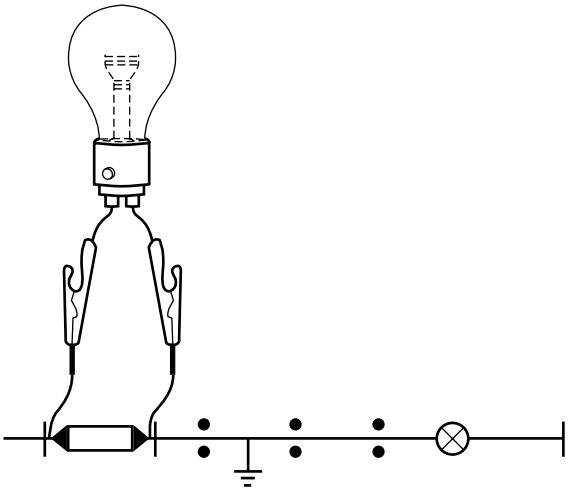

If, however, the lamp goes out, the fault is somewhere further on in the wiring.
Now reconnect the connectors and disconnect the next wiring connection. If the lamp is still bright, the failure is between these two wiring connections.
However, if the lamp goes out again, the fault-finding procedure must be continued.
The faulty wiring section can be found in this way.

https://truckmanualshub.com/

1.2 OPEN CIRCUIT

Suppose a consumer is not functioning. The fault may be in the consumer itself, or there may be an open circuit in the wiring.
First switch on the consumer. Then check the consumer for voltage using a test lamp. If no voltage is found, first check whether the fuse is still intact.
If there is voltage at the fuse, check the wiring from the fuse to the consumer. This means every wiring connection must be checked.
Stop at the first wiring connection that has no voltage. The open circuit will be between this connection and the previous one.
However, if there was a voltage at the consumer, there may still be an open circuit in the negative (earth) wiring. Check this using a test lamp.
Ensure that the relevant circuit is switched on.
Connect one end of the test lamp to earth and the other end to the earth connection of the component to be checked.
If the test lamp lights up, the earth connection of the component is interrupted. If the test lamp does **not** light up, the earth connection will in many cases be in good condition.
If both the positive and negative connections are in good order, the consumer in question must be replaced.

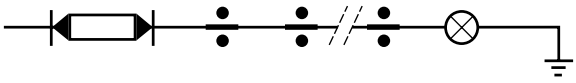

W 5 03 015

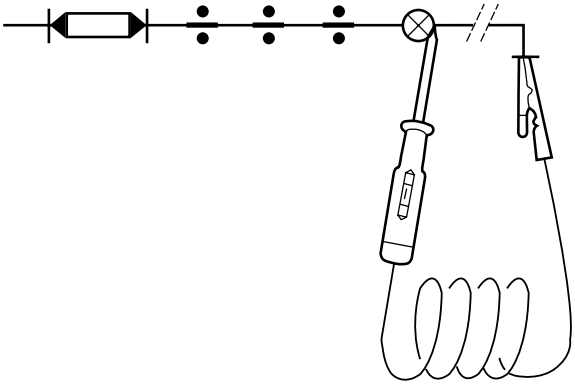

W 5 03 016

https://truckmanualshub.com/

1.3 EARTHING PROBLEMS

Earthing problems are mainly caused by corrosion between the contact surfaces of electrical connections.
A poor earth connection of the main earth circuit (2) between cab and chassis may result in a current through the steering shaft (1).

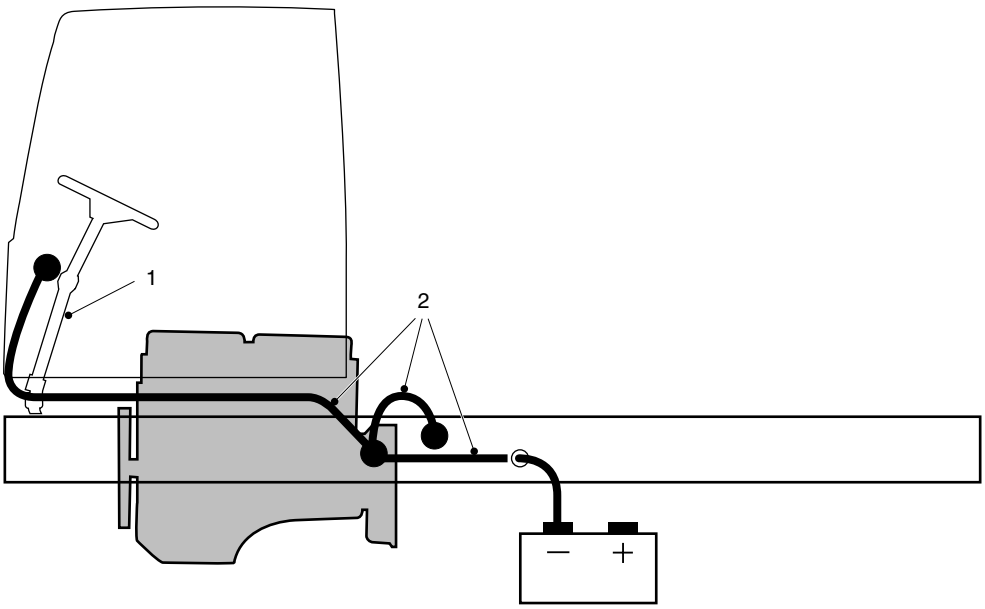

E502316

To check this main earth connection, two complementary tests must be carried out.
- A current measurement using a current probe.
- A voltage loss measurement using a multimeter.

A current probe, which is a special tool (DAF no. 1453183), must be used for a current measurement; this measures the current through the steering shaft (1).

The current measurements have to be carried out while the cab is in the driving position.

https://truckmanualshub.com/

INSPECTION 1, MEASURING THE SYSTEM CURRENT

1. Open the grille.
2. Switch on vehicle ignition and as many consumers as possible, e.g.:
   - dipped beam
   - heater fan in position 4
   - spotlights, etc.
3. Use the current probe to check whether the power consumption through the battery cable at the battery is between 20 A and 40 A. Switch on extra consumers if this is not the case until the power consumption is between 20 A and 40 A.
4. Then measure the system current through the steering shaft (1) using the probe. Make sure that the current probe is placed in the right position (direction of current) and its jaws are closed around the steering shaft.
5. Depending on the measured current value, the following actions need to be carried out:

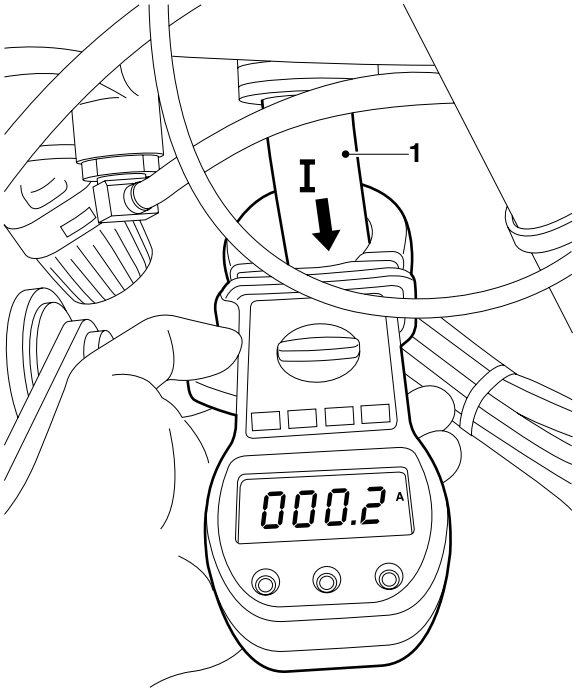

E502267

https://truckmanualshub.com/

1

Measured current value	Measures to be taken
< 2.0 A	- The main earth connections are in good order, end of inspection 1. Continue with inspection 2.
≥ 2.0 A and < 5.0 A	- Inspect - and if necessary repair - all main earth connections from the cab to the negative battery terminal between the following points: - battery earth and cab earth - cab earth and flywheel housing earth - flywheel housing earth and chassis earth - chassis earth and battery earth **Note:** A voltage loss measurement must be carried out to identify which earthing point is in poor condition. This measurement is described later on in this procedure. - The current value through the steering shaft must be less than 2.0 A after repair. Otherwise one or more earth connections are not yet in good order and the main earth connections must be inspected again and if necessary repaired. - If the current value is < 2.0 A, the main earth connections are in good order: end of inspection 1. Continue with inspection 2.
≥ 5.0 A	- Inspect - and if necessary repair - all main earth connections from the cab to the negative battery terminal between the following points: - battery earth and cab earth - cab earth and flywheel housing earth - flywheel housing earth and chassis earth - chassis earth and battery earth **Note:** A voltage loss measurement must be carried out to identify which earthing point is in poor condition. This measurement is described later on in this procedure. - The current value through the steering shaft must be less than 2.0 A after repair. Otherwise one or more main earth connections are not yet in good order and the earth connections must be inspected again and if necessary repaired. - If the current value is < 2.0 A, the earth connections are in good order. **Note:** A high current through the steering shaft can affect the mechanical condition of the steering shaft bearing.

https://truckmanualshub.com/

INSPECTION 2, MEASURING THE STARTING CURRENT

Measure the starting current through the steering shaft while starting, using the current probe.
This measurement must be carried out with the probe's "Max Hold" function. Make sure that the current probe is placed in the right position (direction of current) and its jaws are closed around the steering shaft.

Measured current value	Measures to be taken
< 5.0 A	- Main earth connections are in good condition; end of inspection 2: vehicle is OK.
≥ 5.0 A	- Inspect - and if necessary repair - all main earth connections from the cab to the negative battery terminal between the following points: - battery earth and cab earth - cab earth and flywheel housing earth - flywheel housing earth and chassis earth - chassis earth and battery earth **Note:** A voltage loss measurement must be carried out to identify which earthing point is in poor condition. This measurement is described later on in this procedure. - The starting current value through the steering shaft must be less than 5.0 A after repair. Otherwise one or more main earth connections are not yet in good order and the main earth connections must be inspected again and if necessary repaired. - If the current value is < 5.0 A, the earth connections are in good order; end of inspection 2: vehicle is OK.

https://truckmanualshub.com/

1

MEASURING VOLTAGE LOSS

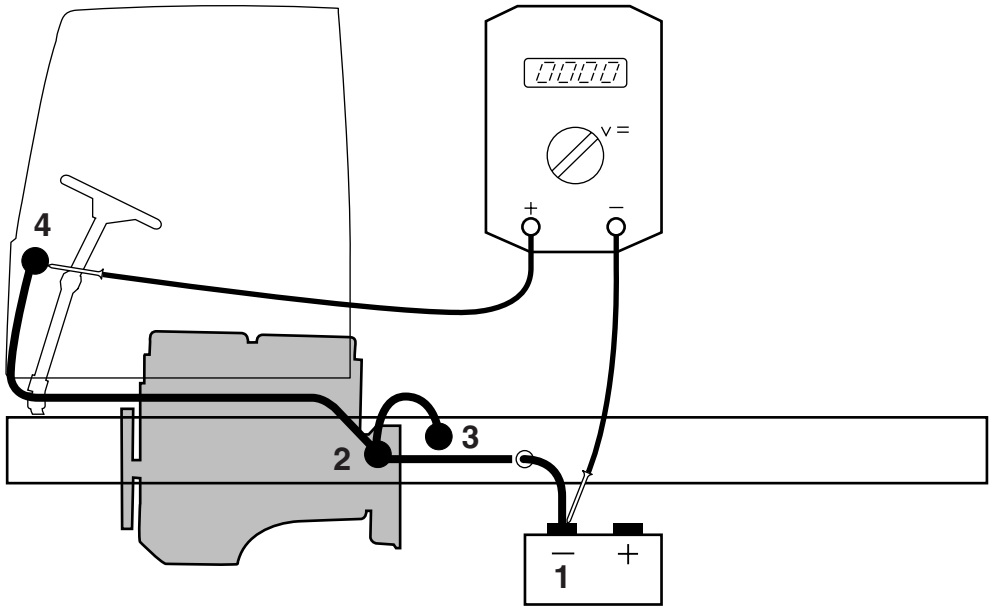

1 negative battery terminal
2 flywheel housing
3 chassis
4 bulkhead lead-through connector

To find out whether a specific earthing point has a good earth connection, measure the voltage loss between the negative battery terminal and this earthing point.

The figure shown is an example; the actual course of the earth connection may differ somewhat depending on vehicle type and production date.
The consumers that were switched when the current was measured should now be switched on as well, i.e. the power consumption should be between 20 A and 40 A.
If the earth connection is good, the voltage loss should be less than 0.5 V.

https://truckmanualshub.com/

2. BATTERIES

2.1 FAULT-FINDING TABLE

SYMPTOM: NEW BATTERY HEATS UP CONSIDERABLY DURING FILLING	
Possible cause	**Remedy**
Inadequate formation because of storage in unsuitable or damp conditions over a long period	Allow to cool Charge fully Check the relative density

SYMPTOM: BATTERY ACID LEAKING FROM THE PLUG HOLES	
Possible cause	**Remedy**
Battery overfilled	Siphon off some of the fluid
Overcharging	Check the charger and repair if necessary

SYMPTOM: ELECTROLYTE LEVEL TOO LOW	
Possible cause	**Remedy**
Leaking battery	Replace the battery
Excessive gas development due to charging current being set too high	Check/repair the charger

SYMPTOM: RELATIVE DENSITY TOO LOW (<1.240) STARTING TROUBLE	
Possible cause	**Remedy**
Power consumer left on by mistake	Charge the battery
Insufficient charging	Check/repair the charger
Short circuit in the charging circuit	Check the charging circuit

SYMPTOM: DENSITY IS TOO HIGH (>1.290)	
Possible cause	**Remedy**
Topped up with acid instead of distilled water	Siphon off the fluid and fill with distilled water If necessary, repeat this after mixing (charging)

https://truckmanualshub.com/

1

SYMPTOM: STARTING TROUBLE POOR STARTING TEST RESULT POWER FAILS UNDER LOAD	
Possible cause	**Remedy**
- Discharged battery	Charge the battery
- Worn battery (plates corroded and worn away)	Replace the battery
- Defective battery (“dead cell”)	Replace the battery
- Battery too small	Replace with battery of a higher capacity
- Battery sulphated (plates have hardened)	Replace the battery

SYMPTOM: BURNT-IN BATTERY TERMINALS	
Possible cause	**Remedy**
- Clamps not securely fitted, or poor contact	Have the battery terminals repaired, fit the clamps properly or replace the clamps if necessary

SYMPTOM: 1 OR 2 CELLS BUBBLE EXCESSIVELY UNDER HIGH LOADS (STARTING OR STARTING TEST)	
Possible cause	**Remedy**
- Defective cells	Replace the battery
- Leaking cell partition	Replace the battery

SYMPTOM: BATTERY DISCHARGES VERY FAST (DOES NOT RETAIN POWER)	
Possible cause	**Remedy**
- Insufficient charging	Check the charging. Is the charging time (driving time) sufficient?
- Short circuit in charging circuit	Check the charging circuit
- Major self-discharging, for example due to contamination	Clean the battery
- Battery sulphated (on examining the plates, they are found to be hard and, in some cases, whitened)	Replace the battery

SYMPTOM: SHORT BATTERY LIFE	
Possible cause	**Remedy**
- Wrong type of battery chosen (for example in the case of tail lifts)	Install Super Heavy Duty or semi-traction battery
- Often too deeply discharged	Intermediate charging with rectifier
- No recharging after deep discharge (white deposits)	Always charge the battery after deep discharge

https://truckmanualshub.com/

SYMPTOM: BATTERY HOT DURING OPERATION WITH EXCESSIVE WATER CONSUMPTION	
Possible cause	**Remedy**
- Overcharging or - charging voltage too high	Check the charger (voltage regulator)

SYMPTOM: BATTERY HAS EXPLODED	
Possible cause	**Remedy**
- Fire or sparks during or just after charging	Ensure good ventilation and exercise due caution as regards fire and sparks
- Short-circuiting by tools	Be careful where tools are put down
- Internal defect (loose connection)	Replace the battery

SYMPTOM: DEFECTIVE ALTERNATOR AND/OR DIODES (RADIO AND OTHER POLARITY-SENSITIVE EQUIPMENT NOT WORKING)	
Possible cause	**Remedy**
- Reversed battery polarity or incorrect charging	Discharge the battery and charge in the correct direction If necessary, replace the battery

SYMPTOM: BATTERY IS INACTIVE (NO VOLTAGE)	
Possible cause	**Remedy**
- Internal open circuit	Replace the battery
- Battery very deeply discharged	Charge the battery and test it; replace if necessary

https://truckmanualshub.com/

1

2.2 SERVICE LIFE

The service life of a battery is significantly shortened if it used “cyclically”.
This means that the batteries are used a lot without being charged.
For example when using a tail lift, cab heater, microwave oven or cooler box.
This is why batteries in commercial vehicles and vehicles used for international transport often fail prematurely (within 1.5 years).

The battery must be charged whenever the voltage measured across the battery falls below 12.5V. If the battery is not charged, the “sulphating process” will begin.
This is a chemical reaction in the battery that produces lead sulphate. Lead sulphate adheres to the battery plates and can cause short-circuiting between the plates, reducing the capacity of the battery.
However, most lead sulphate breaks down when the battery is recharged.
If a battery is used (discharged) while it is not being charged by the alternator, short-circuiting between the battery plates will occur sooner.
This reduces the capacity and consequently the service life of the battery.

 © 200520

https://truckmanualshub.com/

3. ALTERNATOR

3.1 FAULT-FINDING TABLE

SYMPTOM: ALTERNATOR NOT PRODUCING POWER WHEN IDLING	
Possible cause	**Remedy**
Open circuit in connection 15 on alternator	Repair connection 15
Connection 15 on alternator short-circuited to earth	Repair connection 15
Internal defect	Replace regulator

SYMPTOM: ALTERNATOR WARNING (YELLOW)	
Possible cause	**Remedy**
Open circuit in “S” connection	Measure the regulated alternator voltage with as many consumers as possible switched on and with the engine turning above idling speed
Open circuit in “L” connection	Check/repair wiring
Open circuit in connection 15	Increase the engine speed to approx. 1500 rpm. If voltage is now present, check connection 15 on the alternator
Voltage difference between “B+” and “S” connections is greater than 2.5V	Check all contacts between alternator and batteries (contact resistors). Internal battery resistance too high
Voltage too low < 16V	Check alternator drive. Check wiring on contact resistors. Check regulated voltage
Open circuit in voltage regulator	Replace voltage regulator

SYMPTOM: ALTERNATOR VOLTAGE HIGH (RED)	
Possible cause	**Remedy**
Voltage too high > 31V	Measure voltage
Internal defect	Replace regulator/alternator

https://truckmanualshub.com/

1

https://truckmanualshub.com/

4. XENON LIGHTING

4.1 FAULT-FINDING TABLE

SYMPTOM: XENON LIGHTING NOT WORKING ON ONE SIDE	
Possible cause	**Remedy**
Faulty dipped beam fuse	Check fuse
No power to the ballast unit on the faulty side	Check the power supply to the ballast unit
Faulty xenon bulb	Replace xenon bulb
Faulty ignition unit	Replace ignition unit
Faulty wiring between the ballast unit and the ignition unit	Check the wiring
Faulty ballast unit	Replace ballast unit
Ignition unit connector not connected properly	Check connector

SYMPTOM: XENON LIGHTING NOT WORKING ON BOTH SIDES	
Possible cause	**Remedy**
Faulty fuse	Check fuse
Faulty light switch (C622)	Check light switch
Faulty relay (G001)	Check relay
Faulty wiring	Check the wiring

SYMPTOM: COLOUR DIFFERENCE AFTER NEW BULB IS FITTED	
Possible cause	**Remedy**
Bulb of a different make fitted	Bulbs of the same make should preferably be fitted on both left and right

https://truckmanualshub.com/

1

https://truckmanualshub.com/

CONTENTS

		Page	Date
1.	**GENERAL**	1-1	200404
1.1	Multimeter	1-1	200404
1.2	Scopemeter	1-2	200404
1.3	Signal measurements	1-3	200404
2.	**DESCRIPTION OF COMPONENTS**	2-1	200404
2.1	Inductive sensor	2-1	200404
2.2	Vehicle speed sensor	2-2	200404
2.3	Temperature sensors	2-4	200404
2.4	Fluid level sensors	2-6	200404
2.5	Pressure sensors	2-7	200404
2.6	Alternator	2-8	200404
2.7	Proximity sensors	2-10	200404
2.8	Steering column switch	2-11	200404
3.	**DIAGNOSTICS**	3-1	200404
3.1	Diagnostics in electrical systems	3-1	200404

https://truckmanualshub.com/

2

https://truckmanualshub.com/

1. GENERAL

1.1 MULTIMETER

Various measurement options can be selected on the Fluke 87 multimeter.

Units of measurement
The multimeter should be set to the range for the unit of measurement required.
For example, voltage range, current range, or resistance range.
The units of measurement are indicated by symbols on the meter. The following symbols are used:

1. DC voltage
2. AC voltage
3. DC current
4. AC current
5. Resistance
6. Duty cycle
7. Frequency

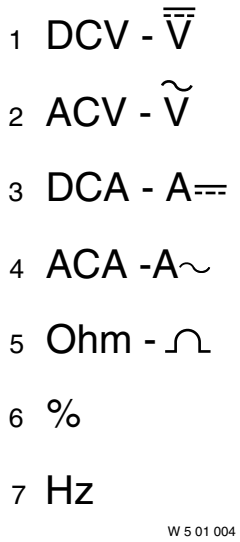

https://truckmanualshub.com/

1.2 SCOPEMETER

Diagnostics in modern electronic systems is becoming steadily more complex.
Using a multimeter on its own is not always sufficient to diagnose a fault.

The scopemeter allows complex signals to be measured.

2

Practical examples of complex signals are:

- PWM signals
- signal deformation
- CAN-bus-signals

https://truckmanualshub.com/

1.3 SIGNAL MEASUREMENTS

Sine-wave signal (AC voltage)
This signal changes polarity regularly in relation to the “0” line.

Frequency
The frequency is shown in Hertz (Hz).
The number of complete sines per second is the frequency of the signal (3 Hz in the diagram).

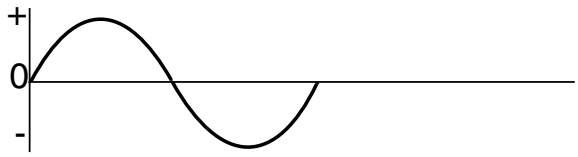

Voltage
If the number of sines per second increases, not just the frequency increases but also the voltage.

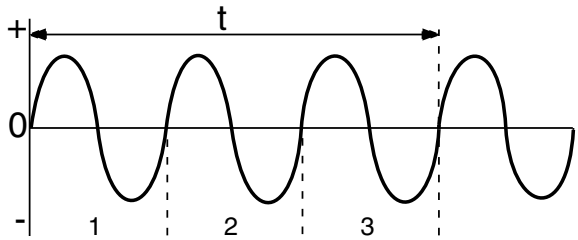

Measuring a sine wave signal
The sine wave signal can be measured in the following ways using a multimeter:
- Multimeter in the frequency position (Hz). This measures the number of complete sines per second.
- Multimeter in the AC voltage position. This measures the average value of the supplied voltage.

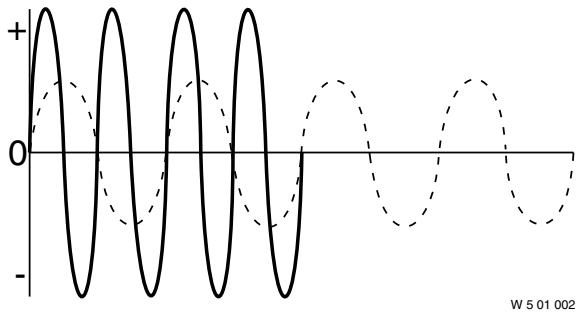

Sine wave signals in the vehicle
- Wheel speed sensor output signal.
- Engine speed sensor output signal.

https://truckmanualshub.com/

2

Square wave signals
Square wave signals are signals with only two voltage levels, both of which have the same duration in principle (t1 is equal to t2).

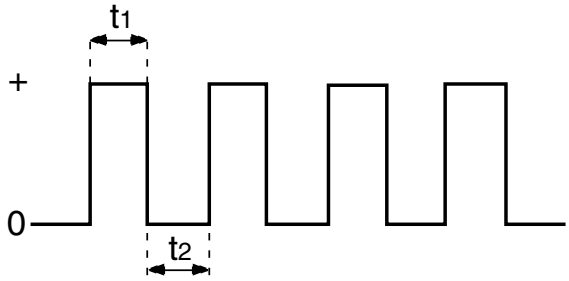

If there is a difference between the duration for the two levels (t1 is not equal to t2), the signal is also called a ”pulse train“.

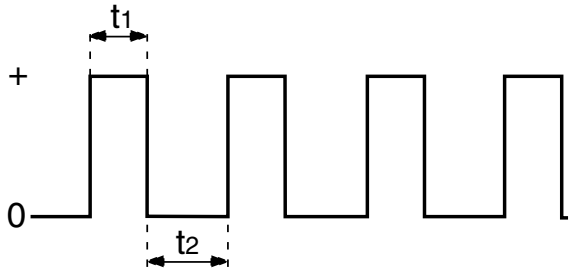

Duty cycle
The duty cycle is the ratio between the two voltage levels, expressed as a percentage.

$$\frac{A}{B} \times 100\%$$

The voltage level ratio of a “pulse train” may change (for example, when the vehicle speed increases).
If the number of pulses per unit of time increases, the duty cycle reading will rise.

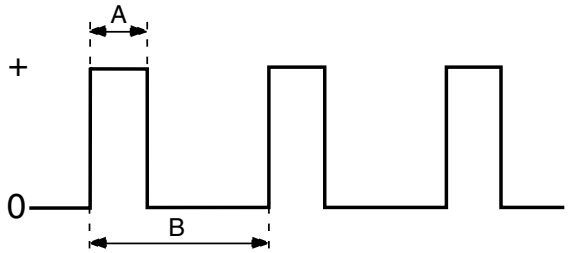

Voltage
An increase in the number of pulses per unit of time will not only lead to a higher duty cycle ratio but also to a higher mean voltage.

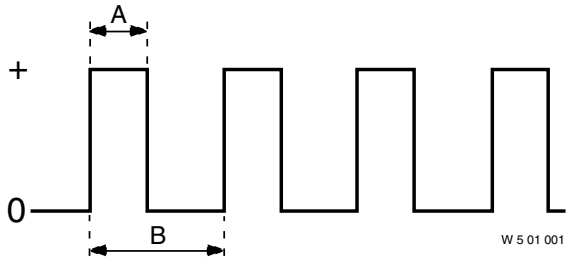

https://truckmanualshub.com/

Measuring a square wave signal
The square wave signal can be measured in the following ways using a multimeter:
- Multimeter in the duty cycle position (%). This measures the voltage level ratio.
- Multimeter in the DC voltage position. This measures the average value of the supplied voltage.

Square wave signals in the vehicle
- Speed sensor output signal
- Vehicle speed signal to electronic units

https://truckmanualshub.com/

2

https://truckmanualshub.com/

2. DESCRIPTION OF COMPONENTS

2.1 INDUCTIVE SENSOR

The vehicle has a number of inductive sensors, such as:

- wheel speed sensor
- engine speed sensor
- camshaft sensor

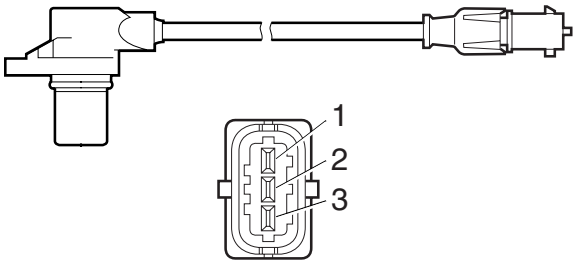

i400442

Recording engine speed
The engine speed is recorded via the crankshaft position sensor. The crankshaft position sensor output signal is a sine wave signal with a frequency corresponding to the number of holes in the pulse disc and the crankshaft rotation frequency.
The signal is converted in the electronic unit into a message that is sent via the CAN network.
The VIC sends this message to the DIP, which then activates the rev counter.

Engine speed sensor operating principles
The inductive sensor consists of a permanent magnet (1), a core (2) and a coil (3).
When the inductive sensor is situated between two teeth, the lines of force of the magnetic field will run directly from the north pole to the south pole via the housing.

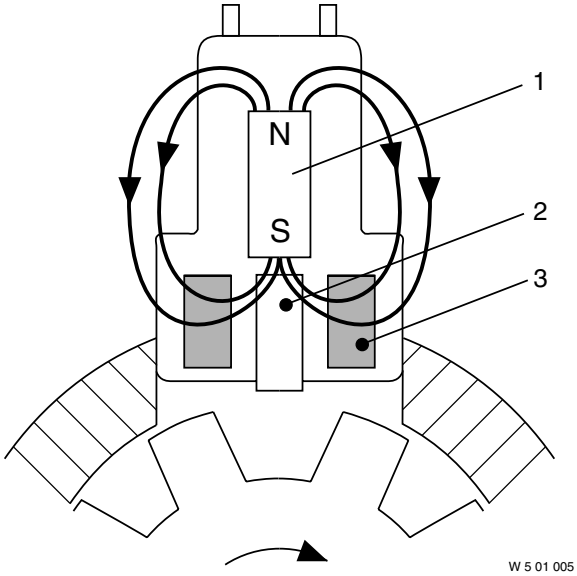

W 5 01 005

The moment a tooth approaches the inductive sensor, the lines of force of the magnetic field will run from the north pole to the south pole via the housing, the teeth of the toothed wheel and the core.
As more lines of force are now running through the core, a more powerful magnetic field is obtained.
As a result of this change in the magnetic field, an AC voltage is generated in the coil.

The value of the AC voltage generated depends on the speed of +rotation of the toothed wheel and the air gap between sensor (core) and tooth.

https://truckmanualshub.com/

2.2 VEHICLE SPEED SENSOR

The vehicle speed sensor has two connections for output signals. The “real-time” speed signal, generated by a Hall IC, is sent via the first connection,
A data signal (bi-directional signal) is sent via the other connection, data being exchanged between the MTCO and the speed sensor.
The MTCO requests data from the sensor.
The sensor sends the coded data to the MTCO in sequence, and the MTCO checks the accuracy of this data.
The coded signal consists of the following data:

- Serial number of the sensor
- “Master key” (the same as that of the MTCO)
- Coded speed signal

The MTCO compares the coded speed signal to the “real-time” speed signal.
The MTCO sends commands and data to the sensor at 10 second intervals.

Speed data for the CAN-system is sent via MTCO-outputs A6 and A7.

Speed data for the UPEC-system and ECAS-system is sent for UPEC via output B7 and for ECAS via output B6; these are duty-cycle signals.

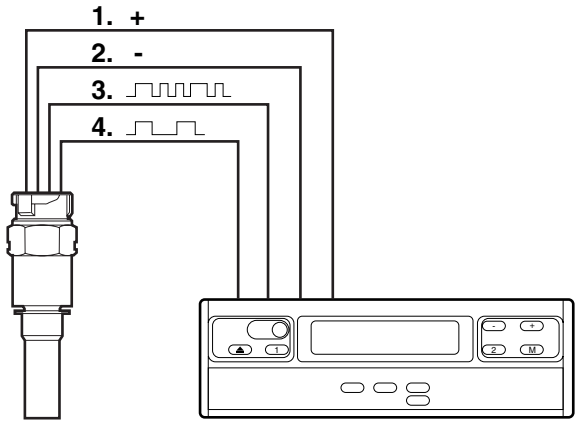

Duty cycle speed signal
The speed signal sent via the vehicle speed sensor to the MTCO is processed by the MTCO and sent as a message via the CAN network.
The speed signal is also converted into a duty cycle signal. This signal is used by electronic units that do not receive/read the vehicle speed signal message via the CAN network.
This diagram shows the linear characteristic of the duty cycle (%) in relation to the vehicle speed (V).
This graph applies to all vehicle models.

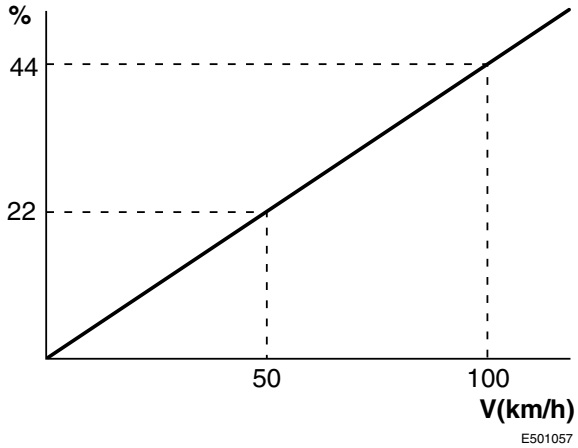

https://truckmanualshub.com/

Inspection
The duty cycle signal (square wave voltage) can be checked using a multimeter that is set to the DC voltage or duty cycle range or using a scopemeter.

https://truckmanualshub.com/

2.3 TEMPERATURE SENSORS

The vehicle has a number of temperature sensors, such as:
- coolant temperature sensor
- inlet air temperature sensor
- fuel temperature sensor
- ambient air temperature sensor

These sensors are temperature-sensitive resistors.
Large changes in the resistance of these sensors are perceptible when the temperature rises or drops.

There are two types of temperature sensor:
- NTC resistor (Negative Temperature Coefficient).
- PTC resistor (Positive Temperature Coefficient).

NTC resistor
In an NTC resistor, the resistance value reduces when the temperature rises.

Application:
- measuring coolant temperature.

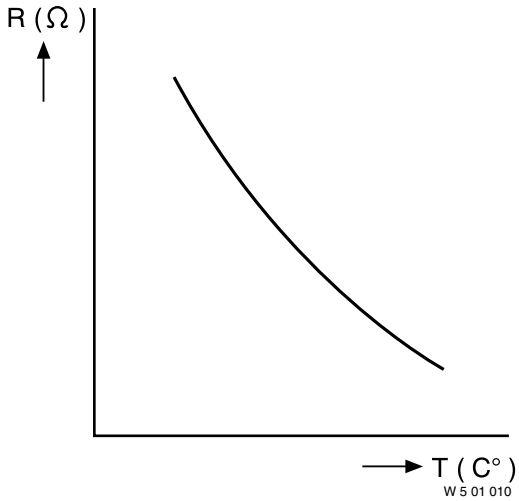

PTC resistor
In a PTC resistor, the resistance value increases when the temperature rises.

In contrast to the NTC resistor, there will be a large change in resistance within a small temperature range in the PTC resistor.

Application:
- measuring air temperature when cab heater is on

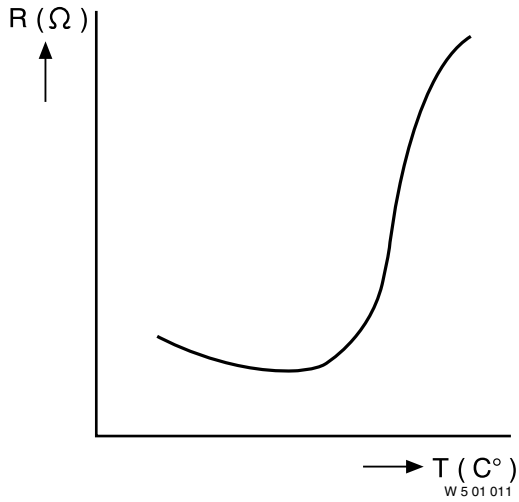

https://truckmanualshub.com/

Inspection
The temperature sensors can be checked using a multimeter that is set to the resistance range.

https://truckmanualshub.com/

2.4 FLUID LEVEL SENSORS

The vehicle has a number of fluid level sensors, such as:
- cooling system fluid level sensor
- engine oil level sensor

Coolant level sensor
The coolant level sensor consists of two microswitches (reed switches), connected in parallel with two resistors.
These microswitches are influenced by a magnetic field positioned outside the sensor.
If the coolant level drops, the microswitches will be closed by a float fitted with a fixed magnet.

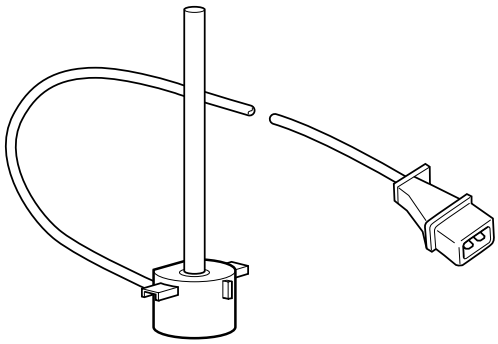

E501433

The “alarm switch” detects that the coolant level is too low and short circuits the parallel switched resistor.
The “daily inspection” switch detects that the coolant needs to be topped up and short circuits the parallel switched resistor.
The VIC uses the resistance value to detect the status of the microswitches.
As a result the instrument display is activated by the VIC.

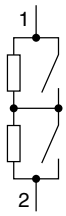

E501434

Note:
The VIC will only send a message to the instruments display during the startup phase if the “daily inspection” switch is closed during the startup phase.

Engine oil level sensor
The operation of the engine oil level sensor is based on a resistance measurement.
When the contact is switched on, a current is sent through the sensor from the VIC control unit for a specific period of time.
Applying this current briefly in this way ensures that the sensor is properly warmed up.
When the level is being measured the resistance value is influenced by the quantity of oil in the sump.

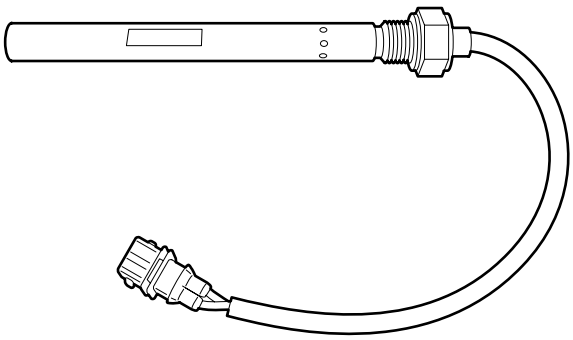

E501146

https://truckmanualshub.com/

Inspection
The engine oil level sensor can be checked with a multimeter set to the resistance range.
The resistance value is between 20.5 and 23.5 Ohms, measured at 20°C.
The maximum current strength of 200mA may not be exceeded when the resistance value is measured.

2.5 PRESSURE SENSORS

The vehicle has a number of pressure sensors, such as:

- Pressure sensor to record bellows pressure for ECAS.
- Pressure sensor on the air supply unit.

There is a diaphragm made of semi-conducting material (silicon) in the pressure sensor.
When pressure is applied to the diaphragm, it will be deflected.
Deflection of the diaphragm leads to a change in the resistance of the semi-conducting material.

The diaphragm is part of a what is known as a bridge circuit.
Deflection of the diaphragm unbalances the bridge circuit, which changes the output signal.
The output voltage is in direct proportion to the pressure applied (deflection of the diaphragm).

Inspection
The output voltage can be checked using a multimeter set to the DC voltage range.

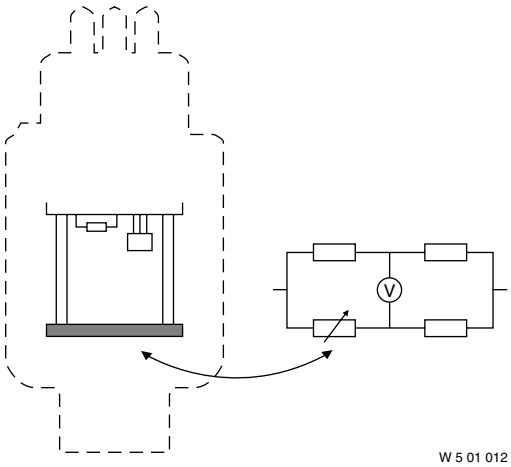

https://truckmanualshub.com/

Pressure sensor for monitoring boost pressure.
A piëzo pressure sensor is used to check the boost pressure. This sensor consists of an electronic circuit and a pressure recording element.
The pressure recording element records changes in pressure; these changes in pressure are converted into an electrical voltage. The electronic circuit amplifies this voltage to create a usable output signal.

Inspection
The output voltage can be checked using a multimeter set to the DC voltage range.

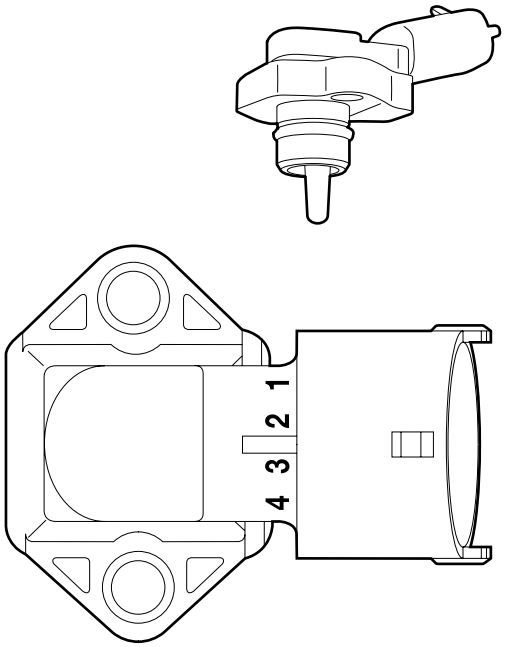

i 400441

2.6 ALTERNATOR

The compact alternator is a lightweight alternator with two internal cooling fans. The electronic controller also controls pre-excitation of the alternator. The function of the exciter diodes has also been taken over by the controller. The alternator generates high currents in the lower speed range.

B connection to terminal 30 on the starter motor
15 voltage after ignition
S sens connection on the controller
L connection to VIC

B connection
The alternator has two B+ connections that are connected to each other internally. B+1 is connected to terminal 30 on the starter motor. B+2 is **NOT** connected. B- (earth) is connected to the alternator housing.

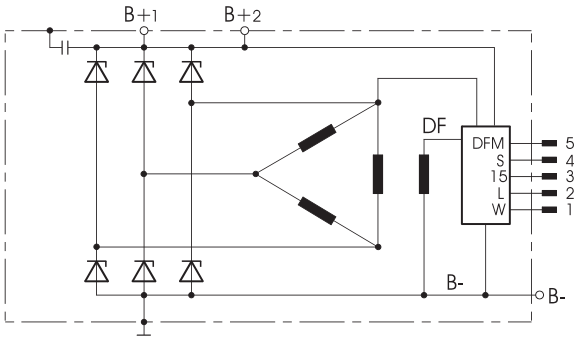

E501373

https://truckmanualshub.com/

Connection 15
When the ignition has been turned on (contact made), power is supplied to the alternator via connection 15 (1010). The controller uses this power to activate pre-excitation (self-energising). If there is an open circuit in this connection, the alternator will not produce any power until it reaches a speed of about 5000 rpm. This corresponds to an engine speed of around 1500 rpm. The alternator will energise itself when it reaches this speed.

Sens connection
The sens connection can be used to compensate for voltage losses in B+. There are voltage differences between the alternator and the battery. Voltage regulation can be improved if these voltage variations can be controlled. The sens connection is connected to terminal 30 on the starter motor.

L connection
The L connection is connected to the VIC electronic unit.
This connection is used to activate a fault message in the master display via the VIC, if necessary.

L voltage high: no fault
L voltage low: fault

The following faults can be detected via the “L” connection:
- Voltage too low (< 16V)
- Open circuit in connection 15 (1010)
- Open circuit in “S” connection
- Open circuit in “L” connection

These faults are indicated by the yellow “Alternator fault” warning.

Too high a voltage (red warning) can be recognised by too high a voltage (>31 V) on the VIC electronic unit.

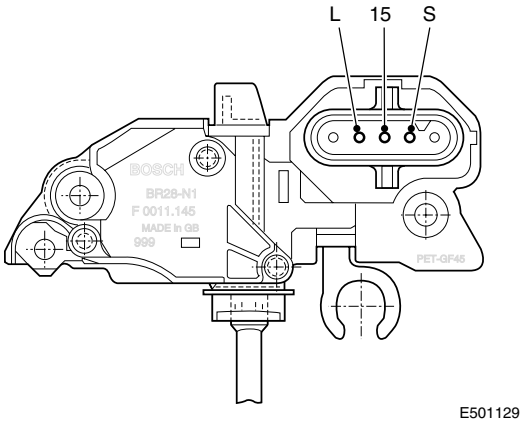

https://truckmanualshub.com/

2.7 PROXIMITY SENSORS

The vehicle has a number of proximity sensors, such as:
- sensor under the clutch pedal for engine management
- cab lock sensor
- mechanical rear axle lifting-gear

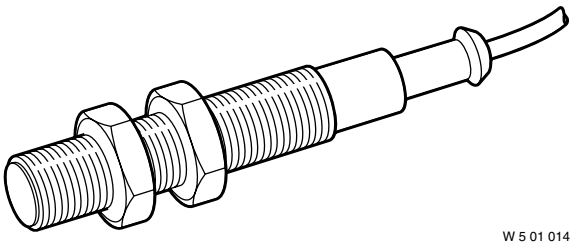

Inductive proximity sensor
An alternating electromagnetic field is generated by a pulsating current in a coil (oscillation).
If a metal object is introduced into the electromagnetic field, eddy currents will occur in that metal object.
These eddy currents will “damp” the magnetic field in the coil, so that the current in the coil changes.
This change results in an output voltage.

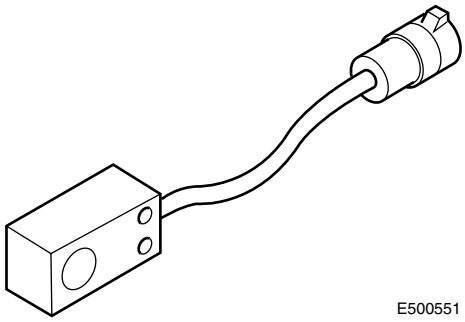

Inspection
Placing a metal object in front of the sensor (inductive sensor) makes it possible to check the output voltage using a multimeter set to the direct voltage range.

https://truckmanualshub.com/

2.8 STEERING COLUMN SWITCH

The steering column switches in the CF vehicle series have been re-designed.
Both the design and the functionality have changed.
The advantages of the new switches are:

- They are short-circuit proof
- Use of reed switches ensures a longer service life
- The intarder function has been integrated into the right hand switch; consequently there are two switches on the steering column
- All cruise-control and engine speed control functions have been integrated into the right hand steering column switch

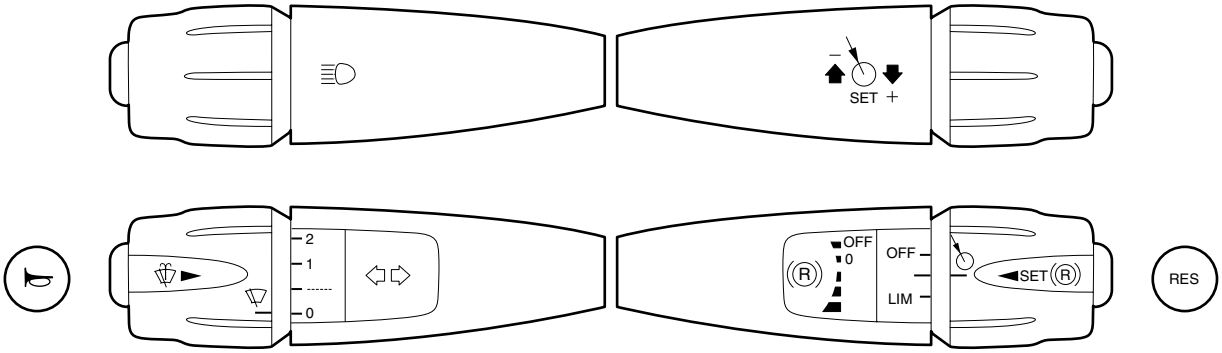

E501135

https://truckmanualshub.com/

There are always two stalks on the steering column.

The left hand stalk has one model. Its functions are:
- Left/right direction indicator
- Main/dipped beam
- Horn
- Windscreen wiper speed/intermittent/wash

The right hand stalk has two models:
- With intarder function
- Without intarder function

The functions of the right hand stalk are as follows:

Model 1:
Cruise control function (speed up/slow down/memory)
Engine speed control (speed up/slow down/fixed speed PTO)

Model 2:
Same functions as version 1
Intarder intarder/V-constant function

https://truckmanualshub.com/

3. DIAGNOSTICS

3.1 DIAGNOSTICS IN ELECTRICAL SYSTEMS

DAVIE XD is used to carry out diagnostics.
This tool has a two-channel scope and a multimeter function.
DAVIE XD is also used to read data from electronic systems. When a fault arises, it offers the option of selecting a ”guided” diagnosis that goes through a series of measurement steps to help locate the cause of the problem.

Refer to the user manual for a full description of the operation and capabilities of DAVIE XD.

https://truckmanualshub.com/

2

https://truckmanualshub.com/

CONTENTS

		Page	Date
1.	**GENERAL**	1-1	200404
1.1	Connector	1-1	200404
1.2	Contact	1-2	200404
1.3	Contact kits	1-3	200404
2.	**REMOVAL AND INSTALLATION**	2-1	200404
2.1	Removal and installation, connectors	2-1	200404
2.2	Removal and installation, contacts	2-2	200404
2.3	Fitting contacts to electrical wires	2-8	200404
2.4	Fitting a SCAT seal	2-15	200404
2.5	Fitting an electrical buffer connection	2-16	200404
2.6	Removal and installation, earth wire	2-19	200404
2.7	Repairing CAN network wiring	2-20	200404

https://truckmanualshub.com/

3

https://truckmanualshub.com/

1. GENERAL

The increasing application of electronics in vehicles means a much broader range of connectors, contacts and wiring is being used. Be sure to pay special attention to this during repairs, so as to avoid unnecessary faults.

1.1 CONNECTOR

A connector is a removable connection between two or more electrical wires or components. The female contacts are on one side and the male contacts on the other side. This way they can be connected and disconnected.
The connector should protect the contacts against unwanted electrical connections and external influences. It also ensures the proper connection of the applicable contacts.

https://truckmanualshub.com/

1.2 CONTACT

A connector has one or more contacts. These contacts are available in various sizes and models.
However, they all have the same design:

The mating part (1) enables the electrical connection between the contacts.
The contact press part (2) is the electrical connection between the stripped part of the wire and the contact.
The relief part (or pull relief) (3) relieves the contact press part from mechanical wear. The insulation relief is placed over the insulating sheath and/or the SCAT.

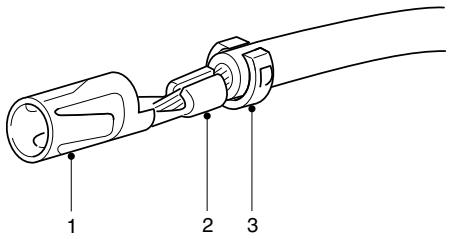

E501479

With contacts, three dimensions are important: the diameter (1) of the wire to be connected, the size of the contact press part (2), which is linked to the wire diameter, and the size of the mating part (3).

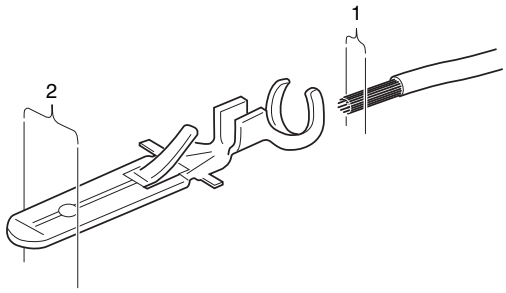

E501504

https://truckmanualshub.com/

1.3 CONTACT KITS

Contact kit A
Contact kit A (DAF No. 0694960) is available for the contacts, except SCAT contacts and micro-timer contacts.

There is a sticker on the inside of the kit to facilitate selection of the contact, contact crimping tool and ejector tool.

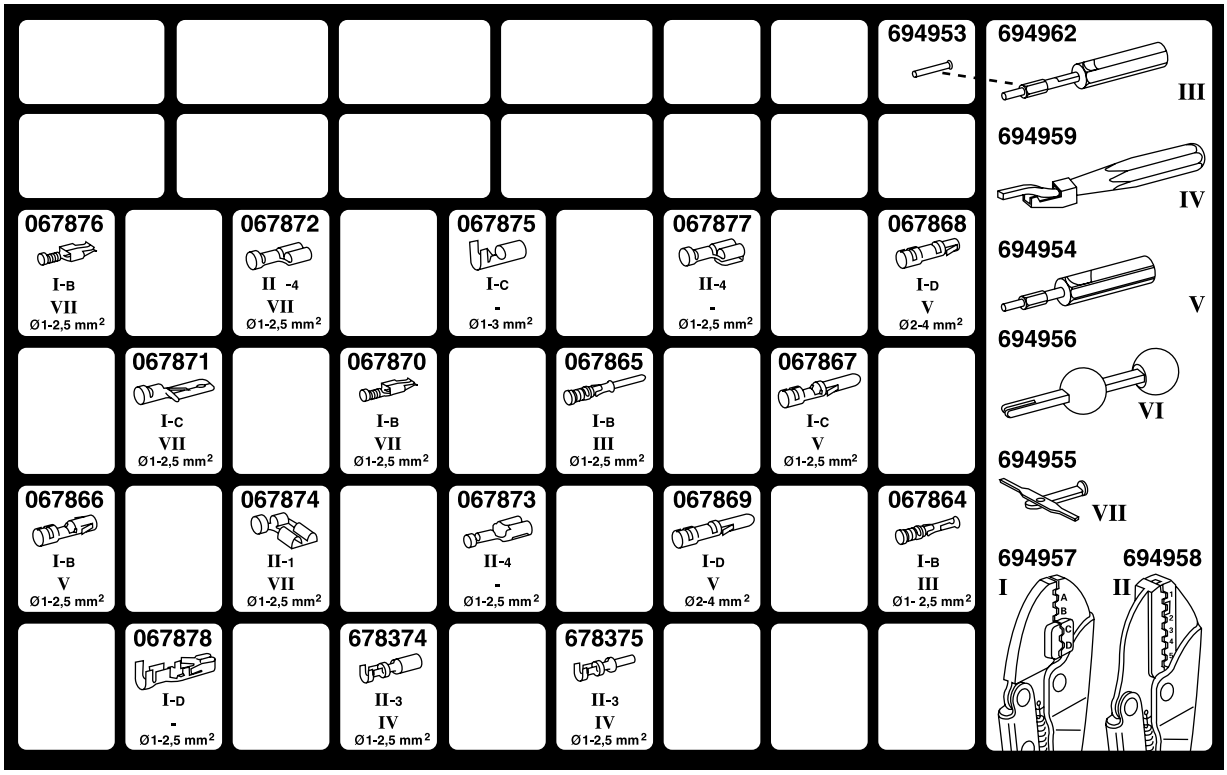

W 5 03 019

At the top the DAF no. of the contact is shown. Roman numerals I and II, shown below the illustrations, refer to the contact crimping tool to be used.
The numeral or letter added to Roman numeral I or II indicates the hole in the contact crimping tool in which the contact is to be placed.
Roman numerals III to VII refer to the type of ejector tool to be used for removing the contact from the connector.
The information at the bottom refers to the core section suitable for the contact.

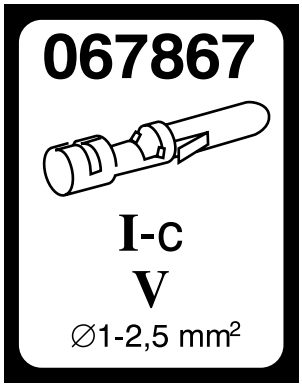

W 5 03 018

https://truckmanualshub.com/

Contact kit B
Additional contact crimping and ejector tools are required for SCAT contacts and for micro-timer contacts. Contact kit B (DAF No. 1240065) is available for this purpose.
There is a sticker on the inside of the kit to facilitate selection of the contact, contact crimping tool and ejector tool (to be used in the same way as for contact kit A).

Note:
The proper ejector and the proper contact crimping tool for each contact can also be found through 'Parts Rapido'.

https://truckmanualshub.com/

2. REMOVAL AND INSTALLATION

2.1 REMOVAL AND INSTALLATION, CONNECTORS

Unlocking the connectors
The connectors can often be locked with one another or with a component. They can be divided into:

A. Active locking.
This means that the lock must be activated. With this type a lock must often be pressed.
B. Passive locking.
Opens when the parts are pulled apart with a certain force.

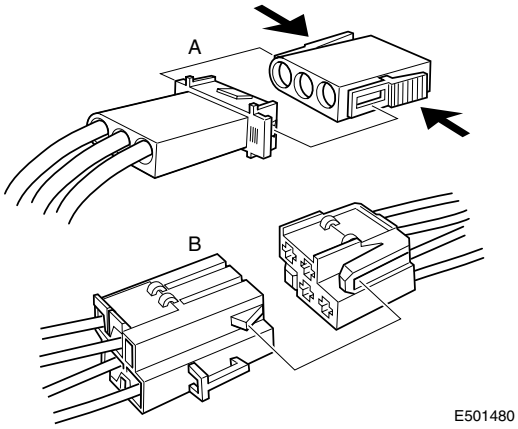

E501480

Two connectors in one housing
These connectors consist of two separate connectors. To remove the contacts first remove the connectors from the connector housing. Push the locking lip aside before removal. The connector can then be slid out of the connector housing.

Examples:
- Connector for VIC electronic unit

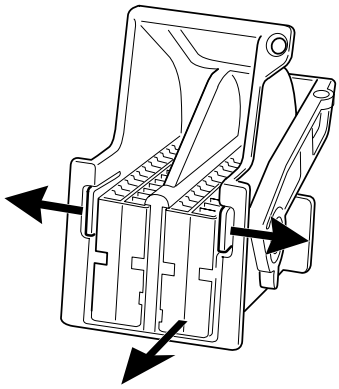
E501484

https://truckmanualshub.com/

2.2 REMOVAL AND INSTALLATION, CONTACTS

Contact lock
There are various types of contact locks. A few examples are given below. When a lock is applied, individually for each contact, this is called a primary lock. An extra general lock for several contacts in a connector is a secondary lock.

Primary contact lock
To keep an individual contact in the connector in place, a contact is often furnished with one or more locking bolts. This is a primary lock. These locking bolts should never be damaged, with a view to pressing and ejecting the contacts.

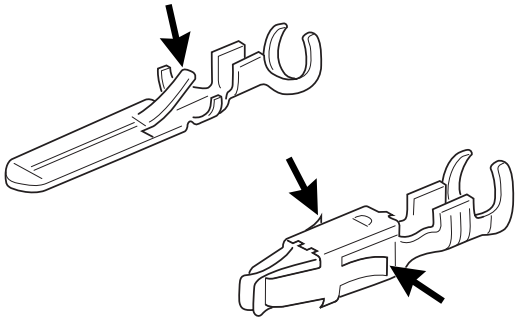

E501481

Secondary contact lock
This type of lock is normally used on 2 and 3-row connectors.
For connectors (1) with a locking lip (2) first remove the lip before removing the contacts. This is a secondary lock. The locking lip is on the side of the connector and can usually be recognised from a colour that is different from the colour of the connector.
The lip is removed entirely. Now the contacts can be removed using the proper ejector tool by unlocking the primary lock.

Examples:
- Cab connectors
- Electronic unit connectors

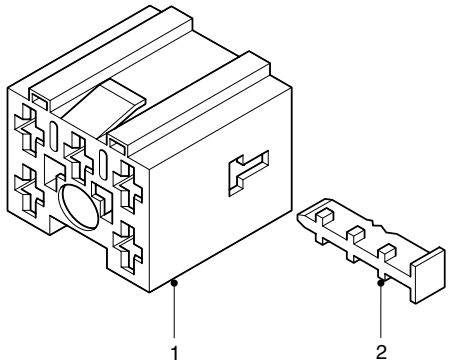

E501483

https://truckmanualshub.com/

The contacts may also be locked secondarily by the lower part of the connector. After tilting this lower part, the contacts can be removed by unlocking the primary lock using the proper ejector tool.
This type of lock is used only on 2-row connectors.

Examples:
- MTCO connector

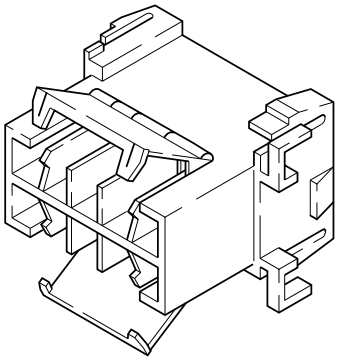

E501497

A different type of secondary lock is formed by two sliding parts of the connector.
The upper half (on the wire insert side) and the lower half form the extra contact lock.

To unlock this secondary contact lock the upper half of the connector must be pushed away slightly in the direction of the arrows on the connector housing.
The contacts can then be removed from the connector using the proper ejector tool.

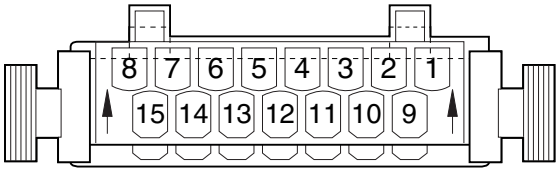

E500475

After any installation of wires with contacts, the connector must be pressed into the lock again. If this is not done it will not fit into the counterpart.

Application examples:
- Connector, CDS electronic unit
- Connector, ECAS-2/3 electronic unit
- Connector for UPEC electronic unit

https://truckmanualshub.com/

Ejecting contacts
For repair or extension of the wiring a contact may have to be replaced or added. Using special ejector tools a contact can be removed from the connector without being damaged.
For the proper ejector tools, see 'Parts Rapido'.

1. Push the wire with contact forwards (1). The locking bolt (2) is now free from the connector (3).
2. Push the proper ejector tool (4) into the front of the connector. This will push the locking bolt (2) down.
3. The contact can now be removed by gently pulling the wire.

Note:
If the wire is pulled before the ejector tool pushes the locking bolt down, the contact will only be fixed in the connector even more.

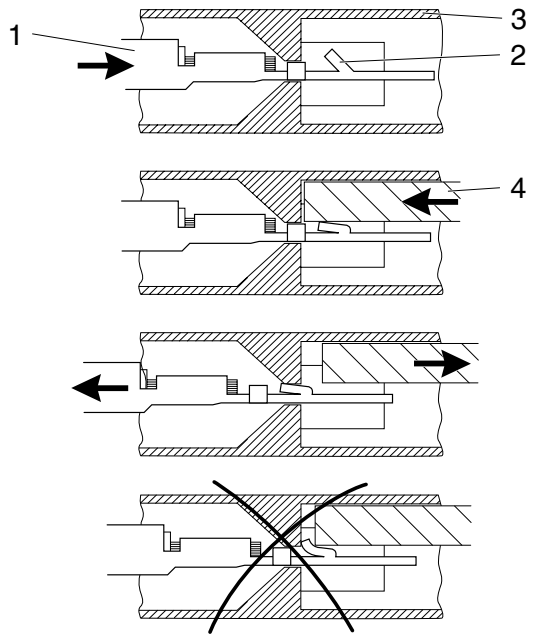

E501482

Contacts are also used in which the locking bolt (2) is on the rear of the connector (3).

1. Pull the wire and contact backwards (1). The locking bolt (2) is now free from the connector (3).
2. Push the proper ejector tool (4) into the back of the connector. This will push the locking bolt (2) up.
3. The contact can now be removed by gently pushing the wire forwards.

Note:
Here the locking bolt works exactly the opposite to the usual connectors.

Application examples:
- EMAS pressure sensor connector
- Accelerator sensor connector, CF series / XF series

For each contact a specific ejector tool is required.
The proper ejector tool for each contact can be found through 'Parts Rapido'.

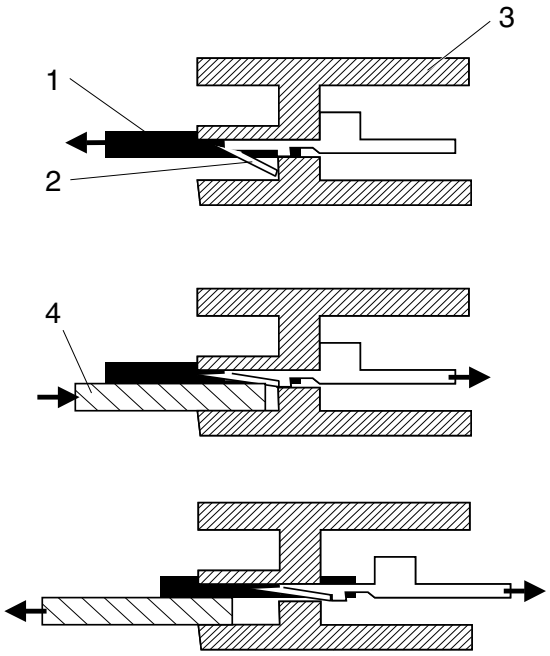

E501696

https://truckmanualshub.com/

An MQS (Micro Quadlock System) contact lock
Before the contact can be removed, the lock must be unlocked with a needle-shaped object.

1. First press the lock at the end of the connector (1). At the same time gently pull the wire (2) until resistance is felt.
2. Then press the second lock (3) and again gently pull the wire (2).
3. The contact can now be removed from the connector.

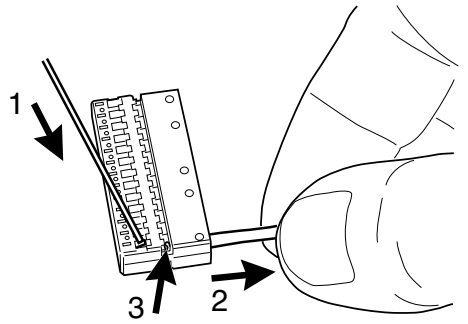

E501486

Note:
This type of contact is locked twice and must therefore be unlocked twice.

Application examples:
- Connector for VIC electronic unit

Removing contacts from the Bosch 89-pin connector
To remove a contact from this connector proceed as follows:

1. Fold the protective cover around the wiring harness down by pushing the lock outwards.
2. Now push the two outer halves of the protective cover outwards and then upwards. The protective cover can now be removed.
3. The pink secondary contact lock (1) must be slid to the centre of the connector to enable the contacts to be removed.
4. The contacts can now be removed using the proper ejection tool.

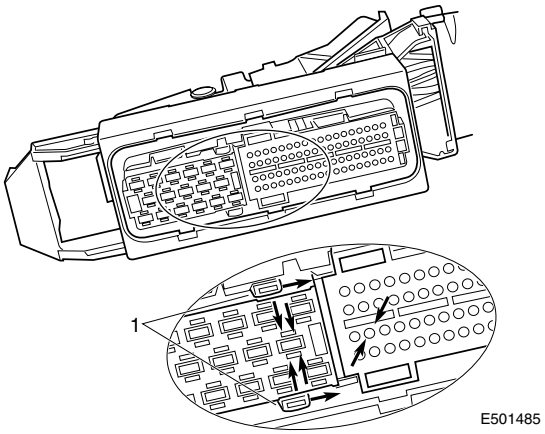

E501485

Note:
The larger contacts are locked with four locking bolts. The smaller contacts are locked with two locking bolts.
Always unlock the locks when adding contacts!

https://truckmanualshub.com/

Fitting the Bosch 89-pin connector
When refitting the protective cover, ensure that the siphon and slide are both in the 'unlocked' position.
If they are not, the connector, when fitted, will not be locked correctly on the electronic unit. As a result, the contact between the connector and the electronic unit may be bad.

Application examples:
- Connector, ECS-DC3 electronic unit

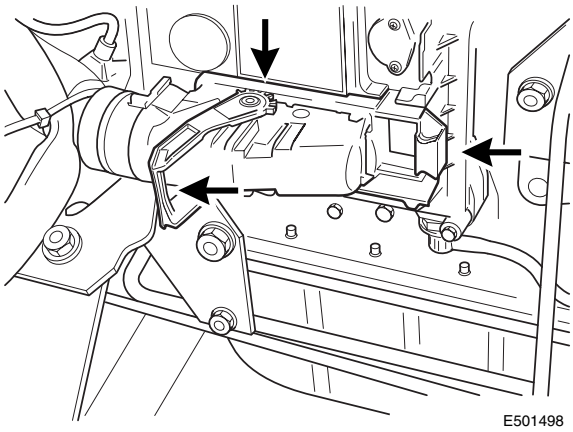
E501498

Removing 39-pin connector contacts
1. Loosen union G.
2. Push pressure ring H and seal K back slightly over the wiring.
3. Then eject the contacts from connector housing F using a special ejector tool from contact kit A or B.

Fitting 39-pin connector contacts
1. Fit union G, pressure ring H over the wiring.
2. Fit new contacts to the wires using the correct tool.
3. Insert the wires and contacts through seal K.
4. Press the contacts to their definitive positions in connector housing F.
5. Press seal K against connector housing F.
6. Position pressure ring H so that the two ridges on the side of connector housing F fall into the pressure ring recesses.
7. Tighten union G by hand.

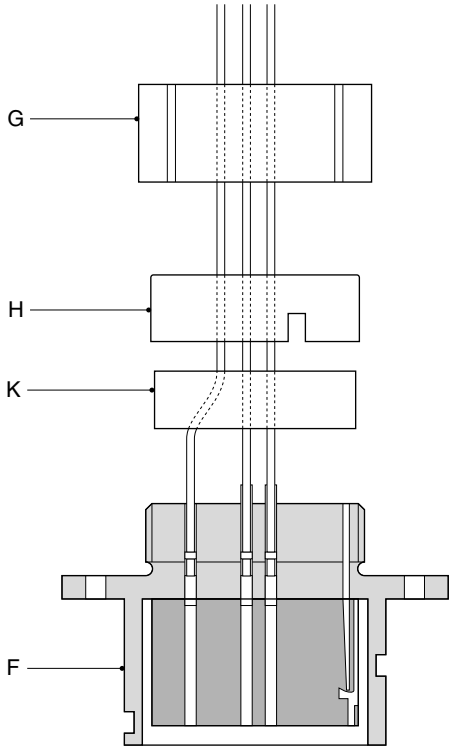

E500477

Note:
- Pressure ring H has contact numbers (their purpose is to enable the contacts to be positioned correctly). These contact numbers must be in the same position as the contact numbers on the connector housing.
- When an incorrectly positioned wire is removed the seal will leak. If a new wire is not inserted a sealing plug should be fitted.

https://truckmanualshub.com/

Removing contacts from 39-pin connector counterpart

1. Loosen end union nut A and tapered coupling nut B and push these as far as possible back over the insulation pipe.
2. Push pressure ring H and seal K as far as possible back over the wiring harness.
3. Push union E back over the wiring harness.
4. Carefully remove the sealing ring (2).
5. Carefully loosen the locking lugs (3) in connector housing F.
6. Remove centring sleeve D from connector housing C.
7. Then eject the contacts from connector housing C using a special ejector tool from contact kit A or B.

Fitting contacts in 39-pin connector counterpart

1. Push end union nut A and tapered coupling nut B as far as possible back over the insulation pipe.
2. Fit the centring sleeve D in connector housing C so that all openings are positioned opposite each another.
3. Check that all locking lugs (3) are positioned in the lock openings (1).
4. Insert the wires without contacts through pressure ring H and seal K.
5. Fit new contacts to the wires using the correct tool.
6. Feed the cable harness through tapered coupling nut B.
7. Press seal K against connector housing C.
8. Position pressure ring H so that the two ridges on the side of connector housing C fall into the pressure ring recesses.
9. Press the connector pins into their correct positions in connector housing C.
10. Fit sealing ring (2) around centring sleeve D and press it until the stop of connector housing C.

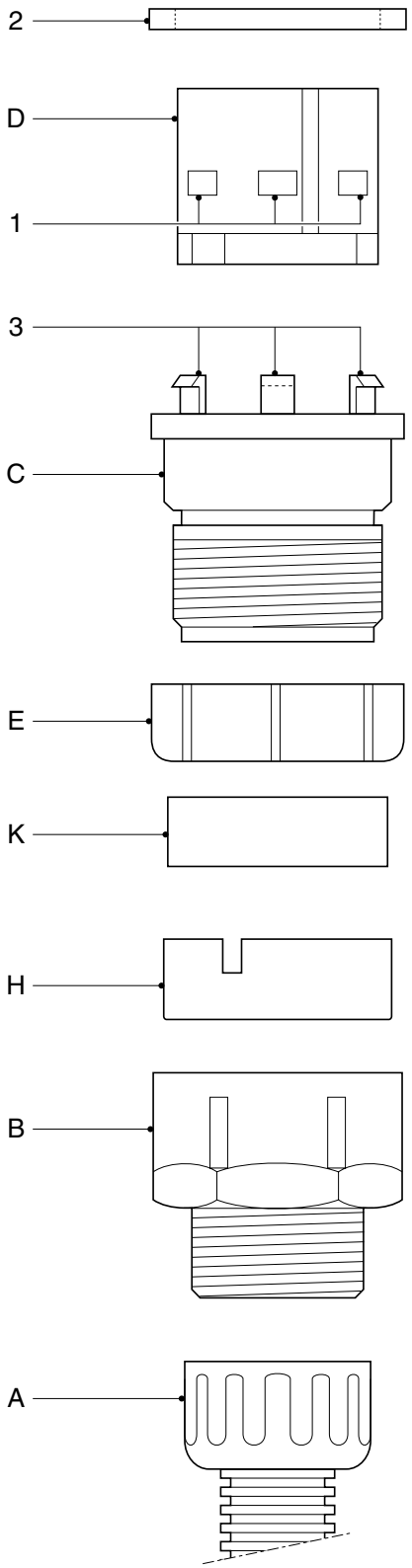

E500478

https://truckmanualshub.com/

Note:
- When carrying out the last two steps it is important not to twist the cable harness as this can lead to serious damage (wire breakage).
- Tighten the respective union nuts by hand. Do not use tools (pliers) to do this.

11. Screw tapered coupling nut B onto connector housing C.

12. Screw end union nut A (with insulation pipe) onto tapered coupling nut B.

2.3 FITTING CONTACTS TO ELECTRICAL WIRES

The increasing application of electronics in vehicles means a much broader range of connectors, contacts and wiring is being used. The result of this is that more attention has to be paid to making and repairing connections. The following criteria should be taken into account:

1. Wires with a reduced insulation thickness, with retention of the mechanical properties, for use with core sections from 0.5 to 2.5 mm^2.

2. Wires with a normal insulation thickness, for use with core sections from 4 to 120 mm^2.

3. Wires for various temperature ranges:
   T1: from −40°C to +70°C
   (in cab and chassis) and
   T2: from −40°C to +100°C
   (in engine compartment and gearbox)

Note:
In view of the mechanical strength required, the minimum permissible core section is 1 mm^2, with the exception of cab wiring. At certain points this may be 0.5 mm^2.

https://truckmanualshub.com/

To ensure the reliability of systems and connections, the following points should be observed when repairs or extensions are made to the wiring:

A. Always choose the following:
   - the correct type of contact
   - the correct wire diameter for the contact used
   - the correct type of contact material (tin-plated, silver-plated or gold-plated)

B. Use the right tool for the job. Wire ends are always clamped to a contact. Special crimping tools have been developed for this purpose.

Note:
Connections will only be reliable if these crimping tools are used and the contact is fitted in the correct hole.

C. Strip the correct length of wire. Always use stripping pliers.
   The rule of thumb is:
   stripped length = length of shrink-sleeve + 1 mm.

   Make sure that the core is not damaged during stripping or problems may occur after some time.

Note:
A good connection will only be obtained if points A, B and C are complied with. This implies that both the copper core and the insulation are firmly clamped in place.

https://truckmanualshub.com/

Crimping wire to a contact
Choose the right crimping tool and place the contact in the correct hole.

Note:
The proper crimping tool for each contact can be found through 'Parts Rapido'.

The contact may never be in a twisted, slanting or slid position (X) in the press clamp opening.

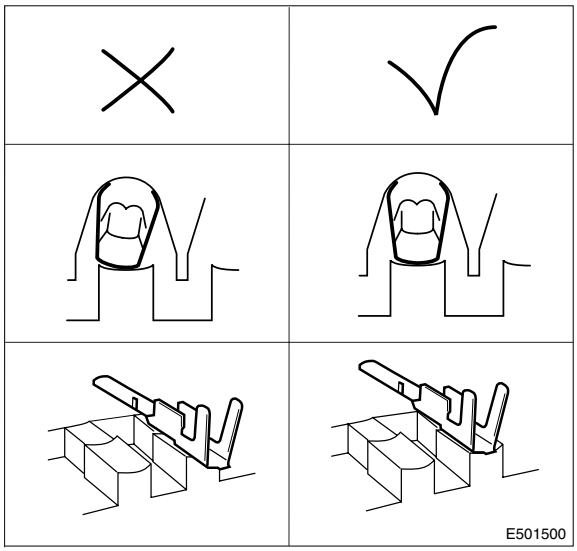

1. Place the wire in the contact.
2. The stripped wire part, the copper conductor must be in the contact press part (1).
   The wire insulation must be in the relief part (2).
3. Check again whether the wire is in the correct position in the contact (1 and 2) and press the contact press part (3 and 4) together.
4. Do not interrupt the contact pressing before the tool is completely compressed in the end position. Only then is full contact pressure reached and the tool can be opened.

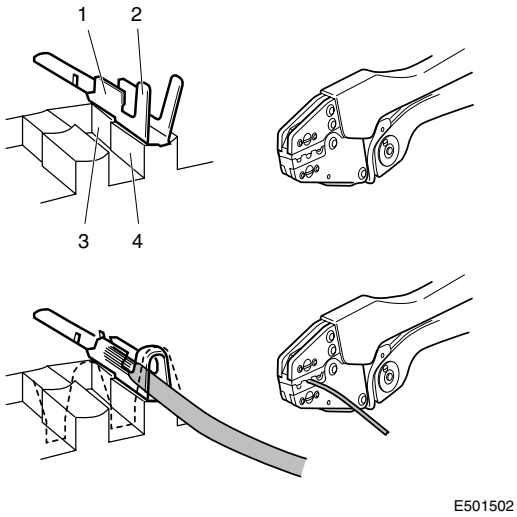

https://truckmanualshub.com/

Copper connection

1A. Wire diameter too large
1B. Wire diameter too small
2A. Crimp height too great (hole in crimping tool too large)
2B. Crimp height too small (hole in crimping tool too small)
3A. Asymmetric crimping
3B. Asymmetric crimping
4. Proper contact crimping

S = material thickness
x = cracking

1A. There is a risk that copper conductors could stick out, which would adversely affect the fixed position of the other copper conductors.
This may result in a short circuit and loose contact.

1B. The contact may crack and the copper conductors may not be sufficiently fixed in the contact.

2A. Copper conductors are not sufficiently fixed in the contact. The wire will come loose of the contact.

2B. The contact will be damaged. The contact may crack after some time and the wire will then come loose from the contact.

3A and B The contact will be damaged and the copper conductors are not fully fixed in the contact. The wire may come loose. The height of any bulge on the contact may not exceed the material thickness of the contact. The width of this bulge may not exceed half the material thickness.

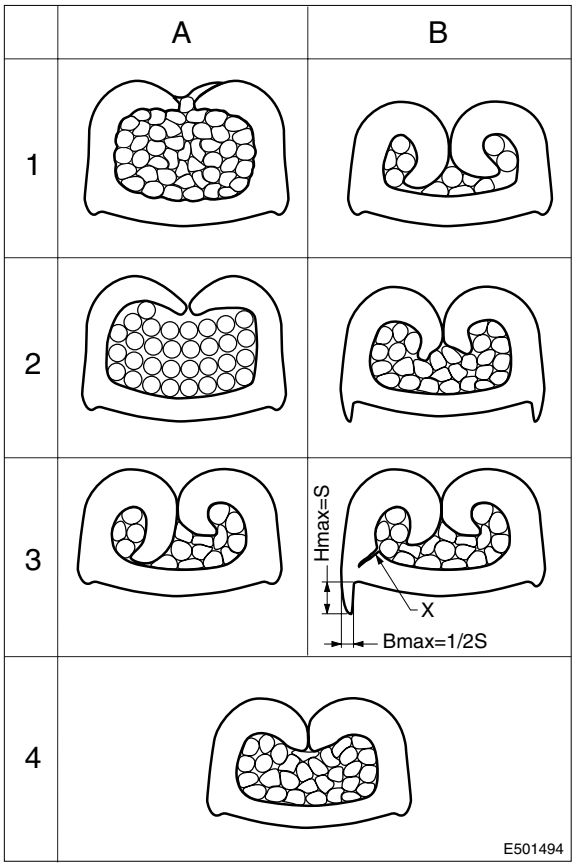

3

https://truckmanualshub.com/

Insulation connection
Different types of crimping are allowed:
1. Normal crimping; the two sides of the relief part fully engage the insulation.
2. Double crimping; two wires are clamped in one contact.
3. Overlap crimping; the two sides of the relief part engage one another slightly.
4. Double overlap crimping; two wires are clamped in one contact, the two sides of the relief part engaging one another slightly.

A. If the insulation connection is correct, the wire is clamped in the relief part with the correct pressure and the insulation is not broken.

B. If the contact pressure is too high the insulation could break, possibly causing a short circuit.
This may for instance be caused by:
- using the wrong crimping tool
- using an improper hole in the crimping tool (too small)
- a defect in the crimping tool delaying the interruption of the contact pressing.

C. If the contact pressure is not sufficient the insulation may not be clamped and the wire may come loose. This will interrupt the electrical connection but may also result in a short circuit.
This may for instance be caused by:
- using the wrong crimping tool
- using an improper hole in the crimping tool (too big)
- interrupting the contact pressing prematurely.

https://truckmanualshub.com/

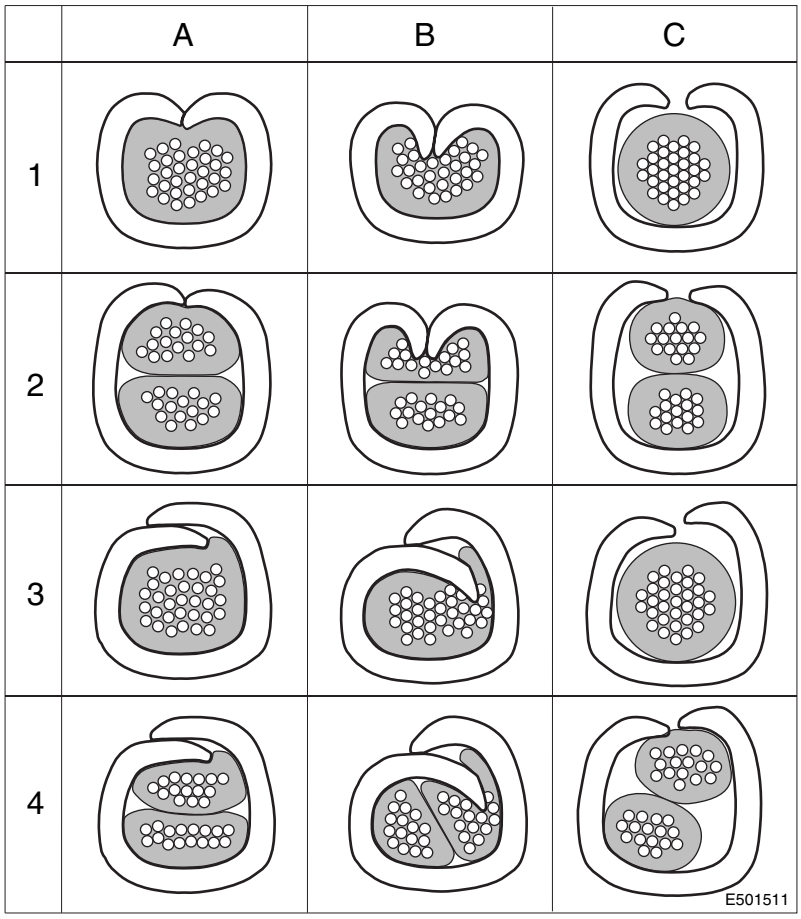

1. Normal crimping
2. Double crimping
3. Overlap crimping
4. Double overlap crimping

A. Good insulation connection
B. The insulation is broken
C. The insulation is not secured

With double crimping the thinnest wire is always at the bottom.

A connection can be checked by gently pulling the wire after the contact is placed in the connector. The lock of the locking bolt in the connector should then be felt.

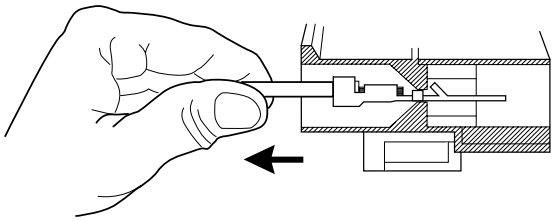

E501501

https://truckmanualshub.com/

Examples of wire-contact connections

A. Wire not sufficiently slid forwards.
The wire is not sufficiently slid forwards to ensure a proper current transfer and pull relief.

B. Stripped part of the wire too short.
The stripped part of the wire is too short to ensure a proper current transfer whereas a part of the insulation is clamped underneath the contact press part.

C. Wire too far backwards.
If the stripped part of the wire is too long and the wire is placed correctly relative to the contact press part, the pull relief will cover too little of the wire.

D. Wire too far forwards.
If the stripped part of the wire is too long and the wire is placed correctly relative to the pull relief, the copper conductors at the front will stick out too far past the contact press part.

E. Copper conductors not clamped.
Copper conductors not clamped may cause a short circuit to other wires nearby.

F. This is a correct connection.

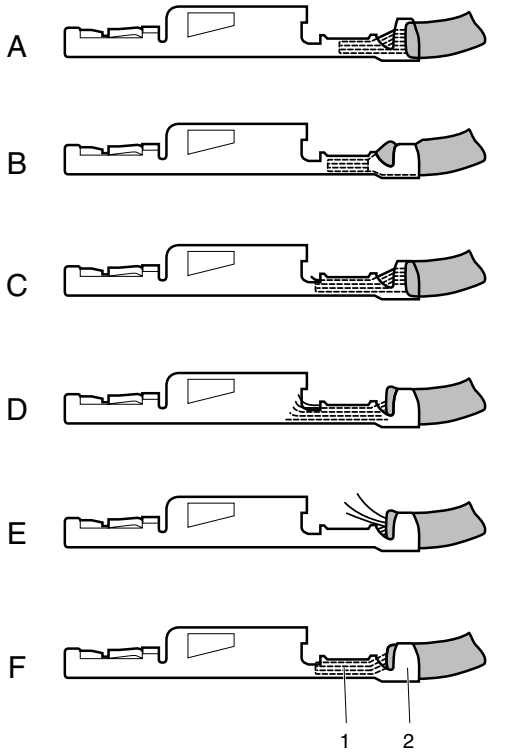

E501499

https://truckmanualshub.com/

2.4 FITTING A SCAT SEAL

SCATs are used in places where wires are exposed to heavy conditions (environment or application of the vehicle), with the risk of water entering the connector.

The SCAT seal, which is made of silicone, prevents corrosion inside the connector and keeps the seal properties intact in the event of temperature changes.

The SCAT seal is pressed around the wire with the relief part of the contact.

The SCATs are available in various colours and sizes.

1. Select the right SCAT for the wire, contact and connector.
2. Slide the SCAT onto an unstripped wire (A).
3. Slide the SCAT far enough onto the wire and strip the wire to the proper length (B).
4. Slide the SCAT back to the tip of the stripped wire so that the copper just sticks out of the SCAT (C).
5. Place the contact in the proper manner (D) around the SCAT (2) and the stripped wire (1).
6. Now crimp the contact around the SCAT and the wire using the proper crimping tool.

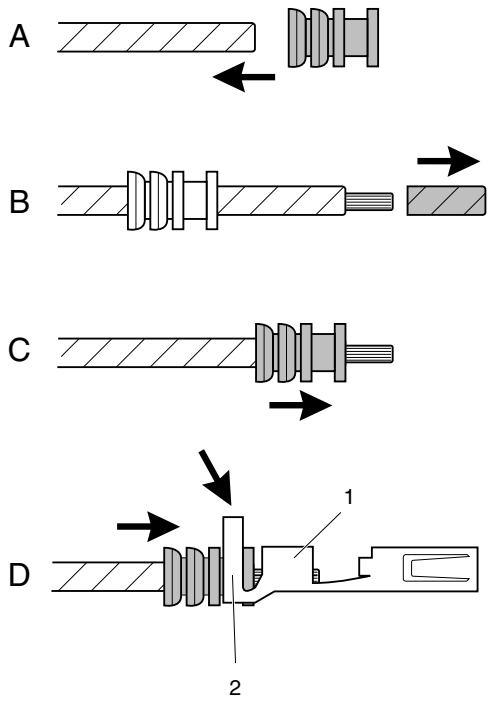

E501503

https://truckmanualshub.com/

2.5 FITTING AN ELECTRICAL BUFFER CONNECTION

A buffer connection is made when at least two wire ends must be connected to one another. This may be required because of a wire repair or if a wire is to be added to a connection.

Note:
When adding a new wire to an existing wire, both wires must be of the same thickness.
If part of the existing wire is to be removed, try to make sure that the wire number can still easily be found on the wire.

The contact crimping part (1) is the electrical connection to the stripped wire part. The central stop (2) is a limiter, preventing the wire to be connected from being inserted too far. The insulation is a crimp insulating sleeve with glue layer (3), which, after heating by a blow drier, will offer protection against unwanted electrical contact and corrosion.

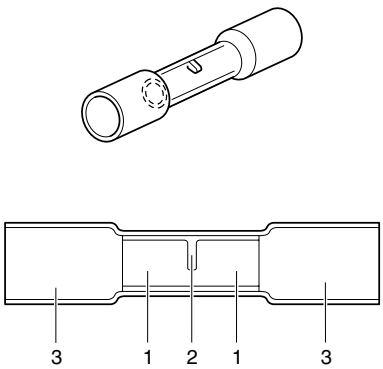

There are three different buffer connectors available: red, blue and yellow. Depending on the wire thicknesses to be connected (and possibly the number of wires to be connected) a specific colour must be used.

- red diameter 0.25 - 0.75 mm^2
- blue diameter 1.0 - 2.5 mm^2
- yellow diameter 4.0 - 6.0 mm^2

Connecting more than two wires to one another is not recommended. The glue layer of the crimping insulation is not sufficient to seal all resulting gaps. So this is certainly not permitted outside the cab.

https://truckmanualshub.com/

It is very important to carry out contact crimping in the correct way to prevent electrical faults. For cold fusion a contact crimping tool is required. This tool creates a cold fusion between wire and buffer connector.

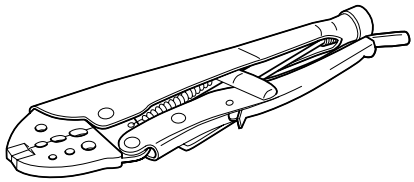

E501491

Fitting the contact crimp connector

1. Select the right buffer connector for the wires to be connected.

Note:
If three wires of the same diameter have to be connected after all, choose a buffer connector that is the same diameter as two of the wires. The single wire on the other side must be stripped to double length and folded double. The same applies when a wire is used on one side that is twice the diameter of the other.

2. Strip the wire to a length of 4 to 5 mm.

Note:
The stripped wire end may **not** be twisted.

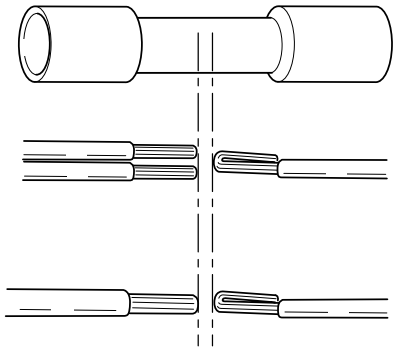

E501490

3. Choose the proper contact crimping tool on the basis of the buffer connector and wire diameter, and check the holes to be used.
4. Place the buffer connector in the hole of the tool and clamp it gently so the buffer connector will remain in the hole.
5. Slide the stripped wire ends into the side of the buffer connector that is engaged by the contact crimping tool.

Note:
The wire insulation may not be slid into the contact part of the buffer connector.

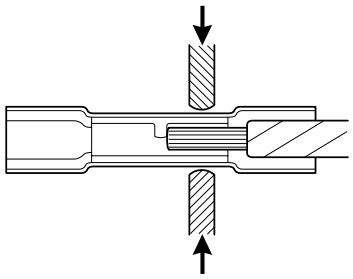

E501492

https://truckmanualshub.com/

6. Compress the contact crimping tool: Do not interrupt the contact crimping before the tool is completely compressed to the end position. Only then is full contact crimping completed and the tool can be opened.

7. Repeat this for the other ends of the buffer connector.

8. Check the contact crimping for damage and pull the wires to ensure they are properly fixed.

Note:
Improper contact crimping means a bad connection, which may cause failures.

Avoid breathing in the vapours produced when heating the crimping insulation.

9. Heat the crimping insulation to fix it properly to the wire insulation. Ensure that the insulation does not get burnt. If the insulation gets burnt it will become brittle and easily break or crack.

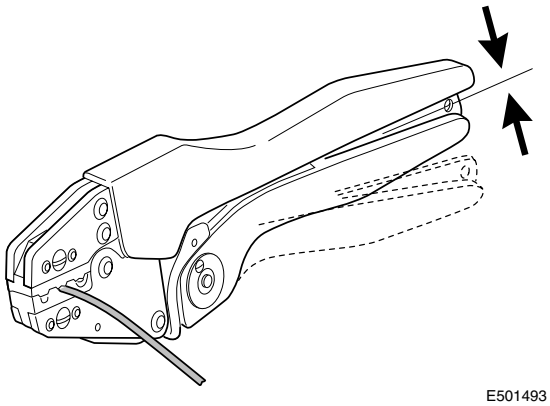

https://truckmanualshub.com/

2.6 REMOVAL AND INSTALLATION, EARTH WIRE

When a failure occurs in an electrical system, one of the first things to be checked is the earth connection, with particular attention being paid to earth connections on the chassis.

Points for special attention when checking earth connection on chassis
If an earth connection has been removed and is being re-installed, pay attention to the following:

- The bolt, nut, earth strip and washers must be cleaned (e.g. using a steel brush or sand paper). If a component is corroded, it must be replaced by a new one.
- Clean all dirt and paint from the area around the engine/chassis earth connection on both sides of the chassis member so that the bare metal is visible.
- Clean all dirt and paint from the area around the battery/chassis earth connection on the inside of the chassis member so that the bare metal is visible.
- On the earth strip side, the cleaned area must be larger than the contact area of the earth strip.
- On the nut side, the cleaned area must be larger than the contact surface of the nut.
- After fitting the earth connection, a protective zinc primer should be applied to both sides of it and it should be painted.

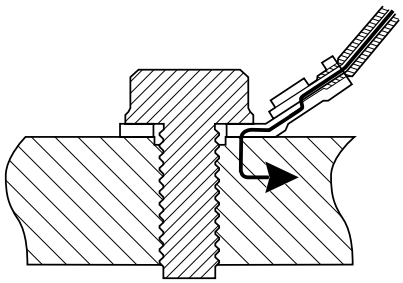

E501495

https://truckmanualshub.com/

2.7 REPAIRING CAN NETWORK WIRING

When repairing or replacing the CAN wiring, the original twisted lengths and diameters of the wiring must be taken into consideration. A 10% tolerance in the twisted length of the wiring is permitted. Winding density 40-50 turns/m.

When repairing the wiring, the winding density must be maintained, with the provision that it is permissible for the wiring at the point of repair to have no twists over a maximum length of 60 mm. When the wiring is being repaired, it must be secured in a wire tie at the end and in the middle.

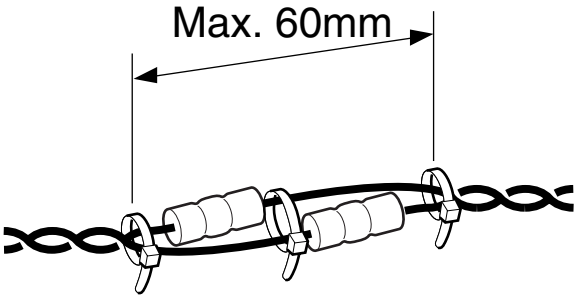

E500977

Replacing CAN wire

1. Measure the length of the original wire when untwisted.
2. Measure the diameter of the original wire. Always take a wire of the same diameter or, if this is not available, of the next size.
3. Preferably choose a wire of the same colour as the original wire.
4. Follow the routing of the original wire and install the wire in the original way.

https://truckmanualshub.com/

CONTENTS

		Page	Date
1.	**SAFETY INSTRUCTIONS**	1-1	200404
1.1	Batteries	1-1	200404
1.2	Battery charging	1-2	200404
2.	**CHARGING BATTERIES**	2-1	200404
2.1	General	2-1	200404
2.2	Methods of charging	2-3	200404
3.	**STORAGE OF BATTERIES**	3-1	200404
3.1	General	3-1	200404
3.2	Storage up to four weeks.	3-1	200404
3.3	Storage for more than four weeks	3-2	200404
4.	**CHECKING BATTERIES**	4-1	200404
4.1	Visual inspection	4-1	200404
4.2	Checking the charging condition	4-1	200404
4.3	Checking using a battery tester	4-3	200404

https://truckmanualshub.com/

https://truckmanualshub.com/

1. SAFETY INSTRUCTIONS

1.1 BATTERIES

- The sulphuric acid in the batteries is an aggressive and poisonous liquid. While working on batteries, wear protective clothing, gloves and safety goggles.
  In case of contact with clothes, skin or eyes, wash immediately with copious amounts of water. Consult a doctor in case of contact with the eyes or skin.
- Always remove the earth lead first before working on batteries.
  When connecting battery leads, always connect the earth lead last.
- Always handle batteries carefully and hold them upright.
- When topping up batteries, never allow the electrolyte level to rise more than 10 mm above the plates or above the level indicator.
- Never put tools or other materials, which could accidentally short circuit the battery poles, down on the batteries or in the vicinity of batteries. Short-circuited battery poles may cause the battery to explode.
- Secure the batteries well after completing the work, but not too tightly.

https://truckmanualshub.com/

1.2 BATTERY CHARGING

- An explosive gas mixture may be released during battery charging. Only charge batteries in a well-ventilated area.
- Never smoke or allow naked flames or sparks in the vicinity of the battery.
- Allow frozen batteries to thaw before charging.
- Switch the charger off before the leads to the battery are disconnected.

https://truckmanualshub.com/

2. CHARGING BATTERIES

2.1 GENERAL

- A battery may only be charged using DC current. Connect the positive pole of the battery to the positive terminal (+) of the charger, and the negative pole of the battery to the negative terminal (–) of the charger. The cell sealing plugs may remain on the battery during charging (with the exception of fast charging).
  The cell voltage will rise during charging. This increase in voltage depends on the charging current applied and the temperature. During normal charging, the cell voltage will rise from about 2 volts/cell to about 2.65 volts/cell. If a charging voltage of about 2.35 to 2.4 volts/cell (about 14.2 volts in a 12V battery) is exceeded, this will initiate active gas development.
  As a consequence of the rise in voltage during charging, the charging current will gradually fall, as a rule.
  Overcharging will reduce the service life of a battery.

- If the charging of the battery is continued after it has been fully charged (even with a low current), this will lead to corrosion (corrosive attack) of the grids of the positive battery plates. This type of wear leads to premature redundancy of the battery.
  Depending on the capacity of the charger, the normal charging time is between 8 and 15 hours.
  If during charging, the temperature of the battery acid exceeds 55°C, charging should be stopped. High temperatures reduce the service life of the battery.

https://truckmanualshub.com/

- A battery should be considered to be charged when the charge voltage stops rising for a period 2 hours and the acid density (relative density) has reached the nominal value (for example 1.28 kg/dm^3) and it rises no further.
- A charged battery must be used immediately. If this is not possible, maintain the battery as described in the “Storage of batteries” section.
- A discharged battery must be charged as soon as possible. If a discharged battery is not recharged, the battery plates may become sulphated (i.e. they may become hard), which will lead to permanent loss of capacity.
- Never disconnect the battery terminals when the engine is running to prevent damage to electronic components.
- Connect the positive lead (+) of the battery charger to the positive terminal (+) of the battery first and then the negative lead (–) to the negative terminal (–).
- Switch off the battery charger before disconnecting the battery charger leads, to avoid sparking and to eliminate the risk of explosion.
- To disconnect, release the negative terminal (–) first and then the positive terminal (+).

https://truckmanualshub.com/

2.2 METHODS OF CHARGING

Always disconnect the battery terminals before charging.

Normal charging

- Normal charging is done to partially or fully restore discharged batteries to full capacity. In most cases, a charging current of $^1/_{20}$ to $^1/_{10}$ of the capacity is selected.
- It is important to reduce the charging current during gas development and to switch the charger off when the battery is charged.

Fast charging

- With this method, multiples of the normal charge current (approx. 3 to 5 times) are used to achieve an acceptable charge condition in the shortest possible time.
- Before fast charging, remove the battery leads to prevent damage to the electronic components.
- Remove the cell sealing plugs so that the released gases can easily escape.
- To prevent overcharging, switch to a lower charging current when the cell voltage is reached (2.35 to 2.4 volts/cell).

  Note:
  If possible, avoid fast charging. Only use it in exceptional cases. Fast charging causes battery overloading, which reduces the service life of the battery.

https://truckmanualshub.com/

Buffer charging

- With this method, the consumer and the charger are both connected to the battery. The charger delivers sufficient current to ensure that the battery remains virtually fully charged. The battery will deliver peak currents to the consumer.
- Buffer charging is best done at a constant (stabilised) voltage.

Trickle charging

- A fully charged battery that is not used for some time, will start to discharge of its own accord. It may discharge at a rate of 0.1% to 1% per day. Trickle charging compensates for such discharges.
- The charging current for trickle charging should be around 0.1 A per 100 Ah.

https://truckmanualshub.com/

3. STORAGE OF BATTERIES

3.1 GENERAL

Before storing batteries, take the following steps:

1. Remove the battery terminals.
2. Clean the battery terminals and top of the batteries.
3. Grease the battery terminals with petroleum jelly.
4. Check the charging condition of the batteries, and charge them if necessary. See section “Checking batteries”.
5. Check the electrolyte level; this should be approx. 10 mm above the plates or up to the level indicator, if present.
   If necessary, top the batteries up with distilled water.

3.2 STORAGE UP TO FOUR WEEKS.

If batteries (whether as separate units or fitted in a vehicle) are not going to be used for an extended period of time not exceeding four weeks, the following measures should be taken:

1. Do **not** connect the battery leads to the batteries.
2. Check the charging condition of the batteries regularly, particularly if the batteries are stored in low temperature conditions. See section “Checking batteries”.
   If the voltage falls below 12.4 volts, or if the relative density of the electrolyte in one or more of the cells is less than 1.23 kg/dm^3, the battery must be charged.

   Note:
   The lower the relative density of the electrolyte, the higher the risk of the battery freezing.

https://truckmanualshub.com/

3.3 STORAGE FOR MORE THAN FOUR WEEKS

If the batteries will not be used for more than four weeks, the following measures should be taken:

1. Remove the batteries from the vehicle and store them in a frost-free, dry, cool and well-ventilated room.
2. Check the charging of the batteries regularly, at least once every four weeks. See section “Checking batteries”.
   If the voltage falls below 12.4 volts, or if the relative density of the electrolyte in one or more of the cells is less than 1.23 kg/dm^3, the battery must be charged.
3. Limit the storage period to a maximum of three months. The longer the period of storage, the greater the permanent loss of capacity.

https://truckmanualshub.com/

4. CHECKING BATTERIES

4.1 VISUAL INSPECTION

- A white dividing line at $^1/_3$ of the plate height (this can be seen through transparent battery boxes) indicates that the battery has been left in a deeply discharged condition.
- If the electrolyte is brown and the battery consumes a lot of fluid, this indicates that the battery is overcharged.
- If the electrolyte is turbid and milky and the cells have a white deposit, the battery has become damaged due to insufficient charging (deep discharge).

4.2 CHECKING THE CHARGING CONDITION

Relative density

- The charging and discharging of the battery leads to a chemical reaction in the battery, which involves sulphuric acid. The sulphuric acid concentration drops as the battery discharges.
  The concentration, measured as relative density (kg/dm^3) is a useful indicator in determining the charging condition of the battery.
- An acidimeter can be used to check the charging condition.

Relative density at 27°C in kg/dm^3		
Charged battery	:	1.28
Half-charged battery	:	1.20
Discharged battery	:	1.10

- Measurement corrections are necessary if temperatures are significantly lower or higher. For every 10°C lower temperature, subtract 0.007 points from the measured value. For every 10°C higher temperature, add 0.007 points.
  In batteries that are in good condition, the relative density should be the same in all the cells. The difference between the highest and lowest relative density must not exceed 0.03 kg/dm^3.

https://truckmanualshub.com/

Note:
If the relative density in one of the cells is much lower than in the other cells it may be caused by cell closure. If the relative relative density of two adjacent cells is much lower than in the other cells, this indicates a leakage in the cell partition. In both cases, the battery must be replaced.

Voltage

- The charging condition of the batteries can be measured using a sensitive, preferably digital voltmeter. This method can only be used 1 to 2 hours after full completion of charging or discharging. Measure the absolute rest voltage (the positive and negative terminals of the battery must be removed).
  The charging condition of the battery can be calculated using the formula: Voltage per cell = relative density (kg/dm^3)+0.84.

  For example:
  For a fully charged battery, the relative density per cell is 1.28 kg/dm^3. The voltage per cell is therefore 1.28 + 0.84 = 2.12 V.
  A 12V battery has 6 cells. The total voltage for a charged battery is 6 x 2.12 = 12.72 V.
  The voltage of a half-charged battery is approx. 12.24 V.
  The voltage of a discharged battery is approx. 11.75 V.

https://truckmanualshub.com/

4.3 CHECKING USING A BATTERY TESTER

- The general condition of the battery can be checked quickly using a battery tester. For this check, a load is applied to the battery, and then the discharge voltage at the battery terminals is measured. The load applied to the battery must be at least 3 times the capacity of the battery.

- As a rule, the test can be carried out when the battery is sufficiently charged (relative density 1.25 - 1.28 kg/dm^3).
  At normal temperatures (10-20°C), the charging voltage for a properly charged battery must be 10 volts after 10 seconds.
  In the case of a partially discharged battery (relative density 1.25 kg/dm^3), the reading should be at least 9 volts.
  It is important that the voltage is measured directly at the battery poles.

https://truckmanualshub.com/

https://truckmanualshub.com/

CONTENTS

		Page	Date
1.	**CONNECTION OF ACCESSORIES**	1-1	200520
1.1	Reserve wires	1-1	200520
1.2	Dashboard lead-through connectors, general	1-3	200520
1.3	Overview of the bulkhead lead-through connector functions	1-4	200520
1.4	Connection of accessories via the accessories connector	1-6	200520
1.5	Bulkhead lead-through connector for superstructure functions application connector	1-9	200520
1.6	Bulkhead lead-through connector for engine speed control application connector	1-12	200520
1.7	Bulkhead lead-through connector for chassis wiring application connector	1-14	200520
1.8	Overview of connection points in roof console	1-16	200520
1.9	40 A connector	1-18	200520
1.10	Connector for 12 V connection in roof console	1-18	200520
1.11	Connector for alarm/immobiliser LED in roof console	1-19	200520
1.12	Connector for cooler box	1-19	200520
1.13	Connectors for connecting the radio	1-20	200520
1.14	Connector for connecting the telephone	1-22	200520

https://truckmanualshub.com/

https://truckmanualshub.com/

1. CONNECTION OF ACCESSORIES

1.1 RESERVE WIRES

Additional wiring
In the roof console on the driver's side there is a 12-pin, black connector (connector no. 597) with two reserve wires (res 1 and res 2) that are connected to connector 581.

The following signals are available there:

Pin layout of connector 597:

Pin no.	Wire no.	Description
1		
2	1154	Power supply before contact
3	1258	Power supply after contact
4	2102	"Left tail light" signal
5	2103	"Right tail light" signal
6	2122	"Main beam" signal
7	2630	Instrument lighting
8		
9		
10	res 1	Reserve 1
11	res 2	Reserve 2
12	M	Earth

NOTE: The power supply **before** contact is fuse-protected via fuse E142. The power supply **after** contact is fuse-protected via fuse E163. Both 25A. The power supply to the cooler box and connector 656 (if present) is also via fuse E142.

https://truckmanualshub.com/

A black 6-pin connector (connector 581) that is connected to connector no. 597 is fitted level with the top connector attachment partition on the driver's side.

Pin layout of connector 581:

Pin no.	Wire no.	Description
1	3649	Ultrasonic/radar earth
2	3650	Ultrasonic/radar input signal
3	3651	Ultrasonic/radar power supply
4	3654	Ultrasonic/radar input signal
5	res 1	Reserve 1
6	res 2	Reserve 2

https://truckmanualshub.com/

1.2 DASHBOARD LEAD-THROUGH CONNECTORS, GENERAL

A number of connectors are fitted in the bulkhead connector lead-through at the front of the cab. A number of earth wires and the main power supply wire are also led through at this point.

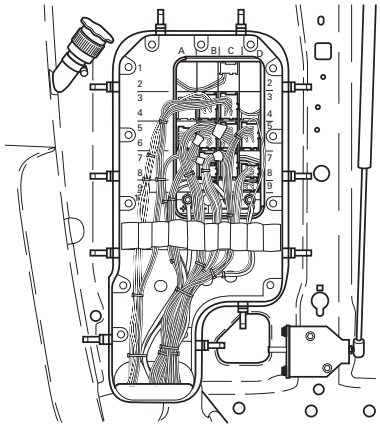

E501059

Seen from the outside looking inwards, the bulkhead connector lead-through appears as follows.

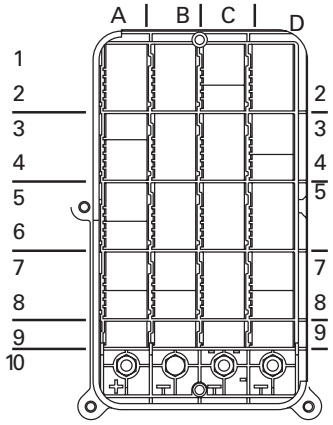

E501060

Seen from the inside looking outwards, the bulkhead connector lead-through appears as follows.

In the descriptions of the various connectors in the bulkhead connector lead-through, the view is always from the cab.

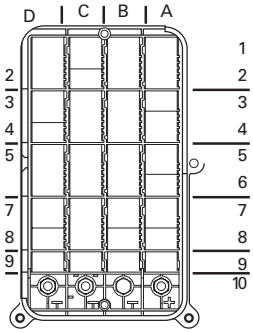

E501093

https://truckmanualshub.com/

1.3 OVERVIEW OF THE BULKHEAD LEAD-THROUGH CONNECTOR FUNCTIONS

The panel with the bulkhead lead-through connectors is divided into four columns. Connectors of the same colour are in the same column.

Layout of bulkhead lead-through connectors: ≥ 0E581142

Column A: Colour: Yellow

Row number	Function	Number of pins
1 - 2	EMAS	21
3	Not in use	
4	Application connector, engine speed control	12
5	Fuel filter	6
6	Cab heater	12
7	Chassis wiring, rear	6
8	2nd PTO	12
9	Thermoline	6
10	Power supply before contact (1000)	1

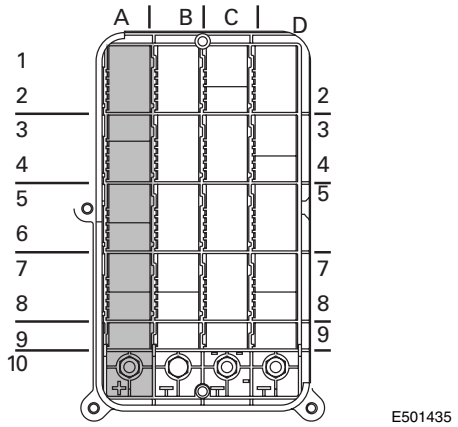

Column B: Colour: Grey

Row number	Function	Number of pins
1 - 2	Allison or AS Tronic gearbox	21
3	AGS	6
4	Cab tilt protection	12
5 - 6	ABS or EBS, rear axle	21
7	ECAS, front axle	6
8	ECAS, rear axle	12
9	ABS, drawn vehicle	6
10	Earth	1

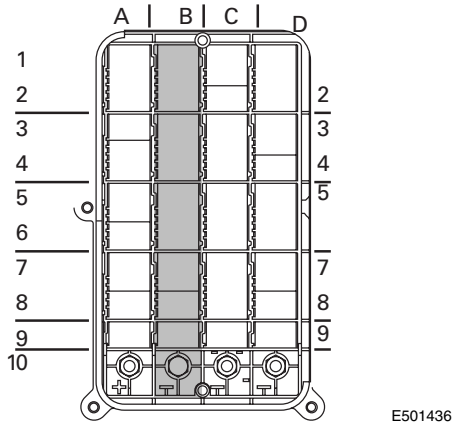

https://truckmanualshub.com/

Column C: Colour: Green

Row number	Function	Number of pins
1 - 2	Engine wiring	21
3 - 4	Engine wiring (colour: violet)	21
5	ABS or EBS, drawn vehicle	6
6	Drawn vehicle	12+-
7 - 8	ABS or EBS, front axle	21
9	Mechanical lifting axle, FAS/FAG	6
10	Earth	1

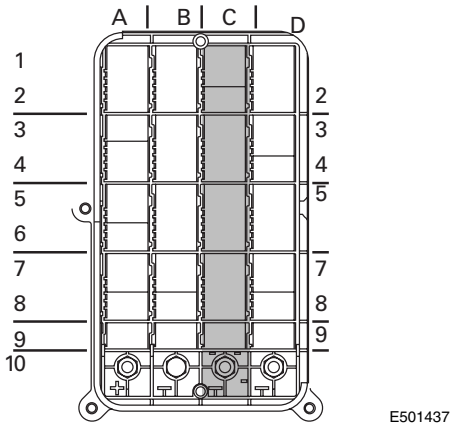

Column D: Colour: Blue

Row number	Function	Number of pins
1 - 2	Superstructure connector	21
3	Refuse collection vehicle	12
4	Main switch	6
5 - 6	Chassis wiring, front/ MTCO wiring/3rd PTO	21
7	Not in use	
8	Intarder	12
9	Cab lock	6
10	Earth	1

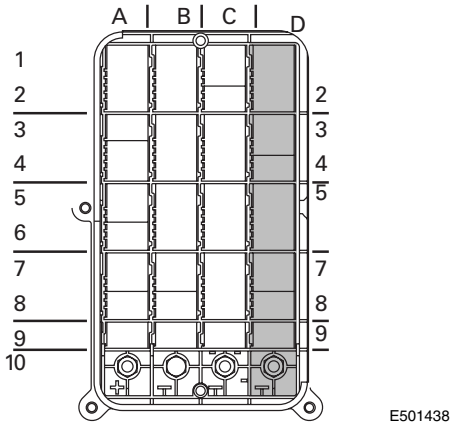

6

https://truckmanualshub.com/

1.4 CONNECTION OF ACCESSORIES VIA THE ACCESSORIES CONNECTOR

A 6-pin green accessories connector (connector no. 580 = A027) that is connected to the dashboard wiring harness has been fitted below the central PCB.

The following signals are available there:

Pin layout, wiring harness connector 580:

Pin no.	Wire no.	Description
1	1154	Power supply before contact
2	1258	Power supply after contact
3	3412	“Cab locking” signal
4	3157	“Engine running” signal
5	M	Earth
6	M	Earth

ATTENTION: The power supply **before** contact is fuse-protected via fuse E142. The power supply **after** contact is fuse-protected via fuse E163. Both 25A. The power supply to the spotlights, rotating beam and cooler box (among others) is also via fuse E142.

Application connector 656 for superstructure functions (with 12 reserve wires) is optional. Only if this option is selected is a cable harness fitted from the connector under the PCB (connector no. 580) to the connector lead-through (connector no. 656) and to the connector behind the radio panel cover (connector no. 654) and the connector behind the heater panel cover (connector no. 655).

https://truckmanualshub.com/

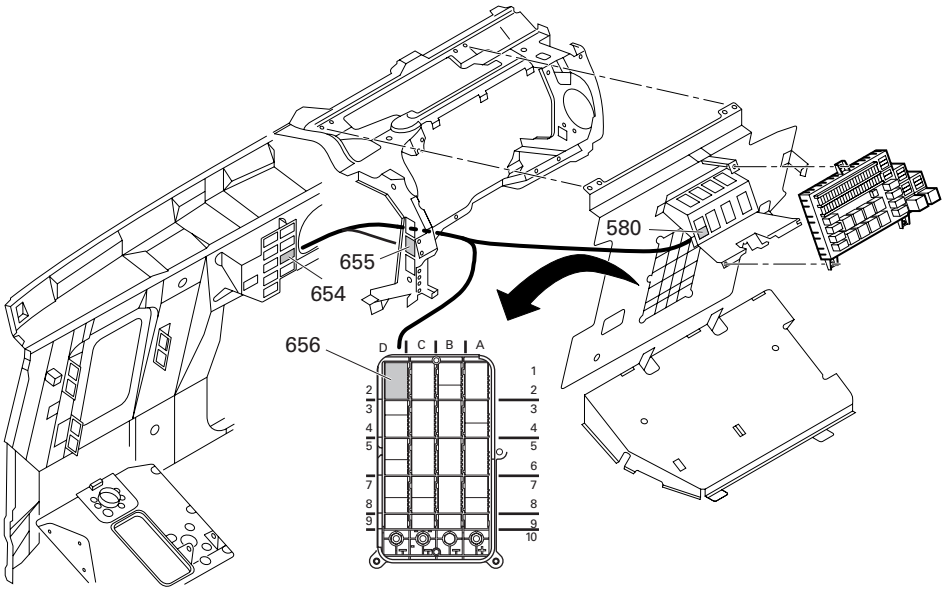

Pin layout, wiring harness connector 656:

Pin no.	Wire no.	Description
1	M	Earth
2	M	Earth
3		
4	3412	“Cab locking” signal
5	res 1	Panic switch signal
6	res 2	Reserve 2
7	res 3	Reserve 3
8	res 4	Reserve 4
9	res 5	Reserve 5
10	res 6	Reserve 6
11	res 7	Reserve 7
12	res 8	Reserve 8
13	res 9	Reserve 9
14	res 10	Reserve 10
15	res 11	Reserve 11
16	res 12	Reserve 12
17		
18		
19	3157	“Engine running” signal
20	1154	Power supply before contact
21	1258	Power supply after contact

https://truckmanualshub.com/

ATTENTION: The power supply **before** contact is fuse-protected via fuse E142. The power supply **after** contact is fuse-protected via fuse E163. Both 25 A. The power supply to the cooler box and connector 597 (if present) is also via fuse E142. The power supply to connector 597 is also via fuse E163.

Pin layout, wiring harness connector 654:

Pin no.	Wire no.	Description
1	3772	Panic switch signal
2	res 2	Reserve 2
3	res 3	Reserve 3
4	res 4	Reserve 4
5	res 5	Reserve 5
6	res 6	Reserve 6
7		
8		
9		

Pin layout, wiring harness connector 655:

Pin no.	Wire no.	Description
1	res 7	Reserve 7
2	res 8	Reserve 8
3	res 9	Reserve 9
4	res 10	Reserve 10
5	res 11	Reserve 11
6	res 12	Reserve 12

https://truckmanualshub.com/

1.5 BULKHEAD LEAD-THROUGH CONNECTOR FOR SUPERSTRUCTURE FUNCTIONS APPLICATION CONNECTOR

Application connectors for superstructure functions are optional. Bulkhead lead-through connector 656 is present only if this option has been selected.

Bulkhead lead-through connector 656 is connected to a wiring harness outside the cab for application connectors 657 and 658.

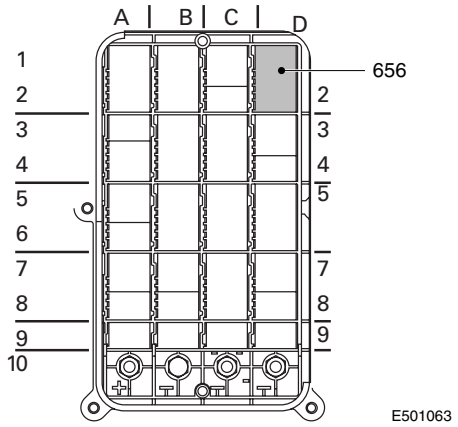

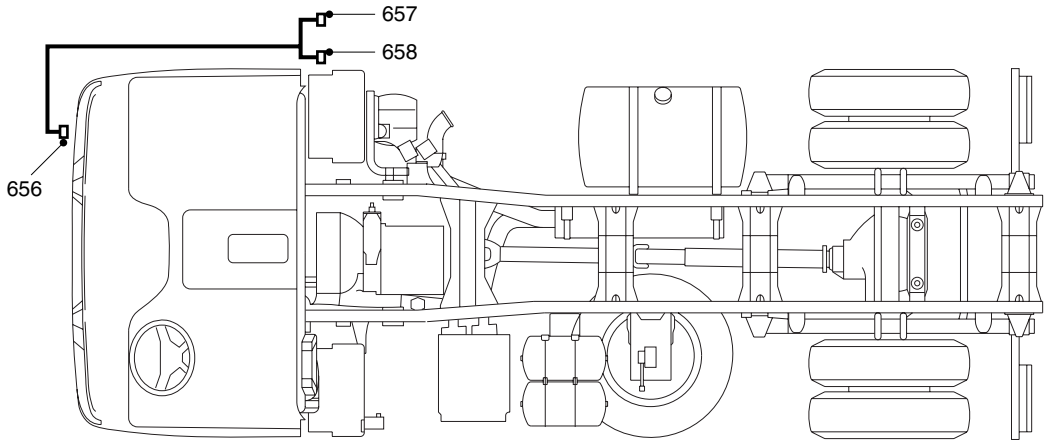

Pin layout, wiring harness connector 656:

Pin no.	Wire no.	Description
1	M1	Earth
2	M2	Earth
3		
4	3412	“Cab locking” signal
5	3772	Panic switch signal
6	res 2	Radio compartment reserve wire 2
7	res 3	Radio compartment reserve wire 3
8	res 4	Radio compartment reserve wire 4
9	res 5	Radio compartment reserve wire 5

https://truckmanualshub.com/

Pin no.	Wire no.	Description
10	res 6	Radio compartment reserve wire 6
11	res 7	Heater panel reserve wire 7
12	res 8	Heater panel reserve wire 8
13	res 9	Heater panel reserve wire 9
14	res 10	Heater panel reserve wire 10
15	res 11	Heater panel reserve wire 11
16	res 12	Heater panel reserve wire 12
17	3700	CAN-L (leads to bulkhead lead-through)
18	3701	CAN-H (leads to bulkhead lead-through)
19	3157	“Engine running” signal
20	1154	Power supply before contact
21	1258	Power supply after contact

ATTENTION: The power supply **before** contact is fuse-protected via fuse E142. The power supply **after** contact is fuse-protected via fuse E163. Both 25 A. The power supply to the cooler box and connector 597 (if present) is also via fuse E142. The power supply to connector 597 is also via fuse E163.

Connectors 657 and 658 are under the cab on the co-driver’s side in SL and SH cabs or behind the cab on the co-driver’s side in D cabs.

Pin layout, wiring harness connector 657:

Pin no.	Wire no.	Description
1	res 1	Panic switch signal
2	res 2	Reserve wire 2
3	res 3	Reserve wire 3
4	res 4	Reserve wire 4
5	res 5	Reserve wire 5
6	res 6	Reserve wire 6
7	res 7	Reserve wire 7
8	res 8	Reserve wire 8
9	res 9	Reserve wire 9
10	res 10	Reserve wire 10
11	res 11	Reserve wire 11
12	res 12	Reserve wire 12

https://truckmanualshub.com/

Pin layout, wiring harness connector 658:

Pin no.	Wire no.	Description
1	1154	Power supply before contact
2	1258	Power supply after contact
3	3157	“Engine running” signal
4	3412	“Cab locking” signal
5	3700	CAN-L
6	3701	CAN-H
7	M	Earth
8	M	Earth

ATTENTION: The power supply **before** contact is fuse-protected via fuse E142. The power supply **after** contact is fuse-protected via fuse E163. Both 25A. The power supply to the cooler box and to connector 597 is also via fuse E142. The power supply to connector 597 is also via fuse E163.

https://truckmanualshub.com/

1.6 BULKHEAD LEAD-THROUGH CONNECTOR FOR ENGINE SPEED CONTROL APPLICATION CONNECTOR

An application connector for engine speed control is optional: (connector A068).

Bulkhead lead-through connector 588 is connected to a wiring harness outside the cab for application connector A068.

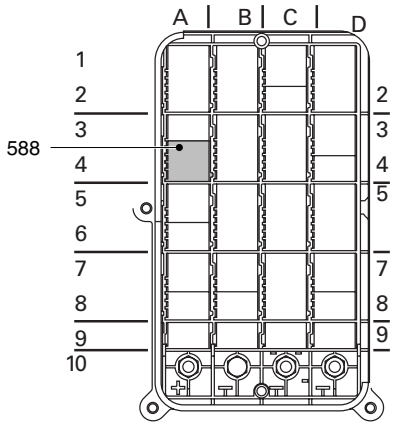

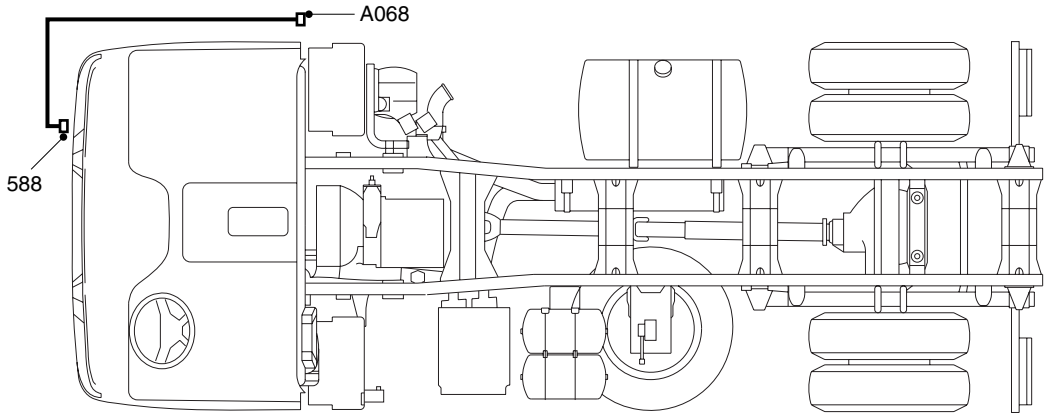

Connector A068 is under the cab on the co-driver's side in SL and SH cabs or behind the cab on the co-driver's side in D cabs.

https://truckmanualshub.com/

Pin layout, wiring harness connector A068:

Pin no.	Wire no.	Description
1	M	Earth
2	9029	Engine emergency cut-out
3	3003	“Engine speed” signal
4	3039	“Vmax special application” signal
5	3141	“SET -” signal (NOT for ECS-DC3)
6	3142	“SET +” signal (NOT for ECS-DC3)
7	3143	“Engine speed control permitted” signal
8	3144	“SET N variable” signal (NOT for ECS-DC3)
9	3145	“N2” signal
10	3146	“N3” signal
11	4594	PTO remote control
12	1240	Power supply after contact

In the bulkhead lead-through the wiring harness from connector A068 is connected to the dashboard wiring harness via connector no. 588 at location A4.

Pin layout, wiring harness connector 588:

Pin no.	Wire no.	Description
1	M	Earth
2	9029	Engine emergency cut-out
3	3003	“Engine speed” signal
4	3039	“Vmax special application” signal
5	3141	“SET -” signal (NOT for ECS-DC3)
6	3142	“SET +” signal (NOT for ECS-DC3)
7	3143	“Engine speed control permitted” signal
8	3144	“N variable” signal (NOT for ECS-DC3)
9	3145	“N2” signal
10	3146	“N3” signal
11	4594	PTO remote control
12	1240	Power supply after contact

https://truckmanualshub.com/

1.7 BULKHEAD LEAD-THROUGH CONNECTOR FOR CHASSIS WIRING APPLICATION CONNECTOR

Application connector A070. This is only fitted on FA vehicles.

Bulkhead lead-through connector 576 is connected to a wiring harness outside the cab for chassis wiring application connector A070.

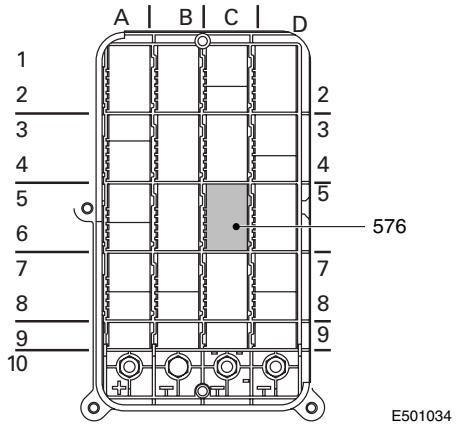

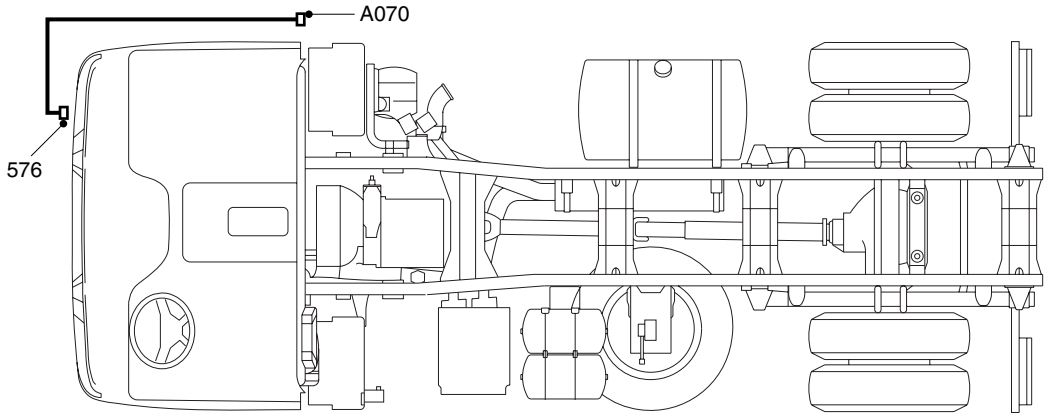

Connector A070 is under the cab on the co-driver's side in SL and SH cabs or behind the cab on the co-driver's side in D cabs.

https://truckmanualshub.com/

Pin layout, wiring harness connector A070:

Pin no.	Wire no.	Description
1	1113	Power supply before contact
2	2102 2155	Superstructure lighting
3	4601	“Stop light” signal
4	4591	“Reversing light” signal
5	1264 3651	Alarm, power supply
6	3659	Alarm, superstructure/drawn vehicle
7	3660	Alarm, superstructure/drawn vehicle
8	M	Earth

In the bulkhead lead-through the wiring harness from connector A070 is connected to the dashboard wiring harness via connector no. 576 at location C5/6.

Pin layout, wiring harness connector 576:

Pin no.	Wire no.	Description
1	9005	Earth
2	3651	Superstructure/drawn vehicle alarm power supply
3	4591	“Reversing light” signal
4	2036	“Left turn” signal
5	2037	“Right turn” signal
6	2008	“Left turn” signal (semi-trailer)
7	2009	“Right turn” signal (semi-trailer)
8	2102	Left town light
9	2103	Right town light
10	2152	“Rear fog lamp” signal
11	2155	Work lamp
12	4601	“Stop light” signal
13	3408	“Differential lock” signal
14	4517	“Differential lock” signal
15	4518	Differential lock (inter-axle)
16	3503	“Fuel level” signal
17	4935	“Cab heater” signal
18	4936	“Cab heater” signal
19	1113	Power supply before contact
20	3659	Alarm, superstructure/drawn vehicle
21	3660	Alarm, superstructure/drawn vehicle

https://truckmanualshub.com/

1.8 OVERVIEW OF CONNECTION POINTS IN ROOF CONSOLE

Cab versions

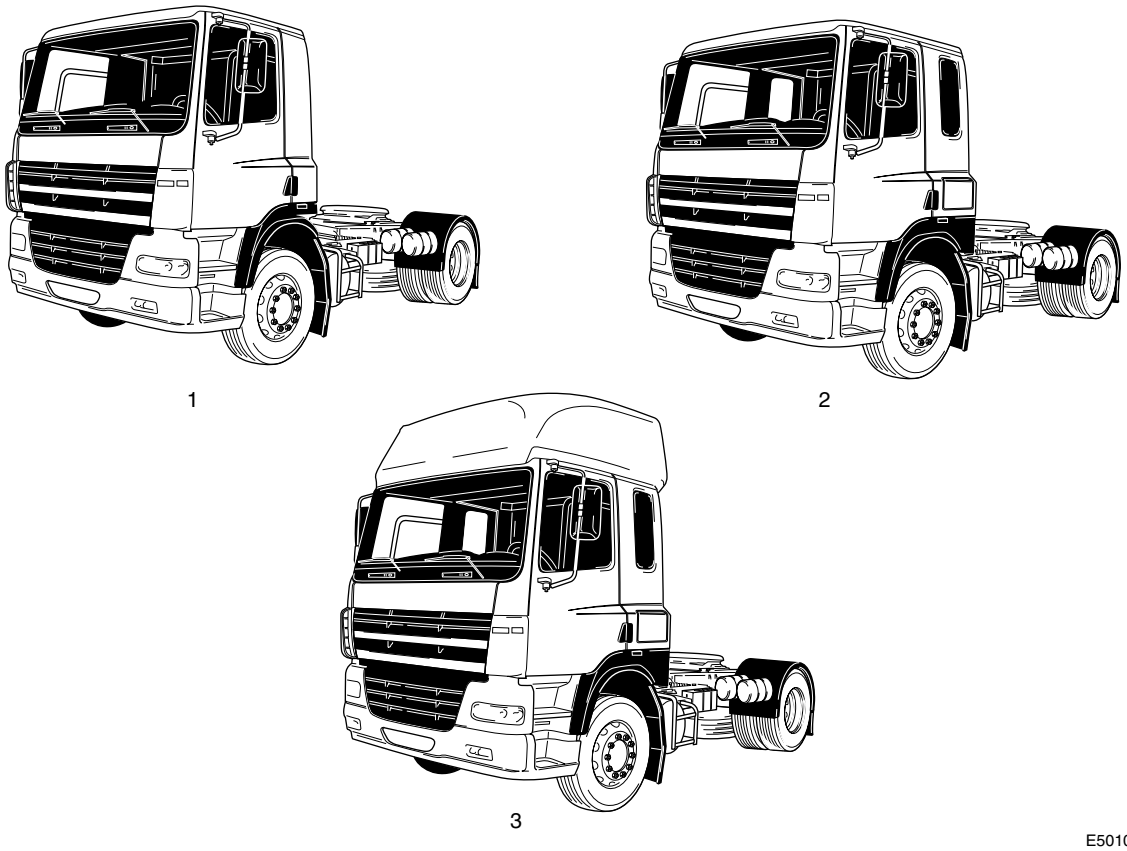

1. D cab
2. SL cab
3. SH cab

https://truckmanualshub.com/

Roof console, D and SL cabs

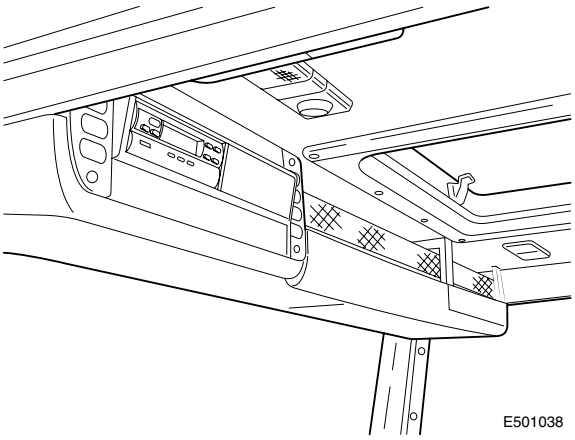

Roof console, SH cab

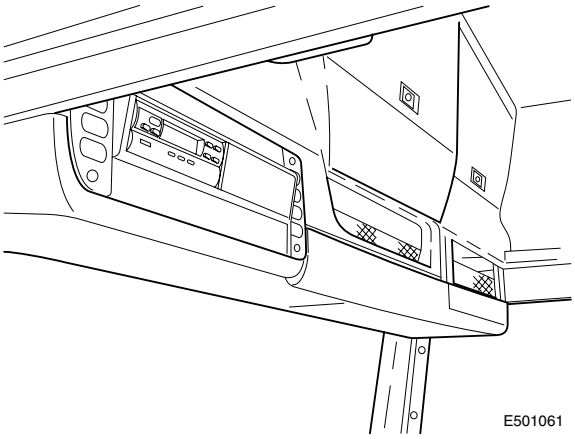

The following connectors are standard in all three cab types:

1: black connector with wires 1264 and 3482 for alarm/immobiliser LED (if NO alarm system is fitted).
2: connector B026 (1108 and M) for the 12V connector for audio equipment (for example CB transmitter).
3: connector no. 597 for 12-pin connector with various signals.

https://truckmanualshub.com/

1.9 40 A CONNECTOR

This connector (180) is a 2-pin connector. The supply voltage for this connector is branched from the power supply before contact via fuse E168. This fuse is fitted as standard in a fuse holder on the edge of the central PCB.

A contact block can be connected to this connector, resulting in a central connection point for power supply and earth.

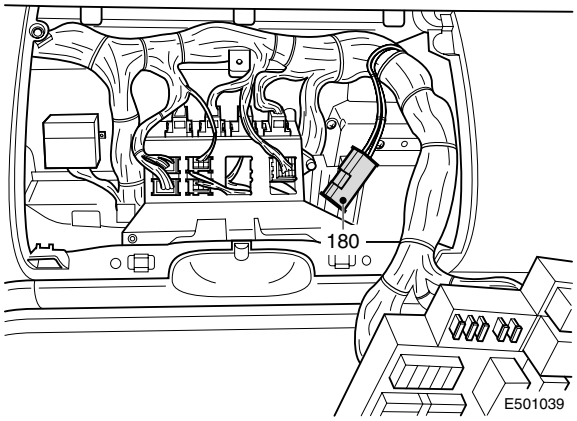

1.10 CONNECTOR FOR 12 V CONNECTION IN ROOF CONSOLE

In the roof console there is a white 2-pin connector (B026). This is intended for connecting a CB set.
This connector contains wires 1108 and earth.

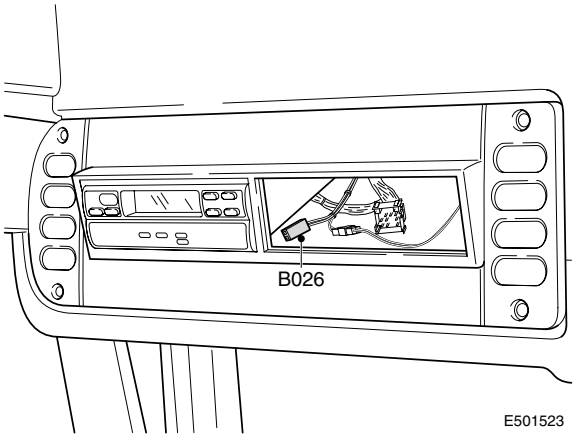

https://truckmanualshub.com/

1.11 CONNECTOR FOR ALARM/IMMOBILISER LED IN ROOF CONSOLE

In the roof console there is a black 2-pin connector (A). This is for connecting an alarm LED.
This alarm LED is fitted as standard if the vehicle does **not** have an alarm system. This connector contains wires 1264 and 3482.

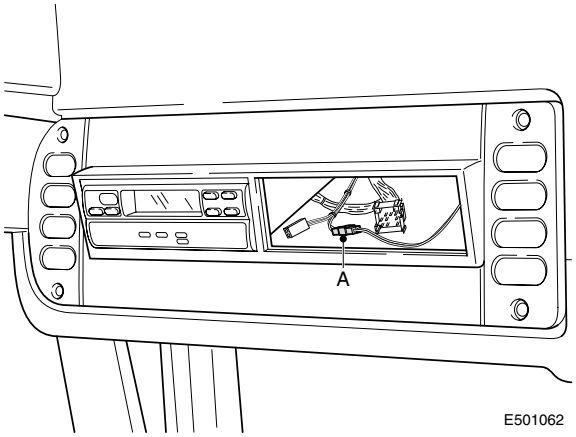

1.12 CONNECTOR FOR COOLER BOX

The wiring for the cooler box has been fitted as standard ready for use behind the door pillar trim (connector no. 618) on the co-driver's side. This connector contains the following wires: 1154 and M.
The cooler box (if present) is connected here to the connector on the co-driver's side.
The lighting for the tool compartment is connected here to the connector on the driver's side.

ATTENTION: The power supply before contact is fuse-protected via fuse E142 (25A). The power supply for the superstructure functions bulkhead lead-through connector (if present), spotlights and rotating beams is also via these fuses.

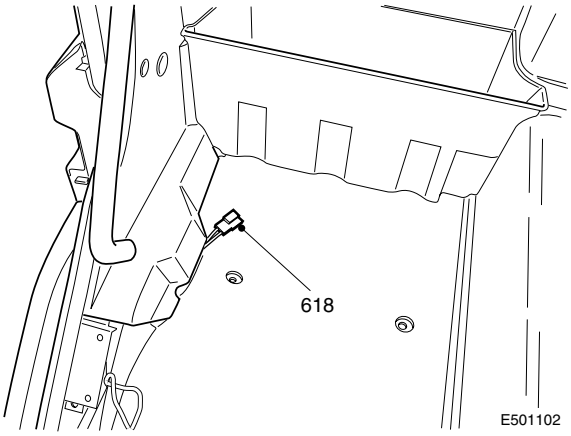

6

https://truckmanualshub.com/

1.13 CONNECTORS FOR CONNECTING THE RADIO

Radio connection
Behind the radio panel there is a connector (connector no. 424) (to ISO standard) for the radio connection; this connector is provided with a 12 V/10 A (20 A) power supply before contact (1108) and earth. The wiring to the door, A-pillar and rear wall for the loudspeakers (connector 425) has also been fitted as standard ready for use. If tweeters are fitted, a separating filter should be fitted.

Connectors for connecting the radio.

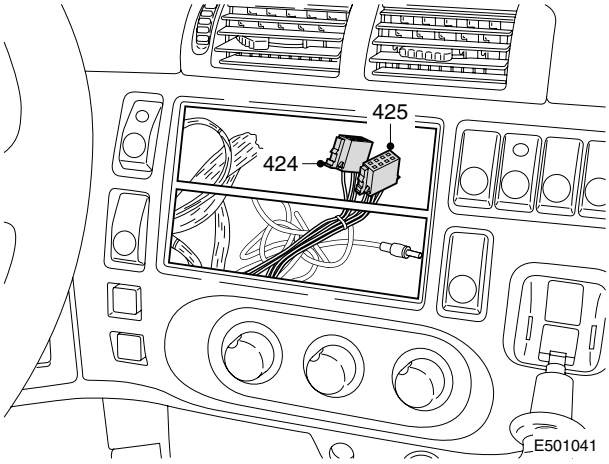

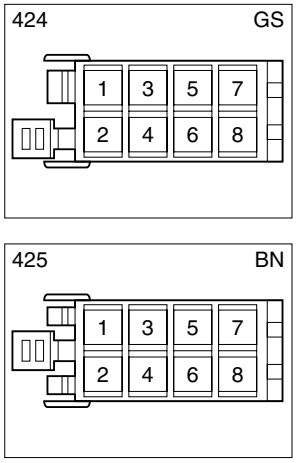

424 Power supply to radio
425 Loudspeakers for radio

https://truckmanualshub.com/

DISPLAY LIGHTING DIMMING

VDO Dayton and Grundig radio

If the radio has display lighting (search lighting), it can switch on at the same time as the vehicle lights are switched on. The display lighting can be dimmed by connecting relay G231 in accordance with the diagram.

Relay G231 should be connected to search lighting wire 2630.

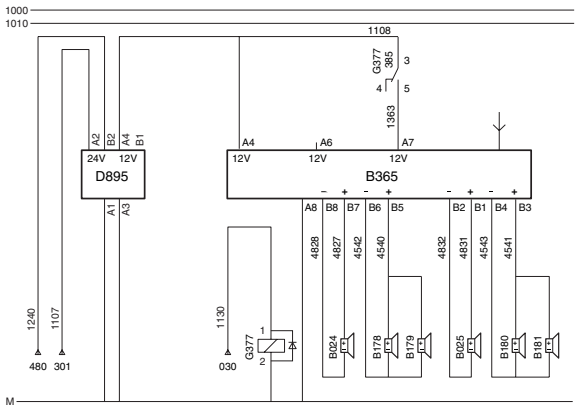

E501969

VDO Dayton radio station memory

Wire 1130 is switched by the ignition/starter switch “accessories” position. Relay G377 then switches and, as a result, the radio is connected to the 12 V power supply through wire 1108.

Grundig radio station memory

Wire 1130 is switched by the ignition/starter switch “accessories” position.
Relay G377 then switches and, as a result, the radio is connected to the 12 V power supply through wire 1108.

Wires 1108 and 1363 in connector no. 424 (the “ISO connector”) must be reversed (see illustration).

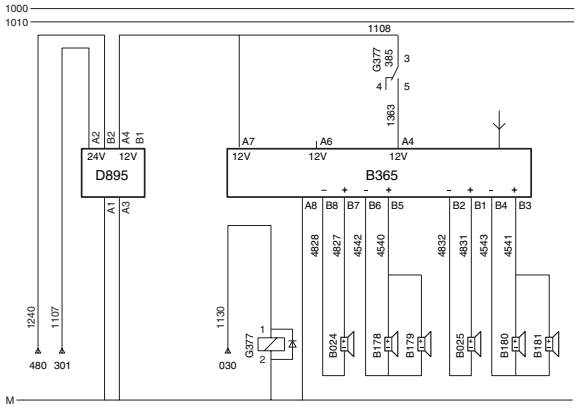

E501970

The wiring for the speakers in the rear wall of the SL and SH cabs has been fitted in the speaker positions ready for use.
The wiring for tweeters has been fitted ready for use in the A-pillar under the dashboard.

6

https://truckmanualshub.com/

1.14 CONNECTOR FOR CONNECTING THE TELEPHONE

Telephone connection
There is space for a telephone connection on the right side of the radio panel.
A white 3-pin connector (A076) is fitted behind the radio panel as standard.

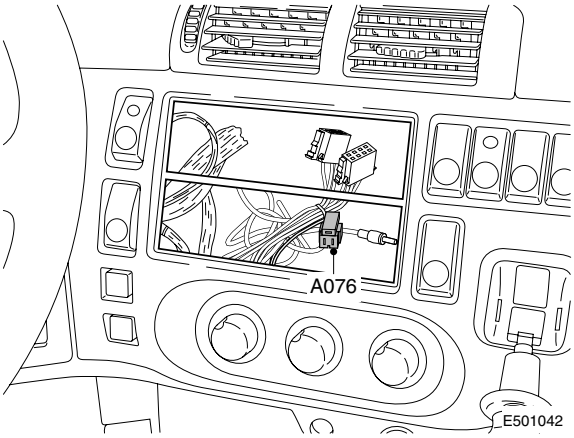

Pin no.	Wire no.	Description
1	1108	Power supply before contact (12 V)
2	1353	Power supply before contact (12V/25mA)
3	M	Earth

https://truckmanualshub.com/

TELEPHONE STATION MEMORY IN COMBINATION WITH 24V/12V 10A OR 20A CONVERTER

This converter is available in two versions:
24V/12V (10A + 25mA) or:
24V/12V (20A + 25mA)
They are connected in the same way.

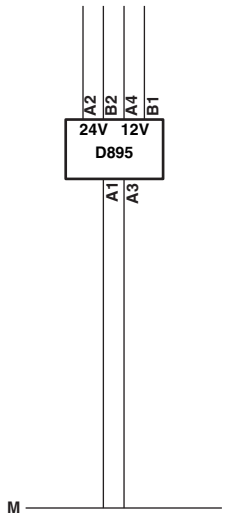

E500726

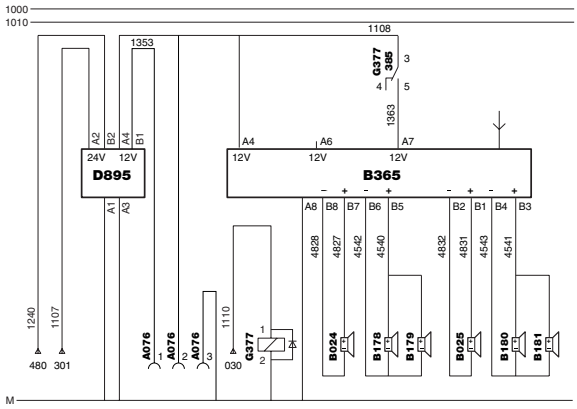

E501011

The converter has two separate inputs and outputs:

24V input	12V output	Max. current strength
A2	A4	10 or 20 A
B2	B1	25mA

https://truckmanualshub.com/

6

https://truckmanualshub.com/

CONTENTS

	Page	Date
1. GENERAL	1-1	200404
1.1 List of abbreviations	1-1	200404
2. MARKING OF ELECTRICAL WIRING	1-1	200404
3. READING CIRCUIT DIAGRAMS	1-1	200404
4. READING SECTION DIAGRAMS	1-1	200404

https://truckmanualshub.com/

https://truckmanualshub.com/

1. GENERAL

1.1 LIST OF ABBREVIATIONS

Abbreviation	Explanation	Translation/description
ABS/ASR-D	Anti Blocking System/Anti Slip Control - version D	Antiblokkeersysteem/Antislipregeling, versie D
ACH-E	Additional Cab Heater - Eberspächer	Standverwarming - Eberspächer
ACH-W	Additional Cab Heater - Webasto	Standverwarming - Webasto
AGC-A	Automatic Gearbox Control - Allison	Besturing automatische versnellingsbak - Allison
AGS	Automatic Greasing System	Automatisch smeersysteem
AIRCO	Air conditioning	Airconditioning
ALS-S	Alarm system Scorpion	Alarmsysteem Scorpion
ASR	Anti Slip Control	Antislipregeling
CAN	Controller Area Network	Controller Area Network
CCU	CAN Connection Unit	CAN-verbindingsunit
CDB	Central Distribution Board	Centraalkast CF-serie
CDS	Central door locking	Centrale portiervergrendeling
CXB	CAN extension box	CAN-extensiebox
ECS-DC3	Engine Control System - DAF/Cummins	Motormanagementsysteem DAF/Cummins
DAVIE XD	DAF Vehicle Investigation Equipment version XD	DAF-voertuigdiagnose-apparaat versie XD
DEB	DAF Engine Brake	DAF-motorrem
DIP-4	DAF Instrument Pack	DAF-instrumentenpaneel
DVB	Connection	Doorverbinding

https://truckmanualshub.com/

Abbreviation	Explanation	Translation/description
EBS	Electronic Brake System	Elektronisch remsysteem
ECAS-2	Electronically Controlled Air Suspension - version 2	Elektronisch geregeld luchtveersysteem - versie 2
ECAS3	Electronically Controlled Air Suspension system - version 3	Elektronisch geregeld luchtveersysteem - versie 3
ECS-DC3	Engine Control System - DAF/Cummins	Motormanagementsysteem DAF/Cummins
EMAS	Electronically controlled multi axle steering	Elektronisch geregelde naloop assturing
EVS	Electronic Vehicle Steering system	Elektronisch voertuigstuursysteem
NMV	Engine specific power take off	Motor-PTO
NRM	Noise reduction module	Geluidsreducerende module
PTO	Power Take Off	Krachtafnemer
RAS-EC	Rear Axle Steering - Electronically Controlled	Electronisch geregelde naloop assturing
Tacho MTCO	Modular Tachograph	Modulaire tachograaf
UPEC	Unit Pump Electronically Controlled	Elektronisch gestuurde pompunit
VIC	Vehicle Intelligence Centre	Voertuig intelligente centrale
VLG/ ADR/ GGVS/ PETREG/ RTMDR	Overland transport of hazardous substances	Vervoer gevaarlijke stoffen

https://truckmanualshub.com/

2. MARKING OF ELECTRICAL WIRING

INTRODUCTION

This standard sets out specifications for the uniform use of markings on electrical wiring.

The marking system consists of a numerical system and a colour coding system, which ensure a clear wiring layout and prevents faulty connections and manufacturing errors.

The marking system does not apply to vehicles subject to special conditions, such as military vehicles.

Numerical and colour coding
Each numerical code consists of four digits, the first of which refers to the main group and to the colour.

Main groups

Power supply (red)

1000 to 1099	Voltage generation
1100 to 1199	Power supplies before ignition
1200 to 1499	Power supplies after ignition

Lighting (yellow)

2000 to 2099	Direction indicator lights and alarm light
2100 to 2599	Vehicle external lights
2600 to 2999	Vehicle interior lighting

Warning and inspection functions (blue)

3000 to 3399	Engine functions
3400 to 3999	Vehicle functions

Consumers (black)

4000 to 4499	Starting, stopping, engine, glow functions
4500 to 5499	Vehicle functions
5500 to 5999	Automatic transmission

Special applications (colour as desired)
6000 to 6999

Earth connections (white)
Not marked

9000 to 9499	Test and signal earth

https://truckmanualshub.com/

I-CAN wiring (twisted)

3565	CAN-L (yellow)
3566	CAN-H (grey)

V-CAN wiring (twisted)

3700	CAN-L (yellow)
3701	CAN-H (blue)

Notes:
- The “M” with serial number coding on earth wiring is used for production-related reasons.
- In the case of straight splicing of the wiring (cascading), the numerical codes are shown on each separate wire followed by a serial letter.

Earth connections
The application of electronic systems has made it necessary to divide the earth connections into groups. There is a distinction to be made between two different types of earth connection:
- switching earth
- test and signal earth.

The switching earth is the conventional type of earth.
The test and signal earth is used exclusively for electronic systems.
The wiring colour for both types of earth is white, but the test and signal earth wiring is marked with numerical codes (from 9000 to 9500).

NEVER USE THE TEST AND SIGNAL EARTH WHEN FITTING AN ELECTRICAL COMPONENT

If you do this, electronic components may not work correctly.
If an electronic component needs to be connected, the earth for this system must be connected to the central earth connection in the cab.
The connection point is located in the dashboard connector lead-through.

Abbreviations used in colour coding

Colour	Abbre-viation	Colour	Abbre-viation
red	rd	yellow	gl
brown	bn	white	wt
green	gn	grey	gs
blue	bw	black	zt
orange	oe		

https://truckmanualshub.com/

3. READING CIRCUIT DIAGRAMS

The circuit diagram is intended to show the various circuits in the simplest way possible. Symbols are used to do this.

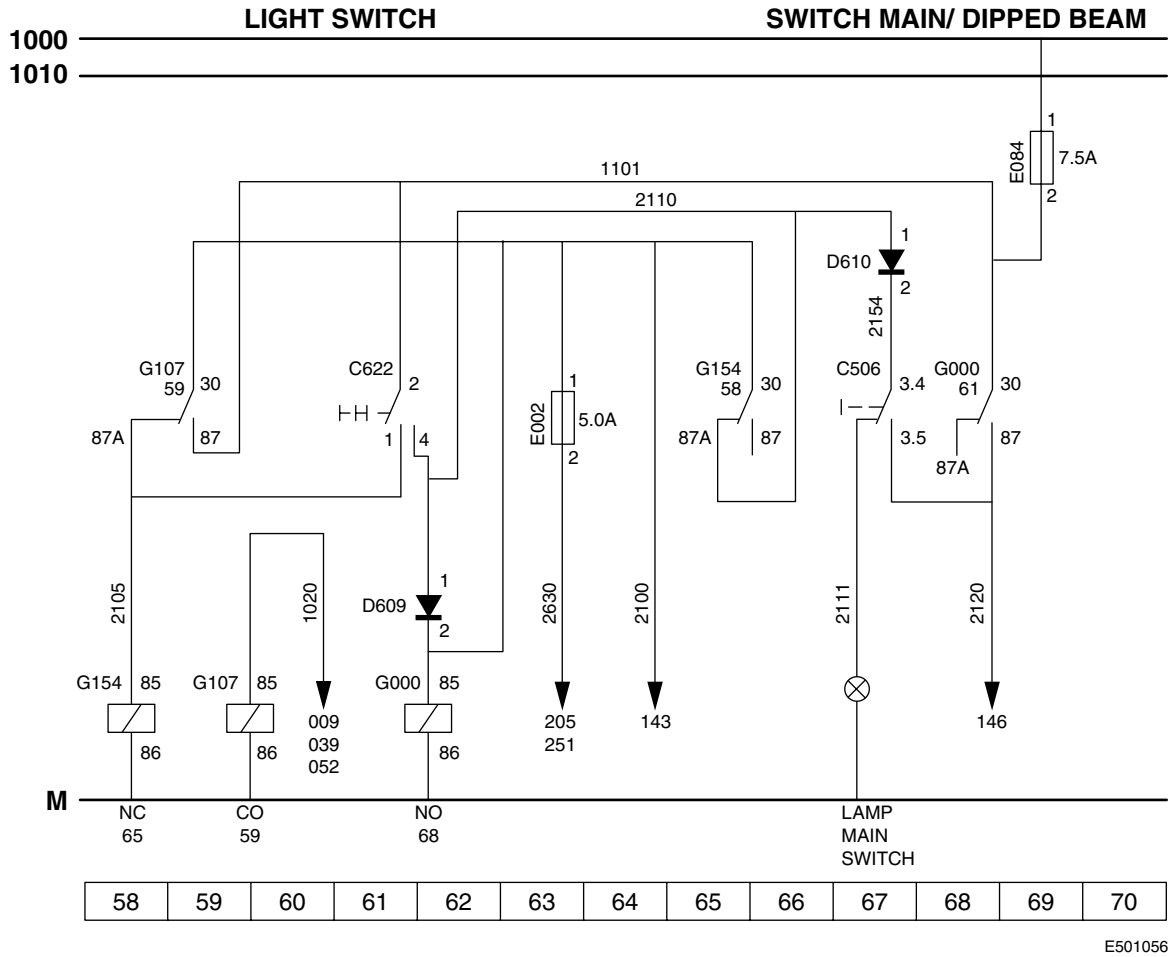

1. “1000” and “1010” is shown at the top left of the diagram.
   These stand for:
   1000 = supply before ignition.
   1010 = supply after ignition.

2. “M” is shown at the bottom left of the diagram.
   This stands for:
   M = earth connection.

https://truckmanualshub.com/

3. To make it easier to find your way around the circuit diagram, a “search bar” is included at the bottom, which contains numbers.
   These numbers are called location numbers.

   In the legend to the circuit diagram, the description of the basic code (ECN) is followed by the relevant location number. This means that a specific component can immediately be located in the diagram.

4. There is an arrow above location numbers 60, 63, 64, and 68 in the diagram example. Below this arrow is a number. This number refers to the location number on the search bar where you can find the relevant wire number.

5. Beneath the “M” (earth connection) line are found the “NC” codes relating to relay G154, the “CO” codes relating to relay G107, and “NO” codes relating to relay G000.
   These codes stand for:
   NC = **n**ormally **c**losed (= break contact)
   CO = **c**hange **o**ver (= changeover contact)
   NO = **n**ormally **o**pen (= make contact)

   These contacts can be found at the location numbers shown beneath the codes “NC”, “CO” and “NO”.

   At the relay contacts shown in the diagram, you will also find the location numbers indicating the relay coil locations.

6. In the circuit diagram, you will find the basic codes (for example, E002). What these codes stand for can be found in the legend to the relevant circuit diagram.

https://truckmanualshub.com/

7. If the wire numbers remain unchanged, these will not be repeated in the circuit diagram.
   For example, in the sample diagram, wire 1101 is connected to connection point 87 of relay contact G107, but also to connection point 2 of component C622.
   Wire 2100 (at location number 64) is connected to connection point 30 of relay G154, but also to connection point 85 of relay G000 etc.

Symbols used

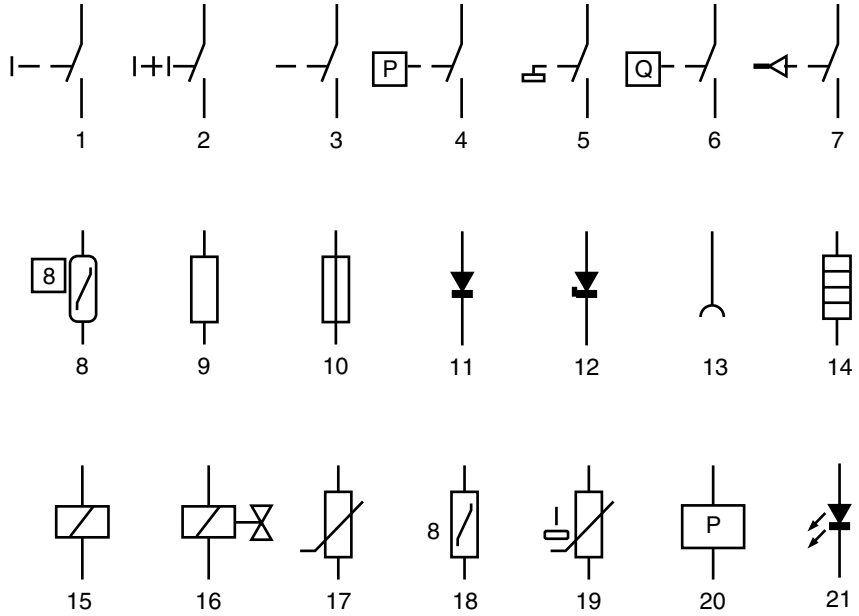

E500135

1. Switch, manually operated
2. Switch, manually operated (multi-position)
3. Switch, manually operated (spring-loaded)
4. Switch, pressure-controlled (pneumatic or hydraulic)
5. Switch, float position
6. Switch, liquid flow
7. Pressure switch
8. Switch, temperature-dependent
9. Resistor
10. Fuse
11. Diode
12. Zener diode
13. Contact socket (for example, for trailer connection)
14. Heating element
15. Relay
16. Electropneumatic valve
17. Resistor, voltage-dependent
18. Resistor, temperature-dependent
19. Resistor, fluid level-dependent
20. Microprocessor
21. LED

7

https://truckmanualshub.com/

https://truckmanualshub.com/

4. READING SECTION DIAGRAMS

EXPLANATION OF THE ITEM NUMBERS IN THE SECTION DIAGRAMS

In the section diagram only information functional in this section diagram is shown in detail.

1. The wiring is shown in the same colours as the wiring in the vehicle.
2. The wire numbers are as they are printed on the wiring in the vehicle.
   Suffixes to wire numbers, such as A, B, C etc., have been omitted.
3. Basic code of a component. For component descriptions, see the legend to the diagram. For more information, see the relevant section diagram.
4. Number of the wire connection point or the PCB track on the component.
5. The basic code of the connector and the connection point on this connector.
6. The symbols indicate which system or component is being referred to (in most cases, the symbol is also shown on the lens of the warning lamp or the switch).
7. PCB tracks.
8. The central box and the instrument panel PCBs are grey.
9. Removable components are shown in white.

https://truckmanualshub.com/

10. Reference to the component with connection point and to the section (section diagram) which gives further information about this component.

G178 85
7

G178	=	Basic code number of the component
85	=	Connection point on the component
7	=	Reference to section diagram 7

11. **ATTENTION!** The vehicle may differ here, because of different specifications. Always consult the legend to the diagram.

12. The housing of this component is connected to earth. The line shown is not a wire, therefore.

13. Search bar numbers.

14. Section diagram number as well as section number.

15. Relation to the circuit diagram.

https://truckmanualshub.com/

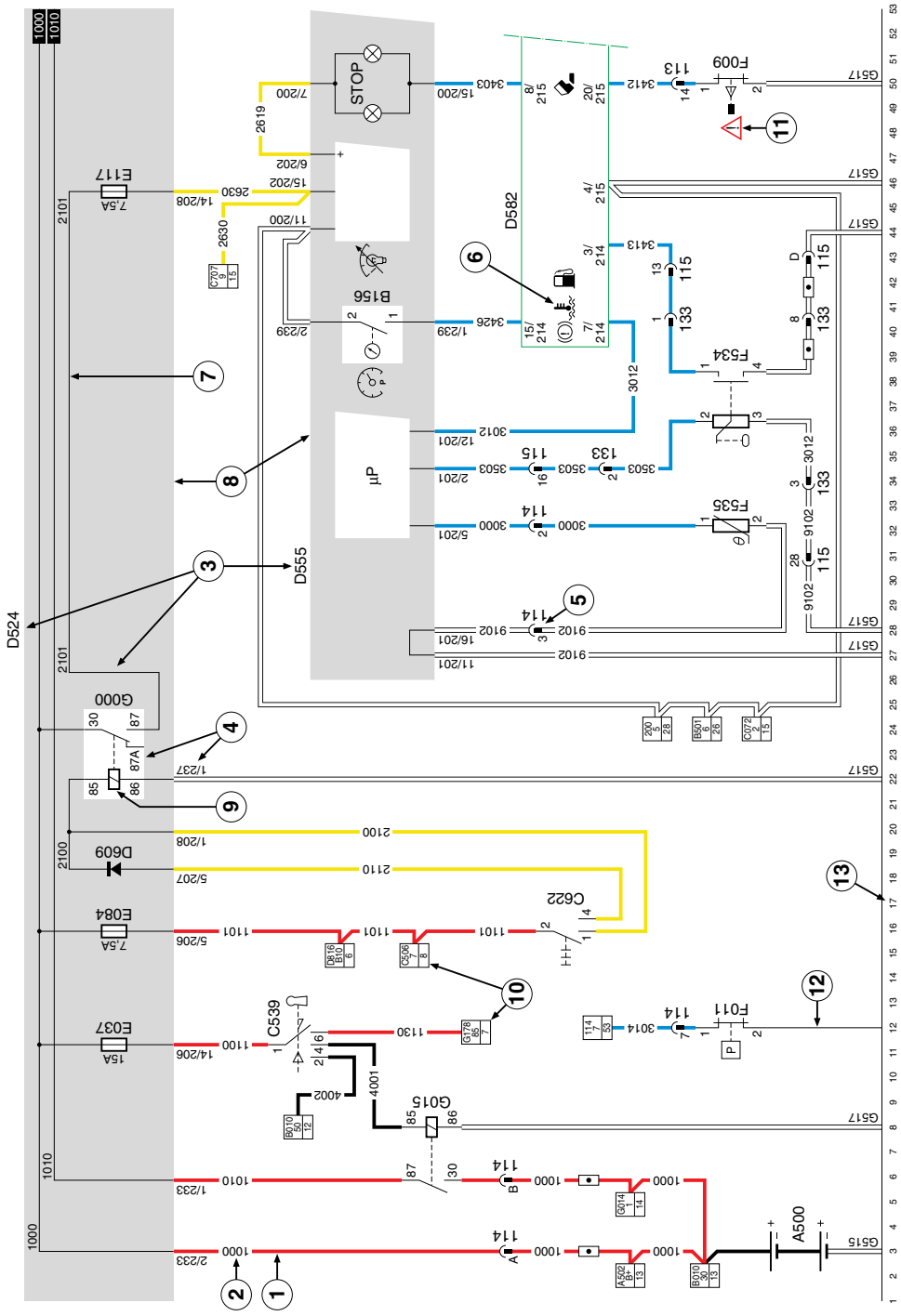

https://truckmanualshub.com/

https://truckmanualshub.com/

CONTENTS

		Page	Date
1.	**GENERAL LOCATION OF COMPONENTS**	1-1	200430
1.1	Introduction	1-1	200430
1.2	Location of components in relation to circuit diagram 1358030/26	1-2	200430

https://truckmanualshub.com/

8

https://truckmanualshub.com/

1. GENERAL LOCATION OF COMPONENTS

1.1 INTRODUCTION

This main group contains an overview of components that do **not** occur in a system manual.
The location of system components is shown in the appropriate system manual.

There is a sticker in the central box indicating what relays, diodes and fuses can be found on the PCB.

https://truckmanualshub.com/

1.2 LOCATION OF COMPONENTS IN RELATION TO CIRCUIT DIAGRAM 1358030/26

Column 1 = basic codes of component
Column 2 = description
Column 3 = location
Column 4 = page number reference

1	2	3	4
A000	Drawn vehicle socket (7-pin)	Chassis rear end	5
A001	Rear fog lamp/reversing light socket (7-pin)	Behind cab	5
A004	Plug socket, ABS/EBS, drawn vehicle (7-pin)	Chassis rear end	5
A007	24V socket (2-pin)	Under radio panel, driver's side	8
A021	Diagnostics socket (16-pin)	Under step-up bracket, co-driver's side	1
A076	Telephone socket	Behind radio panel cover	4
A097	FMS socket (21-pin)	Dashboard lead-through, location A1/2	10
A098	FMS socket (18-pin)	Under foot plate, co-driver's side	10
A510	Alarm system battery	Under foot plate, co-driver's side	2
B015	4-speed heater fan	Middle of dashboard	6
B026	CB set	In roof console, driver's side	4
B071	Mechanical lifting-gear lifting valve	On mechanical lifting-gear pump, between side members behind driven axle	9
B072	Mechanical lifting-gear lowering valve	On mechanical lifting-gear pump, between side members behind driven axle	9
B176	Reversing buzzer	In rearmost chassis cross member	3
B182	Water separator fuel heating element	Next to side member, driver's side next to battery pack	5
B241	Fuel filter/water separator heating element sensor	Rear of cab, driver's side	5
B243	Cross-axle differential lock control valve	In chassis side member, above rear axle, driver's side	3
B251	Neutral position buzzer, tilting cab	Against side member, front of stepwell, co-driver's side	3
B378	Heating element for fuel filter/water separator	Under cab rear, driver's side	5
C622	Lighting switch	Dashboard panel, driver's side	10
C704	Mechanical lifting-gear switch	Dashboard, radio panel	9

https://truckmanualshub.com/

1	2	3	4
C716	Rotating beam switch	Roof console, driver's side	10
C725	Work lamp switch	Dashboard, instrument panel	10
C727	Fog lamp switch, front/rear	Dashboard, instrument panel	10
C735	Nightlight switch, interior	Dashboard, central console	10
C736	Roof hatch switch	Dashboard, central console	10
C737	ASR switch	Dashboard, central console	10
C739	Mechanical lifting-gear switch	Dashboard, radio panel	10
C740	ECAS switch, normal level	Dashboard, radio panel	10
C742	Traction assistance switch	Dashboard, radio panel	10
C744	Drop glass switch, co-driver's side (driver's side door)	Dashboard, central console	10
C748	Operating switch, cross-axle differential lock	Dashboard, radio panel	10
C750	PTO operating switch	Dashboard, instrument panel	10
C751	PTO operating switch	Dashboard, instrument panel	10
C760	Air conditioning switch	Dashboard, radio panel	10
C763	Instrument lighting dimming potentiometer	Dashboard, instrument panel	10
C764	Potentiometer for headlight height adjustment	Dashboard, instrument panel	10
C765	Switch for warning lamps	Dashboard, central console	10
C773	Fog lamp switch, rear	Dashboard, instrument panel	10
C774	Central door locking switch	Dashboard, central console	10
C778	Switch for Eberspächer cab heater	Dashboard, central console	10
C802	Recirculation valve switch	Dashboard, radio panel	10
C813	Spotlight switch, roof	Roof console, driver's side	10
C814	Reversing buzzer switch	Roof console, driver's side	10
C835	Switch to turn off interior detection	Dashboard, central console	10
C836	Switch to turn off superstructure/drawn vehicle loadspace detection	Dashboard, central console	10

https://truckmanualshub.com/

1	2	3	4
C837	Interior lighting switch	Dashboard, central console	10
C840	Four-wheel drive switch	Dashboard, instrument panel	10
C844	Eberspächer cab heater switch with timer unit	Dashboard, central console	10
C853	Cab main switch	Dashboard, central console	10
C854	Chassis main switch	In side member housing, driver's side	5
C858	Interior spot lighting switch	Roof console, driver's side	10
C859	Interior lighting switch, driver's side roof console	Roof console, driver's side	10
C889	Tail lift switch	Dashboard, central console	10
C890	Third brake integration switch	Dashboard, radio panel	10
D503	Electronic unit, mechanical lifting gear	In distribution box, inside of chassis on co-driver's side, front of driven axle	9
D529	Remote control, ECAS	Left of seat console, driver's side	6
D609	Light switch diode	On PCB print track, central box	1
D610	Diode, main beam/dipped beam	On PCB print track, central box	1
D611	Diode for valve damping, lowering mechanical lifting gear	In distribution box, inside of chassis on co-driver's side, front of driven axle	9
D612	Diode for valve damping, lifting mechanical lifting gear	In distribution box, inside of chassis on co-driver's side, front of driven axle	9
D613	Diode for pump relay damping, mechanical lifting gear	In distribution box, inside of chassis on co-driver's side, front of driven axle	9
D622	Diode for mechanical lifting gear, lifting lock	In distribution box, inside of chassis on co-driver's side, front of driven axle	9
D623	Diode for mechanical lifting gear, lowering lock	In distribution box, inside of chassis on co-driver's side, front of driven axle	9
D710	Interior lighting diode to prevent feedback to driver's side switch	On PCB print track, central box	1
D715	Alarm system LED	Underside of roof console	2
D782	Diode to prevent door locking feedback, driver's side	On PCB print track, central box	1
D783	Interior lighting diode, driver's side	On PCB print track, central box	1
D802	ECAS-2 (6x2) electronic unit	Front of attachment plate, central box	1

https://truckmanualshub.com/

1	2	3	4
D814	UPEC electronic unit	Against engine block, driver's side	7
D850	Electronic unit for ABS/ASR, D model	Front of attachment plate, central box	1
D851	Electronic unit, ECAS-3 (4x2)	Front of attachment plate, central box	1
D855	Electronic unit for water separator	Under dashboard radio panel, driver's side	6
D866	Electronic unit, AGC-A4 automatic gearbox control	On attachment plate under PCB, central box	1
D871	Electronic unit, cab heater	In front of storage compartment, behind co-driver's seat	6
D880	EBS electronic unit	Front of attachment plate, central box	1
D895	Electronic unit for (10A) converter with power supply for radio memory	On attachment plate under PCB, central box	1
D900	VIC electronic unit	On attachment plate under PCB, central box	1
D901	Electronic unit for Hydronic 10 cab heater	Behind cab, co-driver's side	5
D902	Electronic unit for ZF intarder EST42	On attachment plate under PCB, central box	1
D903	electronic unit, ECS-DC3	Against engine block, driver's side	7
D904	Menu Control Switch, MCS	Dashboard, radio panel	10
D905	Electronic unit for central door locking	Behind tachograph in roof console, driver's side	4
D909	Electronic unit, alarm system, ultrasonic	In roof console, driver's side	2
D910	Electronic unit, battery charger	Under foot rest, co-driver's side	2
D911	Electronic unit, ALS-S alarm system	On attachment plate under PCB, central box	1
D912	Electronic unit, immobiliser	Against steering column near ignition/starter switch	2
D924	Electronic unit for main switch	Chassis side member, driver's side	5
D929	Central PCB	Central box, co-driver's side	1
D931	LED unit, immobiliser	On attachment plate under PCB, central box	1
D969	CAN Data Manager, CDM	Under foot rest, co-driver's side	6
D977	Electronic unit, EBS-2	On attachment plate under PCB, central box	1
E112	Fuse, glow warning lamp	Above glow plug relay	7

https://truckmanualshub.com/

1	2	3	4
E153	Fuse, main switch for timer/engine stop/main switch power supply	In main switch electronic unit (D924)	5
E279	Fuse, airbag and seat belt tensioner/voltage regulation generator	Next to main switch (if there is a main switch) Above starter motor relay (if there is **NO** main switch)	5
E286	Main fuse	On engine block bracket, driver's side, or on bracket above front of gearbox (for Allison gearbox)	7
E501*	Reversing light operating switch	Gearbox, driver's side	3
E501**	Reversing light operating switch	Gearbox, driver's side	3
E507	Proximity switch for axle-load protection lifting gear (10 tons)	Next to distribution box, inside of chassis on co-driver's side, front of driven axle	9
E509	Air conditioning operating switch, high/low pressure	In evaporator pipe, on outside of cab, co-driver's side	8
E511	Stop light operating switch	Behind radio panel cover	4
E524	Mechanical lifting-gear operating switch, oil pressure limit switch	On mechanical lifting-gear pump, between side members behind driven axle	9
E561	Low-range switch	Gearbox, driver's side	3
E564	Engine brake operating switch	On floor plate, driver's side	6
E566	Operating switch, cab heater thermostat	In rear wall, driver's side	2
E569*	Neutral position switch, gearbox	Gearbox, driver's side	3
E569**	Neutral position switch, gearbox	Gearbox, driver's side	3
E570	Proximity switch, clutch PTO N10	Above clutch pedal	4
E575	Clutch pedal proximity switch	Next to clutch pedal, left-hand side	4
E579	Operating switch for thermostat/cab heater, fan, Eberspächer (water)	In rear wall, driver's side	2
E580	Operating switch for thermostat/cab heater, fan, Eberspächer (timer)	In rear wall, driver's side	2

https://truckmanualshub.com/

1	2	3	4
E581	Cab heater timer unit	In rear wall, driver's side	2
E584	Proximity switch for axle-load protection lifting gear (7.5 tons)	Next to distribution box, inside of chassis on co-driver's side, front of driven axle	9
E592	Reversing light operating switch	Gearbox, driver's side	3
E593	Neutral position switch	Gearbox, driver's side	3
E595	Low-range switch	Gearbox, driver's side	3
F000	Parking brake switch	Behind radio panel cover	4
F006	Control switch for differential lock, 1st differential	In chassis side member, above rear axle, co-driver's side	3
F087	Control switch, gearbox PTO	Gearbox, driver's side	3
F097	Proximity switch for trailing axle mechanical lifting gear	Next to distribution box, inside of chassis on co-driver's side, front of driven axle	9
F120	Gearbox switch for gate 3-4	Gearbox, driver's side	3
F533	Speed sensor	Gearbox, driver's side	3
F603	Ultrasonic transmitter	Under roof console, driver's side	2
F604	Ultrasonic receiver	Under roof console, co-driver's side	2
F651	Ambient temperature sensor	Behind bumper, driver's side	3
F652	Air pressure sensor	On APU unit, under cab, co-driver's side	6
F656	Coolant level sensor	Rear of expansion tank	3
F673	Engine oil level and temperature sensor	In engine oil sump, driver's side	8
F676	Lifting cylinder sensor, cab	Along cab tilting cylinder in side member, co-driver's side	8
F686	Alarm system radar sensor	In roof console, driver's side	2
G014	Glow plug relay	Against engine block, driver's side	7
G052	Motor relay, mechanical lifting gear	In distribution box, inside of chassis on co-driver's side, front of driven axle	9
G066	Takeover relay, mechanical lifting gear	In distribution box, inside of chassis on co-driver's side, front of driven axle	9
G257	Recirculation valve relay	Right-hand side of heater unit	6
G258	Recirculation valve relay	Right-hand side of heater unit	6
G267	Air conditioning relay	Right-hand side of heater unit	6

https://truckmanualshub.com/

1	2	3	4
G279	Air conditioning relay	Right-hand side of heater unit	6
G299	Relay, roof spotlights	In roof console, driver's side	8
G367	Main switch relay, power supply	In main switch electronic unit (D924)	5
G368	Main switch relay, earth	In main switch electronic unit (D924)	5
G380	Relay, mechanical lifting axle upwards	In distribution box, inside of chassis on co-driver's side, front of driven axle	9
G381	Relay, mechanical lifting axle (7.5 tons)	In distribution box, inside of chassis on co-driver's side, front of driven axle	9
G535	CAN distribution block	On attachment plate under PCB, central box	1

https://truckmanualshub.com/

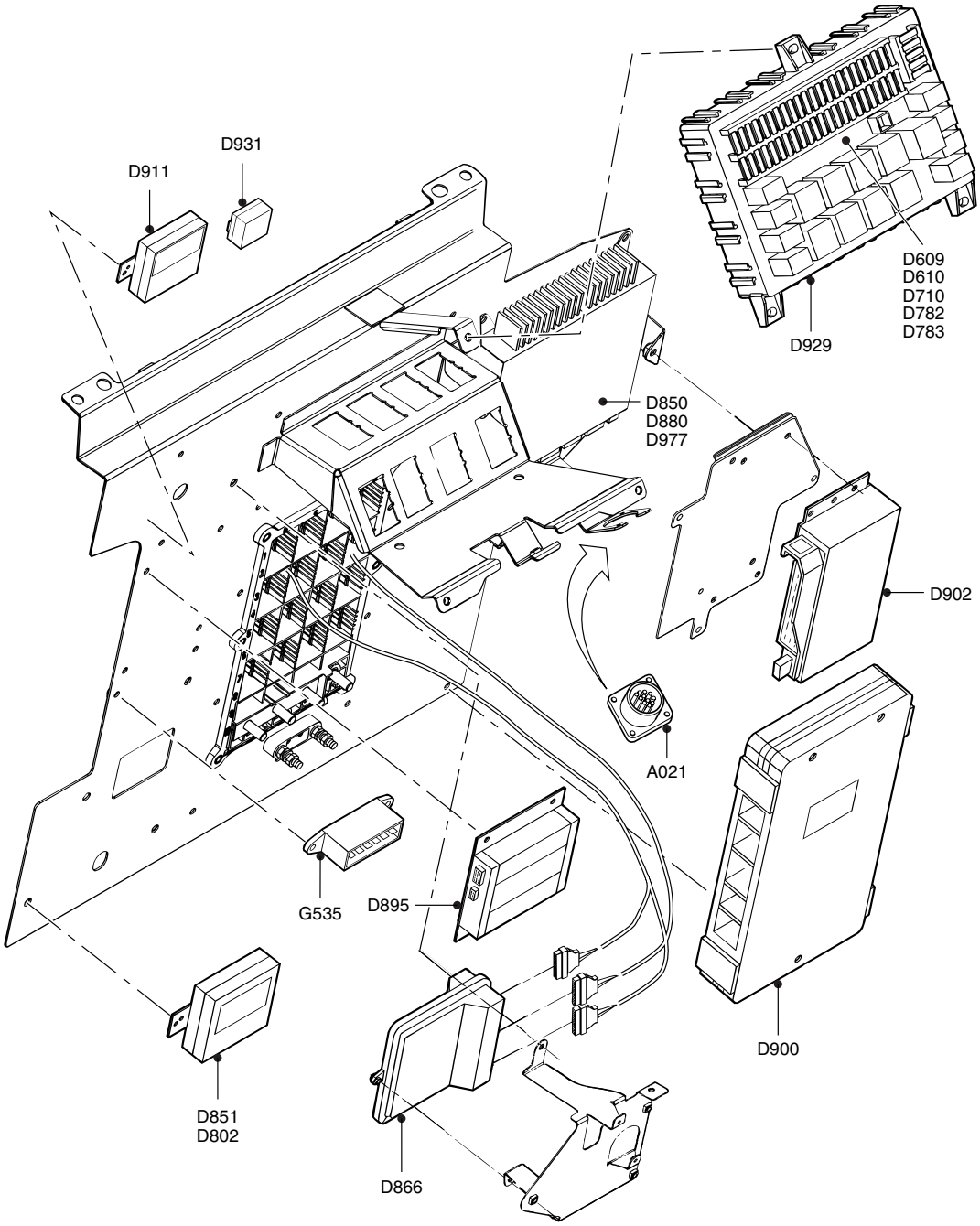

E501914

https://truckmanualshub.com/

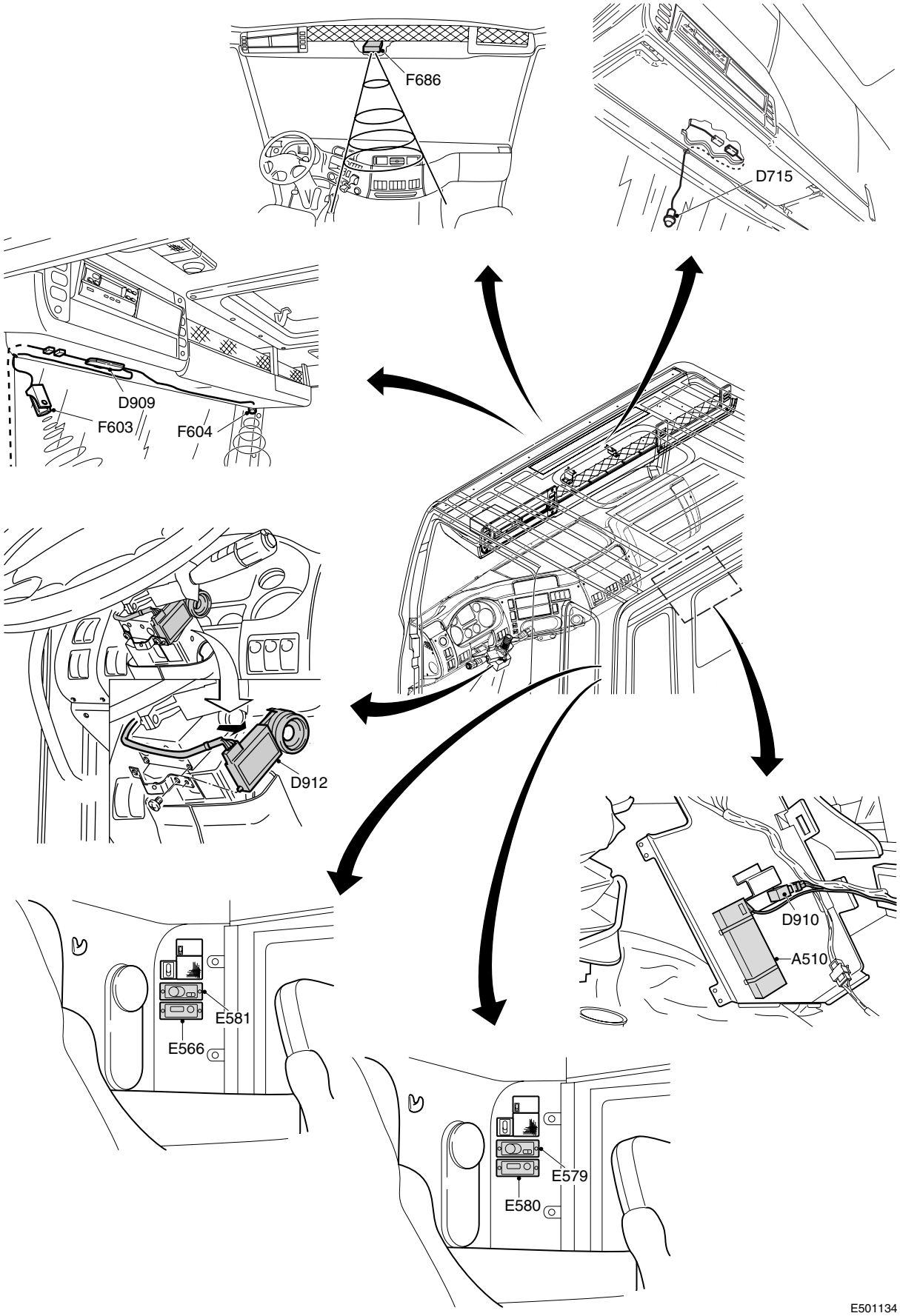

https://truckmanualshub.com/

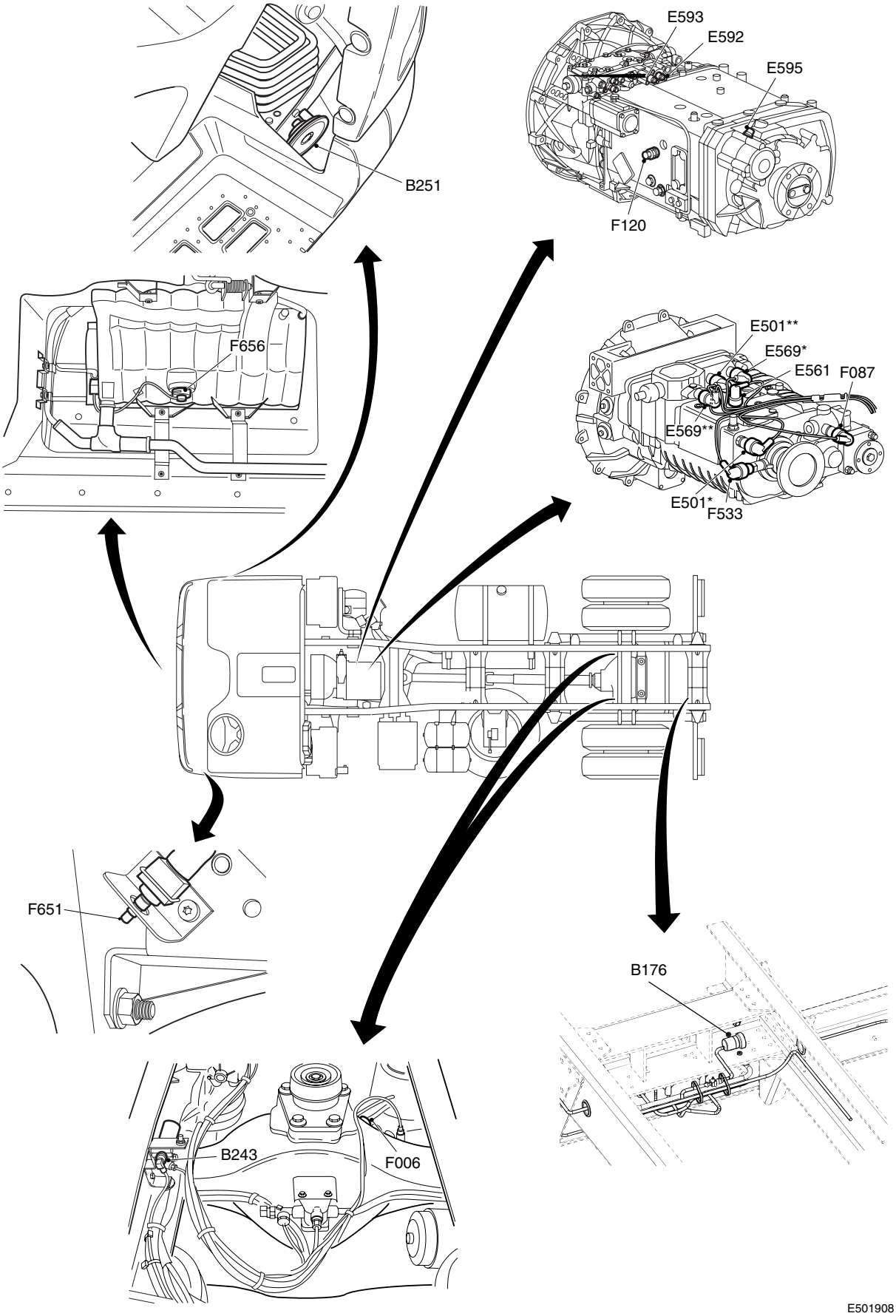

https://truckmanualshub.com/

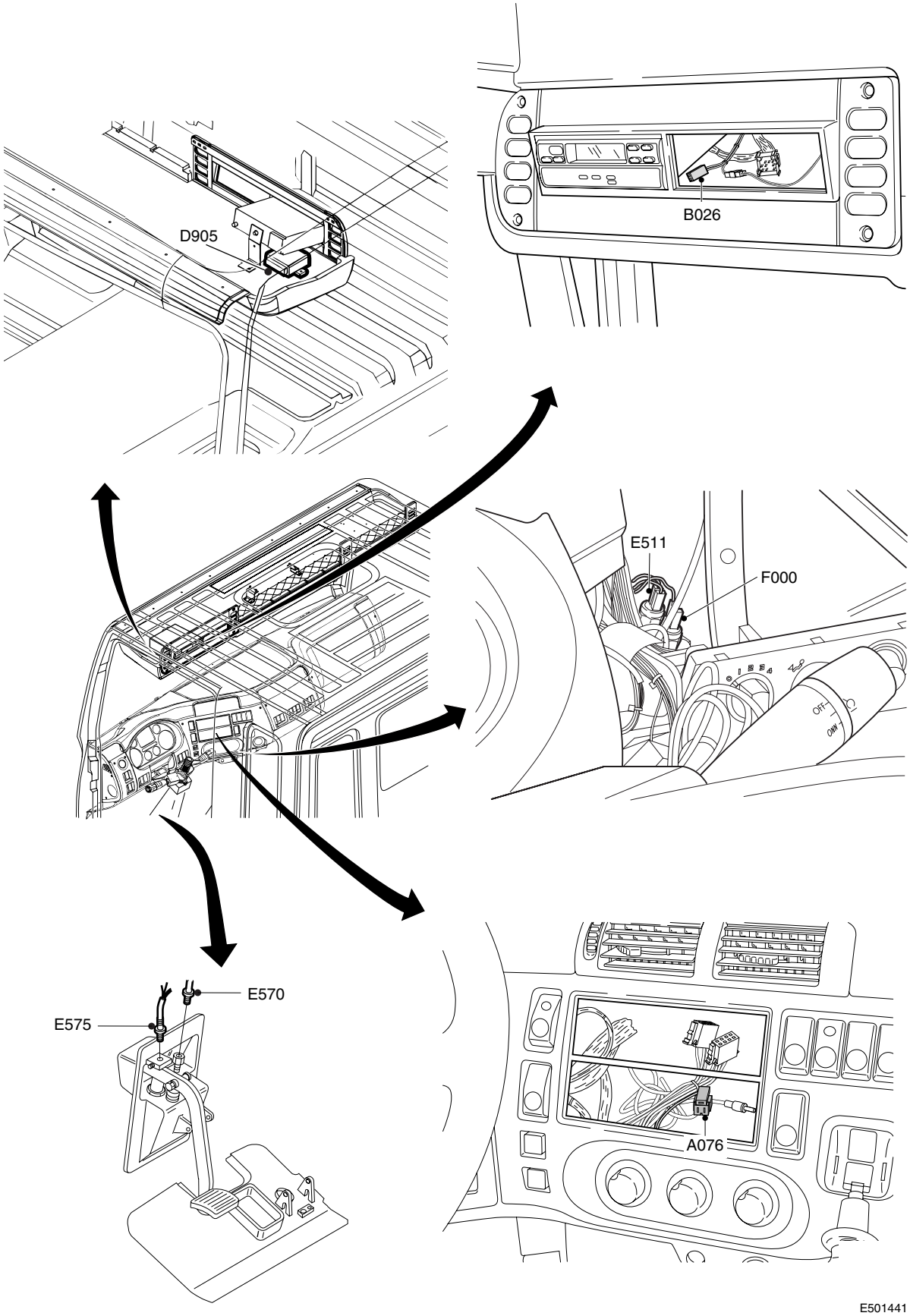

https://truckmanualshub.com/

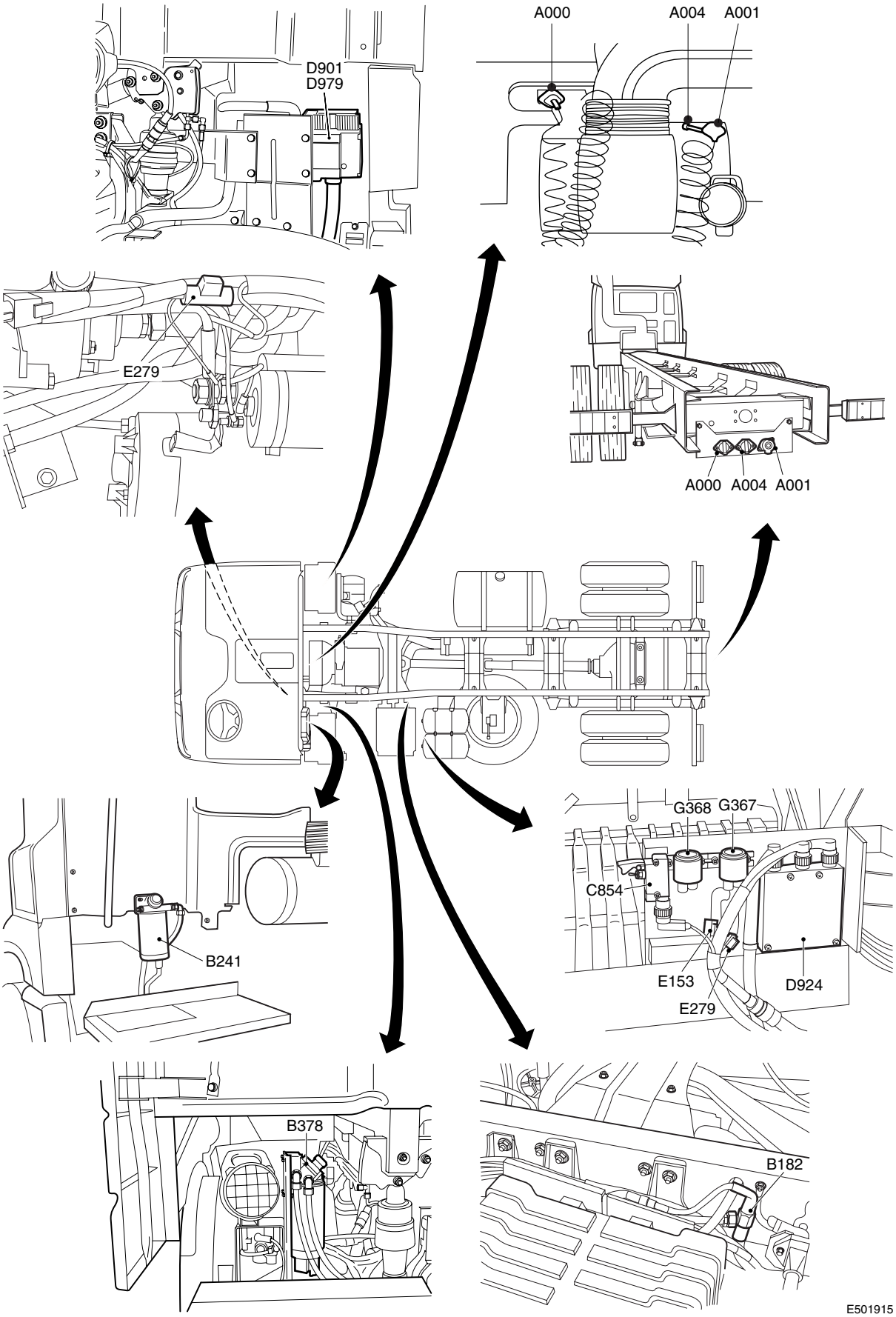

https://truckmanualshub.com/

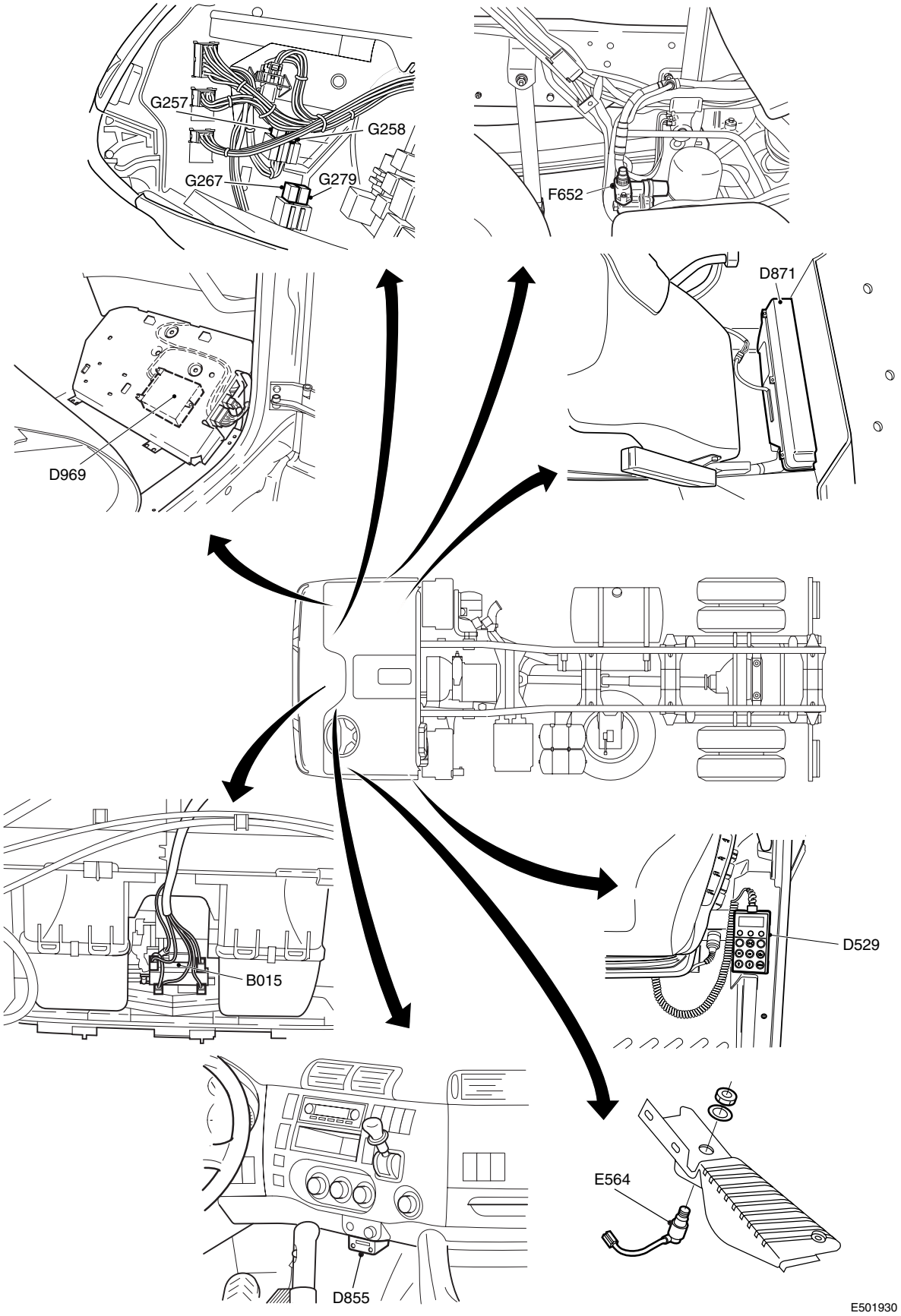

https://truckmanualshub.com/

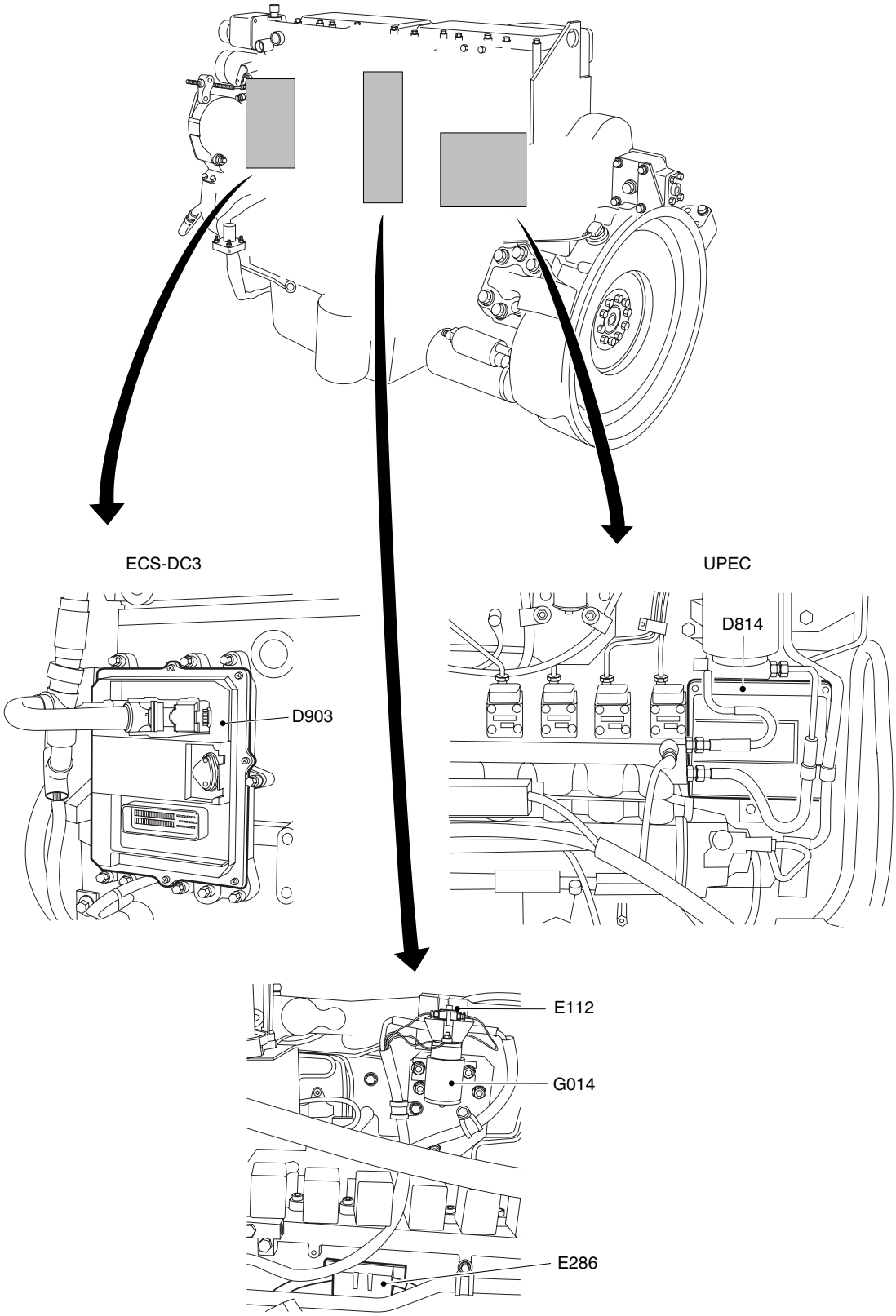

E501169

https://truckmanualshub.com/

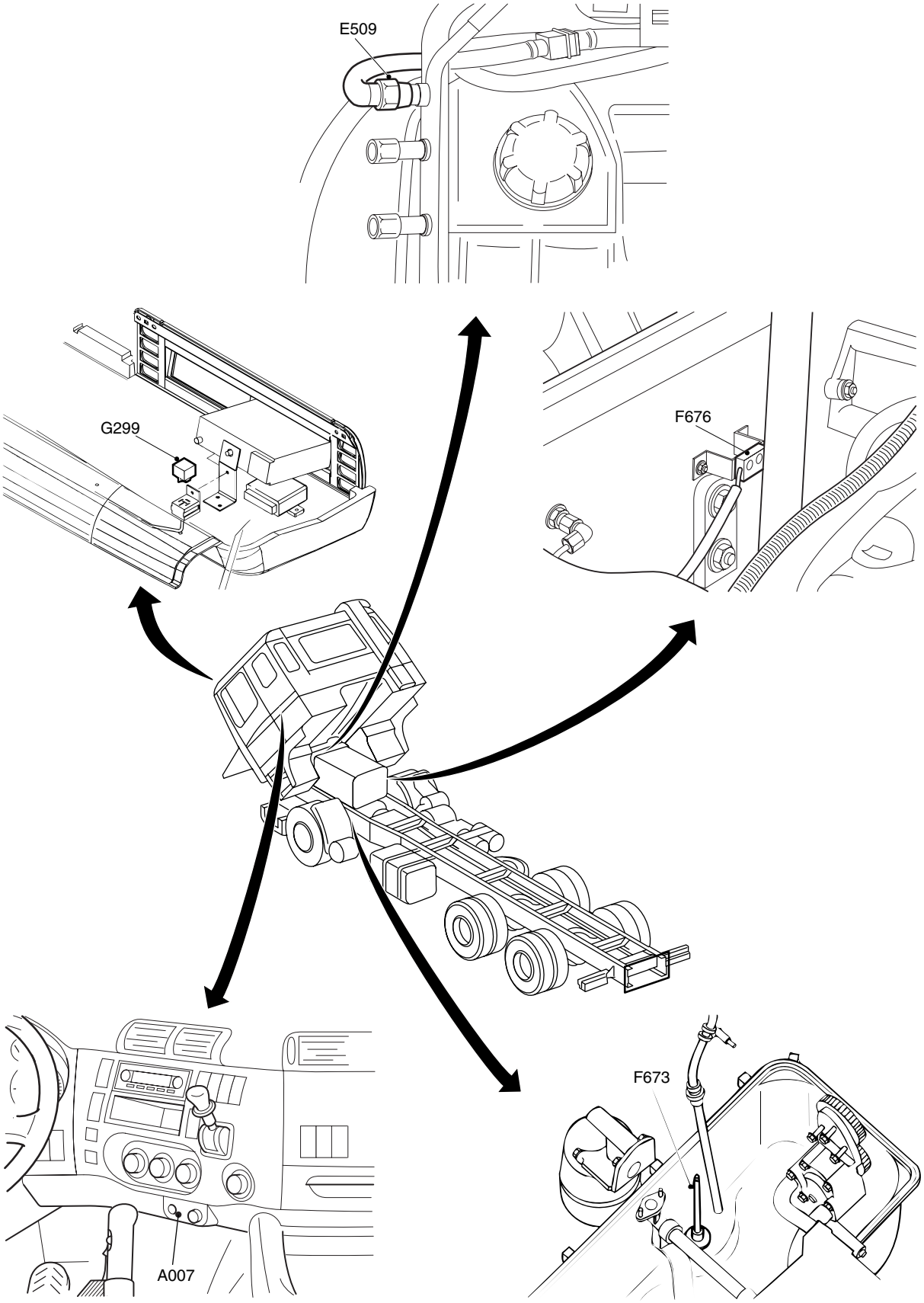

E501170

https://truckmanualshub.com/

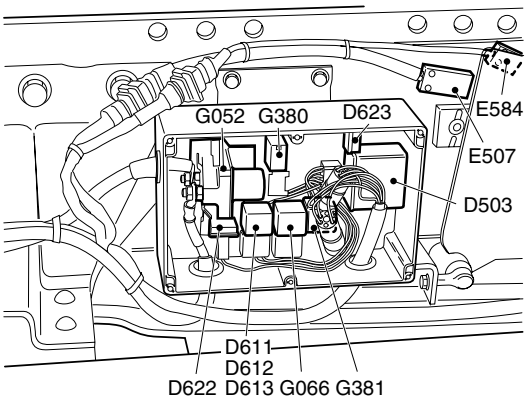

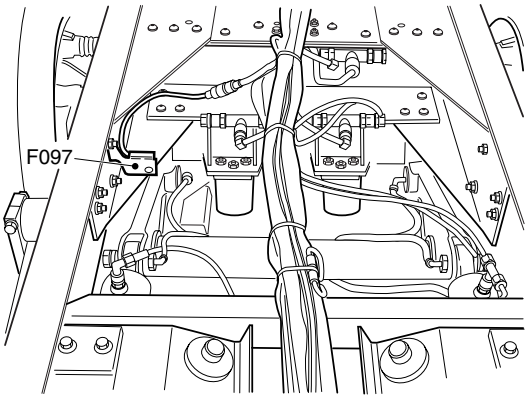

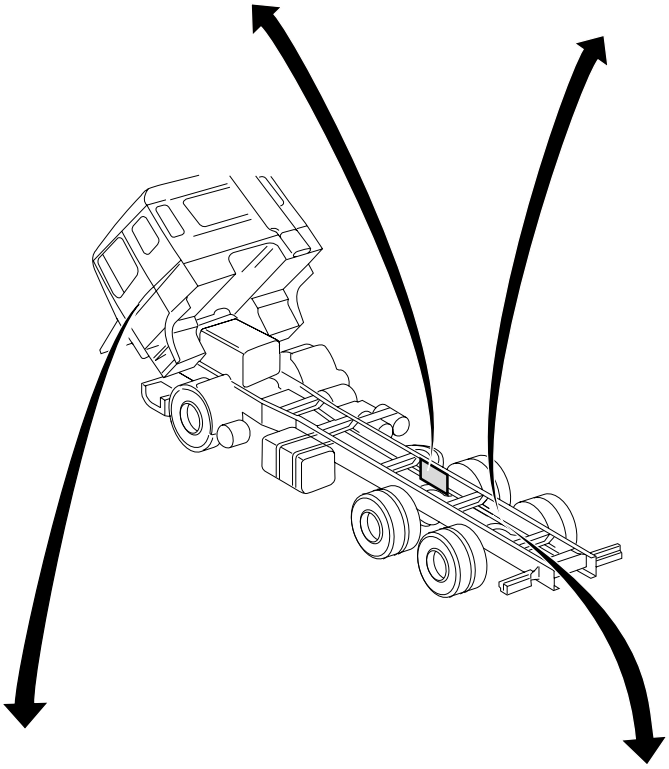

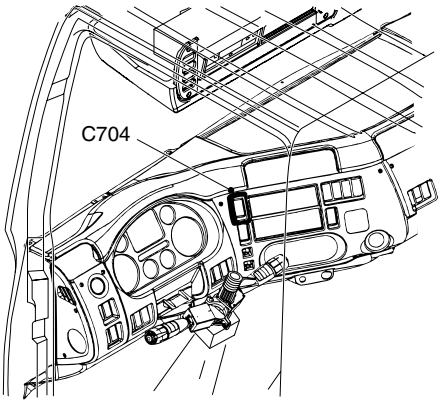

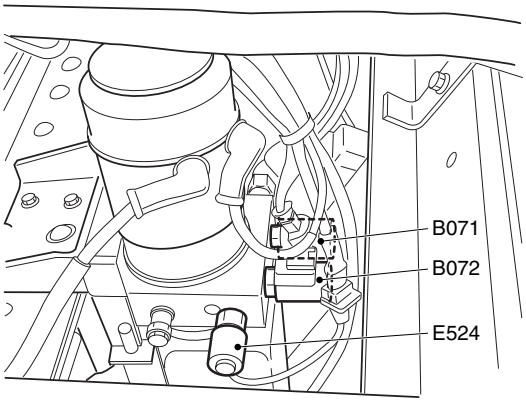

E501476

8

https://truckmanualshub.com/

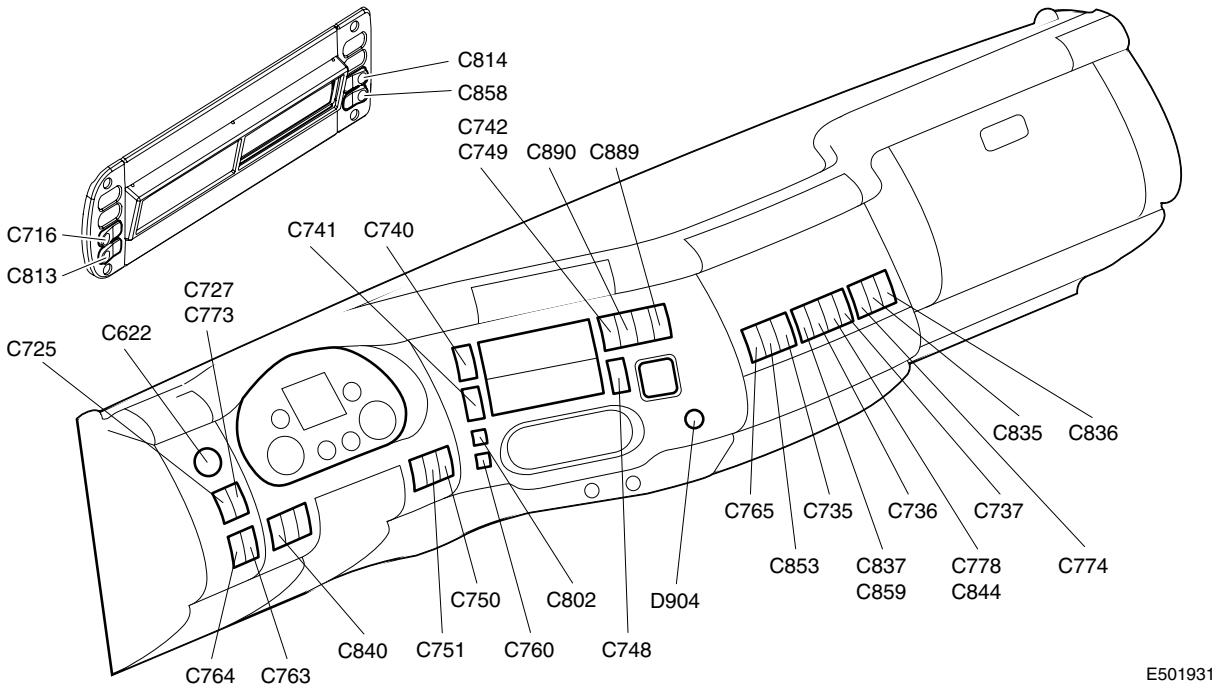

8

https://truckmanualshub.com/

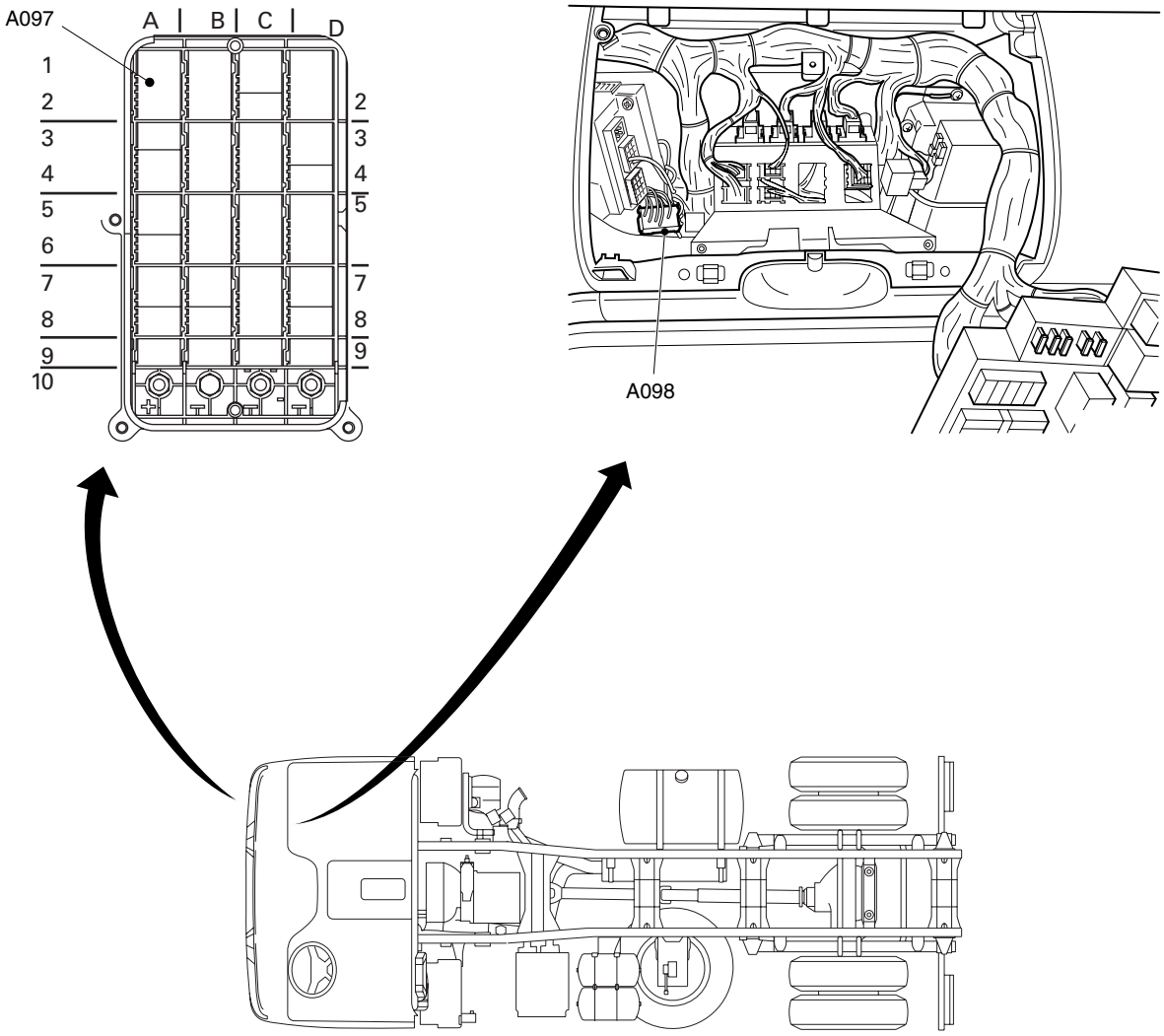

E502116

https://truckmanualshub.com/

8

https://truckmanualshub.com/

CONTENTS

	Page	Date
1. LOCATION OF CONNECTORS	1-1	200430
1.1 List of connectors	1-1	200430
1.2 Drawings showing location of connectors	1-11	200430

https://truckmanualshub.com/

https://truckmanualshub.com/

1. LOCATION OF CONNECTORS

1.1 LIST OF CONNECTORS

Column 1 = Connector coding
Column 2 = Number of connection points on connector
Column 3 = Colour of connector
Column 4 = Description of connector, if applicable
Column 5 = Location of connector in the vehicle
Column 6 = Reference to page number (see “Drawings showing location of connectors”)

1	2	3	4	5	6
116	7	Black	Chassis wiring harness for mechanical lifting axle	In distribution box, inside of chassis on co-driver’s side, front of driven rear axle	33
122	6	White	Time relay, mechanical lifting gear	On electronic unit, mechanical lifting gear	36
143	4	Black	Stepwell lighting	Under cab, driver’s side	16
144	4	Black	Stepwell lighting	Under cab, co-driver’s side	16
216	16	Black	Diagnostics	Bottom right, central box	27
222	6	Blue	Steering column ignition switch	Behind radio panel cover	2
231	5	Black	Light switch	On light switch, left-hand side of steering column	34
251	3	White	Engine brake switch	On foot panel engine brake switch	35
269	14	Black	Eberspächer Airtronic cab heater thermostat unit	Rear wall corner, driver’s side	11
284	12	Black	Chassis substructure	Under cab, driver’s side	28
288	12	Black	Chassis substructure	Under cab, co-driver’s side	28
294	35	Black	UPEC engine management (A connector)	On UPEC electronic unit against engine block, driver’s side	15
295	35	Black	UPEC engine management (B connector)	On UPEC electronic unit against engine block, driver’s side	15
307	9	Black	Remote control, ECAS	Below seat, driver’s side	34
340	35	Black	ECAS-2 (6x2) electronic unit connector	On ECAS-2 (6x2) electronic unit	17

https://truckmanualshub.com/

1	2	3	4	5	6
390	8	Black	AS Tronic gearbox	Right-hand side of gearbox	28
391	8	Black	AS Tronic gearbox	Right-hand side of gearbox	28
392	6	Yellow	Reversing buzzer wiring	Dashboard lead-through, location A7	6
393	21	Yellow	FAG dashboard wiring harness, ECAS 2 + front axle air suspension + EMAS + mechanical lifting gear	Connector partition under PCB, central box	27
397	12	Black	Heater wiring	Right-hand side of heater unit	13
400	35	Grey	PCB connector	Rear of PCB, central box - A connector	1
401	35	Black	PCB connector	Rear of PCB, central box - B connector	1
402	35	Grey	PCB connector	Rear of PCB, central box - C connector	1
403	35	Black	PCB connector	Rear of PCB, central box - D connector	1
407	6	Yellow	Clutch pedal sensor	Behind radio panel cover	2
416	1	White	PCB connector, power supply before contact	Rear of PCB, central box	1
417	1	Brown	PCB connector, power supply after contact	Rear of PCB, central box	1
424	8	Grey	Power supply to radio	Behind radio panel	9
425	8	Brown	Loudspeakers	Behind radio panel	9
446	25	Black	Electronic unit connector, ECAS-3 (4x2)	On electronic unit, ECAS-3 (4x2)	17
453	18	Black	A connector, ABS/ASR-D electronic unit	On ABS/ASR-D electronic unit, central box	9
454	6	Black	B connector, ABS/ASR-D electronic unit	On ABS/ASR-D electronic unit, central box	9
455	9	Black	C connector, ABS/ASR-D electronic unit	On ABS/ASR-D electronic unit, central box	9
456	15	Black	D connector, ABS/ASR-D electronic unit	On ABS/ASR-D electronic unit, central box	9
482	18	Black	Eberspächer Airtronic cab heater	On Airtronic cab heater unit	13
483	12	Black	Eberspächer Airtronic cab heater	Connector partition under PCB, central box	3
491	4	Black	PTO valve	On gearbox, right rear	23

https://truckmanualshub.com/

1	2	3	4	5	6
499	12	Black	ABS chassis wiring harness	In front of driven rear axle	17
527	14	Black	Eberspächer Hydronic 10 cab heater thermostat unit	On thermostat unit, driver's side rear wall corner	12
529	3	White	Continuous lighting	Behind lighting switch panel, driver's side	34
533	2	White	Eberspächer Hydronic 10 cab heater, temperature sensor	On cab rear wall	12
546	8	Black	Gearbox	Right-hand side of gearbox	14
553	16	Grey	Door wiring, driver's side	Door pillar, driver's side	18
554	21	Yellow	Roof wiring	Connector partition, behind left-hand steering column cover	2
555	21	Black	Tachograph roof wiring	Connector partition, behind left-hand steering column cover	2
556	9	Yellow	Door-sill wiring	Connector partition, behind left-hand steering column cover	2
557	6	Green	Engine speed remote control	Connector partition, behind left-hand steering column cover	2
559	18	Black	Substructure, driver's side	Connector partition, behind right-hand steering column cover	2
560	9	Blue	Substructure, EBS valve	Connector partition, behind right-hand steering column cover	2
561	12	Yellow	Steering column - B connector	Behind radio panel cover	2
562	6	Green	Immobiliser	Behind radio panel cover	2
563	14	Black	Instrument panel	Rear of DIP-4	11
564	9	Green	PTO instrument panel	Behind radio panel cover	2
565	6	Black	Instrument panel, 4x4	Behind radio panel cover	2
566	18	Black	Steering column - A connector	Behind radio panel cover	2
567	6	Yellow	Radio panel	Behind radio panel cover	3
568	21	Black	Air conditioning feed-through	Behind radio panel cover	2
569	2	Yellow	Air conditioning pressure switch	Above coolant expansion tank, co-driver's side	21
570	21	Yellow	Heater panel	Right-hand side of heater panel	3
571	9	Blue	Instrument lighting/roof hatch switch	Right-hand side of heater panel	3

https://truckmanualshub.com/

1	2	3	4	5	6
572	21	Yellow	Substructure, co-driver's side	Right-hand side of foot plate, co-driver's side	4
573	9	Black	Door-sill wiring	Right-hand side of foot plate, co-driver's side	4
574	21	Green	Alarm system	Connector partition under PCB, central box	3
577	21	Blue	Lead-through connector, rear chassis wiring / UPEC/ECS-DC3 application connector (A070)	Dashboard lead-through, location D5/6	5
580	6	Green	Superstructure accessories	Connector partition under PCB, central box	3
581	6	Black	Roof wiring	Next to connector partition, behind left-hand steering column cover	2
582	12	Black	Eberspächer Hydronic 10 cab heater	Connector partition under PCB, central box	3
583	12	Blue	Intarder	Connector partition under PCB, central box	4
584	21	Black	EBS	Connector partition under PCB, central box	3
585	21	Black	ABS	Connector partition under PCB, central box	3
586	21	Black	Brake lining	Connector partition under PCB, central box	3
588	12	Yellow	UPEC/ECS-DC3 application connector (A068)	Dashboard lead-through, location A4	5
590	2	Black	ABS, drawn vehicle	Dashboard lead-through, location B9	5
591	16	Grey	Door wiring	Door pillar, driver's side	18
592	9	Black	A connector, VIC electronic unit	Central box	7
593	24	Black	B connector, VIC electronic unit	Central box	7
594	52	Black	C connector, VIC electronic unit	Central box	7
595	40	Black	D connector, VIC electronic unit	Central box	7
596	9	Black	E connector, VIC electronic unit	Central box	7
597	12	Black	Roof wiring	Roof console, driver's side	6
598	8	White	A connector	On rear of tachograph	7

https://truckmanualshub.com/

1	2	3	4	5	6
599	8	Yellow	B connector	On rear of tachograph	7
600	16	Black	Electronic unit, CDS-3	Roof console, driver's side	10
601	6	Black	Interior alarm/loadspace detection	Right-hand side of heater panel	3
602	6	Green	Alarm system siren	Under instrument panel	10
603	12	Black	Electronic unit, ASL-S, A connector	Central box	20
604	21	Black	Electronic unit, ASL-S, B connector	Central box	20
605	21	Black	Chassis wiring harness	In cable duct above front wheel, co-driver's side (only FT type)	20
606	3	Black	Roof spotlights	Behind spotlights on roof, outside cab, driver's side	25
607	18	Black	Allison gear selector	Behind radio panel cover	4
608	21	Grey	EBS chassis	Dashboard lead-through, location B5/6	5
609	21	Green	EBS substructure	Dashboard lead-through, location C7/8	5
610	21	Grey	ABS chassis	Dashboard lead-through, location B5/6	5
611	21	Green	ABS substructure	Dashboard lead-through, location C7/8	5
612	18	Black	A connector, EBS electronic unit	Central box	14
613	15	Black	B connector, EBS electronic unit	Central box	14
614	9	Black	C connector, EBS electronic unit	Central box	14
615	12	Black	D connector, EBS electronic unit	Central box	14
616	6	Black	E connector, EBS electronic unit	Central box	14
618	2	Black	Cooler box door-sill wiring	Next to co-driver's seat, behind cover	13
619	2	Black	Storage compartment door-sill wiring	Next to driver's seat, behind cover	24
620	12	Blue	ZF intarder	Dashboard lead-through, location D8	5
621	9	Blue	Eberspächer Airtronic cab heater wiring	Behind co-driver's seat	13

https://truckmanualshub.com/

1	2	3	4	5	6
622	88	Black	Electronic unit, intarder EST-42	Central box	25
623	12	Black	Roof wiring, spotlights, SH cab	In roof console, driver's side	6
624	2	Black	Fuel heater extension cable	Behind fuel tank, driver's side Special vehicle model	19
625	4	Black	Fuel level sensor extension cable	Behind cab in side member. Special vehicle model	19
626	21	Blue	Gearbox wiring feed-through	Manual gearbox chassis wiring, location D5/6	5
627	12	Grey	Chassis wiring, ECAS-2 (6x2)	Dashboard lead-through, location B8	6
628	8	Black	ECS-DC3 engine harness wiring	Front of engine block	19
630	9	Blue	Eberspächer Airtronic cab heater wiring	Right-hand side of foot plate, co-driver's side	4
632	12	Black	Timer for Eberspächer Airtronic cab heater	Rear wall corner, driver's side	11
633	12	Black	Timer for Eberspächer Hydronic 10 cab heater	Rear wall corner, driver's side	12
634	12	Black	Chassis wiring, ECAS-3 (4x2)	Dashboard lead-through, location B8	6
635	6	Black	Air-sprung front axle	Dashboard lead-through, location B7	5
636	7	Black	Air pressure sensor wiring	Under cab, co-driver's side	26
637	12	Black	Gearbox	On the right next to gearbox	33
638	6	Blue	Main switch	Dashboard lead through, location D4	5
639	8	Black	Main switch	Between battery pack and chassis side member, driver's side	26
643	4	Black	PTO	On gearbox	33
644	18	Blue	Allison transmission	Connector partition under PCB, central box	4
646	4	Black	Coolant level sensor	Next to coolant expansion tank, driver's side	21

https://truckmanualshub.com/

1	2	3	4	5	6
647	89	Black	On ECS-DC3 electronic unit	On ECS-DC3 electronic unit against engine block, driver's side	22
648	21	Grey	Allison gearbox	Dashboard lead-through, location B1/2	6
649	12	Green	Allison gearbox	Dashboard lead-through, location B4	6
650	8	Black	Allison gearbox	On gearbox, middle rear	22
651	8	Black	ECAS chassis wiring harness	Above cross member, in front of driven rear axle	15
654	9	Blue	Accessories connector	Behind radio panel cover	3
655	6	Yellow	Accessories connector	Right-hand side of heater panel	3
656	21	Blue	Accessories connector	Dashboard lead-through, location D1/2	5
657	12	Black	Bodybuilder application connector	Depending on type of cab: under cab or behind cab, co-driver's side	24
658	8	Black	Bodybuilder application connector	Depending on type of cab: under cab or behind cab, co-driver's side	24
659	3	Black	Alarm system extension cable	Rear of cab, driver's side	30
660	6	Black	Alarm system charger	Under foot plate, co-driver's side	12
661	8	Black	Chassis wiring harness for mechanical lifting axle	In cable duct above front wheel, co-driver's side	32
662	7	Black	Chassis wiring harness for mechanical lifting axle	In distribution box, inside of chassis on co-driver's side, front of driven rear axle	33
663	6	Green	FAS/FTS dashboard wiring harness	Dashboard lead-through, location C9	5
666	6	Green	Fuel pre-heating	Right-hand side of heater panel	4
667	2	Black	Thermoline fuel pre-heating	Dashboard lead-through, location A9	6
668	4	Black	Air conditioning compressor	Against engine under cab, co-driver's side	8
669	4	Black	Work lamp	Against bridge piece, rear of cab	8
672	6	Black	Intermediate connector for radar alarm system	In roof console, driver's side	21

https://truckmanualshub.com/

1	2	3	4	5	6
673	6	Black	Intermediate connector for ultrasonic alarm system	In roof console, driver's side	21
674	21	Yellow	EMAS chassis wiring	Dashboard lead-through, location A1/2	6
676	18	Blue	EMAS electronic unit, B connector	Under foot plate, co-driver's side	30
677	15	Black	EMAS electronic unit, C connector	Under foot plate, co-driver's side	30
679	7	Green	EMAS valve block	EMAS steering cylinder control valve block (B386)	29
680	7	Grey	EMAS valve block	EMAS steering cylinder control valve block (B386)	29
681	6	Yellow	Mann & Hummel water separator or fuel filter/water separator (Fleetguard)	Dashboard lead-through, location A5	6
682	36	Black	On ECS-DC3 electronic unit	On ECS-DC3 electronic unit against engine block, driver's side	22
683	16	Black	On ECS-DC3 electronic unit	On ECS-DC3 electronic unit against engine block, driver's side	22
684	4	Black	EMAS chassis wiring intermediate connector	On front axle angle sensor on steering box	31
685	4	Black	EMAS chassis wiring intermediate connector	On trailing axle angle sensor	31
686	4	Black	EMAS valve block	EMAS fluid flow control valve block (B372)	31
687	21	Green	Application connector, Allison gearbox (A074)	Connector partition under PCB, central box	4
688	3	Black	FAS/FTS chassis wiring harness	Above distribution box, above driven rear axle, co-driver's side	33
689	3	Black	FAS/FTS chassis wiring harness	Above distribution box, above driven rear axle, co-driver's side	33
690	4	Black	FAS/FTS chassis wiring harness	In front of lifting axle cross member, co-driver's side	32

https://truckmanualshub.com/

1	2	3	4	5	6
691	2	Black	FAS/FTS chassis wiring harness	Behind lifting cylinder, in front of lifting axle	32
860	21	Yellow	ECAS-2 (4x2) dashboard wiring harness + front axle air suspension	Connector partition under PCB, central box	27
861	21	Yellow	ECAS-2 (6x2) dashboard wiring harness + EMAS	Connector partition under PCB, central box	27
862	21	Yellow	ECAS-2 (6x2) dashboard wiring harness + front axle air suspension	Connector partition under PCB, central box	27
865	2	Black	Accessories connection	Under central PCB, central box	8
868	9	Violet	AS Tronic gear lever unit wiring	In connector partition behind radio panel	27
869	21	Black	AS Tronic chassis wiring	Dashboard lead-through, location B1/2	5
871	18	White	EMAS electronic unit A connector	Under foot plate, co-driver's side	30
872	18	Grey	EMAS electronic unit D connector	Under foot plate, co-driver's side	30
873	39	Black	Rear light chassis wiring, drawn vehicle plugs	On cross member behind rear axle (only FA type)	29
879	15	Black	AS Tronic gear lever unit wiring	On AS Tronic gear lever unit	34
880	20	Black	AS Tronic gearbox	On AS Tronic electronic unit, gearbox	35
882	21	Yellow	Lifting gear wiring	Connector partition under PCB, central box	27
883	9	Yellow	CDM wiring	Connector partition under PCB, central box	4
884	18	Black	CDM unit, A connector	On CDM electronic unit, under foot plate, co-driver's side	36
911	7	Grey	Windscreen wiper motor	Above coolant expansion tank, driver's side	35
913	21	Violet	PEC/XEC/CE engine wiring	Dashboard lead-through, location C3/4	5
914	21	Green	PEC/XEC/CE engine wiring	Dashboard lead-through, location C1/2	5
915	12	Green	Connector, accessories and drawn vehicle	Dashboard lead-through, location C6	5
916	21	Yellow	Chassis wiring harness	Dashboard lead-through, location A7/8	5

https://truckmanualshub.com/

1	2	3	4	5	6
918	12	Yellow	Eberspächer Hydronic 10 cab heater	Dashboard lead-through, location A6	5
919	6	Grey	Grease lubrication wiring harness	Dashboard lead-through, location B3	6
920	12	Black	Eberspächer Hydronic 10 cab heater	On cab heater unit	23
921	6	Green	ABS/EBS, drawn vehicle	Dashboard lead-through, location C5	6
922	15	Black	CDM unit, B connector	On CDM electronic unit, central box	36
923	8	Brown	Tachograph, D connector	On rear of tachograph	7
924	2	Black	Chassis wiring harness	Left side marking	19
925	2	Black	Chassis wiring harness	Right side marking	19
927	12	Grey	Dashboard wiring harness	Dashboard lead-through, location B4	5
928	6	Grey	Wiring harness, air-sprung front axle	Dashboard lead-through, location B7	6
929	12	Black	Chassis wiring harness	ECAS wiring harness	23
930	6	Black	Dashboard wiring harness	Behind radio panel cover	27
931	6	Blue	Dashboard wiring harness	Dashboard lead-through, location D7	6
948	2	Black	Stepwell lighting	Under cab, driver’s side	37
949	2	Black	Stepwell lighting	Under cab, co-driver’s side	37
950	6	Violet	Radio panel	Behind radio panel cover	2
951	6	Violet	Radio panel	Behind radio panel cover	3

https://truckmanualshub.com/

1.2 DRAWINGS SHOWING LOCATION OF CONNECTORS

Explanation of connector drawings

A : Connector coding

B : Colour of connector

BN	=	brown
BW	=	blue
GL	=	yellow
GS	=	grey
OE	=	orange
RD	=	red
VI	=	violet
WT	=	white
ZT	=	black

C : List of pin numbers on connector

The pin numbers on the connector are viewed from the wire input side.

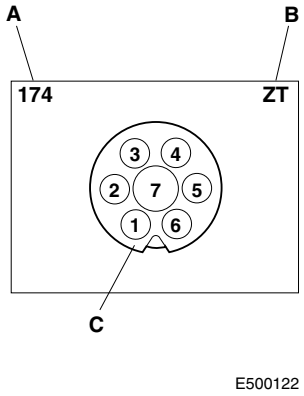

https://truckmanualshub.com/

https://truckmanualshub.com/

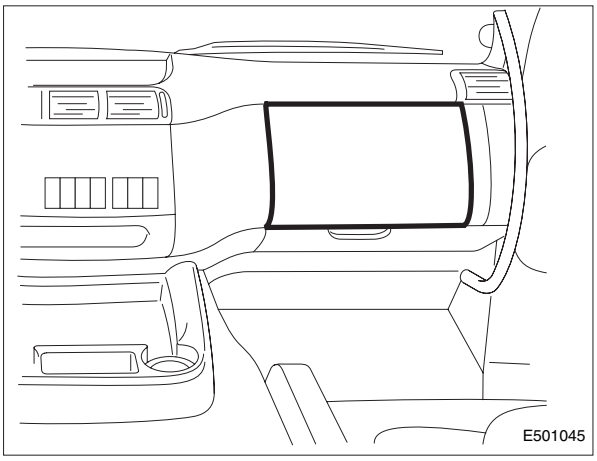

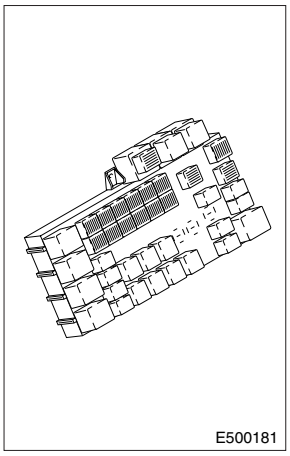

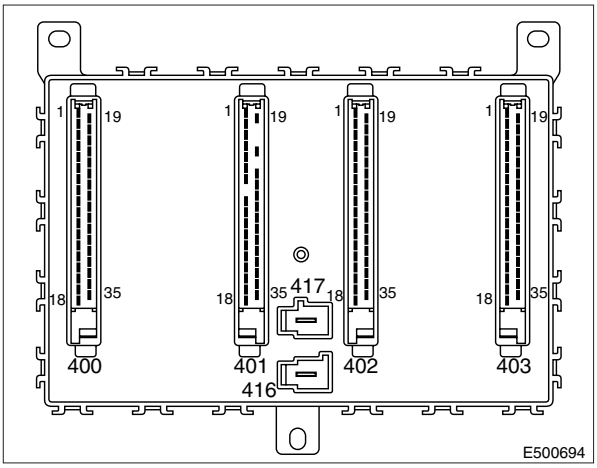

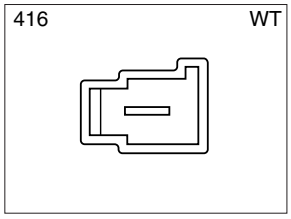

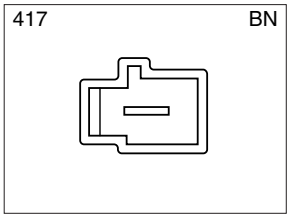

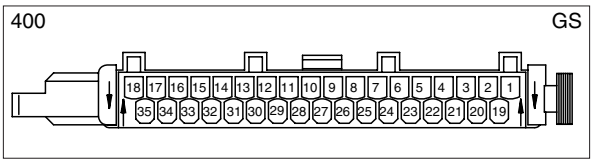

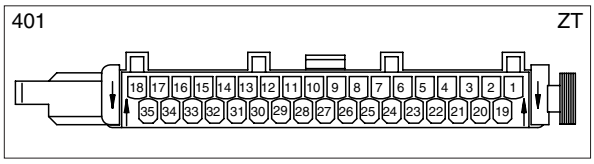

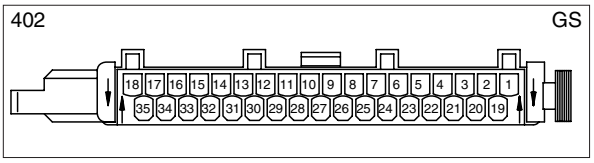

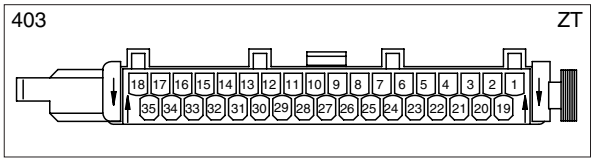

E501179

9

https://truckmanualshub.com/

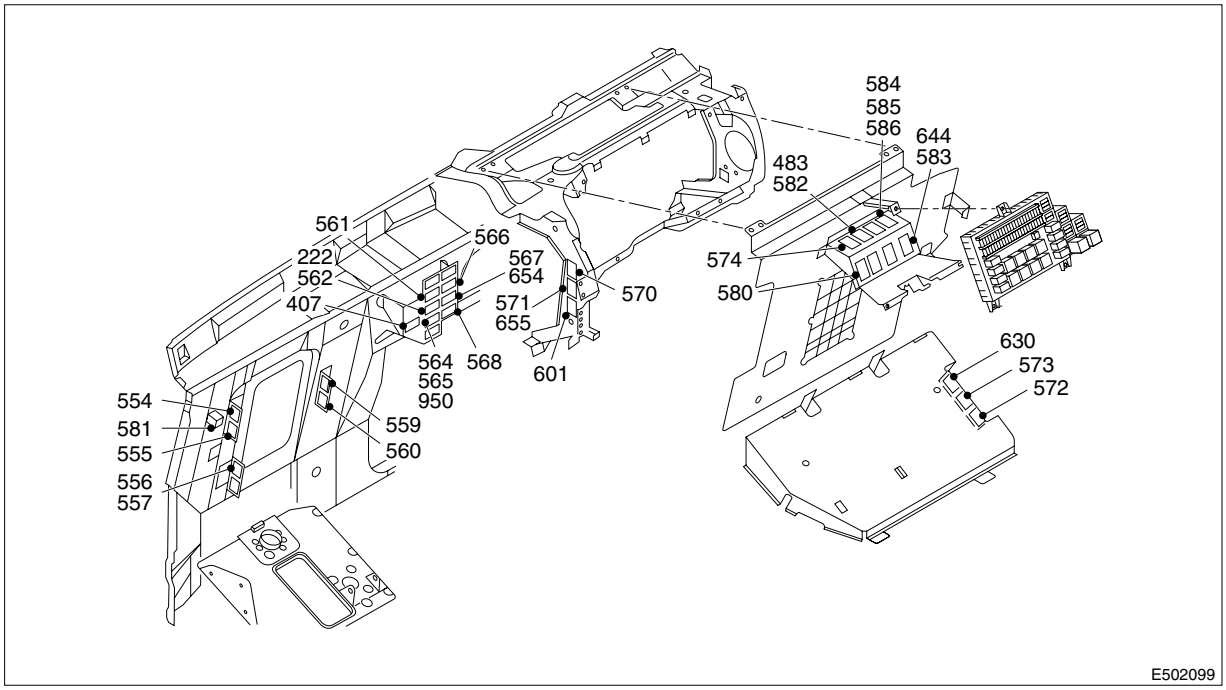

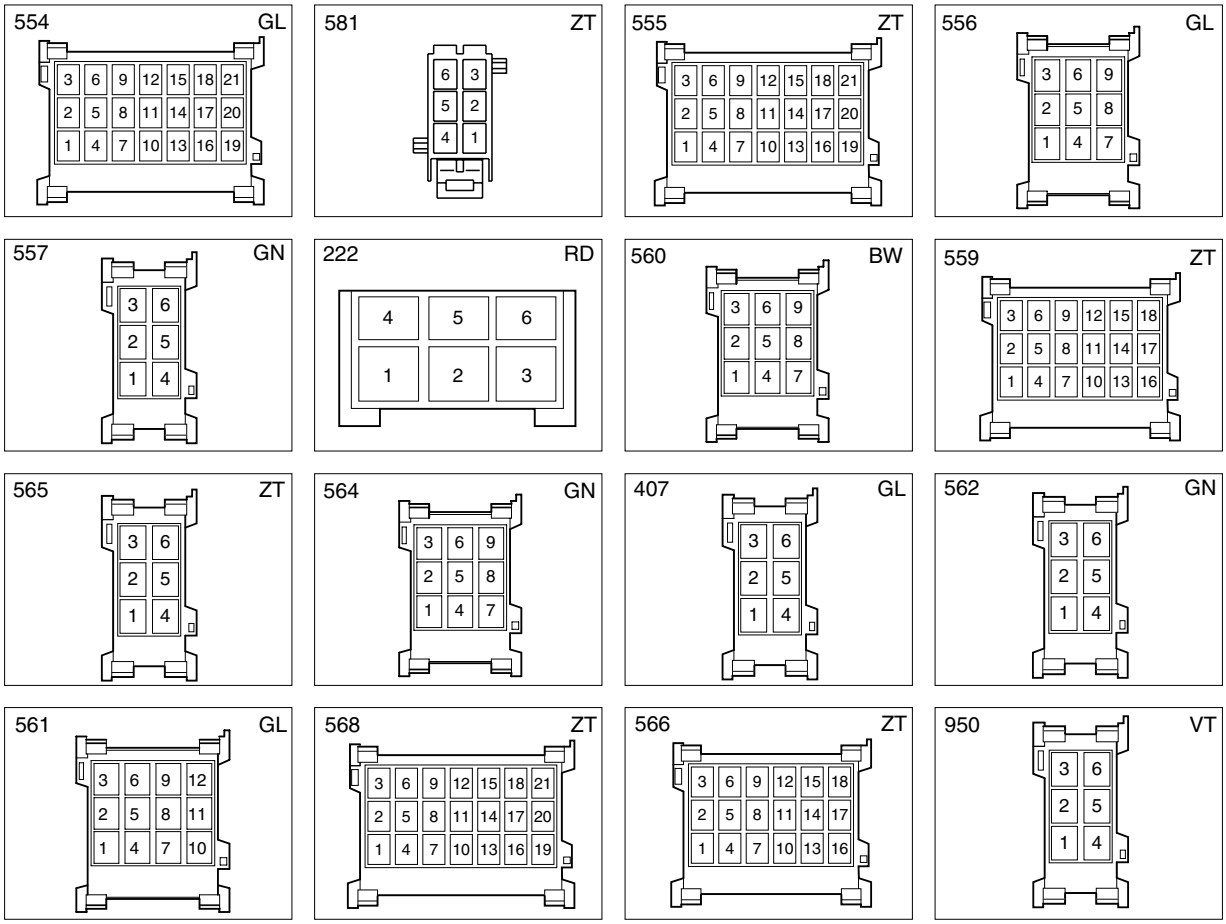

E502100

https://truckmanualshub.com/

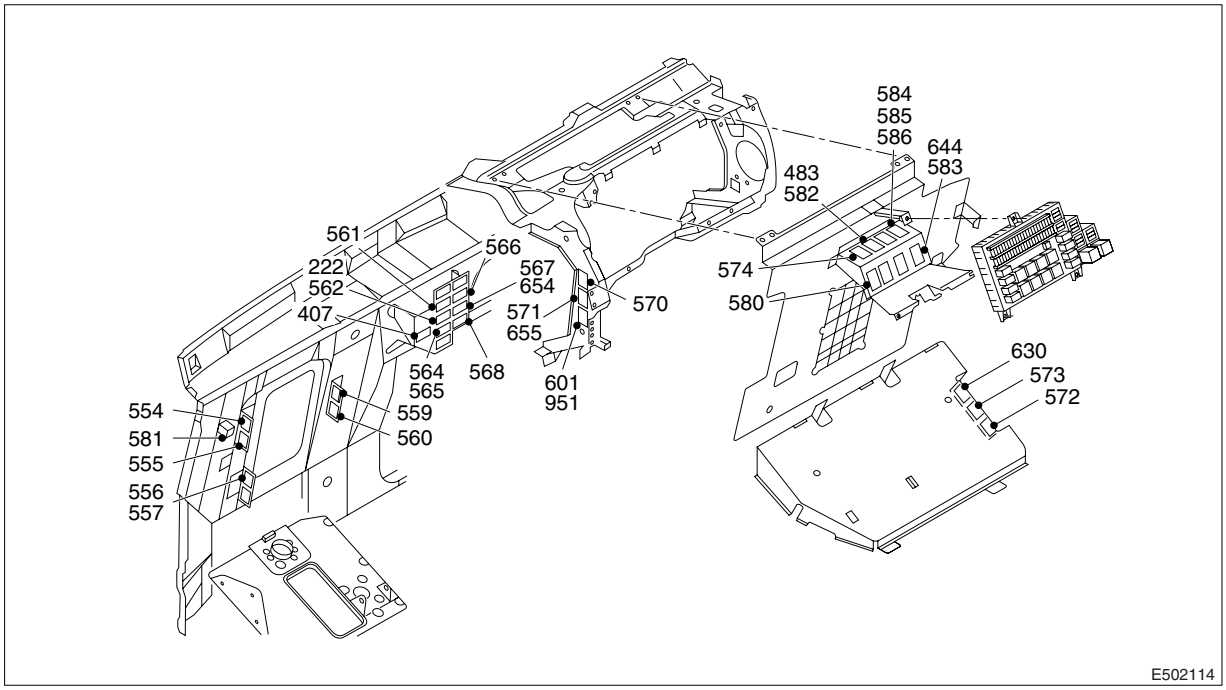

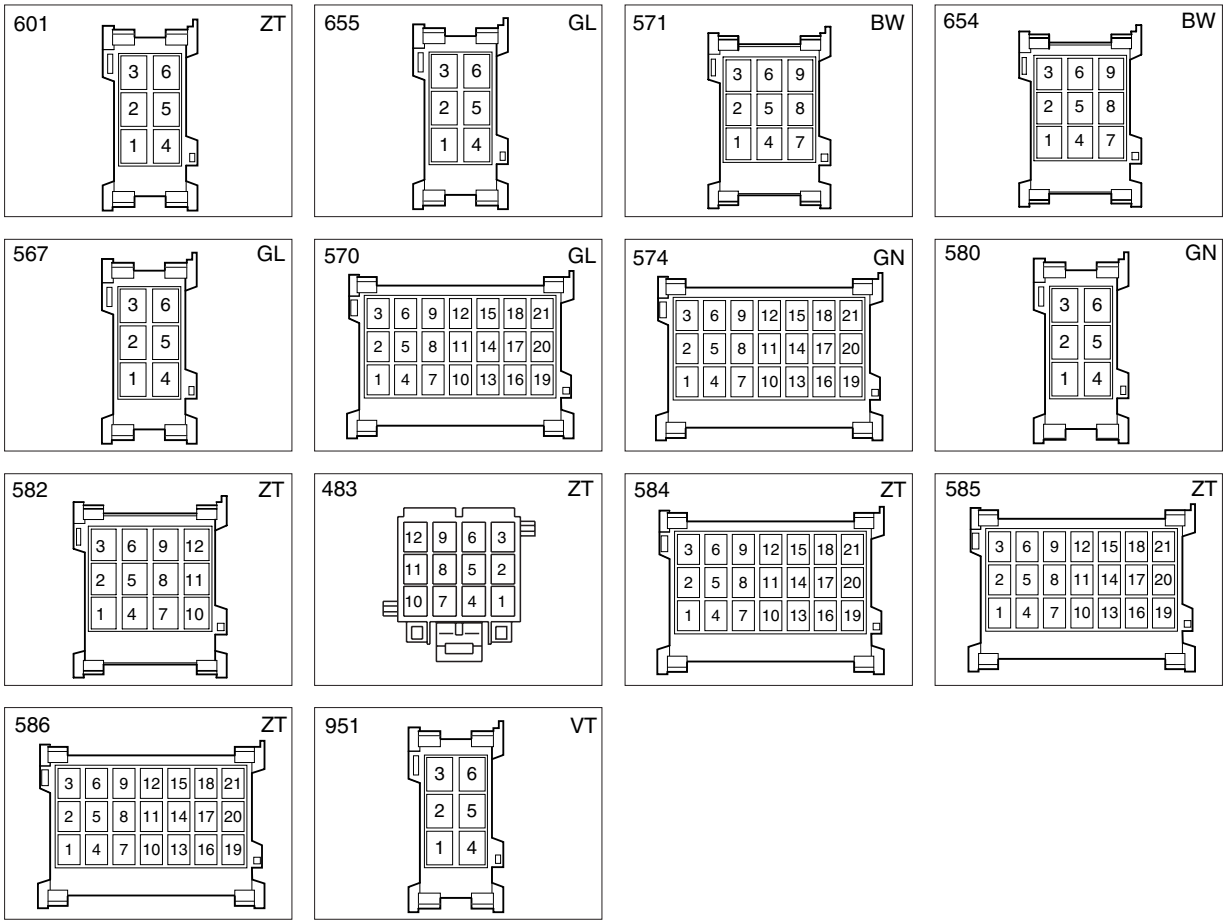

E502115

https://truckmanualshub.com/

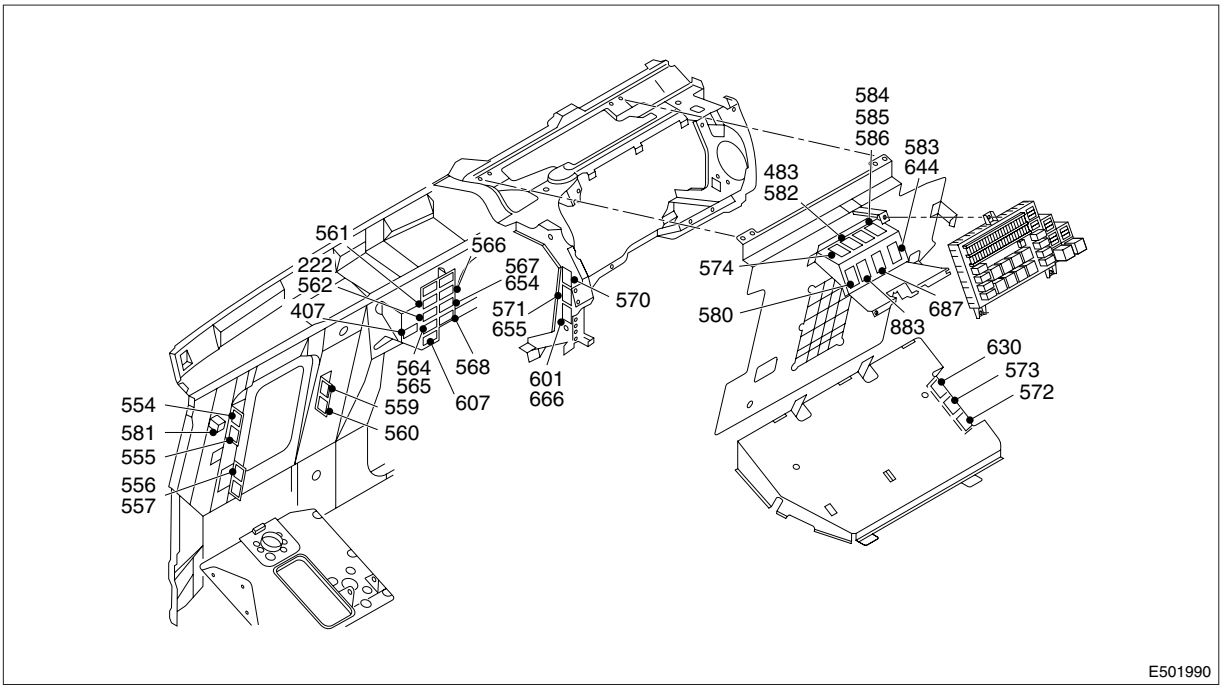

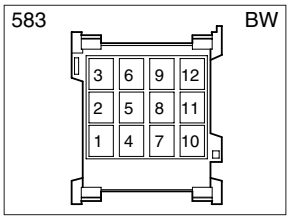

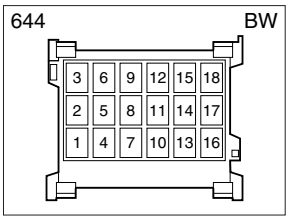

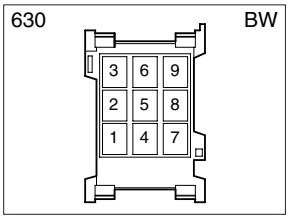

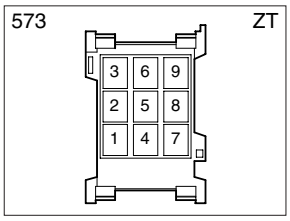

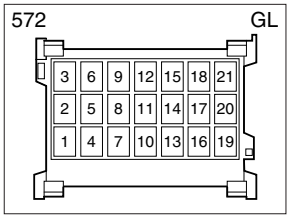

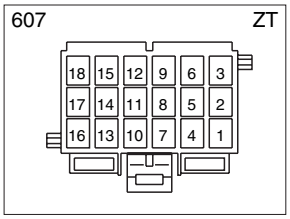

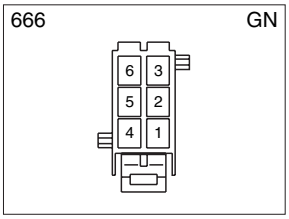

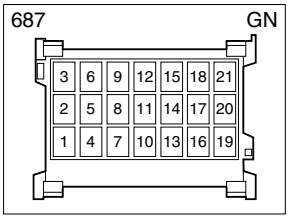

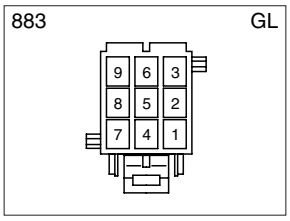

E501991

https://truckmanualshub.com/

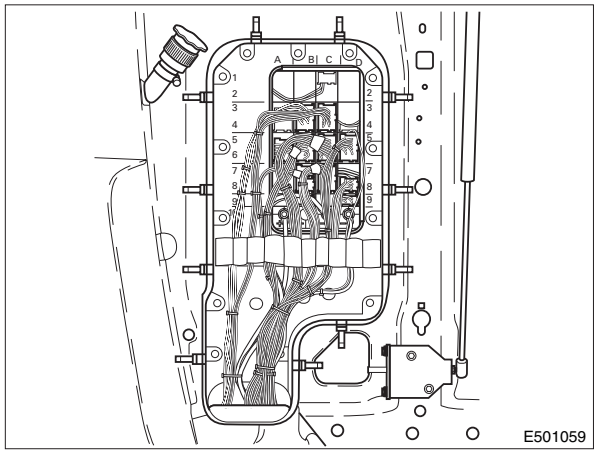

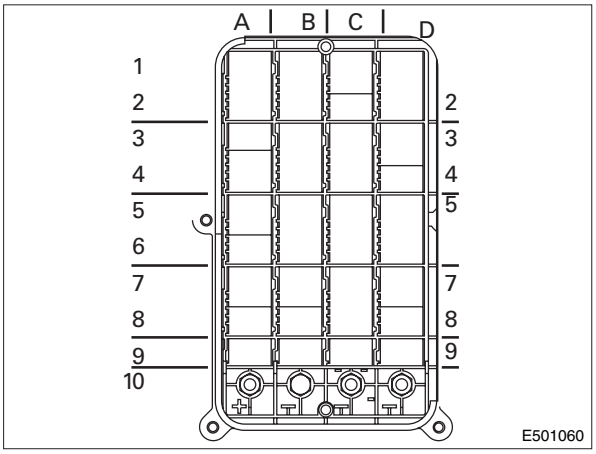

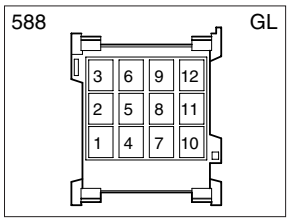

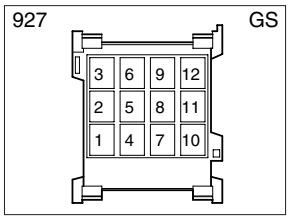

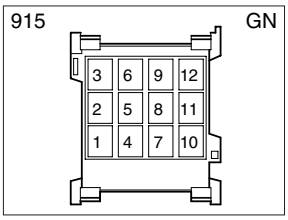

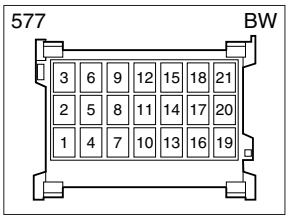

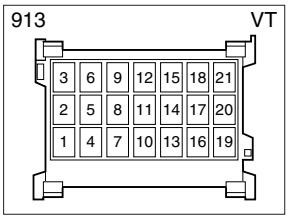

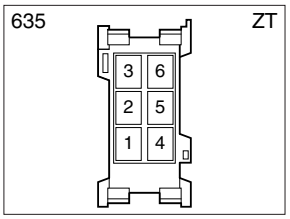

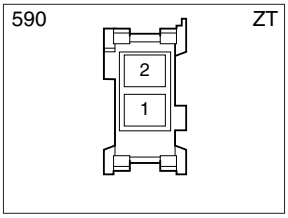

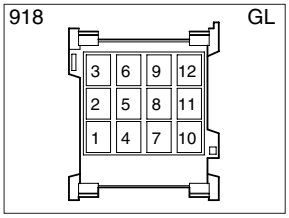

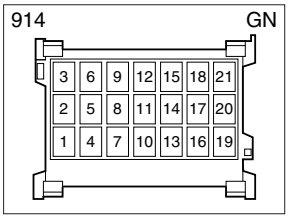

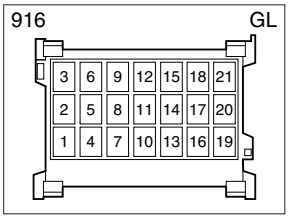

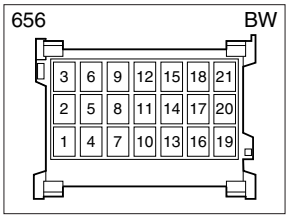

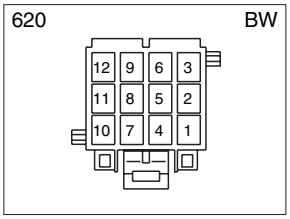

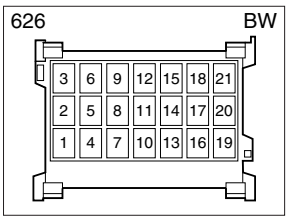

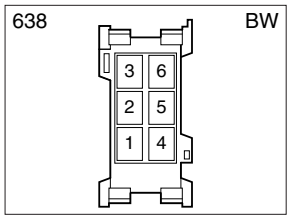

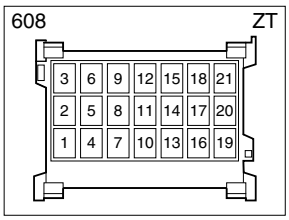

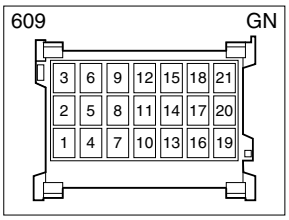

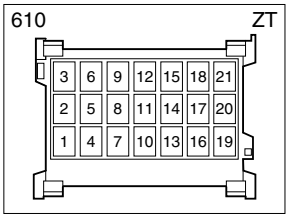

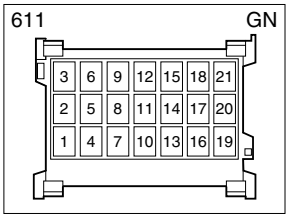

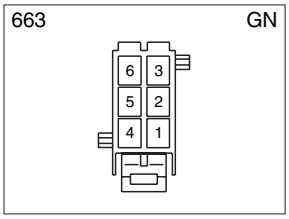

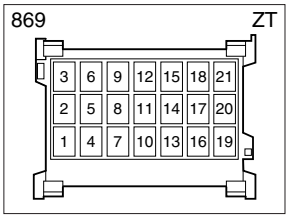

E501992

https://truckmanualshub.com/

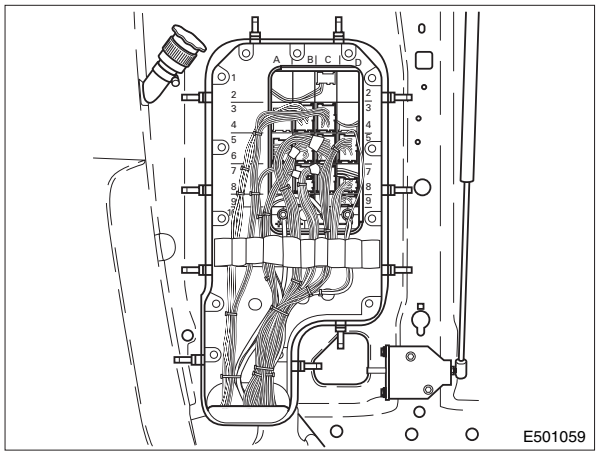

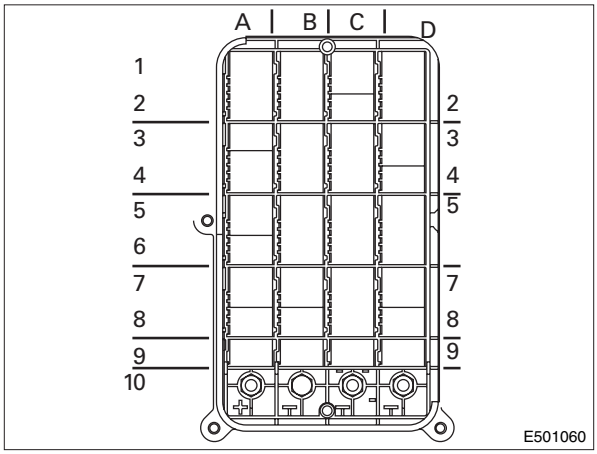

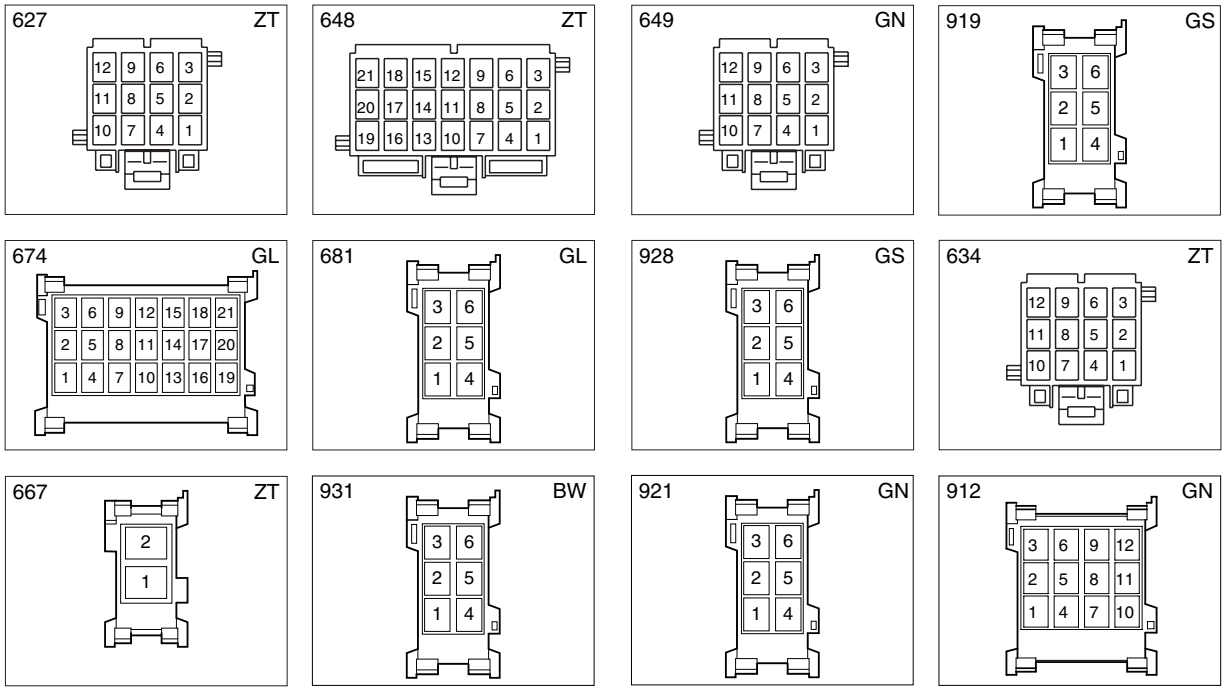

E501993

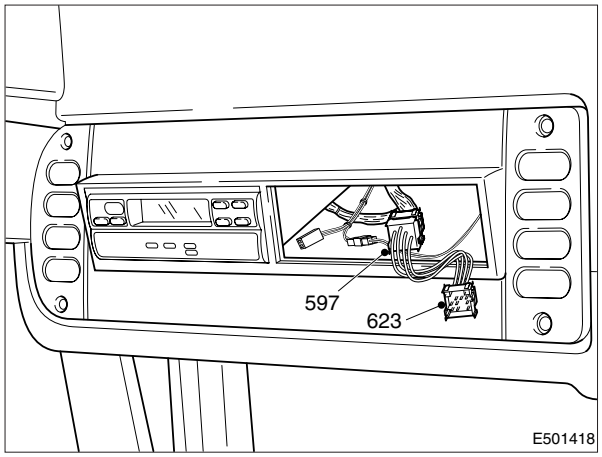

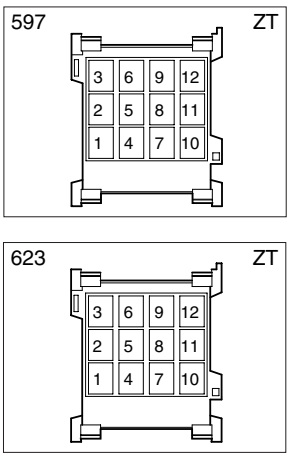

E501419

https://truckmanualshub.com/

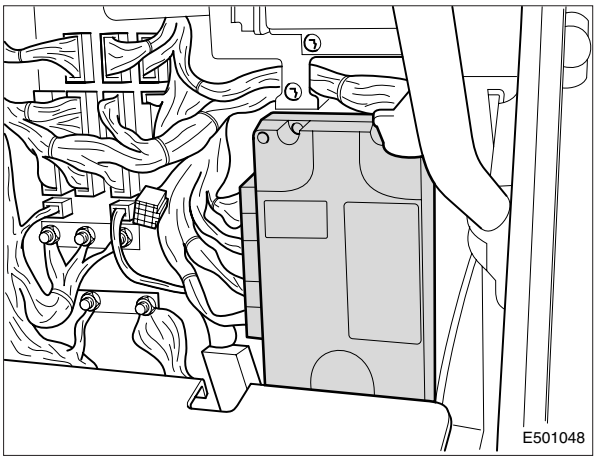

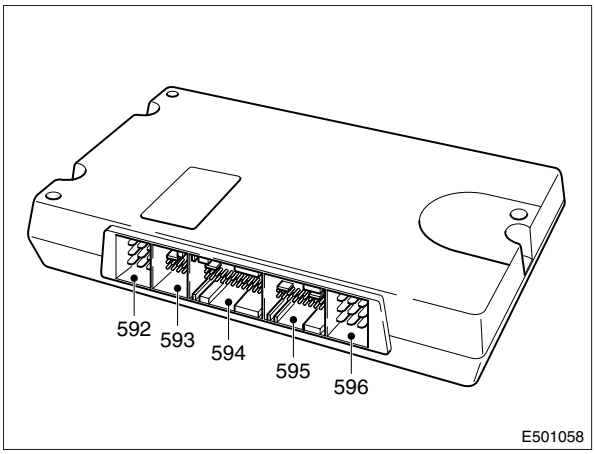

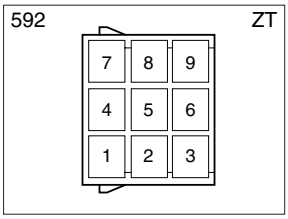

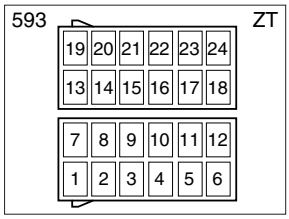

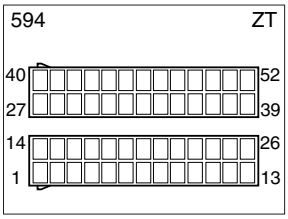

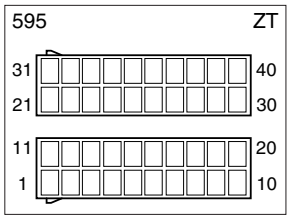

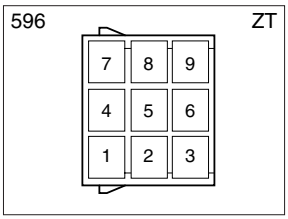

E501187

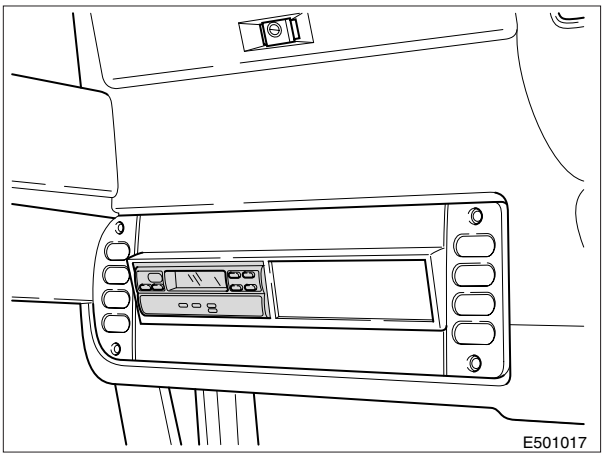

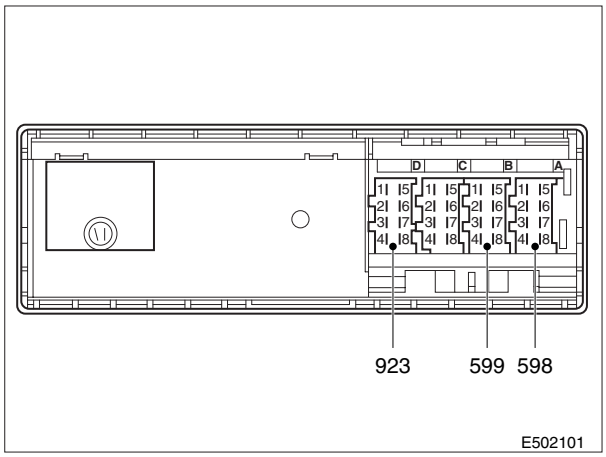

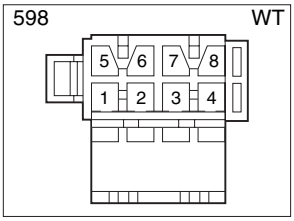

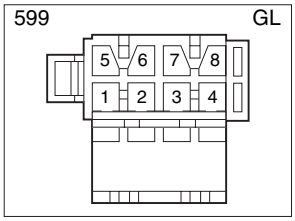

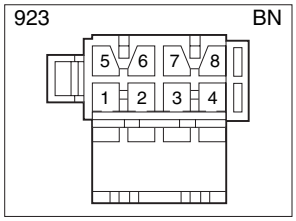

E502102

https://truckmanualshub.com/

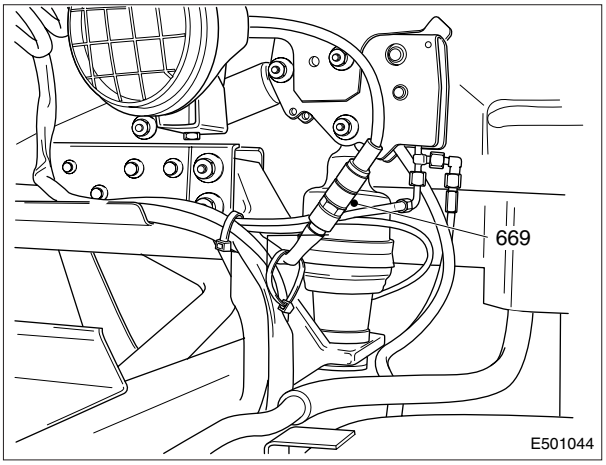

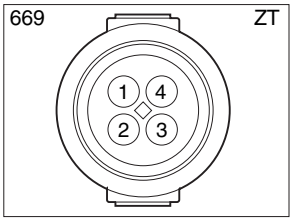

E501175

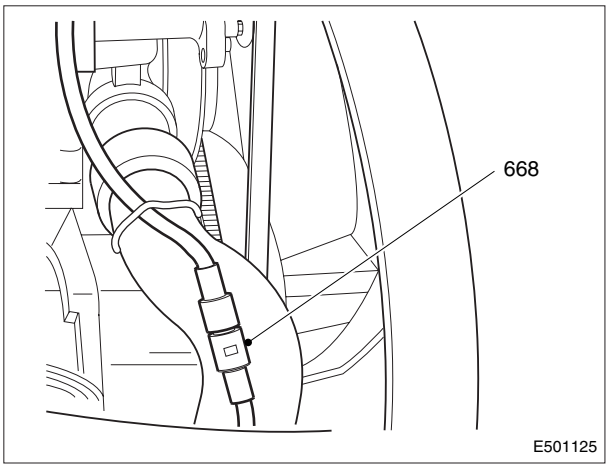

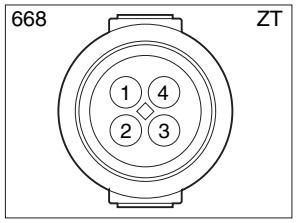

E501204

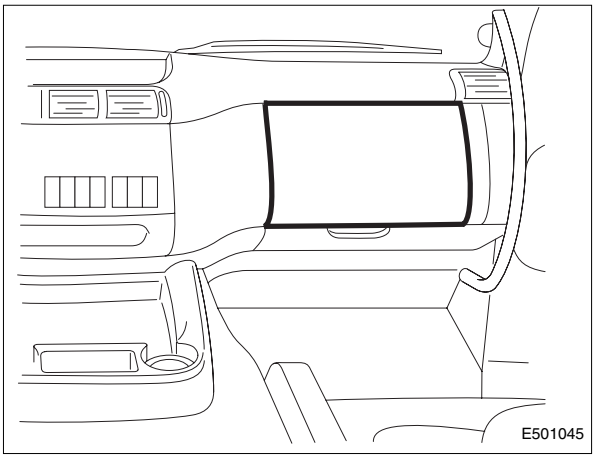

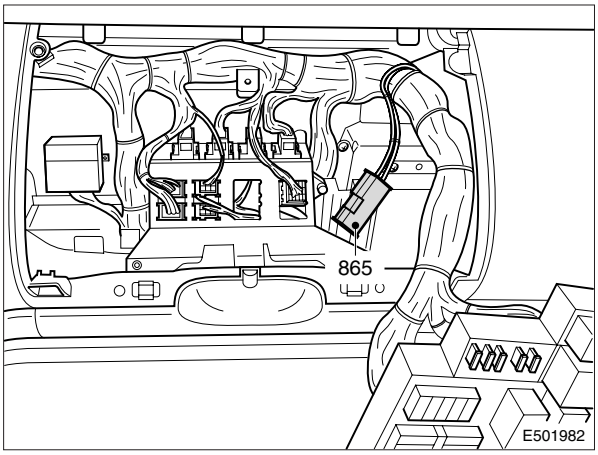

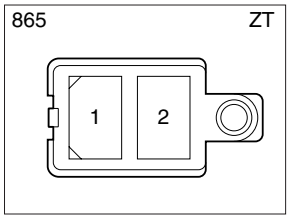

E501983

9

https://truckmanualshub.com/

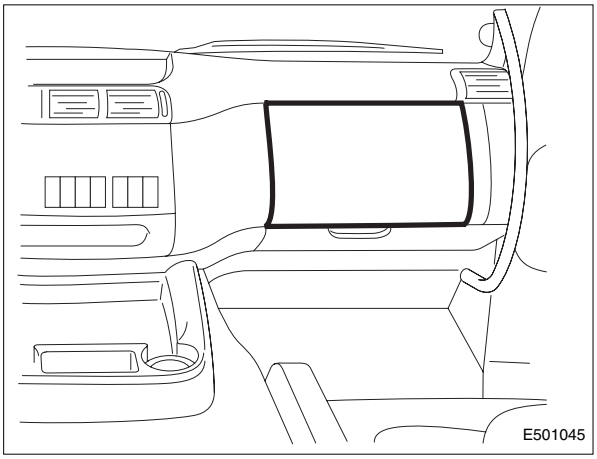

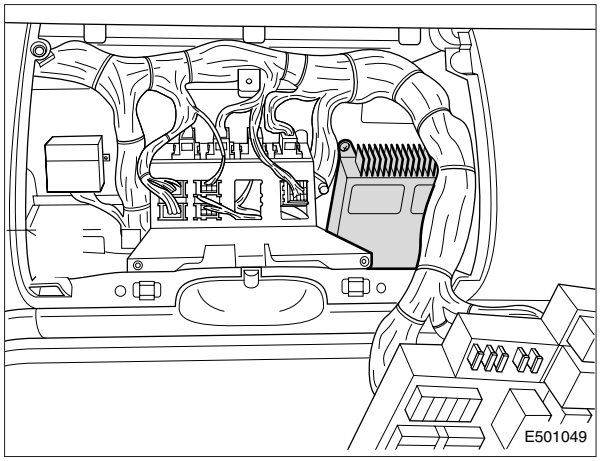

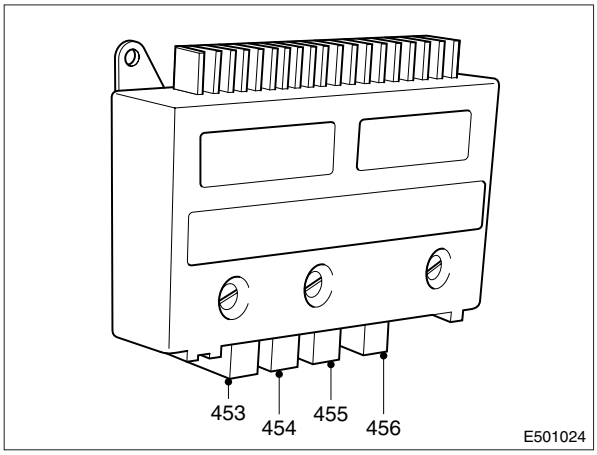

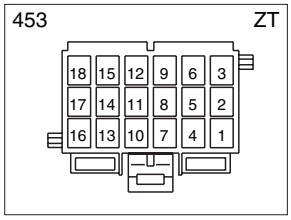

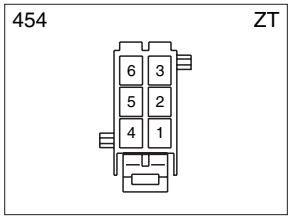

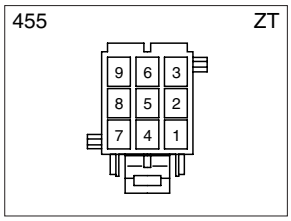

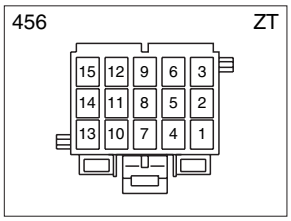

E501190

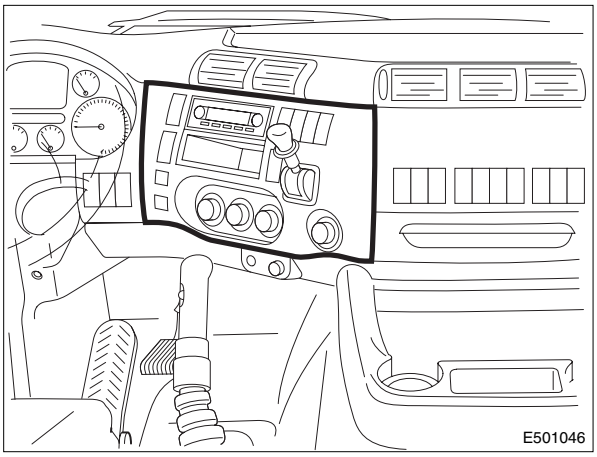

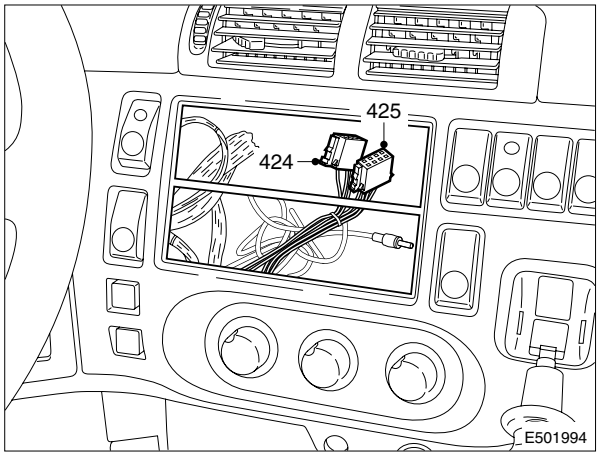

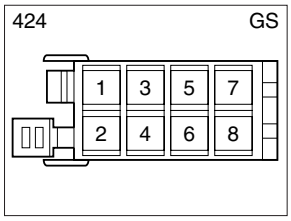

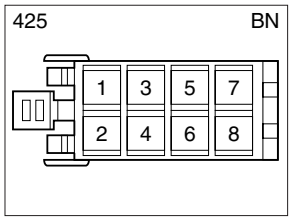

E501995

https://truckmanualshub.com/

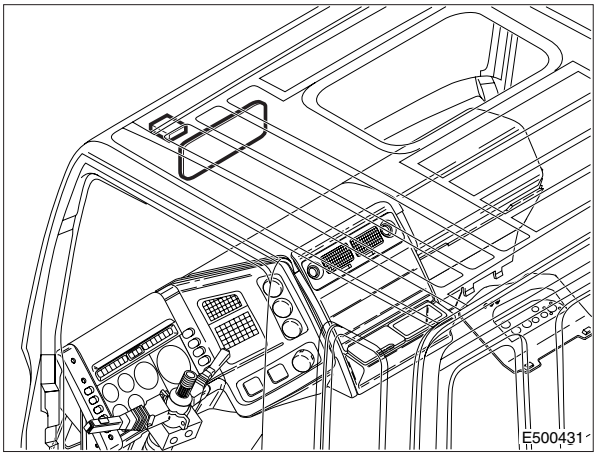

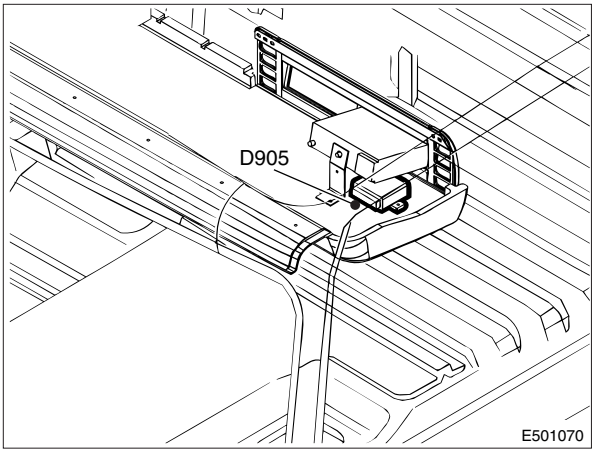

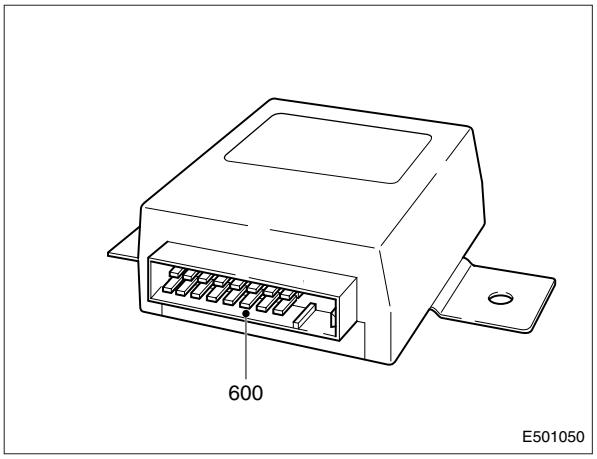

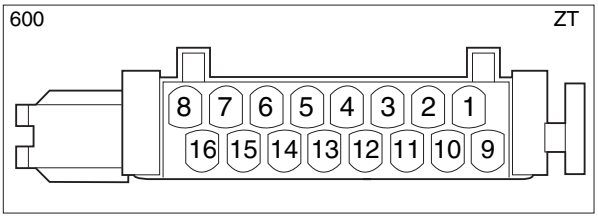

E501186

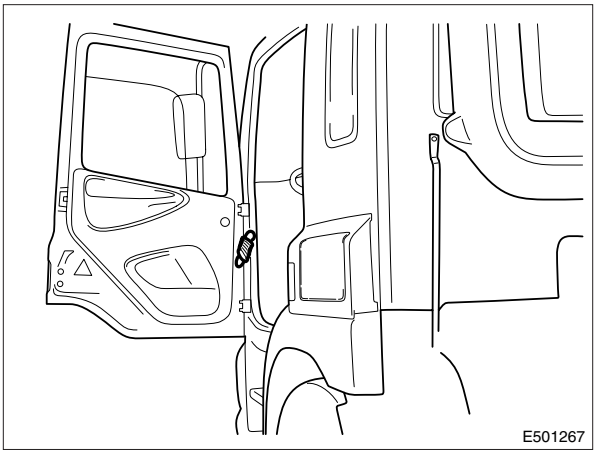

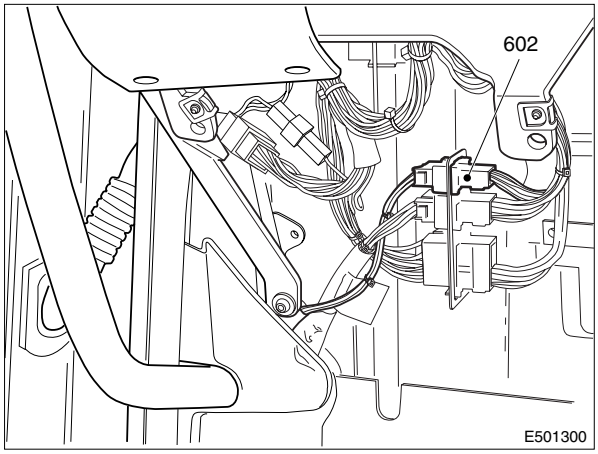

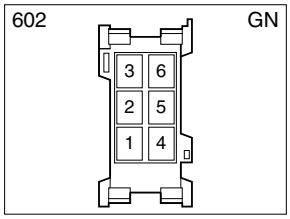

E501431

https://truckmanualshub.com/

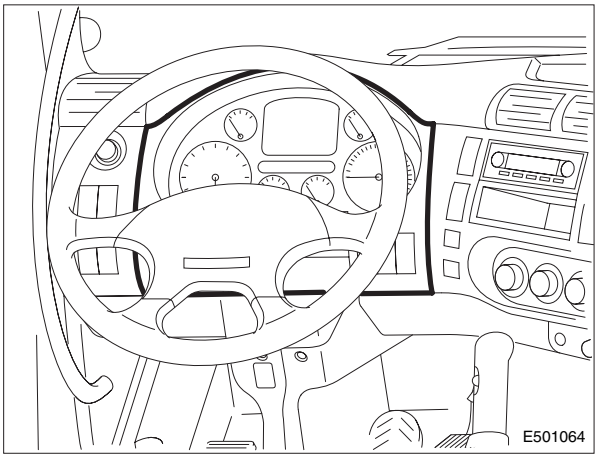

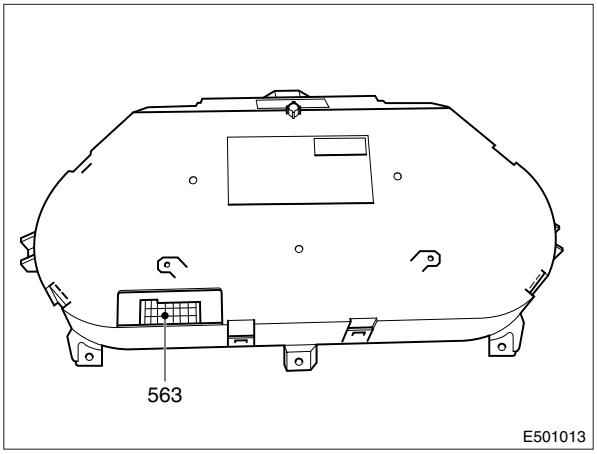

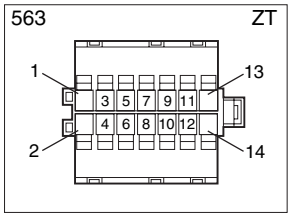

E501181

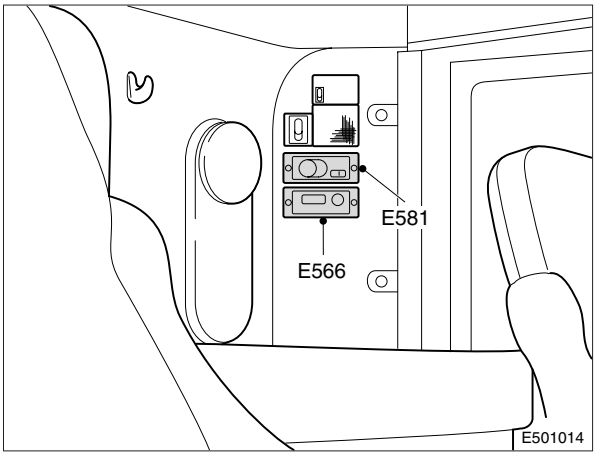

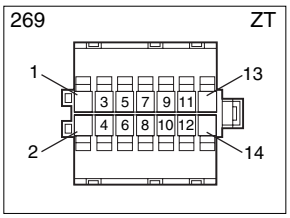

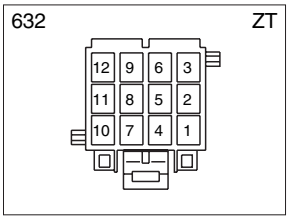

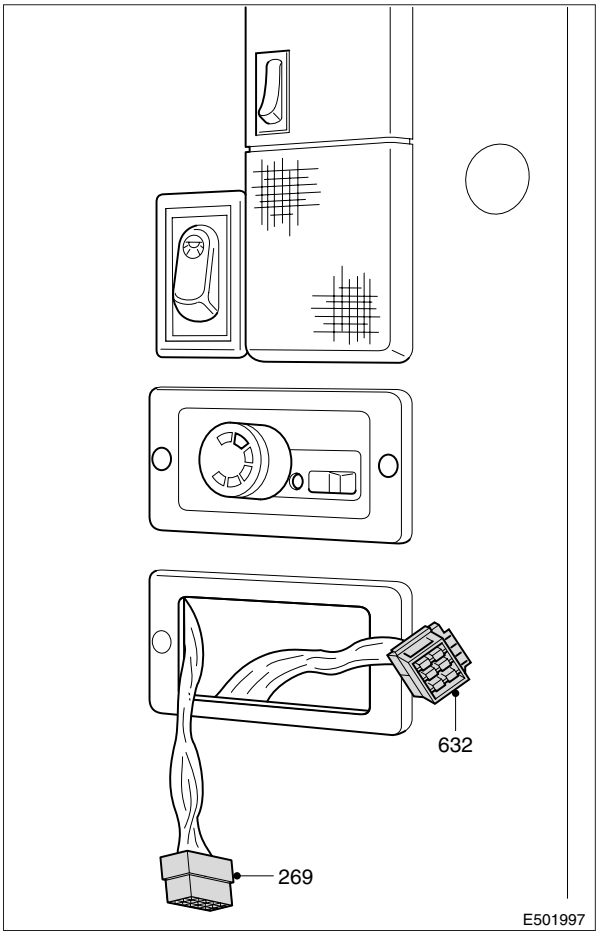

E501996

9

https://truckmanualshub.com/

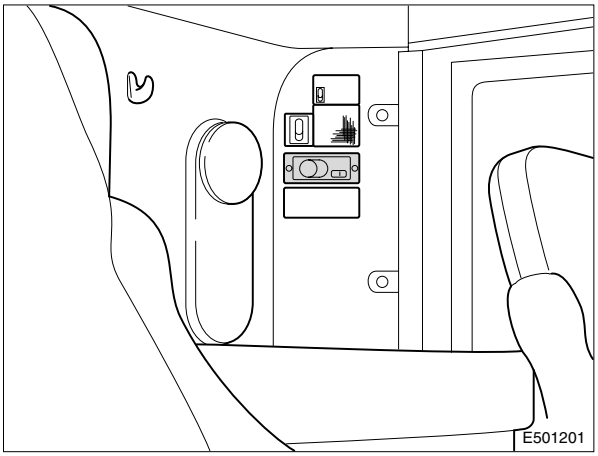

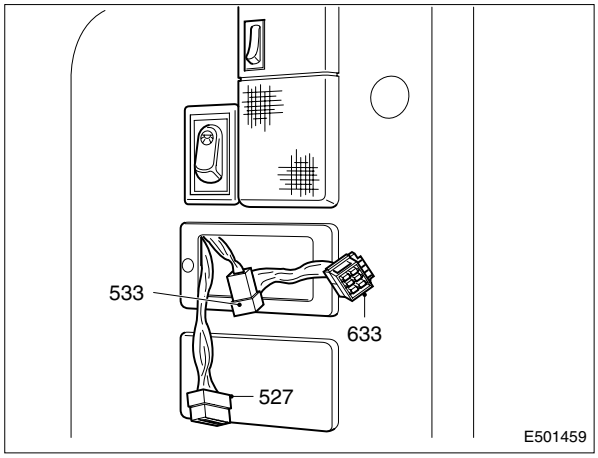

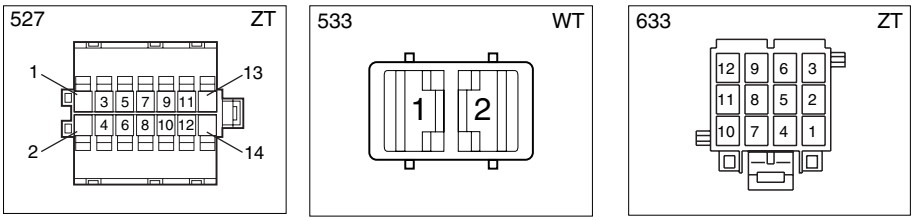

E501460

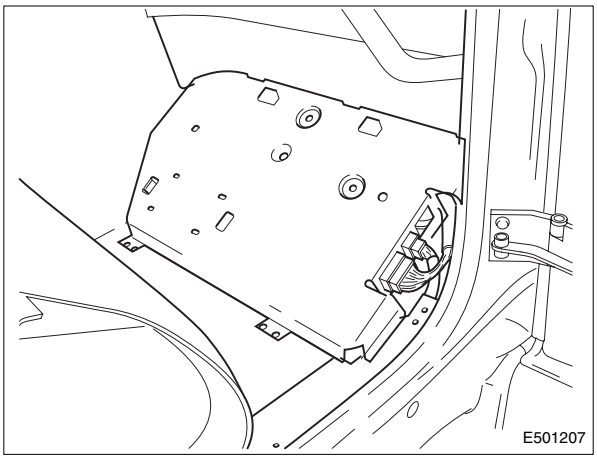

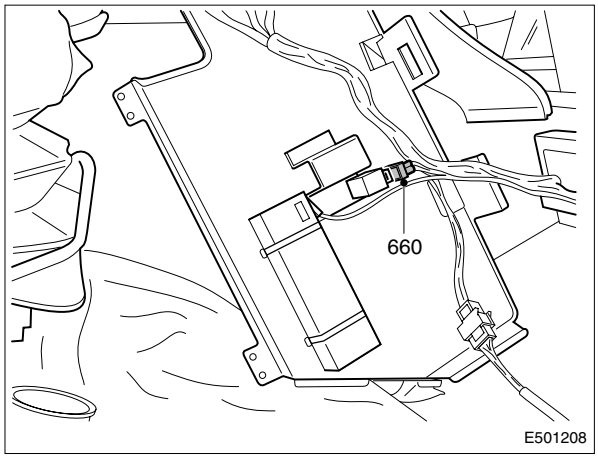

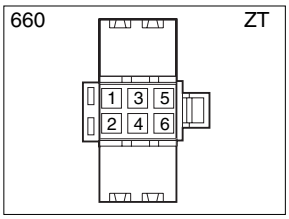

E501209

9

https://truckmanualshub.com/

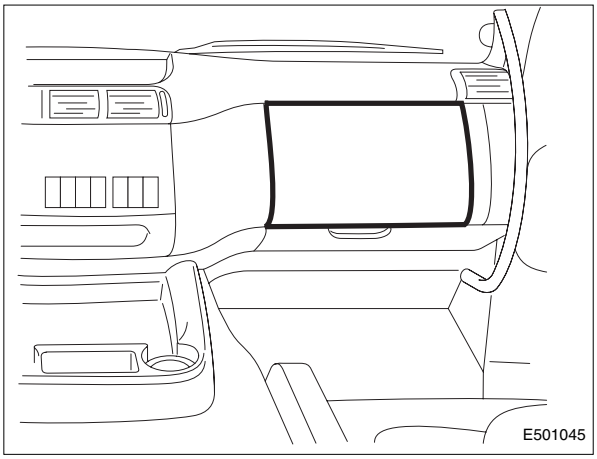

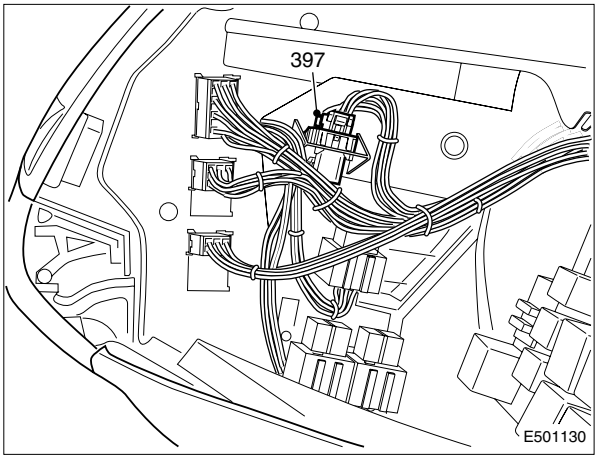

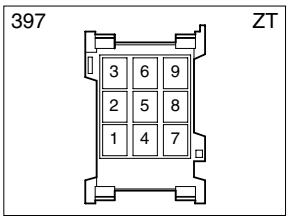

E501205

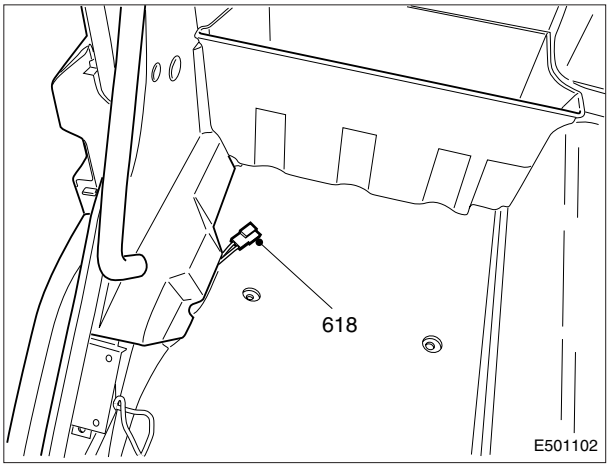

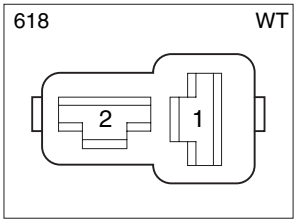

E501203

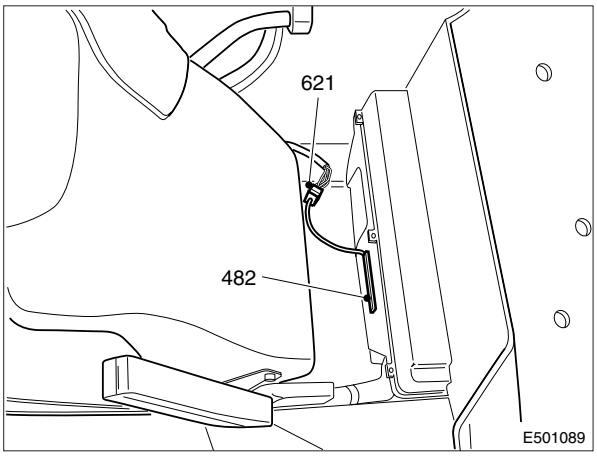

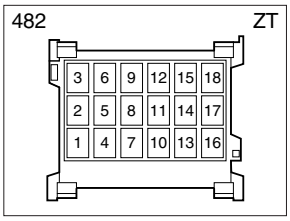

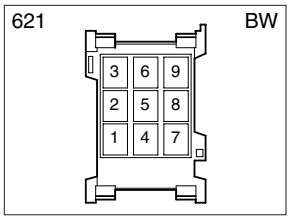

E501195

9

https://truckmanualshub.com/

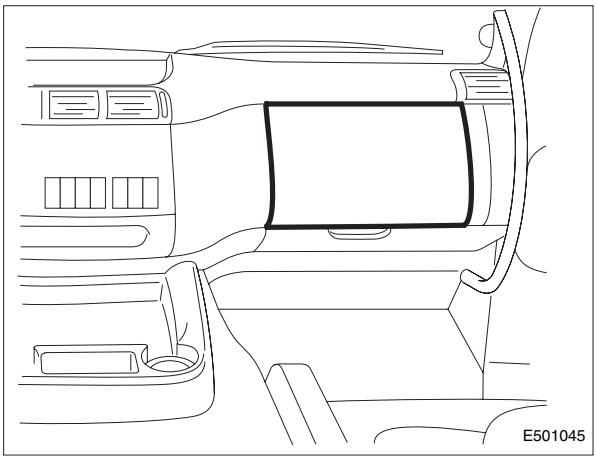

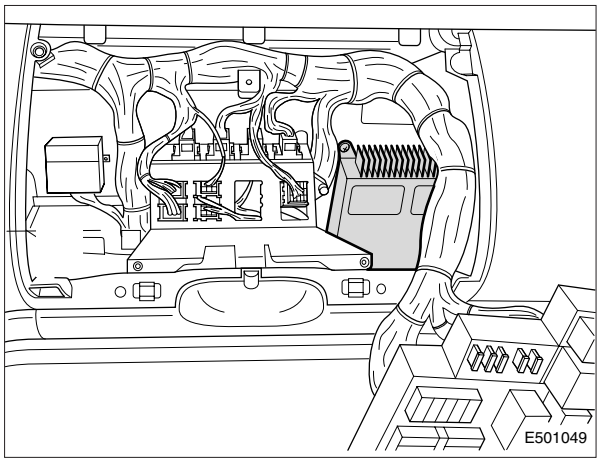

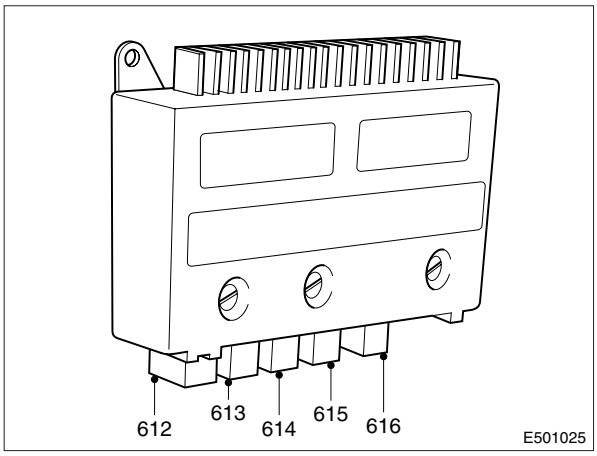

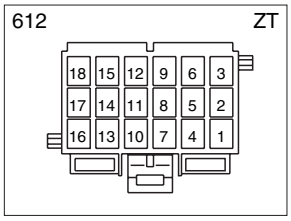

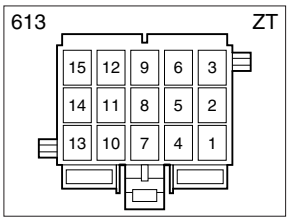

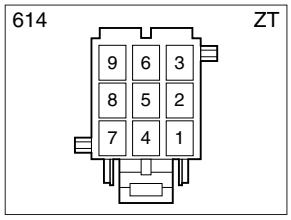

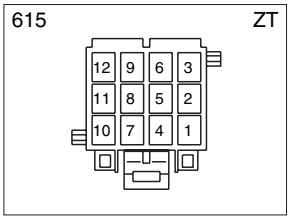

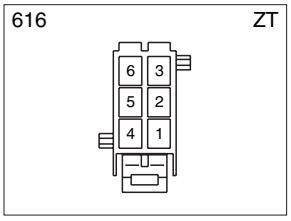

E501194

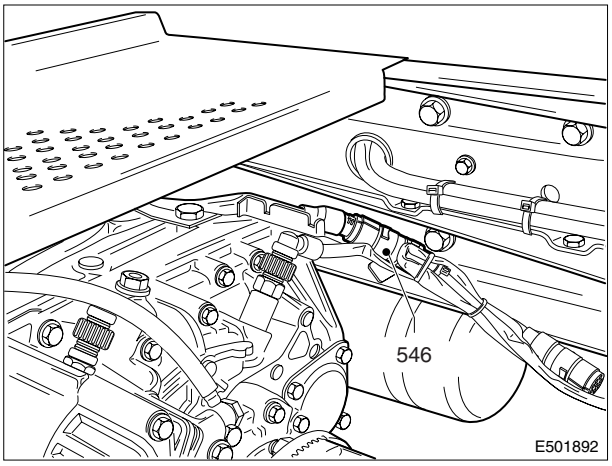

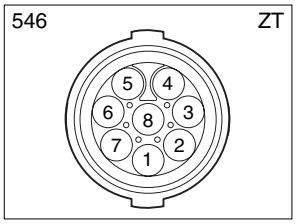

E501893

https://truckmanualshub.com/

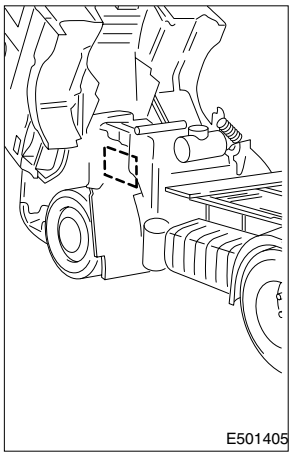

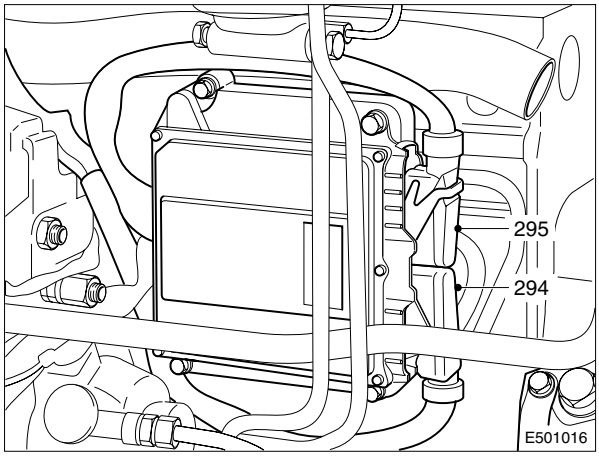

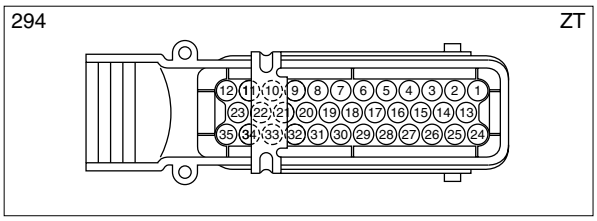

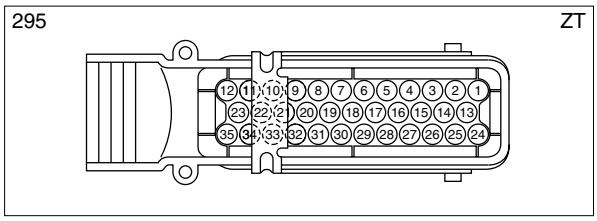

E501406

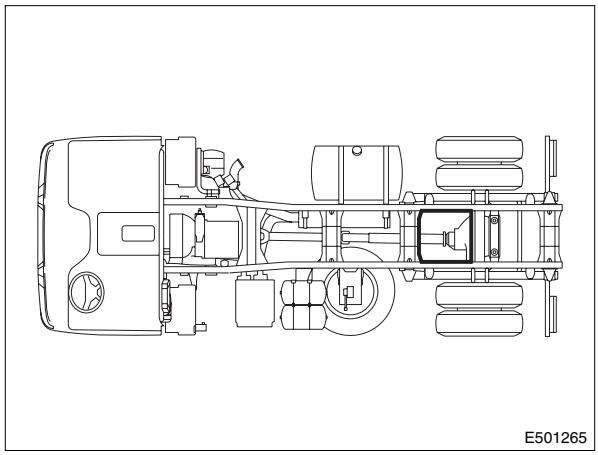

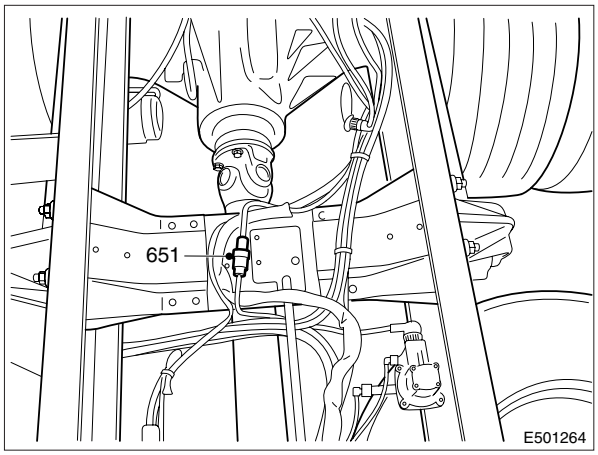

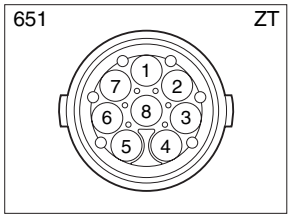

E501282

9

https://truckmanualshub.com/

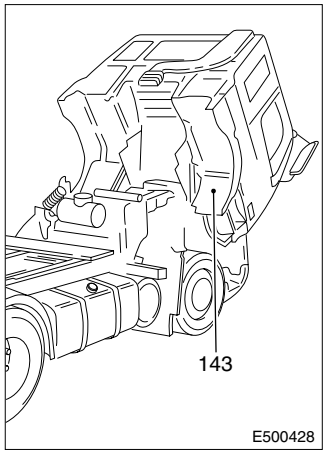

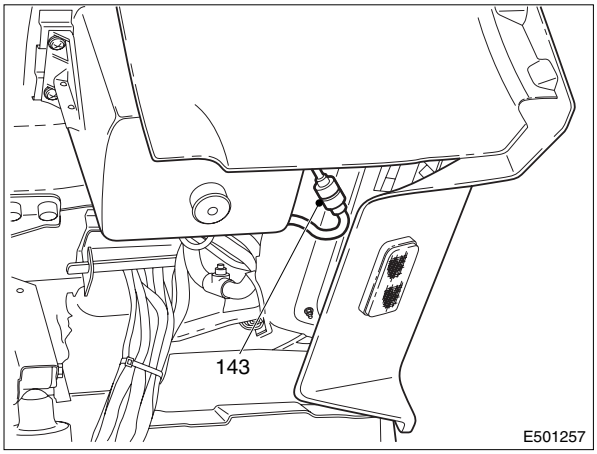

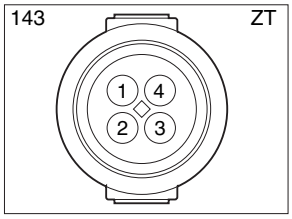

E501273

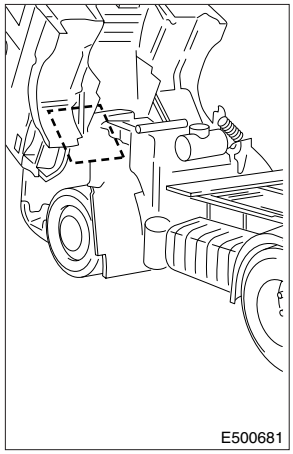

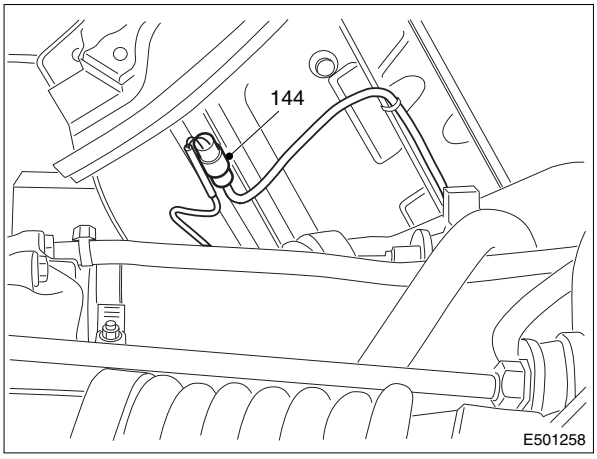

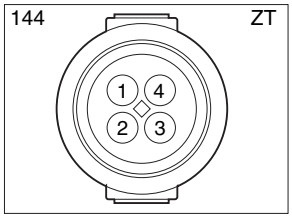

E501269

https://truckmanualshub.com/

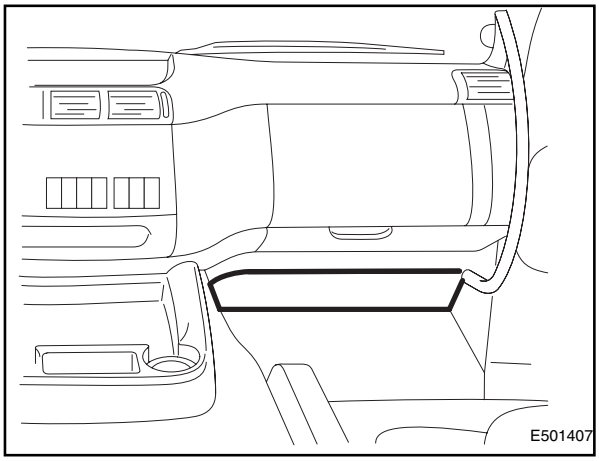

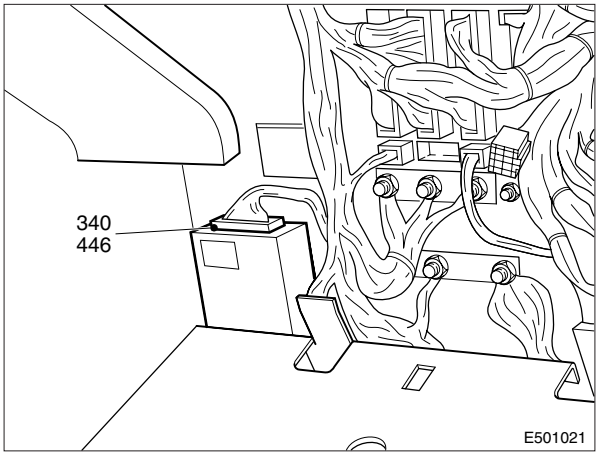

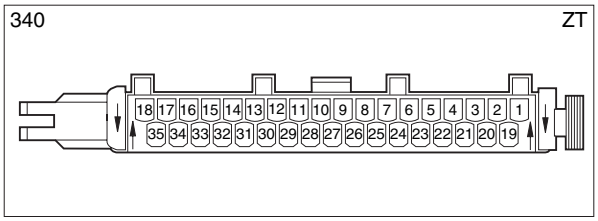

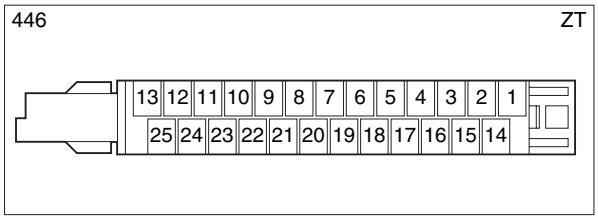

E501408

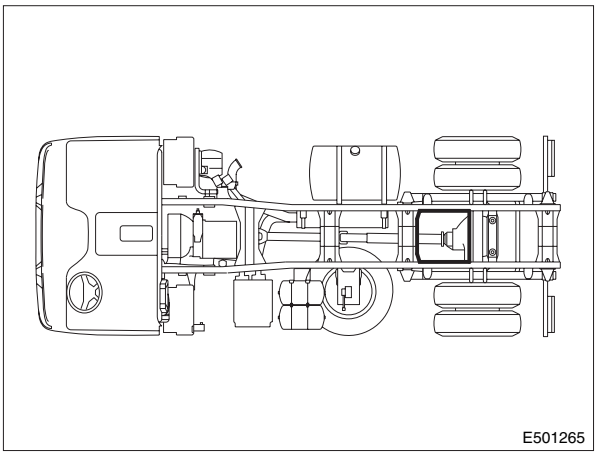

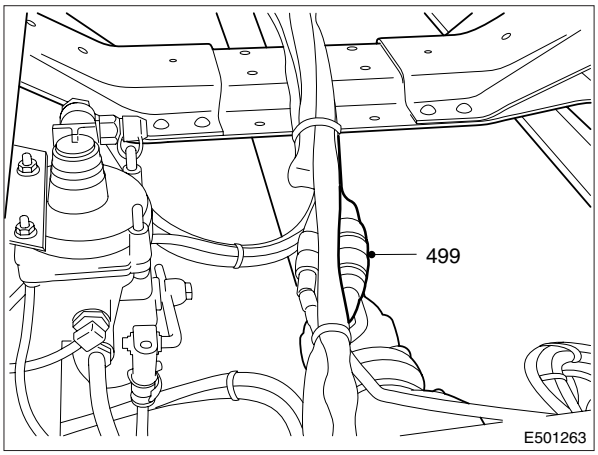

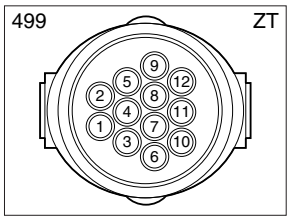

E501266

9

https://truckmanualshub.com/

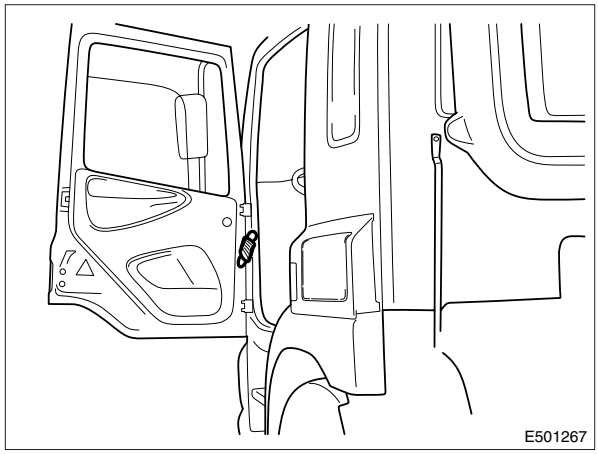

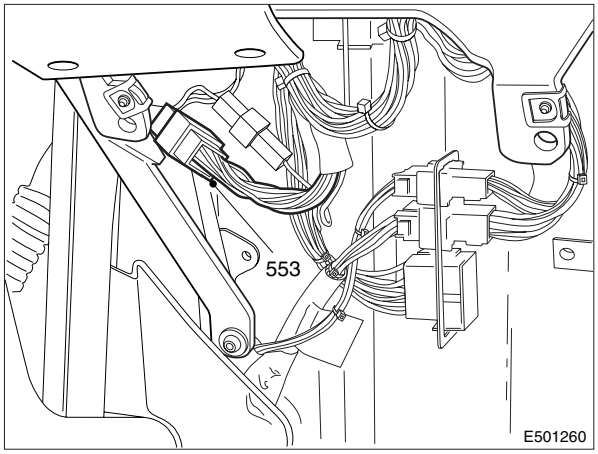

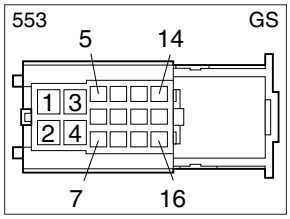

E501281

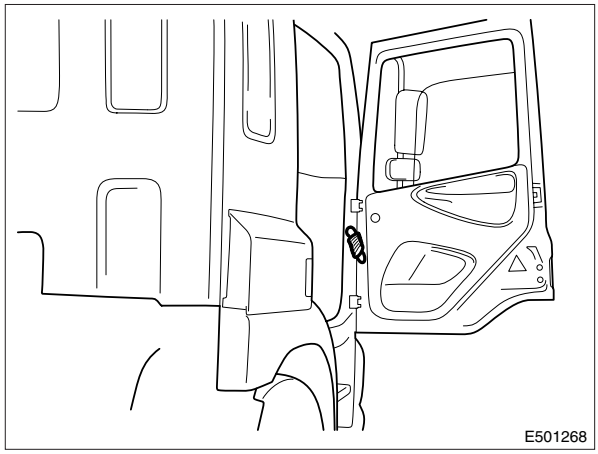

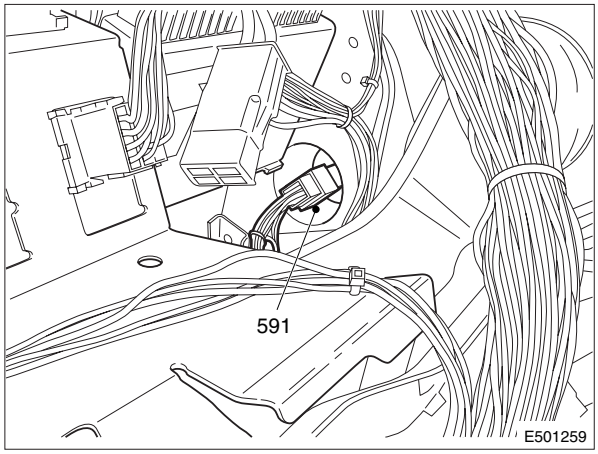

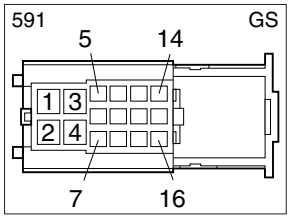

E501280

9

https://truckmanualshub.com/

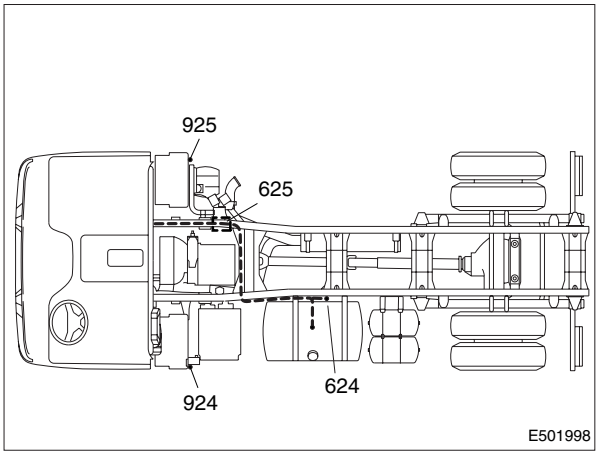

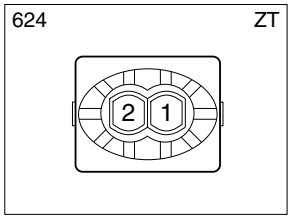

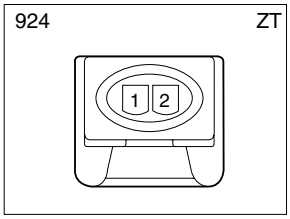

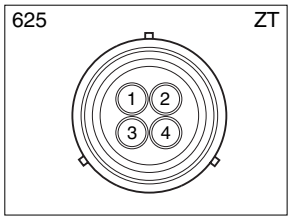

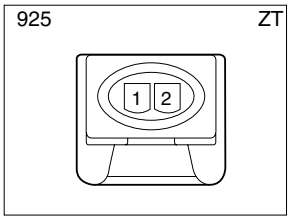

E501999

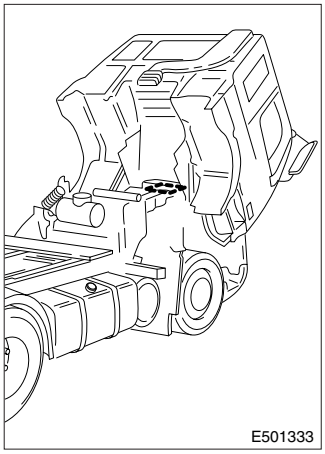

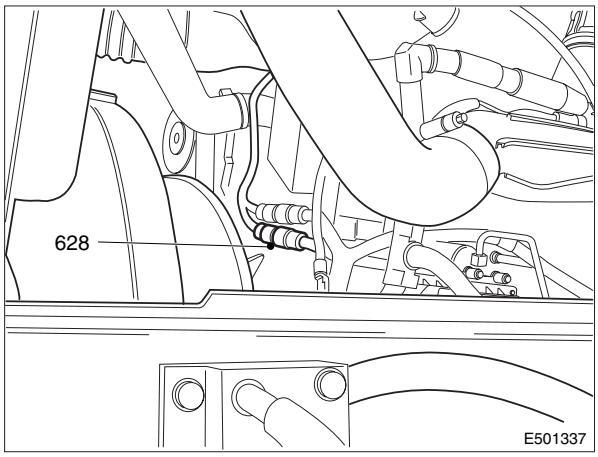

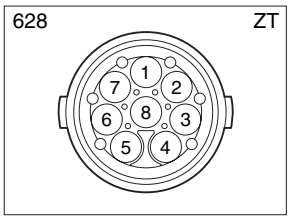

E501338

9

https://truckmanualshub.com/

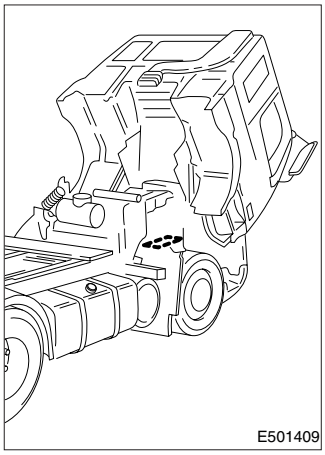

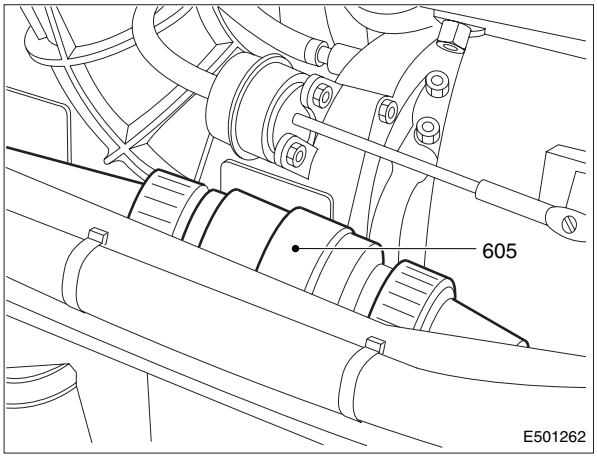

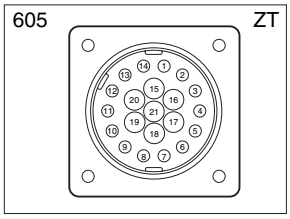

E501430

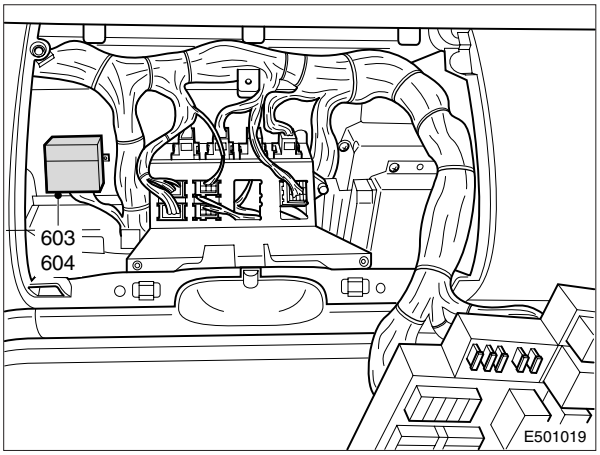

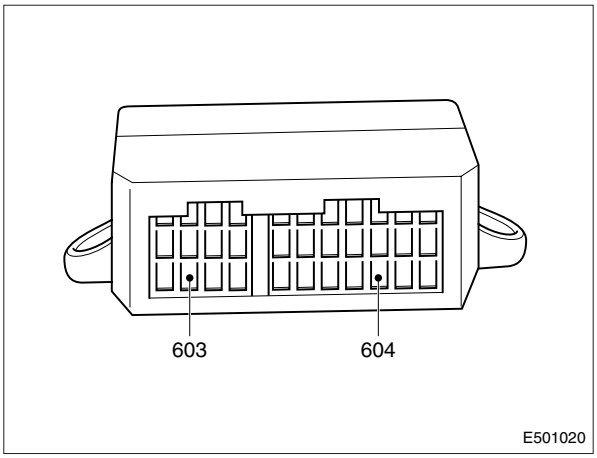

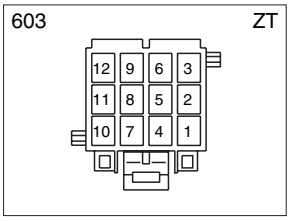

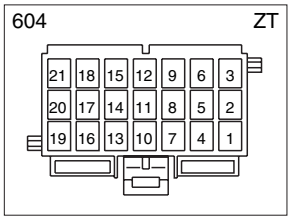

E501192

https://truckmanualshub.com/

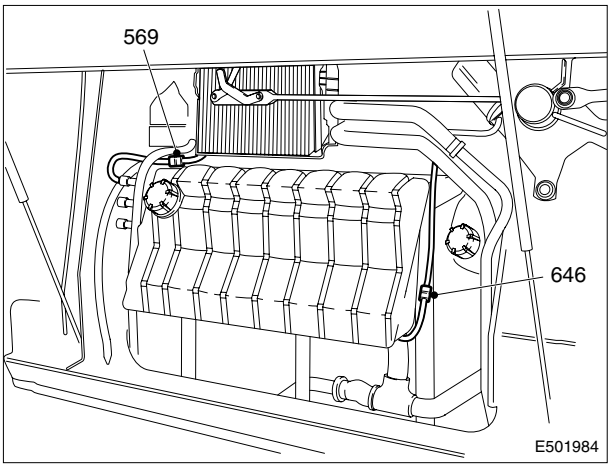

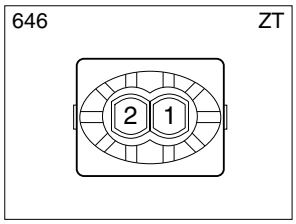

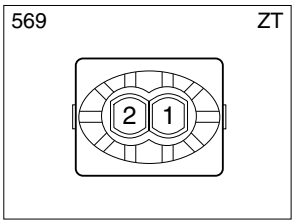

E501985

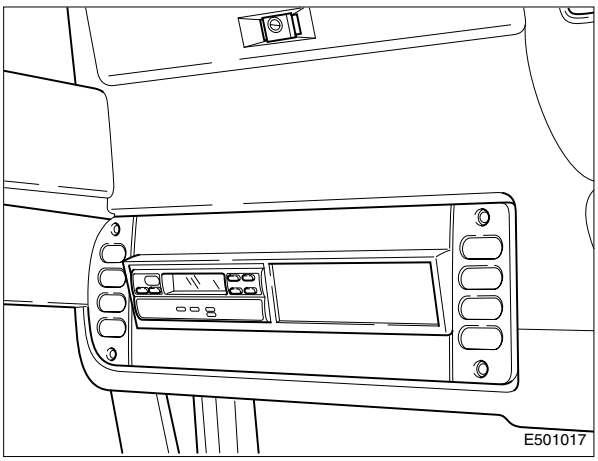

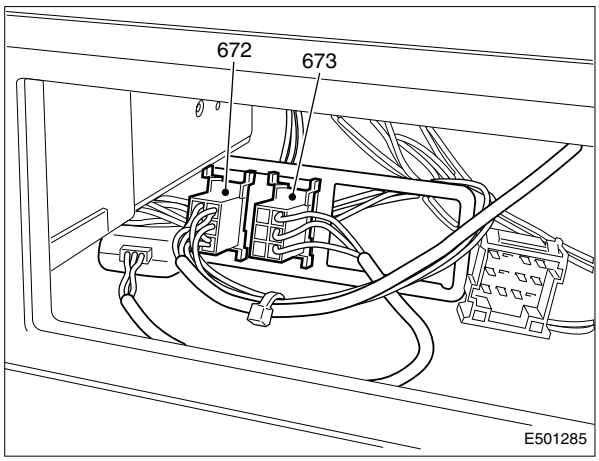

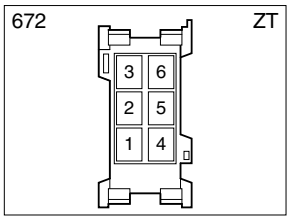

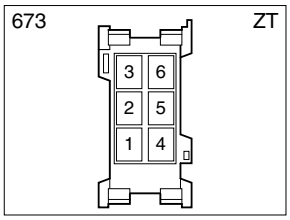

E501184

9

https://truckmanualshub.com/

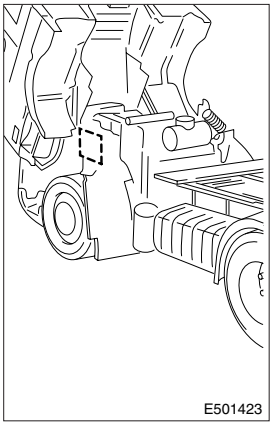

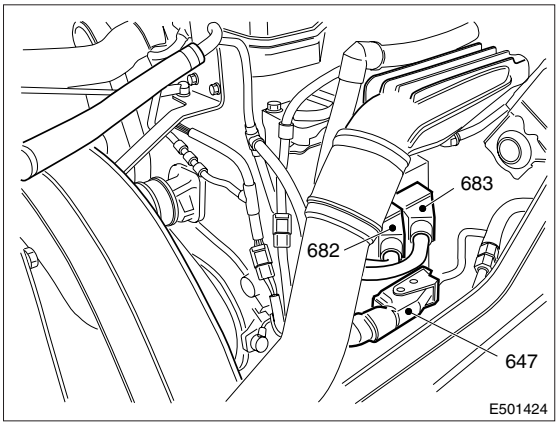

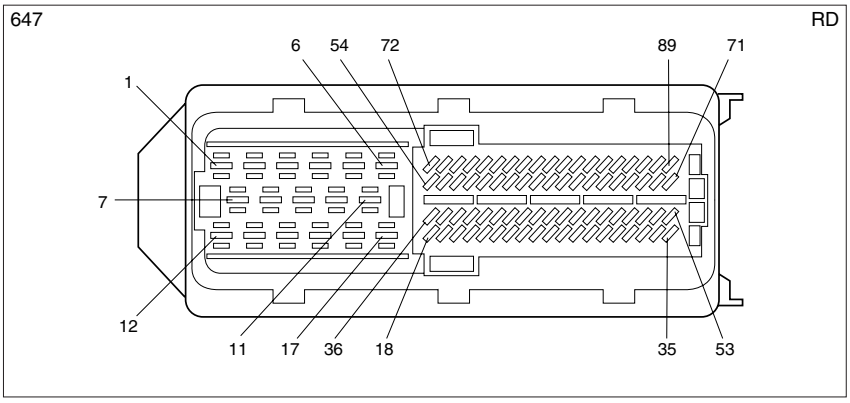

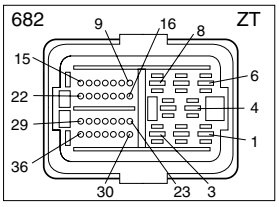

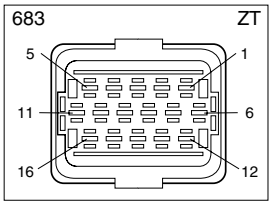

E501425

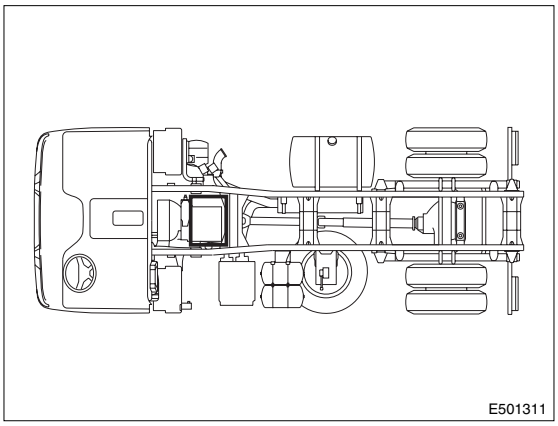

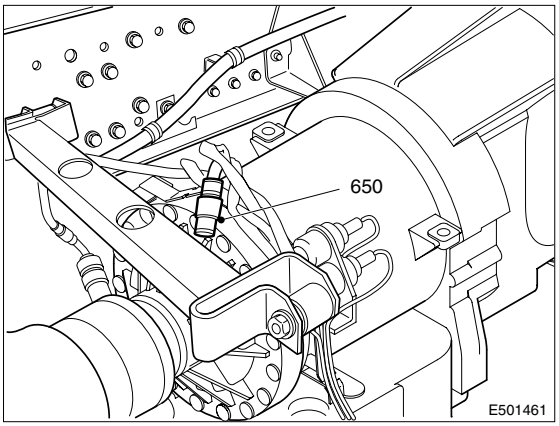

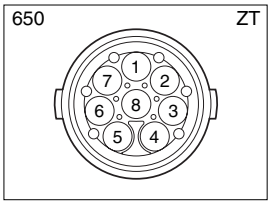

E501462

https://truckmanualshub.com/

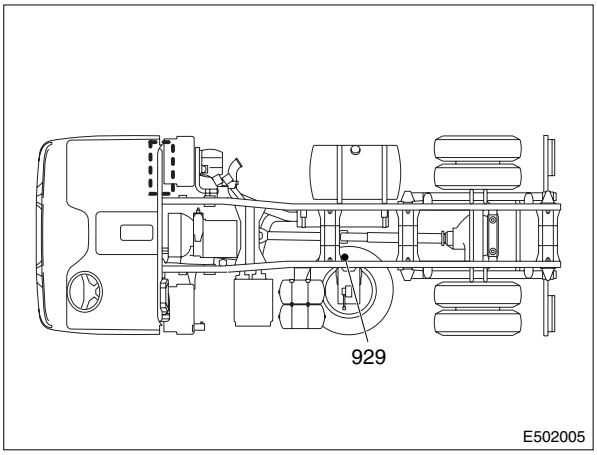

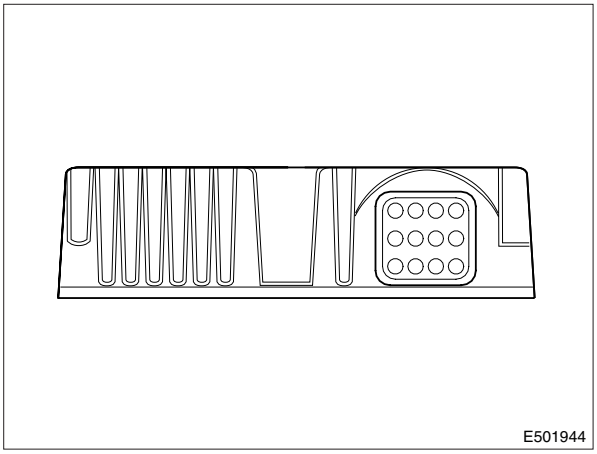

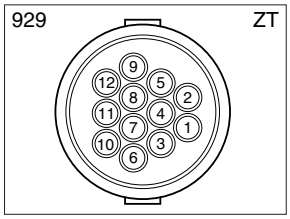

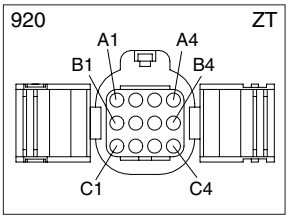

E502000

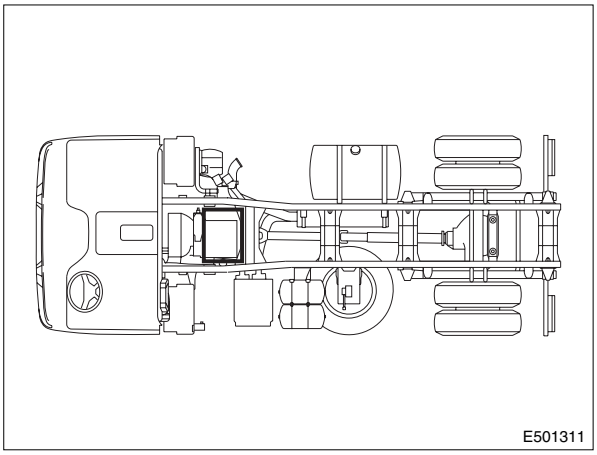

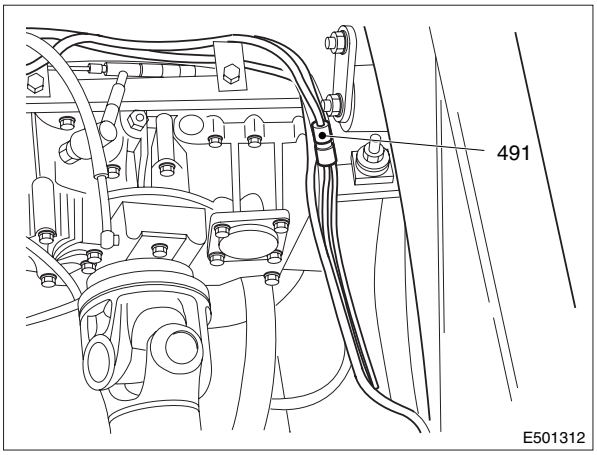

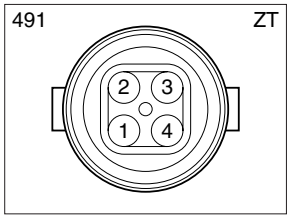

E501313

9

https://truckmanualshub.com/

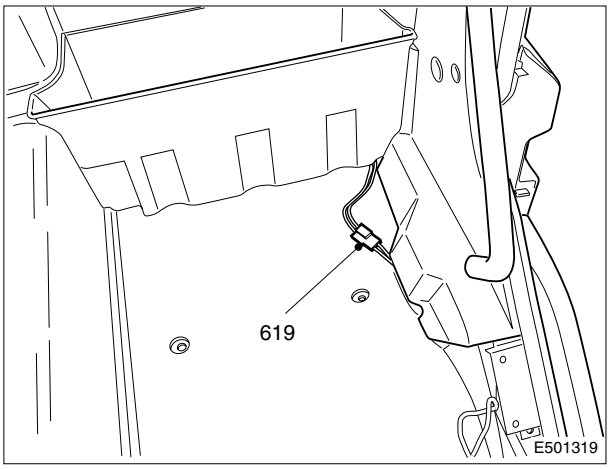

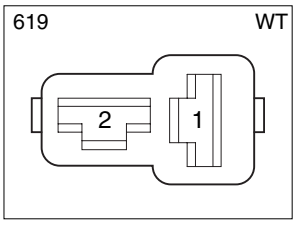

E501320

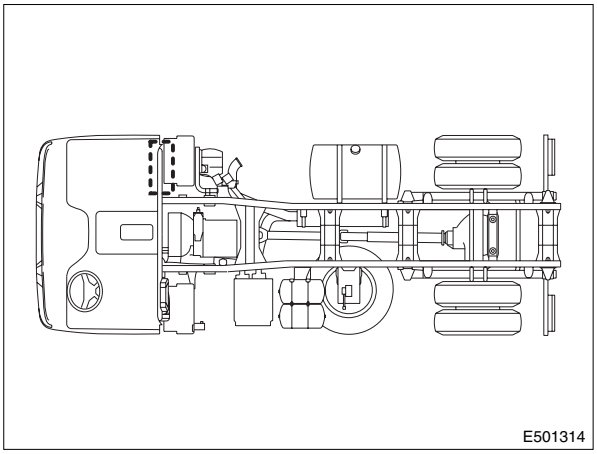

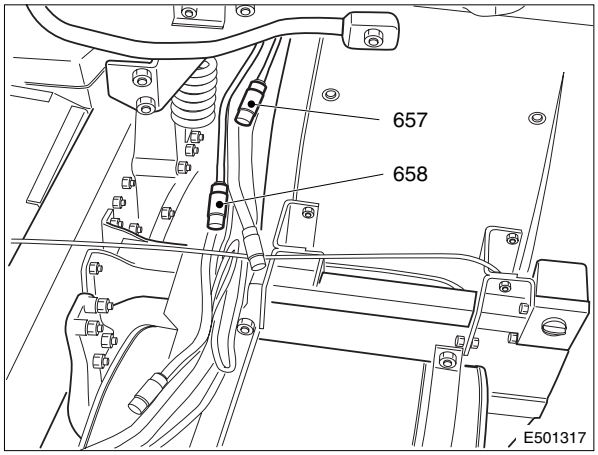

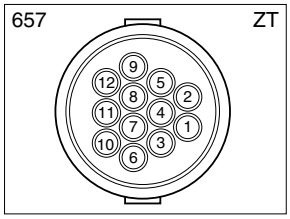

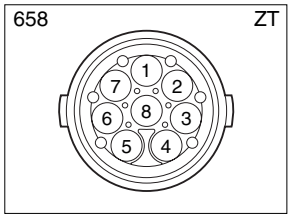

E501318

9

https://truckmanualshub.com/

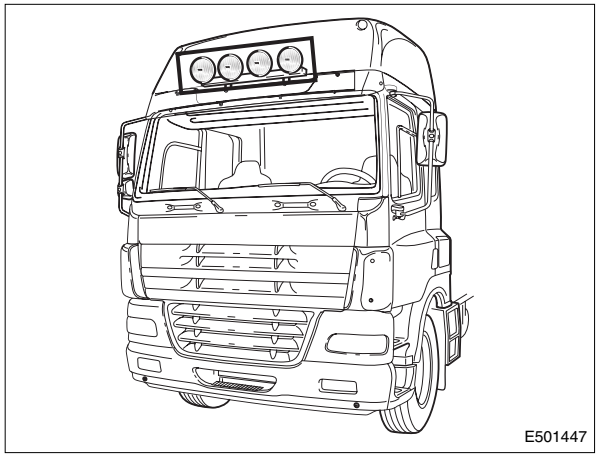

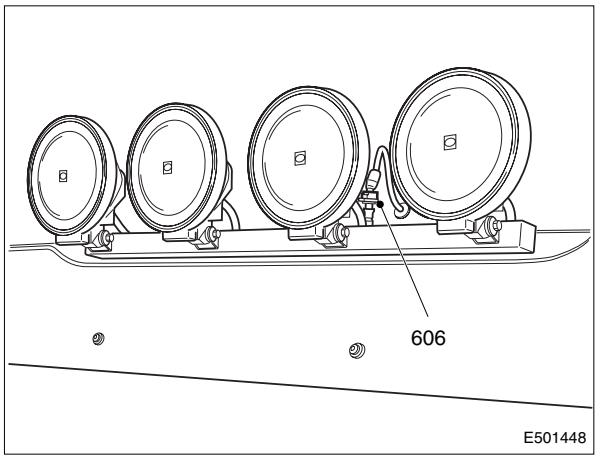

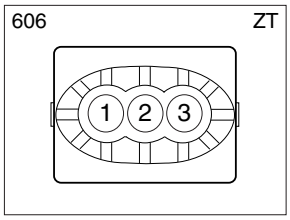

E501917

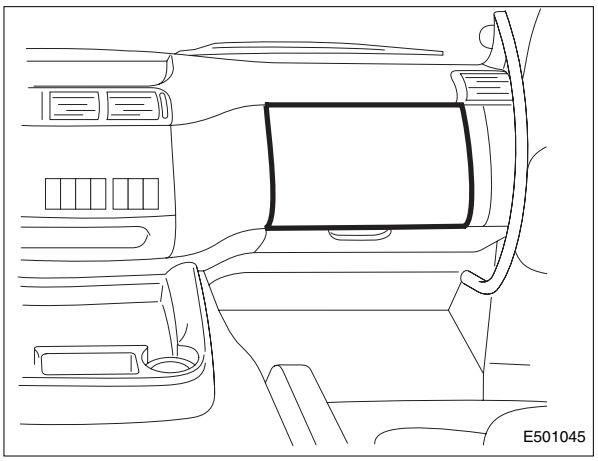

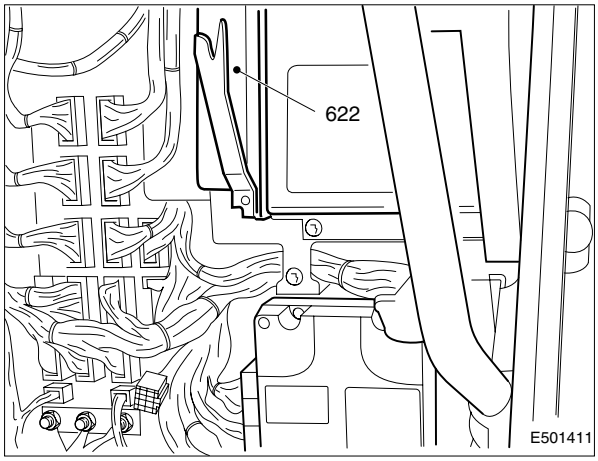

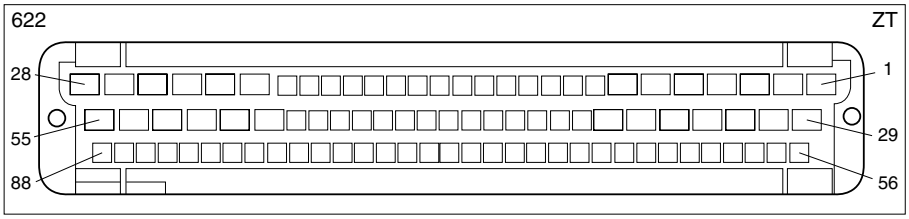

E501412

9

https://truckmanualshub.com/

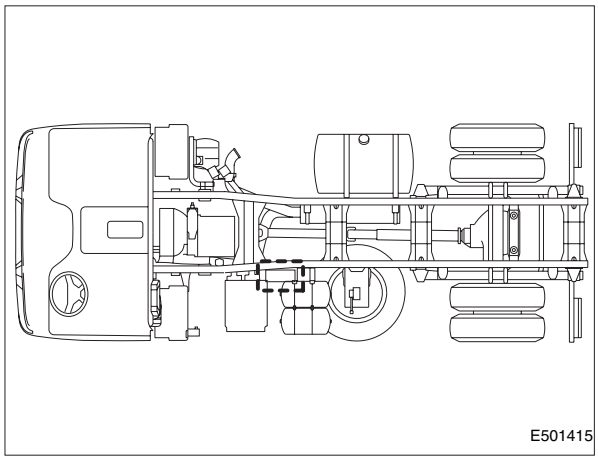

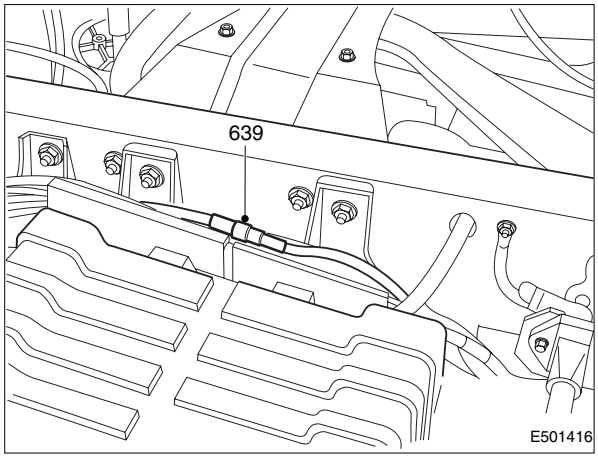

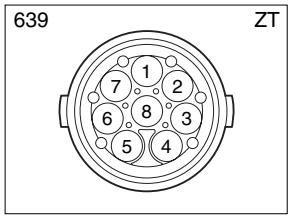

E501417

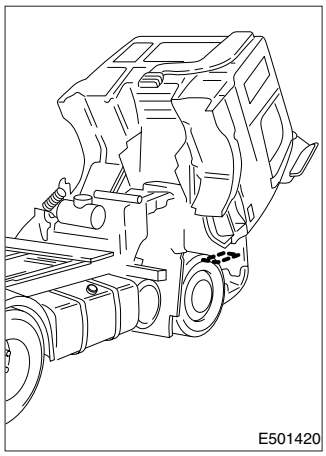

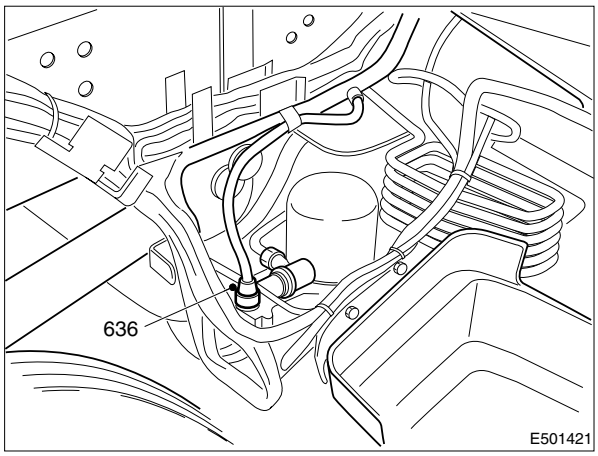

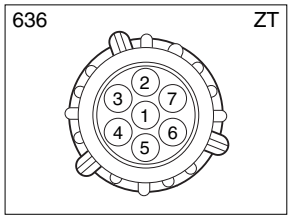

E501422

https://truckmanualshub.com/

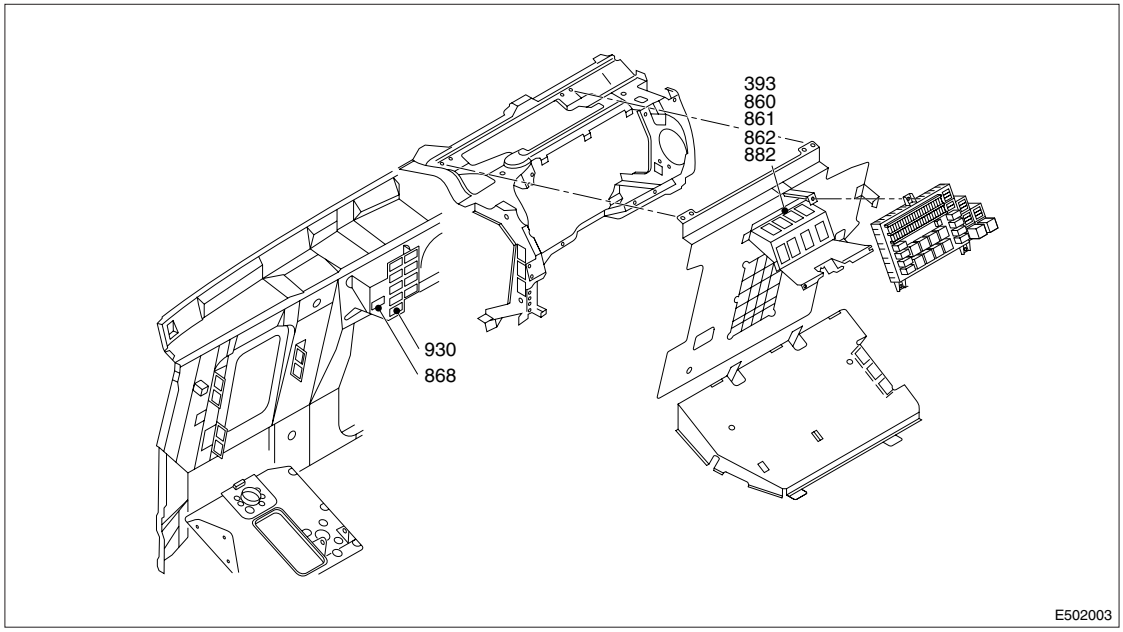

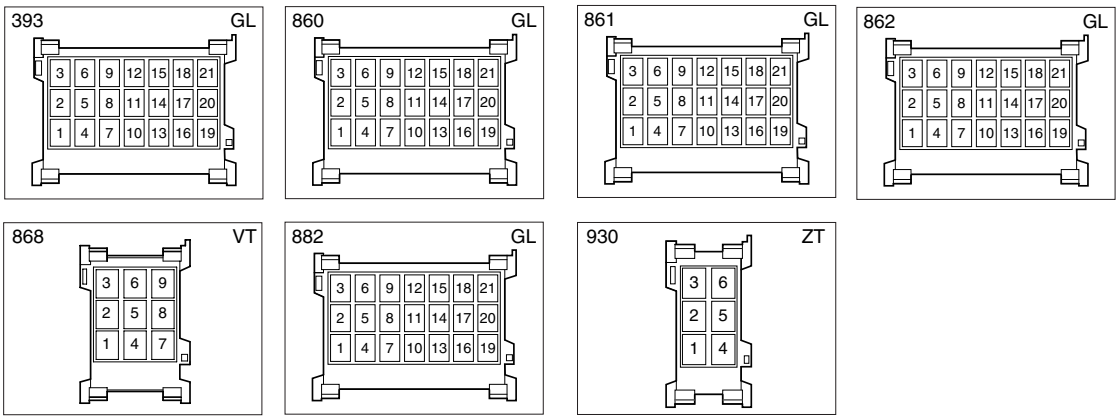

E502004

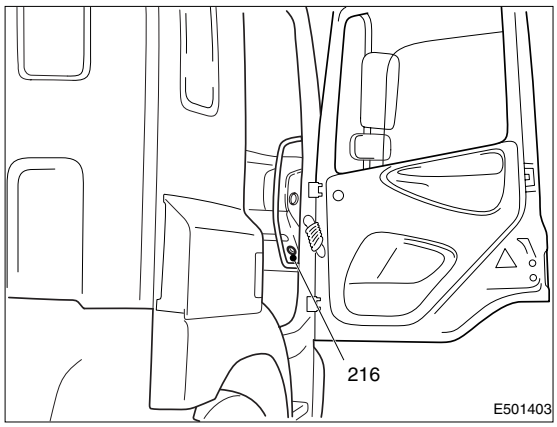

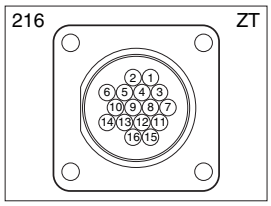

E501404

https://truckmanualshub.com/

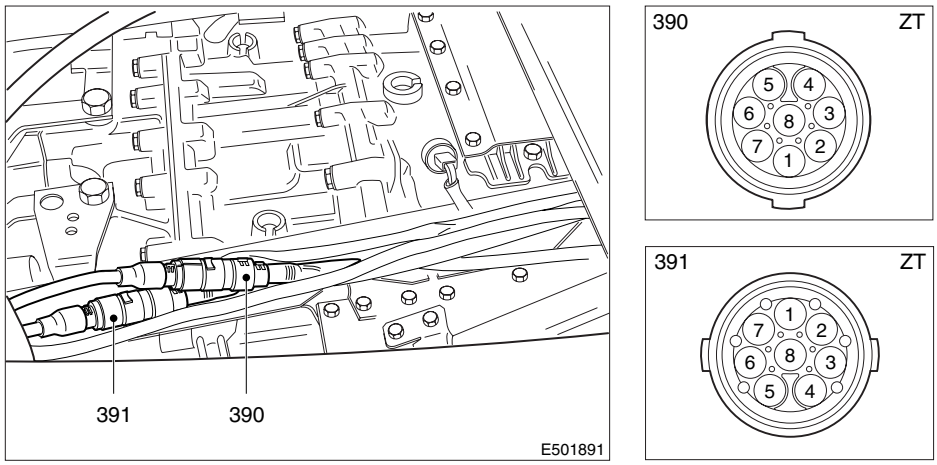

E501901

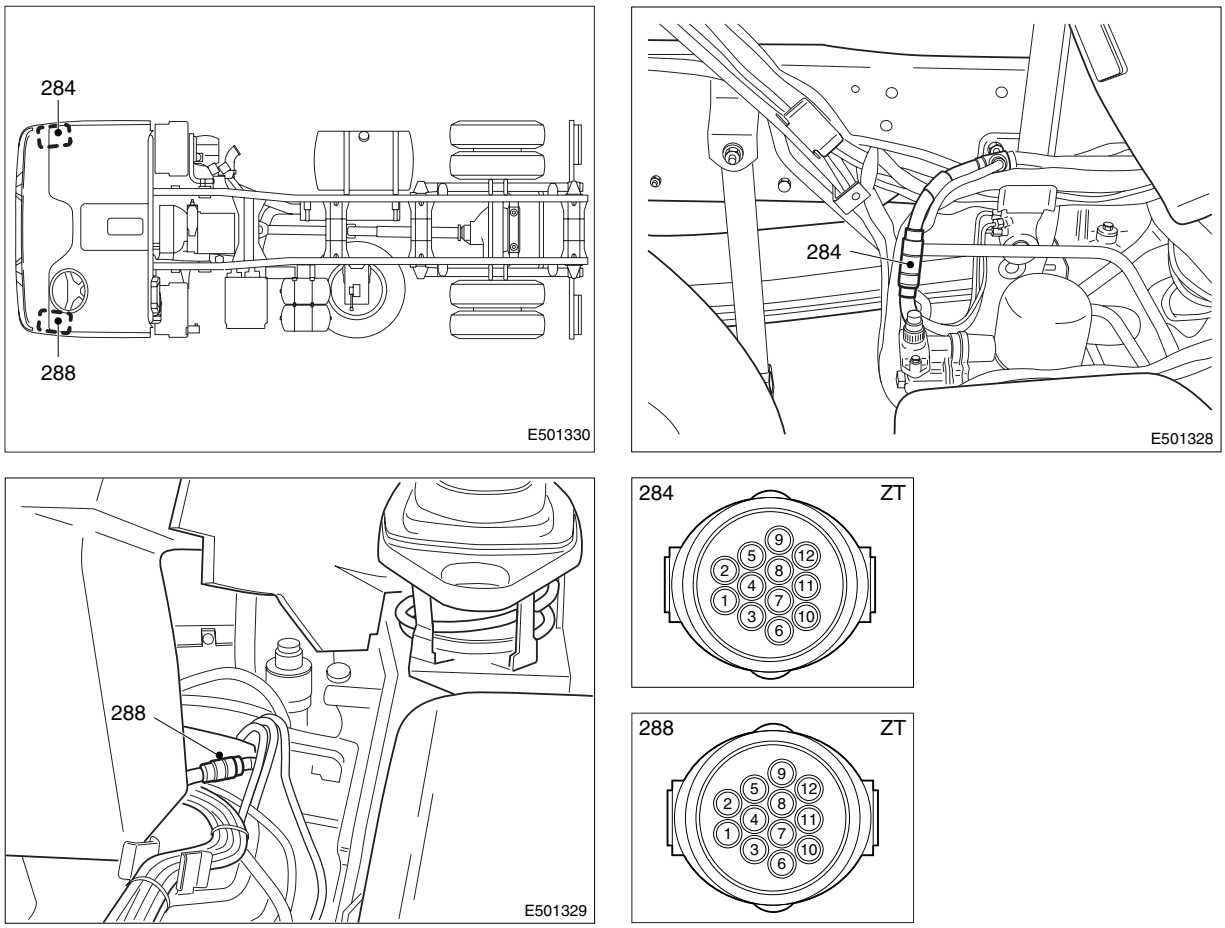

E501331

https://truckmanualshub.com/

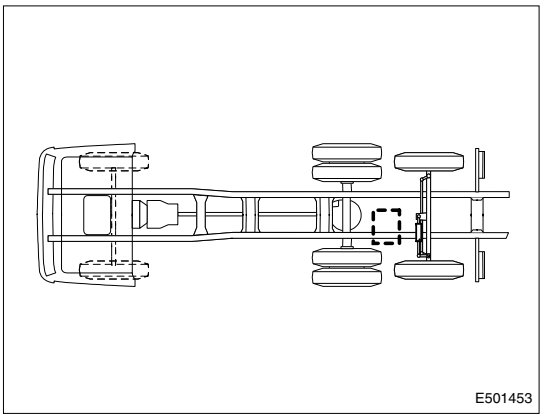

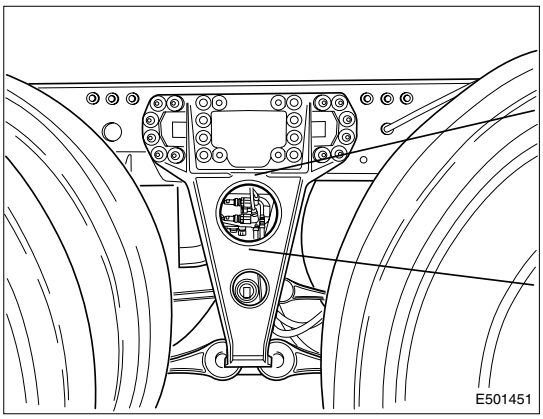

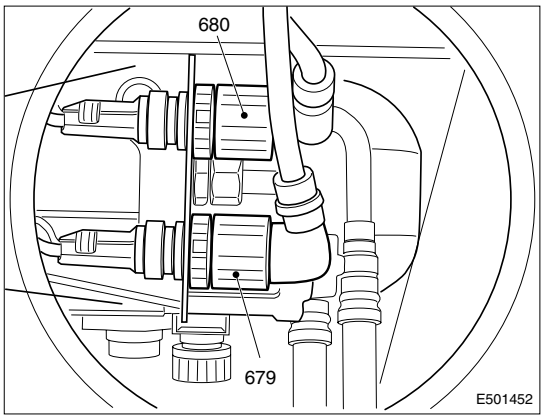

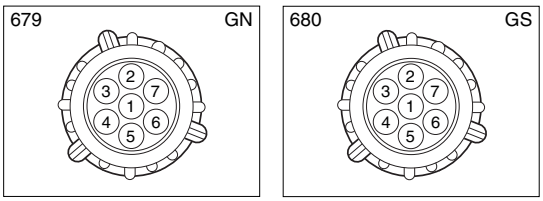

E501454

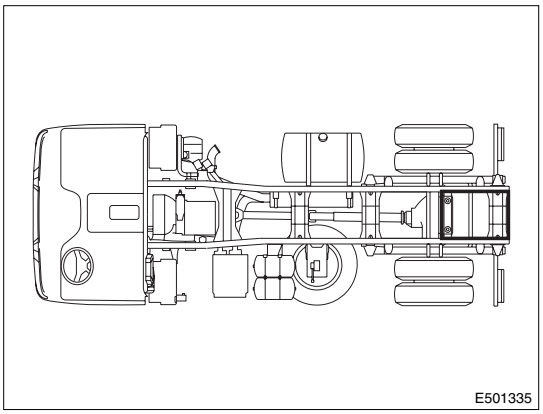

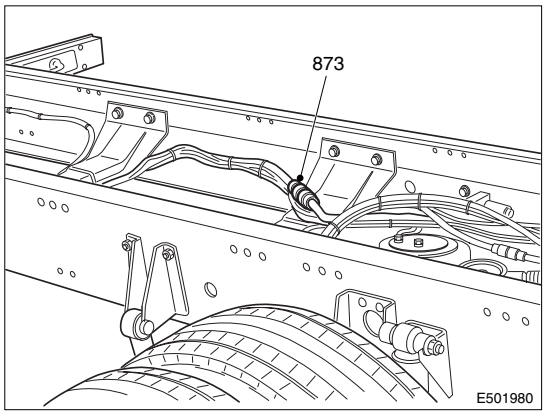

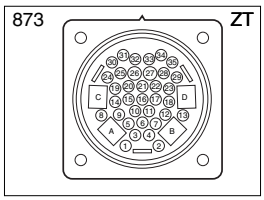

E501981

9

https://truckmanualshub.com/

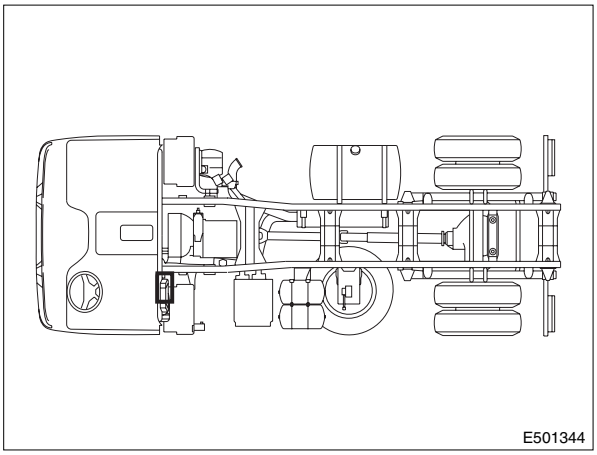

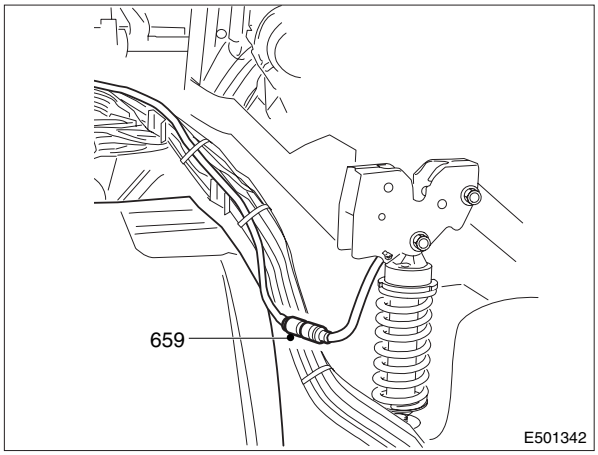

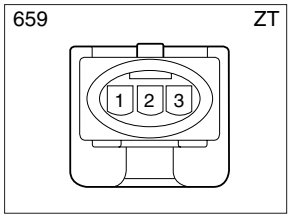

E501343

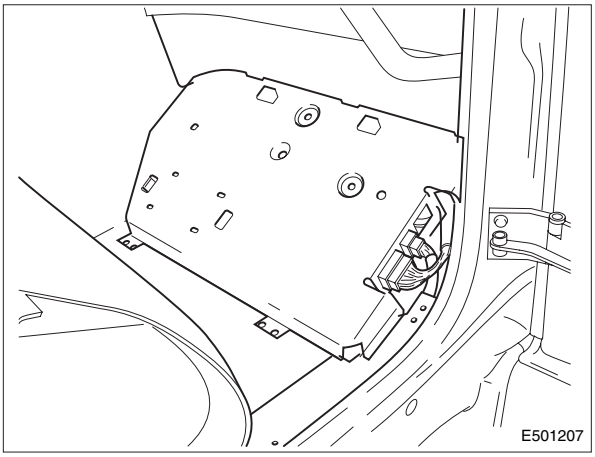

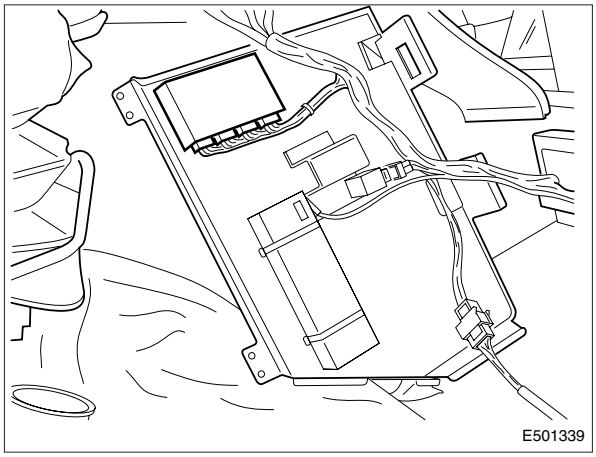

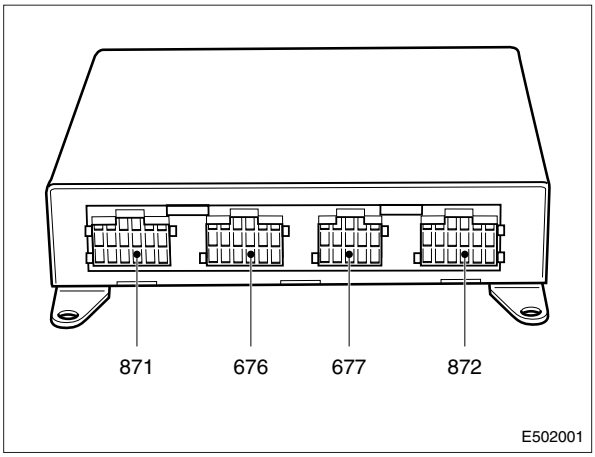

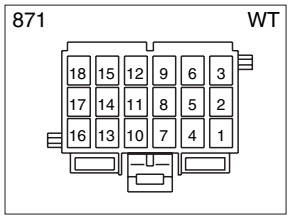

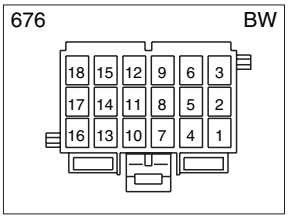

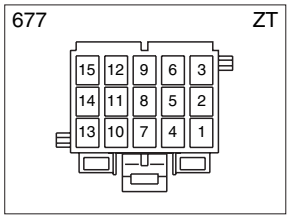

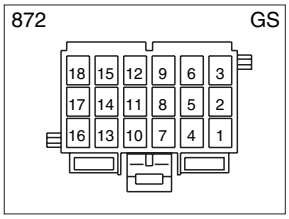

E502002

https://truckmanualshub.com/

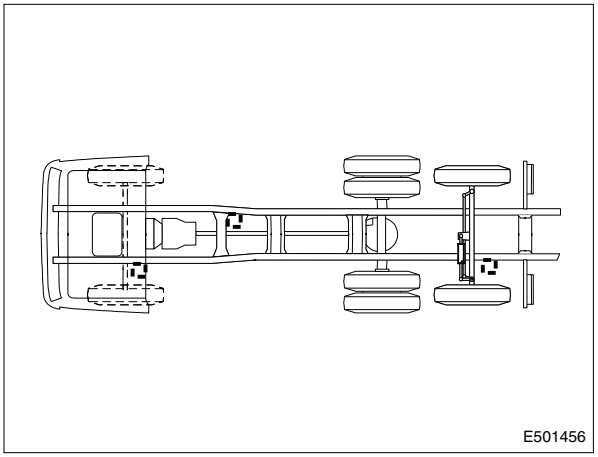

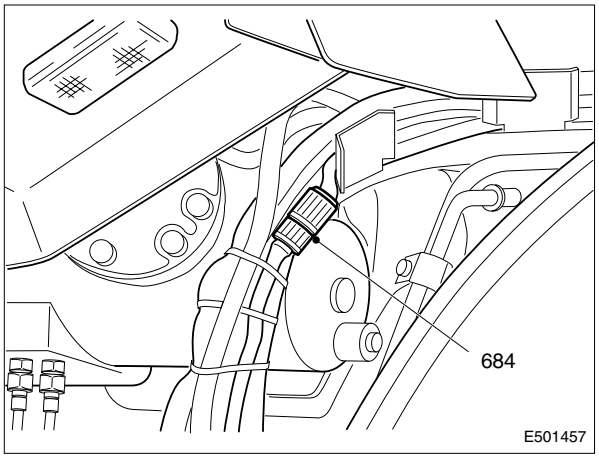

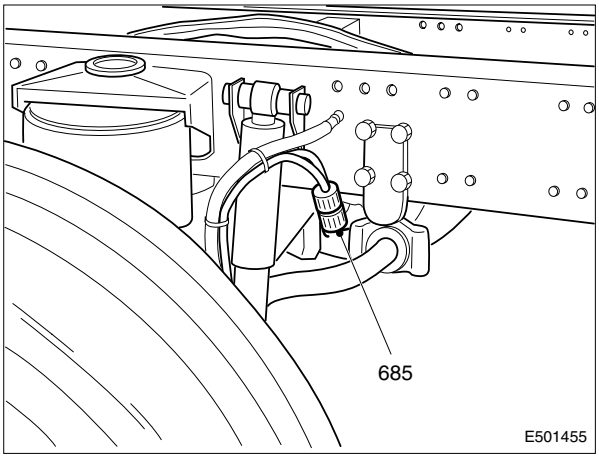

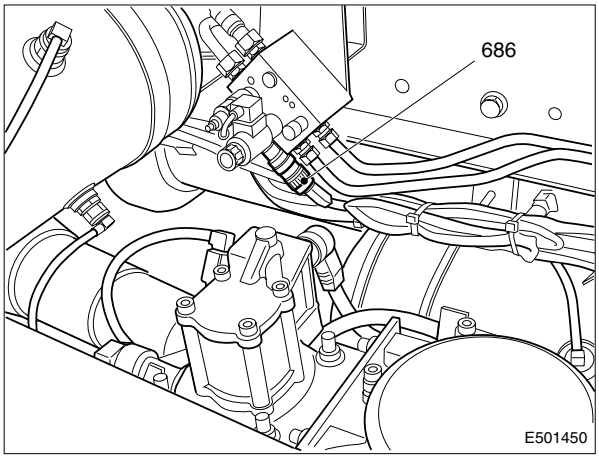

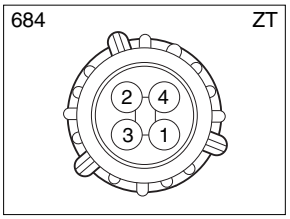

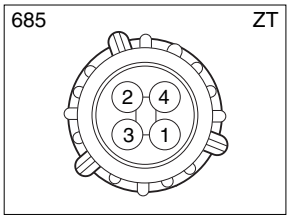

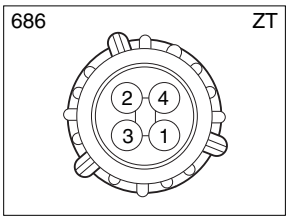

E501458

9

https://truckmanualshub.com/

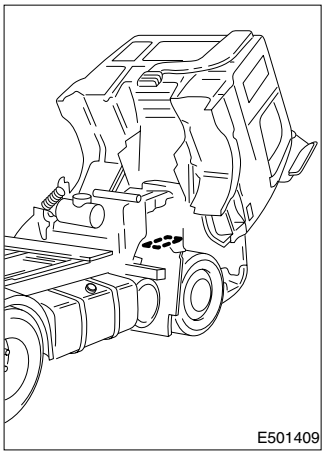

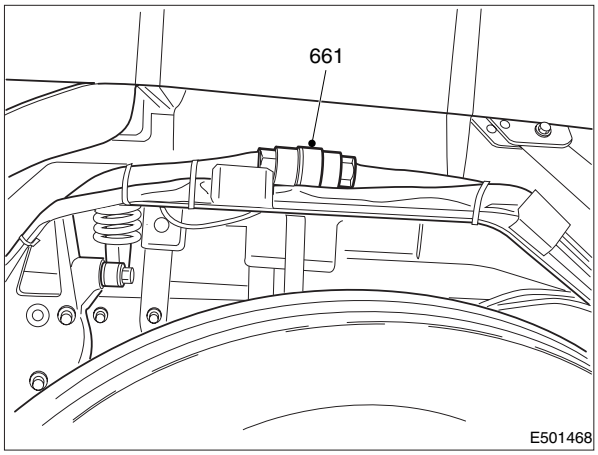

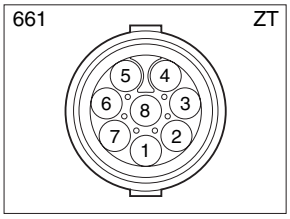

E501477

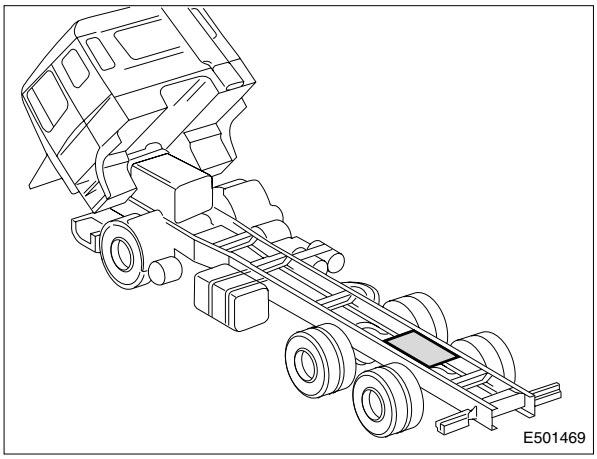

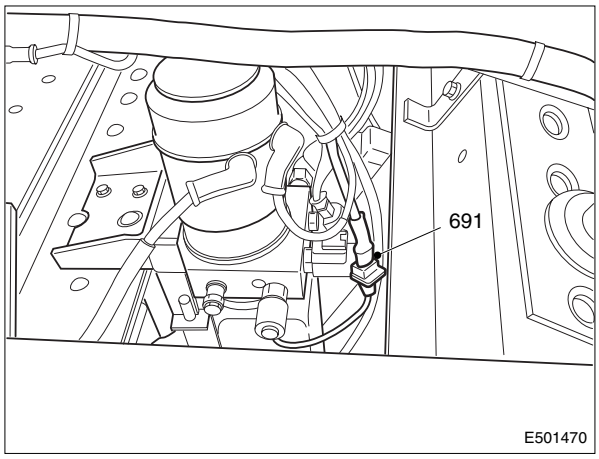

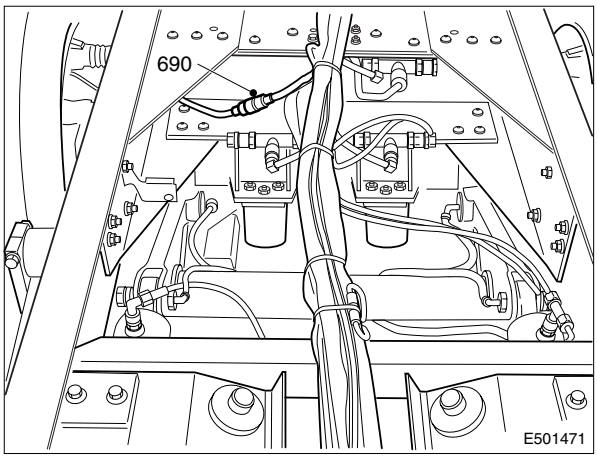

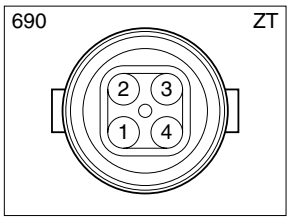

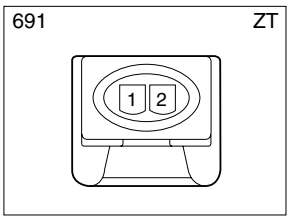

E501478

https://truckmanualshub.com/

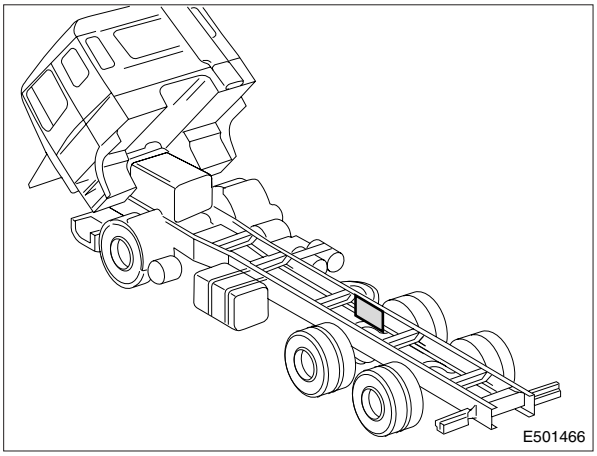

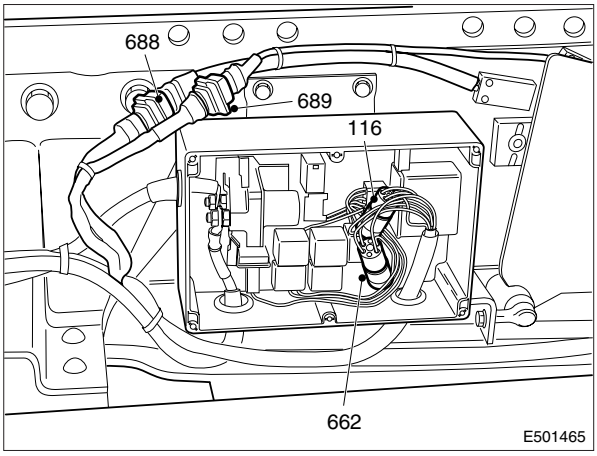

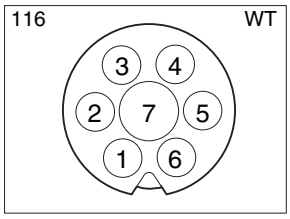

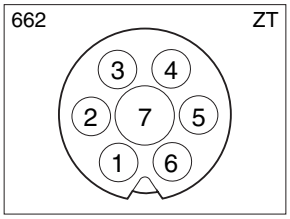

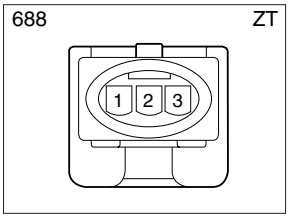

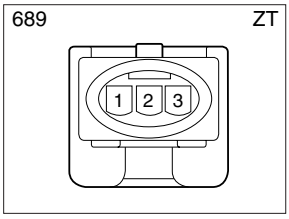

E501467

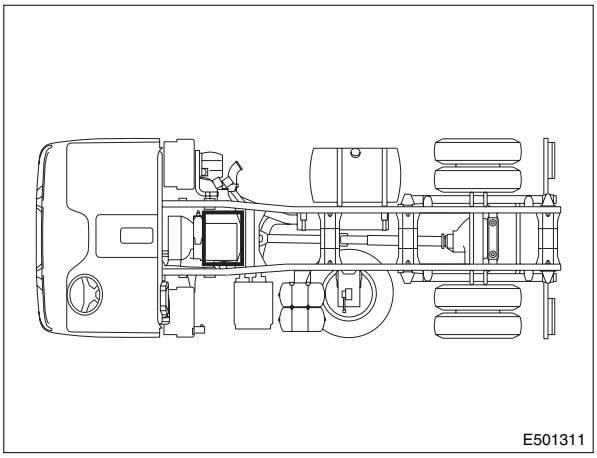

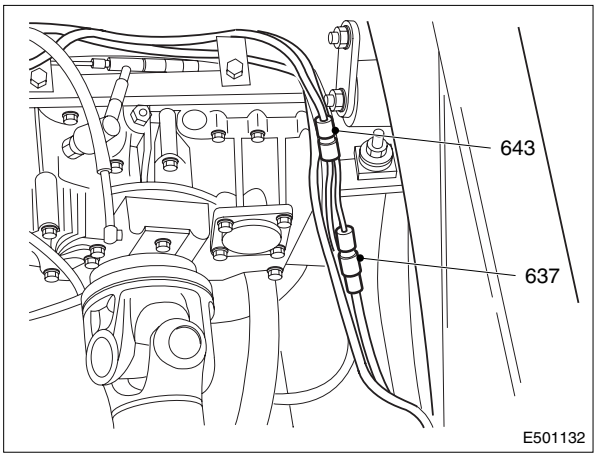

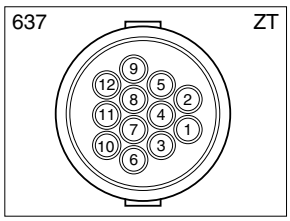

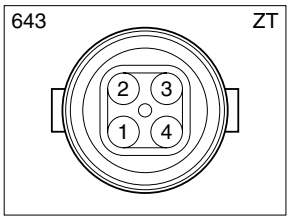

E501506

https://truckmanualshub.com/

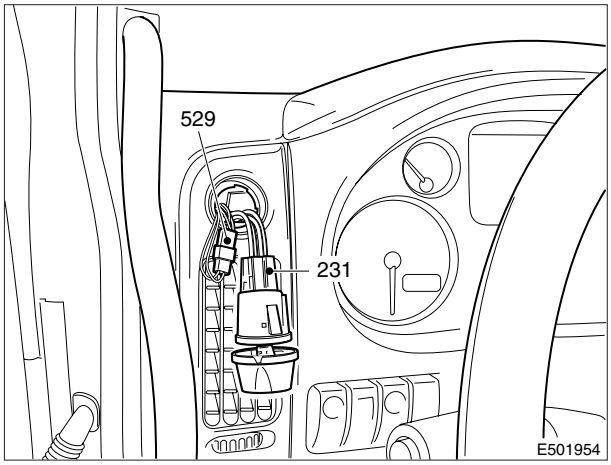

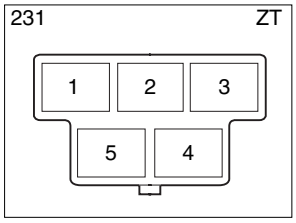

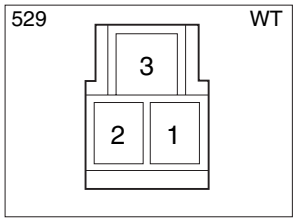

E501955

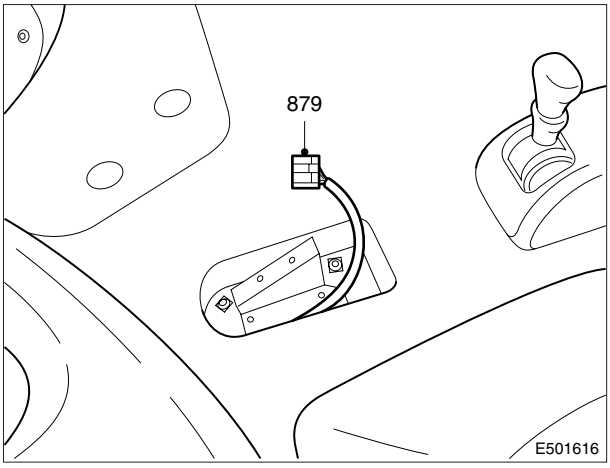

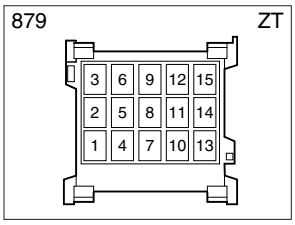

E501677

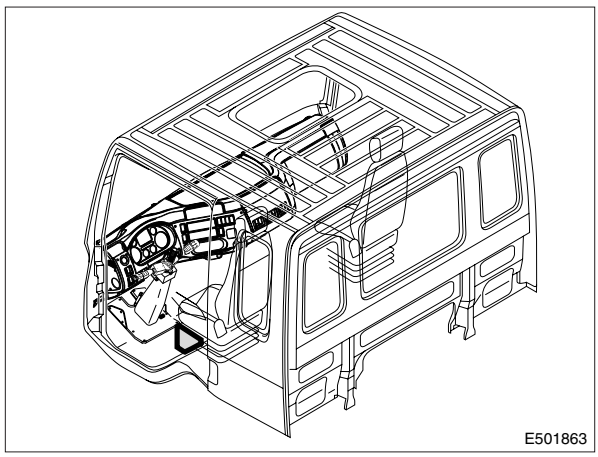

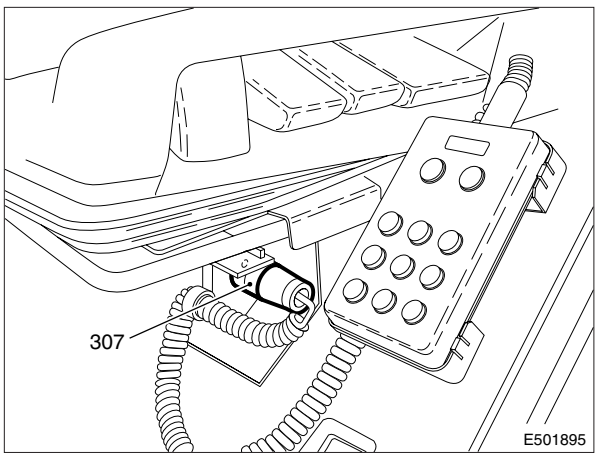

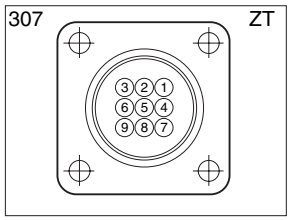

E501864

https://truckmanualshub.com/

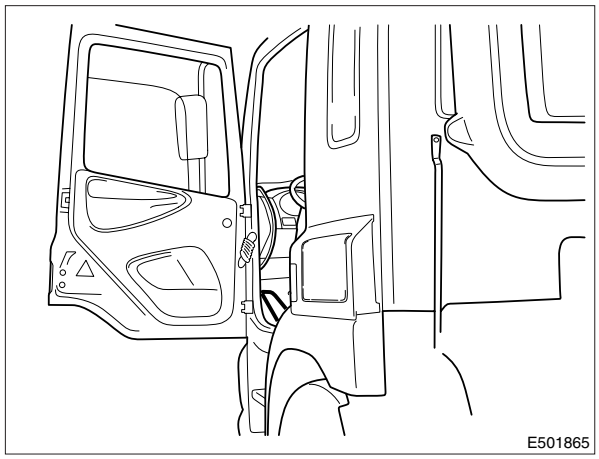

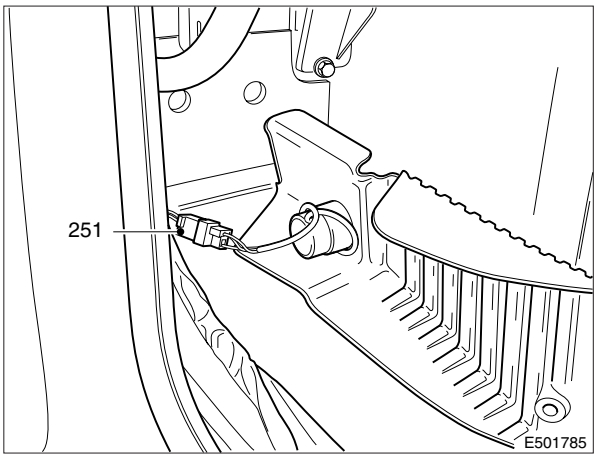

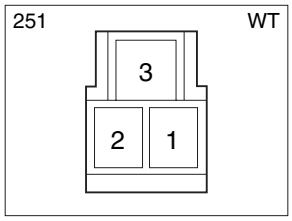

E501866

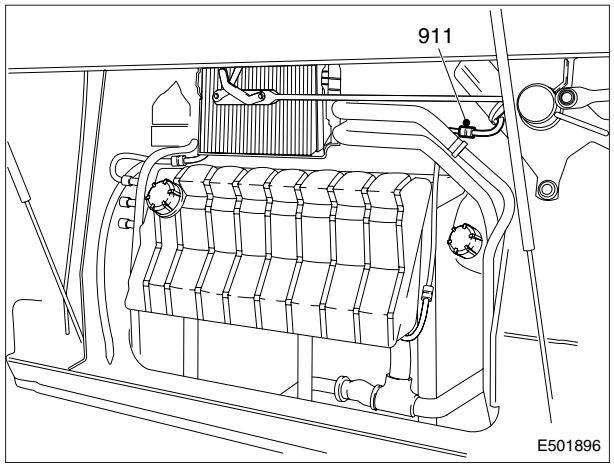

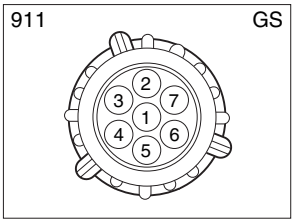

E501897

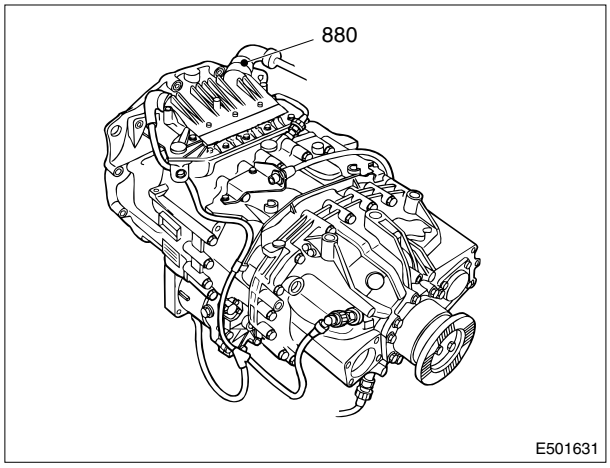

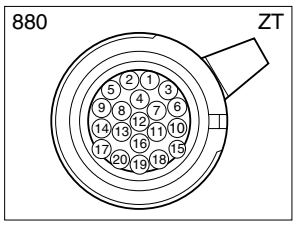

E501679

9

https://truckmanualshub.com/

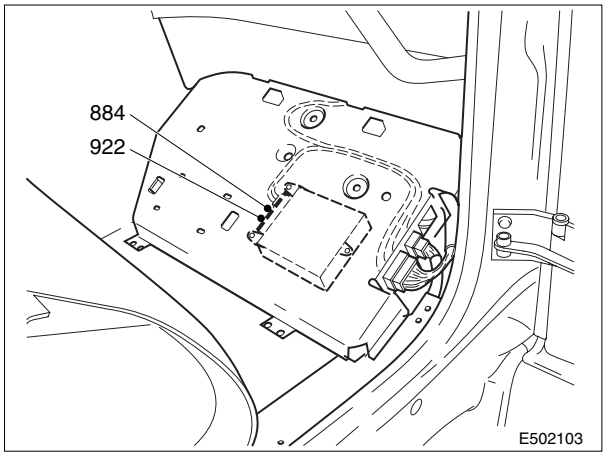

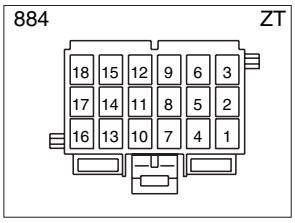

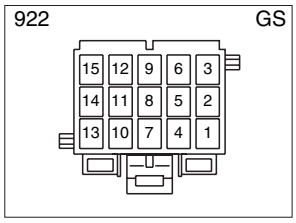

E502104

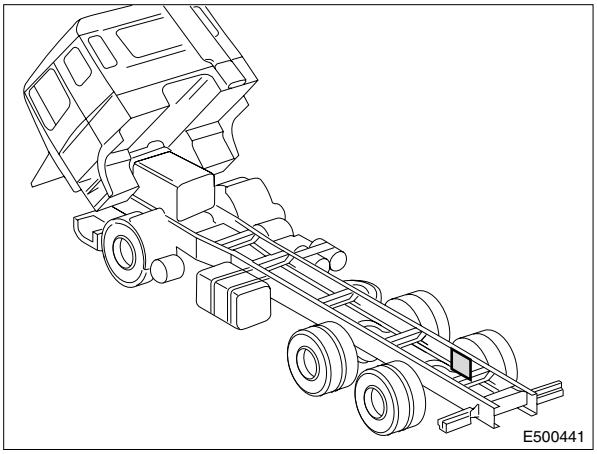

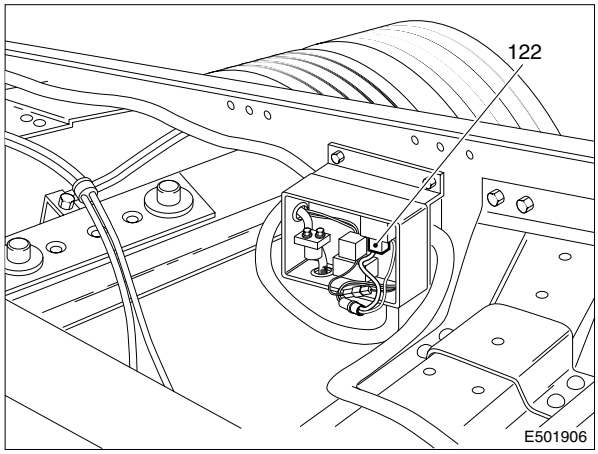

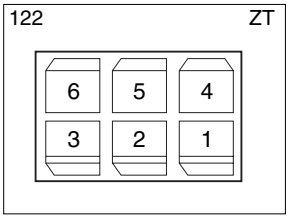

E501907

https://truckmanualshub.com/

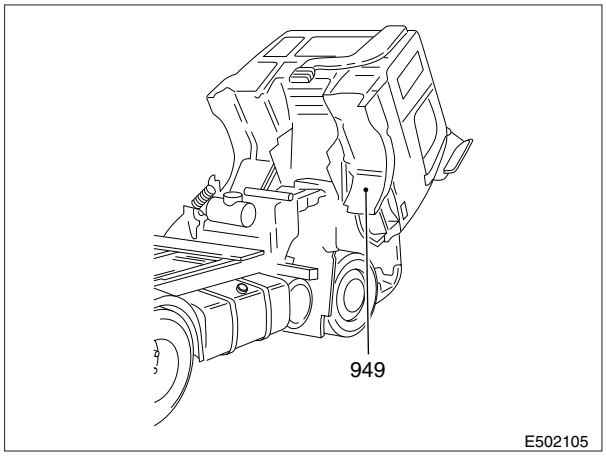

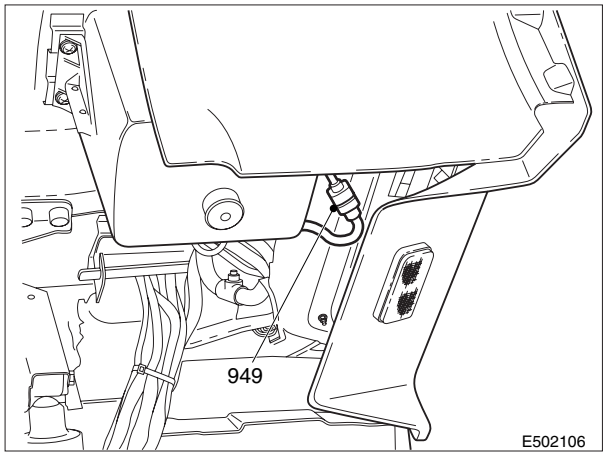

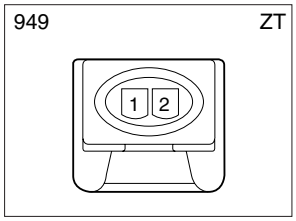

E502107

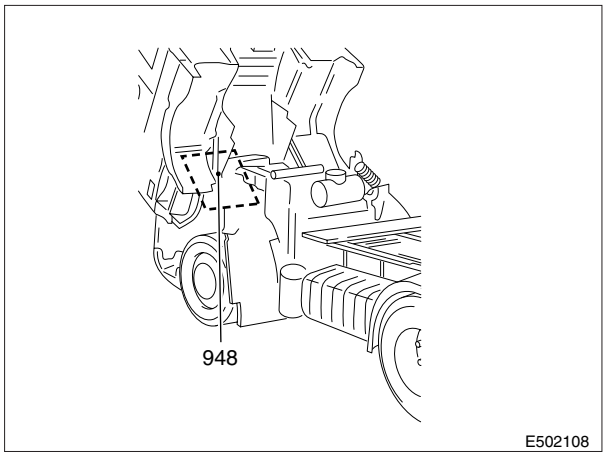

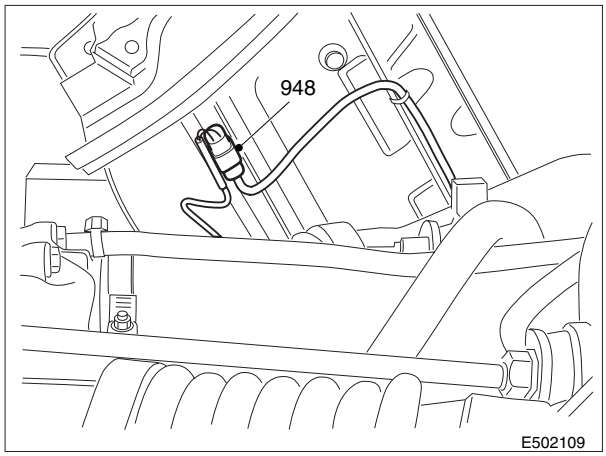

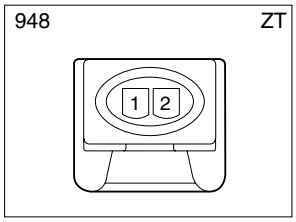

E502110

9

https://truckmanualshub.com/

https://truckmanualshub.com/

CONTENTS

		Page	Date
1.	**INTRODUCTION**	1-1	200404
2.	**ELECTRICAL SYSTEM**	2-1	200404
2.1	Circuit diagram 1358030/26	2-1	200404
2.2	Overview of basic codes for circuit diagram 1358030/26	2-2	200404
2.3	Section diagrams from circuit diagram 1358030/26	2-22	200404

10

https://truckmanualshub.com/

10

https://truckmanualshub.com/

1. INTRODUCTION

This main group includes the entire electrical system shown in the form of **circuit diagrams** and an **overview of connectors/pin allocations** .

Circuit diagrams
All information that relates to the complete electrical system of the vehicle is found in the circuit diagrams with the exception of the connectors.

Note:
For the location of the connectors in the vehicle, see main group “Location of connectors”.

https://truckmanualshub.com/

https://truckmanualshub.com/

2. ELECTRICAL SYSTEM

2.1 CIRCUIT DIAGRAM 1358030/26

This page can be used to make your own notes on the circuit diagram.

https://trucks.autohelp.com/

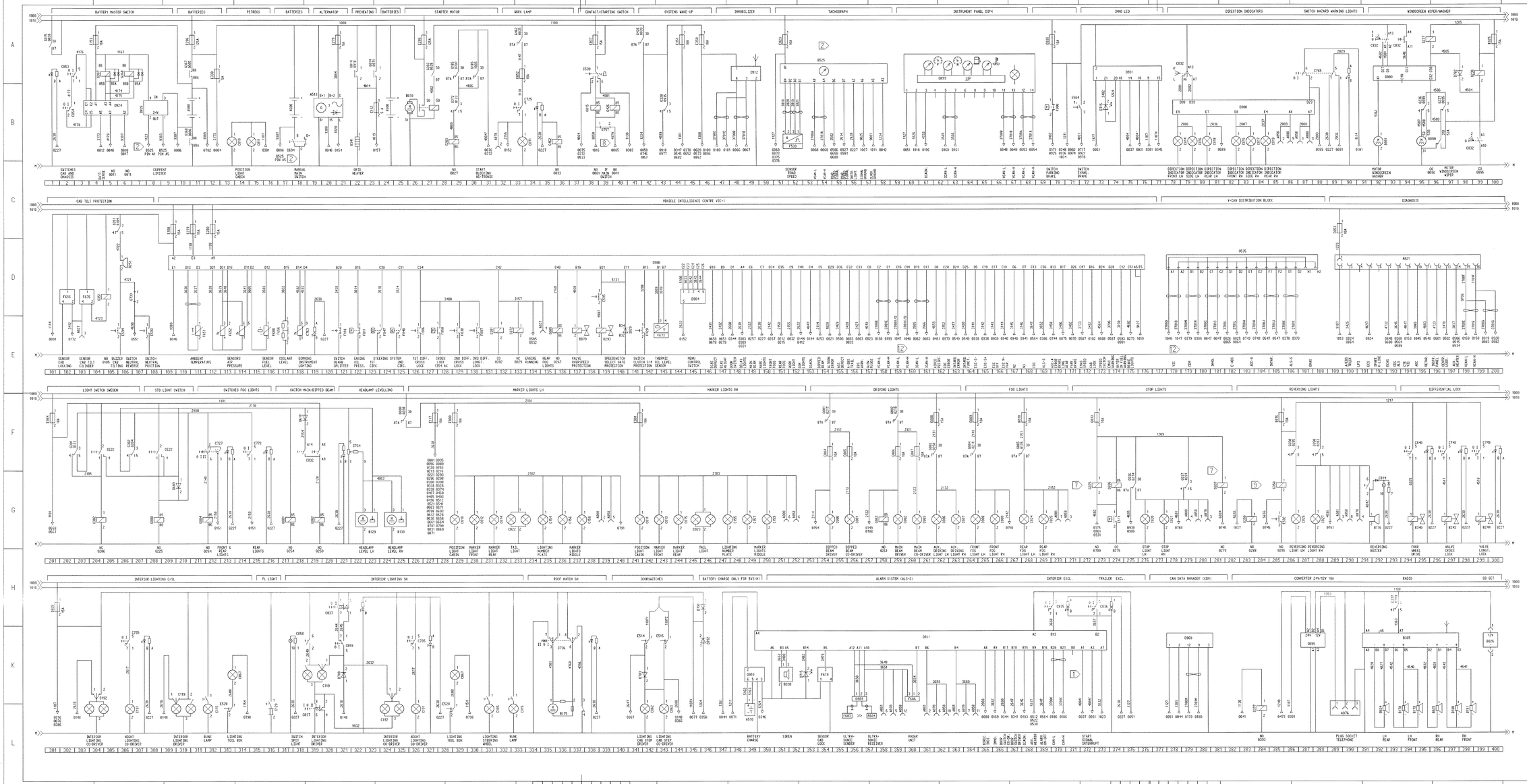

1 OPMERKING/note
STARTONDERBREKING ALLEEN VOOR BV2 EN BV3, NIET VOOR THATCHAM
Starter interrupt only for BV2 EN BV3, not for Thatcham

2 OPMERKING/note
BIJ VEILIGHEIDSEISEN:
VOEDING: ADER 1123 OP PIN A1
MASSA ADER 9303 OP PIN A5
With safety requirements:
Power supply wire 1123 on pin A1
Ground wire 9303 on pin A5

7 OPMERKING/note
G037 EN G375 ALLEEN TBV AGC MET RETARDER
G037 and G375 only for AGC with retarder

8 OPMERKING/note
BIJ TOEPASSING:
HOOFDSCHAKELAAR
ADER 4179 OP B6 VAN G015 EN G426
With mainswitch
Wire 4179 to pin B6 of G015 and G426

9 OPMERKING/note
ACHTERUITRIJ VERLICHTING:
BIJ AS-TRONIC ACTIEF HOOG
OVERIGE V-BAKKEN ACTIEF LAAG
Reversing lights:
with as-tronic active high
other gearboxes active low

12 OPMERKING/note
BIJ AS-TRONIC 3700/3701X
AANGESLOTEN OP VIC C15/C14
ZONDER AS-TRONIC 3700/3701D
AANGESLOTEN OP VIC C15/C14
With AS-tronic 3700/3701X
connected to VIC C15/C14
no AS-tronic 3700/3701D
connected to VIC C15/C14

1358030 / 26
1v3

DAF

https://vrachtwagenhub.com/

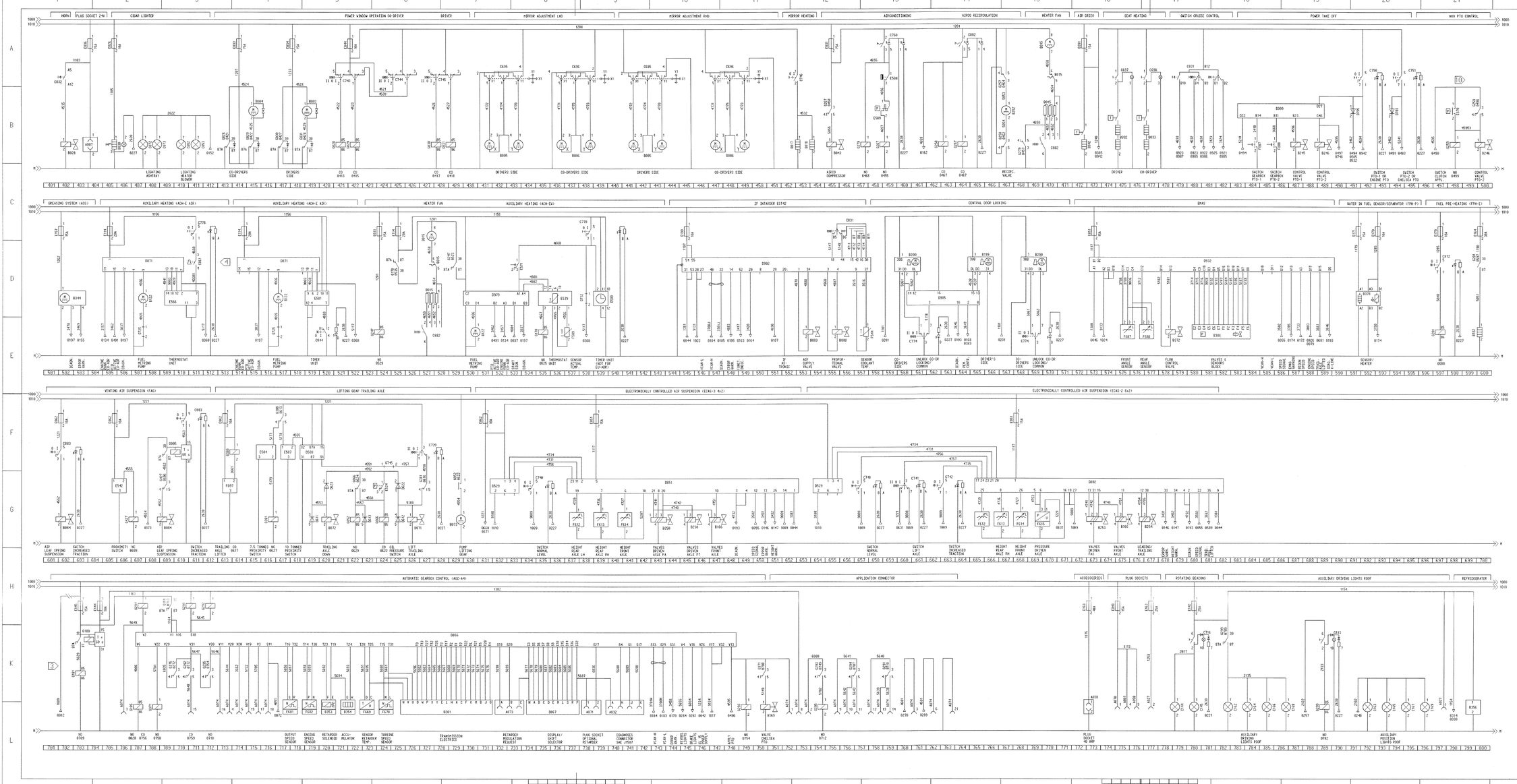

3 OPMERKING/note
BIJ TOEPASSING VAN EEN HOOFDSCHAKELAAR, VOEDING 1089 RECHTSTREEKS VAN DE ACCU.
BIJ VEILIGHEIDSISSUES: KOMPONENTEN E145, G189 EN G181 IN EEN EXPLOSIEVRIJE VERDEELDOOS BIJ DE ACCU MONTEREN.

When a mainswitch is applied, power supply 1089 directly from the batteries
With safety requirements: components E145,G189 and G181 to be fitted in an explosionfree junctionbox near the batteries

4 OPMERKING/note
SLEUTEL SCHAKELAAR C861 ALLEEN BIJ PETREG UITVOERINGEN.

Key switch C861 only for petreg

10 OPMERKING/note
PTO BEVEILIGING ALLEEN VOOR HANDGESCHAKELDE BAKKEN

PTO protection only for manual gearboxes

1358030 / 26
2v3

DAF

https://trucksmanuals.com/

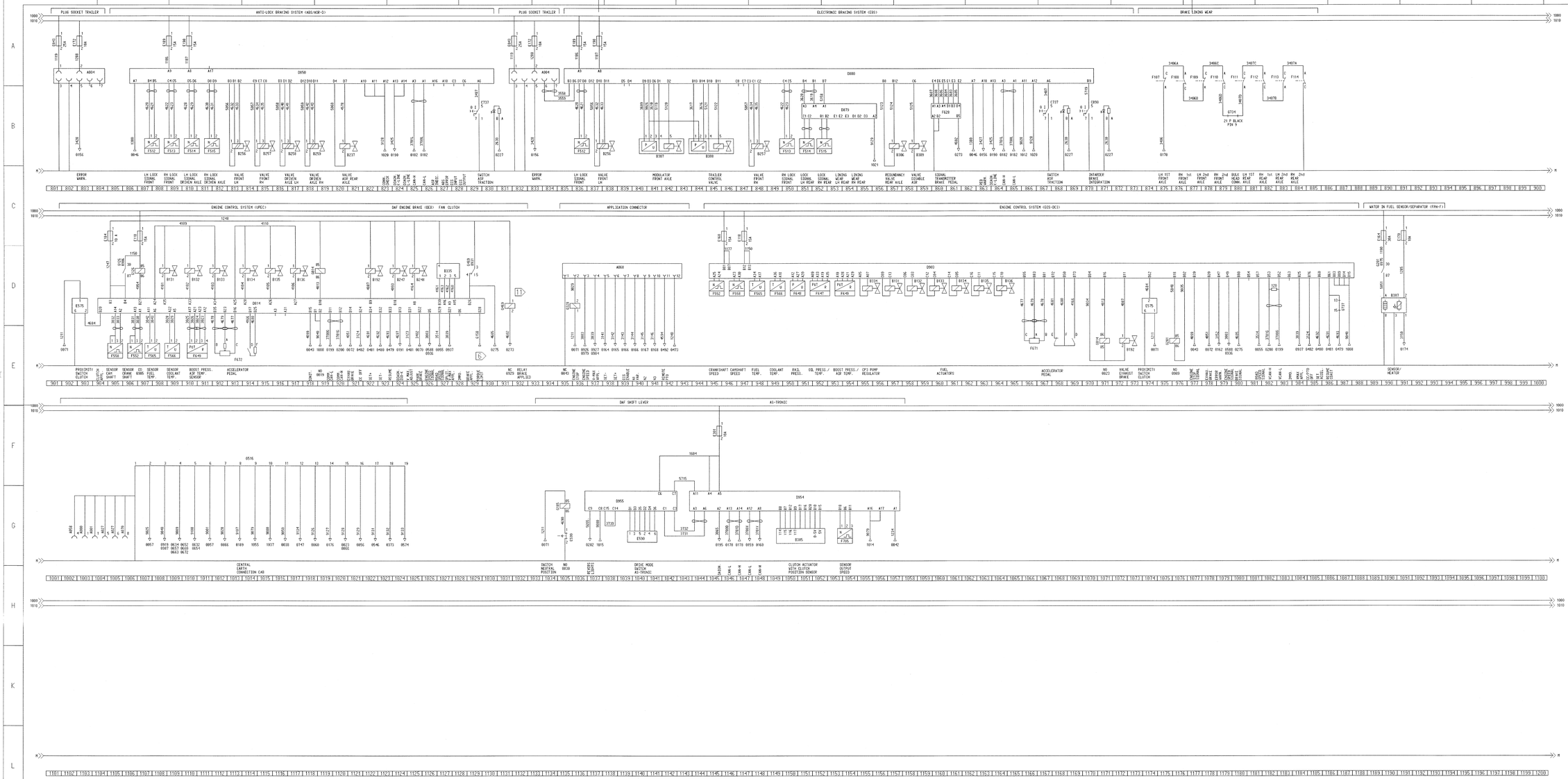

6 OPMERKING/note
WIRE 6158 IN SCHUTBORD
TBV OPBOUWER

wire 6158 in Firewall
prepared for body builder

11 OPMERKING/note
RELAIS G469 REMLICHT SIGNAAL
ALLEEN BIJ AS-TRONIC

Relay G469 brake light signal
only with AS-tronic

1358030 / 26
3v3

DAF

https://truckmanualshub.com/

2.2 OVERVIEW OF BASIC CODES FOR CIRCUIT DIAGRAM 1358030/26

Basic code number	Description	Number on search bar
A000	Drawn vehicle socket (7-pin)	86, 87, 238, 251, 279, 1003
A001	Rear fog lamp/reversing lamp socket (7-pin)	270, 289, 358, 361, 363, 775, 1004
A004	Plug socket, ABS/EBS, drawn vehicle (7-pin)	803, 834
A007	24V socket (2-pin)	403
A021	Diagnostics socket (16-pin)	194, 103
A027	Socket, 24V accessories (6-pin)	103, 135, 777, 797, 1004, 1005
A032	AGC diagnostics socket	740
A038	Socket, 40A accessories (2-pin)	773
A058	Drawn vehicle socket (15-pin)	85, 87, 239, 252, 271, 280, 290, 359, 362, 364, 776, 1002
A068	Application connector, engine speed control	939
A070	Application connector, superstructure (8-pin)	32, 280, 291, 359, 362, 364, 775, 1006
A071	Automatic gearbox socket, intarder functions	738
A073	Automatic gearbox socket, operation	732
A074	Automatic gearbox socket, superstructure	706, 711, 713, 714, 715, 716, 752, 753, 755, 756, 757, 758, 759, 761, 762, 763
A076	Telephone socket	389
A500	Batteries (2x)	10, 17, 24
A510	Alarm system battery	349
A513	Alternator	19
B000	Windscreen wiper motor	96
B001	Windscreen wiper pump	93
B003	Electric drop glass operation motor, driver’s side	419

https://truckmanualshub.com/

Basic code number	Description	Number on search bar
B004	Electric drop glass operation motor, co-driver's side	415
B005	Mirror adjustment motor, left	432, 442
B006	Mirror adjustment motor, right	437, 448
B010	Starter motor	25
B015	4-speed heater fan	470, 471, 527, 528
B017	Mirror heating, driver's side	452
B018	Mirror heating, co-driver's side	453
B024	Loudspeaker, left	392
B025	Loudspeaker, right	396
B026	CB set	399
B028	Horn	402
B030	Cigar lighter, driver's side	406
B032	Seat heating, driver's side	475
B033	Seat heating, co-driver's side	477
B042	Air dryer heating element	473
B043	Air conditioning compressor	455
B071	Mechanical lifting-gear lifting valve	626
B072	Mechanical lifting-gear lowering valve	620
B073	Pump, mechanical lifting gear	629
B079	Low-range downshift protection valve	137
B084	Air suspension valve, bleeding	602, 609
B088	Proportional valve, intarder	556
B089	Air supply valve, intarder	554
B122	Fuel metering pump, cab heater	508, 517, 531
B129	Left-hand headlight height adjuster motor	223
B130	Right-hand headlight height adjuster motor	225
B131	Solenoid valve, pump unit/injector, cylinder 1	909

https://truckmanualshub.com/

Basic code number	Description	Number on search bar
B132	Solenoid valve, pump unit/injector, cylinder 2	910
B133	Solenoid valve, pump unit/injector, cylinder 3	912
B134	Solenoid valve, pump unit/injector, cylinder 4	914
B135	Solenoid valve, pump unit/injector, cylinder 5	916
B136	Solenoid valve, pump unit/injector, cylinder 6	917
B166	ECAS valve , front axle	647, 675
B169	PTO control valve, Chelsea	751
B175	Roof hatch motor	336
B176	Reversing buzzer	292
B178	Loudspeaker, left	394
B179	Loudspeaker, left	395
B180	Loudspeaker, right	397
B181	Loudspeaker, right	398
B182	Water separator fuel heating element	599
B192	Exhaust brake valve	922, 973
B199	Central door locking motor, driver’s side	565
B200	Central door locking motor, co-driver’s side	560, 569
B201	Internal electrical components for automatic gearbox	728
B237	ASR selector valve	821
B238	ECAS-2 (6x2) valve, driven axle left/right, air supply (FT)	645
B243	Cross-axle differential lock control valve	297
B244	Longitudinal controlled slip differential control valve	299
B245	PTO control valve	487
B246	PTO control valve	489, 500
B247	Engine brake valve	924

https://truckmanualshub.com/

Basic code number	Description	Number on search bar
B248	Engine brake valve	925
B250	ECAS valve, driven axle left/right, air supply (FA)	643
B251	Neutral position buzzer, tilting cab	106
B252	Recirculation valve	468
B253	ECAS valve, driven axle left/right, air supply	673
B254	ECAS valve, second steered axle/trailing axle left/right, lifting bellows	677
B256	ABS valve	813, 838
B257	ABS valve	
B258	ABS valve	817
B259	ABS valve	818
B293	Gearbox gate protection valve	139
B306	Redundancy valve	857
B307	Front axle modulator	841
B308	Trailer vehicle control valve	845
B309	ASR cut-off valve	859
B335	Electronically controlled fan clutch	927
B338	Alarm system horn	351
B340	Four-wheel drive valve	295
B341	Glow element	22
B344	Automatic lubrication pump with integrated electronic unit	503
B353	Automatic gearbox control solenoid, retarder	720
B354	Automatic gearbox accumulator	721
B356	Cooler box	799
B365	Radio	394

https://truckmanualshub.com/

Basic code number	Description	Number on search bar
B372	Valve block fluid flow	579
B378	Heating element for fuel filter/water separator	592
B385	AS Tronic clutch unit	1051
B386	Valve block steering cylinder	581
B387	Electronic unit, fuel heater/water separator (Fleetguard)	990
B525	Modular tachograph (MTCO/DTCO)	54
C000	Dipped beam, left	255
C001	Dipped beam, right	256
C002	Main beam, left	260
C003	Main beam, right	261
C006	Left spotlight	262
C007	Right spotlight	264
C008	Fog lamp, front left	265
C009	Fog lamp, front right	266
C010	Width marker light (headlight), left	14, 229
C011	Width marker light (headlight), right	15, 242
C012	Width marker light, front left	231
C013	Width marker light, front right	243
C014	Direction indicator lamp, front left	79
C015	Direction indicator lamp, front right	83
C016	Direction indicator lamp, side left	80
C017	Direction indicator lamp, side right	84
C018	Direction indicator lamp, rear left	81
C019	Direction indicator lamp, rear right	85
C020	Stop light, left	277
C021	Stop light, right	278

https://truckmanualshub.com/

Basic code number	Description	Number on search bar
C022	Tail light, left	232
C023	Tail light, right	245
C024	Fog lamp, rear left	268
C025	Fog lamp, rear right	270
C026	Reversing light, left	287
C027	Reversing light, right	288
C052	Heater fan lighting, left	411
C053	Heater fan lighting, right	412
C062	Stepwell lighting, driver's side	342
C063	Stepwell lighting, co-driver's side	344
C067	Tool compartment lighting, left	314, 329
C071	Work lamp	34
C072	Ashtray lighting, left	408
C073	Ashtray lighting, right	409
C074	Width marker light, rear left	232
C075	Width marker light, rear right	245
C115	Bunk light with switch	312, 333
C119	Interior lighting with switch, driver's side	310, 320
C129	Interior lighting with switch	316
C144	Rotating beam, left	779
C145	Rotating beam, right	781
C154	Rear number plate light, left (FT)	235
C155	Rear number plate light, right (FT)	248
C156	Width marker light, left, 1st (FT)	237
C157	Width marker light, right, 1st (FT)	249
C158	Width marker light, left, 2nd (FT)	238

https://truckmanualshub.com/

Basic code number	Description	Number on search bar
C159	Width marker light, right, 2nd (FT)	251
C162	Roof spotlight	783
C163	Width marker light in spotlight, roof	793
C164	Roof spotlight	784
C165	Width marker light in spotlight, roof	794
C166	Roof spotlight	786
C167	Width marker light in spotlight, roof	795
C168	Roof spotlight	787
C169	Width marker light in spotlight, roof	797
C185	Light with switch	332
C191	Nightlight, centre	307, 327
C192	Interior lighting with switch, co-driver's side	304, 324
C539	Accessories/ignition/starter switch	38
C622	Lighting switch	205, 209
C694	Mechanical main switch	17
C695	Mirror adjustment switch, driver's side	433, 443
C696	Mirror adjustment switch, co-driver's side	438, 448
C697	Seat heating switch, driver's side	475
C698	Seat heating switch, co-driver's side	477
C716	Rotating beam switch	781
C725	Work lamp switch	34
C727	Fog lamp switch, front/rear	212
C735	Nightlight switch, interior	307, 326
C736	Roof hatch switch	336
C737	ASR switch	830, 868
C739	Mechanical lifting-gear switch	627

https://truckmanualshub.com/

Basic code number	Description	Number on search bar
C740	ECAS switch, normal level	635, 657
C741	ECAS switch, axle lifting	661
C742	Traction assistance switch	663
C743	Drop glass switch, co-driver's side (driver's side door)	422
C744	Drop glass switch, co-driver's side (driver's side door)	425
C745	Drop glass switch, driver's side (driver's side door)	428
C746	Mirror heating switch	453
C748	Operating switch, cross-axle differential lock	297
C749	Operating switch, longitudinal controlled slip differential	299
C750	PTO operating switch	492
C751	PTO operating switch	495
C760	Air conditioning switch	459
C763	Instrument lighting dimming potentiometer	119
C764	Headlight height adjustment potentiometer	222
C765	Switch for warning lamps	88
C773	Fog lamp switch, rear	215
C774	Central door locking switch	561, 569
C778	Switch for Eberspächer cab heater	511, 538
C802	Recirculation valve switch	464
C813	Spotlight switch, roof	790
C814	Reversing buzzer switch	292
C831	Cruise control/engine speed control/retarder stalk switch	480, 556
C832	Direction indicator/windscreen wiper stalk switch	79, 92, 93, 98, 219, 402

https://truckmanualshub.com/

Basic code number	Description	Number on search bar
C835	Switch to turn off interior detection	370
C836	Switch to turn off superstructure/drawn vehicle loadspace detection	373
C837	Interior lighting switch	318, 320
C840	Four-wheel drive switch	295
C844	Eberspächer cab heater switch with timer unit	519
C853	Cab main switch	2
C854	Chassis main switch	3
C858	Interior spot lighting switch	318
C859	Interior lighting switch, driver's side roof console	321
C861	PETREG key switch	511
C872	Switch, fuel heating relay (Fleetguard)	597
C882	Heater fan switch	470, 527
C883	FAG traction assistance switch	602, 611
C890	Third brake integration switch	870
D503	Electronic unit, mechanical lifting gear	619
D529	Remote control system, ECAS	632, 654
D609	Light switch diode	209
D610	Diode, main beam/dipped beam	218
D611	Diode, damping valve for lowering mechanical lifting gear	619
D612	Diode, damping valve for lifting mechanical lifting gear	625
D613	Diode for pump damping relay, mechanical lifting gear	623
D622	Diode for mechanical lifting gear, lifting lock	625

https://truckmanualshub.com/

Basic code number	Description	Number on search bar
D623	Diode for mechanical lifting gear, lowering lock	620
D703	Diode for switching off cab heater/door, contact on driver's side	494
D705	Diode for switching off the cab heater with running engine	491
D710	Interior lighting diode to prevent feedback to driver's side switch	321
D715	Alarm system LED	73, 352
D782	Diode to prevent door locking feedback, driver's side	97
D783	Interior lighting diode, driver's side	341
D791	Door switch diode	345
D792	Door switch diode	346
D802	ECAS-2 (6x2) electronic unit	673
D814	UPEC electronic unit	914
D826	Electronic unit for VLG current limiter	7
D850	ABS/ASR, D version, electronic unit	817
D851	ECAS-3 (4x2) electronic unit	644
D866	Electronic unit, AGC-A4 automatic gearbox control	729
D867	Automatic gearbox selector	735
D871	Electronic unit, cab heater	508, 517
D879	Rear axle modulator	854
D880	EBS electronic unit	854
D895	Electronic unit for (10A) converter with power supply for radio memory	387
D899	DIP-4 instrument panel	62
D900	VIC electronic unit	83, 93, 143, 486

https://truckmanualshub.com/

Basic code number	Description	Number on search bar
D902	Electronic unit for ZF intarder EST42	550
D903	ECS-DC3 electronic unit	959
D904	Menu control switch, MCS	145
D905	Electronic unit, central door locking	562
D909	Electronic unit, alarm system, ultrasonic	356
D910	Electronic unit, battery charger	349
D911	Electronic unit, ALS-S alarm system	361
D912	Electronic unit, immobiliser	49
D924	Electronic unit, main switch	5
D931	LED unit, immobiliser	75
D932	EMAS electronic unit	581
D954	AS Tronic gearbox modulator	1050
D955	AS Tronic gear lever unit	1038
D969	CAN-data manager, CDM	379
D979	Electronic unit, Hydronic 10 cab heater	532
E000	Fuse, rear left width marker light	228
E001	Fuse, rear right width marker light	241
E004	Fuse, dipped beam, driver’s side	254
E005	Fuse, dipped beam, co-driver’s side	255
E006	Fuse, main beam, driver’s side	259
E007	Fuse, main beam/warning lamp, co-driver’s side	260
E008	Fuse, spotlights	261
E009	Fuse, front fog lamps	264
E010	Fuse, rear fog lamps	267
E013	Fuse, stop lights	272

https://truckmanualshub.com/

Basic code number	Description	Number on search bar
E016	Fuse, reversing lights/gearbox neutral position/windscreen wiper motor/cross-axle differential lock	285
E023	Fuse, cold start switch/tachograph clock/cab heater program clock/alarm system	51
E025	Fuse, windscreen wiper motor/headlamp washer/windscreen washer motor	100
E026	Fuse, cigar lighter/door switches/electronic unit, 24/12V converter with power supply for radio memory	405
E028	Fuse, interior lighting/bunk lamps/central door lock	301
E031	Fuse, heater fan	455, 523
E033	Fuse, electric drop glass motor, co-driver's side	414
E034	Fuse, electric drop glass motor, driver's side	417
E035	Fuse, instruments and warning lamps/parking brake switch/power supply after contact	69
E036	Fuse, 24V socket	403
E037	Fuse, ignition switch	38
E043	Fuse, drawn vehicle ABS/EBS	801, 831
E044	Fuse, mirror heating/electric mirror adjustment/electric drop glass operation	421
E048	Fuse, drawn vehicle power supply	774
E051	Fuse, ECAS/EMAS	573, 638, 667
E052	Fuse, ECAS remote control/work lamp	33
E053	Fuse, diagnosis connector (16-pin)/LED unit/alarm system	189

https://truckmanualshub.com/

Basic code number	Description	Number on search bar
E062	Fuse, mechanical lifting gear/ECAS/EMAS	601, 605, 613, 631
E084	Fuse, lighting	201
E091	Fuse, air dryer heating element/stalk switch/PTO/clutch switch/engine speed control application connector	472
E108	Fuse, VIC	109
E112	Fuse, glow warning lamp	23
E114	Fuse, cab heater/warning lamps	505, 514, 525
E117	Fuse, search light	227
E118	Fuse, UPEC/ECS-DC3 supply voltage	906, 947
E142	Fuse, accessories before contact	780
E144	Fuse, AGC-A4 automatic gearbox	704
E145	Fuse, AGC-A4 automatic gearbox	703
E153	Fuse, main switch for timer/engine stop/main switch power supply	4
E157	Fuse, automatic lubrication	501
E160	ECS-DC3 fuse	945
E163	Fuse, accessories after contact (connector A027)/rotating beams/roof hatch	777
E164	Fuse, FPH-E fuel heater before contact	599, 989
E168	Fuse, accessories/microwave	772
E170	Fuse, electronic unit for fuel filter/water separator, Racor	592, 597, 991
E171	Fuse, fuel filter/water separator heating element, Racor	591
E172	Fuse, drawn vehicle ABS/EBS	802, 833
E184	Fuse, extra functions	904

https://truckmanualshub.com/

Basic code number	Description	Number on search bar
E189	Fuse, rear axle ABS	808, 836
E190	Fuse, front axle ABS	810, 837
E199	Fuse, ZF intarder	545
E277	Fuse, VIC	110
E279	Fuse, airbag and seat belt tensioner/voltage regulation generator	20
E280	Fuse, VIC	112
E286	Main fuse	10, 26
E301	Fuse, AS Tronic	1045
E330	Fuse, ‘sens’ wire main switches	12
E350	Fuse, various electrical systems	45
E351	Fuse, various electrical systems	44
E507	Proximity switch for axle-load protection lifting gear (10 tons)	617
E508	Temperature switch for air conditioning compressor	459
E509	Air conditioning operating switch, high/low pressure	458
E511	Stop light operating switch	274
E514	Operating switch for stepwell/interior lighting, driver’s side door switch	341
E515	Operating switch for stepwell/interior lighting, co-driver’s side door switch	343
E524	Mechanical lifting-gear operating switch, oil pressure limit switch	624
E528	Operating switch for left-hand tool compartment lighting	313, 328
E542	Proximity switch for axle load protection (13 tons)	605
E564	Engine brake operating switch	72
E566	Operating switch, cab heater thermostat	509

https://truckmanualshub.com/

Basic code number	Description	Number on search bar
E570	Proximity switch, clutch PTO N10	498
E571	Thermo 90/Hydronic 10 cab heater operating switch	534
E575	Clutch pedal proximity switch	902, 974
E579	Operating switch for thermostat/cab heater, fan, Eberspächer (water)	536
E580	Operating switch for thermostat/cab heater, fan, Eberspächer (timer)	540
E581	Cab heater timer unit	519
E584	Proximity switch for axle-load protection lifting gear (7.5 tons)	615
E590	AS Tronic selector switch	1040
E592	Reversing light operating switch	286
E593	Neutral position switch	108
E594	Operating switch for neutral position/reverse gear	106
E595	Low-range switch	139
E599	Neutral position switch	1036
F000	Parking brake switch	70
F006	Control switch for differential lock, 1st differential	127
F007	Control switch for differential lock, 3rd differential	131
F011	Control switch for engine oil pressure	123
F038	Control switch for differential lock, 2nd differential	129
F047	Control switch for steering system (1st circuit)	124
F048	Control switch for steering system (2nd circuit)	125

https://truckmanualshub.com/

Basic code number	Description	Number on search bar
F050	Control switch for differential lock pressure, 1st and 2nd differential	128
F087	Control switch, gearbox PTO	485
F088	Control switch, gearbox PTO	486
F097	Proximity switch for trailing axle mechanical lifting gear	613
F107	Control switch for brake lining wear, front left	874
F108	Control switch for brake lining wear, front right	876
F109	Control switch for brake lining wear, front left, 2nd front axle	877
F110	Control switch for brake lining wear, front right, 2nd front axle	879
F111	Control switch for brake lining wear, rear left	880
F112	Control switch for brake lining wear, rear right	881
F113	Control switch for brake lining wear, rear left, 2nd rear axle (6x2)	882
F114	Control switch for brake lining wear, rear right, 2nd rear axle (6x2)	884
F118	Control switch for splitter signalling	121
F120	Gearbox switch for gate 3-4	142
F509	Cab temperature sensor, cab heater	537
F512	Wheel speed sensor, front axle, left	807, 836
F513	Wheel speed sensor, front axle, right	809, 850
F514	Wheel speed sensor, driven axle, left	810
F515	Wheel speed sensor, driven axle, right	811
F533	Speed sensor	52
F544	Coolant temperature sensor, intarder	558
F552	Crankshaft sensor	906

https://truckmanualshub.com/

Basic code number	Description	Number on search bar
F558	Camshaft sensor	905
F565	Fuel temperature sensor	907
F566	Engine coolant temperature sensor	909
F601	Output shaft speed sensor, automatic gearbox	717
F602	Input shaft speed sensor, automatic gearbox	719
F608	Fuel level sensor	116
F612	Height sensor, ECAS, rear axle, left	637, 665
F613	Height sensor, ECAS, rear axle, right	639, 666
F614	Height sensor, ECAS, front axle	640, 668
F615	ECAS pressure sensor, driven axle, left/right	669
F616	Cab locking sensor	102
F619	Cab locking sensor, alarm system	354
F628	Foot brake valve	860
F649	Inlet air boost pressure sensor/temperature sensor	910
F651	Ambient temperature sensor	112
F652	Air pressure sensor	113
F656	Coolant level sensor	117
F669	Retarder temperature sensor, automatic gearbox	723
F670	Automatic gearbox turbine speed sensor	724
F671	ECS-DC3 accelerator pedal sensor	966
F672	Accelerator pedal sensor	913
F673	Engine oil level and temperature sensor	143
F676	Lifting cylinder sensor, cab	103, 360

https://truckmanualshub.com/

Basic code number	Description	Number on search bar
F686	Alarm system radar sensor	575
F687	EMAS angle sensor, front axle	576
F688	EMAS angle sensor, trailing axle	1053
F705	Speed sensor	208
G000	Tail light/width marker light/search light relay	225
G001	Dipped beam relay	217, 254
G002	Main beam relay	219, 259
G003	Spotlight relay	258.261
G004	Fog lamp relay, front	211, 264
G005	Fog lamp relay, rear	135, 267
G014	Glow plug relay	22, 23, 918, 971
G015	Contact relay	1, 38
G028	Electric drop glass operation relay, co-driver's side	413, 421
G029	Electric drop glass operation relay, co-driver's side	415, 422
G030	Electric drop glass operation relay, driver's side	417, 427
G031	Electric drop glass operation relay, driver's side	418, 428
G036	Stop light relay	274, 275
G037	Stop light relay for automatic gearbox	279, 281
G052	Motor relay, mechanical lifting gear	622, 629
G066	Takeover relay, mechanical lifting gear	622, 624
G095	Traction assistance relay, 60 sec. bleeding	609
G126	UPEC/ECS-DC3 supply relay	905, 906
G170	Heater fan relay, cab heater	525, 535
G180	Time relay, automatic gearbox	703
G181	Takeover relay, automatic gearbox	703, 709

https://truckmanualshub.com/

Basic code number	Description	Number on search bar
G185	Starting circuit interrupter relay	29, 30, 707, 1035
G201	Fuel heating relay, FPH-E	597, 599, 975, 989
G203	Starter motor takeover relay	27, 28
G236	Windscreen wiper relay (speed 1 or 2)	95, 99
G237	Windscreen wiper relay (automatic zero position)	95, 96
G247	Heater fan relay, Eberspächer Hydronic cab heater	523, 529
G257	Recirculation valve relay	464, 467
G258	Recirculation valve relay	462, 467
G259	PTO operation takeover relay	498, 499
G267	Air conditioning relay	455, 458
G279	Air conditioning relay	457, 468
G291	Relay, automatic gearbox	710, 759
G292	Relay, automatic gearbox	710, 712
G293	Relay, automatic gearbox	749, 754
G294	Relay, automatic gearbox	707, 759
G295	Relay, automatic gearbox	712, 754
G299	Relay, roof spotlights	782, 789
G301	Lighting relay D+	131, 202
G302	Swedish lighting relay	204, 206
G328	Engine stop relay	43, 935
G350	Reversing light relay, automatic gearbox	283, 285, 286, 288
G351	Cab tilt protection relay	104, 105
G367	Main switch relay, power supply	4, 10
G368	Main switch relay, earth	6, 10

https://truckmanualshub.com/

Basic code number	Description	Number on search bar
G371	PTO relay, automatic gearbox	708, 750
G372	Starting circuit interrupter relay	29, 133
G375	Stop light relay for automatic gearbox with retarder	272, 709
G377	Relay, accessories power supply for radio	384, 393
G380	Relay, mechanical lifting axle upwards	613, 617
G381	Relay, mechanical lifting axle (7.5 tons)	616, 627
G426	Contact relay	39, 41
G427	Traction assistance relay, FAG	606, 609
G462	Work lamp relay	33, 35
G469	Braking signal relay	929, 931
G516	Central cab earth, co-driver's side	1014
G535	CAN distribution block	183
G725	Through-connection, cab heater (Eberspächer)	507, 516
G732	Through-connection, cab heater (Eberspächer)	538
G733	Through connection for intarder neutral position	107
G734	Through-connection for brake lining wear	880
G736	V-CAN connection	198
G737	Through-connection, ECS-DC3 speed control	987
G745	Through-connection, mechanical lifting gear	625
G757	Through-connection for main switch	39
I020	Diode, gearbox gate protection	141

https://truckmanualshub.com/

2.3 SECTION DIAGRAMS FROM CIRCUIT DIAGRAM 1358030/26

A	Voltage before and after contact
B	Overview of earthing points
C	CAN overview
1	Main switch
2	Alternator/ignition/starter switch/charging circuit
3	Tachograph
4	Immobiliser
5	Pre-glowing
6	DIP-4
7	Direction indicators and warning lamps
8	VIC
9	FA marker and parking lights
10	FT marker and parking lights
11	UPEC
12	Reversing lights
13	Light switch/fog lamps/dipped beam and main beam switch, FA/FT
14	Swedish lighting
15	Stop lights/cab tilting gear
16	Differential lock
17	Interior lighting, D/SL cab
18	Interior lighting, SH cab
19	Mirror heating/mirror adjustment
20	Search lighting
21	Air conditioning/recirculation valve/heater fan
22	Seat heating/accessories
23	Horn/cigar lighter/work lamp/air dryer
24	ABS-ASR-D
25	DEB

https://truckmanualshub.com/

26	Intarder EST42
27	ECS-DC3
28	AGS
29	EMAS
30	AGC
31	FAG
32	PTO
33	Roof spotlights/cooler box/rotating beams
34A	ECAS-3 (4x2)
34B	ECAS-2 (6x2)
35	Headlight-height adjustment
36	24V/12V converter/radio/CB set
37	Electric drop glass/central door locking/roof hatch, SH cab
38	Mechanical lifting gear
39	Fuel pre-heating
40	Windscreen wipe/wash system
41	Airtronic cab heater (ACH-EA) with/without timer
42	Hydronic 10 (ACH-EW) cab heater with timer
43	UPEC/CUMMINS/AGC application connector
44	EBS
45	Brake lining wear switch
46	Alarm system/battery charger for BV3 alarm
47	Sockets, FA
48	Sockets, FT
49	Water separator (Fleetguard)
50	Water separator
51	AS Tronic
52	CDM

https://truckmanualshub.com/

A VOLTAGE BEFORE AND AFTER CONTACT

VOLTAGE BEFORE CONTACT

A constant voltage is supplied to pin 1 of connector 416 through wire 1008, point 30 on the starter motor, fuse E286, the + bolt in the dashboard connector lead-through and the voltage distribution block.
Power is also supplied (via wire 1008) from point 30 of the starter motor to the B+ connection of the alternator and to relay G014 (glow-plug relay).

Power is supplied to the “S” (sens) connection of the alternator from point 30 of the starter motor via fuse E279 and wire 3084.

Only wire 1008 to the + bolt in the dashboard connector lead-through is fuse-protected by fuse E286 (125A).
The other wires are NOT fuse-protected and they can only be made dead by disconnecting the battery leads..

VOLTAGE AFTER CONTACT

A voltage is supplied to contact relay G015 (connection point 30) via the starter motor (connection point 30). This connection point may be connected to wire 1010 over contact relay G015.
This wire is only fuse-protected with fuse E286 (125A).

OPERATION

When the accessories/ignition/starter switch (C539) is set to the “accessories” position (connection between points 1 and 6), a voltage is supplied to connection point 1 of relay G377 via wire 1000, fuse E037, accessories/ignition/starter switch (C539) (contact points 1 - 6) and wire 1130.

When the accessories/ignition/starter switch (C539) is set to the “contact” position (connection between points 1 and 4), relay G015 is energised via wire 1000, fuse E037, accessories/ignition/starter switch (C539) (contact points 1 - 4) and wire 4001, relay G015.
This then connects wire 1000 (voltage before contact) to wire 1010 (voltage after contact).

At the same moment this voltage is also applied to connection point 85 of relay G426. This relay is also activated and connects contacts 30 and 87. A voltage is now applied both to fuse E350 and to fuse E351 via fuse E037, contacts 30 - 87 and wire 1234. The voltage goes to connection point 15 of the alternator via fuse E350.

When the accessories/ignition/starter switch (C539) is turned against the pressure of the spring (connection between points 1 and 2), relay G015 and relay G426 remain energised and a voltage is supplied to the alarm system (D911) (if present) or directly to connector 403, connection point 2, via wire 1000, fuse E037, accessories/ignition/starter switch (C539), contacts 1 - 2 and wire 4004. When the ignition/starter key is released, the ignition/starter switch automatically springs back and remains in the “contact” position.

https://truckmanualshub.com/

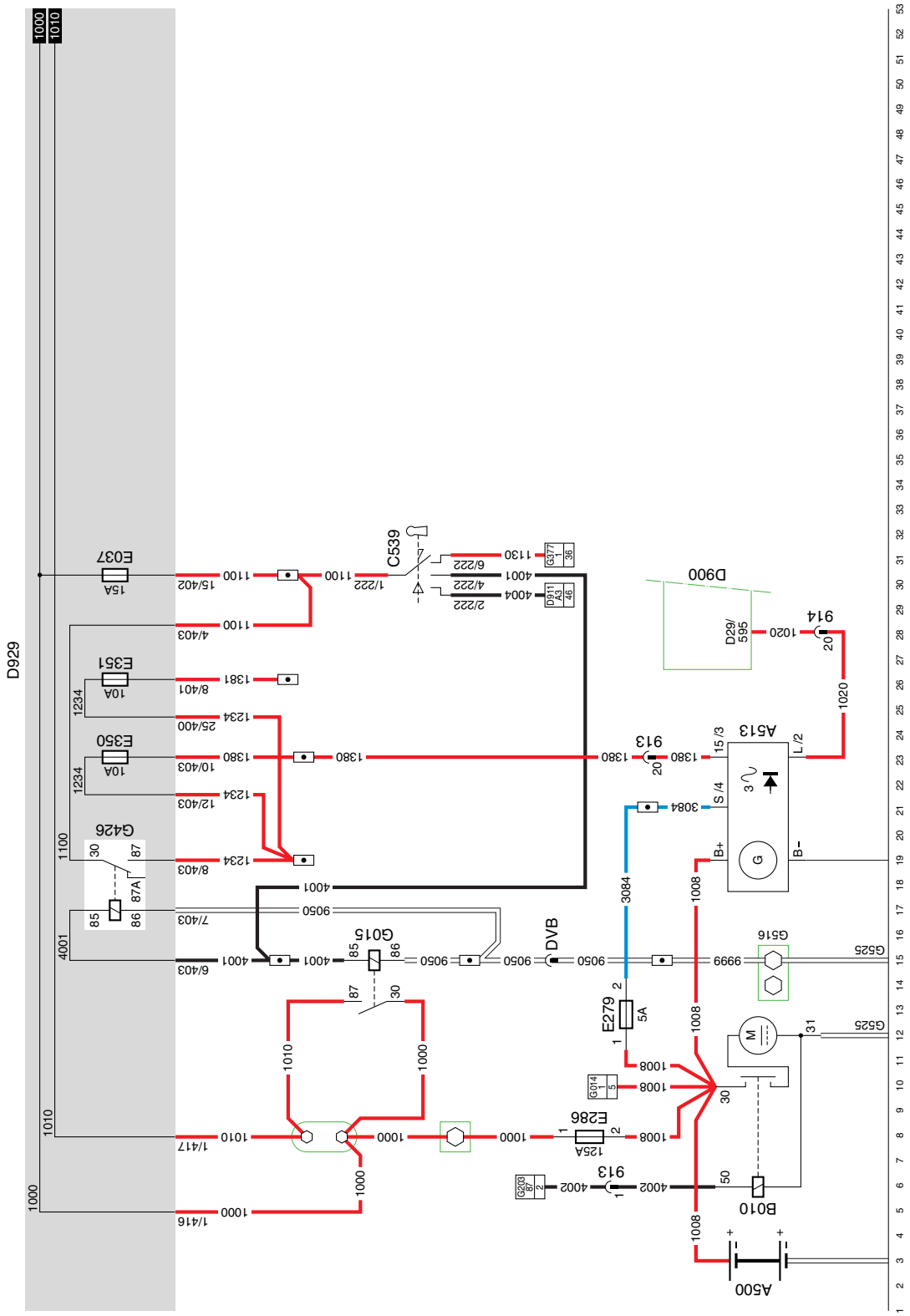

A 1358030/26 EL001292

10

https://truckmanualshub.com/

B OVERVIEW OF EARTHING POINTS

This section diagram gives an overview of all the earth connections, with wire markings and connector points.

VARIANTS

Location

10	connector 580: superstructure connection, accessories
18	connector 482: cab heater ACH-H connector 582: cab heater ACH-E
59	connector 644: only for AGC
67	connector 869: only for AS Tronic
69	connector 403: only for AS Tronic
71	connector 868: only for AS Tronic
76	connector 860: loop-through to ECAS

© 200404

https://truckmanualshub.com/

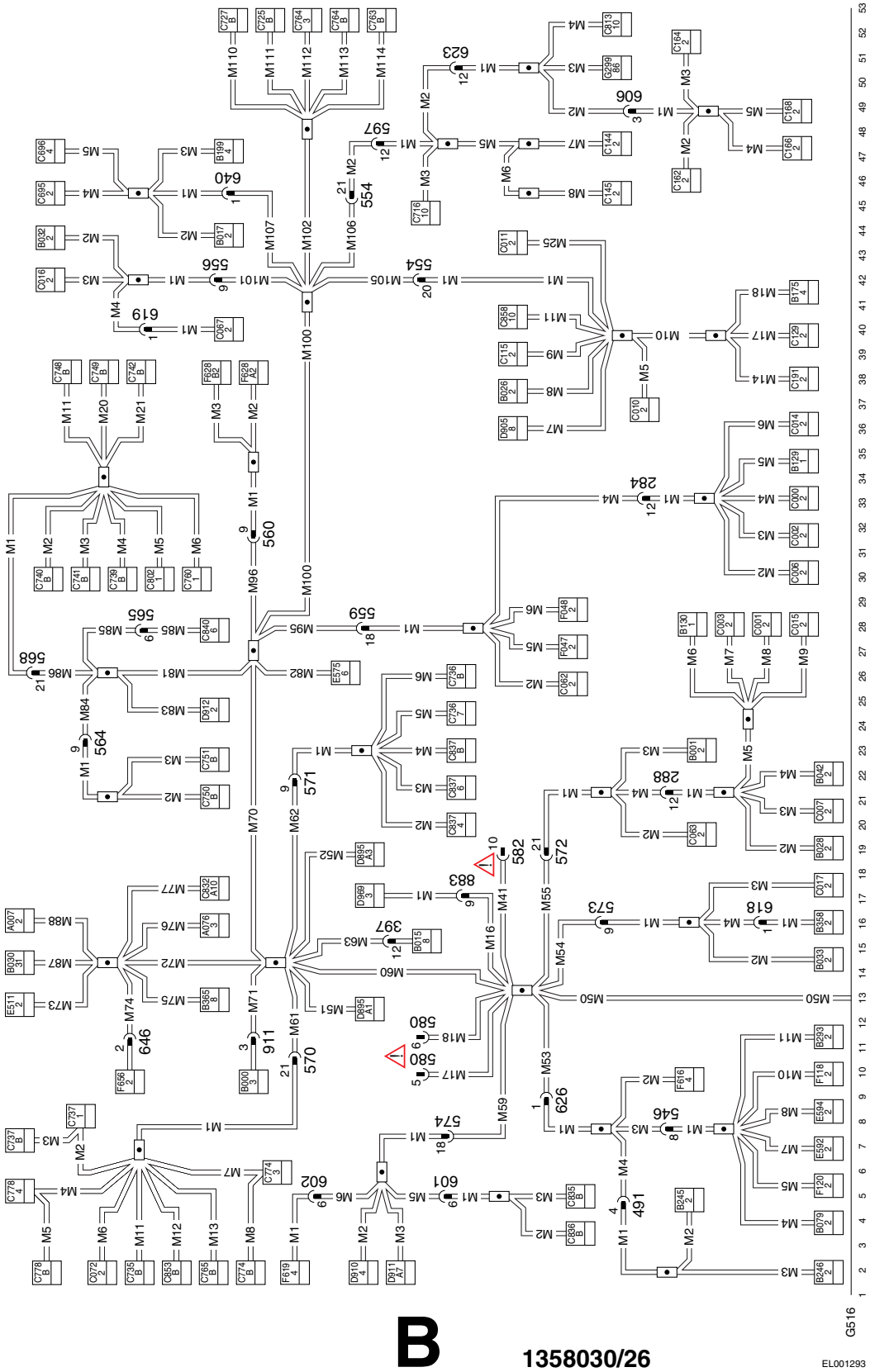

https://truckmanualshub.com/

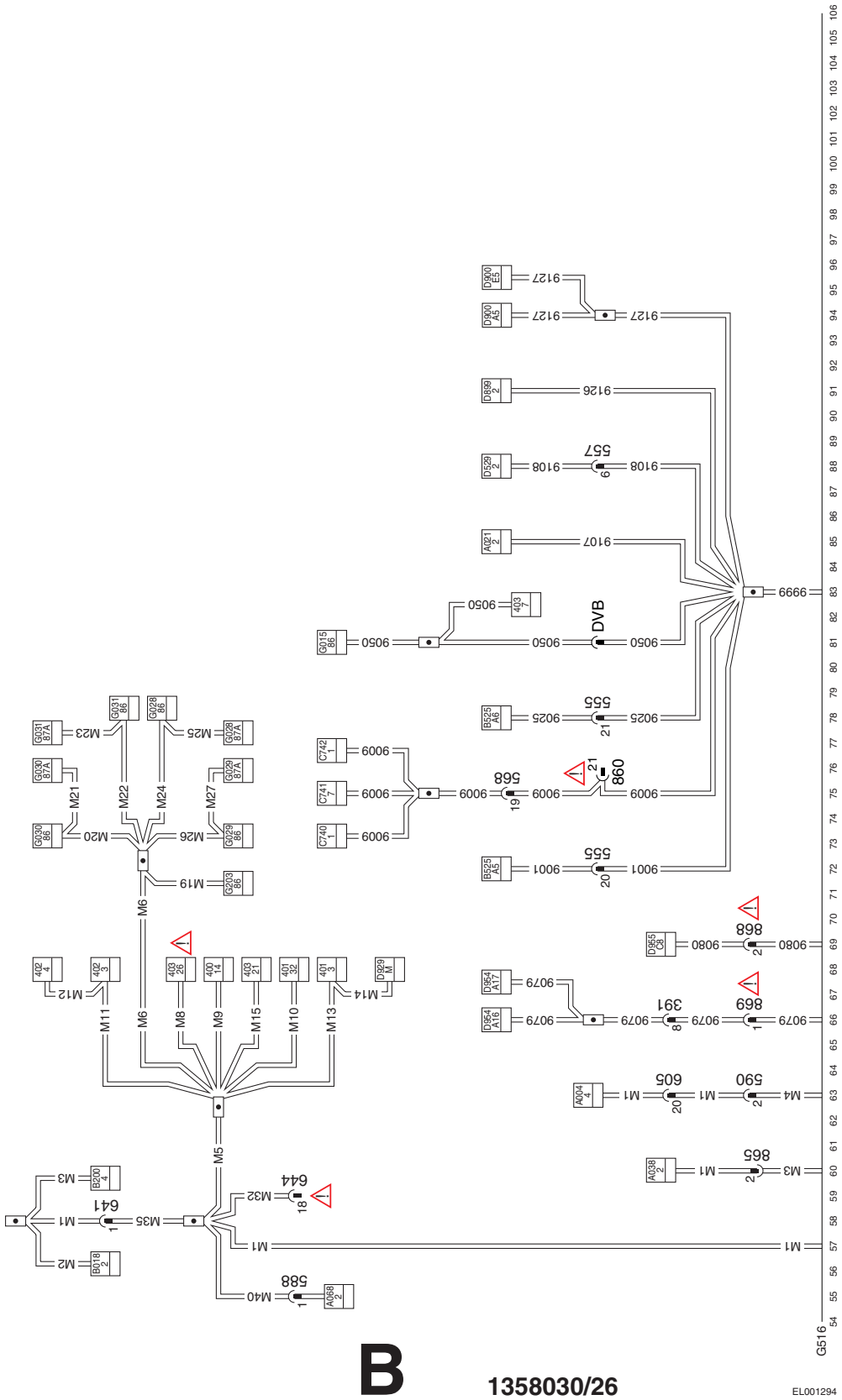

https://truckmanualshub.com/

https://truckmanualshub.com/

C CAN OVERVIEW

This section diagram gives an overview of all the CAN connections, with wire markings and connector points.

SEE THE SYSTEM MANUAL FOR MORE INFORMATION

VARIANTS

Location

11	Only for AS Tronic If AS Tronic is **NOT** fitted, wire 3701 direct from A8 to C14 without in-line connectors.
25	D814: UPEC electronic unit or D903: electronic unit, ECS-DC3
64	Connector 873 only on vehicle type FA D880 for EBS or D941 for ABS/ASR-D

© 200404

https://truckmanualshub.com/

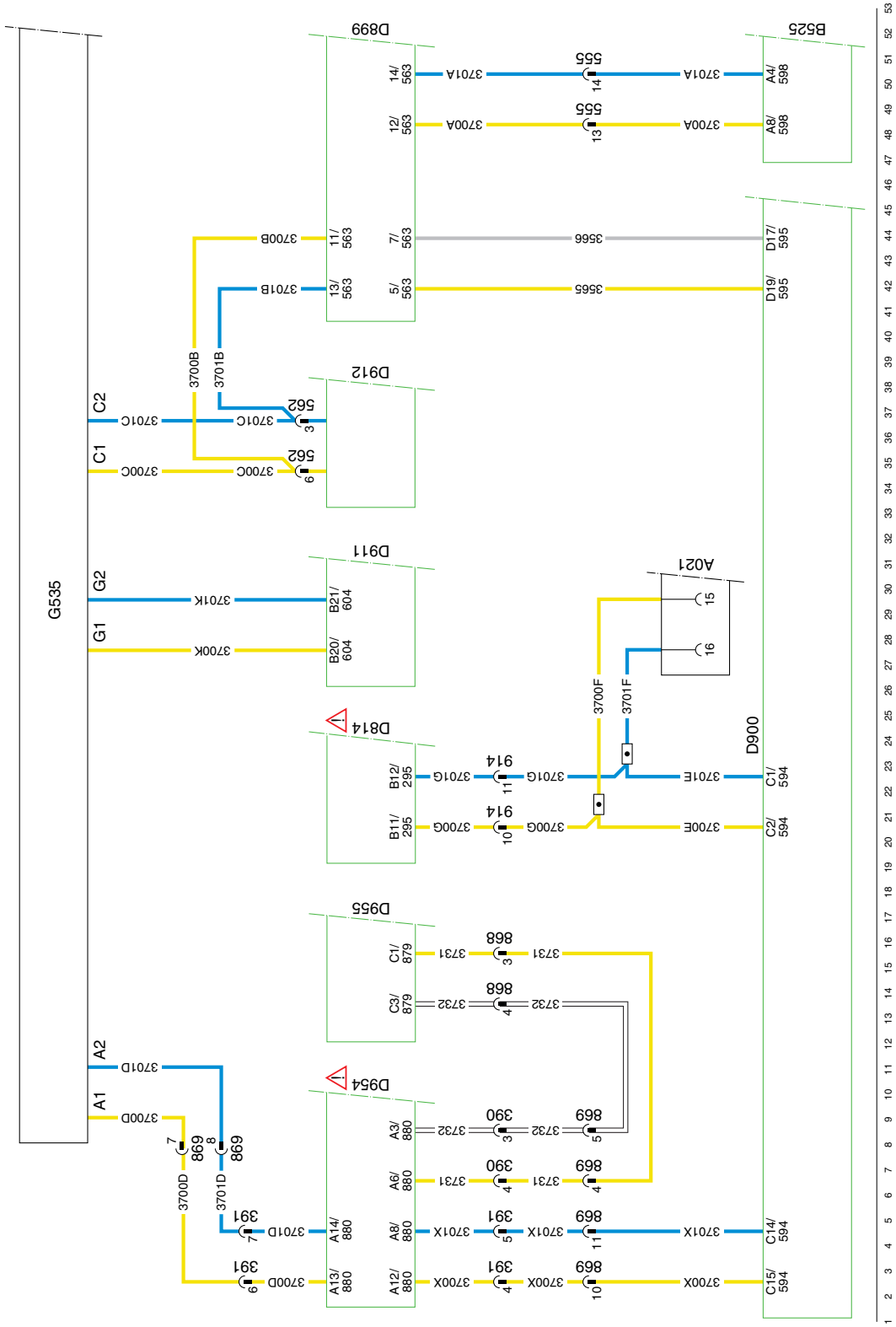

C 1358030/26

EL001295

10

https://truckmanualshub.com/

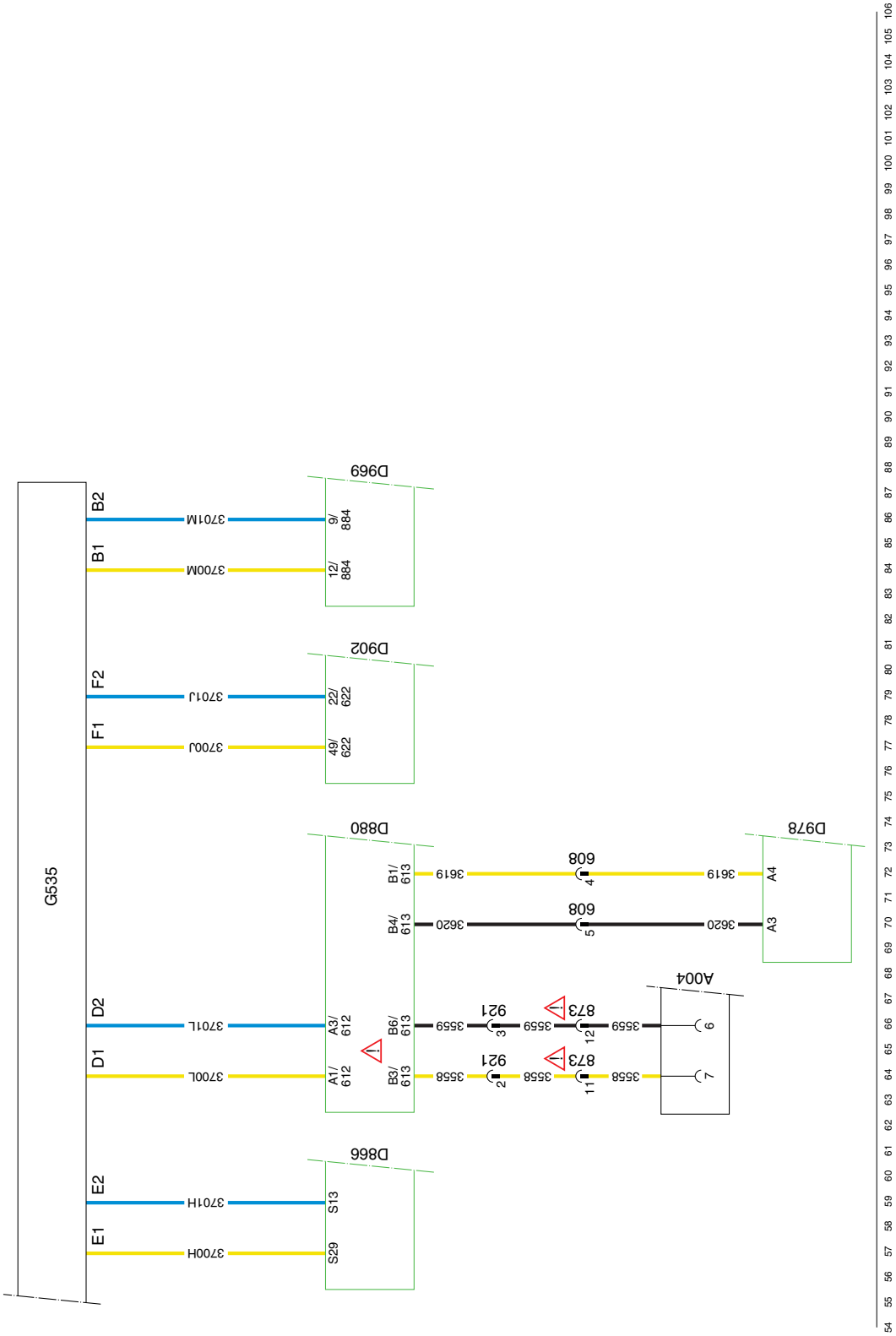

C 1358030/26 EL001296

https://truckmanualshub.com/

https://truckmanualshub.com/

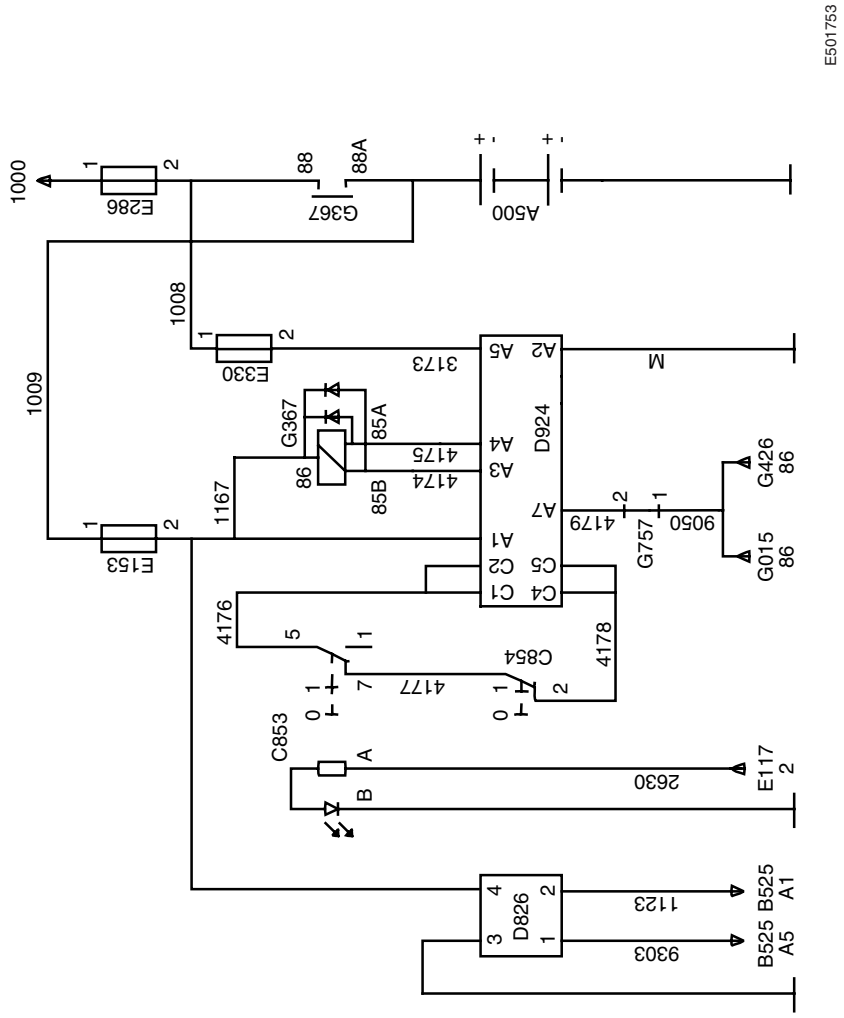

1 MAIN SWITCH

MAIN SWITCH FOR VLG/ADR

* If the vehicle has an Allison gearbox and the system must meet specific safety requirements, wire no. 1009 (Allison power supply) should be connected to connection 88a of relay G367.

Basic code number	Description
A500	Batteries
A513	Integrated voltage regulator generator
B525	Modular tachograph, MTCO
C853	Cab main switch
C854	Chassis main switch
D826	Electronic unit for VLG current limiter
D900	CF 65/75/85 VIC electronic unit
D924	Electronic unit for main switch
E117	Fuse, search light
E153	Fuse, main switch for timer/engine stop/main switch power supply
E286	Main fuse
E330	Fuse, 'sens' wire main switch
G367	Main switch relay, power supply
G425	Main switch relay

10

https://truckmanualshub.com/

Relay, main switch power supply
Relay G367 is a bi-stable relay. If one of the two coils is briefly energised, the relay will remain in this position. If the other coil is energised, the relay will switch over and then remain in the new position.

https://truckmanualshub.com/

Electrically closing the main switch

The main switch (D924) can be closed:
- electrically in the cab using switch C853
- electrically on the chassis using switch C854

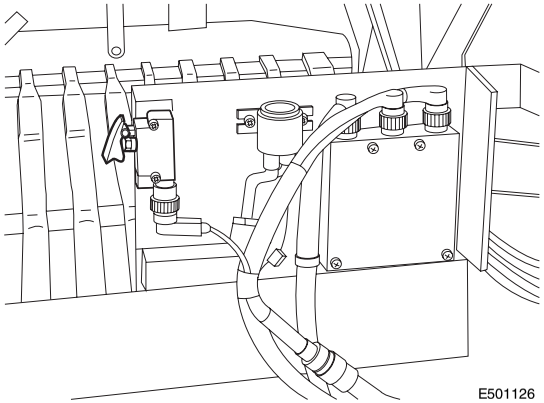

ATTENTION: Switches C853 and C854 are connected in series. When C853 or C854 is switched on, the other switch must be in the “main switch on” position.
Switch C853 (main switch in cab) connects the C1 and C2 connections to the C4 and C5 connections via wire 4176, contacts 5 - 7 of switch C853, wire 4177, contacts 1 - 2 of switch C854 and wire 4178.

Relay G367 is immediately energised through wire 4174 and connection point A3 (A3 is connected to earth in the unit for 0.5 seconds). This connects point 88a to 88 of relay G367. The positive pole of the batteries is now connected to the vehicle’s power supply.
Immediately after switch C853 closes, connection point A2 is internally connected to point A7.

Connection point A5 is connected to the positive pole via wire 3173 after connection point 88 of relay G367. This connection transmits a signal to the ECU to indicate that relay G367 has switched.

Closing the main switch electrically on the chassis

NOTE: Switch C853 must be in the “main switch on” position (connection between contacts 5 and 7).
Switch C854 (switch for main switch on the chassis) connects the C1 and C2 connections to the C4 and C5 connections via wire 4176, contacts 5 - 7 of switch C853, wire 4177, contacts 1 - 2 of switch C854 and wire 4178.
Relay G367 is immediately energised through wire 4174 and connection point A3 (A3 is connected to earth in the unit for 0.5 seconds). This connects point 88a to 88 of relay G367. The positive pole of the batteries is now connected to the vehicle’s power supply.

Immediately after switch C854 closes, connection point A2 is internally connected to point A7.

Connection point A5 is connected to the positive pole via wire 3173 after connection point 88 of relay G367. This connection transmits a signal to the ECU to indicate that relay G367 has switched.

The main switch (D924) can be opened:
- electrically in the cab using switch C853
- electrically on the chassis using switch C854

Opening the main switch electrically in the cab

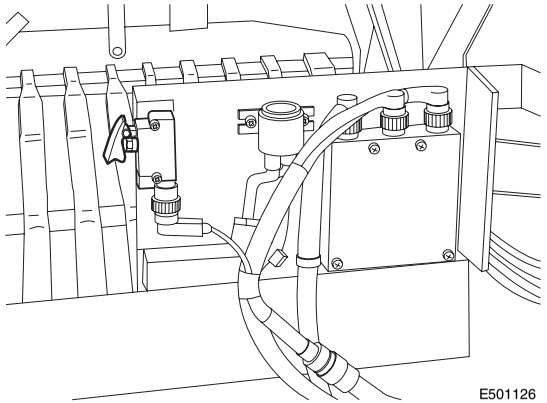

NOTE: Switch C854 must be in the “main switch on” position (connection between contacts 1 and 2).

https://truckmanualshub.com/

Switch C853 (switch for main switch in cab) disconnects the C1 and C2 connections from the C4 and C5 connections via wire 4176, contacts 5 - 7 of switch C853, wire 4177, contacts 1 - 2 of switch C854 and wire 4178. Two actions are carried out immediately after switch C853 is opened:

1. Connection point A7 is disconnected from earth (A2) in the unit. If the engine is running, it is switched off.
2. After a delay of approx. 6 seconds, relay G367 is connected to earth in the unit for approx. 0.5 seconds via wire 4175 and connection point A4. This breaks the connection between points 88a and 88 of relay G367. The batteries are now disconnected from the vehicle's power supply.

Connection point A5 is connected to the positive pole via wire 3173 and fuse E330 after connection point 88 of relay G367. This connection transmits a signal to the ECU to indicate that relay G367 has switched.

Opening the main switch electrically on the chassis

NOTE: Switch C853 must be in the "main switch on" position (connection between contacts 5 and 7).

Switch C854 (main switch in cab) disconnects the C1 and C2 connections from the C4 and C5 connections via wire 4176, contacts 5 - 7 of switch C853, wire 4177, contacts 1 - 2 of switch C854 and wire 4178.

Two actions are carried out immediately after switch C854 is opened:

1. Connection point A7 is disconnected from earth (A2) in the unit. If the engine is running, it is switched off.
2. After a delay of approx. 6 seconds, relay G367 is connected to earth in the unit for approx. 0.5 seconds via wire 4175 and connection point A4. This breaks the connection between points 88a and 88 of relay G367. The batteries are now disconnected from the vehicle's power supply.

Connection point A5 is connected to the positive pole via wire 3173 and fuse E330 after connection point 88 of relay G367. This connection transmits a signal to the ECU to indicate that relay G367 has switched.

Note:
When one of the switches (C853 or C854) that activate the electronic unit (close main switch) is operated, relay G367 is activated after approximately 3 seconds. If one of the switches is operated again within the 3 seconds, the electronic unit (D924) will select the priority 'main switch ON'.

https://truckmanualshub.com/

MAIN SWITCH FOR PETREG

If the vehicle has an Allison gearbox and the system must meet specific safety requirements, wire no. 1009 (Allison power supply) should be connected to connection 88a of relay G367.
The earth connection of D866 must be connected to connector 88 of relay G368.

Basic code number	Description
A500	Batteries
A513	Integrated voltage regulator generator
B525	Tachograph
C010	Position of cab lamp on driver's side
C011	Position of co-driver's side cab lamp
C853	Switch for main switch in cab
C854	Switch for main switch on chassis
D826	Electronic unit for VLG current limiter
D900	LF65/75/85 VIC electronic unit
D924	Electronic unit for main switch
E045	Fuse, interior lighting
E117	Fuse, search light
E153	Engine stop main switch fuse for main switch
E286	High output fuse
E330	Fuse, 'sens' wire main switch
G367	Relay, power supply main switch
G368	Relay, main switch earth
G425	Relay, main switch

https://truckmanualshub.com/

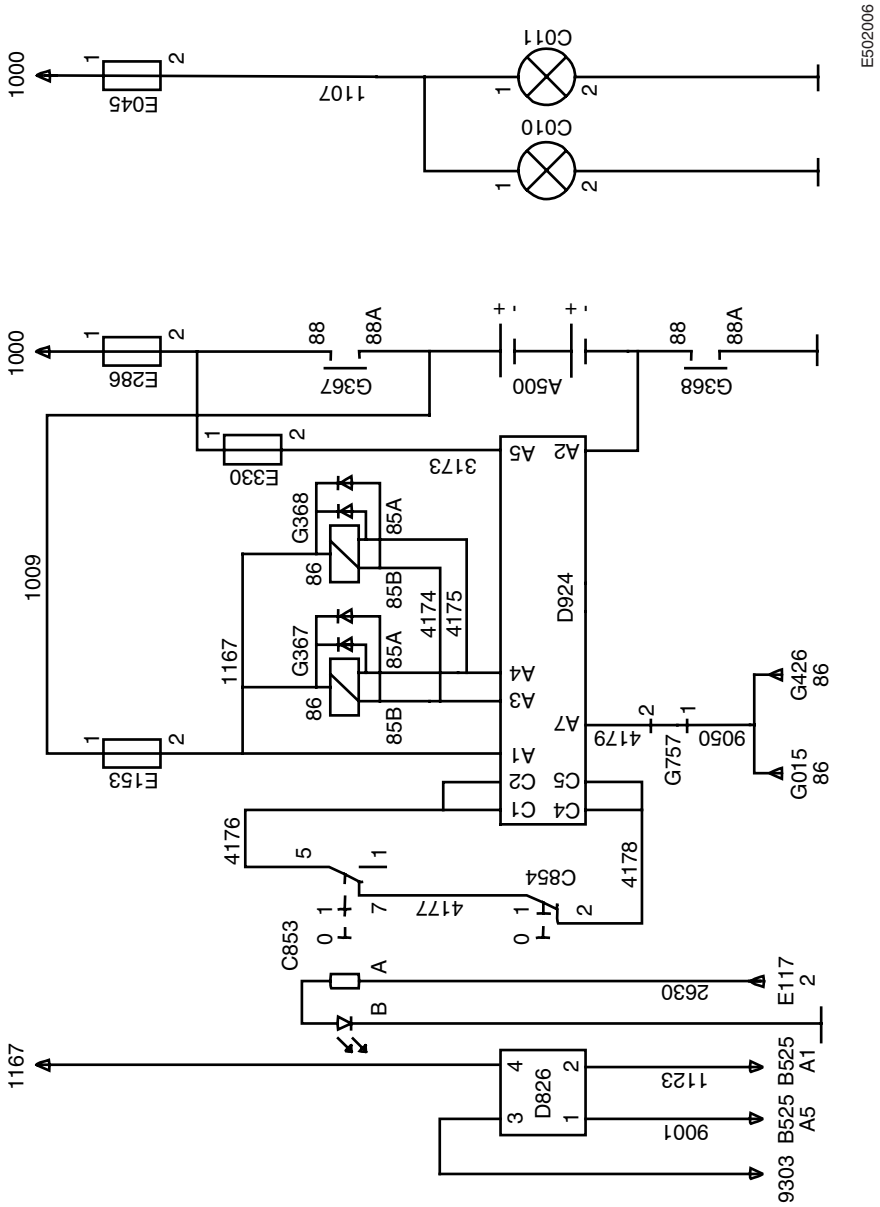

10

https://truckmanualshub.com/

The main switch (D924) can be closed:
- electrically in the cab
- electrically on the chassis

Closing the main switch electrically in the cab

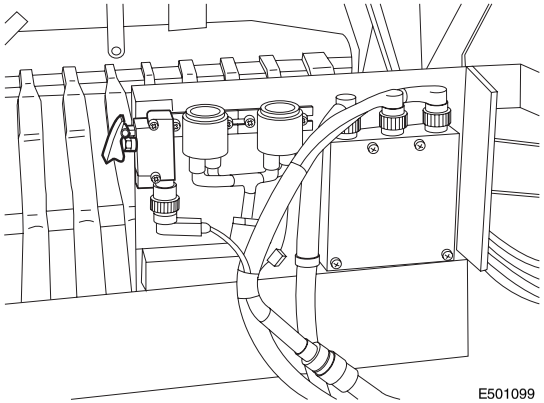

NOTE: Switch C854 must be in the "main switch on" position (connection between contacts 1 and 2).

Switch C853 (switch for main switch in cab) connects the C1 and C2 connections to the C4 and C5 connections via wire 4176, contacts 5 - 7 of switch C853, wire 4177, contacts 1 - 2 of switch C854 and wire 4178. Relays G367 and G368 are immediately energised through wire 4174 and connection point A3 (A3 is connected to earth for 0.5 seconds). This closes the connection between points 88a and 88 of both relay G367 and relay G368. The positive and the negative poles of the batteries are now connected to the vehicle's power supply.

Immediately after switch C853 closes, connection point A2 is internally connected to point A7.

Connection point A5 is connected to the positive pole via wire 3173 after connection point 88 of relay G367.
This connection transmits a signal to the ECU to indicate that relay G367 has switched.

Closing the main switch electrically on the chassis

NOTE: Switch C853 must be in the "main switch on" position (connection between contacts 5 and 7).

Switch C854 (switch for main switch on the chassis) connects the C1 connection to the C4 and C5 connections via wire 4176, contacts 5 - 7 of switch C853, wire 4177, contacts 1 - 2 of switch C854 and wire 4178. Relays G367 and G368 are immediately energised through wire 4174 and connection point A3 (A3 is connected to earth for 0.5 seconds). This closes the connection between points 88a and 88 of both relay G367 and relay G368. The positive and the negative poles of the batteries are now connected to the vehicle's power supply.

Immediately after switch C854 closes, connection point A2 is internally connected to point A7.
Connection point A5 is connected to the positive pole via wire 3173 after connection point 88 of relay G367. This connection transmits a signal to the ECU to indicate that relay G367 has switched.

The main switch (D924) can be opened:
- electrically in the cab
- electrically on the chassis

Opening the main switch electrically in the cab

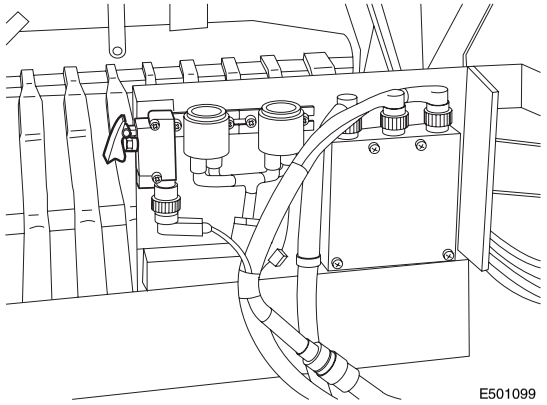

NOTE: Switch C854 must be in the "main switch on" position (connection between contacts 1 and 2).

Switch C853 (switch for main switch in cab) disconnects wire 4176, contacts 5 - 7 of switch C853, wire 4177, contacts 1 - 2 of switch C854 and the C1 and C2 connections from the C4 and C5 connections via wire 4178.

https://truckmanualshub.com/

Two actions are carried out immediately after switch C853 is opened:
1. Connection point A7 is connected to earth (A2).
2. After a delay of approx. 6 seconds, relays G367 and G368 are connected to earth for approx. 0.5 sec. via wire4175 and connection point A4. This breaks the connection between points 88a and 88 of relays G367 and G368. The positive and the negative poles of the batteries are now disconnected from the vehicle's power supply.

If the engine is running, it is switched off.

Connection point A5 is connected to the positive pole via wire 3173 after connection point 88 of relay G367. This connection transmits a signal to the ECU to indicate that relay G367 has switched.

Opening the main switch electrically on the chassis

NOTE: Switch C853 must be in the "main switch on" position (connection between contacts 5 and 7).

Switch C854 (switch for main switch in cab) breaks the C1 and C2 connections to the C4 and C5 connections via wire 4176, contacts 5 - 7 of switch C853, wire 4177, contacts 1 - 2 of switch C854 and wire 4178.

Two actions are carried out immediately after switch C854 is opened:
1. Connection point A7 is connected to earth (A2) in the unit.
2. After a delay of approx. 6 seconds, relays G367 and G368 are connected to earth for approx. 0.5 sec. via wire4175 and connection point A4. This breaks the connection between points 88a and 88 of relays G367 and G368. The positive and the negative poles of the batteries are now disconnected from the vehicle's power supply.

If the engine is running, it is switched off.

Connection point A5 is connected to the positive pole via wire 3173 after connection point 88 of relay G367. This connection transmits a signal to the ECU to indicate that relay G367 has switched.

Note:
When one of the switches (C853 or C854) that activate the electronic unit (close main switch) is operated, relays G367 and G368 are activated after approximately 3 seconds. If one of the switches is operated again within the 3 seconds, the electronic unit (D924) will select the priority 'main switch ON'.

VARIANTS

Location

24	Only if the vehicle is equipped to PETREG requirements.
36	Connect wire 4179 to dashboard-wiring harness in central box (see drawing).
39	Attach wire 4176 to pin 11 of connector 570. Attach wire 4177 to pin 12 of connector 570.
43, 46	Attach wire 1123 to pin 2 instead of wire 1127. Insulate wire 1127. Attach wire 9303 to pin 20 of connector 555 instead of wire 9001. Insulate wire 9001.
50	Only if vehicle is equipped to PETREG requirements.

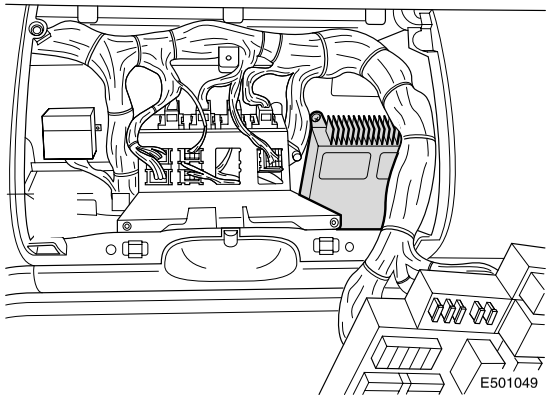

https://truckmanualshub.com/

MECHANICAL MAIN SWITCH

When C694 (mechanical main switch) is operated, connections B and G are connected. The earth of the batteries is now connected to the chassis. The earth connection of B525 (MTCO) is independent of the position of the main switch.

VARIANTS

Location

64 Attach wire 9307 to pin 20 of connector 555 instead of wire 9001. Insulate wire 9001.

https://truckmanualshub.com/

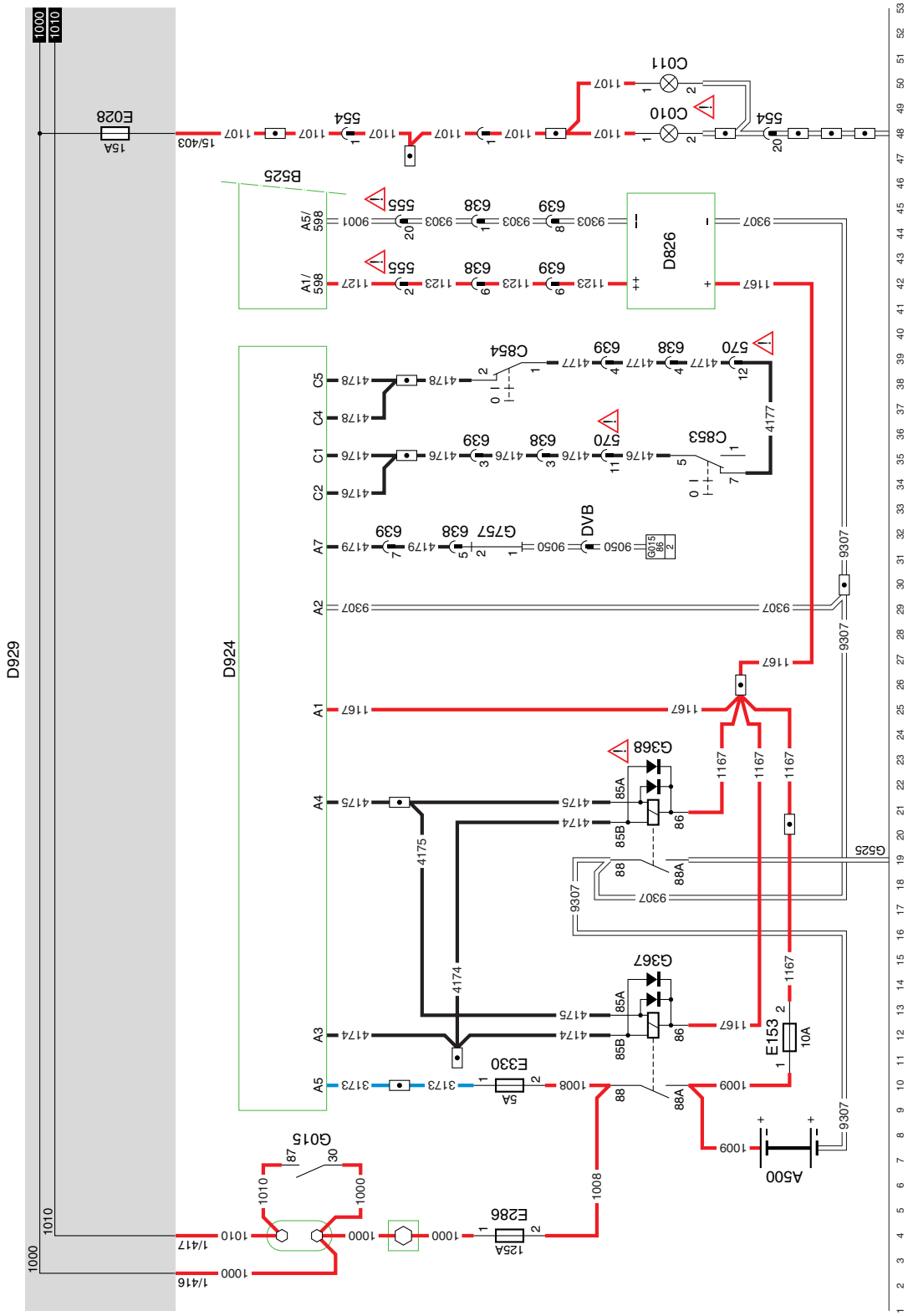

1

1358030/26

EL001297

10

https://truckmanualshub.com/

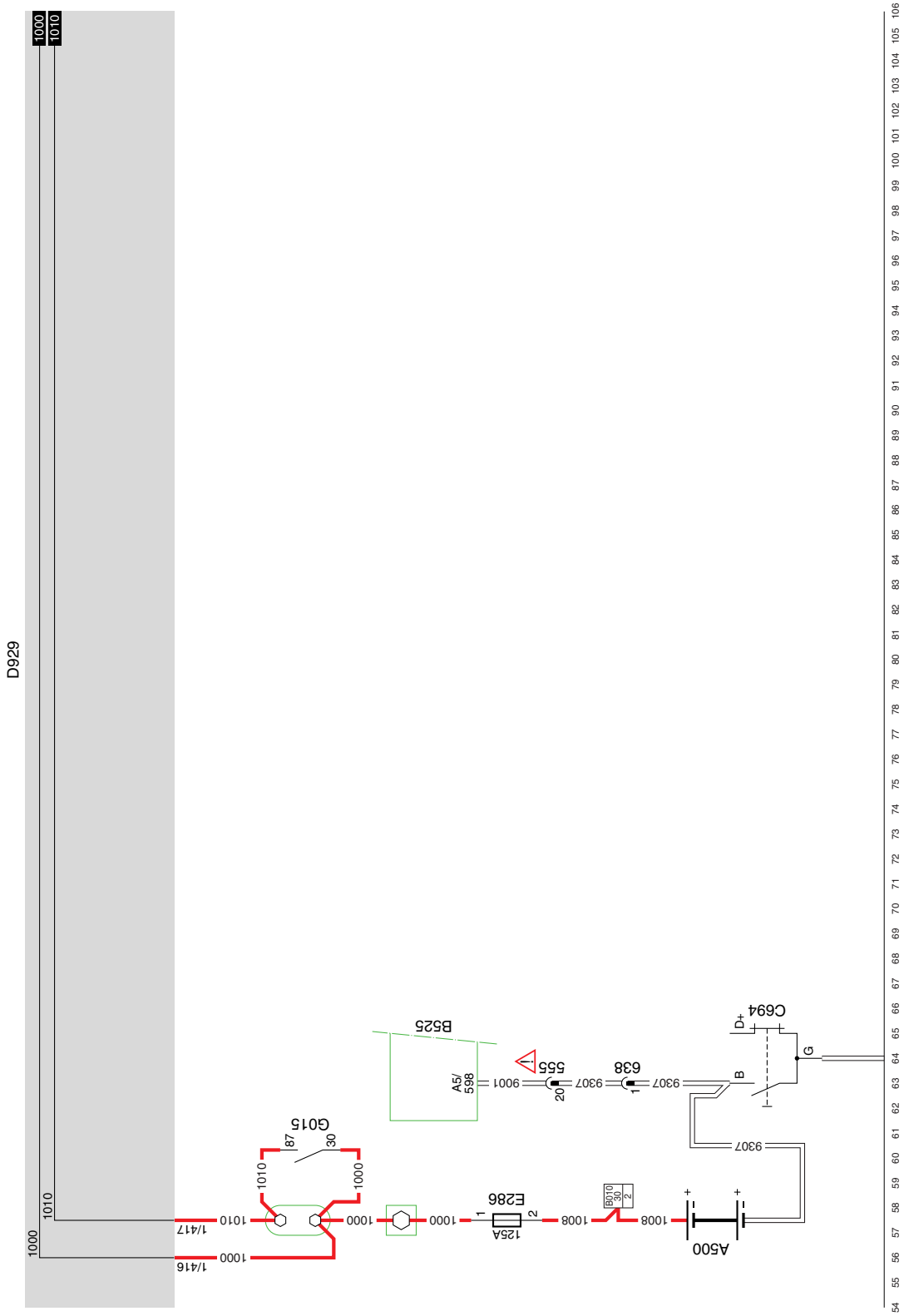

1 1358030/26 EL001298

https://truckmanualshub.com/

https://truckmanualshub.com/

2 ALTERNATOR/IGNITION/STARTER SWITCH/CHARGING CIRCUIT

CONTACT CIRCUIT

If accessories/ignition/starter switch C539 is turned (contact 1 is connected to pin 6), the "radio accessories power supply" relay (G377) will be energised.
Voltage is now applied to contact 1 of relay G377 through fuse E037, wire 1100, contacts 1 - 6 of switch C539, wire 1130. When G377 is energised, a connection is made between contacts 3 and 5 of G377 and a voltage is switched from the converter to the radio.

STARTING CIRCUIT

If the ignition switch C539 is turned (contact 1 is connected to 4), both contact relay G015 and G426 will be activated via wire 4001.
If the ignition switch is turned to the "start" position, a contact is made in this switch between contacts 1 and 2. The power is now supplied from the batteries through fuse E037, the connection 1 - 2 from the accessories/ignition/starter switch and wire 4004 on connection point A3 of the alarm system.
When the alarm system has been switched off using the remote control, or by activating the contact (the immobiliser switches the alarm off via CAN), wire 4004, connection point A3, is connected to wire 4004, connection point A1.
The coil of relay G203 will be activated. This closes connection 30 - 87. A voltage is now applied to connection point 50 of the starter motor, through fuse E037, wire 1100, relay contacts 30 - 87, wire 4002, causing the starter motor to turn.

When the alarm has been switched off and the door has opened, the start interrupter will be deactivated for 60 seconds. If the engine is not started within this time, the start interrupter is reactivated. If the alarm is switched off and the doors are not opened, the start interrupter remains deactivated for 9 minutes.

If the vehicle has an AS Tronic gearbox
If the vehicle has an AS Tronic gearbox, relay G185 is also fitted. When the contact is switched on and the gearbox is in neutral, relay G185 will be energised.
The voltage is now applied to the coil of relay G203 through wire 4004, contacts 30 - 87 of relay G185, wire 4186, contacts 3 - 4, wire 4009. This relay is energised. A voltage is now applied to connection point 50 of the starter motor, through E037, wire 1100, contacts 30 - 87 and wire 4002, causing the starter motor to turn.

As soon as the motor turns, the VIC applies a voltage to connection point C42. The voltage is then applied to connection point 1 of relay G372 via wire 3157. This relay is energised, breaking the starting circuit.

Note:
When the immobiliser applies a voltage to wire 4009, the cab heater is also switched off if the vehicle must meet requirements for the transportation of hazardous substances.

CHARGING CIRCUIT

If the contact is activated, there is voltage on connection point 85 of relay G426. This relay is activated. Voltage is now applied to connection point 15 of the alternator through fuse E037, contacts 30 - 87 of relay G426, fuse E350 and wire 1380.
An internal resistor in the alternator is energised by an IC in the carbon brush holder. This resistor ensures that a low level of current passes through the energising resistor. This excites a magnetic field in the alternator.

After starting, the voltage on terminals B+ and 15 will rise to about 28.5 V. Once this voltage is reached, the IC in the regulator interrupts the pre-exciter coil to enable the voltage to be regulated. The magnetic field will now disappear, so that the generator will not be energised for a short period of time. As a result, the voltage on outputs B+ and 15 will drop.

https://truckmanualshub.com/

The regulator reactivates when the voltage drops below 27.6V. This means that the voltage supplied by the generator remains relatively constant. The batteries are supplied through the B+ generator output.

The alternator charging current warning lamp is activated via wire 1020, which is connected to the VIC (D900). The VIC controls the DIP via the CAN network. The voltage on wire 1020 is switched by the control IC.

The alternator is also equipped with a 'sens' line. This connection continuously measures the voltage on connection point 30 of the starter motor. If the voltage on connection point 30 drops, the voltage is immediately corrected by the control IC. The alternator will increase the voltage until a value of 28.5V is reached again.

VARIANTS

Location

44/46	If **NO** alarm system is fitted, wires 4004 and 4004A are connected through in connector 574.
51	Only for AS Tronic.

https://truckmanualshub.com/

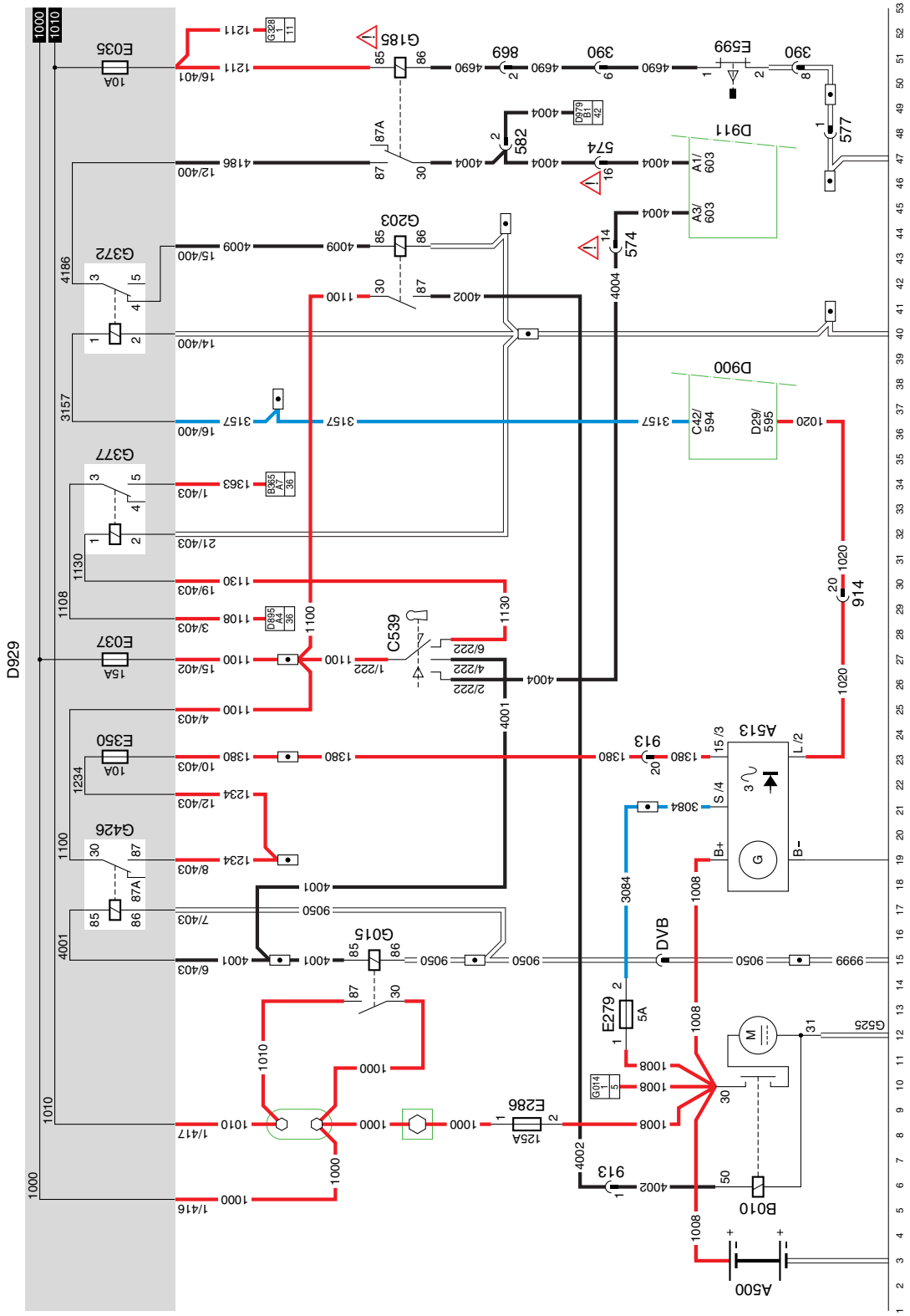

2

1358030/26

EL001299

https://truckmanualshub.com/

https://truckmanualshub.com/

10

3 MTCO-TACHOGRAPH

SEE THE SYSTEM MANUAL FOR MORE INFORMATION

VARIANTS

Location

26	Connector 626 for manual gearbox. Connector 699 for AS Tronic.
29	Connector 861: connection to ECAS system
35	D814 for vehicles with UPEC. D903 for vehicles with ECS-DC3.

© 200404

https://truckmanualshub.com/

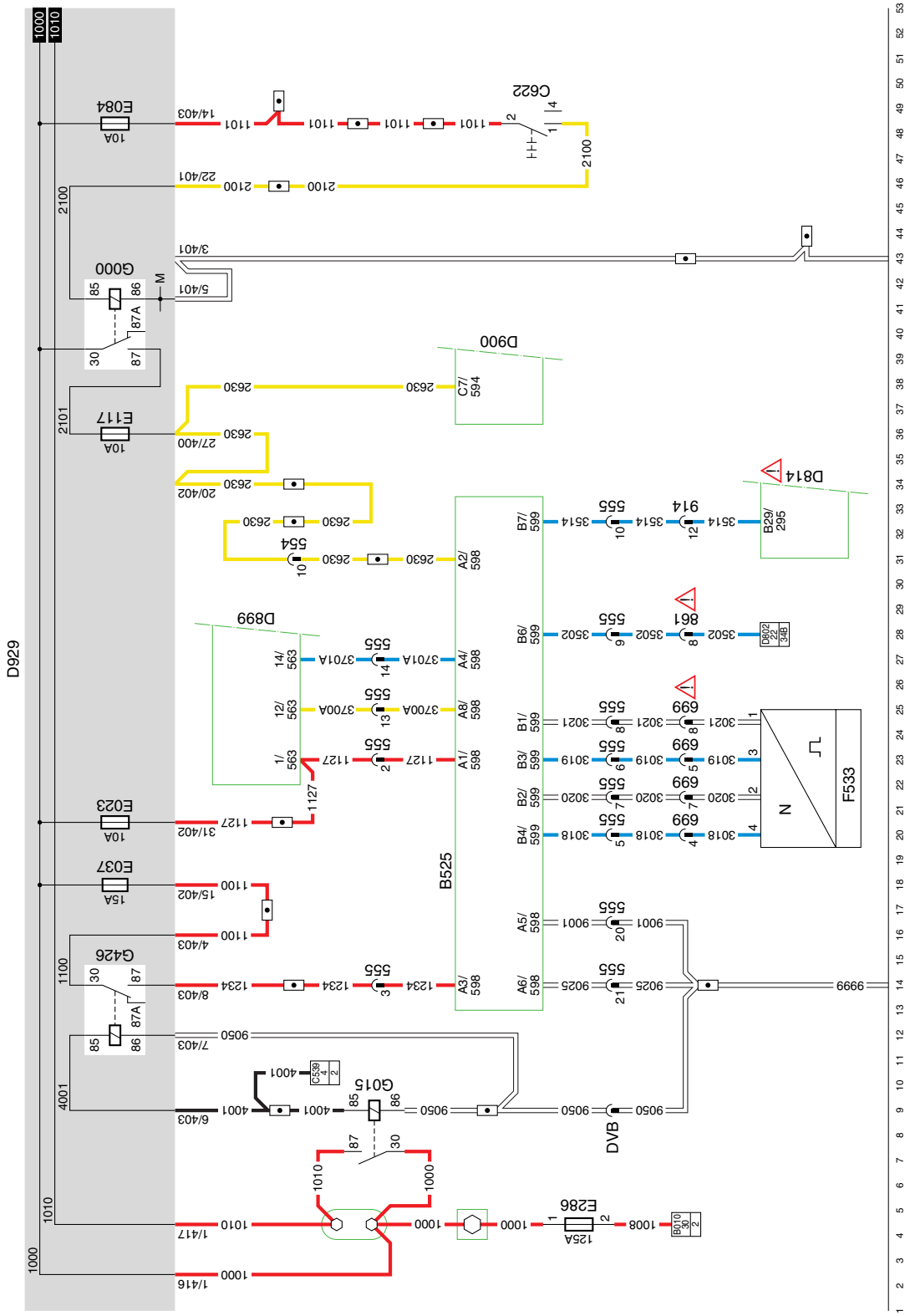

3

1358030/26

EL001300

10

https://truckmanualshub.com/

10

4 IMMOBILISER

SEE THE SYSTEM MANUAL FOR MORE INFORMATION

https://truckmanualshub.com/

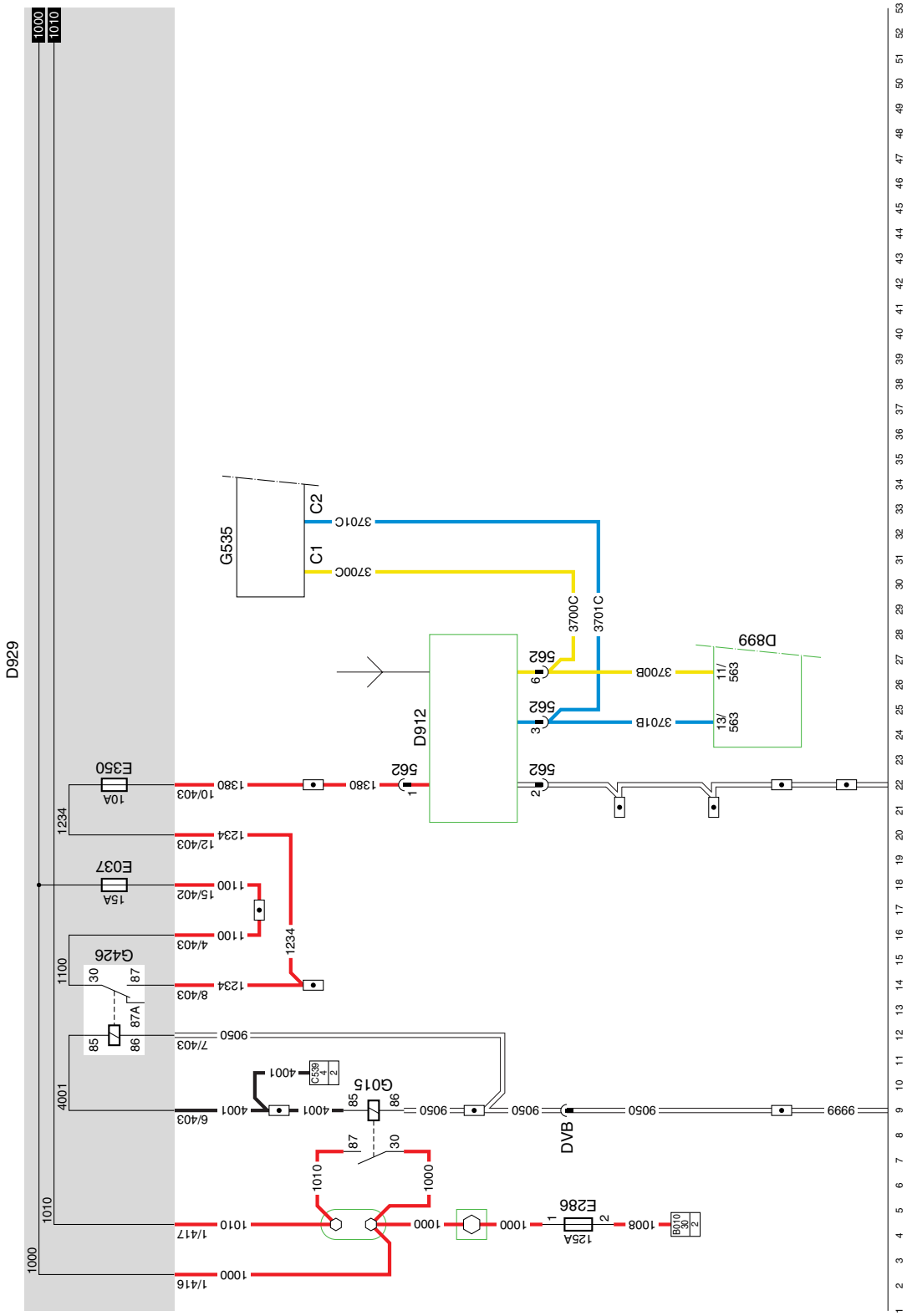

4

1358030/26

EL001301

10

https://truckmanualshub.com/

5 PRE-GLOWING

SEE THE SYSTEM MANUAL FOR MORE INFORMATION

VARIANTS

Location

37 If no pre-glowing system has been fitted, the wires are attached to a 'dummy' relay.

41 D814 for vehicles with UPEC
D903 for vehicles with ECS-DC3

© 200404

https://truckmanualshub.com/

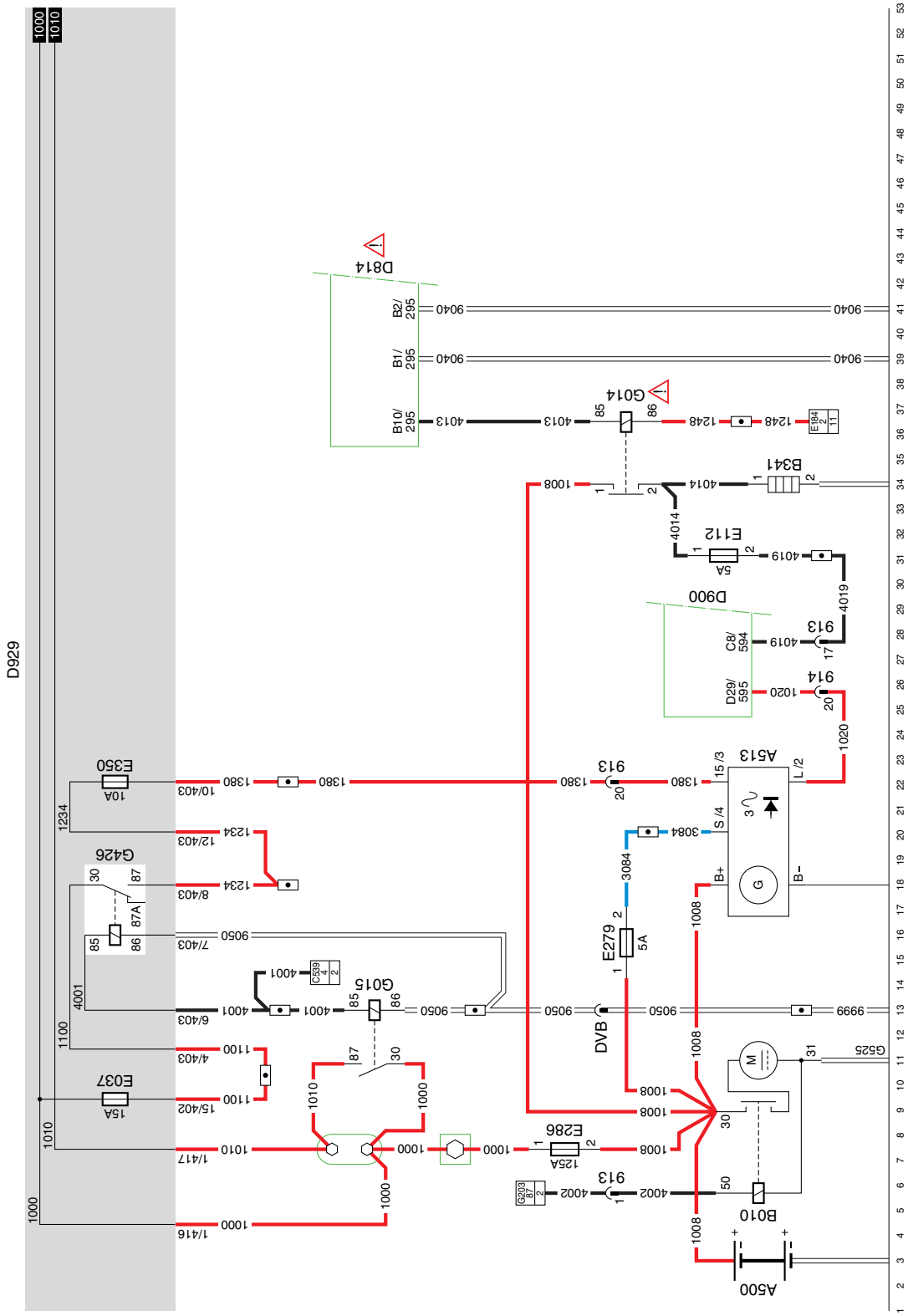

5 1358030/26

10

https://truckmanualshub.com/

6 DIP-4
SEE THE SYSTEM MANUAL FOR MORE INFORMATION

https://truckmanualshub.com/

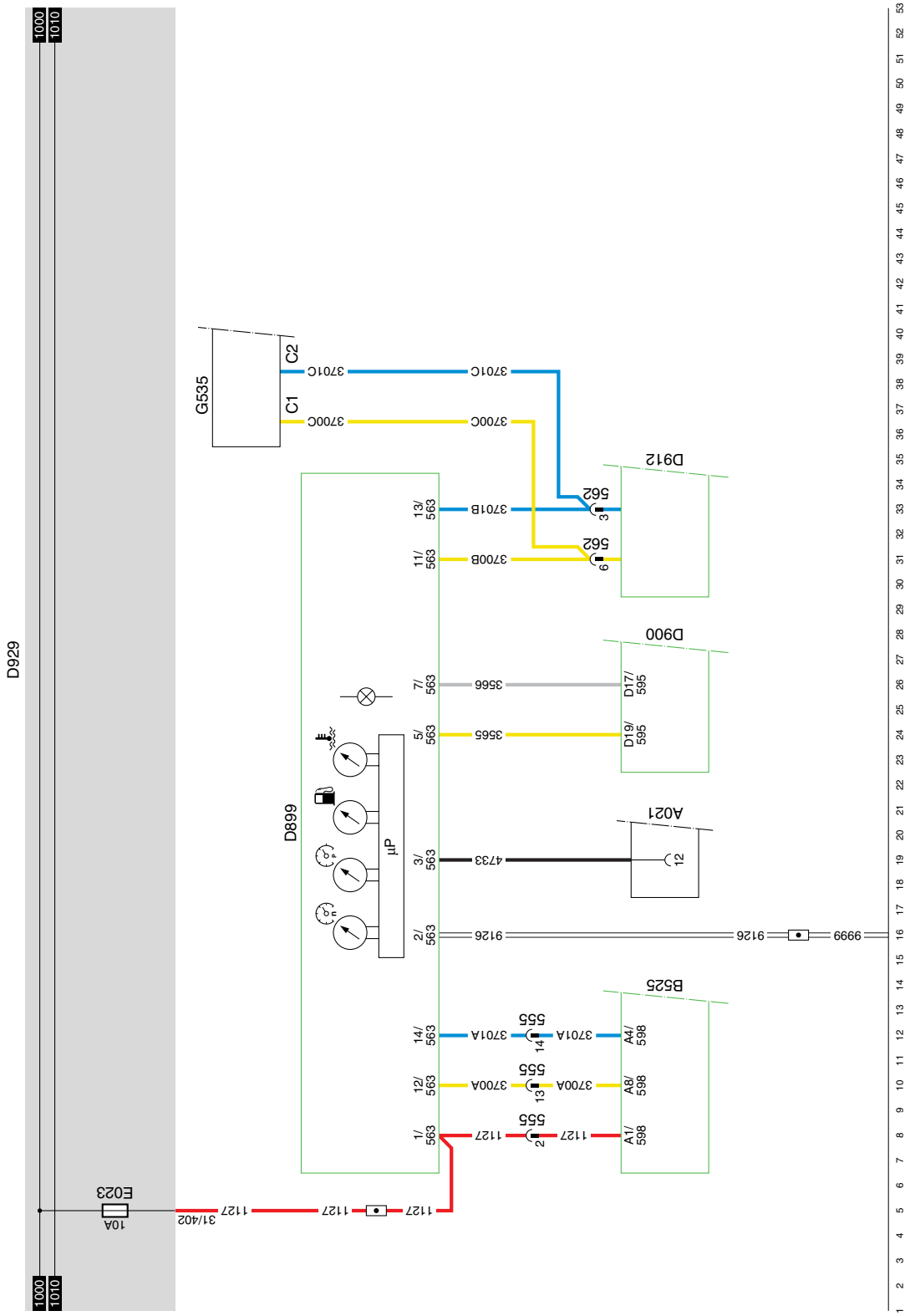

6

1358030/26

EL001303

10

https://truckmanualshub.com/

7 DIRECTION INDICATORS AND WARNING LIGHTS

SEE THE SYSTEM MANUAL FOR MORE INFORMATION

VARIANTS

Location

3, 8, 26 Connector 873 only for vehicle type FA.

8 Depending on whether the vehicle is fitted with a 7-pin or 15-pin plug. See also section diagram 47.

© 200404

https://truckmanualshub.com/

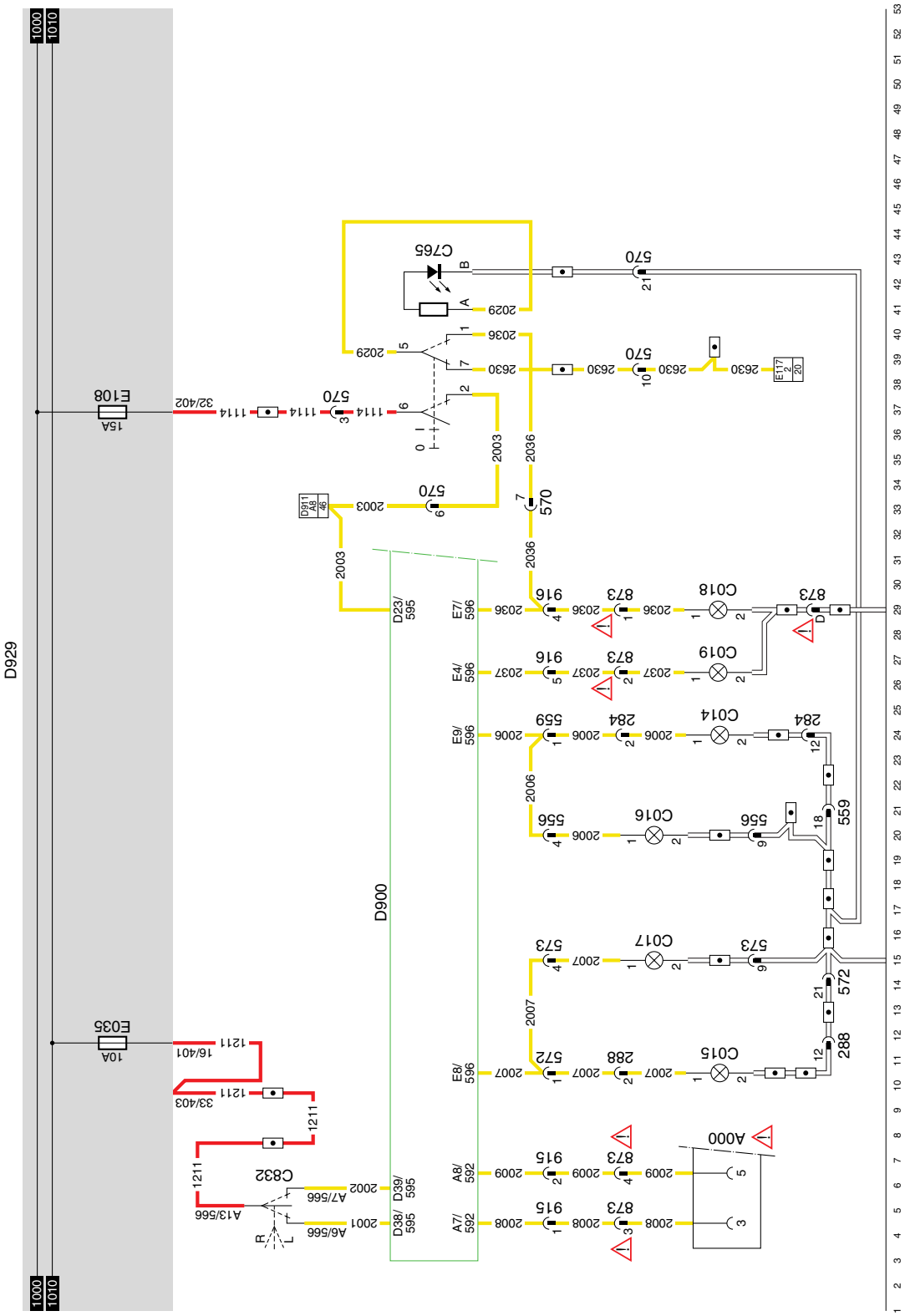

7

1358030/26

EL001304

10

https://truckmanualshub.com/

8 VIC

SEE THE SYSTEM MANUAL FOR MORE INFORMATION

VARIANTS

Location

145	Connector 580: optional.
146	D871: Airtronic cab heater. D979: Hydronic 10 cab heater.
147	G301: if vehicle is fitted with Swedish lighting.
203	For vehicles with ABS/ASR-D, connector 584. For vehicles with EBS, connector 585.
220	Only if the vehicle is fitted with AS Tronic. If AS Tronic is **NOT** fitted, wire 3701 is connected directly from C14 to A8 without 'in-line' connectors.

© 200404

https://truckmanualshub.com/

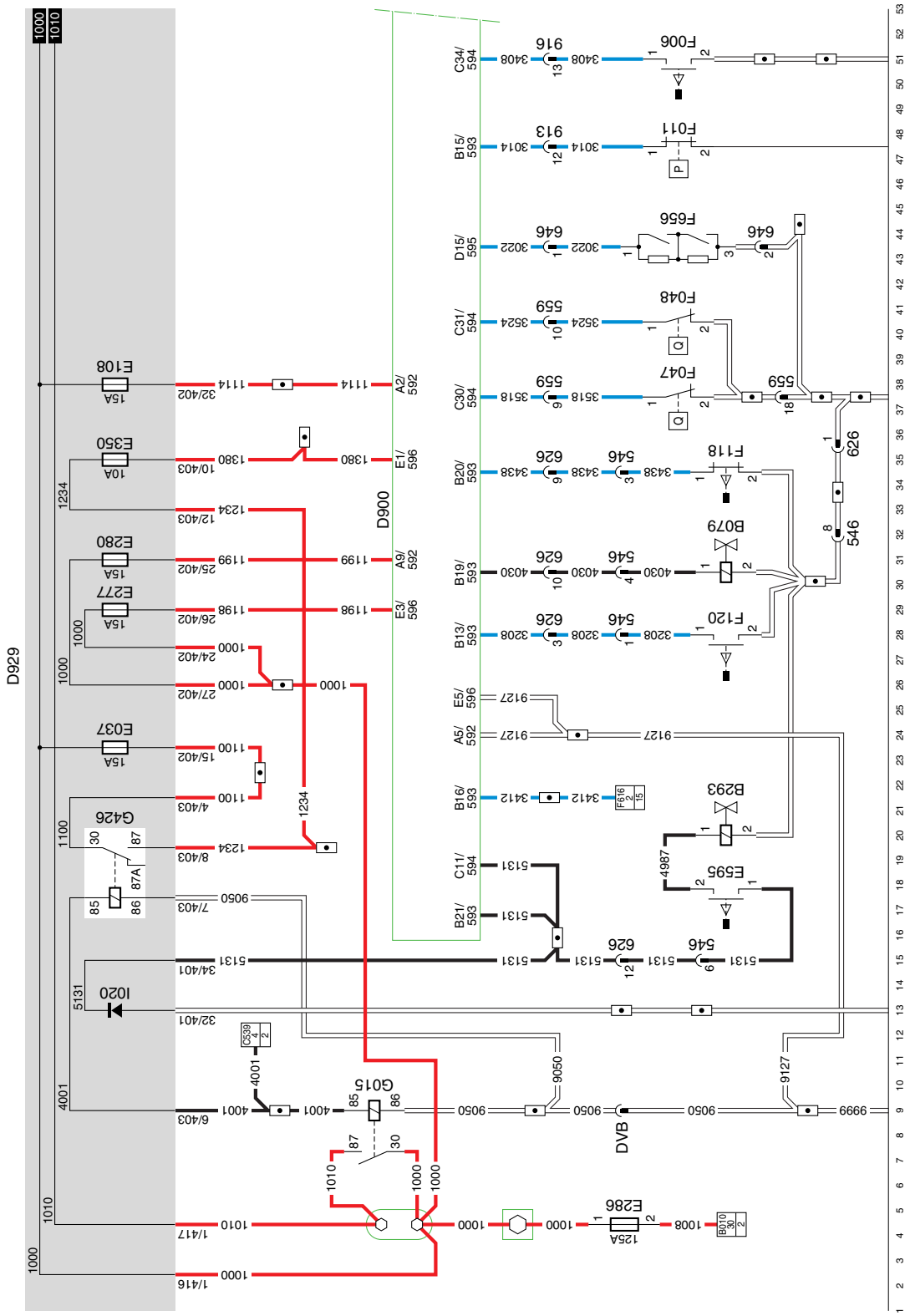

8

1358030/26

EL001305

10

https://truckmanualshub.com/

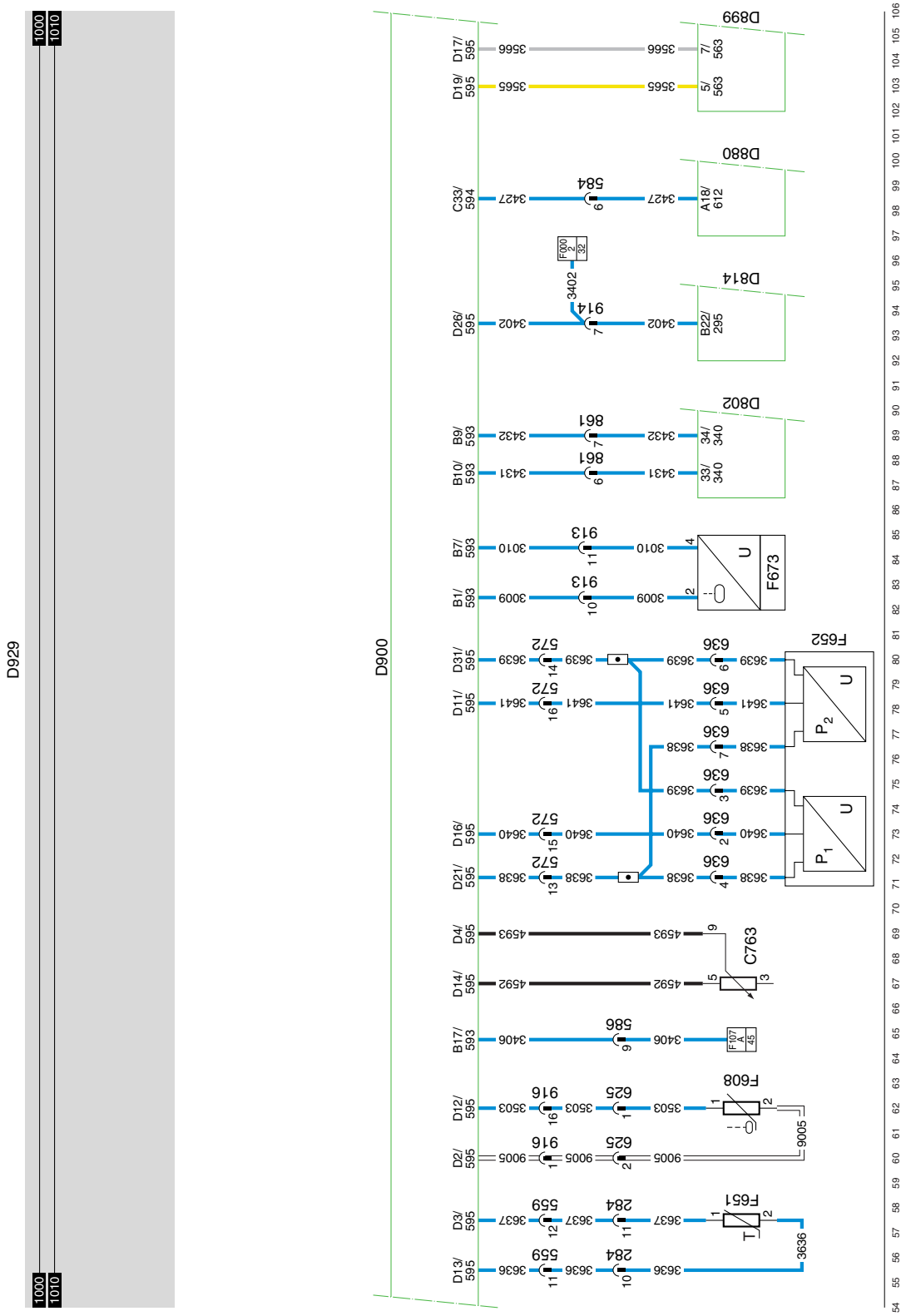

8

1358030/26

EL001306

https://truckmanualshub.com/

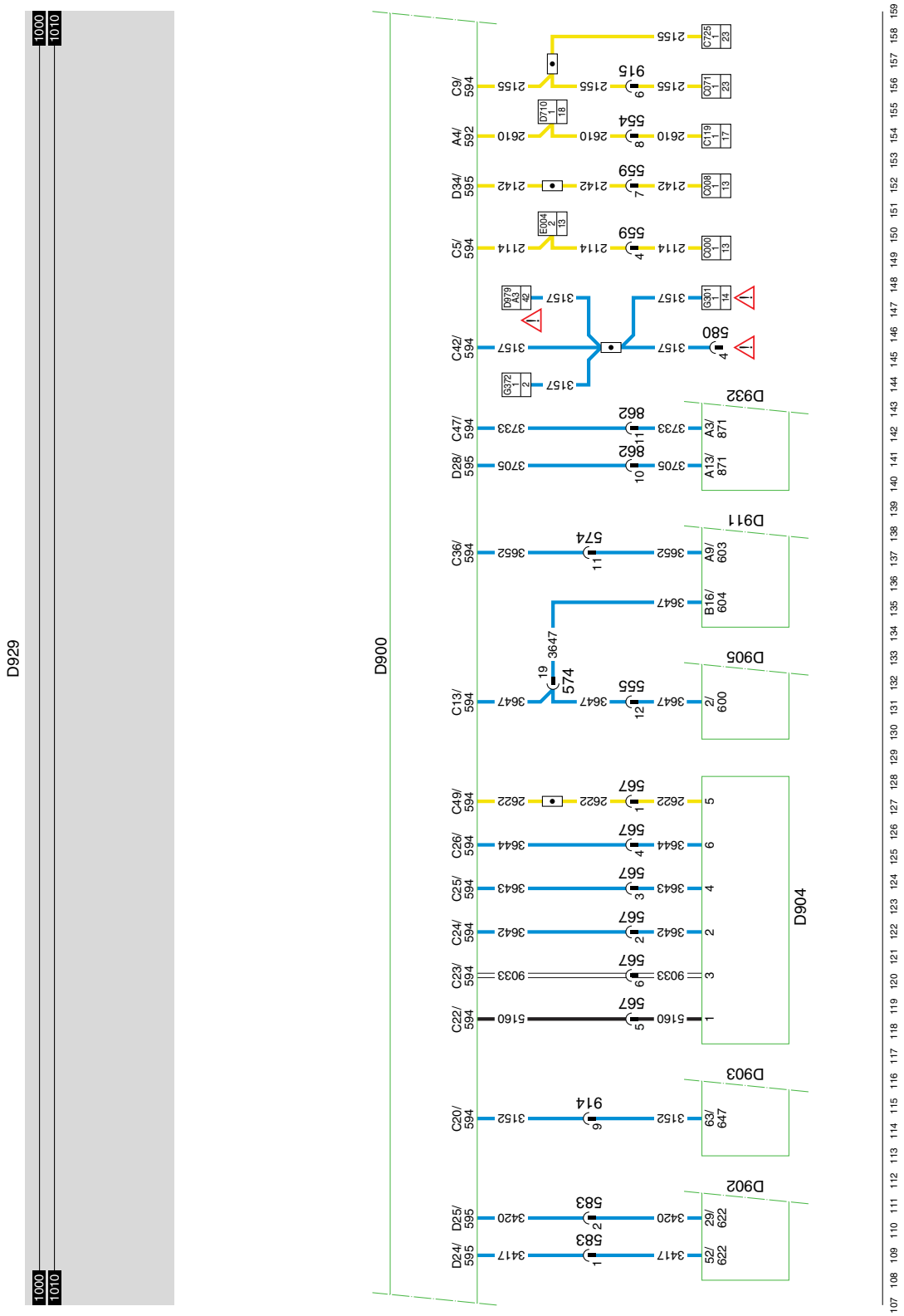

8

1358030/26

EL001307

10

https://truckmanualshub.com/

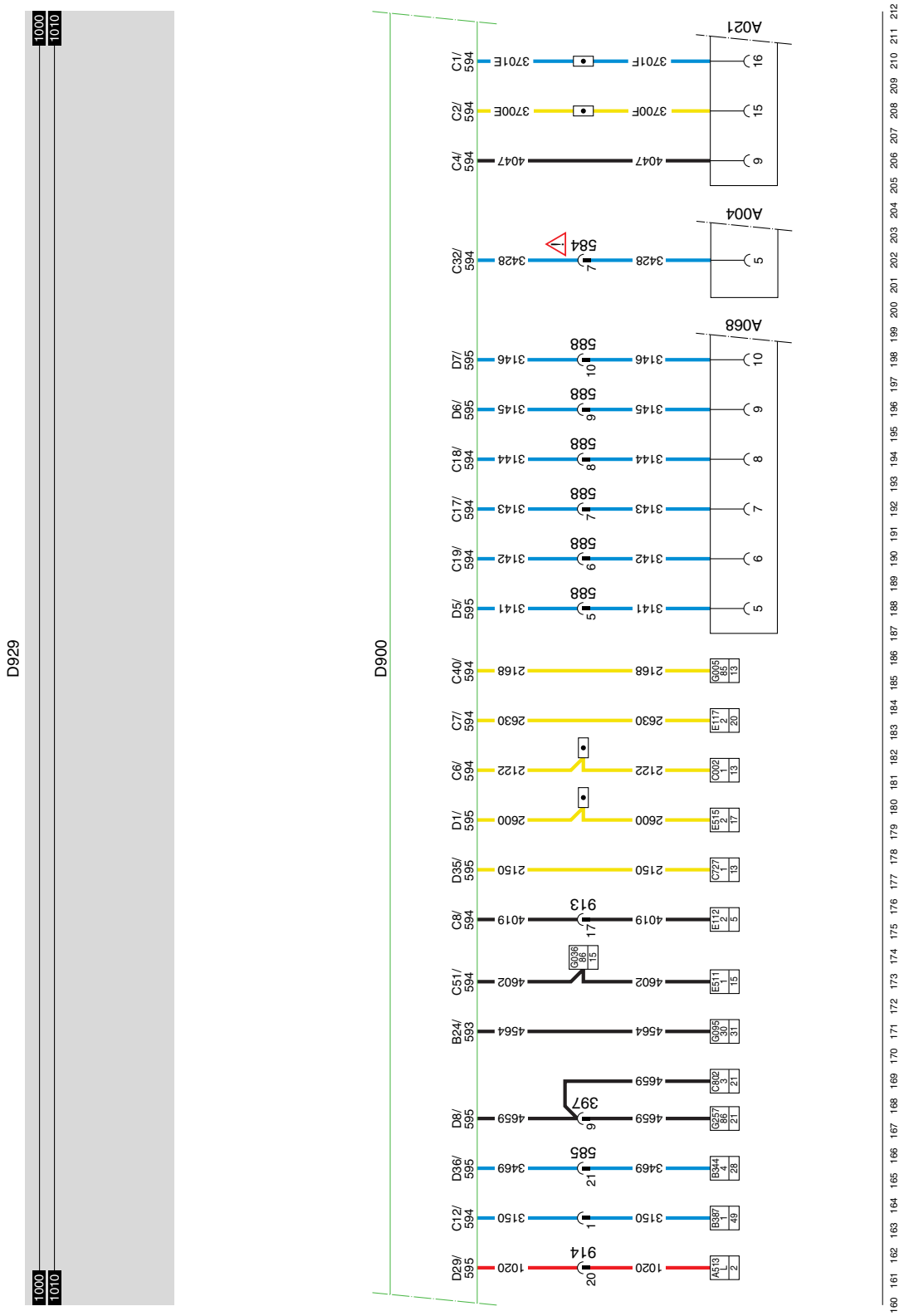

8

1358030/26

EL001308

https://truckmanualshub.com/

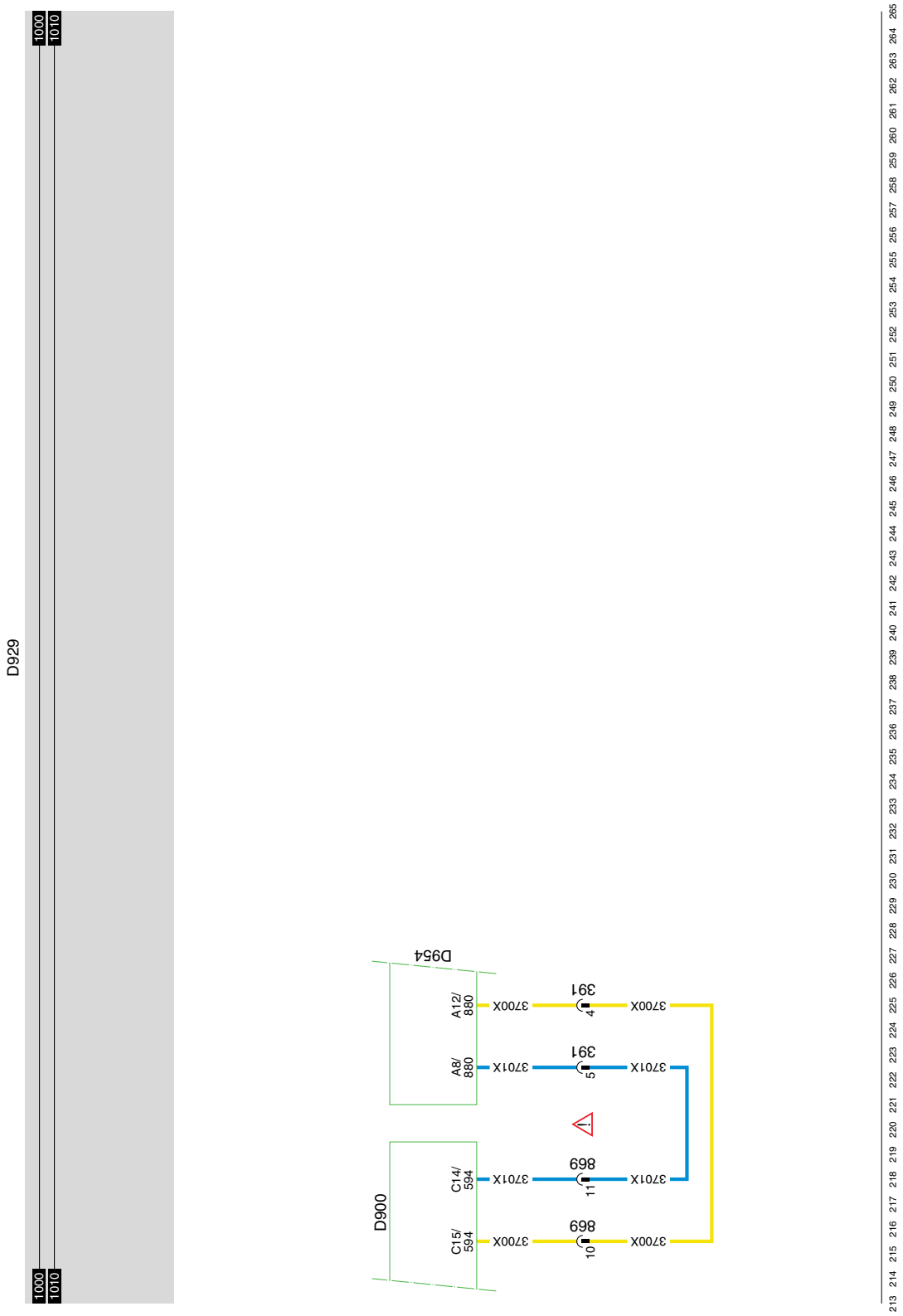

8

1358030/26

EL001309

10

https://truckmanualshub.com/

9 FA MARKER AND PARKING LIGHTS

Switching the lighting switch (C622) to the 1st position (connection between contacts 2 and 1) energises the rear light/width marker light relay (G000) through fuse E084, wire 1101, contacts 2 - 1 of switch C622 and wire 2100. A voltage is applied to the left and right lights through the G000 relay contacts (30 - 87 respectively) and fuses E000 and E001.

Linked to fuse E000 are: C010, C012, C156, C158, C074 and C022. There is also a connection in connector A000 (pin 2) and connector A070 (pin 2).

Linked to fuse E001 are: C011, C013, C157, C159, C075 and C023. There is also a connection in connector A000 (pin 6) and connector A070 (pin 3).

VARIANTS

Location

31, 51, 37:	Connector 877: only if the vehicle has a buffer beam as standard.
31, 39, 50:	Connector 873: only on vehicle type FA. **Not** if AE = > 902 mm.
46	This may be either a 7-pin or a 15-pin connector. For more information: see section diagram 47.

https://truckmanualshub.com/

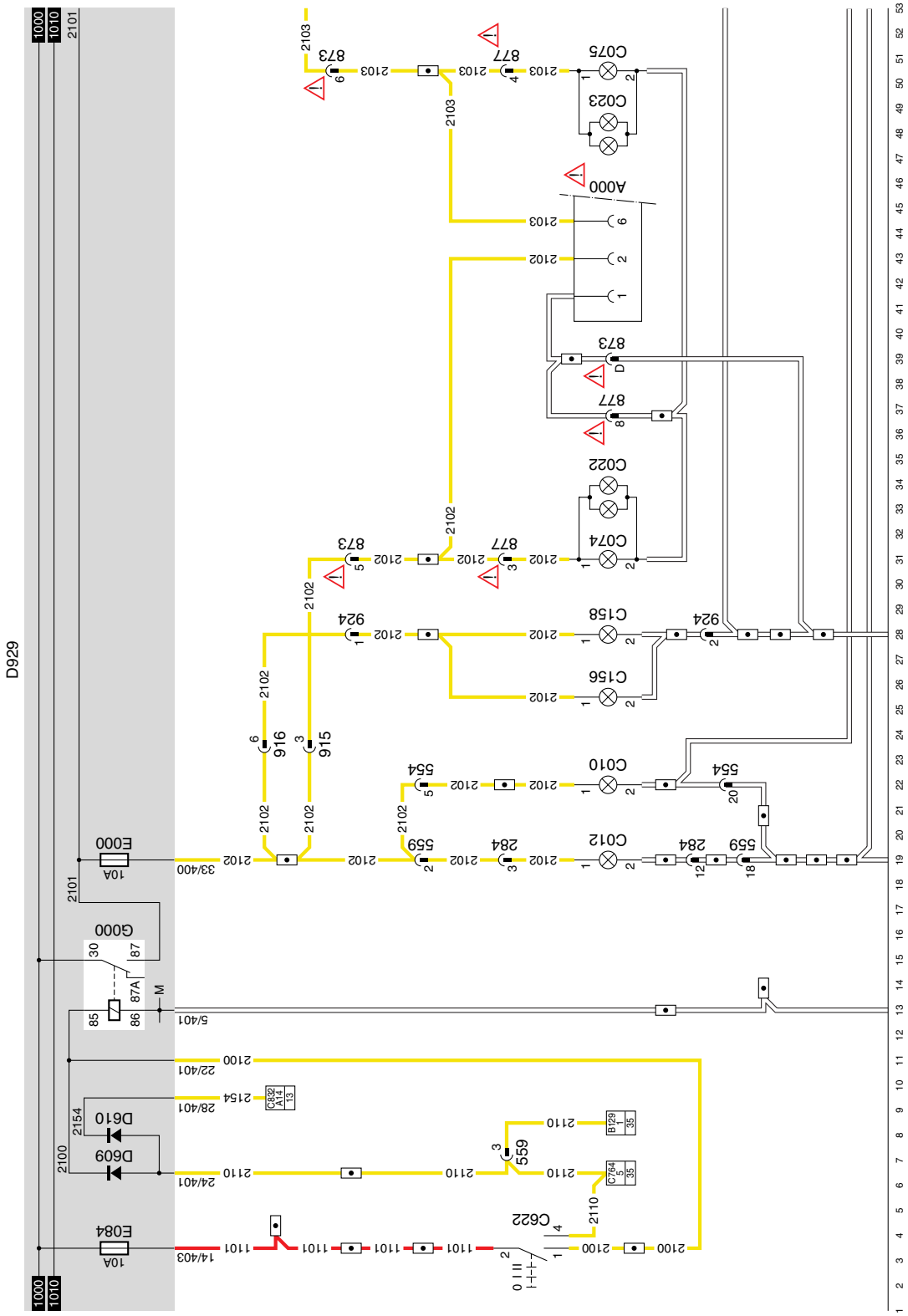

9

1358030/26

EL001310

10

https://truckmanualshub.com/

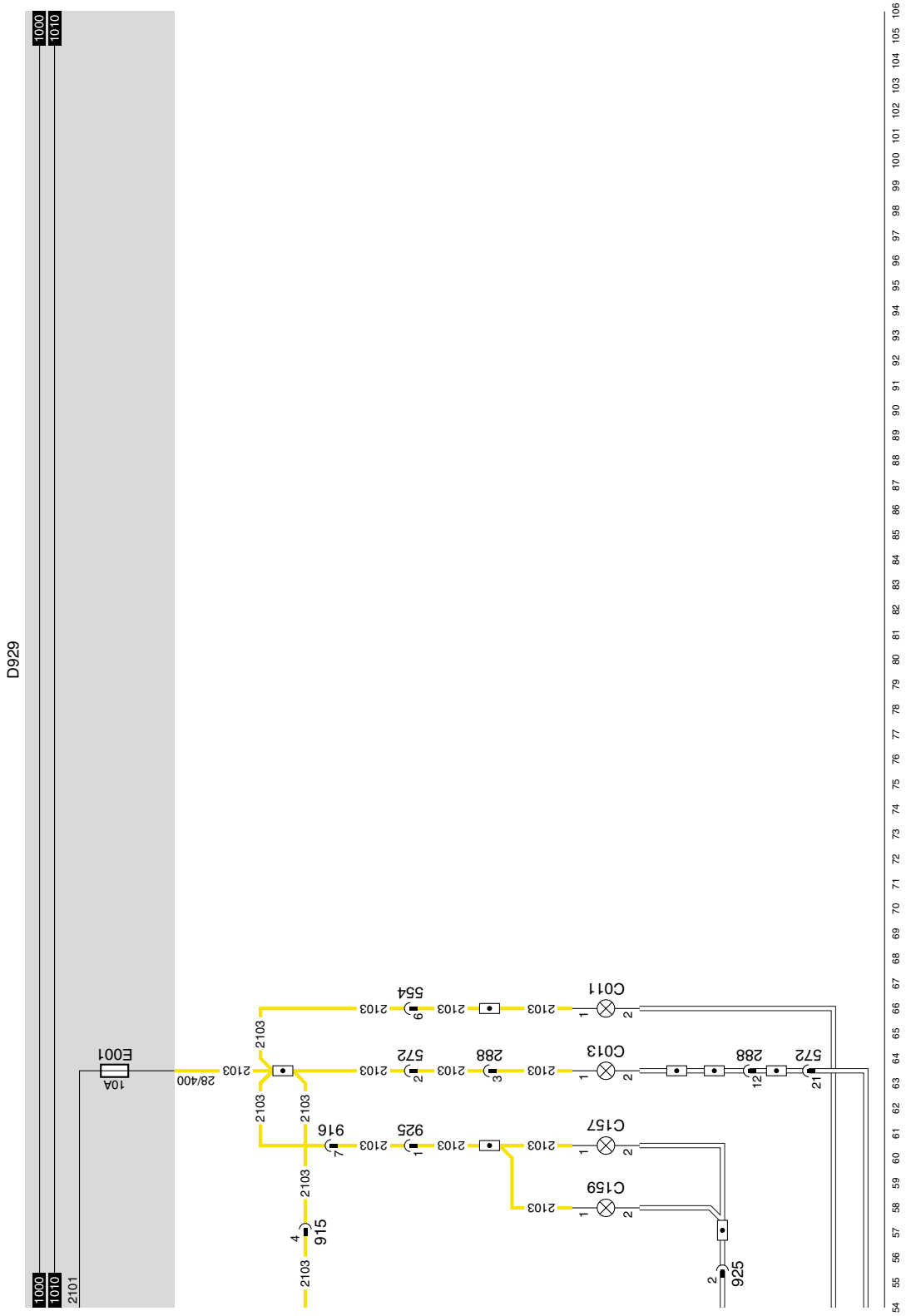

9 1358030/26 EL001311

https://truckmanualshub.com/

https://truckmanualshub.com/

10 FT MARKER AND PARKING LIGHTS

Switching the lighting switch (C622) to the 1st position (connection between contacts 2 and 1) energises the rear light/width marker light relay (G000) through fuse E084, wire 1101, contacts 2 - 1 of switch C622 and wire 2100. A voltage is applied to the left and right lights through the G000 relay contacts (30 - 87 respectively) and fuses E000 and E001.

Linked to fuse E000 are: C010, C012, C156, C158, C074 and C154. There is also a connection in connector A000 (pin 2).

Linked to fuse E001 are: C011, C013, C157, C159, C075 and C155. There is also a connection in connector A000 (pin 6).

VARIANTS

Location

39 This may be either a 7-pin or a 15-pin connector. For more information: see section diagram 48.

© 200404

https://truckmanualshub.com/

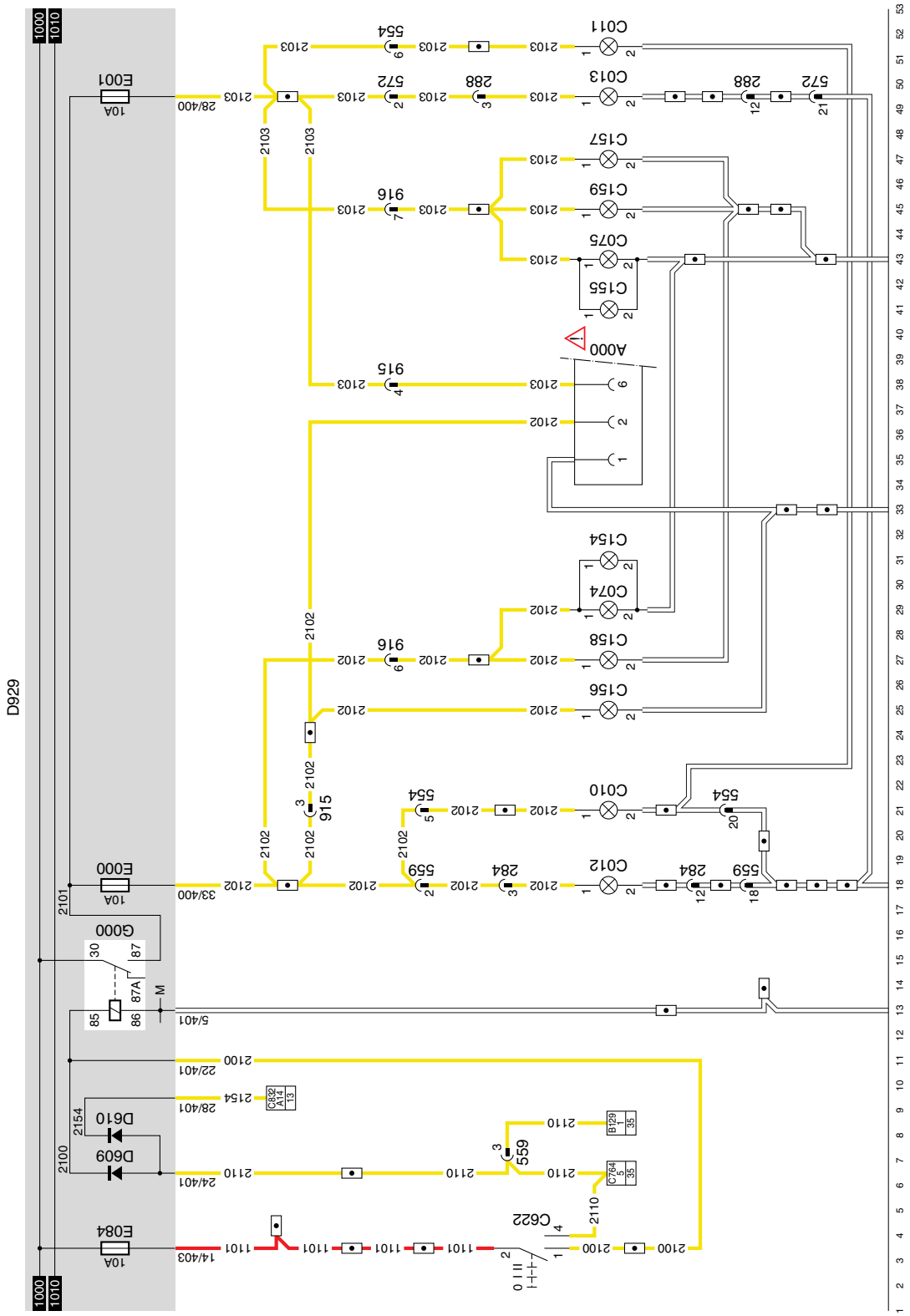

10

1358030/26

EL001312

https://truckmanualshub.com/

11 UPEC

SEE THE SYSTEM MANUAL FOR MORE INFORMATION

VARIANTS

Location

19	Connector 914: the illustration shows the AS Tronic version. For information regarding vehicle without AS Tronic: see section diagram 15.
23	G469: only if the vehicle is fitted with AS Tronic.
115	Wire 6158 ends in lead-through connector 913, pin 3. This wire is for the bodybuilder.

https://truckmanualshub.com/

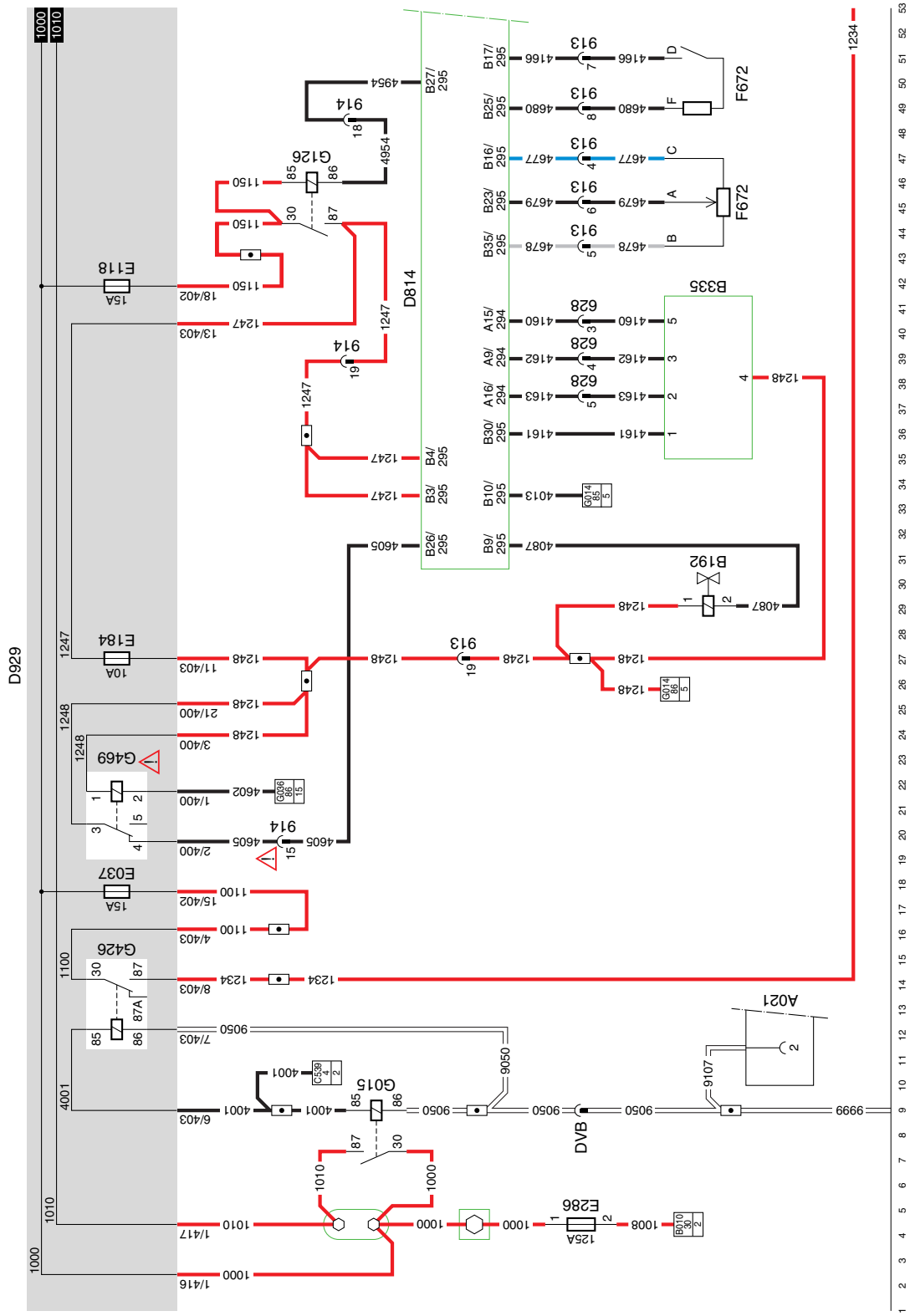

11 1358030/26 EL001313

10

https://truckmanualshub.com/

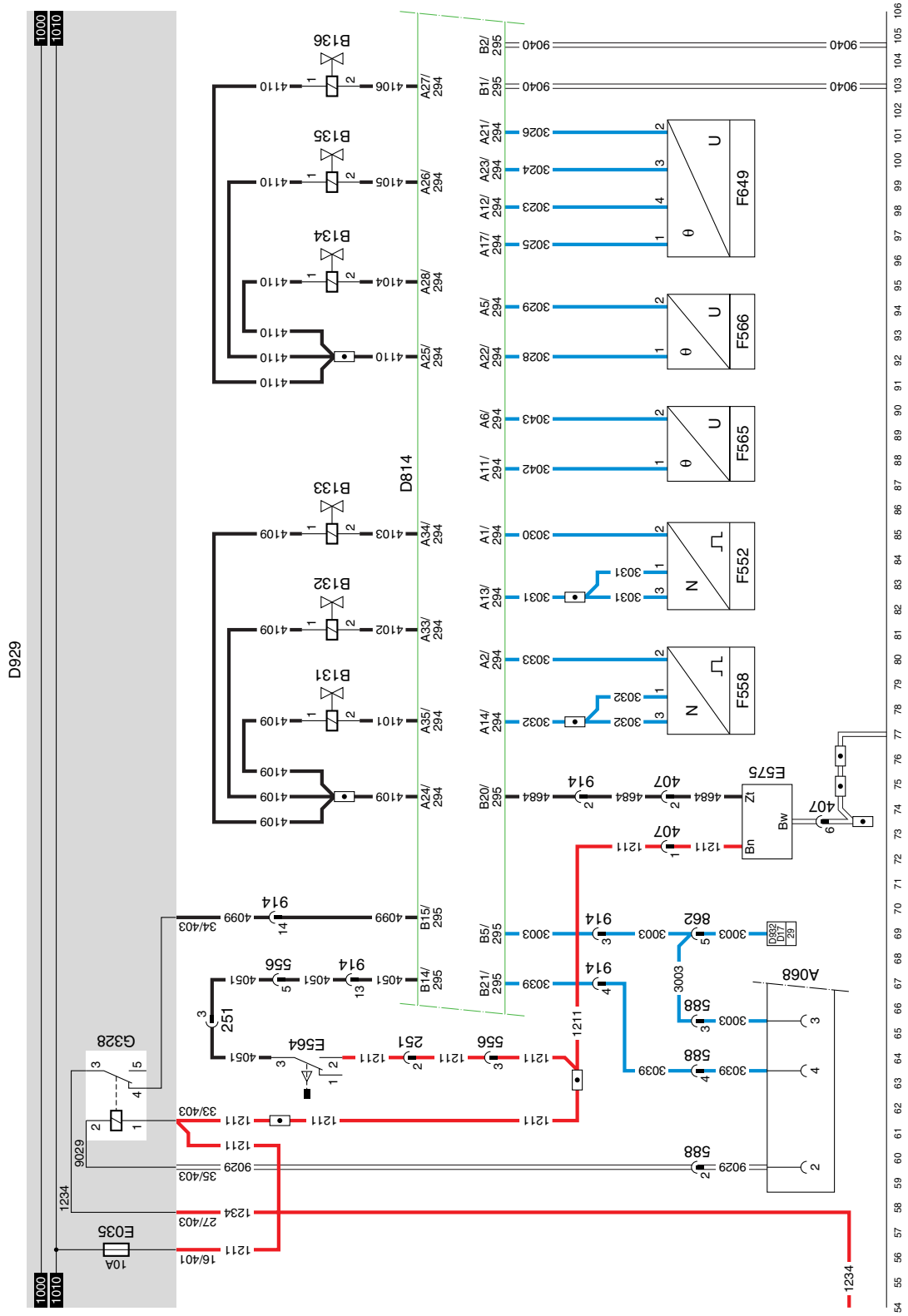

11

1358030/26

EL001314

https://truckmanualshub.com/

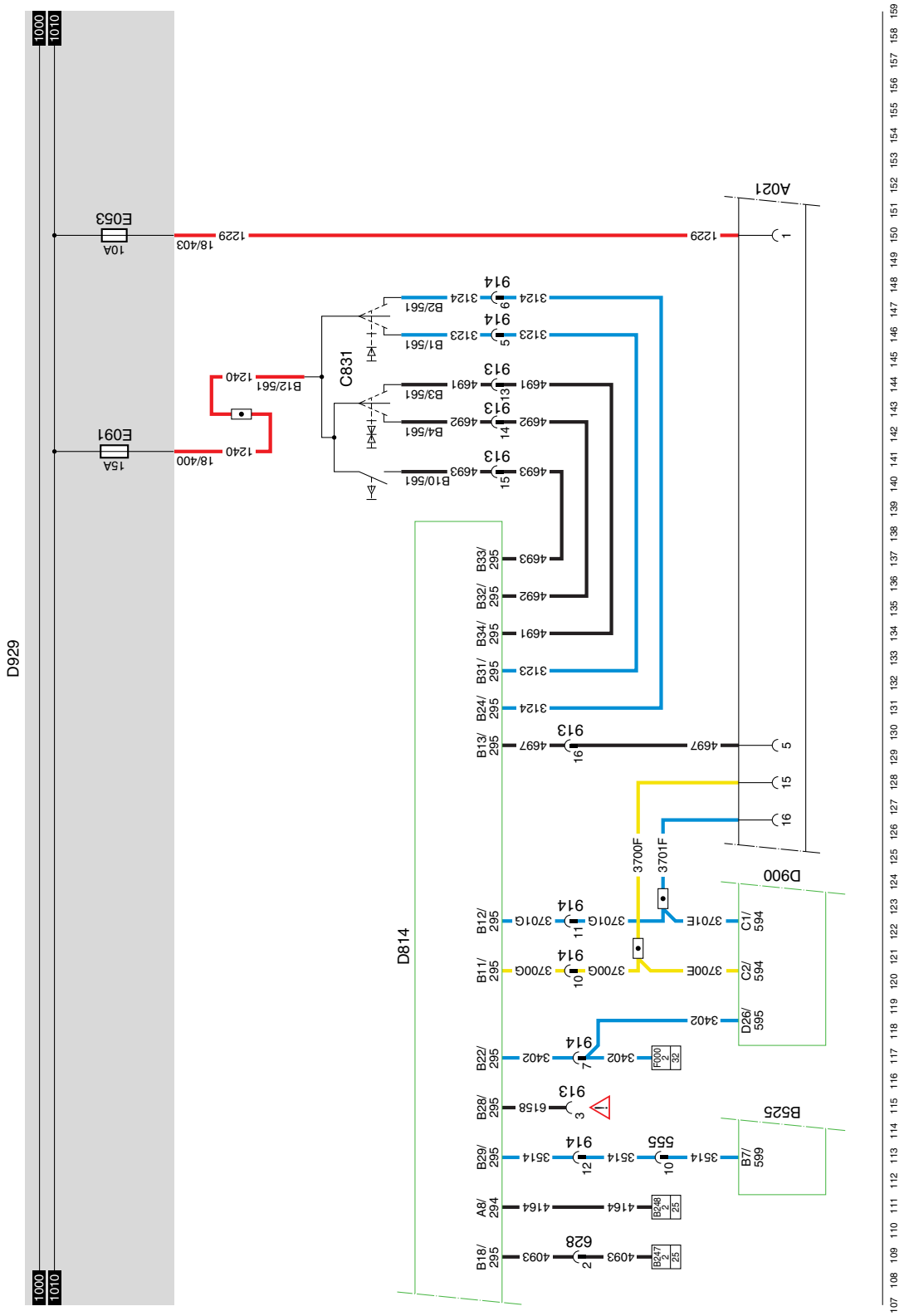

11 1358030/26

10

https://truckmanualshub.com/

12 REVERSING LIGHTS

When contact has been made, power is supplied to the operating switch of the reversing lights (E592) via E016 and wire 1217.

This switch is mounted in the gearbox. The contacts are closed when the gearbox is set to the “reverse” position.

The voltage is then applied to earth through fuse E016, wire 1217, connection point 1 of G350 (reversing light relay), wire 5655, contacts 1 and 2 of switch E592.

If relay G350 is activated, a voltage is applied to the reversing lights (C026 and C027) via wire 4591. At the same time the reversing buzzer (B176) is activated and the voltage is also applied to the drawn vehicle connector A000 (pin 3) or to A070 (pin 4).

The above description applies to vehicle type FA.

VARIANTS

Location	
9, 10	Connector 626 for a manual gearbox. Connector 868 for an AS Tronic gearbox. Connector 644 for an Allison gearbox.
12 -> 38	Only for vehicle type FA.
39 -> 51	Only for vehicle type FT.
18, 24, 31	Connector 873: only for vehicle type FA.
19, 27	Fit wires 4591 and 6012 in connector 584.
24, 27	Connector 877: only if the vehicle has a buffer beam as standard.
32, 45	Depending on whether the vehicle is fitted with a 7-pin or 15-pin plug. See also section diagram 47or 48.

https://truckmanualshub.com/

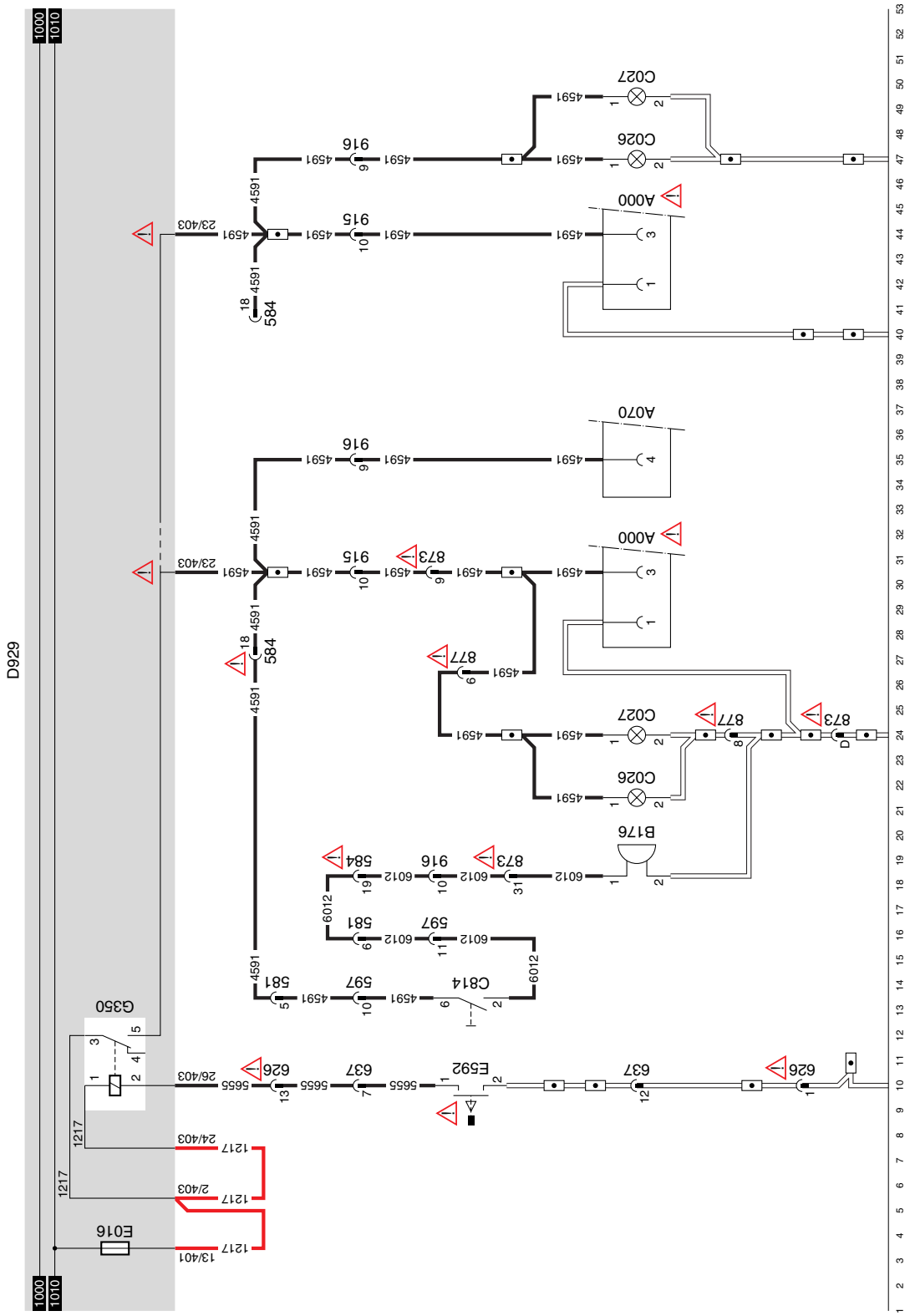

12 1358030/26 EL001316

10

https://truckmanualshub.com/

13 LIGHT SWITCH / FOG LAMPS / FA/FT DIMMED BEAM AND MAIN BEAM SWITCH

MARKER AND PARKING LIGHTS
FOR SECTION DIAGRAM AND EXPLANATION: SEE SECTION DIAGRAMS 9 AND 10

LIGHTING SWITCH (C622)

position 1 ("marker lights")
A voltage is applied to connection point 2 of lighting switch C622 through fuse E084, wire 1101. If this switch is in the "town lights" position (connection between contacts 2 and 1), the voltage is transmitted to connection point 85 of relay G000 (rear light/width marker light relay) through wire 2100. This relay is energised and contacts 30 - 87 will close. Through contacts 30 - 87 of relay G000, wire 2101, a voltage is now applied to corner marker lights, marker lights and rear lights through fuses E000 and E001 and wires 2102 and 2103 respectively.

position 2 ("dipped beam")
If switch C622 is put in the 2nd position (connection between contacts 2 and 4), the following takes place:
A voltage is applied to connection point 2 of lighting switch C622 through fuse E084, wire 1101. Through contacts 2 - 4 of C622 the voltage is applied to connection point 85 of G000 through wire 2110, diode D609. The voltage is also applied to connection point 5 of C773 through wire 2100.
The voltage is also applied to connection point 85 of G001 through wire 2110. This relay is activated. Through contacts 30 - 87 of relay G001, wire 2112 and through fuses E004 and E005 and wires 2114 and 2113 respectively, a voltage is now applied to the left and right dipped beams. They will now switch on.

Signalling light
The voltage on connection point 85 of relay G001 is also on connection point 14 of stalk switch C832 through diode D610, via wire 2154. If this (spring-loaded) part of the switch is operated (connection between points 14 and 9), relay G002 is energised through wire 2120. A connection is now made between contacts 30 and 87 and this applies a voltage to lights C002 and C003 through contacts 30 - 87, wire 2121, and fuses E006 and E007 and wires 2122 and 2123 respectively. These lights remain on as long as there is a connection between contacts 14 and 9 of stalk switch C832.

Main beam
A voltage is applied to connection point 8 of stalk switch C832 through fuse E084 and wire 1101. If this part of the switch is operated ('fixed' connection between points 8 and 9), relay G002 is energised through wire 2120.
A connection is now made between contacts 30 and 87 and this applies a voltage to lights C002 and C003 through contacts 30 - 87, wire 2121, and fuses E006 and E007 and wires 2122 and 2123 respectively. These lights remain on as long as there is a 'fixed' connection between contacts 8 and 9.
The dipped beam does **NOT** go out while the signalling light or main beam is in use.

REAR FOG LAMPS
(standard version)
To activate the rear fog lamps, lighting switch C622 must be in the "dipped beam" position (connection between contacts 2 and 4). The voltage is then applied to D609 through fuse E084, wire 1101, contacts 2 - 4 of switch C622 and wire 2110. The voltage is split after this diode. The voltage is applied to connection point 85 of G000 through a PCB track. This switches on the corner marker lights, marker lights and rear lights. The same voltage is also applied to connection point 5 of C773 through wire 2100. The VIC also receives a voltage on pin C5 of relay G001 (dipped beam relay). The VIC receives a voltage signal at pin D35 when the fog lamp switch (C773) is operated (connection between 5 and 1).
The VIC then activates the rear fog lamp relay (G005) via pin C40 of the VIC, so that the rear fog lamps come on. The VIC then switches on the "rear fog lamps" indicator on the instrument panel via the I-CAN.

https://truckmanualshub.com/

FRONT FOG LAMPS (optional)
To activate the front fog lamps, lighting switch C622 must be in the “town lights” position (connection between contacts 2 and 1). There is now a voltage on connection point 85 of relay G000 (rear light/ width marker light relay). Turning the fog lamp switch (C727) to position I (connection between contacts 2 and 6) (front fog lamps) activates relay G004. A voltage is now applied through fuse E009, wire 2141, contacts 30 - 87 of relay G004 and wire 2142. The left and right front fog lamps (C008 and C009 respectively) will now come on.
A voltage is also sent to the VIC via wire 2142, pin C34. The VIC controls the DIP, which ensures that the “front fog lamps” warning indicator illuminates on the instrument panel. The VIC receives a voltage signal at pin D35 through wire 2150 when the fog lamp switch (C727) is turned to position 2 (connection between contacts 2 and 3).
The VIC then activates the rear fog lamp relay (G005) via pin C40 of the VIC, so that the rear fog lamps come on. The VIC then switches on the “rear fog lamps” warning indicator on the instrument panel via the I-CAN.

VARIANTS

Location	
15	C773 is fitted as standard . If the front fog lamps option is selected, switches C773 and C727 should be swapped over.
79	Connector 877 only if the vehicle has a buffer beam as standard.
79 -> 82	Situation for vehicle type FA.
87 -> 91	Situation for vehicle type FT.
87	This may be either a 7-pin or a 15-pin connector. For more information: see section diagram 47.

https://truckmanualshub.com/

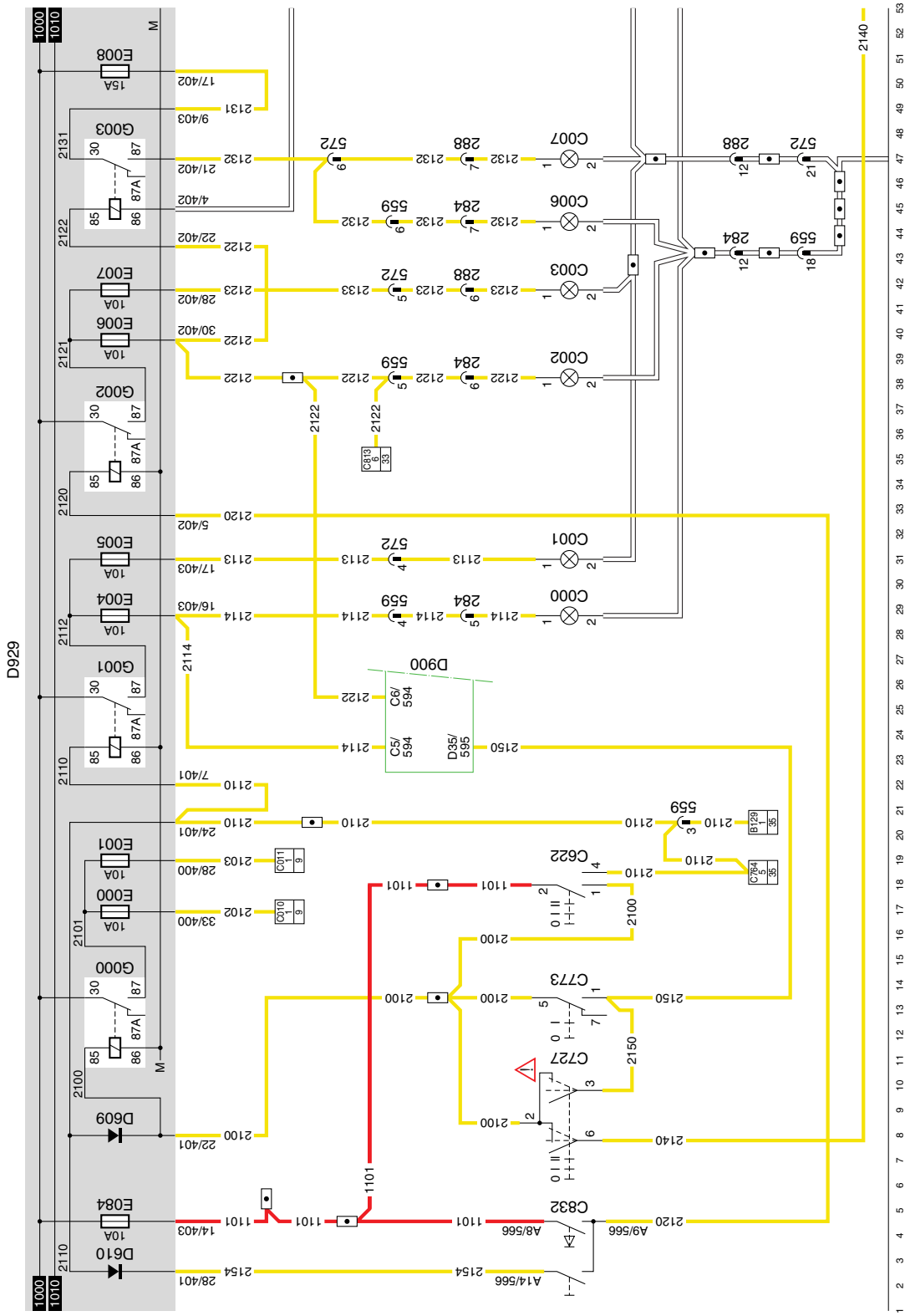

13 1358030/26 EL001317

https://truckmanualshub.com/

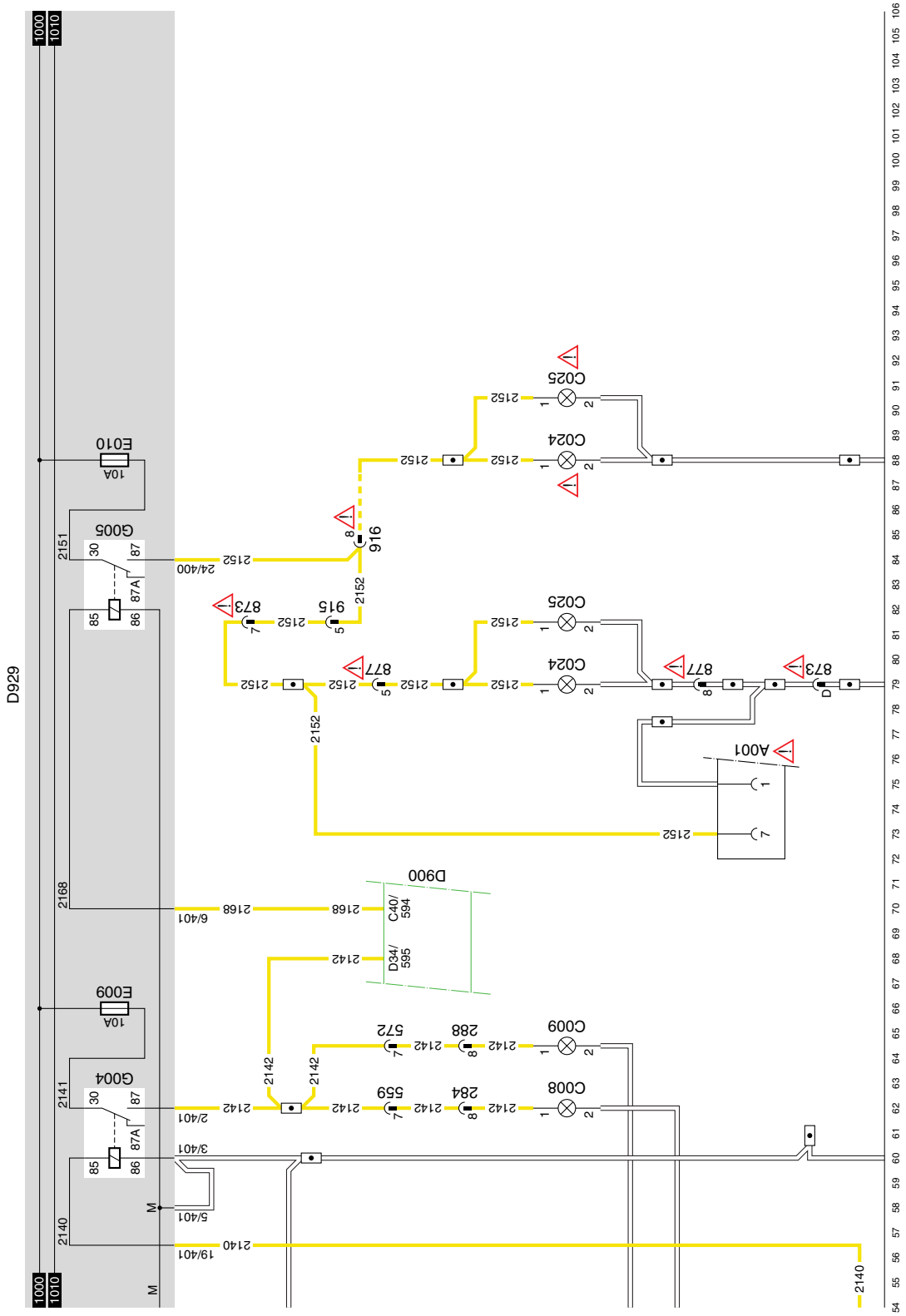

13

1358030/26

EL001318

10

https://truckmanualshub.com/

14 SWEDISH LIGHTING

Conditions: Engine running, switch C622 has NOT been operated.

If the engine is running and switch C622 has **NOT** been operated, relay G301 is activated by a voltage from connection point C42 of D900 (VIC). A voltage is then applied to connection point 85 of relay G001 (dipped beam relay) through fuse E084, wire 1101, contacts 5 - 3 of relay G301, wire 2100, contacts 3 - 4 of relay G302 and wire 2110.
The same voltage is also applied to connection point 85 of relay G000 (rear light/width marker light relay) through diode D609. Both relays are energised.
When relay G000 is energised (connection between contacts 30 and 87), a voltage is applied to the left and right width marker lights in the headlights through contacts 30 - 87 of relay G000, PCB track 2101, fuses E000 and E001 and wire 2102.
When relay G001 is energised (connection between contacts 30 and 87), a voltage is applied through contacts 30 - 87 of relay G001, PCB track 2112, fuse E004 and fuse E005. The voltage through wire 2114 is applied to connection point 1 of C000 (left dipped beam) through fuse E004. The voltage through wire 2113 is applied to connection point 1 of C001 (right dipped beam) through fuse E005.

A voltage is also applied to the VIC via wire 2114, pin C5. The VIC controls the DIP, which ensures that the “dipped beam” warning indicator illuminates on the instrument panel.

Conditions: Engine running, switch C622 in position: marker lights (position 1).

When the engine is running and switch C622 is in the ‘marker lights’ position (connection between 2 and 1), the following occurs:
Relay G301 is energised, making a connection between contacts 5 and 3. The voltage is now applied to wire 2100 and to connection point 85 of relay G000 through fuse E084, wire 1101, contacts 5-3 of relay G301 . When relay G000 is energised a voltage is applied through relay contacts 30 - 87 of relay G000, wire 2101, fuses E000 and E001 and wire 2102 and wire 2103 respectively. The corner marker lights, marker lights and rear lights (on both the driver’s and co-driver’s side) now come on.
There is also a voltage on connection point 1 of relay G302 through fuse E084, wire 1101, contacts 2 - 1 of switch C622, wire 2105. Relay G302 is energised, breaking contacts 3 - 4.
There is no longer a voltage on wire 2110 and, as a result, relay G001 is no longer energised. Contacts 30 - 87 are now broken and, as a result, the driver’s and co-driver’s side headlights go out.

Conditions: Engine not running, switch C622 in position: dipped beam (position 2).

When the engine is not running and switch C622 is in the ‘dipped beam’ position (position 2) (connection between 2 and 4), the following takes place:
Relay G301 is energised, making a connection between contacts 5 and 3. The voltage is now applied to wire 2100 and to connection point 85 of relay G000 through fuse E084, wire 1101, contacts 5 - 3 of relay G301 . When relay G000 is energised a voltage is applied through relay contacts 30 - 87 of relay G000, wire 2101, fuses E000 and E001 and wire 2102 and wire 2103 respectively. The corner marker lights, marker lights and rear lights (on both the driver’s and co-driver’s side) now come on. Because there is a voltage on connection point 85 of relay G001 through contacts 2 - 4 of switch C622, wire 2110, this relay is energised. When relay G001 is energised, a voltage is applied to both the left and right dipped beam through contacts 30 - 87, wire 2112, fuses E004 and E005 and wires 2113 and 2114 respectively. A voltage is also sent to the VIC via wire 2114, pin C5. The VIC controls the DIP, which ensures that the “dipped beam” warning indicator illuminates on the instrument panel.

https://truckmanualshub.com/

VARIANTS

Location	
5, 16, 19	Connector 529 fitted on Swedish lighting version.

https://truckmanualshub.com/

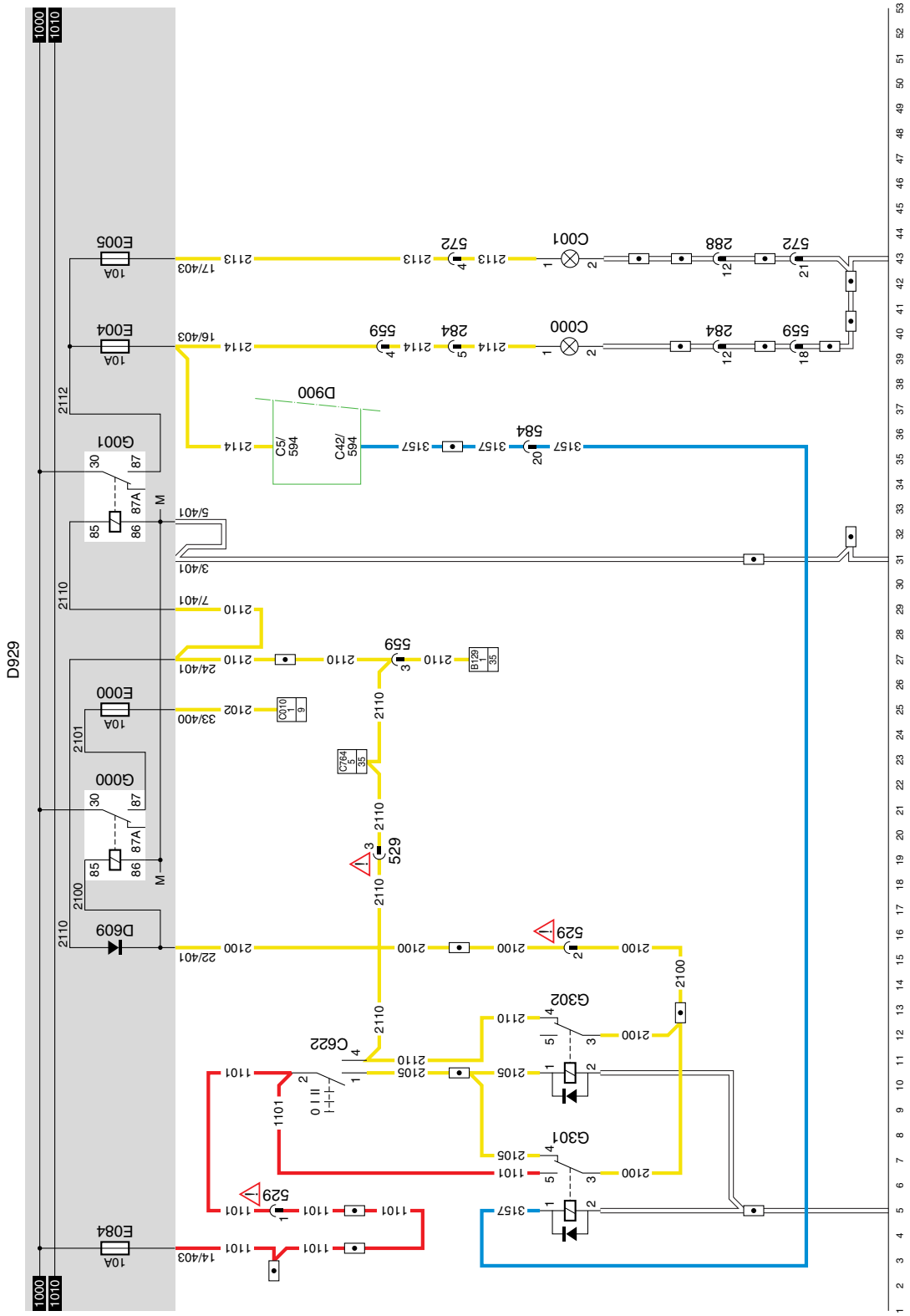

14 1358030/26 EL001319

https://truckmanualshub.com/

https://truckmanualshub.com/

15 STOP LIGHTS/CAB TILTING GEAR

STOP LIGHTS

When the brake pedal is pressed, stop light operating switch E511 is activated (connection between contacts 2 and 1) and relay G036 will be energised. Through fuse E013, wire 1209, contacts 30 and 87 of relay G036 and wire 4601 a voltage is now applied to the right stop light (C021) and the left stop light (C020), so that they go on. There is also a voltage on connection point 4 of drawn vehicle socket A000 and on connection point 3 of the superstructure application connector (A070). When relay G036 is energised, the connection 30 - 78a is broken. The voltage on D814 (UPEC electronic unit) or D903 (ECS-DC3 electronic unit) is lost.

CAB TILTING GEAR

A voltage is applied to connection point 1 of the cab locking sensor F676 (sensor) and to sensor F616 (cab tilting cylinder sensor) through fuse E018 and wire 1114. There is also a voltage on connection point 2 of sensor F676 through connection points 1 - 2 of relay G351 (cab tilt protection micro-relay) and wire 4723. When this sensor is activated, the voltage is transmitted to connection point D16 of D900 (VIC) and to connection point 2 of sensor F616. The VIC now sends a message to the DIP, which then activates the “cab tilted” warning lamp. When sensor F616 is activated, relay G351 is energised and, as a result, a voltage is applied to B251 through contacts 3 and 5 and wire 4722 (buzzer neutral position, cab tilting). If the contacts in switch E594 (neutral position switch) are closed (connection between pins 1 and 2), the horn will go off.

VARIANTS

Location

30	Only if the vehicle is fitted with AS Tronic gearbox.
33	If the vehicle is fitted with a conventional braking system, there is **NO** connection to F628. If the vehicle is fitted with the EBS braking system, there is **NO** stop light switch (E511) or earth connection.
35	Depending on whether the vehicle is fitted with a UPEC or ECS-DC3 engine.
36	Connector 914 if **NO** AS Tronic fitted. If AS Tronic fitted: see section diagram 11.
39, 41	Connector 877 only if the vehicle has a buffer beam as standard.
44, 45	Connector 873: only for vehicle type FA.
48	Depending on whether the vehicle is fitted with a 7-pin or 15-pin plug. See also section diagram 47or 48.
52	Connector 916: only for vehicle type FA.

https://truckmanualshub.com/

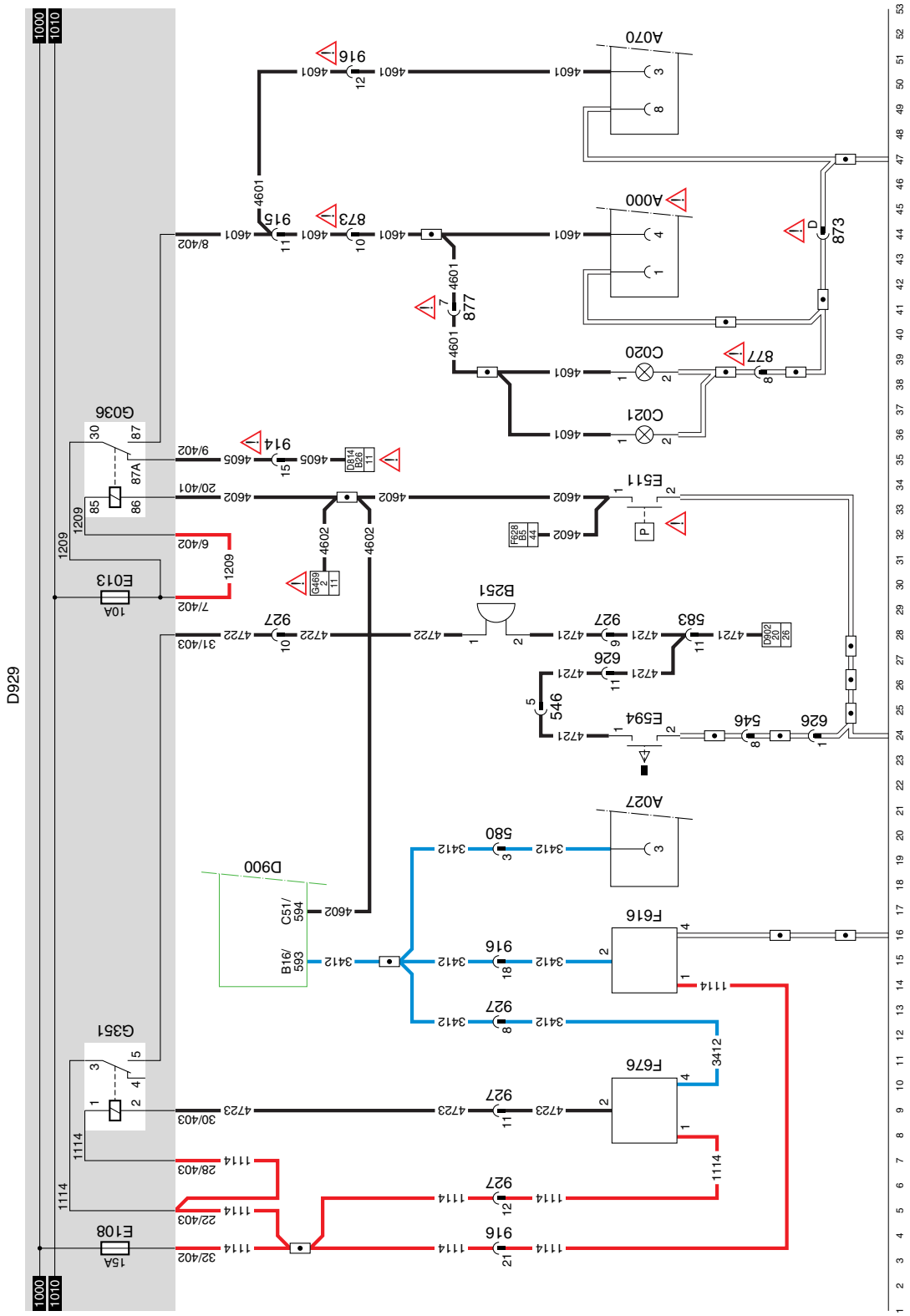

15 1358030/26 EL001320

10

https://truckmanualshub.com/

16 DIFFERENTIAL LOCK

When the ignition switch (G015) is activated, a voltage is applied through fuse E016 and wire 1217 to the cross-axle lock differential control switch (C748) and the longitudinal controlled slip differential control switch (C749).

When the cross-axle differential lock (C748) is activated, a voltage is applied through wire 4517 to the cross-axle differential lock control valve (B243). As a result, the valve is activated.

When the longitudinal controlled slip differential (C749) is activated, a voltage is applied through wire 4518 to the longitudinal controlled slip differential control valve (B244). As a result, the valve is activated.

© 200404

https://truckmanualshub.com/

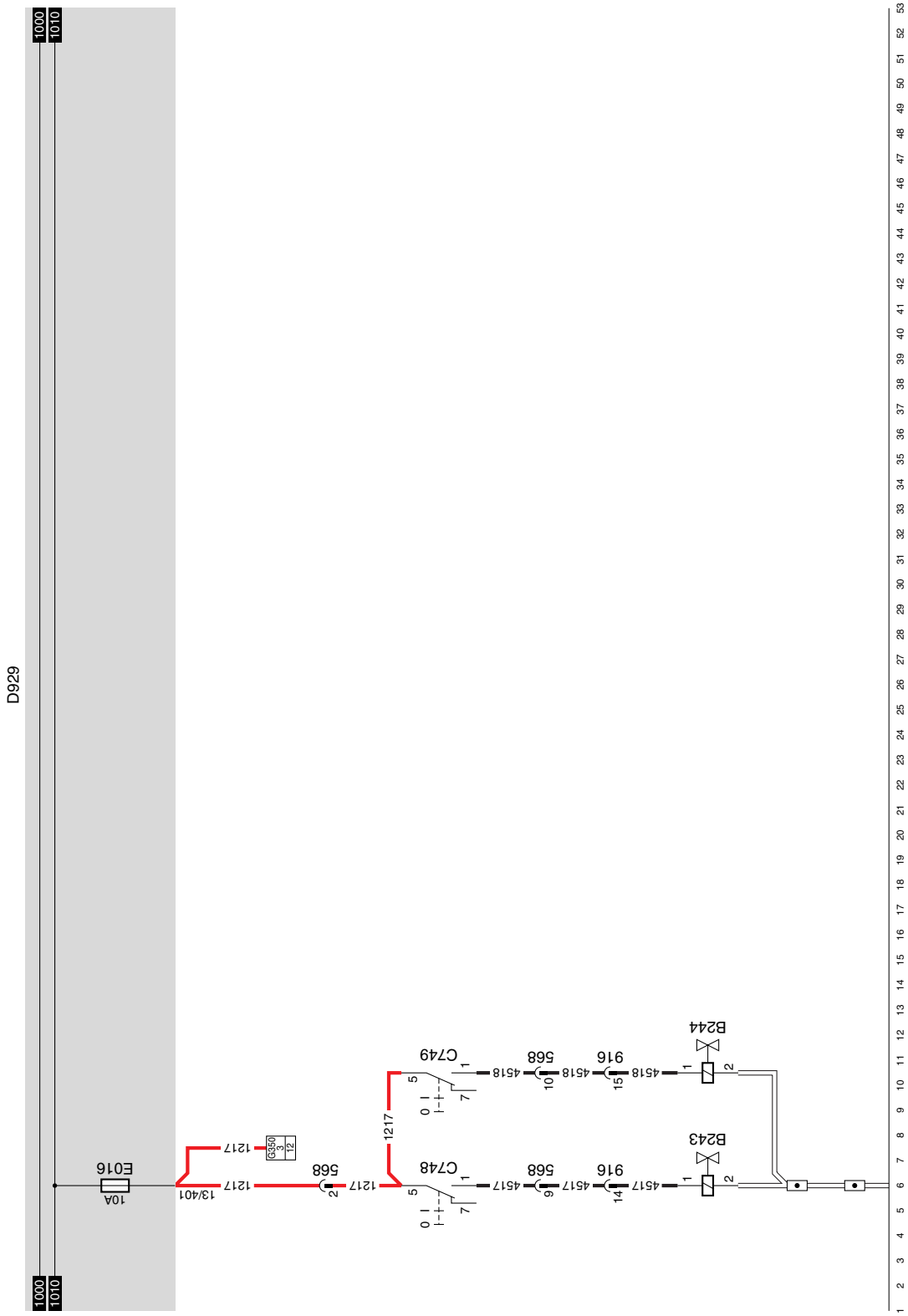

https://truckmanualshub.com/

17 INTERIOR LIGHTING, DAY/SLEEPER CAB

CAB STEPWELL LIGHTING/INTERIOR LIGHTING DOOR SWITCH, DRIVER'S SIDE

If the door on the driver's side is opened, door switch E514 is activated (connection between 1 and 2). A a result, there is a voltage on C062, C063 and D911 through fuse E028 (interior lighting fuse), wire 1107, contacts 1 - 2 of door switch E514, wire 2647, diode D783 (driver's side interior lighting diode), wire 2600. This activates the cab stepwell lighting on both the driver's side (C062) and the co-driver's side (C063). The VIC (D900) also receives a voltage on connection point 1, connector 595. The VIC then turns on the cab lighting (C119/C192), provided the switch is in the correct position, activating it via connection point 4, connector 492.

When the door on the driver's side is closed (contacts 1 - 2 interrupted), the voltage to connection point 1, connector 595 of the VIC is lost. Connection point 4, connector 592 will then continue to be supplied with power for another 9 seconds approximately. After approximately 9 seconds, the supply voltage is switched off and the lights go out.

If the vehicle ignition is switched on (contact made) within 9 seconds, the power supply to connection point 4, connector 592 of the VIC will be switched off immediately. The lighting will be switched off immediately. If the alarm system (D911) sends a voltage to connection point 13, connector 594 of the VIC to indicate that the doors have locked correctly, the lighting will also go off immediately.

CAB STEPWELL LIGHTING/INTERIOR LIGHTING DOOR SWITCH, CO-DRIVER'S SIDE

If the door on the co-driver's side is opened, door switch E515 is activated (connection between 1 and 2).
As a result, there is a voltage on both C062 and C063 through fuse E028 (interior lighting fuse), wire 1107, contacts 1 - 2 of door switch E515, wire 2600. This activates the cab stepwell lighting on both the driver's side (C062) and the co-driver's side (C063).

INTERIOR LIGHT WITH MAP-READING LIGHT (DRIVER'S SIDE AND CO-DRIVER'S SIDE)

There is a combined interior light and map-reading light on both sides of the cab against the roof. The lamps operate in the same way on the driver's side and co-driver's side.

A voltage is applied to connection point 2 of C119 and C192 through fuse E028, wire 1107. Depending on the position of the built-in switches, the interior light or the map-reading light is now switched on individually or together.

TOOL COMPARTMENT LIGHTING

When the tool compartment door is opened, tool compartment light switch E528 is activated (connection between 1 and 2). As a result, there is a voltage on C067 through fuse E142 (accessories before contact fuse), wire 1154, contacts 1 - 2 of tool compartment light switch E528, wire 2608. This switches on the tool compartment light. The tool compartment light works independently of the contact.

BUNK LAMP

The bunk lamp C115 is switched on by a switch in the light fitting. The bunk lamp works independently of the contact. Voltage is applied to connection point 1 of C115 through fuse E028, wire 1107. When the switch is operated (connection between contacts 1 and 2), connection point 2 is connected to earth. The lamp will now come on.

https://truckmanualshub.com/

INTERIOR NIGHTLIGHT

When switch C735 (interior nightlight switch) is operated (connection between 5 and 1), a voltage is applied to C191 through fuse E028 (interior lighting fuse), wire 1107, contacts 5 - 1 of nightlight switch C735, wire 2617. This switches the nightlight on. The nightlight works independently of the contact.

VARIANTS

Location

29 Wire 1107 only fitted if there is **NO** alarm system.

https://truckmanualshub.com/

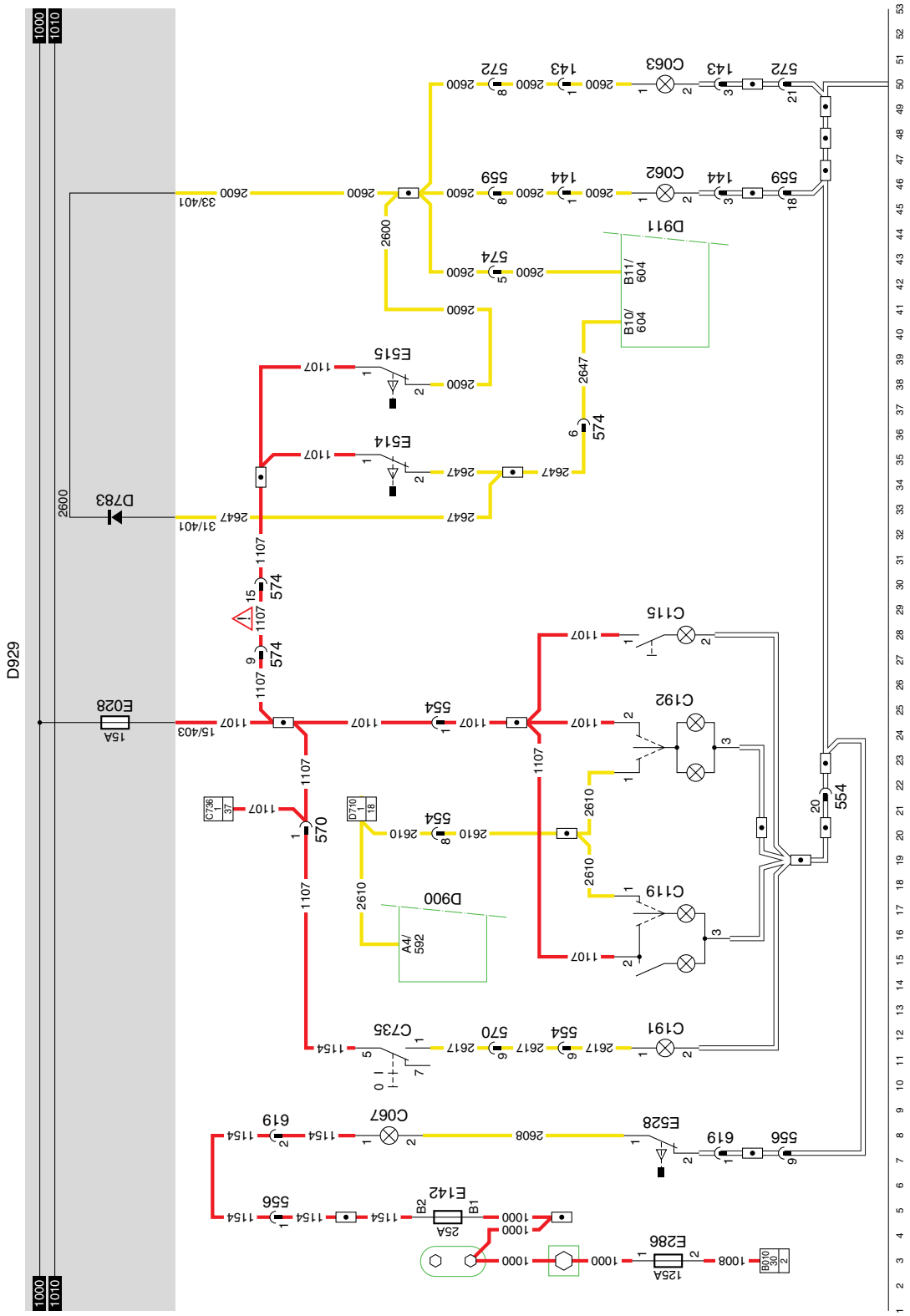

17 1358030/26 EL001322

https://truckmanualshub.com/

https://truckmanualshub.com/

18 SH CAB INTERIOR LIGHTING

CAB STEPWELL LIGHTING/INTERIOR LIGHTING DOOR SWITCH, DRIVER'S SIDE

If the door on the driver's side is opened, door switch E514 is activated (connection between 1 and 2). A a result, there is a voltage on the driver's side cab stepwell lighting (C062), co-driver's side cab stepwell lighting (C063) and D911 (alarm system) through fuse E028 (interior lighting fuse), wire 1107, contacts 1 - 2 of door switch E514, wire 2647, diode D783 (driver's side interior lighting diode), wire 2600. This activates the cab stepwell lighting on both the driver's side (C062) and the co-driver's side (C063). The VIC (D900) also receives a voltage on connection point 1, connector 595. The VIC then turns on the cab lighting (C119/C192), provided the switches (C119, C192, C859 and C837) are in the correct position, activating it through wire 2610 (connection point 4, connector 592 of the VIC unit).

When the door on the driver's side is closed (contacts 1 - 2 of door switch E514 interrupted), the voltage to connection point 1, connector 595 of the VIC is lost. Connection point 4, connector 592 will then continue to be supplied with power for another 9 seconds approximately. After approximately 9 seconds, the supply voltage is switched off and the interior lighting goes out.

If the vehicle ignition is switched on (contact made) within 9 seconds, the power supply to connection point 4, connector 592 of the VIC will be switched off immediately. The interior lighting will be switched off immediately. If the alarm system (D911, pin 16 of connector 604, wire 3647) sends a voltage to connection point 13, connector 594 of the VIC to indicate that the doors have locked correctly, the interior lighting will also go off immediately.

CAB STEPWELL LIGHTING/INTERIOR LIGHTING DOOR SWITCH, CO-DRIVER'S SIDE

If the door on the co-driver's side is opened, door switch E515 is activated (connection between 1 and 2).
As a result, there is a voltage on both driver's side cab stepwell lighting (C062) and co-driver's side cab stepwell lighting (C063) through fuse E028 (interior lighting fuse), wire 1107, contacts 1 - 2 of door switch E515, wire 2600. This activates the cab stepwell lighting on both the driver's side (C062) and the co-driver's side (C063).

Interior lighting with map-reading light (driver's and co-driver's side)
There is a combined interior light and map-reading light on both sides of the cab against the roof. The lamps operate in the same way on the driver's side and co-driver's side.

A voltage is applied to connection point 2 of C119 and C192 through fuse E028, wire 1107. Depending on the position of the built-in switches, the interior light or the map-reading light is now switched on individually or together.

INTERIOR LIGHTING TWO-WAY SWITCHING

The condition to turn on both interior lights is that C119 (interior light with switch, driver's side) and C192 (interior light with switch, co-driver's side) must be switched together. In other words: the switch is connected to contact 1.

Situation 1: Switch C837 in '0' position.
Switch C837 in middle position (contacts 5 - 1 and 8 - 4 connected).
The supply voltage and the earth are now interrupted and the light does not work.

https://truckmanualshub.com/

Situation 2:
Switch C837 set to position 'I' (contacts 5 - 7 and 8 - 6 connected). A voltage is now applied to connection point 1 of C119 and to connection point 1 of C192 through fuse E028, wire 1107, contacts 5 - 7 of C837, wire 2644, contacts 7 - 5 of C859 (driver's side roof console interior light switch), wire 2632. The earth is formed because connection point 3 of C119 and connection point 3 of C192 are connected to the vehicle earth through wire 9032, contacts 8 - 6 of C837.
The lighting can now be switched on or off using switch C859.

Situation 3:
Switch C837 set to position 'II' (contacts 3 - 1 and 2 - 4 connected). A voltage is now applied to connection point 1 of C119 and to connection point 1 of C192 through fuse E028, wire 1107, contacts 3 - 1 of C837, wire 2645, contacts 1 - 5 of C859 (driver's side roof console interior light switch), wire 2632. The earth is formed because connection point 3 of C119 and connection point 3 of C192 are connected to the vehicle earth through wire 9032, contacts 2 - 4 of C837.
The lighting can now be switched on or off using switch C859.
Explanation of two-way switching in vehicle

Tool compartment lighting
When the tool compartment door is opened, the driver's side tool compartment light switch (E528) is activated (connection between 1 and 2). As a result, there is a voltage through fuse E142, wire 1154 on C067, wire 2608 on E528 (tool compartment light switch). This is connected to earth. This switches on the tool compartment light. The tool compartment light works independently of the contact.

Bunk lamp
The bunk lamp C115 is switched on by a switch in the light fitting. The bunk lamp works independently of the contact. Voltage is applied to connection point 1 of C115 through fuse E028, wire 1107. Connection point 2 of C115 is connected to earth. When the switch is operated (connection between contacts 1 and 2), the lamp goes on.

Nightlight
When switch C735 (interior nightlight switch) is operated (connection between 5 and 1), a voltage is applied to connection point 1 of C191 (middle nightlight) through fuse E028 (interior lighting fuse), wire 1107, contacts 5 -1 of nightlight switch C735, wire 2617. This switches the nightlight on. The nightlight works independently of the contact.

VARIANTS

Location
49 Wire 1107 only fitted if there is **NO** alarm system.

https://truckmanualshub.com/

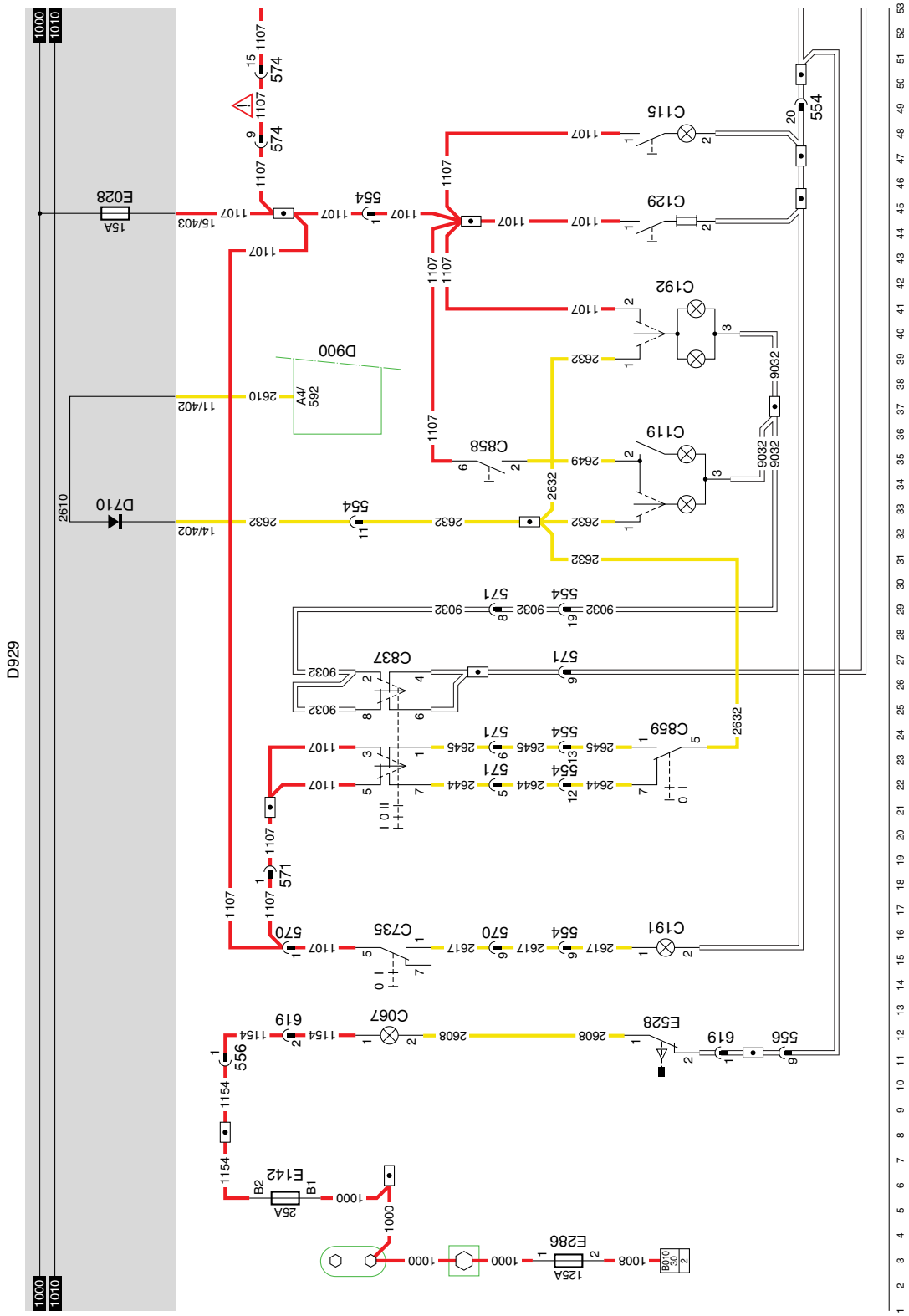

18 1358030/26

EL001323

https://truckmanualshub.com/

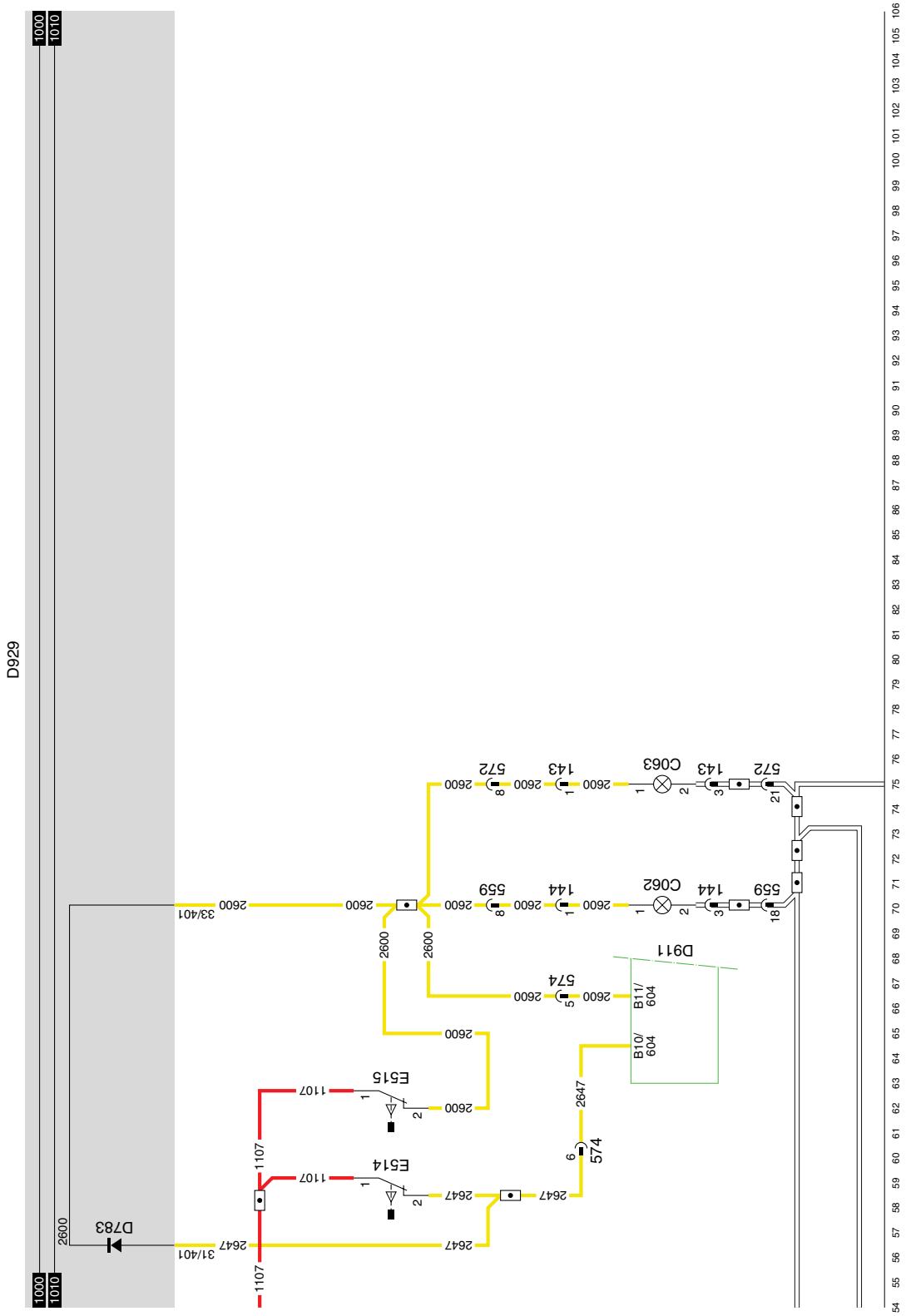

18 1358030/26 EL001324

10

https://truckmanualshub.com/

19 MIRROR HEATING/MIRROR ADJUSTMENT

MIRROR HEATING

When the mirror heating switch (C746) is operated, a voltage is applied to mirror heater B017 (driver's side) and B018 (co-driver's side) through fuse E044, wire 1208, switch C746 (contacts 1 - 2) and wire 4532.

The mirror heating can only be switched on when the contact relay has been energised (contact 'on').

MIRROR ADJUSTMENT

The outside mirrors are adjusted using two so-called "joystick" switches C695 (driver's side) and C696 (co-driver's side). If the handle of the switch is moved from the rest position (centre) in a particular direction, power will be supplied to mirror adjustment motor B005 (driver's side) or B006 (co-driver's side) and the mirror in question will follow the movement of the handle.
For this, wires 4770 and 4774 (driver's side) or 4771 and 4775 (co-driver's side) supply power to the motor for the left/right movement. Wires 4772 and 4774 (driver's side) or 4773 and 4775 (co-driver's side) supply power to the adjusting motor for the up and down movement.

The mirror adjustment system can only be used if the contact relay is energised.

VARIANTS

Location

7	If RHD, pin 4 is connected to wire 1208 and pin 2 is connected to earth.
17	If RHD, pin 4 is connected to wire 1208 and pin 2 is connected to earth.

© 200404

https://truckmanualshub.com/

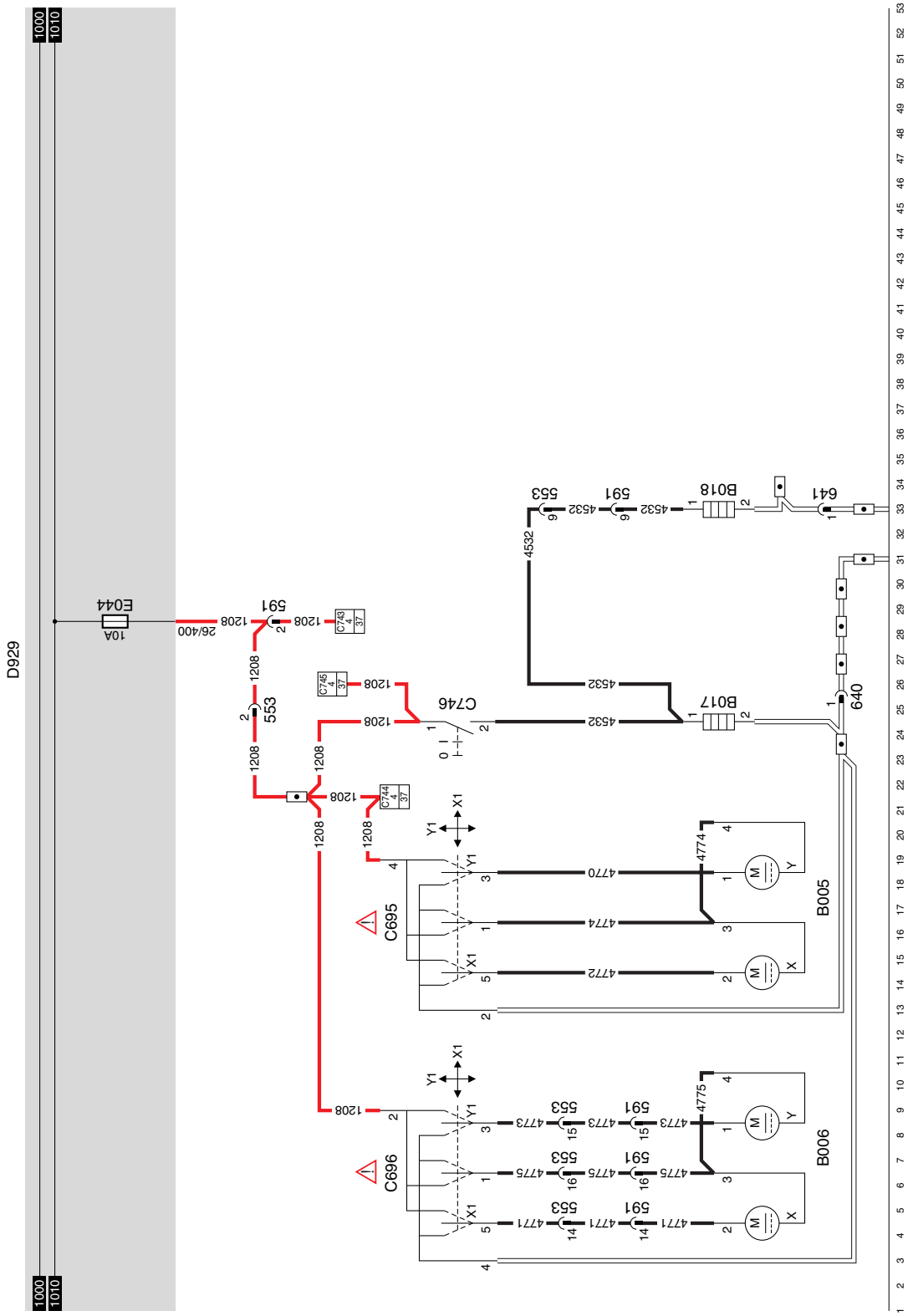

19 1358030/26 EL001325

10

https://truckmanualshub.com/

20 SEARCH LIGHTING

SEARCH LIGHTING

Search lighting refers to lights or LEDs in the various function switches.

When the light switch (C622) is operated, a supply voltage is present on relay G000 (connection point 85) through fuse E084 and the light switch (C622), contacts 2 - 1, wire 2100.

Relay G000 is energised (connection between connection points 30 and 87), PCB track 2101, fuse (E117) when there is a voltage on the search lighting (through wire 2630). All search lighting connected to this will come on.

The following switches are illuminated by a light: B030, C052, C053, C072, C073, C716, C813, C814 and C858.

The following switches are illuminated by an LED:
C725, C727, C735, C736, C737, C739, C740, C741, C742, C748, C749, C750, C751, C760, C763, C764, C765, C774, C778, C802, C835, C836, C837 and C853.

LIGHT BUZZER

When the lighting switch (C622) is operated, supply voltage will be applied to connection point 85 of relay G000 through fuse E084, lighting switch (C622) and wire 2100.

Relay G000 is energised so that a voltage is applied to the search lighting (wire 2630) through fuse E117. This wire is also connected to the VIC (D900), pin C7, connector 594.

If the pre-programmed condition in the VIC is met, the VIC sends a message to the DIP, which in turn activates the buzzer (fitted in the DIP).

© 200404

https://truckmanualshub.com/

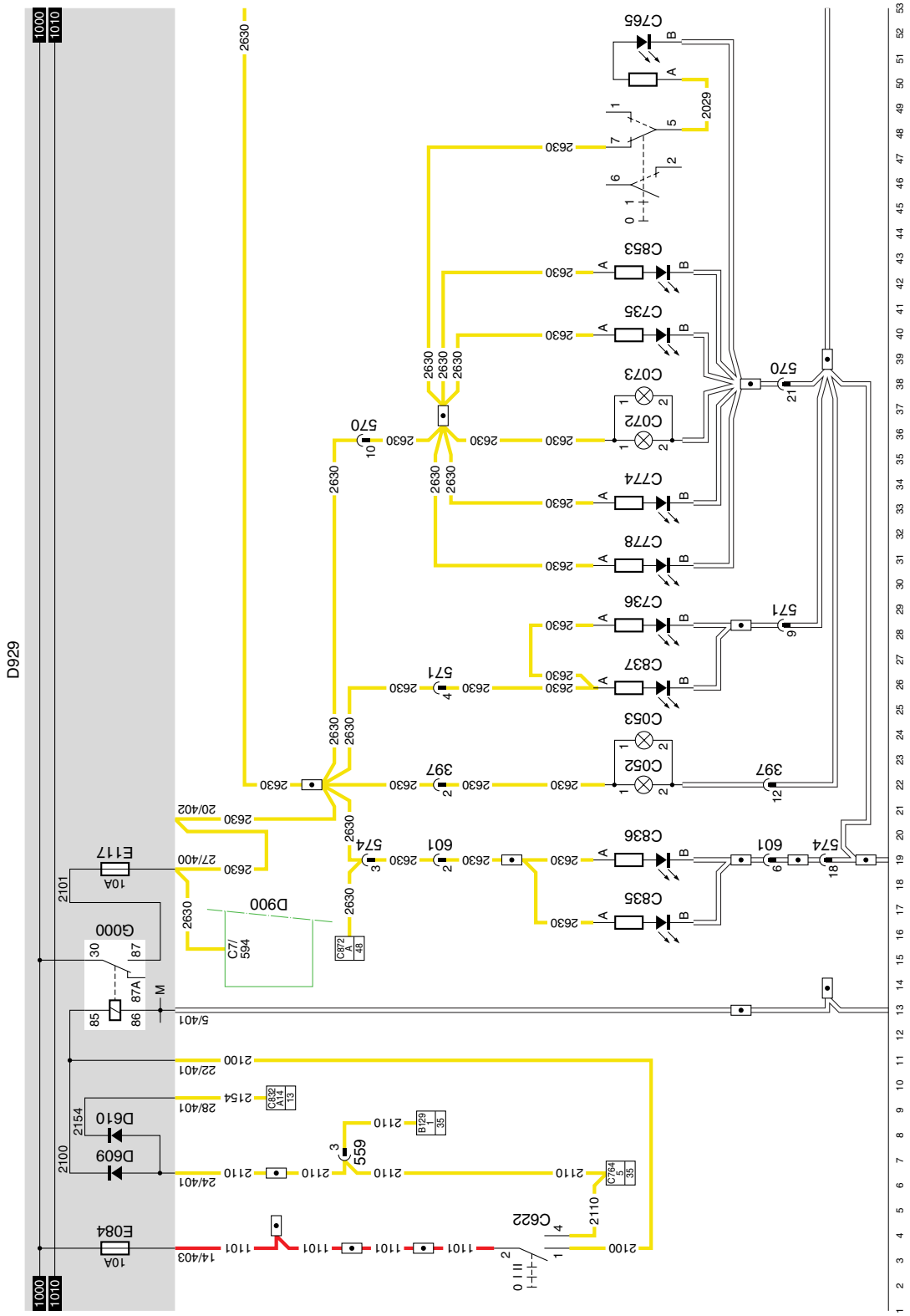

20 1358030/26 EL001326

10

https://truckmanualshub.com/

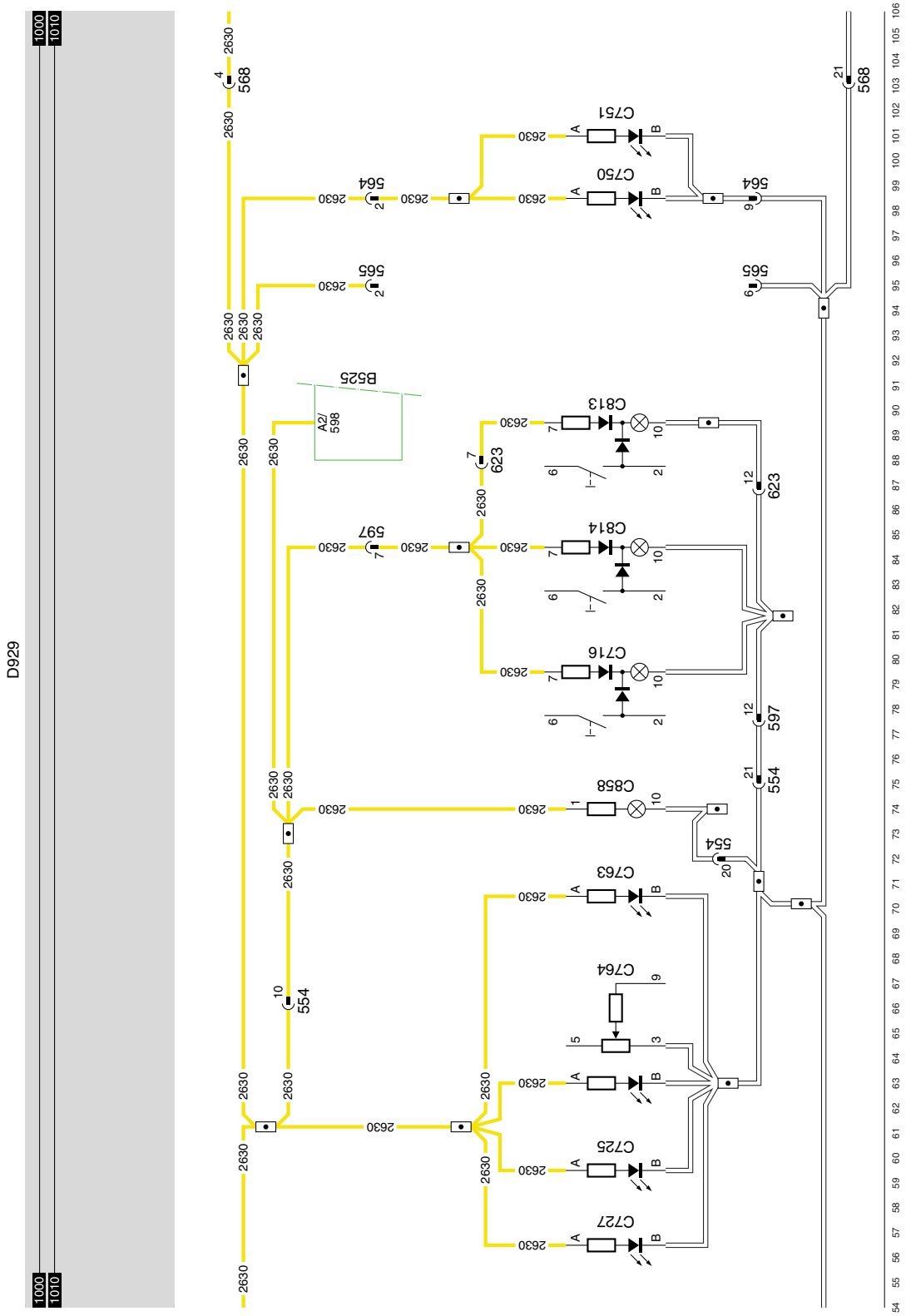

20 1358030/26 EL001327

https://truckmanualshub.com/

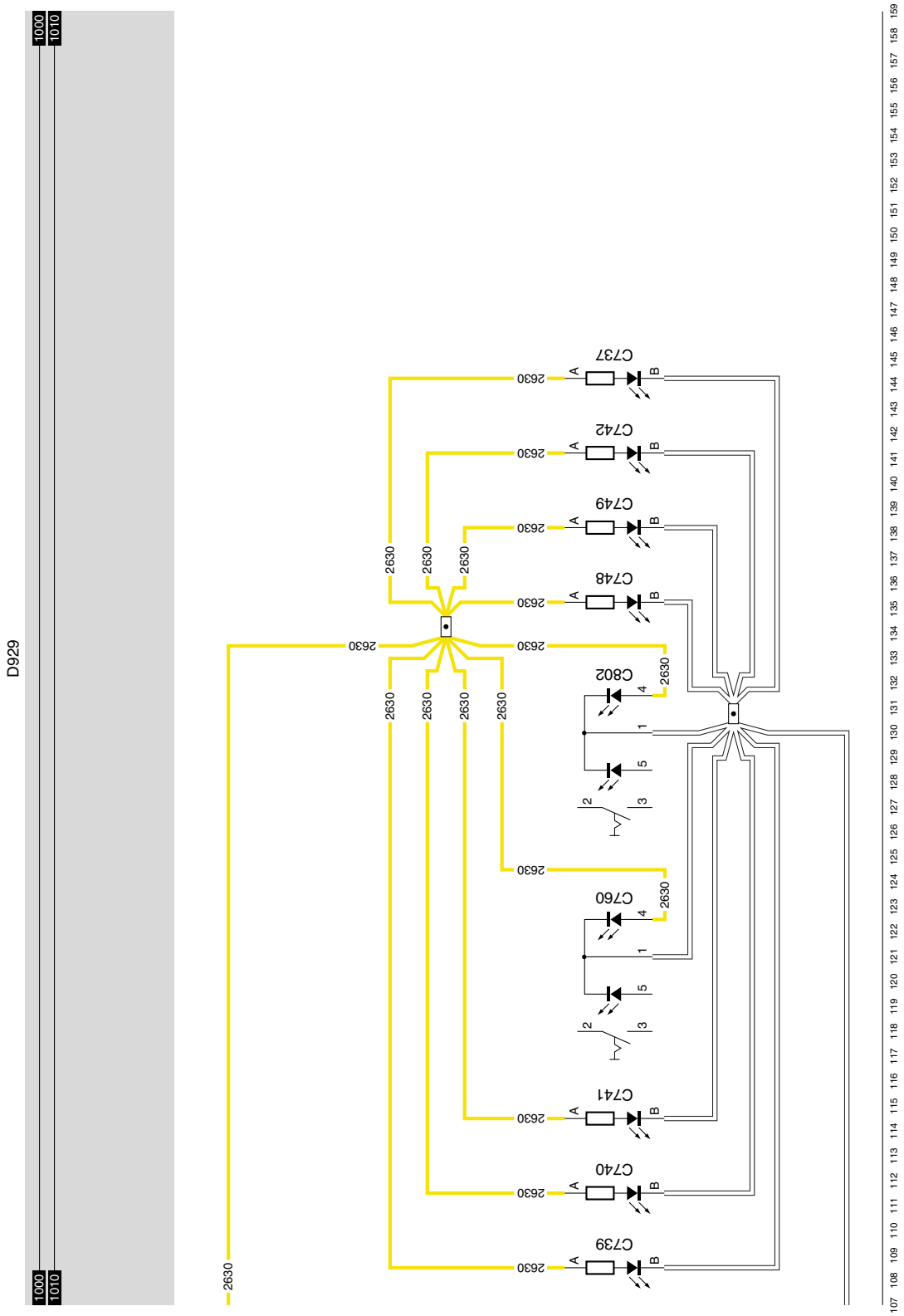

20 1358030/26 EL001328

10

https://truckmanualshub.com/

21 AIR CONDITIONING/RECIRCULATION VALVE/HEATER FAN

AIR CONDITIONING

SEE THE SYSTEM MANUAL FOR MORE INFORMATION

RECIRCULATION VALVE

When C802 is operated (connection between contacts 2 and 3), a voltage is applied to connection points 1 of G257 and G258 through fuse E031, wire 1201, contacts 2 - 3 of C802, wire 4659. This relay is energised and, as a result, a connection is made between contacts 3 and 5. This causes a voltage to be applied to connection point 1 of B252 through fuse E031, wire 1201, contacts 5 - 3 of relay G257 and wire 5053. The other connection point 2 is connected to earth through wire 5054, contacts 3 - 5 of relay G258. The recirculation valve, driven by B252, will now close.
The VIC (D900) also receives a voltage signal on connection point 8. The VIC activates the “recirculation” warning indicator on the instrument panel via the I-CAN.

HEATER FAN

A voltage is applied to connection point 8 of B015 (4-speed heater fan) through fuse E031 (heater fan) and wire 1201.
Depending on the position of C882 (heater fan switch), the fan will start operating.

The knob has five positions:

Off: (position 0): Heater fan (B015) off.

Position 1: (Connection between contacts 2 and 6) The fan runs at the lowest speed.
Voltage is applied to connection point 8 of B015 through fuse E031 and wire 1201. The earth is formed through connection point 7 of B015, wire 4658, contacts 6 - 5 of thermal switch B015, wire 4654, through three resistors (B015), wire 4650 and contacts 2 - 6 of C882.

Position 2: (Connection between contacts 2 and 6) The fan runs slightly faster.
Voltage is applied to connection point 8 of B015 through fuse E031 and wire 1201. The earth is formed through connection point 7 of B015, wire 4658, contacts 6 - 5 of thermal switch B015, wire 4654, through two resistors (B015), wire 4651 and contacts 4 - 6 of C882.

Position 3: (Connection between contacts 3 and 6) The fan runs at the highest speed but one.
Voltage is applied to connection point 8 of B015 through fuse E031 and wire 1201. The earth is formed through connection point 7 of B015, wire 4658, contacts 6 - 5 of thermal switch B015, wire 4654, through one resistor (B015), wire 4652 and contacts 3 - 6 of C882.

Position 4: (Connection between contacts 1 and 6) The fan runs at the highest speed.
Voltage is applied to connection point 8 of B015 through fuse E031 and wire 1201. The earth is formed through connection point 7 of B015, wire 4658, contacts 6 - 5 of the thermal switch (B015).

https://truckmanualshub.com/

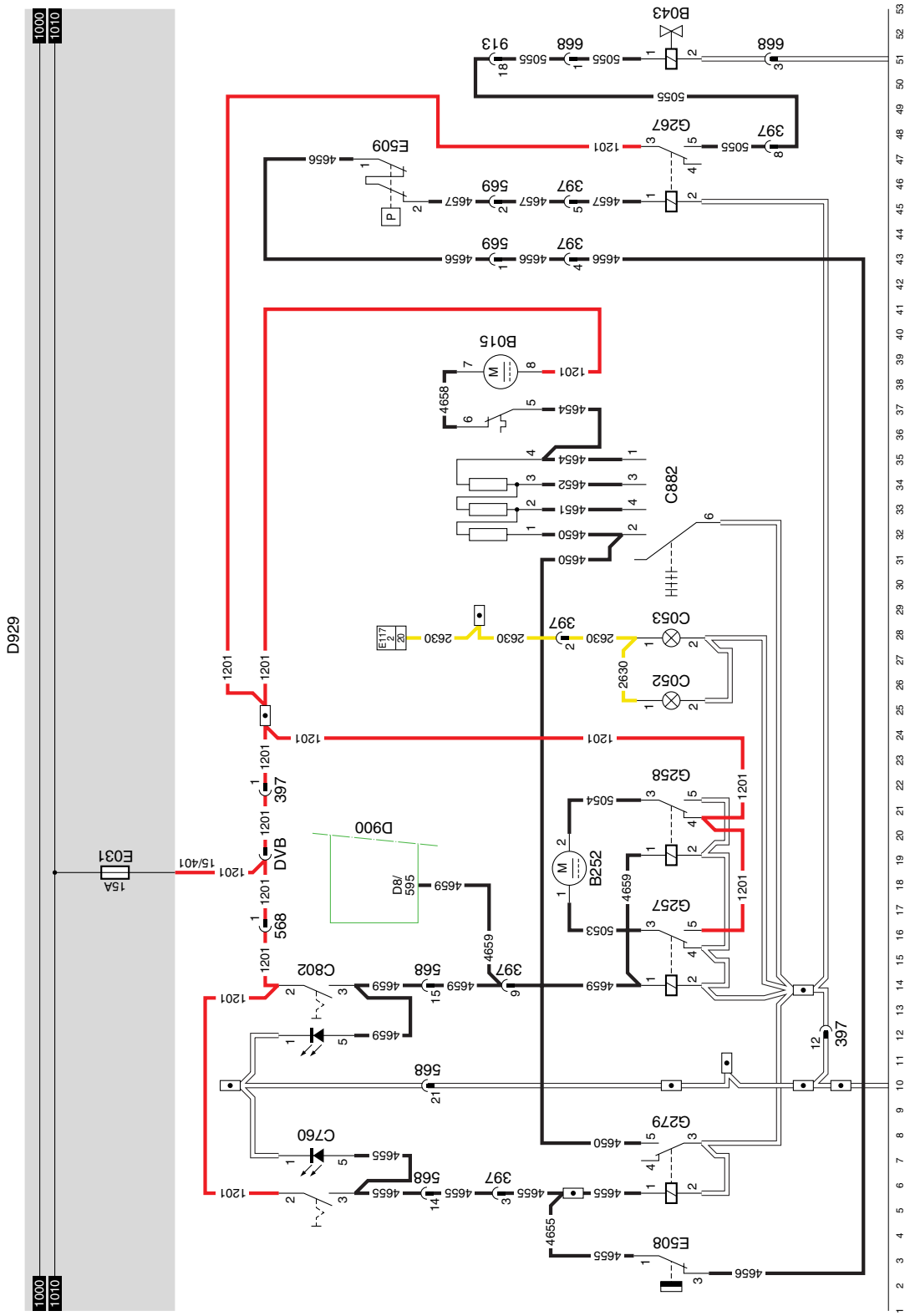

21 1358030/26 EL001329

10

https://truckmanualshub.com/

22 CONNECTION FOR SEAT HEATING/ACCESSORIES

SEAT HEATING

When the contact is activated, a voltage is applied to switch C697 (driver's side seat heating switch) and switch C698 (co-driver's side seat heating switch) through fuse E091 and wire 1240.
When one of the switches (C697 or C698) is operated, heating element B032 or B033 is switched on. When the maximum temperature is reached, a thermal switch in the seat switches off the heating element.

ACCESSORIES CONNECTION

There is a 2-pin connector A038 (connector number: 180) in the central box, under the PCB.
This is connected before contact (wire 1175) and is protected by a 25A fuse.

https://truckmanualshub.com/

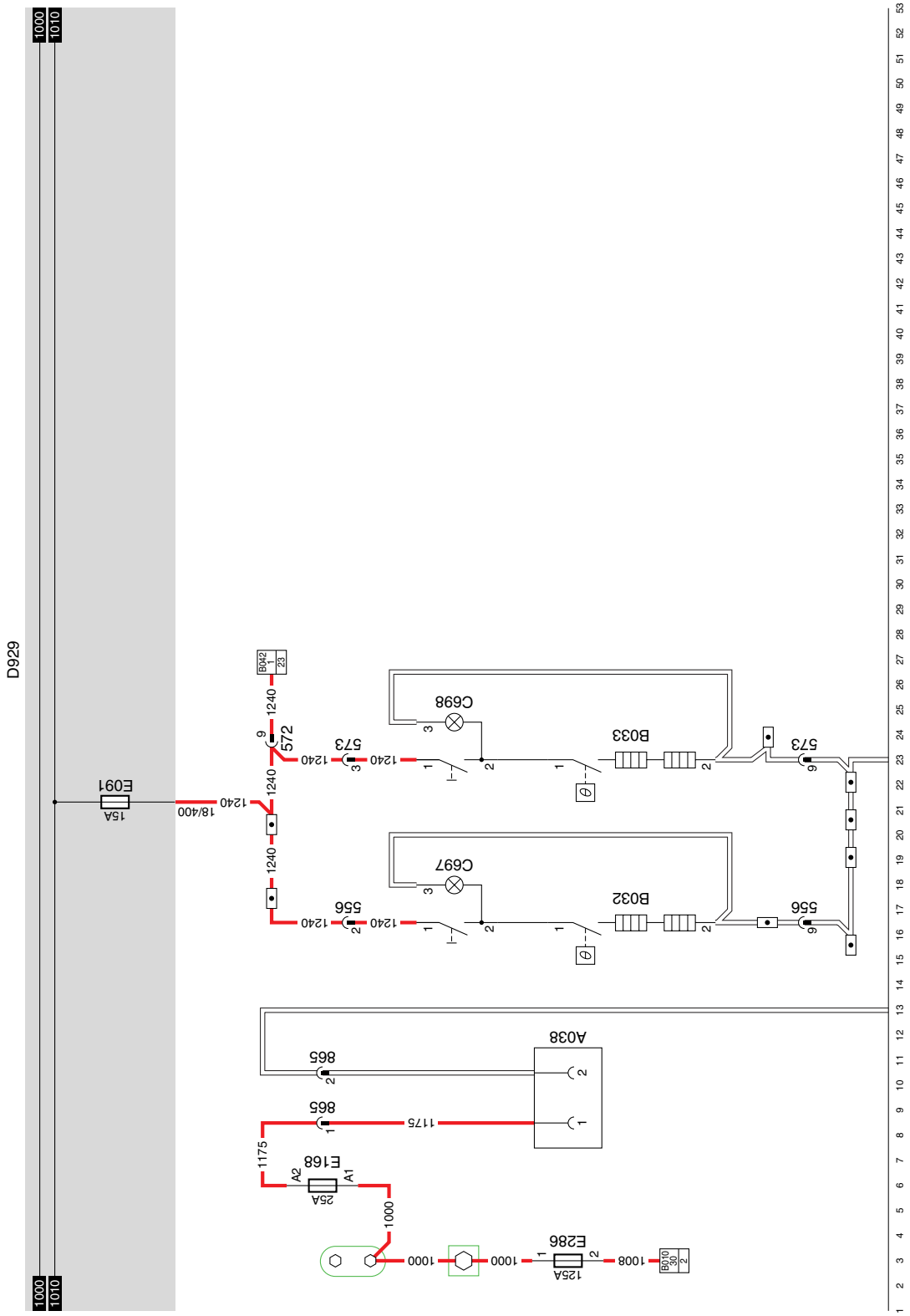

22 1358030/26 EL001330

10

https://truckmanualshub.com/

23 HORN/CIGAR LIGHTER/WORK LAMP/AIR DRYER

HORN
A voltage is applied to connection point 5 of C832 (direction indicator/windscreen wiper stalk switch) via fuse E036 and wire 1103. When this switch is operated (connection between contacts 5 and 12), voltage is applied to connection point 1 of valve B028 (horn) via wire 4535. This valve is activated. The air duct in the pneumatic horn is now released.

CIGAR LIGHTER
A voltage is applied to connection point 1 of B030 (driver's side cigar lighter) through fuse E026 (power supply before contact) and wire 1105. When the cigar lighter is pressed in (connection between contacts 1 and 3), a current flows through an internal resistor. When the temperature exceeds a specific value, the heating element springs back and the electric circuit is broken.

WORK LAMP
When the vehicle lighting is on (relay G000 activated), a voltage is applied to connection point 85 of relay G462 (work lamp relay) through contacts 30 - 87 of relay G000, PCB track 2101, fuse E117, wire 2630. This relay is activated. A voltage is now applied through fuse E037, wire 1100, contacts 30 and 87 of relay G462 through fuse E052 to connection point 5 of C725 (work lamp switch). When the work lamp switch is operated (connection between connection points 5 and 1), the work lamp (C071) is supplied with voltage. The VIC (D900) also receives a voltage signal on connection point C9. The VIC switches on the "work lamp" warning indicator on the instrument panel via the I-CAN.

AIR DRYER
A voltage is applied to connection point 1 of B042 (air dryer heating element) through fuse E091 (power supply after contact) and wire 1240. If the built-in temperature switch is closed (connection between contacts 1 and 2), a current flows through an internal resistor. If the temperature exceeds a specific value, the temperature switch turns the heating element back off.

VARIANTS

Location

45	Connector A070: optional. Only for vehicle type FA.
47	only on vehicle type FA.

https://truckmanualshub.com/

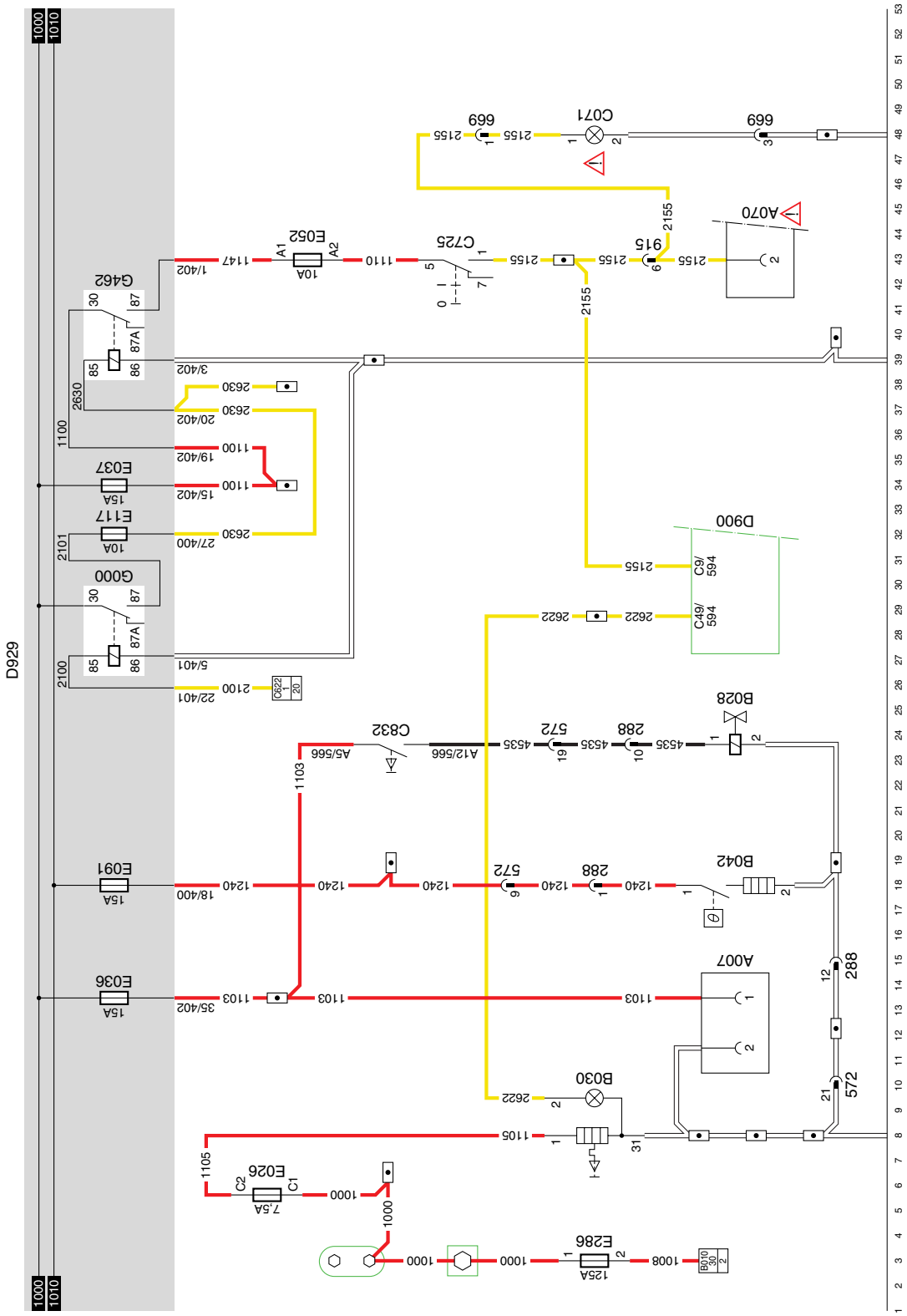

23

1358030/26

EL001331

https://truckmanualshub.com/

10

24 ABS - ASR-D

SEE THE SYSTEM MANUAL FOR MORE INFORMATION

VARIANTS

Location	
21 -> 26	Connector 873: only on vehicle type FA.

https://truckmanualshub.com/

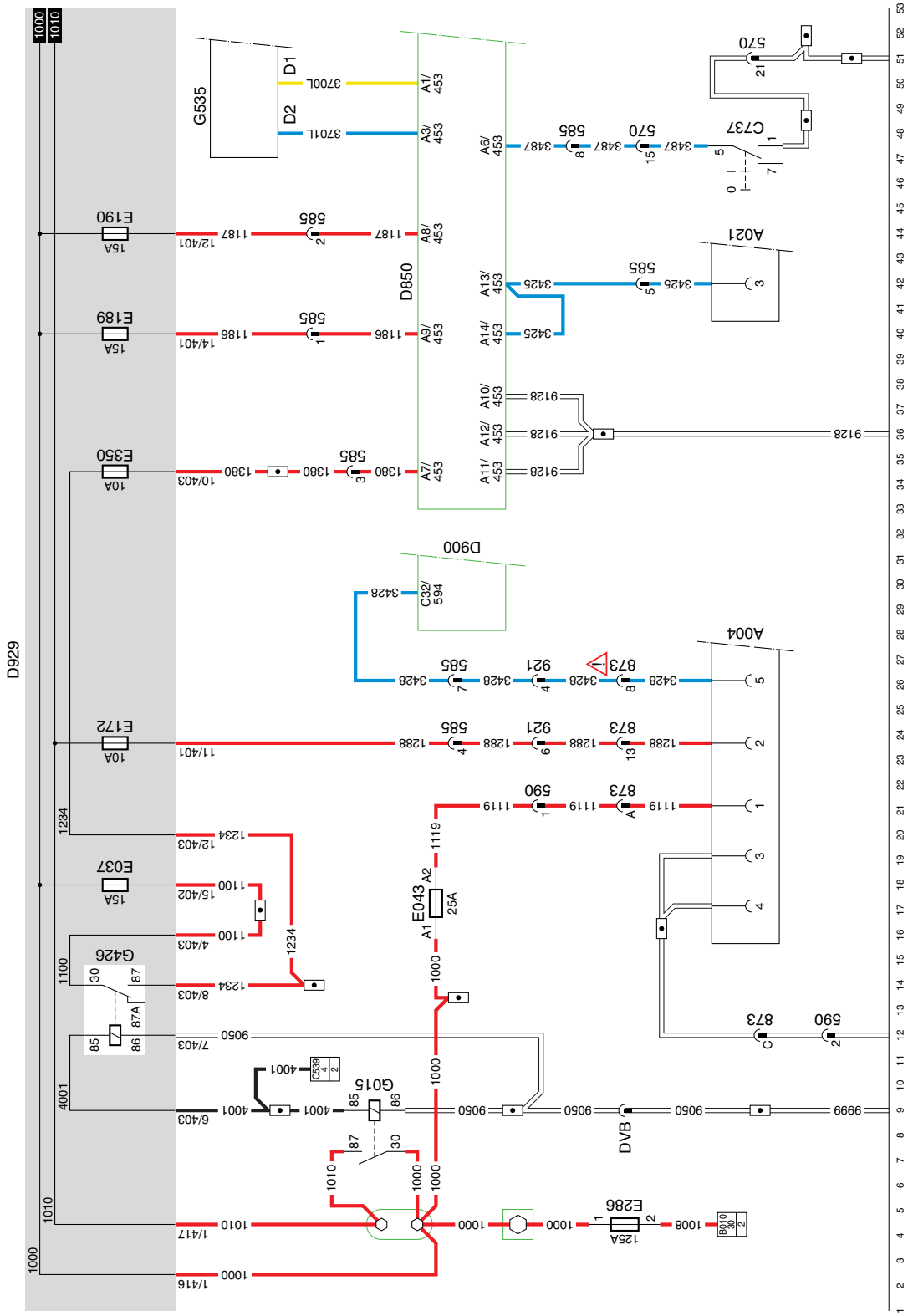

24 1358030/26 EL001332

10

https://truckmanualshub.com/

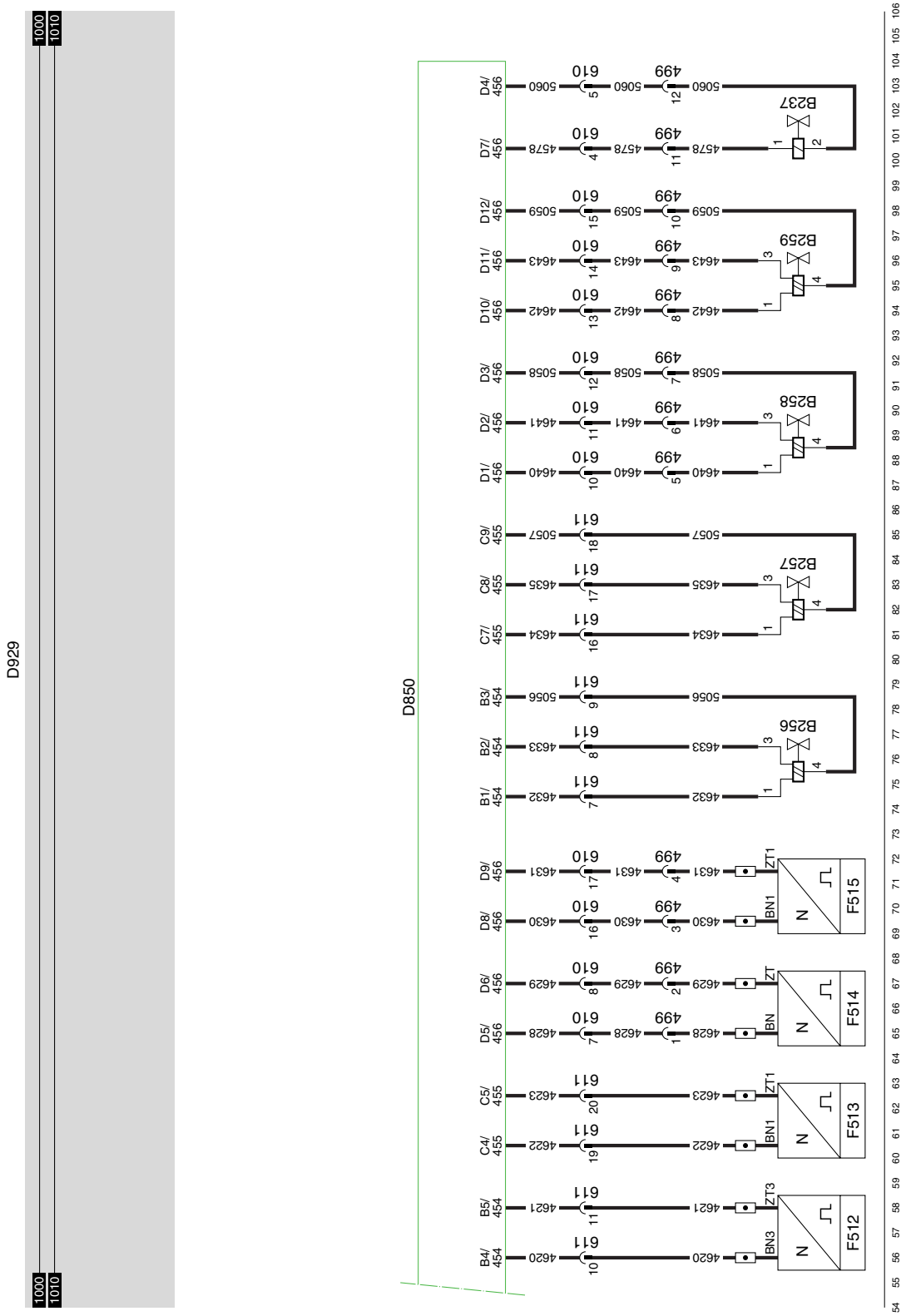

24 **1358030/26** EL001333

10

https://truckmanualshub.com/

https://truckmanualshub.com/

25 DEB

Voltage is applied through fuse E118 and relay G126 to D814 (UPEC electronic unit) and through fuse E184 to valves B192, B247 and B248.
Depending on unit D814, relay G126 is activated, after which voltage is applied to exhaust brake valve B192 and engine brake (DEB) valves B247 and B248.
Depending on unit D814 these valves are connected to earth or are not connected to earth.

SEE THE SYSTEM MANUAL FOR MORE INFORMATION

VARIANTS

Location

17	Connector 914: only for AS Tronic.
17	Relay G469: only for AS Tronic.

© 200404

https://truckmanualshub.com/

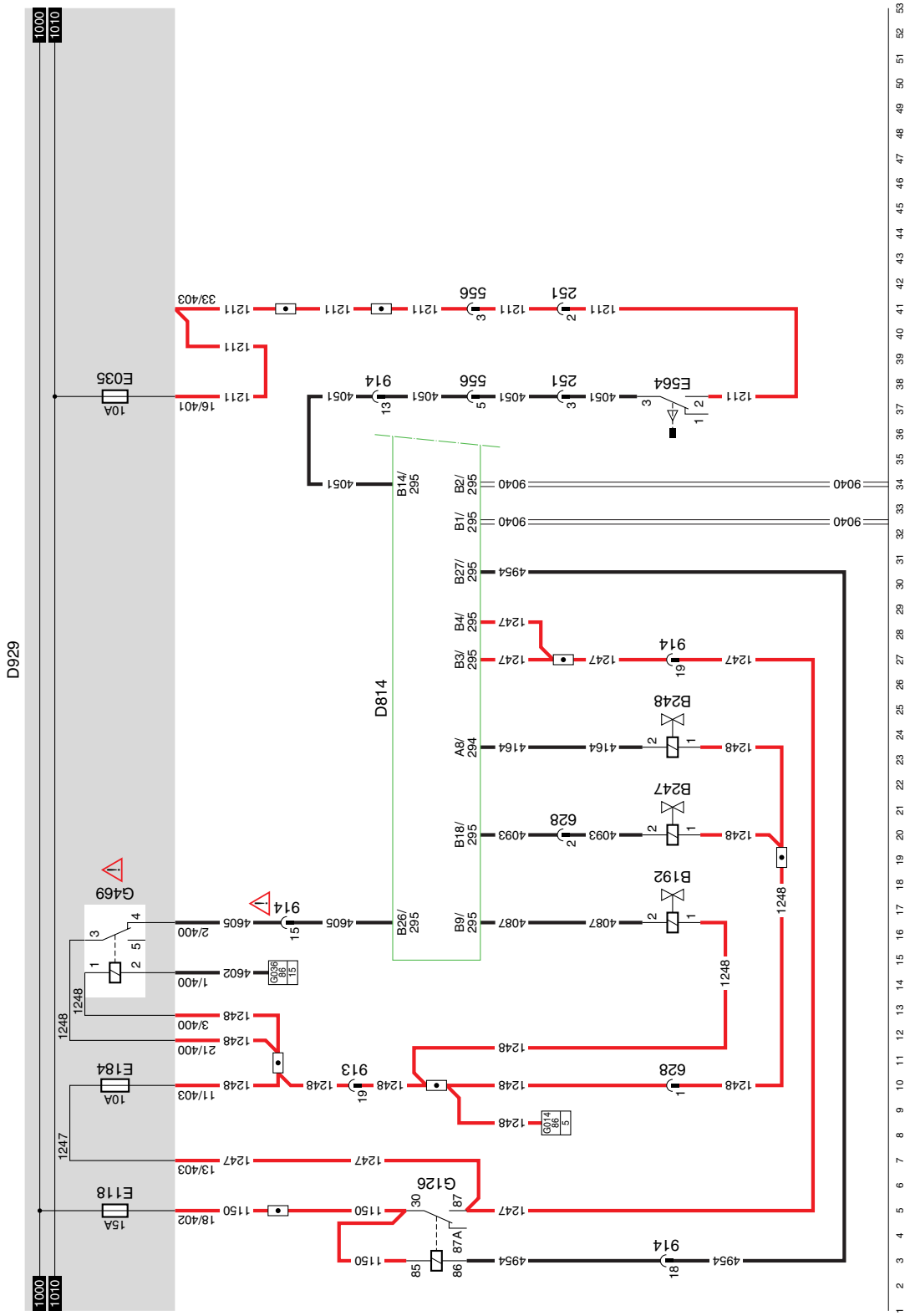

25 1358030/26 EL001334

10

https://truckmanualshub.com/

26 INTARDER EST42

SEE THE SYSTEM MANUAL FOR MORE INFORMATION

VARIANTS

Location

15 The housing is connected to earth by a separate wire.

23 Connector 583: on AS Tronic: wire 4690 connected directly to earth.

© 200404

https://truckmanualshub.com/

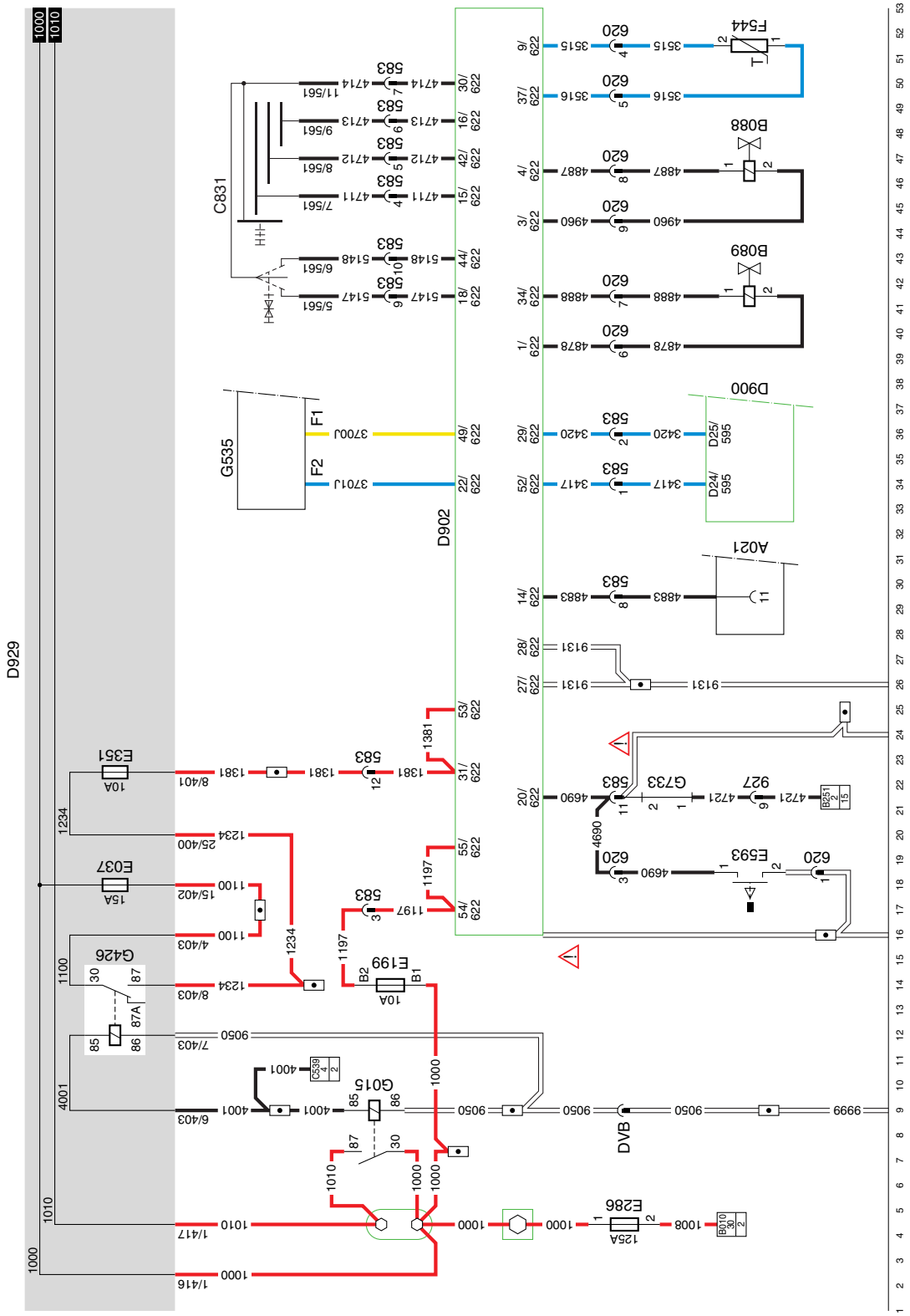

26

1358030/26

EL001335

10

https://truckmanualshub.com/

27 ECS-DC3

SEE THE SYSTEM MANUAL FOR MORE INFORMATION

VARIANTS

Location

28 Connector 914: the illustration shows the situation without AS Tronic. See section diagram 11 for situation with AS Tronic.

https://truckmanualshub.com/

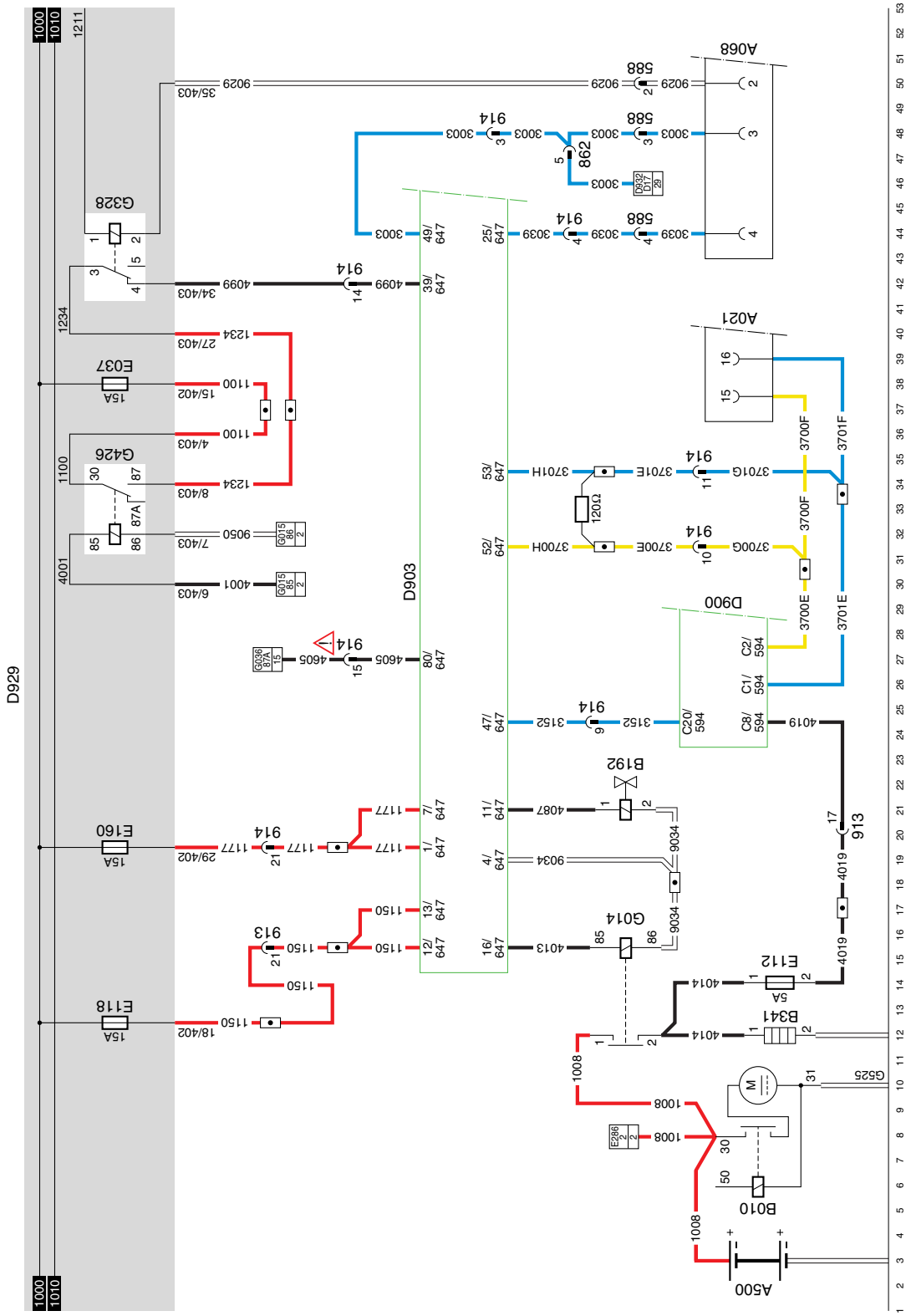

27

1358030/26

EL001336

10

https://truckmanualshub.com/

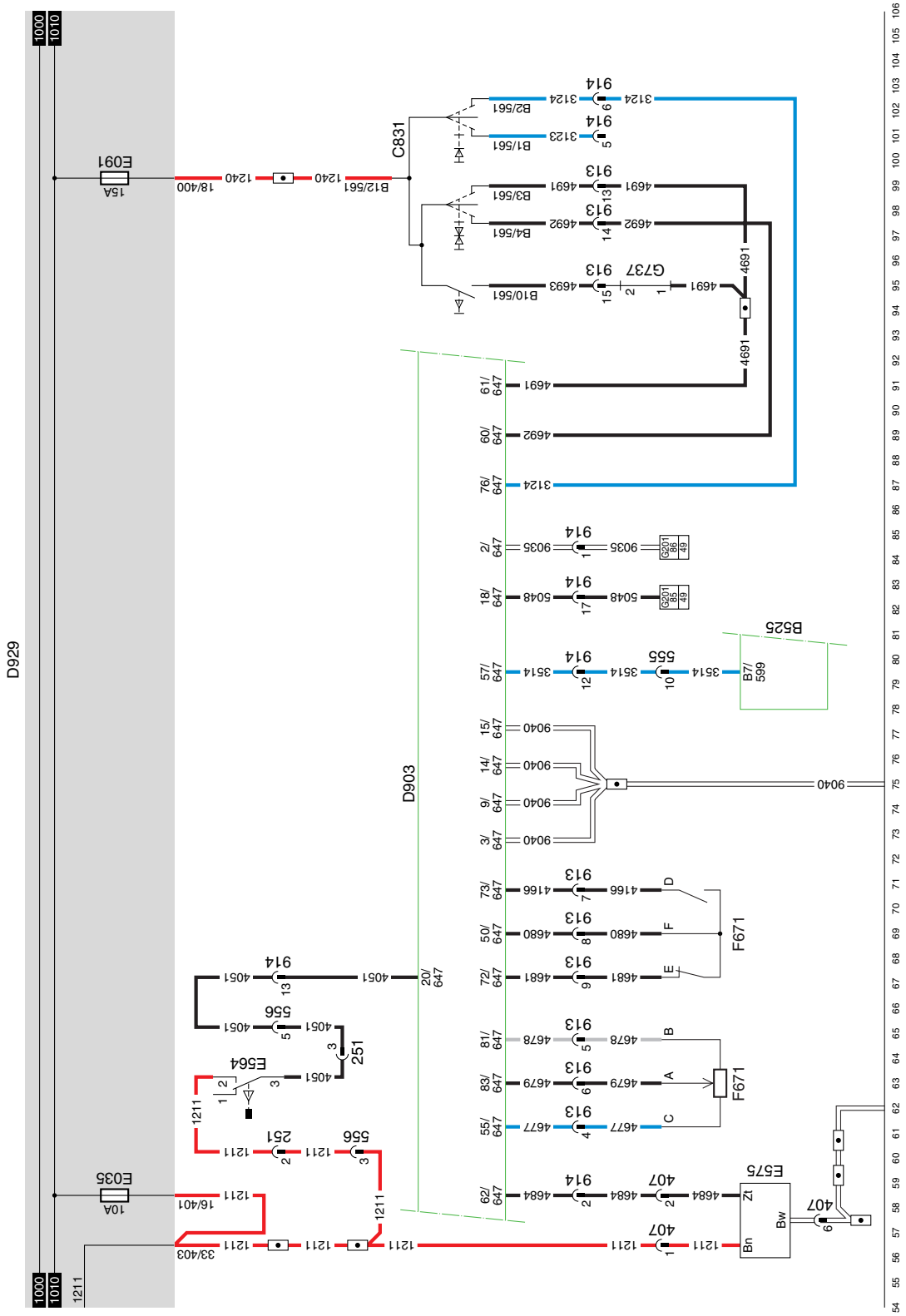

27 1358030/26 EL001337

https://truckmanualshub.com/

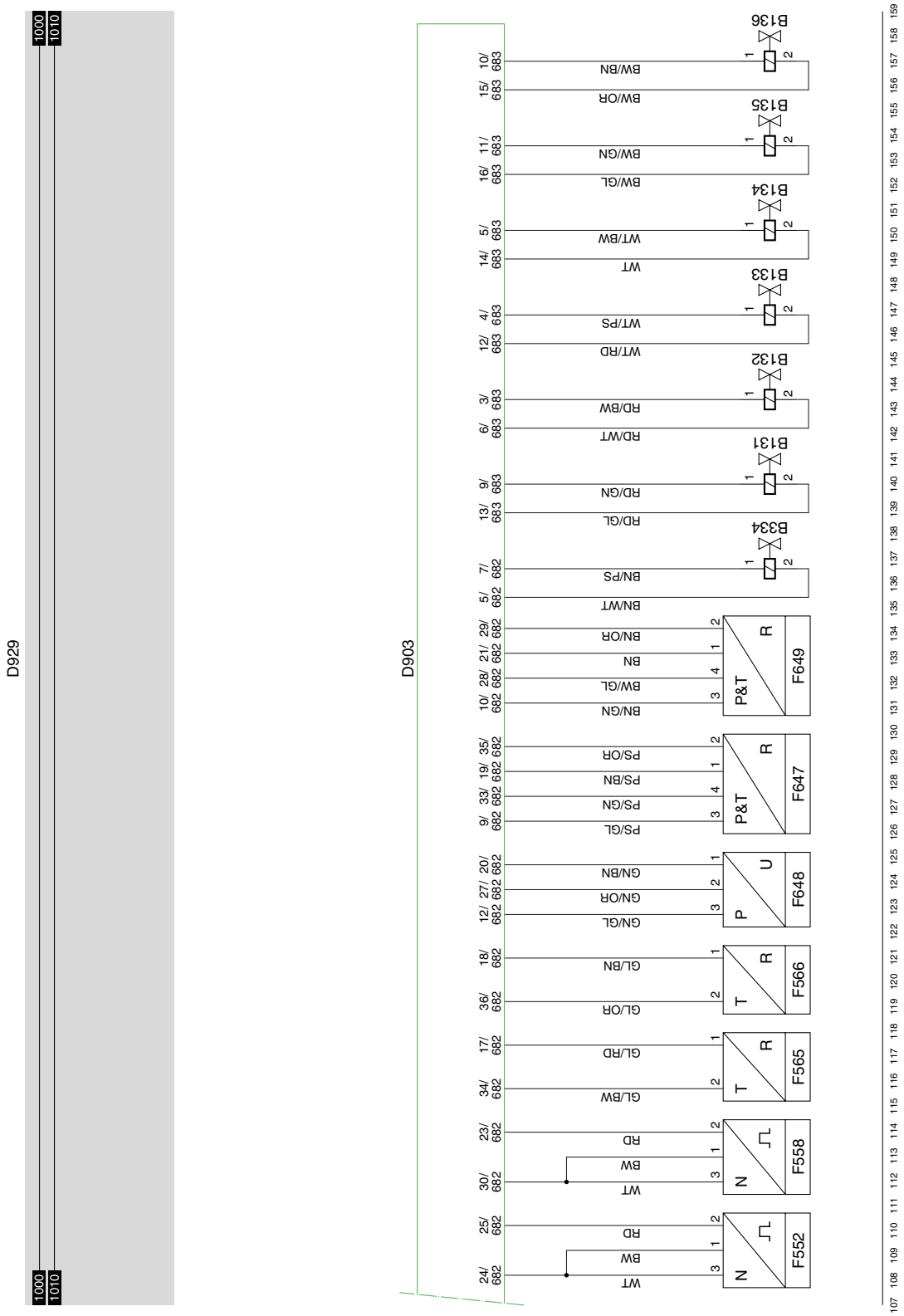

27 1358030/26 EL001338

10

https://truckmanualshub.com/

https://truckmanualshub.com/

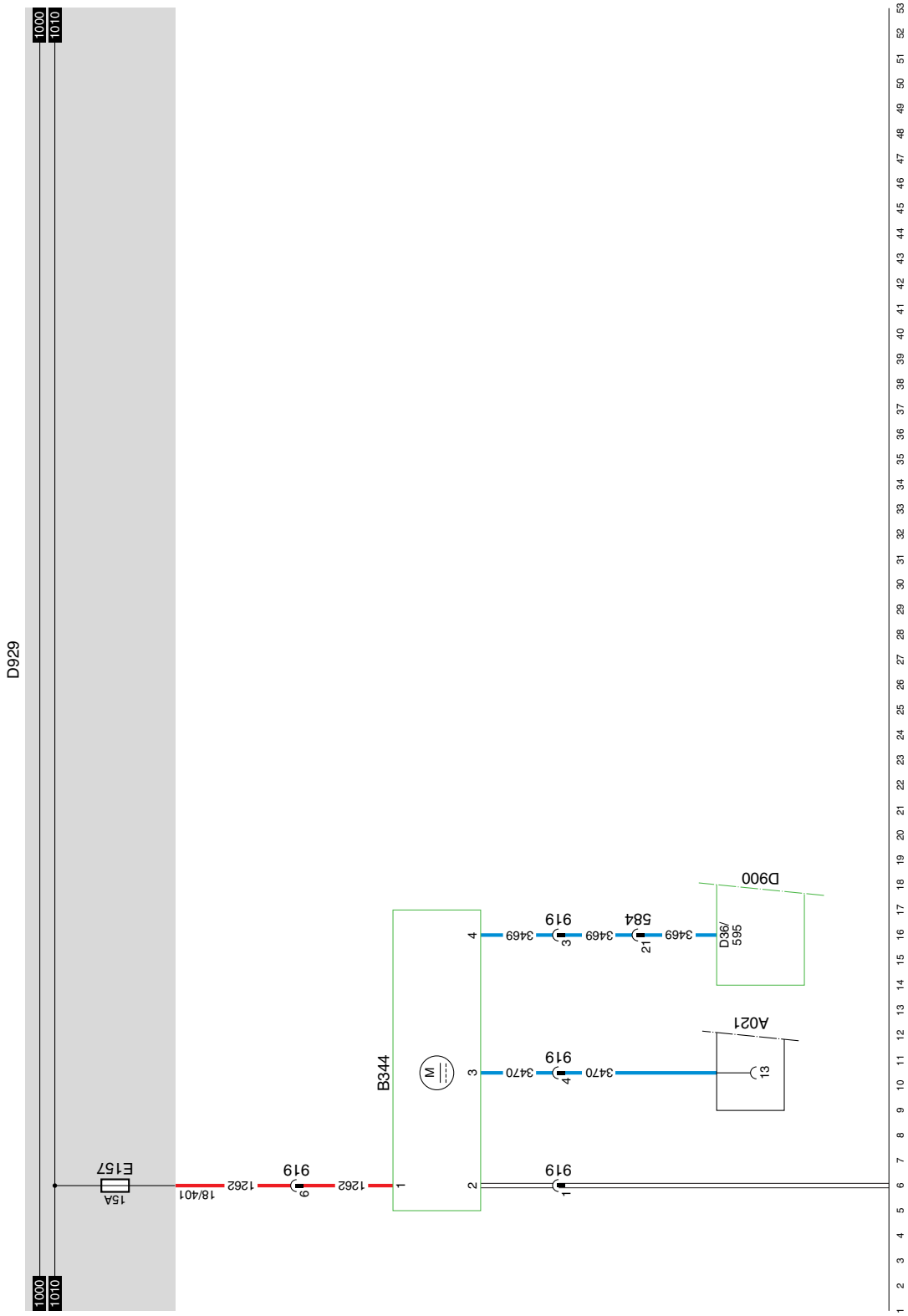

28 **1358030/26** EL001339

10

https://truckmanualshub.com/

29 EMAS

SEE THE SYSTEM MANUAL FOR MORE INFORMATION

VARIANTS

Location

42 Wires coming out of connectors 679 and 680 are **NOT** provided with DAF markings.

https://truckmanualshub.com/

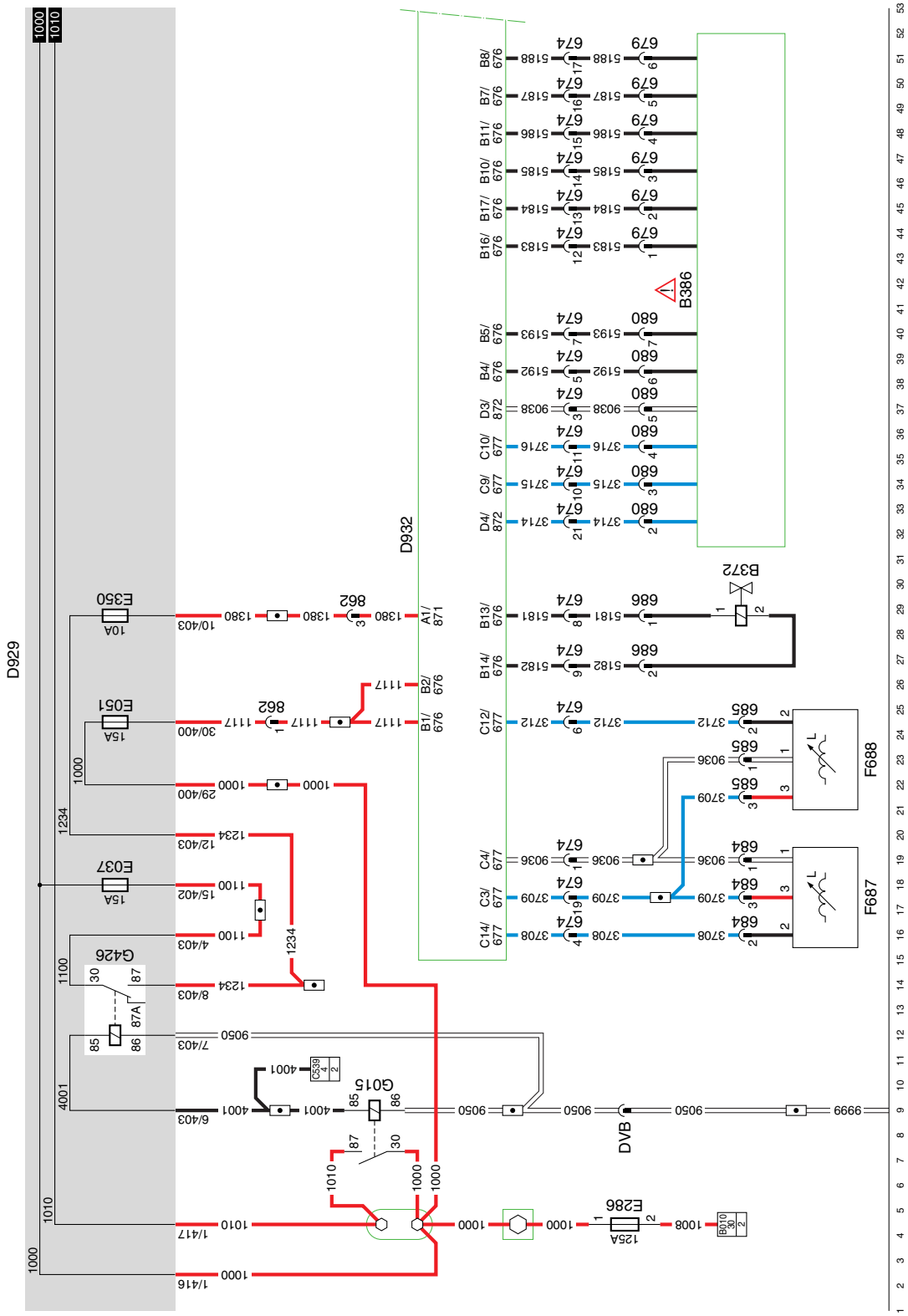

29 1358030/26

EL001340

https://truckmanualshub.com/

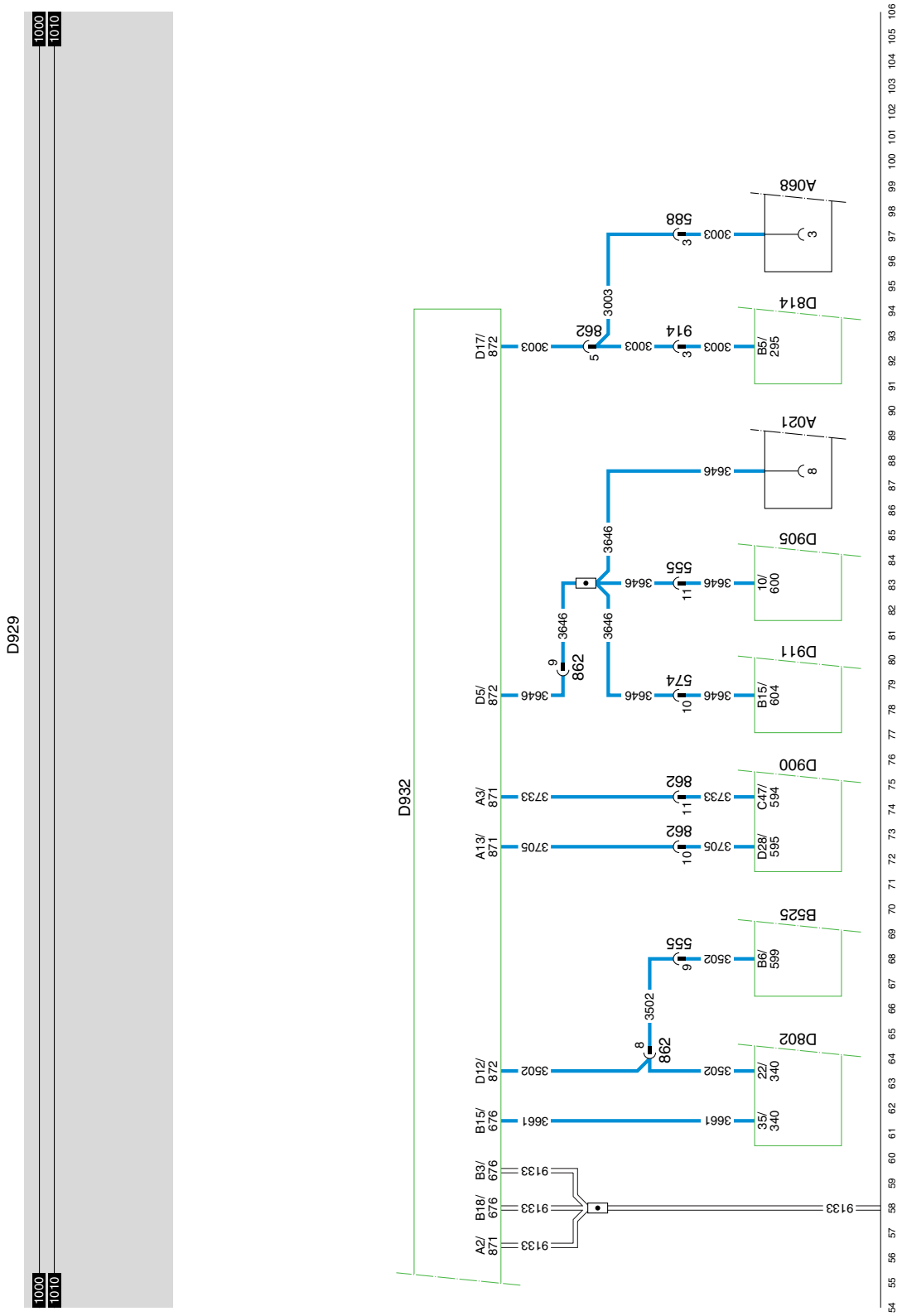

29 1358030/26 EL001341

https://truckmanualshub.com/

https://truckmanualshub.com/

30 AGC

SEE THE SYSTEM MANUAL FOR MORE INFORMATION

VARIANTS

Location

52, 72, 82, 136:
Connector A074:
this is a connector for bodybuilder.

115 Depending on whether alarm system is fitted.

© 200404

https://truckmanualshub.com/

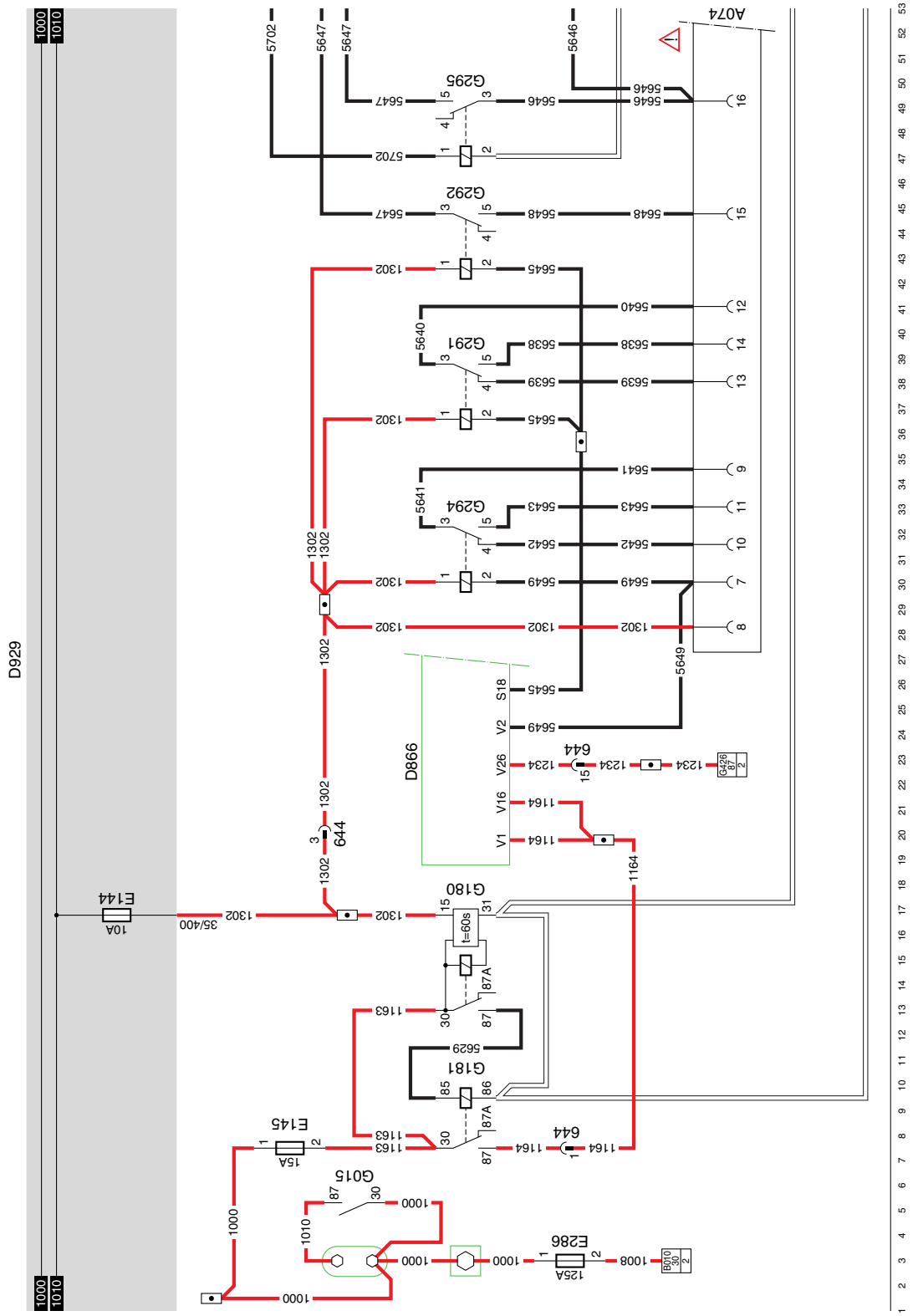

30 **1358030/26** EL001342

10

https://truckmanualshub.com/

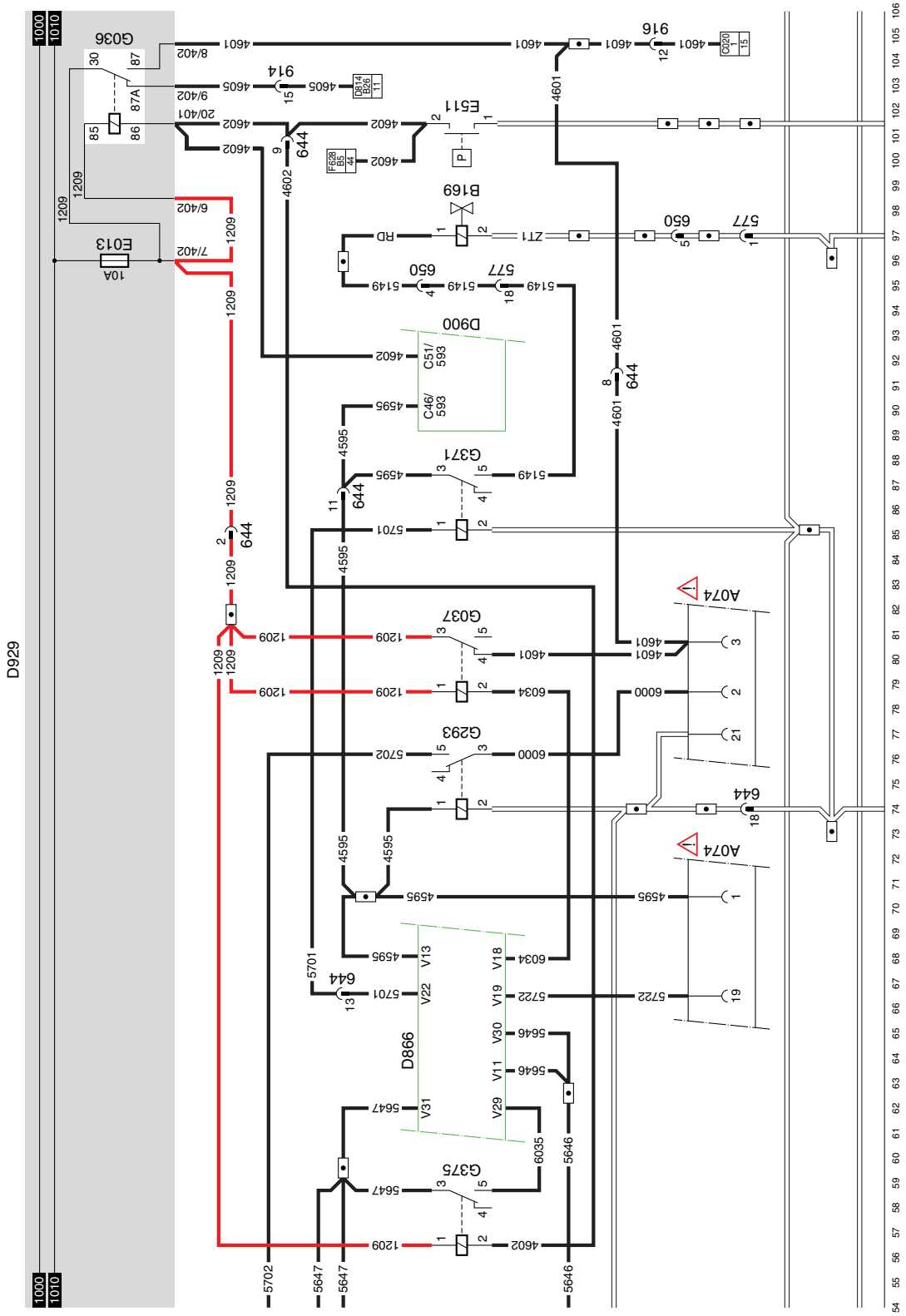

30

1358030/26

EL001343

https://truckmanualshub.com/

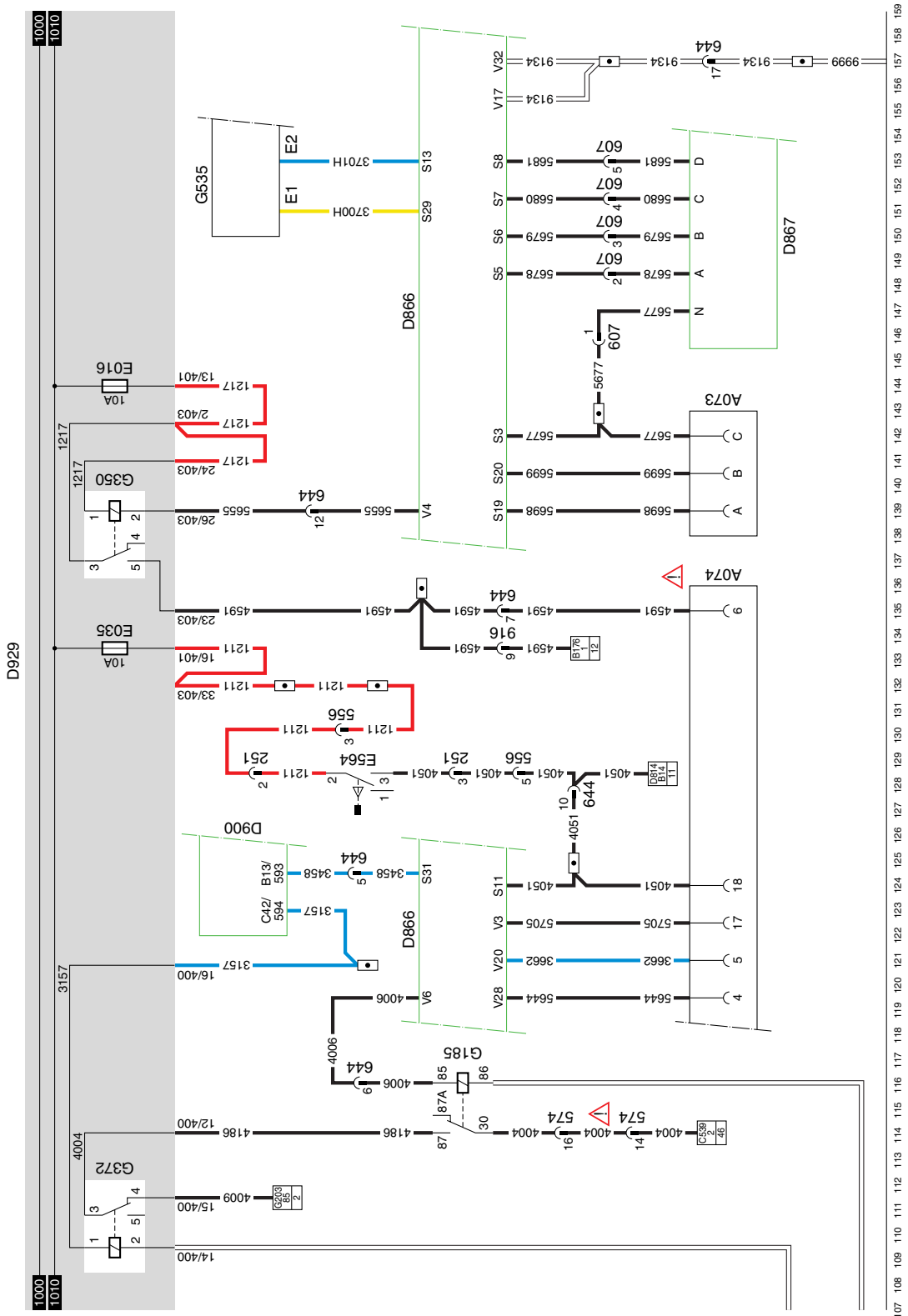

https://truckmanualshub.com/

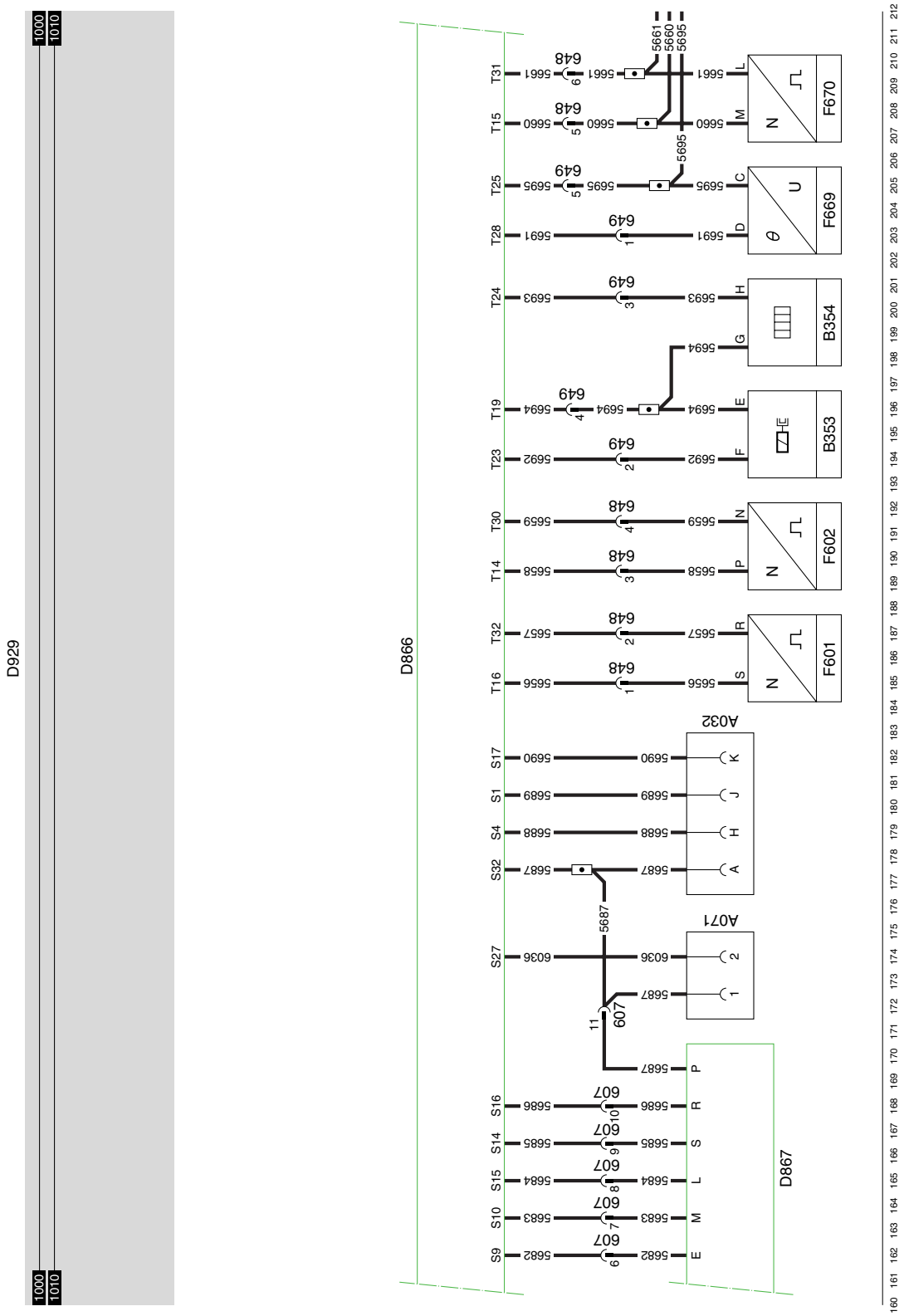

30 1358030/26 EL001345

https://truckmanualshub.com/

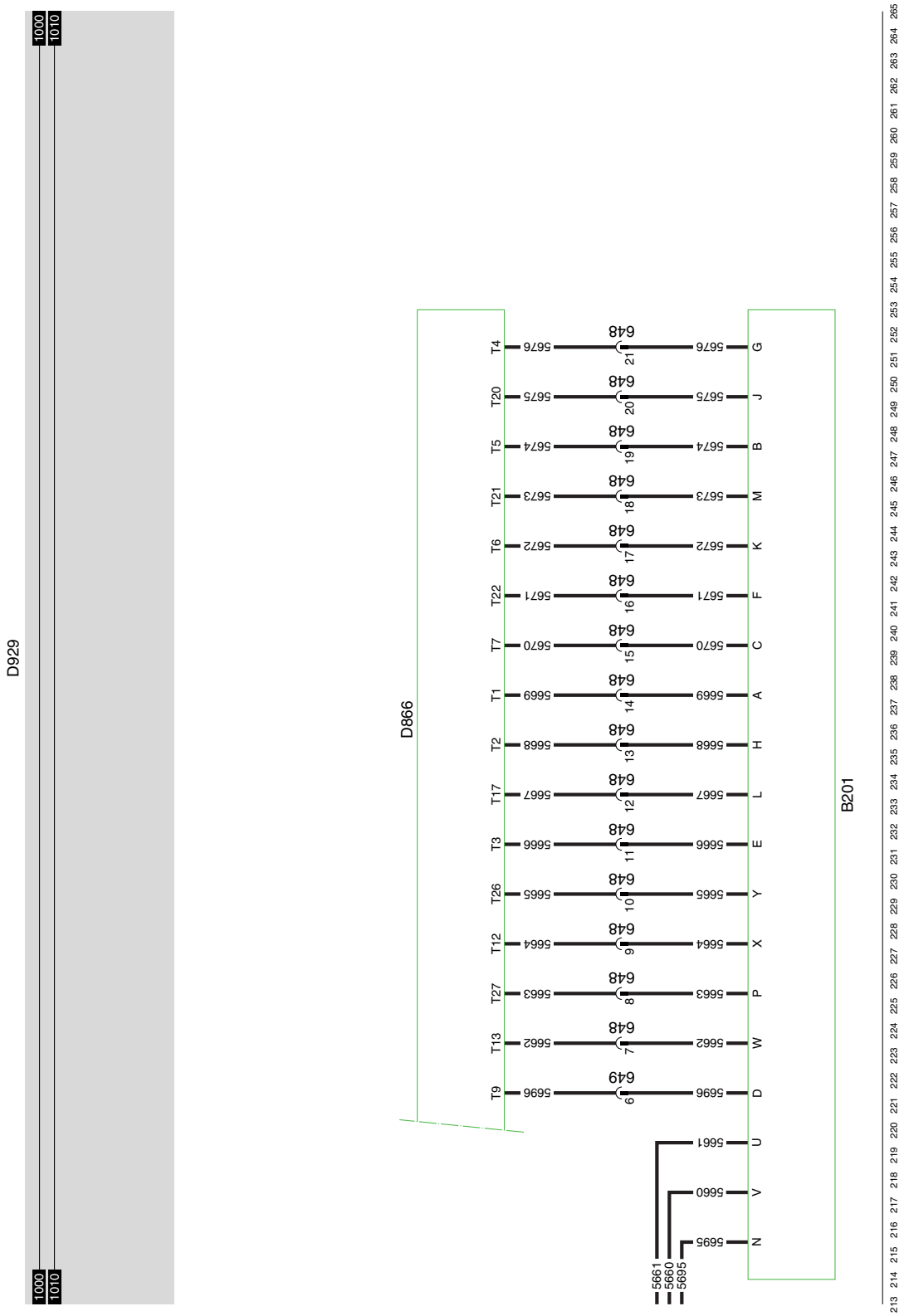

https://truckmanualshub.com/

31 FAG

A distinction can be made between three different situations:
- rest position (normal position during driving).
- bleeding leading rear axle (increased pressure on driving axle).
- ventilating leading rear axle (returned to rest).

Operation of traction control mode is limited to a maximum time: 90 seconds.
A further operation of traction assistance may only be started after a pause of 50 seconds after the end of the previous operation.
By now adjusting a time relay (G095) to a delay time of 60 ± 8 seconds, the pause period is fulfilled.

REST POSITION
When traction assistance switch C883 is operated (connection between contacts 5 and 1), a voltage is applied to connection point 15 of time relay G095 through fuse E062, wire 1221, contacts 5 - 1 of C883, wire 4563.
During normal driving, the traction assistance switch contact (C883) is open. The switch is self-returning.

BLEEDING LEADING REAR AXLE
Pressing and then releasing the traction assistance switch activates traction assistance (bleeding leading rear axle).

The time relay (G095) is now switched on for a period of 60 seconds. Contacts 30 - 87 are closed.
The voltage is now applied from the VIC to connection point 1 of B084 through wire 4564, contacts 30 - 87 of relay G095, wire 4562, contacts 3 - 4 and wire 4552. The VIC will only supply a voltage below the programmed speed. This activates the solenoid valve (B084), thus bleeding the bellows of the leading rear axle. As a result, a greater load is placed on the driving axle (more traction).
When the 60 ± 8 seconds have elapsed, the connection 30 - 87 of time relay G095 is broken. As a result, the voltage on valve B084 is also lost.

There is a safety mechanism to prevent overload of the axle. The proximity switch (E542) monitors the axle load.
When the maximum value is reached, the proximity switch (E542) is activated and this applies a supply voltage to connection point 1 of relay G427 through wire 4555.
Relay G427 is now energised, thereby breaking contacts 3 - 4. The bleed valve (B084) is no longer activated, so that bleeding is no longer performed and ventilation starts again immediately.

VARIANTS

Location
9, 12 Wire 4550: only on vehicle type FAG.

https://truckmanualshub.com/

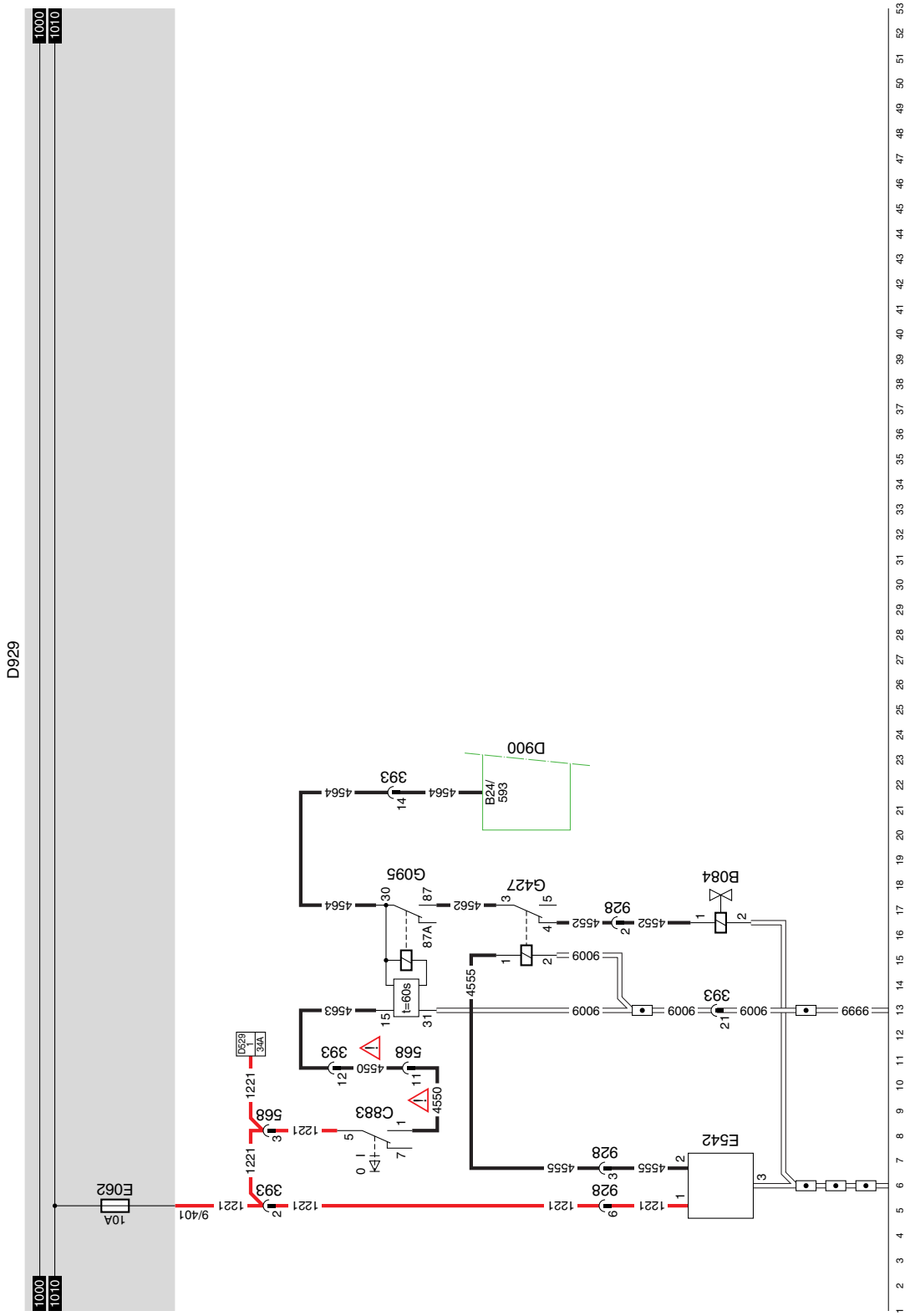

31 1358030/26 EL001347

10

https://truckmanualshub.com/

32 PTO

'REQUEST' PTO 1 (= SWITCH ON)
When the PTO operation switch (C750) is operated, a voltage is applied to connection point D27 of D900 (VIC) through fuse E091, wire 1240, contacts 5 - 1 of switch C750 and wire 4594. The PTO can also be switched on through connection point 11 of A068 (engine speed control application connector). This means that a 'request' to use the PTO has been made.
This 'request' is implemented depending on the conditions programmed in the VIC. A condition might be that the parking brake must be engaged. In this case, a voltage is applied to connection point 1 of parking brake switch F000 through fuse E035, wire 1211. If parking brake switch F000 is closed (connection between contacts 1 and 2), this voltage is also on connection point B22 of D814 (UPEC electronic unit) through wire 3402 and on connection point D26 of D900 (VIC).

OPERATION
When the 'PTO request' is implemented, the following takes place:
A voltage is applied from connection point B23 of D900 through wire 4596 to connection point 1 of B245, thereby switching on the PTO.

The VIC checks whether the PTO is actually switched on. This takes place as follows:
When the PTO has been switched on, F087 is operated mechanically. Contacts 1 - 2 of F087 close. Connection point B14 of the VIC is now connected to earth. The VIC then sends a message to the DIP and the "PTO active" warning is activated. If the PTO does **NOT** switch on, F087 is **NOT** operated and connection point B14 of the VIC is **NOT** connected to earth. After a period of time programmed in the VIC, a 'message' is sent to the DIP and the "PTO fault" warning symbol is activated.

'CANCEL' PTO 1 (= SWITCH OFF)
Breaking contacts 5 - 1 of C750 switches the PTO off. This interrupts the voltage from connection point D27 to D900 (VIC). One of the switch-on conditions for operation of the PTO is now absent. The VIC responds to this by also removing the voltage from connection point B23, causing the voltage at connection point 1 of B245 to be lost. The valve is no longer energised and the PTO is switched off.

'REQUEST' PTO 2 (= SWITCH ON)
When the PTO operation switch (C751) is operated, a voltage is applied to connection point D22 of D900 (VIC) through fuse E091, wire 1240, contacts 5 - 1 of switch C750 and wire 5241. This means that a 'request' to use the PTO has been made.
This 'request' is implemented depending on the conditions programmed in the VIC. A condition might be that the parking brake must be engaged. In this case, a voltage is applied to connection point 1 of parking brake switch F000 through fuse E035, wire 1211. If parking brake switch F000 is closed (connection between contacts 1 and 2), this voltage is also on connection point B22 of D814 (UPEC electronic unit) through wire 3402 and on connection point D26 of D900 (VIC).

https://truckmanualshub.com/

OPERATION
When the 'PTO request' is implemented, the following takes place:
A voltage is applied from connection point C46 of D900 to connection point 1 of E570 (clutch - PTO N10 proximity switch) (if present) and to connection point 3 of relay G259 (PTO operation takeover relay) (if present) through wire 4595. When switch E570 is operated by depressing the clutch pedal (connection between contacts 1 and 2), a voltage is applied to connection point 1 of relay G259 through wire 4595 and to connection point 1 of B245 (PTO control valve). Relay G259 is energised and, as a result, a connection is made between contacts 3 and 5 of relay G259. Relay G259 now remains energised irrespective of E570 (this is a 'memory' function). B246 is also activated and this switches the PTO on.

The VIC checks whether the PTO is actually switched on. This takes place as follows:
When the PTO has been switched on, F088 is operated mechanically. Contacts 1 - 2 of F088 close. Connection point B11 of the VIC is now connected to earth. The VIC then sends a message to the DIP and the "PTO active" warning is activated. If the PTO does **NOT** switch on, F088 is **NOT** operated and connection point B11 of the VIC is **NOT** connected to earth. After a period of time programmed in the VIC, a 'message' is sent to the DIP and the "PTO fault" warning symbol is activated.

'CANCEL' PTO 2 (= SWITCH OFF)
Breaking contacts 5 - 1 of C751 switches the PTO off. This interrupts the voltage from connection point D22 to D900 (VIC). One of the switch-on conditions for operation of the PTO is now absent. The VIC responds to this by removing the voltage on connection point C46 as well. The voltage on relay G259 is interrupted and, as a result, the coil is no longer energised. Contacts 5 - 3 open and, as a result, the voltage on connection point 1 of B246 is lost. The valve is no longer energised and the PTO is switched off.

VARIANTS

Location

9	Connector A068: optional.
35	DVB: in wiring harness above PCB if there is **NO** clutch PTO N10 proximity switch.
21, 24, 25, 31, 41:	Connector 626: for manual gearbox. Connector 699: for AS Tronic. Connector 577 for AGC.

https://truckmanualshub.com/

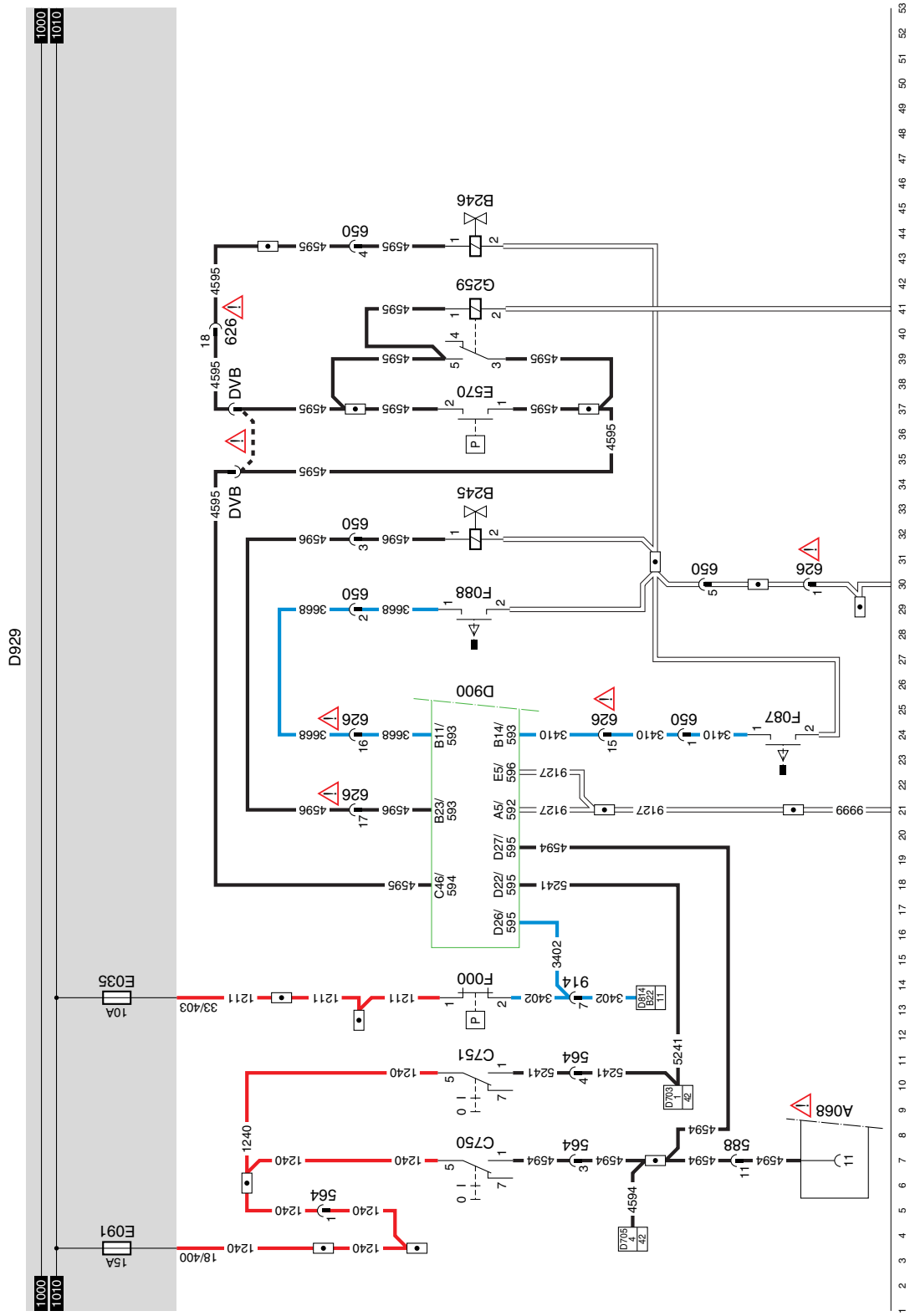

32 1358030/26 EL001348

https://truckmanualshub.com/

33 ROOF SPOTLIGHTS/COOLER BOX/ROTATING BEAMS

ROOF SPOTLIGHTS

Marker/parking lights in roof spotlights
A voltage is applied to connection point 2 of C622 (lighting switch) via fuse E084 and wire 1101. When this switch is operated (connection between contacts 2 and 1), voltage is applied to connection point 85 of relay G000 (tail light/width marker light relay) via wire 2100. This relay is activated. A voltage is now applied through contacts 30 - 87 of relay G000, fuse E000 and wire 2102 to C163, C165, C167 and C169 (width marker light in roof spotlights). The marker and parking lights in the spotlights now come on.

Roof spotlights
A voltage is applied to connection point A8 of C832 (direction indicator/windscreen wiper stalk switch) via fuse E084 and wire 1101. When this switch is operated (connection between contacts A8 and A9), voltage is applied to connection point 85 of relay G002 (main beam relay) via wire 2120. This relay is activated. A voltage is now applied through contacts 30 - 87 of relay G002, fuse E006 and wire 2122 to C002 (left main beam) and connection point 6 of C813 (roof spotlights switch). When this switch is closed (connection between contacts 6 and 2), voltage is also applied to connection point 85 of G299 (roof spotlights relay). This relay is activated. A voltage is now applied through fuse E142, wire 1154, contacts 30 - 87 of G299 and wire 2135 to connection point 1 of C162, C164, C166 and C168 (roof spotlights). The spotlights will now light up.

COOLER BOX
The cooler box is connected to voltage BEFORE contact. Voltage is applied to connection point 1 of B356 (cooler box) from fuse E142 via wire 1154.

ROTATING BEAMS
The rotating beams are connected to voltage BEFORE contact. Voltage is applied to connection point 6 of C716 (rotating beams switch) from fuse E142 via wire 1154. When the switch is closed (connection between contacts 6 and 2), voltage is applied to C144 (left rotating beam) and C145 (right rotating beam) via wire 2017. These rotating beams will now light up. Switch C716 may be replaced by C715.

https://truckmanualshub.com/

33 ROOF SPOTLIGHTS/COOLER BOX/ROTATING BEAMS

ROOF SPOTLIGHTS

Marker/parking lights in roof spotlights
A voltage is applied to connection point 2 of C622 (lighting switch) via fuse E084 and wire 1101. When this switch is operated (connection between contacts 2 and 1), voltage is applied to connection point 85 of relay G000 (tail light/width marker light relay) via wire 2100. This relay is activated. A voltage is now applied through contacts 30 - 87 of relay G000, fuse E000 and wire 2102 to C163, C165, C167 and C169 (width marker light in roof spotlights). The marker and parking lights in the spotlights now come on.

Roof spotlights
A voltage is applied to connection point A8 of C832 (direction indicator/windscreen wiper stalk switch) via fuse E084 and wire 1101. When this switch is operated (connection between contacts A8 and A9), voltage is applied to connection point 85 of relay G002 (main beam relay) via wire 2120. This relay is activated. A voltage is now applied through contacts 30 - 87 of relay G002, fuse E006 and wire 2122 to C002 (left main beam) and connection point 6 of C813 (roof spotlights switch). When this switch is closed (connection between contacts 6 and 2), voltage is also applied to connection point 85 of G299 (roof spotlights relay). This relay is activated. A voltage is now applied through fuse E142, wire 1154, contacts 30 - 87 of G299 and wire 2135 to connection point 1 of C162, C164, C166 and C168 (roof spotlights). The spotlights will now light up.

COOLER BOX
The cooler box is connected to voltage BEFORE contact. Voltage is applied to connection point 1 of B356 (cooler box) from fuse E142 via wire 1154.

ROTATING BEAMS
The rotating beams are connected to voltage BEFORE contact. Voltage is applied to connection point 6 of C716 (rotating beams switch) from fuse E142 via wire 1154. When the switch is closed (connection between contacts 6 and 2), voltage is applied to C144 (left rotating beam) and C145 (right rotating beam) via wire 2017. These rotating beams will now light up. Switch C716 may be replaced by C715.

https://truckmanualshub.com/

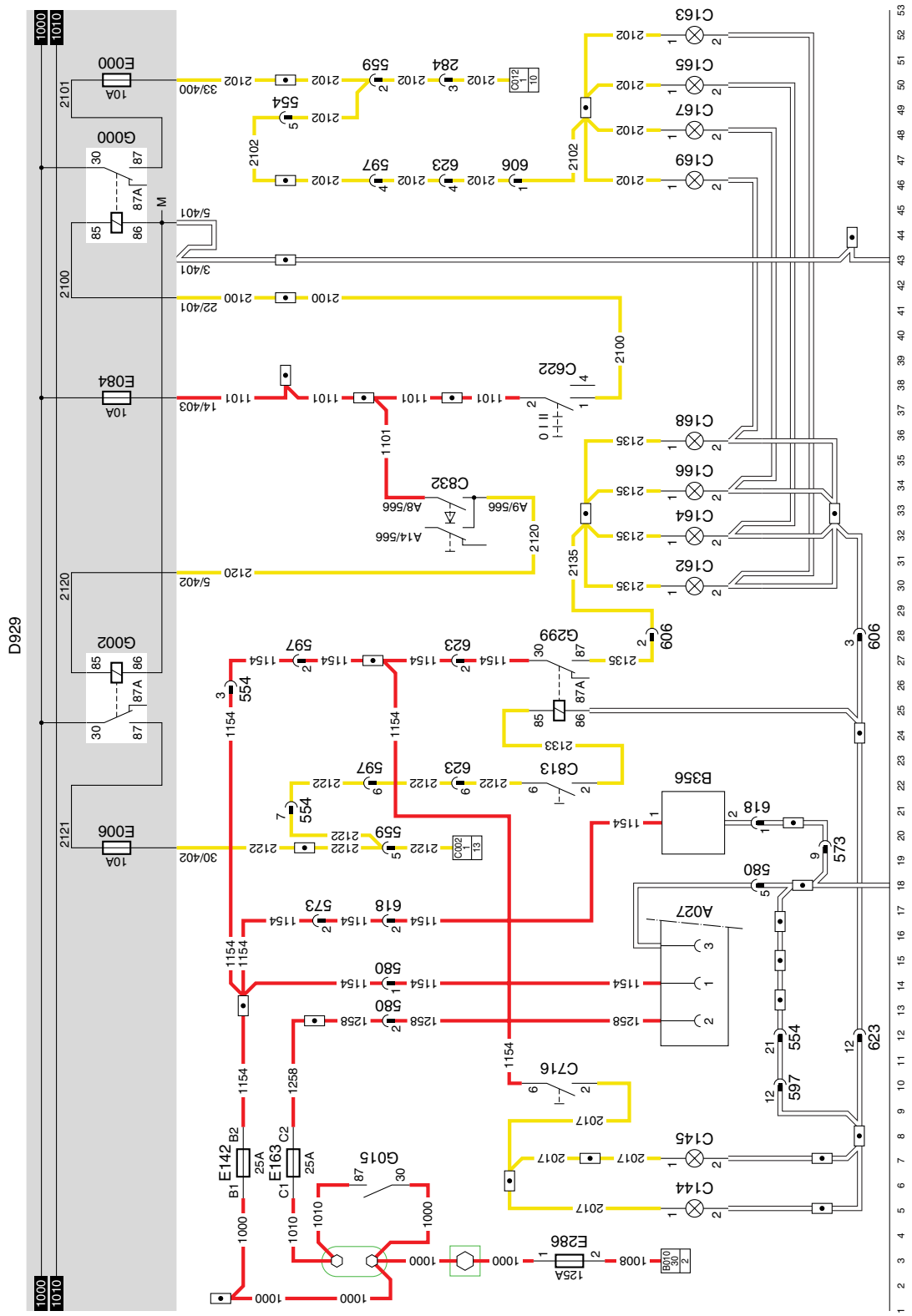

33 1358030/26 EL001349

10

https://truckmanualshub.com/

34A ECAS-3 (4X2)

SEE THE SYSTEM MANUAL FOR MORE INFORMATION

VARIANTS

Location

98 Valve B250:
for vehicle type FA: B250.
for vehicle type FA: B238.

https://truckmanualshub.com/

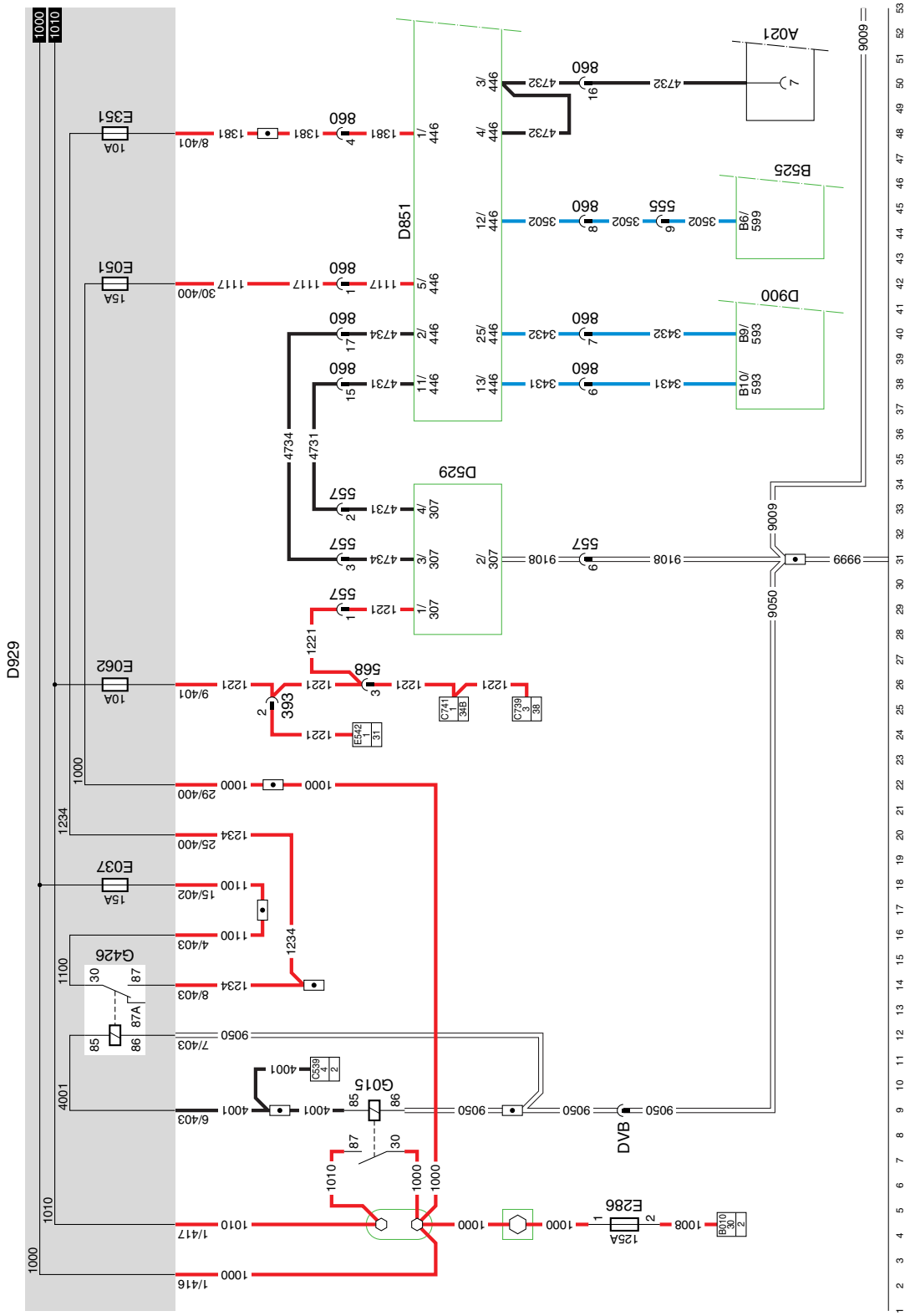

34A 1358030/26

EL001350

10

https://truckmanualshub.com/

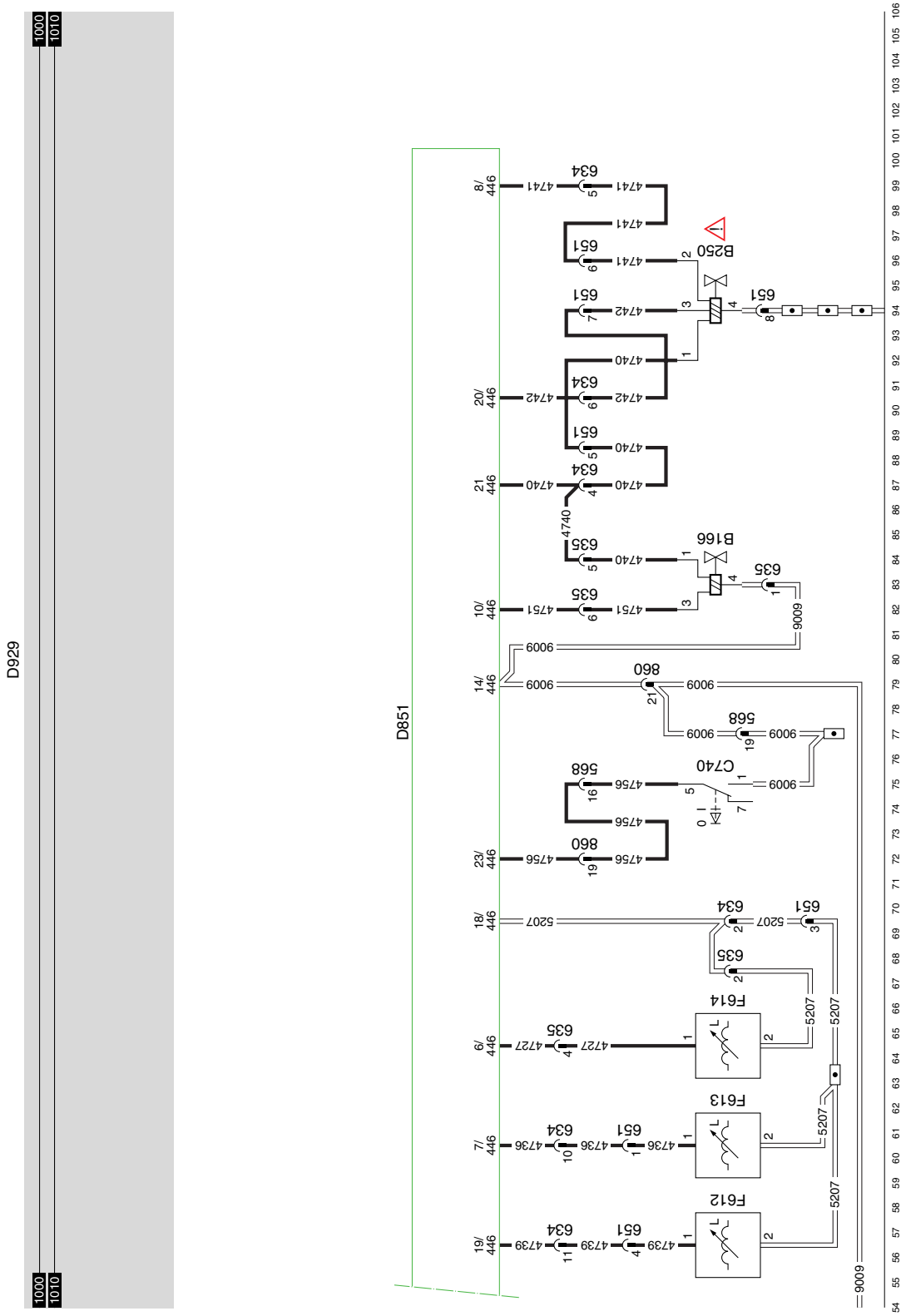

34A 1358030/26

EL001351

https://truckmanualshub.com/

https://truckmanualshub.com/

34B ECAS-2 (6X2)

SEE THE SYSTEM MANUAL FOR MORE INFORMATION

VARIANTS

Location

56 Connector 929:
only if the vehicle has been equipped to transport hazardous substances.

https://truckmanualshub.com/

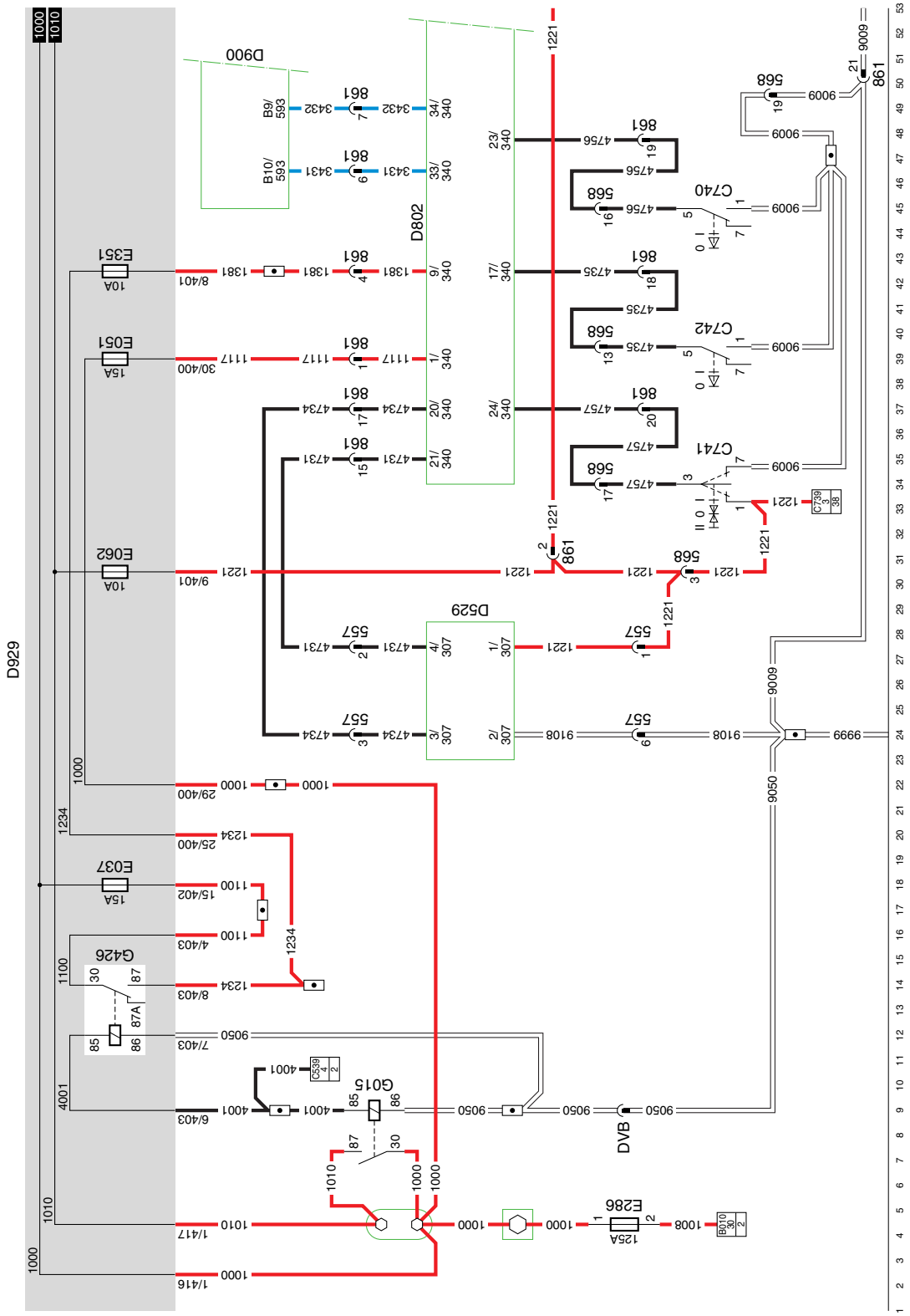

34B 1358030/26

EL001352

https://truckmanualshub.com/

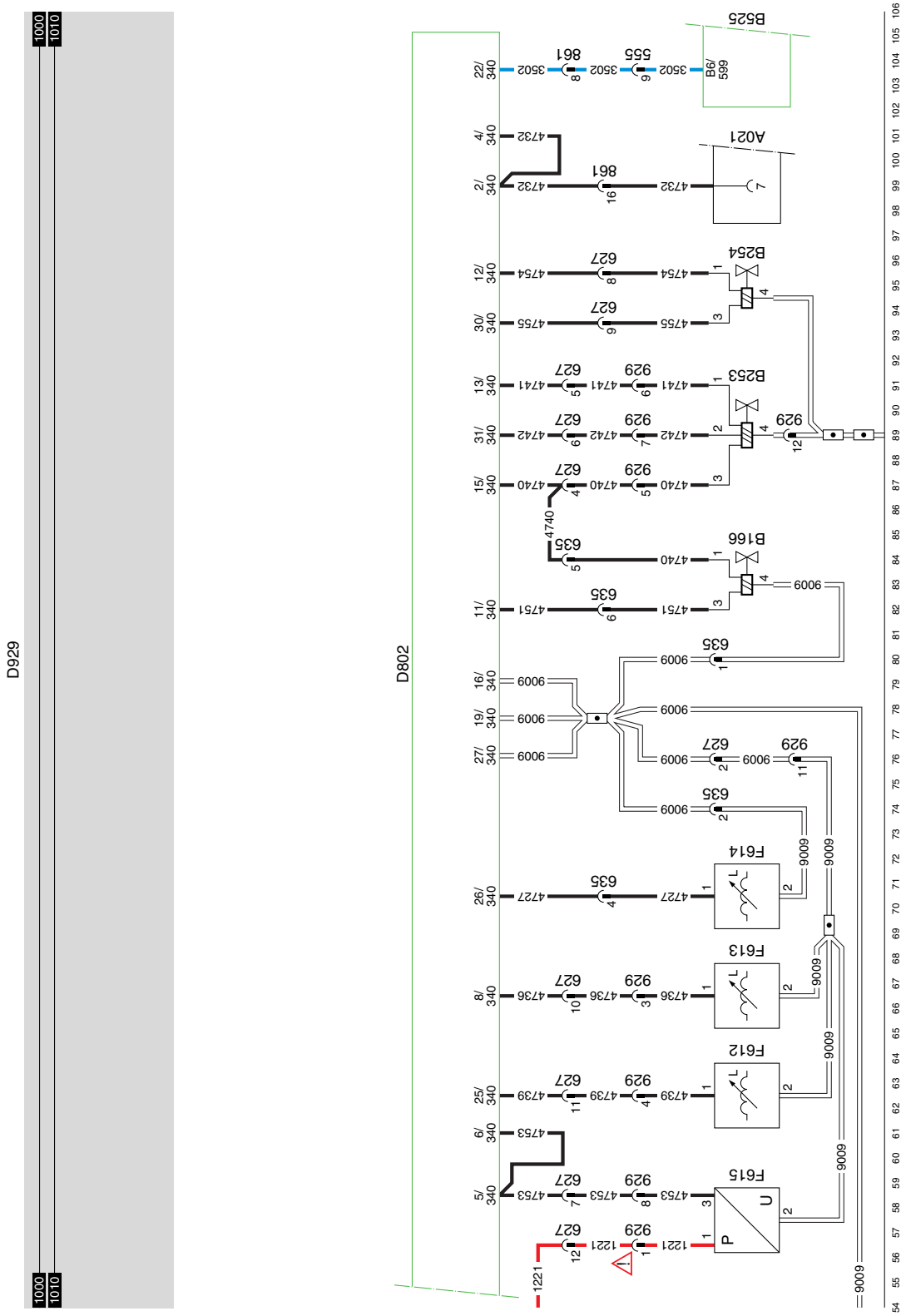

34B 1358030/26 EL001353

https://truckmanualshub.com/

35 HEADLAMP HEIGHT ADJUSTMENT

Parking/marker lights position
A voltage is applied to connection 2 of switch C622 (light switch) through fuse E084, wire 1101.

Dipped beam position
When a connection is made between contacts 2 and 4 through switch C622, a voltage is applied to connection point 85 of relay G000 through fuse E084, wire 1101, switch C622, wire 2110, via D609 (light switch diode). There is also a voltage on both B129 (left headlamp height adjustment motor), connection point 1, and on B130 (right headlamp height adjustment motor), connection point 1 and connection point 5 of C764 (headlamp height adjustment potentiometer). Depending upon the position of C764 (headlamp height adjustment potentiometer), the motor in the headlamp will be activated. The headlamp height adjustment motor remains activated until there is an electrical equilibrium. This equilibrium refers to the voltage difference that exists between wires 2110 and 4953 of C764, B129 and B130. This voltage difference should be the same for all three components.

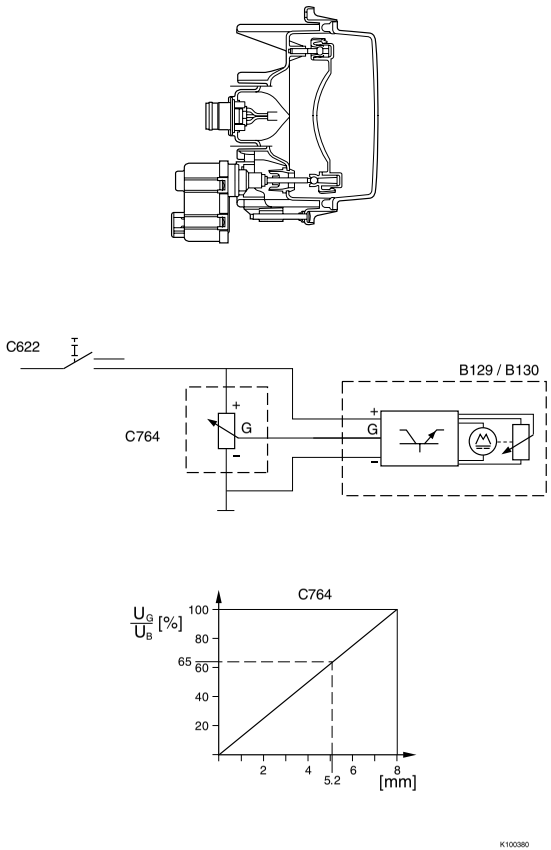

https://truckmanualshub.com/

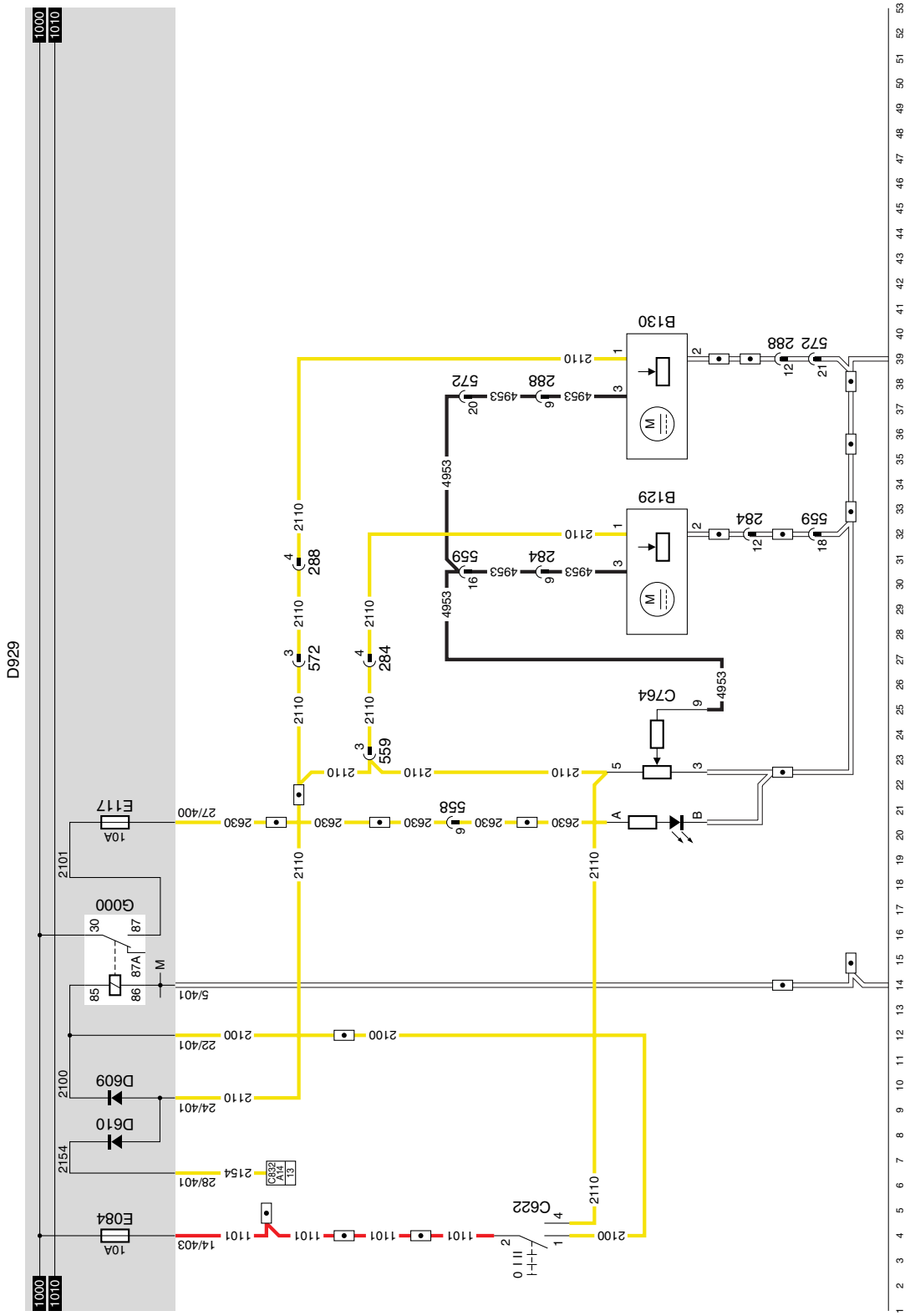

35

1358030/26

EL001354

10

https://truckmanualshub.com/

36 24 V/12 V CONVERTER FOR RADIO/CB SET

The following description of the operation and connection is intended as a general guideline only.

Also refer to the manufacturer's installation instructions supplied with the radio.

If the accessories/ignition/starter switch (C539) is switched to accessories position, pin 1 is connected to pin 6 (wire 1100 is connected to wire 1130). As a result, a voltage is applied to connection point 1 of relay G377. This relay is activated. There is now a power supply of 12 volts to connection point A7 of the 'ISO' connector through wire 1108 and contacts 3 - 5 of relay G377 and wire 1363.

The radio has an aerial connection and 2 loudspeaker outputs which can be used to connect loudspeakers B024 and B025. Two high-tone and two low-tone speakers (B178, B179, B180 and B181) can also be connected to the radio.

CB SET

Wire 1108 is also available in a white connector for a CB set (B026). This connector is in the roof console on the driver's side.

For more information, see also block 6: Connection of accessories.

© 200404

https://truckmanualshub.com/

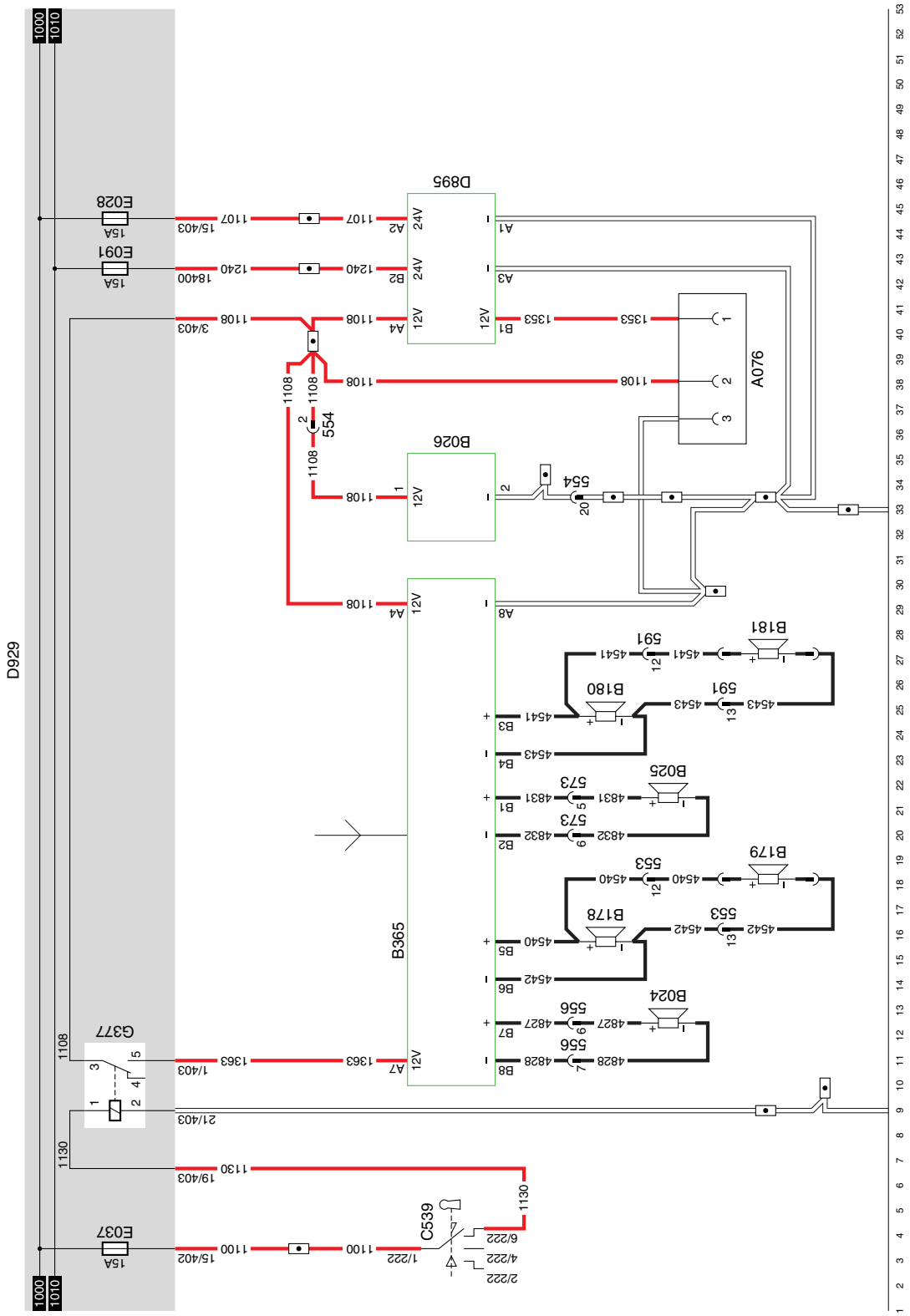

36 1358030/26 EL001355

https://truckmanualshub.com/

37 DROP GLASS OPERATION / CENTRAL DOOR LOCKING / SH CAB ROOF HATCH

ELECTRIC DROP GLASS OPERATION, DRIVER'S SIDE (OPENING)
(Switch in door panel, driver's side)
When a connection is made (contacts 2 and 4) by means of the driver's side drop glass operation switch (C745), relay G030 will be energised through fuse E044, switch C745 (wire 4526). As a result of this, there is a supply voltage on connection point 2 of the motor (B003) through fuse E034. The other connection point (2) is connected to earth via relay G031. The motor starts running anti-clockwise and the driver's side window opens.

ELECTRIC DROP GLASS OPERATION, DRIVER'S SIDE (CLOSING)
(Switch in door panel, driver's side)
When a connection is made (contacts 4 and 1) by means of the driver's side drop glass operation switch (C745), relay G031 will be energised through fuse E044, switch C745 (wire 4527). As a result of this, there is a supply voltage on connection point 2 of the motor (B003) through fuse E034. The other connection point (1) is connected to earth via relay G030. The motor starts running clockwise and the driver's side window will close.

ELECTRIC DROP GLASS OPERATION, CO-DRIVER'S SIDE (OPENING)
(Switch in door panel, driver's side)
When the co-driver's side drop glass operation switch (C743) is operated and a connection is made (contacts 2 and 4), relay G028 will be energised through fuse E044, switch C743 (wire 4522). As a result of this, there is a supply voltage on connection point 1 of the motor (B004) through fuse E033. The other connection point (2) is connected to earth via relay G029.
The motor starts running anti-clockwise and the co-driver's side window will open.

ELECTRIC DROP GLASS OPERATION, CO-DRIVER'S SIDE (CLOSING)
(Switch in door panel, driver's side)
When the co-driver's side drop glass operation switch (C743) is operated and a connection is made (contacts 4 and 1), relay G029 will be energised through fuse E044, switch C743 (wire 4523). As a result of this, there is a supply voltage on connection point 2 of the motor (B004) through fuse E033. The other connection point (1) is connected to earth via relay G028.
The motor starts running clockwise and the co-driver's side window will close.

ELECTRIC DROP GLASS OPERATION, CO-DRIVER'S SIDE
(Switch in door panel, co-driver's side)
Operation of the drop glass on the co-driver's side through switch C744 works in exactly the same way as on the driver's side. When switch C744 is operated (connection between contacts 4 and 2), relay G028 is switched via switch C743 (contacts 5 and 2) and the motor (B004) will open the window. When switch C744 (connection between contacts 4 and 1) is operated, relay G029 is activated through switch C743 (contacts 3 and 1), the motor runs clockwise and the window closes as a result.

The electric drop glass will only operate if the contact is activated.

https://truckmanualshub.com/

DOOR LOCKING, CO-DRIVER'S SIDE (STANDARD)

Purpose:
To lock the co-driver's side door using button/key or switch C744.

The driver can lock/unlock the co-driver's door from the driving position using the switch.

Central door locking motor, co-driver's side (B200):

The motor has two (internal) switches:
- an 'end stroke' switch (switches over at the end of each stroke) (the bottom switch in the diagram).
- a switch that is mechanically connected to the locking button (switches over at the beginning of each upward or downward movement of the locking button) (the top switch in the diagram).

Note:
A mechanical connection (rod linkage) between the cylinder lock and the locking button is maintained.

https://truckmanualshub.com/

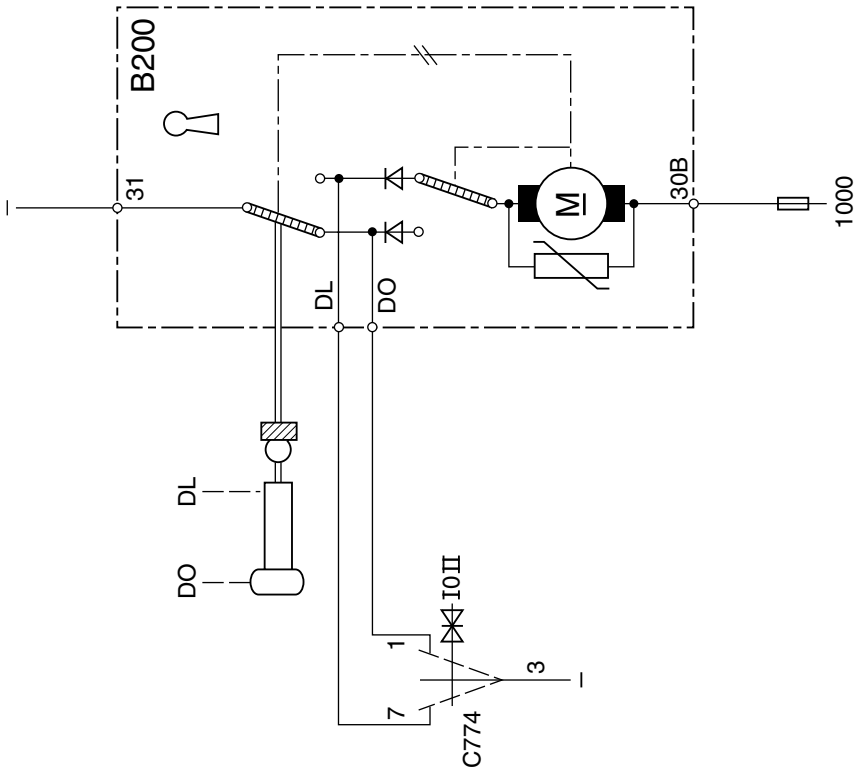

Initial position: door unlocked

- **The door is locked using the button/key.** The top switch is directly switched over via the rod linkage. As a result, a current will flow through the fuse, connection 30B, the motor, the bottom switch and the top switch through connection 31 to earth. Because of the mechanical connection between the motor and the locking button, the button moves downwards. When the lower position is reached, the 'end stroke' switch (the lower switch in the diagram) switches over. The forces are transmitted from the motor to the locking button via a crank/connecting rod linkage.

- **The door is locked using switch C774.** When spring-loaded switch C774 makes a connection between connections 3 and 7, connection point DL of B200 is connected to earth. As a result, a current will flow through the fuse, connection 30B, the motor and the bottom switch to earth. A brief moment is sufficient to start the motor. Since there is a mechanical connection between the motor and the locking button, the top switch will switch over immediately. A current will pass until the 'end stroke' switch interrupts the circuit.

https://truckmanualshub.com/

Initial position: door locked

- **The door is unlocked using the button/key.**

The top switch is directly switched over via the rod linkage. As a result, a current will flow through the fuse, connection 30B, the motor, the bottom switch and the top switch through connection 31 to earth. Because of the mechanical connection between the motor and the locking button, the button moves upwards. When the lower position is reached, the 'end stroke' switch (the lower switch in the diagram) switches over. The forces are transmitted from the motor to the locking button via a crank/connecting rod linkage.

- **The door is unlocked using switch C774.**

When spring-loaded switch C774 makes a connection between connections 3 and 1, connection point DO of B200 is connected to earth. As a result, a current will flow through the fuse, connection 30B, the motor and the bottom switch to earth. A brief moment is sufficient to start the motor. Since there is a mechanical connection between the motor and the locking button, the top switch will switch over immediately. A current will pass until the 'end stroke' switch interrupts the circuit.

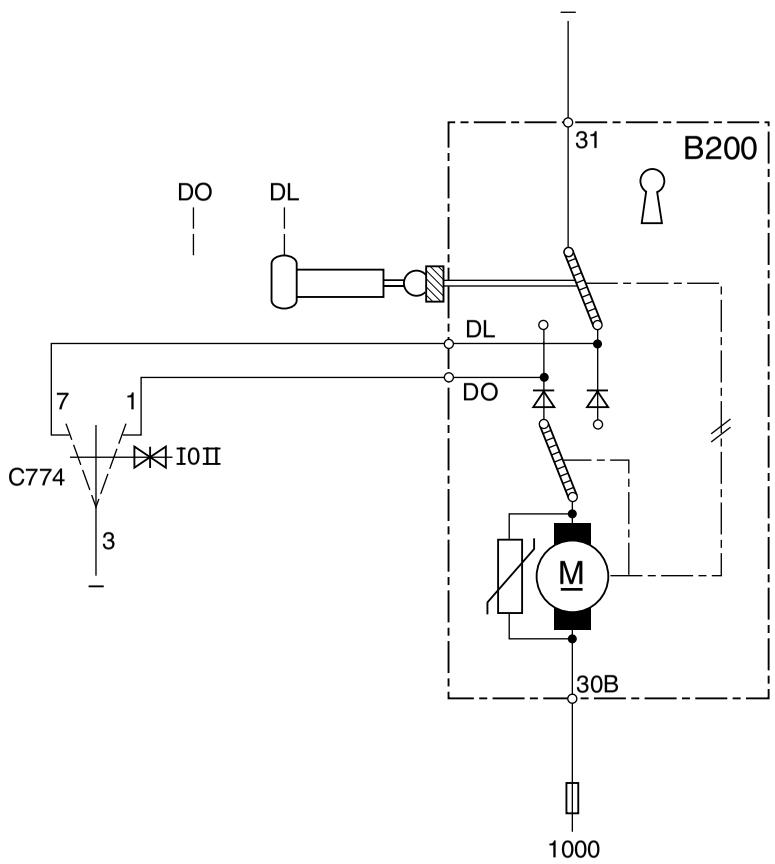

E501715

https://truckmanualshub.com/

CENTRAL DOOR LOCKING (CDS-3)

SEE THE SYSTEM MANUAL FOR MORE INFORMATION

SH CAB ROOF HATCH

OPENING ROOF HATCH

When the roof hatch switch (C736) is operated and a connection is made between contacts 2 and 6 and therefore between contacts 1 and 3, a voltage is applied to pin 1 of the roof hatch motor (B175) through fuse E028, switch C736 and wire 4761. The roof hatch will open.

CLOSING ROOF HATCH

When the roof hatch switch (C736) is operated and a connection is made between contacts 8 and 6 and therefore between contacts 7 and 3, a voltage is applied to pin 2 of the roof hatch motor (B175) through fuse E028, switch C736 and wire 4760. The roof hatch will now close.

VARIANTS

Location

36 If the standard version is installed, the motor for door locking on the driver's side (B199) and the electronic unit for central door locking (D905) are not fitted.

The connections on B200 are as follows:

Connection point	Wire number:	Description
1	1105	Power supply
2	5061	Open door
3	5062	Close door
4	M	Earth

Wire 5062 is directly connected to connection point 7 of switch C774.

© 200404

https://truckmanualshub.com/

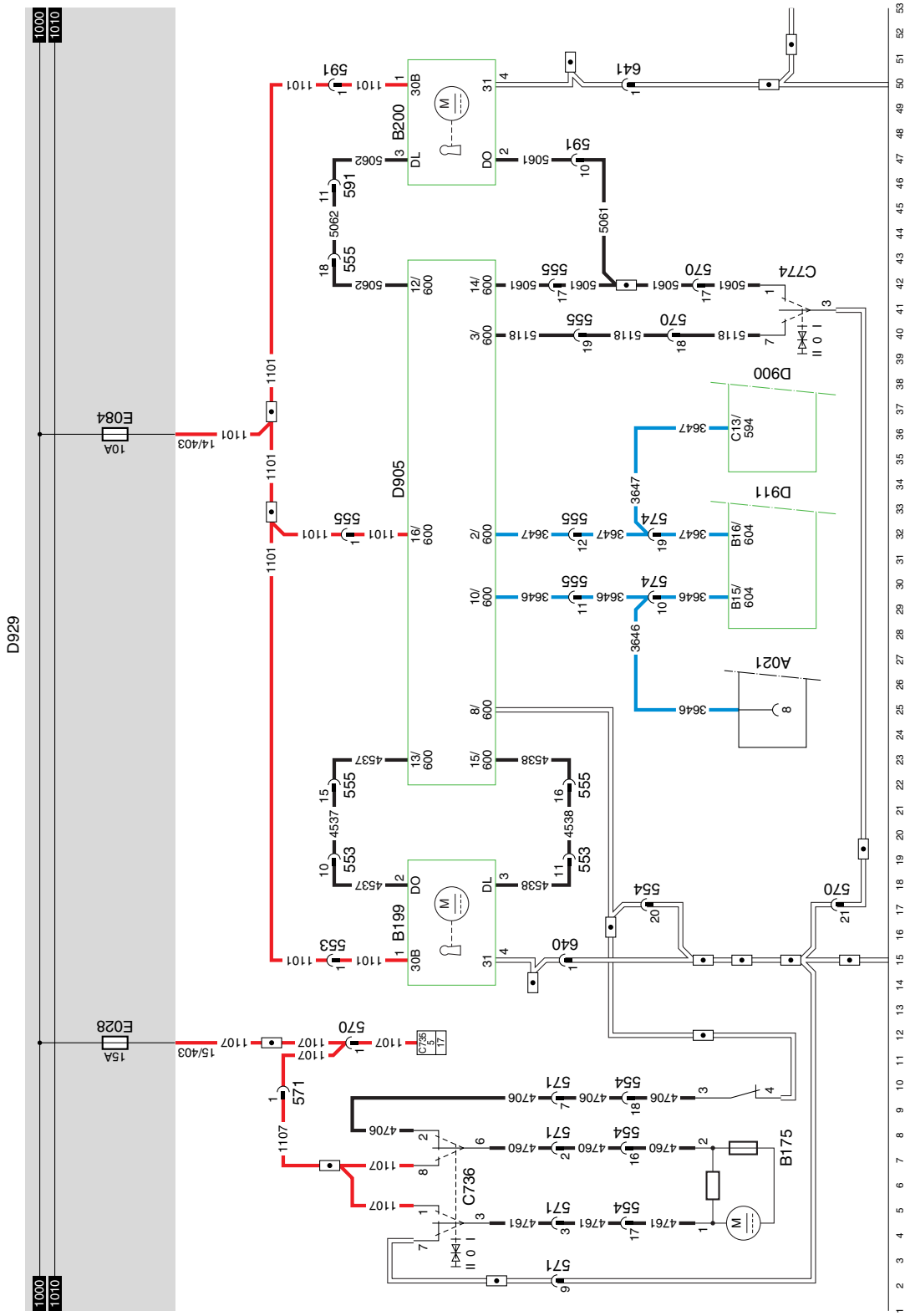

37 1358030/26 EL001356

10

https://truckmanualshub.com/

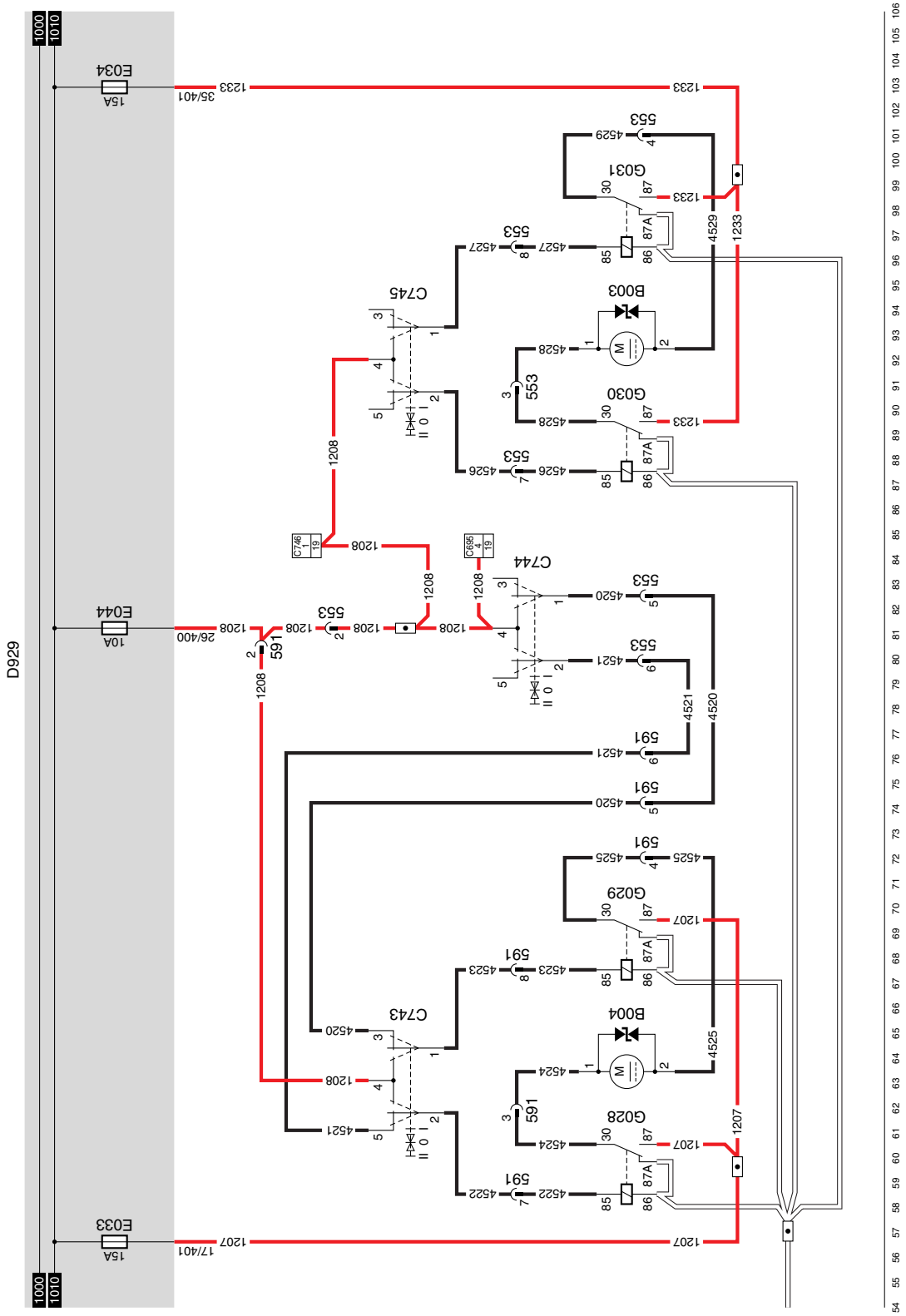

37 1358030/26 EL001357

https://truckmanualshub.com/

https://truckmanualshub.com/

38 MECHANICAL LIFTING GEAR

Manual lifting
When switch C739 (mechanical lifting gear switch) is operated (connection between contacts 3 and 7), a voltage is applied to connection point 1 of B071 through fuse E062, wire 1221, contacts 3 - 7 of switch C739, wire 4550, contacts 3 - 4 of relay G381 and wire 5180. This valve is energised. At the same time the voltage is applied to connection point 85 of relay G052 through D622, wire 4552, contacts 30 - 87a of relay G066, wire 4557. This relay is activated and closes contacts 1 - 2. A voltage is now applied to connection point 1 of B073 through contacts 1 - 2 of relay G052, wire 4554. The oil pump motor starts to run.
If the oil pressure becomes too high (>160 bar), E524 will close. Voltage is now applied to connection point 85 of relay G066 through contacts 1 - 2 of E524. This relay is energised and breaks the connection 30 - 87a. Voltage is now applied to connection point 85 of relay G066 from wire 4552 through contacts 30 - 87 of relay G066 and wire 4558. This relay continues to be activated. At the same time the voltage through relay G052 is lost. Contacts 1 - 2 open and the voltage on connection point 1 of B073 is lost. The pump motor is no longer driven and the oil pressure drops.

Manual lowering
When switch C739 (mechanical lifting gear switch) is operated (connection between contacts 3 and 1), a voltage is applied to connection point S1 of D503 through fuse E062, wire 1221, contacts 3 - 1 of switch C739, wire 4757, through-connection G745 and wire 4551. A voltage is applied to connection point 1 of B072 through connection point 87 of D503, wire 4553. This valve is energised. At the same time the voltage is applied to connection point 85 of relay G052 through D623, wire 4552, contacts 30 - 87a of relay G066, wire 4557. This relay is activated and closes contacts 1 - 2. A voltage is now applied to connection point 1 of B073 through contacts 1 - 2 of relay G052, wire 4554. The oil pump motor starts to run.
If the oil pressure becomes too high (>160 bar), E524 will close. Voltage is now applied to connection point 85 of relay G066 through contacts 1 - 2 of E524. This relay is energised and breaks the connection 30 - 87a. Voltage is now applied to connection point 85 of relay G066 from wire 4552 through contacts 30 - 87 of relay G066 and wire 4558. This relay continues to be activated. At the same time the voltage through relay G052 is lost. Contacts 1 - 2 open and the voltage on connection point 1 of B073 is lost. The pump motor is no longer driven and the oil pressure drops.

Automatic axle load protection
If the pressure on the driven axle is greater than the legal maximum, sensor E584 is activated. This puts sensor E507 in 'stand-by' mode. If the permitted axle load increases further (> 10 tons), sensor E507 automatically lowers the trailing axle.
If the axle has been lifted, F097 (proximity switch for mechanical trailing axle lifting gear) ensures that relay G380 is energised through wire 3661. A voltage is now applied through fuse E062, wire 1221, contacts 3 - 5 of relay G380 to connection point 1 of E507. This relay is activated.
The voltage is immediately transmitted to S2 on D503. The signal sent by the proximity switch for axle load protection (E507) to S2 should last for at least 10 seconds before the electronic unit for lifting gear (D503) will activate the valve (B072) and the lifting gear pump motor (B073), so that the trailing axle is lowered. This is to prevent the legal maximum axle load from being exceeded.
If the dashboard switch is operated within 2.5 minutes, the electronic unit will be reset and another 2.5 minute period will start.

https://truckmanualshub.com/

As a result, the mechanical lifting gear motor relay (G052) will also be activated, thus activating the mechanical lifting gear pump (B073). This is done through D623, relay G066 (connection between points 30 and 87a) to connection point 85 of relay G052.
When a pressure of 160 bar is reached, the limit switch (E524) switches the lifting-gear pump motor (B073) off through relay G066 and relay G052.
The trailing axle cannot be lifted for a period of 2.5 minutes as the valve (B072) remains energised. This valve should be in the **non**-activated position for lifting.

VARIANTS

Location

40 G745: In connector 882, pin 20 there is a wire, 4757. In the other side there is wire 4551. G745 is formed by the pin connection.

https://truckmanualshub.com/

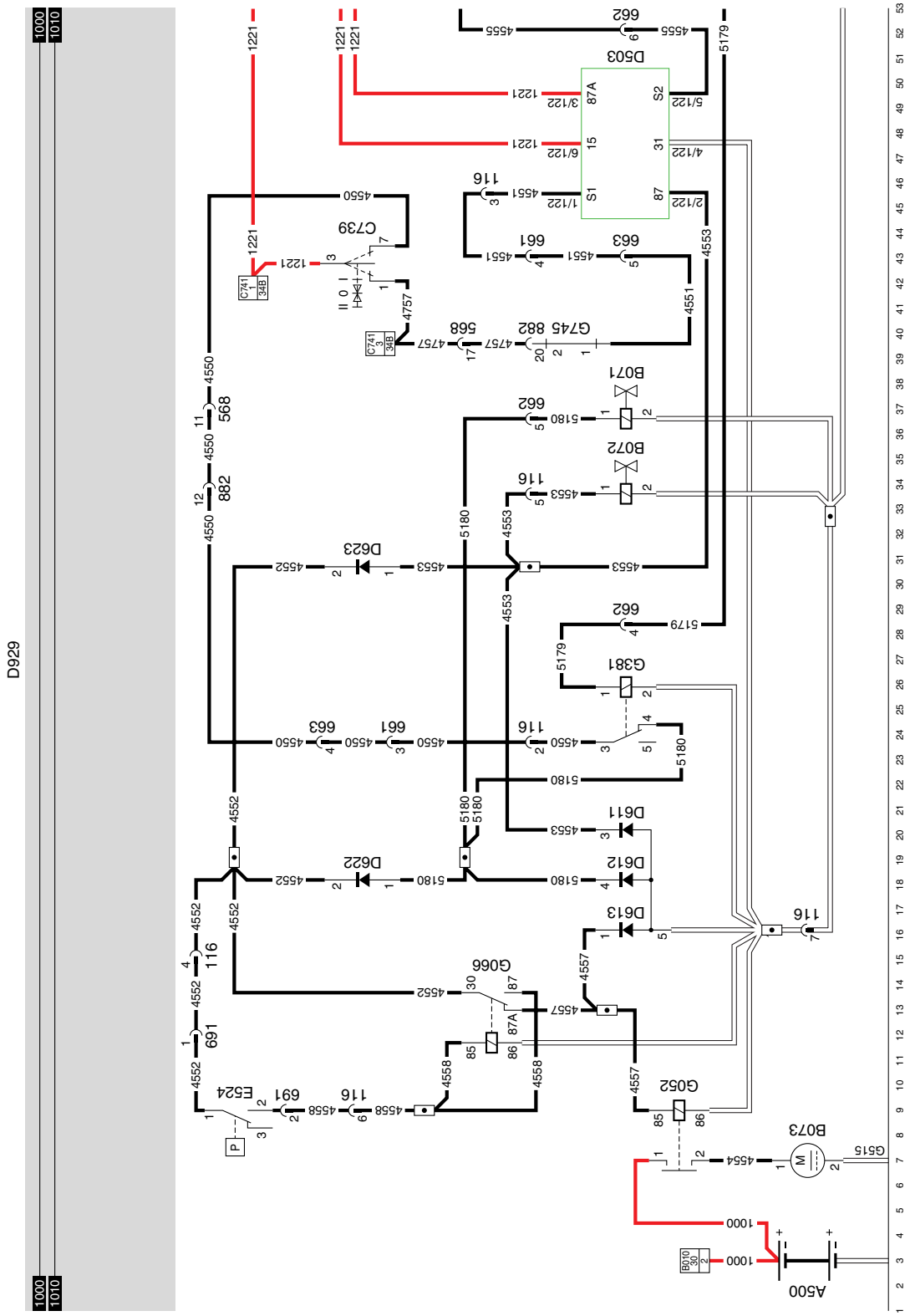

38

1358030/26

EL001358

https://truckmanualshub.com/

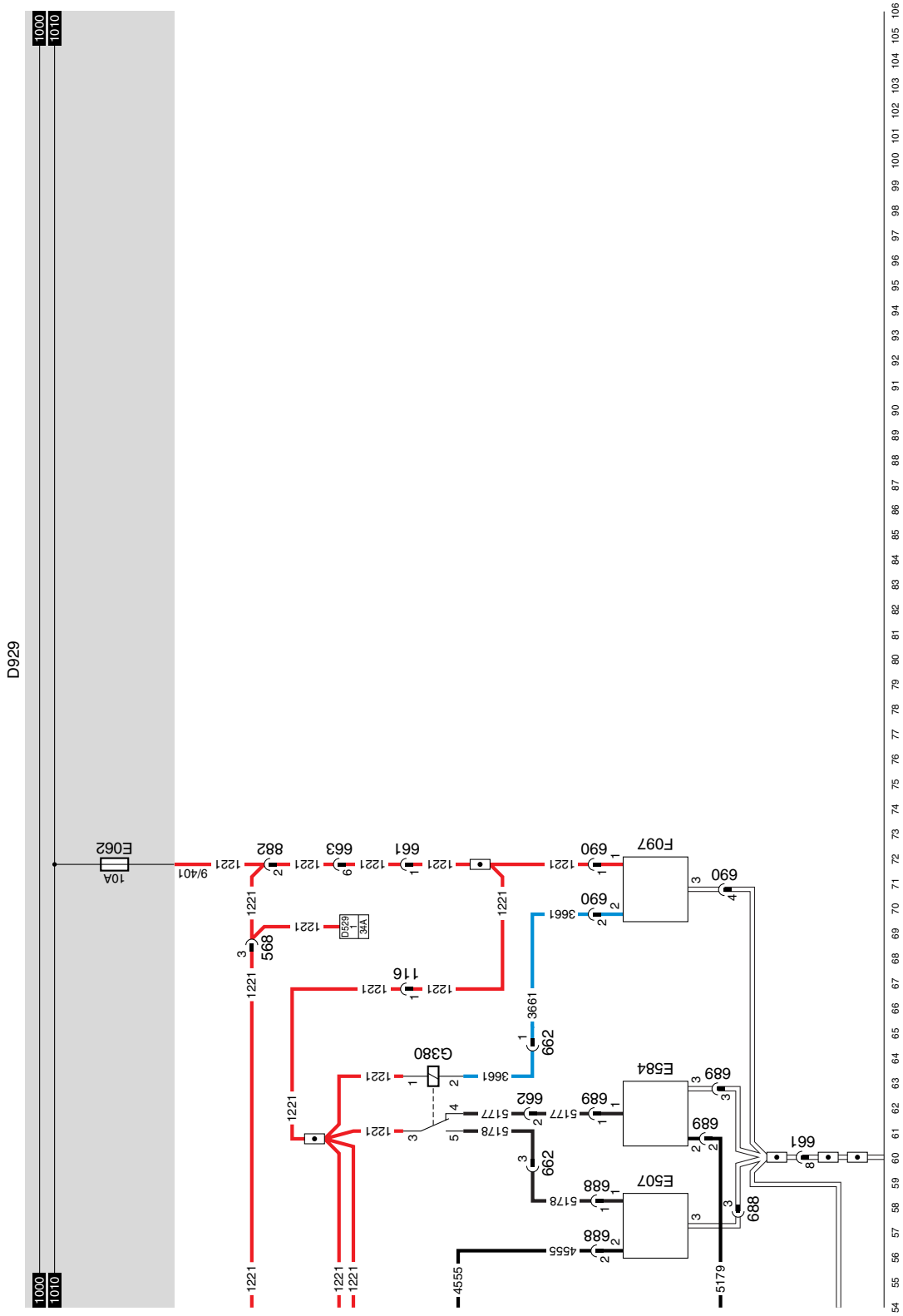

https://truckmanualshub.com/

39 FUEL PRE-HEATING

HEATING ELEMENT

A voltage is applied to connection point 5 of C872 (FPH-E fuel heating relay switch) through wire 1010, fuse E170, wire 1285. When this switch is switched on (connection between contacts 5 and 1), voltage is applied to connection point 85 of relay G201 (FPH-E fuel heating relay) via wire 5048. This relay is energised and contacts 30 - 87 close.
A voltage is now applied to connection point 1 of B182 (water separator fuel heating element) through wire 1000, fuse E164, wire 1190, contacts 30 - 87 of relay G201 and wire 5051. This element now warms up and will keep the fuel fluid.

© 200404

https://truckmanualshub.com/

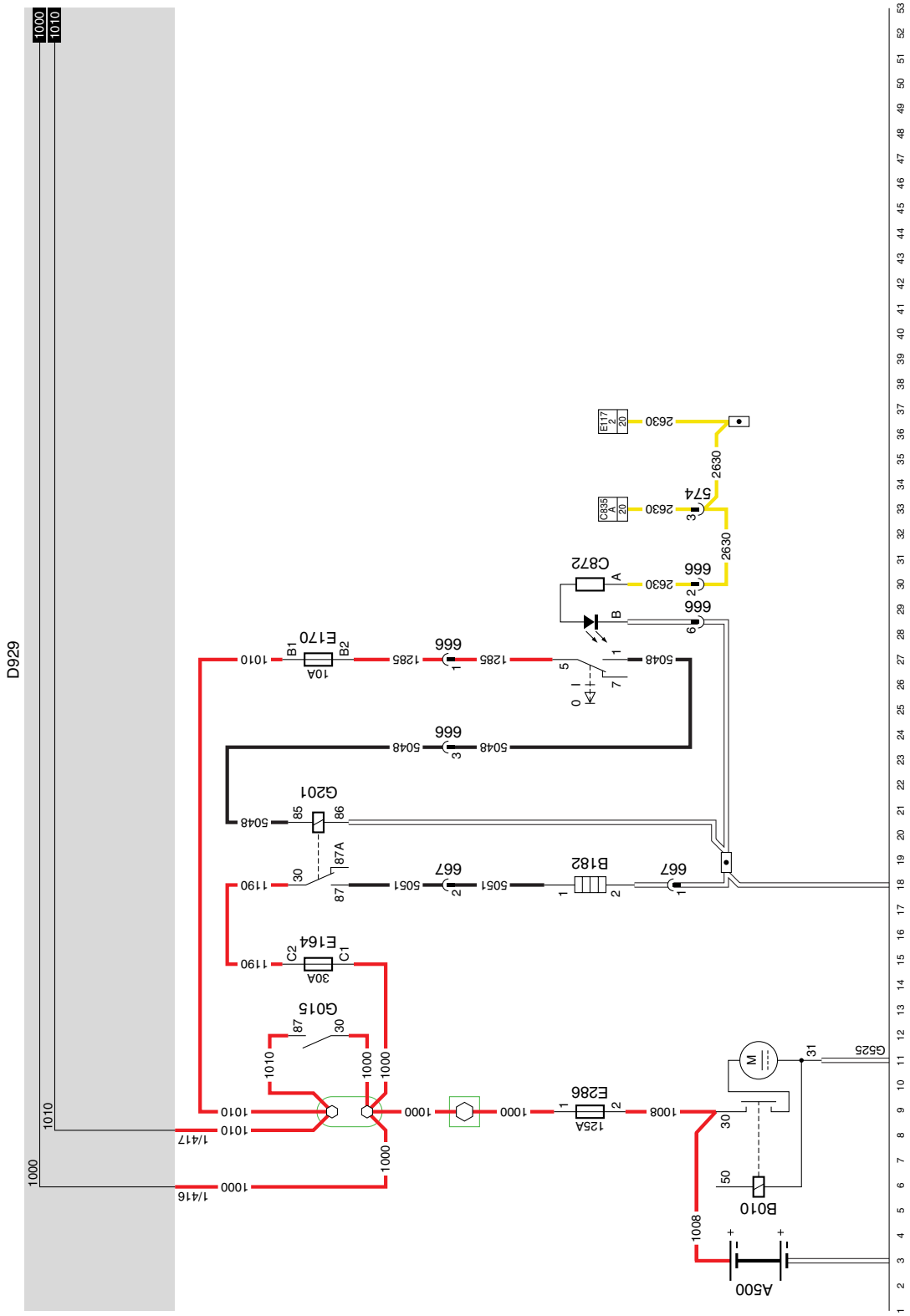

39 1358030/26 EL001360

10

https://truckmanualshub.com/

40 WINDSCREEN WIPE/WASH INSTALLATION

Speed I (low speed)
When windscreen wiper switch (C832) is set to position I (connection between contacts A13 and A2), there is a voltage on connection point D9 of D900 (VIC) through fuse E035, wire 1211, contacts A13 - A2 of switch C832 and wire 4501. The VIC switches connection point C50 to earth. Voltage is now applied to connection point 1 of relay G237 through fuse E025, wire 1205. Because the VIC has connected wire 4505 to earth through connection point C50, relay G237 is energised.
A voltage is now applied to connection point 53 of B000 through fuse E025, wire 1205, contacts 5 - 3 of G237, wire 4506, contacts 3 - 4 of relay G236, wire 4507.

Speed II (high speed)
When windscreen wiper switch C832 is set to position II (connection between contacts A3 and A10), relays G236 and G237 are switched to earth through fuse E025, wire 1205, relays G236 and G237, wire 4505, diode D782, wire 4504 and switch C832 (contacts 3 - 10).
Both relays are now energised. A voltage is now applied to connection point 53b of B000 through fuse E025, wire 1205, contacts 5 - 3 of relay G237, wire 4506, contacts 3 - 5 of relay G236 and wire 4508.
The VIC is bypassed at speed II (high speed).

Intermittent wipe
When windscreen wiper switch C832 is set to intermittent wipe (connection between contacts A13 and A!), there is a voltage on connection point D37 of the VIC through fuse E035, wire 1211, contacts 13 - 1 of C832 and wire 4502. The VIC switches connection point C50 to earth. Voltage is now applied to connection point 1 of relay G237 through E025, wire 1205. The earth is formed through wire 4505 and connection point C50 of the VIC. As a result, relay G237 is energised. A voltage is now applied to connection point 53 of B000 through fuse E025, wire 1205, contacts 5 - 3 of relay G237, wire 4506, contacts 3 - 4 of relay G236, wire 4507.

A voltage is applied to connection point D32 of the VIC through fuse E025, wire 1205, the cut-off switch in the windscreen wiper motor (B000), wire 4509. The earth with connection point C50 is broken and, as a result, relay G237 is no longer energised.

If connection point D32 is earthed again via the cut-off switch, connection point C50 will be switched to earth again after the interval period, so that relay G237 is re-activated. This starts the cycle again.

Wash/wipe
When a voltage is applied briefly to connection point D33 of the VIC through fuse E035, wire 1211, contacts A4 - A11 of C832, wire 3648, and then is lost again (windscreen wiper switch C832 no longer operated), connection point 50 of the VIC is switched to earth for a specific period of time. As a result, the relay (G237) is energised and the windscreen wipers perform 1 wiper stroke.

When a voltage is applied to windscreen wiper switch C832 through fuse E035, wire 1211, contacts A4 - A11 of C832 and wire 3648 for approximately 2 seconds, a voltage is applied to connection point A1 of the VIC, as a result of which the windscreen wiper pump (B001) is activated. After approximately 1 second, C50 is connected to earth for a specific period of time. As a result, the relay (G237) is energised and the windscreen wiper motor is operated.

SEE THE SYSTEM MANUAL FOR MORE INFORMATION

https://truckmanualshub.com/

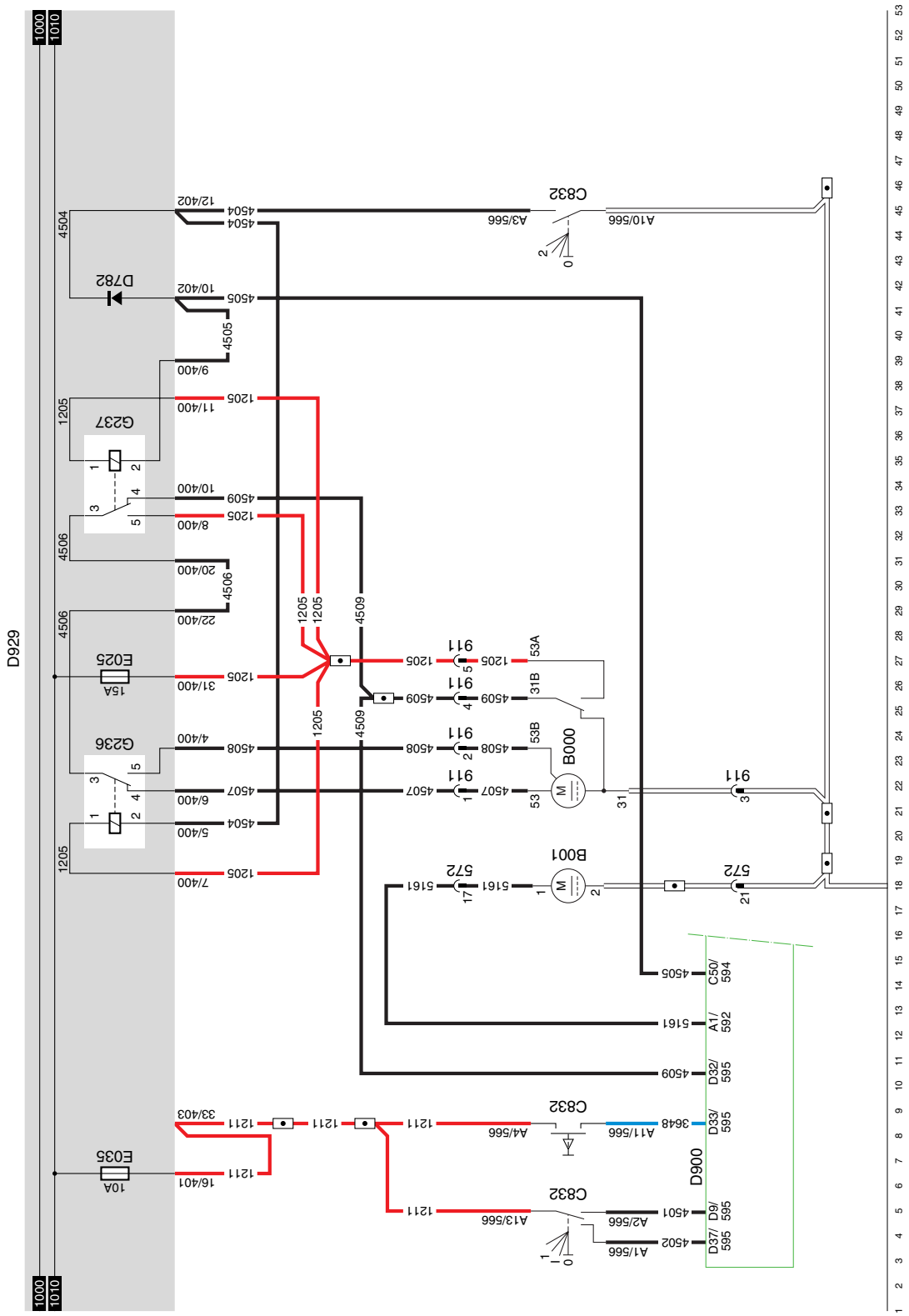

40 1358030/26

10

https://truckmanualshub.com/

10

41 AIRTRONIC (ACH-EA) CAB HEATER WITH/WITHOUT TIMER

SEE THE SYSTEM MANUAL FOR MORE INFORMATION

VARIANTS

Location

7, 9	Only if the vehicle has been equipped to transport hazardous substances in accordance with RTMDR requirements.
22	Connector 483, pin 5, wire 4935: on the one side there is wire 4935, on the other side an earth connection.
33	Only if the vehicle has a thermostat unit, then also switch C778. Does **not** apply if the vehicle has NOT been equipped to transport hazardous substances.
37	Only if the vehicle has been equipped to transport hazardous substances in accordance with PETREG requirements.
43	Only if the vehicle has a timer.
50	C844: Only if the vehicle has been equipped to transport hazardous substances in accordance with RTMDR requirements.

© 200404

https://truckmanualshub.com/

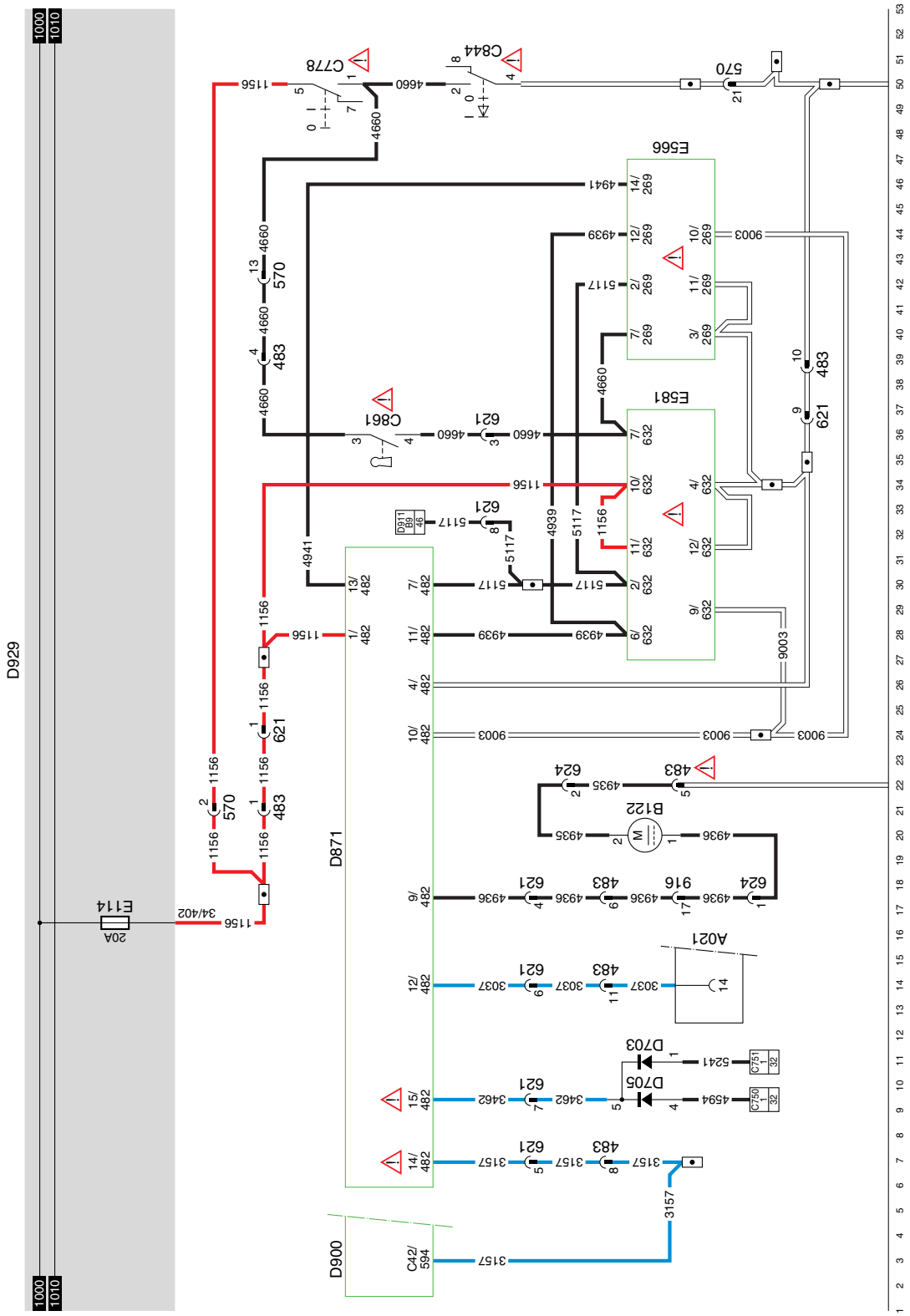

41

1358030/26

EL001362

10

https://truckmanualshub.com/

10

42 HYDRONIC 10 (ACH-EW) CAB HEATER WITH TIMER

SEE THE SYSTEM MANUAL FOR MORE INFORMATION

VARIANTS

Location

15	DVB: in wiring harness next to PCB.
68, 71	Only if the vehicle has an alarm system.

© 200404

https://truckmanualshub.com/

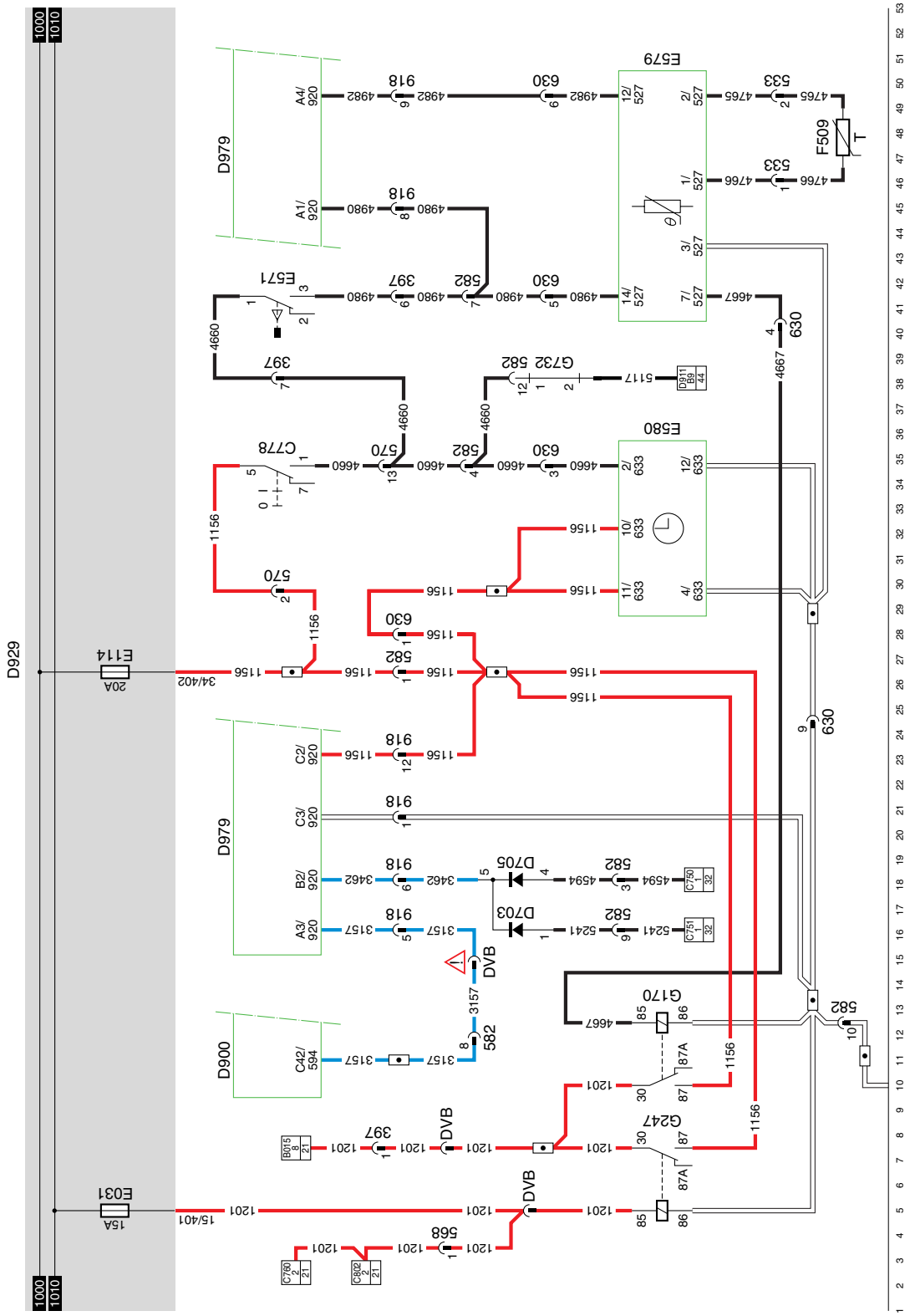

42 1358030/26

EL001363

10

https://truckmanualshub.com/

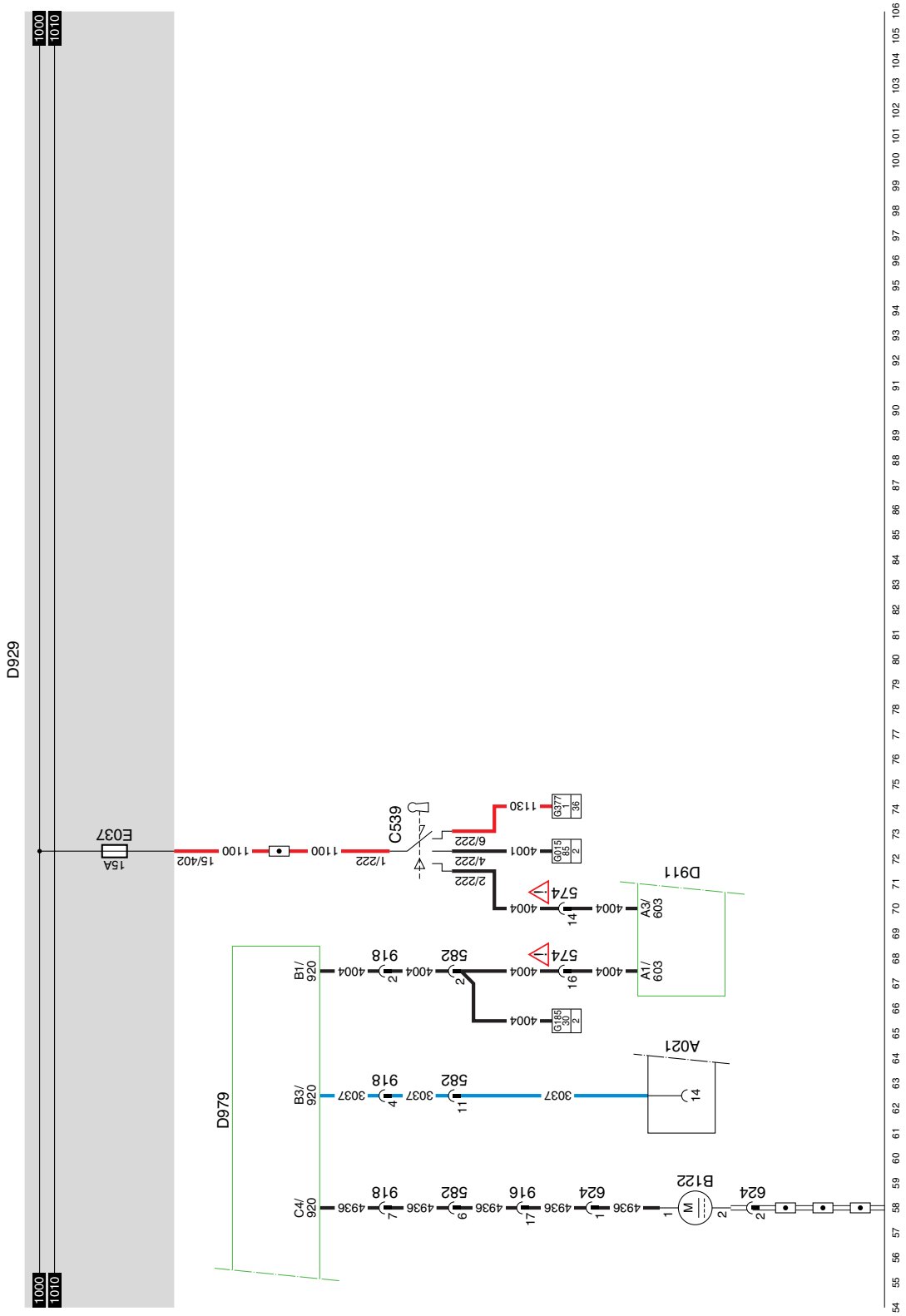

42 1358030/26 EL001364

https://truckmanualshub.com/

https://truckmanualshub.com/

43 UPEC/CUMMINS/AGC/SUPERSTRUCTURE FUNCTIONS APPLICATION CONNECTOR

FOR MORE INFORMATIO, SEE BLOCK 6: CONNECTION OF ACCESSORIES

VARIANTS

Location

69 -> 105	If the vehicle has UPEC.
105	Connector A068: optional.
109 -> 142	If the vehicle has ECS-DC3.
165 -> 183	All 658 connectors: optional.
165 -> 182 and 185 -> 207	All 656 connectors: optional.
185 -> 195	All 654 connectors: optional.
185 -> 207	All 657 connectors: optional.
197 -> 207	All 655 connectors: optional.

© 200404

https://truckmanualshub.com/

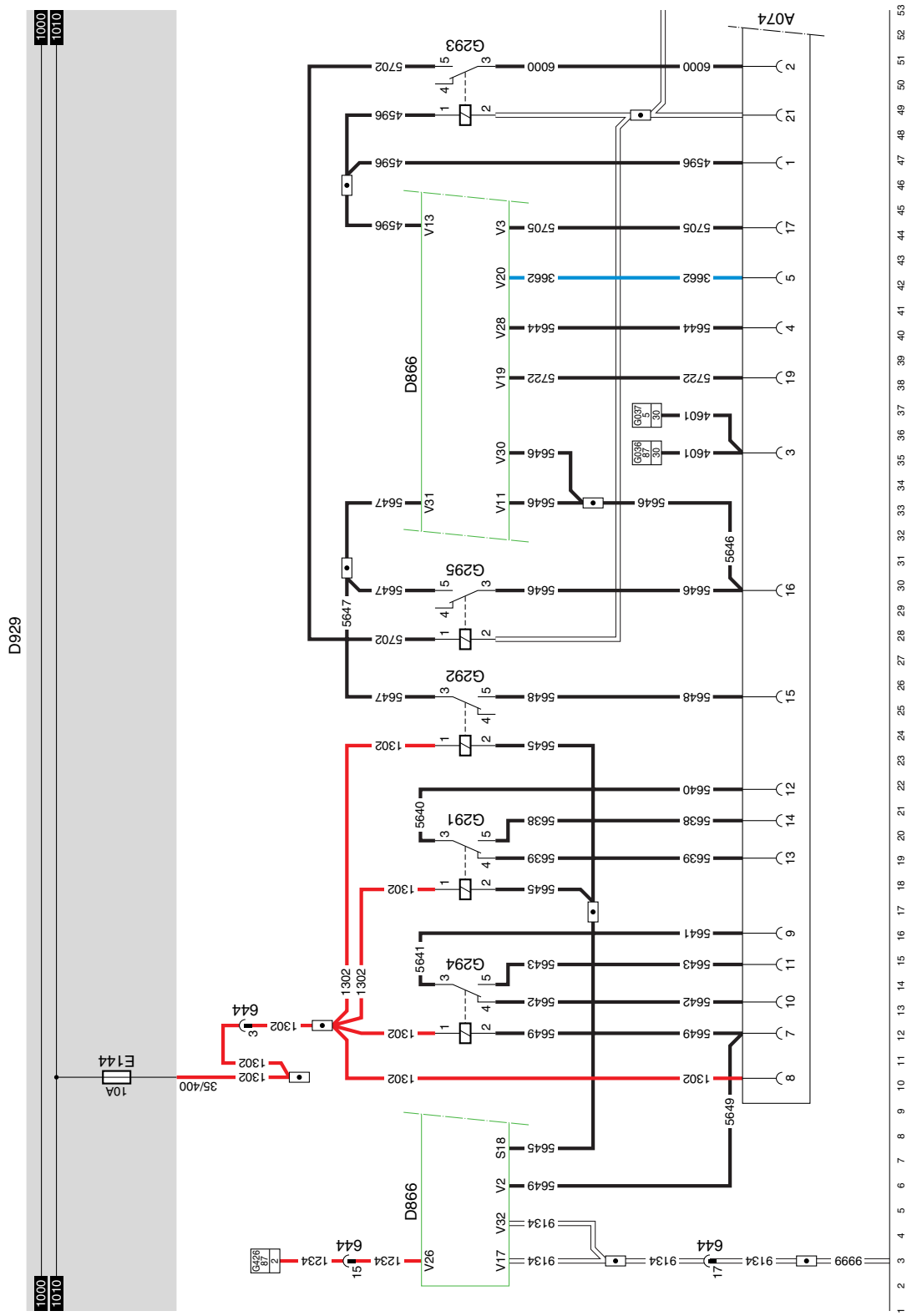

43

1358030/26

EL001365

10

https://truckmanualshub.com/

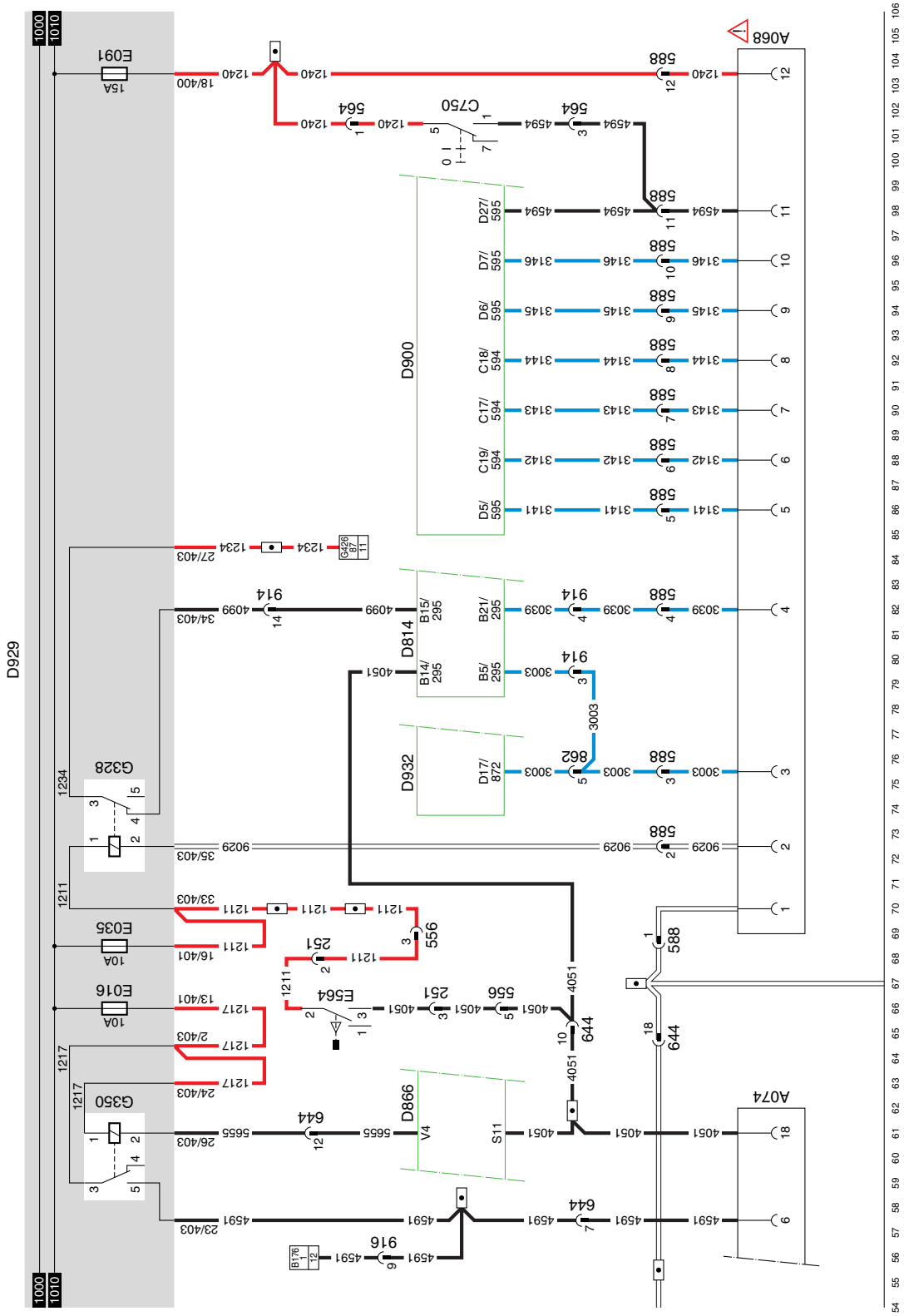

43 1358030/26 EL001366

https://truckmanualshub.com/

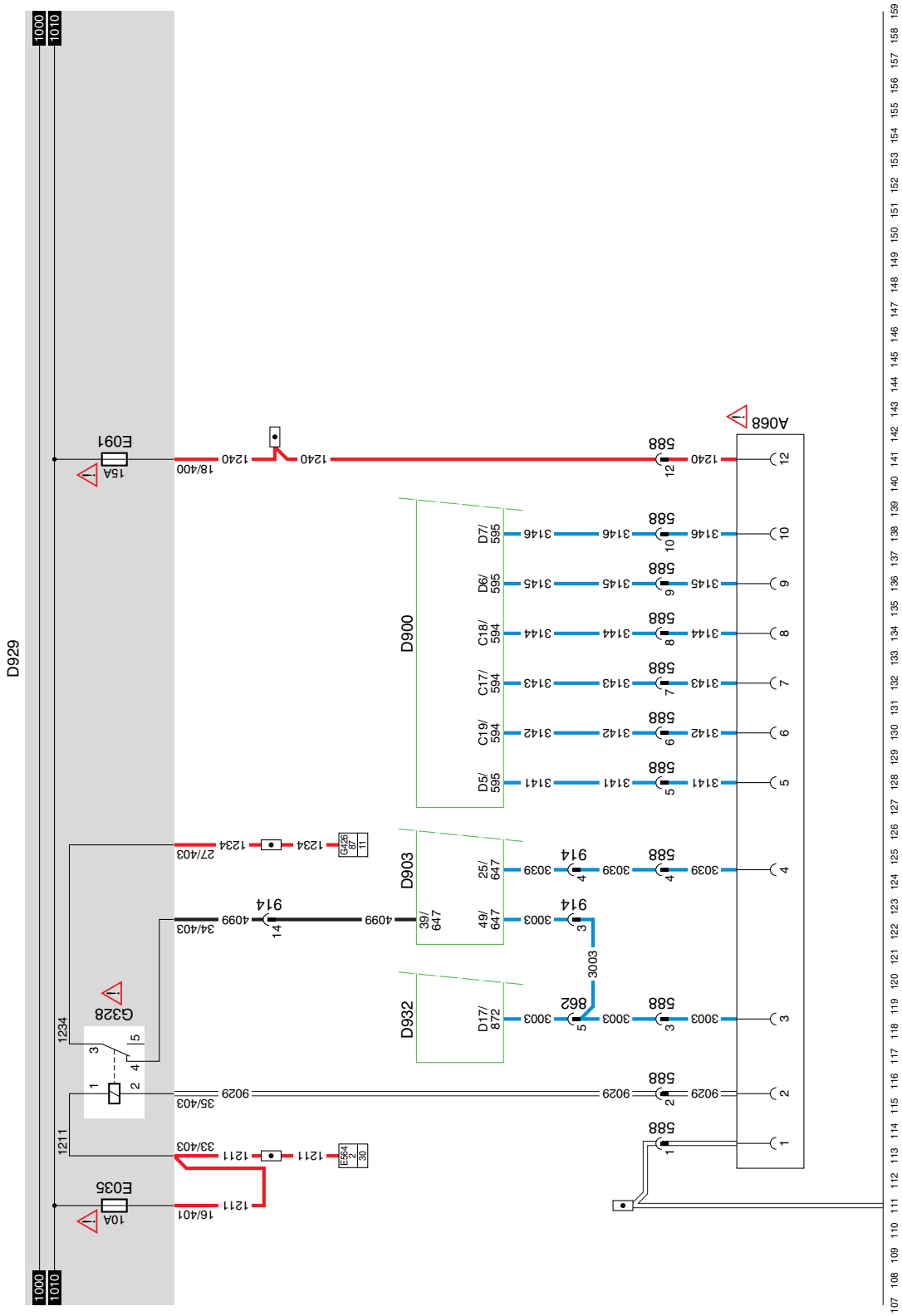

43 1358030/26 EL001367

10

https://truckmanualshub.com/

43 1358030/26 EL001368

https://truckmanualshub.com/

https://truckmanualshub.com/

44 EBS

SEE THE SYSTEM MANUAL FOR MORE INFORMATION

VARIANTS

Location

18 -> 35	Connector 873: only on cab type D.
121	E511 not fitted for EBS.

© 200404

https://truckmanualshub.com/

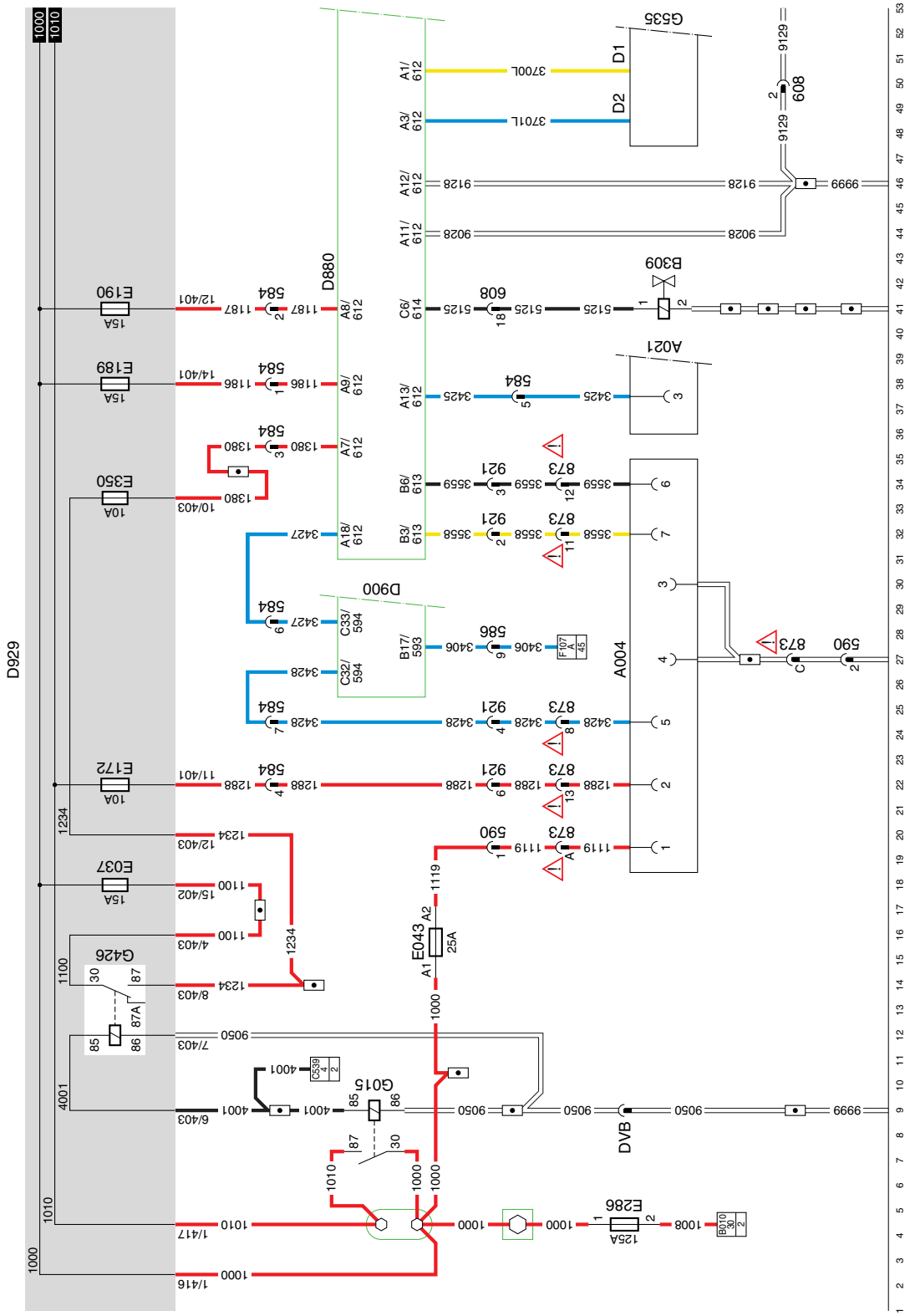

44

1358030/26

EL001369

10

https://truckmanualshub.com/

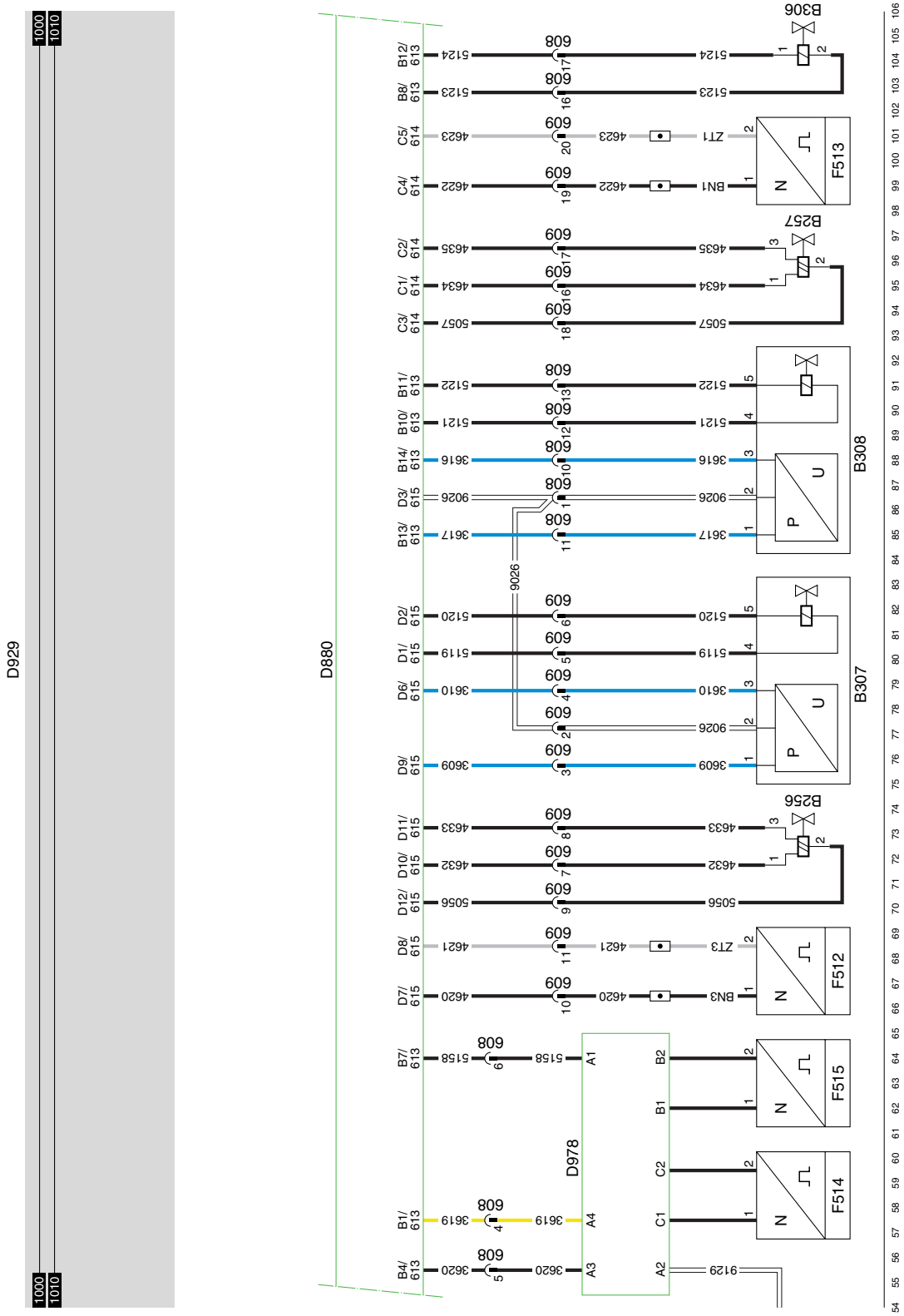

© 200404

https://truckmanualshub.com/

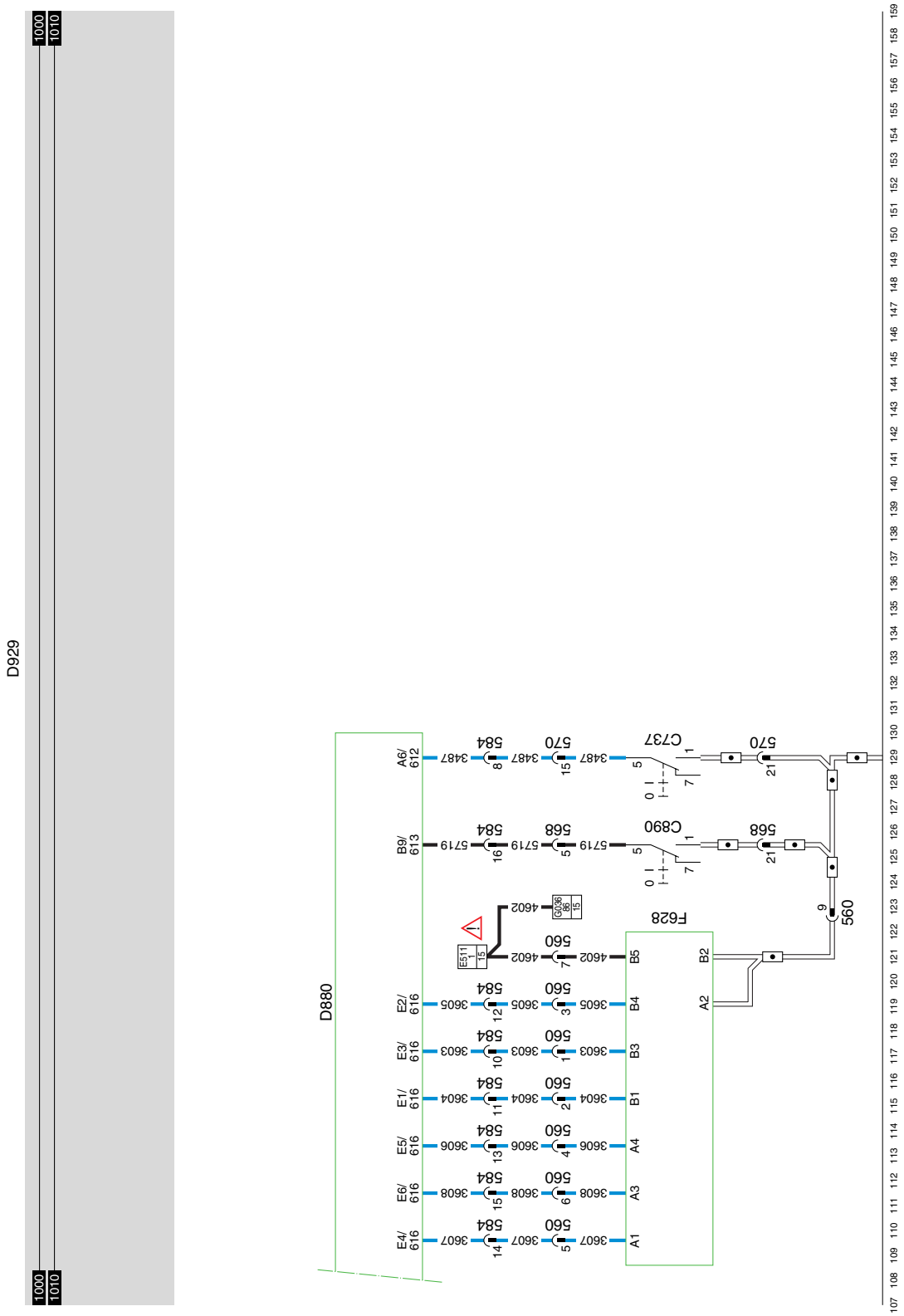

10

https://truckmanualshub.com/

10

45 BRAKE LINING WEAR SWITCH

If one of the brake linings is too thin, connection point B17 of the VIC (D900) will be interrupted by the corresponding brake lining wear control switch (F107 or F108 or F111 or F112 or F113 or F114) through wire 3406. The VIC will send a message to the instrument panel, which will then activate the “brake lining wear” indicator.

https://truckmanualshub.com/

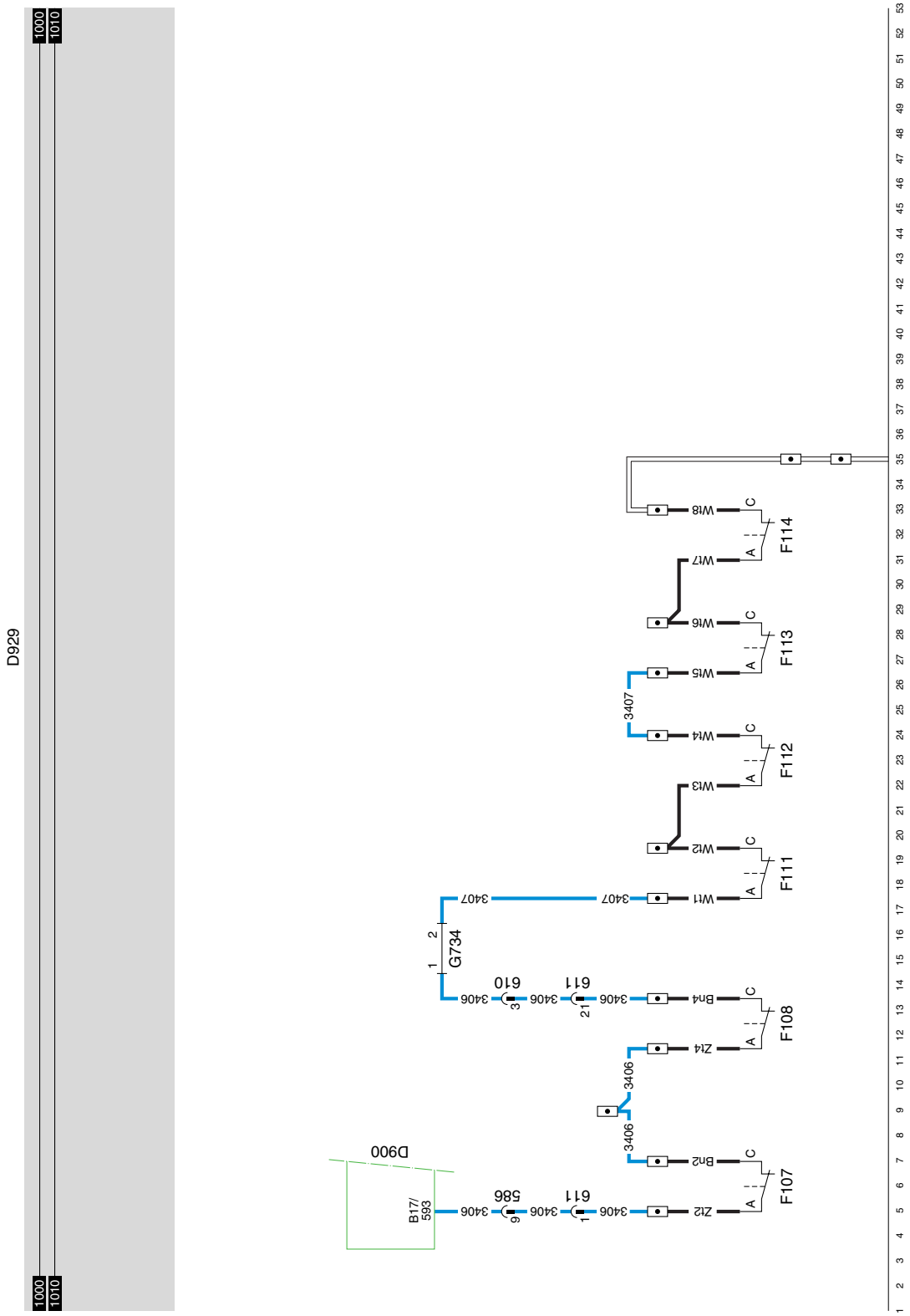

45 1358030/26 EL001372

10

https://truckmanualshub.com/

46 ALARM SYSTEM/BATTERY CHARGER FOR BV3 ALARM SYSTEM

SEE THE SYSTEM MANUAL FOR MORE INFORMATION

VARIANTS

Location

18	Wire 4004: fitted if **NO** alarm system installed.
23	G185: only for AS Tronic.
49, 57	**NOT** fitted on H1 version
64	For more information on D783, see section diagram 17 & 18.
60, 69, 71	**NOT** fitted on BV02 version.
90 -> 95	Connector 873 on vehicle type FA. Connector 874 on vehicle type FT.
90 -> 95	Connector A001: on vehicle type FA. Connector A003 on vehicle type FT.
105	Only on vehicle type FA.
115	Connection for F686 (this is optional). Only applies to an SL cab and for versions BV2, BV3 or H1. Only applies to SL cab. **NOT** fitted on H1 version
153	D931: only if **NO** alarm system fitted.
154	E035: only if **NO** alarm system fitted.
157	E023: only if **NO** alarm system fitted.

© 200404

https://truckmanualshub.com/

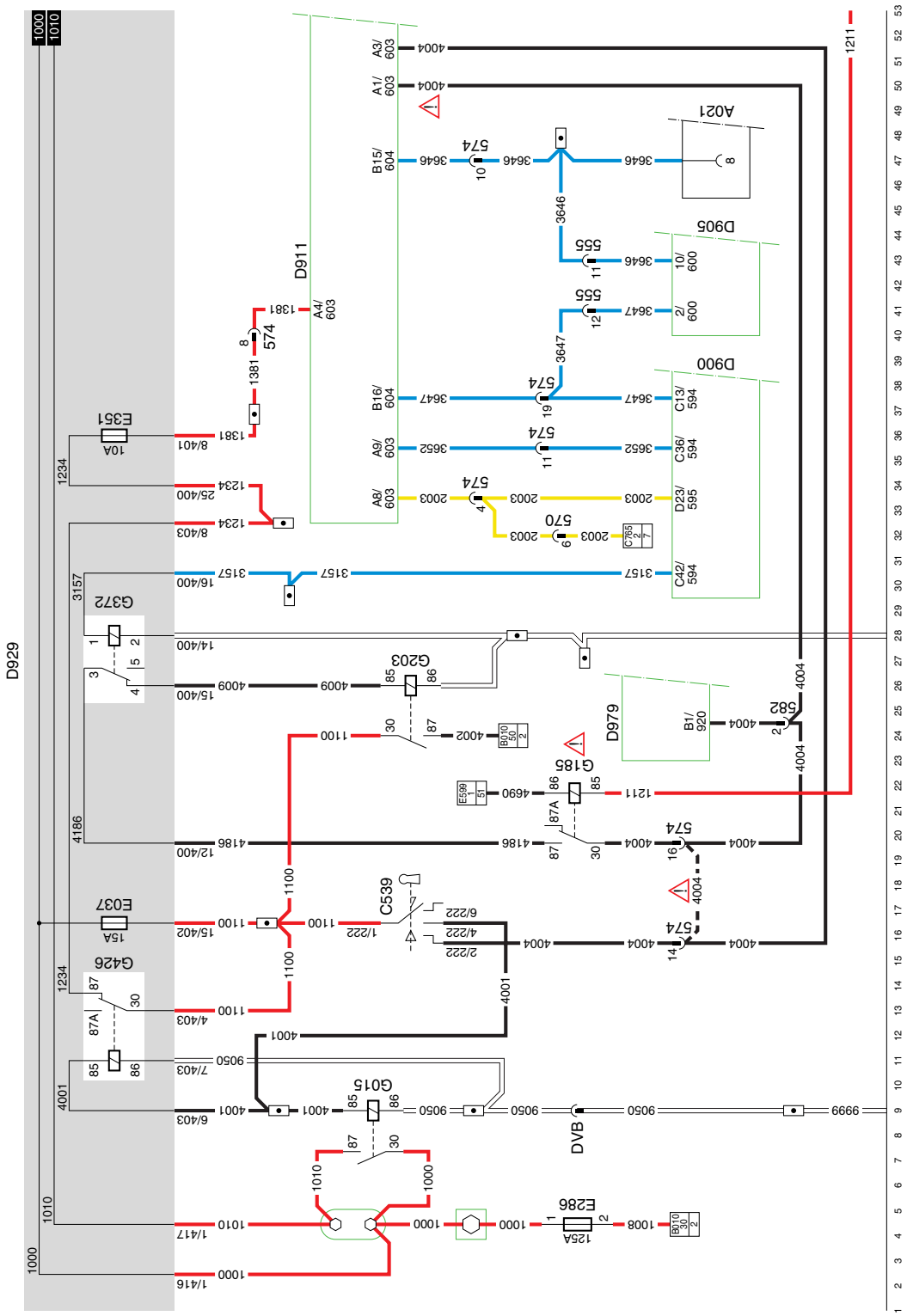

46

1358030/26

EL001373

10

https://truckmanualshub.com/

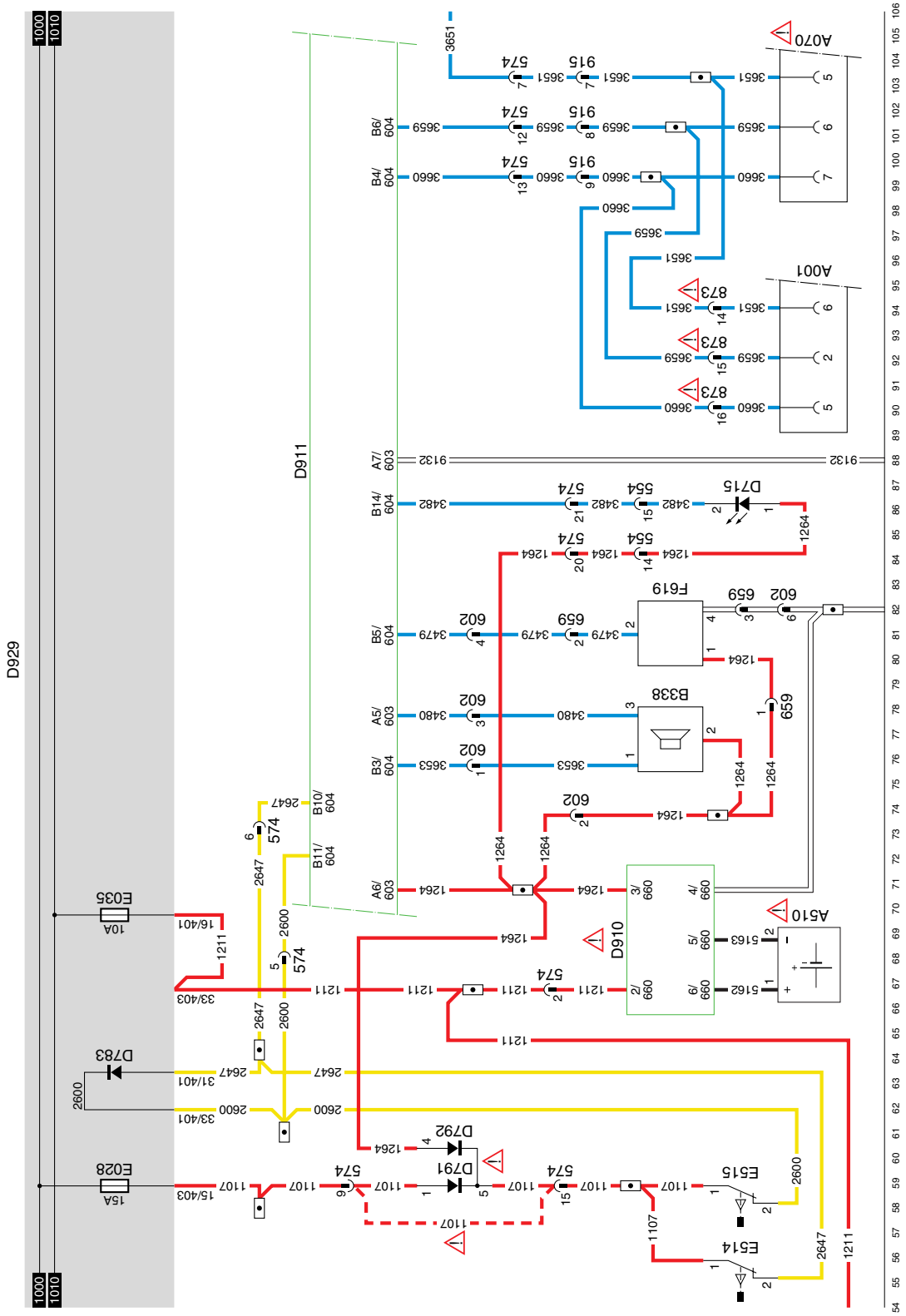

46 1358030/26 EL001374

https://truckmanualshub.com/

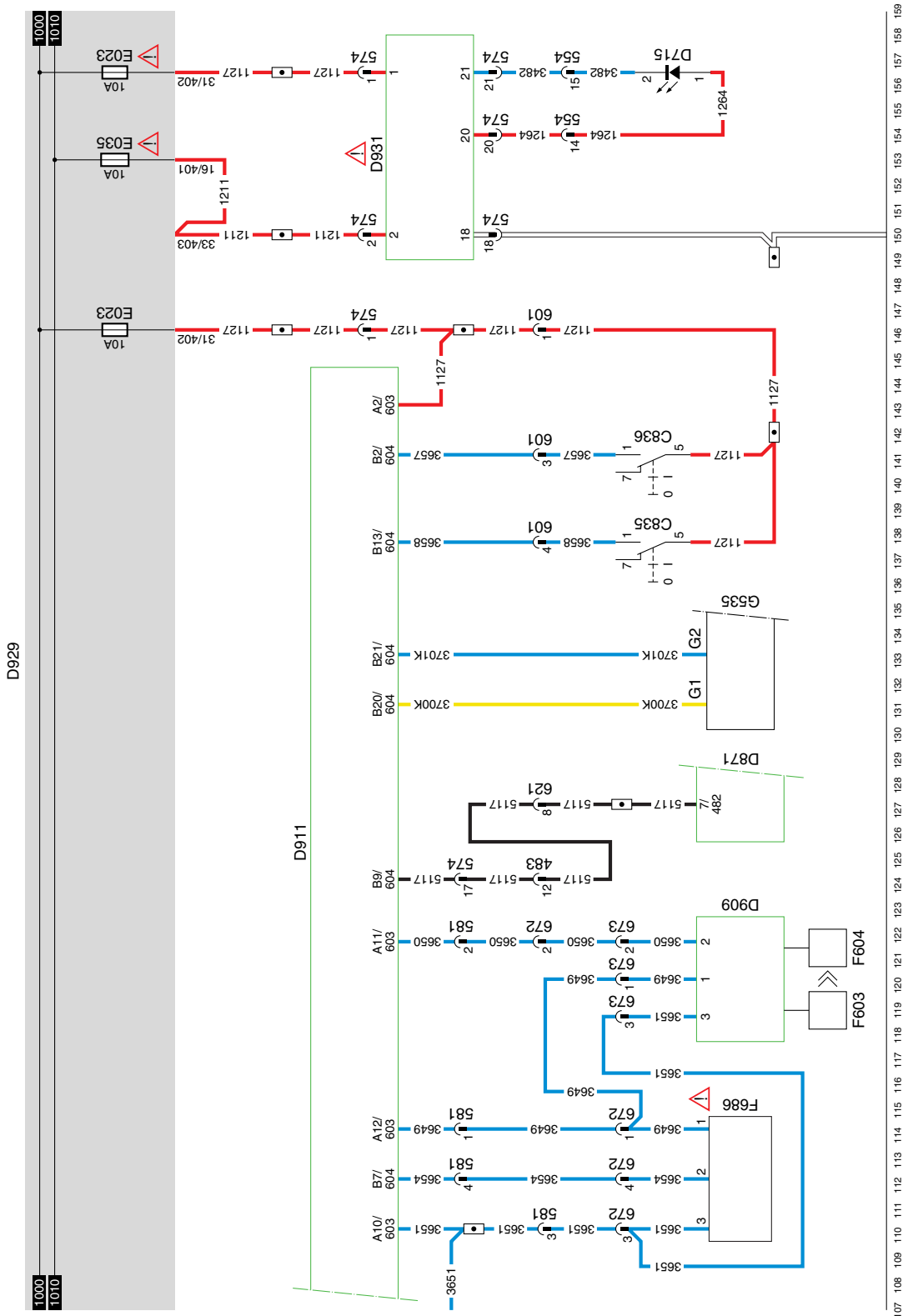

46 1358030/26

EL001375

https://truckmanualshub.com/

47 PLUG SOCKETS, FA

DIAGNOSTICS PLUG (A021)

The diagnostics plug is on the bottom right on the outside of the central box. This is the plug for the DAVIE connection. After the ignition is switched on, power is supplied to pin 1 via fuse E053. Pin 2 is connected to earth. The remaining pins are for communication with the various systems, and are connected to those systems.

Pin no.	Wire no.	Colour	Description
1	1229	red	Power supply for DAVIE
2	9107	white	Earth
3	3425	blue	ABS - ASR-D
4			
5	4697	black	UPEC, ECS-DC3
6			
7	4732	black	ECAS
8	3646	blue	CDS, ALS-S, EMAS
9	4047	black	VIC
10	3065	blue	AS Tronic
11	4883	black	ZF intarder
12	4733	black	DIP-4
13	3470	blue	AGS
14	3037	blue	Cab heater
15	3700	yellow	V-CAN-L
16	3701	blue	V-CAN-H

24V SOCKET (2-pin) (A007)

Pin 1 is connected directly to the power supply through wire 1103, fuse E036.

Pin 2 is connected to earth.

ABS/EBS SOCKET (7-pin) (A004)

Pin 1 is connected directly to power before contact through fuse E043 and wire 1119.

Pin 2 is connected directly to power after contact through fuse E172 and wire 1288.

Pins 3 + 4 are both connected to earth.

Pin 5 is connected to pin C32 of the VIC (D900) through wire 3428.

Pin 6 is connected to pin B6 of D880 (EBS) via wire 3559.
Only if the vehicle has EBS.

Pin 7 is connected to pin B3 of D880 (EBS) via wire 3558.
Only if the vehicle has EBS.

DRAWN VEHICLE PLUG SOCKET (7-pin) (A000)

Pin 1 is connected to earth.

Pin 2 switches the left tail light.

Pin 3 is connected through wire 2008 to connection point A7 of the VIC (D900) (direction, left).

Pin 4 is connected to relay G036 (stop light relay) through wire 4601.

Pin 5 is connected through wire 2009 to connection point A8 of the VIC (D900) (direction, right).

Pin 6 switches the right tail light.

DRAWN VEHICLE PLUG SOCKET (15-pin) (A058)

Pin 1 is connected through wire 2008 to connection point A7 of the VIC (D900) (direction, left).

Pin 2 is connected through wire 2009 to connection point A8 of the VIC (D900) (direction, right).

Pin 3 is connected via wire 2152 to connection point 87 of relay G005 (fog lamp relay, rear).

Pin 4 is connected to earth.

Pin 5 switches the left tail light via wire 2102.

https://truckmanualshub.com/

Pin 6 switches the right tail light via wire 2103.

Pin 7 is connected to connection point 87 of relay G036 (stop light relay) through wire 4601.

Pin 8 is connected to connection point 5 of G350 (reversing lights relay) through wire 4591.

Pin 9 is connected to power before contact through wire 1113 and fuse E048.

Pin 10 is connected via wire 3659 to connection point B6 of D911 (ALS-S).

Pin 11 is connected via wire 3660 to connection point B4 of D911 (ALS-S).

Pin 12 is connected to connection point A10 of D911 (ALS-S) through wire 3651.

Pin 13 Not connected.

Pin 14 Not connected.

Pin 15 Not connected.

SOCKET, REAR FOG LAMP AND REVERSING LIGHT PLUG (A001)

Pin 1 is connected to earth.

Pin 2 is connected via wire 3659 to connection point B6 of ALS-S (D911).

Pin 3 is connected to connection point 5 of G350 (reversing lights relay) through wire 4591.

Pin 4 is connected to power before contact through wire 1113 and fuse E048.

Pin 5 is connected via wire 3660 to connection point B4 of D911 (ALS-S).

Pin 6 is connected to connection point A10 of D911 (ALS-S) through wire 3651.

Pin 7 is connected via wire 2152 to connection point 87 of relay G005 (fog lamp relay, rear).

APPLICATION CONNECTOR, SUPERSTRUCTURE (8-pin) (A070)

Pin 1 is connected to power before contact through wire 1113 and fuse E048.

Pin 2 is connected to connection point 1 of C725 (work lamp switch) through wire 2155.

Pin 3 is connected to connection point 87 of G036 (stop light relay) through wire 4601.

Pin 4 is connected to connection point 5 of G350 (reversing lights relay) through wire 4591.

Pin 5 is connected to connection point A10 of D911 (ALS-S) through wire 3651.

Pin 6 is connected via wire 3659 to connection point B6 of D911 (ALS-S).

Pin 7 is connected via wire 3660 to connection point B4 of D911 (ALS-S).

Pin 8 is connected to earth.

TELEPHONE CONNECTOR (A076)

Pin 1 is connected via wire 1353 to connection B1 (12V) of D895.

Pin 2 is connected via wire 1108 to connection A4 (12V) of D895.

Pin 3 is connected to earth.

ACCESSORIES SOCKET (6-pin) (A027)

Pin 1 is connected to power before contact through wire 1154 and fuse E142.

Pin 2 is connected to power after contact through wire 1258 and fuse E163.

Pin 3 is connected to connection point 2 of F616 (cab locking sensor) through wire 3412.

Pin 5 is connected to C42 of the VIC (D900) through wire 3157.

Pin 5 is connected to earth.

Pin 6 is connected to earth.

https://truckmanualshub.com/

VARIANTS

Location

32, 36, 59	Connector 585: for ABS/ASR-D. Connector 584 for EBS.
59	Connection to D850 or D880.
61	Connection to D851 or D802.
66	If the vehicle has EMAS system.
83	D954: only for AS Tronic.
121, 158	A000 and A001. For 2x 7-pin connector.
162 -> 209	For 1x 15-pin connector.

https://truckmanualshub.com/

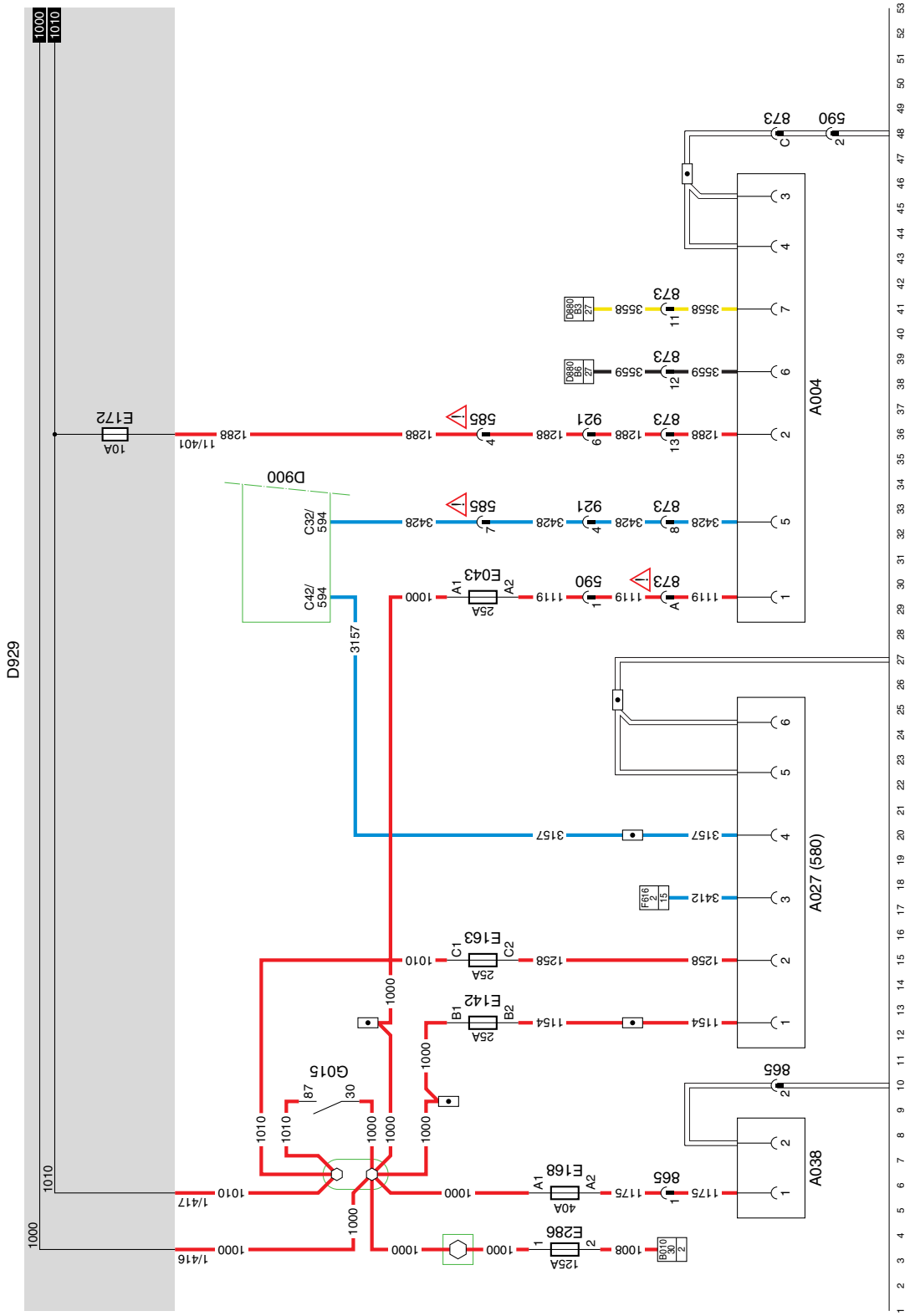

47

1358030/26

EL001376

10

https://truckmanualshub.com/

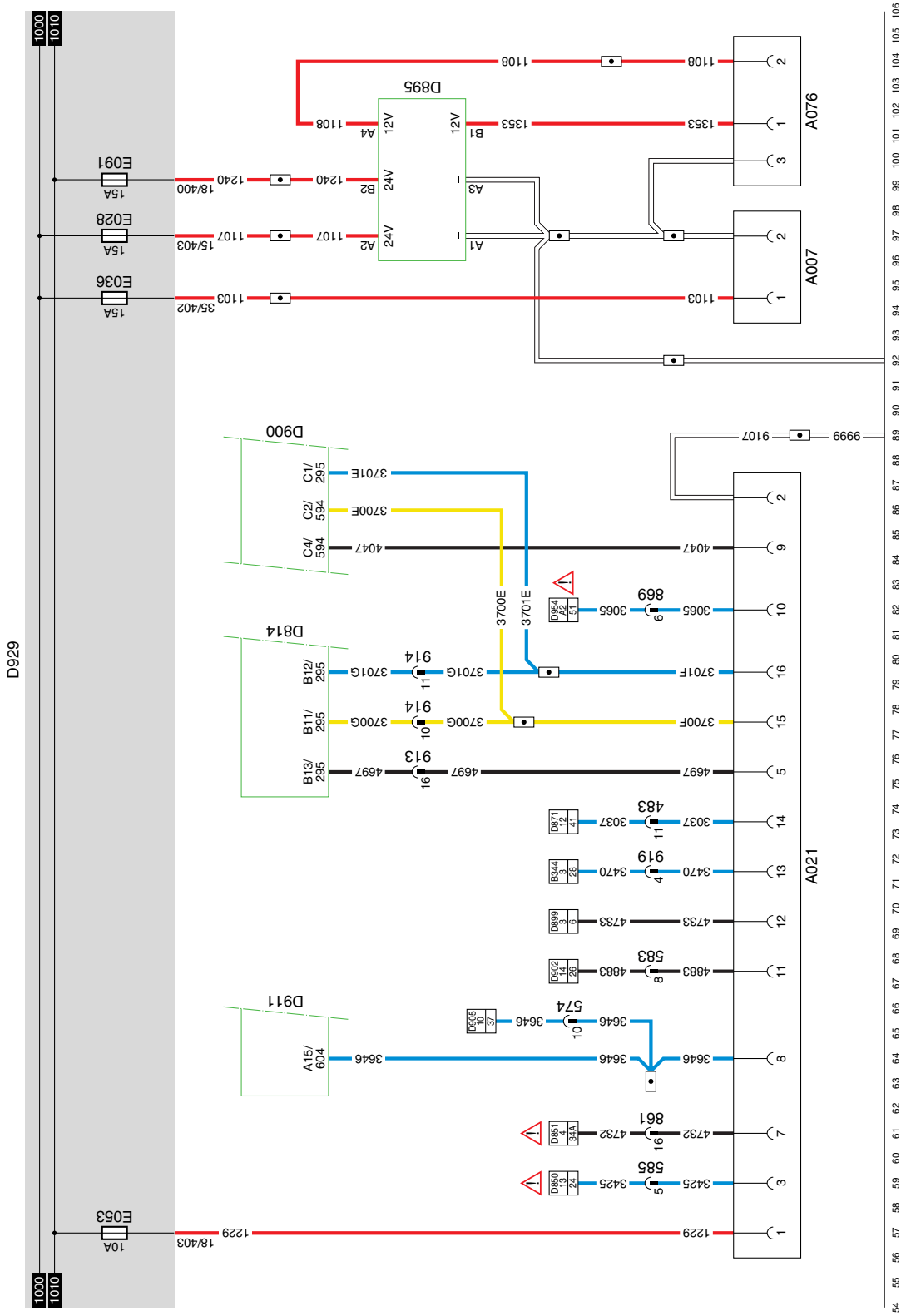

47 1358030/26 EL001377

https://truckmanualshub.com/

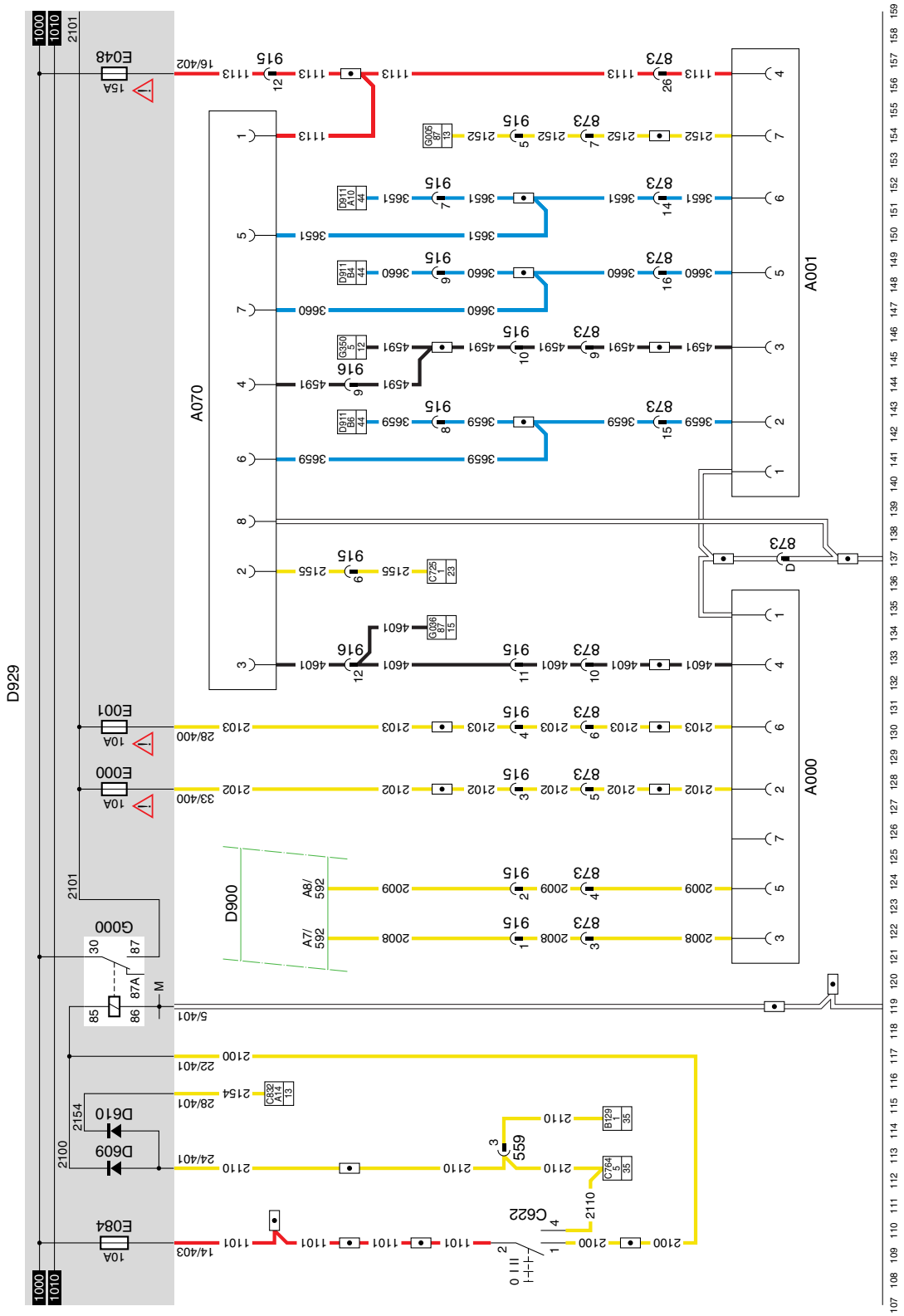

47 1358030/26

10

https://truckmanualshub.com/

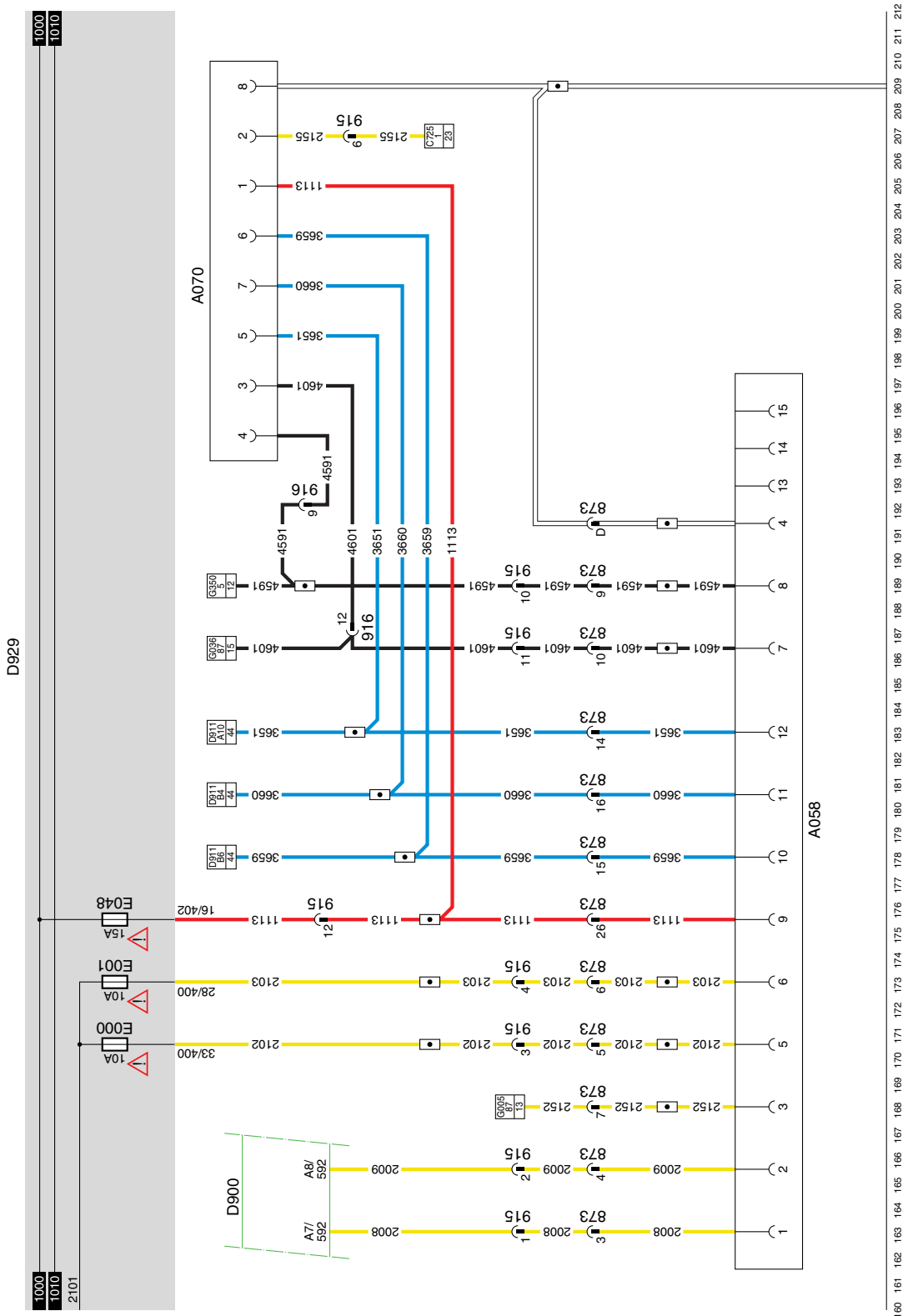

47 1358030/26

EL001379

https://truckmanualshub.com/

https://truckmanualshub.com/

48 PLUG SOCKETS, FT

DIAGNOSTICS PLUG (A021)

The diagnostics plug is on the bottom right on the outside of the central box. This is the plug for the DAVIE connection. After the ignition is switched on, power is supplied to pin 1 via fuse E053. Pin 2 is connected to earth. The remaining pins are for communication with the various systems, and are connected to those systems.

Pin no.	Wire no.	Colour	Description
1	1229	red	Power supply for DAVIE
2	9107	white	Earth
3	3425	blue	ABS - ASR-D
4			
5	4697	black	UPEC, ECS-DC3
6			
7	4732	black	ECAS
8	3646	blue	CDS, ALS-S, EMAS
9	4047	black	VIC
10	3065	blue	AS Tronic
11	4883	black	ZF intarder
12	4733	black	DIP-4
13	3470	blue	AGS
14	3037	blue	Cab heater
15	3700	yellow	V-CAN-L
16	3701	blue	V-CAN-H

24V SOCKET (2-pin) (A007)

Pin 1 is connected directly to the power supply through wire 1103, fuse E036.

Pin 2 is connected to earth.

ABS/EBS SOCKET (7-pin) (A004)

Pin 1 is connected directly to power before contact through fuse E043 and wire 1119.

Pin 2 is connected directly to power after contact through fuse E172 and wire 1288.

Pins 3 + 4 are both connected to earth.

Pin 5 is connected to pin C32 of the VIC (D900) through wire 3428.

Pin 6 is connected to pin B6 of D880 (EBS) via wire 3559.
Only if the vehicle has EBS.

Pin 7 is connected to pin B3 of D880 (EBS) via wire 3558.
Only if the vehicle has EBS.

DRAWN VEHICLE PLUG SOCKET (7-pin) (A000)

Pin 1 is connected to earth.

Pin 2 switches the left tail light.

Pin 3 is connected through wire 2008 to connection point A7 of the VIC (D900) (direction, left).

Pin 4 is connected to relay G036 (stop light relay) through wire 4601.

Pin 5 is connected through wire 2009 to connection point A8 of the VIC (D900) (direction, right).

Pin 6 switches the right tail light.

DRAWN VEHICLE PLUG SOCKET (15-pin) (A058)

Pin 1 is connected through wire 2008 to connection point A7 of the VIC (D900) (direction, left).

Pin 2 is connected through wire 2009 to connection point A8 of the VIC (D900) (direction, right).

Pin 3 is connected via wire 2152 to connection point 87 of relay G005 (fog lamp relay, rear).

Pin 4 is connected to earth.

Pin 5 switches the left tail light via wire 2102.

https://truckmanualshub.com/

Pin 6 switches the right tail light via wire 2103.

Pin 7 is connected to connection point 87 of relay G036 (stop light relay) through wire 4601.

Pin 8 is connected to connection point 5 of G350 (reversing lights relay) through wire 4591.

Pin 9 is connected to power before contact through wire 1113 and fuse E048.

Pin 10 is connected via wire 3659 to connection point B6 of D911 (ALS-S).

Pin 11 is connected via wire 3660 to connection point B4 of D911 (ALS-S).

Pin 12 is connected to connection point A10 of D911 (ALS-S) through wire 3651.

Pin 13 Not connected.

Pin 14 Not connected.

Pin 15 Not connected.

SOCKET, REAR FOG LAMP AND REVERSING LIGHT PLUG (A001)

Pin 1 is connected to earth.

Pin 2 is connected via wire 3659 to connection point B6 of ALS-S (D911).

Pin 3 is connected to connection point 5 of G350 (reversing lights relay) through wire 4591.

Pin 4 is connected to power before contact through wire 1113 and fuse E048.

Pin 5 is connected via wire 3660 to connection point B4 of D911 (ALS-S).

Pin 6 is connected to connection point A10 of D911 (ALS-S) through wire 3651.

Pin 7 is connected via wire 2152 to connection point 87 of relay G005 (fog lamp relay, rear).

TELEPHONE CONNECTOR (A076)

Pin 1 is connected via wire 1353 to connection B1 (12V) of D895.

Pin 2 is connected via wire 1108 to connection A4 (12V) of D895.

Pin 3 is connected to earth.

ACCESSORIES SOCKET (6-pin) (A027)

Pin 1 is connected to power before contact through wire 1154 and fuse E142.

Pin 2 is connected to power after contact through wire 1258 and fuse E163.

Pin 3 is connected to connection point 2 of F616 (cab locking sensor) through wire 3412.

Pin 5 is connected to C42 of the VIC (D900) through wire 3157.

Pin 5 is connected to earth.

Pin 6 is connected to earth.

VARIANTS

Location	
32, 36	Connector 585 for ABS/ASR-D. Connector 584 for EBS.
59	Connection to D850 or D880.
61	Connection to D851 or D802.
82	D954: only for AS Tronic.
122 -> 156	A000 and A001. For 2x 7-pin connector.
161 -> 199	For 1x 15-pin connector.

https://truckmanualshub.com/

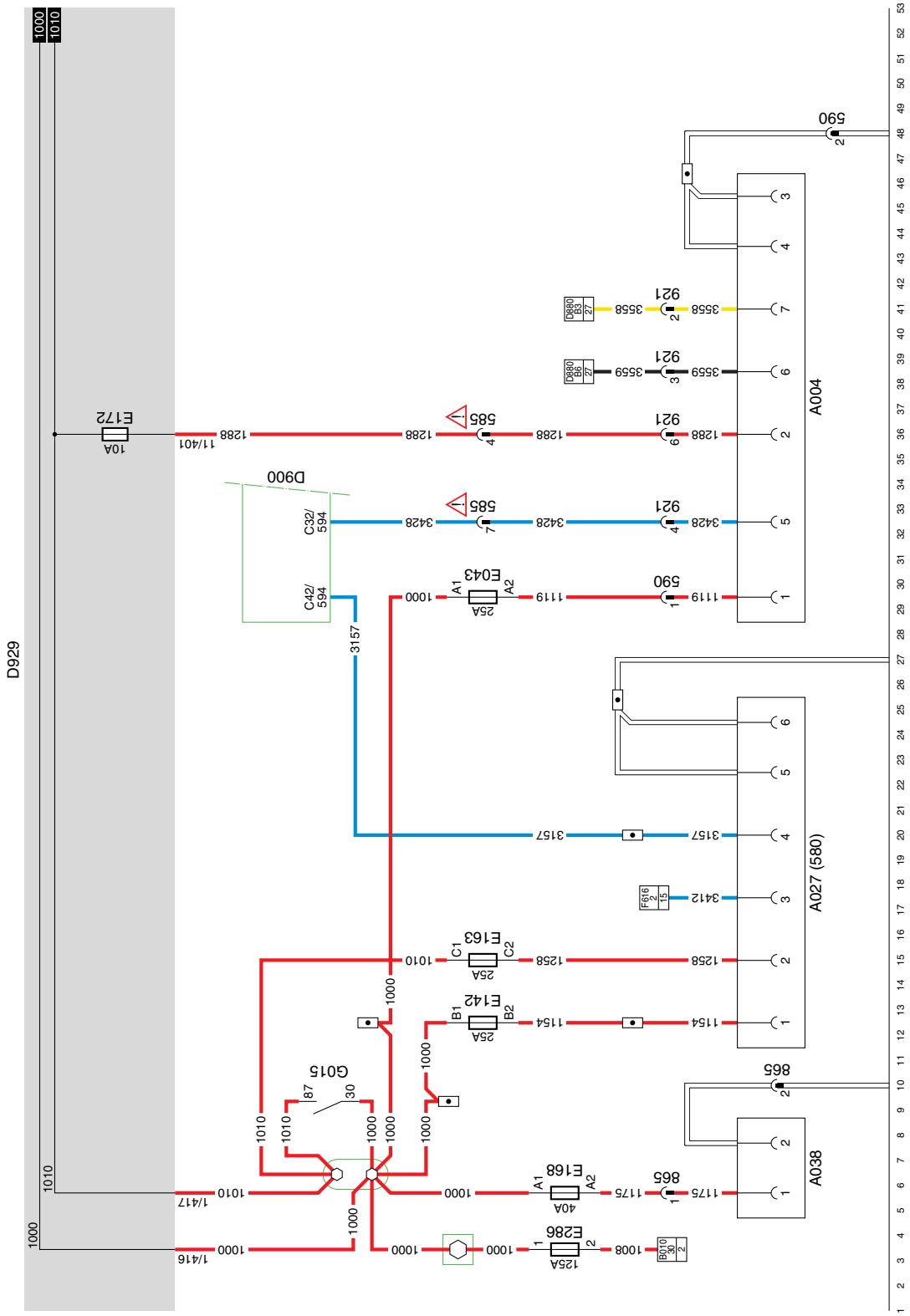

48 **1358030/26** EL001380

https://truckmanualshub.com/

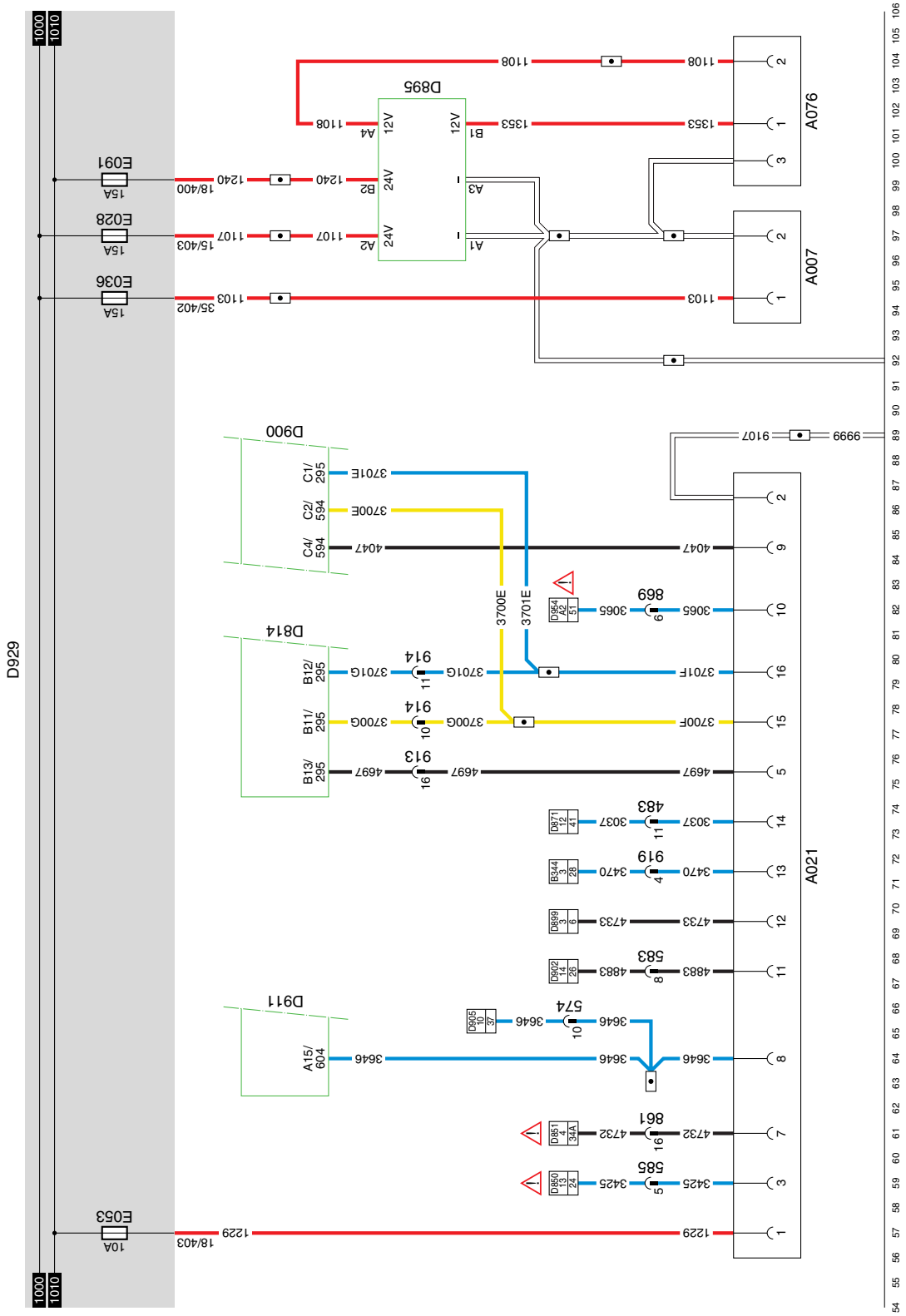

48

1358030/26

EL001381

10

https://truckmanualshub.com/

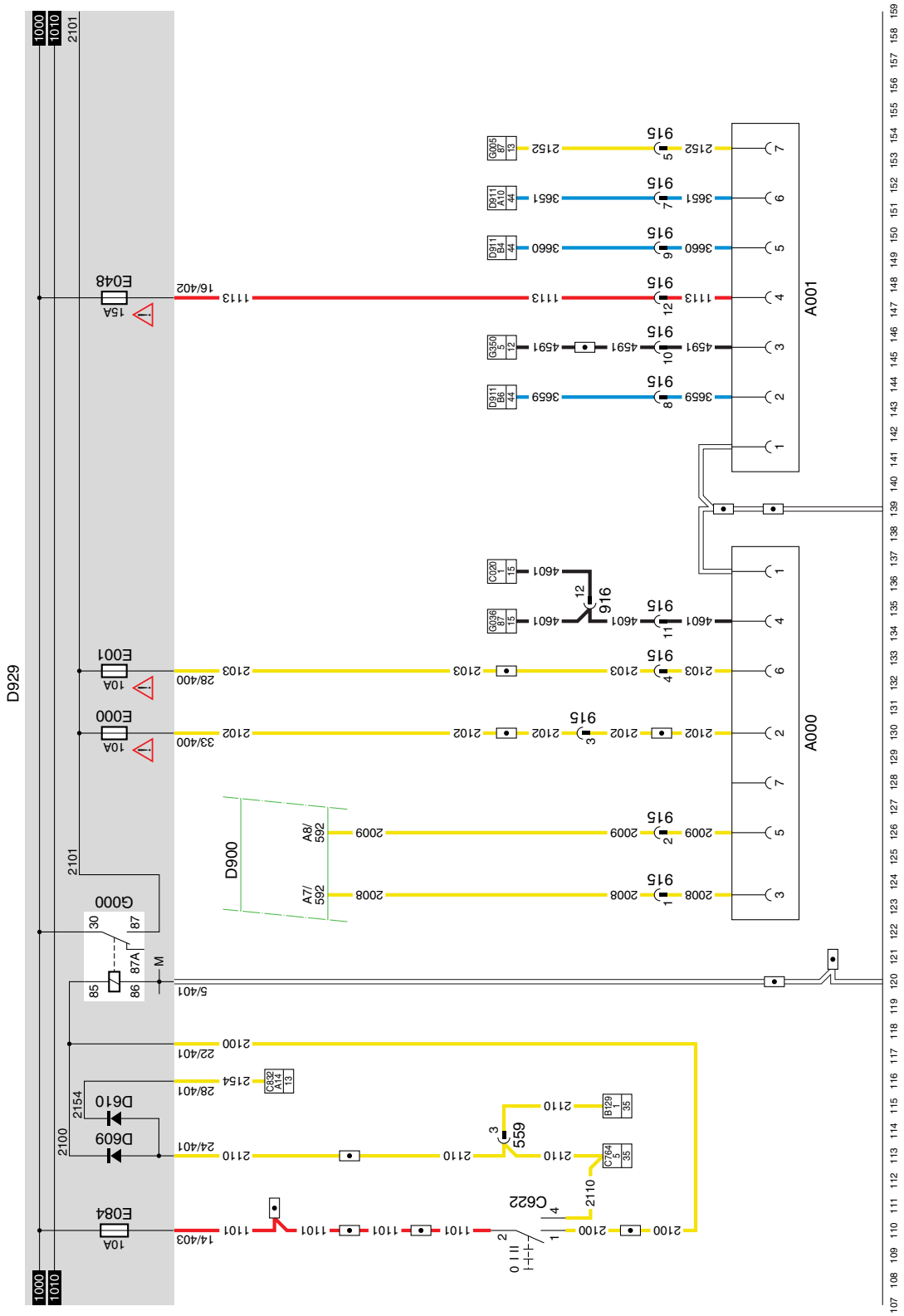

48 1358030/26 EL001382

https://truckmanualshub.com/

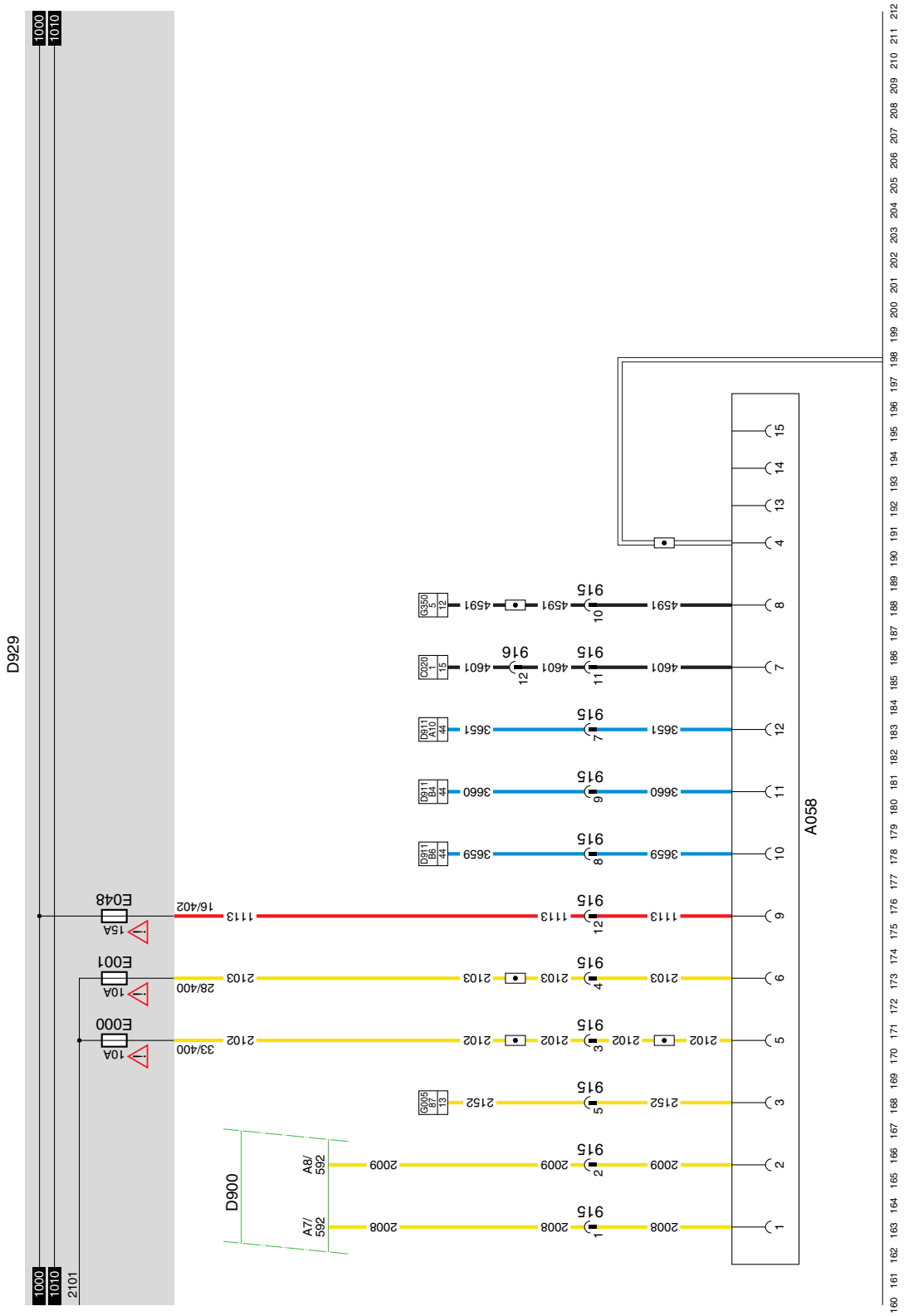

48 **358030/26** EL001383

10

https://truckmanualshub.com/

49 FUEL FILTER/WATER SEPARATOR (FLEETGUARD)

When the vehicle contact is switched on, there is a voltage on connection point 2 of electronic unit B387 (electronic unit for fuel filter/water separator) through wire 1010 and fuse E170.

If the temperature of the fuel is too low, relay G201 is activated by the ECS-DC3 electronic unit (D903).
A voltage is applied from connection point 18, wire 5048 to connection point 85 of relay G201. Connection point 86 of relay G201 is connected through an earth wire to connection point 2. The VIC now switches the earth on or off, so that relay G201 is switched on or off depending on the fuel temperature.

When relay G201 is energised, contacts 30 - 87 close. A voltage is now applied to connection point A of electronic unit B387 through wire 1000, fuse E164, wire 1190, contacts 30 - 87 of relay G201, wire 5051. The glow element is now activated.

If there is too much water in the fuel prefilter of the water separator, a voltage is applied to connection C12 of the VIC unit through connection 1 of B387, wire 3150. This in turn sends a signal to the DIP via the I-CAN. The DIP will now send a message to indicate that there is too much water in the fuel filter/water separator.

VARIANTS

Location

15 This is a 1-pin plug. It is located in the wire harness behind the central PCB.

29 Attach wire 5048 in connector 914, pin 17.
Attach wire 9035 in connector 914, pin 1.

https://truckmanualshub.com/

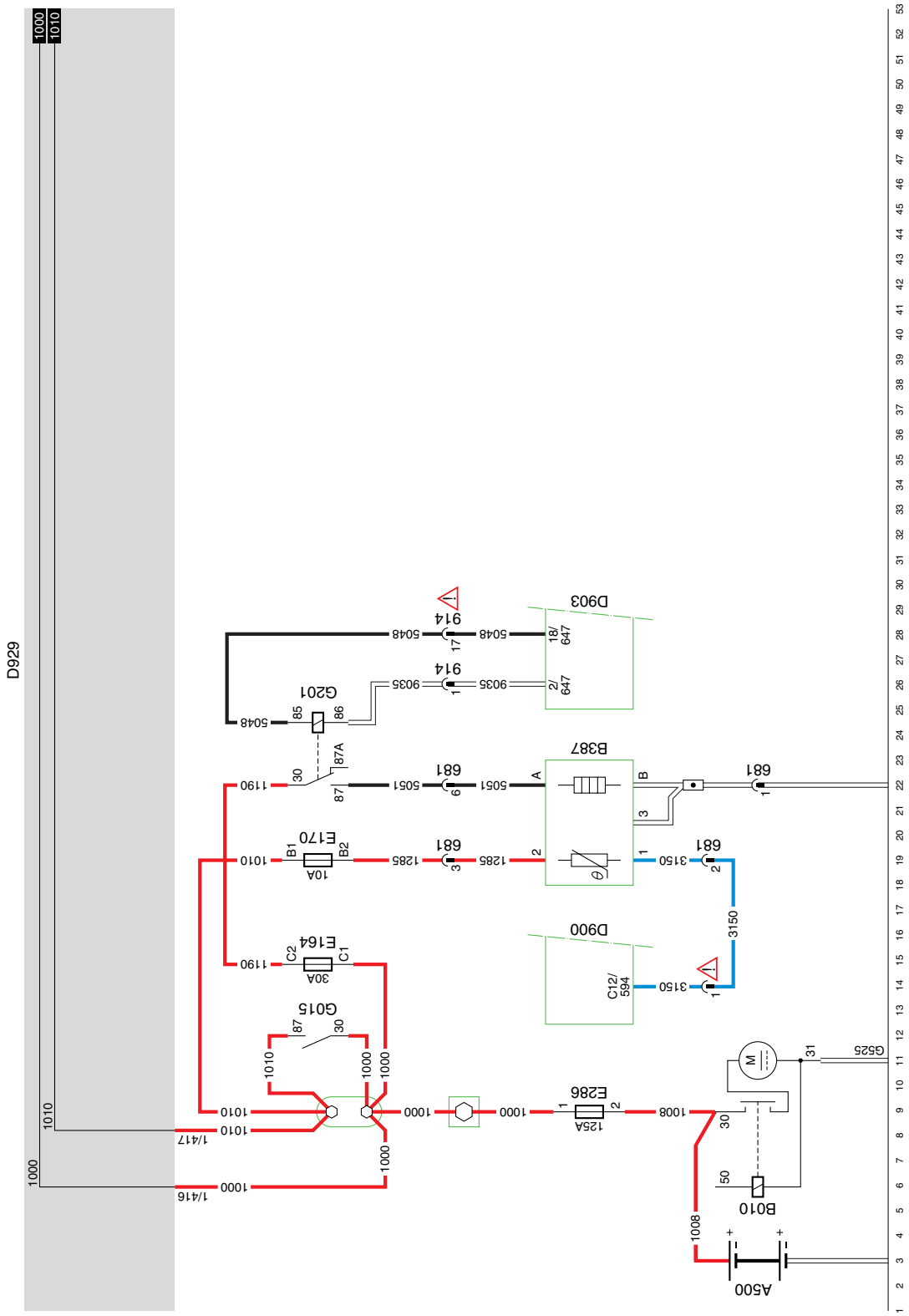

49 **1358030/26** EL001384

10

https://truckmanualshub.com/

50 WATER SEPARATOR

When the vehicle contact is activated, there is a voltage on both connection points B1 and A3 of the electronic unit (B378) (fuel filter/water separator heating element sensor) through wire 1010 and fuse E170. Voltage is also applied to connection point A1 of B378 through wire 1000, fuse E171, wire 1179.

A signal that there is water in the water separator is given via wire 3150. This signal goes to connection point C12 of the VIC (D900). The VIC activates the 'Water separator/fuel filter' symbol on the instrument panel.

VARIANTS

Location

15 This is a 1-pin plug. It is located in the wire harness behind the central PCB.

https://truckmanualshub.com/

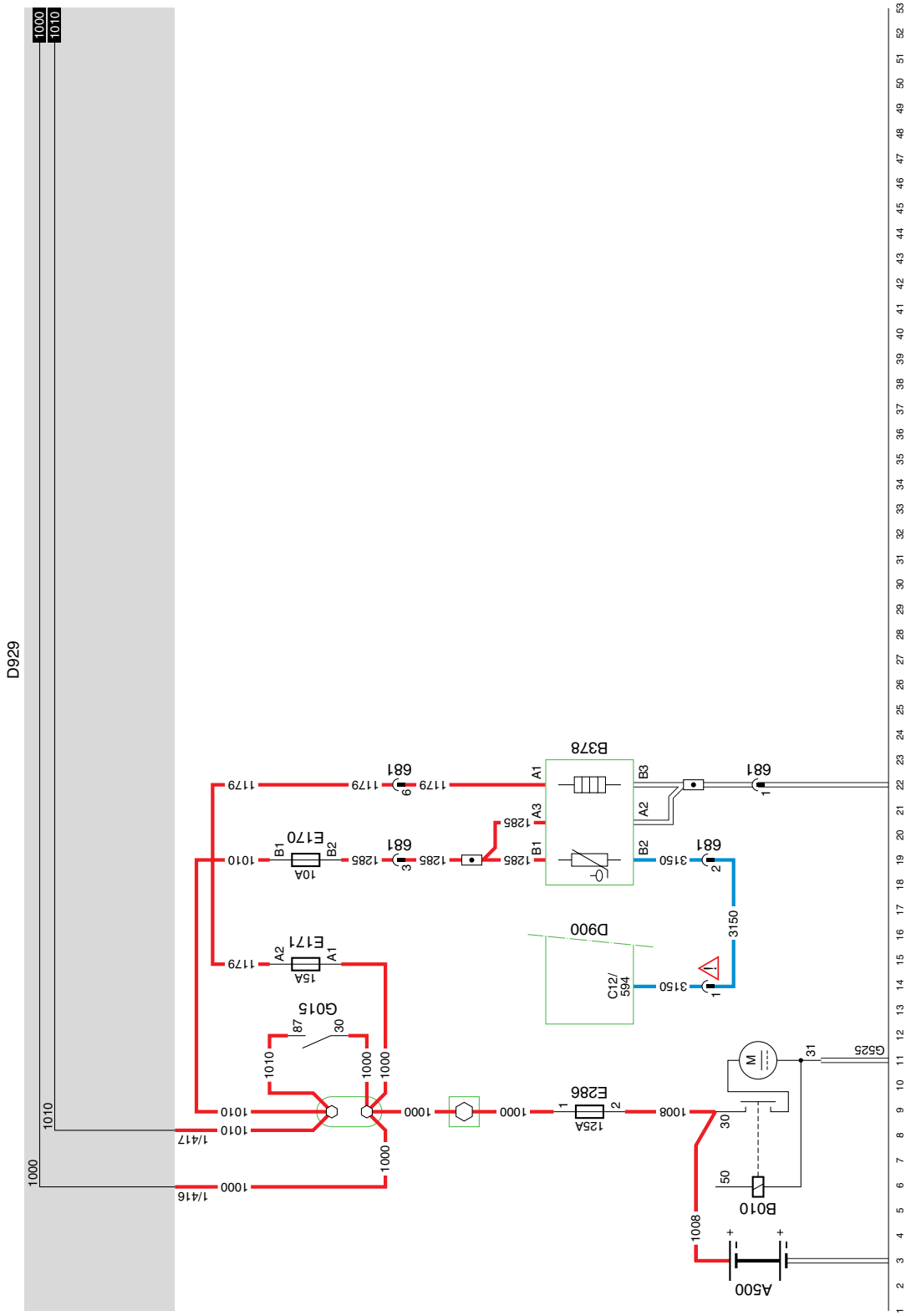
D929
1000
1010
1/416
1/417
1000
1010
1010
1010
1000
1000
1000
1000
1000
1000
1008
1008
1179
1179
1179
1179
1285
1285
1285
1285
3150
3150
3150
3150
1
2
3
9
1
2
1
2
1
2
1
2
1
2
1
2
681
681
681

https://truckmanualshub.com/

https://truckmanualshub.com/

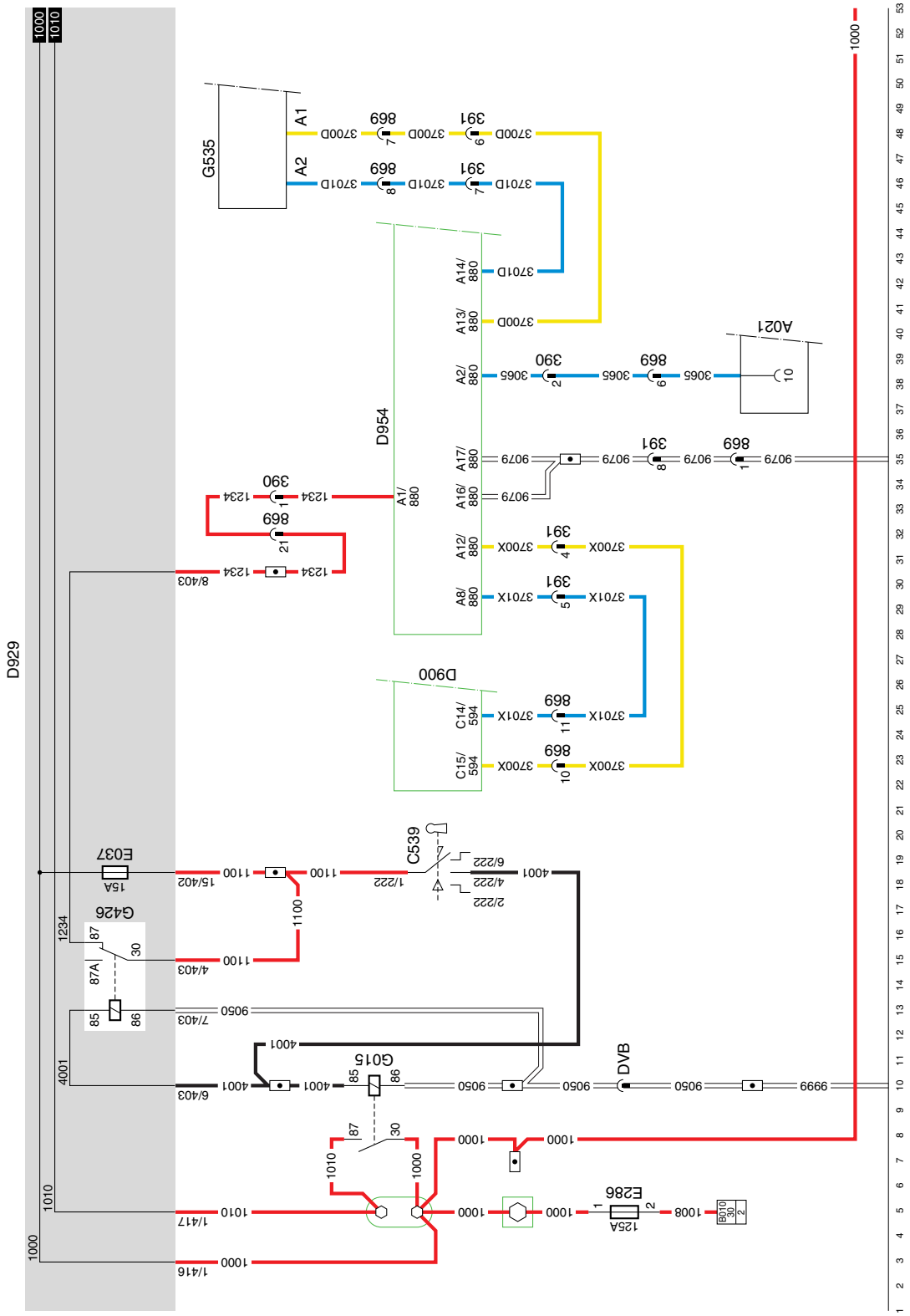

51

1358030/26

EL001386

10

https://truckmanualshub.com/

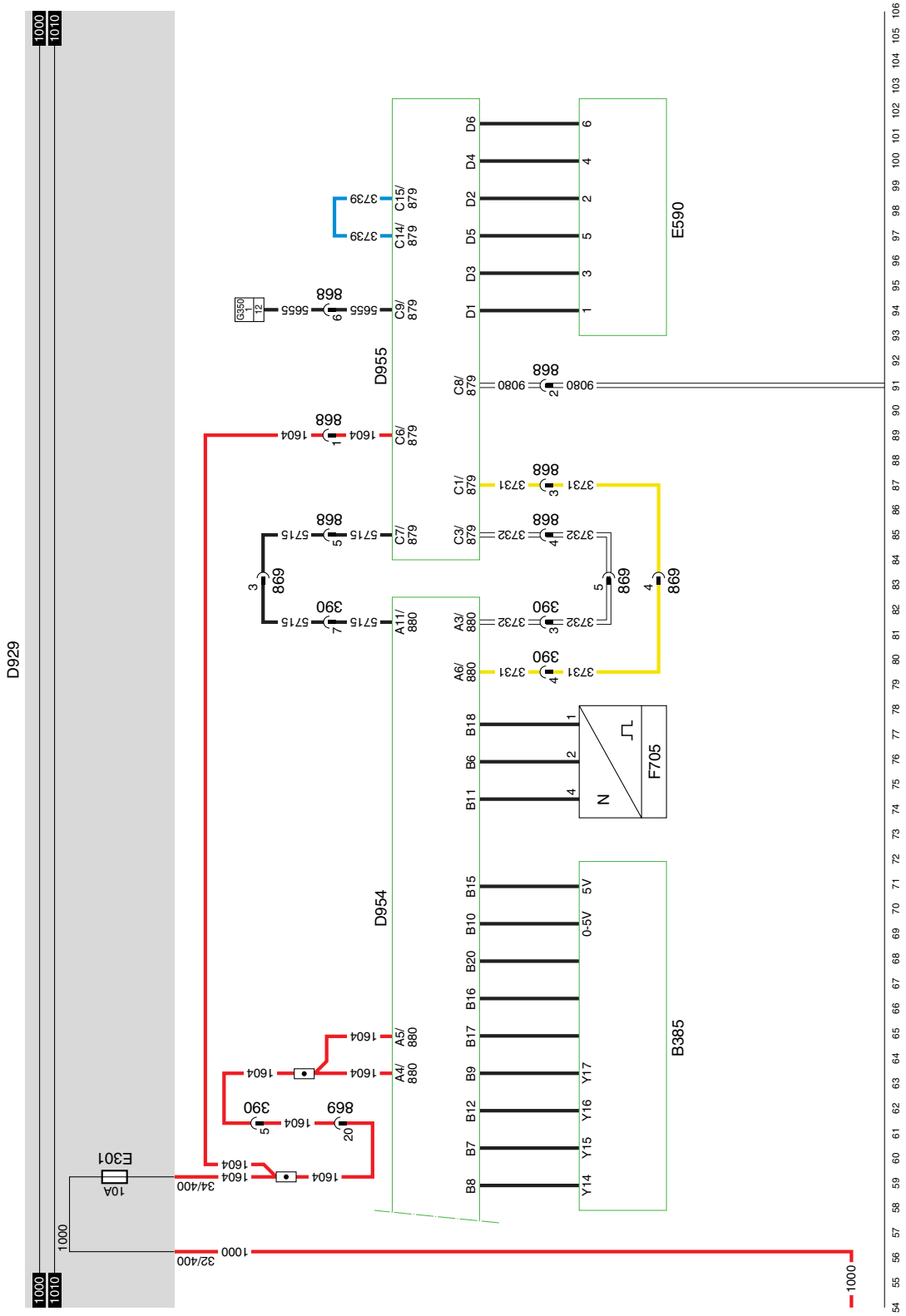

51 1358030/26 EL001387

https://truckmanualshub.com/

https://truckmanualshub.com/

10

52 CDM
SEE THE SYSTEM MANUAL FOR MORE INFORMATION

https://truckmanualshub.com/

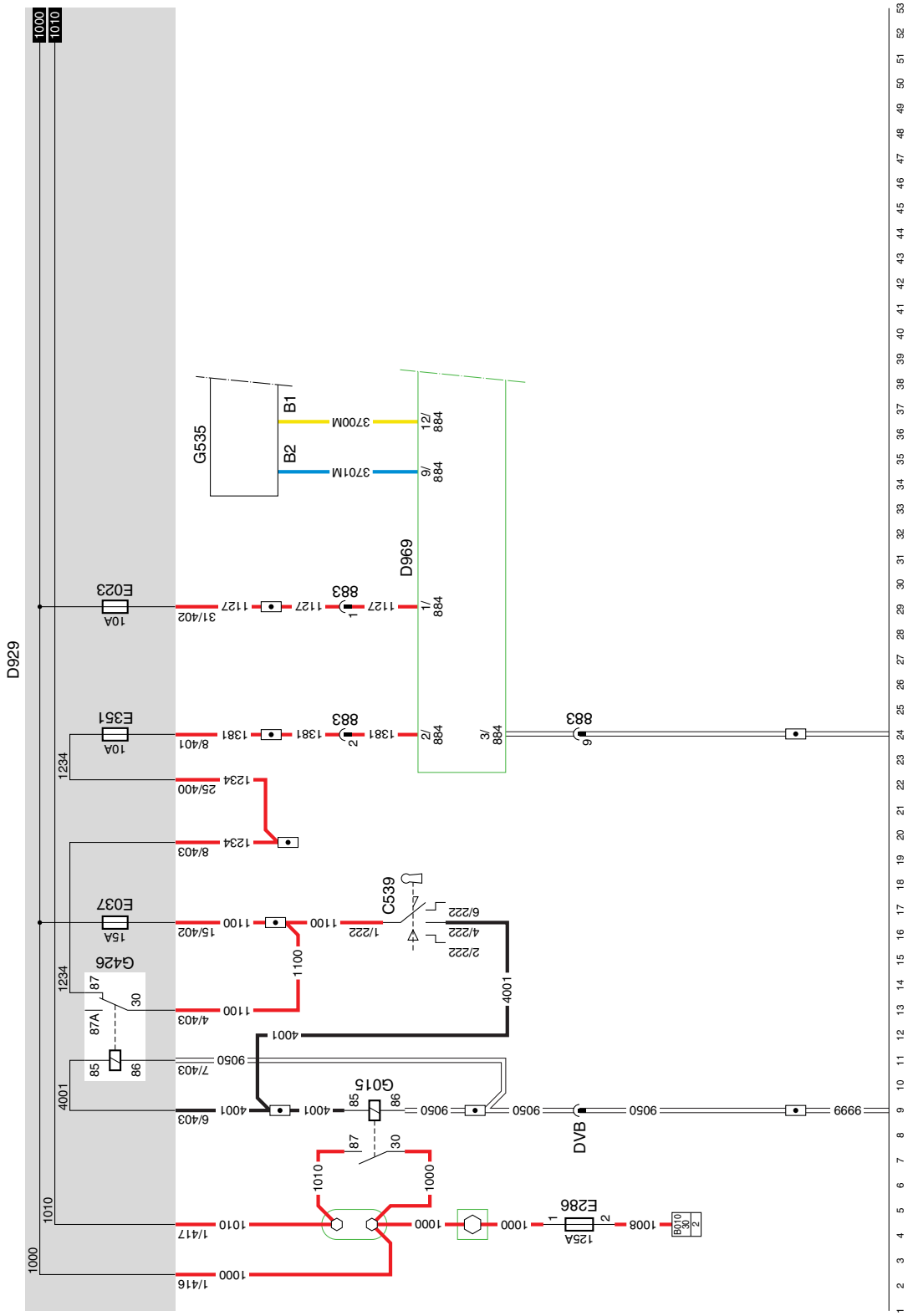

52 1358030/26 EL001388

10

https://truckmanualshub.com/

https://truckmanualshub.com/

CONTENTS

		Page	Date
1.	**INTRODUCTION**	1-1	200520
2.	**CHANGES IN THE ELECTRICAL SYSTEM FROM CHASSIS NUMBER 0E626381**	2-1	200520
2.1	Overview of the changes in the electrical system	2-1	200520
2.2	Circuit diagram 1358030/27-29	2-2	200520
2.3	Overview of basic code numbers in circuit diagrams 1358030/27-29	2-3	200520
2.4	Section diagrams from circuit diagrams 1358030/27-29	2-19	200520
3.	**CHANGES IN THE ELECTRICAL SYSTEM FROM CHASSIS NUMBER 0E646818**	3-1	200520
3.1	Overview of the changes in the electrical system	3-1	200520
3.2	Circuit diagrams 1358030/30-34	3-3	200520
3.3	Overview of basic code numbers in circuit diagrams 1358030/30-34	3-4	200520
3.4	Section diagrams from circuit diagrams 1358030/30-34	3-20	200520
4.	**CHANGES IN THE ELECTRICAL SYSTEM FROM CHASSIS NUMBER 0E659894**	4-1	200520
4.1	Overview of the changes in the electrical system	4-1	200520
4.2	Circuit diagrams 1358030/35-37	4-2	200520
4.3	Overview of basic code numbers in circuit diagrams 1358030/35-37	4-3	200520
4.4	Section diagrams from circuit diagrams 1358030/35-37	4-19	200520

https://truckmanualshub.com/

https://truckmanualshub.com/

1. INTRODUCTION

This main group includes the entire electrical system shown in the form of **circuit diagrams and the modified section diagrams.**

Circuit diagrams
All information that relates to the complete electrical system of the vehicle is found in the circuit diagrams with the exception of the connectors.

Section diagrams
Only the modified parts of the electrical system are shown on the section diagrams. These diagrams also contain the connectors.

Note:
For the location of the connectors in the vehicle, see “Location of connectors”.

https://truckmanualshub.com/

https://truckmanualshub.com/

2. CHANGES IN THE ELECTRICAL SYSTEM FROM CHASSIS NUMBER 0E626381

2.1 OVERVIEW OF THE CHANGES IN THE ELECTRICAL SYSTEM

Section diagram	Electrical system	Changes	From chassis number
B	Overview of earthing points	Various earthing points changed	0E626381
C	CAN overview	Diagram modified	0E626381
1	Main switch	Current limiter and PETREG version based on additional circuit diagram	0E626381
20	Search lighting	C900 added	0E626381
41	Airtronic cab heater (ACH-EA) with/without timer	Various connectors changed	0E626381
44	EBS-2	New	0E626381
51	AS Tronic	Wire 1380 added Wire 5715 removed	0E626381

The other section diagrams from circuit diagrams 1358030/27-29 contain no functional changes compared with circuit diagram 1358030/26.

https://truckmanualshub.com/

2.2 CIRCUIT DIAGRAM 1358030/27-29

This page can be used to make your own notes on the circuit diagram.

https://truckmanualshub.com/

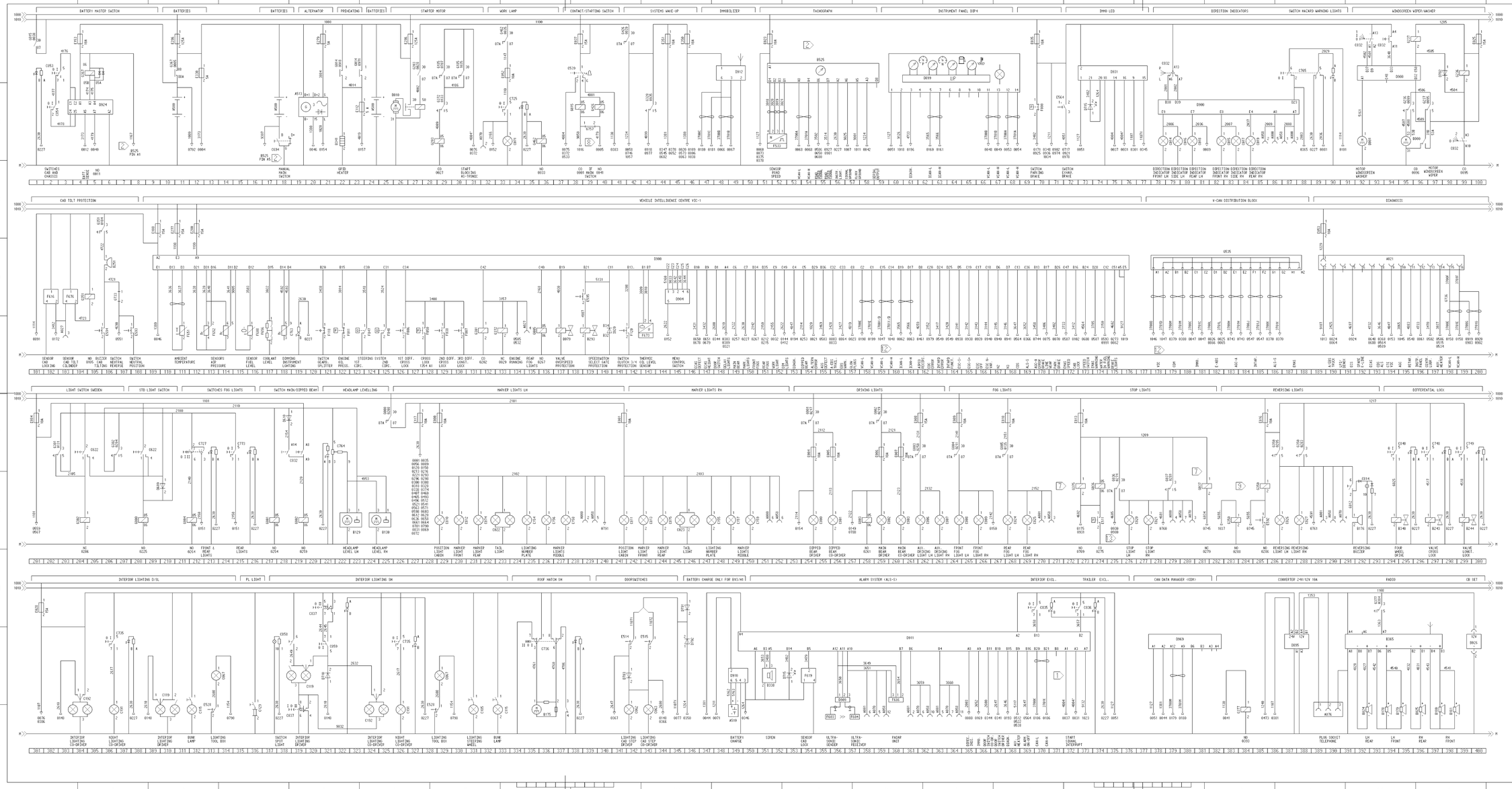

1 OPMERKING/note
STARTONDERBREKING ALLEEN VOOR BV2 EN BV3. NIET VOOR THATCHAM BV2 and BV3, not for Thatcham — Starter interrupt only for

6 OPMERKING/note
BIJ HOOFDSCHAKELAAR ADER 1167 OP PIN A1 MASSA SCHAKELAAR: 9307 OP PIN A5 — With mainswitch ADR: wire 1167 on pin A1 Mannual switch: 9307 on pin A5

7 OPMERKING/note
6037 EN 6375 ALLEEN TBV AGC MET RETARDER — 6037 and 6375 only for AGC with retarder

8 OPMERKING/note
BIJ TOEPASSING HOOFDSCHAKELAAR ADER 4179 OP 86 VAN 0815 EN 0426 — With mainswitch Wire 4179 to pin 86 of 0815 and 0426

9 OPMERKING/note
ACHTERUITRIJ VERLICHTING: BIJ AS-TRONIC ALTIEF HOOG OVERIDE V-BAKKEN ALTIEF LAAG — Reversing lights: with as-tronic active high other gearboxes active low

12 OPMERKING/note
BIJ AS-TRONIC 3700/3701X AANGESLOTEN OP VIC C15/C14 ZONDER AS-TRONIC 3700/3701D AANGESLOTEN OP VIC C15/C14 — With AS-tronic 3700/3701X connected to VIC C15/C14 no AS-tronic 3700/3701D connected to VIC C15/C14

13 OPMERKING/note
BIJ AS-TRONIC ADER 4605 NIET AANGESLOTEN OP 0836 87A — With AS-tronic wire 4605 not connected to 0836 87A

1358030 / 27-29
1v3

DAF

https://truckmanualshub.com/

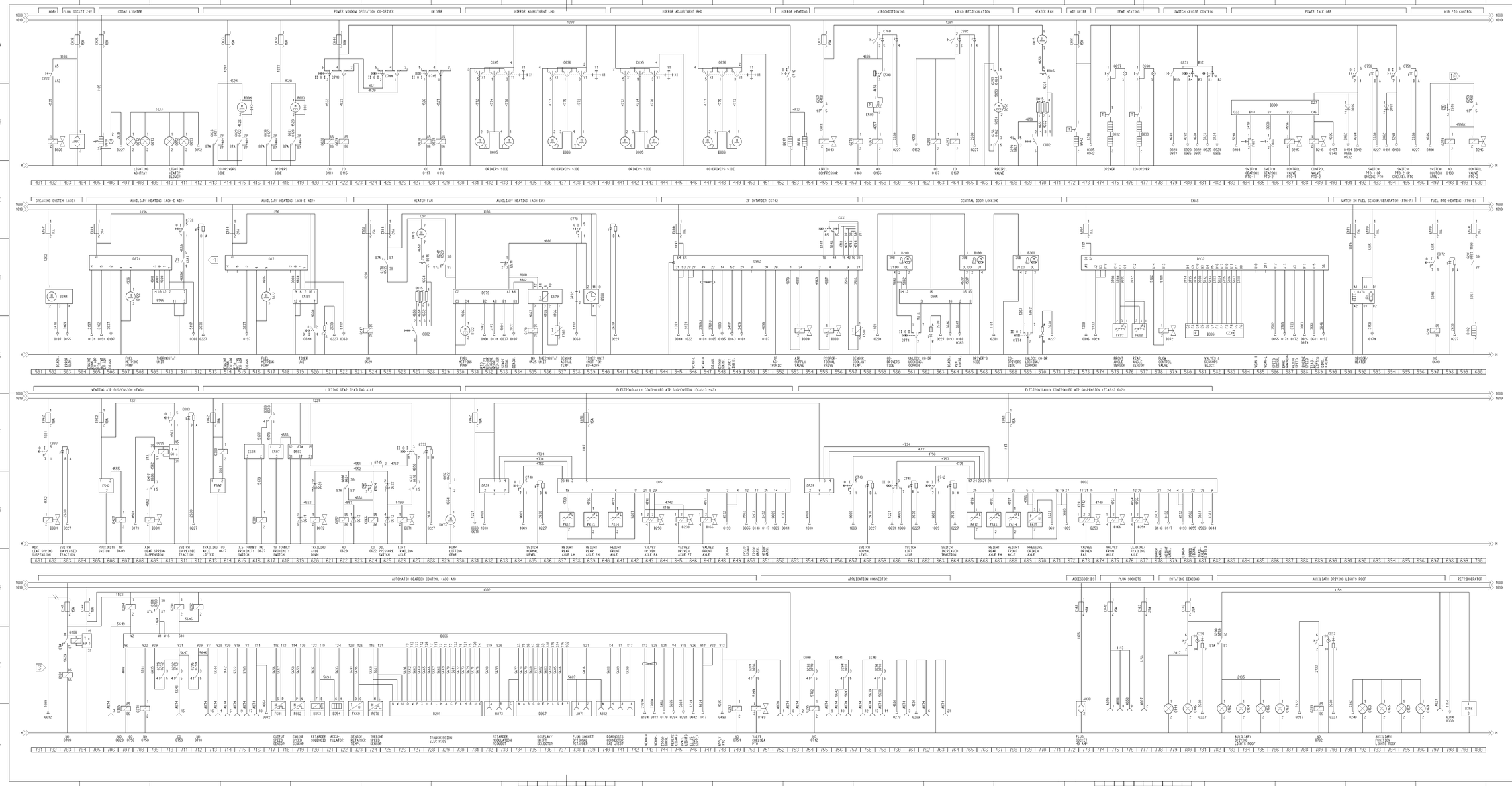

5 OPMERKING/note
BIJ TOEPASSING VAN EEN HOOFDSCHAKELAAR, VOEDING 1089 RECHTSTREEK2 VAN DE ACCU. BIJ VEILIGHEIDSEISEN: KOMPONENTEN E145, G180 EN G181 IN EEN EXPLOSIEVRIJE, VERDEELDOOS BIJ DE ACCU MONTEREN.

When a mainswitch is applied, power supply 1089 directly from the batteries
With safety requirements: components E145,G180 and G181 to be fitted in an explosionfree junctionbox near the batteries

4 OPMERKING/note
SLEUTEL SCHAKELAAR C861 ALLEEN BIJ PETREG UITVOERINGEN.

Key switch C861 only for petreg

16 OPMERKING/note
PTO BEVEILIGING ALLEEN VOOR HANDGESCHAKELDE BAKKEN

PTO protection only for manual gearboxes

1358030 / 27-29
2v3

DAF

https://truckmanualshub.com/

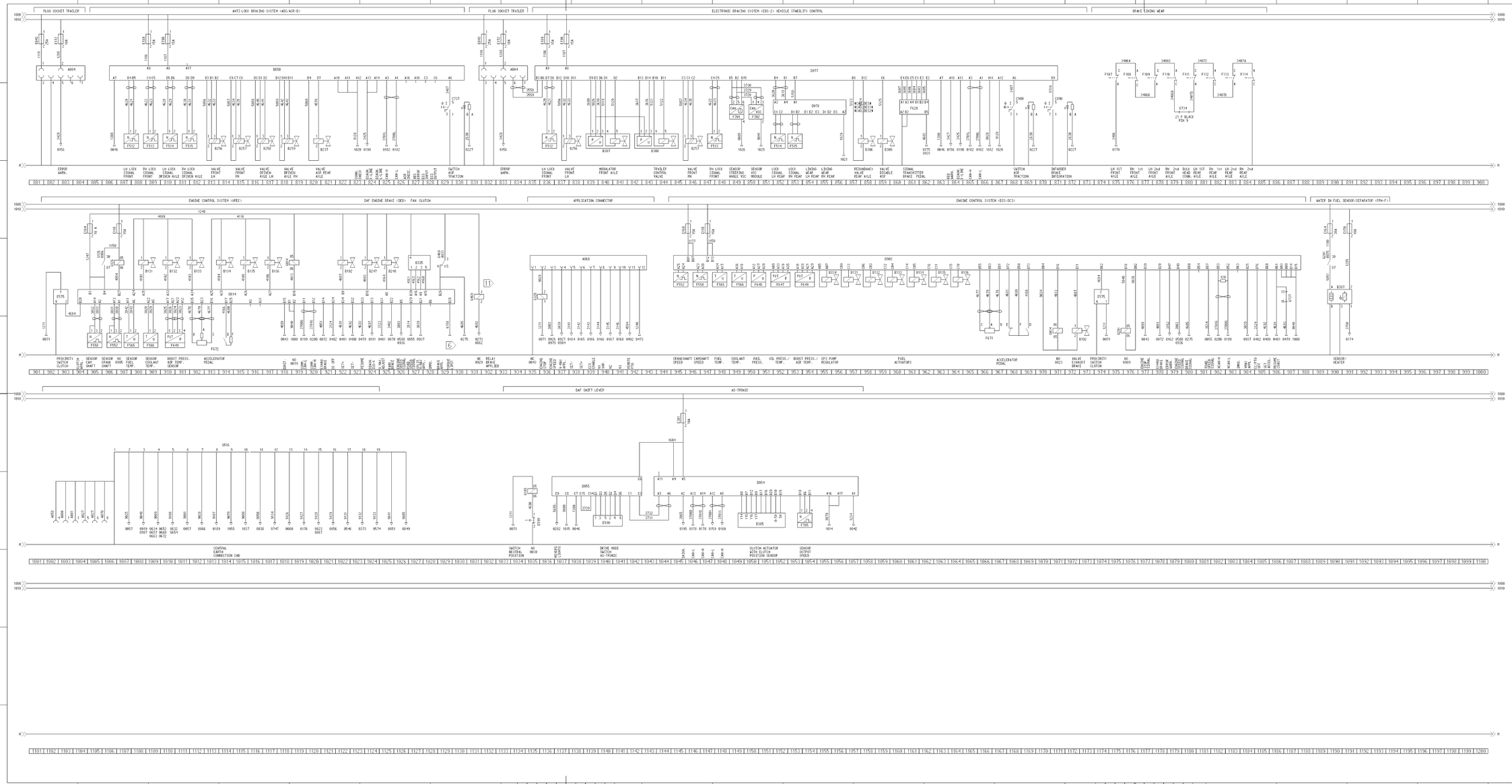

E OPMERKING/note
WIRE 6158 IN SCHUTBORD
TBV OPBOUWER

wire 6158 in firewall
prepared for body builder

11 OPMERKING/note
RELAIS 6469 REMLICHT SIGNAAL
ALLEEN BIJ AS-TRONIC

Relay 6469 brake light signal
only with AS-tronic

1358030 / 27-29
3v3

DAF

https://truckmanualshub.com/

2.3 OVERVIEW OF BASIC CODE NUMBERS IN CIRCUIT DIAGRAMS 1358030/27-29

Basic code number	Description	Number on search bar
A000	Drawn vehicle socket (7-pin)	86, 87, 238, 251, 279, 1003
A001	Rear fog lamp/reversing lamp socket (7-pin)	270, 289, 358, 361, 363, 775, 1004
A004	Plug socket, ABS/EBS, drawn vehicle (7-pin)	803, 834
A007	24V socket (2-pin)	403
A021	Diagnostics socket (16-pin)	194
A027	Socket, 24V accessories (4-pin)	103, 135, 777, 797, 1004, 1005
A032	AGC diagnostics socket	740
A038	Socket, 40A accessories (2-pin)	773
A058	Drawn vehicle socket (15-pin)	85, 87, 239, 252, 271, 280, 290, 359, 362, 364, 776, 1002
A068	Application connector, engine speed control	939
A070	Application connector, superstructure (8-pin)	32, 280, 291, 359, 362, 364, 775, 1006
A071	Automatic gearbox socket, retarder functions	738
A073	Automatic gearbox socket, operation	732
A074	Automatic gearbox socket, superstructure	706, 711, 713, 714, 715, 716, 752, 753, 755, 756, 757, 758, 759, 761, 762, 763
A076	Telephone socket	389
A500	Batteries (2x)	10, 17, 24
A510	Alarm system battery	349
A513	Alternator	19
B000	Windscreen wiper motor	96
B001	Windscreen wiper pump	93
B003	Electric drop glass operation motor, driver’s side	419
B004	Electric drop glass operation motor, co-driver’s side	415
B005	Mirror adjustment motor, left	432, 442
B006	Mirror adjustment motor, right	437, 448
B010	Starter motor	25

https://truckmanualshub.com/

Changes in the electrical system from chassis number 0E626381

***CF*65/75/85** series ≥0E621376

Basic code number	Description	Number on search bar
B015	4-speed heater fan	470, 471, 527, 528
B017	Mirror heating, driver's side	452
B018	Mirror heating, co-driver's side	453
B024	Loudspeaker, left	392
B025	Loudspeaker, right	396
B026	CB set	399
B028	Horn	402
B030	Cigar lighter, driver's side	406
B032	Seat heating, driver's side	475
B033	Seat heating, co-driver's side	477
B042	Air dryer heating element	473
B043	Air conditioning compressor	455
B071	Mechanical lifting-gear lifting valve	626
B072	Mechanical lifting-gear lowering valve	620
B073	Pump, mechanical lifting gear	629
B079	Low-range downshift protection valve	137
B084	Air suspension valve, bleeding	602, 609
B088	Intarder proportional valve	556
B089	Air supply valve, intarder	554
B122	Fuel metering pump, cab heater	508, 517, 531
B129	Left-hand headlamp height adjuster motor	223
B130	Right-hand headlamp height adjuster motor	225
B131	Solenoid valve, pump unit/injector, cylinder 1	909
B132	Solenoid valve, pump unit/injector, cylinder 2	910
B133	Solenoid valve, pump unit/injector, cylinder 3	912
B134	Solenoid valve, pump unit/injector, cylinder 4	914
B135	Solenoid valve, pump unit/injector, cylinder 5	916
B136	Solenoid valve, pump unit/injector, cylinder 6	917
B166	ECAS valve , front axle	647, 675
B169	PTO control valve, Chelsea	751
B175	Roof hatch motor	336
B176	Reversing buzzer	292

https://truckmanualshub.com/

Basic code number	Description	Number on search bar
B178	Loudspeaker, left	394
B179	Loudspeaker, left	395
B180	Loudspeaker, right	397
B181	Loudspeaker, right	398
B182	Water separator fuel heating element	599
B192	Exhaust brake valve	922, 973
B199	Central door locking motor, driver's side	565
B200	Central door locking motor, co-driver's side	560, 569
B201	Internal electrical components for automatic gearbox	728
B237	ASR selector valve	821
B238	ECAS-2 (6x2) valve, driven axle left/right, air supply (FT)	645
B243	Cross-axle differential lock control valve	297
B244	Longitudinal controlled slip differential control valve	299
B245	PTO control valve	487
B246	PTO control valve	489, 500
B247	Engine brake valve	924
B248	Engine brake valve	925
B250	ECAS valve, driven axle left/right, air supply (FA)	643
B251	Neutral position buzzer, tilting cab	106
B252	Recirculation valve	468
B253	ECAS valve, driven axle left/right, air supply	673
B254	ECAS valve, steered leading rear axle/trailing axle left/right, lifting bellows	677
B256	ABS valve	813, 838
B257	ABS valve	815, 846
B258	ABS valve	817
B259	ABS valve	818
B293	Gearbox gate protection valve	139
B306	Redundancy valve	858
B307	Front axle modulator	840
B308	Drawn vehicle control valve	843
B309	ASR cut-off valve	859

https://truckmanualshub.com/

Changes in the electrical system from chassis number 0E626381

***CF*65/75/85** series ≥0E621376

Basic code number	Description	Number on search bar
B335	Electronically controlled fan clutch	927
B338	Alarm system horn	351
B340	Four-wheel drive valve	295
B341	Glow element	22
B344	Automatic lubrication pump with integrated electronic unit	503
B353	Automatic gearbox control solenoid, retarder	720
B354	Automatic gearbox accumulator	721
B356	Cooler box	799
B365	Radio	394
B372	Valve block fluid flow	579
B378	Heating element for fuel filter/water separator	592
B385	AS Tronic clutch unit	1051
B386	Valve block steering cylinder	581
B387	Electronic unit, fuel heater/water separator (Fleetguard)	990
B525	Modular tachograph (MTCO/DTCO)	55
C000	Dipped beam, left	255
C001	Dipped beam, right	256
C002	Main beam, left	260
C003	Main beam, right	261
C006	Left spotlight	262
C007	Right spotlight	264
C008	Fog lamp, front left	265
C009	Fog lamp, front right	266
C010	Width marker light (headlight), left	229
C011	Width marker light (headlight), right	242
C012	Width marker light, front left	231
C013	Width marker light, front right	243
C014	Direction indicator lamp, front left	79
C015	Direction indicator lamp, front right	83
C016	Direction indicator lamp, side left	80
C017	Direction indicator lamp, side right	84
C018	Direction indicator lamp, rear left	81
C019	Direction indicator lamp, rear right	85

https://truckmanualshub.com/

Basic code number	Description	Number on search bar
C020	Stop light, left	277
C021	Stop light, right	278
C022	Tail light, left	232
C023	Tail light, right	245
C024	Fog lamp, rear left	268
C025	Fog lamp, rear right	270
C026	Reversing light, left	287
C027	Reversing light, right	288
C052	Heater fan light, left	411
C053	Heater fan light, right	412
C062	Cab stepwell lighting, driver's side	342
C063	Cab stepwell lighting, co-driver's side	344
C067	Left-hand tool compartment lighting	314, 329
C071	Work lamp	34
C072	Ashtray light, left	408
C073	Ashtray light, right	409
C074	Width marker light, rear left	232
C075	Width marker light, rear right	245
C115	Bunk light with switch	312, 333
C119	Interior lighting with switch, driver's side	310, 320
C129	Interior lighting with switch	316
C144	Rotating beam, left	779
C145	Rotating beam, right	781
C154	Rear number plate light, left (tractors)	235
C155	Rear number plate light, left (tractors)	248
C156	Width marker light, left, 1st (tractors)	237
C157	Width marker light, right, 1st (tractors)	249
C158	Width marker light, left, 2nd (tractors)	238
C159	Width marker light, right, 2nd (tractors)	251
C162	Roof spotlight	783
C163	Width marker light in roof spotlight	793
C164	Roof spotlight	784
C165	Width marker light in roof spotlight	794

https://truckmanualshub.com/

Changes in the electrical system from chassis number 0E626381 — ***CF*65/75/85** series ≥0E621376

Basic code number	Description	Number on search bar
C166	Roof spotlight	786
C167	Width marker light in roof spotlight	795
C168	Roof spotlight	787
C169	Width marker light in roof spotlight	797
C185	Light with switch	332
C191	Nightlight, centre	307, 327
C192	Interior lighting with switch, co-driver's side	304, 324
C539	Accessories/ignition/starter switch	38
C622	Switch, lighting	205, 209
C694	Main switch, mechanical	17
C695	Mirror adjustment switch, driver's side	433, 443
C696	Mirror adjustment switch, co-driver's side	438, 448
C697	Seat heating switch, driver's side	475
C698	Seat heating switch, co-driver's side	477
C716	Switch, rotating beams	781
C725	Work lamp switch	34
C727	Front/rear fog lamp switch	212
C735	Interior nightlight switch	307, 326
C736	Roof hatch switch	336
C737	ABS/ASR-D traction switch	830
C739	Mechanical lifting-gear switch	627
C740	ECAS switch, normal level	635, 657
C741	ECAS switch, axle lifting	661
C742	Traction assistance switch	663
C743	Electric drop glass switch, co-driver's side (driver's side door)	422
C744	Electric drop glass switch, co-driver's side (co-driver's side door)	425
C745	Electric drop glass switch, driver's side (driver's side door)	428
C746	Mirror heating switch	453
C748	Cross-axle differential lock operating switch	297
C749	Longitudinal controlled slip differential operating switch	299
C750	PTO operation switch	492

https://truckmanualshub.com/

Basic code number	Description	Number on search bar
C751	PTO operation switch	495
C760	Air conditioning switch	459
C763	Instrument lighting dimming potentiometer	119
C764	Potentiometer for headlamp height adjustment	222
C765	Switch, warning lamps (with LED search lighting)	88
C773	Rear fog lamp switch	215
C774	Central door locking switch	561, 569
C778	Cab heater switch	511, 538
C802	Switch, recirculation valve	464
C813	Spotlight switch, roof	790
C814	Reversing buzzer switch	292
C831	Cruise control/engine speed control/retarder stalk switch	480, 556
C832	Direction indicator/windscreen wiper stalk switch	79, 92, 93, 98, 219, 402
C835	Switch to turn off interior detection	370
C836	Switch to turn off superstructure/drawn vehicle loadspace detection	373
C837	Interior lighting switch	318,320
C840	Four-wheel drive switch	295
C844	Cab heater main switch	519
C853	Cab main switch	2
C854	Chassis main switch	3
C858	Interior spot lighting switch	318
C859	Interior lighting switch, roof console, driver’s side	321
C861	PETREG key switch	511
C872	Fuel filter/water separator operating switch	597
C882	Heater fan switch	470, 527
C883	FAG traction assistance switch	602, 611
C890	Switch to switch off integration of third brake	871
D503	Electronic unit, mechanical lifting gear	619
D529	Electronic unit, ECAS remote control	632, 654

https://truckmanualshub.com/

Basic code number	Description	Number on search bar
D609	Light switch diode	209
D610	Diode, main beam/dipped beam	218
D611	Diode for valve damping, lowering mechanical lifting gear	619
D612	Diode for valve damping, lifting mechanical lifting gear	625
D613	Diode for pump relay damping, mechanical lifting gear	623
D622	Diode for mechanical lifting gear, lifting lock	625
D623	Diode for mechanical lifting gear, lowering lock	620
D703	Diode for switching off cab heater/door, contact on driver's side	494
D705	Diode for switching off cab heater with running engine	491
D710	Interior lighting diode to prevent feedback to driver's side switch	321
D715	Alarm system LED	73, 352
D782	Diode to prevent door locking feedback, driver's side	97
D783	Diode, cab stepwell lighting, driver's side	341
D791	Door switch diode	345
D792	Door switch diode	346
D802	ECAS-2 (6x2) electronic unit	673
D814	UPEC electronic unit	914
D850	Electronic unit, ABS/ASR, D model	817
D851	Electronic unit, ECAS-3 (4x2)	644
D866	Electronic unit, AGC-A automatic gearbox control	729
D867	Automatic gearbox gear selection display	735
D871	Electronic unit for Airtronic D2 cab heater	508 517
D895	Electronic unit for (10 A) converter with power supply for radio memory	387
D899	DIP-4 instrument panel	62
D900	VIC electronic unit	81, 94, 143, 486
D902	Electronic unit, ZF intarder with CAN	550
D903	ECS-DC3 electronic unit	959
D904	Menu Control Switch, MCS	145
D905	Electronic unit for central door locking	562
D909	Electronic unit, alarm system, ultrasonic	356

https://truckmanualshub.com/

Basic code number	Description	Number on search bar
D910	Electronic unit, battery charger	349
D911	Electronic unit, ALS-S alarm system	361
D912	Electronic unit, immobiliser	49
D924	Electronic unit for main switch	5
D931	LED unit, immobiliser	75
D932	EMAS electronic unit	581
D954	AS Tronic gearbox modulator	1050
D955	AS Tronic gear lever unit	1038
D969	CAN Data Manager, CDM	379
D977	Electronic unit, EBS-2	854
D978	Rear axle modulator	854
D979	Electronic unit for Hydronic 10 cab heater	532
E000	Fuse, rear left width marker light	228
E001	Fuse, rear right width marker light	241
E004	Fuse, dipped beam, driver's side	254
E005	Fuse, dipped beam/warning lamp, co-driver's side	255
E006	Fuse, main beam, driver's side	259
E007	Fuse, main beam/warning lamp, co-driver's side	260
E008	Fuse, spotlights	261
E009	Fuse, front fog lamps	264
E010	Fuse, rear fog lamps	267
E013	Fuse, stop lights	272
E016	Fuse, reversing lights/gearbox neutral position/windscreen wiper motor/cross-axle differential lock	285
E023	Fuse, switch for cold start/tachograph clock/cab heater program clock/alarm system	51
E025	Fuse, windscreen wiper motor/headlamp washer/windscreen washer motor	100
E026	Fuse, cigar lighter/door switches/electronic unit, 24/12 V converter with power supply for radio memory	405
E028	Fuse, interior lighting/bunk lamps/central door lock	301
E031	Fuse, heater fan	455, 523
E033	Fuse, electric drop glass motor, co-driver's side	414

https://truckmanualshub.com/

Changes in the electrical system from chassis number 0E626381

***CF*65/75/85** series ≥0E621376

Basic code number	Description	Number on search bar
E034	Fuse, electric drop glass motor, driver's side	417
E035	Fuse, instruments and warning lamps/parking brake switch	69
E036	Fuse, 24V socket	403
E037	Fuse, ignition switch	38
E043	Fuse, drawn vehicle ABS/EBS	801, 831
E044	Fuse, mirror heating/electric mirror adjustment/electric drop glass operation	421
E048	Fuse, drawn vehicle power supply	774
E051	Fuse, ECAS/EMAS	573, 638, 667
E052	Fuse, ECAS remote control/work lamp	33
E053	Fuse, diagnosis connector (16-pin)/LED unit/alarm system	189
E062	Fuse, ECAS/EMAS mechanical lifting gear	601, 605, 613, 631
E084	Fuse, lighting	201
E091	Fuse, air dryer heating element/stalk switch/PTO/clutch switch/engine speed control application connector	472
E108	Fuse, VIC	109
E112	Fuse, glow warning lamp	23
E114	Fuse, cab heater (Eberspächer)/warning lamps	505, 514, 525
E117	Fuse, search lighting	227
E118	Fuse, UPEC/ECS-DC3 supply voltage	906, 947
E142	Fuse, accessories before contact	780
E144	Fuse, AGC-A4 automatic gearbox	704
E145	Fuse, AGC-A4 automatic gearbox	703
E153	Fuse, main switch for timer/engine stop/main switch power supply	4
E157	Fuse, automatic lubrication	501
E160	ECS-DC3 fuse	945
E163	Fuse, accessories after contact (connector A027)/rotating beams/roof hatch	777
E164	Fuse for fuel heater before contact	599, 989
E168	Fuse, accessories/microwave	772

https://truckmanualshub.com/

Basic code number	Description	Number on search bar
E170	Fuse, fuel heater after contact	592, 597, 991
E171	Fuse, electronic unit for fuel filter/water separator, Racor	591
E172	Fuse, drawn vehicle ABS/EBS	802, 833
E184	Fuse, UPEC	904
E189	Fuse, rear axle EBS	808, 836
E190	Fuse, front axle EBS	810, 837
E199	Fuse, ZF intarder	545
E277	Fuse, VIC	110
E279	Fuse, generator voltage control	20
E280	Fuse, VIC	112
E286	Main fuse	10, 26
E301	Fuse, AS Tronic	1045
E330	Fuse, main switch, “sens” wire	12
E350	Fuse, various electrical systems	45
E351	Fuse, various electrical systems	44
E507	Proximity switch for axle-load protection lifting gear (10 tons)	617
E508	Temperature switch for air conditioning compressor	459
E509	Air conditioning operating switch, high/low pressure	458
E511	Stop light operating switch	274
E514	Operating switch for stepwell/interior lighting, driver’s side door switch	341
E515	Operating switch for stepwell/interior lighting, co-driver’s side	343
E524	Mechanical lifting-gear operating switch, oil pressure limit switch	624
E528	Operating switch for left-hand tool compartment lighting	313, 328
E542	Proximity switch for axle load protection (13 tons)	605
E564	Operating switch, engine brake	72
E566	Operating switch for Eberspächer cab heater thermostat (DILC)	509
E570	Pneumatic switch, clutch PTO N10	498
E571	Thermo 90/Hydronic 10 cab heater operating switch	534

https://truckmanualshub.com/

Basic code number	Description	Number on search bar
E575	Proximity switch, clutch	902, 974
E579	Operating switch for thermostat/cab heater, fan, Eberspächer (water)	536
E580	Operating switch for thermostat/cab heater, fan, Eberspächer (timer)	540
E581	Operating switch/combination clock, Eberspächer Airtronic cab heater	519
E584	Proximity switch for axle-load protection lifting gear (7.5 tons)	615
E590	AS Tronic selector switch	1040
E592	Reversing light operating switch	286
E593	Neutral position switch	108
E594	Operating switch for neutral position/reverse gear	106
E595	Gearbox gate protection operating switch	139
E599	Neutral position switch	1036
F000	Control switch for parking brake	70
F006	Control switch for differential lock, 1st differential	127
F007	Control switch for differential lock, 3rd differential	131
F011	Control switch for engine oil pressure	123
F038	Control switch for differential lock, 2nd differential	129
F047	Control switch for steering system (1st circuit)	124
F048	Control switch for steering system (2nd circuit)	125
F050	Control switch for differential lock pressure, 1st and 2nd differentials	128
F087	Control switch, gearbox PTO	485
F088	Control switch, gearbox PTO	486
F097	Proximity switch for trailing axle mechanical lifting gear	613
F107	Brake pad wear switch, front left	874
F108	Brake pad wear switch, front right	876
F109	Brake pad wear switch, front left, 2nd front axle	877
F110	Brake pad wear switch, front right, 2nd front axle	879
F111	Brake pad wear switch, rear left	880
F112	Brake pad wear switch, rear right	881
F113	Brake pad wear switch, rear left, 2nd rear axle	882
F114	Brake pad wear switch, rear right, 2nd rear axle	884

https://truckmanualshub.com/

Basic code number	Description	Number on search bar
F118	Control switch for splitter signalling	121
F120	Clutch protection switch	142
F509	Cab temperature sensor of cab heater	537
F512	Wheel speed sensor, front axle, left	807, 836
F513	Wheel speed sensor, front axle, right	809, 847
F514	Wheel speed sensor, driven axle, left	810
F515	Wheel speed sensor, driven axle, right	811
F533	Speed sensor (4-pin, 1st)	52
F544	Coolant temperature sensor for secondary retarder	558
F552	Crankshaft sensor	906
F558	Camshaft sensor	905
F565	Sensor, fuel temperature	907
F566	Sensor, engine coolant temperature	909
F601	Sensor, AGS	717
F602	Sensor, AGS	719
F608	Sensor, fuel level	116
F612	Height sensor, ECAS, rear axle, left	637, 665
F613	Height sensor, ECAS, rear axle, right	639, 666
F614	Height sensor, ECAS, front axle	640, 668
F615	ECAS pressure sensor, driven axle, left/right	669
F616	Cab locking sensor	102
F619	Cab locking sensor, alarm system	354
F628	EBS foot brake valve	861
F649	Boost pressure and air inlet temperature sensor	910
F651	Ambient temperature sensor	112
F652	Air pressure sensor	113
F656	Coolant level sensor	117
F669	Retarder temperature sensor, automatic gearbox	723
F670	Automatic gearbox turbine speed sensor	724
F671	Sensor, accelerator pedal, ECS-DC3	966
F672	UPEC accelerator pedal sensor	913
F673	Sensor, engine oil level and temperature	143

https://truckmanualshub.com/

Changes in the electrical system from chassis number 0E626381

***CF*65/75/85** series ≥0E621376

Basic code number	Description	Number on search bar
F676	Cab locking sensor	103
F686	Alarm system sensor, radar	360
F687	Angle sensor, front axle, EMAS	575
F688	Angle sensor, rear axle, EMAS	576
F701	Steering angle sensor	849
F702	VSC module	850
F705	Speed sensor	1053
G000	Relay, tail light/width marker light/search lighting	208, 225
G001	Relay, dipped beam	217, 254
G002	Relay, main beam	219, 259
G003	Relay, spotlights	258, 261
G004	Relay, front fog lamp	211, 264
G005	Relay, rear fog lamp	135, 267
G014	Relay, glowing	22, 23, 918, 971
G015	Relay, contact	1, 38
G028	Electric drop glass operation relay, co-driver’s side	413, 421
G029	Electric drop glass operation relay, co-driver’s side	415, 422
G030	Relay, electric drop glass operation, driver’s side	417, 427
G031	Relay, electric drop glass operation, driver’s side	418, 428
G036	Relay, stop light	274, 275
G037	Stop light micro relay for AGC with retarder	279, 281
G052	Relay, mechanical lifting-gear motor	622, 629
G066	Relay, mechanical lifting-gear takeover	622, 624
G095	Traction assistance relay, 60 sec. bleeding	609
G126	UPEC/ECS-DC3 supply relay	905, 906
G170	Relay, cab heater fan	525, 535
G180	Time relay power supply, Allison, 12V	703
G181	Takeover relay power supply, Allison, 12V	703, 709
G185	Starting circuit interrupter relay	29, 30, 707, 1035
G201	Fuel heating relay, EFPH	597, 599, 975, 989
G203	Starter motor takeover relay	27, 28
G236	Relay, windscreen wiper (speed 1 or 2)	95, 99
G237	Relay, windscreen wiper (automatic zero position)	95, 96

https://truckmanualshub.com/

Basic code number	Description	Number on search bar
G247	Relay, heater fan, Eberspächer Hydronic cab heater	523, 529
G257	Recirculation valve relay	464, 467
G258	Recirculation valve relay	462, 467
G259	PTO operation takeover relay	498, 499
G267	Air conditioning relay	455, 458
G279	Air conditioning relay	457, 468
G291	Relay, automatic gearbox	710, 759
G292	Relay, automatic gearbox	710, 712
G293	Relay, automatic gearbox	749, 754
G294	Relay, automatic gearbox	707, 756
G295	Relay, automatic gearbox	712, 754
G299	Relay, roof spotlights	782, 789
G301	Relay, light D+	131, 202
G302	Relay for Swedish lighting	204, 206
G328	Relay, engine stop	43, 935
G350	Reversing light relay, automatic gearbox	283, 285, 286, 288
G351	Cab tilt protection relay	104, 105
G367	Relay, main switch power supply	4, 10
G368	Relay, main switch earth	6, 10
G371	Automatic gearbox relay, superstructure	708, 750
G372	Starting circuit interrupter relay	29, 133
G375	Stop light relay for AGC with retarder	272, 709
G377	Relay, accessories power supply for radio	384, 393
G380	Relay, mechanical lifting axle	613, 617
G381	Relay, mechanical lifting axle	616, 627
G426	Relay, contact	39, 41
G427	FAG traction assistance relay	606, 609
G462	Relay for work lamp	33, 35
G469	Relay, braking signal	929, 931
G516	Central cab earth, co-driver’s side	1014
G535	CAN distribution block	183
G732	Through-connection for cab heater	538

https://truckmanualshub.com/

Changes in the electrical system from chassis number 0E626381

***CF*65/75/85** series ≥0E621376

Basic code number	Description	Number on search bar
G733	Through connection for intarder neutral position	107
G734	Through-connection for brake lining wear	880
G736	V-CAN connection	198
G737	Through-connection, ECS-DC3 speed control	987
G745	Through-connection, mechanical lifting gear	625
G757	Through-connection for main switch	39
I020	Diode, gearbox gate protection	141

https://truckmanualshub.com/

2.4 SECTION DIAGRAMS FROM CIRCUIT DIAGRAMS 1358030/27-29

B Overview of earthing points
C CAN overview
1 Main switch
20 Search lighting
41 Airtronic cab heater (ACH-EA) with/without timer
44 EBS-2
51 AS Tronic

https://truckmanualshub.com/

B OVERVIEW OF EARTHING POINTS

This section diagram gives an overview of all the earth connections, with wire markings and connector points.

VARIANTS

Location

11	Connector 580: superstructure connection, accessories
18	Connector 482: cab heater ACH-H Connector 582: cab heater ACH-E
59	Connector 644: only for AGC
67	Connector 869: only for AS Tronic
69	Connector 403: only for AS Tronic
71	Connector 868: only for AS Tronic
76	Connector 860: loop-through to ECAS

https://truckmanualshub.com/

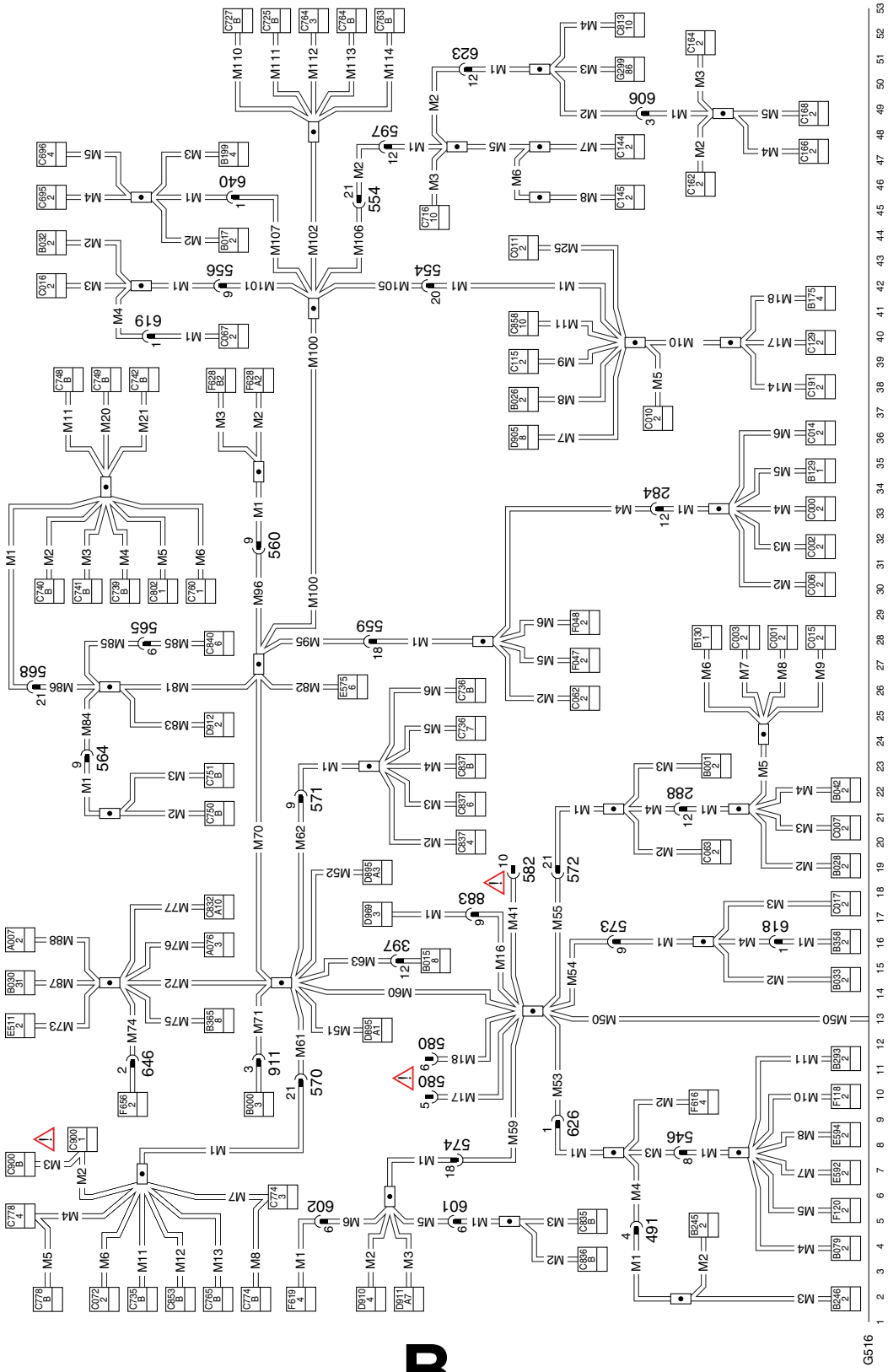

https://truckmanualshub.com/

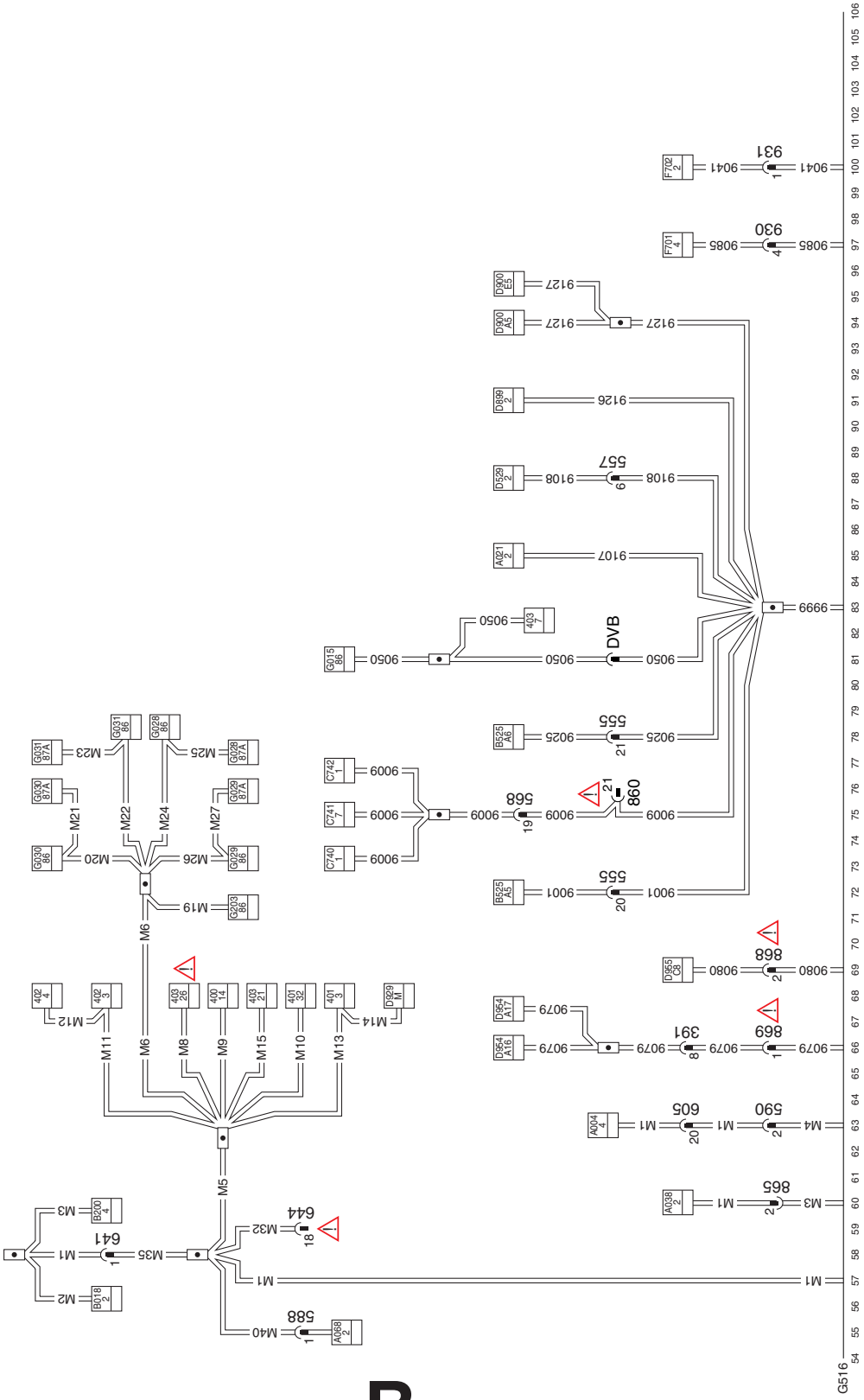

https://truckmanualshub.com/

https://truckmanualshub.com/

C CAN OVERVIEW

This section diagram gives an overview of all the CAN connections, with wire markings and connector points.

SEE THE SYSTEM MANUAL FOR MORE INFORMATION

VARIANTS

Location

11	only for AS Tronic. If AS Tronic is **NOT** fitted, wire 3701 direct from A8 to C14 without in-line connectors.
25	D814: UPEC electronic unit or D903: electronic unit, ECS-DC3
64	Connector 873 only on vehicle type FA D880 for EBS or D941 for ABS/ASR-D

https://truckmanualshub.com/

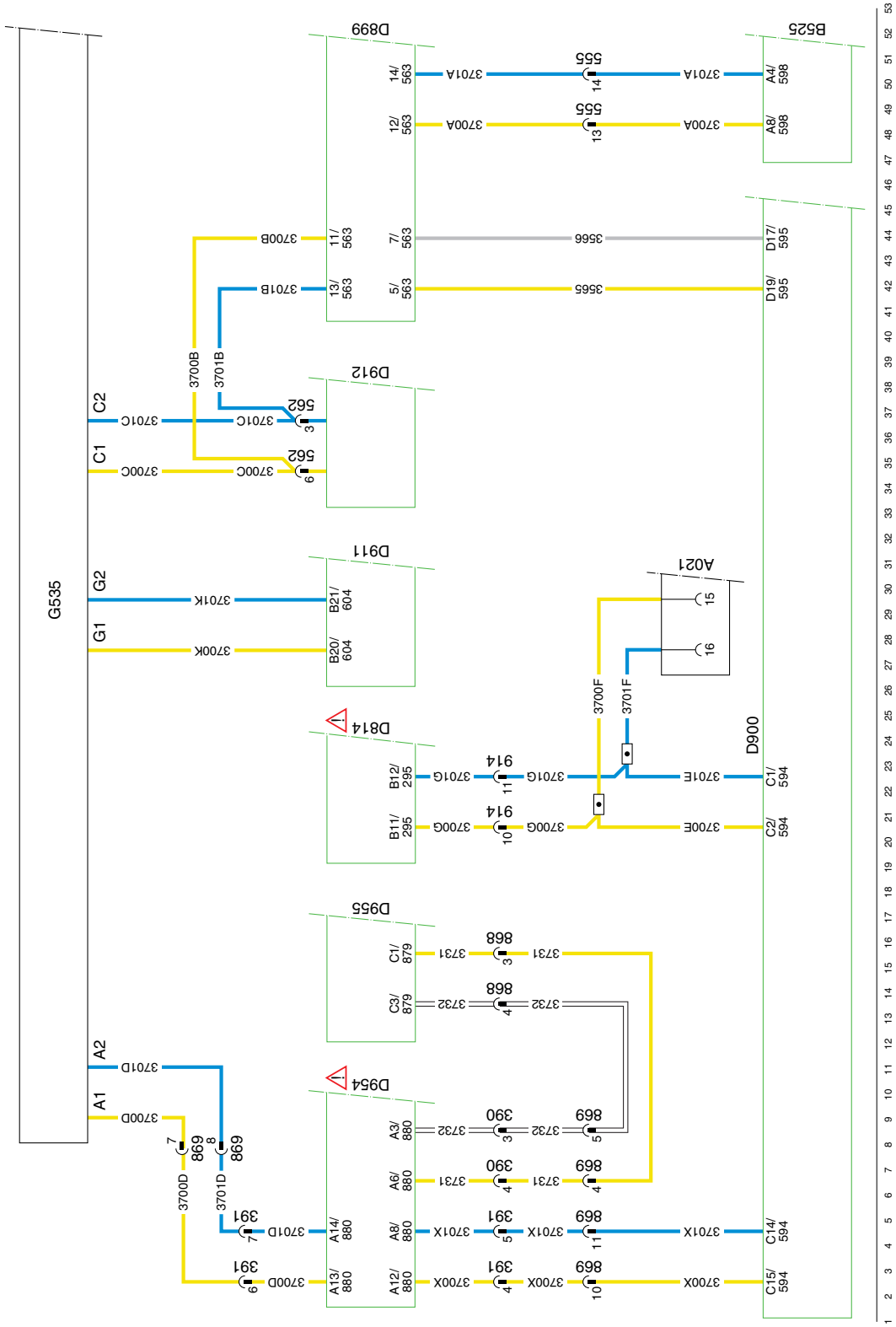

C 1358030/27-29 EL001399

11

https://truckmanualshub.com/

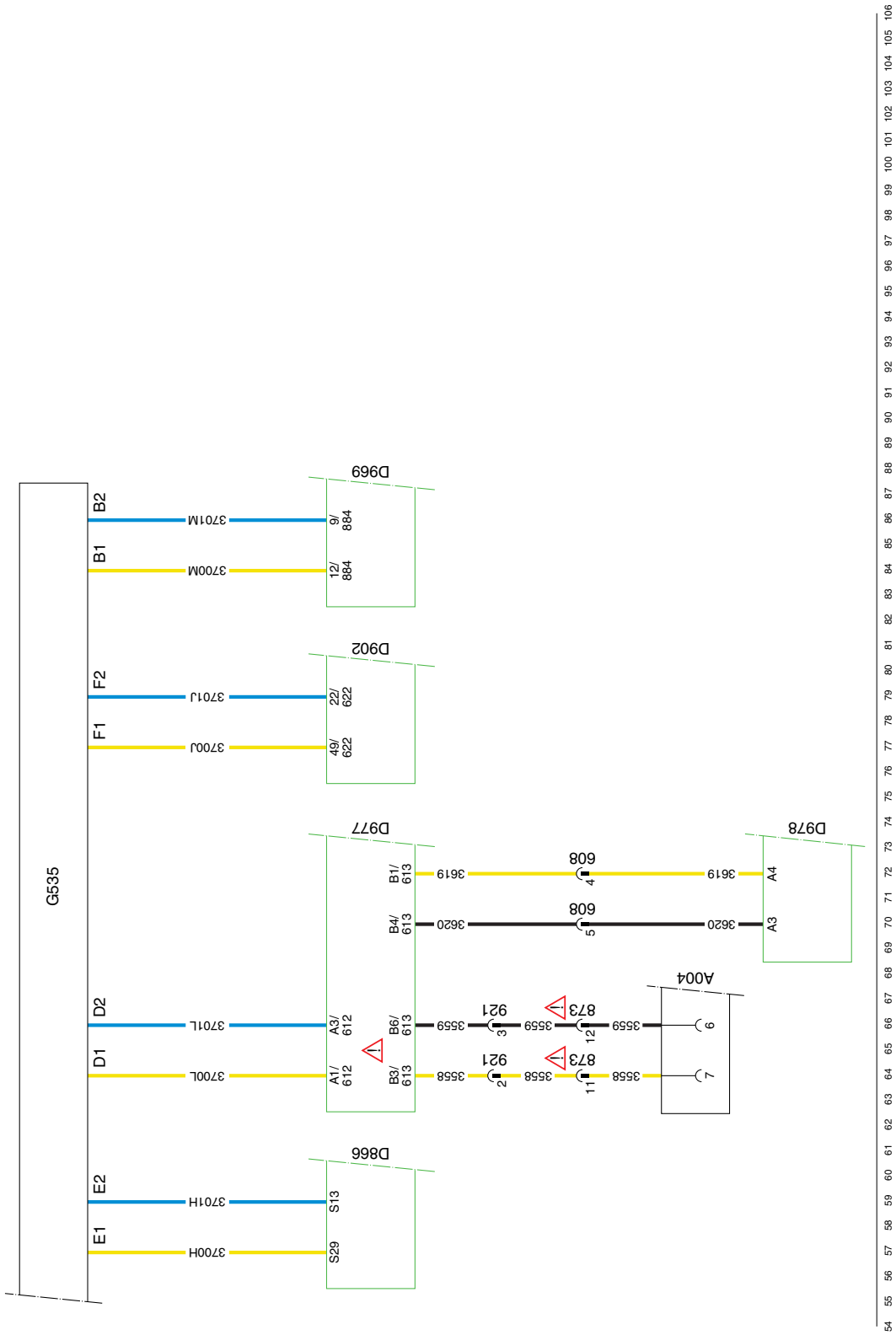

C

1358030/27-29

EL001400

https://truckmanualshub.com/

https://truckmanualshub.com/

Changes in the electrical system from chassis number 0E626381

***CF*65/75/85** Serie ≥0E621376

MAIN SWITCH FOR VLG/ADR
If the vehicle has an Allison gearbox and the system must meet specific safety requirements, wire no. 1009 (Allison power supply) should be connected to connection 88a of relay G367.

Basic code number	Description
A500	Batteries
A513	Integrated voltage regulator generator
B525	Modular tachograph, MTCO
C853	Cab main switch
C854	Chassis main switch
D826	Electronic unit for VLG current limiter
D900	CF 65/75/85 VIC electronic unit
D924	Electronic unit for main switch
E117	Fuse, search lighting
E153	Fuse, main switch for timer/engine stop/main switch power supply
E286	Main fuse
E330	Fuse, main switch, “sens” wire
G367	Main switch relay, power supply
G425	Main switch relay

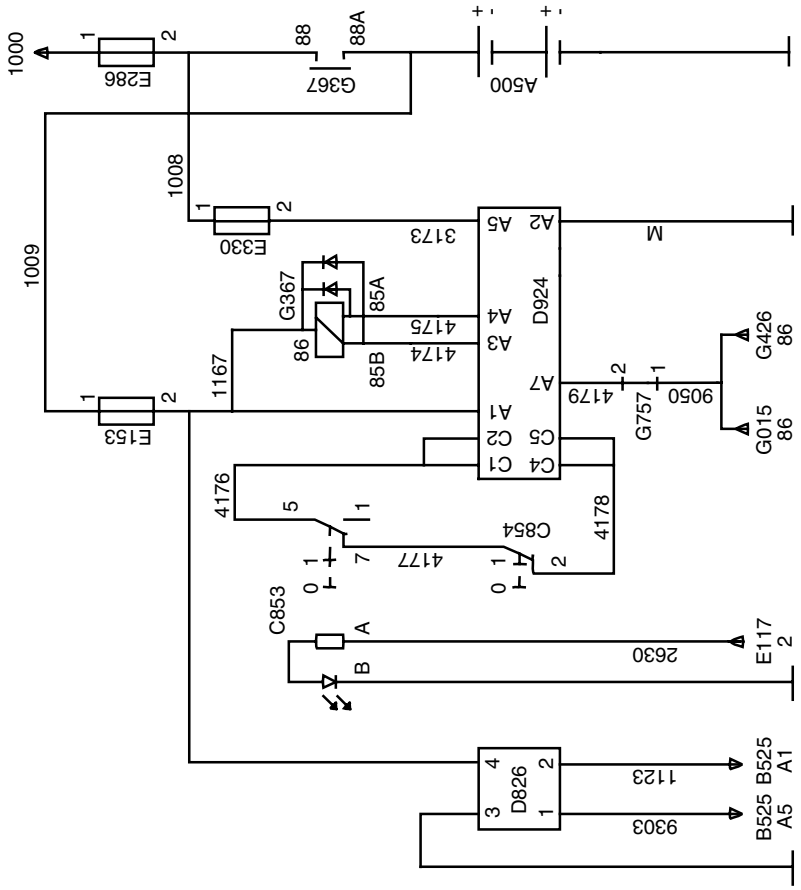

https://truckmanualshub.com/

Relay, main switch power supply
Relay G367 is a bi-stable relay. If one of the two coils is briefly energised, the relay will remain in this position. If the other coil is energised, the relay will switch over and then remain in the new position.

Electrically closing the main switch
The main switch (D924) can be closed:
- electrically in the cab using switch C853
- electrically on the chassis using switch C854

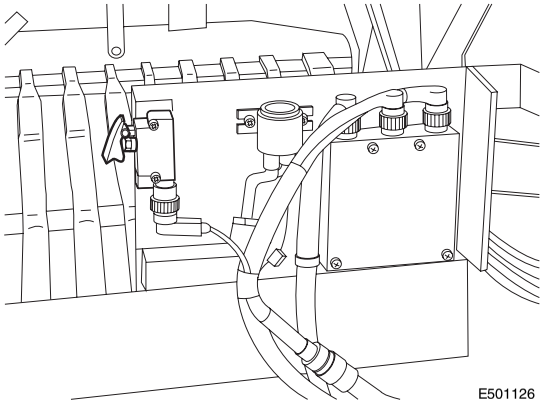

ATTENTION: Switches C853 and C854 are connected in series. When C853 or C854 is switched on, the other switch must be in the "main switch on" position.
Switch C853 (main switch in cab) connects the C1 and C2 connections to the C4 and C5 connections via wire 4176, contacts 5-7 of switch C853, wire 4177, contacts 1-2 of switch C854 and wire 4178.
Relay G367 is immediately energised through wire 4174 and connection point A3 (A3 is connected to earth in the unit for 0.5 seconds). This connects point 88a to 88 of relay G367. The positive terminal of the batteries is now connected to the vehicle's power supply.
Immediately after switch C853 closes, connection point C2 is internally connected to point A7.

Connection point A5 is connected to the positive terminal via wire 3173 after connection point 88 of relay G367. This connection transmits a signal to the ECU to indicate that relay G367 has switched.

Closing the main switch electrically on the chassis

NOTE: Switch C853 must be in the "main switch on" position (connection between contacts 5 and 7).

Switch C854 (switch for main switch on the chassis) connects the C1 and C2 connections to the C4 and C5 connections via wire 4176, contacts 5-7 of switch C853, wire 4177, contacts 1-2 of switch C854 and wire 4178.
Relay G367 is immediately energised through wire 4174 and connection point A3 (A3 is connected to earth in the unit for 0.5 seconds). This connects point 88a to 88 of relay G367. The positive terminal of the batteries is now connected to the vehicle's power supply.
Immediately after switch C854 closes, connection point C2 is internally connected to point A7.

Connection point A5 is connected to the positive terminal via wire 3173 after connection point 88 of relay G367. This connection transmits a signal to the ECU to indicate that relay G367 has switched.

The main switch (D924) can be opened:
- electrically in the cab using switch C853
- electrically on the chassis using switch C854

Opening the main switch electrically in the cab

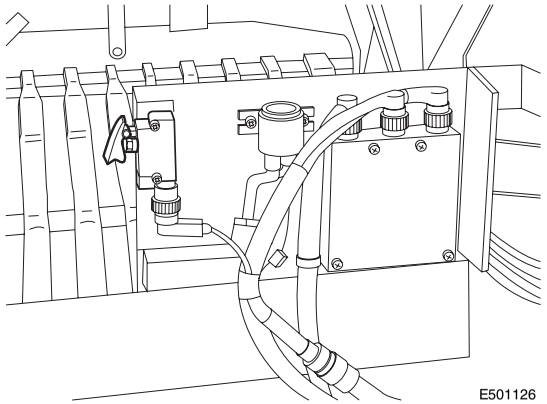

NOTE: Switch C854 must be in the "main switch on" position (connection between contacts 1 and 2).

Switch C853 (switch for main switch in cab) disconnects the C1 and C2 connections from the C4 and C5 connections via wire 4176, contacts 5-7 of switch C853, wire 4177, contacts 1-2 of switch C854 and wire 4178.

https://truckmanualshub.com/

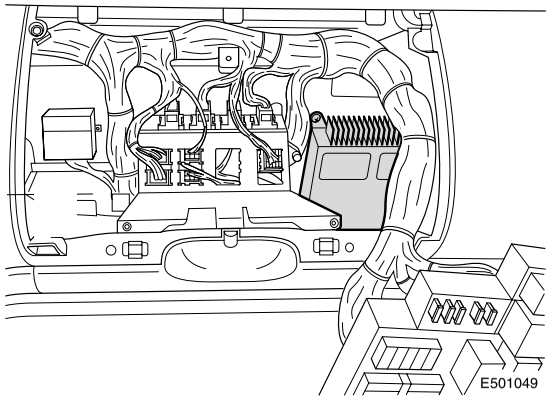

VARIANTS

Location

22	Attach wire 4176 to pin 11 of connector 570.
25	Attach wire 4177 to pin 12 of connector 570.

MECHANICAL MAIN SWITCH

When C694 (mechanical main switch) is operated, connections B and G are connected. The earth of the batteries is now connected to the chassis. The earth connection of B525 (MTCO) is independent of the position of the main switch.

Two actions are carried out immediately after switch C853 is opened:

1. connection point A7 is disconnected from earth (A2) in the unit. If the engine is running, it is switched off.
2. after a delay of approx. 6 seconds, relay G367 is connected to earth in the unit for approx. 0.5 seconds via wire 4175 and connection point A4. This breaks the connection between points 88a and 88 of relay G367. The batteries are now disconnected from the vehicle's power supply.

Connection point A5 is connected to the positive terminal via wire 3173 and fuse E330 after connection point 88 of relay G367. This connection transmits a signal to the ECU to indicate that relay G367 has switched.

Opening the main switch electrically on the chassis

NOTE: Switch C853 must be in the "main switch on" position (connection between contacts 5 and 7).

Switch C854 (main switch in cab) disconnects the C1 and C2 connections from the C4 and C5 connections via wire 4176, contacts 5-7 of switch C853, wire 4177, contacts 1-2 of switch C854 and wire 4178.

Two actions are carried out immediately after switch C854 is opened:

1. connection point A7 is disconnected from earth (A2) in the unit. If the engine is running, it is switched off.
2. after a delay of approx. 6 seconds, relay G367 is connected to earth in the unit for approx. 0.5 seconds via wire 4175 and connection point A4. This breaks the connection between points 88a and 88 of relay G367. The batteries are now disconnected from the vehicle's power supply.

Connection point A5 is connected to the positive terminal via wire 3173 and fuse E330 after connection point 88 of relay G367. This connection transmits a signal to the ECU to indicate that relay G367 has switched.

Note:
When one of the switches (C853 or C854) that activate the electronic unit (close main switch) is operated, relay G367 is activated after approximately 3 seconds. If one of the switches is operated again within the 3 seconds, the electronic unit (D924) will select the priority "main switch ON".

https://truckmanualshub.com/

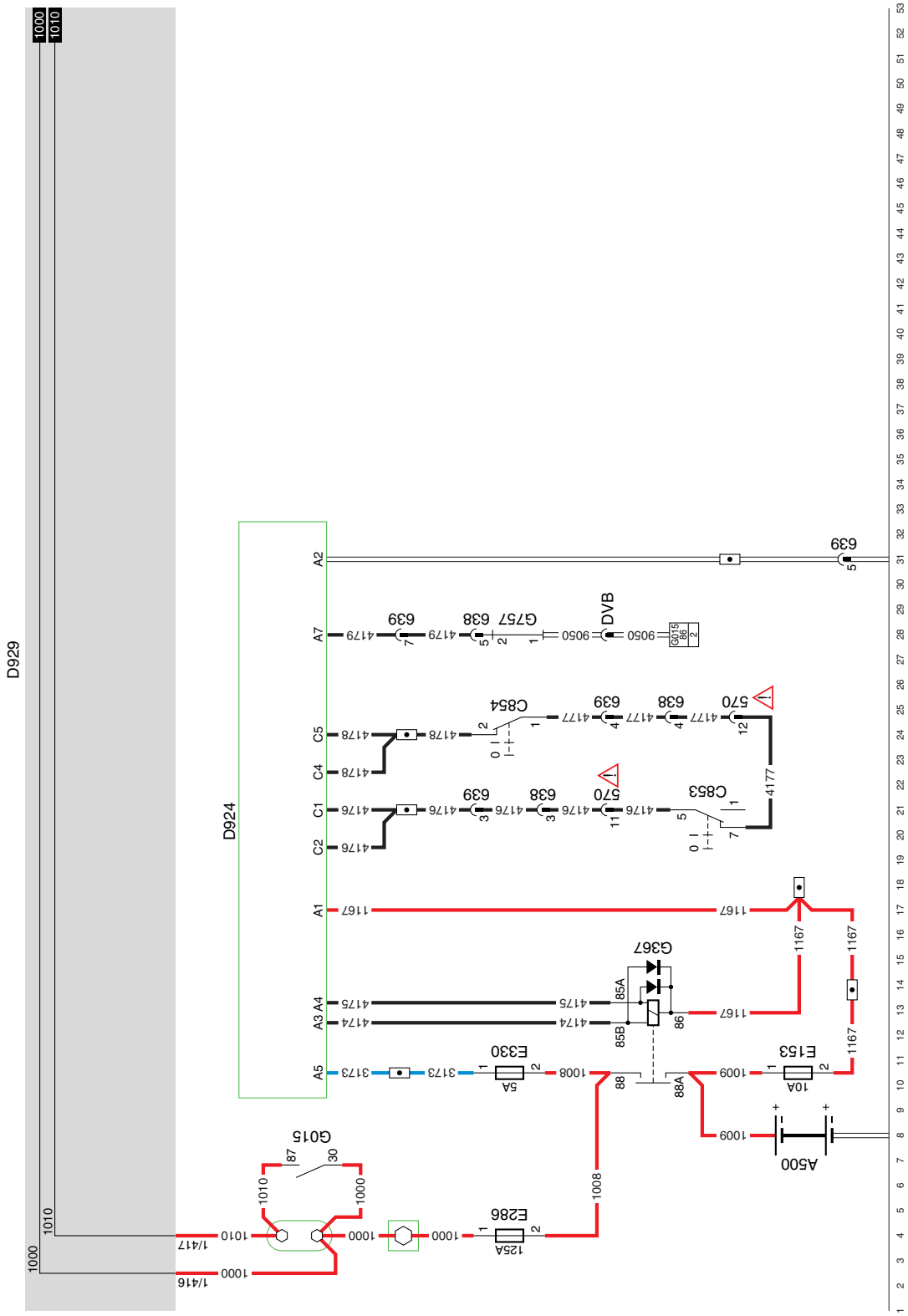

1 1358030/27-29

EL001391

https://truckmanualshub.com/

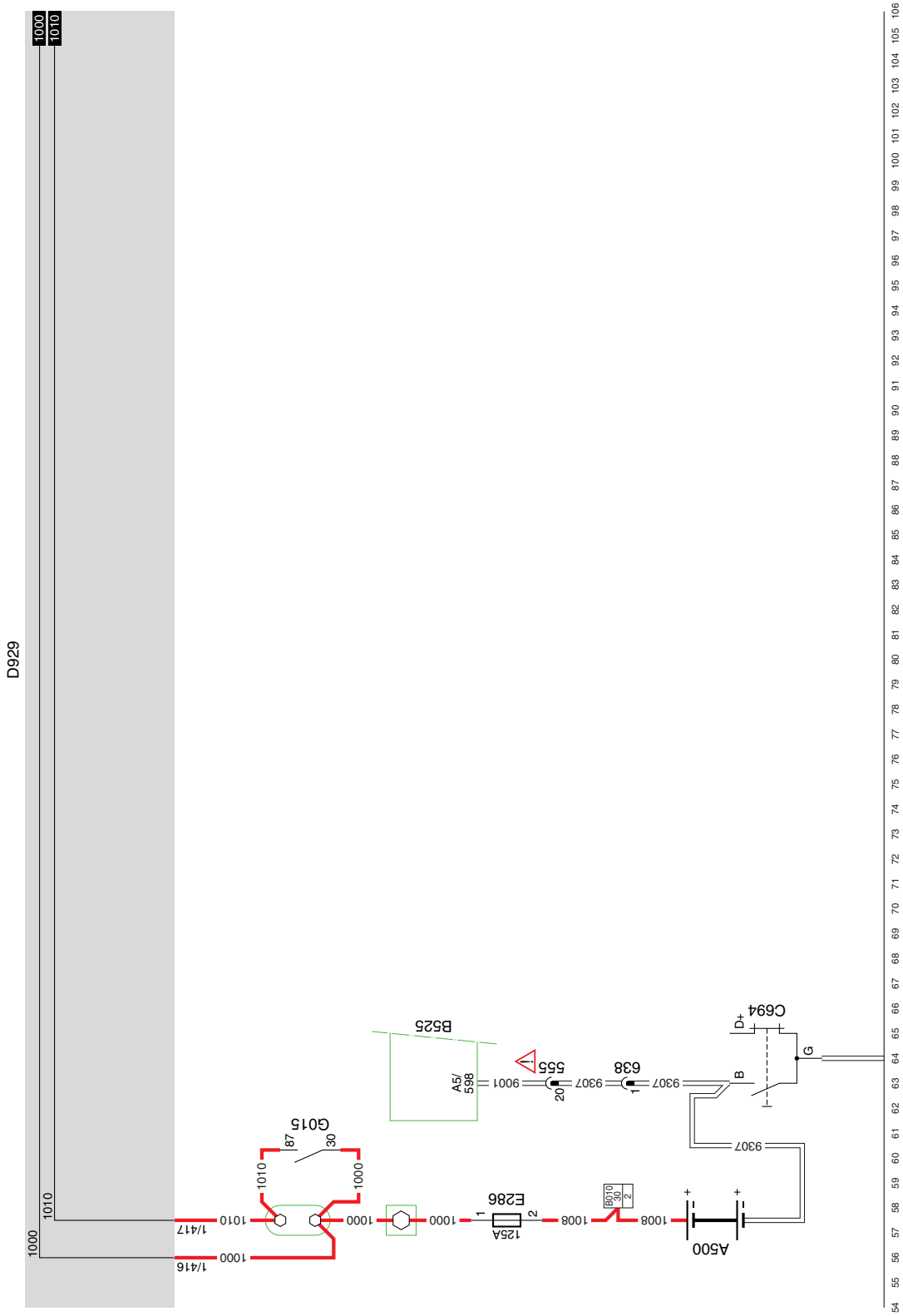

1

1358030/27-29

EL001392

https://truckmanualshub.com/

https://truckmanualshub.com/

20 SEARCH LIGHTING

SEARCH LIGHTING

Search lighting refers to lights or LEDs in the various function switches.
When the light switch (C622) is operated, a supply voltage is present on relay G000 (connection point 85) through fuse E084 and the light switch (C622), contacts 2-1, wire 2100.
Relay G000 is energised (connection between connection points 30 and 87, PCB track 2101, fuse (E117)) when there is a voltage on the search lighting (through wire 2630). All search lighting connected to this will come on.

The following switches are illuminated by a light: B030, C052, C053, C072, C073, C716, C813, C814 and C858.

The following switches are illuminated by an LED:
C725, C727, C735, C736, C737, C739, C740, C741, C742, C748, C749, C750, C751, C760, C763, C764, C765, C774, C778, C802, C835, C836, C837, C853 and C900.

LIGHT BUZZER

When the light switch (C622) is operated, supply voltage will be applied to connection point 85 of relay G000 through fuse E084, light switch (C622) and wire 2100.
Relay G000 is energised so that a voltage is applied to the search lighting (wire 2630) through fuse E117. This wire is also connected to the VIC (D900), pin C7, connector 594.
If the pre-programmed condition in the VIC is met, the VIC sends a message to the DIP, which in turn activates the buzzer (fitted in the DIP).

https://truckmanualshub.com/

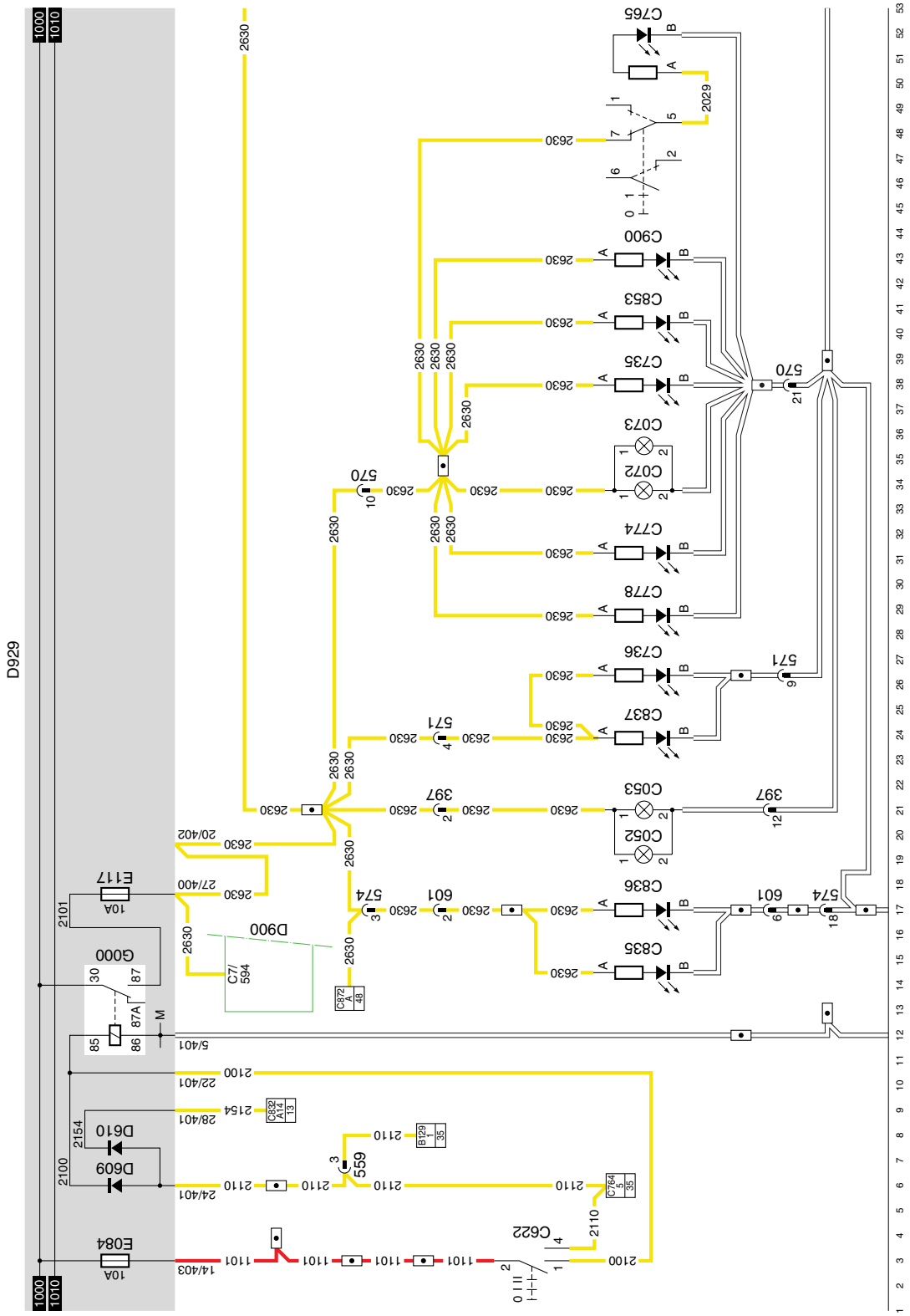

20 1358030/27-29 EL001401

11

https://truckmanualshub.com/

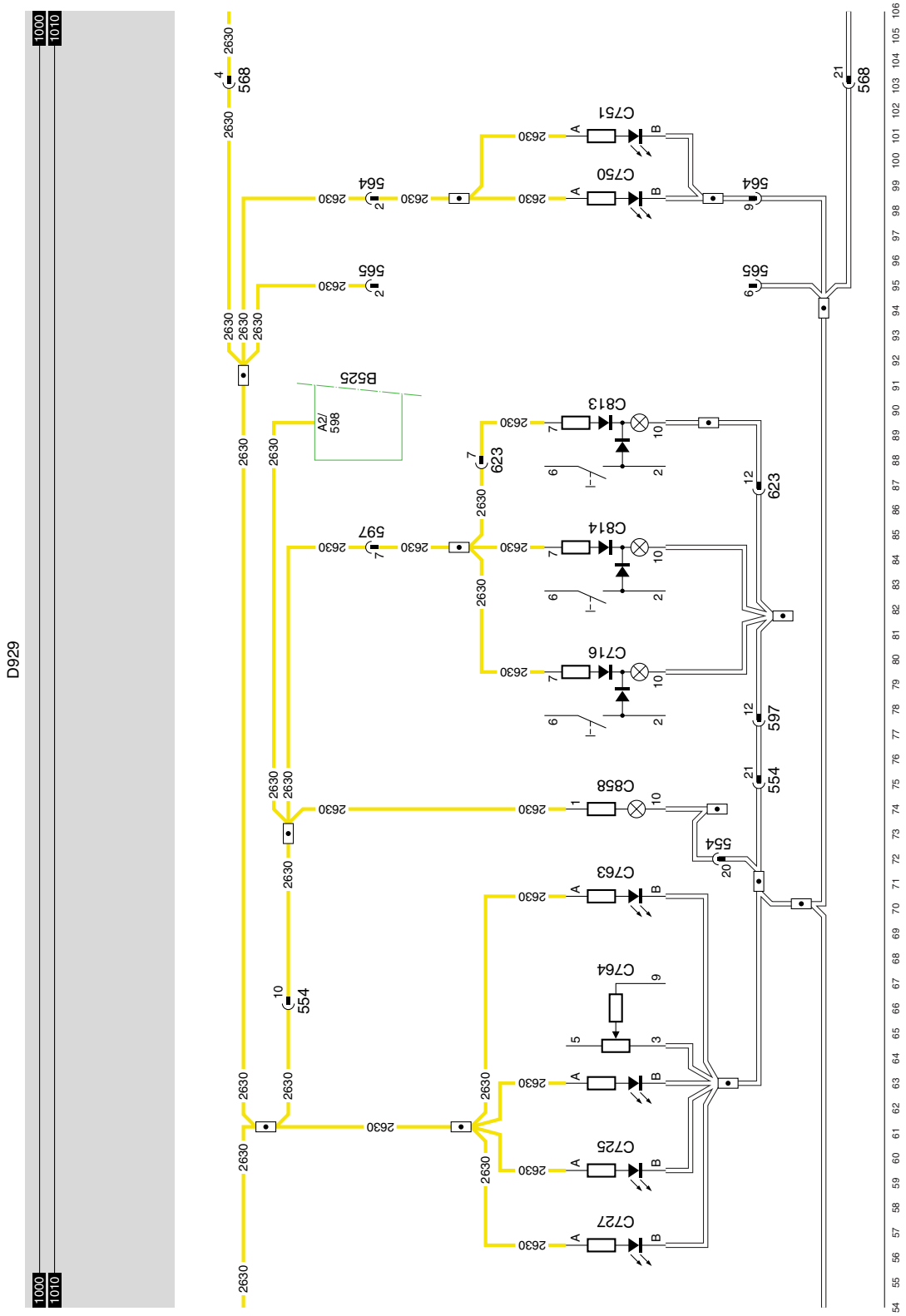

20

1358030/27-29

EL001402

https://truckmanualshub.com/

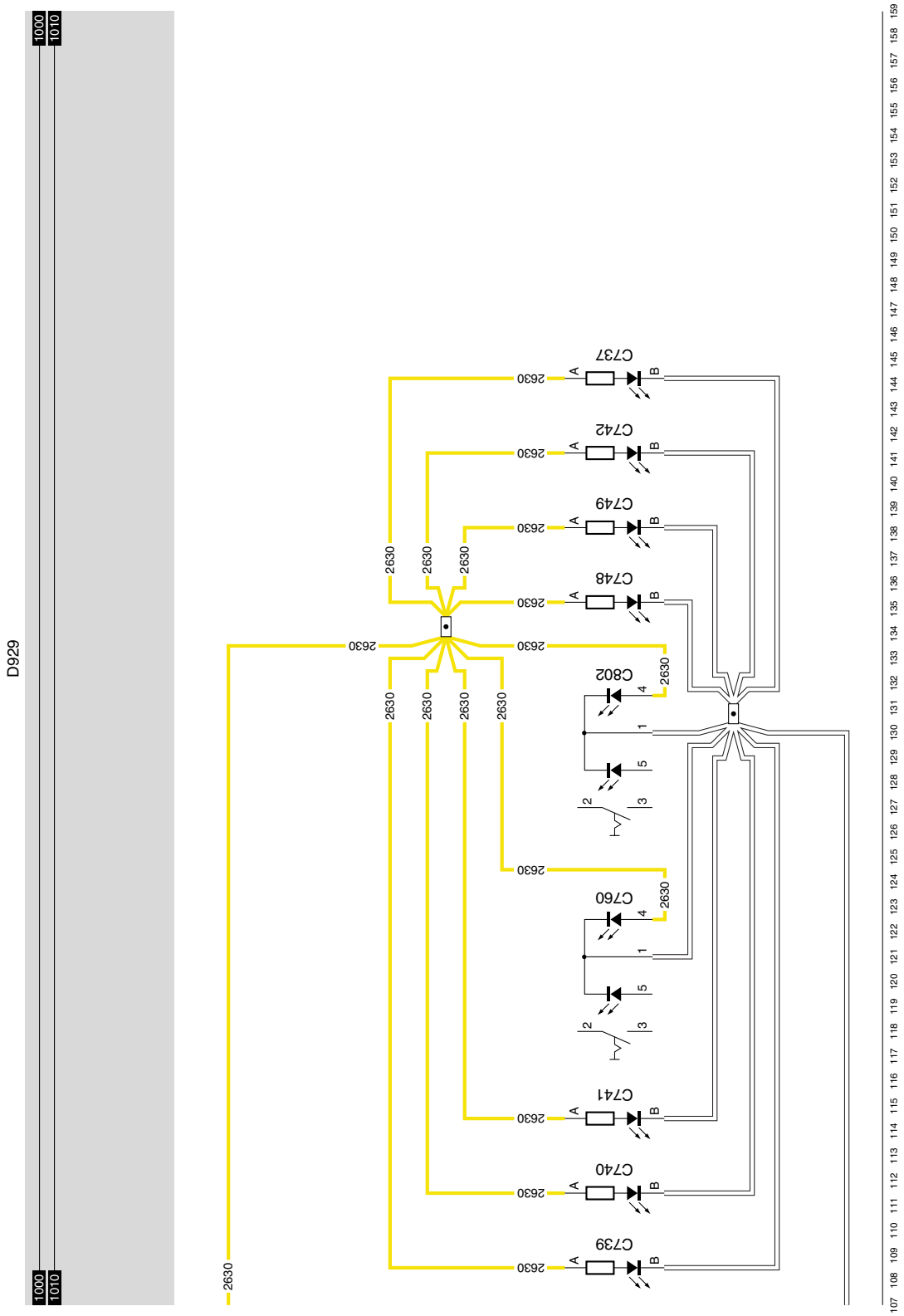

20 1358030/27-29 EL001403

11

https://truckmanualshub.com/

41 AIRTRONIC (ACH-EA) CAB HEATER WITH/WITHOUT TIMER

SEE THE SYSTEM MANUAL FOR MORE INFORMATION

VARIANTS

Location

7, 9	Only if the vehicle has been equipped to transport hazardous substances in accordance with RTMDR requirements.
33	Only if the vehicle has a thermostat unit, then also switch C778. Does **not** apply if the vehicle has NOT been equipped to transport hazardous substances.
37	Only if the vehicle has been equipped to transport hazardous substances in accordance with PETREG requirements.
43	Only if the vehicle has a timer.
50	C844: only if the vehicle has been equipped to transport hazardous substances in accordance with RTMDR requirements.

© 200520

https://truckmanualshub.com/

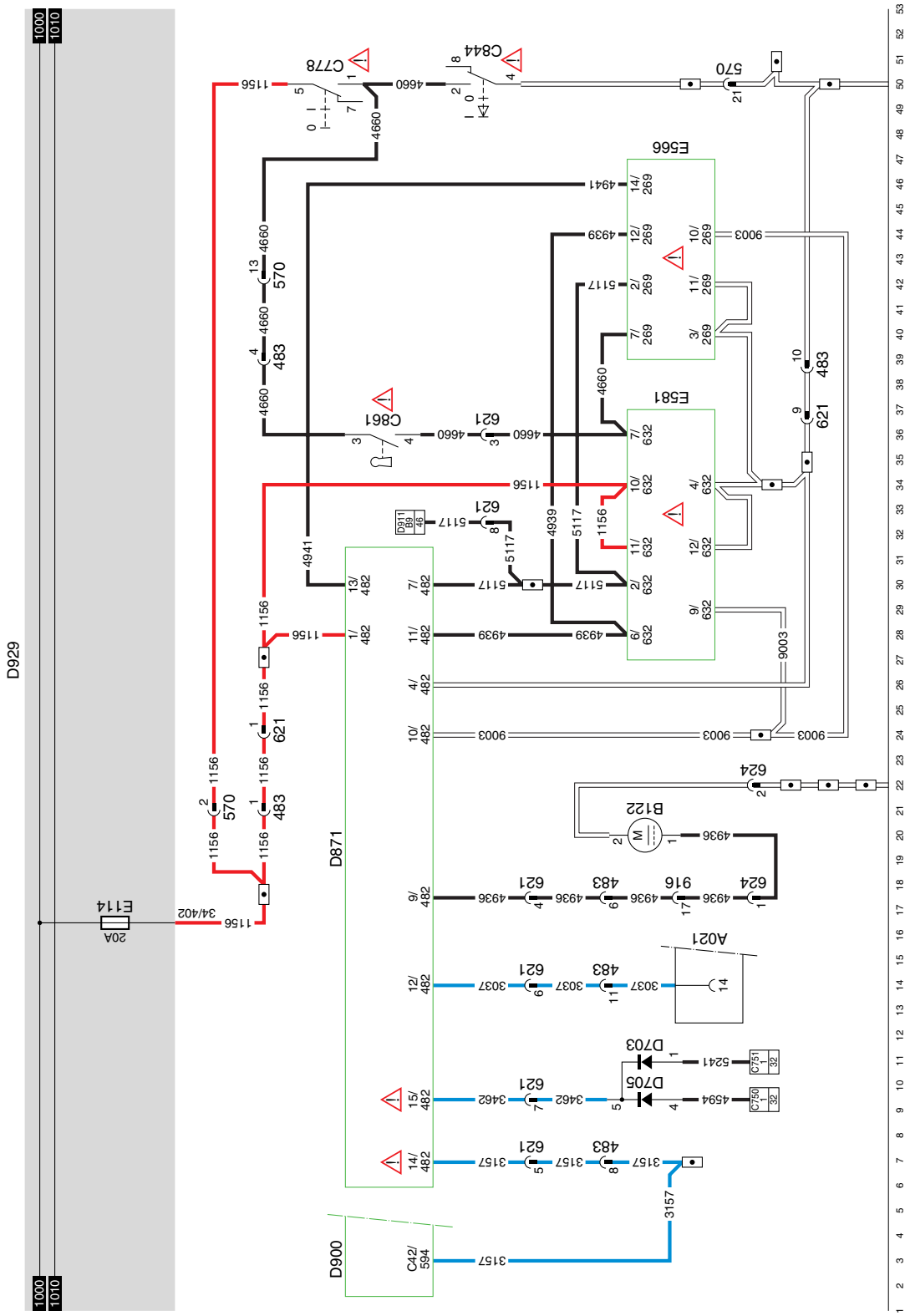
D929
1000
1010
E114
20A
34/402
1156
570
483
621
D871
D900
C42/
594
3157
14/
482
15/
482
12/
482
9/
482
4/
482
10/
482
11/
482
7/
482
13/
482
1/
482
3157
3157
3157

https://truckmanualshub.com/

44 EBS-2

SEE THE SYSTEM MANUAL FOR MORE INFORMATION

VARIANTS

Location
18 -> 35: Connector 873: only on cab type D

https://truckmanualshub.com/

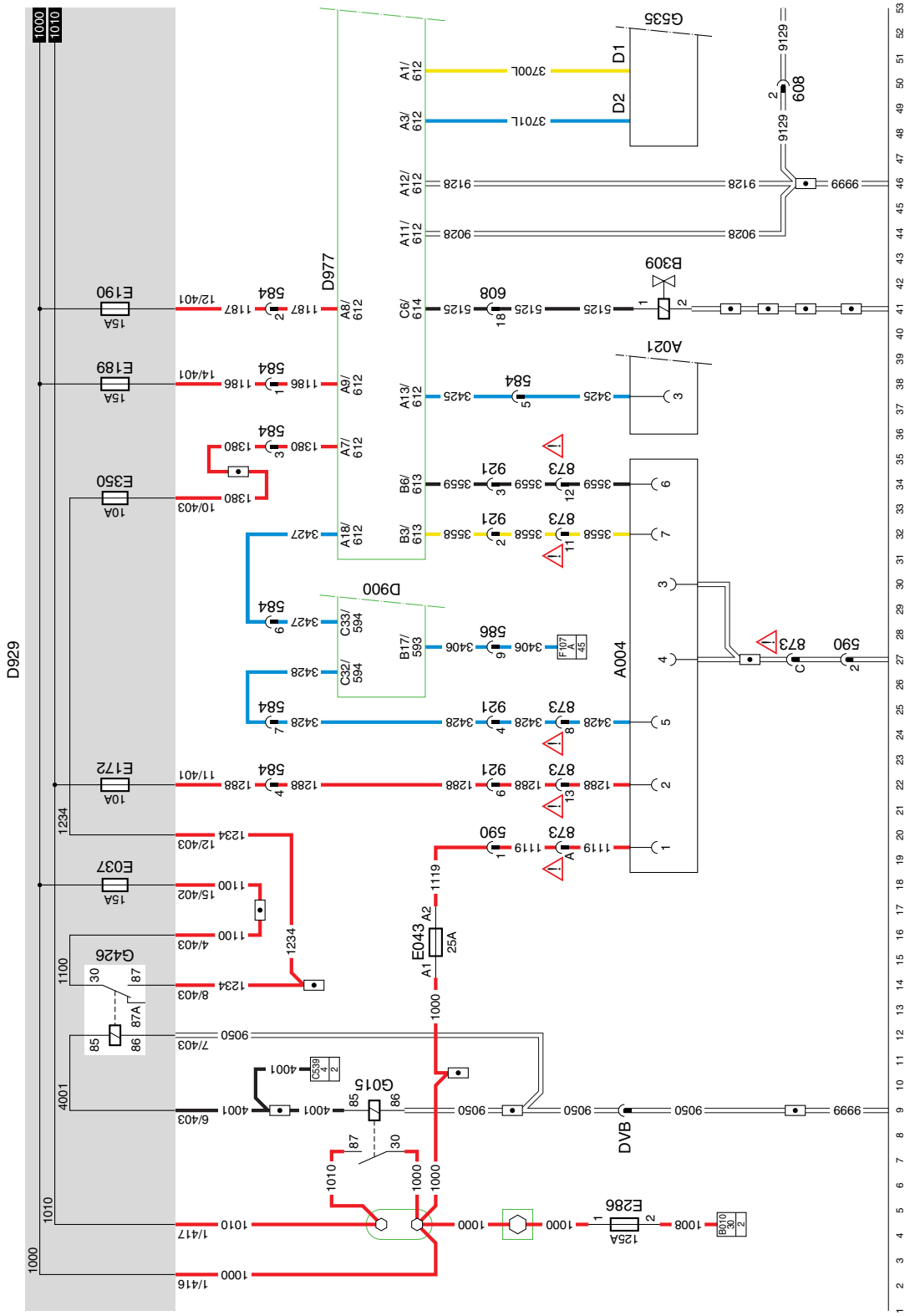

44 1358030/27-29 EL001394

11

https://truckmanualshub.com/

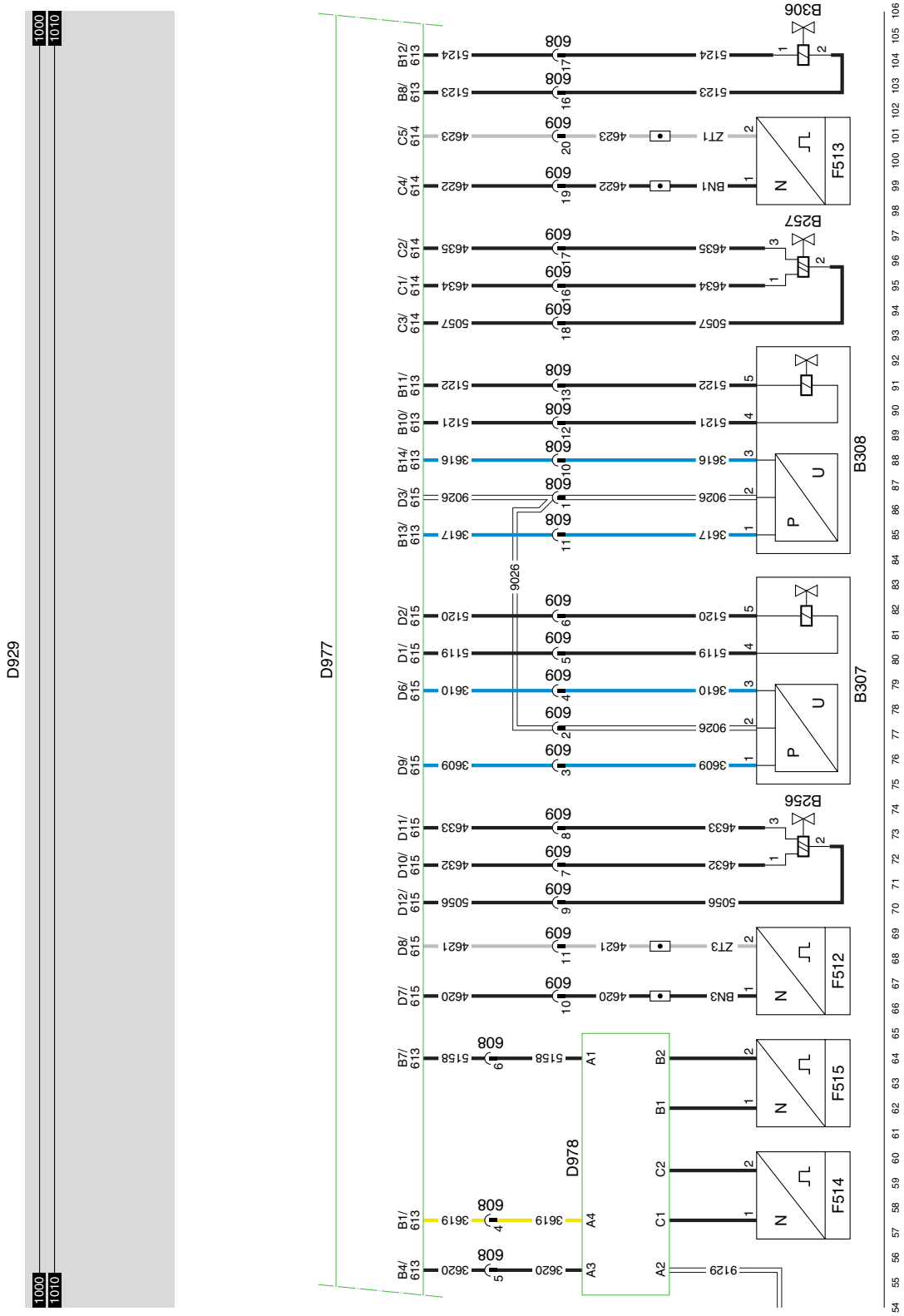

https://truckmanualshub.com/

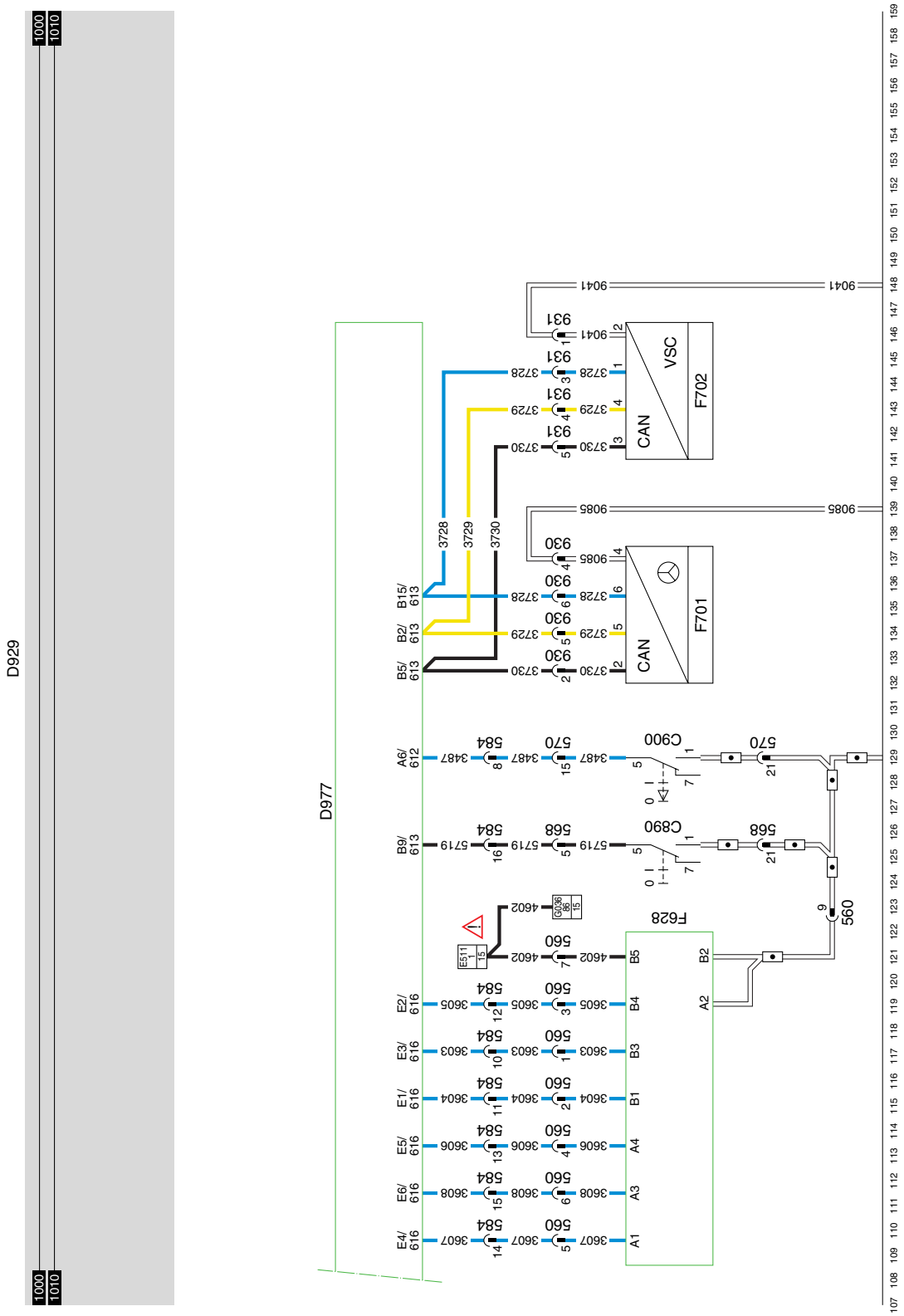

11

https://truckmanualshub.com/

11

51 AS TRONIC

SEE THE SYSTEM MANUAL FOR MORE INFORMATION

https://truckmanualshub.com/

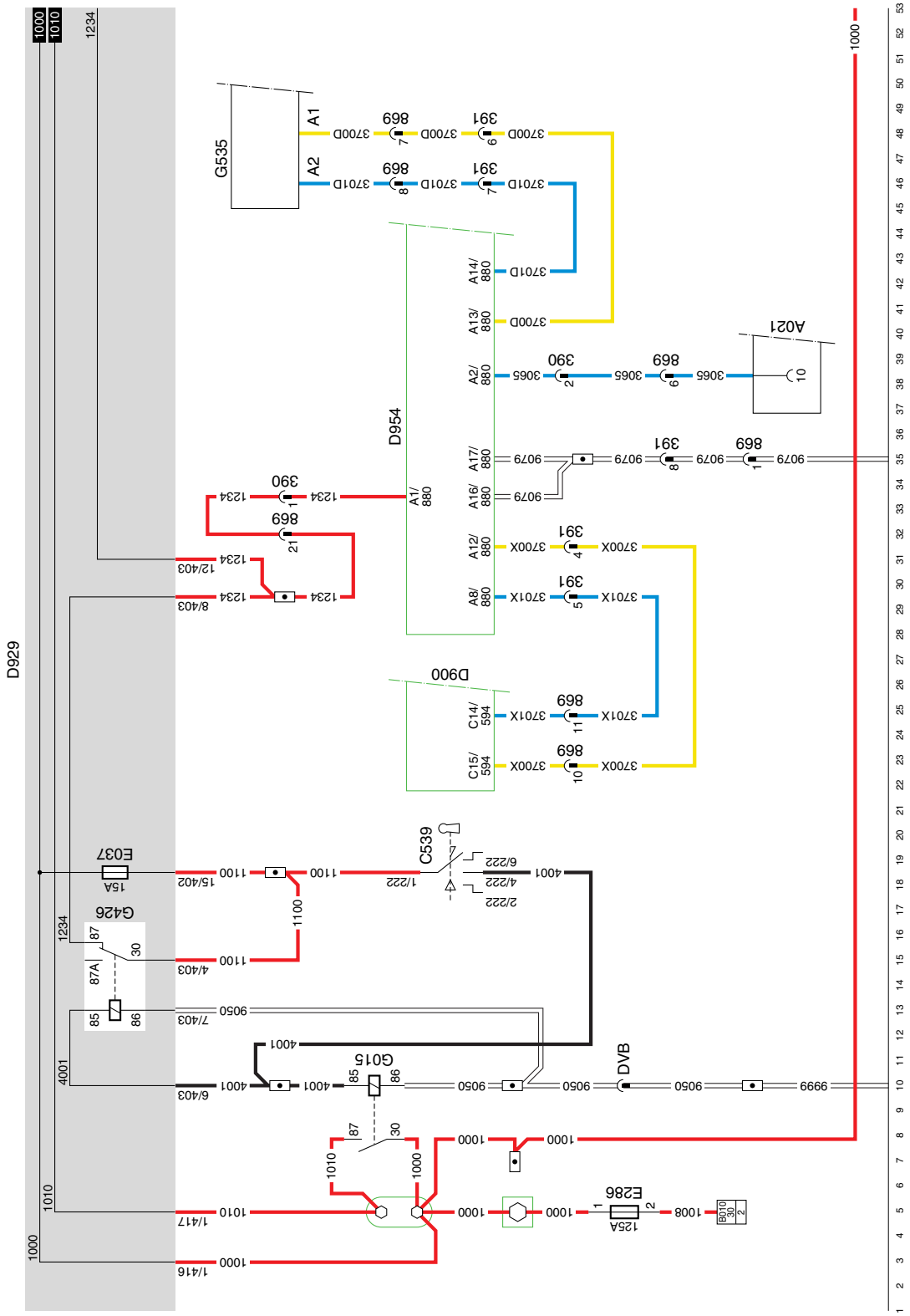

51 1358030/27-29 EL001397

11

https://truckmanualshub.com/

Changes in the electrical system from chassis number 0E626381

***CF*65/75/85** Serie ≥0E621376

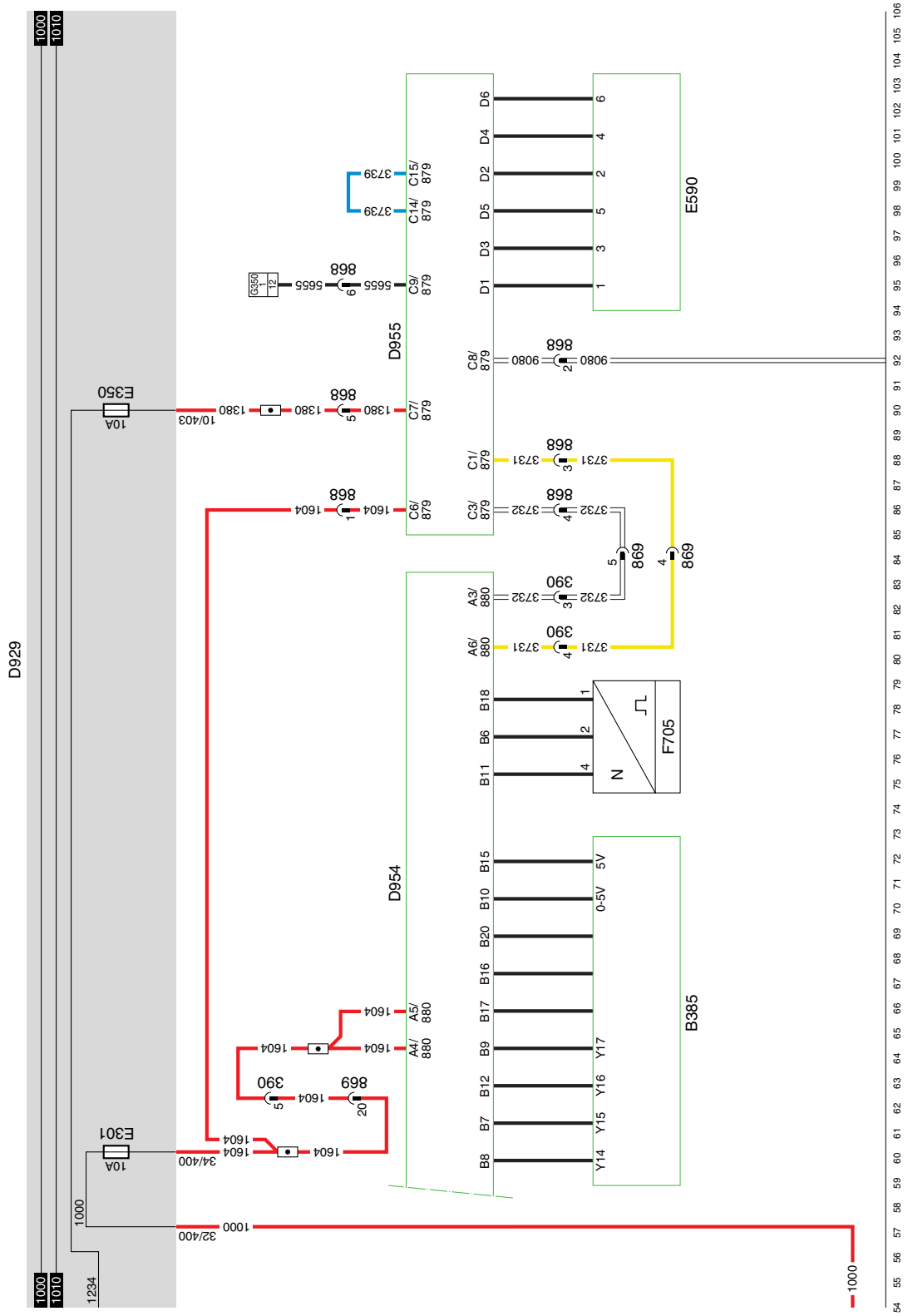

51 1358030/27-29

EL001398

https://truckmanualshub.com/

3. CHANGES IN THE ELECTRICAL SYSTEM FROM CHASSIS NUMBER 0E646818

3.1 OVERVIEW OF THE CHANGES IN THE ELECTRICAL SYSTEM

Section diagram	Electrical system	Changes	From chassis number
A	Voltage before and after contact	Connection to D911 removed, connection to G372 added	0E646818
B	Overview of earthing points	Various earthing points changed	0E646818
C	CAN overview	Diagram modified with connectors A097 and A098	0E646818
1	Main switch	Unit D826 removed. Unit B525 added	0E646818
2	Alternator/ignition/starter switch/charging circuit	Connection of wires 4004, 3157 and 4202 modified	0E646818
3	MTCO tachograph	Connections of wires 3225 and 3502 modified	0E646818
8	VIC	Start interruptor function switched via VIC. Connection from relay G372 (relay, starter motor lock) to wire 3457 removed and added to wire 3157 at connector point C42. Wire 4690 with connection to B251 and D902 added to connector point B5/593. Wire 4202 at connection point C44 of D900 added	0E646818
9	FA marker/parking lights	Connection to A098 added	0E646818
10	FT marker/parking lights	Connection to A098 added, C155 removed	0E646818
11	UPEC	Stop light circuit modified	0E646818
15 A	Stop lights in combination with manual gearbox/cab tilting gear	Stop light circuit modified	0E646818
15B	Stop lights in combination with AS Tronic gearbox/cab tilting gear	Stop light circuit modified	0E646818

https://truckmanualshub.com/

Changes in the electrical system from chassis number 0E646818

***CF*65/75/85** Series ≥ 0E621376

Section diagram	Electrical system	Changes	From chassis number
17	D/SL interior lighting	Connectors modified	0E646818
18	SH interior lighting	Connectors modified	0E646818
25	DEB	Stop light circuit modified	0E646818
26	Intarder EST 42	Wire 4690 at VIC added	0E646818
27	ECS-DC3	Connections of wire 3003 modified. A098 added. F565 and F647 removed	0E646818
29	EMAS	Branch to A098 added	0E646818
30	AGC	Stop light circuit modified	0E646818
32	PTO	Wire 4596 to A098 added	0E646818
34A	ECAS-3	Wire 3502 added	0E646818
34B	ECAS-2	Wire 3502 added	0E646818
42	Hydronic 10	Wire 3157 added, wire 4980 removed	0E646818
43	UPEC/CUMMINS/AGC application connector	Wire 3003 with branch to A098 added	0E646818
46	Alarm system	Wire 3003 added, connectors modified	0E646818
52	CDM + FMS	New	0E646818

The other section diagrams from circuit diagrams 1358030/30-34 contain no functional changes compared with circuit diagrams 1358030/27-29.

https://truckmanualshub.com/

3.2 CIRCUIT DIAGRAMS 1358030/30-34

This page can be used to make your own notes on the circuit diagram.

https://truckmanualshub.com/

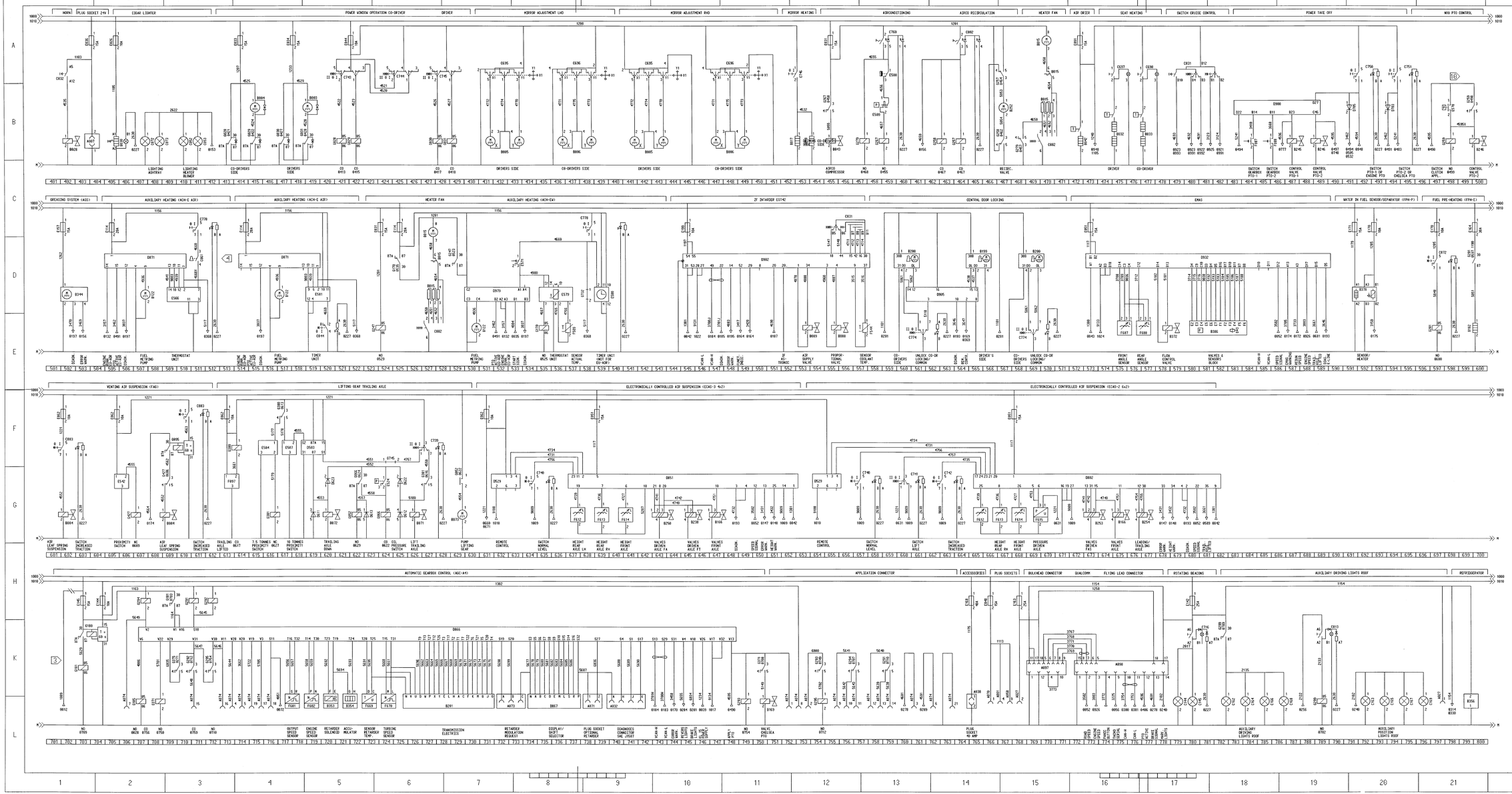

3 OPMERKING/note
BIJ TOEPASSING VAN EEN HOOFDSCHAKELAAR, VOEDING 1089 RECHTSTREEKS VAN DE ACCU.
BIJ VEILIGHEIDSEISEN: KOMPONENTEN E145, G180 EN G181 IN EEN EXPLOSIEVRIJE VERDEELDOOS BIJ DE ACCU MONTEREN.

When a mainswitch is applied, power supply 1089 directly from the batteries
With safety requirements: components E145,G180 and G181 to be fitted in an explosionfree junctionbox near the batteries

4 OPMERKING/note
SLEUTEL SCHAKELAAR C861 ALLEEN BIJ PETRED UITVOERINGEN.

Key switch C861 only for petreg

10 OPMERKING/note
PTO BEVEILIGING ALLEEN VOOR HANDSESCHAKELIDE BAKKEN

PTO protection only for manual gearboxes

1358030 / 30-34
1v3

DAF

https://trucksmanualshub.com/

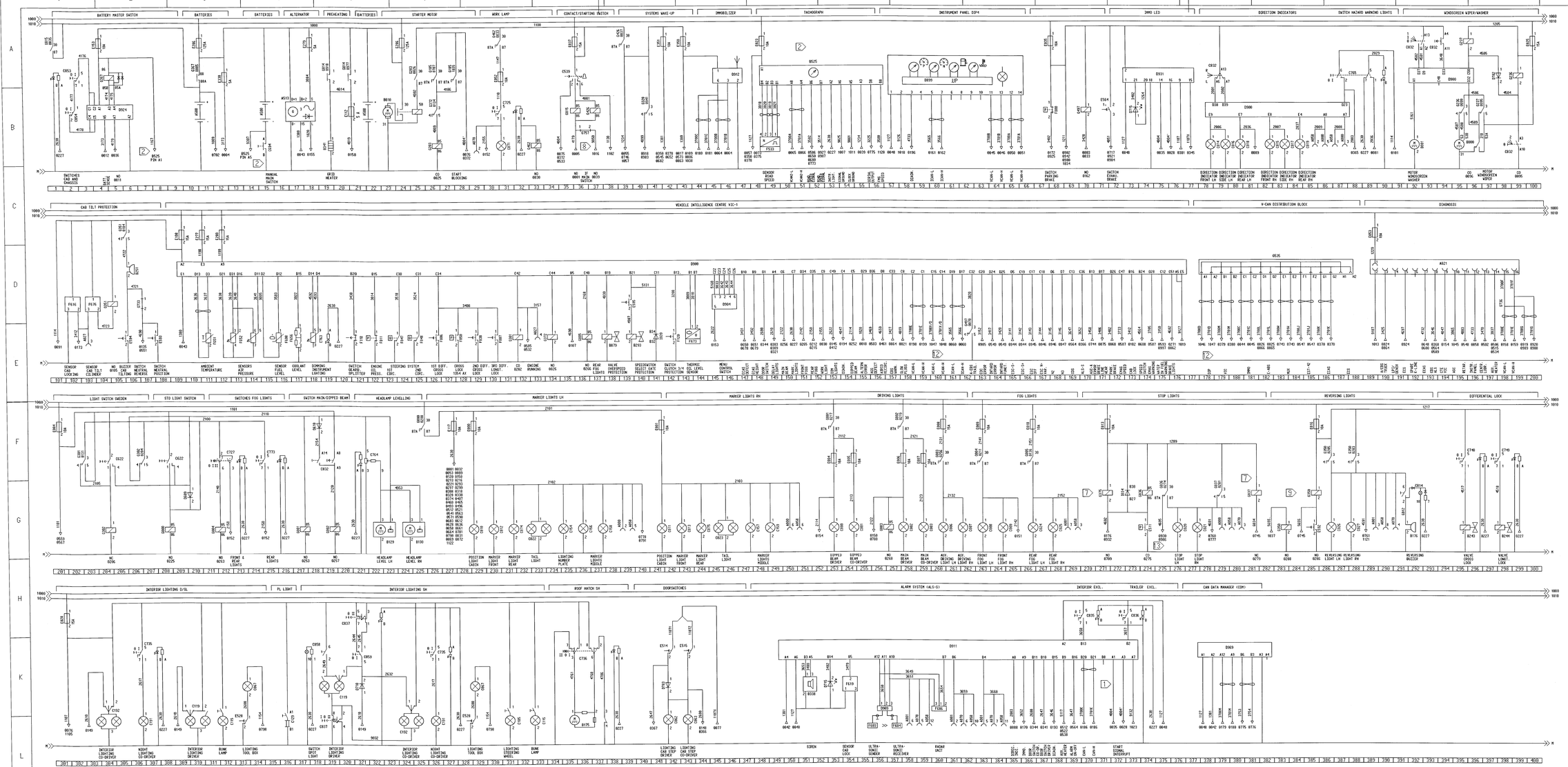

1 OPMERKING/note
STARTONDERBREKING ALLEEN VOOR BV2 EN BV3, NIET VOOR THATCHAM
Starter interrupt only for BV2 EN BV3, not for Thatcham

2 OPMERKING/note
BIJ HOOFDSCHAKELAAR
ADR: ADER 1167 OP PIN A1
MASSA SCHAKELAAR:
S307 OP PIN A5
With mainswitch
ADR: wire 1167 on pin A1
manual switch:
S307 on pin A5

7 OPMERKING/note
G837 EN G375 ALLEEN TBV AGC MET RETARDER
G837 and G375 only for AGC with retarder

8 OPMERKING/note
BIJ TOEPASSING HOOFDSCHAKELAAR
ADER 4179 OP BE VAN G815 EN G426
With mainswitch
Wire 4179 to pin B6 of G815 and G426

9 OPMERKING/note
ACHTERUITRIJ VERLICHTING:
BIJ AS-TRONIC AKTIEF HOOG
OVERIGE V-BAKKEN AKTIEF LAAG
Reversing lights:
with as-tronic active high
other gearboxes active low

12 OPMERKING/note
BIJ AS-TRONIC 3700/3701X
AANGESLOTEN OP VIC C15/C14
ZONDER AS-TRONIC 3700/3701D
AANGESLOTEN OP VIC C15/C14
With AS-tronic 3700/3701X
connected to VIC C15/C14
no AS-tronic 3700/3701D
connected to VIC C15/C14

13 OPMERKING/note
CIRCUIT REMLICHTEN
ZONDER AS-TRONIC
circuit brake lights
without AS-tronic

1358030 / 30-34
2v3

DAF

https://trucksmanualshub.com/

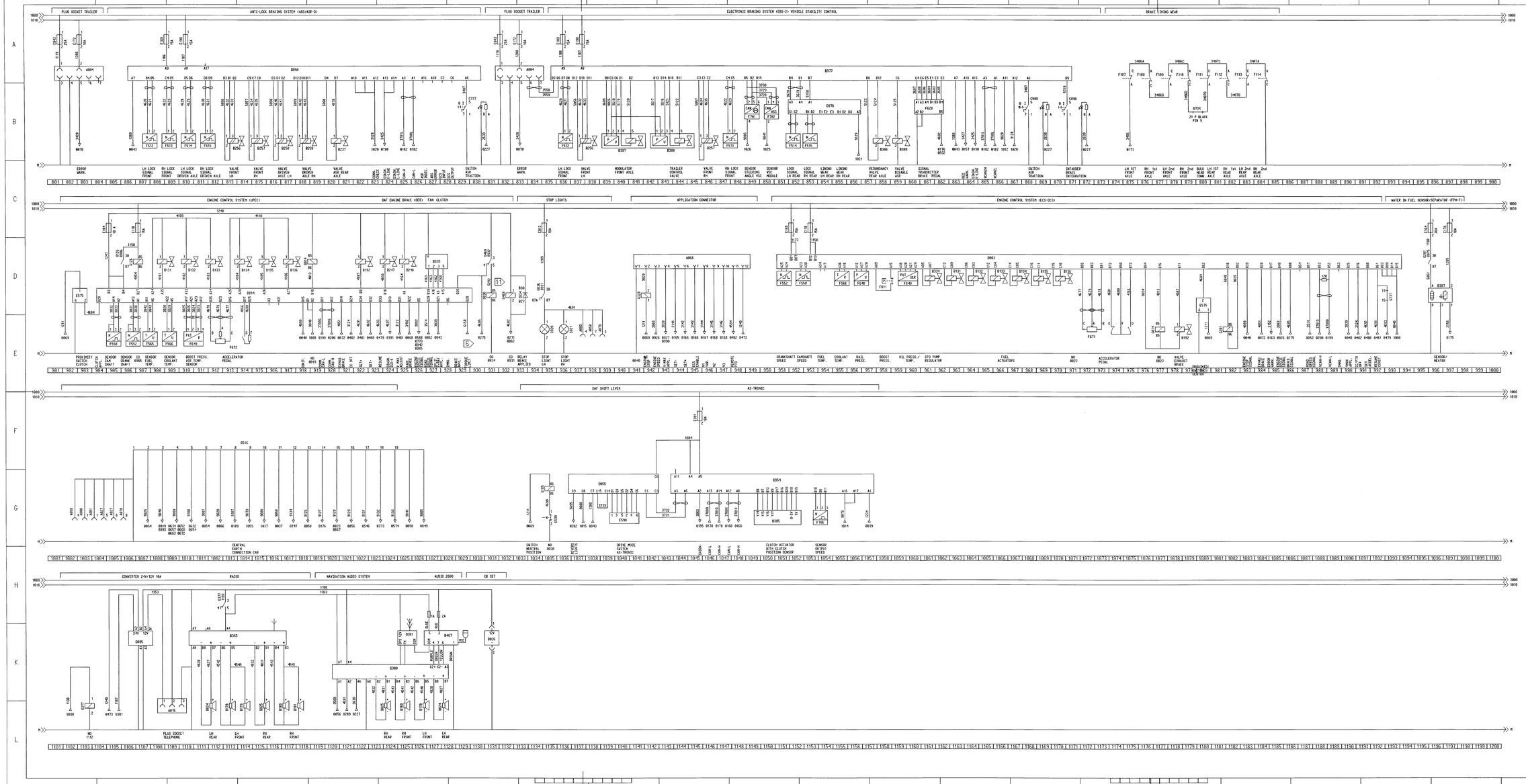

6 OPMERKING/note
WIRE 6158 IN SCHUTBORD
TBV OPBOUWER

wire 6158 in firewall
prepared for body builder

11 OPMERKING/note
CIRCUIT REMLICHTEN
MET AS-TRONIC

circuit brake lights
with AS-tronic

1358030 / 30-34
3v3

DAF

https://truckmanualshub.com/

3.3 OVERVIEW OF BASIC CODE NUMBERS IN CIRCUIT DIAGRAMS 1358030/30-34

Basic code number	Description	Number on search bar
A000	Drawn vehicle socket (7-pin)	86, 87, 238, 250, 279, 937, 1003
A001	Rear fog lamp/reversing lamp socket (7-pin)	269, 289, 358, 361, 363, 767, 1004
A004	Plug socket, ABS/EBS, drawn vehicle (7-pin)	803, 834
A007	24V socket (2-pin)	403
A021	Diagnostics socket (16-pin)	194
A027	Socket, 24V accessories (4-pin)	103, 133, 768, 797, 1004, 1005
A032	AGC diagnostics socket	740
A038	Socket, 40A accessories (2-pin)	765
A058	Drawn vehicle socket (15-pin)	85, 87, 239, 251, 269, 280, 290, 359, 362, 364, 767, 938, 1002
A068	Application connector, engine speed control	945
A070	Application connector, superstructure (8-pin)	32, 280, 291, 359, 362, 364, 776, 939, 1006
A071	Automatic gearbox socket, retarder functions	738
A073	Automatic gearbox socket, operation	732
A074	Automatic gearbox socket, superstructure	706, 711, 713, 714, 715, 716, 752, 753, 755, 756, 757, 758, 759, 761, 762, 763
A076	Telephone socket	1109
A097	FMS connector (21-pin)	770
A098	FMS connector (18-pin)	775
A500	Batteries (2x)	10, 17, 24
A510	Alarm system battery	349
A513	Alternator	19
B000	Windscreen wiper motor	96
B001	Windscreen wiper pump	93
B003	Electric drop glass operation motor, driver’s side	419
B004	Electric drop glass operation motor, co-driver’s side	415
B005	Mirror adjustment motor, left	432, 442

https://truckmanualshub.com/

Basic code number	Description	Number on search bar
B006	Mirror adjustment motor, right	437, 448
B010	Starter motor	25
B015	4-speed heater fan	470, 471, 527, 528
B017	Mirror heating, driver's side	452
B018	Mirror heating, co-driver's side	453
B024	Loudspeaker, left	1112, 1128
B025	Loudspeaker, right	1115, 1124
B026	CB set	1131
B028	Horn	402
B030	Cigar lighter, driver's side	406
B032	Seat heating, driver's side	475
B033	Seat heating, co-driver's side	477
B042	Air dryer heating element	473
B043	Air conditioning compressor	455
B071	Mechanical lifting-gear lifting valve	626
B072	Mechanical lifting-gear lowering valve	620
B073	Pump, mechanical lifting gear	629
B079	Low-range downshift protection valve	138
B084	Air suspension valve, bleeding	602, 609
B088	Intarder proportional valve	556
B089	Air supply valve, intarder	554
B122	Fuel metering pump, cab heater	508, 517, 531
B129	Left-hand headlamp height adjuster motor	223
B130	Right-hand headlamp height adjuster motor	225
B131	Solenoid valve, pump unit/injector, cylinder 1	909
B132	Solenoid valve, pump unit/injector, cylinder 2	910
B133	Solenoid valve, pump unit/injector, cylinder 3	912
B134	Solenoid valve, pump unit/injector, cylinder 4	914
B135	Solenoid valve, pump unit/injector, cylinder 5	916
B136	Solenoid valve, pump unit/injector, cylinder 6	917
B166	ECAS valve , front axle	647, 675
B169	PTO control valve, Chelsea	751
B175	Roof hatch motor	336

https://truckmanualshub.com/

Changes in the electrical system from chassis number 0E646818

***CF*65/75/85** Series ≥0E621376

Basic code number	Description	Number on search bar
B176	Reversing buzzer	292
B178	Loudspeaker, left	1113, 1126
B179	Loudspeaker, left	1114
B180	Loudspeaker, right	1117, 1125
B181	Loudspeaker, right	1118
B182	Water separator fuel heating element	599
B192	Exhaust brake valve	922, 979
B199	Central door locking motor, driver's side	565
B200	Central door locking motor, co-driver's side	560, 569
B201	Internal electrical components for automatic gearbox	728
B237	ASR selector valve	821
B238	ECAS-2 (6x2) valve, driven axle left/right, air supply (FT)	645
B243	Cross-axle differential lock control valve	297
B244	Longitudinal controlled slip differential control valve	299
B245	PTO control valve	487
B246	PTO control valve	489, 500
B247	Engine brake valve	924
B248	Engine brake valve	925
B250	ECAS valve, driven axle left/right, air supply (FA)	643
B251	Neutral position buzzer, tilting cab	106
B252	Recirculation valve	468
B253	ECAS valve, driven axle left/right, air supply	673
B254	ECAS valve, steered leading rear axle/trailing axle left/right, lifting bellows	677
B256	ABS valve	813, 838
B257	ABS valve	815, 846
B258	ABS valve	817
B259	ABS valve	818
B293	Gearbox gate protection valve	140
B306	Redundancy valve	858
B307	Front axle modulator	840

https://truckmanualshub.com/

Basic code number	Description	Number on search bar
B308	Drawn vehicle control valve	843
B309	ASR cut-off valve	859
B335	Electronically controlled fan clutch	927
B338	Alarm system horn	351
B340	Four-wheel drive valve	295
B341	Glow element	22
B344	Automatic lubrication pump with integrated electronic unit	503
B353	Automatic gearbox control solenoid, retarder	720
B354	Automatic gearbox accumulator	721
B356	Cooler box	799
B365	Radio	1113
B372	Valve block fluid flow	579
B378	Heating element for fuel filter/water separator	592
B385	AS Tronic clutch unit	1051
B386	Valve block steering cylinder	581
B387	Electronic unit, fuel heater/water separator (Fleetguard)	996
B467	Radio	1128
B525	Modular tachograph (MTCO)	54
C000	Dipped beam, left	254
C001	Dipped beam, right	255
C002	Main beam, left	258
C003	Main beam, right	260
C006	Left spotlight	261
C007	Right spotlight	262
C008	Fog lamp, front left	264
C009	Fog lamp, front right	265
C010	Width marker light (headlight), left	229
C011	Width marker light (headlight), right	242
C012	Width marker light, front left	231
C013	Width marker light, front right	243
C014	Direction indicator lamp, front left	79
C015	Direction indicator lamp, front right	83

https://truckmanualshub.com/

Changes in the electrical system from chassis number 0E646818

***CF*65/75/85** Series ≥0E621376

Basic code number	Description	Number on search bar
C016	Direction indicator lamp, side left	80
C017	Direction indicator lamp, side right	84
C018	Direction indicator lamp, rear left	81
C019	Direction indicator lamp, rear right	85
C020	Stop light, left	277, 935
C021	Stop light, right	278, 937
C022	Tail light, left	232
C023	Tail light, right	245
C024	Fog lamp, rear left	267
C025	Fog lamp, rear right	268
C026	Reversing light, left	287
C027	Reversing light, right	288
C052	Heater fan light, left	411
C053	Heater fan light, right	412
C062	Cab stepwell lighting, driver’s side	342
C063	Cab stepwell lighting, co-driver’s side	344
C067	Left-hand tool compartment lighting	314, 329
C071	Work lamp	34
C072	Ashtray light, left	408
C073	Ashtray light, right	409
C074	Width marker light, rear left	232
C075	Width marker light, rear right	245
C115	Bunk light with switch	312, 333
C119	Interior lighting with switch, driver’s side	310, 320
C129	Interior lighting with switch	316
C144	Rotating beam, left	780
C145	Rotating beam, right	781
C154	Rear number plate light, left (tractors)	235
C156	Width marker light, left, 1st (tractors)	237
C157	Width marker light, right, 1st (tractors)	248
C158	Width marker light, left, 2nd (tractors)	238
C159	Width marker light, right, 2nd (tractors)	249
C162	Roof spotlight	783
C163	Width marker light in roof spotlight	793

https://truckmanualshub.com/

Basic code number	Description	Number on search bar
C164	Roof spotlight	784
C165	Width marker light in roof spotlight	794
C166	Roof spotlight	786
C167	Width marker light in roof spotlight	795
C168	Roof spotlight	787
C169	Width marker light in roof spotlight	797
C185	Light with switch	332
C191	Nightlight, centre	307, 327
C192	Interior lighting with switch, co-driver's side	304, 324
C539	Accessories/ignition/starter switch	38
C622	Switch, light	205, 209
C694	Main switch, mechanical	17
C695	Mirror adjustment switch, driver's side	433, 443
C696	Mirror adjustment switch, co-driver's side	438, 448
C697	Seat heating switch, driver's side	475
C698	Seat heating switch, co-driver's side	477
C716	Switch, rotating beams	781
C725	Work lamp switch	34
C727	Front/rear fog lamp switch	212
C735	Interior nightlight switch	307, 326
C736	Roof hatch switch	336
C737	ABS/ASR-D traction switch	830
C739	Mechanical lifting-gear switch	627
C740	ECAS switch, normal level	635, 657
C741	ECAS switch, axle lifting	661
C742	Traction assistance switch	663
C743	Electric drop glass switch, co-driver's side (driver's side door)	422
C744	Electric drop glass switch, co-driver's side (co-driver's side door)	425
C745	Electric drop glass switch, driver's side (driver's side door)	428
C746	Mirror heating switch	453
C748	Cross-axle differential lock operating switch	297

https://truckmanualshub.com/

Changes in the electrical system from chassis number 0E646818

***CF*65/75/85** Series ≥0E621376

Basic code number	Description	Number on search bar
C749	Longitudinal controlled slip differential operating switch	299
C750	PTO operation switch	492
C751	PTO operation switch	495
C760	Air conditioning switch	459
C763	Instrument lighting dimming potentiometer	119
C764	Potentiometer for headlamp height adjustment	222
C765	Switch, warning lamps (with LED search lighting)	88
C773	Rear fog lamp switch	215
C774	Central door locking switch	561, 569
C778	Cab heater switch	511, 538
C802	Switch, recirculation valve	464
C813	Switch for roof spotlights	790
C814	Reversing buzzer switch	292
C831	Cruise control/engine speed control/retarder stalk switch	480, 556
C832	Direction indicator/windscreen wiper stalk switch	79, 92, 93, 98, 219, 402
C835	Switch to turn off interior detection	370
C836	Switch to turn off superstructure/drawn vehicle loadspace detection	373
C837	Interior lighting switch	318,320
C840	Four-wheel drive switch	295
C844	Cab heater main switch	519
C853	Cab main switch	2
C854	Chassis main switch	3
C858	Interior spot lighting switch	318
C859	Interior lighting switch, roof console, driver’s side	321
C861	PETREG key switch	511
C872	Fuel filter/water separator operating switch	597
C882	Heater fan switch	470, 527
C883	FAG traction assistance switch	602, 611
C890	Switch to turn off integration of third brake	871
C900	ASR switch	868

https://truckmanualshub.com/

Basic code number	Description	Number on search bar
D503	Electronic unit, mechanical lifting gear	619
D529	Electronic unit, ECAS remote control	632, 654
D609	Light switch diode	209
D610	Diode, main beam/dipped beam	218
D611	Diode for valve damping, lowering mechanical lifting gear	619
D612	Diode for valve damping, lifting mechanical lifting gear	625
D613	Diode for pump relay damping, mechanical lifting gear	623
D622	Diode for mechanical lifting gear, lifting lock	625
D623	Diode for mechanical lifting gear, lowering lock	620
D703	Diode for switching off cab heater/door, contact on driver's side	494
D705	Diode for switching off cab heater with running engine	491
D710	Interior lighting diode to prevent feedback to driver's side switch	321
D715	Alarm system LED	73, 352
D782	Diode to prevent door locking feedback, driver's side	97
D783	Diode, cab stepwell lighting, driver's side	341
D791	Door switch diode	345
D792	Door switch diode	346
D802	Electronic unit, ECAS-2 (6x2)	673
D814	UPEC electronic unit	914
D850	Electronic unit, ABS/ASR, D model	817
D851	Electronic unit, ECAS-3 (4x2)	644
D866	Electronic unit, AGC-A automatic gearbox control	729
D867	Automatic gearbox gear selection display	735
D871	Electronic unit, Airtronic D2 cab heater	508 517
D879	Rear axle modulator	854
D895	Electronic unit, converter (10 A) with power supply for radio memory	1107
D899	DIP-4 instrument panel	62
D900	VIC electronic unit	81, 94, 143, 486

https://truckmanualshub.com/

Changes in the electrical system from chassis number 0E646818

***CF*65/75/85** Series ≥0E621376

Basic code number	Description	Number on search bar
D902	Electronic unit, ZF intarder with CAN	550
D903	Electronic unit, ECS-DC3	965
D904	Menu Control Switch, MCS	146
D905	Electronic unit, central door locking	562
D909	Electronic unit, alarm system, ultrasonic	356
D910	Electronic unit, battery charger	349
D911	Electronic unit, ALS-S alarm system	361
D912	Electronic unit, immobiliser	49
D924	Electronic unit, main switch	5
D931	LED unit, immobiliser	75
D932	EMAS electronic unit	581
D954	AS Tronic gearbox modulator	1050
D955	AS Tronic gear lever unit	1038
D969	CAN Data Manager, CDM	379
D977	Electronic unit, EBS-2	854
D979	Electronic unit, Hydronic 10 cab heater	532
E000	Fuse, rear left width marker light	228
E001	Fuse, rear right width marker light	241
E004	Fuse, dipped beam, driver’s side	253
E005	Fuse, dipped beam/warning lamp, co-driver’s side	254
E006	Fuse, main beam, driver’s side	257
E007	Fuse, main beam/warning lamp, co-driver’s side	259
E008	Fuse, spotlights	260
E009	Fuse, front fog lamps	263
E010	Fuse, rear fog lamps	266
E013	Fuse, stop lights	271, 934
E016	Fuse, reversing lights/gearbox neutral position/windscreen wiper motor/cross-axle differential lock	285
E023	Fuse, switch for cold start/tachograph/cab heater program clock/alarm system	51
E025	Fuse, windscreen wiper motor/headlamp washer/windscreen washer motor	100
E026	Fuse, cigar lighter/door switches/electronic unit, 24/12 V converter with power supply for radio memory	405

https://truckmanualshub.com/

Basic code number	Description	Number on search bar
E028	Fuse, interior lighting/bunk lamps/central door lock	301
E031	Fuse, heater fan	455, 523
E033	Fuse, electric drop glass motor, co-driver's side	414
E034	Fuse, electric drop glass motor, driver's side	417
E035	Fuse, instruments and warning lamps/parking brake switch	69
E036	Fuse, 24V socket	403
E037	Fuse, ignition switch	38
E043	Fuse, drawn vehicle ABS/EBS	801, 831
E044	Fuse, mirror heating/electric mirror adjustment/electric drop glass operation	421
E048	Fuse, drawn vehicle power supply	766
E051	Fuse, ECAS/EMAS	573, 638, 667
E052	Fuse, ECAS remote control/work lamp	33
E053	Fuse, diagnostic connector (16-pin)/LED unit/alarm system	189
E062	Fuse, ECAS/EMAS mechanical lifting gear	601, 605, 613, 631
E084	Fuse, lighting	201
E091	Fuse, air dryer heating element/stalk switch/PTO/clutch switch/engine speed control application connector	472
E108	Fuse, VIC	109
E112	Fuse, glow warning lamp	23
E114	Fuse, cab heater (Eberspächer)/warning lamps	505, 514, 525
E117	Fuse, search lighting	227
E118	Fuse, UPEC/ECS-DC3 supply voltage	906, 953
E142	Fuse, accessories before contact	780
E144	Fuse, AGC-A4 automatic gearbox	704
E145	Fuse, AGC-A4 automatic gearbox	703
E153	Fuse, main switch for timer/engine stop/main switch power supply	4
E157	Fuse, automatic lubrication	501
E160	Fuse, ECS-DC3	951

https://truckmanualshub.com/

Changes in the electrical system from chassis number 0E646818

***CF*65/75/85** Series ≥0E621376

Basic code number	Description	Number on search bar
E163	Fuse, accessories after contact (connector A027)/rotating beams/roof hatch	768
E164	Fuse, fuel heater before contact	599, 995
E168	Fuse, accessories/microwave	764
E170	Fuse, fuel heater after contact	592, 597, 997
E171	Fuse, electronic unit for fuel filter/water separator, Racor	591
E172	Fuse, drawn vehicle ABS/EBS	802, 833
E184	Fuse, UPEC	904
E189	Fuse, rear axle EBS	808, 836
E190	Fuse, front axle EBS	810, 837
E199	Fuse, ZF intarder	545
E277	Fuse, VIC	110
E279	Fuse, generator voltage control	20
E280	Fuse, VIC	112
E286	Main fuse	10, 26
E301	Fuse, AS Tronic	1045
E330	Fuse, main switch, “sens” wire	12
E350	Fuse, various electrical systems	45
E351	Fuse, various electrical systems	44
E507	Proximity switch for axle-load protection lifting gear (10 tons)	617
E508	Temperature switch for air conditioning compressor	459
E509	Air conditioning operating switch, high/low pressure	458
E511	Stop light operating switch	274
E514	Operating switch for stepwell/interior lighting, driver’s side door switch	341
E515	Operating switch for stepwell/interior lighting, co-driver’s side	343
E524	Mechanical lifting-gear operating switch, oil pressure limit switch	624
E528	Operating switch for left-hand tool compartment lighting	313, 328
E542	Proximity switch for axle load protection (13 tons)	605
E564	Operating switch, engine brake	72
E566	Operating switch for Eberspächer cab heater thermostat (DILC)	509

https://truckmanualshub.com/

Basic code number	Description	Number on search bar
E570	Pneumatic switch, clutch PTO N10	498
E571	Thermo 90/Hydronic 10 cab heater operating switch	534
E575	Proximity switch, clutch	902, 980
E579	Operating switch for thermostat/cab heater, fan, Eberspächer (water)	536
E580	Operating switch for thermostat/cab heater, fan, Eberspächer (timer)	540
E581	Operating switch/combination clock, Eberspächer Airtronic cab heater	519
E584	Proximity switch for axle-load protection lifting gear (7.5 tons)	615
E590	AS Tronic selector switch	1040
E592	Reversing light operating switch	286
E593	Neutral position switch	108
E594	Operating switch for neutral position/reverse gear	106
E595	Gearbox gate protection operating switch	140
E599	Neutral position switch	1036
F000	Control switch for parking brake	70
F006	Control switch for differential lock, 1st differential	127
F007	Control switch for differential lock, 3rd differential	131
F011	Control switch for engine oil pressure	123
F038	Control switch for differential lock, 2nd differential	129
F047	Control switch for steering system (1st circuit)	124
F048	Control switch for steering system (2nd circuit)	125
F050	Control switch for differential lock pressure, 1st and 2nd differentials	128
F087	Control switch, gearbox PTO	485
F088	Control switch, gearbox PTO	486
F097	Proximity switch for trailing axle mechanical lifting gear	613
F107	Brake pad wear switch, front left	874
F108	Brake pad wear switch, front right	876
F109	Brake pad wear switch, front left, 2nd front axle	877
F110	Brake pad wear switch, front right, 2nd front axle	879

https://truckmanualshub.com/

Changes in the electrical system from chassis number 0E646818

***CF*65/75/85** Series ≥0E621376

Basic code number	Description	Number on search bar
F111	Brake pad wear switch, rear left	880
F112	Brake pad wear switch, rear right	881
F113	Brake pad wear switch, rear left, 2nd rear axle	882
F114	Brake pad wear switch, rear right, 2nd rear axle	884
F118	Control switch for splitter signalling	121
F120	Clutch protection switch	143
F509	Cab temperature sensor of cab heater	537
F512	Wheel speed sensor, front axle, left	807, 836
F513	Wheel speed sensor, front axle, right	809, 847
F514	Wheel speed sensor, driven axle, left	810
F515	Wheel speed sensor, driven axle, right	811
F533	Speed sensor (4-pin, 1st)	52
F544	Coolant temperature sensor for secondary retarder	558
F552	Crankshaft sensor	906
F558	Camshaft sensor	905
F565	Sensor, fuel temperature	907
F566	Sensor, engine coolant temperature	909
F601	Sensor, AGS	717
F602	Sensor, AGS	719
F608	Sensor, fuel level	116
F612	Height sensor, ECAS, rear axle, left	637, 665
F613	Height sensor, ECAS, rear axle, right	639, 666
F614	Height sensor, ECAS, front axle	640, 668
F615	Pressure sensor, ECAS, driven axle, left/right	669
F616	Cab locking sensor	102
F619	Cab locking sensor, alarm system	354
F628	EBS foot brake valve	861
F649	Boost pressure and air inlet temperature sensor	910
F651	Ambient temperature sensor	112
F652	Air pressure sensor	113
F656	Coolant level sensor	117
F669	Retarder temperature sensor, automatic gearbox	723
F670	Automatic gearbox turbine speed sensor	724

https://truckmanualshub.com/

Basic code number	Description	Number on search bar
F671	Sensor, accelerator pedal, ECS-DC3	972
F672	UPEC accelerator pedal sensor	913
F673	Sensor, engine oil level and temperature	143
F676	Cab locking sensor	103
F686	Alarm system sensor, radar	360
F687	Angle sensor, front axle, EMAS	575
F688	Angle sensor, rear axle, EMAS	576
F701	Steering angle sensor	849
F702	VSC module	850
F705	Speed sensor	1053
G000	Relay, tail light/width marker light/search lighting	208, 225
G001	Relay, dipped beam	217, 253
G002	Relay, main beam	219, 257
G003	Relay, spotlights	256, 260
G004	Relay, front fog lamp	211, 263
G005	Relay, rear fog lamp	136, 266
G014	Relay, glowing	22, 23, 918, 977
G015	Relay, contact	1, 38
G028	Electric drop glass operation relay, co-driver's side	413, 421
G029	Electric drop glass operation relay, co-driver's side	415, 422
G030	Relay, electric drop glass operation, driver's side	417, 427
G031	Relay, electric drop glass operation, driver's side	418, 428
G036	Relay, stop light	274, 275, 931, 934
G037	Stop light micro relay for AGC with retarder	279, 281
G052	Relay, mechanical lifting-gear motor	622, 629
G066	Relay, mechanical lifting-gear takeover	622, 624
G095	Traction assistance relay, 60 sec. bleeding	609
G126	Supply relay, UPEC/ECS-DC3	905, 906
G170	Relay, cab heater fan	525, 535
G180	Time relay power supply, Allison, 12V	703
G181	Takeover relay power supply, Allison, 12V	703, 709
G185	Starting circuit interrupter relay	29, 30, 707, 1035
G201	Fuel heating relay, EFPH	597, 599, 981, 995

https://truckmanualshub.com/

Changes in the electrical system from chassis number 0E646818

***CF*65/75/85** Series ≥0E621376

Basic code number	Description	Number on search bar
G203	Starter motor takeover relay	27, 29
G236	Relay, windscreen wiper (speed 1 or 2)	95, 99
G237	Relay, windscreen wiper (automatic zero position)	95, 96
G247	Relay, heater fan, Eberspächer Hydronic cab heater	523, 529
G257	Recirculation valve relay	464, 467
G258	Recirculation valve relay	462, 467
G259	PTO operation takeover relay	498, 499
G267	Air conditioning relay	455, 458
G279	Air conditioning relay	457, 468
G291	Relay, automatic gearbox	710, 759
G292	Relay, automatic gearbox	710, 712
G293	Relay, automatic gearbox	749, 754
G294	Relay, automatic gearbox	707, 756
G295	Relay, automatic gearbox	712, 754
G299	Relay, roof spotlights	782, 789
G301	Relay, light D+	131, 202
G302	Relay for Swedish lighting	204, 206
G328	Relay, engine stop	43, 941
G350	Relay, reversing lights, automatic gearbox	283, 285, 286, 288
G351	Relay, cab tilt protection	104, 105
G367	Relay, main switch power supply	4, 10
G371	Relay, automatic gearbox, superstructure	708, 750
G372	Starting circuit interrupter relay	29, 134
G375	Stop light relay for AGC with retarder	271, 709
G377	Relay, accessories power supply for radio	1103, 1112
G380	Relay, mechanical lifting axle	613, 617
G381	Relay, mechanical lifting axle	616, 627
G426	Relay, contact	39, 41
G427	FAG traction assistance relay	606, 609
G462	Relay, work lamp	33, 35
G469	Relay, braking signal	931, 932
G516	Central cab earth, co-driver’s side	1014
G535	CAN distribution block	183

https://truckmanualshub.com/

Basic code number	Description	Number on search bar
G732	Through-connection for cab heater	538
G733	Through connection for intarder neutral position	107
G734	Through-connection for brake lining wear	880
G736	V-CAN connection	198
G737	Through-connection, ECS-DC3 speed control	993
G745	Through-connection, mechanical lifting gear	625
G757	Through-connection for main switch	39
I020	Diode, gearbox gate protection	141
I034	Diode, stop light relay	272, 933

https://truckmanualshub.com/

3.4 SECTION DIAGRAMS FROM CIRCUIT DIAGRAMS 1358030/30-34

A	Voltage before and after contact
B	Overview of earthing points
C	CAN overview
1	Main switch
2	Alternator/starter motor/ignition/starter switch
3	Modular tachograph (MTCO)
8	VIC
9	FA marker/parking lights
10	FT marker/parking lights
11	UPEC
15A	Stop lights in combination with manual gearbox/cab tilting gear
15B	Stop lights in combination with manual gearbox/cab tilting gear
17	D/SL interior lighting
18	SH interior lighting
20	Search lighting
25	DEB
26	Intarder EST 42
27	Engine Control System (ECS-DC3)
29	EMAS
30	AGC
32	PTO
34A	ECAS-3
34B	ECAS-2
41	Airtronic cab heater (ACH-EA) with/without timer
42	Hydronic 10 (ACH-EW) cab heater with timer
43	UPEC/CUMMINS/AGC application connector
46	Alarm system/battery charger for BV3 alarm
52	CDM + FMS

https://truckmanualshub.com/

https://truckmanualshub.com/

A VOLTAGE BEFORE AND AFTER CONTACT

VOLTAGE BEFORE CONTACT

A constant voltage is supplied to pin 1 of connector 416 through wire 1008, point 30 on the starter motor, fuse E286, the + bolt in the bulkhead connector lead-through and the voltage distribution block.
Power is also supplied (via wire 1008) from point 30 of the starter motor to the B+ connection of the alternator and to relay G014 (glow-plug relay).

Power is supplied to the “S” (sens) connection of the alternator from point 30 of the starter motor via fuse E279 and wire 3084.

Only wire 1008 to the + bolt in the bulkhead connector lead-through is fuse-protected by fuse E286 (125A).
The other wires are NOT fuse-protected and they can only be made dead by disconnecting the battery leads.

VOLTAGE AFTER CONTACT

A voltage is supplied to contact relay G015 (connection point 30) via the starter motor (connection point 30). This connection point may be connected to wire 1010 over contact relay G015.
This wire is only fuse-protected with fuse E286 (125 A).

OPERATION

When the accessories/ignition/starter switch (C539) is set to the “accessories” position (connection between points 1 and 6), a voltage is supplied to connection point 1 of relay G377 via wire 1000, fuse E037, accessories/ignition/starter switch (C539) (contact points 1-6) and wire 1130.

When the accessories/ignition/starter switch (C539) is set to the “contact” position (connection between points 1 and 4), relay G015 is energised via wire 1000, fuse E037, accessories/ignition/starter switch (C539) (contact points 1 - 4) and wire 4001.
This then connects wire 1000 (voltage before contact) to wire 1010 (voltage after contact).

When the accessories/ignition/starter switch (C539) is turned against the pressure of the spring (connection between points 1 and 2), relay G015 remains energised and a voltage is supplied to starting circuit interrupter relay G372 or to D979 (Hydronic 10 cab heater electronic unit) (if fitted) via wire 1000, fuse E037, accessories/ignition/starter switch (C539) (contacts 1-2) and wire 4004. The engine will start, depending on the activation of relay G372 by VIC. When the key is released, the accessories/ignition/starter switch automatically springs back and remains in the “contact” position.

VARIANTS

Location

27:	Relay G372 for manual gearbox. Relay G185 for AS Tronic or Allison.

© 200520

https://truckmanualshub.com/

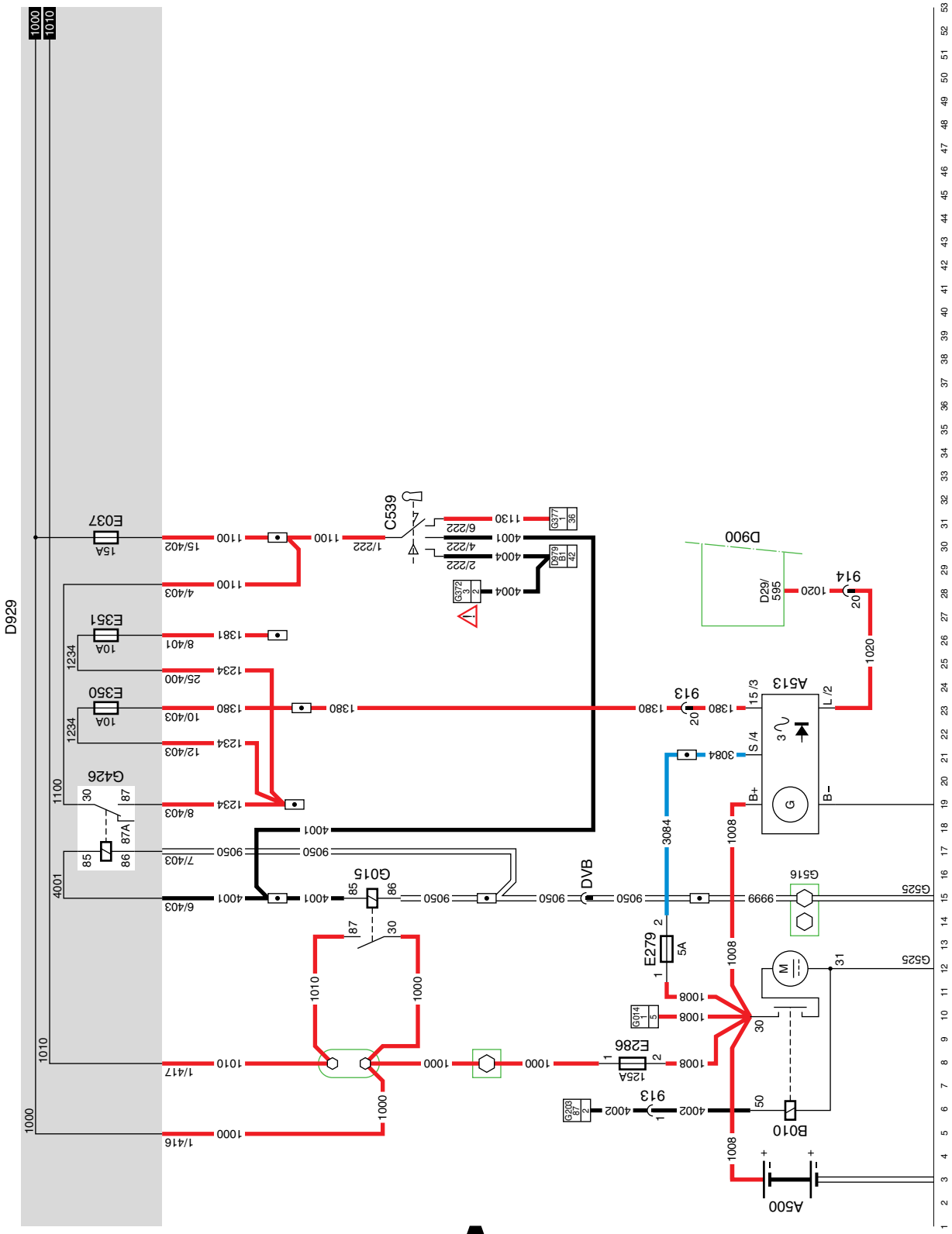

A 1358030/30-34

EL001495

11

https://truckmanualshub.com/

B OVERVIEW OF EARTHING POINTS

This section diagram gives an overview of all the earth connections, with wire markings and connector points.

VARIANTS

Location	
10	C900 for EBS system C737 for ABS/ASR-D
12	Connector 658: superstructure connector (optional)
19	Connector 582 for cab heater ACH-EA. Connector 482 for cab heater ACH-EW
59	Connector 644: only for AGC
63	Only for AS Tronic
71	Connector 869: only for AS Tronic
72	Connector 403 only for AS Tronic
74	Connector 868 only for AS Tronic
75	Earth connection to relay G036 only for AS Tronic
80	Connector 860: loop-through to ECAS

https://truckmanualshub.com/

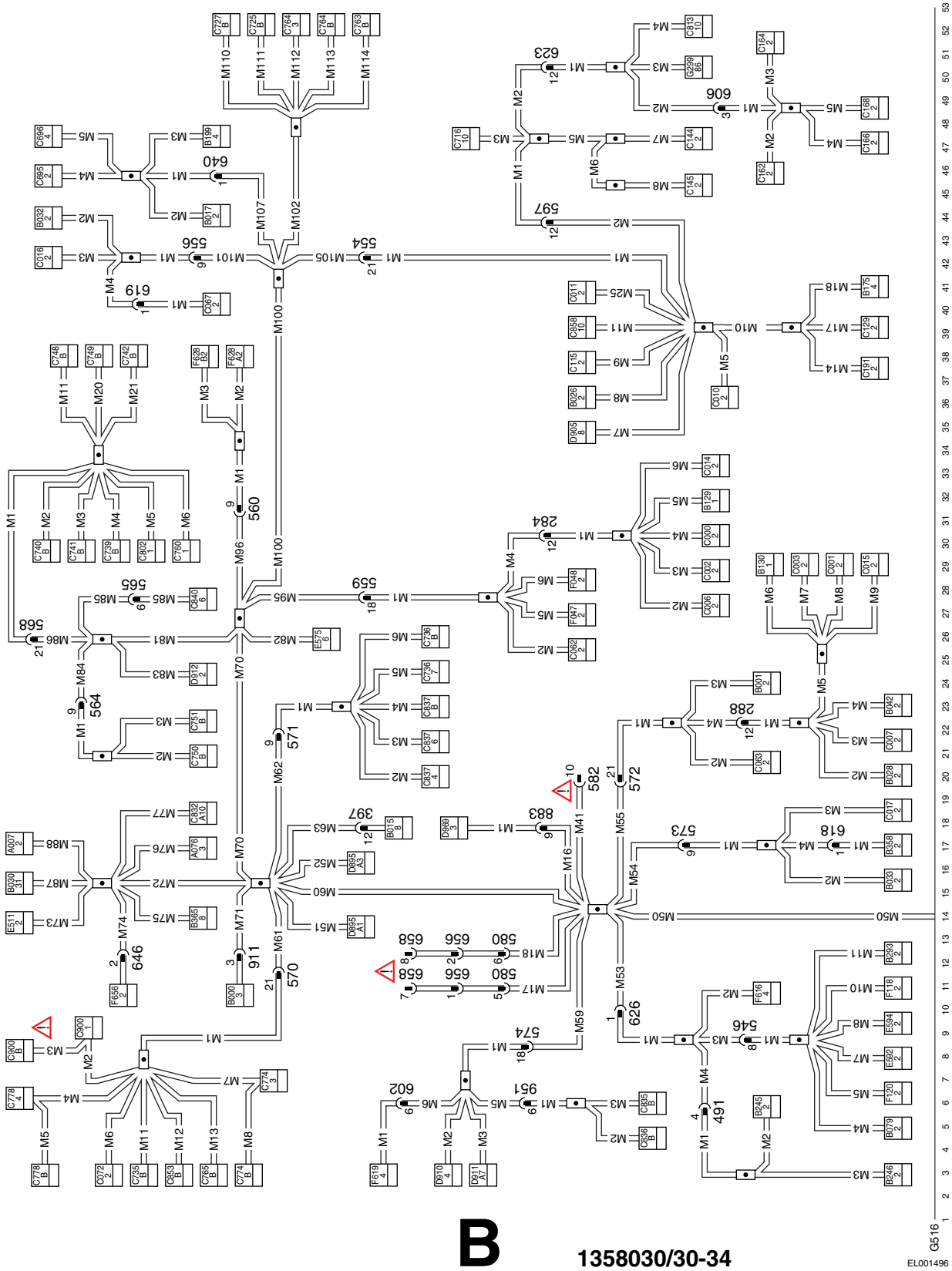

https://truckmanualshub.com/

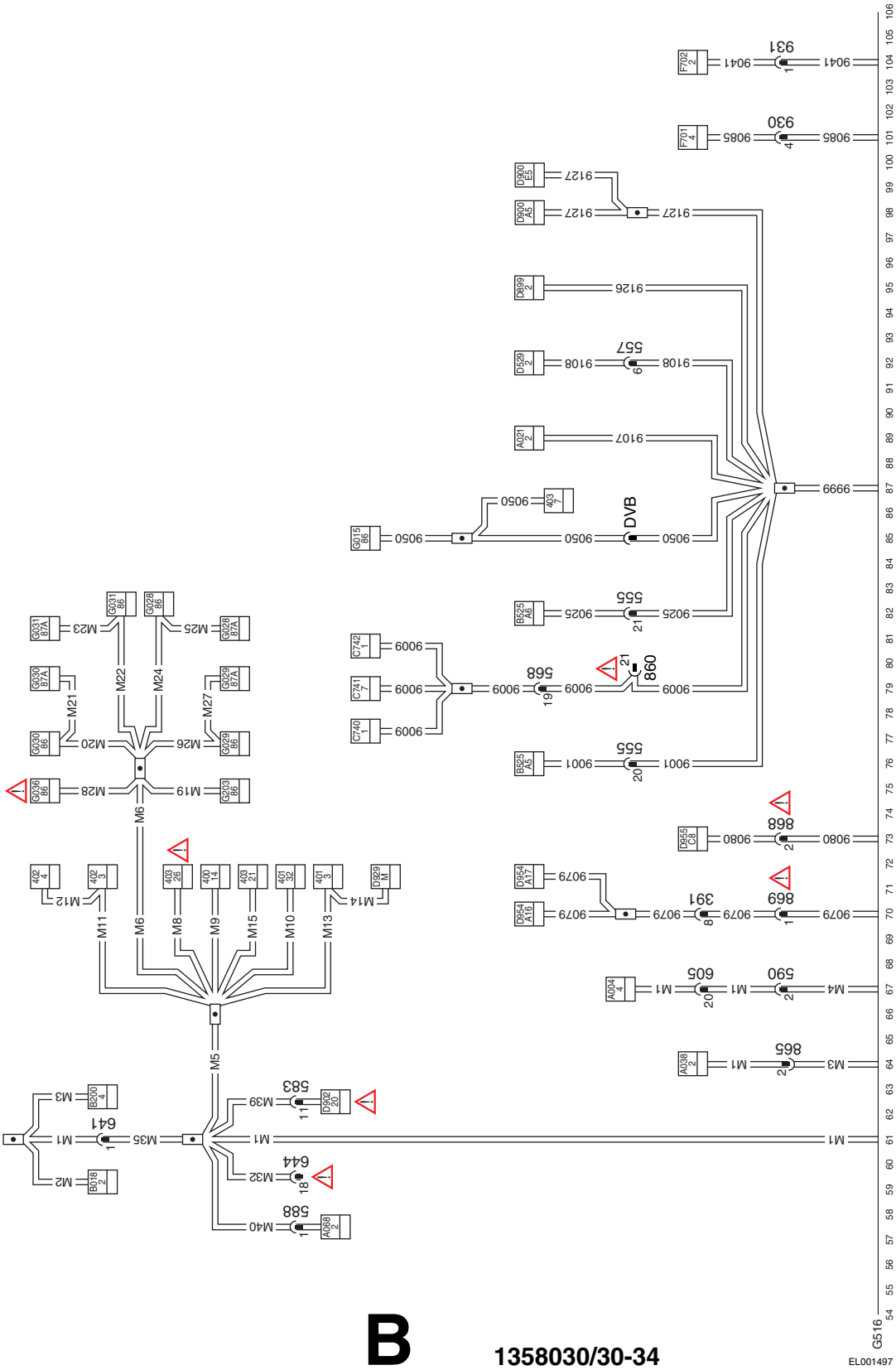

https://truckmanualshub.com/

https://truckmanualshub.com/

C CAN OVERVIEW

This section diagram gives an overview of all the CAN connections, with wire markings and connector points.

SEE THE SYSTEM MANUAL FOR MORE INFORMATION

VARIANTS

Location	
11	D954: only for AS Tronic. If AS Tronic is **NOT** fitted, wire 3700D and wire 3701D direct from C14 and C15 without in-line connectors from D900 to G535, connection points A1 and A2.
25	D814: UPEC electronic unit or D903: Electronic unit, ECS-DC3
64, 67	Connector 873 only on vehicle type FA

https://truckmanualshub.com/

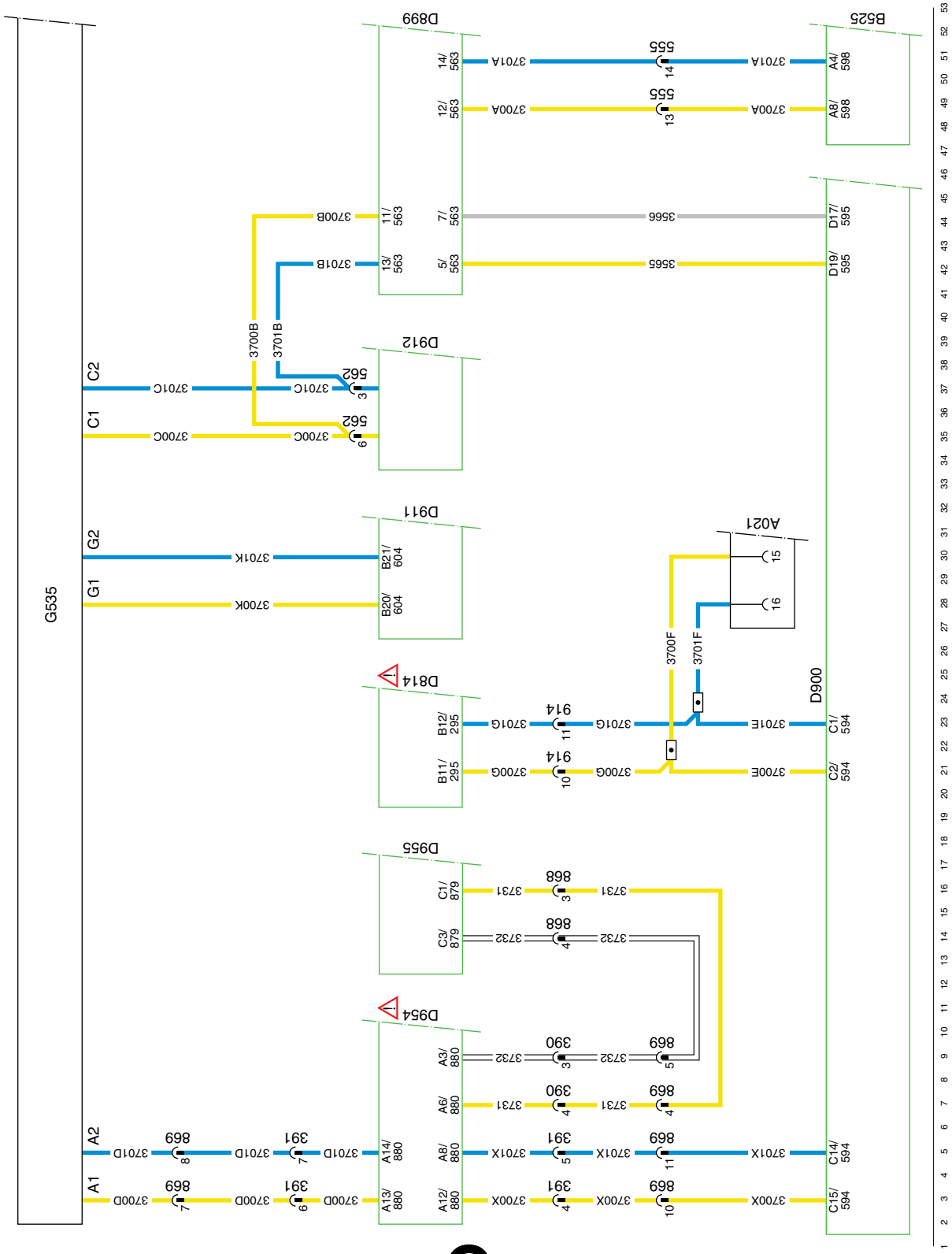

1358030/30-34

EL001498

11

https://truckmanualshub.com/

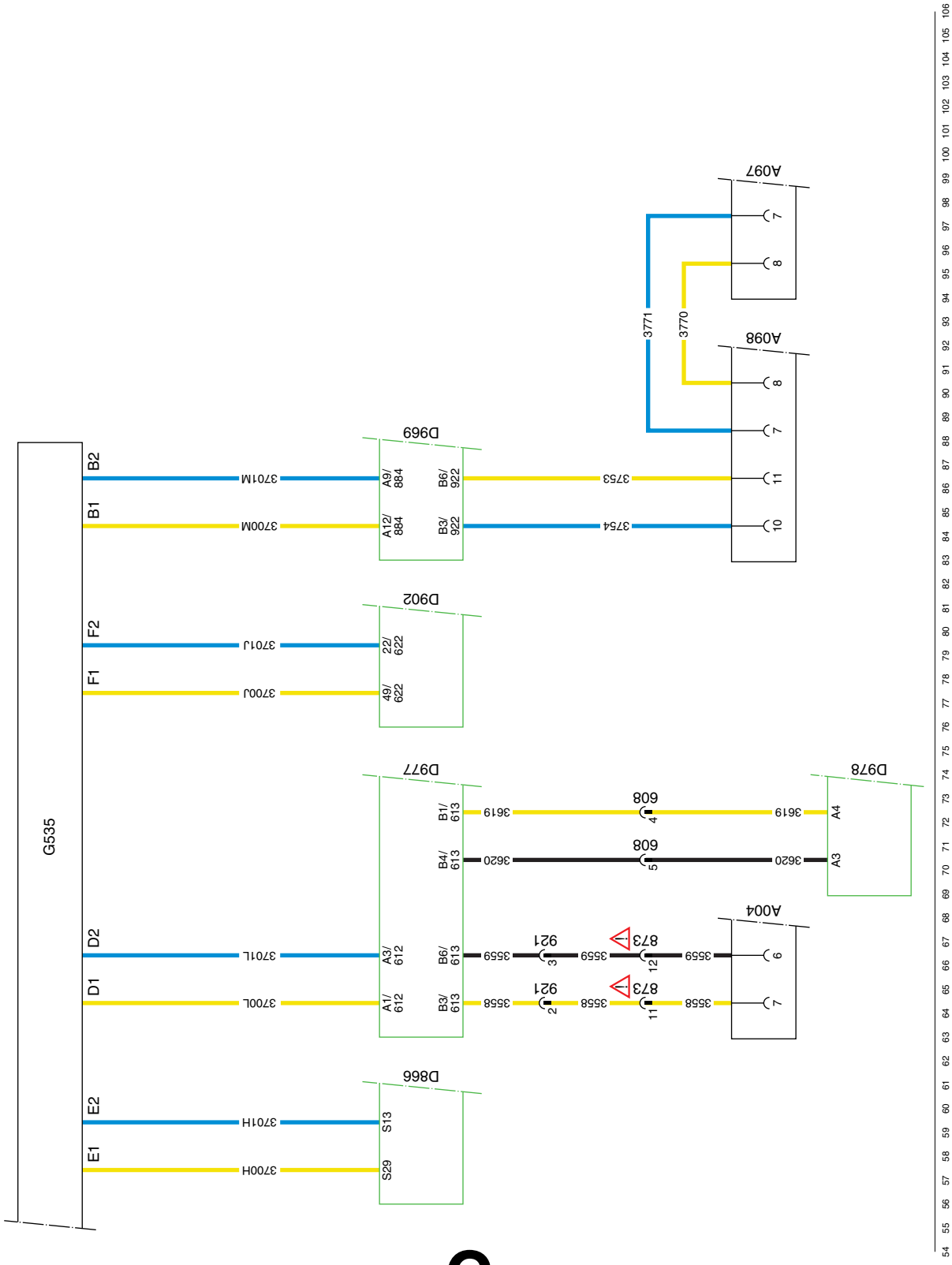

C

1358030/30-34

EL001499

11

https://truckmanualshub.com/

https://truckmanualshub.com/

Changes in the electrical system from chassis number 0E646818

***CF*65/75/85** Serie ≥0E621376

MAIN SWITCH FOR VLG/ADR

If the vehicle has an Allison gearbox and the system must meet specific safety requirements, wire no. 1009 (Allison power supply) should be connected to connection 88a of relay G367.

Basic code number	Description
A500	Batteries
B525	Modular tachograph, MTCO
C853	Cab main switch
C854	Chassis main switch
D924	Electronic unit, main switch
E117	Fuse, search lighting
E153	Fuse, main switch for timer/engine stop/main switch power supply
E286	Main fuse
E330	Fuse, main switch, “sens” wire
G015	Contact relay
G367	Relay, main switch power supply
G426	Contact relay
G757	Through-connection between output A7 (wire 4179), G015 and G426 via wire 9050.

E502088

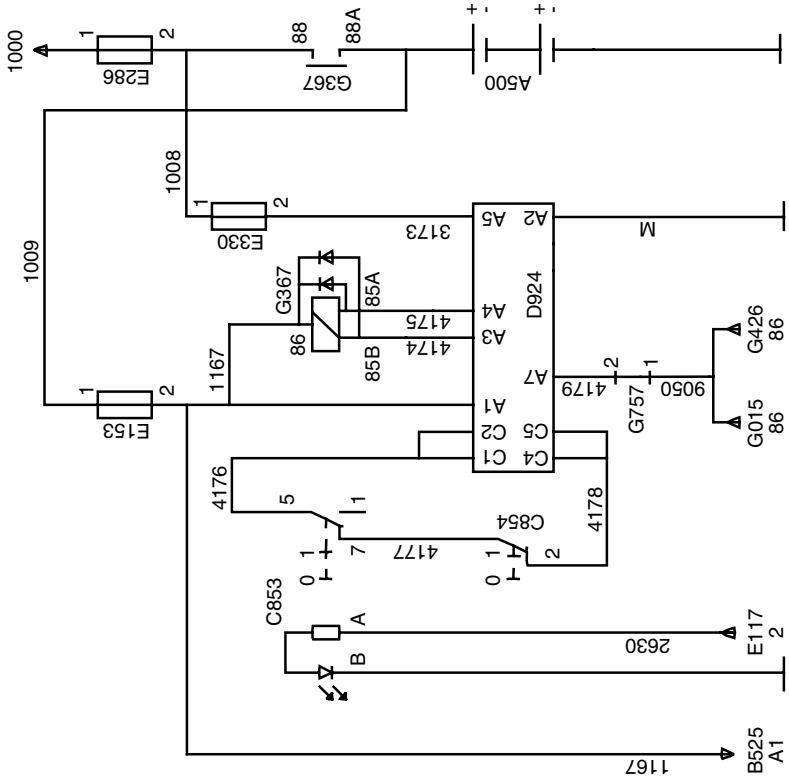

11

1 MAIN SWITCH

https://truckmanualshub.com/

Relay, main switch power supply
Relay G367 is a bi-stable relay. If one of the two coils is briefly energised, the relay will remain in this position. If the other coil is energised, the relay will switch over and then remain in the new position.

Electrically closing the main switch

The main switch (D924) can be closed:
- electrically in the cab using switch C853
- electrically on the chassis using switch C854

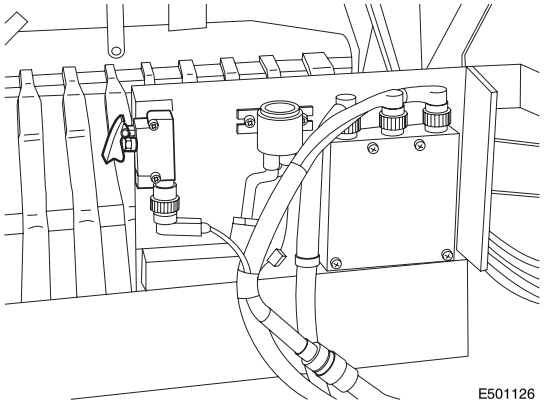

ATTENTION: Switches C853 and C854 are connected in series. When C853 or C854 is switched on, the other switch must be in the "main switch on" position.
Switch C853 (main switch in cab) connects the C1 and C2 connections to the C4 and C5 connections via wire 4176, contacts 5-7 of switch C853, wire 4177, contacts 1-2 of switch C854 and wire 4178.
Relay G367 is immediately energised through wire 4174 and connection point A3 (A3 is connected to earth in the unit for 0.5 seconds). This connects point 88a to 88 of relay G367. The positive terminal of the batteries is now connected to the vehicle's power supply.
Immediately after switch C853 closes, connection point C2 is internally connected to point A7.

Connection point A5 is connected to the positive terminal via wire 3173 after connection point 88 of relay G367. This connection transmits a signal to the ECU to indicate that relay G367 has switched.

Closing the main switch electrically on the chassis

NOTE: Switch C853 must be in the "main switch on" position (connection between contacts 5 and 7).
Switch C854 (switch for main switch on the chassis) connects the C1 and C2 connections to the C4 and C5 connections via wire 4176, contacts 5-7 of switch C853, wire 4177, contacts 1-2 of switch C854 and wire 4178.
Relay G367 is immediately energised through wire 4174 and connection point A3 (A3 is connected to earth in the unit for 0.5 seconds). This connects point 88a to 88 of relay G367. The positive terminal of the batteries is now connected to the vehicle's power supply.
Immediately after switch C854 closes, connection point C2 is internally connected to point A7.

Connection point A5 is connected to the positive terminal via wire 3173 after connection point 88 of relay G367. This connection transmits a signal to the ECU to indicate that relay G367 has switched.

The main switch (D924) can be opened:
- electrically in the cab using switch C853
- electrically on the chassis using switch C854

Opening the main switch electrically in the cab

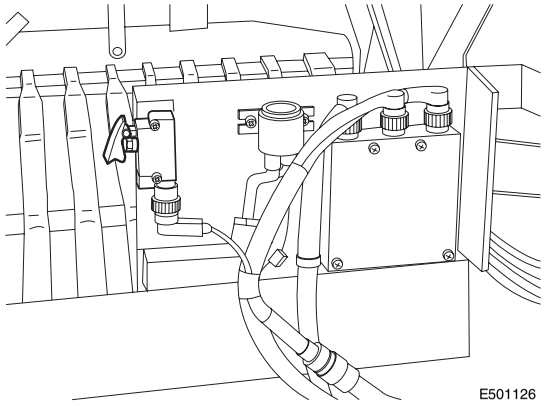

NOTE: Switch C854 must be in the "main switch on" position (connection between contacts 1 and 2).
Switch C853 (switch for main switch in cab) disconnects the C1 and C2 connections from the C4 and C5 connections via wire 4176, contacts 5-7 of switch C853, wire 4177, contacts 1-2 of switch C854 and wire 4178.

https://truckmanualshub.com/

Two actions are carried out immediately after switch C853 is opened:

1. connection point A7 is disconnected from earth (A2) in the unit. If the engine is running, it is switched off.
2. after a delay of approx. 6 seconds, relay G367 is connected to earth in the unit for approx. 0.5 seconds via wire 4175 and connection point A4. This breaks the connection between points 88a and 88 of relay G367. The batteries are now disconnected from the vehicle's power supply.

Connection point A5 is connected to the positive terminal via wire 3173 and fuse E330 after connection point 88 of relay G367. This connection transmits a signal to the ECU to indicate that relay G367 has switched.

Opening the main switch electrically on the chassis

NOTE: Switch C853 must be in the "main switch on" position (connection between contacts 5 and 7).
Switch C854 (main switch in cab) disconnects the C1 and C2 connections from the C4 and C5 connections via wire 4176, contacts 5-7 of switch C853, wire 4177, contacts 1-2 of switch C854 and wire 4178.

Two actions are carried out immediately after switch C854 is opened:

1. connection point A7 is disconnected from earth (A2) in the unit. If the engine is running, it is switched off.
2. After a delay of approx. 6 seconds, relay G367 is connected to earth in the unit for approx. 0.5 seconds via wire 4175 and connection point A4. This breaks the connection between points 88a and 88 of relay G367. The batteries are now disconnected from the vehicle's power supply.

Connection point A5 is connected to the positive terminal via wire 3173 and fuse E330 after connection point 88 of relay G367. This connection transmits a signal to the ECU to indicate that relay G367 has switched.

Note:
When one of the switches (C853 or C854) that activate the electronic unit (close main switch) is operated, relay G367 is activated after approximately 3 seconds. If one of the switches is operated again within the 3 seconds, the electronic unit (D924) will select the priority "main switch ON".

MECHANICAL MAIN SWITCH
When C694 (mechanical main switch) is operated, connections B and A are connected. The earth of the batteries is now connected to the chassis. The earth connection of B525 (MTCO) is independent of the position of the main switch.

VARIANTS

Location	
22	Attach wire 4176 to pin 11 of connector 570.
25	Attach wire 4177 to pin 12 of connector 570.
37	Attach wire 1167 to pin 2 of connector 555.
64	Attach wire 9307 to pin 20 of connector 555.

https://truckmanualshub.com/

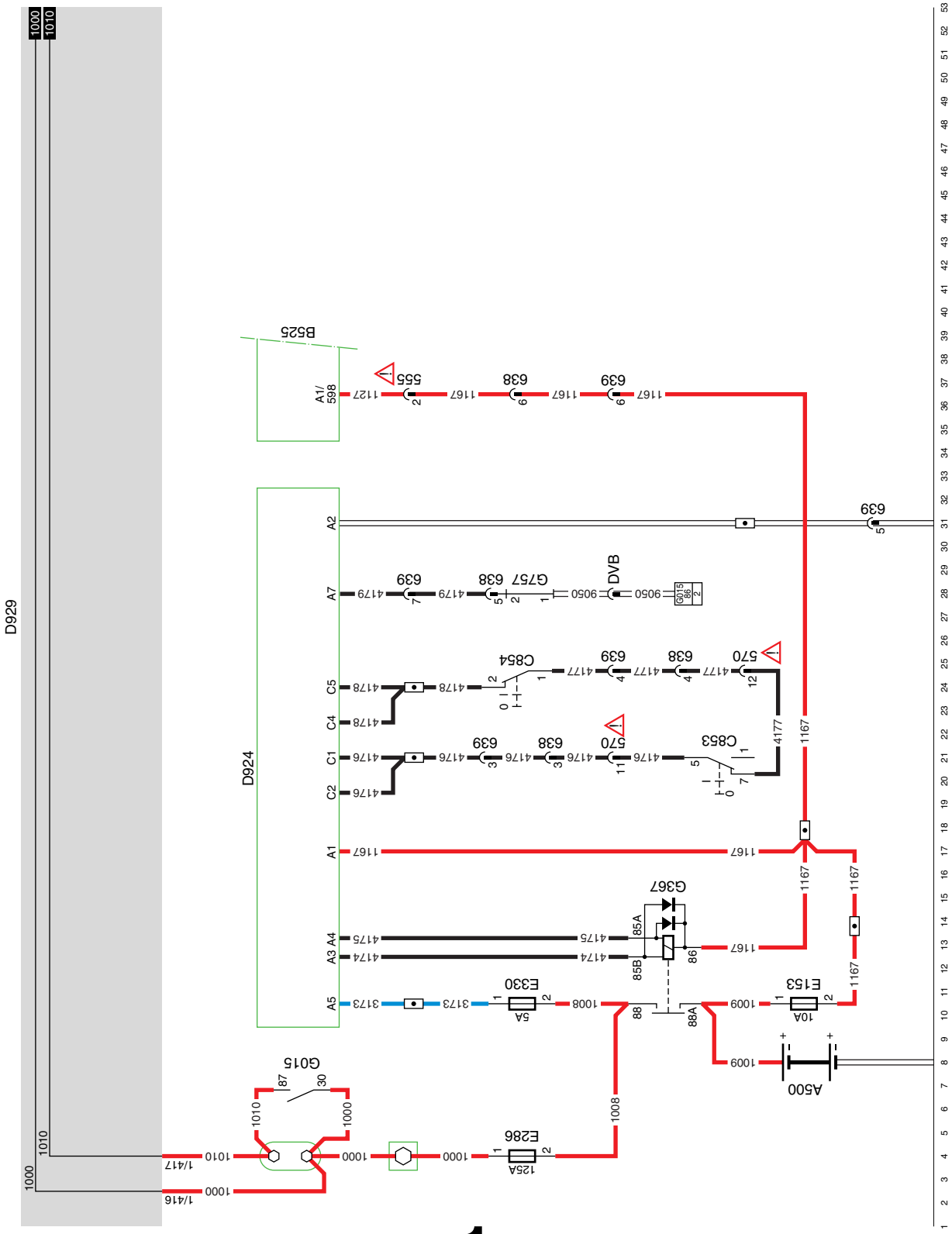

1

1358030/30-34

EL001500

11

https://truckmanualshub.com/

Changes in the electrical system from chassis number 0E646818

***CF*65/75/85** Serie ≥0E621376

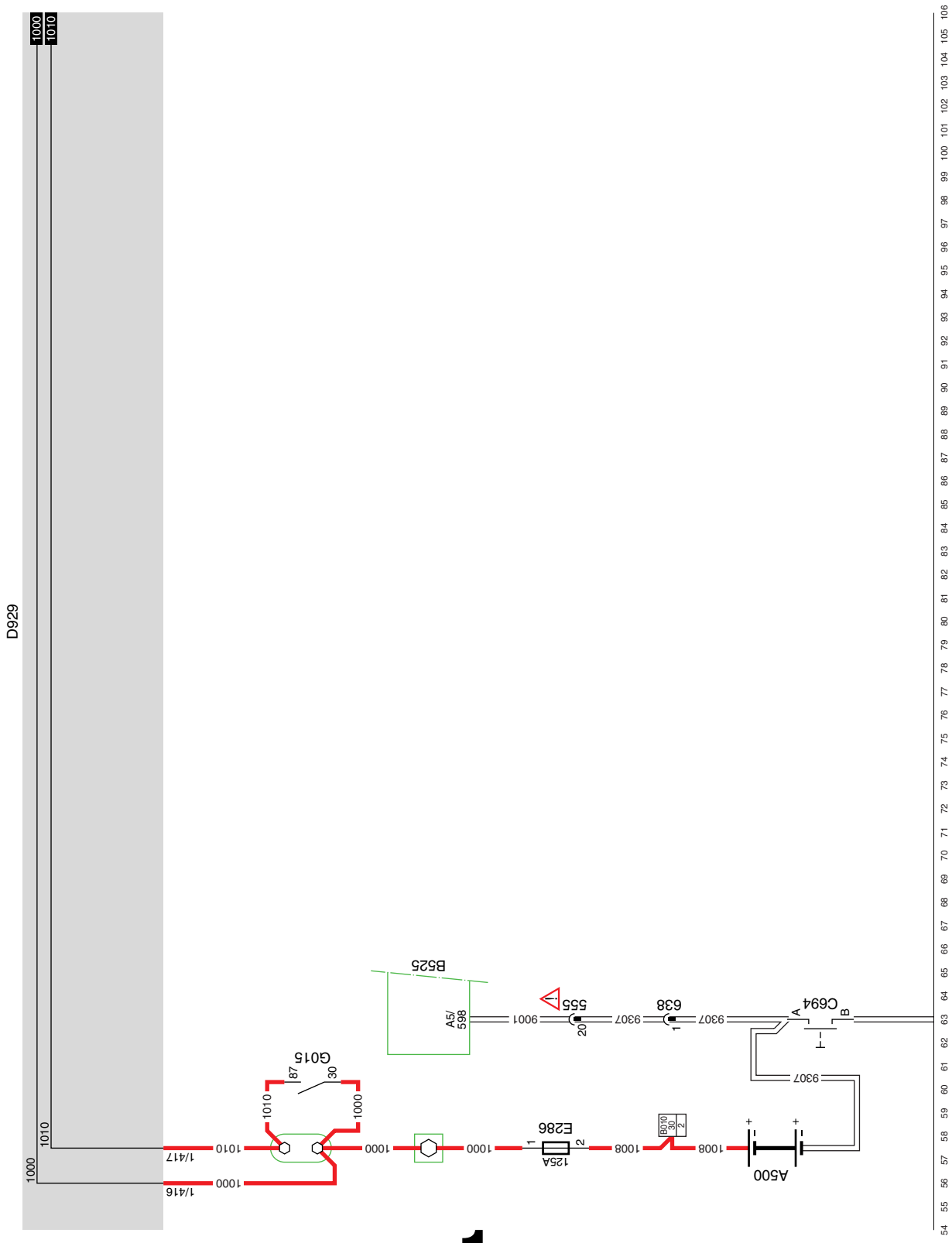

1

1358030/30-34

EL001501

11

© 200520

https://truckmanualshub.com/

https://truckmanualshub.com/

2 ALTERNATOR/IGNITION/STARTER SWITCH/CHARGING CIRCUIT

CONTACT CIRCUIT

If accessories/ignition/starter switch C539 is turned (contact 1 is connected to pin 6), the "radio accessories power supply" relay (G377) will be energised.
Voltage is now applied to contact 1 of relay G377 through fuse E037, wire 1100, contacts 1-6 of switch C539, wire 1130. When G377 is energised, a connection is made between contacts 3 and 5 of G377 and a voltage is switched from the converter to the radio.

STARTING CIRCUIT

If the ignition switch C539 is turned (contact 1 is connected to 4), contact relay G015 will be activated via wire 4001.
If the ignition switch is turned to the "start" position, a contact is made in this switch between contacts 1 and 2. The power is now supplied from the batteries through fuse E037, the connection 1-2 from the ignition/starter switch and wire 4004 on connection point B1 of D979.
A voltage is also applied to connection point 30 of relay G185 through wire 4004.
Relay G185 is only fitted if the vehicle is equipped with AS Tronic. When the contact is switched on and the gearbox is in neutral, relay G185 will be energised.
The voltage is now applied to connection point 85 of relay G203 through wire 4004, contacts 30-87 of relay G185, contacts 3-5 of relay G372. This relay is energised, thereby connecting connection point 30 to connection point 87.
A voltage is now applied to connection point 50 of the starter motor, through fuse E037, wire 1100, relay contacts 30-87, wire 4002, causing the starter motor to turn.

As soon as the motor turns, the VIC applies a voltage to connection point C44. The voltage is then applied to connection point 1 of relay G372 via wire 4202. This relay is energised, breaking the starting circuit.

If the vehicle has a manual gearbox, wire 4004 is directly connected to point 3 of relay G372.

CHARGING CIRCUIT

If the contact is activated, there is voltage on connection 15 of the alternator.
An internal resistor in the alternator is energised by an IC in the carbon brush holder. This resistor ensures that a low level of current passes through the energised resistor. This excites a magnetic field in the alternator.

After starting, the voltage on terminals B+ and 15 will rise to about 28.5V. Once this voltage is reached, the IC in the regulator interrupts the pre-exciter coil to enable the voltage to be controlled. The magnetic field will now disappear, so that the generator will not be energised for a short period of time. As a result, the voltage on outputs B+ and 15 will drop.
The regulator reactivates when the voltage drops below 27.6V. This means that the voltage supplied by the generator remains relatively constant. The batteries are supplied through the B+ generator output.

The alternator charging current warning in the DIP is activated through wire 1020, which is connected to connection point D29 of the VIC (D900). The VIC controls the DIP via the CAN network. The voltage on wire 1020 is switched by the control IC.

The alternator is also equipped with a "sens" line. This connection continuously measures the voltage on connection point 30 of the starter motor. If the voltage on connection point 30 drops, it is immediately corrected by the control IC. The alternator will increase the voltage until a value of 28.5V is reached again.

VARIANTS

Location	
15	DVB in wiring harness next to PCB
46	If AS Tronic not fitted: wire 4004 direct from connector 582, connection point 2 to connector 400, connection point 12.
52	Relay G185 fitted only on AS Tronic gearbox.

https://truckmanualshub.com/

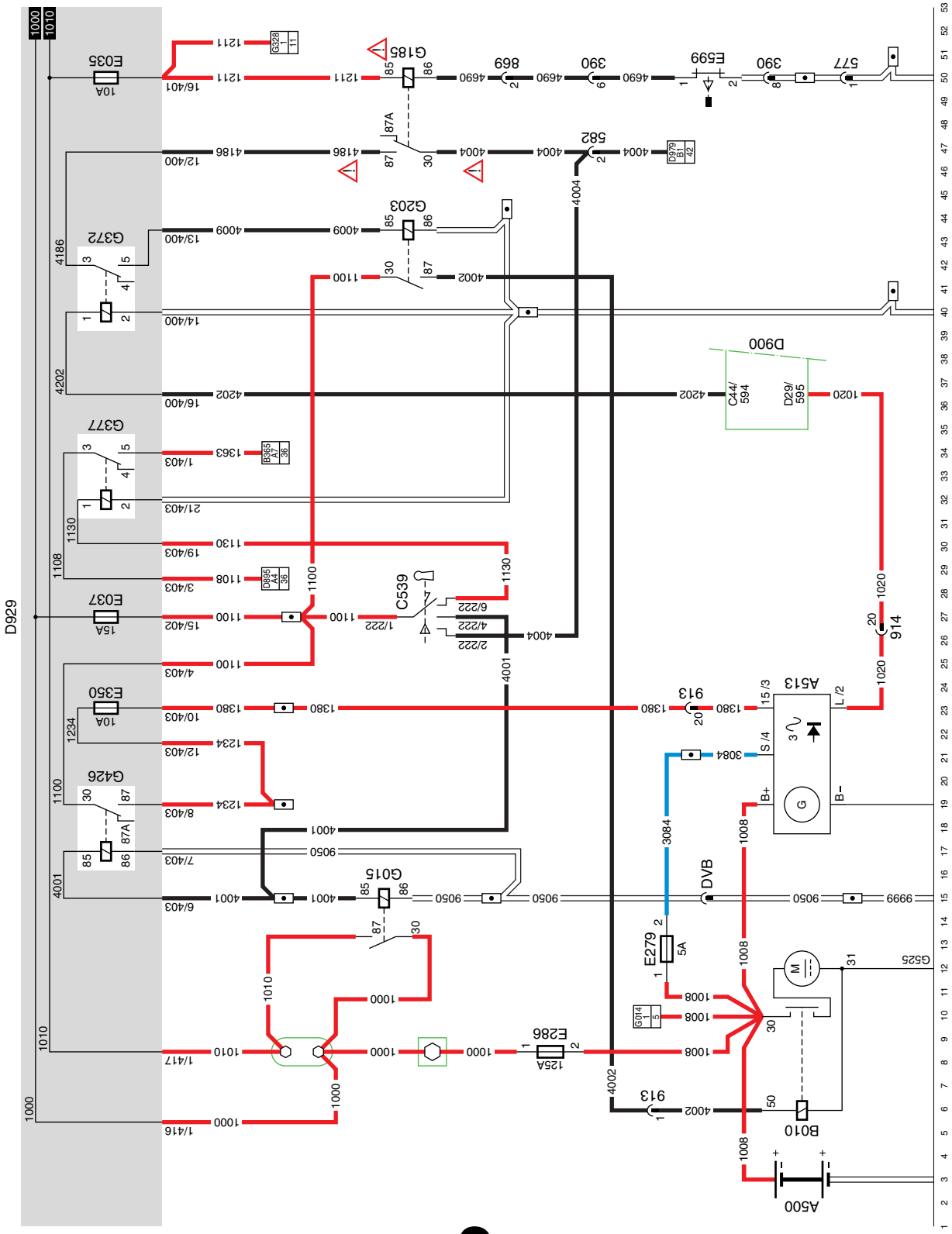

2

1358030/30-34

EL001502

11

https://truckmanualshub.com/

3 MODULAR TACHOGRAPH (MTCO)

SEE THE SYSTEM MANUAL FOR MORE INFORMATION

VARIANTS

Location

26	Connector 699 for AS Tronic. Connector 626 for manual gearbox.
29	D814 for vehicles with UPEC. D903 for vehicles with ECS-DC3.
39	Connector 861: connection to ECAS system

© 200520

https://truckmanualshub.com/

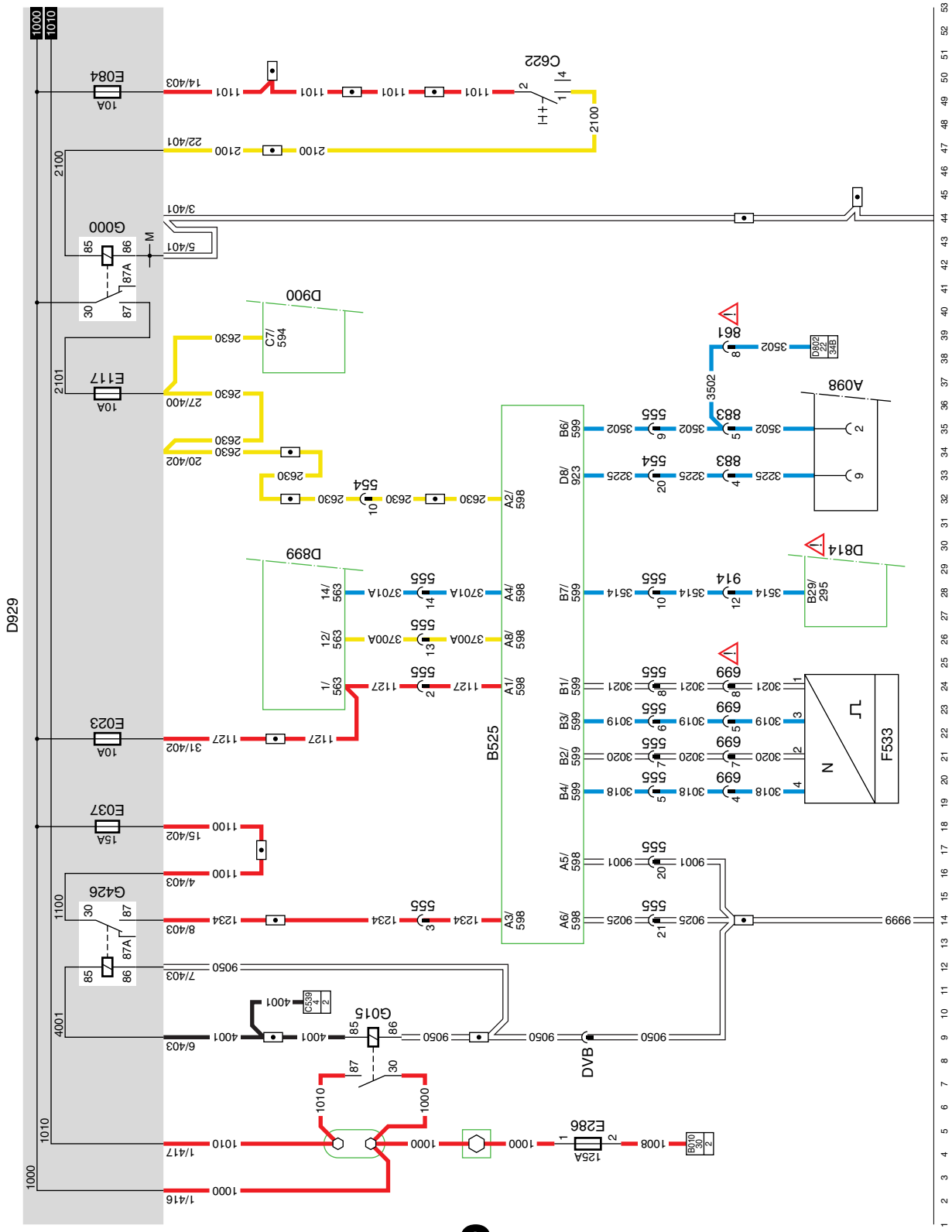

3

1358030/30-34

EL001503

https://truckmanualshub.com/

8 VIC

SEE THE SYSTEM MANUAL FOR MORE INFORMATION

VARIANTS

Location

146	Connector 580: is an option for bodybuilder
148	D871: cab heater ACH-EA. D979: cab heater ACH-EW
148	Relay G301: if vehicle is fitted with Swedish lighting.
203	Connector 584: for vehicles with ABS/ASR-D. Connector 585: for vehicles with EBS.
223, 227	D954: only for AS Tronic. If AS Tronic is **NOT** fitted, wire 3700D and wire 3701D direct from C14 and C15 without in-line connectors from D900 to G535, connection points A1 and A2.

https://truckmanualshub.com/

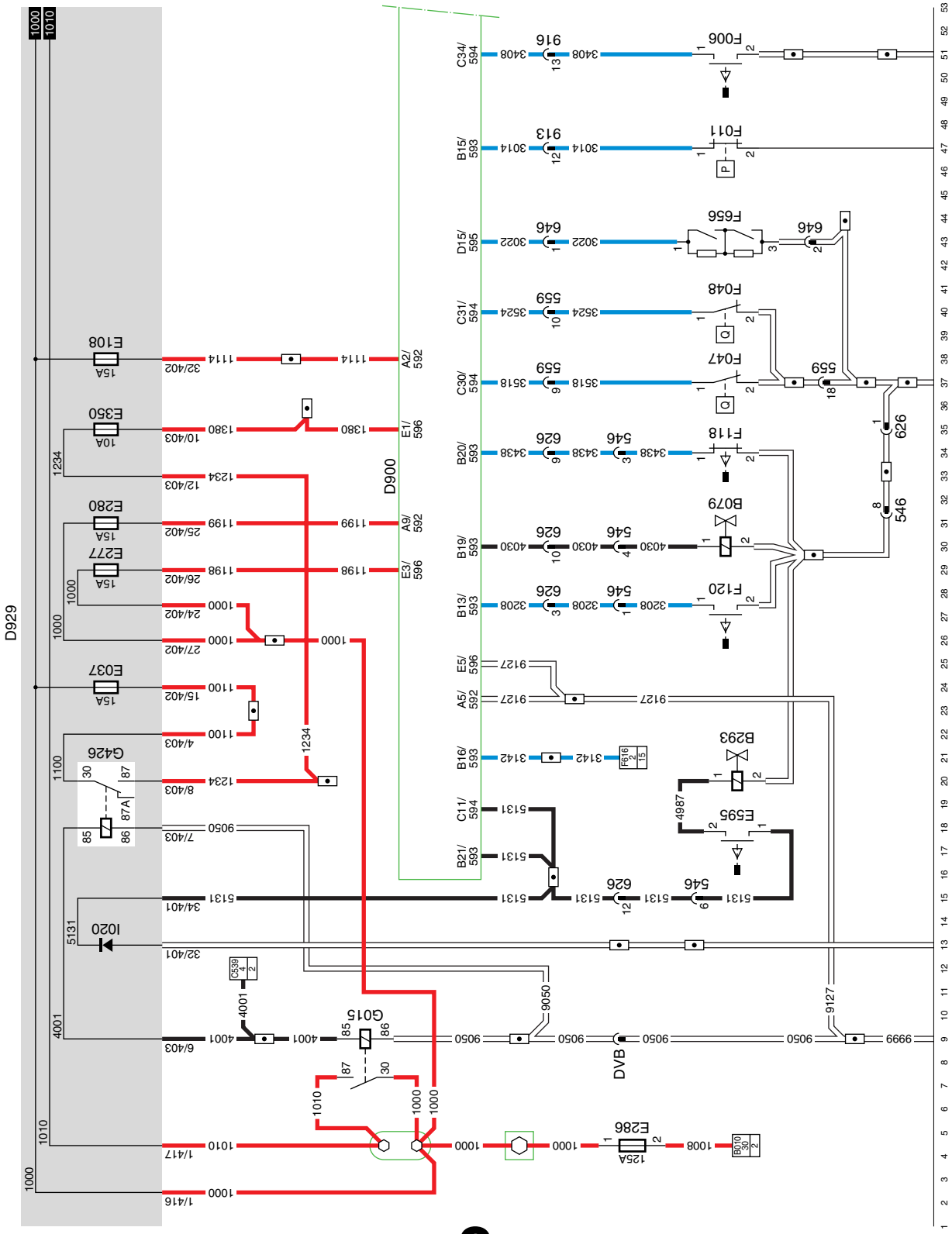

8

1358030/30-34

EL001504

https://truckmanualshub.com/

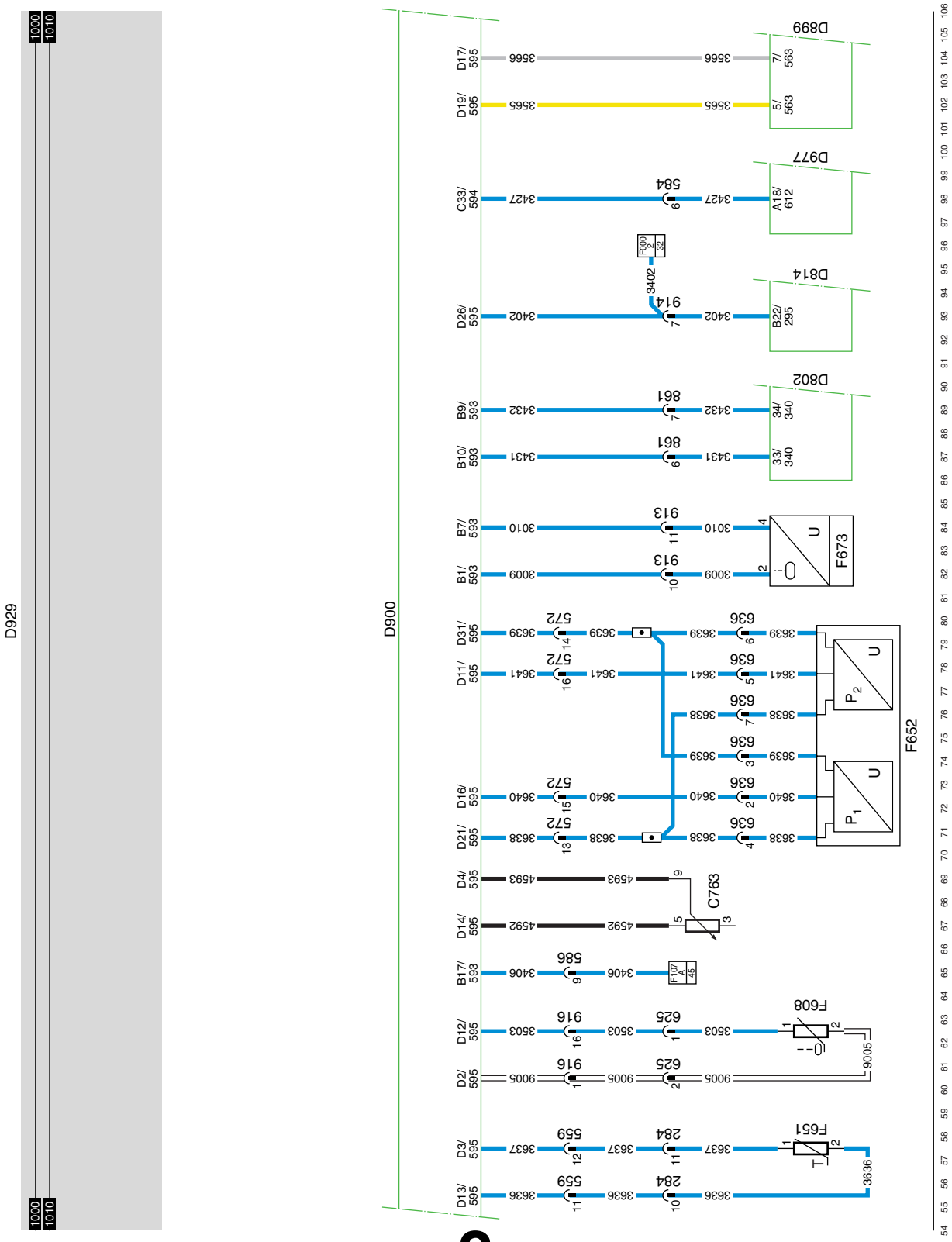

© 200520

https://truckmanualshub.com/

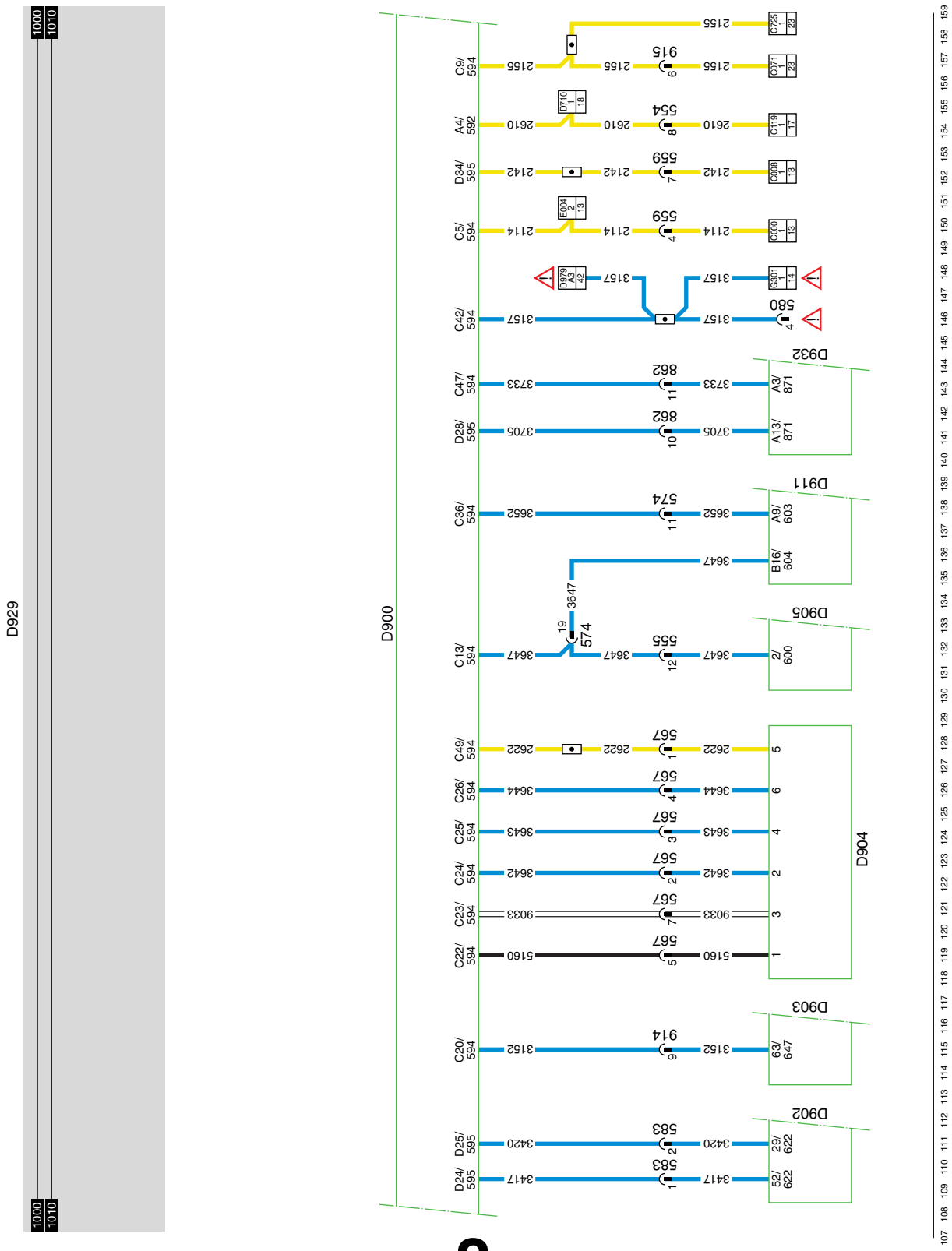

https://truckmanualshub.com/

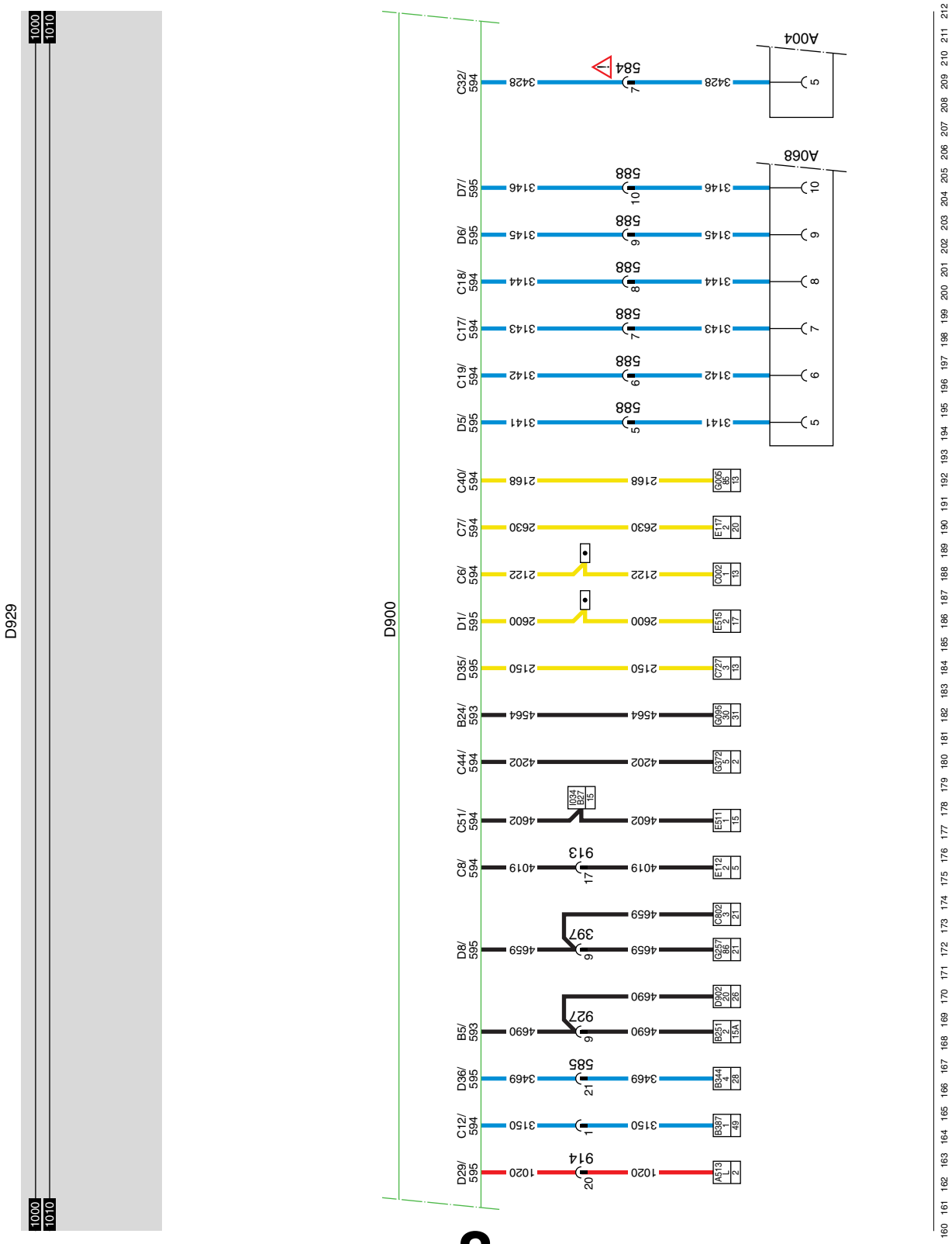

8

1358030/30-34

https://truckmanualshub.com/

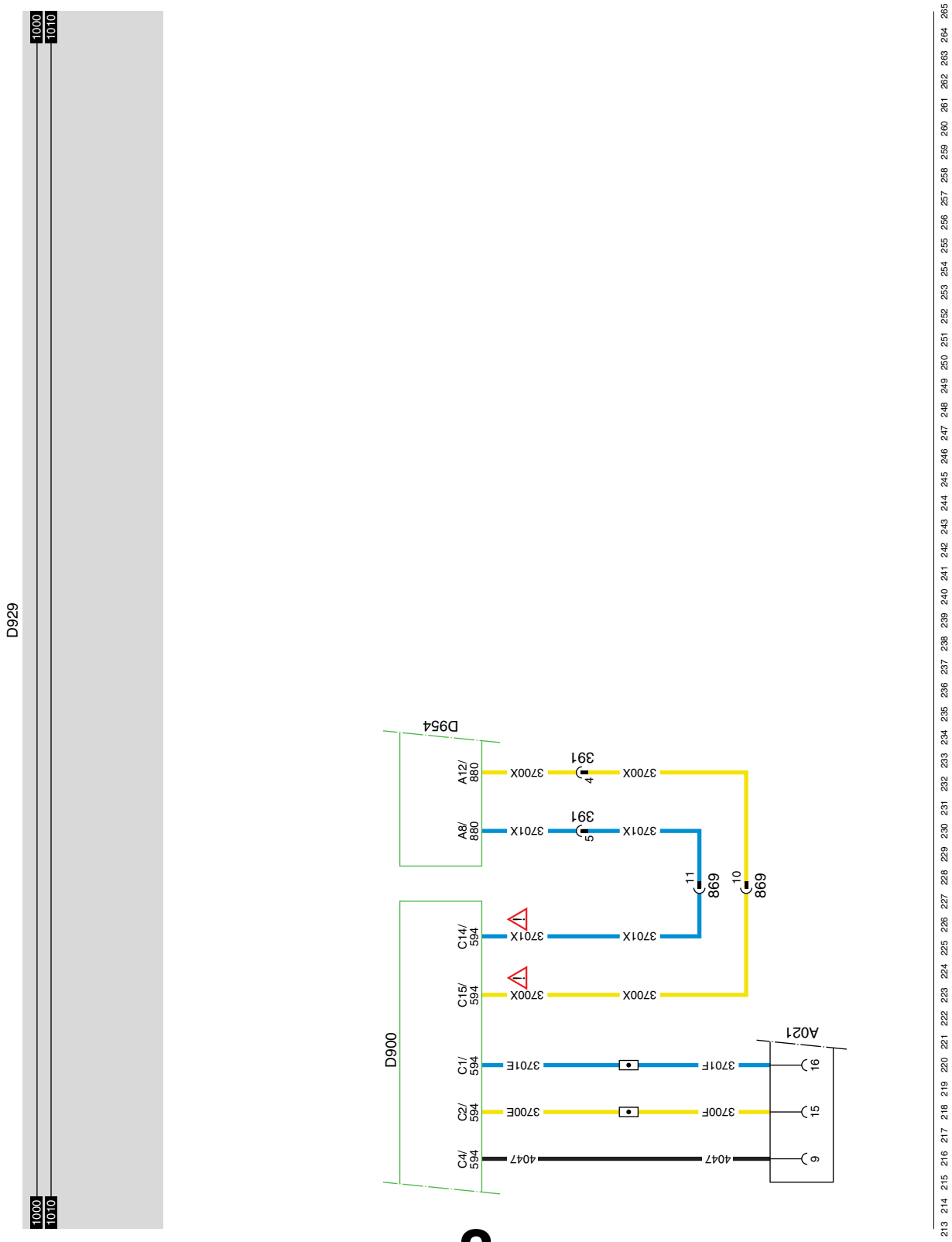

8

1358030/30-34

EL001508

https://truckmanualshub.com/

9 FA MARKER AND PARKING LIGHTS

Switching the light switch (C622) to the 1st position (connection between contacts 2 and 1) energises the tail light/width marker light relay (G000) through fuse E084, wire 1101, contacts 2-1 of switch C622 and wire 2100. A voltage is applied to the left and right lights through the G000 relay contacts (30-87) and fuses E000 and E001 respectively.

Linked to fuse E000 are: C010, C012, C156, C158, C074 and C022. There is also a connection in connector A000 (pin 2) and connector A098 (pin 14) (option).

Linked to fuse E001 are: C011, C013, C157, C159, C075 and C023. There is also a connection in connector A000 (pin 6).

VARIANTS

Location

31, 36, 51:	Connector 877: only if the vehicle has a buffer beam as standard.
31, 39, 50:	Connector 873: only on vehicle type FA. **Not** if AE = > 902 mm.
46	This may be either a 7-pin or a 15-pin connector. For more information: see section diagram 47.

https://truckmanualshub.com/

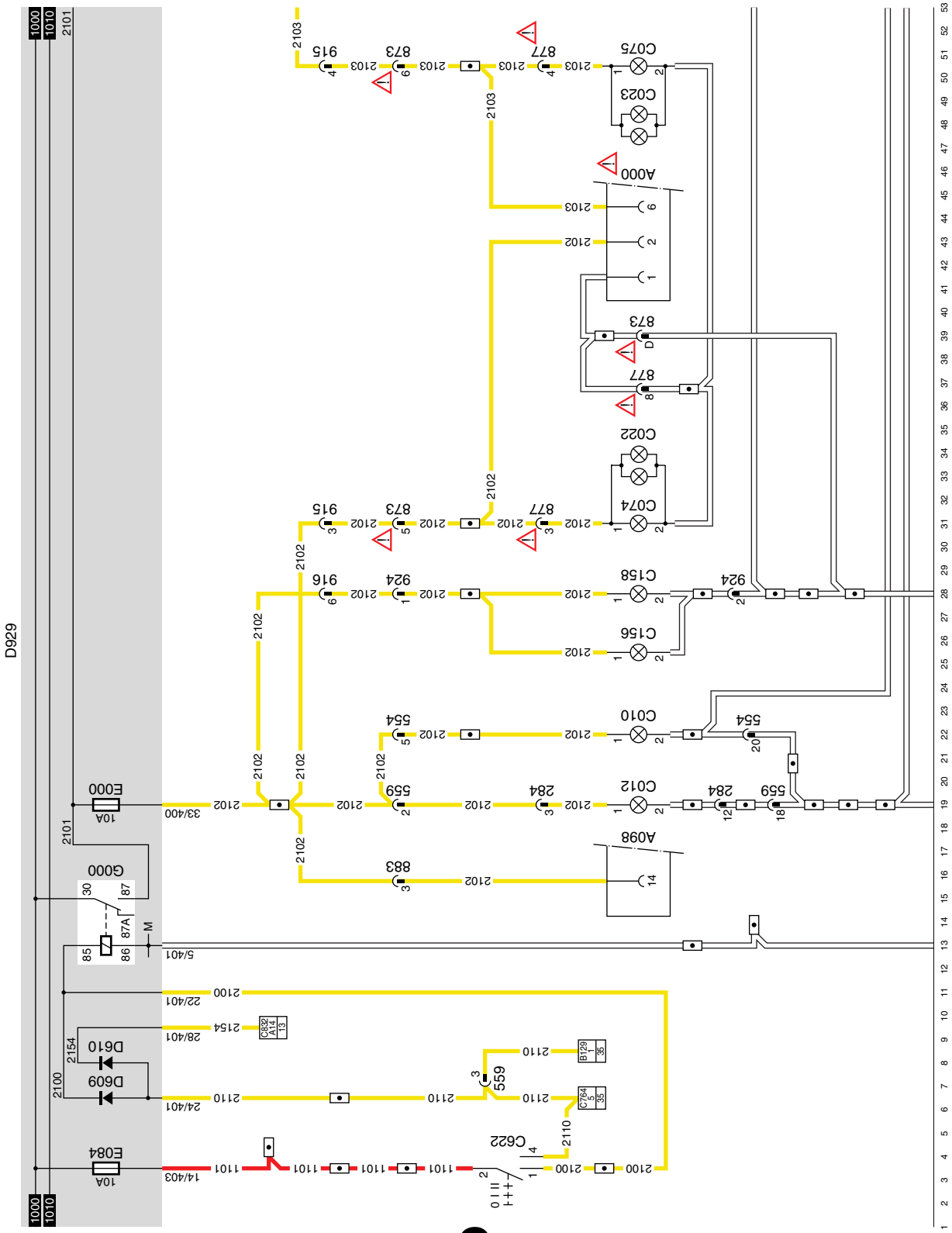

9

1358030/30-34

EL001509

11

https://truckmanualshub.com/

Changes in the electrical system from chassis number 0E646818

***CF*65/75/85** Serie ≥0E621376

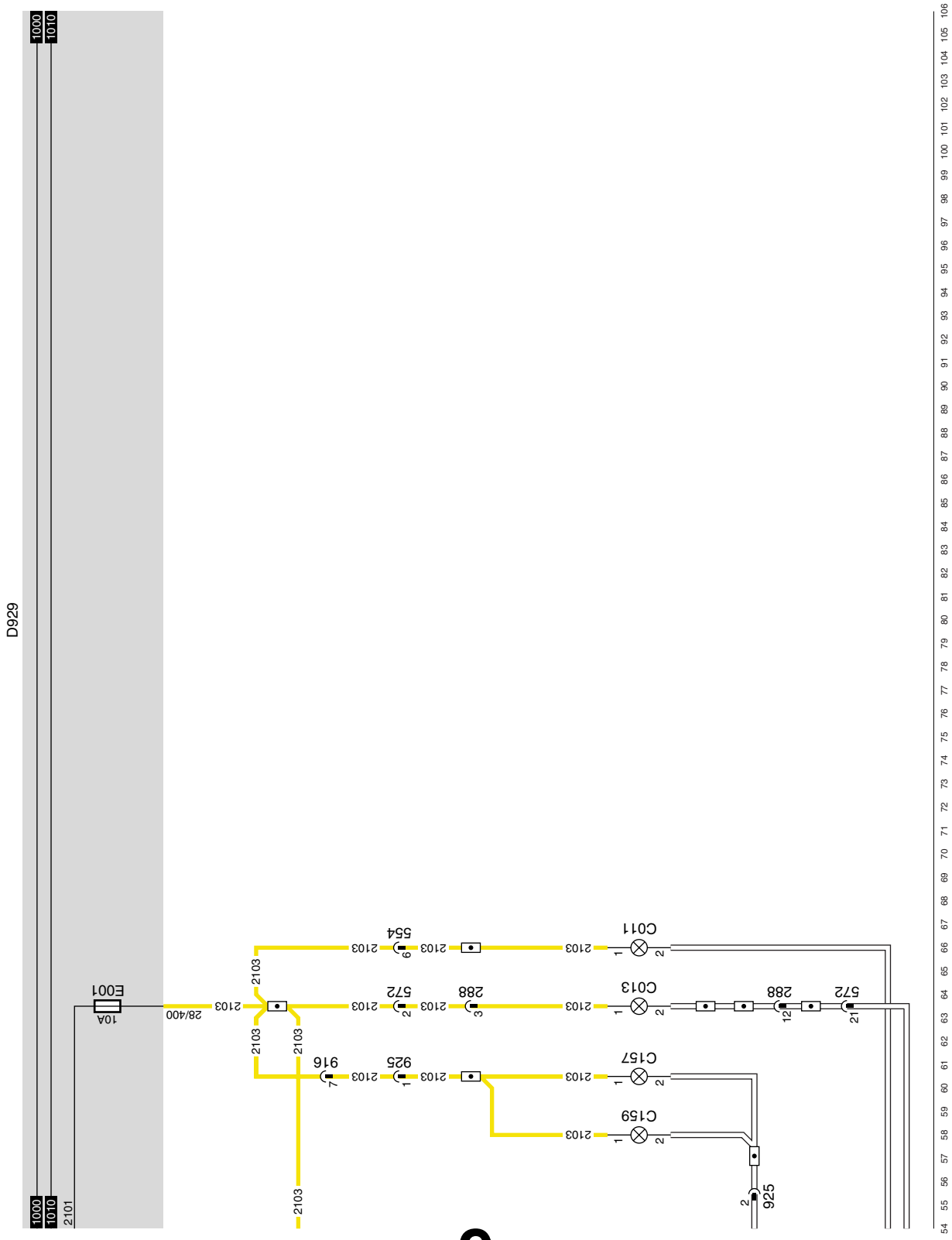

9 **1358030/30-34** EL001510

https://truckmanualshub.com/

https://truckmanualshub.com/

10 FT MARKER AND PARKING LIGHTS

Switching the light switch (C622) to the 1st position (connection between contacts 2 and 1) energises the tail light/width marker light relay (G000) through fuse E084, wire 1101, contacts 2-1 of switch C622 and wire 2100. A voltage is applied to the left and right lights through the G000 relay contacts (30-87) and fuses E000 and E001 respectively.

Linked to fuse E000 are: C010, C012, C156, C158, C074 and C154. There is also a connection in connector A000 (pin 2).

Linked to fuse E001 are: C011, C013, C157, C159 and C075. There is also a connection in connector A000 (pin 6) and connector A098 (pin 14) (option).

VARIANTS

Location

39 This may be either a 7-pin or a 15-pin connector. For more information: see section diagram 48.

https://truckmanualshub.com/

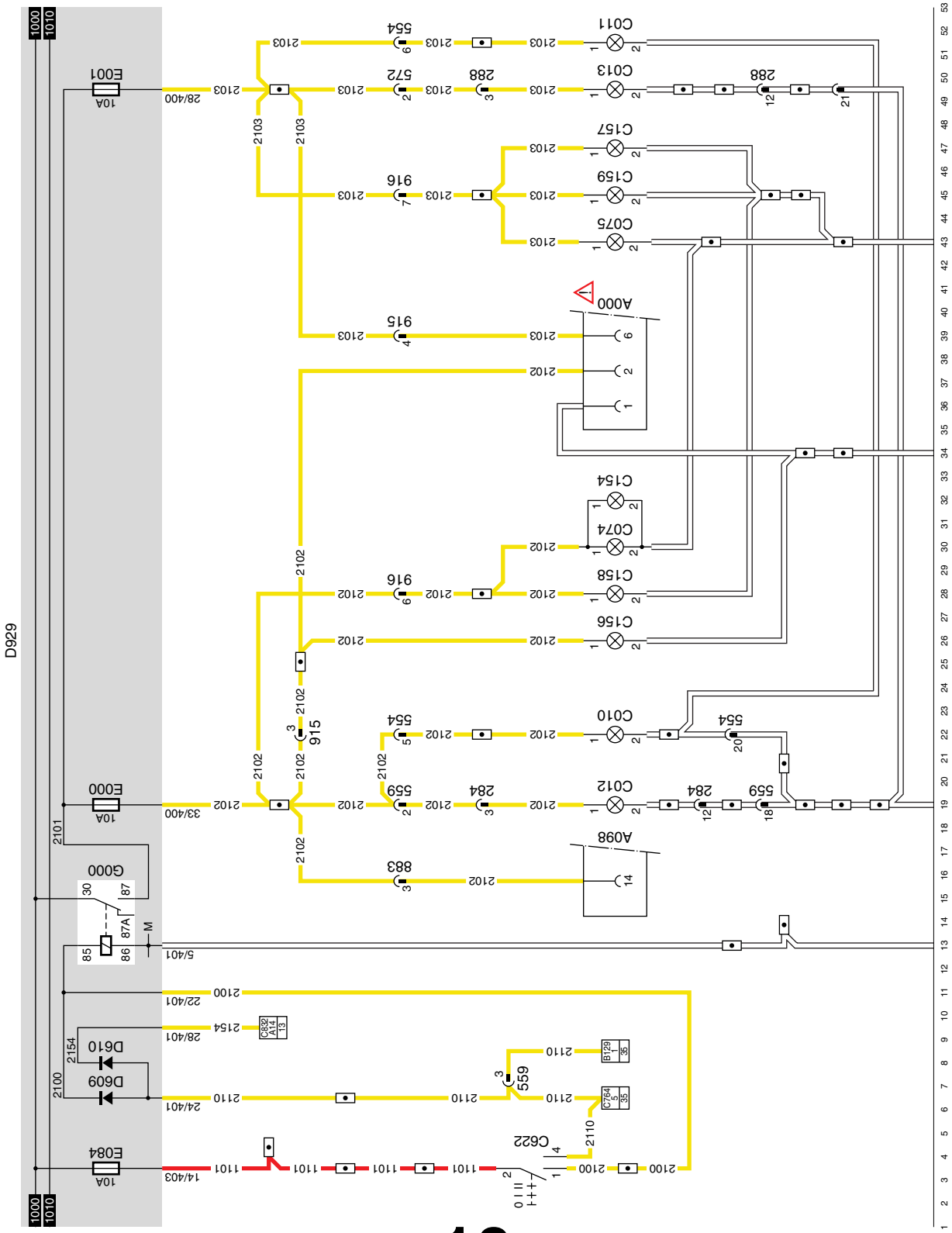

10

1358030/30-34

EL001511

11

https://truckmanualshub.com/

11

11 UPEC

SEE THE SYSTEM MANUAL FOR MORE INFORMATION

VARIANTS

Location

34	Section diagram 15A if the vehicle is fitted with a manual gearbox or an Allison gearbox. Section diagram 15B if the vehicle is fitted with AS Tronic gearbox.
91	Wire 6158 ends in lead-through connector 913, pin 3. This wire is for the bodybuilder.

© 200520

https://truckmanualshub.com/

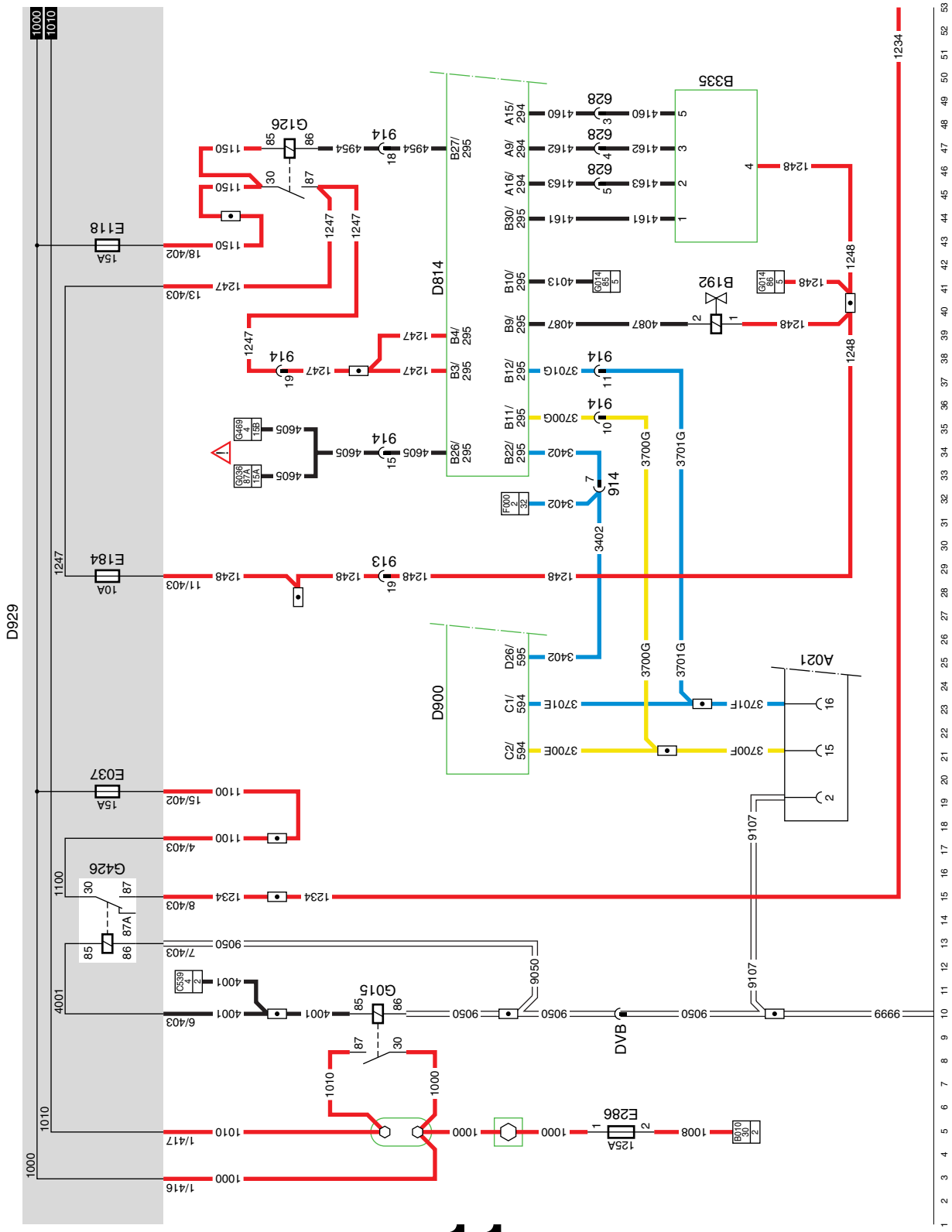

11 1358030/30-34 EL001512

https://truckmanualshub.com/

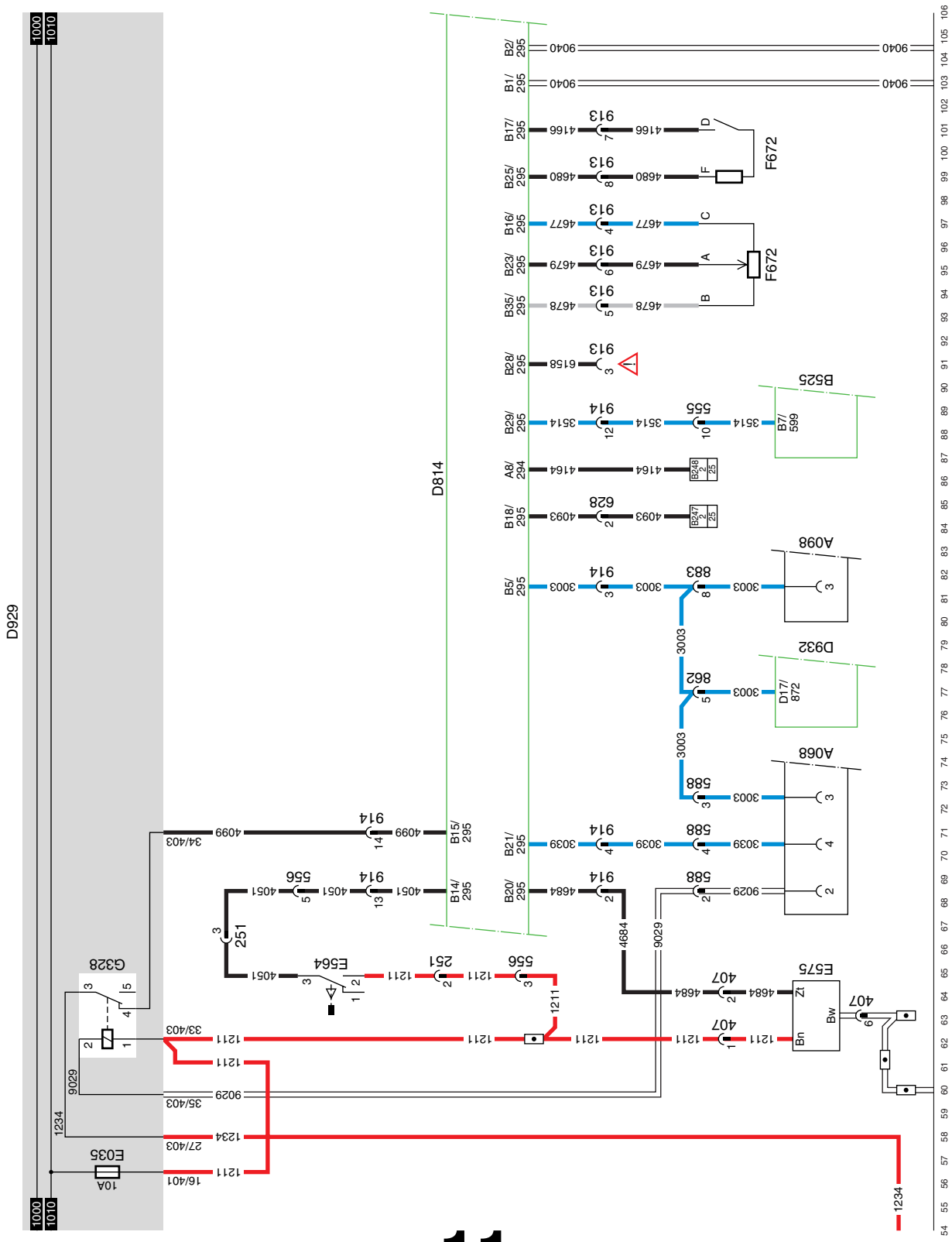
D929
D814
F672
F672
B525
A098
D932
A068
E575
G328
E035
10A
1000
1010
1234
9029
1211
1234
35/403
27/403
16/401
33/403
34/403
251
556
E564
251
556
914
914
914

https://truckmanualshub.com/

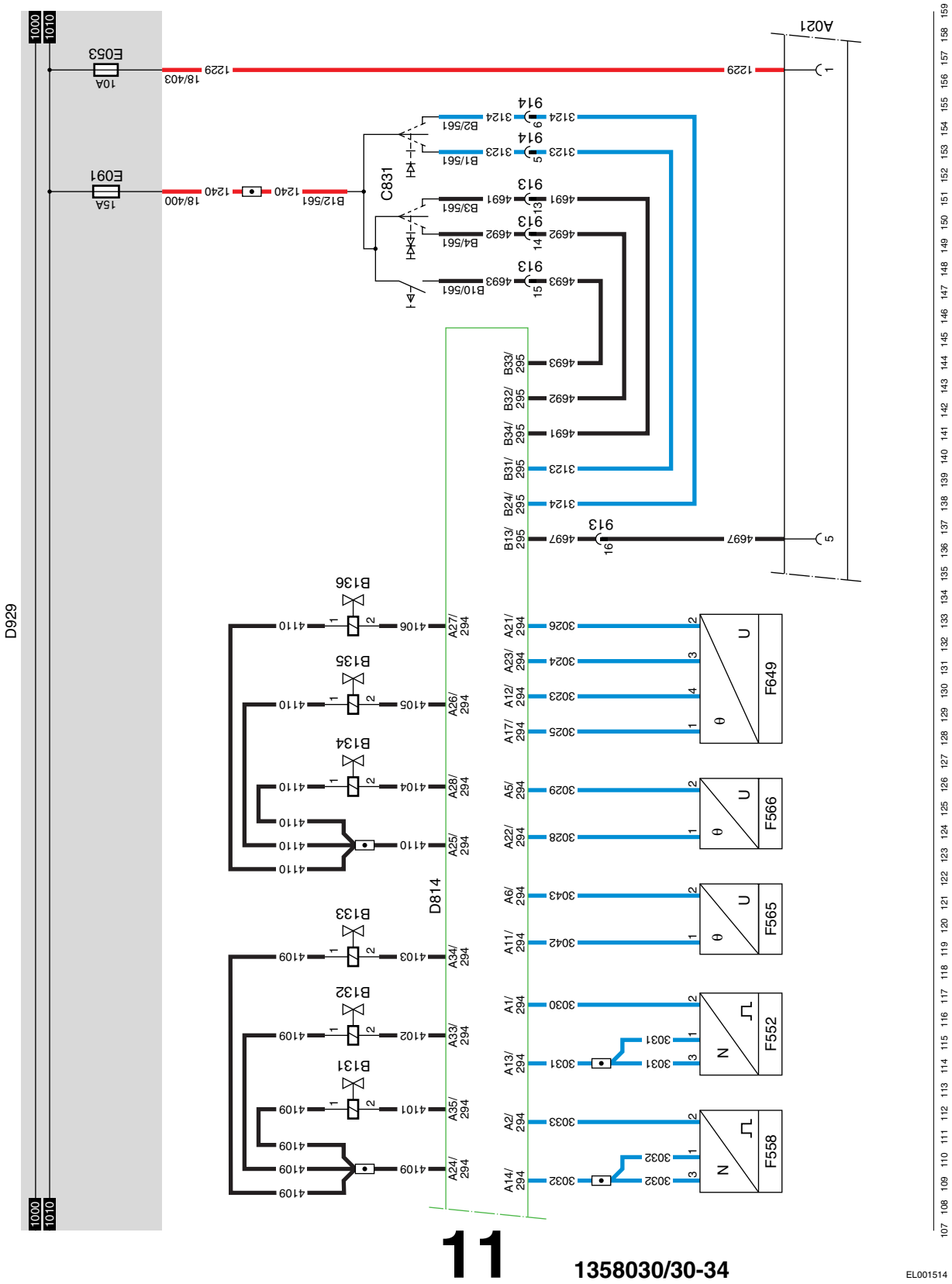

https://truckmanualshub.com/

15A STOP LIGHTS IN COMBINATION WITH MANUAL GEARBOX/CAB TILTING GEAR

STOP LIGHTS

When the brake pedal is depressed or following activation via VIC (D900), relay G036 is energised. Voltage is now applied to connection point 85 of relay G036 through fuse E013, wire and PCB track 1209. The earth is formed through wire 4602 and contacts 1-2 of switch E511. The relay is activated. A voltage is now applied to the left stop light (C020) and the right stop light (C021) through fuse E013, wire and PCB track 1209, contacts 30-87 of relay G036 and wire 4605. A voltage is also applied to connection point 4 of the drawn vehicle socket (A000), connection point C51 of the VIC (D900), connection point 13 of the FMS connector (A098) and connection point 3 of the superstructure application connector (A070). The stop lights will now light up.
When relay G036 is energised, the connection 30-87a is broken. The voltage on D814 (UPEC electronic unit) is lost.

CAB TILTING GEAR

A voltage is applied to connection point 1 of the cab locking sensor (F616) through fuse E018 and wire 1114. A voltage is also applied to connection point 1 of F676 and connections 1 and 3 of relay G351 (cab tilt protection relay).
When sensor F676 is activated, wire 4723 in sensor F616 is connected to earth. Relay G351 will be energised, causing voltage to be applied to connection point 1 of B251 (buzzer neutral position) through contacts 3-5 of relay G351, wire 4722.
B251 will now be activated via the VIC. A message is also sent to the DIP, which then activates the “cab tilted” warning lamp.

VARIANTS

Location	
43	E511 not fitted for EBS.
56	On an FT model, C020 and C021 are connected here.
64, 70	Connector 873: on vehicle type FA
73	A000: 7-pin model A058: 15-pin model
74, 77	Only for vehicle fitted with buffer beam.

© 200520

https://truckmanualshub.com/

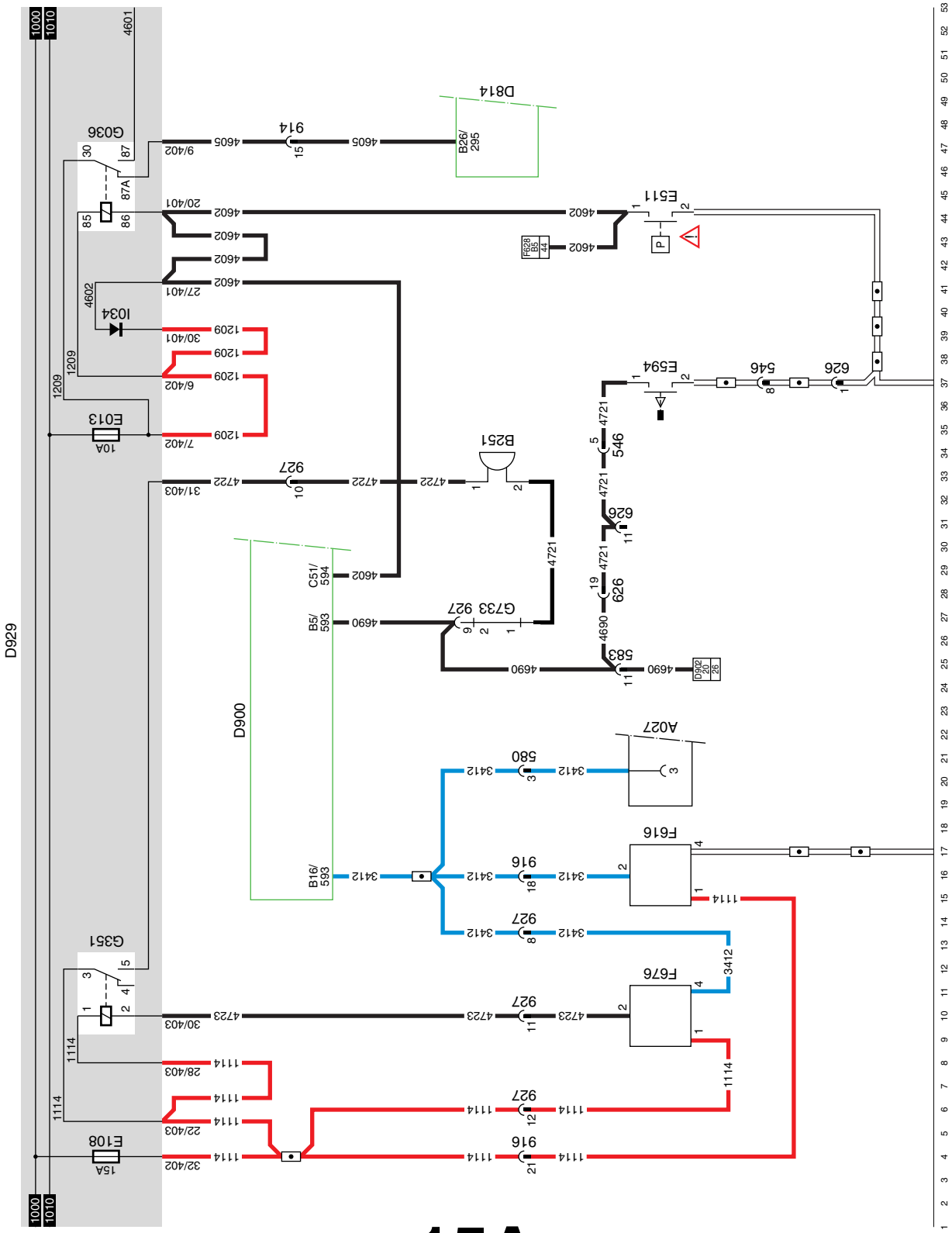

15A 1358030/30-34

11

https://truckmanualshub.com/

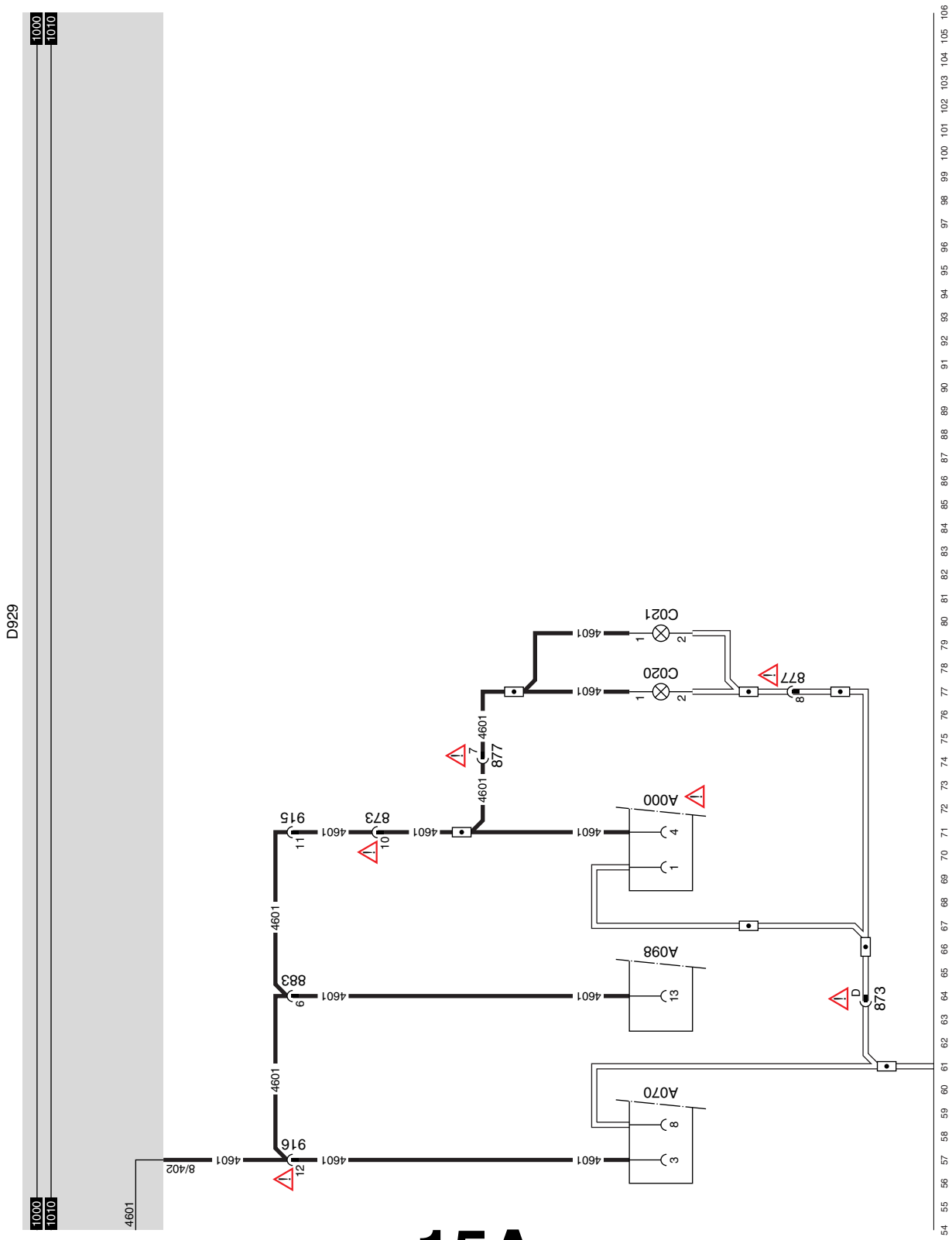

15A **1358030/30-34**

EL001516

© 200520

https://truckmanualshub.com/

https://truckmanualshub.com/

15B STOP LIGHTS IN COMBINATION WITH AS TRONIC GEARBOX/CAB TILTING GEAR

STOP LIGHTS

When the brake pedal is depressed or following activation via VIC (D900), relay G469 is energised. This also energises relay G036. Voltage is now applied to connection point 1 of relay G469 through fuse E184, wire and PCB track 1248. Contacts 3-5 are closed, causing a voltage to be applied to the coil of relay G036 via wire 1248 and PCB track 5292. The relay is activated. A voltage is now applied to the left stop light (C020) and the right stop light (C021) through fuse E013, PCB track 1209, contacts 30-87 of relay G036 and wire 4601. A voltage is also applied to connection point 4 of the drawn vehicle socket (A000), to connection point 13 of the FMS connector (A098) and connection point 3 of the superstructure application connector (A070). The stop lights will now light up.

CAB TILTING GEAR

A voltage is applied to connection point 1 of the cab locking sensor (F616) through fuse E018 and wire 1114. A voltage is also applied to connection point 1 of F676 and connections 1 and 3 of relay G351 (cab tilt protection relay).
When sensor F676 is activated, wire 4723 in sensor F616 is connected to earth. Relay G351 will be energised, causing voltage to be applied to connection point 1 of B251 (buzzer neutral position) through contacts 3 - 5 of relay G351, wire 4722.
B251 will now be activated via the VIC. A message is also sent to the DIP, which then activates the “cab tilted” warning lamp.

VARIANTS

Location	
69, 76	Connector 873: on vehicle type FA
77	A000: 7-pin model A058: 15-pin model
44	E511 not fitted for EBS.
79, 82	Only for vehicle fitted with buffer beam.
61	On an FT model, C020 and C021 are connected here.

https://truckmanualshub.com/

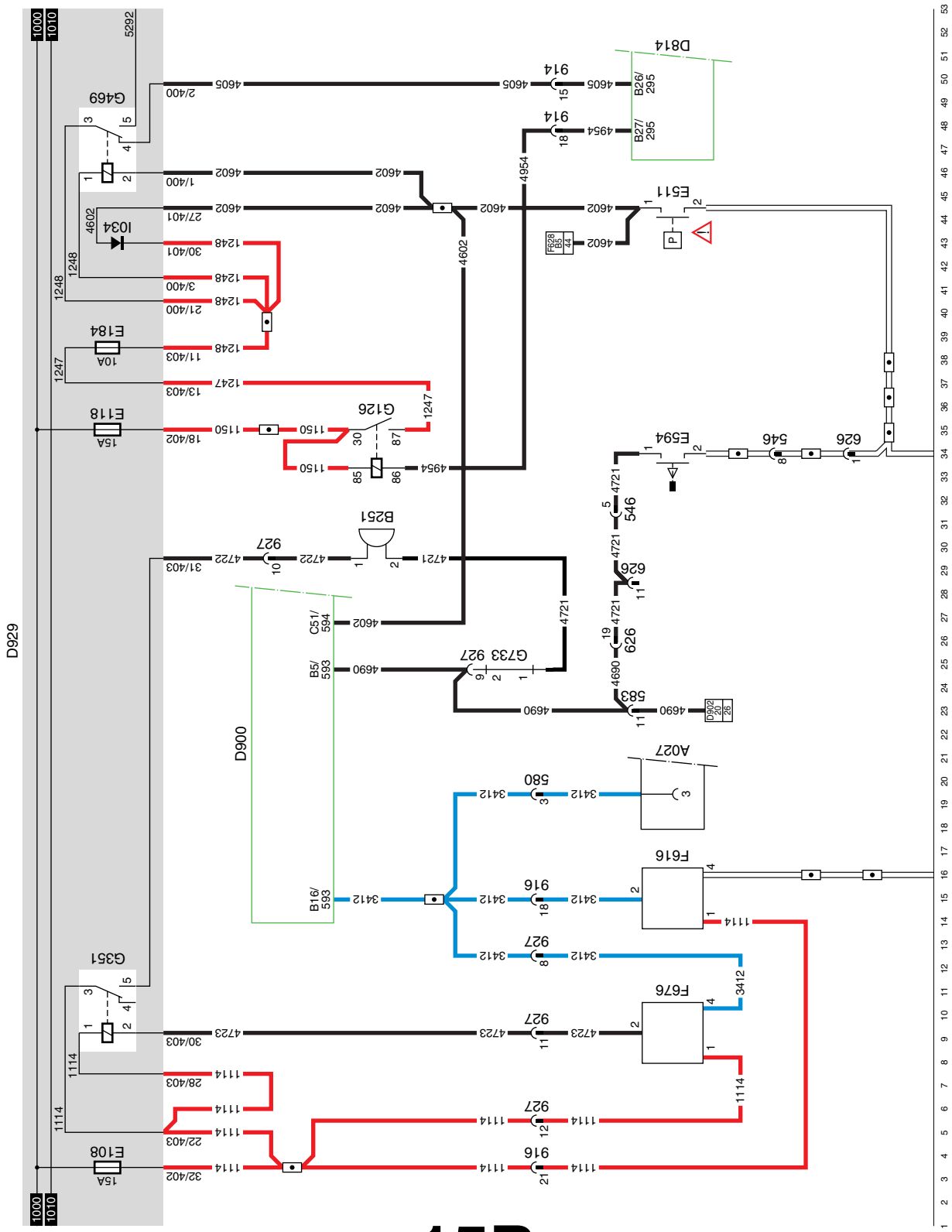

15B 1358030/30-34

EL001517

11

https://truckmanualshub.com/

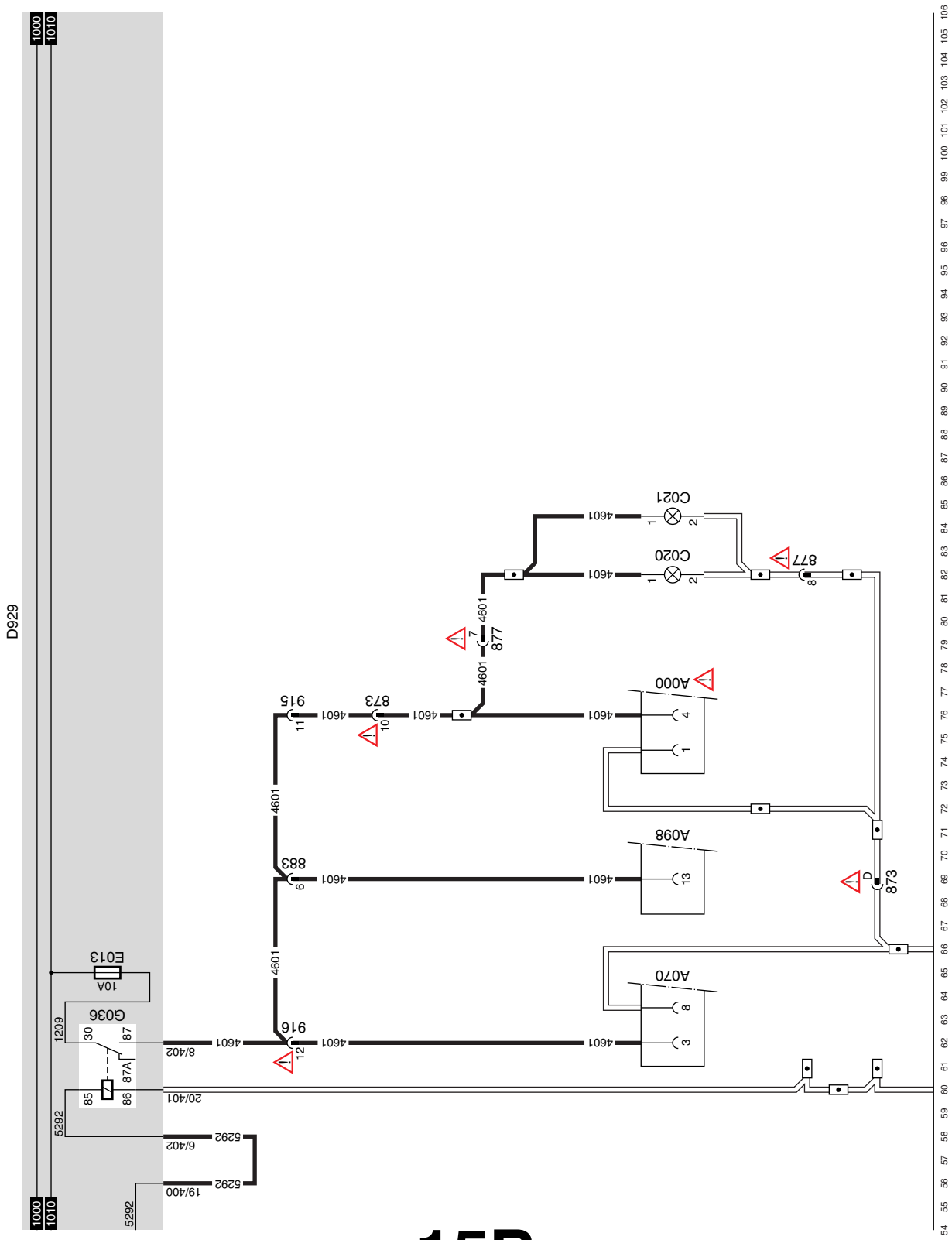

15B 1358030/30-34

EL001518

© 200520

https://truckmanualshub.com/

https://truckmanualshub.com/

17 INTERIOR LIGHTING, DAY/SLEEPER CAB

CAB STEPWELL LIGHTING/INTERIOR LIGHTING DOOR SWITCH, DRIVER'S SIDE

If the door on the driver's side is opened, door switch E514 is activated (connection between 1 and 2). A a result, there is a voltage on C062, C063 and D911 through fuse E028 (interior lighting fuse), wire 1107, contacts 1-2 of door switch E514, wire 2647, diode D783 (driver's side interior lighting diode), wire 2600. This activates the cab stepwell lighting on both the driver's side (C062) and the co-driver's side (C063). The VIC (D900) also receives a voltage on connection point 1, connector 595. The VIC then turns on the cab lighting (C119/C192), provided the switch is in the correct position

When the door on the driver's side is closed (contacts 1-2 interrupted), connection point 4, connector 592 will be connected to the supply voltage for approx. another 9 seconds. After approximately 9 seconds, the supply voltage is switched off and the lights go out.

If the vehicle ignition is switched on (contact made) within 9 seconds, the power supply to connection point 4, connector 592 of the VIC will be switched off immediately. The lighting will be switched off immediately. If the alarm system (D911) sends a voltage to connection point 13, connector 594 of the VIC to indicate that the doors have locked correctly, the lighting will also go off immediately.

CAB STEPWELL LIGHTING/INTERIOR LIGHTING DOOR SWITCH, CO-DRIVER'S SIDE

If the door on the co-driver's side is opened, door switch E515 is activated (connection between 1 and 2).
As a result, there is a voltage on both C062 and C063 through fuse E028 (interior lighting fuse), wire 1107, contacts 1-2 of door switch E515, wire 2600. This activates the cab stepwell lighting on both the driver's side (C062) and the co-driver's side (C063).

INTERIOR LIGHT WITH MAP-READING LIGHT (DRIVER'S SIDE AND CO-DRIVER'S SIDE)

There is a combined interior light and map-reading light on both sides of the cab against the roof. The lamps operate in the same way on the driver's side and co-driver's side.
A voltage is applied to connection point 2 of C119 and to connection point 2 of C192 through fuse E028, wire 1107. Depending on the position of the built-in switches, the interior light and the map-reading light can now be switched on individually or together.

TOOL COMPARTMENT LIGHTING

When the tool compartment door is opened, tool compartment light switch E528 is activated (connection between 1 and 2). As a result, there is a voltage on C067 through fuse E142 (accessories before contact fuse), wire 1154, contacts 1-2 of tool compartment light switch E528, wire 2608. This switches on the tool compartment light. The tool compartment light works independently of the contact.

BUNK LAMP

The bunk lamp C115 is switched on by a switch in the light fitting. The bunk lamp works independently of the contact. Voltage is applied to connection point 1 of C115 through fuse E028, wire 1107. When the switch is operated (connection between contacts 1 and 2), connection point 2 is connected to earth. The lamp will now come on.

INTERIOR NIGHTLIGHT

When switch C735 (interior nightlight switch) is operated (connection between 5 and 1), a voltage is applied to C191 through fuse E028 (interior lighting fuse), wire 1107, contacts 5-1 of nightlight switch C735, wire 2617. This switches the nightlight on. The nightlight works independently of the contact.

https://truckmanualshub.com/

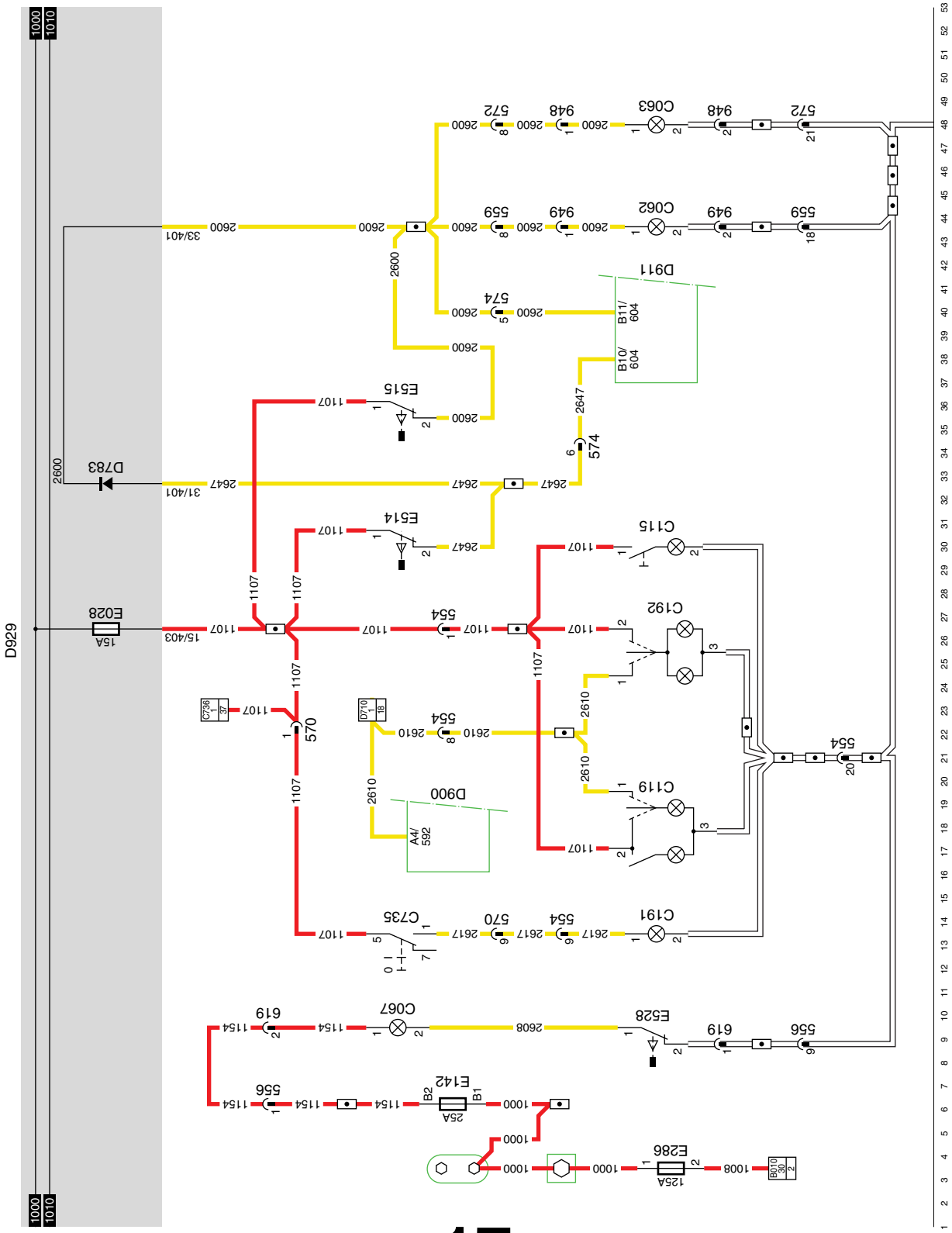

17

1358030/30-34

EL001519

11

https://truckmanualshub.com/

18 SH CAB INTERIOR LIGHTING

CAB STEPWELL LIGHTING/INTERIOR LIGHTING DOOR SWITCH, DRIVER'S SIDE

If the door on the driver's side is opened, door switch E514 is activated (connection between 1 and 2). A a result, there is a voltage on the driver's side cab stepwell lighting (C062), co-driver's side cab stepwell lighting (C063) and D911 (alarm system) through fuse E028 (interior lighting fuse), wire 1107, contacts 1-2 of door switch E514, wire 2647, diode D783 (driver's side interior lighting diode), wire 2600. This activates the cab stepwell lighting on both the driver's side (C062) and the co-driver's side (C063). The VIC (D900) also receives a voltage on connection point 1, connector 595. The VIC then turns on the cab lighting (C119/C192), provided the switches (C119, C192, C859 and C837) are in the correct position, activating it through wire 2610 (connection point 4, connector 592 of the VIC unit).

When the door on the driver's side is closed (contacts 1-2 of door switch E514 interrupted), the voltage to connection point 1, connector 595 of the VIC is lost. Connection point 4, connector 592 will then continue to be supplied with power for another 9 seconds approximately. After approximately 9 seconds, the supply voltage is switched off and the interior lighting goes out.

If the vehicle ignition is switched on (contact made) within 9 seconds, the power supply to connection point 4, connector 592 of the VIC will be switched off immediately. The interior lighting will be switched off immediately. If the alarm system (D911, pin 16 of connector 604, wire 3647) sends a voltage to connection point 13, connector 594 of the VIC to indicate that the doors have locked correctly, the interior lighting will also go off immediately.

CAB STEPWELL LIGHTING/INTERIOR LIGHTING DOOR SWITCH, CO-DRIVER'S SIDE

If the door on the co-driver's side is opened, door switch E515 is activated (connection between 1 and 2).
As a result, there is a voltage on both driver's side cab stepwell lighting (C062) and co-driver's side cab stepwell lighting (C063) through fuse E028 (interior lighting fuse), wire 1107, contacts 1-2 of door switch E515, wire 2600. This activates the cab stepwell lighting on both the driver's side (C062) and the co-driver's side (C063).

Interior lighting with map-reading light (driver's and co-driver's side)

There is a combined interior light and map-reading light on both sides of the cab against the roof. The lamps operate in the same way on the driver's side and co-driver's side.
A voltage is applied to connection point 2 of C119 and to connection point 2 of C192 through fuse E028, wire 1107. Depending on the position of the built-in switches, the interior light and the map-reading light can now be switched on individually or together.

https://truckmanualshub.com/

INTERIOR LIGHTING TWO-WAY SWITCHING
The condition for turning on both interior lights is that C119 (interior light with switch, driver's side) and C192 (interior light with switch, co-driver's side) must be switched together. In other words: the switch is connected to contact 1.

Situation 1: Switch C837 in "0" position.
Switch C837 in middle position (contacts 5-1 and 8-4 connected).
The supply voltage and the earth are now interrupted and the light does not work.

Situation 2:
Switch C837 set to position "I" (contacts 5-7 and 8-6 connected). A voltage is now applied to connection point 1 of C119 and to connection point 1 of C192 through fuse E028, wire 1107, contacts 5-7 of C837, wire 2644, contacts 7-5 of C859 (driver's side roof console interior light switch), wire 2632. The earth is formed because connection point 3 of C119 and connection point 3 of C192 are connected to the vehicle earth through wire 9032, contacts 8-6 of C837.
The lighting can now be switched on or off using switch C859.

Situation 3:
Switch C837 set to position "II" (contacts 3-1 and 2-4 connected). A voltage is now applied to connection point 1 of C119 and to connection point 1 of C192 through fuse E028, wire 1107, contacts 3-1 of C837, wire 2645, contacts 1-5 of C859 (driver's side roof console interior light switch), wire 2632. The earth is formed because connection point 3 of C119 and connection point 3 of C192 are connected to the vehicle earth through wire 9032, contacts 2-4 of C837.
The lighting can now be switched on or off using switch C859.

Tool compartment lighting
When the tool compartment door is opened, the left-hand tool compartment light switch (E528) is activated (connection between 1 and 2). As a result, there is a voltage through fuse E142, wire 1154 on C067, wire 2608 on E528 (tool compartment light switch). This is connected to earth. This switches on the tool compartment light. The tool compartment light works independently of the contact.

Bunk lamp
The bunk lamp C115 is switched on by a switch in the light fitting. The bunk lamp works independently of the contact. Voltage is applied to connection point 1 of C115 through fuse E028, wire 1107. Connection point 2 of C115 is connected to earth. When the switch is operated (connection between contacts 1 and 2), the lamp goes on.

Nightlight
When switch C735 (interior nightlight switch) is operated (connection between 5 and 1), a voltage is applied to connection point 1 of C191 (middle nightlight) through fuse E028 (interior lighting fuse), wire 1107, contacts 5-1 of nightlight switch C735, wire 2617. This switches the nightlight on. The nightlight works independently of the contact.

https://truckmanualshub.com/

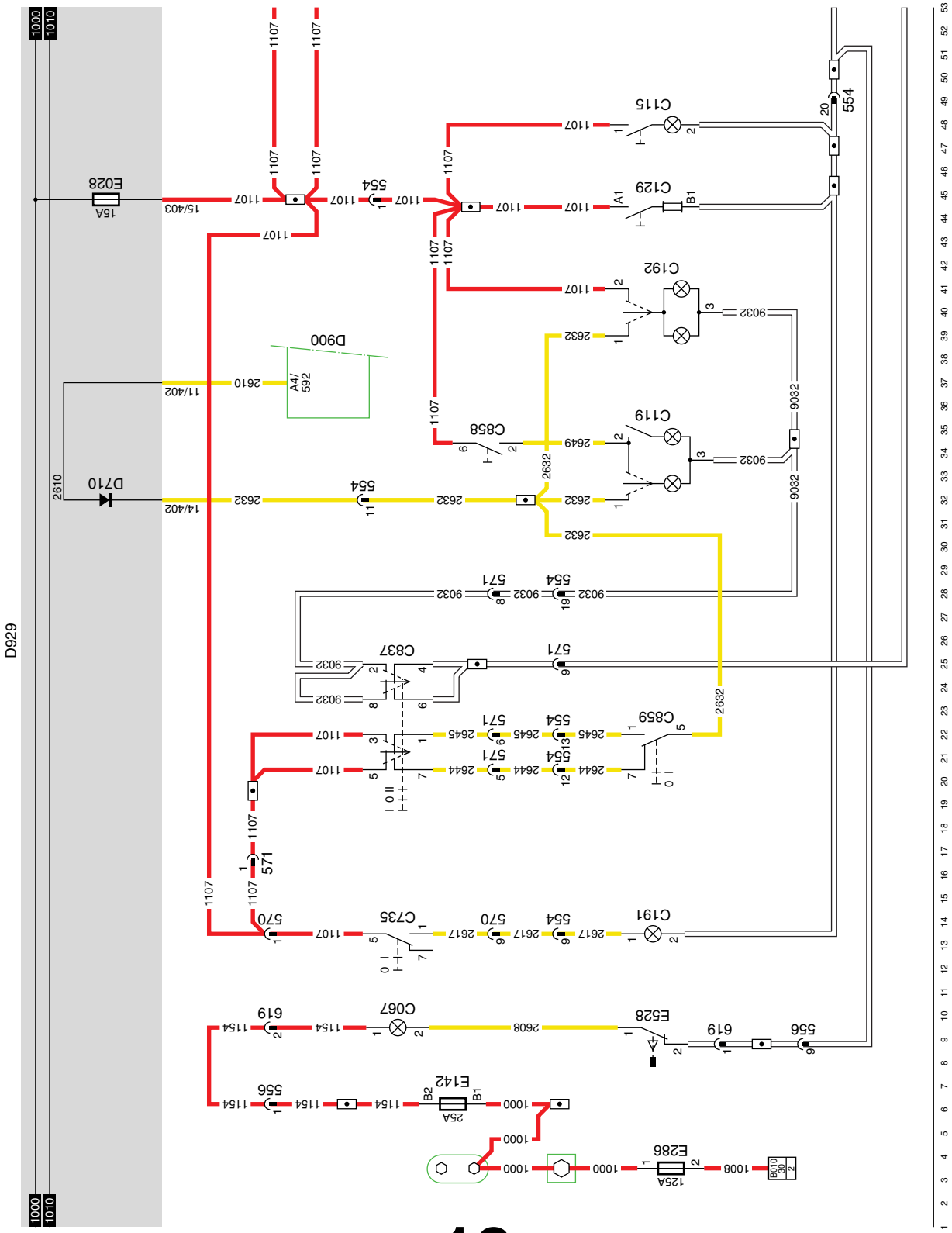

18 **1358030/30-34**

EL001520

https://truckmanualshub.com/

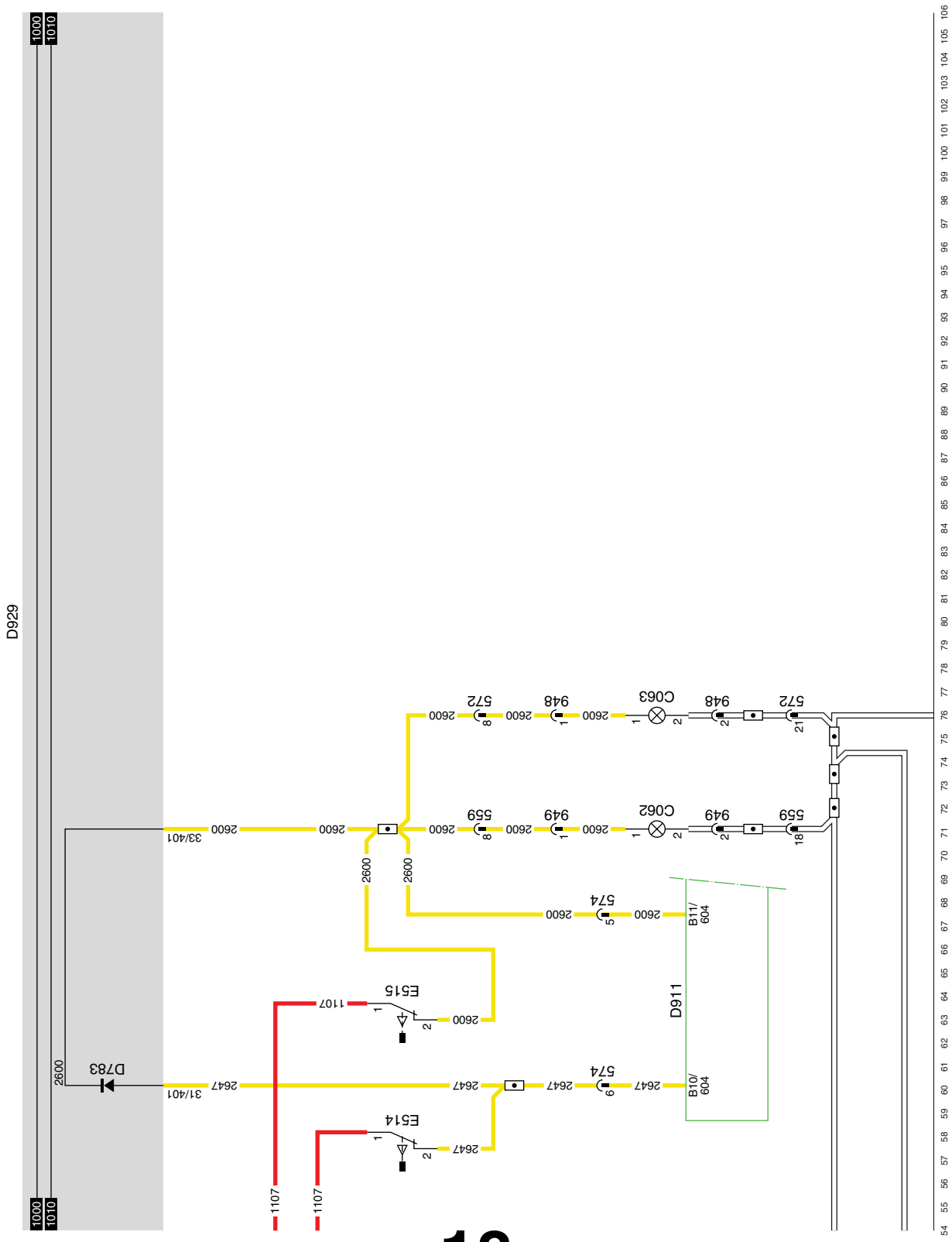

18 1358030/30-34

EL001521

11

https://truckmanualshub.com/

20 SEARCH LIGHTING

SEARCH LIGHTING

Search lighting refers to lights or LEDs in the various function switches.

When the light switch (C622) is operated, a supply voltage is present on relay G000 (connection point 85) through fuse E084 and the light switch (C622), contacts 2-1, wire 2100.

Relay G000 is energised (connection between connection points 30 and 87, PCB track 2101, fuse (E117)) when there is a voltage on the search lighting (through wire 2630). All search lighting connected to this will come on.

The following switches are illuminated by a light: C052, C053, C072, C073, C716, C813, C814 and C858.

The following switches are illuminated by an LED: C725, C727, C735, C736, C737, C739, C740, C741, C742, C748, C749, C750, C751, C760, C763, C764, C765, C774, C778, C802, C835, C836, C837, C853 and C900.

LIGHT BUZZER

When the light switch (C622) is operated, supply voltage will be applied to connection point 85 of relay G000 through fuse E084, light switch (C622) and wire 2100.

Relay G000 is energised so that a voltage is applied to the search lighting (wire 2630) through fuse E117. This wire is also connected to the VIC (D900), pin C7, connector 594.

If the pre-programmed condition in the VIC is met, the VIC sends a message to the DIP, which in turn activates the buzzer (fitted in the DIP).

VARIANTS

Location	
18	C836: switch for turning off cargo body space detection is an option.

https://truckmanualshub.com/

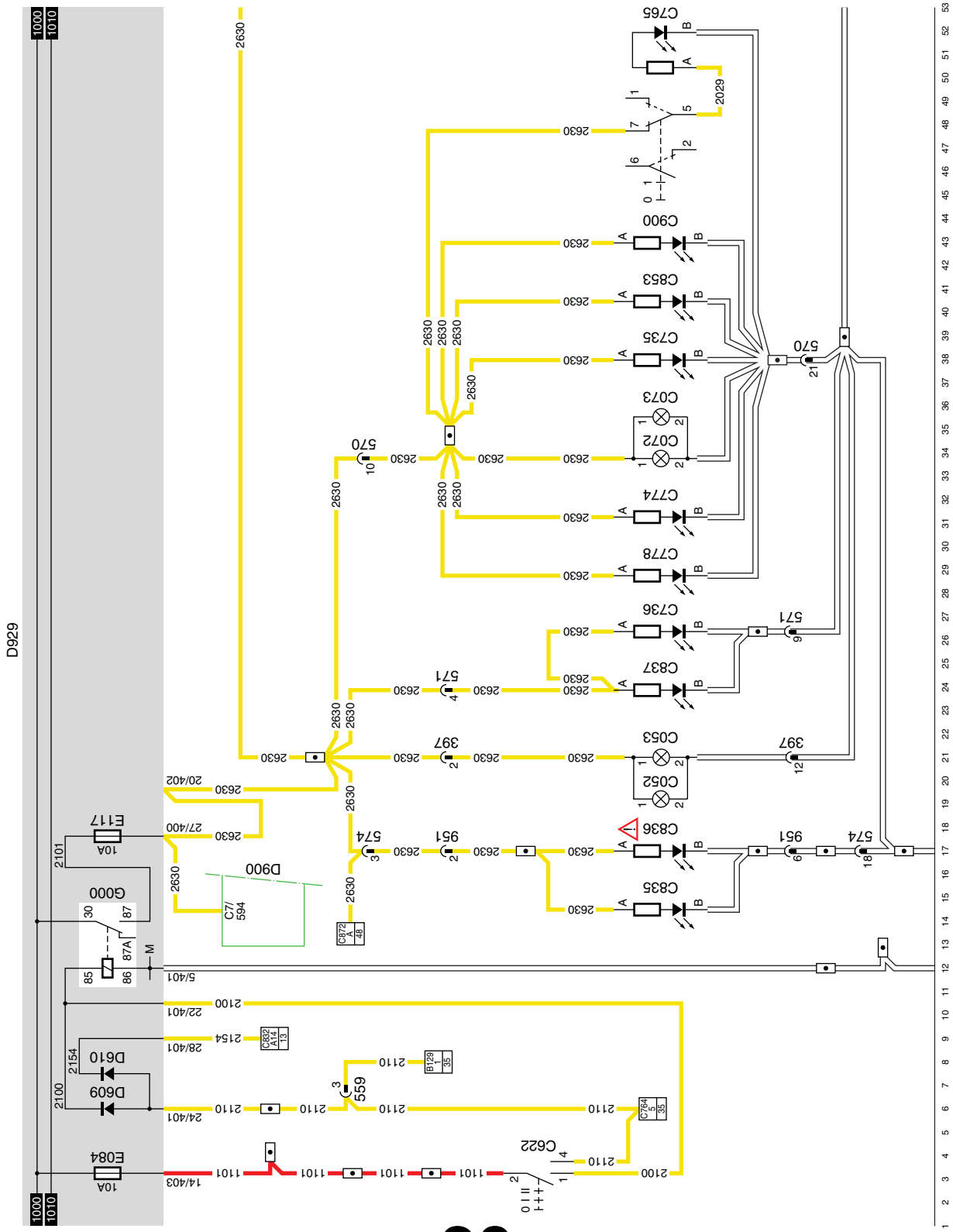

20

1358030/30-34

EL001522

11

https://truckmanualshub.com/

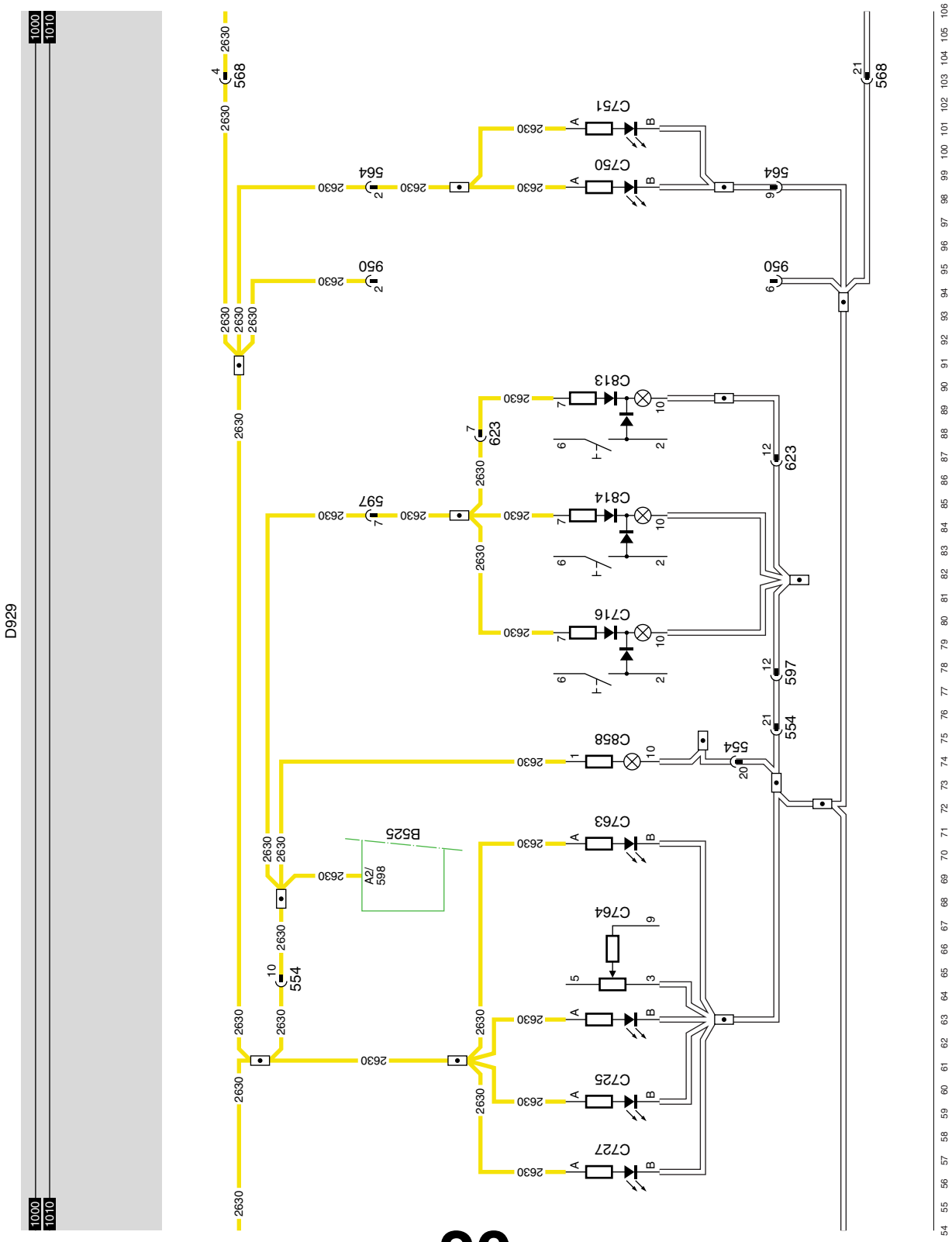

20

1358030/30-34

EL001523

https://truckmanualshub.com/

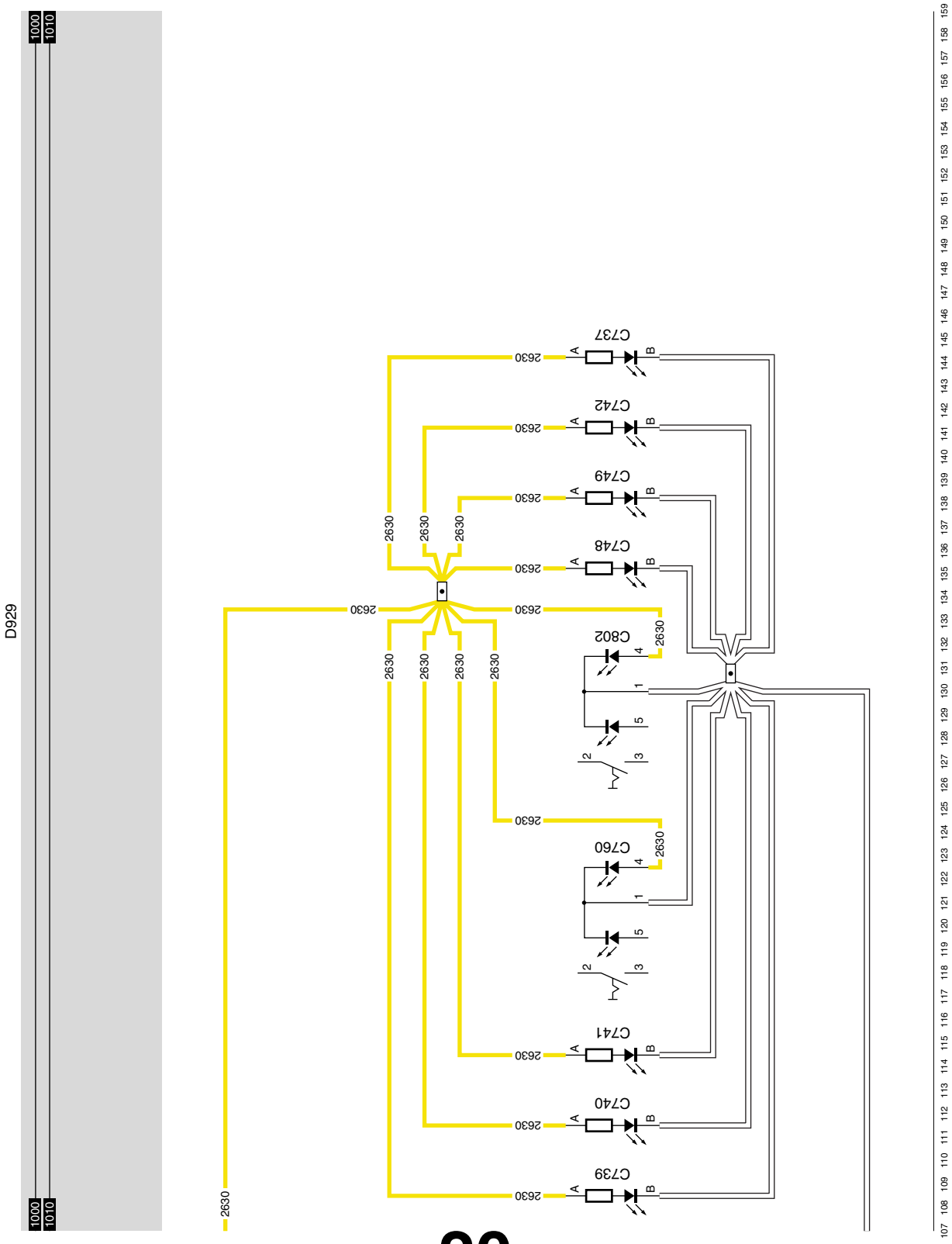

20

1358030/30-34

EL001524

https://truckmanualshub.com/

11

25 DEB

Voltage is applied through fuse E118 and relay G126 to D814 (UPEC electronic unit) and through fuse E184 to valves B192, B247 and B248.
Depending on unit D814, relay G126 is activated, after which voltage is applied to exhaust brake valve B192 and engine brake (DEB) valves B247 and B248.
Depending on unit D814 these valves are connected to earth or are not connected to earth.

SEE THE SYSTEM MANUAL FOR MORE INFORMATION

© 200520

https://truckmanualshub.com/

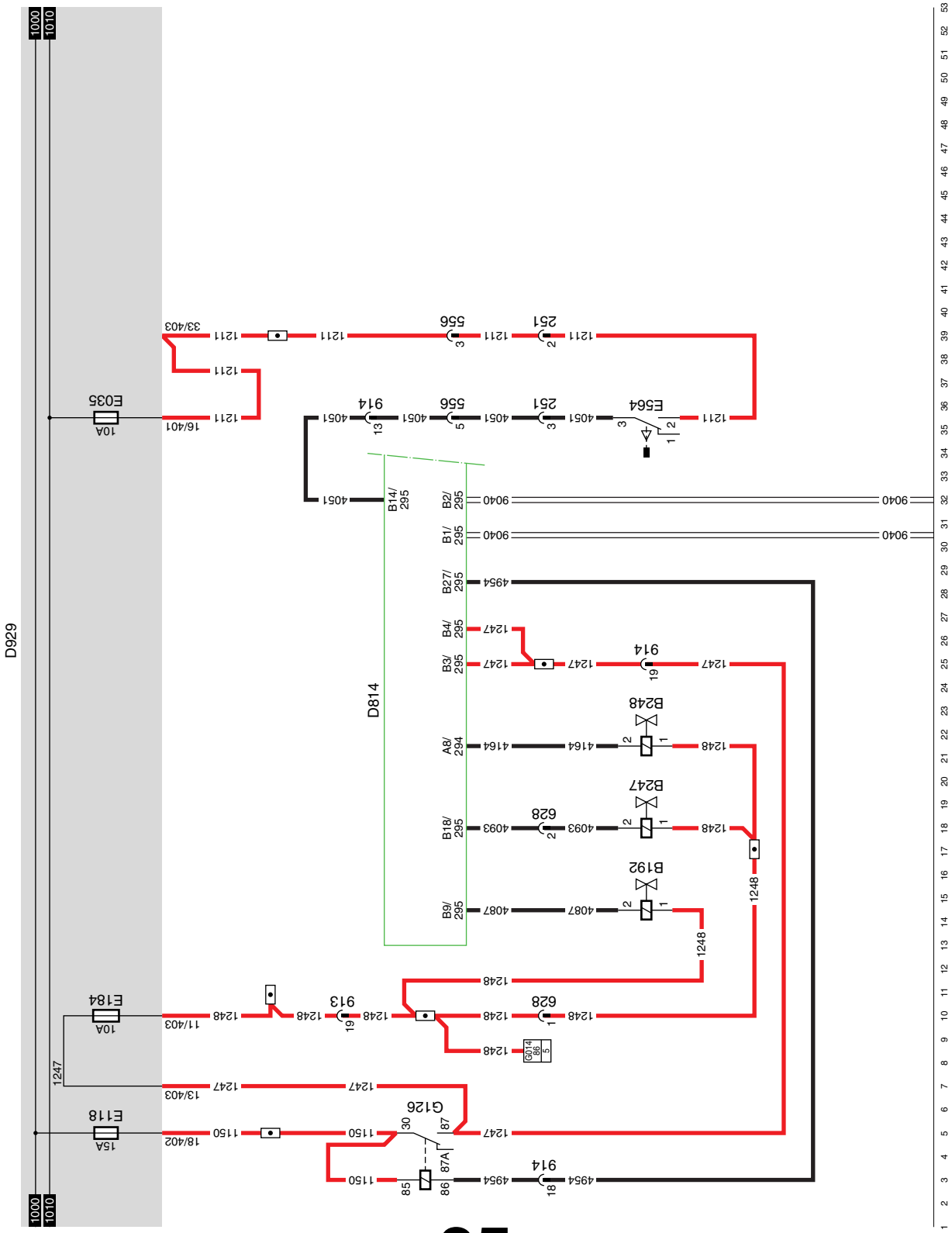
D929
1000
1010
E035
10A
E184
10A
E118
15A
1247
1248
1211
1150
1247
1248
1211
1211
1211

https://truckmanualshub.com/

26 INTARDER EST 42

SEE THE SYSTEM MANUAL FOR MORE INFORMATION

VARIANTS

Location	
13	The housing is connected to earth by a separate wire.
22	Connector 583: if AS Tronic fitted: wire 4690 direct to earth.

https://truckmanualshub.com/

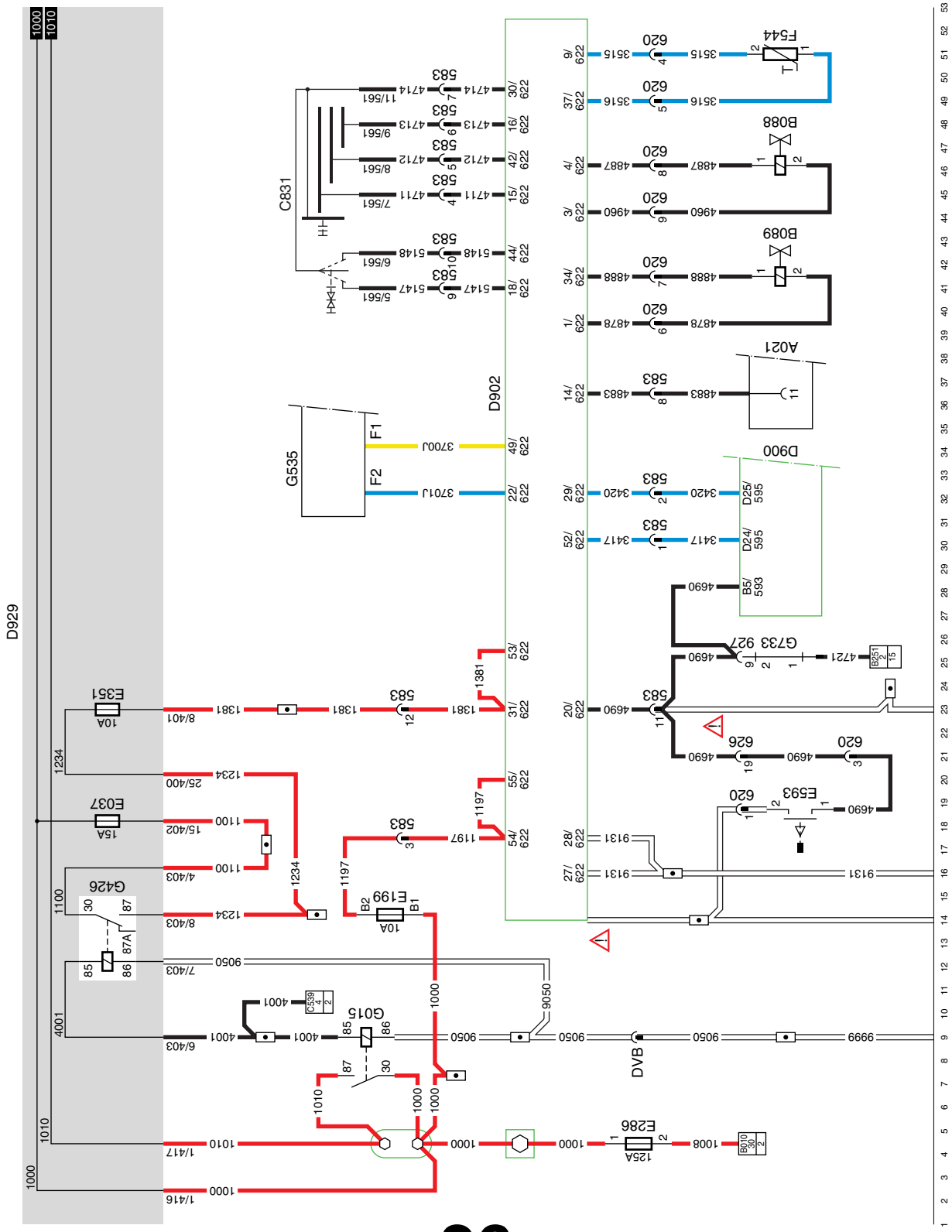

26

1358030/30-34

EL001526

https://truckmanualshub.com/

Changes in the electrical system from chassis number 0E646818

***CF*65/75/85** Serie ≥0E621376

11

27 ECS-DC3

SEE THE SYSTEM MANUAL FOR MORE INFORMATION

https://truckmanualshub.com/

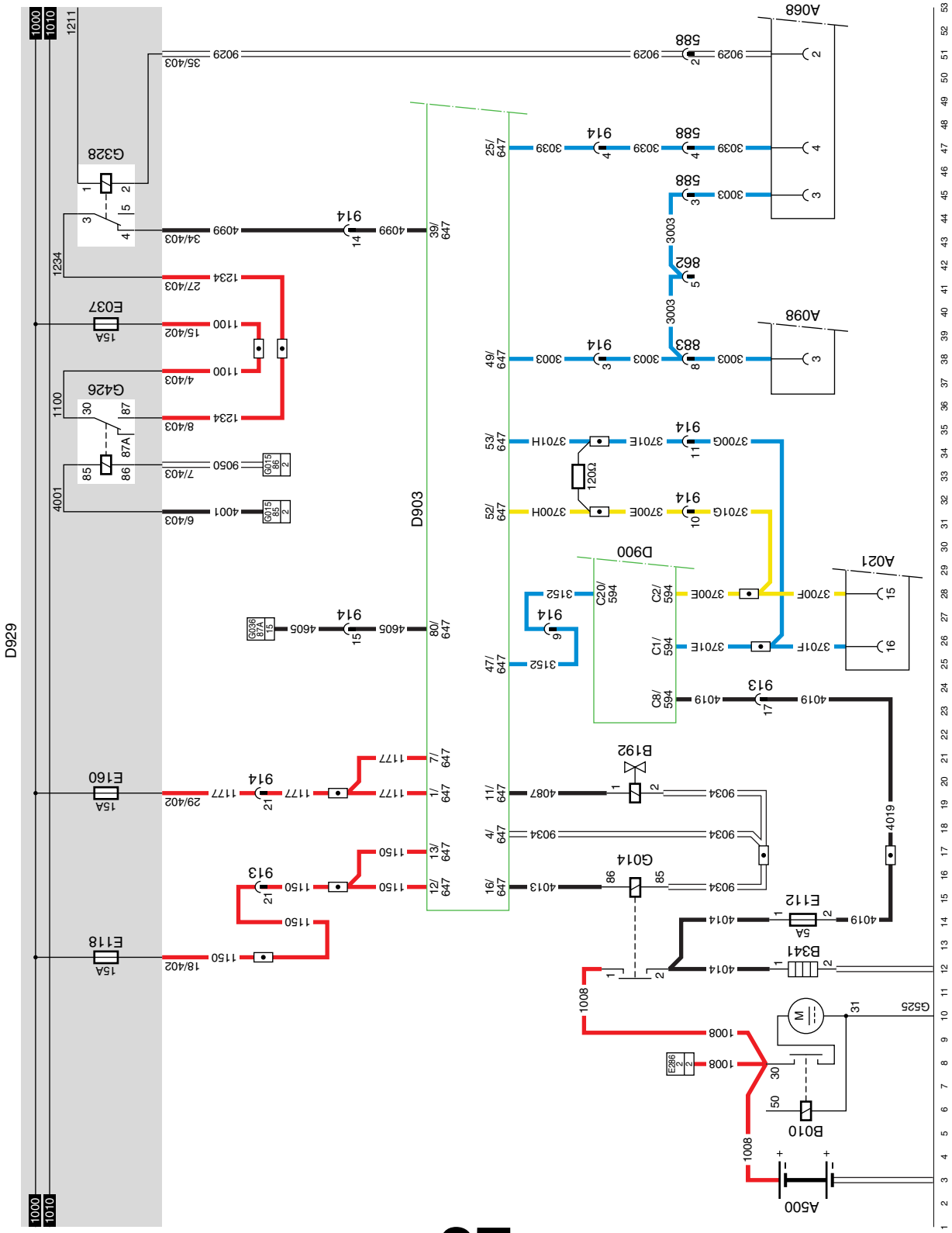

27

1358030/30-34

EL001527

https://truckmanualshub.com/

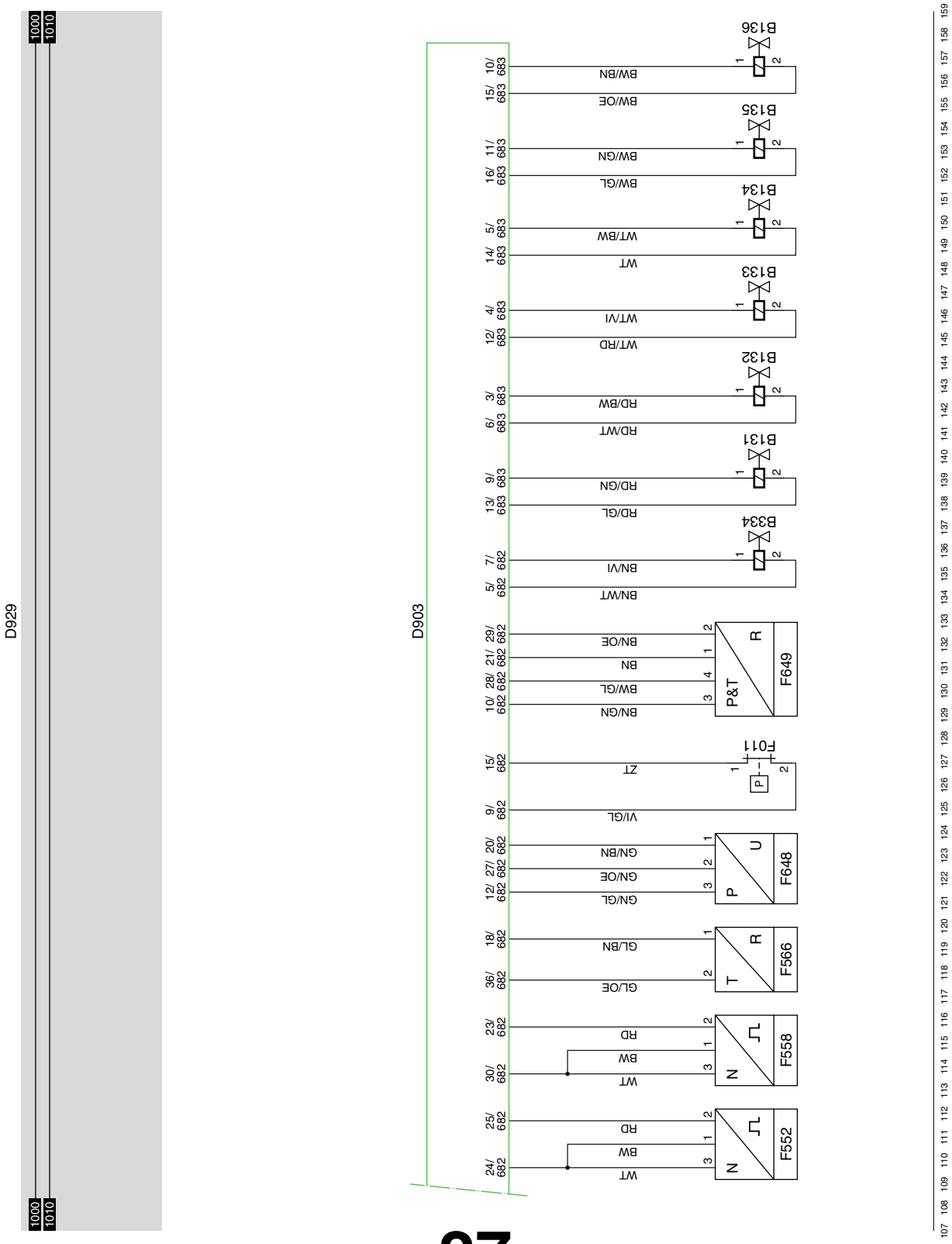

27

1358030/30-34

EL001529

https://truckmanualshub.com/

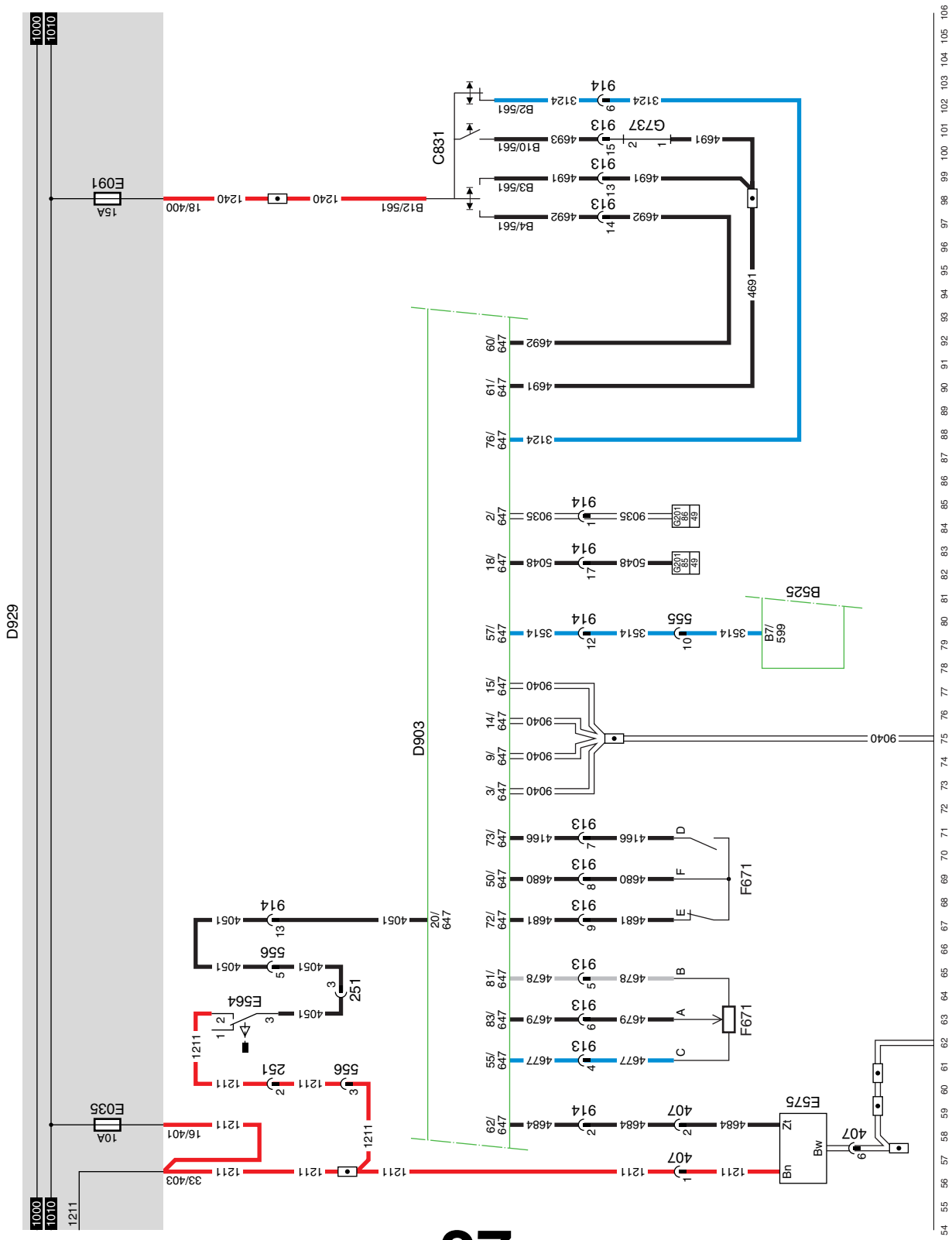
D929
1000
1010
1211
E091
15A
18/400
1240
1240
B12/561
C831
B2/561
B10/561
B3/561
B4/561
312
914
G737
913
913
913
469
469
469

https://truckmanualshub.com/

29 EMAS

SEE THE SYSTEM MANUAL FOR MORE INFORMATION

VARIANTS

Location
42

Wires coming out of connectors: 679 and 680 are **NOT** provided with DAF markings.

https://truckmanualshub.com/

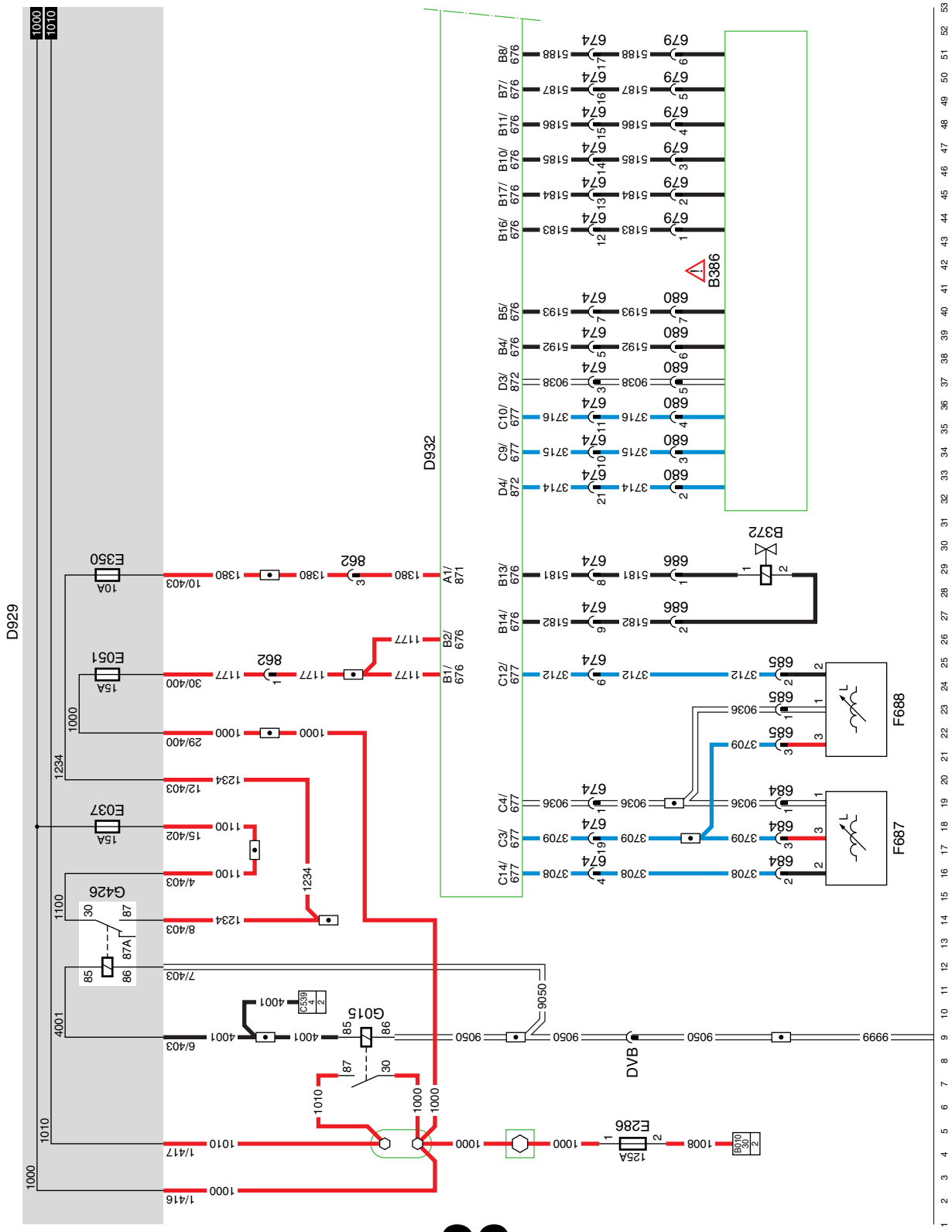

29 1358030/30-34

EL001530

11

https://truckmanualshub.com/

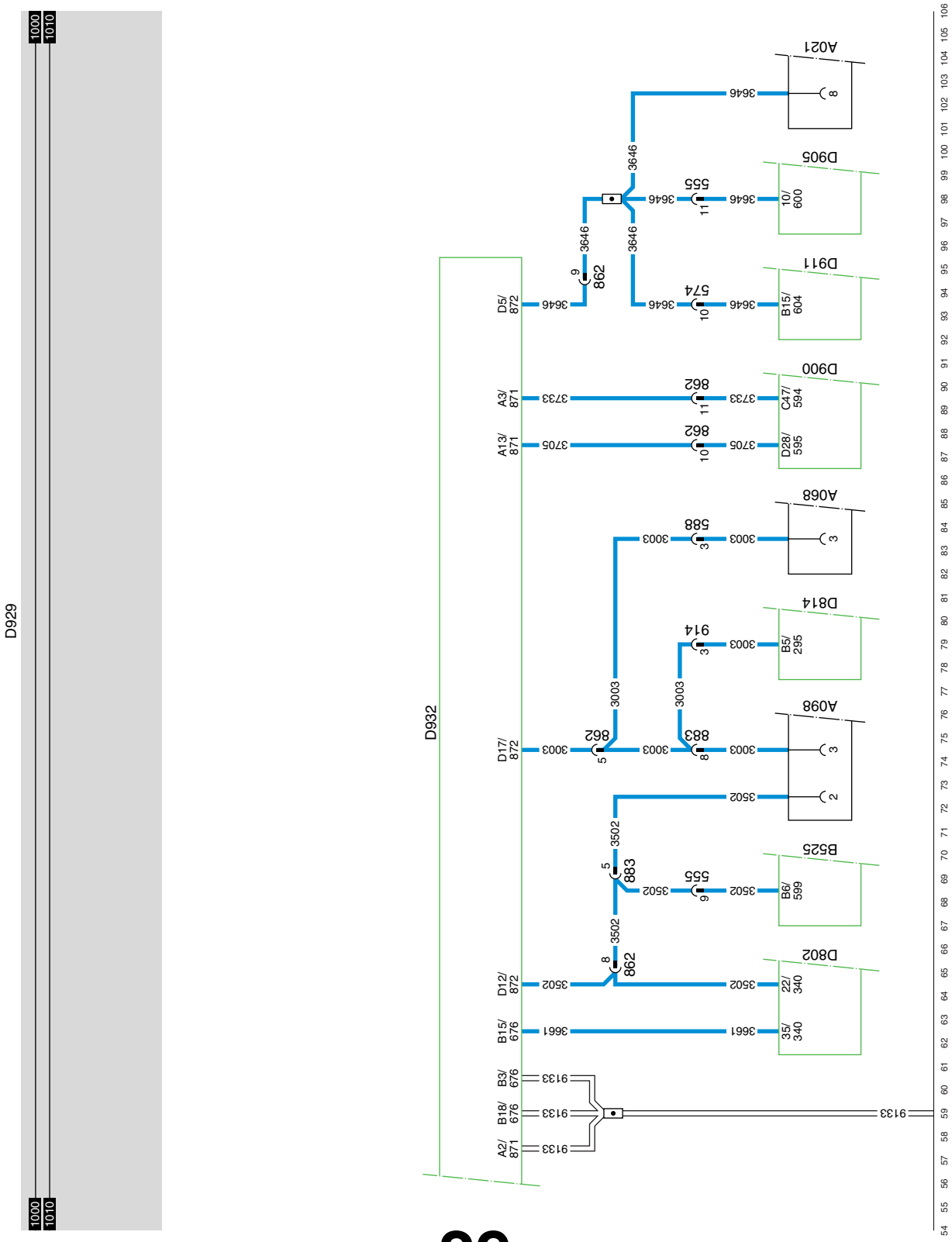

29 **1358030/30-34** EL001531

https://truckmanualshub.com/

https://truckmanualshub.com/

30 AGC

SEE THE SYSTEM MANUAL FOR MORE INFORMATION

VARIANTS

Location	
52, 72, 83, 136:	Connector A074: this is a connector for bodybuilder.
115	Depending on whether alarm system is fitted.

https://truckmanualshub.com/

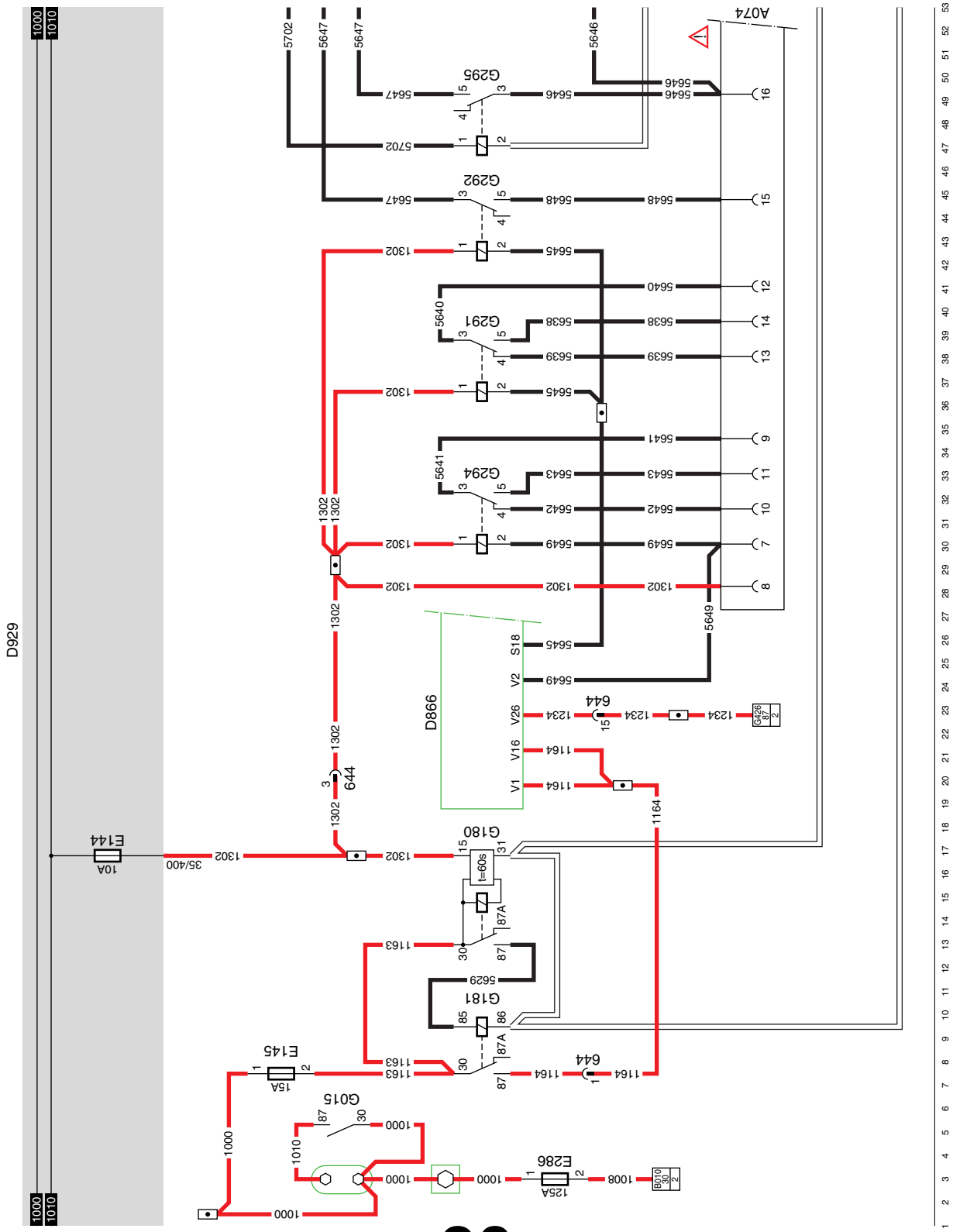

30

1358030/30-34

EL001532

11

https://truckmanualshub.com/

Changes in the electrical system from chassis number 0E646818

***CF*65/75/85** Serie ≥0E621376

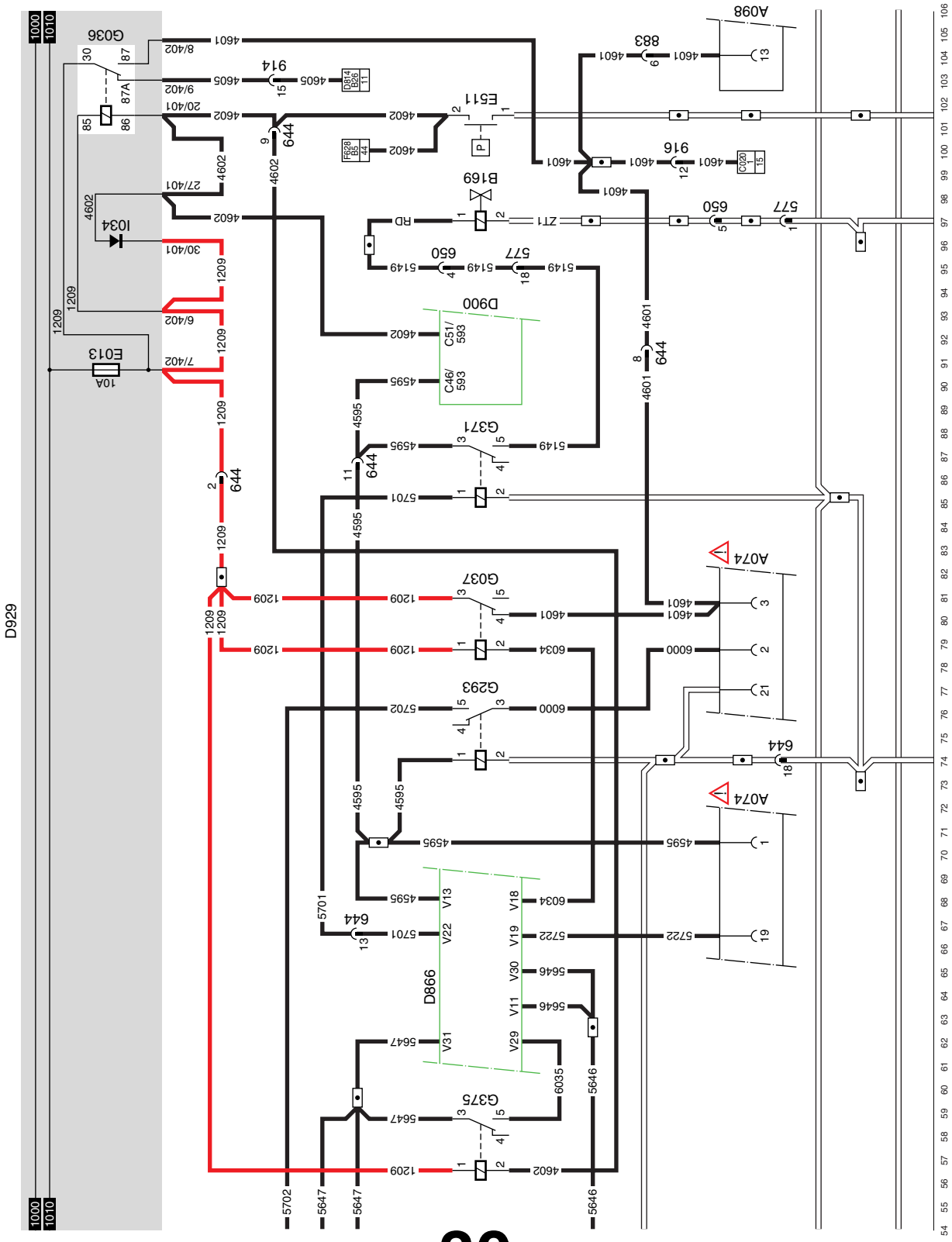

30 **1358030/30-34** EL001533

11

https://truckmanualshub.com/

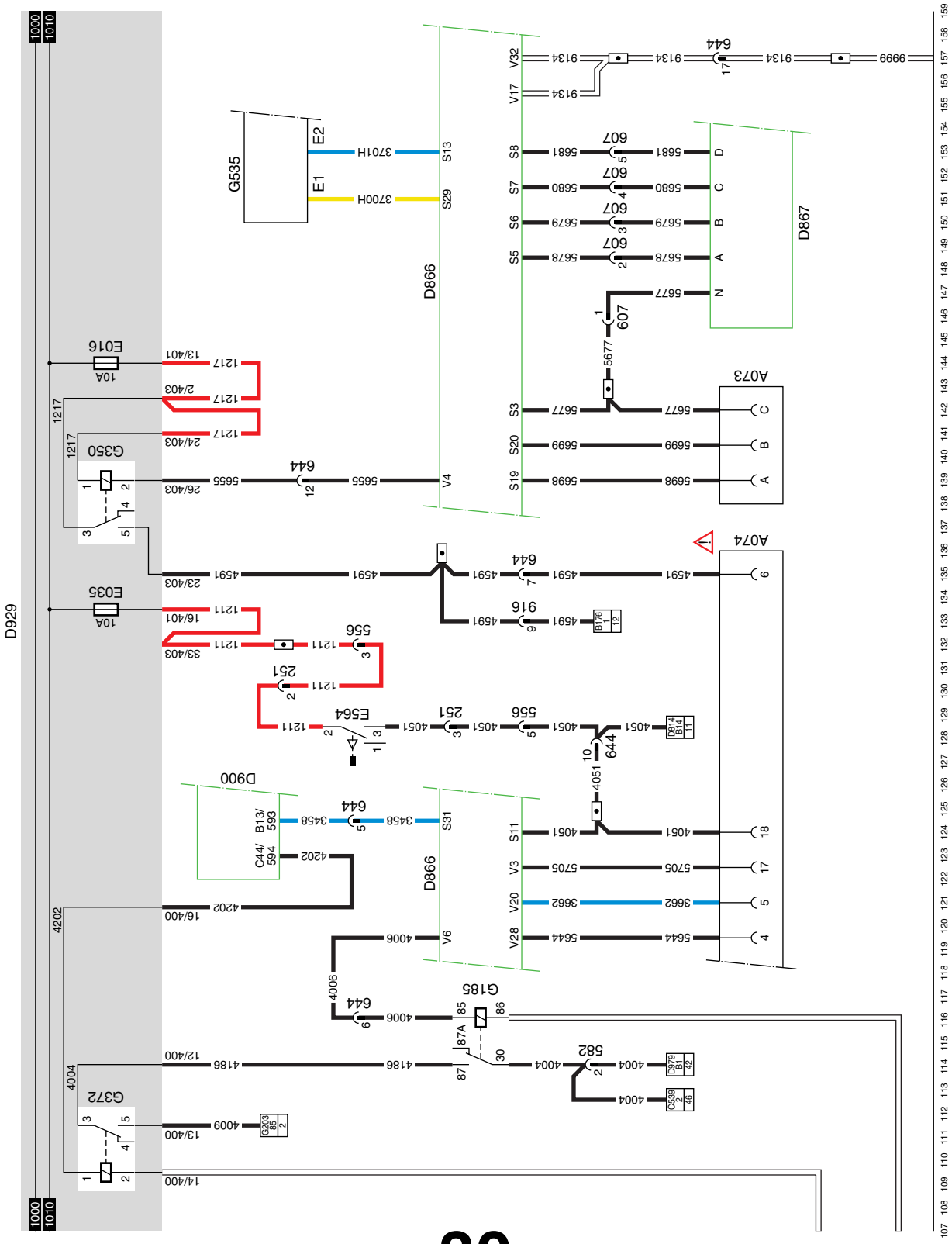

30

11

https://truckmanualshub.com/

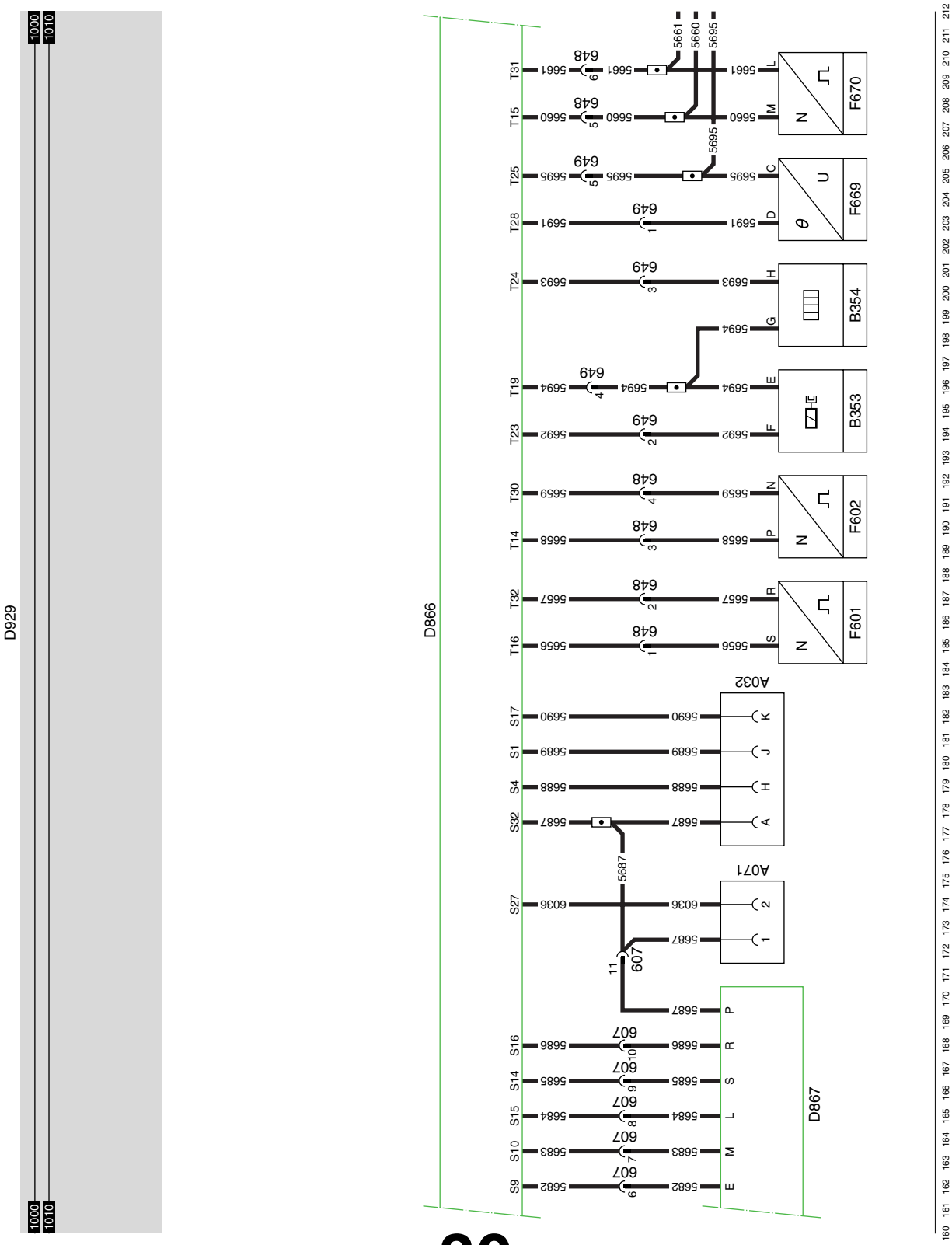

30

1358030/30-34

EL001535

https://truckmanualshub.com/

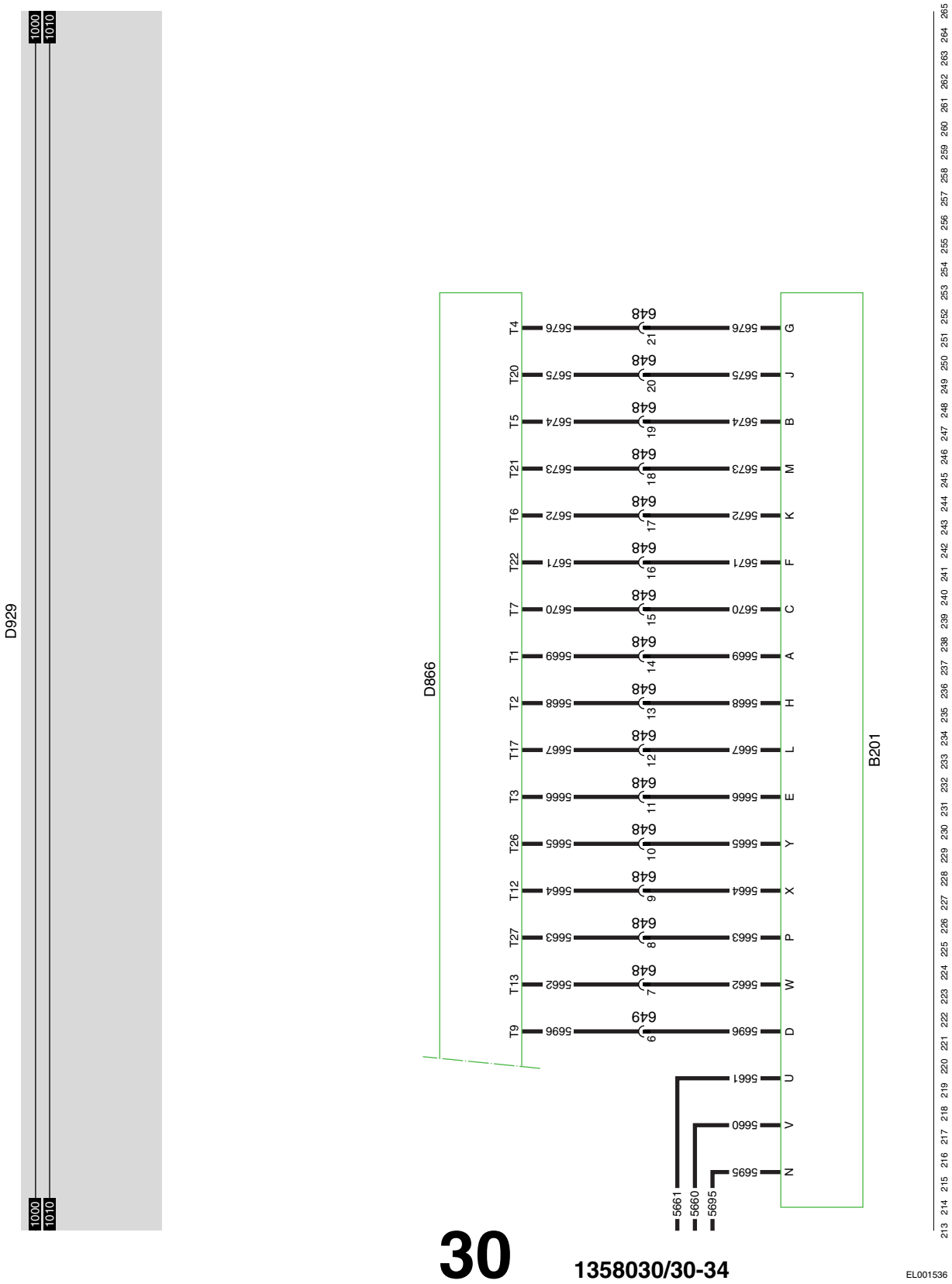

30

1358030/30-34

EL001536

11

https://truckmanualshub.com/

32 PTO

”“REQUEST” PTO 1 (= SWITCH ON)
When the PTO 1 switch (C750) is operated, a voltage is applied to connection point D27 of D900 (VIC) through fuse E091, wire 1240, contacts 5-1 of switch C750 and wire 4594. The PTO can also be switched on through connection point 11 of A068 (engine speed control application connector). This means that a “request” to use the PTO has been made.
This “request” is implemented depending on the conditions programmed in the VIC. A condition might be that the parking brake must be engaged. In this case, a voltage is applied to connection point 1 of parking brake switch F000 through fuse E035, wire 1211. If parking brake switch F000 is closed (connection between contacts 1 and 2), this voltage is also on connection point B22 of D814 (UPEC electronic unit) through wire 3402 and on connection point D26 of D900 (VIC).

OPERATION
If the “PTO request” is implemented, the following takes place:
A voltage is applied from connection point B23 of D900 through wire 4596 to connection point 1 of B245, thereby switching on the PTO.

The VIC checks whether the PTO is actually switched on. This takes place as follows:
When the PTO has been switched on, F087 is operated mechanically. Contacts 1-2 of F087 close. Connection point B14 of the VIC is now connected to earth. The VIC then sends a message to the DIP and the “PTO active” warning is activated. If the PTO does **NOT** switch on, F087 is **NOT** operated and connection point B14 of the VIC is **NOT** connected to earth. After a period of time programmed in the VIC, a “message” is sent to the DIP and the “PTO fault” warning symbol is activated.

“CANCEL” PTO 1 (= SWITCH OFF)
Breaking contacts 5-1 of C750 switches the PTO off. This interrupts the voltage from connection point D27 to D900 (VIC). One of the switch-on conditions for operation of the PTO is now absent. The VIC responds to this by also removing the voltage from connection point B23, causing the voltage at connection point 1 of B245 to be lost. The valve is no longer energised and the PTO is switched off.

“REQUEST” PTO 2 (= SWITCH ON)
When the PTO operation switch (C751) is operated, a voltage is applied to connection point D22 of D900 (VIC) through fuse E091, wire 1240, contacts 5-1 of switch C750 and wire 5241. This means that a “request” to use the PTO has been made.
This “request” is implemented depending on the conditions programmed in the VIC. A condition might be that the parking brake must be engaged. In this case, a voltage is applied to connection point 1 of parking brake switch F000 through fuse E035, wire 1211. If parking brake switch F000 is closed (connection between contacts 1 and 2), this voltage is also on connection point B22 of D814 (UPEC electronic unit) through wire 3402 and on connection point D26 of D900 (VIC).

OPERATION
If the “PTO request” is implemented, the following takes place:
A voltage is applied from connection point C46 of D900 to connection point 1 of E570 (clutch PTO N10 proximity switch) (if present) and to connection point 3 of relay G259 (PTO operation takeover relay) (if present) through wire 4595. When switch E570 is operated by depressing the clutch pedal (connection between contacts 1 and 2), a voltage is applied to connection point 1 of relay G259 through wire 4595 and to connection point 1 of B245 (PTO control valve). Relay G259 is energised and, as a result, a connection is made between contacts 3 and 5 of relay G259. Relay G259 now remains energised irrespective of E570 (this is a “memory” function). B246 is also activated and this switches the PTO on.

https://truckmanualshub.com/

The VIC checks whether the PTO is actually switched on. This takes place as follows: When the PTO has been switched on, F088 is operated mechanically. Contacts 1-2 of F088 close. Connection point B11 of the VIC is now connected to earth. The VIC then sends a message to the DIP and the “PTO active” warning is activated. If the PTO does **NOT** switch on, F088 is **NOT** operated and connection point B11 of the VIC is **NOT** connected to earth. After a period of time programmed in the VIC, a “message” is sent to the DIP and the “PTO fault” warning symbol is activated.

“CANCEL” PTO 2 (= SWITCH OFF)
Breaking contacts 5-1 of C751 switches the PTO off. This interrupts the voltage from connection point D22 to D900 (VIC). One of the switch-on conditions for operation of the PTO is now absent. The VIC responds to this by removing the voltage on connection point C46 as well. The voltage on relay G259 is interrupted and, as a result, the coil is no longer energised. Contacts 5-3 open and, as a result, the voltage on connection point 1 of B246 is lost. The valve is no longer energised and the PTO is switched off.

VARIANTS

Location

9	Connector A068: optional
39	DVB: in wiring harness above PCB if there is **NO** clutch PTO N10 proximity switch.
24, 27, 33, 44:	Connector 626: for manual gearbox. Connector 699: for AS Tronic. Connector 577 for AGC.

https://truckmanualshub.com/

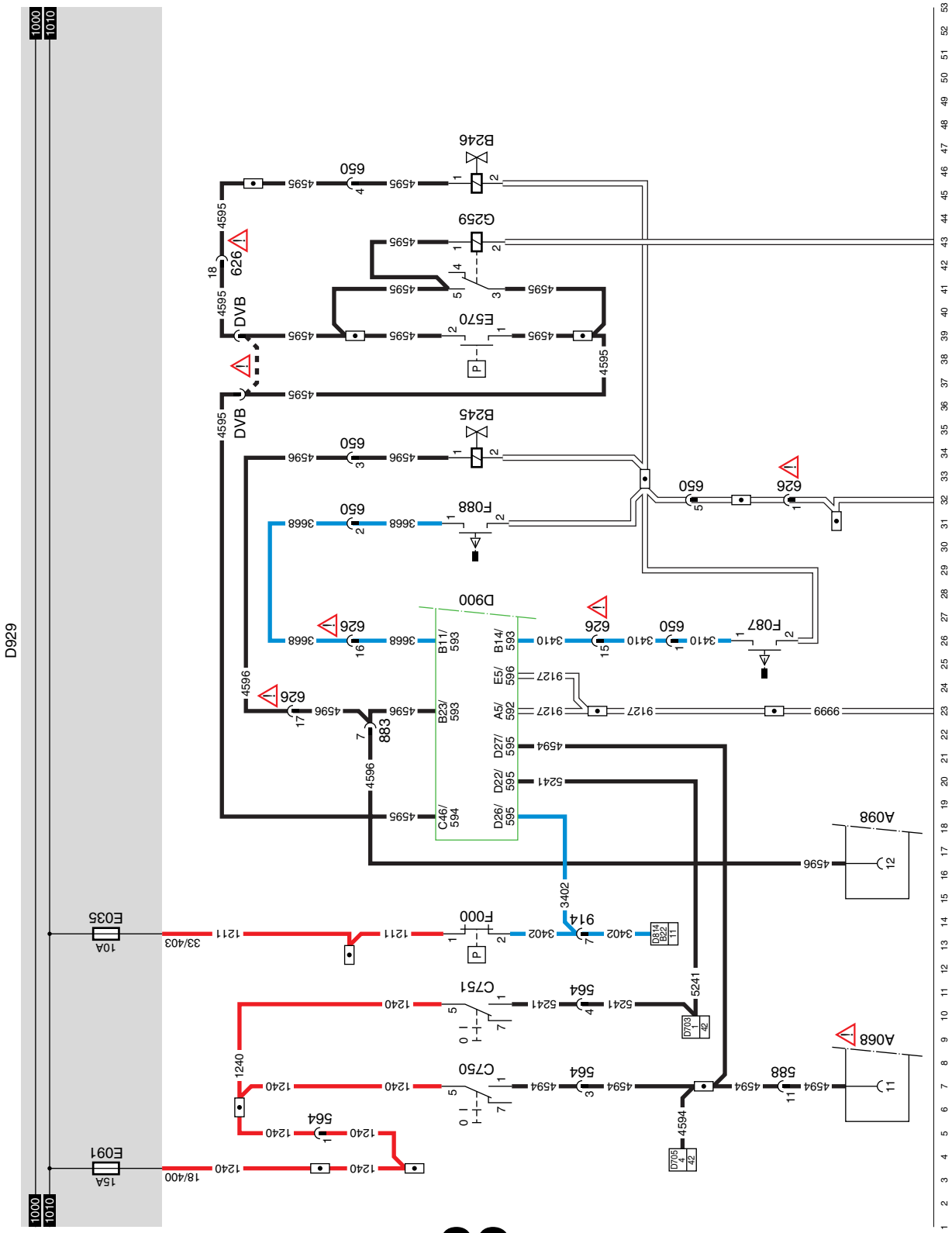

32

1358030/30-34

EL001537

https://truckmanualshub.com/

https://truckmanualshub.com/

34A ECAS-3

SEE THE SYSTEM MANUAL FOR MORE INFORMATION

VARIANTS

Location
98 Valve B250:
for vehicle type FA: B250
for vehicle type FT: B238

https://truckmanualshub.com/

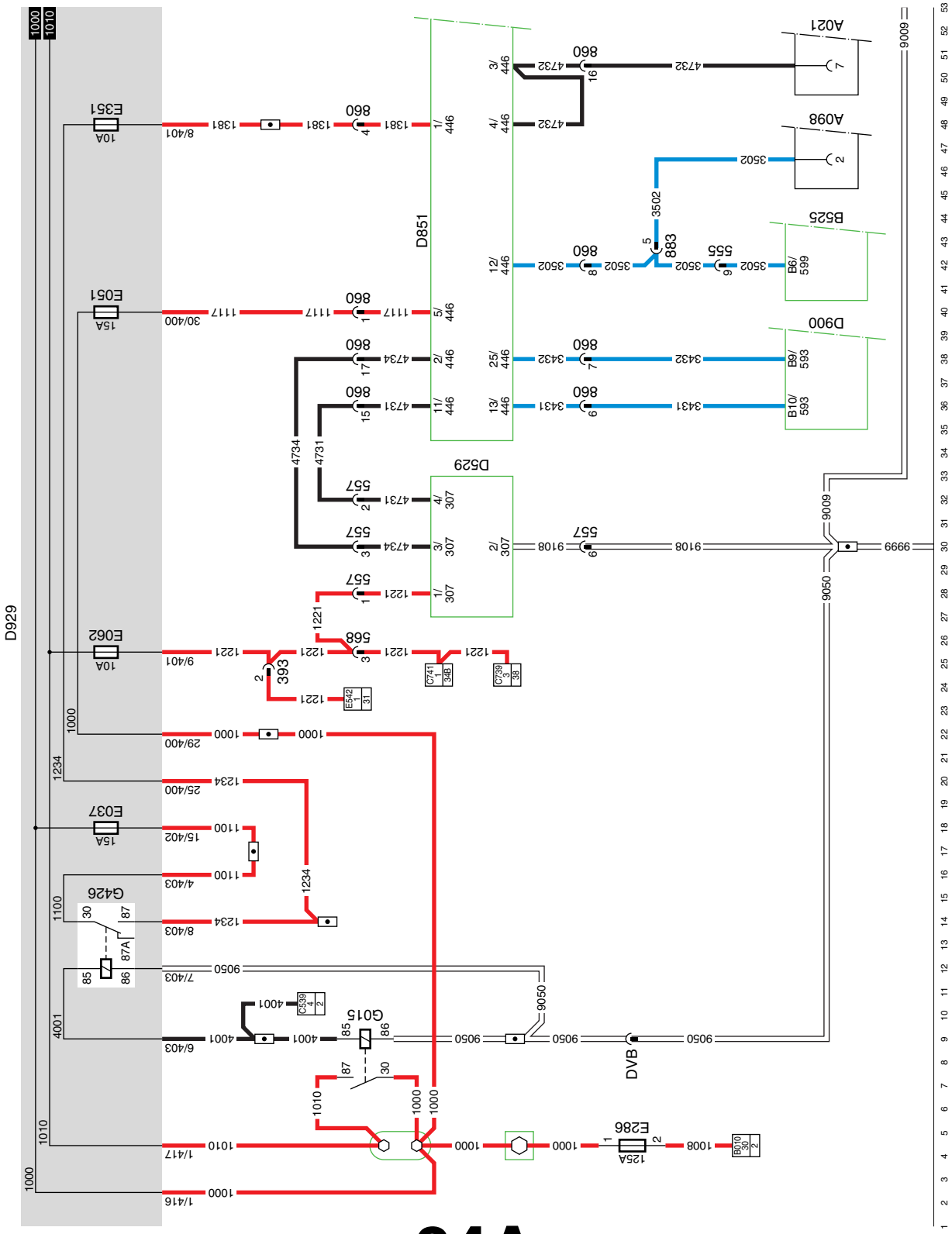

34A 1358030/30-34

EL001538

https://truckmanualshub.com/

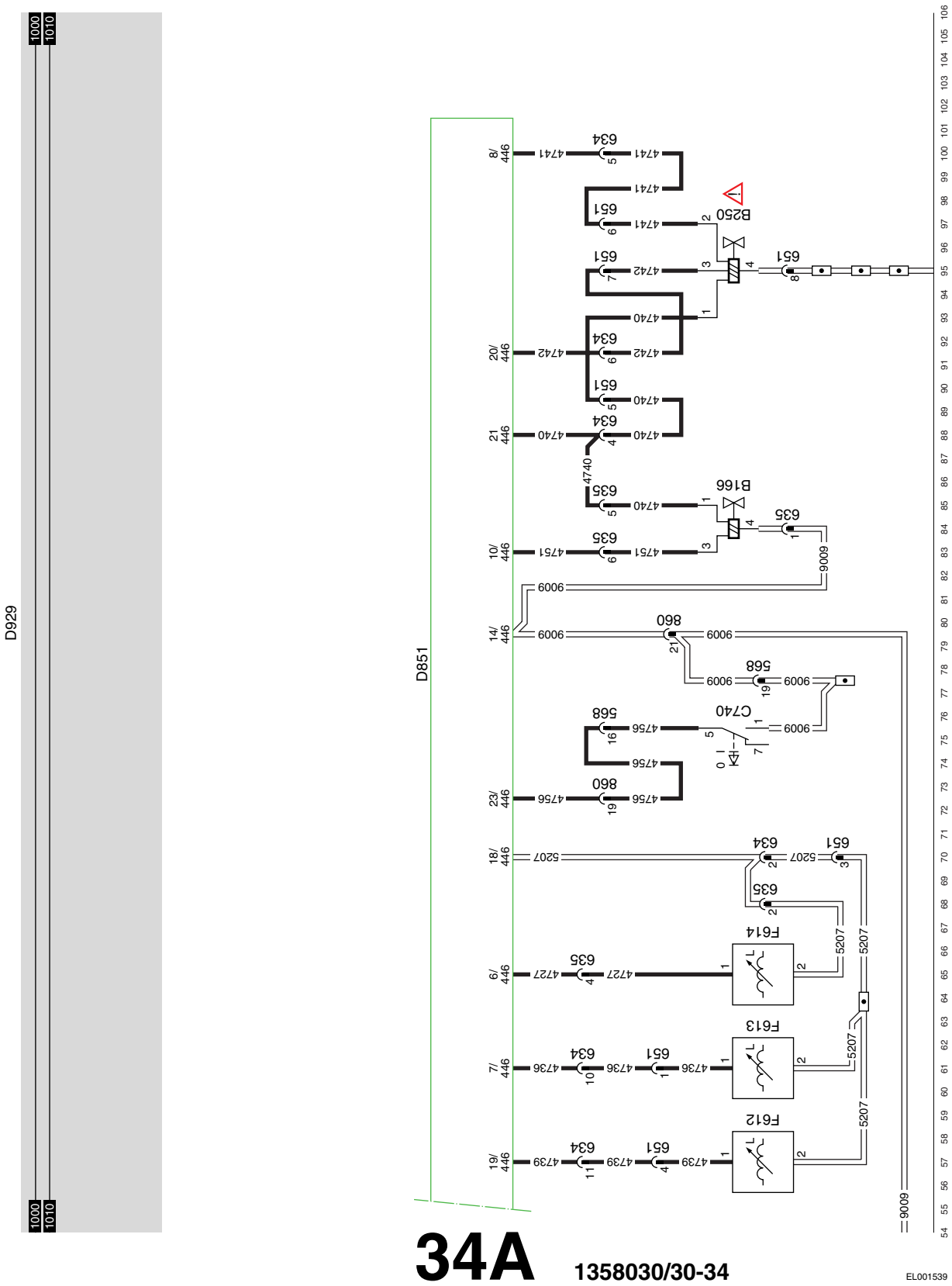

https://truckmanualshub.com/

https://truckmanualshub.com/

34B ECAS-2

SEE THE SYSTEM MANUAL FOR MORE INFORMATION

VARIANTS

Location

56 Connector 929: only if the vehicle has been equipped to transport hazardous substances.

https://truckmanualshub.com/

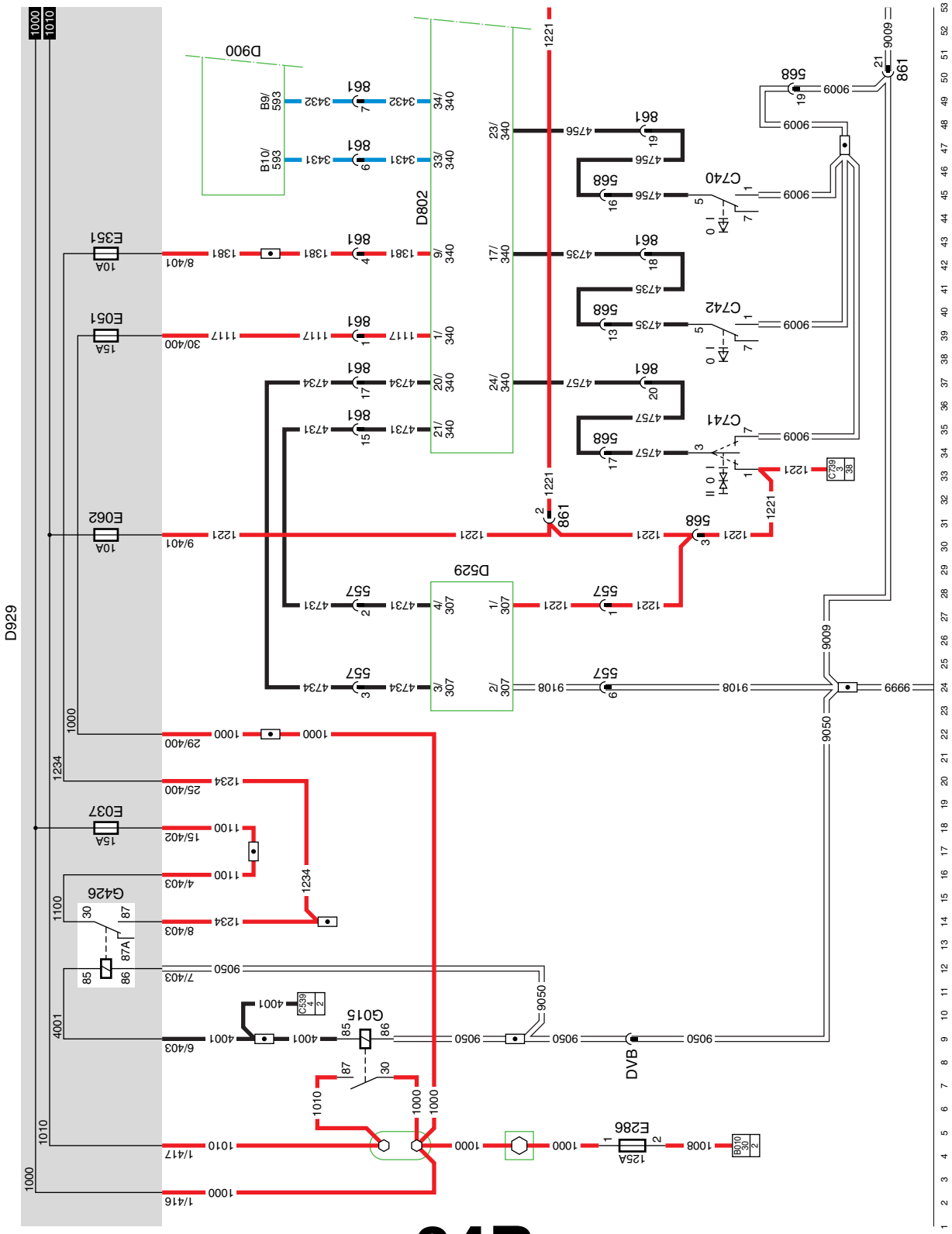

34B 1358030/30-34

EL001540

11

https://truckmanualshub.com/

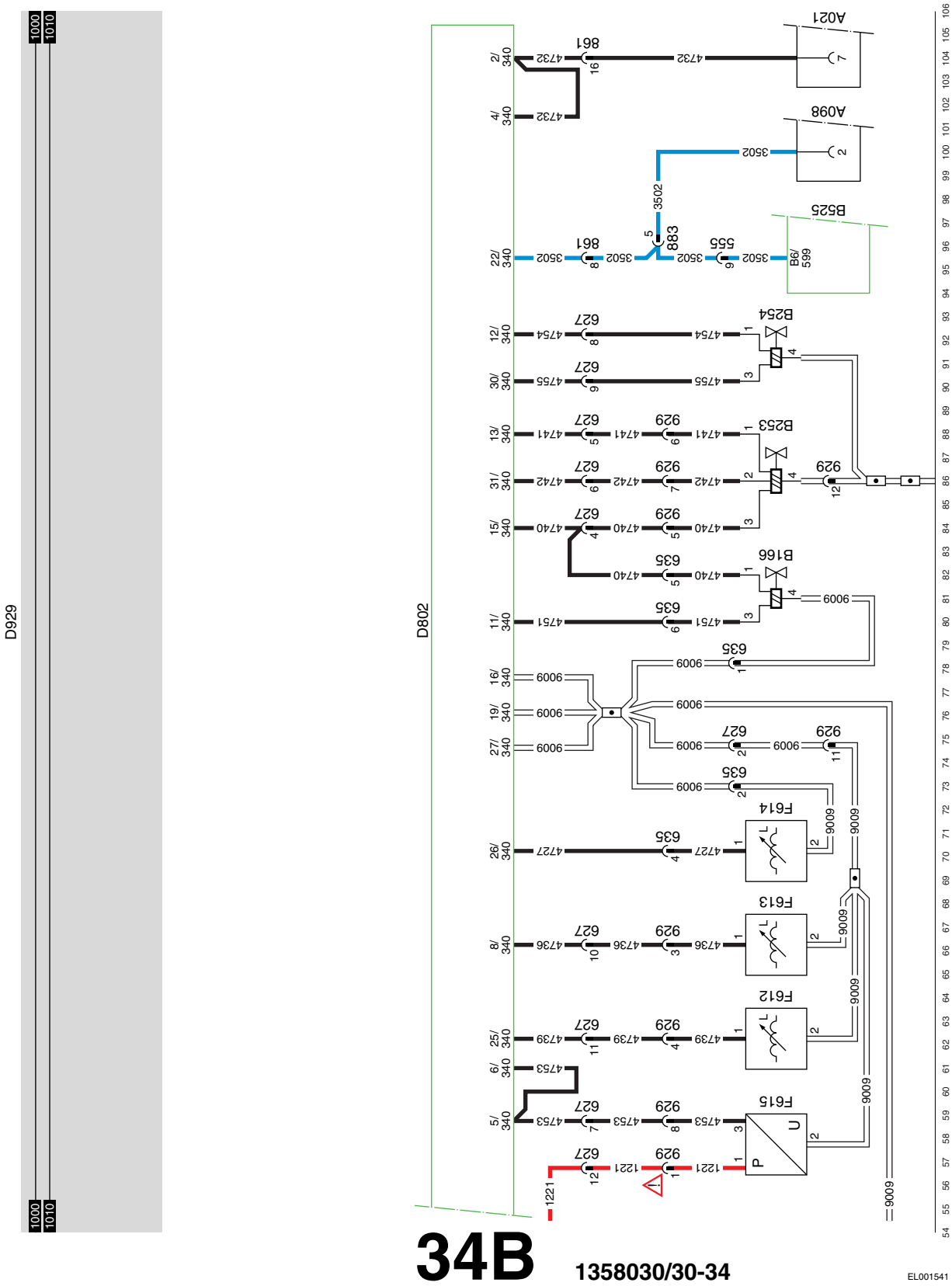

© 200520

https://truckmanualshub.com/

https://truckmanualshub.com/

42 HYDRONIC 10 (ACH-EW) CAB HEATER WITH TIMER

SEE THE SYSTEM MANUAL FOR MORE INFORMATION

VARIANTS

Location

15	DVB: in wiring harness next to PCB
68	Relay G372 for a manual gearbox. Relay G185 for an AS Tronic gearbox and for an Allison gearbox.

© 200520

https://truckmanualshub.com/

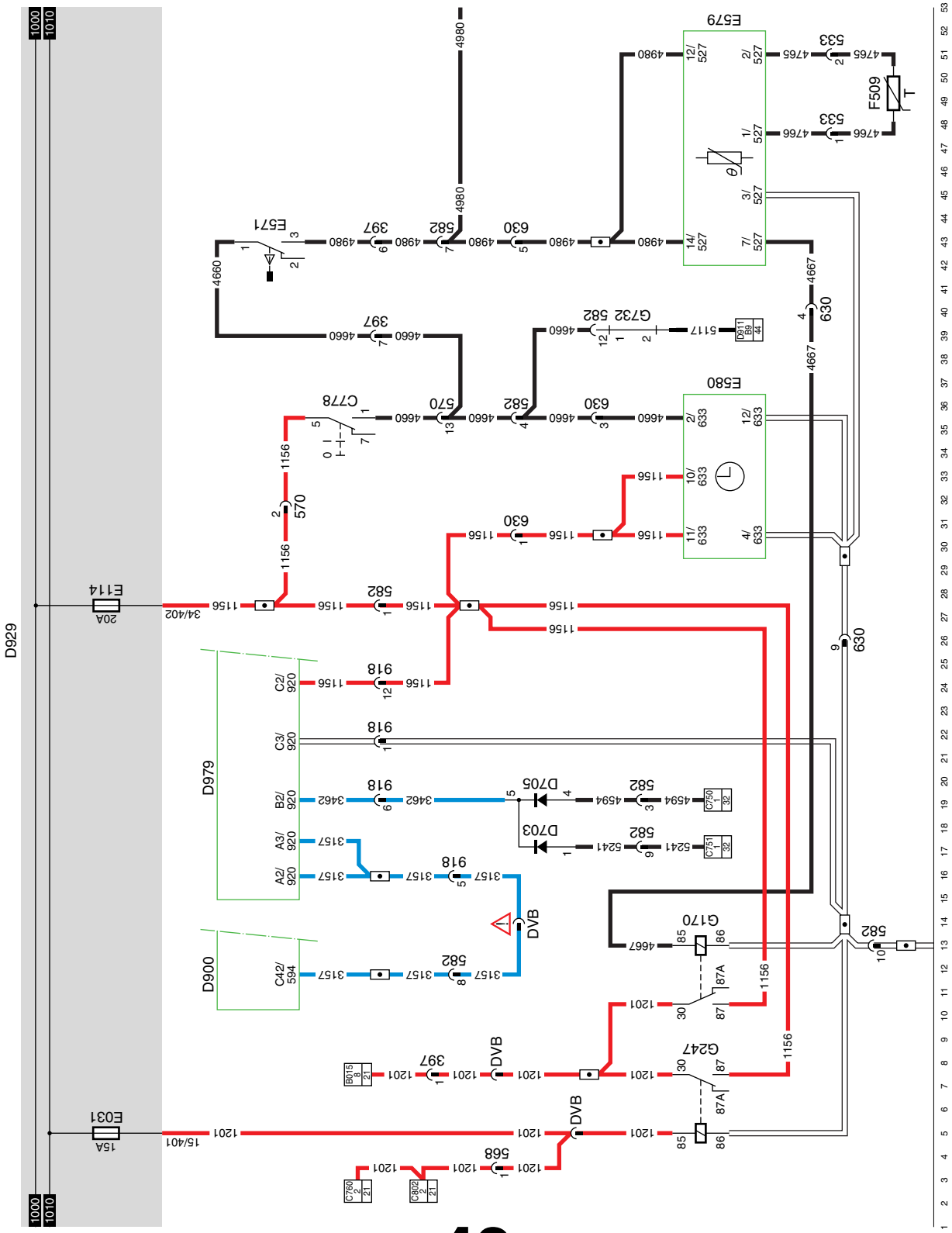

42 11358030/30-34

EL001542

https://truckmanualshub.com/

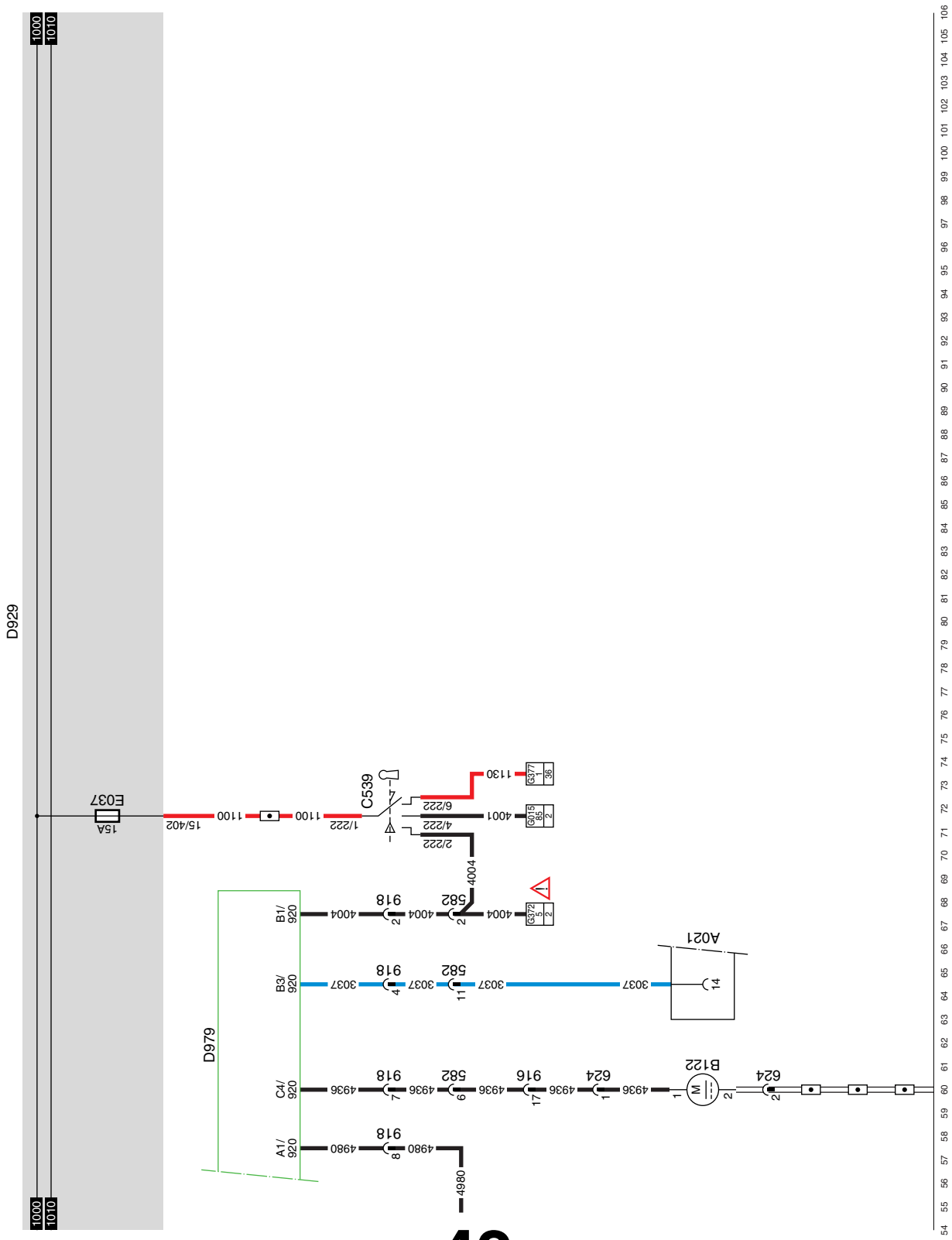

11

https://truckmanualshub.com/

https://truckmanualshub.com/

43 UPEC/CUMMINS/AGC/SUPERSTRUCTURE FUNCTIONS APPLICATION CONNECTOR

FOR MORE INFORMATION: SEE BLOCK 6: CONNECTION OF ACCESSORIES

VARIANTS

Location

69 -> 105: If the vehicle has UPEC.
76, 105, 120, 147
Connector A068: optional
109 -> 147: If the vehicle has ECS-DC3.
165 -> 182: All 658 connectors: optional
165 -> 182 and 185 -> 209:
All 656 connectors: optional
185 -> 197: All 654 connectors: optional
185 -> 209: All 657 connectors: optional
199 -> 209: All 655 connectors: optional

© 200520

https://truckmanualshub.com/

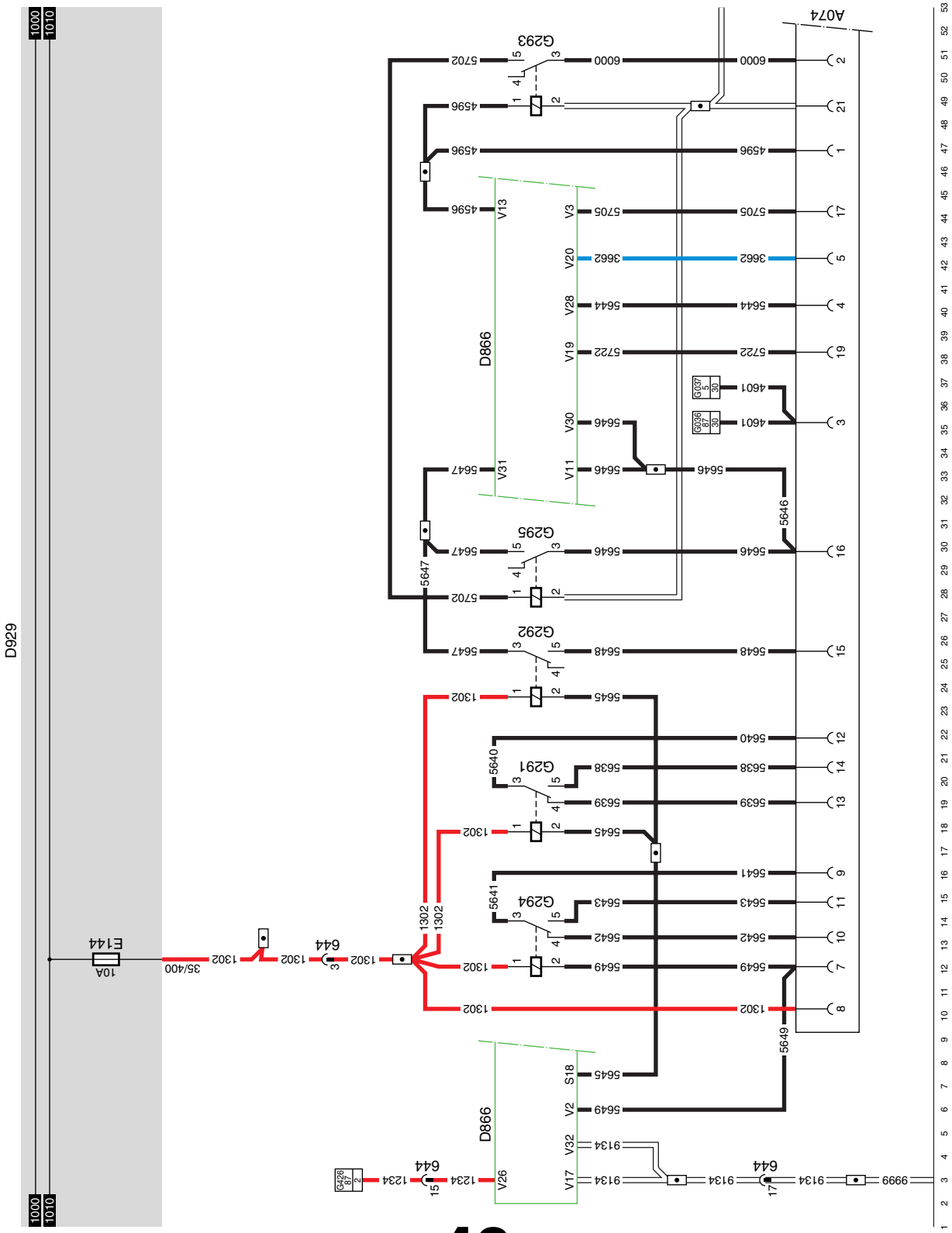

43 1358030/30-34 EL001544

11

https://truckmanualshub.com/

Changes in the electrical system from chassis number 0E646818

***CF*65/75/85** Serie ≥0E621376

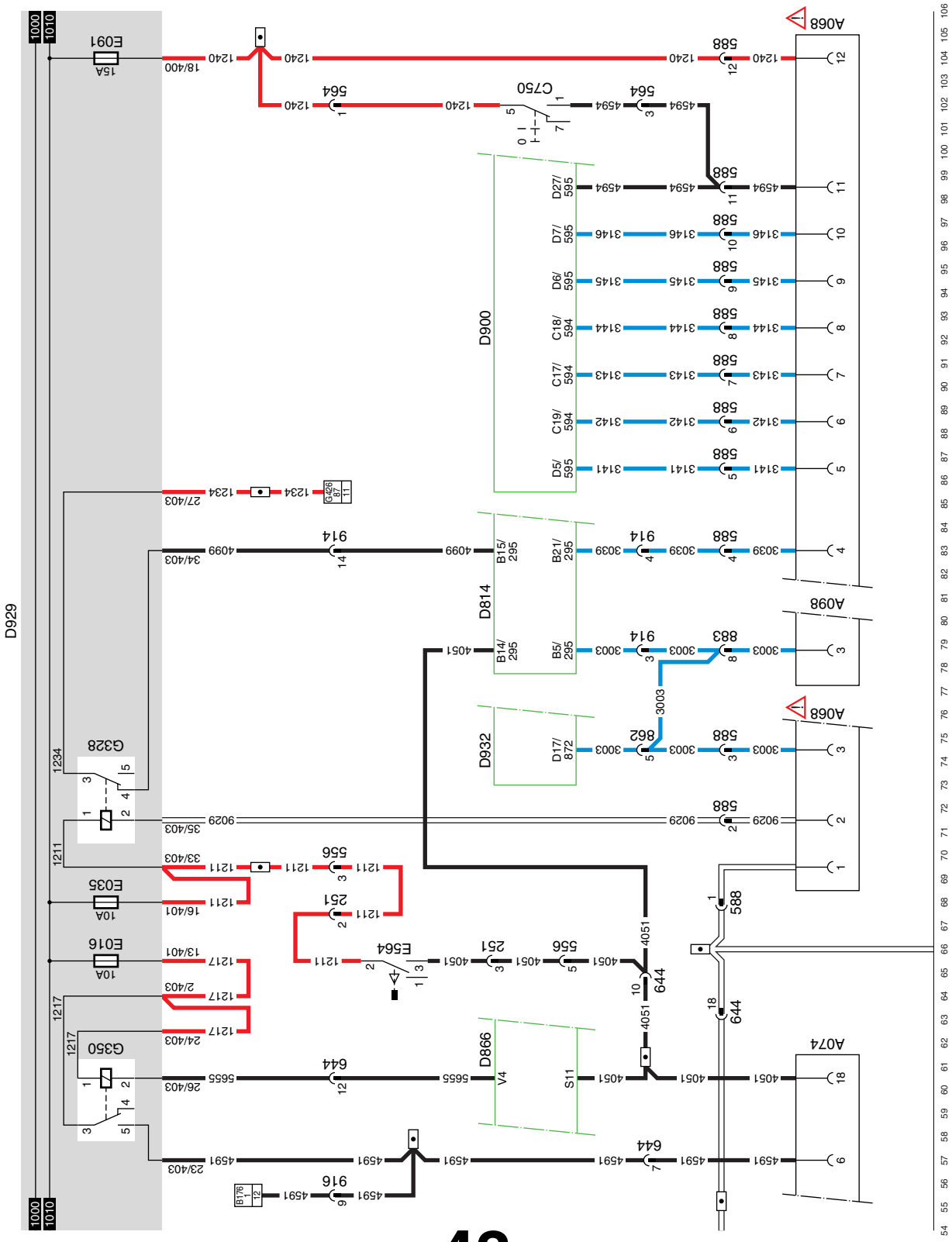

43

1358030/30-34

EL001545

11

https://truckmanualshub.com/

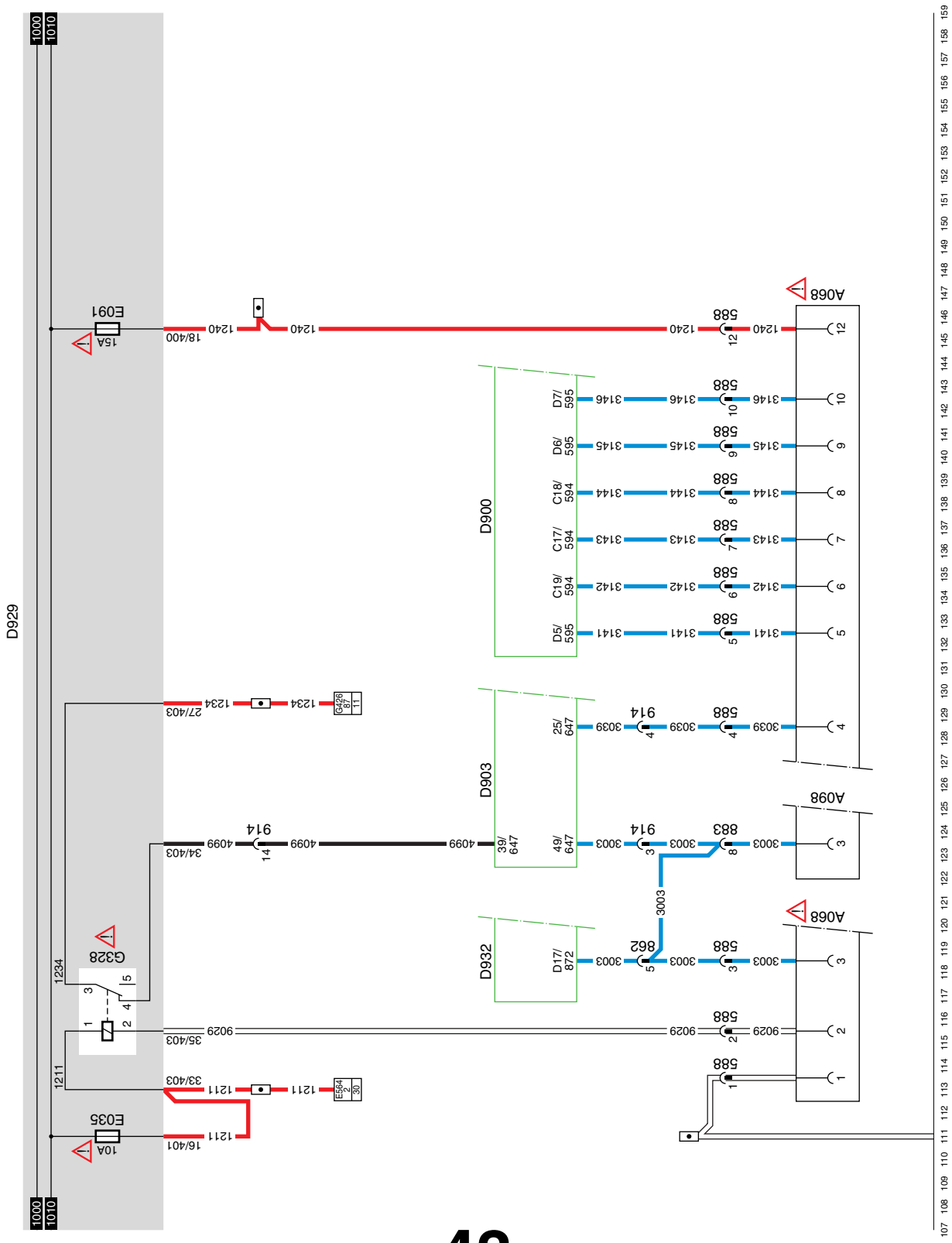

43

1358030/30-34

EL001546

11

https://truckmanualshub.com/

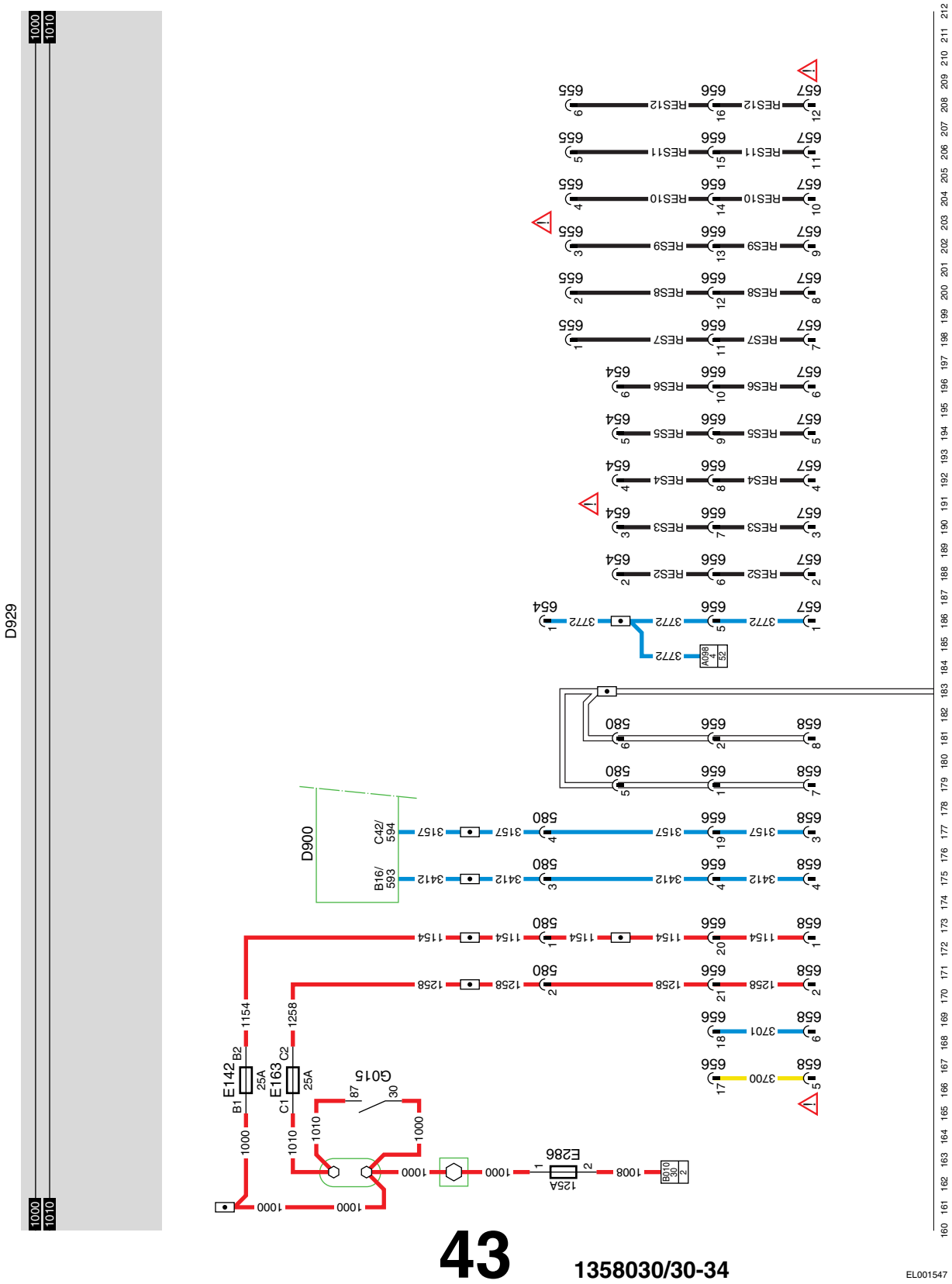

43

1358030/30-34

EL001547

© 200520

https://truckmanualshub.com/

https://truckmanualshub.com/

46 ALARM SYSTEM

SEE THE SYSTEM MANUAL FOR MORE INFORMATION

VARIANTS

Location

23, 24	Relay G185: only for AS Tronic or Allison gearbox. Only relay G350 is fitted if gearbox is manual. Connection point 30 (with wire 4004) is then rigidly connected to wire 4186.
59 -> 65	Connector 873 on vehicle type FA. Connector 874 on vehicle type FT.
59 -> 65	Connector A001: on vehicle type FA. Connector A003: on vehicle type FT.
73	Connector A073: only on vehicle type FA
81	Connection for F686 (this is optional). Only applies to SL cab.
128	C836: optional
144	D931: fitted if **NO** alarm system installed.
142	E351: fitted if **NO** alarm system installed.
147	E023: fitted if **NO** alarm system installed.

© 200520

https://truckmanualshub.com/

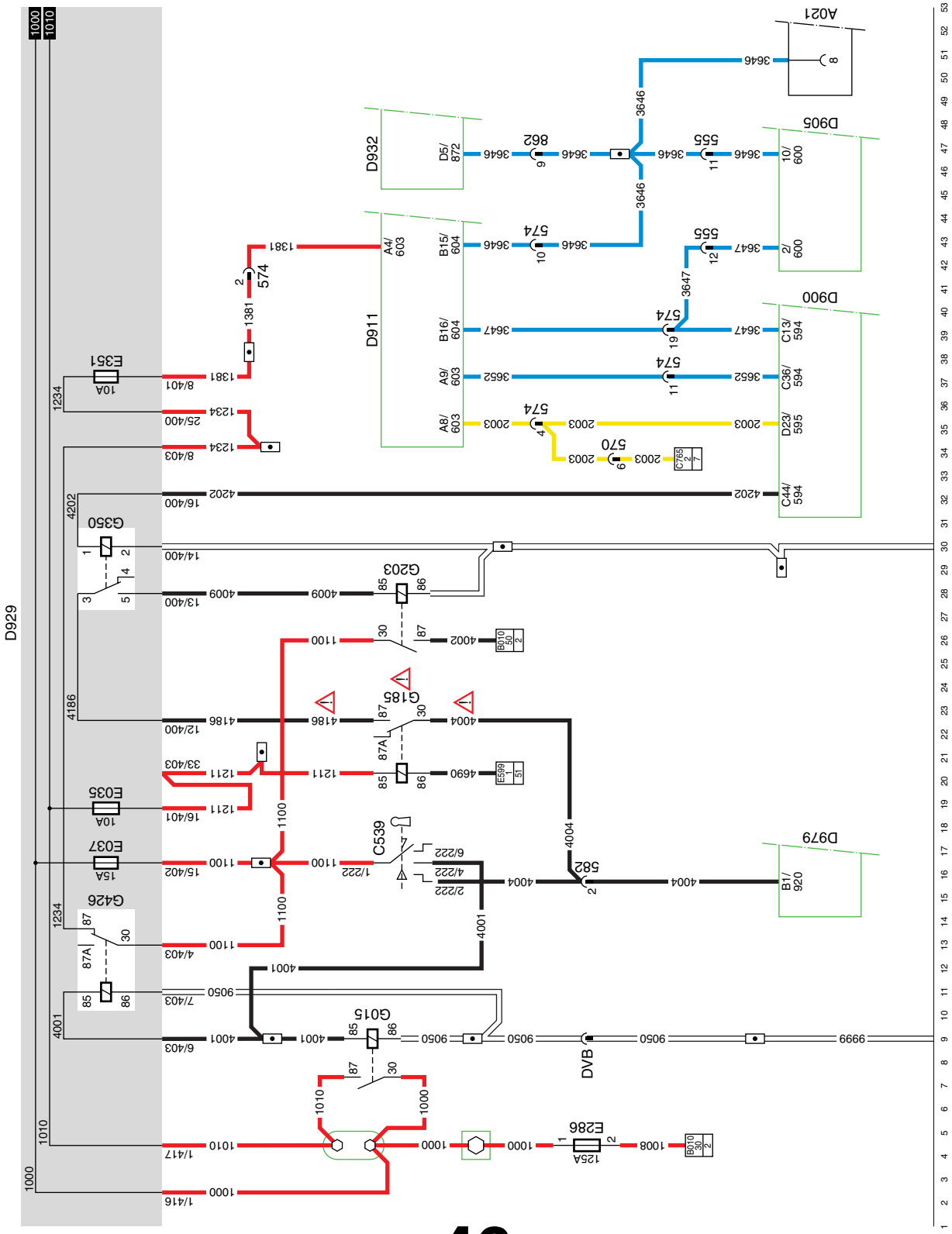

46 1358030/30-34

EL001548

https://truckmanualshub.com/

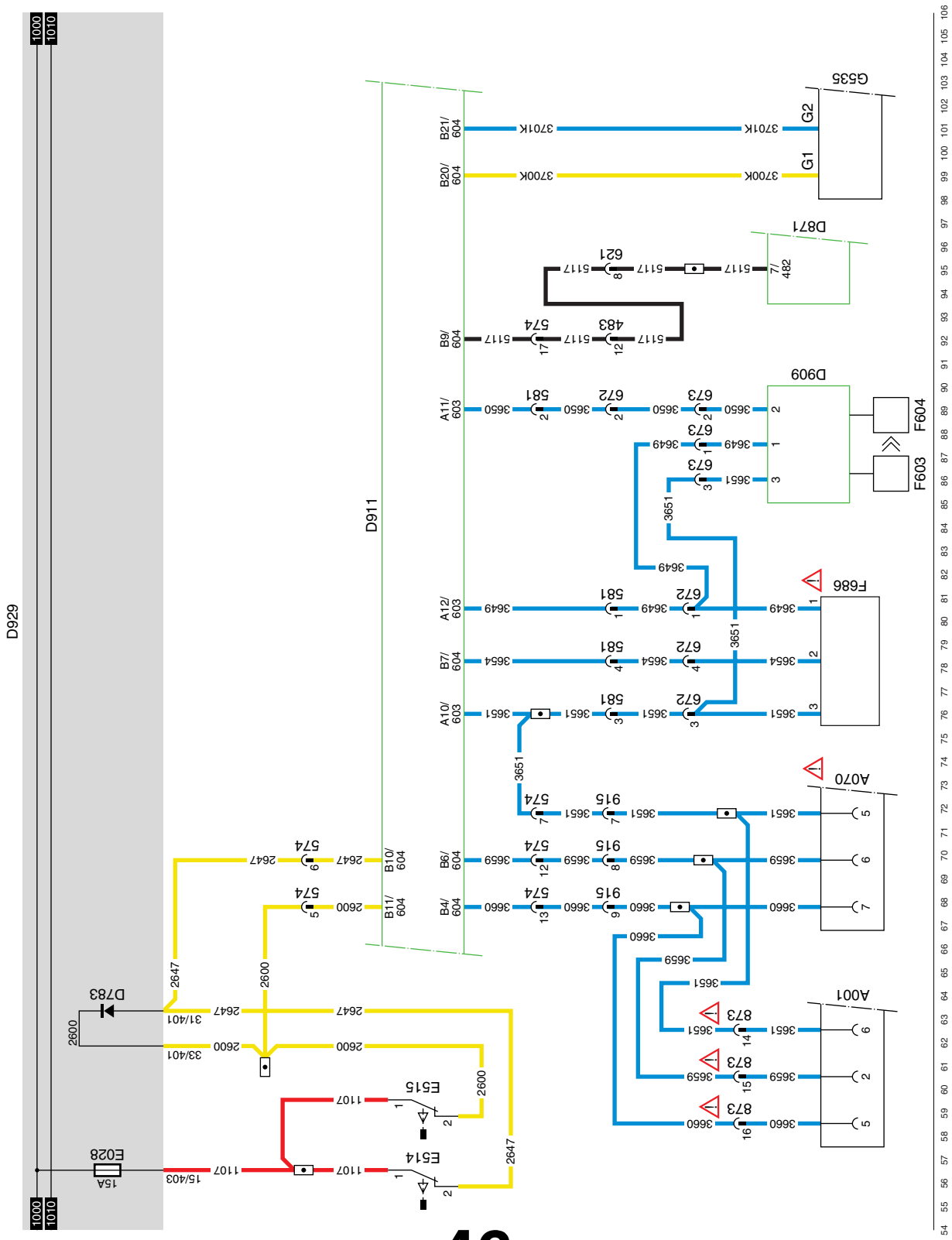

https://truckmanualshub.com/

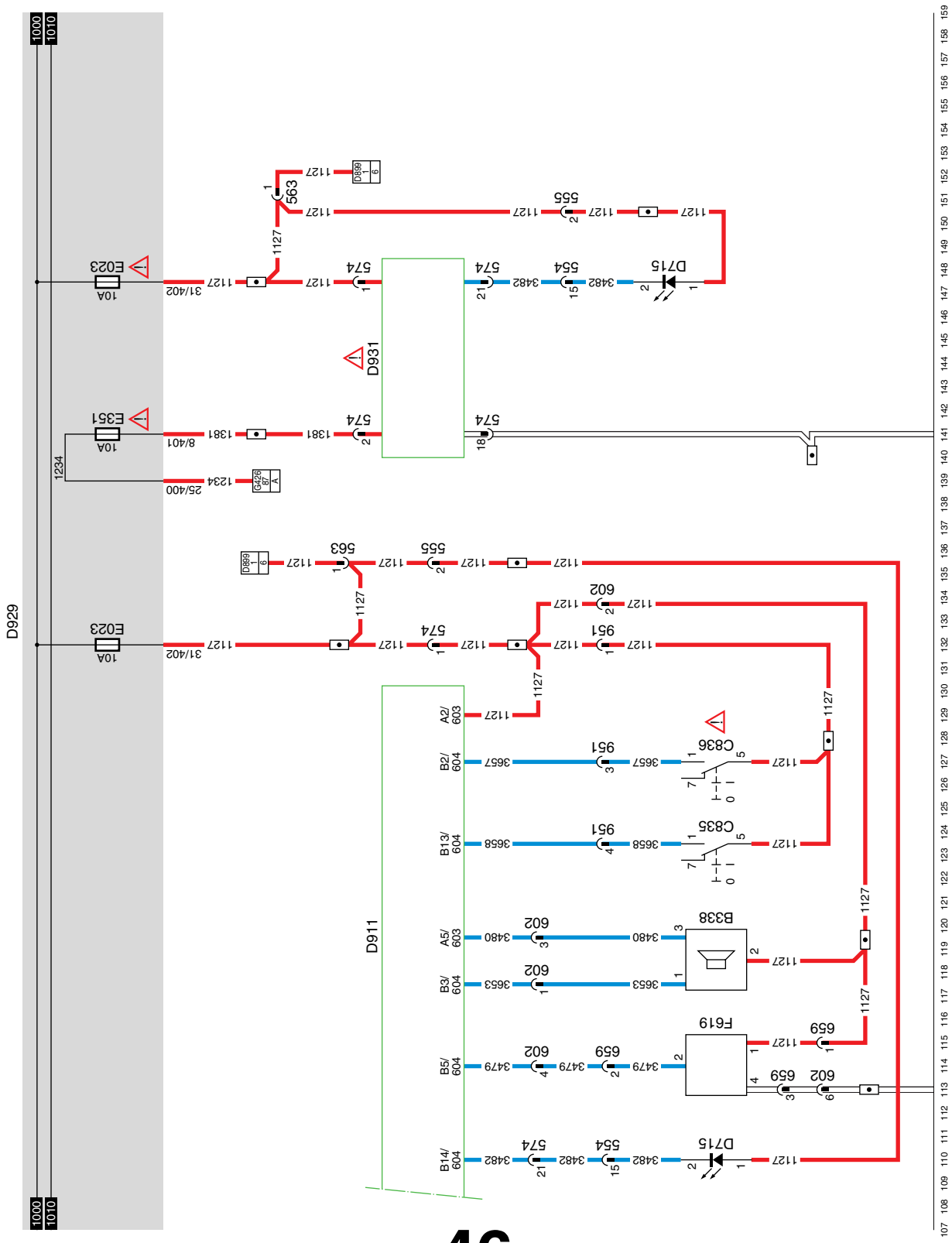

46

1358030/30-34

EL001550

https://truckmanualshub.com/

52 CDM + FMS

SEE THE SYSTEM MANUAL FOR MORE INFORMATION

VARIANTS

Location	
37	Connector 656: connector for bodybuilder

© 200520

https://truckmanualshub.com/

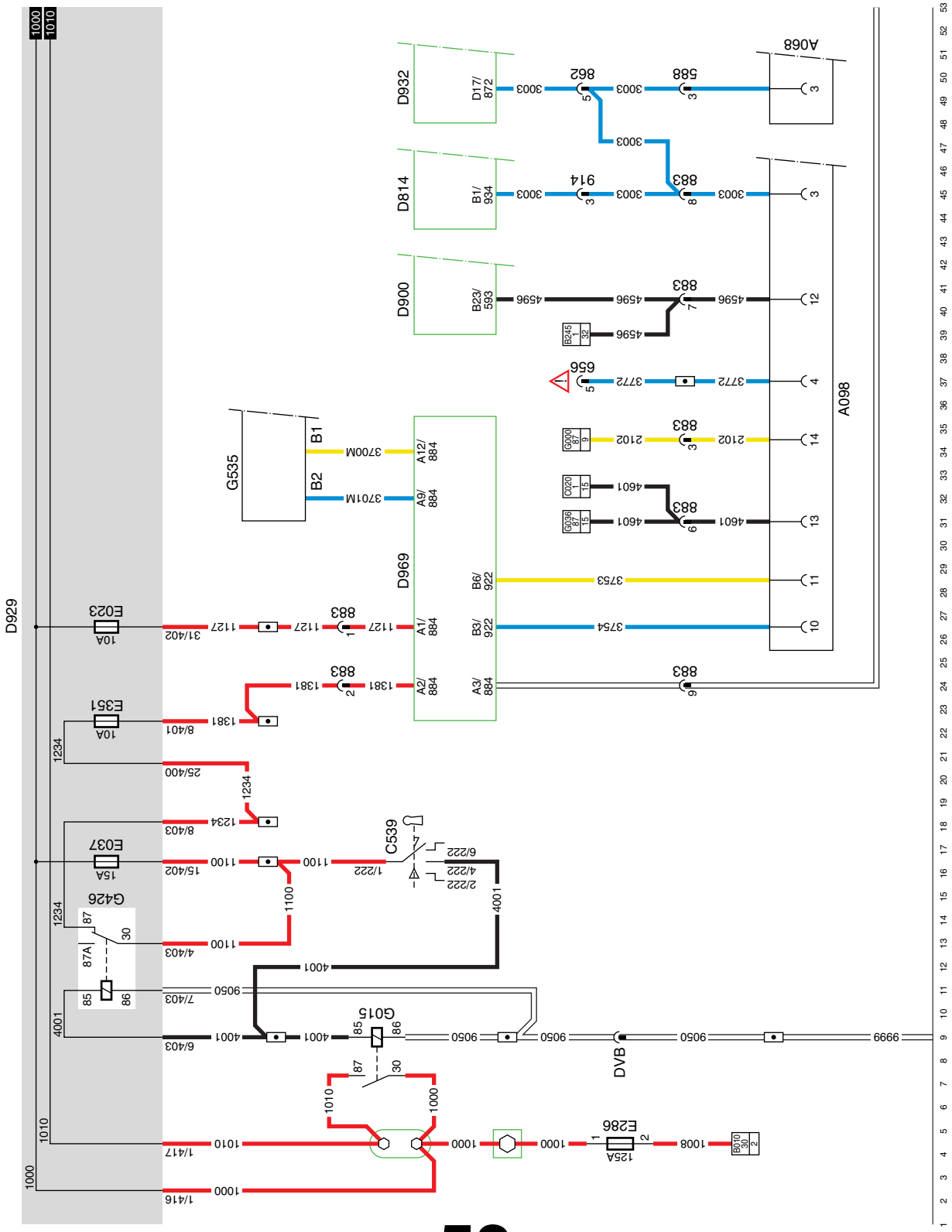

52 1358030/30-34

EL001551

11

https://truckmanualshub.com/

Changes in the electrical system from chassis number 0E646818

***CF*65/75/85** Serie ≥0E621376

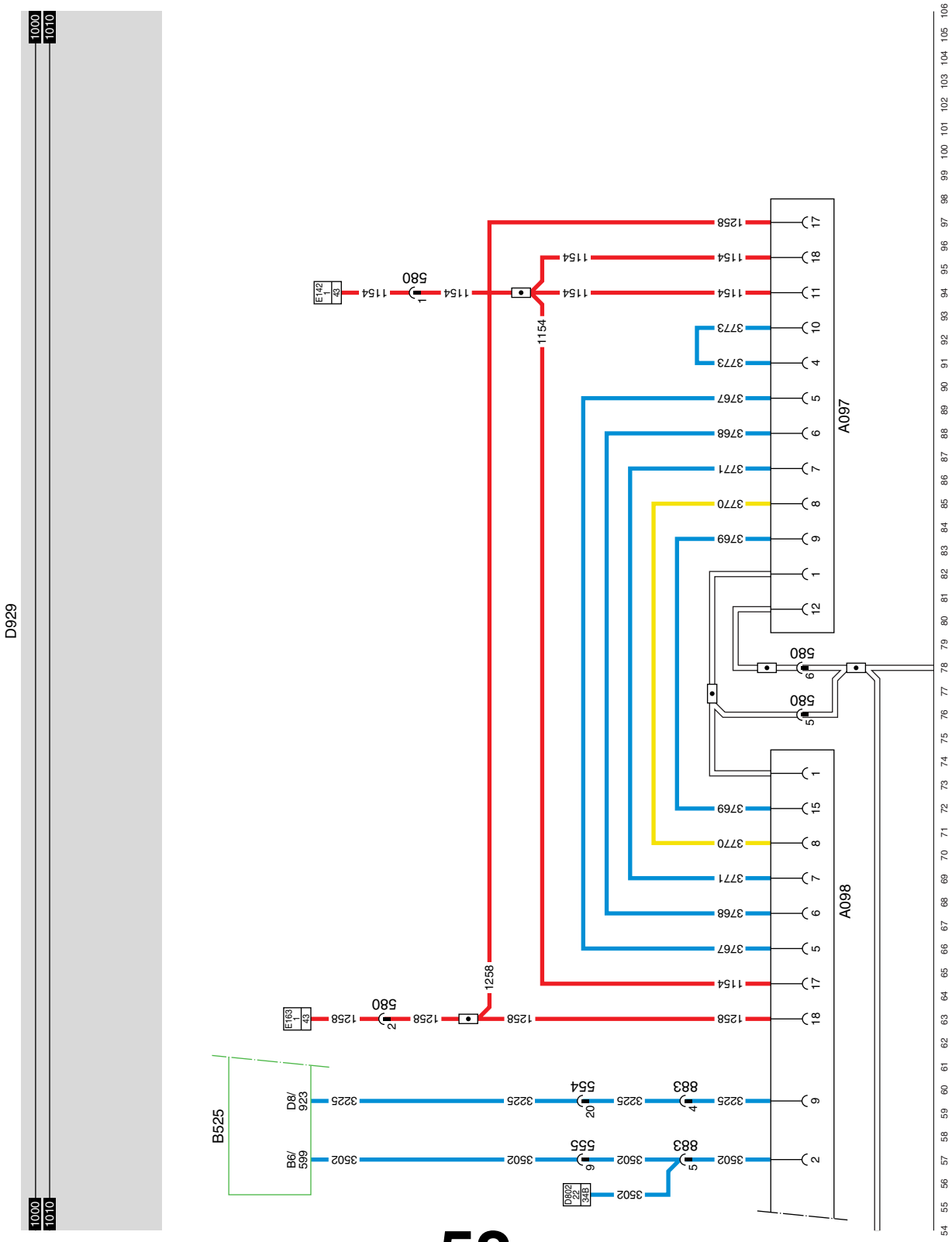

52 1358030/30-34

EL001552

© 200520

https://truckmanualshub.com/

4. CHANGES IN THE ELECTRICAL SYSTEM FROM CHASSIS NUMBER 0E659894

4.1 OVERVIEW OF THE CHANGES IN THE ELECTRICAL SYSTEM

Section diagram	Electrical system	Changes	From chassis number
B	Overview of earthing points	Various earthing points changed	0E663173
1	Main switch	New main switch	0E682847
5	Tachograph	ECN name changed	0E682847
8	VIC	Relay, EBS warning, semi-trailer (G497) added	0E659894
11	UPEC	Relay, EBS warning, semi-trailer (G497) added to fuse E035	0E659894
15B	Stop lights/cab tilting gear	Power supply to wire 1248 changed to wire 1217	0E659894
21	Air conditioning/air-conditioning reci rculation/heater fan	Temperature switch E508 replaced by temperature sensor F754	0E659894
24	ABS - ASR-D	Relay, EBS warning, semi-trailer (G497) added	0E659894
25	DEB	Relay, EBS warning, semi-trailer (G497) added to fuse E035	0E659894
34C	ECAS-2 FT low deck + FA large volume	New	0E673432
36	24 V/12 V 10/20 A converter/radio/CB set	Supplemented by connection for combi-aerial	0E659894
37	Electric drop glass/central door locking/roof hatch, XC	Connection to fuses E033 and E034 changed to wire 1000	0E682847
44	EBS-2	Relay, EBS warning, semi-trailer (G497) added	0E659894
47	FA connectors	Relay, EBS warning, semi-trailer (G497) added	0E659894
48	FT connectors	Relay, EBS warning, semi-trailer (G497) added	0E659894
53	Car kit telephone	New	0E663173

The other section diagrams from circuit diagrams 1358030/35-37 contain no functional changes compared with circuit diagram 1358030/30-34.

https://truckmanualshub.com/

4.2 CIRCUIT DIAGRAMS 1358030/35-37

This page can be used to make your own notes on the circuit diagram.

https://truckmanualshub.com/

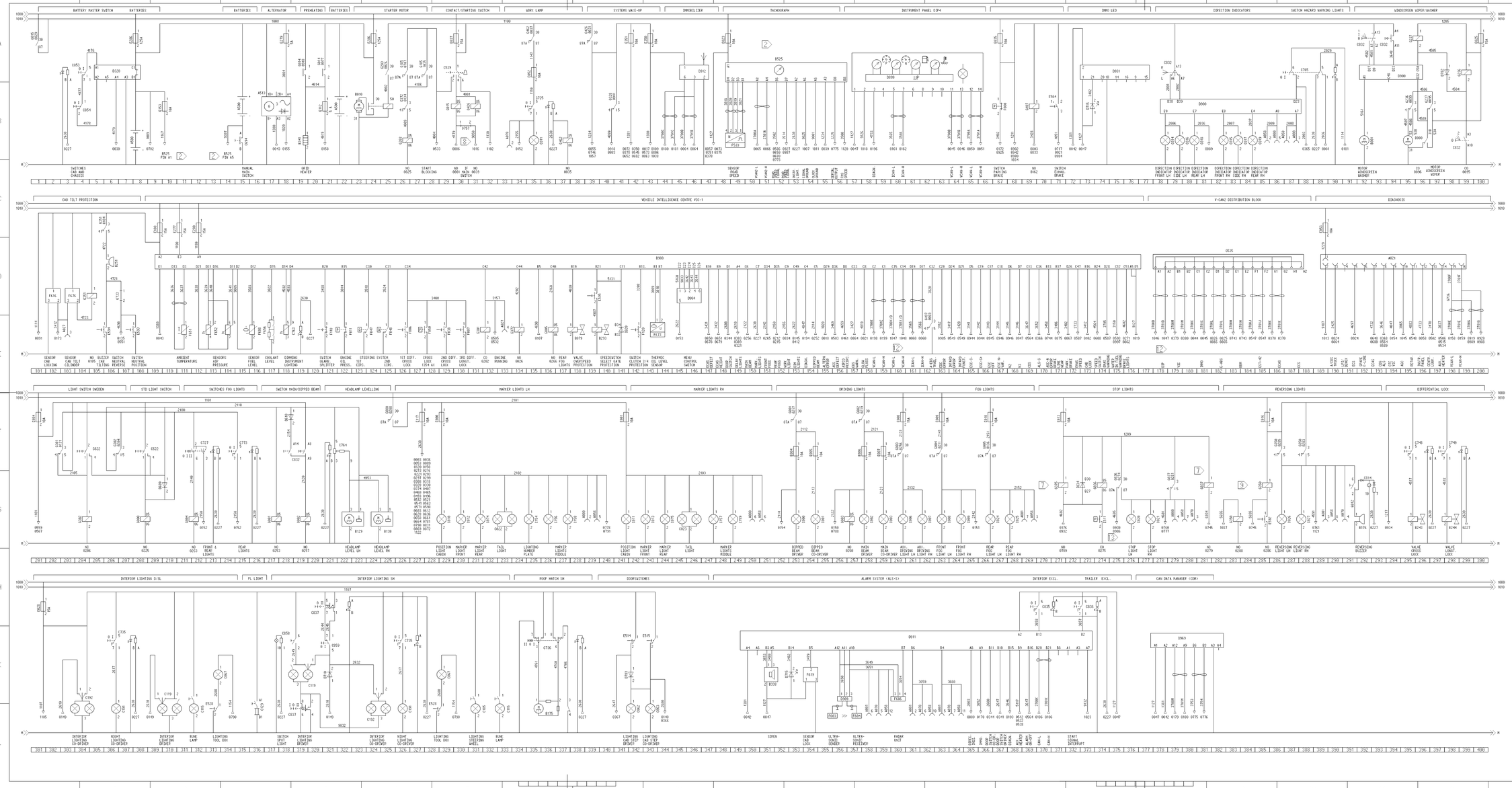

1 OPMERKING/note
STARTONDERBREKING ALLEEN VOOR BV2 EN BV3, NIET VOOR THATCHAM EX2 and BV3, not for Thatcham — Starter interrupt only for

6 OPMERKING/note
BIJ HOOFDSCHAKELAAR ADR: ADER 1167 OP PIN A1 MASSA SCHAKELAAR: 9307 OP PIN A5 — With mainswitch ADR: wire 1167 on pin A1 Manual switch: 9307 on pin A5

7 OPMERKING/note
G037 EN G375 ALLEEN TBV AGC MET RETARDER — G037 and G375 only for AGC with retarder

8 OPMERKING/note
BIJ TOEPASSING HOOFDSCHAKELAAR ADER 4179 OP 86 VAN G015 EN G426 — With mainswitch Wire 4179 to pin 86 of G015 and G426

3 OPMERKING/note
ACHTERUITRIJ VERPLICHTING: BIJ AS-TRONIC AKTIEF HOOG OVERIGE V-BAKKEN AKTIEF LAAG — Reversing lights: with as-tronic active high other gearboxes active low

2 OPMERKING/note
BIJ AS-TRONIC 3700/3701X AANGESLOTEN OP VIC C15/C14 ZONDER AS-TRONIC 3700/3701D AANGESLOTEN OP VIC C15/C14 — With AS-tronic 3700/3701X connected to VIC C15/C14 no AS-tronic 3700/3701D connected to VIC C15/C14

5 OPMERKING/note
CIRCUIT REMLICHTEN ZONDER AS-TRONIC — circuit brake lights without AS-tronic

1358030 / 35-37
1v3

DAF

https://truckmanualshub.com/

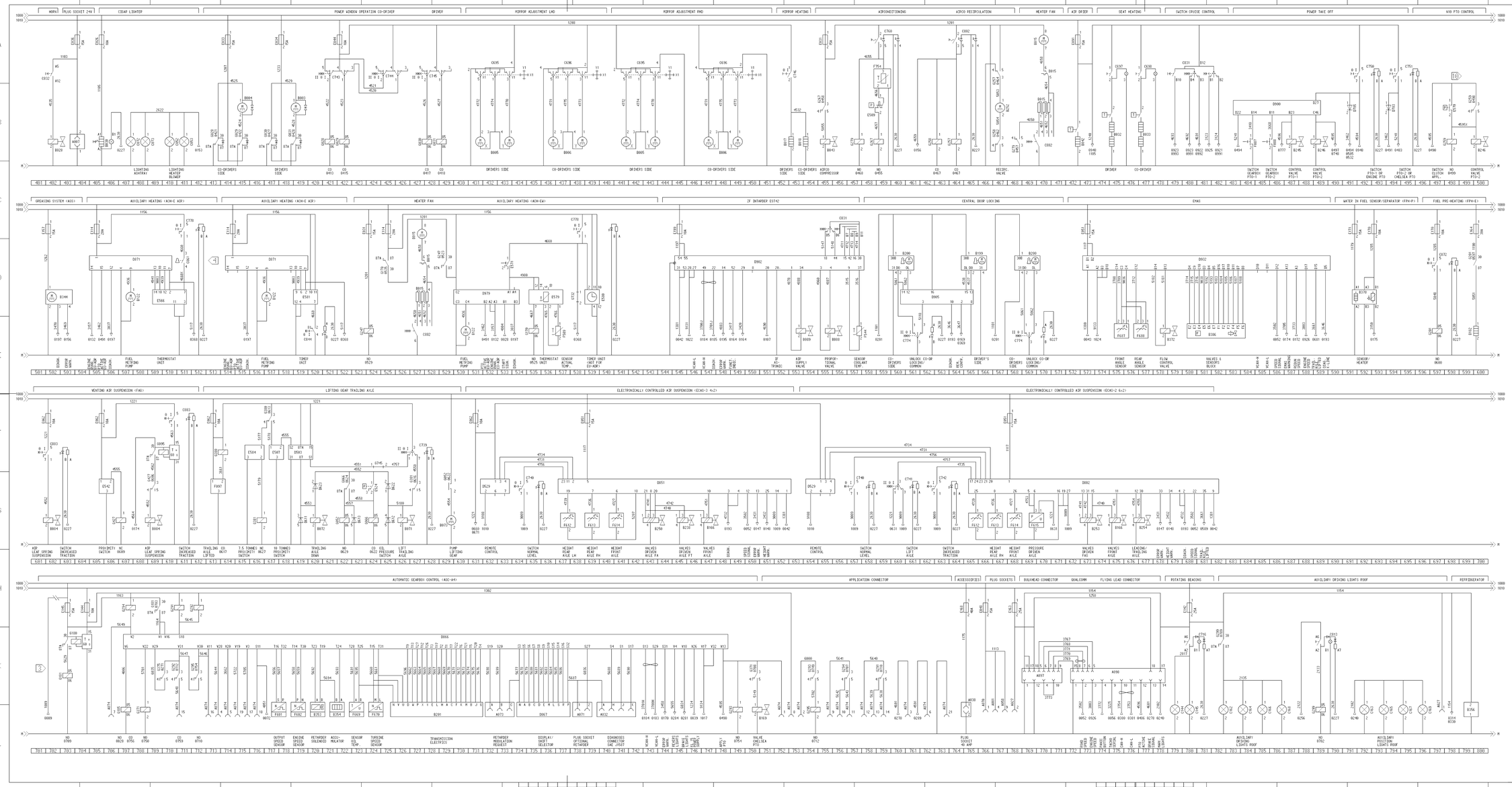

3 OPMERKING/note
BIJ TOEPASSING VAN EEN HOOFDSCHAKELAAR, VOEDING 1089 RECHTSTREEKS VAN DE ACCU. BIJ VEILIGHEIDSEISEN: KOMPONENTEN E145, G180 EN G181 IN EEN EXPLOSIEVRIJE VERDEELDOOS BIJ DE ACCU MONTEREN.

When a mainswitch is applied, power supply 1089 directly from the batteries
With safety requirements: components E145,G180 and G181 to be fitted in an explosionfree junctionbox near the batteries

4 OPMERKING/note
SLEUTEL SCHAKELAAR C861 ALLEEN BIJ PETRED UITVOERINGEN.

Key switch C861 only for petreg

10 OPMERKING/note
PTO BEVEILIGING ALLEEN VOOR HANDGESCHAKELDE BAKKEN

PTO protection only for manual gearboxes

1358030 / 35-37
2v3

DAF

https://truckmanualshub.com/

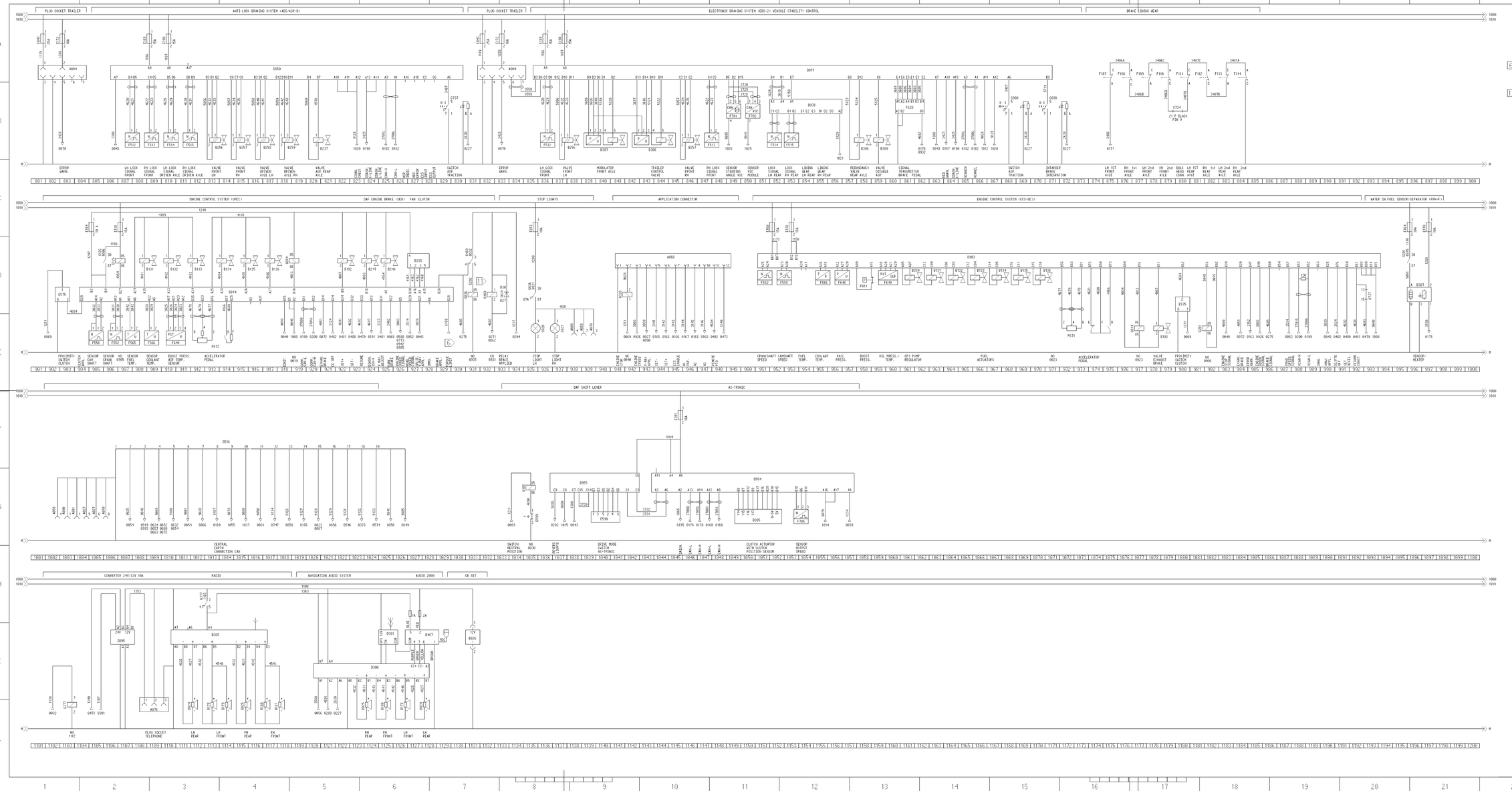

5 OPMERKING/note
WIRE 6158 IN SCHUTBORD
TBV OPBOUWER

wire 6158 in firewall
prepared for body builder

11 OPMERKING/note
CIRCUIT PERLICHTEN
MET AS-TRONIC

circuit brake lights
with AS-tronic

1358030 / 35-37
3v3

DAF

https://truckmanualshub.com/

4.3 OVERVIEW OF BASIC CODE NUMBERS IN CIRCUIT DIAGRAMS 1358030/35-37

Basic code number	Description	Number on search bar
A000	Drawn vehicle connector (7-pin)	86, 87, 238, 250, 279, 938, 1003
A001	Rear fog lamp/reversing lamp connector (7-pin)	269, 289, 358, 361, 363, 767, 1004
A004	ABS/EBS drawn vehicle connector (7-pin)	803, 834
A007	Connector, 24 V (2-pin)	403
A021	Diagnostic connector (16-pin)	194
A027	Accessories connector, 24 V (6-pin)	103, 133, 768, 797, 1004, 1005
A032	AGC diagnostic connector	740
A038	Accessories connector, 40 A (2-pin)	765
A058	Drawn vehicle connector (15-pin)	85, 87, 239, 251, 269, 280, 290, 359, 362, 364, 767, 939, 1002
A068	Application connector, engine speed control	945
A070	Application connector, superstructure (8-pin)	33, 280, 291, 359, 362, 364, 766, 939, 1006
A071	Automatic gearbox connector, intarder functions	738
A073	Automatic gearbox connector, operation	732
A074	Automatic gearbox connector, superstructure	706, 711, 713, 714, 715, 716, 752, 753, 755, 756, 757, 758, 759, 761, 762, 763
A076	Phone connector	1109
A097	FMS connector (21-pin)	770
A098	FMS connector (18-pin)	775
A500	Batteries (2x)	7, 15, 21
A513	Alternator	16
B000	Windscreen wiper motor	96
B001	Windscreen wiper pump	93
B003	Electric drop glass operation motor, driver’s side	419
B004	Electric drop glass operation motor, co-driver’s side	415
B005	Mirror adjustment motor, left	432, 442

https://truckmanualshub.com/

Changes in the electrical system from chassis number 0E659894

***CF*65/75/85** Series ≥0E621376

Basic code number	Description	Number on search bar
B006	Mirror adjustment motor, right	437, 448
B010	Starter motor	23
B015	4-speed heater fan	470, 471, 527, 528
B017	Mirror heating, driver's side	452
B018	Mirror heating, co-driver's side	453
B024	Loudspeaker, left	1112, 1128
B025	Loudspeaker, right	1115, 1124
B026	CB set	1131
B028	Horn	402
B030	Cigar lighter, driver's side	406
B032	Seat heating, driver's side	475
B033	Seat heating, co-driver's side	477
B042	Air dryer heating element	473
B043	Air conditioning compressor	455
B071	Mechanical lifting-gear lifting valve	626
B072	Mechanical lifting-gear lowering valve	620
B073	Pump, mechanical lifting gear	629
B079	Low-range downshift protection valve	138
B084	Air suspension valve, bleeding	602, 609
B088	Intarder proportional valve	556
B089	Air supply valve, intarder	554
B122	Fuel metering pump, cab heater	508, 517, 531
B129	Left-hand headlamp height adjuster motor	223
B130	Right-hand headlamp height adjuster motor	225
B131	Solenoid valve, pump unit/injector, cylinder 1	909
B132	Solenoid valve, pump unit/injector, cylinder 2	910
B133	Solenoid valve, pump unit/injector, cylinder 3	912
B134	Solenoid valve, pump unit/injector, cylinder 4	914
B135	Solenoid valve, pump unit/injector, cylinder 5	916
B136	Solenoid valve, pump unit/injector, cylinder 6	917
B166	ECAS valve , front axle	647, 675
B169	PTO control valve, Chelsea	751
B175	Roof hatch motor	336

https://truckmanualshub.com/

Basic code number	Description	Number on search bar
B176	Reversing buzzer	292
B178	Loudspeaker, left	1113, 1126
B179	Loudspeaker, left	1114, 1117
B180	Loudspeaker, right	1125
B181	Loudspeaker, right	1118
B182	Water separator fuel heating element	599
B192	Exhaust brake valve	922, 979
B199	Central door locking motor	565
B200	Central door locking motor, co-driver's side	560, 569
B201	Internal electrical components for automatic gearbox	728
B237	ASR valve	821
B238	ECAS valve, driven axle, air supply	645
B243	Cross-axle differential lock control valve	296
B244	Longitudinal controlled slip differential control valve	298
B245	PTO 1 control valve	487
B246	PTO 2 control valve	489, 500
B247	DEB solenoid valve, cyl. 1-3	924
B248	DEB solenoid valve, cyl. 4-6	925
B250	ECAS valve, driven axle, air supply	643
B251	Neutral position buzzer, tilting cab	106
B252	Recirculation valve	468
B253	ECAS valve, driven axle, air supply	673
B254	ECAS valve, steered leading rear axle/trailing axle, lifting bellows	677
B256	ABS valve, front axle, left	813, 838
B257	ABS valve, front axle, right	815, 846
B258	ABS valve, driven axle, left	817
B259	ABS valve, driven axle, right	818
B293	Gearbox gate protection valve	140
B306	Redundancy valve	858
B307	Front axle modulator	840
B308	Drawn vehicle control valve	843
B309	ASR cut-off valve	859
B335	Electronically controlled fan clutch	927

https://truckmanualshub.com/

Changes in the electrical system from chassis number 0E659894

***CF*65/75/85** Series ≥0E621376

Basic code number	Description	Number on search bar
B338	Alarm system horn	351
B341	Glow element	19
B344	Automatic lubrication pump with integrated electronic unit	503
B353	Automatic gearbox control solenoid valve, retarder	720
B354	Automatic gearbox accumulator	721
B356	Cooler box	799
B365	Radio	1113
B372	Fluid flow valve block	579
B378	Heating element for fuel filter/water separator	592
B385	AS Tronic clutch unit	1051
B386	Steering cylinder valve block	581
B387	Electronic unit, fuel heater/water separator (Fleetguard)	996
B467	Radio	1128
B525	Tachograph	52
C000	Dipped beam, left	254
C001	Dipped beam, right	255
C002	Main beam, left	258
C003	Main beam, right	260
C006	Left spotlight	261
C007	Right spotlight	262
C008	Fog lamp, front left	264
C009	Fog lamp, front right	265
C010	Marker lights, left	229
C011	Marker lights, right	242
C012	Parking light, front left	231
C013	Parking light, front right	243
C014	Direction indicator lamp, front left	79
C015	Direction indicator lamp, front right	83
C016	Direction indicator lamp, side left	80
C017	Direction indicator lamp, side right	84
C018	Direction indicator lamp, rear left	81
C019	Direction indicator lamp, rear right	85

https://truckmanualshub.com/

Basic code number	Description	Number on search bar
C020	Stop light, left	277, 936
C021	Stop light, right	278, 937
C022	Tail light, left	232
C023	Tail light, right	245
C024	Fog lamp, rear left	267
C025	Fog lamp, rear right	268
C026	Reversing light, left	287
C027	Reversing light, right	288
C052	Heater fan lighting, left	411
C053	Heater fan lighting, right	412
C062	Stepwell lighting, left	342
C063	Stepwell lighting, right	344
C067	Tool compartment lighting, left	314, 329
C071	Work lamp	36
C072	Ashtray lighting, left	408
C073	Ashtray lighting, right	409
C074	Marker lights, rear left	232
C075	Marker lights, rear right	245
C115	Bunk light with switch	312, 333
C119	Interior lighting with switch, driver’s side	310, 320
C129	Interior lighting with switch	316
C144	Rotating beam, left	780
C145	Rotating beam, right	781
C154	Rear number plate light, left	235
C156	Marker lights, left, 1st	237
C157	Marker lights, right, 1st	248
C158	Marker lights, left, 2nd	238
C159	Marker lights, right, 2nd	249
C162	Roof spotlight	783
C163	Marker lights in spotlight, roof	793
C164	Roof spotlight	784
C165	Marker lights in spotlight, roof	794
C166	Roof spotlight	786

https://truckmanualshub.com/

Changes in the electrical system from chassis number 0E659894

***CF*65/75/85** Series ≥0E621376

Basic code number	Description	Number on search bar
C167	Marker lights in spotlight, roof	795
C168	Roof spotlight	787
C169	Marker lights in spotlight, roof	797
C185	Light with switch	332
C191	Nightlight, centre	307, 327
C192	Interior lighting with switch, co-driver's side	304, 324
C539	Accessories / ignition / starter switch	29
C622	Light switch	205, 209
C694	Mechanical main switch	15
C695	Mirror adjustment switch, driver's side	433, 443
C696	Mirror adjustment switch, co-driver's side	438, 448
C697	Seat heating switch, driver's side	475
C698	Seat heating switch, co-driver's side	477
C716	Rotating beam switch	781
C725	Work lamp switch	35
C727	Fog lamp switch, front/rear	212
C735	Nightlight switch, interior	307, 326
C736	Roof hatch switch	336
C737	ASR switch	830
C739	Mechanical lifting-gear switch	627
C740	ECAS switch, normal level	635, 657
C741	ECAS switch, axle lifting	661
C742	Traction assistance switch	663
C743	Drop glass switch, co-driver's side (driver's side door)	422
C744	Drop glass switch, co-driver's side (co-driver's side door)	425
C745	Drop glass switch, driver's side (driver's side door)	428
C746	Mirror heating switch	453
C748	Cross-axle differential lock switch	296
C749	Longitudinal controlled slip differential switch	298
C750	PTO 1 switch	492
C751	PTO 2 switch	495
C760	Air conditioning switch	459

https://truckmanualshub.com/

Basic code number	Description	Number on search bar
C763	Instrument lighting dimming potentiometer	119
C764	Potentiometer for headlamp height adjustment	222
C765	Switch for warning lamps	88
C773	Fog lamp switch, rear	215
C774	Central door locking switch	561, 569
C778	Switch for Eberspächer cab heater	511, 538
C802	Recirculation valve switch	464
C813	Switch for roof spotlights	790
C814	Reversing buzzer switch	292
C831	Cruise control/engine speed control/retarder stalk switch	480, 556
C832	Direction indicator/windscreen wiper stalk switch	79, 92, 93, 98, 219, 402
C835	Switch to turn off interior detection	370
C836	Switch to turn off superstructure/drawn vehicle loadspace detection	373
C837	Interior lighting switch	318,320
C844	Eberspächer cab heater switch with timer unit	519
C853	Cab main switch	3
C854	Chassis main switch	4
C858	Interior spot lighting switch	318
C859	Interior lighting switch, driver’s side roof console	321
C861	PETREG key switch	511
C872	Switch, fuel heating relay (Fleetguard)	597
C882	Heater fan switch	470, 527
C883	FAG traction assistance switch	602, 611
C890	Third brake integration switch	871
C900	ASR switch	868
D300	Electronic unit, audio navigation system	1124
D301	GPS antenna	1125
D320	Electronic unit, integrated main switch	7
D503	Electronic unit, mechanical lifting gear	619
D529	Remote control system, ECAS	632, 654

https://truckmanualshub.com/

Changes in the electrical system from chassis number 0E659894

***CF*65/75/85** Series ≥0E621376

Basic code number	Description	Number on search bar
D609	Light switch diode	209
D610	Diode, main beam/dipped beam	218
D611	Diode for valve damping, lowering mechanical lifting gear	619
D612	Diode for valve damping, lifting mechanical lifting gear	625
D613	Diode for pump relay damping, mechanical lifting gear	623
D622	Diode for mechanical lifting gear, lifting lock	625
D623	Diode for mechanical lifting gear, lowering lock	620
D703	Diode for switching off cab heater/door switch on the driver's side	494
D705	Diode for switching off cab heater with running engine	491
D710	Interior lighting diode to prevent feedback to driver's side switch	321
D715	Alarm system LED	73, 352
D782	Diode, windscreen wipers	97
D783	Diode, cab stepwell lighting, driver's side	341
D802	Electronic unit, ECAS-2	673
D814	UPEC electronic unit	914
D850	Electronic unit, ABS/ASR, D model	817
D851	Electronic unit, ECAS-3	644
D866	Electronic unit, AGC-A4 automatic gearbox control	729
D867	Automatic gearbox selector	735
D871	Electronic unit, Airtronic cab heater	508, 517
D895	Electronic unit, converter (10 A) with power supply for radio memory	1107
D899	DIP-4 instrument panel	59
D900	VIC electronic unit	81, 94, 143, 486
D902	Electronic unit for EST 42 ZF intarder	550
D903	Electronic unit, ECS-DC3	965
D904	Menu Control Switch, MCS	146
D905	Electronic unit, CDS	562
D909	Electronic unit, alarm system, ultrasonic	356
D911	Electronic unit, ALS-S alarm system	361
D912	Electronic unit, immobiliser	46

https://truckmanualshub.com/

Basic code number	Description	Number on search bar
D931	LED unit, immobiliser	75
D932	EMAS electronic unit	581
D954	AS Tronic gearbox modulator	1050
D955	AS Tronic gear lever unit	1038
D969	CDM electronic unit	379
D977	Electronic unit, EBS-2	854
D978	Rear axle modulator	854
D979	Electronic unit, Hydronic 10 cab heater	532
E000	Fuse, tail light/parking light/marker light and search lighting, left	228
E001	Fuse, tail light/parking light/marker light and search lighting, right	241
E004	Fuse, dipped beam, driver's side	253
E005	Fuse, dipped beam, co-driver's side	254
E006	Fuse, main beam, driver's side	257
E007	Fuse, main beam/warning lamp, co-driver's side	259
E008	Fuse, spotlights	260
E009	Fuse, front fog lamps	263
E010	Fuse, rear fog lamps	266
E013	Fuse, stop lights	271, 935
E016	Fuse, reversing lights/gearbox neutral position/windscreen wiper motor/cross-axle differential lock/hydraulic fan drive	285
E023	Fuse, switch for cold start/tachograph/cab heater program clock/alarm system/diagnostic connector (16-pin)	48
E025	Fuse, windscreen wiper motor/headlamp washer/windscreen washer motor	100
E026	Fuse, cigar lighter/door switches/electronic unit, 24/12 V converter with power supply for radio memory	405
E028	Fuse, interior lighting/bunk lamps/central door lock	301
E031	Fuse, heater fan	455, 523
E033	Fuse, electric drop glass motor, co-driver's side	414
E034	Fuse, electric drop glass motor, driver's side	417

https://truckmanualshub.com/

Changes in the electrical system from chassis number 0E659894

***CF*65/75/85** Series ≥0E621376

Basic code number	Description	Number on search bar
E035	Fuse, instruments and warning lamps/parking brake switch/power supply after contact	67
E036	Fuse, 24 V connector	403
E037	Fuse, ignition switch	29
E043	Fuse, drawn vehicle ABS/EBS	801, 831
E044	Fuse, mirror heating/electric mirror adjustment/electric drop glass operation	421
E048	Fuse, drawn vehicle power supply	766
E051	Fuse, ECAS/EMAS	573, 638, 667
E052	Fuse for work lamp	35
E053	Fuse, diagnostic connector (16-pin)/LED unit/alarm system	189
E062	Fuse, ECAS/EMAS mechanical lifting gear	601, 605, 613, 631
E084	Fuse, lighting/CDS3	201
E091	Fuse, air dryer heating element/water separator/stalk switch/PTO/clutch switch/RAS-EC/engine speed control application connector	472
E108	Fuse, VIC	109
E112	Fuse, glow warning lamp	20
E114	Fuse, cab heater/warning lamps	505, 514, 525
E117	Fuse, search lighting	227
E118	Fuse, engine management power supply	906, 953
E142	Fuse, accessories before contact	780
E144	Fuse, AGC-A automatic gearbox	704
E145	Fuse, AGC-A automatic gearbox	703
E153	Fuse, main switch for timer/engine stop/main switch power supply	9
E157	Fuse, automatic lubrication	501
E160	Fuse, ECS-DC3	951
E163	Fuse, accessories after contact (connector A027)/rotating beams/roof hatch	768
E164	Fuse, FPH-E fuel heater before contact	599, 995
E168	Fuse, accessories/microwave	764

https://truckmanualshub.com/

Basic code number	Description	Number on search bar
E170	Fuse, electronic unit for fuel filter/water separator, Racor	592, 597, 997
E171	Fuse, fuel filter/water separator heating element, Racor	591
E172	Fuse, drawn vehicle ABS/EBS	802, 833
E184	Fuse, extra functions	904
E189	Fuse, rear axle EBS	808, 836
E190	Fuse, ABS-D / ABS / ASR-E / EBS, front axle	810, 837
E199	Fuse, ZF intarder	545
E277	Fuse, VIC	110
E279	Fuse, generator voltage control	18
E280	Fuse, VIC	112
E286	Main fuse	7, 24
E301	Fuse, AS Tronic	1045
E350	Fuse, various electrical systems	43
E351	Fuse, various electrical systems	41
E507	Proximity switch for axle-load protection lifting gear (10 tons)	617
E509	Air conditioning switch, high/low pressure	458
E511	Stop light switch	274
E514	Cab stepwell lighting/interior lighting door switch, driver’s side	341
E515	Cab stepwell lighting/interior lighting door switch, co-driver’s side	343
E524	Oil pressure limit switch for mechanical lifting gear	624
E528	Switch, tool compartment lighting, right	313, 328
E542	Proximity switch for axle load protection (13 tons)	605
E564	Engine brake switch	72
E566	Switch for cab heater thermostat	509
E570	Pneumatic switch, clutch PTO N10	498
E571	Operating switch, cab heater	534
E575	Proximity switch, clutch	902, 980
E579	Thermostat / cab heater, Eberspächer (water)	536
E580	Thermostat / cab heater, Eberspächer	540

https://truckmanualshub.com/

Changes in the electrical system from chassis number 0E659894

***CF*65/75/85** Series ≥0E621376

Basic code number	Description	Number on search bar
E581	Cab heater timer unit	519
E584	Proximity switch for axle-load protection lifting gear (7.5 tons)	615
E590	AS Tronic selector switch	1040
E592	Reverse gear switch	286
E593	Neutral position switch	108
E594	Neutral position/reverse gear switch	106
E595	Low-range switch	140
E599	Neutral position switch	1036
F000	Parking brake switch	68
F006	Control switch for differential lock, 1st differential	127
F007	Control switch for differential lock, 3rd differential	131
F011	Control switch for engine oil pressure	123
F038	Control switch for differential lock, 2nd differential	129
F047	Control switch for steering system (1st circuit)	124
F048	Control switch for steering system (2nd circuit)	125
F050	Control switch for differential lock pressure, 1st and 2nd differentials	128
F087	Control switch, gearbox PTO	485
F088	Control switch, gearbox PTO	486
F097	Proximity switch for trailing axle mechanical lifting gear	613
F107	Brake pad wear switch, front left	874
F108	Brake pad wear switch, front right	876
F109	Brake pad wear switch, front left, 2nd front axle	877
F110	Brake pad wear switch, front right, 2nd front axle	879
F111	Control switch for brake lining wear, rear left	880
F112	Control switch for brake lining wear, rear right	881
F113	Control switch for brake lining wear, rear left, 2nd rear axle (6x2)	882
F114	Control switch for brake lining wear, rear right, 2nd rear axle (6x2)	884
F118	Splitter control switch	121

https://truckmanualshub.com/

Basic code number	Description	Number on search bar
F120	Gearbox switch for gate 3-4	143
F509	Cab temperature sensor, cab heater	537
F512	Wheel speed sensor, front axle, left	807, 836
F513	Wheel speed sensor, front axle, right	809, 847
F514	Wheel speed sensor, driven axle, left	810
F515	Wheel speed sensor, driven axle, right	811
F533	Vehicle speed sensor	49
F544	Coolant temperature sensor, intarder	558
F552	Crankshaft sensor	906
F558	Camshaft sensor	905
F565	Fuel temperature sensor	907
F566	Coolant temperature sensor	909
F601	Output shaft speed sensor, automatic gearbox	717
F602	Input shaft speed sensor, automatic gearbox	719
F608	Fuel level sensor	116
F612	Height sensor, ECAS, rear axle, left	637, 665
F613	Height sensor, ECAS, rear axle, right	639, 666
F614	Height sensor, ECAS, front axle	640, 668
F615	ECAS pressure sensor, driven axle, right	669
F616	Cab locking sensor	102
F619	Cab locking sensor, alarm system	354
F628	Sensor/switches, foot-brake valve	861
F649	Charge boost pressure sensor and temperature sensor	910
F651	Ambient temperature sensor	112
F652	Air pressure sensor	113
F656	Coolant level sensor	117
F669	Retarder oil temperature sensor, automatic gearbox	723
F670	Automatic gearbox turbine speed sensor	724
F671	ECS-DC3 accelerator pedal sensor	972
F672	Accelerator pedal sensor	913
F673	Engine oil level sensor	143

https://truckmanualshub.com/

Basic code number	Description	Number on search bar
F676	Lifting cylinder sensor, cab	103
F686	Alarm system radar sensor	360
F687	EMAS angle sensor, front axle	575
F688	EMAS angle sensor, trailing axle	576
F701	Steering angle sensor	849
F702	VSC module	850
F705	AS Tronic speed sensor	1053
F754	Air conditioning temperature sensor	458
G000	Rear light/parking light/marker light and search lighting relay	208, 225
G001	Dipped beam relay	217, 253
G002	Main beam relay	219, 257
G003	Spotlight relay	256, 260
G004	Relay, front fog lamp	211, 263
G005	Relay, rear fog lamp	136, 266
G014	Glow plug relay	19, 20, 918, 977
G015	Contact relay	1, 29
G028	Electric drop glass operation relay, co-driver’s side	413, 421
G029	Electric drop glass operation relay, co-driver’s side	415, 422
G030	Electric drop glass operation relay, driver’s side	417, 427
G031	Electric drop glass operation relay, driver’s side	418, 428
G036	Stop light relay	274, 275, 931, 935
G037	Stop light relay for automatic gearbox	279, 281
G052	Pump relay, mechanical lifting gear	622, 629
G066	Takeover relay, mechanical lifting gear	622, 624
G095	Traction assistance relay, 60 sec. bleeding	609
G126	Engine management supply relay	905, 906
G170	Heater fan relay, cab heater	525, 535
G180	Time relay, automatic gearbox	703
G181	Takeover relay, automatic gearbox	703, 709
G185	Starting circuit interrupter relay	26, 27, 707, 1035
G201	Fuel heating relay, FPH-E	597, 599, 981, 995
G203	Starter motor takeover relay	25, 26

https://truckmanualshub.com/

Basic code number	Description	Number on search bar
G236	Windscreen wiper relay (speed 1 or 2)	95, 99
G237	Windscreen wiper relay (zero position)	95, 96
G247	Heater fan relay, cab heater	523, 529
G257	Recirculation valve relay	464, 467
G258	Recirculation valve relay	462, 467
G259	PTO operation takeover relay	498, 499
G267	Air conditioning relay	455, 458
G279	Air conditioning relay	457, 468
G291	Relay, automatic gearbox	710, 759
G292	Relay, automatic gearbox	710, 712
G293	Relay, automatic gearbox	749, 754
G294	Relay, automatic gearbox	707, 756
G295	Relay, automatic gearbox	712, 754
G299	Relay, roof spotlights	782, 789
G301	“Engine running” lighting relay	131, 202
G302	Swedish lighting relay	204, 206
G328	Engine stop relay	40, 941
G350	Reversing light relay, automatic gearbox	283, 285, 286, 288
G351	Relay, cab tilt protection	104, 105
G371	PTO relay, automatic gearbox	708, 750
G372	Starting circuit interrupter relay	26, 134
G375	Stop light relay for automatic gearbox with retarder	271, 709
G377	Relay, accessories power supply for radio	1103, 1112
G380	Relay, mechanical lifting axle upwards	613, 617
G381	Relay, mechanical lifting axle (7.5 tons)	616, 627
G426	Contact relay	31, 39
G427	Traction assistance relay, FAG	606, 609
G462	Work lamp relay	35, 37
G469	Braking signal relay	931, 932
G497	Relay, EBS warning, semi-trailer	70, 162
G516	Central cab earth, co-driver’s side	1014
G535	CAN distribution block	183

https://truckmanualshub.com/

Changes in the electrical system from chassis number 0E659894

***CF*65/75/85** Series ≥ 0E621376

Basic code number	Description	Number on search bar
G732	Through-connection for cab heater	538
G733	Through connection for intarder neutral position	107
G734	Through-connection for brake lining wear	880
G736	V-CAN connection	198
G737	Through-connection, ECS-DC3 speed control	993
G745	Through-connection, mechanical lifting gear	625
G757	Through-connection for main switch	30
I020	Diode, gearbox gate protection	141
I034	Damping diode for relay	272, 933

https://truckmanualshub.com/

4.4 SECTION DIAGRAMS FROM CIRCUIT DIAGRAMS 1358030/35-37

B	Overview of earthing points
1	Main switch
3	Tachograph
8	VIC
11	UPEC
15B	Stop lights/cab tilting gear
21	Air conditioning/air–conditioning recirculation/heater fan
24	ABS - ASR-D
25	DEB
34C	ECAS-2 FT low deck + FA large volume
36	24 V/12 V 10/20 A converter/radio/CB set
37	Electric drop glass/central door locking/roof hatch, XC
44	EBS-2
47	FA connectors
48	FT connectors
53	Car kit telephone

https://truckmanualshub.com/

B OVERVIEW OF EARTHING POINTS

This section diagram gives an overview of all the earth connections, with wire markings and connector points.

VARIANTS

Location	
9	C900 for EBS system C737 for ABS/ASR-D
11	Connector 658: superstructure connector (optional)
18	Connector 482: cab heater ACH-H Connector 582: cab heater ACH-E
59	Connector 644: only for AGC
63	Only for AS Tronic
67	Connector 869: only for AS Tronic
69	Connector 403: only for AS Tronic
71	Connector 868: only for AS Tronic
75	Earth connection to relay G036 only for AS Tronic
76	Connector 860: loop-through to ECAS

© 200520

https://truckmanualshub.com/

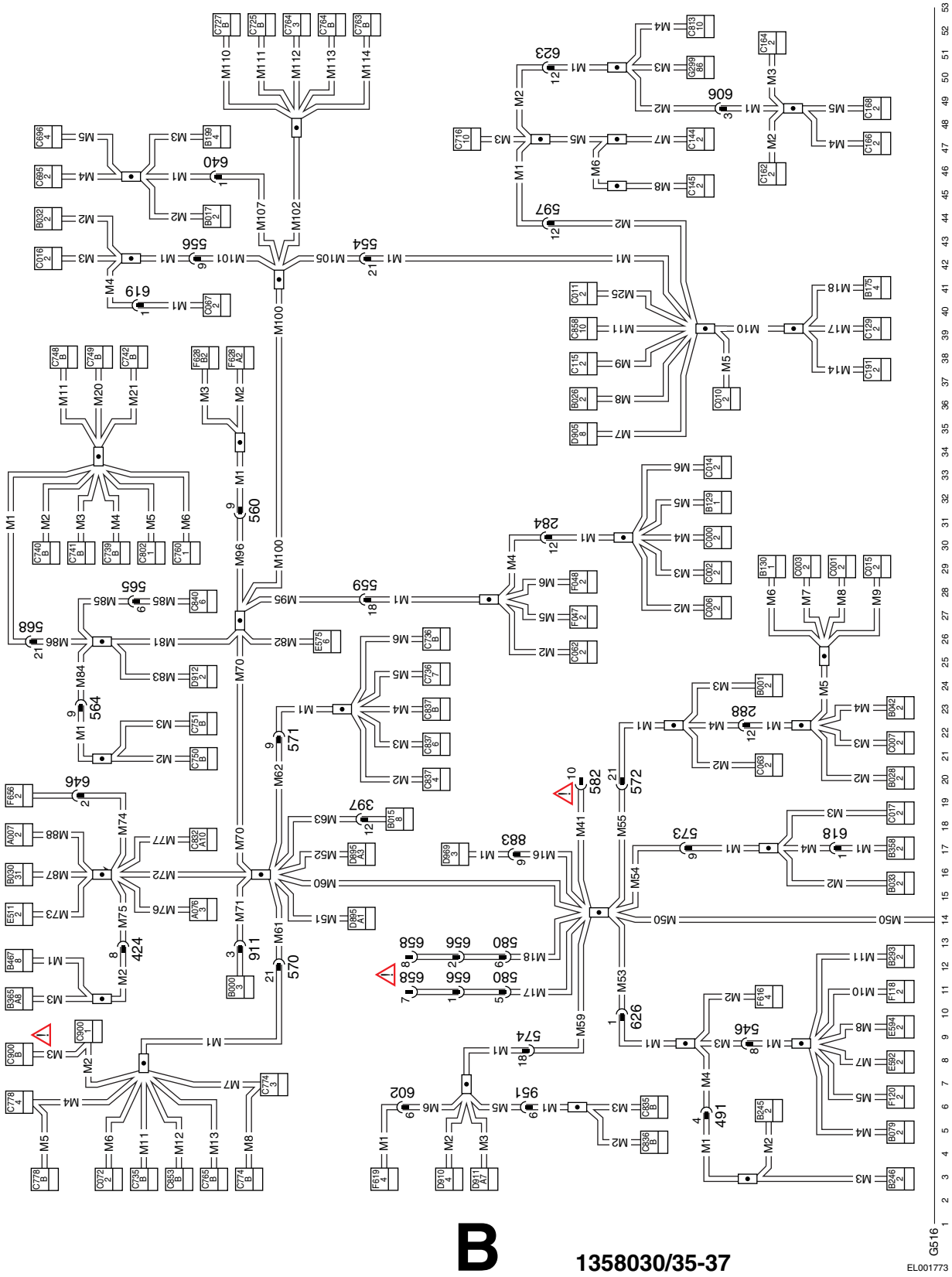

https://truckmanualshub.com/

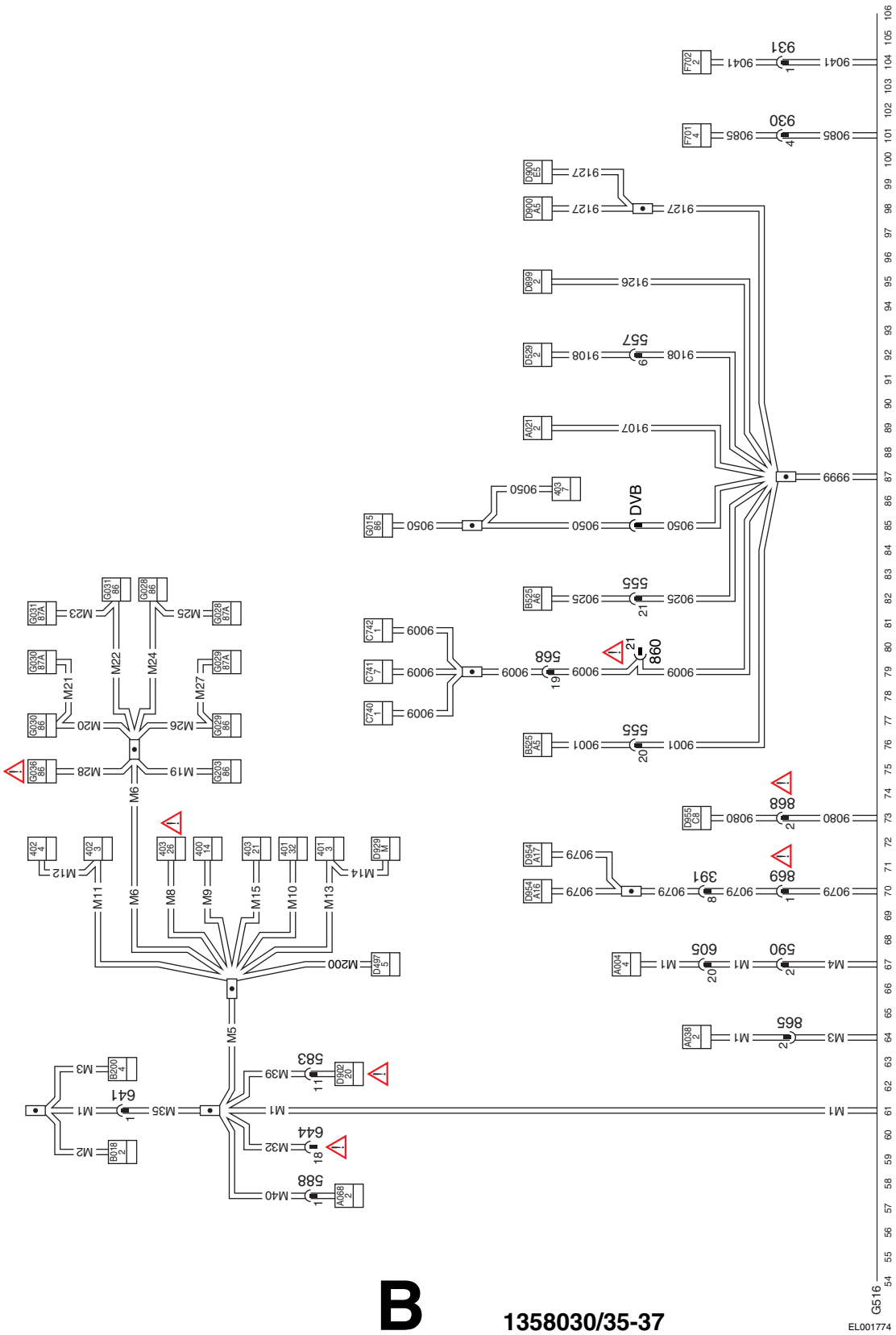

https://truckmanualshub.com/

https://truckmanualshub.com/

1 MAIN SWITCH

Operation of main switch
The electronic unit of the integrated main switch (D320) contains one mechanical bi-stable relay. The operation of this relay is comparable to the mechanics also used in a ball-pen.
When the coil is briefly energised, the relay will switch off and stay off until the coil is briefly energised again. The relay will then switch on and stay on.

Electrically closing the main switch
The main switch (D320) can be closed:
- electrically in the cab using switch C853
- electrically on the chassis using switch C854

ATTENTION: Switches C853 and C854 are connected in series. This means that both switches must be in the "on" position before the main switch is "closed" (battery connected to vehicle's power supply).

When C853 or C854 is operated, the A1 and A2 connections are connected through wire 4176, contacts 5-7 of switch C853, wire 4177, contacts 1-2 of switch C854 and wire 4178. The internal relay will immediately be briefly energised. The positive terminal of the batteries is now connected to the vehicle's power supply.

Note:
When one of the switches (C853 or C854) that activate the electronic unit (close main switch) is operated, the mechanical bi-stable relay (G367) will immediately close the contacts.

Electrically opening the main switch
The main switch (D320) can be opened:
- electrically in the cab using switch C853
- electrically on the chassis using switch C854

When C853 or C854 is operated, the A1 and A2 connections are disconnected through wire 4176, contacts 5-7 of switch C853, wire 4177, contacts 1-2 of switch C854 and wire 4178.

Note:
When one of the switches (C853 or C854) is operated while the ignition is "on", the mechanical bi-stable relay (G367) will be activated after approximately 3 seconds.

VARIANTS

Location

22	Attach wire 4176 to pin 11 of connector 570.
25	Attach wire 4177 to pin 12 of connector 570.
63	Attach wire 1127 to pin 2 of connector 555.

MECHANICAL MAIN SWITCH
When C694 (mechanical main switch) is operated, connections B and A are connected. The earth of the batteries is now connected to the chassis. The earth connection of B525 (MTCO) is independent of the position of the main switch.

https://truckmanualshub.com/

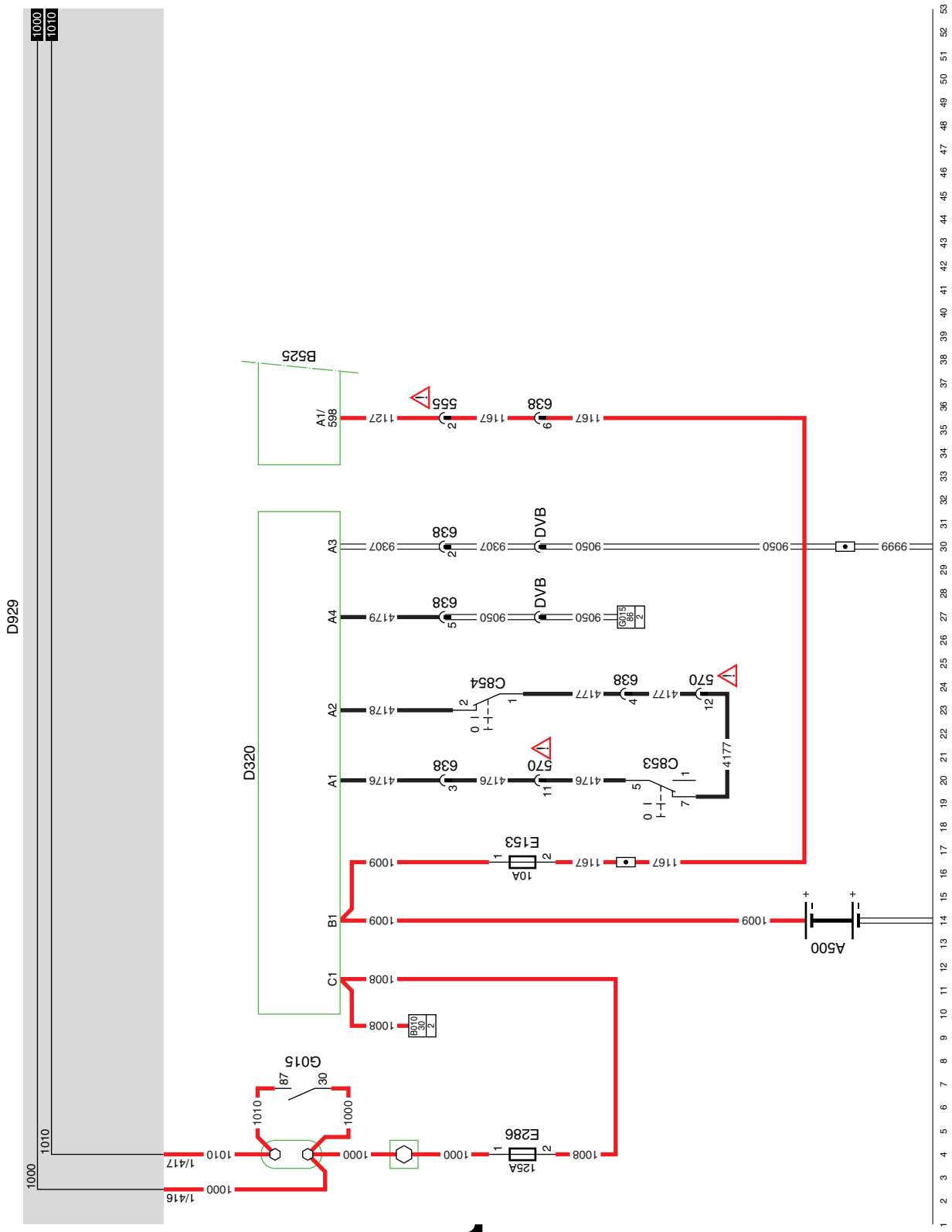

1

1358030/35-37

EL001775

https://truckmanualshub.com/

Changes in the electrical system from chassis number 0E659894

***CF*65/75/85** Serie ≥0E621376

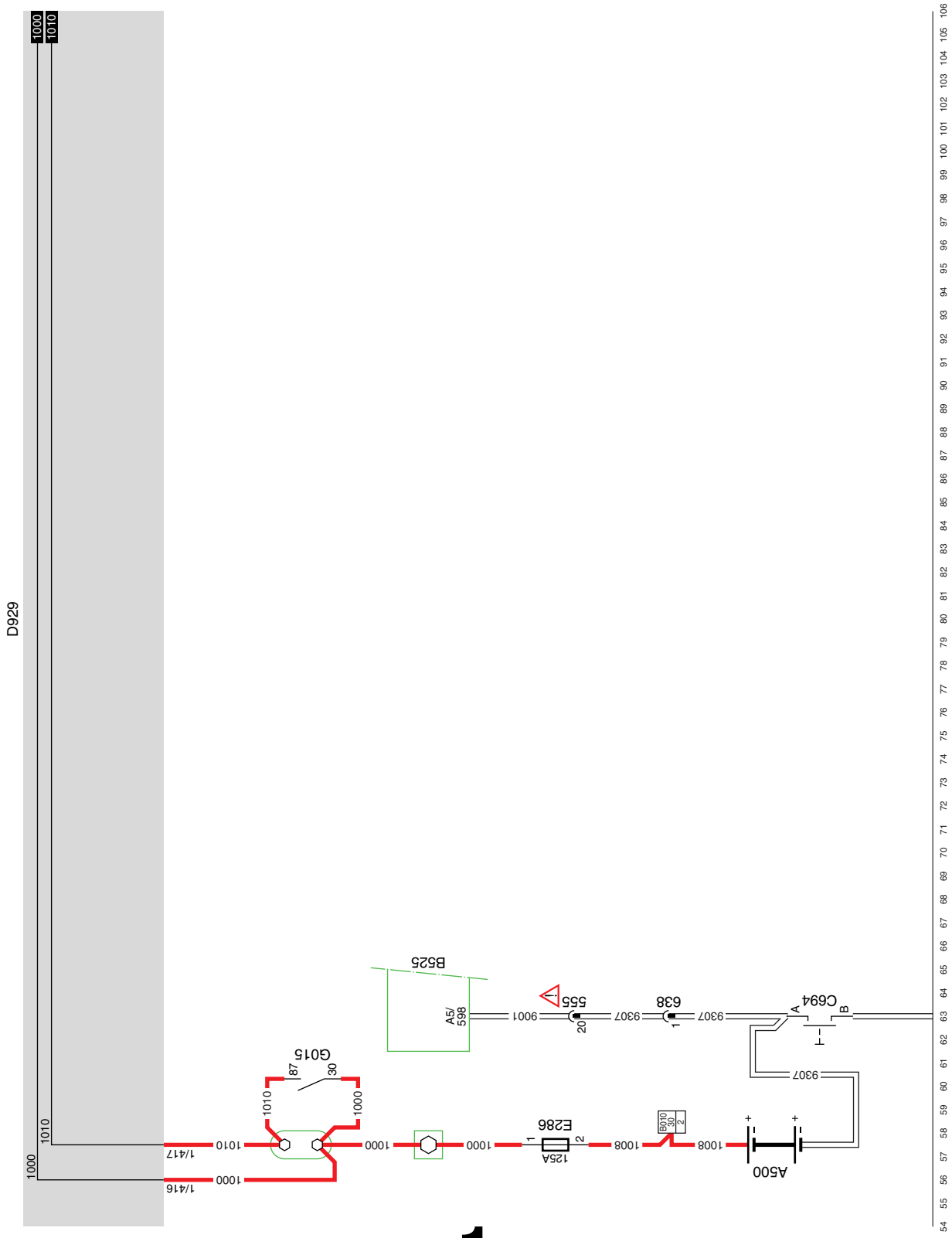

1

1358030/35-37

EL001776

11

© 200520

https://truckmanualshub.com/

https://truckmanualshub.com/

3 TACHOGRAPH

SEE THE SYSTEM MANUAL FOR MORE INFORMATION

VARIANTS

Location

26	Connector 699 for AS Tronic. Connector 626 for manual gearbox.
29	D814 for vehicles with UPEC. D903 for vehicles with ECS-DC3.
35	Wire 3500: for connection to D300 (= option)
39	Connector 861: connection to ECAS system

© 200520

https://truckmanualshub.com/

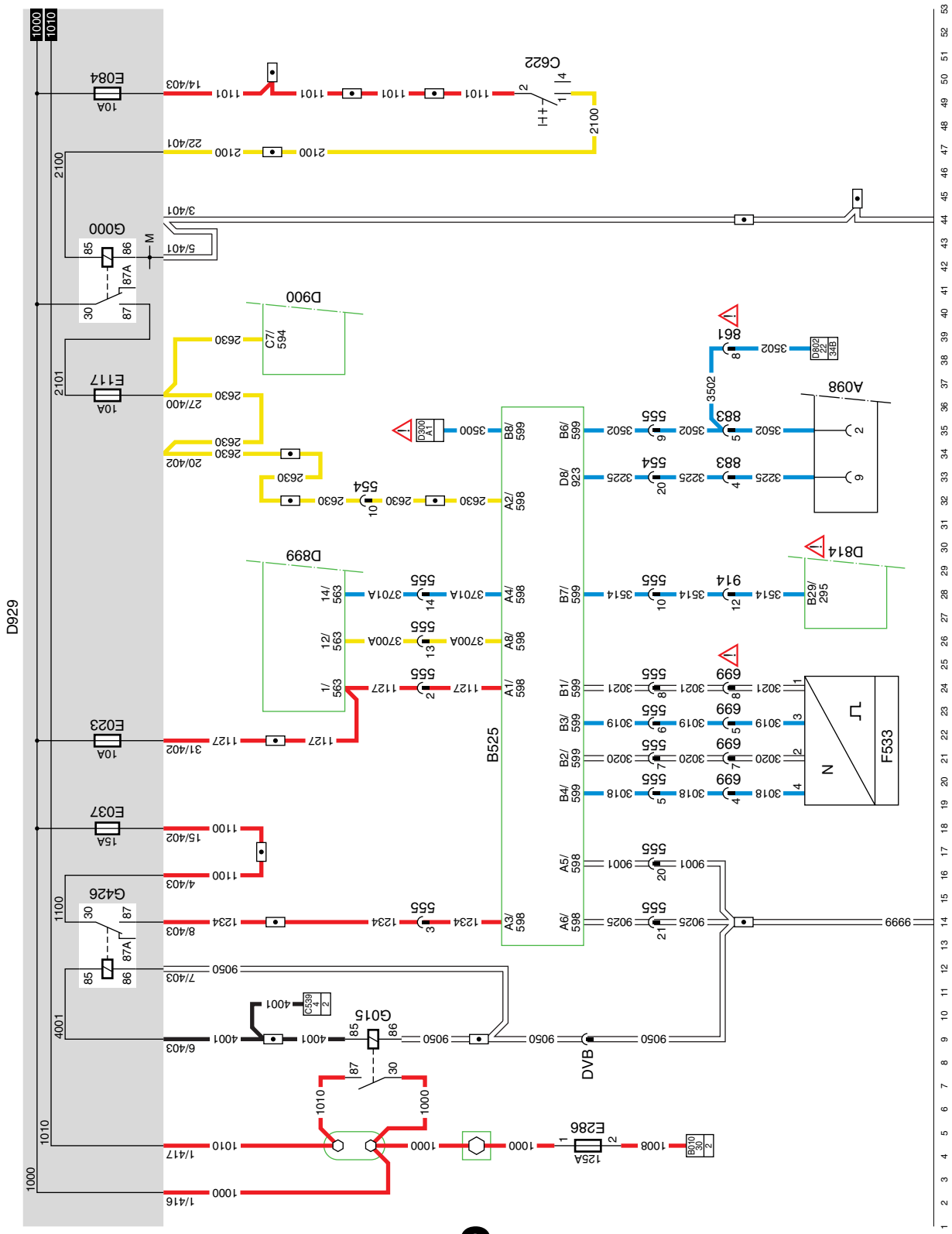

3

1358030/35-37

EL001808

11

https://truckmanualshub.com/

8 VIC

SEE THE SYSTEM MANUAL FOR MORE INFORMATION

VARIANTS

Location

146 Connector 580: is an option for bodybuilder

148 D979: cab heater ACH-EW

148 Relay G301: if vehicle is fitted with Swedish lighting.

223, 227 D954:
only for AS Tronic. If AS Tronic is **NOT** fitted, wire 3700D and wire 3701D direct from C14 and C15 without in-line connectors from D900 to G535, connection points A1 and A2.

© 200520

https://truckmanualshub.com/

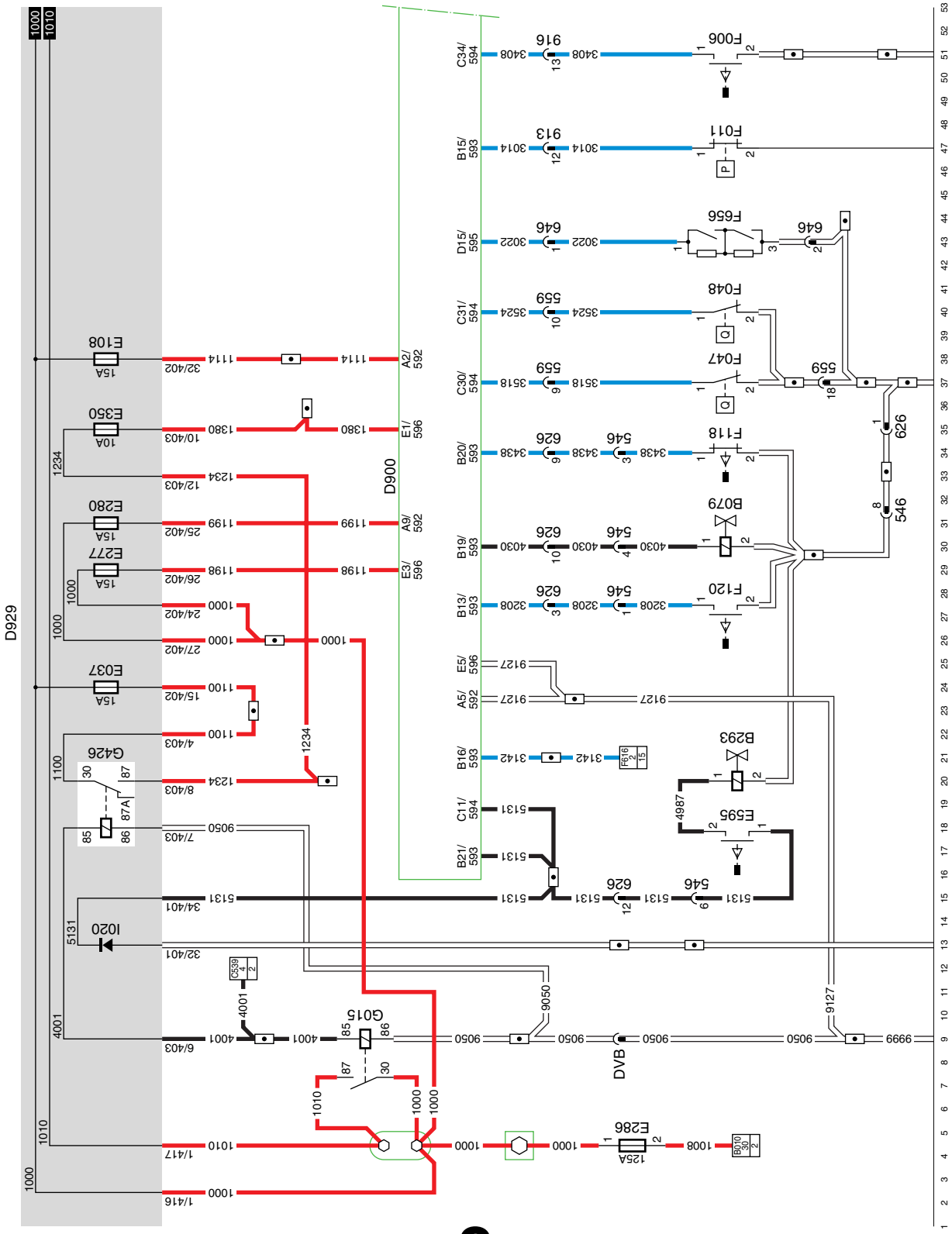

8

1358030/35-37

EL001777

https://truckmanualshub.com/

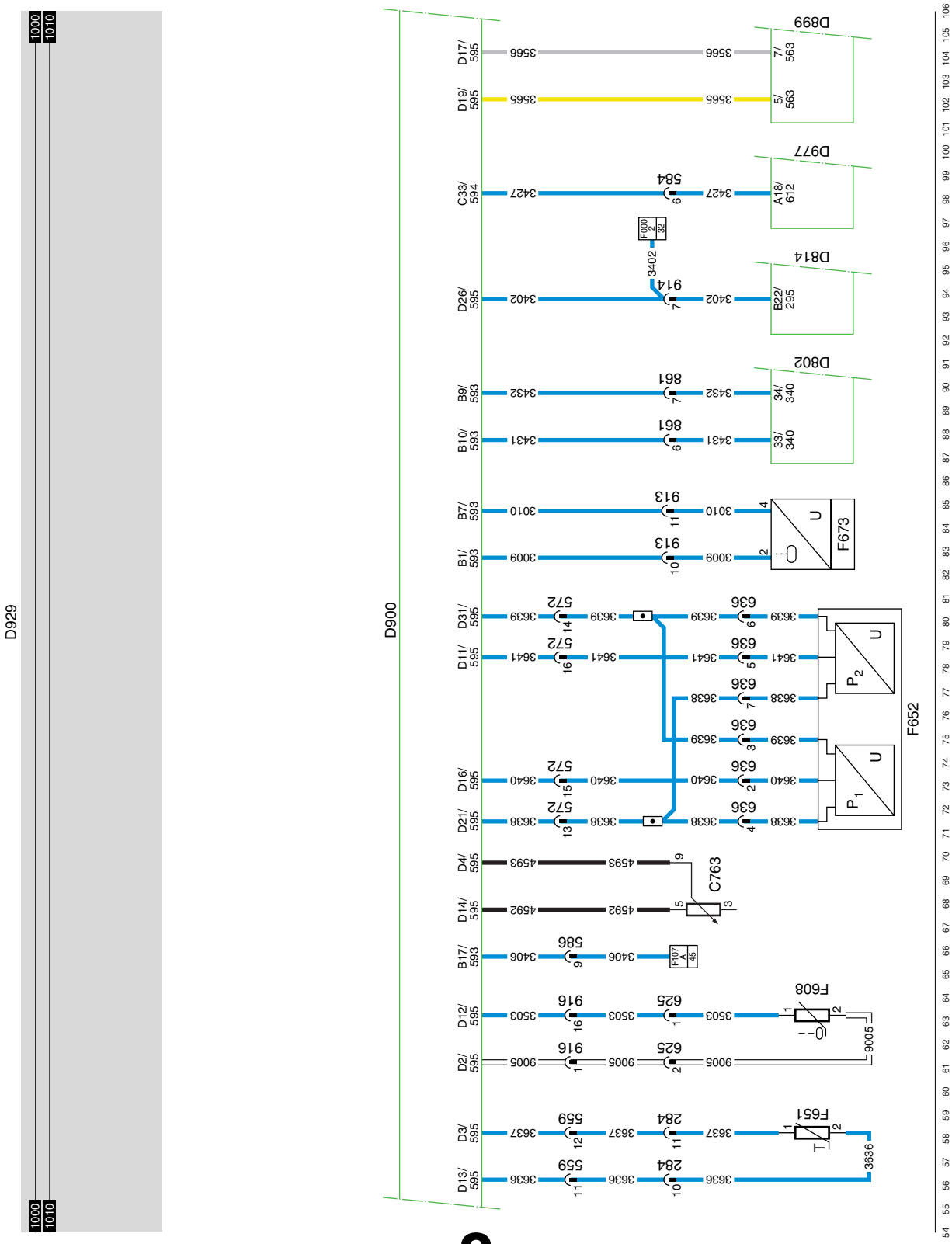

© 200520

https://truckmanualshub.com/

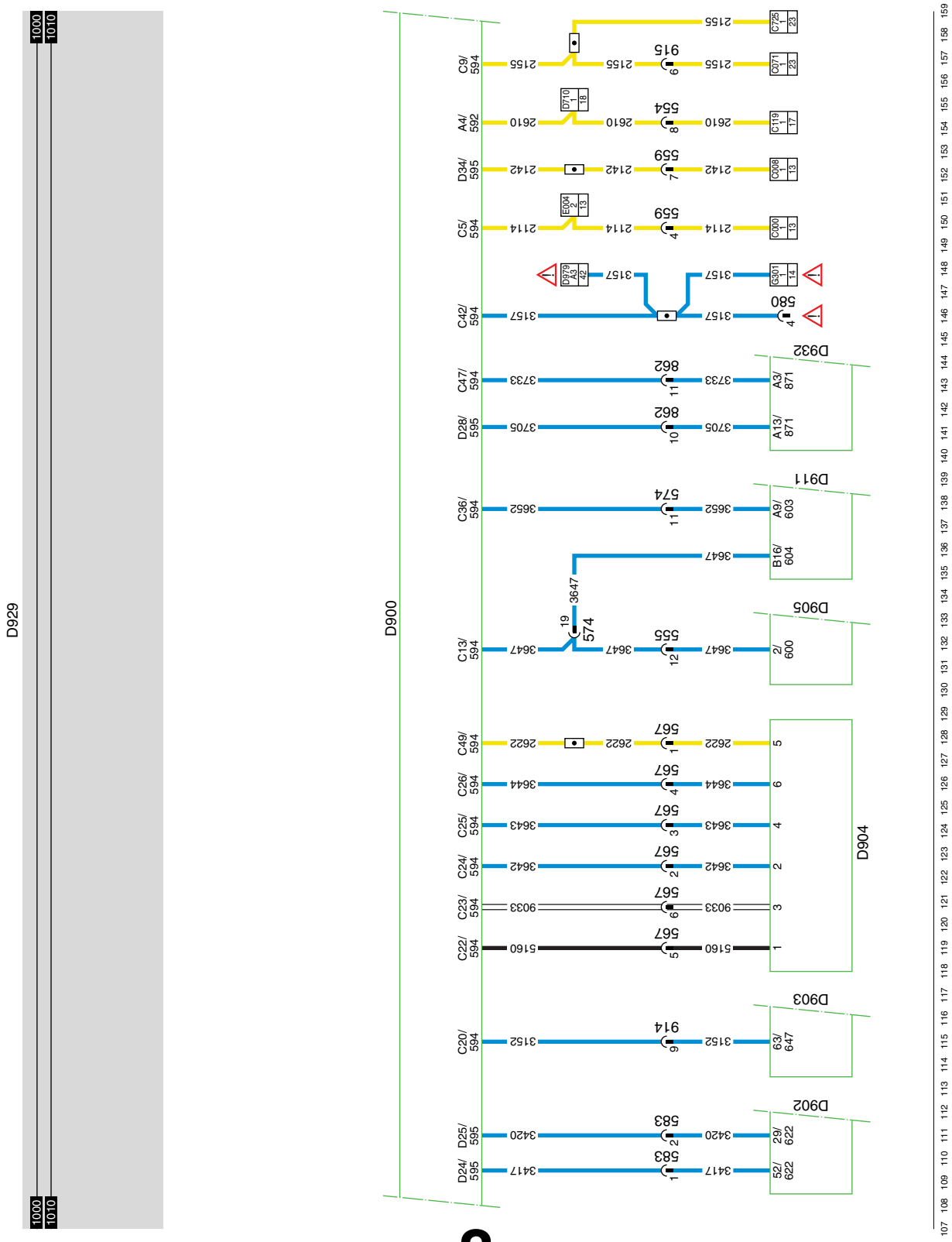

8 1358030/35-37

EL001779

11

https://truckmanualshub.com/

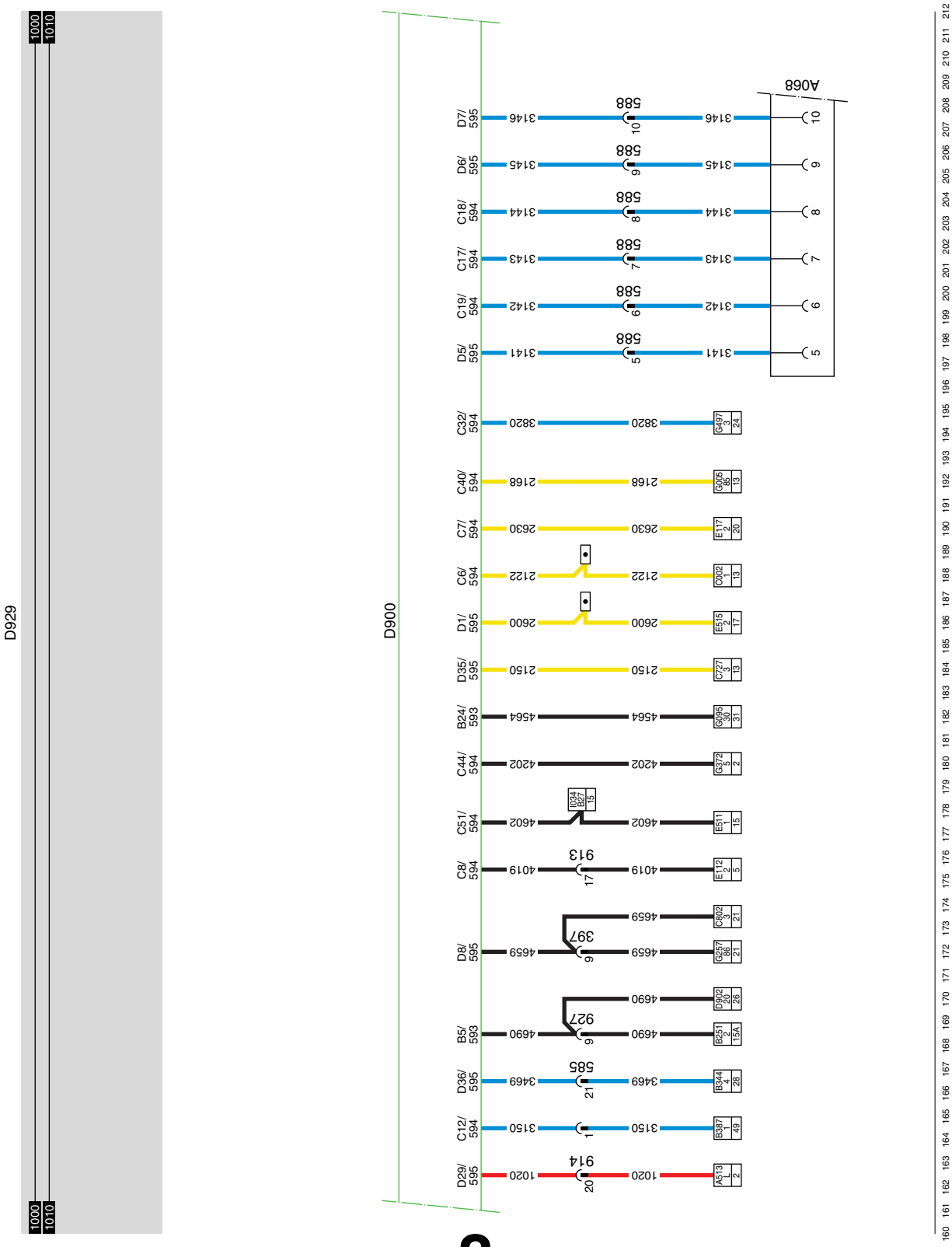

https://truckmanualshub.com/

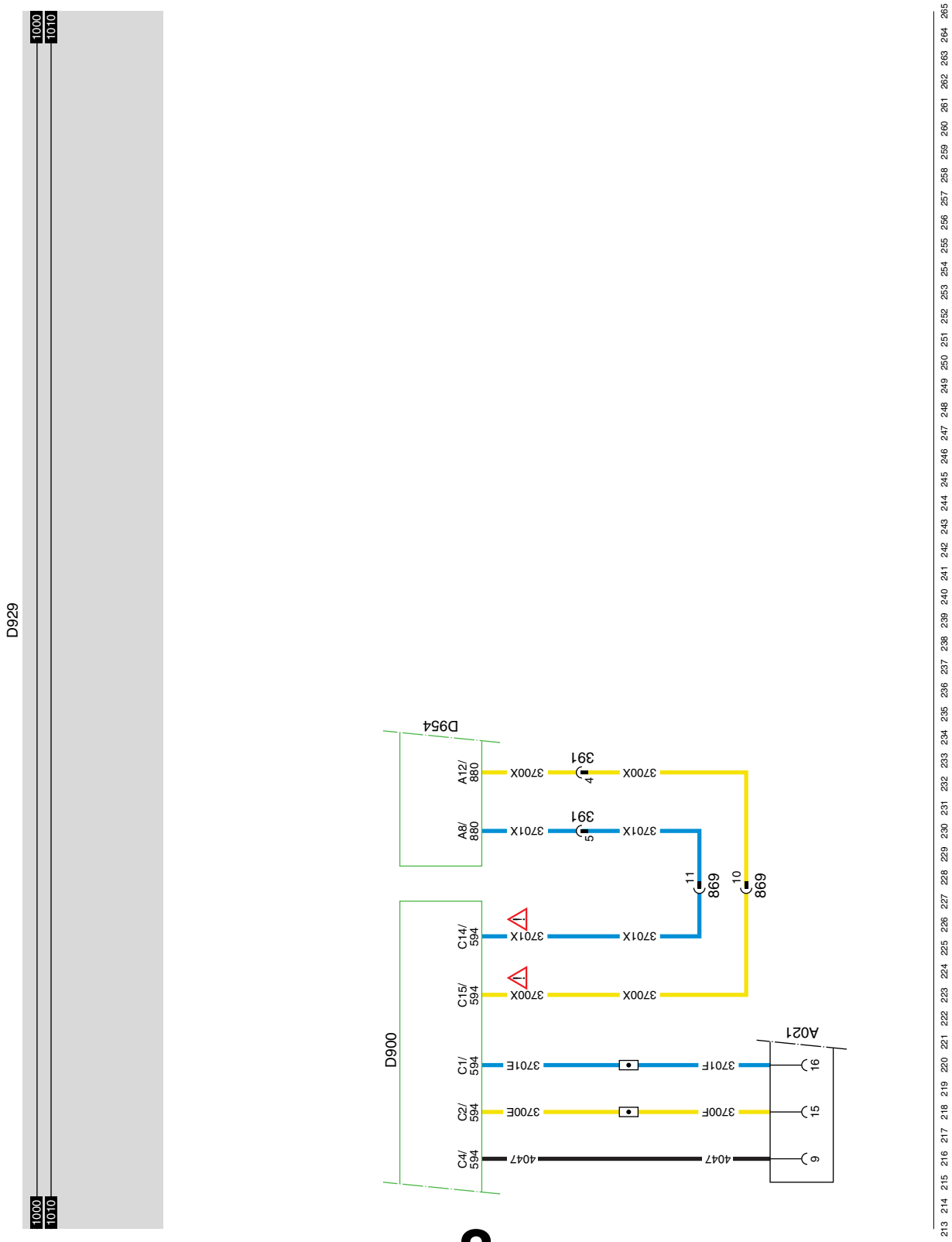

8

1358030/35-37

EL001781

11

https://truckmanualshub.com/

11

11 UPEC

SEE THE SYSTEM MANUAL FOR MORE INFORMATION

VARIANTS

Location

34	Section diagram 15A if the vehicle is fitted with a manual gearbox or an Allison gearbox. Section diagram 15B if the vehicle is fitted with AS Tronic gearbox.
91	Wire 6158 ends in lead-through connector 913, pin 3. This wire is for the bodybuilder.

© 200520

https://truckmanualshub.com/

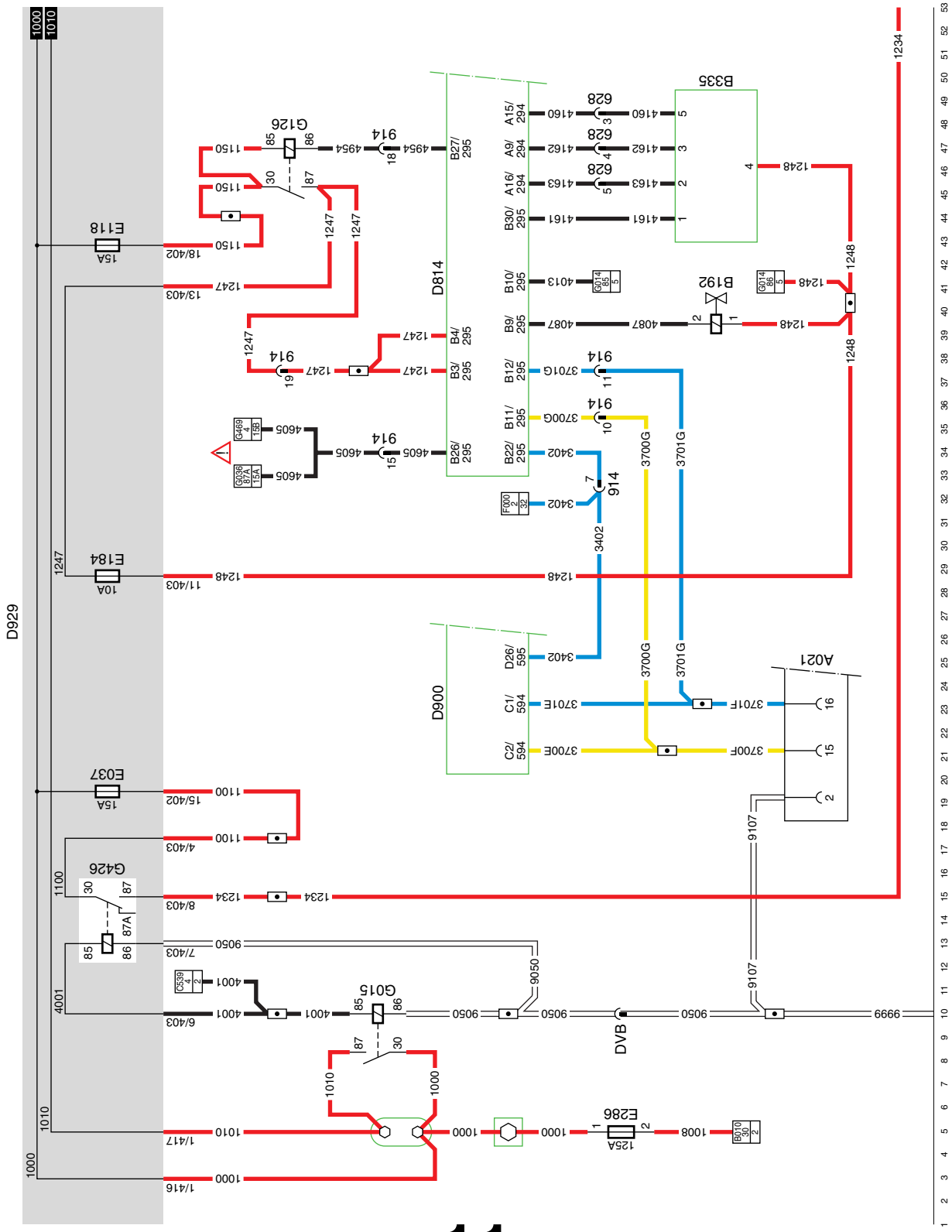

11 1358030/35-37 EL001782

https://truckmanualshub.com/

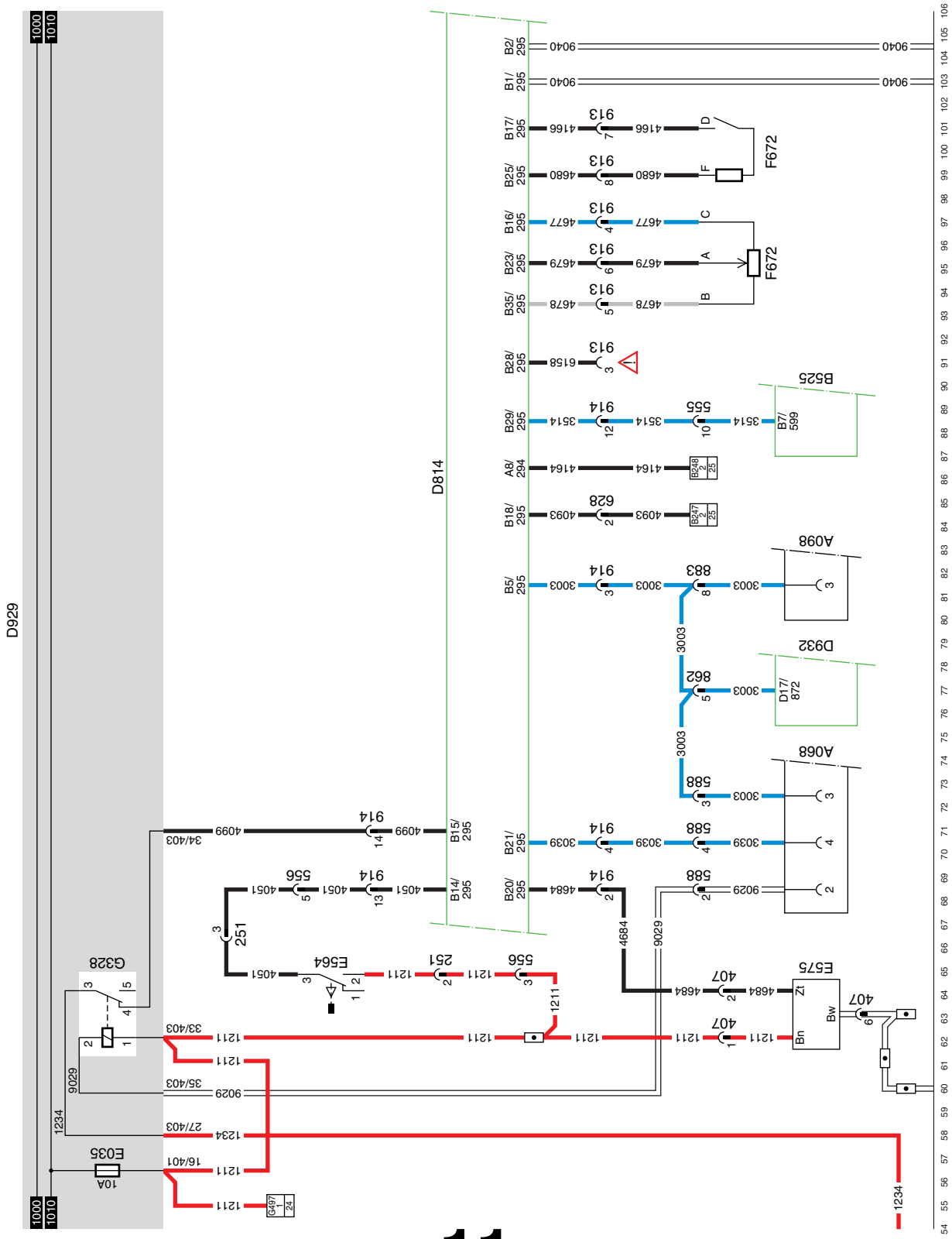

11

1358030/35-37

https://truckmanualshub.com/

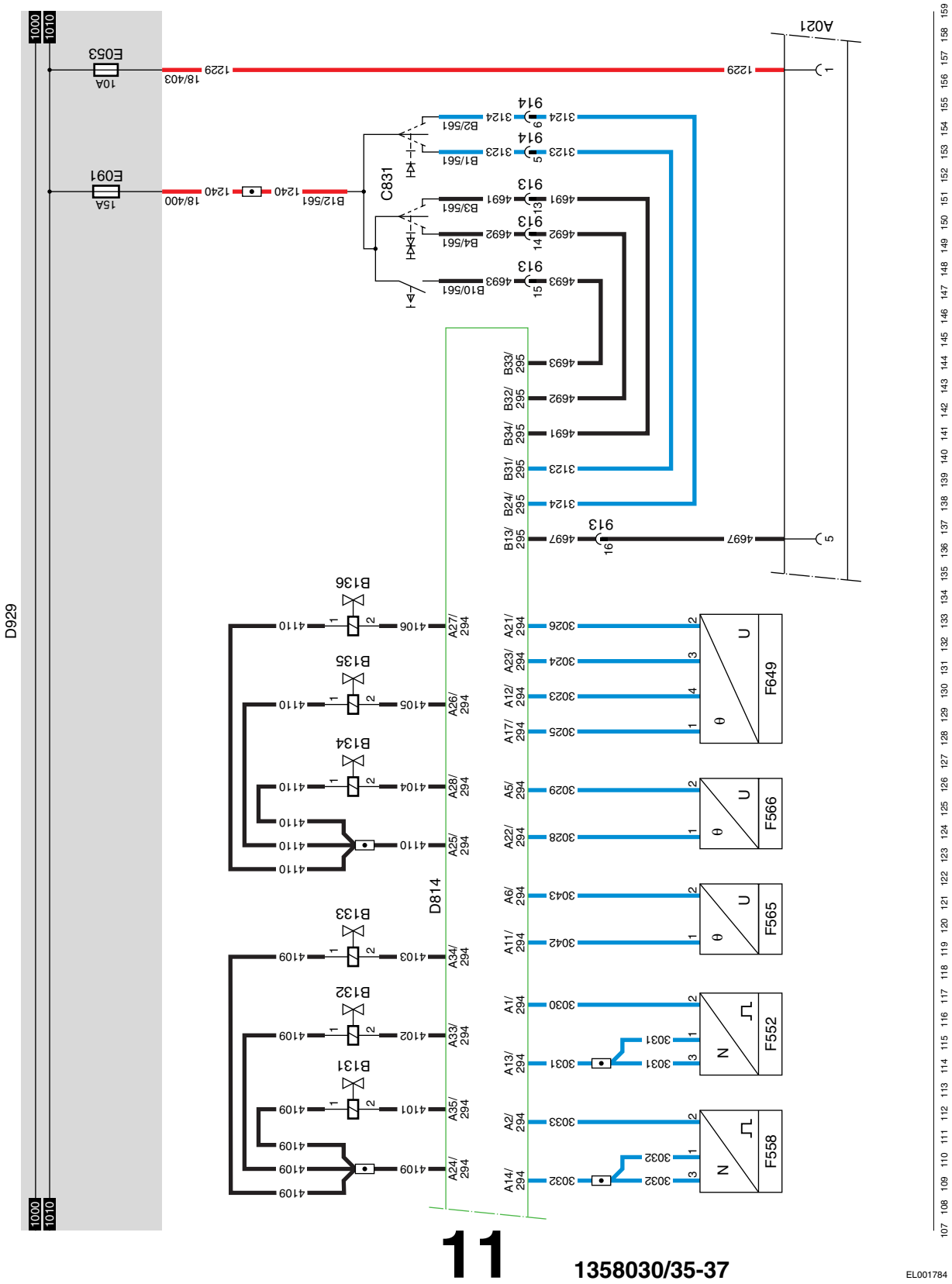

11

https://truckmanualshub.com/

15B STOP LIGHTS IN COMBINATION WITH AS TRONIC GEARBOX/CAB TILTING GEAR

STOP LIGHTS

When the brake pedal is depressed or following activation via VIC (D900), relay G469 is energised. This also energises relay G036. Voltage is now applied to connection point 1 of relay G469 through fuse E016, wire and PCB track 1217. Contacts 3-5 are closed, causing a voltage to be applied to the coil of relay G036 via wire 1217 and PCB track 5292. The relay is activated. A voltage is now applied to the left stop light (C020) and the right stop light (C021) through fuse E013, PCB track 1209, contacts 30-87 of relay G036 and wire 4601. A voltage is also applied to connection point 4 of the drawn vehicle socket (A000), to connection point 13 of the FMS connector (A098) and connection point 3 of the superstructure application connector (A070). The stop lights will now light up.

CAB TILTING GEAR

A voltage is applied to connection point 1 of the cab locking sensor (F616) through fuse E018 and wire 1114. A voltage is also applied to connection point 1 of F676 and connections 1 and 3 of relay G351 (cab tilt protection relay).
When sensor F676 is activated, wire 4723 in sensor F616 is connected to earth. Relay G351 will be energised, causing voltage to be applied to connection point 1 of B251 (buzzer neutral position) through contacts 3 - 5 of relay G351, wire 4722.
B251 will now be activated via the VIC. A message is also sent to the DIP, which then activates the “cab tilted” warning lamp.

VARIANTS

Location

45	E511 not fitted for EBS.
69, 75	Connector 873: on vehicle type FA
77	A000: 7-pin model A058: 15-pin model
79, 82	Only for vehicle fitted with buffer beam.
61	On an FT model, C020 and C021 are connected here.

https://truckmanualshub.com/

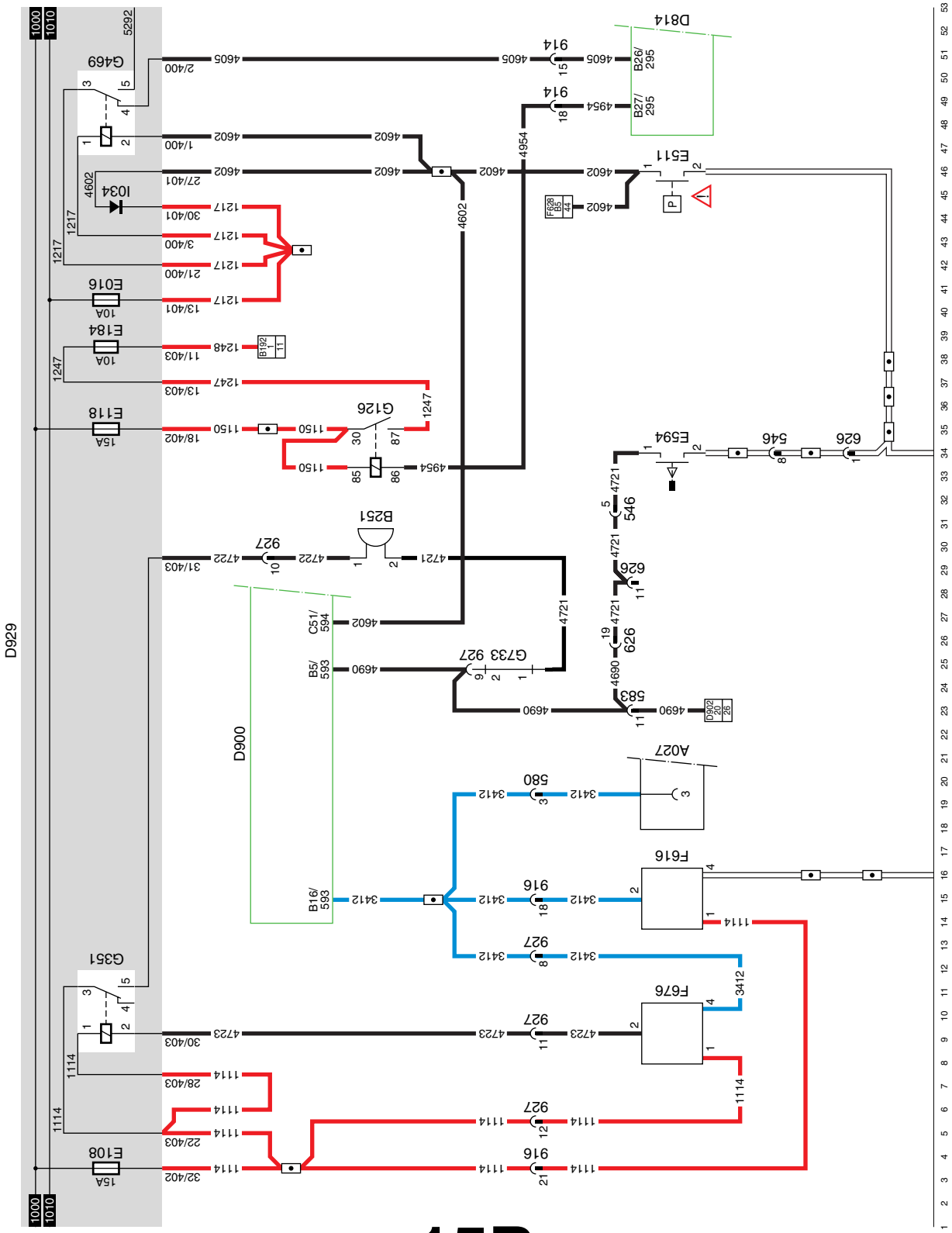

15B 1358030/35-37

EL001785

https://truckmanualshub.com/

Changes in the electrical system from chassis number 0E659894

***CF*65/75/85** Serie ≥0E621376

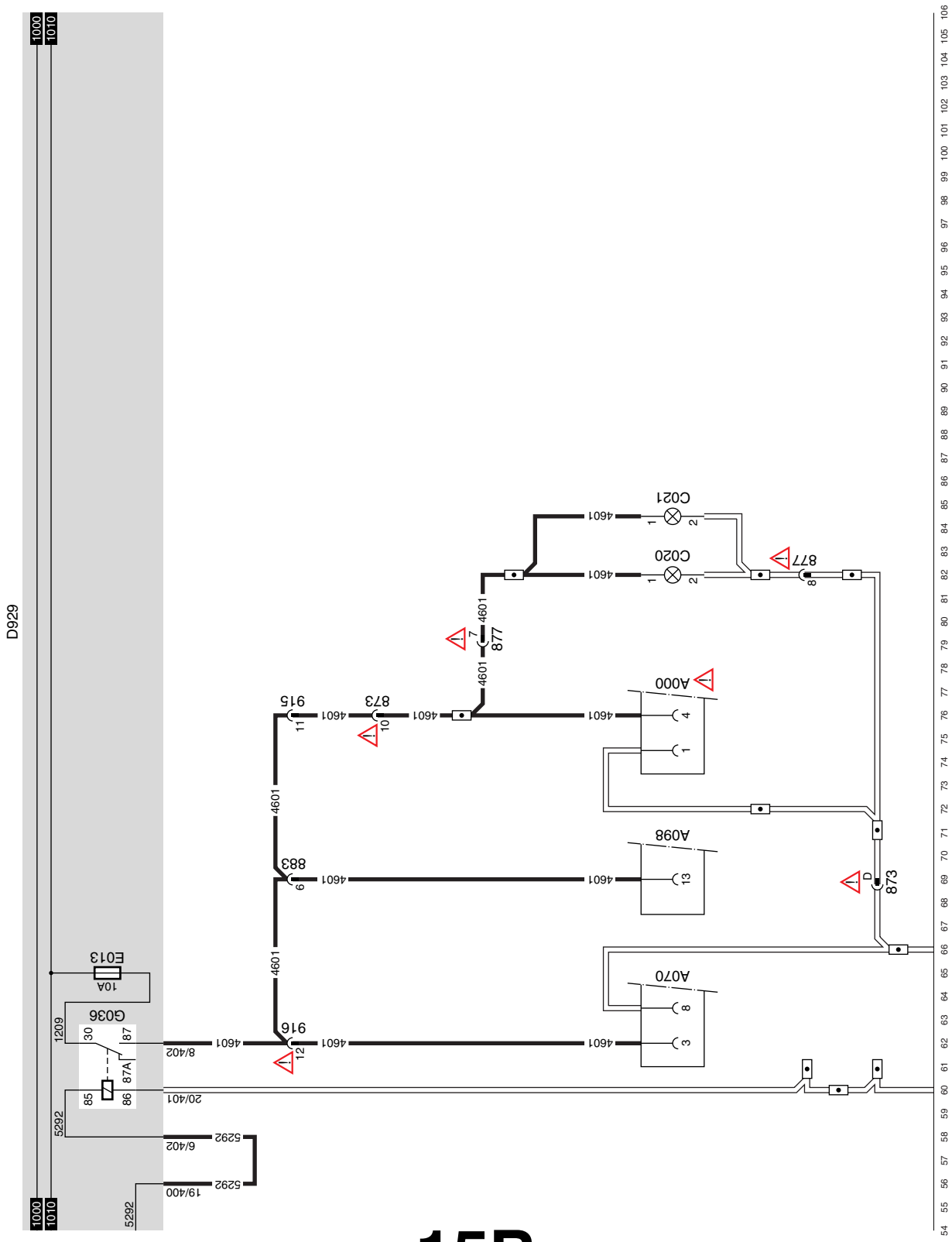

15B 1358030/35-37

EL001786

https://truckmanualshub.com/

https://truckmanualshub.com/

21 AIR CONDITIONING/RECIRCULATION VALVE/HEATER FAN

AIR CONDITIONING

SEE THE SYSTEM MANUAL FOR MORE INFORMATION

RECIRCULATION VALVE

When C802 is operated (connection between contacts 2 and 3), a voltage is applied to connection points 1 of G257 and G258 through fuse E031, wire 1201, contacts 2-3 of C802, wire 4659. These relays are energised and, as a result, a connection is made between contacts 3 and 5. This causes a voltage to be applied to connection point 1 of B252 through E031, wire 1201, contacts 5-3 of relay G257 and wire 5053. The other connection point 2 is connected to earth through wire 5054, contacts 3-5 of relay G258. The recirculation valve, driven by B252, will now close.
The VIC (D900) also receives a voltage signal on connection point 8. The VIC activates the “recirculation” warning indicator on the instrument panel via the I-CAN.

HEATER FAN

A voltage is applied to connection point 8 of B015 (4-speed heater fan) through fuse E031 (heater fan) and wire 1201.
Depending on the position of C882 (heater fan switch), the fan will start operating.

The knob has five positions:

Off: (position 0): Heater fan (B015) off.

Position 1: (Connection between contacts 2 and 6.) The fan runs at the lowest speed. Voltage is applied to connection point 8 of B015 through fuse E031 and wire 1201. The earth is formed through connection point 7 of B015, wire 4658, contacts 6-5 of thermal switch B015, wire 4654, through three resistors (B015), wire 4650 and contacts 2-6 of C882.

Position 2: (Connection between contacts 4 and 6). The fan runs slightly faster. Voltage is applied to connection point 8 of B015 through fuse E031 and wire 1201. The earth is formed through connection point 7 of B015, wire 4658, contacts 6-5 of thermal switch B015, wire 4654, through two resistors (B015), wire 4651 and contacts 4-6 of C882.

Position 3: (Connection between contacts 3 and 6.) The fan runs at the highest speed but one. Voltage is applied to connection point 8 of B015 through fuse E031 and wire 1201. The earth is formed through connection point 7 of B015, wire 4658, contacts 6-5 of thermal switch B015, wire 4654, through one resistor (B015), wire 4652 and contacts 3-6 of C882.

Position 4: (Connection between contacts 1 and 6.) The fan runs at the highest speed. Voltage is applied to connection point 8 of B015 through fuse E031 and wire 1201. The earth is formed through connection point 7 of B015, wire 4658, contacts 6-5 of the thermal switch (B015).

© 200520

https://truckmanualshub.com/

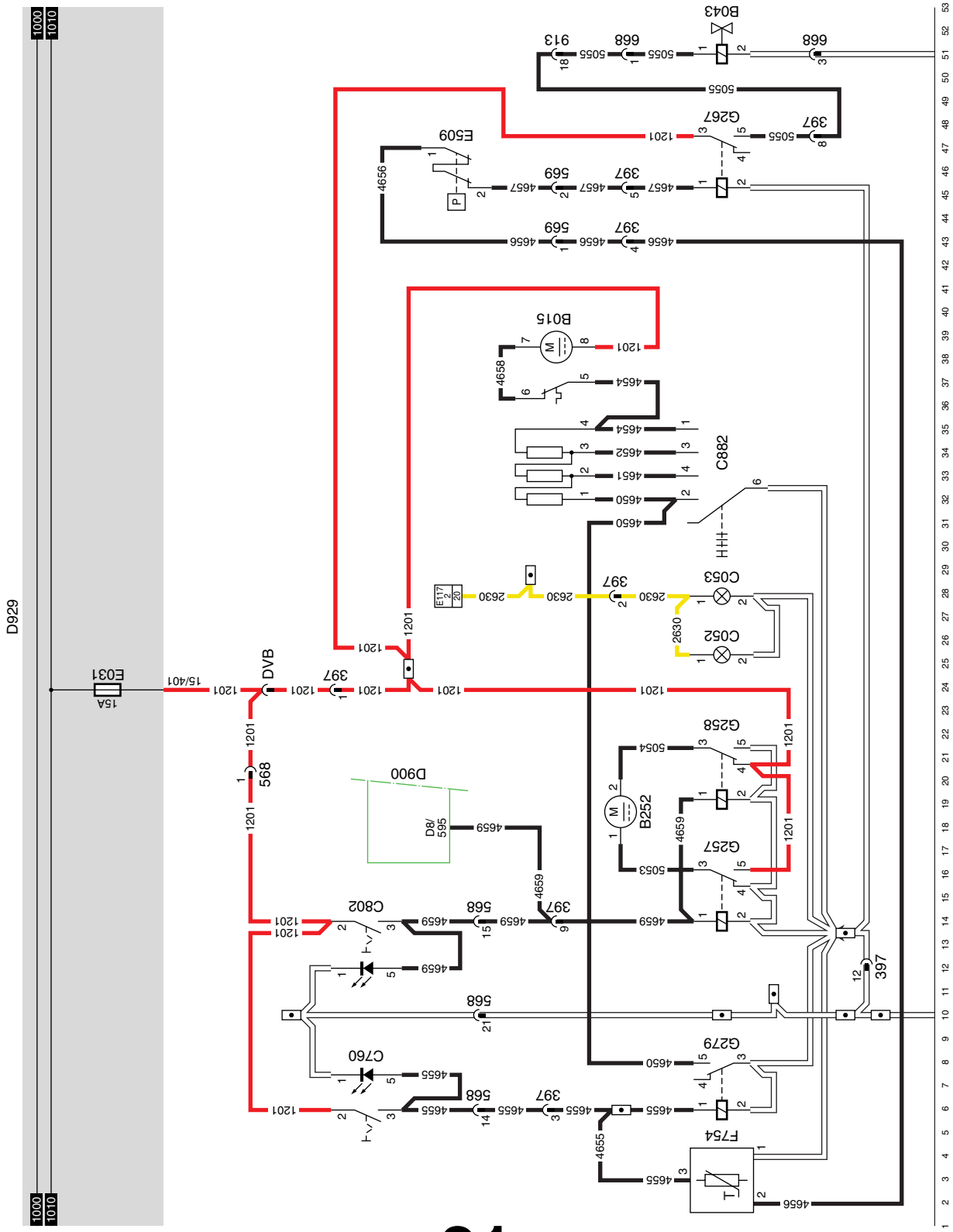

21

1358030/35-37

EL001787

11

https://truckmanualshub.com/

24 ABS - ASR-D

SEE THE SYSTEM MANUAL FOR MORE INFORMATION

VARIANTS

Location	
21 -> 26	Connector 873: only on vehicle type FA

https://truckmanualshub.com/

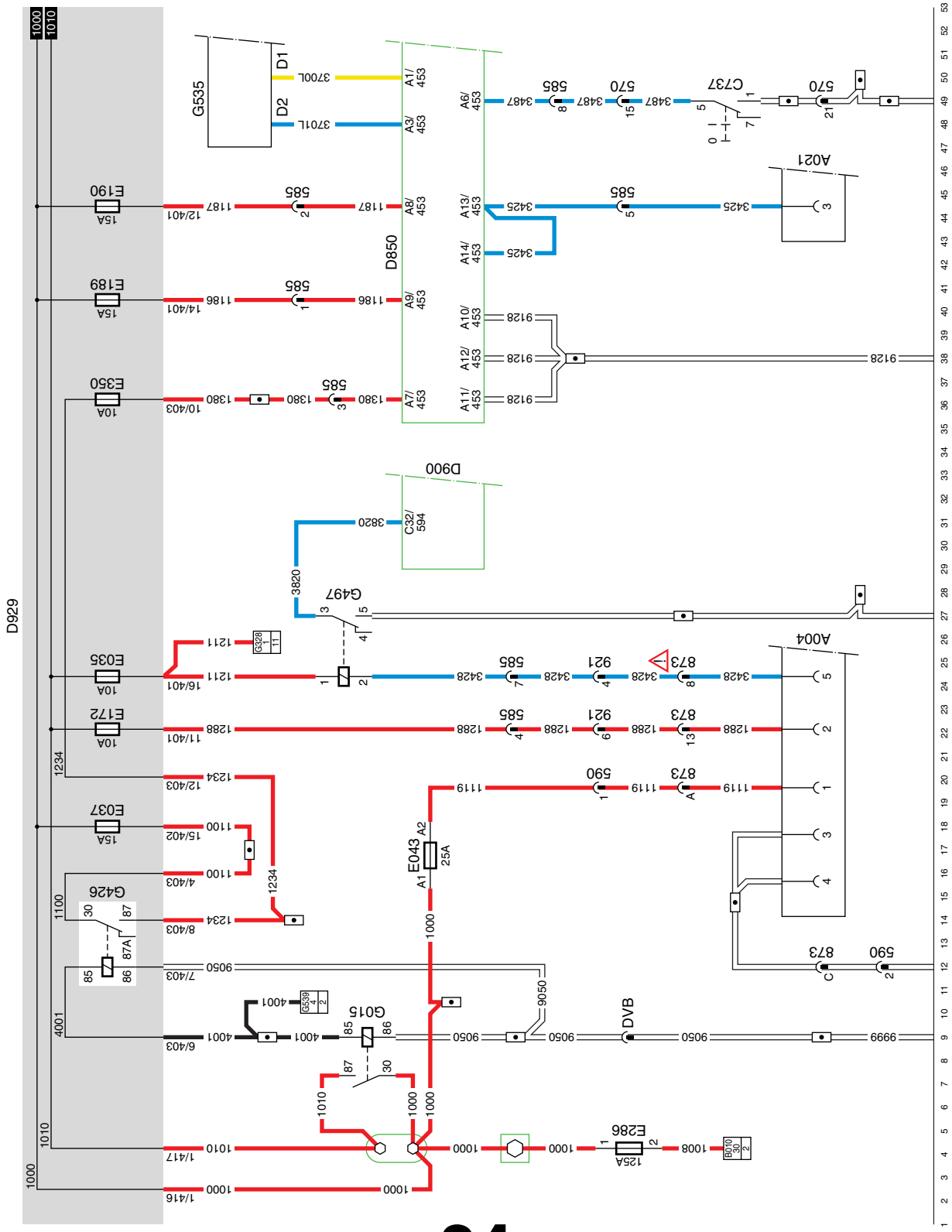

24

1358030/35-37

EL001788

11

https://truckmanualshub.com/

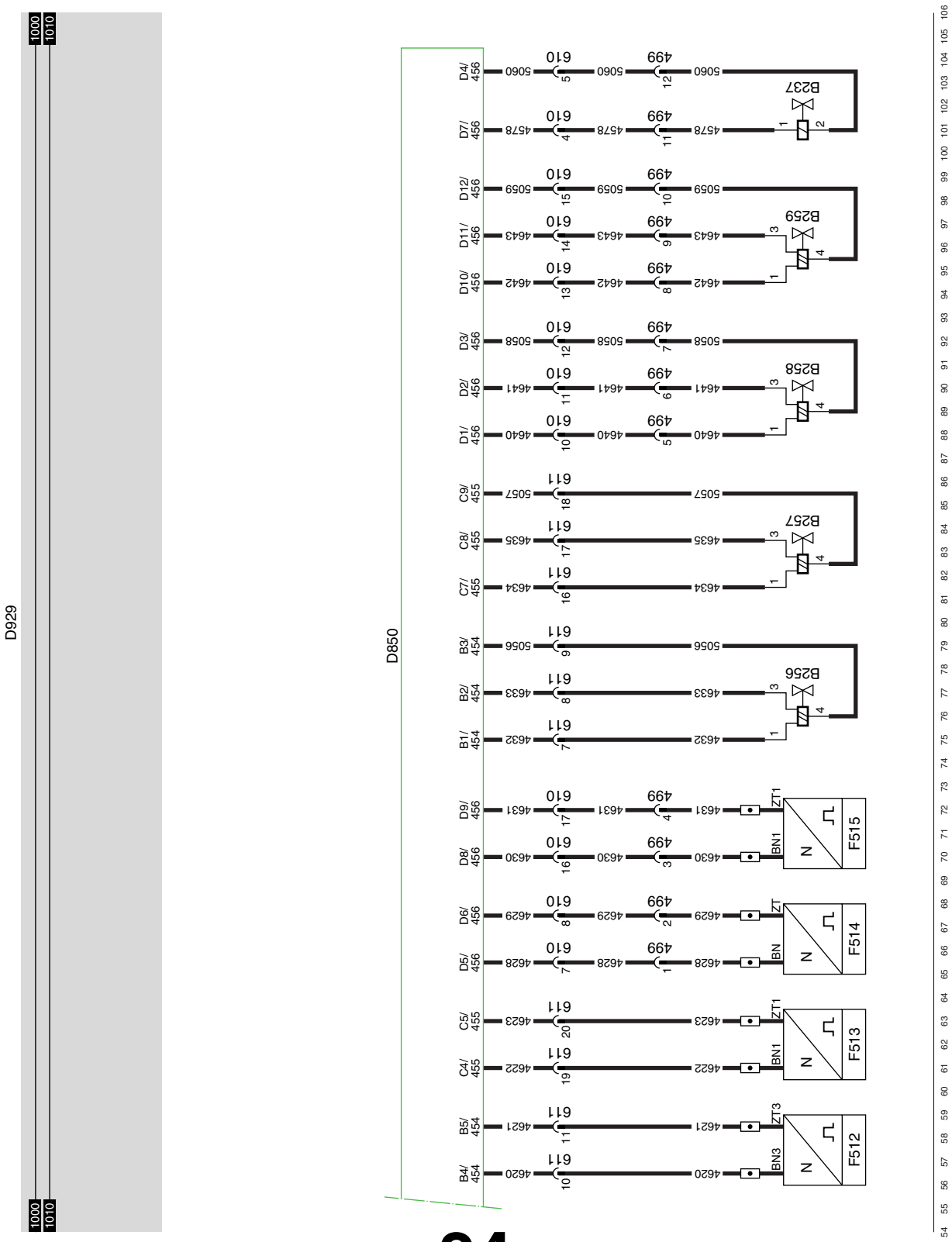

24

1358030/35-37

EL001789

11

https://truckmanualshub.com/

https://truckmanualshub.com/

25 DEB

Voltage is applied through fuse E118 and relay G126 to D814 (UPEC electronic unit) and through fuse E184 to valves B192, B247 and B248.
Depending on unit D814, relay G126 is activated, after which voltage is applied to exhaust brake valve B192 and engine brake (DEB) valves B247 and B248.
Depending on unit D814 these valves are connected to earth or are not connected to earth.

SEE THE SYSTEM MANUAL FOR MORE INFORMATION

https://truckmanualshub.com/

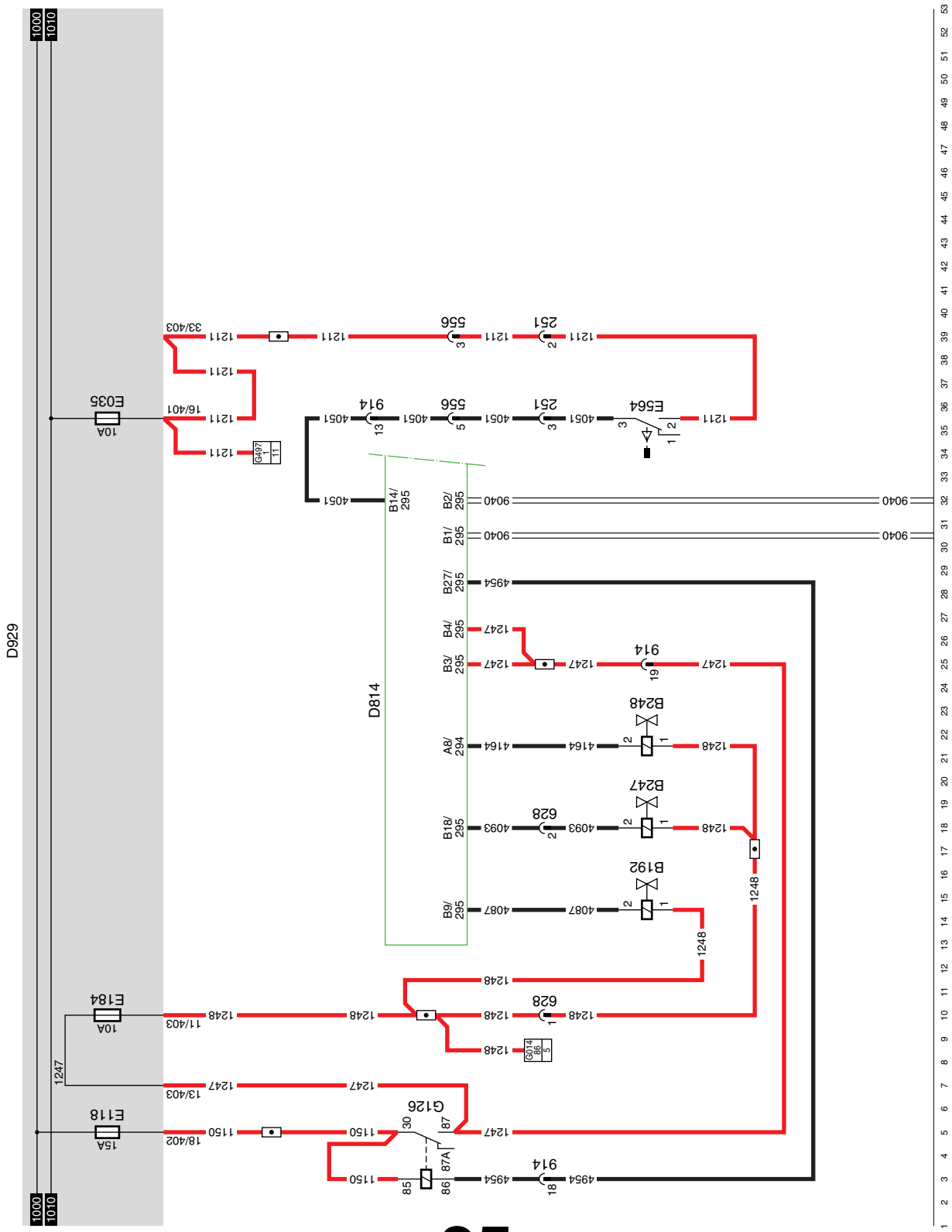
D929
1000
1010
E035
10A
E184
10A
E118
15A
1247
1248
1211
1150
1247
1248
1211
1211
1211

https://truckmanualshub.com/

Changes in the electrical system from chassis number 0E659894

***CF*65/75/85** Serie ≥0E621376

https://truckmanualshub.com/

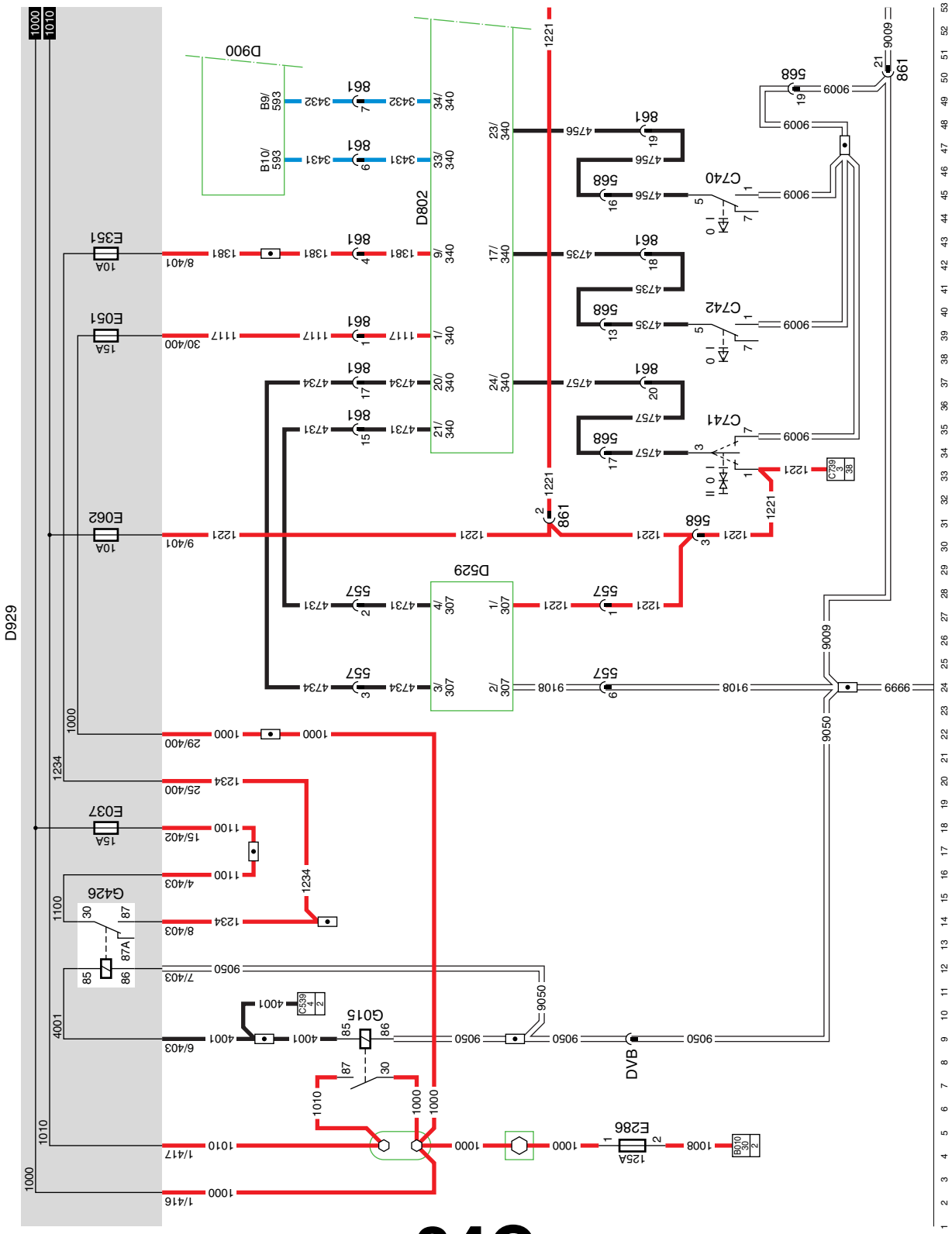

34C 1358030/35-37

EL001791

11

https://truckmanualshub.com/

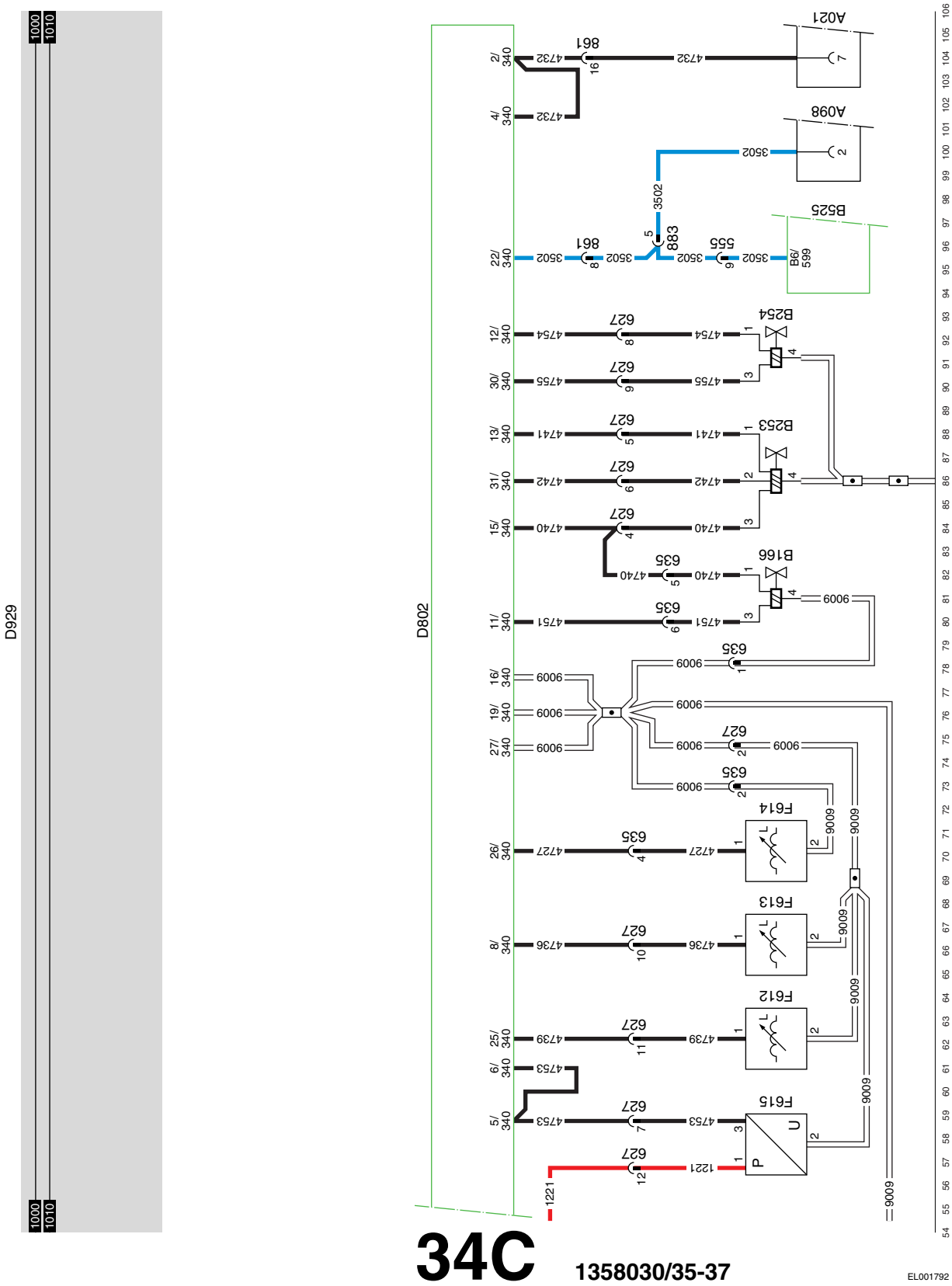

© 200520

https://truckmanualshub.com/

https://truckmanualshub.com/

36 24 V/12 V CONVERTER/RADIO/CB SET

The following description of the operation and connection is intended as a general guideline only.

Also refer to the manufacturer's installation instructions supplied with the radio.

If the accessories/ignition/starter switch (C539) is switched to accessories position, pin 1 is connected to pin 6 (wire 1100 is connected to wire 1130). As a result, a voltage is applied to connection point 1 of relay G377. This relay is activated. There is now a power supply of 12 volts to connection point A7 of the "ISO" connector through wire 1108 and contacts 3-5 of relay G377 and wire 1363.

The radio has an aerial connection and 2 loudspeaker outputs which can be used to connect loudspeakers B024 and B025. Two high-tone and two low-tone speakers (B178, B179 and B180, B181) can also be connected to the radio.

CB SET
Wire 1108 is also available in a white connector for a CB set (B026). This connector is in the roof console on the driver's side.

For more information: see also block 6: Connection of accessories.

VARIANTS

Location

15	Connector 554 contains wire 1363. This wire should be connected to the combi-aerial.

© 200520

https://truckmanualshub.com/

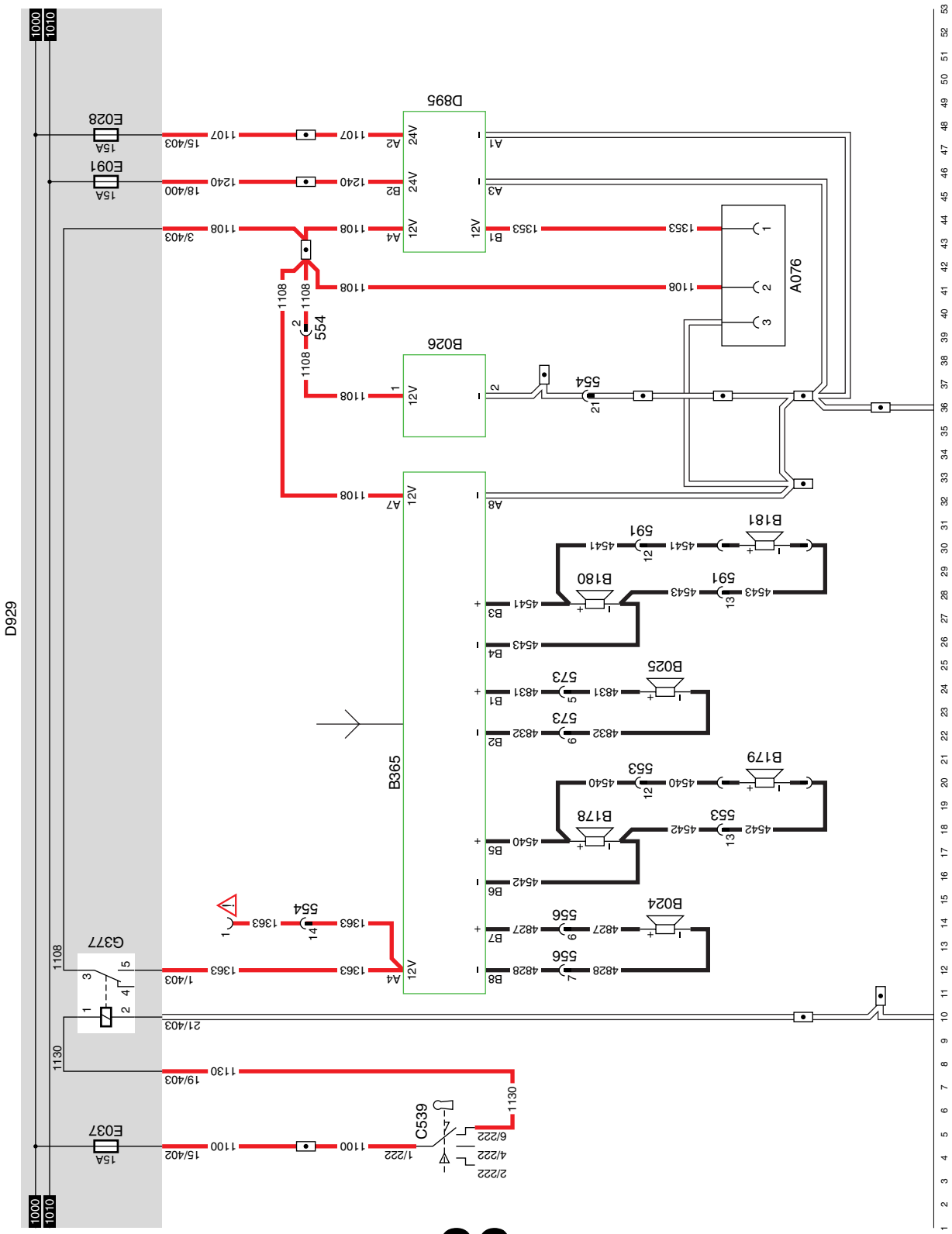

36

1358030/35-37

EL001793

11

https://truckmanualshub.com/

37 ELECTRIC DROP GLASS/CENTRAL DOOR LOCKING/ROOF HATCH, SH CAB

ELECTRIC DROP GLASS OPERATION, DRIVER'S SIDE (OPENING)
(Switch in door panel, driver's side)
When a connection is made (contacts 2 and 4) by means of the driver's side drop glass operation switch (C745), relay G030 will be energised through fuse E044, switch C745 (wire 4526). As a result of this, there is a supply voltage on connection point 1 of the motor (B003) through fuse E034. The other connection point (2) is connected to earth via relay G031. The motor starts running anti-clockwise and the driver's side window opens.

ELECTRIC DROP GLASS OPERATION, DRIVER'S SIDE (CLOSING)
(Switch in door panel, driver's side)
When a connection is made (contacts 4 and 1) by means of the driver's side drop glass operation switch (C745), relay G031 will be energised through fuse E044, switch C745 (wire 4527). As a result of this, there is a supply voltage on connection point 2 of the motor (B003) through fuse E034. The other connection point (1) is connected to earth via relay G030. The motor starts running clockwise and the driver's side window will close.

ELECTRIC DROP GLASS OPERATION, CO-DRIVER'S SIDE (OPENING)
(Switch in door panel, driver's side)
When a connection is made (contacts 2 and 4) by means of the co-driver's side drop glass operation switch (C743), relay G028 will be energised through fuse E044, switch C743 (wire 4522). As a result of this, there is a supply voltage on connection point 1 of the motor (B004) through fuse E033. The other connection point (2) is connected to earth via relay G029.
The motor starts running anti-clockwise and the co-driver's side window will open.

ELECTRIC DROP GLASS OPERATION, CO-DRIVER'S SIDE (CLOSING)
(Switch in door panel, driver's side)
When a connection is made (contacts 4 and 1) by means of the co-driver's side drop glass operation switch (C743), relay G029 will be energised through fuse E044, switch C743 (wire 4523). As a result of this, there is a supply voltage on connection point 2 of the motor (B004) through fuse E033. The other connection point (1) is connected to earth via relay G028.
The motor starts running clockwise and the co-driver's side window will close.

ELECTRIC DROP GLASS OPERATION, CO-DRIVER'S SIDE
(Switch in door panel, co-driver's side)
Operation of the drop glass on the co-driver's side through switch C744 works in exactly the same way as on the driver's side. When switch C744 is operated (connection between contacts 4 and 2), relay G028 is switched via switch C743 (contacts 5 and 2) and the motor (B004) will open the window. When switch C744 (connection between contacts 4 and 1) is operated, relay G029 is activated through switch C743 (contacts 3 and 1), the motor runs clockwise and the window closes as a result.

The electric drop glass will only operate if the contact is activated.

DOOR LOCKING, CO-DRIVER'S SIDE (STANDARD)

Purpose:
To lock the co-driver's side door using button/key or switch C744.

The driver can lock/unlock the co-driver's door from the driving position using the switch.

Central door locking motor, co-driver's side (B200)

https://truckmanualshub.com/

The motor has two (internal) switches:
- an “end stroke” switch (switches over at the end of each stroke) (the bottom switch in the diagram).
- a switch that is mechanically connected to the locking button (switches over at the beginning of each upward or downward movement of the locking button) (the top switch in the diagram).

Note:
A mechanical connection (rod linkage) between the cylinder lock and the locking button is maintained.

Conditions: door unlocked.

- **The door is locked using the button/key.**
  The top switch is directly switched over via the rod linkage. As a result, a current will flow through the fuse, connection 30B, the motor, the bottom switch and the top switch through connection 31 to earth. Because of the mechanical connection between the motor and the locking button, the button moves downwards. When the lower position is reached, the “end stroke” switch (the lower switch in the diagram) switches over. The forces are transmitted from the motor to the locking button via a crank/connecting rod linkage.

- **The door is locked using switch C774.**
  When spring-loaded switch C774 makes a connection between connections 3 and 7, connection point DL of B200 is connected to earth. As a result, a current will flow through the fuse, connection 30B, the motor and the bottom switch to earth. A brief moment is sufficient to start the motor. Since there is a mechanical connection between the motor and the locking button, the top switch will switch over immediately. A current will pass until the “end stroke” switch interrupts the circuit.

Conditions: door locked.

- **The door is unlocked using the button/key.**
  The top switch is directly switched over via the rod linkage. As a result, a current will flow through the fuse, connection 30B, the motor, the bottom switch and the top switch through connection 31 to earth. Because of the mechanical connection between the motor and the locking button, the button moves upwards. When the lower position is reached, the “end stroke” switch (the lower switch in the diagram) switches over. The forces are transmitted from the motor to the locking button via a crank/connecting rod linkage.

- **The door is unlocked using switch C774.**
  When spring-loaded switch C774 makes a connection between connections 3 and 1, connection point DO of B200 is connected to earth. As a result, a current will flow through the fuse, connection 30B, the motor and the bottom switch to earth. A brief moment is sufficient to start the motor. Since there is a mechanical connection between the motor and the locking button, the top switch will switch over immediately. A current will pass until the “end stroke” switch interrupts the circuit.

https://truckmanualshub.com/

CENTRAL DOOR LOCKING (CDS-3)

SEE THE SYSTEM MANUAL FOR MORE INFORMATION

SH CAB ROOF HATCH

OPENING ROOF HATCH
When the roof hatch switch (C736) is operated and a connection is made between contacts 2 and 6 and therefore between contacts 1 and 3 as well, a voltage is applied to pin 1 of the roof hatch motor (B175) through fuse E028, switch C736 and wire 4761. The roof hatch will open.

CLOSING ROOF HATCH
When the roof hatch switch (C736) is operated and a connection is made between contacts 8 and 6 and therefore between contacts 7 and 3 as well, a voltage is applied to pin 2 of the roof hatch motor (B175) through fuse E028, switch C736 and wire 4760. The roof hatch will now close.

VARIANTS

Location
37 If the standard version is installed, the motor for door locking on the driver's side (B199) and the CDS electronic unit (D905) are not fitted.

The connections on B200 are then as follows:

Connection point	Wire number:	Description
1	1105	Power supply
2	5061	Open door
3	5062	Close door
4	M	Earth

Wire 5062 is directly connected to connection point 7 of switch C774.

https://truckmanualshub.com/

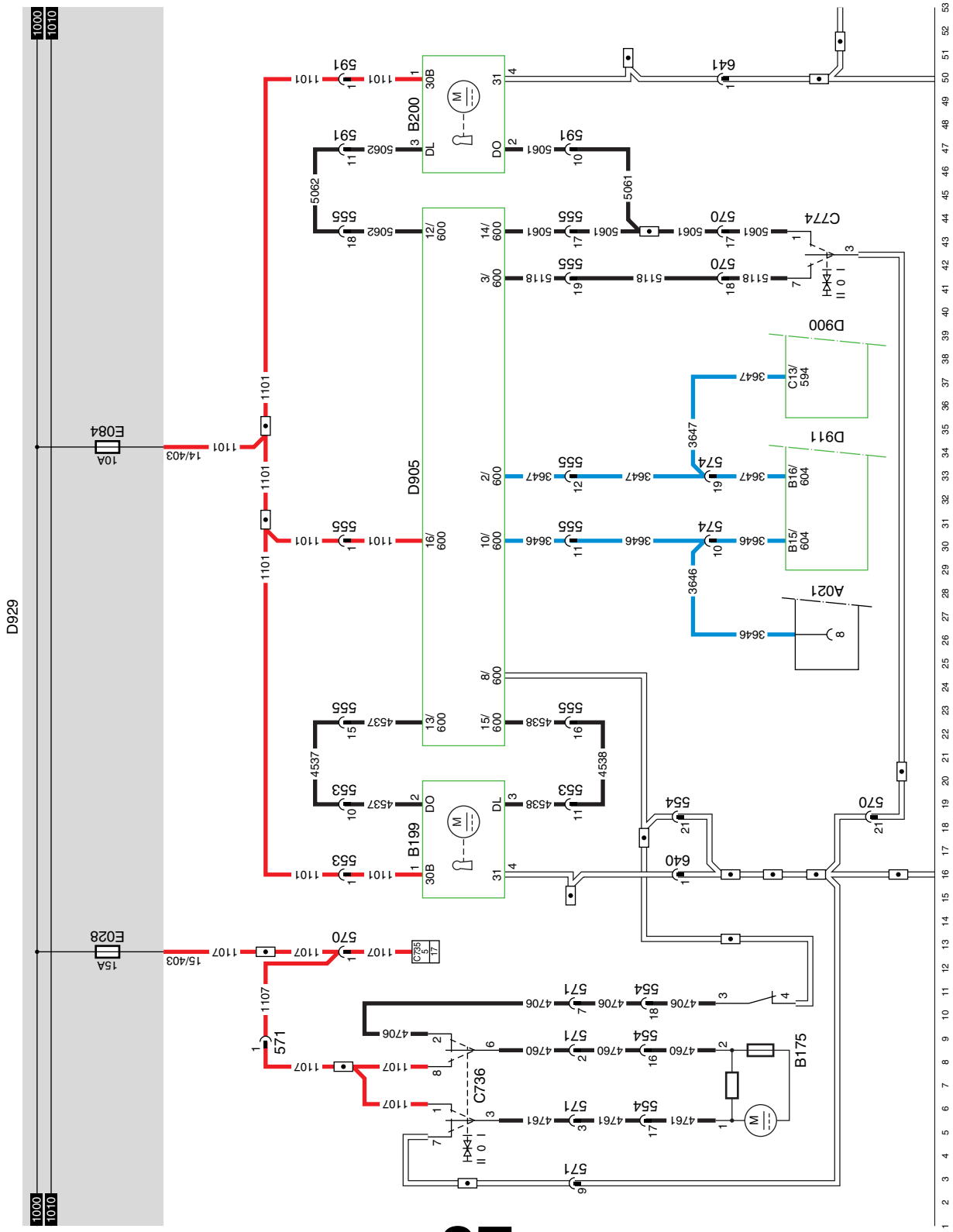

37

1358030/35-37

EL001794

https://truckmanualshub.com/

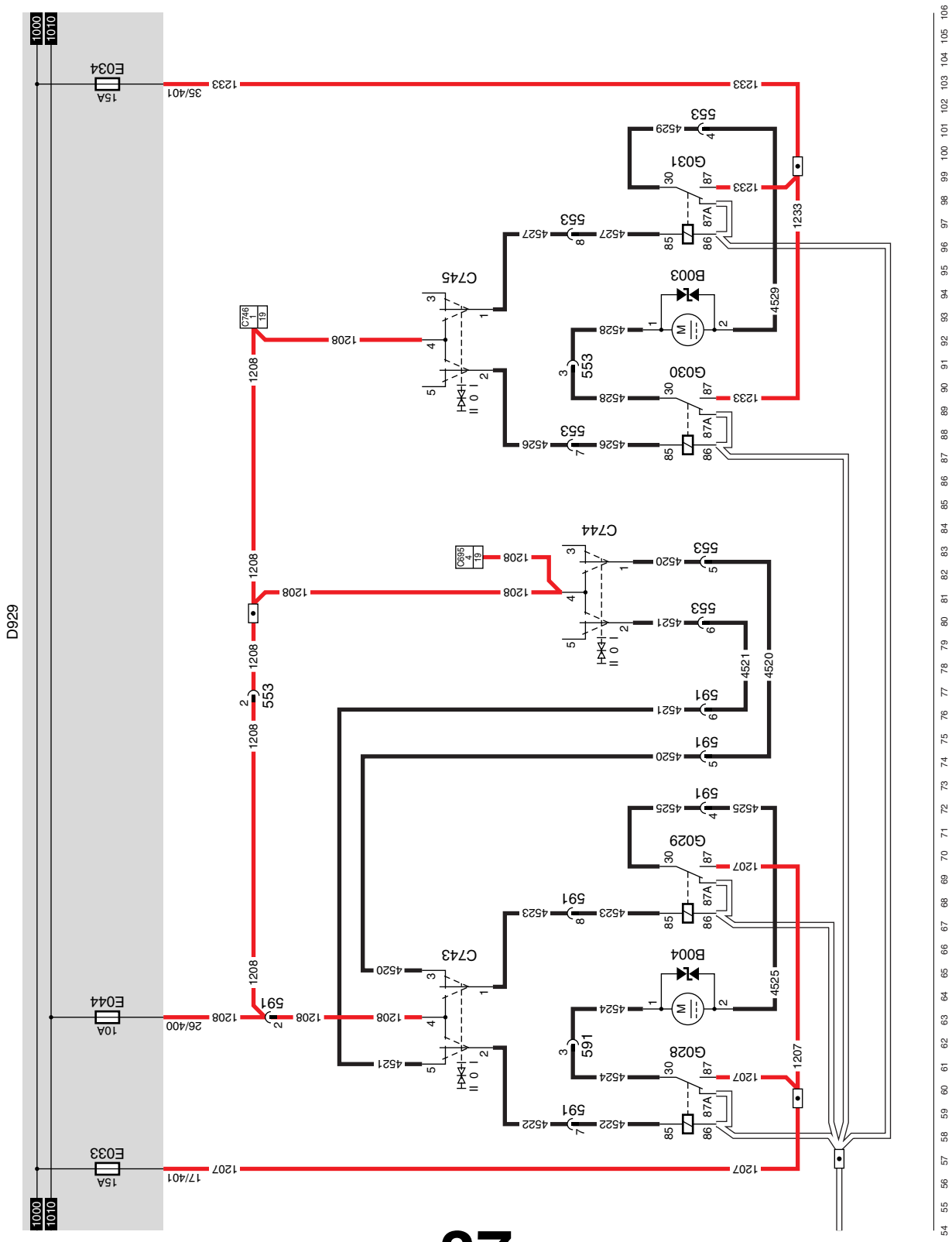

37

1358030/35-37

EL001795

© 200520

https://truckmanualshub.com/

https://truckmanualshub.com/

44 EBS-2

SEE THE SYSTEM MANUAL FOR MORE INFORMATION

VARIANTS

Location

18 -> 37: Connector 873: only on cab type D

126: E511 NOT fitted with EBS.

https://truckmanualshub.com/

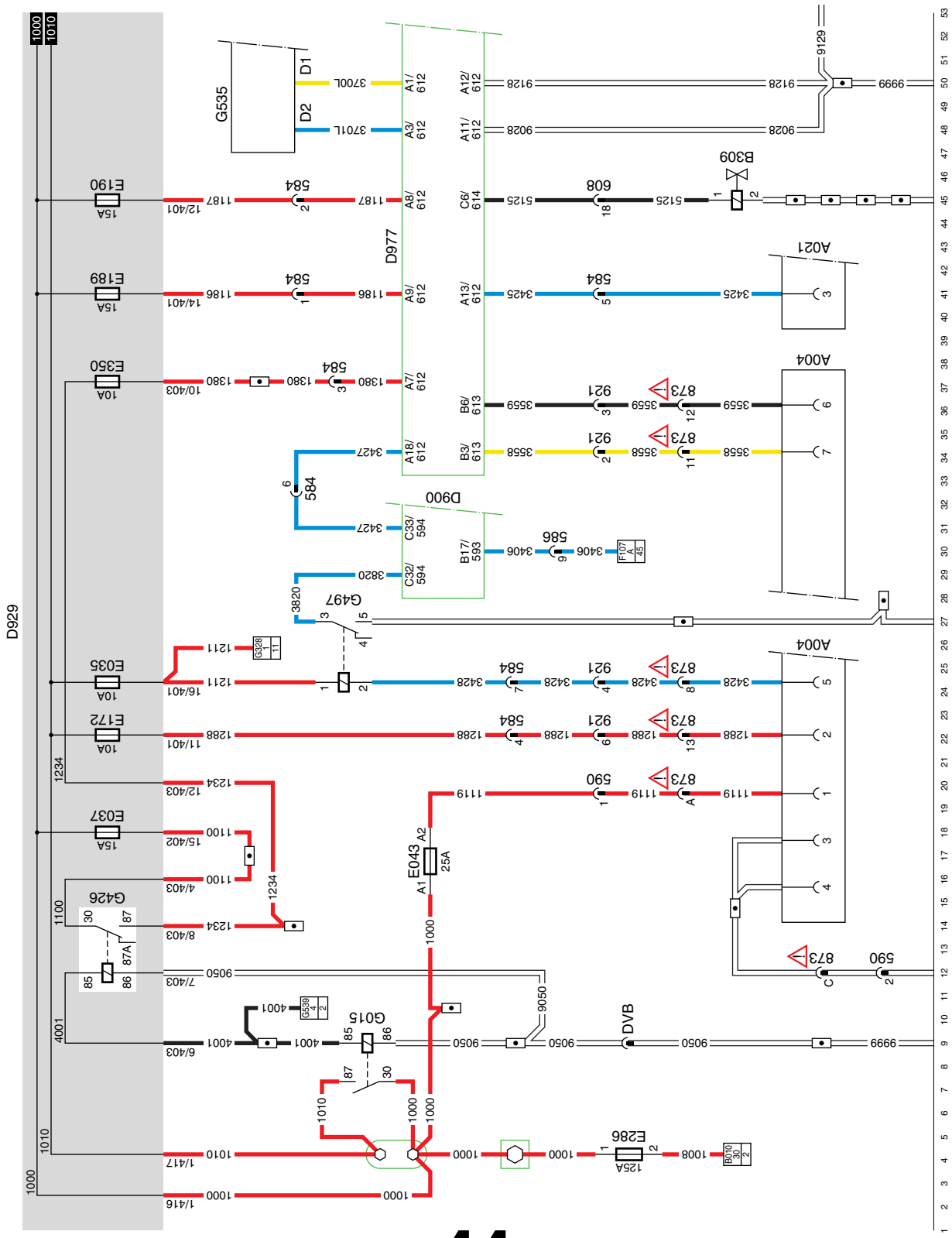

44 1358030/35-37

EL001796

https://truckmanualshub.com/

Changes in the electrical system from chassis number 0E659894

***CF*65/75/85** Serie ≥0E621376

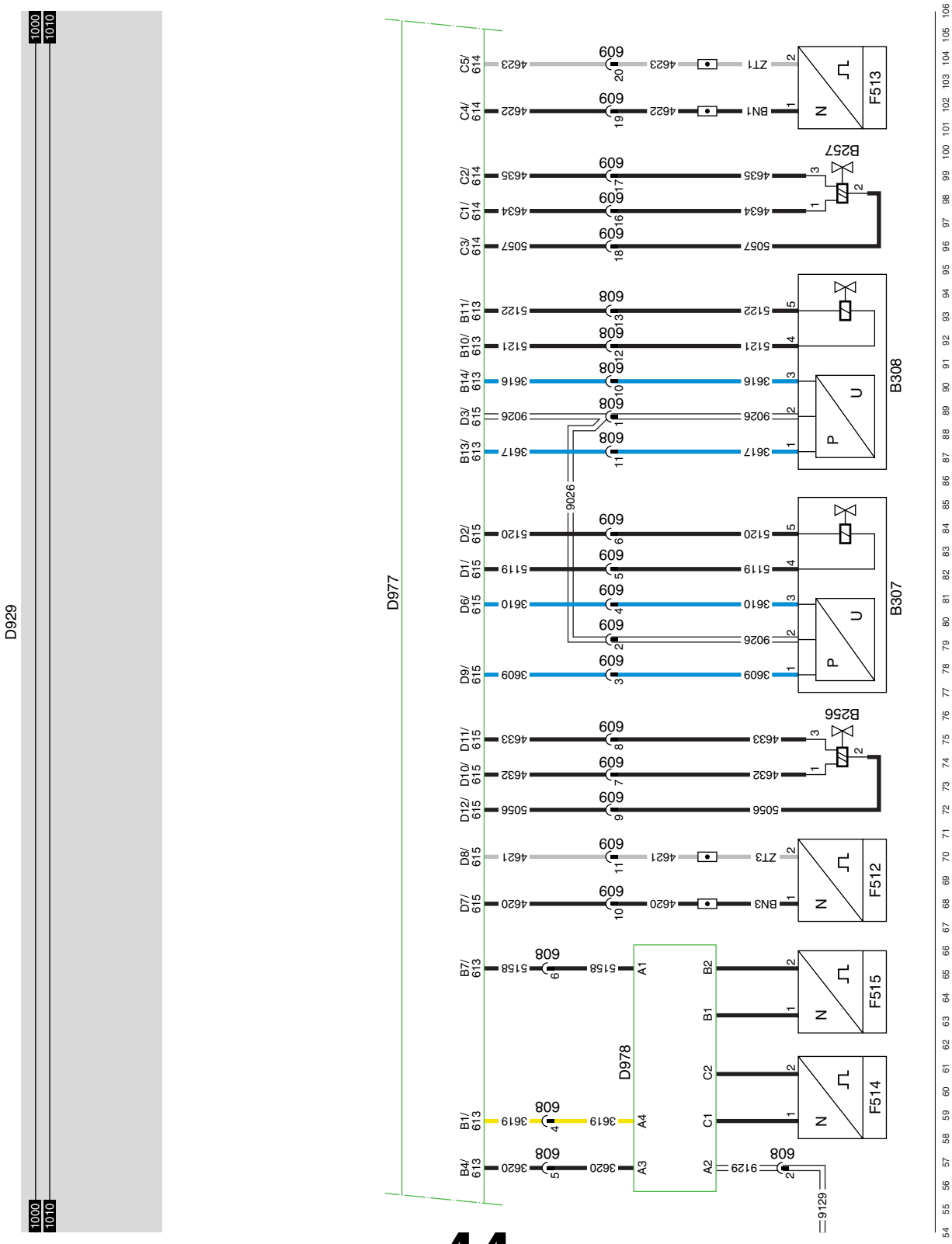

44

1358030/35-37

EL0011797

11

https://truckmanualshub.com/

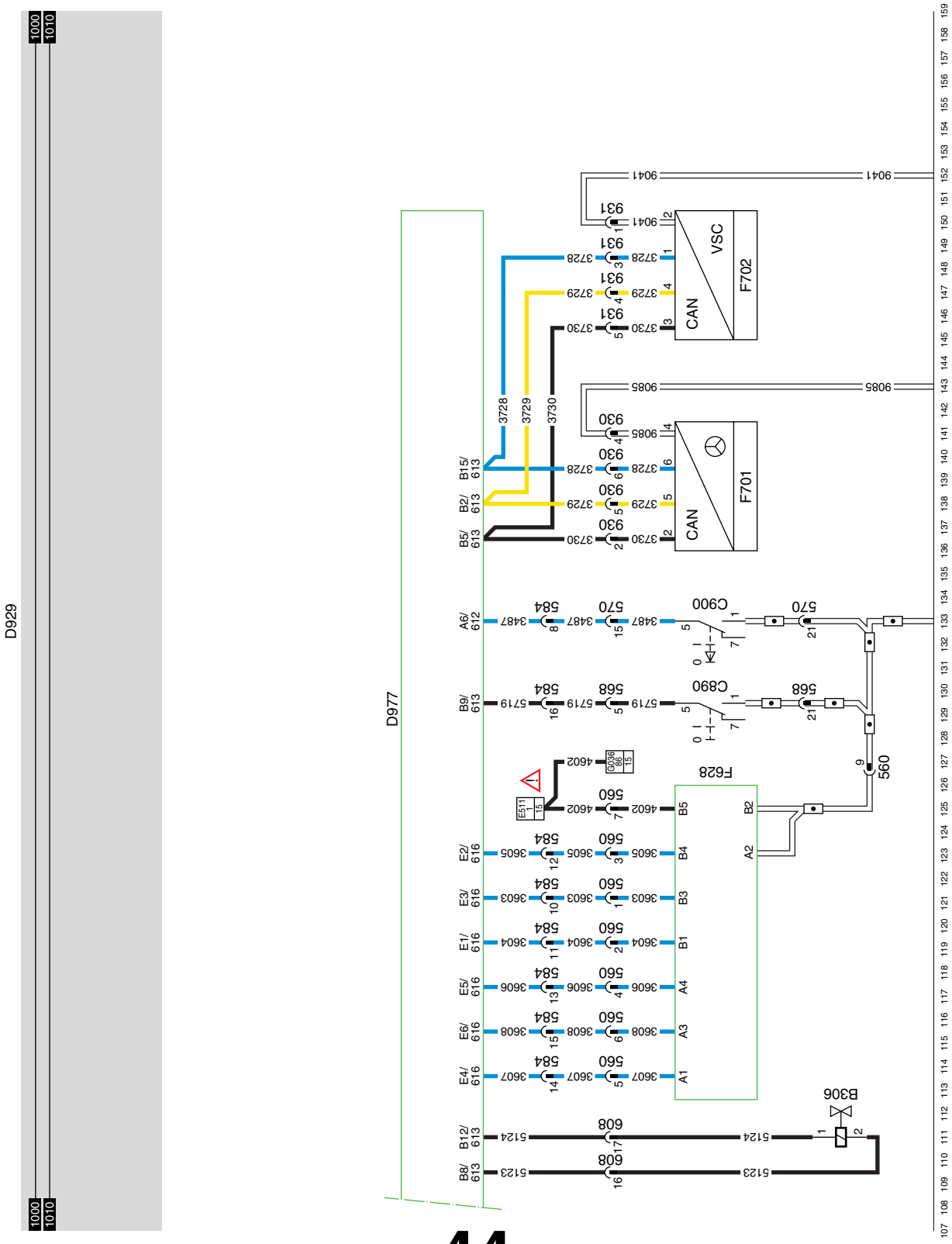

44 1358030/35-37

EL001798

11

https://truckmanualshub.com/

47 PLUG SOCKETS, FA

DIAGNOSTIC CONNECTOR (A021)

The diagnostic connector is at bottom right on the outside of the central box. This is the connector for the DAVIE connection. After the ignition is switched on, power is supplied to pin 1 via fuse E053. Pin 2 is connected to earth. The remaining pins are for communication with the various systems, and are connected to those systems.

Pin no.	Wire no.	Colour	Description
1	1229	red	Power supply for DAVIE
2	9107	white	Earth
3	3425	blue	ABS - ASR-D
4			
5	4697	black	UPEC, ECS-DC3
6			
7	4732	black	ECAS
8	3646	blue	CDS, ALS-S, EMAS
9	4047	black	VIC
10	3065	blue	AS Tronic
11	4883	black	ZF intarder
12	4733	black	DIP-4
13	3470	blue	AGS
14	3037	blue	Cab heater
15	3700	yellow	V-CAN-L
16	3701	blue	V-CAN-H

https://truckmanualshub.com/

24 V CONNECTOR (2-pin) (A007)

Pin 1 is connected directly to the power supply through wire 1103, fuse E036.

Pin 2 is connected to earth.

ABS/EBS DRAWN VEHICLE CONNECTOR (7-pin) (A004)

Pin 1 is connected directly to power before contact through fuse E043 and wire 1119.

Pin 2 is connected directly to power after contact through fuse E172 and wire 1288.

Pins 3 + 4 are both connected to earth.

Pin 5 is connected to power supply through wire 3428 and the coil of relay G497. It is activated when a semi-trailer fitted with EBS is hitched.

Pin 6 is connected to pin B6 of D880 (EBS) via wire 3559.
Only if the vehicle has EBS.

Pin 7 is connected to pin B3 of D880 (EBS) via wire 3558.
Only if the vehicle has EBS.

DRAWN VEHICLE CONNECTOR (7-pin) (A000)

Pin 1 is connected to earth.

Pin 2 switches the left tail light.

Pin 3 is connected through wire 2008 to connection point A7 of the VIC (D900) (direction, left).

Pin 4 is connected to relay G036 (stop light relay) through wire 4601.

Pin 5 is connected through wire 2009 to connection point A8 of the VIC (D900) (direction, right).

Pin 6 switches the right tail light.

DRAWN VEHICLE CONNECTOR (15-pin) (A058)

Pin 1 is connected through wire 2008 to connection point A7 of the VIC (D900) (direction, left).

Pin 2 is connected through wire 2009 to connection point A8 of the VIC (D900) (direction, right).

Pin 3 is connected via wire 2152 to connection point 87 of relay G005 (relay, rear fog lamp).

Pin 4 is connected to earth.

Pin 5 switches the left tail light via wire 2102.

Pin 6 switches the right tail light via wire 2103.

Pin 7 is connected to connection point 87 of relay G036 (stop light relay) through wire 4601.

Pin 8 is connected to connection point 5 of G350 (reversing light relay) through wire 4591.

Pin 9 is connected to power before contact through wire 1113 and fuse E048.

Pin 10 is connected via wire 3659 to connection point B6 of D911 (ALS-S).

Pin 11 is connected via wire 3660 to connection point B4 of D911 (ALS-S).

Pin 12 is connected to connection point A10 of D911 (ALS-S) through wire 3651.

Pin 13 is not connected.

Pin 14 is not connected.

Pin 15 is not connected.

REAR FOG LAMP/REVERSING LAMP CONNECTOR (A001)

Pin 1 is connected to earth.

Pin 2 is connected via wire 3659 to connection point B6 of ALS-S (D911).

Pin 3 is connected to connection point 5 of G350 (reversing light relay) through wire 4591.

Pin 4 is connected to power before contact through wire 1113 and fuse E048.

Pin 5 is connected via wire 3660 to connection point B4 of D911 (ALS-S).

Pin 6 is connected to connection point A10 of D911 (ALS-S) through wire 3651.

Pin 7 is connected via wire 2152 to connection point 87 of relay G005 (relay, rear fog lamp).

https://truckmanualshub.com/

APPLICATION CONNECTOR, SUPERSTRUCTURE (8-pin) (A070)

Pin 1 is connected to power before contact through wire 1113 and fuse E048.

Pin 2 is connected to connection point 1 of C725 (work lamp switch) through wire 2155.

Pin 3 is connected to connection point 87 of G036 (stop light relay) through wire 4601.

Pin 4 is connected to connection point 5 of G350 (reversing light relay) through wire 4591.

Pin 5 is connected to connection point A10 of D911 (ALS-S) through wire 3651.

Pin 6 is connected via wire 3659 to connection point B6 of D911 (ALS-S).

Pin 7 is connected via wire 3660 to connection point B4 of D911 (ALS-S).

Pin 8 is connected to earth.

PHONE CONNECTOR (A076)

Pin 1 is connected via wire 1353 to connection B1 (12V) of D895.

Pin 2 is connected via wire 1108 to connection A4 (12V) of D895.

Pin 3 is connected to earth.

ACCESSORIES CONNECTOR (6-pin) (A027)

Pin 1 is connected to power before contact through wire 1154 and fuse E142.

Pin 2 is connected to power after contact through wire 1258 and fuse E163.

Pin 3 is connected to connection point 2 of F616 (cab locking sensor) through wire 3412.

Pin 5 is connected to C42 of the VIC (D900) through wire 3157.

Pin 5 is connected to earth.

Pin 6 is connected to earth.

VARIANTS

Location

32, 36, 59	Connector 585: for ABS/ASR-D. Connector 584 for EBS.
59	Connection to D850 or D880.
61	Connection to D851 or D802.
82	D954: Only for AS Tronic
121, 158	A000 and A001. For 2x 7-pin connector.
162 -> 209:	For 1x 15-pin connector.

https://truckmanualshub.com/

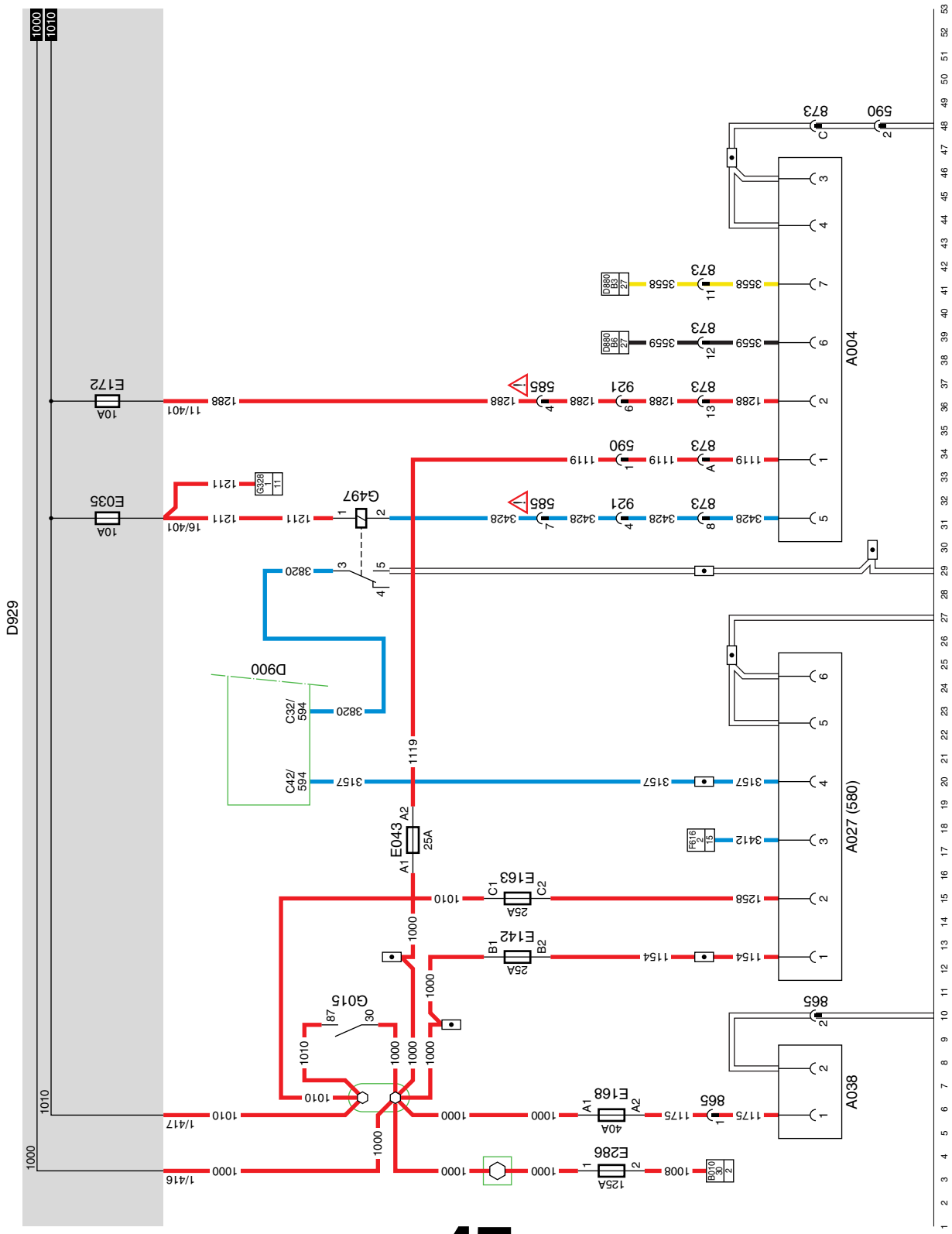

47

1358030/35-37

EL001799

11

https://truckmanualshub.com/

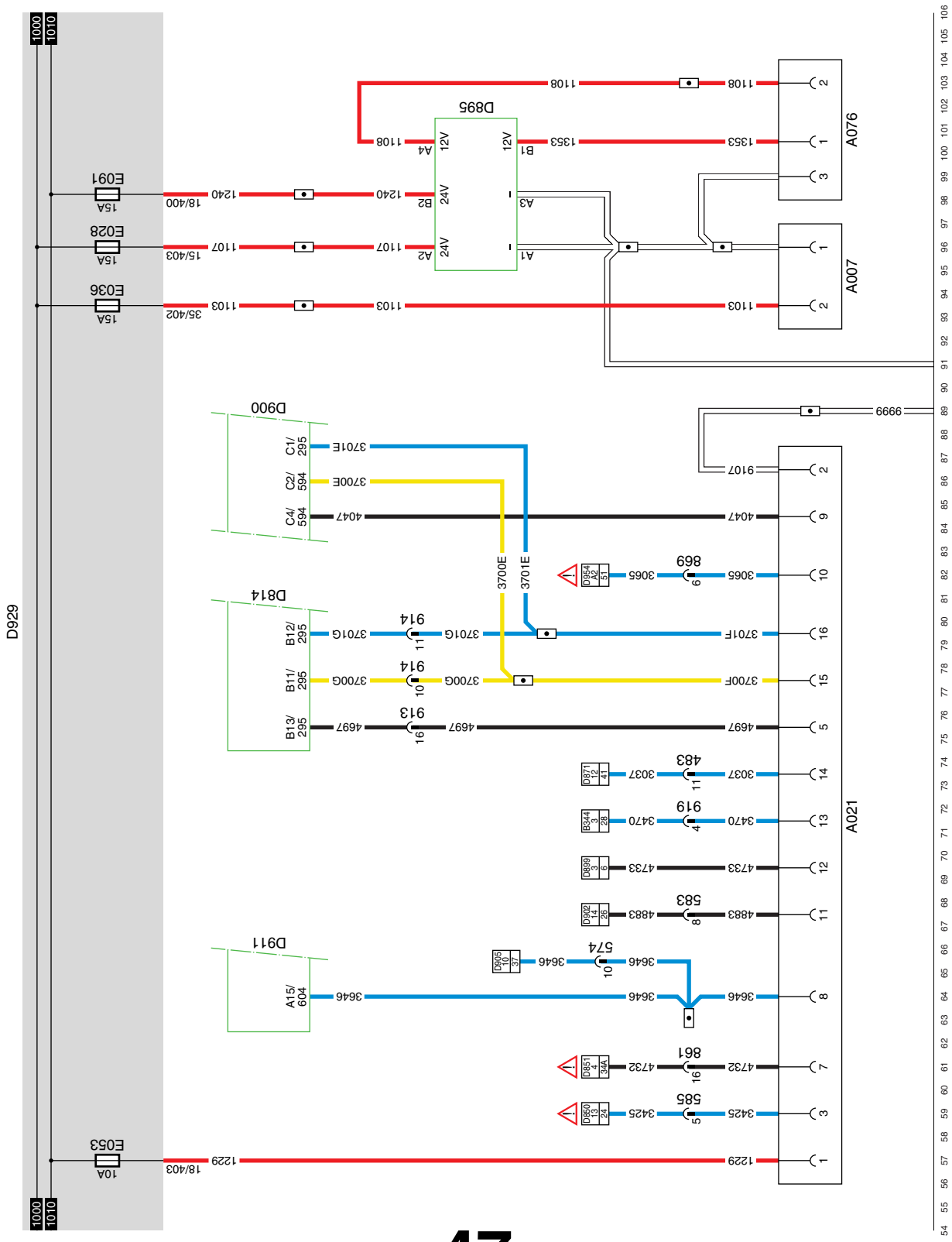

47

1358030/35-37

https://truckmanualshub.com/

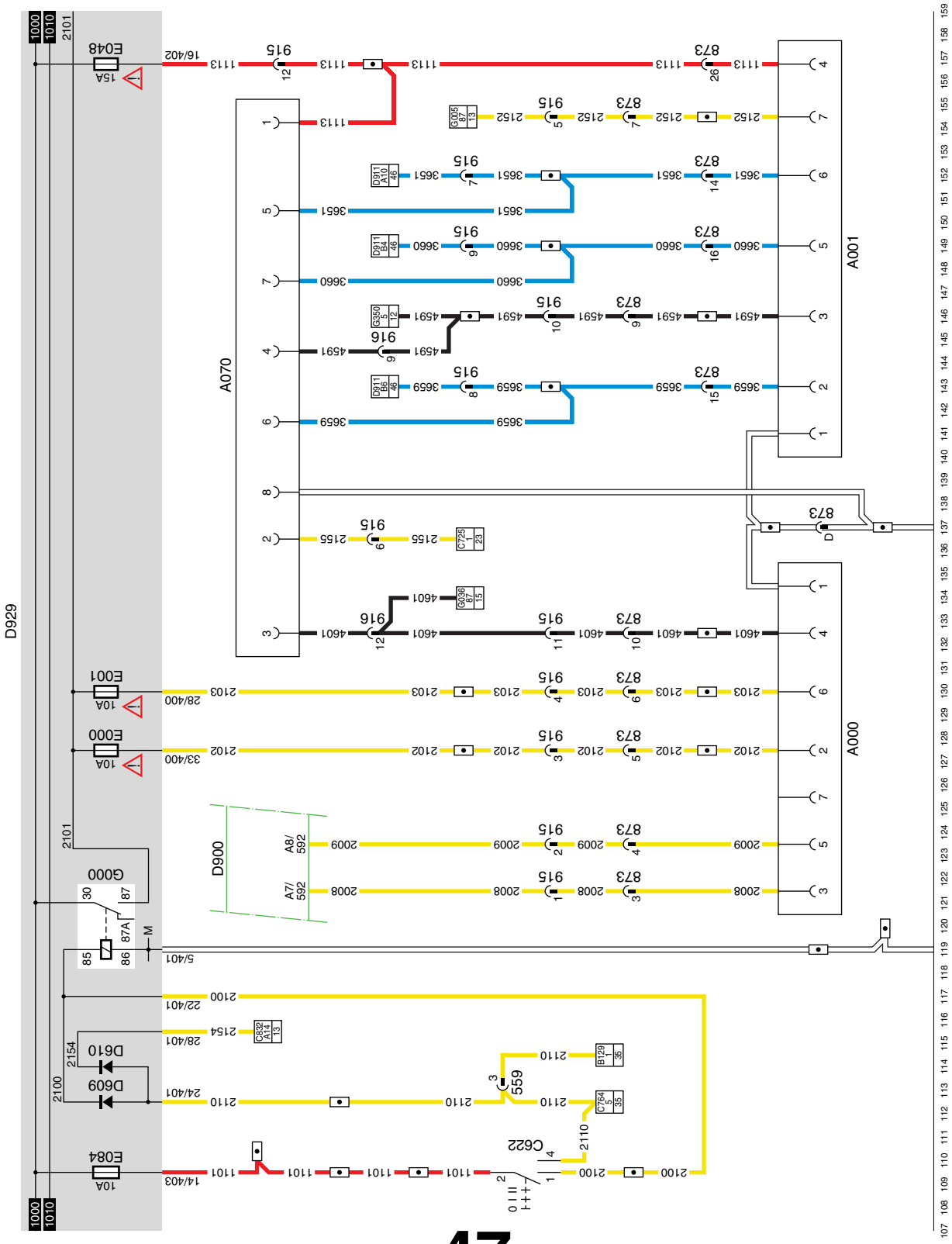

https://truckmanualshub.com/

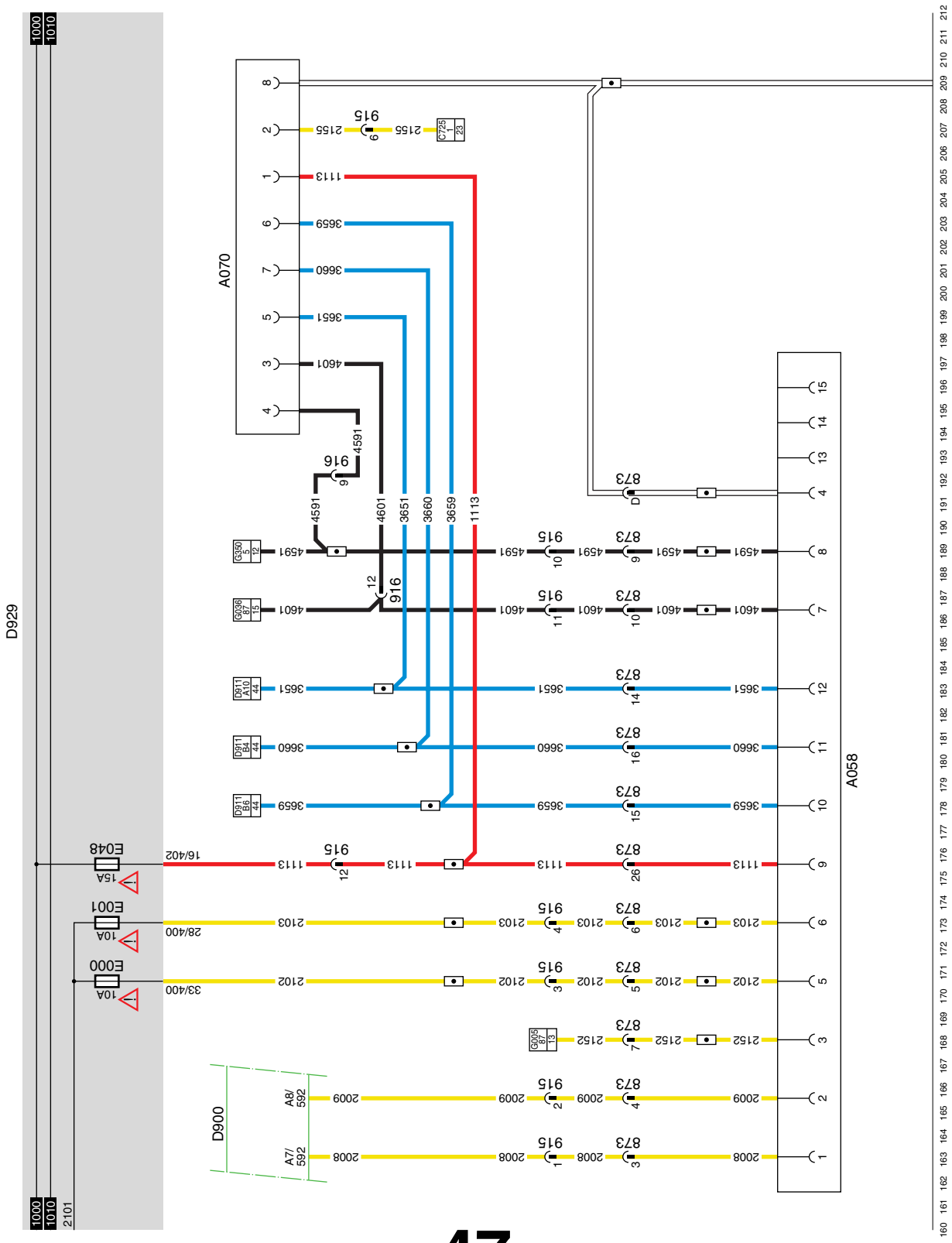

© 200520

https://truckmanualshub.com/

https://truckmanualshub.com/

48 PLUG SOCKETS, FT

DIAGNOSTIC CONNECTOR (A021)

The diagnostic connector is at bottom right on the outside of the central box. This is the connector for the DAVIE connection. After the ignition is switched on, power is supplied to pin 1 via fuse E053. Pin 2 is connected to earth. The remaining pins are for communication with the various systems, and are connected to those systems.

Pin no.	Wire no.	Colour	Description
1	1229	red	Power supply for DAVIE
2	9107	white	Earth
3	3425	blue	ABS - ASR-D
4			
5	4697	black	UPEC, ECS-DC3
6			
7	4732	black	ECAS
8	3646	blue	CDS, ALS-S, EMAS
9	4047	black	VIC
10	3065	blue	AS Tronic
11	4883	black	ZF intarder
12	4733	black	DIP-4
13	3470	blue	AGS
14	3037	blue	Cab heater
15	3700	yellow	V-CAN-L
16	3701	blue	V-CAN-H

https://truckmanualshub.com/

24 V CONNECTOR (2-pin) (A007)

Pin 1 is connected directly to the power supply through wire 1103, fuse E036.

Pin 2 is connected to earth.

ABS/EBS DRAWN VEHICLE CONNECTOR (7-pin) (A004)

Pin 1 is connected directly to power before contact through fuse E043 and wire 1119.

Pin 2 is connected directly to power after contact through fuse E172 and wire 1288.

Pins 3 + 4 are both connected to earth.

Pin 5 is connected to power supply through wire 3428 and the coil of relay G497. It is activated when a semi-trailer fitted with EBS is hitched.

Pin 6 is connected to pin B6 of D880 (EBS) via wire 3559.

Only if the vehicle has EBS.

Pin 7 is connected to pin B3 of D880 (EBS) via wire 3558.

Only if the vehicle has EBS.

DRAWN VEHICLE CONNECTOR (7-pin) (A000)

Pin 1 is connected to earth.

Pin 2 switches the left tail light.

Pin 3 is connected through wire 2008 to connection point A7 of the VIC (D900) (direction, left).

Pin 4 is connected to relay G036 (stop light relay) through wire 4601.

Pin 5 is connected through wire 2009 to connection point A8 of the VIC (D900) (direction, right).

Pin 6 switches the right tail light.

DRAWN VEHICLE CONNECTOR (15-pin) (A058)

Pin 1 is connected through wire 2008 to connection point A7 of the VIC (D900) (direction, left).

Pin 2 is connected through wire 2009 to connection point A8 of the VIC (D900) (direction, right).

Pin 3 is connected via wire 2152 to connection point 87 of relay G005 (relay, rear fog lamp).

Pin 4 is connected to earth.

Pin 5 switches the left tail light via wire 2102.

Pin 6 switches the right tail light via wire 2103.

Pin 7 is connected to connection point 87 of relay G036 (stop light relay) through wire 4601.

Pin 8 is connected to connection point 5 of G350 (reversing light relay) through wire 4591.

Pin 9 is connected to power before contact through wire 1113 and fuse E048.

Pin 10 is connected via wire 3659 to connection point B6 of D911 (ALS-S).

Pin 11 is connected via wire 3660 to connection point B4 of D911 (ALS-S).

Pin 12 is connected to connection point A10 of D911 (ALS-S) through wire 3651.

Pin 13 is not connected.

Pin 14 is not connected.

Pin 15 is not connected.

REAR FOG LAMP/REVERSING LAMP CONNECTOR (A001)

Pin 1 is connected to earth.

Pin 2 is connected via wire 3659 to connection point B6 of ALS-S (D911).

Pin 3 is connected to connection point 5 of G350 (reversing light relay) through wire 4591.

Pin 4 is connected to power before contact through wire 1113 and fuse E048.

Pin 5 is connected via wire 3660 to connection point B4 of D911 (ALS-S).

Pin 6 is connected to connection point A10 of D911 (ALS-S) through wire 3651.

Pin 7 is connected via wire 2152 to connection point 87 of relay G005 (relay, rear fog lamp).

https://truckmanualshub.com/

PHONE CONNECTOR (A076)

Pin 1 is connected via wire 1353 to connection B1 (12V) of D895.

Pin 2 is connected via wire 1108 to connection A4 (12V) of D895.

Pin 3 is connected to earth.

ACCESSORIES CONNECTOR (6-pin) (A027)

Pin 1 is connected to power before contact through wire 1154 and fuse E142.

Pin 2 is connected to power after contact through wire 1258 and fuse E163.

Pin 3 is connected to connection point 2 of F616 (cab locking sensor) through wire 3412.

Pin 5 is connected to C42 of the VIC (D900) through wire 3157.

Pin 5 is connected to earth.

Pin 6 is connected to earth.

VARIANTS

Location

32, 36	Connector 585 for ABS/ASR-D. Connector 584 for EBS.
59	Connection to D850 or D880.
61	Connection to D851 or D802.
82	D954: only for AS Tronic.
122 -> 156	A000 and A001. For 2x 7-pin connector.
161 -> 199	For 1x 15-pin connector.

https://truckmanualshub.com/

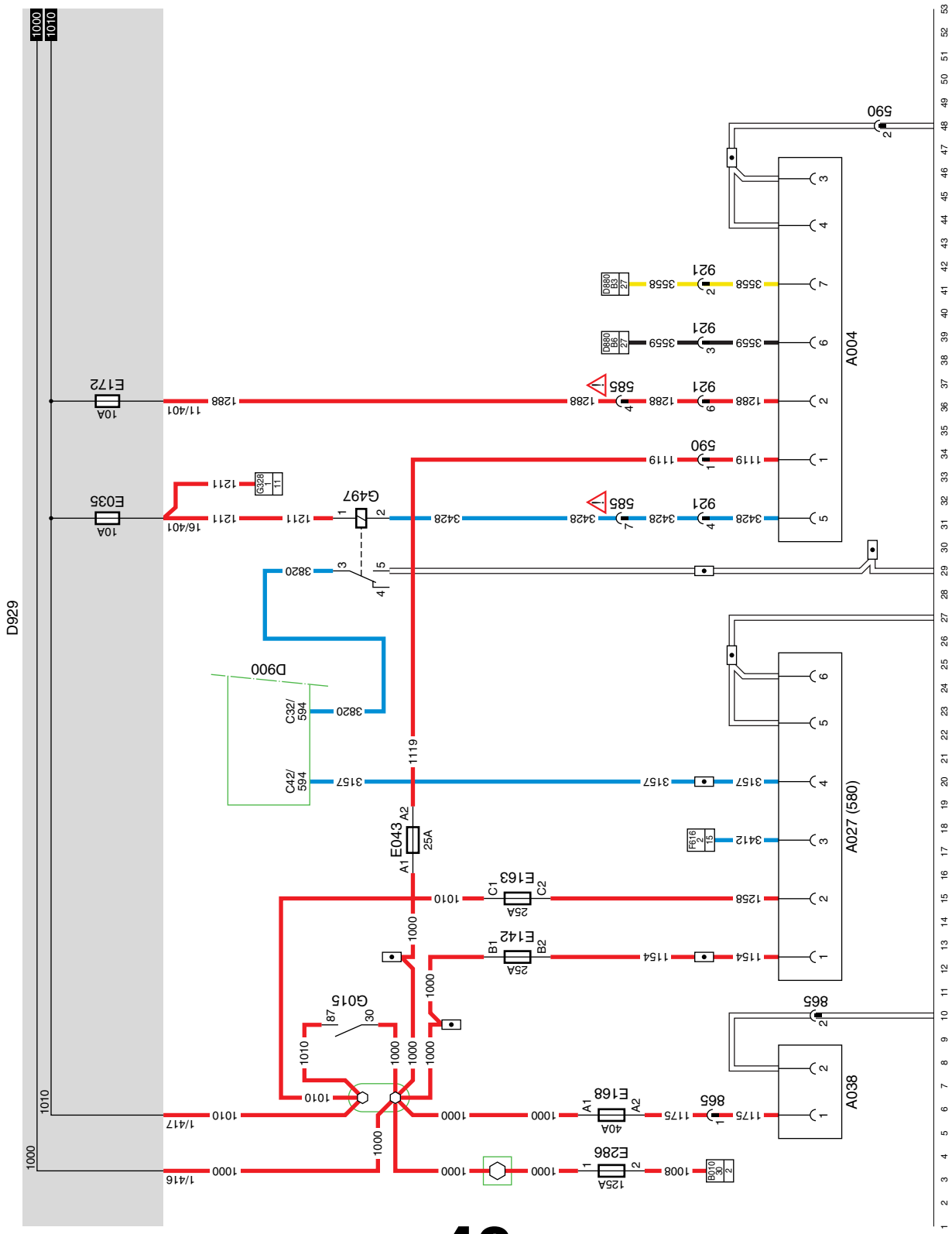

48

1358030/35-37

EL001803

11

https://truckmanualshub.com/

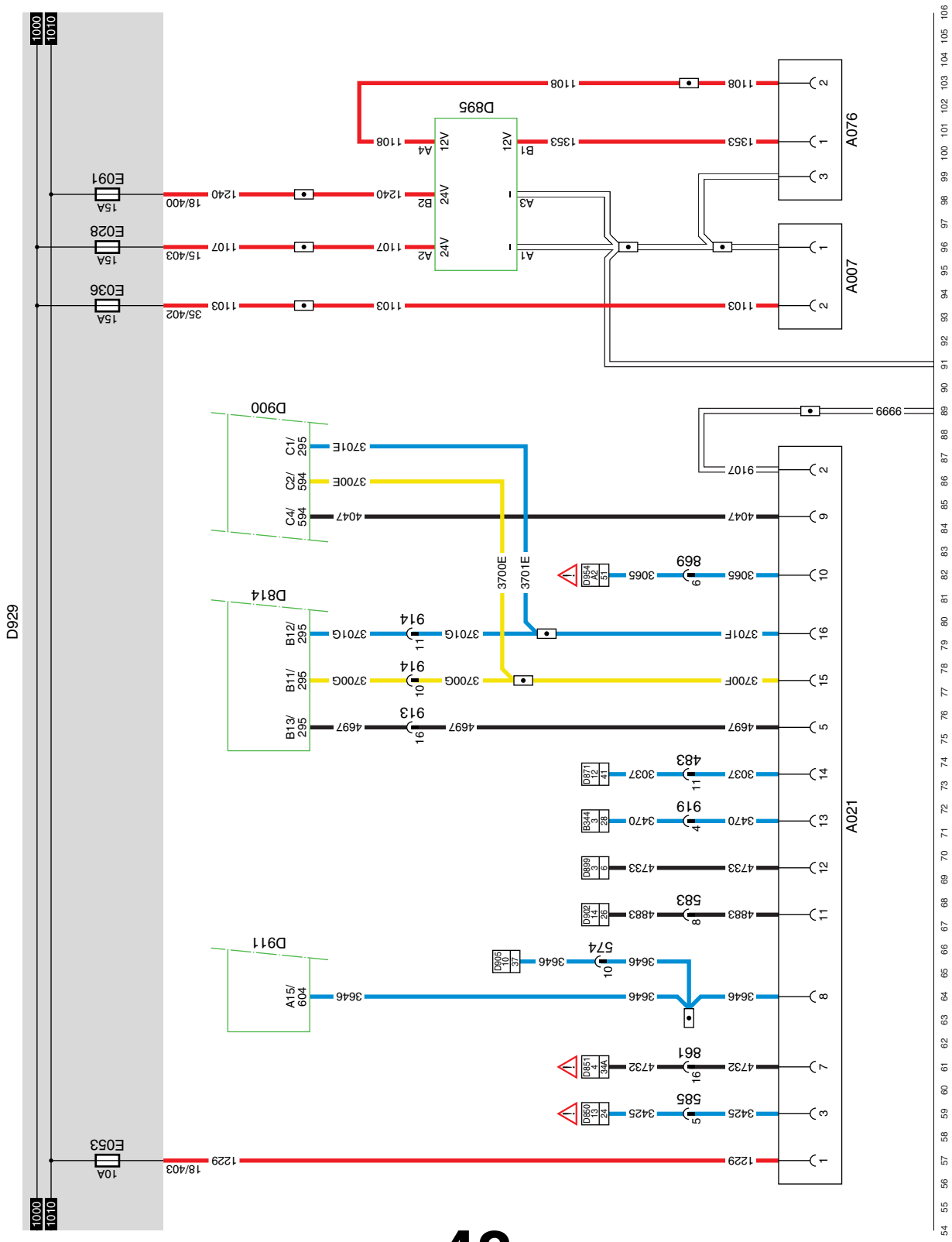

48

1358030/35-37

EL001804

11

https://truckmanualshub.com/

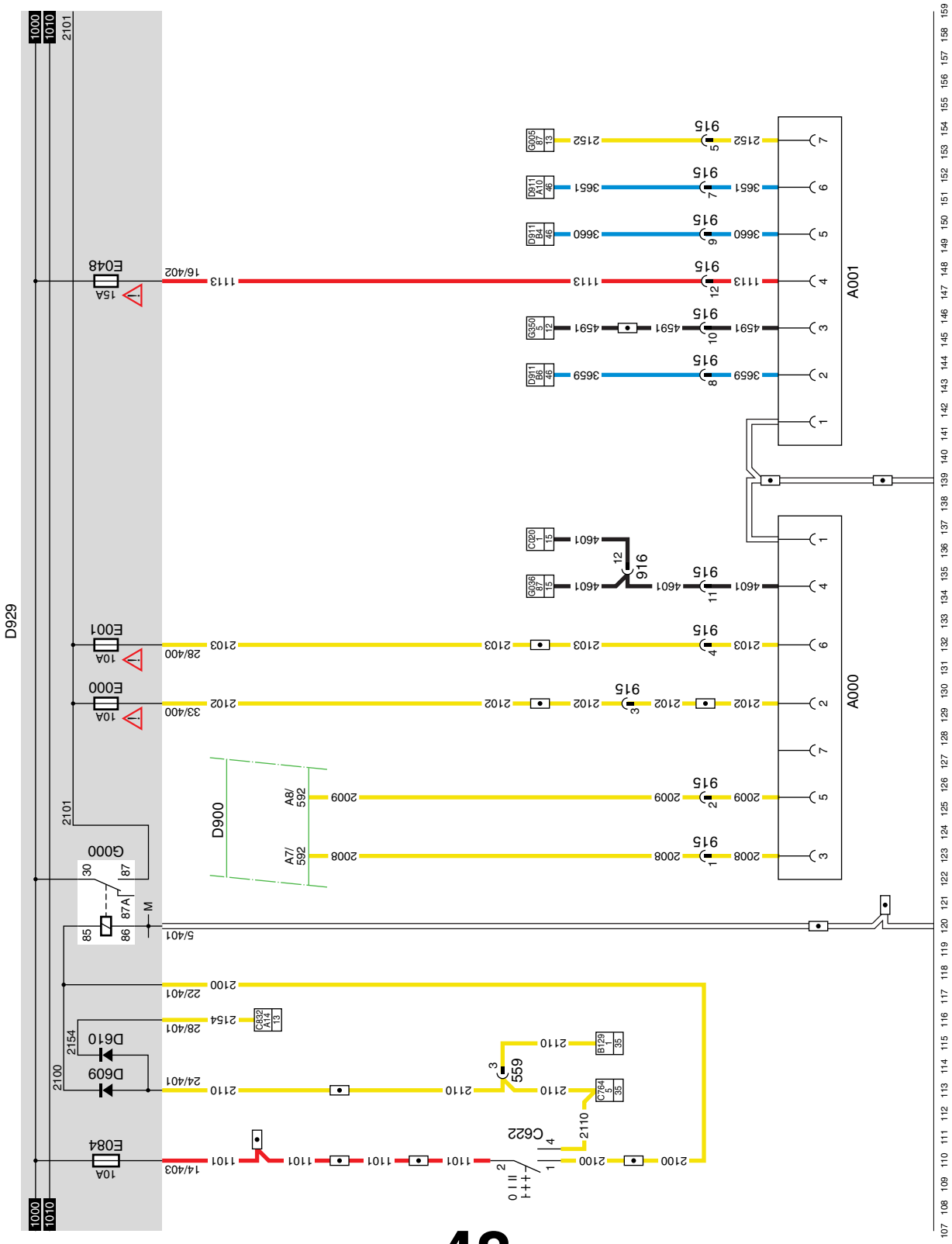

48

1358030/35-37

EL001805

https://truckmanualshub.com/

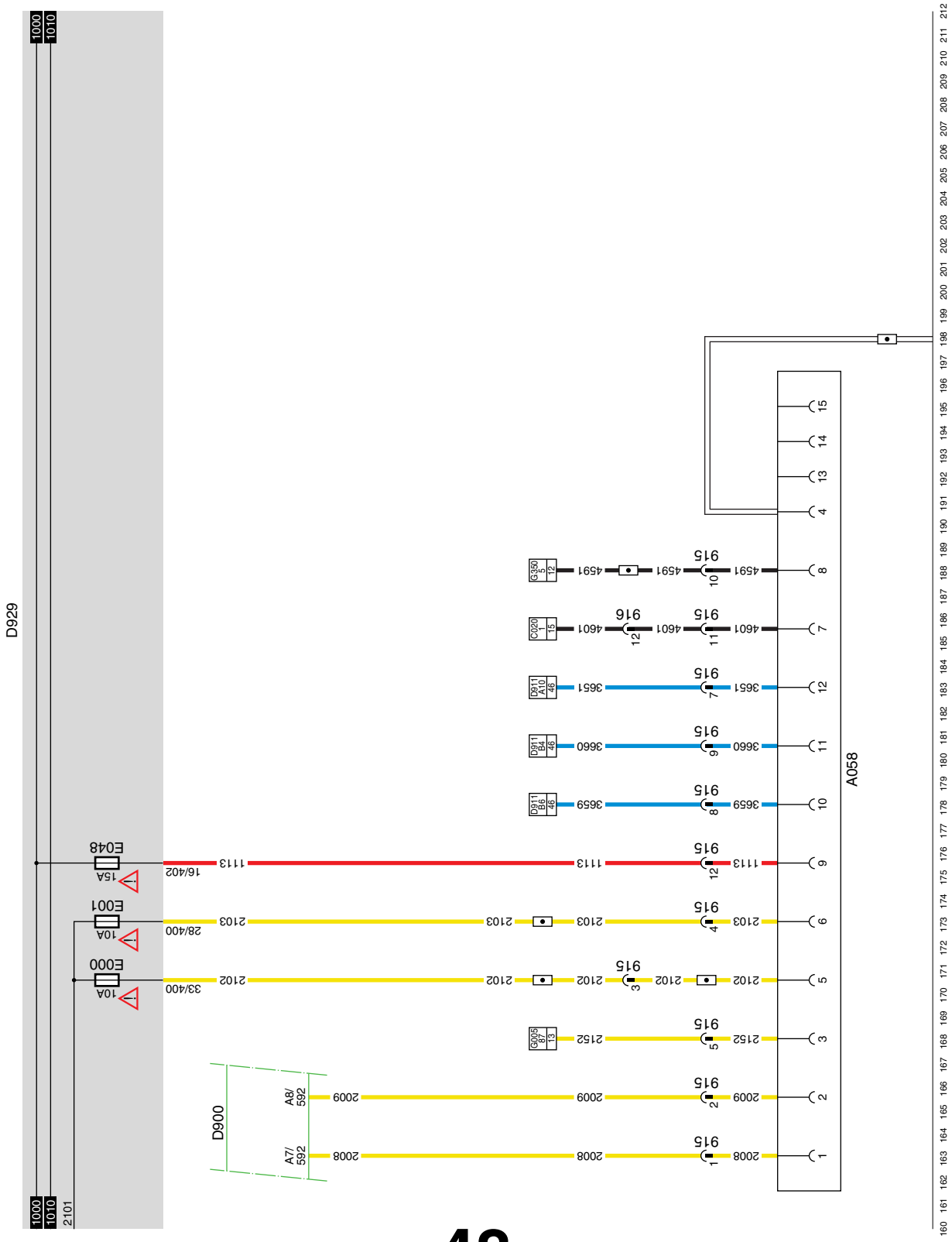

© 200520

https://truckmanualshub.com/

https://truckmanualshub.com/

53 CAR KIT TELEPHONE

The following description of the operation and connection is intended as a general guideline only.

Also refer to the manufacturer's installation instructions supplied with the radio.

If the accessories/ignition/starter switch (C539) is switched to accessories position, pin 1 is connected to pin 6 (wire 1100 is connected to wire 1130). As a result, a voltage is applied to connection point 1 of relay G377. This relay is activated. There is now a power supply of 12 volts to connection point A7 of the "ISO" connector through wire 1108 and contacts 3-5 of relay G377 and wire 1363.

The radio has an aerial connection and 2 loudspeaker outputs which can be used to connect loudspeakers B024 and B025. Two high-tone and two low-tone speakers (B178, B179 and B180, B181) can also be connected to the radio.

For more information: see also block 6: Connection of accessories.

VARIANTS

Location	
20	Connector 554 contains wire 1363. This wire should be connected to the combi-aerial.
40	Wire 5402 is a "mute" connection. It should be connected to the "mute" input of the radio.
51	This wiring harness contains a "sub.D-connector" and therefore has no connector number.

© 200520

https://truckmanualshub.com/

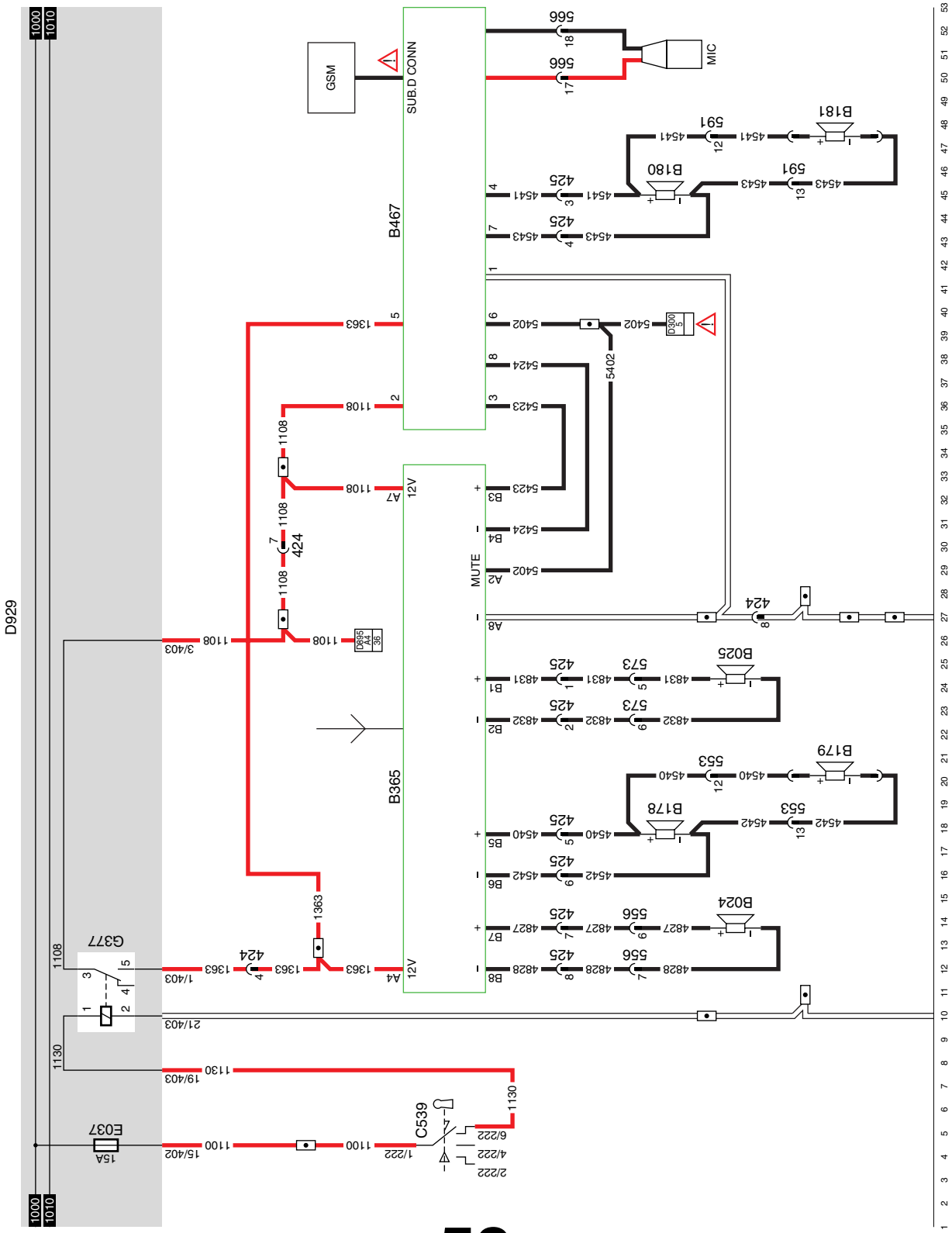

53

1358030/35-37

EL001807

11

https://truckmanualshub.com/

https://truckmanualshub.com/

CONTENTS

		Page	Date
1.	**INTRODUCTION**	1-1	200520
2.	**ELECTRICAL SYSTEM: OPTIONS AND SPECIAL APPLICATIONS FROM CHASSIS NUMBER 0E615715**	2-1	200520
2.1	Circuit diagram 1454219/03	2-1	200520
2.2	Overview of basic codes for circuit diagram 1454219/03	2-2	200520
3.	**ELECTRICAL SYSTEM: OPTIONS AND SPECIAL APPLICATIONS FROM CHASSIS NUMBER 0E678692**	3-1	200520
3.1	Circuit diagram 1454219/09	3-1	200520
3.2	Overview of basic codes for circuit diagram 1454219/09	3-2	200520

https://truckmanualshub.com/

https://truckmanualshub.com/

1. INTRODUCTION

This main group includes the entire electrical system for options and special applications shown in the form of **circuit diagrams**.

Circuit diagram
The circuit diagram contains all information relating to the entire electrical system: options and special applications which can be used in the vehicle, with the exception of the connectors.

https://truckmanualshub.com/

https://truckmanualshub.com/

2. ELECTRICAL SYSTEM: OPTIONS AND SPECIAL APPLICATIONS FROM CHASSIS NUMBER 0E615715

2.1 CIRCUIT DIAGRAM 1454219/03

This page can be used to make your own notes on the circuit diagram.

https://trucksmanualshub.com/

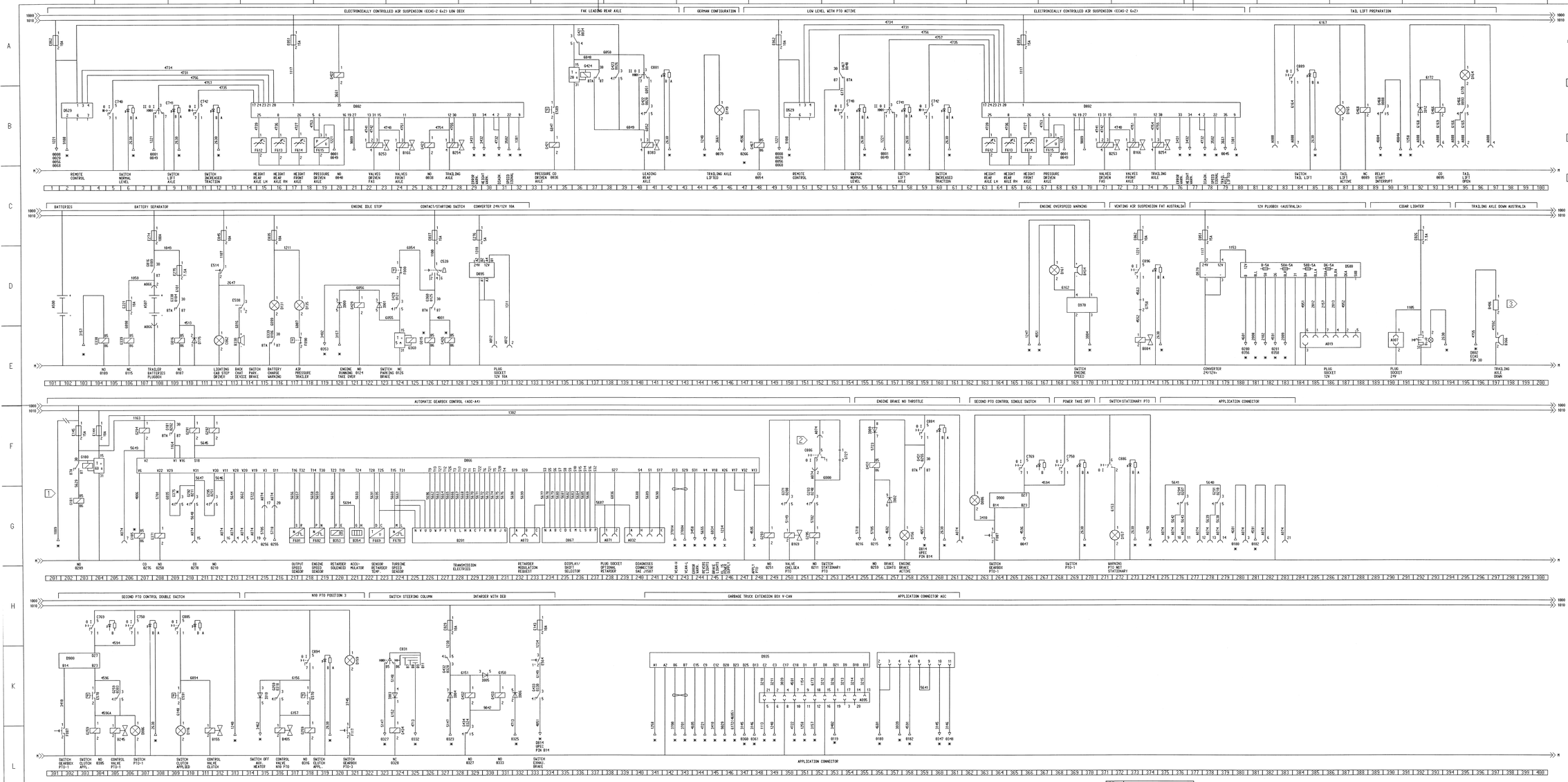

* OPMERKING/note

VOOR ANDERE AANSLUITPUNTEN VAN DEZE ADERS ZIE TEKENING STANDAARD PRINCIPESCHEMA

For other connections of these wires, refer to drawing of standard principal diagram

1 OPMERKING/note

BIJ TOEPASSING VAN EEN HOOFDSCHAKELAAR, VOEDING 1809 RECHTSTREEKS VAN DE ACCU. BIJ VEILIGHEIDSEISEN: KOMPONENTEN E145, G180 EN G181 IN EEN EXPLOSIEVRIJE VERBEILSDOOS BIJ DE ACCU MONTEREN.

When a mainswitch is applied, power supply 1809 directly from the batteries
With safety requirements: components E145,G180 and G181 to be fitted in an explosionfree junctionbox near the batteries

2 OPMERKING/note

G727, DOORVERBINDING VOOR STATIONAIRE PTO
C886, SCHAKELAAR STATIONAIRE OF RIJDENDE PTO

G727 through connection for stationairy PTO
C886, switch stationairy or driving PTO

3 OPMERKING/note

WEERSTAND 56 OHM TBV STROOMBEGRENZING

Resistor 56 ohm current limiter

1454219 / 03
1v1

DAF

2 v 2	DAF		
1 v 1	1454219	/ 03	

https://truckmanualshub.com/

2.2 OVERVIEW OF BASIC CODES FOR CIRCUIT DIAGRAM 1454219/03

Basic code number	Description	Number on search bar
A007	24V socket (2-pin)	190
A012	12V socket, 2-pin	130, 131
A019	12V socket (7-pin)	186
A032	AGC automatic gearbox diagnostics socket	239
A066	Semi-trailer socket (2-pin)	107, 108
A071	Automatic gearbox socket, intarder functions	238
A073	Automatic gearbox socket, operation	232
A074	Automatic gearbox socket, superstructure	206, 210, 212, 213, 214, 215, 216, 252, 261, 275, 276, 277, 278, 279, 280, 282, 283, 359
A088	Superstructure socket, tail lift (21-pin)	82, 84, 92, 93, 94, 95, 97
A095	Application connector	355
A500	Batteries (2x)	101
A507	Batteries for superstructure/radio/tail lift (2x)	107
B030	Cigar lighter, driver's side	192
B084	Air suspension bleed valve	174
B155	Operation valve, PTO, 2nd	312
B166	ECAS valve, front axle	24, 73
B169	PTO operation valve, Chelsea	250
B201	Internal electrical components for AGC automatic gearbox	228
B245	PTO operation valve	305
B253	ECAS valve, driven axle left/right, air supply	23, 71
B254	ECAS valve, steered leading rear axle/trailing axle left/right, lifting bellows	28, 75
B330	Buzzer indicating door open, handbrake not in use	114
B353	Automatic gearbox control solenoid, retarder	220
B354	Accumulator, AGC-A4 automatic gearbox	221

https://truckmanualshub.com/

Basic code number	Description	Number on search bar
B366	Buzzer indicating trailing axle lowering	198
B383	ECAS valve, FAK/FTM leading rear axle	41
B405	Operation valve, PTO, 3rd	316
B406	Resistor, trailing axle lowering	197
B434	Buzzer indicating engine speed too high	170
C062	Cab stepwell lighting, driver's side	113
C539	Accessories/ignition/starter switch	127
C740	ECAS switch, normal level	5, 54
C741	ECAS switch, axle lifting	9, 57
C742	Traction assistance switch	11, 60
C750	PTO operation switch	269, 307
C769	PTO operation switch	266, 304
C831	Cruise control/engine speed control/retarder stalk switch	324
C881	ECAS switch, lifting	41
C884	Engine brake switch, retarder function	259
C885	Clutch operation switch	310
C886	PTO switch, idling	251, 272
C889	Tail lift switch	84
C894	Operation switch, PTO, 3rd	318
C896	Air suspension bleed switch	174
D086	PTO warning light (orange)	263, 307
D116	Warning lamp (red) for second operation, PTO on	310
D131	Warning lamp (red), semi-trailer connection	116
D135	Warning lamp, semi-trailer air pressure	118
D149	Warning lamp, lifting axle lifted	46
D156	Engine brake warning lamp, retarder function	258
D157	Warning lamp, idling PTO	272
D159	Warning lamp, PTO, 3rd	321
D161	Warning lamp indicating engine speed too high	168
D164	Warning lamp, tail lift open	96
D165	Warning lamp, tail lift operated	87
D529	Electronic unit, ECAS remote control	2, 50

https://truckmanualshub.com/

Basic code number	Description	Number on search bar
D579	Electronic unit for converter, 24/12 V (15 A)	177
D580	Electronic unit for voltage reduction, 24/12V	187
D775	Diode, battery partition, semi-trailer	111
D802	Electronic unit, ECAS-2 (6x2)	21, 70
D866	Electronic unit, AGC-A4 automatic gearbox control	228
D867	Selector for AGC automatic gearbox	235
D895	Electronic unit, converter (10 A) with power supply for radio memory	129
D900	VIC electronic unit	264, 302
D935	CAN extension box CXB	348
D970	Electronic unit for engine speed switch	169
E026	Fuse, cigar lighter/door switches/electronic unit, 24/12 V converter with power supply for radio memory	192
E029	Fuse, intarders/engine brake	327
E035	Fuse, instruments and warning lamps/parking brake switch/power supply after contact	115
E037	Fuse, ignition switch	126
E045	Fuse, interior lighting	112
E051	Fuse, ECAS/EMAS	17, 65, 177
E062	Fuse, ECAS/EMAS mechanical lifting gear	1, 49, 173
E143	Fuse, UPEC/tachograph/alarm system/immobiliser/ABS-D/ABS/ASR-E	333
E144	Fuse, AGC-A4 automatic gearbox	204
E145	Fuse, AGC-A4 automatic gearbox	202
E221	Fuse for superstructure	106
E274	Main fuse, battery partition	107
E275	Fuse, battery partition	109
E276	Fuse, converter	129
E514	Operating switch for stepwell/interior lighting, driver's side door switch	112
E564	Operating switch, engine brake	334
E570	Proximity switch, clutch-PTO N10	304, 318

https://truckmanualshub.com/

Basic code number	Description	Number on search bar
E589	ECAS operating switch, driven axle	35
E591	Operating switch, clutch	310
E598	Operating switch, buzzer	113
F000	Control switch for parking brake	124
F087	Control switch, gearbox PTO	264, 302
F090	Control switch for ABS/parking brake/drawn vehicle	118
F117	Control switch, PTO, 3rd	321
F601	Sensor, output shaft speed, AGC automatic gearbox	217
F602	Sensor, input shaft speed, AGC automatic gearbox	218
F612	Height sensor, ECAS, rear axle, left	14, 63
F613	Height sensor, ECAS, rear axle, right	16, 64
F614	Height sensor, ECAS, front axle	17, 66
F615	Pressure sensor, ECAS, driven axle, left/right	19, 67
F669	Retarder temperature sensor - AGC-A4 automatic gearbox	222
F670	Sensor, turbine speed, AGC automatic gearbox AT1000/2000	224
G015	Relay, contact	126
G016	Partition relay	107, 109
G180	Time relay power supply, Allison, 12V	203
G181	Takeover relay power supply, Allison, 12V	202, 209
G185	Starting circuit interrupter relay	206
G259	PTO operation takeover relay	303, 305, 316, 318
G291	Relay, AGC-A4 automatic gearbox	210, 278
G292	Relay, AGC-A4 automatic gearbox	210, 211
G293	Relay, AGC-A4 automatic gearbox	248, 251
G294	Relay, AGC-A4 automatic gearbox	207, 276
G295	Relay, AGC-A4 automatic gearbox	211, 251
G338	Relay, battery partition	104, 109
G339	Relay, battery partition warning lamp	106, 115
G360	Relay, engine stop	125, 126
G371	Relay, automatic gearbox, superstructure	208, 250

https://truckmanualshub.com/

Basic code number	Description	Number on search bar
G375	Relay, stop light for AGC-A4 automatic gearbox with retarder	209
G421	Relay, ECAS, leading rear axle, lowering	34, 35
G422	Relay, ECAS, leading rear axle, lifting	20, 40
G423	Relay, ECAS, leading rear axle lowering before trailing axle is lowered	26, 38
G424	Time relay, ECAS, leading rear axle, lowering	37
G426	Relay, contact	127
G429	Relay, parking brake	121, 124
G431	Engine brake relay, retarder function	255, 259
G432	Intarder + DEB relay	327, 328
G433	DEB relay disengaged	330, 333
G434	Intarder + DEB relay	324, 328
G466	Relay, tail lift open	93, 95
G467	Relay, ECAS, lowering if PTO active	48, 54
G468	Relay for interrupting starting circuit during use of tail lift	88, 89
G727	Connection for PTO	254
G758	Air suspension bleed through-connection	174
I000	Diode to prevent “engine running” takeover relay feedback	120
I001	Diode to prevent “engine stop” takeover relay feedback	123
I002	Diode to prevent stop-lights feedback	257
I003	Diode to prevent cruise control/engine speed control/retarder stalk switch feedback	323
I004	Diode to prevent cruise control/engine speed control/retarder stalk switch feedback	328
I005	Diode to prevent intarder/DEB relay feedback	330
I006	Diode to prevent cruise control/engine speed control/retarder stalk switch feedback	332
I009	Diode to prevent stop-lights feedback	255
I010	Diode to prevent feedback, PTO, 3rd	315
I012	Polarity diode, tail lift open indication	92

https://truckmanualshub.com/

3. ELECTRICAL SYSTEM: OPTIONS AND SPECIAL APPLICATIONS FROM CHASSIS NUMBER 0E678692

3.1 CIRCUIT DIAGRAM 1454219/09

This page can be used to make your own notes on the circuit diagram.

https://truckmanualshub.com/

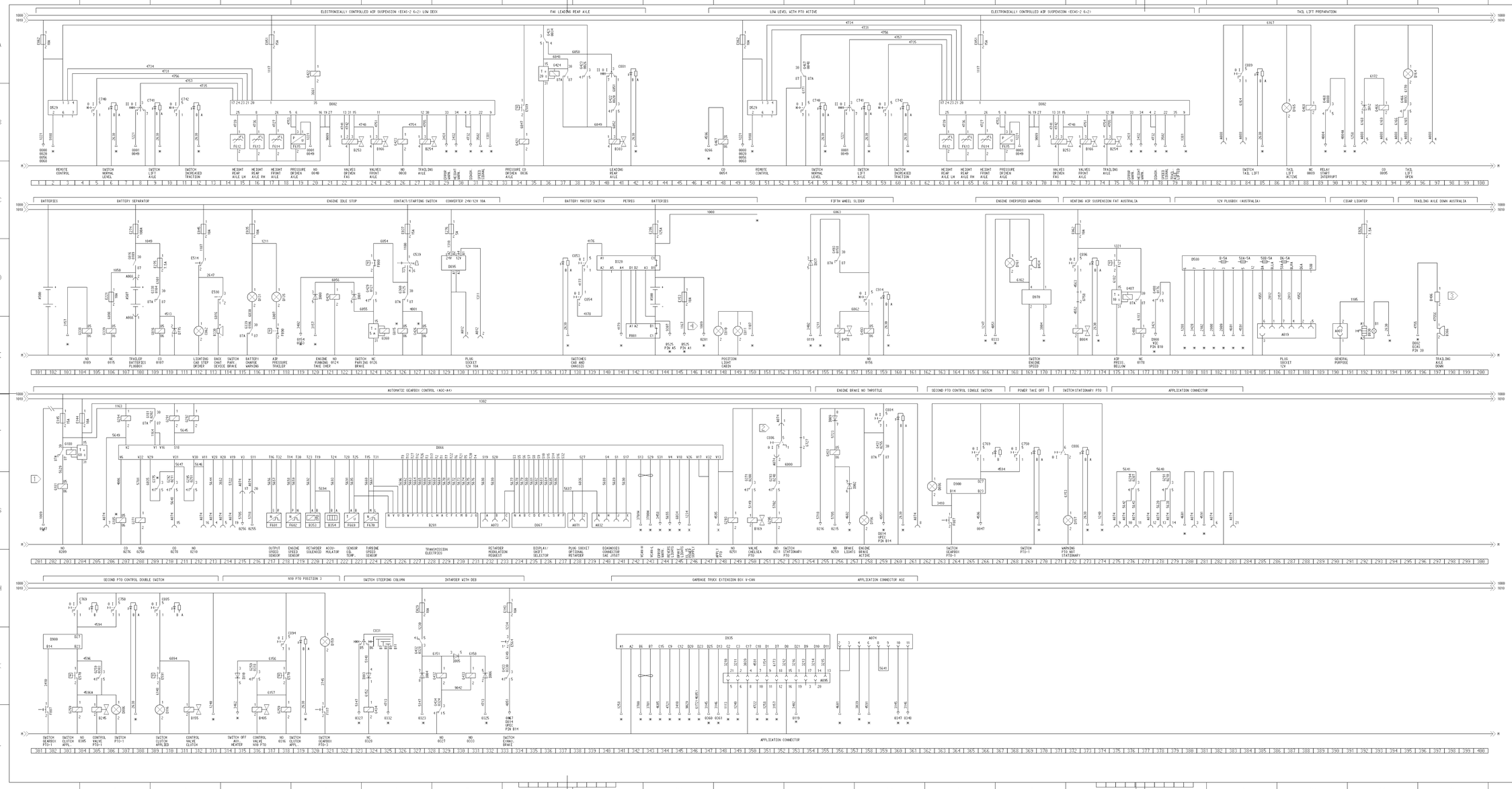

* OPMERKING/note

VOOR ANDERE AANSLUITPUNTEN VAN DEZE ADERS ZIE TEKENING STANDAARD PRINCIPESCHEMA	For other connections of these wires, refer to drawing of standard principal diagram

1 OPMERKING/note

BIJ TOEPASSING VAN EEN HOOFDSCHAKELAAR, VOEDING 1089 RECHTSTREEKS VAN DE ACCU.	When a mainswitch is applied, power supply 1089 directly from the batteries
BIJ VEILIGHEIDSEISEN: KOMPONENTEN E146, G180 EN G181 IN EEN EXPLOSIEVRIJE VERKELEDOOS BIJ DE ACCU MONTEEREN.	With safety requirements: components E146, G180 and G181 to be fitted in an explosionfree junctionbox near the batteries

2 OPMERKING/note

G727 DOORVERBINDING VOOR STATIONAIRE PTO	G727 through connection for stationairy PTO
C886 SCHAKELAAR STATIONAIRE OF RIJDENDE PTO	C886, switch stationairy or driving PTO

3 OPMERKING/note

WEERSTAND 56 OHM TBV STROOMBEGRENZING	Resistor 56 ohm current limiter

4 OPMERKING/note

BIJ VEILIGHEIDSEISEN: VOEDING ADER 1167 OP PIN A1 MASSA ADER 9307 OP PIN A5 TACHOGRAAF	With safety requirements: Power supply wire 1167 on pin A1 Ground wire 9307 on pin A5 Tachograph

1454219 / 09
1v1

DAF

https://truckmanualshub.com/

3.2 OVERVIEW OF BASIC CODES FOR CIRCUIT DIAGRAM 1454219/09

Basic code number	Description	Number on search bar
A007	Connector, 24 V (2-pin)	190
A012	Connector, 24 V (2-pin)	130, 131
A019	Connector, 12 V (7-pin)	186
A032	AGC diagnostic connector	239
A066	Application connector, engine speed control	107, 108
A071	Automatic gearbox connector, intarder functions	238
A073	Automatic gearbox connector, operation	232
A074	Automatic gearbox connector, superstructure	206, 212, 213, 214, 215, 216, 252, 261, 275, 276, 277, 278, 279, 280, 282, 283, 358
A088	Superstructure connector, tail lift (7-pin)	82, 84, 92, 93, 94, 95, 97
A095	Refuse collection vehicle superstructure application connector	355
A500	Batteries (2x)	101, 143
A507	Batteries for superstructure/radio/tail lift (2x)	107
B030	Cigar lighter, driver’s side	192
B084	Air suspension valve, bleeding	173
B155	2nd PTO control valve	312
B166	ECAS valve , front axle	24, 73
B169	PTO control valve, Chelsea	250
B201	Internal electrical components for automatic gearbox	228
B245	PTO 1 control valve	305
B253	ECAS valve, driven axle, air supply	23, 71
B254	ECAS valve, steered leading rear axle/trailing axle, lifting bellows	28, 75
B330	Buzzer indicating door open, handbrake not in use	113
B353	Automatic gearbox control solenoid, retarder	220
B354	Automatic gearbox accumulator, retarder	221
B366	Buzzer indicating trailing axle lowering	198
B383	ECAS valve, FAK/FTM leading rear axle	41

https://truckmanualshub.com/

Basic code number	Description	Number on search bar
B405	3rd PTO control valve	316
B406	Resistor, trailing axle lowering	197
B434	Buzzer indicating engine speed too high	170
B478	Fifth wheel guide valve	156
C010	Marker lights, left	148
C011	Marker lights, right	150
C062	Stepwell lighting, left	113
C539	Accessories / ignition / starter switch	127
C740	ECAS switch, normal level	5, 54
C741	ECAS switch, axle lifting	9, 57
C742	Traction assistance switch	11, 60
C750	PTO 1 switch	269, 307
C769	PTO operation switch	266, 304
C831	Cruise control/engine speed control/retarder stalk switch	324
C853	Cab main switch	138
C854	Chassis main switch	139
C881	ECAS switch, lifting axle	41
C884	Engine brake switch, retarder function	259
C885	Clutch operation switch	310
C886	Idling PTO switch	251, 272
C889	Tail lift switch	84
C894	3rd PTO switch	318
C896	Airglide air suspension bleed switch	173
C914	Fifth wheel guide switch	159
D086	PTO warning light (orange)	263, 307
D116	Warning lamp (red) for second operation, PTO on	310
D131	Warning lamp (red), semi-trailer connection	116
D135	Warning lamp, semi-trailer air pressure	118
D156	Engine brake warning lamp, retarder function	258
D157	Idling PTO warning lamp	272
D159	3rd PTO warning lamp	321
D161	Warning lamp indicating engine speed too high	168

https://truckmanualshub.com/

Basic code number	Description	Number on search bar
D164	Warning lamp, tail lift open	96
D165	Warning lamp, tail lift operated	87
D529	Remote control system, ECAS	2, 50
D580	Electronic unit, 24/12V converter, with power supply for radio memory	180
D775	Diode, battery partition, semi-trailer	111
D802	Electronic unit, ECAS-2	21, 70
D866	Electronic unit, AGC-A4 automatic gearbox control	228
D867	Automatic gearbox selector	235
D895	Electronic unit, converter (10 A) with power supply for radio memory	129
D900	VIC electronic unit	264, 302
D935	CAN extension box CXB	348
D970	Electronic unit for engine speed switch	169
E026	Fuse, cigar lighter/door switches/electronic unit, 24/12 V converter with power supply for radio memory	192
E029	Fuse, intarder/engine brake	327
E035	Fuse, instruments and warning lamps/parking brake switch/power supply after contact	115
E037	Fuse, ignition switch	126
E045	Fuse, interior lighting	112
E051	Fuse, ECAS/EMAS	17, 65
E062	Fuse, ECAS/EMAS mechanical lifting gear	1, 49, 172
E143	Fuse, UPEC/tachograph/alarm system/immobiliser/ABS-D/ABS/ASR-E	333
E144	Fuse, AGC-A automatic gearbox	204
E145	Fuse, AGC-A automatic gearbox	202
E153	Fuse, main switch for timer/engine stop/main switch power supply	145
E221	Fuse for superstructure	106
E274	Main fuse, battery partition	107
E275	Fuse, battery partition	109
E276	Fuse, converter	129

https://truckmanualshub.com/

Basic code number	Description	Number on search bar
E286	Main fuse	143
E514	Cab stepwell lighting/interior lighting door switch, driver's side	112
E564	Engine brake switch	334
E570	Proximity switch, clutch-PTO N10	304, 318
E589	Switch, ECAS, driven axle, FAK	35
E591	Clutch switch	310
E598	Parking brake valve switch	113
F000	Parking brake switch	124
F087	Control switch, gearbox PTO	264, 302
F090	Control switch for ABS/parking brake/drawn vehicle	118
F117	Control switch, PTO, 3rd	321
F127	Airglide pneumatic switch	175
F601	Output shaft speed sensor, automatic gearbox	217
F602	Input shaft speed sensor, automatic gearbox	218
F612	Height sensor, ECAS, rear axle, left	14, 63
F613	Height sensor, ECAS, rear axle, right	16, 64
F614	Height sensor, ECAS, front axle	17, 66
F615	Pressure sensor, ECAS, driven axle, right	19, 67
F669	Retarder oil temperature sensor, automatic gearbox	222
F670	Automatic gearbox turbine speed sensor	224
G015	Contact relay	126
G016	Battery partition relay	107, 109
G180	Time relay, automatic gearbox	203
G181	Takeover relay, automatic gearbox	202, 209
G185	Starting circuit interrupter relay	206
G259	PTO operation takeover relay	303, 305, 316, 318
G291	Relay, automatic gearbox	210, 278
G292	Relay, automatic gearbox	210, 211
G293	Relay, automatic gearbox	248, 251
G294	Relay, automatic gearbox	207, 276

https://truckmanualshub.com/

Basic code number	Description	Number on search bar
G295	Relay, automatic gearbox	211, 251
G338	Battery partition relay	104, 109
G339	Relay, battery partition warning lamp	106, 115
G360	Engine stop relay	125, 126
G371	PTO relay, automatic gearbox	208, 250
G375	Stop light relay for automatic gearbox with retarder	209
G421	Relay, ECAS, leading rear axle, lowering	34, 36
G422	Relay, ECAS, leading rear axle, lifting	20, 40
G423	Relay, ECAS, leading rear axle lowering before trailing axle is lowered	26, 38
G424	Time relay, ECAS, leading rear axle, lowering	37
G426	Contact relay	127
G429	“Engine running” signal takeover relay	121, 124
G431	Engine brake relay, retarder function	255, 259
G432	Intarder + DEB relay	327, 328
G433	DEB relay, switched off	330, 333
G434	Intarder + DEB relay	324, 328
G466	Tail lift relay, open	93, 95
G467	Relay, ECAS, lowering if PTO active	48, 54
G468	Relay for interrupting starting circuit during use of tail lift	88, 89
G487	Airglide time relay	176
G488	Airglide signal relay	176, 178
G493	Diode, parking brake	156, 158
G727	Connection for PTO	254
G758	Air suspension bleed through-connection	173
I000	Diode, “engine running” takeover relay	120
I001	Diode, “engine off” takeover relay	123
I002	Diode, stop lights	257
I003	Diode, cruise control/engine speed control/retarder stalk switch	323
I004	Diode, cruise control/engine speed control/retarder stalk switch	328
I005	Diode, intarder/DEB relay	330

https://truckmanualshub.com/

Basic code number	Description	Number on search bar
I006	Diode, cruise control/engine speed control/retarder stalk switch	332
I009	Diode, stop lights	255
I010	Diode, PTO, 3rd	315
I012	Polarity diode, tail lift open indication	92
I037	Diode, parking brake	154
R001	Earth, main switch relay	143

https://truckmanualshub.com/