https://truckmanualshub.com/

6SE567 2007

EPA07 Series 60®
DDEC VI®
Troubleshooting Guide

DETROIT DIESEL®

Detroit Diesel
13400 Outer Drive, West / Detroit, Michigan 48239-4001
Telephone: 313-592-5000
Fax: 313-592-5802
http://www.detroitdiesel.com

NOTE:
Additional copies of this troubleshooting manual may be purchased from Detroit Diesel Distributors. See your yellow pages - under Engines, Diesel.

Detroit Diesel®, DDC®, DDEC® and the spinning arrows design are registered trademarks of Detroit Diesel Corporation.
All other trademarks are the property of their respective owners.
All information subject to change without notice.
6SE567 Copyright © 2007 DETROIT DIESEL CORPORATION. All rights reserved. Printed in U.S.A.

https://truckmanualshub.com/

CALIFORNIA
Proposition 65 Warning

Diesel engine exhaust and some of its constituents are known to the State of California to cause cancer, birth defects, and other reproductive harm.

https://truckmanualshub.com/

ENGINE EXHAUST

Consider the following before servicing engines:

TRADEMARK INFORMATION

DDC®, Detroit Diesel®, DDEC®, Diagnostic Link®, Optimized Idle®, Optimized Idle®, Pro-Link®, and Series 60® are registered trademarks of Detroit Diesel Corporation. All other trademarks used are the property of their respective owners.

MCM/CPC WARNING

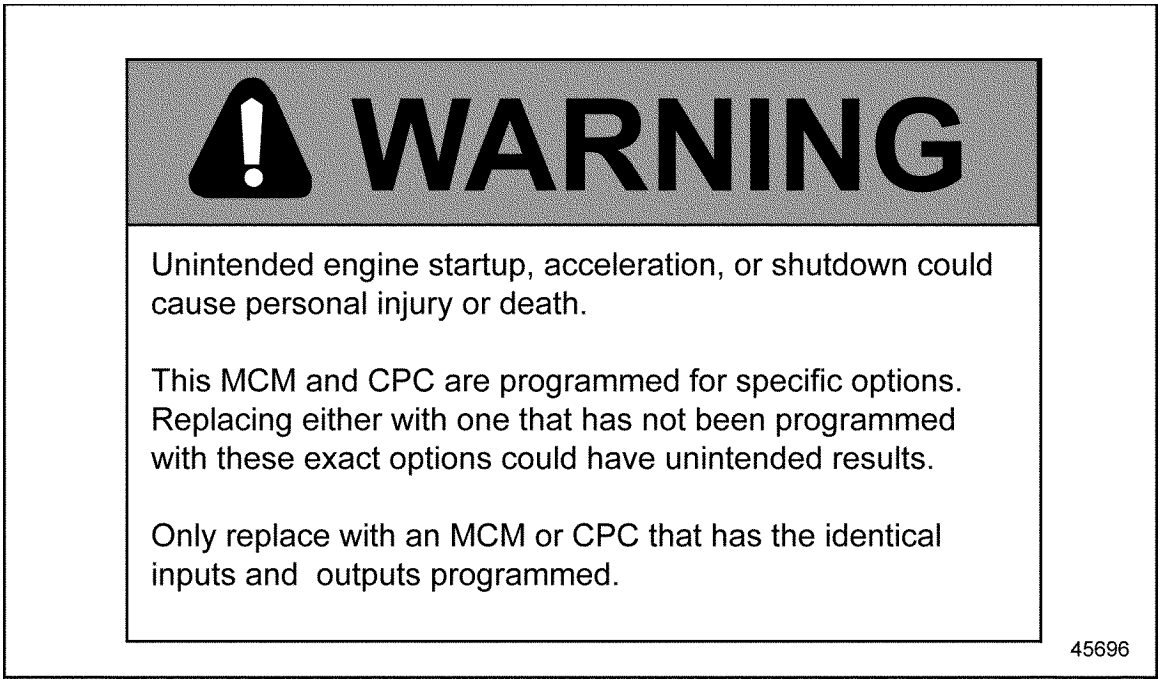

Figure 1 MCM/CPC Replacement Warning

SOFTWARE UPGRADES

NOTE:
These engines are equipped with DaimlerChrysler software. This software generally assures optimal engine performance. The installation of software upgrades may cause minor changes in features and engine performance.

ABSTRACT

This manual provides instruction for troubleshooting DDEC® VI Series 60® engines.

Specifically covered in this manual are troubleshooting and repair steps that apply to the DDEC VI.

All information subject to change without notice.
Copyright © 2007 DETROIT DIESEL CORPORATION

https://truckmanualshub.com/

SAFETY INSTRUCTIONS

To reduce the chance of personal injury and/or property damage, the instructions contained in this troubleshooting manual must be carefully observed. Proper service and repair are important to the safety of the service technician and the safe, reliable operation of the engine.

If part replacement is necessary, the part must be replaced with one of the same part number or with an equivalent part number. Do not use a replacement part of lesser quality. The service procedures recommended and described in this manual are effective methods of performing repair. Some of these procedures require the use of specially designed tools. Accordingly, anyone who intends to use a replacement part, procedure or tool which is not recommended, must first determine that neither personal safety nor the safe operation of the engine will be jeopardized by the replacement part, procedure or tool selected.

It is important to note that this manual contains various hazard notices labeled “Warnings, “Cautions" and "Notices" that must be carefully observed in order to reduce the risk of personal injury during repair, or the possibility that improper repair may damage the engine or render it unsafe. It is also important to understand that these “Warnings,” "Cautions" and "Notices" are not exhaustive. It is impossible to warn personnel of all the possible hazardous consequences that might result from failure to follow these instructions.

A LETTER TO THE TECHNICIANS

Technicians today are required to have computer skills, excellent comprehension of the written word and possess an extensive diagnostic understanding of the various technological systems and components. Technicians today must perform at a higher level of efficiency and competency than their predecessors and at the same time furnish professional quality support.

As the leader in engine computer systems and technology, Detroit Diesel Corporation remains focused on providing excellence in products, service support and training. As products become more and more advanced, technicians must become specialized in multiple areas. This manual is designed with that thought in mind. The Detroit Diesel 2007 Electronics Controls Troubleshooting Guide will provide you with concentrated information that will allow you to excel in 2007 Electronics Controls technology.

All information subject to change without notice.
Copyright © 2007 DETROIT DIESEL CORPORATION

https://truckmanualshub.com/

TABLE OF CONTENTS

1 INTRODUCTION

1.1 OVERVIEW 1-3
1.2 SCOPE AND USE OF THIS GUIDE 1-4
1.3 SAFETY PRECAUTIONS 1-6

2 LOW OIL PRESSURE

2.1 IMPROPER ENGINE OIL LEVEL 2-3
2.2 IMPROPER LUBRICATING OIL VISCOSITY 2-4
2.3 LUBRICATING OIL DILUTED WITH FUEL OIL OR ENGINE COOLANT 2-5
2.4 FAULTY OIL PRESSURE GAUGE SENSOR 2-6
2.5 ROCKER ARM SHAFT PLUGS MISSING (NEW OR REBUILT ENGINES ONLY) 2-7
2.6 RESTRICTED OIL COOLER 2-9
2.7 NONFUNCTIONAL OR STICKING OIL PRESSURE REGULATOR VALVE 2-10
2.8 DEFECTIVE BYPASS VALVE 2-12
2.9 DEFECTIVE PRESSURE RELIEF VALVE 2-13
2.10 DEFECTIVE PICKUP SCREEN TUBE AND SCREEN ASSEMBLY 2-14
2.11 DEFECTIVE CRANKSHAFT MAIN BEARING SHELLS 2-15
2.12 DEFECTIVE OIL PUMP ASSEMBLY 2-16
2.13 DETECTING INTERNAL FUEL LEAKS 2-17

3 MISFIRING CYLINDER

3.1 POOR VEHICLE GROUND 3-3
3.2 AERATED FUEL 3-5
3.3 FAULTY FUEL INJECTOR 3-6
3.4 FAULTY MOTOR CONTROL MODULE 3-7
3.5 WORN OR DAMAGED VALVE OR CYLINDER KIT 3-8

4 STARTING DIFFICULTY – ENGINE ROTATES

4.1 EMPTY FUEL TANK 4-3
4.2 LOW BATTERY VOLTAGE 4-3
4.3 CORRODED OR DAMAGED BATTERY TERMINALS 4-4
4.4 DEFECTIVE MAGNETIC SWITCH 4-5
4.5 DEFECTIVE STARTER 4-6
4.6 LOW CRANKING SPEED 4-7
4.7 FUEL SUPPLY VALVE 4-8
4.8 PLUGGED FUEL FILTER(S) 4-9
4.9 FUEL PUMP 4-10
4.10 AERATED FUEL 4-11
4.11 RESTRICTIVE AIR FILTER 4-12
4.12 LOW COMPRESSION 4-13
4.13 EXTENDED CRANK TIME 4-19

All information subject to change without notice.
Copyright © 2007 DETROIT DIESEL CORPORATION

4.14 CRANK NO START 4-21

5 NO START - ENGINE WILL NOT ROTATE

5.1 DISCHARGED BATTERY 5-3
5.2 DEFECTIVE MAGNETIC SWITCH 5-4
5.3 DEFECTIVE STARTER 5-5
5.4 INTERNAL ENGINE DAMAGE 5-6

6 EXCESSIVE OIL CONSUMPTION

6.1 EXTERNAL OIL LEAKS 6-3
6.2 LEAKING OIL COOLER CORE 6-4
6.3 DEFECTIVE AIR COMPRESSOR 6-6
6.4 DEFECTIVE TURBOCHARGER 6-8
6.5 WORN OR DAMAGED VALVE OR CYLINDER KIT 6-9

7 EXCESSIVE CRANKCASE PRESSURE

7.1 OBSTRUCTION OR DAMAGE TO ROCKER COVER BREATHER 7-3
7.2 DEFECTIVE AIR COMPRESSOR 7-4
7.3 DEFECTIVE TURBOCHARGER 7-6
7.4 WORN OR DAMAGED VALVE OR CYLINDER KIT 7-7

8 EXCESSIVE EXHAUST SMOKE - BLACK OR GRAY

8.1 IMPROPER GRADE OF DIESEL FUEL 8-3
8.2 RESTRICTED AIR CLEANER ELEMENT 8-4
8.3 RESTRICTED OR CRACKED CHARGE AIR COOLER 8-5
8.4 FAULTY EXHAUST SYSTEM 8-7
8.5 FAULTY FUEL INJECTOR 8-8
8.6 DEFECTIVE TURBOCHARGER 8-9

9 EXCESSIVE BLUE SMOKE

9.1 DEFECTIVE TURBOCHARGER 9-3
9.2 WORN OR DAMAGED VALVE OR CYLINDER KIT 9-5

10 EXCESSIVE WHITE SMOKE

10.1 IMPROPER GRADE OF FUEL 10-3
10.2 DEFECTIVE FUEL PUMP 10-4
10.3 AERATED FUEL 10-6
10.4 IMPROPER INJECTOR CALIBRATION SETTING 10-7
10.5 IMPROPER VALVE CLEARANCE OR INJECTOR HEIGHT, WORN OR DAMAGED CAMSHAFT LOBES AND ROLLERS 10-8
10.6 FAULTY FUEL INJECTOR 10-9

11 ROUGH RUNNING OR STALLING

11.1 LOW BATTERY VOLTAGE 11-3
11.2 AERATED FUEL 11-4
11.3 INSUFFICIENT FUEL FLOW 11-4
11.4 HIGH FUEL TEMPERATURE RETURN 11-6
11.5 IMPROPER INJECTOR CALIBRATION SETTING 11-8
11.6 LOW COMPRESSION PRESSURE 11-8

All information subject to change without notice.
Copyright © 2007 DETROIT DIESEL CORPORATION

https://truckmanualshub.com/

12 LOW POWER
12.1 FACTORS THAT AFFECT WHEEL HORSEPOWER 12-3
12.2 LOW HORSEPOWER INTERVIEW 12-6
12.3 AERATED FUEL 12-12
12.4 HIGH FUEL PRESSURE 12-13
12.5 HIGH FUEL TEMPERATURE RETURN 12-16
12.6 RESTRICTED AIR CLEANER ELEMENT 12-17
12.7 RESTRICTED OR CRACKED CHARGE AIR COOLER OR LEAKING INTAKE MANIFOLD 12-18
12.8 FAULTY EXHAUST SYSTEM 12-20
12.9 HIGH INLET AIR TEMPERATURE 12-21
12.10 HIGH ALTITUDE OPERATION 12-22
12.11 INCORRECT CAMSHAFT TIMING 12-24
12.12 POWER VERIFICATION WITH CHASSIS DYNAMOMETER 12-25

13 HIGH ENGINE COOLANT TEMPERATURE
13.1 IMPROPER ENGINE COOLANT LEVEL 13-3
13.2 INSUFFICIENT RADIATOR AIR CIRCULATION 13-5
13.3 FAULTY PRESSURE CONTROL CAP 13-6
13.4 DEFECTIVE COOLANT HOSES 13-7
13.5 FAN BELTS ARE INCORRECTLY ADJUSTED 13-8
13.6 INOPERATIVE THERMO-MODULATED FAN 13-9
13.7 FAULTY THERMOSTATS 13-10
13.8 FAULTY WATER PUMP 13-11
13.9 COMBUSTION GASES IN COOLANT 13-13
13.10 ABNORMAL RADIATOR COOLANT FLOW 13-19

14 LOW COOLANT TEMPERATURE
14.1 FAULTY THERMOSTATS 14-3

15 POOR FUEL ECONOMY
15.1 SOFTWARE VERSION 15-3

16 AIR COMPRESSOR
16.1 AIR COMPRESSOR TROUBLESHOOTING 16-3

17 DDEC VI SYSTEM
17.1 DDEC VI SYSTEM--HOW IT WORKS 17-3
17.2 MOTOR CONTROL MODULE 17-3
17.3 COMMON POWERTRAIN CONTROLLER 17-11
17.4 WIRES AND WIRING 17-21
17.5 CONDUIT AND LOOM 17-35
17.6 TAPE AND TAPING 17-36
17.7 SENSORS 17-37
17.8 INSTRUMENT PANEL LAMPS 17-51

18 ENGINE MANUFACTURER DIAGNOSTICS
18.1 ENGINE MANUFACTURER DIAGNOSTICS DEFINITIONS 18-3
18.2 ENGINE MANUFACTURER DIAGNOSTICS PARAMETER DESCRIPTIONS 18-4

All information subject to change without notice.
Copyright © 2007 DETROIT DIESEL CORPORATION

19 SPN 27 - EGR VALVE POSITION CIRCUIT FAULT
19.1 SPN 27/FMI 3 19-3
19.2 SPN 27/FMI 4 19-4
19.3 SPN 27/FMI 7 19-7
20 SPN 51 - INTAKE THROTTLE VALVE ABOVE OR BELOW NORMAL OPERATING RANGE
20.1 SPN 51/FMI 2, 3 OR 4 20-3
21 SPN 70 (CPC) - J1939 PARK BRAKE SWITCH SIGNAL ERRATIC OR MISSING
21.1 SPN 70/FMI 13 21-3
21.2 SPN 70/FMI 19 21-3
22 SPN 84 (CPC) - J1939 WHEEL-BASED VEHICLE SPEED SIGNAL ERRATIC OR MISSING
22.1 SPN 84/FMI 13 22-3
22.2 SPN 84/FMI 19 22-3
23 SPN 84 (CPC) – VEHICLE SPEED SENSOR
23.1 SPN 84/FMI 2 23-3
23.2 SPN 84/FMI 3 23-3
23.3 SPN 84/FMI 4 23-4
23.4 SPN 84/FMI 6 23-4
23.5 SPN 84/FMI 8 23-5
24 SPN 91 (CPC) – ACCELERATOR PEDAL SENSOR FAULT
24.1 SPN 91/FMI 2 24-3
24.2 SPN 91/FMI 3 24-4
24.3 SPN 91/FMI 4 24-5
25 SPN 94 – FUEL COMPENSATION PRESSURE SENSOR CIRCUIT FAULT
25.1 SPN 94/FMI 3 OR 4 25-3
26 SPN 100 — ENGINE OIL PRESSURE OUTSIDE OF NORMAL OPERATING RANGE
26.1 SPN 100/FMI 1 26-3
26.2 SPN 100/FMI 3 26-4
26.3 SPN 100/FMI 4 26-6
26.4 SPN 100/FMI 18 26-8
27 SPN 103 – TURBO NO REVOLUTION
27.1 SPN 103/FMI 0 27-3
27.2 SPN 103/FMI 1 27-4
27.3 SPN 103/FMI 4 27-5
28 SPN 108 - BAROMETRIC PRESSURE SENSOR CIRCUIT FAULT
28.1 SPN 108/FMI 3 28-3
28.2 SPN 108/FMI 4 28-3

All information subject to change without notice.
Copyright © 2007 DETROIT DIESEL CORPORATION

29 SPN 110 — COOLANT TEMPERATURE ABOVE OR BELOW NORMAL OPERATING RANGE
29.1 SPN 110/FMI 0 29-3
29.2 SPN 110/FMI 3 29-3
29.3 SPN 110/FMI 4 29-6
29.4 SPN 110/FMI 14 29-7
29.5 SPN 110/FMI 16 29-8

30 SPN 111 (CPC) – COOLANT LEVEL OUTSIDE NORMAL OPERATING RANGE
30.1 SPN 111/FMI 1 30-3
30.2 SPN 111/FMI 3 30-5
30.3 SPN 111/FMI 4 30-7

31 SPN 132 - AIR MASS FLOW NOT NORMAL
31.1 SPN 132/FMI1 31-3

32 SPN 168 – BATTERY VOLTAGE OUTSIDE NORMAL OPERATING RANGE
32.1 SPN 168/FMI 0 32-3
32.2 SPN 168/FMI 1 32-4

33 SPN 171 (CPC) - J1587 AMBIENT AIR TEMPERATURE SENSOR DATA NOT RECEIVED
33.1 SPN 171/FMI 9 33-3
33.2 SPN 171/FMI 14 33-3

34 SPN 174 – SUPPLY FUEL TEMPERATURE FAULT
34.1 SPN 174/FMI 3 34-3
34.2 SPN 174/FMI 4 34-5

35 SPN 175 – ENGINE OIL TEMPERATURE OUT OF NORMAL RANGE
35.1 SPN 175/FMI 3 35-3
35.2 SPN 175/FMI 4 35-5
35.3 SPN 175/FMI 14 35-5

36 SPN 190 - ENGINE SPEED HIGH
36.1 SPN 190/FMI 2 36-3

37 SPN 191 (CPC) - J1939 ETC1 MESSAGE MISSING AND TRANSMISSION OUTPUT SHAFT SPEED SIGNAL ERRATIC OR MISSING
37.1 SPN 191/FMI 9 37-3
37.2 SPN 191/FMI 13 37-3
37.3 SPN 191/FMI 19 37-4

38 SPN 247 (CPC) – MCM ENGINE HOURS DATA HIGHER OR LOWER THAN EXPECTED
38.1 SPN 247/FMI 0 38-3
38.2 SPN 247/FMI 1 38-3
38.3 SPN 247/FMI 9 38-4

All information subject to change without notice.
Copyright © 2007 DETROIT DIESEL CORPORATION

39 SPN 411 — EGR DIFFERENTIAL PRESSURE OR DELTA P SENSOR CIRCUIT OUTSIDE OF NORMAL OPERATING RANGE
39.1 SPN 411/FMI 0 39-3
39.2 SPN 411/FMI 3 39-4
39.3 SPN 411/FMI 4 39-6
39.4 SPN 411/FMI 13 39-8

40 SPN 412 - EGR TEMPERATURE IS OUTSIDE OF THE NORMAL RANGE
40.1 SPN 412/FMI 3 40-3
40.2 SPN 412/FMI 4 40-6
40.3 SPN 412/FMI 16 40-8
40.4 SPN 412/FMI 20 40-9

41 SPN 523 (CPC) - TRANSMISSION CURRENT GEAR SIGNAL ERRATIC OR MISSING
41.1 SPN 523/FMI 19 41-3
41.2 SPN 523/FMI 13 41-3

42 SPN 524 (CPC) - J1939 ETC2 MESSAGE IS MISSING
42.1 SPN 523/FMI 9 42-3

43 SPN 527 (CPC) - J1939 CCVS MESSAGE MISSING
43.1 SPN 527/FMI 9 43-3

44 SPN 558 (CPC) - IDLE VALIDATION SWITCH
44.1 SPN 558/FMI 1 44-3
44.2 SPN 558/FMI 3 44-3
44.3 SPN 558/FMI 4 44-5

45 SPN 596 (CPC) - CRUISE CONTROL ENABLE SWITCH SIGNAL ERRATIC OR MISSING
45.1 SPN 596/FMI 13 45-3
45.2 SPN 596/FMI 19 45-3

46 SPN 597 (CPC) - SERVICE BRAKE SWITCH SIGNAL ERRATIC OR MISSING
46.1 SPN 597/FMI 13 46-3
46.2 SPN 597/FMI 19 46-3

47 SPN 599 (CPC) - CRUISE CONTROL SWITCHES NOT FUNCTIONING PROPERLY
47.1 SPN 599/FMI 4 47-3

48 SPN 600 (CPC) - CRUISE CONTROL COAST SWITCH SIGNAL ERRATIC OR MISSING
48.1 SPN 600/FMI 13 48-3
48.2 SPN 600/FMI 19 48-3

All information subject to change without notice.
Copyright © 2007 DETROIT DIESEL CORPORATION

https://truckmanualshub.com/

49 SPN 602 (CPC) - CRUISE CONTROL ACCELERATE SWITCH SIGNAL ERRATIC OR MISSING
49.1 SPN 602/FMI 13 49-3
49.2 SPN 602/FMI 19 49-3
50 SPN 609 - MCM FAULT (ERRONEOUS DATA)
50.1 SPN 609/FMI 12 50-3
50.2 SPN 609/FMI 14 50-4
51 SPN 615 (CPC) - J1939 DM1 MESSAGE FROM TRANSMISSION MISSING
51.1 SPN 615/FMI 9 51-3
52 SPN 625 - CAN FAULT
52.1 SPN 625/FMI 2 52-3
52.2 SPN 625/FMI 9 52-5
53 SPN 628 (CPC) - MULTIPLE FAULTS
53.1 SPN 628/FMI 13 (ALL FAULT DESCRIPTIONS) 53-3
53.2 SPN 628/FMI 14 53-3
54 SPN 629 (CPC) - MULTIPLE FAULTS
54.1 SPN 629/FMI 2 54-3
54.2 SPN 629/FMI 12 54-4
55 SPN 630 (CPC) - MULTIPLE FAULTS
55.1 SPN 630/FMI 14 55-3
56 SPN 636 — CRANKSHAFT POSITION SENSOR OUTSIDE OF NORMAL OPERATING CONDITIONS
56.1 SPN 636/FMI 1 56-3
56.2 SPN 636/FMI 3 56-4
56.3 SPN 636/FMI 4 56-6
56.4 SPN 636/FMI 7 56-7
56.5 SPN 636/FMI 8 56-9
56.6 SPN 636/FMI 14 56-11
57 SPN 641 - SMART REMOTE ACTUATOR 5 (VGT) ABNORMAL OPERATION
57.1 SPN 641/FMI 7 57-3
57.2 SPN 641/FMI 8 57-5
57.3 SPN 641/FMI 9 57-6
57.4 SPN 641/FMI 11 57-7
57.5 SPN 641/FMI 14 57-9
57.6 SPN 641/FMI 31 57-12
58 SPN 647 - SINGLE-SPEED FAN (LOW-SIDE DIGITAL OUTPUT #3) FAULT
58.1 SPN 647/FMI 3 58-3
58.2 SPN 647/FMI 4 58-4
58.3 SPN 647/FMI 5 58-5

All information subject to change without notice.
Copyright © 2007 DETROIT DIESEL CORPORATION

59 SPN 651 – INJECTOR #1 NEEDLE VALVE NOT OPERATING NORMALLY
59.1 SPN 651/FMI 14 59-3
60 SPN 652 – INJECTOR #2 NEEDLE VALVE NOT OPERATING NORMALLY
60.1 SPN 652/FMI 14 60-3
61 SPN 653 – INJECTOR #3 NEEDLE VALVE NOT OPERATING NORMALLY
61.1 SPN 653/FMI 14 61-3
62 SPN 654 – INJECTOR #4 NEEDLE VALVE NOT OPERATING NORMALLY
62.1 SPN 654/FMI 14 62-3
63 SPN 655 – INJECTOR #5 NEEDLE VALVE NOT OPERATING NORMALLY
63.1 SPN 655/FMI 14 63-3
64 SPN 656 – INJECTOR #6 NEEDLE VALVE NOT OPERATING NORMALLY
64.1 SPN 656/FMI 14 64-3
65 SPN 703 (CPC) - ASG2 BACKUP LAMP
65.1 SPN 703/FMI 3 65-3
65.2 SPN 703/FMI 4 65-3
66 SPN 704 (CPC) - HIGH EXHAUST SYSTEM TEMPERATURE LAMP
66.1 SPN 704/FMI 3 66-3
66.2 SPN 704/FMI 4 66-3
67 SPN 704 - TURBO ACTUATOR CONTROL (AUX PWM #10)
67.1 SPN 704/FMI 3 67-3
67.2 SPN 704/FMI 4 67-4
67.3 SPN 704/FMI 5 67-5
68 SPN 705 (CPC) - MALFUNCTION INDICATOR LAMP
68.1 SPN 705/FMI 3 68-3
68.2 SPN 705/FMI 4 68-3
69 SPN 706 (CPC) - ASG2 CHECK TRANS TEMP LAMP
69.1 SPN 706/FMI 3 69-3
69.2 SPN 706/FMI 4 69-3
70 SPN 707 (CPC) - AMBER WARNING LAMP
70.1 SPN 707/FMI 3 70-3
70.2 SPN 707/FMI 4 70-3
71 SPN 708 (CPC) - ASG2 CHECK TRANS LAMP
71.1 SPN 708/FMI 3 71-3
71.2 SPN 708/FMI 4 71-3

All information subject to change without notice.
Copyright © 2007 DETROIT DIESEL CORPORATION

https://truckmanualshub.com/

72 SPN 709 (CPC) - RED STOP LAMP
72.1 SPN 709/FMI 3 72-3
72.2 SPN 709/FMI 4 72-3
73 SPN 711 (CPC) - DPF REGEN LAMP
73.1 SPN 711/FMI 3 73-3
73.2 SPN 711/FMI 4 73-3
74 SPN 713 (CPC) - TOP2 LOCKOUT SOLENOID
74.1 SPN 713/FMI 3 74-3
74.2 SPN 713/FMI 4 74-3
74.3 SPN 713/FMI 5 74-3
74.4 SPN 713/FMI 7 74-3
75 SPN 714 (CPC) - TOP2 SHIFT SOLENOID
75.1 SPN 714/FMI 3 75-3
75.2 SPN 714/FMI 4 75-3
75.3 SPN 714/FMI 5 75-3
76 SPN 715 (CPC) - VEHICLE POWER SHUTDOWN
76.1 SPN 715/FMI 3 76-3
76.2 SPN 715/FMI 4 76-3
76.3 SPN 715/FMI 5 76-3
77 SPN 723 – CAMSHAFT POSITION SENSOR FAULT
77.1 SPN 723/FMI 3 77-3
77.2 SPN 723/FMI 4 77-5
77.3 SPN 723/FMI 8 77-6
77.4 SPN 723/FMI 14 77-7
78 SPN 904 (CPC) - J1939 EBC2 MESSAGE MISSING AND FRONT AXLE SPEED SIGNAL ERRATIC OR MISSING
78.1 SPN 904/FMI 9 78-3
78.2 SPN 904/FMI 13 78-3
78.3 SPN 904/FMI 19 78-4
79 SPN 973 (CPC) - J1939 EBC1 MESSAGE MISSING AND ENGINE RETARDER SELECTION SIGNAL IS ERRATIC OR MISSSING
79.1 SPN 973/FMI 9 79-3
79.2 SPN 973/FMI 13 79-3
79.3 SPN 973/FMI 19 79-4
80 SPN 986 (CPC) - J1939 CM1 MESSAGE IS MISSING
80.1 SPN 986/FMI 9 80-3
81 SPN 1071 - TWO-SPEED FAN (AUX PWM #6) FAULT
81.1 SPN 1071/FMI 3 81-3
81.2 SPN 1071/FMI 4 81-4
81.3 SPN 1071/FMI 5 81-5

All information subject to change without notice.
Copyright © 2007 DETROIT DIESEL CORPORATION

82 SPN 1072 – JAKE BRAKES STAGE 1 (AUX PWM #7) OPEN OR SHORT
82.1 SPN 1072/FMI 4 82-3
82.2 SPN 1072/FMI 5 82-4
83 SPN 1073 – JAKE BRAKE STAGE 2 (AUX PWM #13) OPEN OR SHORT
83.1 SPN 1073/FMI 4 83-3
83.2 SPN 1073/FMI 5 83-4
84 SPN 1172 -TURBO COMPRESSOR IN TEMP HIGH OR LOW
84.1 SPN 1172/FMI 2 84-3
84.2 SPN 1172/FMI 3 84-3
84.3 SPN 1172/FMI 4 84-6
85 SPN 1590 (CPC) - J1939 ACC1 MESSAGE FROM ADAPTIVE CRUISE CONTROL IS MISSING
85.1 SPN 1590/FMI 9 85-3
86 SPN 1624 (CPC) - J1939 TCO1 MESSAGE IS MISSING AND TACHOGRAPH VEHICLE SPEED SIGNAL IS ERRATIC AND MISSING
86.1 SPN 1624/FMI 9 86-3
86.2 SPN 1624/FMI 13 86-3
86.3 SPN 1624/FMI 19 86-4
87 SPN 1636 – INTAKE AIR TEMPERATURE OUTSIDE OF NORMAL OPERATING RANGE
87.1 SPN 1636/FMI 3 87-3
87.2 SPN 1636/FMI 4 87-5
87.3 SPN 1636/FMI 20 87-6
87.4 SPN 1636/FMI 21 87-7
87.5 SPN 1636/FMI 31 87-8
88 SPN 1716 (CPC) - J1939 ERC1 MESSAGE IS MISSING
88.1 SPN 1716/FMI 9 88-3
89 SPN 1845 (CPC) - J1939 TCFG2 MESSAGE IS MISSING
89.1 SPN 1845/FMI 9 89-3
90 SPN 2623 (CPC) - PWM ACCELERATOR PEDAL GAS1 AND GAS2 SIGNAL MISSING
90.1 SPN 2623/FMI 4 90-3
90.2 SPN 2623/FMI 14 90-3
91 SPN 2629 - TURBO COMPRESSOR OUT TEMP HIGH OR LOW
91.1 SPN 2629/FMI 3 91-3
91.2 SPN 2629/FMI 4 91-6
91.3 SPN 2629/FMI 20 91-7
91.4 SPN 2629/FMI 21 91-8

All information subject to change without notice.
Copyright © 2007 DETROIT DIESEL CORPORATION

https://truckmanualshub.com/

92 SPN 2659 - EGR FLOW NOT NORMAL
92.1 SPN 2659/FMI 0 92-3
92.2 SPN 2659/FMI 1 92-4
93 SPN 2791 – EGR VALVE (AUX PWM #1) FAILED OR OPEN CIRCUIT
93.1 SPN 2791/FMI 3 93-3
93.2 SPN 2791/FMI 4 93-4
93.3 SPN 2791/FMI 5 93-4
93.4 SPN 2791/FMI 7 93-6
94 SPN 2795 - CAN COMMUNICATION ERROR
94.1 SPN 2795/FMI 9 94-3
95 SPN 2797 - INJECTOR #1, 2, OR 3 NEEDLE OR SPILL CONTROL VALVE NOT OPERATING NORMALLY
95.1 SPN 2797/FMI 3 95-3
95.2 SPN 2797/FMI 4 95-4
95.3 SPN 2797/FMI 5 95-6
95.4 SPN 2797/FMI 6 95-7
96 SPN 2798 - INJECTOR #4, 5, OR 6 NEEDLE OR SPILL CONTROL VALVE NOT OPERATING NORMALLY
96.1 SPN 2798/FMI 3 96-3
96.2 SPN 2798/FMI 4 96-4
96.3 SPN 2798/FMI 5 96-6
96.4 SPN 2798/FMI 6 96-7
97 SPN 2900 (CPC) - J1939 ETC7 MESSAGE IS MISSING
97.1 SPN 2900/FMI 9 97-3
98 SPN 3050 - ENGINE AIR FLOW ABOVE OR BELOW NORMAL OPERATING RANGE
98.1 SPN 3050 98-3
99 SPN 3242 - DOC INLET TEMPERATURE SENSOR ABOVE OR BELOW NORMAL OPERATING RANGE
99.1 SPN 3242/FMI 2, 3, 4 OR 10 99-3
100 SPN 3246 - DPF OUTLET TEMPERATURE SENSOR OPERATING ABOVE OR BELOW NORMAL
100.1 SPN 3246/FMI 0, 2, 3, 4, 10, 14, 31 100-3
101 SPN 3250 - DPF INLET TEMPERATURE SENSOR ABOVE OR BELOW NORMAL OPERATING RANGE
101.1 SPN 3250/FMI 0, 2, 3, 4, 10, 14, 31 101-3
102 SPN 3251 - DPF OUTLET PRESSURE ABOVE OR BELOW NORMAL OPERATING RANGE
102.1 SPN 3251/FMI 0, 1 OR 16 102-3

All information subject to change without notice.
Copyright © 2007 DETROIT DIESEL CORPORATION

https://truckmanualshub.com/

103 SPN 3471 - ELECTRONIC DOSING VALVE SENSOR ABOVE OR BELOW NORMAL OPERATING RANGE
103.1 SPN 3471/FMI 1, 3, 4 OR 5 103-3
104 SPN 3480 - FUEL LINE PRESSURE SENSOR ABOVE OR BELOW NORMAL OPERATING RANGE
104.1 SPN 3480/FMI 1, 2 OR 14 104-3
105 SPN 3482 - FUEL CUTOFF VALVE SENSOR ABOVE OR BELOW NORMAL OPERATING RANGE
105.1 SPN 3482/FMI 3, 4, 5 OR 7 105-3
106 SPN 3509 - MULTIPLEXER 1 CHANNEL 1 OR 2 SHORT OR OPEN CIRCUIT HIGH
106.1 SPN 3509/FMI 3 106-3
107 SPN 3510 - MULTIPLEXER 2 CHANNEL 1 OR 2 SHORT OR OPEN CIRCUIT HIGH
107.1 SPN 3510/FMI 3 107-3
108 SPN 3510 – ACCELERATOR PEDAL SUPPLY OUTSIDE OF NORMAL OPERATING RANGE
108.1 SPN 3510/FMI 2 108-3
108.2 SPN 3510/FMI 3 108-5
108.3 SPN 3510/FMI 4 108-6
109 SPN 3511 - MULTIPLEXER 3 CHANNEL 1 0R 2 SHORT OR OPEN CIRCUIT HIGH
109.1 SPN 3511/FMI 3 109-3
110 SPN 3556 - ELECTRONIC DOSING VALVE ABOVE OR BELOW NORMAL OPERATING RANGE
110.1 SPN 3556/FMI 0 OR 1 110-3
111 SPN 3563– INTAKE MANIFOLD PRESSURE OUTSIDE NORMAL RANGE
111.1 SPN 3563/FMI 0 111-3
111.2 SPN 3563/FMI 1 111-4
111.3 SPN 3563/FMI 3 111-5
111.4 SPN 3563/FMI 4 111-6
111.5 SPN 3563/FMI 20 111-8
111.6 SPN 3563/FMI 21 111-12
112 SPN 3588 - ETHER START (LOW-SIDE DIGITAL OUTPUT #8) FAULT
112.1 SPN 3588/FMI 3 112-3
112.2 SPN 3588/FMI 4 112-4
112.3 SPN 3588/FMI 5 112-5
113 SPN 3597 - PROPORTIONAL VALVE BANK 1 CIRCUIT
113.1 SPN 3597/FMI 3 113-3

All information subject to change without notice.
Copyright © 2007 DETROIT DIESEL CORPORATION

https://truckmanualshub.com/

114 SPN 3603 (CPC) - J1939 ESS MESSAGE IS MISSING
114.1 SPN 3603/FMI 9 114-3
115 SPN 3609 - DPF INLET PRESSURE SENSOR ABOVE OR BELOW NORMAL OPERATING RANGE
115.1 SPN 3609FMI 2, 3, 4, 10, 20 OR 21 115-3
116 SPN 3610 - DPF OUTLET PRESSURE SENSOR ABOVE OR BELOW NORMAL OPERATING RANGE
116.1 SPN 3610/FMI 2, 3, 4, 14, 20 OR 21 116-3
117 SPN 3659 – INJECTOR #1 SPILL VALVE NOT OPERATING NORMALLY
117.1 SPN 3659/FMI 14 117-3
118 SPN 3660 - INJECTOR #2 SPILL VALVE NOT OPERATING NORMALLY
118.1 SPN 3660/FMI 14 118-3
119 SPN 3661 - INJECTOR #3 SPILL VALVE NOT OPERATING NORMALLY
119.1 SPN 3661/FMI 14 119-3
120 SPN 3662 - INJECTOR #4 SPILL VALVE NOT OPERATING NORMALLY
120.1 SPN 3662/FMI 14 120-3
121 SPN 3663 - INJECTOR #5 SPILL VALVE NOT OPERATING NORMALLY
121.1 SPN 3663/FMI 14 121-3
122 SPN 3664 - INJECTOR #6 SPILL VALVE NOT OPERATING NORMALLY
122.1 SPN 3664/FMI 14 122-3
123 SPN 3695 (CPC) - DPF REGEN MUX SWITCH MESSAGES NOT OPERATING NORMALLY
123.1 SPN 3695/FMI 9 123-3
123.2 SPN 3695/FMI 13 123-4
123.3 SPN 3695/FMI 14 123-4
123.4 SPN 3695/FMI 19 123-5
124 SPN 3719 - SOOT LEVEL ABOVE NORMAL
124.1 SPN 3719/FMI 0, 15,16,OR 31 124-3
125 SPN 3798 - PROPORTIONAL VALVE BANK 2 CIRCUIT
125.1 SPN 3798/FMI 4 125-3
126 SPN 3720 - ASH LEVEL ABOVE NORMAL
126.1 SPN 3720/FMI 15 OR 16 126-3
127 SPN 4077 FUEL LINE PRESSURE SENSOR CIRCUIT FAULT
127.1 SPN 4077/FMI 3, 4 OR 14 127-3

All information subject to change without notice.
Copyright © 2007 DETROIT DIESEL CORPORATION

https://truckmanualshub.com/

128 SPN 4228 - VGT TEMPERATURE WARNING

128.1 SPN 4228/FMI 15 128-3
128.2 SPN 4228/FMI 16 128-4

129 DDEC VI SCHEMATICS

129.1 CRUISE CONTROL 129-3
129.2 FAN CONTROL 129-4
129.3 OPTIMIZED IDLE 129-10

All information subject to change without notice.
Copyright © 2007 DETROIT DIESEL CORPORATION

https://truckmanualshub.com/

1 INTRODUCTION

Section **Page**

1.1 OVERVIEW 1-3
1.2 SCOPE AND USE OF THIS GUIDE 1-4
1.3 SAFETY PRECAUTIONS 1-6

https://truckmanualshub.com/

All information subject to change without notice.
Copyright © 2007 DETROIT DIESEL CORPORATION

https://truckmanualshub.com/

1.1 OVERVIEW

Detroit Diesel Corporation is the world leader in diesel engines and diesel engine electronics. DDC has made technological leaps in engine performance and fuel economy. Today, we build the most dependable electronically controlled diesel engine in the industry.

Detroit Diesel Electronic Controls VI (DDEC®) provides two industry standard serial data links: SAE Standards J1587 and J1939. SAE Standard J1587 provides two way communications for the diagnostic equipment and vehicle displays. SAE Standard J1939 provides control data to other vehicle systems such as transmissions and traction control devices.

As the leader in engine computer systems and technology, Detroit Diesel Corporation remains focused on providing excellence in products, service support and training. As products become more and more advanced, today's technicians must become specialized in multiple areas. This manual is designed with that thought in mind.

Our goal at Detroit Diesel is to be the most customer focused and most responsive engine manufacturer in the world.

All information subject to change without notice.
Copyright © 2007 DETROIT DIESEL CORPORATION

 https://truckmanualshub.com/

1.2 SCOPE AND USE OF THIS GUIDE

The first half of the manual contain mechanical troubleshooting procedures. The second half contains instructions for troubleshooting the electronic controls.

This manual is divided into numbered chapters. Each chapter begins with a table of contents. Pages and illustrations are numbered consecutively within each chapter.

Information can be located by using the table of contents at the front of the manual or the table of contents at the beginning of each chapter.

Instructions to "Contact Detroit Diesel Customer Service Center" indicate that at the time of this publication, all known troubleshooting checks have been included. Review any recent Service Information Bulletins (SIB) or Service Information letters before calling.

It is also suggested that other DDC outlets be contacted. e.g. if you are a dealer or user, contact your closest DDC Distributor.

Ensure you have the engine serial number when you call. The phone number for Detroit Diesel Customer Service Center is 313-592-5800.

Instructions in this manual may suggest replacing a non DDC component. It may be required to contact the supplier of the component, e.g. truck manufacturer for a TPS concern, to obtain approval to replace the component.

Important: To ensure you receive updates to this manual should the need arise, you must fill out the Information Card in the front of this manual. Service Information Bulletins are issued via the DDC extranet. Visit DDCDIRECT at www.accessfreightliner.com.

NOTE:
It is absolutely **critical** that you understand the EGR system to be qualified to offer any type of proper diagnostics. Do not **waste time** trying to troubleshoot a DDC product, you are not qualified to troubleshoot. Your company may incur wasted labor hours. If you are qualified to perform a troubleshooting task and have spent more than one hour on that task, **STOP**, and contact the Detroit Diesel Customer Support Center at (313) 592–5800. Once you have discussed your options with a customer support center person, you can perform the required tests and evaluations. Please keep in contact with your customer support person. Doing so allows you to stay on track.

1.2.1 Mechanical Troubleshooting

Each chapter has a fault as the title (i.e. Excessive White Smoke). The next level within the chapter is the probable cause/symptom of the fault. Following this are the resolution and verification of the resolution. The mechanical troubleshooting should be used before the electronic troubleshooting.

All information subject to change without notice.
Copyright © 2007 DETROIT DIESEL CORPORATION

https://truckmanualshub.com/

1.2.2 Electronic Troubleshooting

The DDEC VI system allows for an increased processor speed and increased memory.

Instructions for repair in this manual are generic. For example, "Repair Open" is used to advise the technician that a particular wire has been determined to be broken. In some cases it may not be best to try and locate the open. It may be that the best repair technique is to replace a complete harness. The technician should make the determination of the proper repair, with the best interest of the customer in mind.

Instructions to check terminals and connectors should include checking for proper contact tension. Using a mating terminal, a modest force should be required to remove a terminal from its mate. Replace terminals with poor tension.

After completing any repair, always clear fault codes that may have been generated during the troubleshooting process.

NOTE:
Be aware that troubleshooting in this manual is mostly concerned with DDEC related codes. Codes associated with other components, e.g. transmissions, ECUs, ABS, etc. can be found in the related publication.

All information subject to change without notice.
Copyright © 2007 DETROIT DIESEL CORPORATION

https://truckmanualshub.com/

1.3 SAFETY PRECAUTIONS

The following safety precautions must be observed when working on a Detroit Diesel engine:

WARNING:

PERSONAL INJURY

To avoid injury from accidental engine startup while servicing the engine, disconnect/disable the starting system.

All engine installations, especially those within enclosed spaces, should be equipped with an exhaust discharge pipe so that exhaust gases are delivered into the outside air.

WARNING:

PERSONAL INJURY

To avoid injury from the sudden release of a high-pressure hose connection, wear a face shield or goggles. Bleed the air from the air starter system before disconnecting the air supply hose.

All information subject to change without notice.
Copyright © 2007 DETROIT DIESEL CORPORATION

https://truckmanualshub.com/

1.3.1 Ether Start

The DDEC Ether Start System is a fully-automatic engine starting fluid system used to assist a DDEC equipped diesel engine in cold starting conditions. The amount of ether is properly controlled to optimize the starting process and prevent engine damage. DDEC will control ether injection using standard sensors to control the ether injection hardware.

WARNING:

FIRE AND TOXICITY

Some pressurized fluid may be trapped in the system. To avoid personal injury, loosen all connections slowly to avoid contact with fluid. When required, spray fluid into a proper container. The engine starting fluid used in DDEC Ether Start Systems contains extremely flammable and toxic substances.

WARNING:

FIRE AND TOXICITY

To avoid personal injury, spray the fluid from the bottom of the valve into an appropriate container. The engine starting fluid used in DDEC Ether Start Systems contains extremely flammable and toxic substances.

All information subject to change without notice.
Copyright © 2007 DETROIT DIESEL CORPORATION

https://truckmanualshub.com/

1.3.2 Exhaust (Start/Run Engine)

Before starting and running an engine, adhere to the following safety precautions:

WARNING:

PERSONAL INJURY

To avoid injury before starting and running the engine, ensure the vehicle is parked on a level surface, parking brake is set, and the wheels are blocked.

1.3.3 Glasses

Select appropriate safety glasses for the job. It is especially important to wear safety glasses when using tools such as hammers, chisels, pullers or punches.

WARNING:

EYE INJURY

To avoid injury from flying debris when using compressed air, wear adequate eye protection (face shield or safety goggles) and do not exceed 276 kPa (40 psi) air pressure.

All information subject to change without notice.
Copyright © 2007 DETROIT DIESEL CORPORATION

https://truckmanualshub.com/

1.3.4 Welding

Wear welding goggles and gloves when welding or using an acetylene torch. Ensure that a metal shield separates the acetylene and oxygen tanks. These must be securely chained to a cart.

WARNING:

PERSONAL INJURY

To avoid injury from arc welding, gas welding, or cutting, wear required safety equipment such as an arc welder's face plate or gas welder's goggles, welding gloves, protective apron, long sleeve shirt, head protection, and safety shoes. Always perform welding or cutting operations in a well ventilated area. The gas in oxygen/acetylene cylinders used in gas welding and cutting is under high pressure. If a cylinder should fall due to careless handling, the gage end could strike an obstruction and fracture, resulting in a gas leak leading to fire or an explosion. If a cylinder should fall resulting in the gage end breaking off, the sudden release of cylinder pressure will turn the cylinder into a dangerous projectile. Observe the following precautions when using oxygen/acetylene gas cylinders:

- **Always wear required safety shoes.**
- **Do not handle tanks in a careless manner or with greasy gloves or slippery hands.**
- **Use a chain, bracket, or other restraining device at all times to prevent gas cylinders from falling.**
- **Do not place gas cylinders on their sides, but stand them upright when in use.**
- **Do not drop, drag, roll, or strike a cylinder forcefully.**
- **Always close valves completely when finished welding or cutting.**

All information subject to change without notice.
Copyright © 2007 DETROIT DIESEL CORPORATION

https://truckmanualshub.com/

WARNING:

FIRE

To avoid injury from fire, check for fuel or oil leaks before welding or carrying an open flame near the engine.

1.3.5 Pressurized Fluids

Be extremely careful when dealing with fluids under pressure. Fluids under pressure can have enough force to penetrate the skin. These fluids can infect a minor cut or opening in the skin. If injured by escaping fluid, see a doctor at once. Serious infection or reaction can result without immediate medical treatment.

WARNING:

PERSONAL INJURY

To avoid injury from the sudden release of a high-pressure hose connection, wear a face shield or goggles.

WARNING:

PERSONAL INJURY

To avoid injury from penetrating fluids, do not put your hands in front of fluid under pressure. Fluids under pressure can penetrate skin and clothing.

All information subject to change without notice.
Copyright © 2007 DETROIT DIESEL CORPORATION

https://truckmanualshub.com/

1.3.6 Fuel

Keep the hose and nozzle or the funnel and container in contact with the metal of the fuel tank when refueling.

WARNING:

FIRE

To avoid injury from fire, keep all potential ignition sources away from diesel fuel, including open flames, sparks, and electrical resistance heating elements. Do not smoke when refueling.

The following cautions should be followed when filling a fuel tank:

WARNING:

FIRE

To avoid injury from fire caused by heated diesel-fuel vapors:

- **Keep those people who are not directly involved in servicing away from the engine.**
- **Stop the engine immediately if a fuel leak is detected.**
- **Do not smoke or allow open flames when working on an operating engine.**
- **Wear adequate protective clothing (face shield, insulated gloves and apron, etc.).**
- **To prevent a buildup of potentially volatile vapors, keep the engine area well ventilated during operation.**

All information subject to change without notice.
Copyright © 2007 DETROIT DIESEL CORPORATION

https://truckmanualshub.com/

WARNING:

FIRE

To avoid injury from fire, contain and eliminate leaks of flammable fluids as they occur. Failure to eliminate leaks could result in fire.

1.3.7 Batteries

Electrical storage batteries emit highly flammable hydrogen gas when charging and continue to do so for some time after receiving a steady charge.

WARNING:

BATTERY EXPLOSION AND ACID BURN

To avoid injury from battery explosion or contact with battery acid, work in a well ventilated area, wear protective clothing, and avoid sparks or flames near the battery. If you come in contact with battery acid:

- **Flush your skin with water.**
- **Apply baking soda or lime to help neutralize the acid.**
- **Flush your eyes with water.**
- **Get medical attention immediately.**

Always disconnect the battery cable before working on the electrical system.

WARNING:

PERSONAL INJURY

To avoid injury from accidental engine startup while servicing the engine, disconnect/disable the starting system.

All information subject to change without notice.
Copyright © 2007 DETROIT DIESEL CORPORATION

https://truckmanualshub.com/

1.3.8 Fire

Keep a charged fire extinguisher within reach. Ensure you have the proper type of extinguisher on hand.

WARNING:

FIRE

To avoid injury from fire, keep a fire extinguisher near the grinding machine in case excessive heat should ignite the oil.

1.3.9 Cleaning Agent

Avoid the use of carbon tetrachloride as a cleaning agent because of the harmful vapors that it releases. Ensure the work area is adequately ventilated. Use protective gloves, goggles or face shield, and apron.

WARNING:

PERSONAL INJURY

To avoid injury from harmful vapors or skin contact, do not use carbon tetrachloride as a cleaning agent.

1.3.10 Diagnostic Equipment

For mobile applications, Detroit Diesel Diagnostic Link 7.0 (DDDL 7.0) must be used by personnel other than the vehicle operator. The vehicle operator must maintain control of the vehicle while an assistant performs the diagnostic evaluations.

WARNING:

PERSONAL INJURY

To avoid injury from loss of vehicle/vessel control, the operator of a DDEC equipped engine must not use or read any diagnostic tool while the vehicle/vessel is moving.

All information subject to change without notice.
Copyright © 2007 DETROIT DIESEL CORPORATION

https://truckmanualshub.com/

1.3.11 Working on a Running Engine

When working on an engine that is running, accidental contact with the hot exhaust manifold can cause severe burns. Remain alert to the location of the rotating fan, pulleys and belts. Avoid making contact across the two terminals of a battery which can result in severe arcing, or battery explosion.

WARNING:

PERSONAL INJURY

To avoid injury from rotating belts and fans, do not remove and discard safety guards.

WARNING:

PERSONAL INJURY

To avoid injury when working near or on an operating engine, remove loose items of clothing and jewelry. Tie back or contain long hair that could be caught in any moving part causing injury.

All information subject to change without notice.
Copyright © 2007 DETROIT DIESEL CORPORATION

https://truckmanualshub.com/

1.3.12 Optimized Idle

Optimized Idle must be turned on by the factory via order entry or mainframe setup.

CAUTION:

UNEXPECTED ENGINE START

To avoid injury from an unexpected startup of an engine equipped with the Optimized Idle system, remove the starter relay from the relay holder.

WARNING:

PERSONAL INJURY

To avoid injury from accidental engine startup, replace a defective ECM with an ECM programmed with identical inputs and outputs.

1.3.13 Fluoroelastomer

Fluoroelastomer (Viton®) parts such as O-rings and seals are perfectly safe to handle under normal design conditions.

WARNING:

CHEMICAL BURNS

To avoid injury from chemical burns, wear a face shield and neoprene or PVC gloves when handling fluoroelastomer O-rings or seals that have been degraded by excessive heat. Discard gloves after handling degraded fluoroelastomer parts.

A potential hazard may occur if these components are raised to a temperature above 600°F (316°C) (in a fire for example). Fluoroelastomer will decompose (indicated by charring or the appearance of a black, sticky mass) and produce hydrofluoric acid. This acid is extremely corrosive and, if touched by bare skin, may cause severe burns (the symptoms could be delayed for several hours).

All information subject to change without notice.
Copyright © 2007 DETROIT DIESEL CORPORATION

https://truckmanualshub.com/

All information subject to change without notice.
Copyright © 2007 DETROIT DIESEL CORPORATION

https://truckmanualshub.com/

2 LOW OIL PRESSURE

Section		Page
2.1	IMPROPER ENGINE OIL LEVEL	2-3
2.2	IMPROPER LUBRICATING OIL VISCOSITY	2-4
2.3	LUBRICATING OIL DILUTED WITH FUEL OIL OR ENGINE COOLANT	2-5
2.4	FAULTY OIL PRESSURE GAUGE SENSOR	2-6
2.5	ROCKER ARM SHAFT PLUGS MISSING (NEW OR REBUILT ENGINES ONLY)	2-7
2.6	RESTRICTED OIL COOLER	2-9
2.7	NONFUNCTIONAL OR STICKING OIL PRESSURE REGULATOR VALVE	2-10
2.8	DEFECTIVE BYPASS VALVE	2-12
2.9	DEFECTIVE PRESSURE RELIEF VALVE	2-13
2.10	DEFECTIVE PICKUP SCREEN TUBE AND SCREEN ASSEMBLY	2-14
2.11	DEFECTIVE CRANKSHAFT MAIN BEARING SHELLS	2-15
2.12	DEFECTIVE OIL PUMP ASSEMBLY	2-16
2.13	DETECTING INTERNAL FUEL LEAKS	2-17

https://truckmanualshub.com/

All information subject to change without notice.
Copyright © 2007 DETROIT DIESEL CORPORATION

https://truckmanualshub.com/

2.1 IMPROPER ENGINE OIL LEVEL

To determine if improper engine oil level is causing low oil pressure, perform the following steps:

1. Ensure that the vehicle is parked on level ground.
2. Check the engine oil level; refer to appropriate service manual, preventive maintenance chapter.
   [a] If the engine oil level is correct, check lubricating oil viscosity; refer to section 2.2.
   [b] If the engine oil level is incorrect, refer to section 2.1.1.

2.1.1 Low Engine Oil Level Resolution

Perform the following steps for low engine oil level:

1. Fill engine oil pan to correct level; refer to appropriate service manual, preventive maintenance chapter.
2. Verify low engine oil resolution; refer to section 2.1.1.1.

2.1.1.1 Test for Proper Engine Oil Level

Perform the following steps to determine if properly filled oil pan resolved low oil pressure:

1. Connect Detroit Diesel Diagnostic Link (DDDL 7.0) to check the oil pressure.
2. Start and vary engine speed between 1800 - 2100 rpm.
3. Check DDDL 7.0 for oil pressure reading.
   [a] If DDDL 7.0 indicates oil pressure greater than or equal 241 kPa (35 psi) at 1800 rpm, shut down the engine and disconnect DDDL 7.0. Refer to section 6 to diagnose the cause for the low oil level.
   [b] If DDDL 7.0 indicates oil pressure less than 241 kPa (35 psi), at 1800 rpm, shut down the engine and disconnect DDDL 7.0. Check oil pressure using a mechanical gage; refer to section 2.1.2.

2.1.2 Check Oil Pressure with a Mechanical Gauge

Check as follows:

1. Remove the oil pressure sending unit from the engine.
2. Connect a mechanical oil pressure gage to oil pressure sending unit port on the engine.
3. Start the engine. Verify that the engine speed is between 1800 and 2100 rpm.
   [a] If the oil pressure is greater than or equal to 241 kpa (35 psi), refer to section 2.4.
   [b] If oil pressure is less than 241 kpa (35 psi),refer to section 2.2.

All information subject to change without notice.
Copyright © 2007 DETROIT DIESEL CORPORATION

https://truckmanualshub.com/

2.2 IMPROPER LUBRICATING OIL VISCOSITY

To determine if improper lubricating oil viscosity is causing low oil pressure, perform the following steps:

1. Acquire a lubricating oil sample from the engine oil pan.
2. Submit oil sample for an ASTM test analysis.
   [a] If engine oil sample meets ASTM specifications, check to determine if lubricating oil is diluted with fuel or coolant; refer to section 2.3.
   [b] If engine oil sample did not meet ASTM specifications, refer to section 2.2.1.

2.2.1 Lubricating Oil Replacement

Perform the following steps to replace engine oil:

1. Drain and refill engine with new lubricating oil; refer to appropriate service manual, preventive maintenance chapter.
2. Verify lubricating oil replacement, refer to section 2.2.1.1.

2.2.1.1 Test Engine with Replaced Lubricating Oil

Perform the following steps to determine if replaced lubricating oil resolved low oil pressure:

1. Connect to DDDL 7.0.
2. Start and run engine speed at 1800 rpm.
3. Check DDDL 7.0 for the for oil pressure reading.
   [a] If DDDL 7.0 indicates oil pressure greater than or equal 241 kPa (35 psi) at 1800 rpm, shut down the engine and disconnect DDDL 7.0. No further troubleshooting is required.
   [b] If DDDL 7.0 indicates oil pressure less than 241 kPa (35 psi) at 1800 rpm, shut down the engine and disconnect DDDL 7.0. Check the lubricating oil for fuel and water dilution; refer to section 2.3.

All information subject to change without notice.
Copyright © 2007 DETROIT DIESEL CORPORATION

https://truckmanualshub.com/

2.3 LUBRICATING OIL DILUTED WITH FUEL OIL OR ENGINE COOLANT

To determine if lubricating oil is diluted with fuel oil or engine coolant is causing low oil pressure, perform the following steps:

1. Acquire a lubricating oil sample from the engine oil pan.
2. Examine the lubricating oil sample for presence of engine coolant or fuel oil.
   [a] If coolant or fuel oil are not present, check for a faulty oil pressure gage, refer to section 2.4.
   [b] If water or fuel oil are present, refer to section 2.3.1.

2.3.1 Contaminated Lubricating Oil Resolution

Perform the following steps to resolve contaminated lubricating oil:

1. Drain engine oil pan, refer to appropriate service manual, preventive maintenance chapter.
2. Refill engine crankcase with new oil; refer to appropriate service manual, preventive maintenance chapter.
3. Verify lubricating oil replacement; refer to section 2.3.1.1.

2.3.1.1 Test Replaced Lubricating Oil

Perform the following steps to determine if replaced lubricating oil resolved low oil pressure:

1. Connect to DDDL 7.0.
2. Start and run the engine speed at 1800 rpm.
3. Visually examine DDDL 7.0 for oil pressure reading.
   [a] If DDDL 7.0 indicates oil pressure greater than or equal 241 kPa (35 psi) at 1800 rpm, shut down the engine and disconnect DDDL 7.0. Refer to section 2.13 to determine the cause for the diluted oil.
   [b] If DDDL 7.0 indicates oil pressure less than 241 kPa (35 psi) at 1800 rpm, shut down the engine and disconnect DDDL 7.0. Check for faulty oil pressure gage; refer to section 2.4.

All information subject to change without notice.
Copyright © 2007 DETROIT DIESEL CORPORATION

https://truckmanualshub.com/

2.4 FAULTY OIL PRESSURE GAUGE SENSOR

To determine if a faulty oil pressure gage sensor is causing low oil pressure, perform the following steps:

1. Connect to DDDL 7.0.
2. Start and vary the engine speed between 1800 - 2100 rpm.
3. Visually examine DDDL 7.0 for oil pressure reading.
   [a] If DDDL 7.0 indicates oil pressure greater than or equal 241 kPa (35 psi) at 1800 rpm, shut down the engine and disconnect DDDL 7.0, refer to OEM for the correct operation of the oil gage.
   [b] If DDDL 7.0 indicates oil pressure less than 241 kPa (35 psi) at 1800 rpm, shut down the engine; refer to section 2.4.1.

2.4.1 Oil Pressure Gage Sensor Replacement

Perform the following steps to replace the oil pressure gage sensor:

1. Remove and replace the oil pressure gage sensor; refer to OEM guidelines.
2. Verify replaced oil pressure gage sensor; refer to section 2.4.1.1.

2.4.1.1 Test the Engine with Replaced Oil Pressure Gage Sensor

Perform the following steps to determine if replaced oil pressure gage sensor resolved low oil pressure:

1. Connect to DDDL 7.0.
2. Start and run engine speed at 1800 rpm.
3. Visually examine DDDL 7.0 for oil pressure reading.
   [a] If DDDL 7.0 indicates oil pressure greater than or equal 241 kPa (35 psi) at 1800 rpm, shut down the engine and disconnect DDDL 7.0. No further troubleshooting is required.
   [b] If DDDL 7.0 indicates oil pressure less than 241 kPa (35 psi) at 1800 rpm, shut down the engine and disconnect DDDL 7.0. Refer to section 2.5.

All information subject to change without notice.
Copyright © 2007 DETROIT DIESEL CORPORATION

https://truckmanualshub.com/

2.5 ROCKER ARM SHAFT PLUGS MISSING (NEW OR REBUILT ENGINES ONLY)

If engine is not new or has not been rebuilt, refer to section 2.6.

To determine if a missing rocker arm shaft plugs are causing low oil pressure, perform the following steps:

1. Remove the rocker arm cover, (two piece, three piece); refer to appropriate service manual, engine chapter.
2. Visually inspect the rocker arm shaft for missing or leaking shaft plugs.
   - [a] If the shaft plugs are present and are not leaking, check the oil cooler for restriction; refer to section 2.6.
   - [b] If the shaft plugs are missing, refer to section 2.5.2.
   - [c] If the shaft plugs are leaking, refer to section 2.5.1.

2.5.1 Leaking Rocker Arm Shaft Plug Repair

Perform the following steps to repair leaking rocker arm shaft plugs:

1. Remove damaged shaft plugs; refer to appropriate service manual, engine chapter.
2. Inspect rocker arm shaft for damage. If damage is found, replace the rocker arm shaft; refer to appropriate service manual, engine chapter.
3. Install new shaft plugs; refer to appropriate service manual, engine chapter.

NOTE:
Shaft plug **must** be installed 1.0 - 1.3 mm (0.040 -0.050 in.) below surface using J–36236.

4. Install rocker arm cover; refer to appropriate service manual, engine chapter.
5. Verify repair made to the rocker shaft plugs; refer to section 2.5.2.1.

2.5.2 Missing Rocker Arm Shaft Plug Repair

Perform the following steps to repair missing rocker arm shaft plugs:

1. Inspect rocker arm shaft for damage. If damage is found, replace the rocker arm shaft; refer to appropriate service manual, engine chapter.
2. Install new shaft plugs; refer to appropriate service manual, engine chapter.

NOTE:
Shaft plug **must** be installed 1.0 - 1.3 mm (0.040 -0.050 in.) below surface using J–36236.

3. Install rocker arm cover; refer to appropriate service manual, engine chapter.

All information subject to change without notice.
Copyright © 2007 DETROIT DIESEL CORPORATION

https://truckmanualshub.com/

4. Verify repair made to the rocker shaft plugs; refer to section 2.5.2.1.

2.5.2.1 Test Engine with Repaired Rocker Shaft Plugs

Perform the following steps to determine if repaired rocker shaft plugs resolved low oil pressure:

1. Connect to DDDL 7.0.
2. Start and run engine speed at 1800 rpm.
3. Check DDDL 7.0 for oil pressure reading.
   [a] If DDDL 7.0 indicates 241 kPa (35 psi) or more at 1800 rpm, shut down the engine and disconnect DDDL 7.0. No further troubleshooting is required.
   [b] If DDDL 7.0 indicates less than 241 kPa (35 psi) at 1800 rpm, shut down the engine and disconnect DDDL 7.0. Check the oil cooler for restriction; refer to section 2.6.

All information subject to change without notice.
Copyright © 2007 DETROIT DIESEL CORPORATION

https://truckmanualshub.com/

2.6 RESTRICTED OIL COOLER

To determine if a restricted oil cooler is causing low oil pressure, perform the following steps:

1. Connect to DDDL 7.0.
2. Start and run the engine at 1800 rpm.
3. Run the engine at 1800 rpm with a no-load for approximately 5 minutes, allowing the engine coolant to reach normal operating range, 88 - 96°C (190 - 210°F).
   [a] If DDDL 7.0 is indicating a lubricating oil temperature less than or equal to 110°C (230°F). Shut down the engine, disconnect DDDL 7.0, and check pressure regulator valve; refer to section 2.7.
   [b] If DDDL 7.0 is indicating a lubricating oil temperature greater than 110°C (230°F). Shut down the engine and repair oil cooler; refer to section 2.6.1.

2.6.1 Oil Cooler Repair

Perform the following steps to repair the oil cooler:

1. Remove and repair oil cooler, refer to appropriate service manual, lubrication system chapter.
2. Clean the oil cooler; refer to appropriate service manual, lubrication system chapter.
3. Inspect the oil cooler for damage; refer to appropriate service manual, lubrication system chapter.
4. Install repaired oil cooler; refer to appropriate service manual, lubrication system chapter.
5. Verify repair of oil cooler; refer to section 2.6.1.1.

2.6.1.1 Test Engine with Repaired Oil Cooler

Perform the following steps to determine if oil cooler repair resolved low oil pressure:

1. Connect to DDDL 7.0.
2. Refer to section1.3 for the exhaust caution before proceeding. Start and run the engine at 1800 rpm.
3. Run the engine through its operating range with no-load for approximately 5 minutes, allowing the engine coolant to reach normal operating range, 88 - 96°C (190 - 210°F).
   [a] If DDDL 7.0 is indicating a lubricating oil temperature less than or equal to 110°C (230°F) at 1800 rpm, disconnect DDDL 7.0 and shut down the engine. No further troubleshooting is required.
   [b] If DDDL 7.0 is indicating a lubricating oil temperature greater than 110°C (230°F) at 1800 rpm, shut down the engine and disconnect DDDL 7.0. Check pressure regulator valve; refer to section 2.7.

All information subject to change without notice.
Copyright © 2007 DETROIT DIESEL CORPORATION

https://truckmanualshub.com/

2.7 NONFUNCTIONAL OR STICKING OIL PRESSURE REGULATOR VALVE

To determine if a nonfunctional or sticking regulator valve is causing low oil pressure, perform the following steps:

1. Remove the oil pressure regulator; refer to appropriate service manual, lubrication system chapter.
2. Inspect the oil pressure regulator; refer to appropriate service manual, lubrication system chapter.
   [a] If the regulator valve moves freely in the valve body; see Figure 2-1. reinstall the oil pressure regulator assembly; refer to appropriate service manual, lubrication system chapter. Check the bypass valve, refer to section 2.8.
   [b] If the regulator valve will not move freely in the valve body, refer to section 2.7.1.

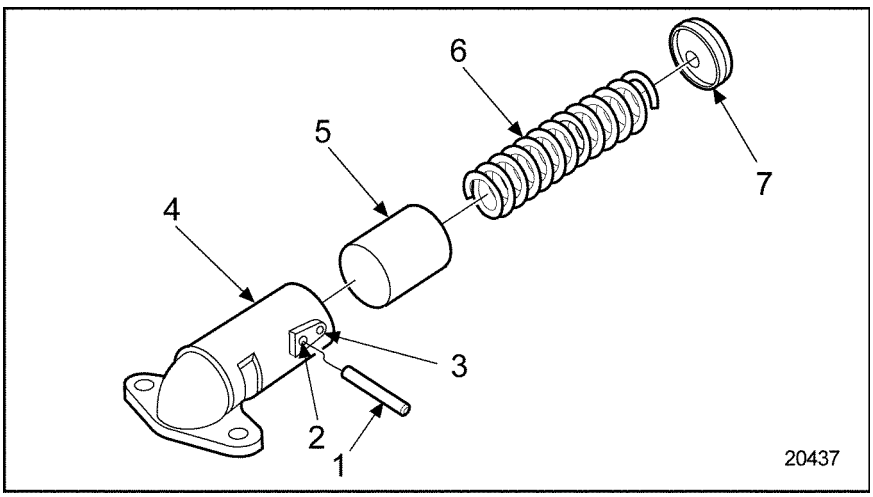

1. Pin
2. Pressure Relief Valve Pin Location
3. Pressure Regulator Pin Location
4. Valve Body
5. Valve
6. Spring
7. Spring Seat

Figure 2-1 Oil Pressure Regulator

All information subject to change without notice.
Copyright © 2007 DETROIT DIESEL CORPORATION

https://truckmanualshub.com/

2.7.1 Oil Pressure Regulator Valve Repair

Perform the following steps to repair the oil pressure regulator valve:

1. Disassemble the pressure regulator valve and replace damaged components; refer to appropriate service manual, lubrication system chapter.
2. Assemble the pressure regulator valve; refer to appropriate service manual, lubrication system chapter.
3. Verify repair of the regulator valve; refer to section 2.7.1.1.

2.7.1.1 Test Engine with Repaired Oil Pressure Regulator Valve

Perform the following steps to determine if repaired oil pressure regulator valve resolved low oil pressure:

1. Connect to DDDL 7.0.
2. Start and run engine speed at 1800 rpm.
3. Visually examine DDDL 7.0 for oil pressure reading.
   [a] If DDDL 7.0 indicates 241 kPa (35 psi) or more at 1800 rpm, shut down the engine and disconnect DDDL 7.0. No further troubleshooting is required.
   [b] If DDDL 7.0 indicates less than 241 kPa (35 psi) at 1800 rpm, shut down the engine and disconnect DDDL 7.0; check bypass valve; refer to section 2.8.

All information subject to change without notice.
Copyright © 2007 DETROIT DIESEL CORPORATION

https://truckmanualshub.com/

2.8 DEFECTIVE BYPASS VALVE

To determine if a defective bypass valve is causing low oil pressure, perform the following steps:

1. Remove the oil filter adaptor; refer to appropriate service manual, lubrication system chapter.
2. Inspect the oil filter adaptor; refer to appropriate service manual, lubrication system chapter.
   [a] If no damage is found with the oil filter adaptor components, reinstall the oil filter adaptor; refer to appropriate service manual, lubrication system chapter. Check pressure relief valve, refer to section 2.9.
   [b] If damage is found with the oil filter adaptor components; refer to section 2.8.1.

2.8.1 Oil Filter Adaptor Repair

Perform the following steps to repair the oil filter adaptor:

1. Disassemble the oil filter adaptor; refer to appropriate service manual, lubrication system chapter.
2. Assemble the oil filter adaptor; refer to appropriate service manual, lubrication system chapter.

NOTE:
Always replace the copper washer whenever the adaptor plug is removed.

3. Install repaired oil filter adaptor; refer to appropriate service manual, lubrication system chapter.
4. Verify repairs made to the oil filter adaptor; refer to section 2.8.1.1.

2.8.1.1 Test Engine with Repaired Oil Filter Adaptor

Perform the following steps to determine if repaired oil pressure regulator valve resolved low oil pressure:

1. Connect to DDDL 7.0.
2. Start and vary the engine speed between 1800 -2100 rpm.
3. Visually examine DDDL 7.0 for oil pressure reading.
   [a] If DDDL 7.0 indicates 241 kPa (35 psi) or more at 1800 rpm, shut down the engine and disconnect DDDL 7.0. No further troubleshooting is required.
   [b] If DDDL 7.0 indicates less than 241 kPa (35 psi), shut down the engine and disconnect DDDL 7.0, check pressure relief valve; refer to section 2.9.

All information subject to change without notice.
Copyright © 2007 DETROIT DIESEL CORPORATION

https://truckmanualshub.com/

2.9 DEFECTIVE PRESSURE RELIEF VALVE

To determine if a defective pressure relief valve is causing low oil pressure, perform the following steps:

1. Remove the pressure relief valve; refer to appropriate service manual, lubrication system chapter.
2. Inspect the oil pressure relief valve; refer to appropriate service manual, lubrication system chapter.
   [a] If the relief valve moves freely in the valve body, reinstall the oil pressure relief valve; refer to appropriate service manual, lubrication system chapter. Check the pickup tube and screen assembly for defects, refer to section 2.10.
   [b] If the relief valve will not move freely in the valve body, refer to section 2.9.1.

2.9.1 Pressure Relief Valve Repair

Perform the following steps to repair the pressure relief valve:

1. Disassemble the pressure relief valve and replace damaged components; refer to appropriate service manual, lubrication system chapter.
2. Assemble and install the pressure regulator valve; refer to appropriate service manual, lubrication system chapter.
3. Verify repair of the regulator valve; refer to section 2.9.1.1.

2.9.1.1 Test Engine with Repaired Relief Valve

Perform the following steps to determine if repaired relief valve resolved low oil pressure:

1. Connect to DDDL 7.0.
2. Start and run engine speed at 1800 rpm.
3. Visually examine DDDL 7.0 for oil pressure reading.
   [a] If DDDL 7.0 indicates 241 kPa (35 psi), or more at 1800 rpm, shut down the engine and disconnect DDDL 7.0. No further troubleshooting is required.
   [b] If DDDL 7.0 indicates less than 241 kPa (35 psi), at 1800 rpm, shut down the engine and disconnect DDDL 7.0, check pickup tube and screen assembly; refer to section 2.10.

All information subject to change without notice.
Copyright © 2007 DETROIT DIESEL CORPORATION

https://truckmanualshub.com/

2.10 DEFECTIVE PICKUP SCREEN TUBE AND SCREEN ASSEMBLY

To determine if a defective pickup screen tube or screen assembly is causing low oil pressure, perform the following steps:

1. Remove pickup screen tube and screen assembly; refer to appropriate service manual, lubrication system chapter.
2. Visually inspect pickup screen tube and screen assembly; refer to appropriate service manual, lubrication system chapter.
   [a] If no stress cracks, twisted screen tube, or cracked flange gaskets are found, check crankshaft main bearings; refer to section 2.11.
   [b] If stress cracks, twisted screen tube, or cracked flange gaskets are found, refer to section 2.10.1.

2.10.1 Pickup Screen Tube and Screen Assembly Repair

Perform the following steps to repair the pickup screen tube and screen assembly:

1. Replace all damaged components identified during inspection and install; refer to appropriate service manual, lubrication system chapter.
2. Verify repairs to pickup screen tube and screen assembly; refer to section 2.10.1.1.

2.10.1.1 Test Engine with Repaired Pickup Screen Tube and Screen Assembly

Perform the following steps to determine if repaired pickup screen resolved low oil pressure:

1. Connect to DDDL 7.0.
2. Start and run engine speed at 1800 rpm.
3. Visually examine DDDL 7.0 for oil pressure reading.
   [a] If DDDL 7.0 indicates 241 kPa (35 psi), or more at 1800 rpm, shut down the engine and disconnect DDDL 7.0. No further troubleshooting is required.
   [b] If DDDL 7.0 indicates less than 241 kPa (35 psi) at 1800 rpm, shut down the engine and disconnect DDDL 7.0, check crankshaft main bearings; refer to section 2.11.

All information subject to change without notice.
Copyright © 2007 DETROIT DIESEL CORPORATION

https://truckmanualshub.com/

2.11 DEFECTIVE CRANKSHAFT MAIN BEARING SHELLS

To determine if defective crankshaft main bearing shells are causing low oil pressure, perform the following steps:

1. Check main bearing to crankshaft journal clearances; refer to appropriate service manual, engine chapter.
   [a] If main bearing shell-to-journal clearance is within 0.040 - 0.151 mm (0.0016 -0.006 in.), check oil pump assembly; refer to section 2.12.
   [b] If main bearing shell-to-journal clearance is not within 0.040 - 0.151 mm (0.0016 -0.006 in.), refer to section 2.11.1.

2.11.1 Crankshaft Main Bearing Shell Repair

Perform the following steps to repair crankshaft main bearing shells:

1. Remove and replace defective crankshaft main bearing shells; refer to appropriate service manual, engine chapter.
2. Verify crankshaft main bearing shells repair: refer to section 2.11.1.1.

2.11.1.1 Test Engine with New Crankshaft Main Bearing Shells

Perform the following steps to determine if repaired relief valve resolved low oil pressure:

1. Connect to DDDL 7.0.
2. Start and run engine between 1800 rpm.
3. Visually examine DDDL 7.0 for oil pressure reading.
   [a] If DDDL 7.0 indicates 241 kPa (35 psi), at 1800 rpm, shut down the engine and disconnect DDDL 7.0. No further troubleshooting is required.
   [b] If DDDL 7.0 indicates less than 241 kPa (35 psi) at 1800 rpm, shut down the engine and disconnect DDDL 7.0. Check the oil pump assembly; refer to section 2.11.

All information subject to change without notice.
Copyright © 2007 DETROIT DIESEL CORPORATION

https://truckmanualshub.com/

2.12 DEFECTIVE OIL PUMP ASSEMBLY

To determine if a defective oil pump is causing low oil pressure, perform the following steps:

1. Remove the oil pump assembly; refer to appropriate service manual, lubrication system chapter.
2. Manually rotate the oil pump drive gear.
   [a] If the drive gear rotates freely in the pump housing, call the Detroit Diesel Customer Support Center 313–592–5800.
   [b] If the drive gear did not rotate freely; refer to section 2.12.1.

2.12.1 Oil Pump Assembly Repair

Perform the following steps to repair the oil pump assembly:

1. Disassemble the oil pump assembly and replace worn or damaged components as required; refer to appropriate service manual, lubrication system chapter.
2. Reassemble the oil pump; refer to appropriate service manual, lubrication system chapter.
3. Verify oil pump repair; refer to section 2.12.1.1.

2.12.1.1 Test Engine with Repaired Oil Pump Assembly

Perform the following steps to determine if repaired relief valve resolved low oil pressure:

1. Connect to DDDL 7.0.
2. Start and run the engine speed at 1800 rpm.
3. Visually examine DDDL 7.0 for oil pressure reading.
   [a] If DDDL 7.0 indicates 241 kPa (35 psi) at 1800 rpm, shut down the engine and disconnect DDDL 7.0. No further troubleshooting is required.
   [b] If DDDL 7.0 indicates less than 241 kPa (35 psi) at 1800 rpm, shut down the engine and disconnect DDDL 7.0; call the Detroit Diesel Customer Support Center (313–592–5800).

All information subject to change without notice.
Copyright © 2007 DETROIT DIESEL CORPORATION

https://truckmanualshub.com/

2.13 DETECTING INTERNAL FUEL LEAKS

Used lube oil analysis can identify a potential source of engine trouble before it occurs. A program such as the Detroit Diesel Oil Analysis Program is recommended for monitoring crankcase oil in all engines. One of the most serious conditions used oil analysis can uncover is the presence of excessive fuel in the lube oil which should not exceed 2.5% maximum of oil volume, reference Detroit Diesel's Publication 7SE270 “Engine Requirements for Lubricating Oil, Fuel and Filters.” While used oil analysis can uncover the presence of excessive fuel in the lube oil, other methods must be used to determine its source. A particularly effective test involves the use of special test fuel containing dye additives.

2.13.1 Prepare Test Fuel

The use of fluorescent dye(J–28431–B) is effective in fuel leak detection and should be the technician's choice in preparing a test fuel mixture. However, if a “Black light“ or fluorescent dye are not available, red LTO 1140 may be substituted.

To prepare fluorescent dye (J–28431–B), mix 118 ml (four ounces) of fluorescent dye additive with 15.1 liters (four gallons) of diesel fuel in a clean container marked with the words “Test Fuel”.

To prepare Red LTO 1140, mix 59 ml (two ounces) of Red LTO 1140 dye additive with 18.9 liters (five gallons) of diesel fuel in a clean container marked with the words “Test Fuel”.

2.13.1.1 Fuel Leak Tests (E3 Injectors Installed/Engine Off)

To locate a leaking injector the tests below should be completed in the sequence indicated and stopped at a point when the leaking injector is diagnosed. If a leaking injector is found, do not arbitrarily replace more than that injector, as multiple injector malfunctions are rare on the same engine.

All information subject to change without notice.
Copyright © 2007 DETROIT DIESEL CORPORATION

https://truckmanualshub.com/

NOTE:
During fuel pressure testing (engine off, 5 minutes at 345 kPa [50 psi]) fuel leakage will be evident at the injector body/plunger spring seat area see Figure 2-2. Factory tests have shown that accumulation of fuel at each injector, approximately a tablespoon may be evident during these tests. Evidence of fuel in this area is expected, as there is no other place for it to go when the injector cavities are pressurized, forcing fuel between the injector body and plunger.

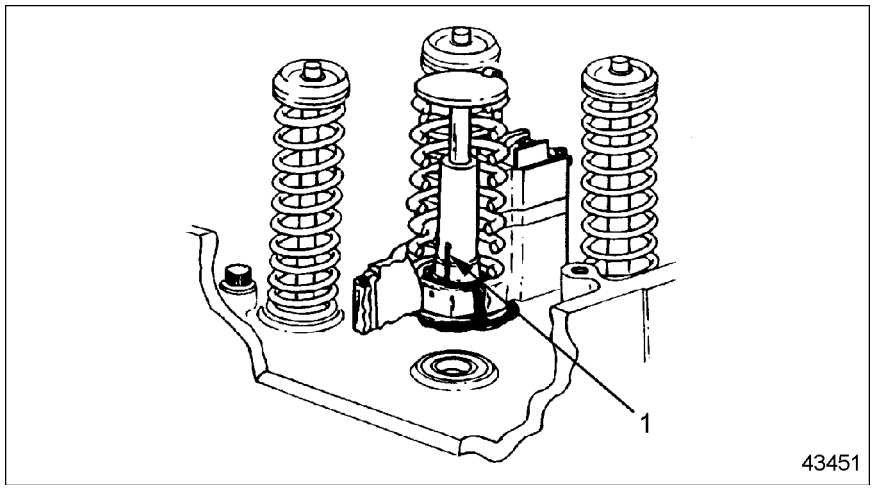

1. Acceptable Fuel Leakage

Figure 2-2 Acceptable-Fuel Leakage Between injector Plunger and Body

2.13.1.2 Fuel Pressure Test

Since there is no known fuel leak tester available in the commercial market today, one must be fabricated. Use the following guidelines to help in fabricating:

- □ Although test fuel can be pressurized by variety of methods, Detroit Diesel recommends an air/fuel accumulator design capable of safely withstanding a minimum pressure of 345 kPa (50 psi).
- □ The tester should have a capacity of 9.5 liters (2.5 gallons) of test fuel and provide for contamination free storage of the test fuel when not in use.
- □ **Regulated** shop air may be used to charge the accumulator tank and maintain a constant test fuel pressure.
- □ A shut-off valve should be installed at the accumulator outlet to start and stop pressurization during the test sequence.

All information subject to change without notice.
Copyright © 2007 DETROIT DIESEL CORPORATION

https://truckmanualshub.com/

WARNING:

PERSONAL INJURY

To avoid injury from the sudden release of a high-pressure hose connection, wear a face shield or goggles.

WARNING:

PERSONAL INJURY

To avoid injury from tank rupture or a sudden air hose failure, do not use unregulated air pressure or an accumulator tank with an inadequate pressure rating.

Fuel Leak Tester

1. Fill fuel system tester with the fluorescent or red dye fuel mixture approximately 9.5 liters (2.5 gallons).
2. Charge tester (outlet valve closed) with shop air **regulated** at 345 kPa (50 psi).
3. Hook-up the tester to the engine fuel system. There are two options for fuel tester to engine hook-up as determined by the ease of access.
   - Option 1–Remove the fuel line from the outlet side of the fuel pump and connect the fuel system testers line in this fuel hose fitting. This hook-up location will require the fuel system shut-off valve to remain in the **open** position during testing. About 3.8 liters (1 gallon) of test fuel will be necessary to charge the engine's fuel system from this hook-up location. Test fuel will not harm the engine's fuel filters and may remain in the fuel system at the conclusion of testing.
   - Option 2–Remove the fuel line from the outlet side of the fuel by-pass filter adapter and connect the fuel testers line in this fuel hose fitting. It is recommended that the fuel system shut-off valve be placed in the **closed** position before removing the engine fuel line and remain **closed** until reinstalled. About 1.9 liter (0.5 gallon) of test fuel will be necessary to charge the engine's fuel system from this hook-up location.
4. Remove rocker cover and disconnect the fuel outlet line at a convenient location between the cylinder head and the fuel tank. Install an appropriate size pipe plug (loose) in the fuel outlet line end and place it in a container to catch the fuel while priming the cylinder head. If equipped, Jake Brakes® should be removed to allow for the visual examination of the injectors during fuel leak testing.
5. Slowly open the fuel tester's shut-off valve and charge the cylinder head fuel galley. When test fuel is flowing from the fuel return line and air has been purged from the system, tighten the pipe plug at the engine fuel outlet line fitting.
6. With the fuel tester shut-off valve completely open and the cylinder head galley pressurized to 345 kPa (50 psi), visually monitor the overhead using a black light for five minutes if the test time goes beyond five minutes it will become more difficult to determine the faulty injector due to expected leakage at the injector plunger/body. Pay

All information subject to change without notice.
Copyright © 2007 DETROIT DIESEL CORPORATION

https://truckmanualshub.com/

special attention to any leaks at the injector body, high and low pressure body plugs, see Figure 2-3and see Figure 2-5, injector nut to body and nut to tube seals see Figure 2-4, and stop valve cover see Figure 2-6.

NOTE:
Injector plunger/body leakage at the follower spring area is normal and expected during this test.

NOTE:
The figures that follow do not illustrate amount of fuel leakage but rather its origin or location. If injector(s) are removed and reinstalled in the head, the injector nut 'O' ring seals should be replaced with new parts.

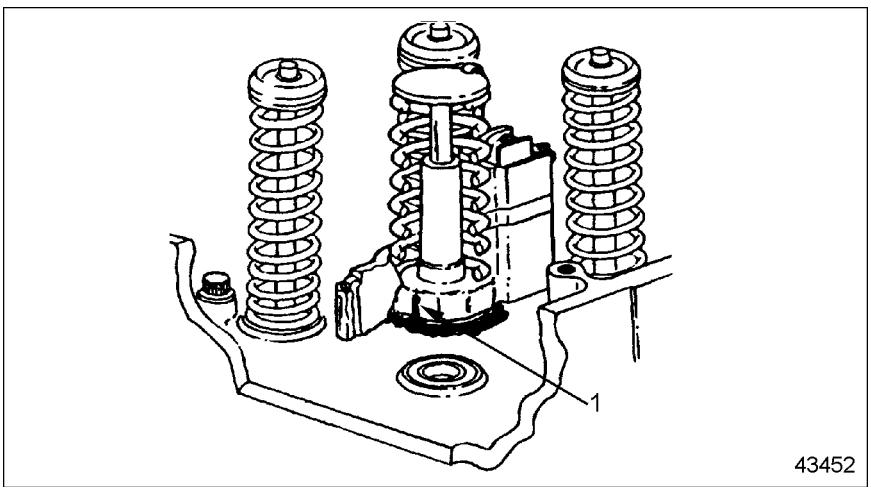

1. Fuel Leakage at Low Pressure Body Plug

Figure 2-3 Unacceptable-Fuel Leakage at Low Pressure Body Plug

All information subject to change without notice.
Copyright © 2007 DETROIT DIESEL CORPORATION

https://truckmanualshub.com/

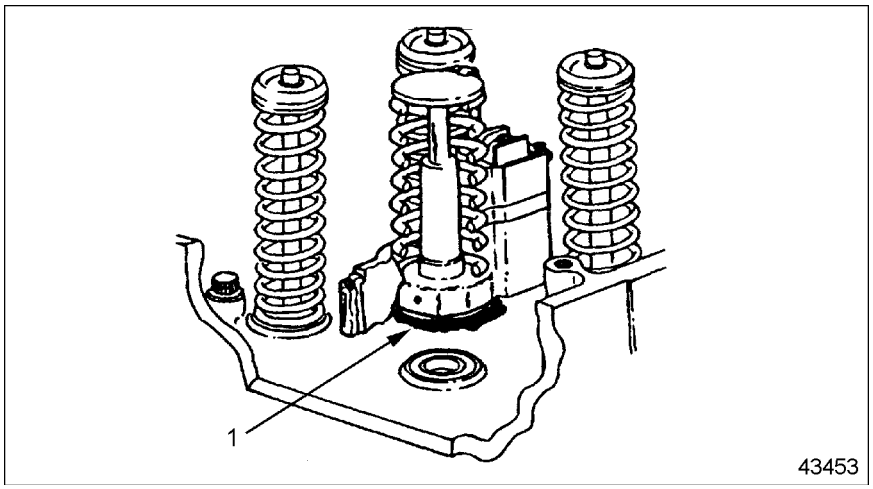

1. Fuel Leakage at Injector Nut-to-Tube 'O' Ring Seal

Figure 2-4 Unacceptable-Fuel Leakage at Injector Nut-toTube 'O' Ring Seal

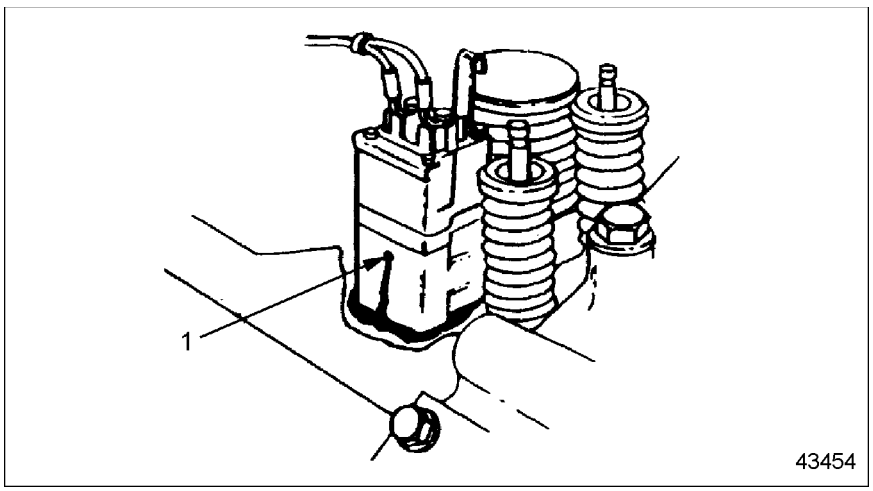

1. Fuel Leakage at High Pressure Body Plug and or Body Crack

Figure 2-5 Unacceptable-Fuel Leakage at High Pressure Body Plug and or Body Crack

All information subject to change without notice.
Copyright © 2007 DETROIT DIESEL CORPORATION

https://truckmanualshub.com/

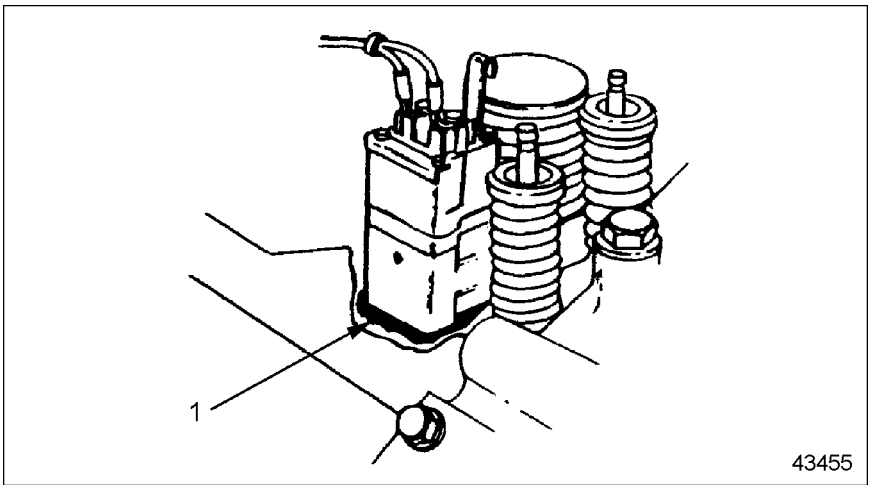

1. Fuel Leakage at Injector Stop Valve Cover

Figure 2-6 Unacceptable-Fuel Leakage at Injector Stop Valve Cover

7. Correct the cause of any abnormal fuel leaks.
8. Bleed the pressure from the accumulator tank and remove the pipe plug from the fuel outlet line. Reinstall the fuel outlet line in the engine's fuel system. Disconnect the fuel tester and reinstall the fuel inlet line in the engine's fuel system.
9. Completely open the engine's fuel shut-off valve and assure that all fuel connections are tight. Reinstall the rocker cover and start engine to purge the air from the fuel system. If the engine fails to start, it may be necessary to prime the fuel system.

All information subject to change without notice.
Copyright © 2007 DETROIT DIESEL CORPORATION

https://truckmanualshub.com/

3 MISFIRING CYLINDER

Section **Page**

3.1 POOR VEHICLE GROUND 3-3
3.2 AERATED FUEL 3-5
3.3 FAULTY FUEL INJECTOR 3-6
3.4 FAULTY MOTOR CONTROL MODULE 3-7
3.5 WORN OR DAMAGED VALVE OR CYLINDER KIT 3-8

https://truckmanualshub.com/

All information subject to change without notice.
Copyright © 2007 DETROIT DIESEL CORPORATION

https://truckmanualshub.com/

3.1 POOR VEHICLE GROUND

To determine if poor vehicle ground is causing the cylinder to misfire, perform the following steps:

1. Remove alternator belt.
2. Start the engine.
3. Run the engine through operating range.
4. Listen for engine misfiring.
   [a] If the engine is not misfiring, refer to section 3.1.1. Shut down the engine.
   [b] If the engine is still misfiring, check for aerated fuel; refer to section 3.2.

3.1.1 Negative Lead Repair

Perform the following steps for negative lead repair:

1. Shut down the engine.
2. Remove negative lead(s) at frame ground stud near battery box.
3. Clean ground stud; refer to OEM guidelines.
4. Clean negative lead(s) terminal lugs with low grit sandpaper.
5. Repair any loose or damaged lead(s), using the splice method or rosin core solder.
6. Install negative lead(s) to frame ground stud; refer to OEM guidelines.
7. Install alternator belt. Tighten belt to:
   [a] If installing a new belt, tighten to 170 N·m (125 lb).
   [b] If installing a used belt, tighten to 135 N·m (100 lb).
   [c] If a belt tension gage is not available, adjust the belt tension so that a firm push with the thumb, at a point midway between the two pulleys, will depress the belt 12.70 - 19.05 mm (0.500 -0.750 in.).

NOTE:
When installing or adjusting an accessory drive belt, be sure the bolt at the accessory adjusting pivot point is properly tightened, as well as the bolt in the adjusting slot.

NOTE:
Drive belts (Vee and poly-vee) should be replaced every 2,000 hours or 160,000 km (100,000 miles).

8. Verify negative lead repair; refer to section 3.1.1.1.

All information subject to change without notice.
Copyright © 2007 DETROIT DIESEL CORPORATION

https://truckmanualshub.com/

3.1.1.1 Verification of Repair for Negative Lead

Perform the following steps to determine if negative lead repair resolved the misfiring cylinder condition:

1. Refer to section3.1 for exhaust caution before preceding. Start engine.
2. Run engine speed up to the occurrence of the misfiring.
3. Listen for misfiring cylinder.
   [a] If the engine is not misfiring, no further troubleshooting is required. Shut down the engine.
   [b] If the engine is misfiring, check for aerated fuel. Shut down the engine; refer to section 3.2.

All information subject to change without notice.
Copyright © 2007 DETROIT DIESEL CORPORATION

https://truckmanualshub.com/

3.2 AERATED FUEL

To determine if aerated fuel is causing the cylinder to misfire, perform the following steps:

1. Disconnect the fuel line return hose from the fitting located at the fuel tank.
2. Place the opened end of fuel line into a suitable container.
3. Start the engine.
4. Run the engine at 1000 rpm.
5. Visually check to see if air bubbles are rising to the surface of the fuel within the container.
   [a] If air bubbles are present, refer to section 3.2.1.
   [b] If air bubbles are not present, check for improper calibration setting. Shut down the engine.

3.2.1 Aerated Fuel Repair

Perform the following steps for air in fuel repair:

1. Shut down engine.
2. Tighten all fuel line connections between fuel tank and fuel pump; refer to OEM guidelines.
3. Visually inspect all fuel lines between fuel tank and fuel pump for leaks.
4. Replace any damaged components; refer to appropriate service manual, fuel system chapter.
5. Verify repair of fuel lines:
   [a] If no air in the fuel return, refer to section 3.2.1.1.
   [b] If air in the rule return, locate and repair. Then refer to section 3.2.1.1.

3.2.1.1 Test the Engine with Repair for Aerated Fuel

Perform the following steps to determine if the aerated fuel repair resolved the misfiring cylinder condition:

1. Refer to section3.2 for exhaust caution before preceding. Start engine.
2. Run engine at 1000 rpm.
3. Listen for misfiring cylinder.
   [a] If the engine is not misfiring, no further troubleshooting is required. Shut down the engine.
   [b] If the engine is misfiring,, shut down the engine and check for improper injector setting.

All information subject to change without notice.
Copyright © 2007 DETROIT DIESEL CORPORATION

https://truckmanualshub.com/

3.3 FAULTY FUEL INJECTOR

To determine if a faulty fuel injector is causing the cylinder to misfire, perform the following steps:

1. Connect to DDDL 7.0.
2. Start the engine.
3. From the Select Menu, scroll to select ENGINE and press the ENTER key.
4. Scroll to FUEL INJECTOR INFO (CUTOUT) and press the ENTER key.
5. Scroll to select NEW TEST and press the ENTER key.
6. Scroll to select RPM SETTING FOR CCO TEST NORMAL and scroll to select 1000 and press the ENTER key.
7. Scroll to select AUTO and press the ENTER key. Wait for END OF TEST.

NOTE:
If an injector cannot be cutout, you will see an ERROR message. Press FUNC to exit the cylinder cutout function, press the FUNC key.

8. Scroll the list to review the results of the cylinder cutout test. To find suspect injectors, look for a cylinder with a value that is within 0.2 degrees of the NO CUTOUT PULSE WIDTH, by comparing the CUTOUT PULSE WIDTH values to the NO CUTOUT PULSE WIDTH values.
   [a] If any CUTOUT PULSE WIDTH values are within 0.2 degrees of the NO CUTOUT PULSE WIDTH, shut down the engine and refer to section 3.3.1.
   [b] If any CUTOUT PULSE WIDTH values are not within 0.2 degrees of the NO CUTOUT PULSE WIDTH, shut down the engine and refer to section 3.4.

3.3.1 Faulty Fuel Injector Repair

Perform the following steps for faulty fuel injector assembly(s):

1. Remove and replace injector assembly(s) whose values are within 0.2 degrees of the NO CUTOUT PULSE WIDTH; refer to the appropriate service manual, fuel system chapter.
2. Verify replaced injector assembly(s), refer to section 3.3.1.1.

3.3.1.1 Verification of Repair for Faulty Fuel Injector

Perform the following steps to determine if the replaced fuel injector(s) resolved the misfiring cylinder condition:

1. Refer to section3.3 for the exhaust caution before preceding. Start the engine.
2. Run the engine speed up to the occurrence of the misfiring.
3. Listen for misfiring cylinder.

All information subject to change without notice.
Copyright © 2007 DETROIT DIESEL CORPORATION

https://truckmanualshub.com/

[a] If the engine is not misfiring, shut down the engine. No further troubleshooting is required.

[b] If the engine is misfiring, shut down the engine and check for a faulty Electronic Control Unit (MCM); refer to section 3.4.

3.4 FAULTY MOTOR CONTROL MODULE

To determine if a faulty MCM is causing the cylinder to misfire, perform the following:

1. Remove the thru-bolts holding the MCM to the engine; refer to the appropriate service manual, fuel system chapter.
2. Remove the MCM from the engine and tag the MCM for core return.
3. Obtain a new reprogrammed MCM.
4. Inspect the MCM isolators for any damage. Replace if necessary, refer to the appropriate service manual, fuel system chapter.
5. Install the MCM to the engine using thru-bolts; refer to the appropriate service manual, fuel system chapter.
6. Torque the MCM thru-bolts to 23 - 27 N·m (17 - 20 lb·ft).
7. Install the 120–pin Engine Harness connector to the MCM.

3.4.1 Faulty MCM Repair

No repair authorized for MCM.

3.4.1.1 Verification of Repair for Faulty MCM

Perform the following steps to determine if the new MCM resolved the misfiring cylinder condition:

1. Start the engine.
2. Run the engine speed up to the occurrence of the misfiring.
3. Listen for misfiring cylinder.

   [a] If the engine is not misfiring, shut down the engine. No further troubleshooting is required.

   [b] If the engine is misfiring, shut down the engine and check for worn or damaged valves and cylinder kits; refer to section 3.5.

All information subject to change without notice.
Copyright © 2007 DETROIT DIESEL CORPORATION

https://truckmanualshub.com/

3.5 WORN OR DAMAGED VALVE OR CYLINDER KIT

Loss of compression in Series 60 engines may result from a variety of sources, including worn or broken fire or compression rings, holes in pistons, leaky valves, scored or worn cylinder walls, leaky or broken gaskets and cracked cylinder heads or cylinder liners. The detection and elimination of the cause or causes of cylinder pressure losses is vital to engine life and efficient operation. To assist the mechanic in effectively measuring the loss of cylinder pressure, and locating the source of abnormal leaks in individual cylinders, the following test procedure has been developed.

1. Move the vehicle requiring test to the chassis dynamometer; refer to OEM guidelines.
2. Disconnect air compressor; refer to the appropriate service manual, special equipment chapter.
3. Start the engine.
4. Run the engine and bring the engine coolant temperature to normal operating range.
5. Run vehicle to full load and rated speed.
6. Attach a manometer calibrated to read in kPa (in. H_2O), to the oil dipstick opening.
7. Measure and record crankcase pressure. For crankcase pressure guidelines refer to Service Information Letter 02 TS-20 found on the DDC extranet.
8. Shut down engine.
9. Remove the vehicle from the chassis dynamometer.
10. Review the crankcase pressure test results.
    [a] If the crankcase pressure was greater than 1.25 kPa (5 in. H_2O); refer to section 3.5.1.
    [b] If the crankcase pressure was less than 1.25 kPa (5 in. H_2O); perform a cylinder compression test. Refer to section 3.5.1.2.
11. Compare the cylinder compression test results to specifications.
    [a] If cylinder pressure is below specifications, refer to section 3.5.1.
    [b] If cylinder pressure is within specification, call Detroit Diesel Customer Support Center (313-592-5800).

3.5.1 Worn or Damaged Valve or Cylinder Kit Repair

Perform the following steps for worn or damaged valve or cylinder kit:

1. Remove cylinder head; refer to the appropriate service manual, engine chapter.
2. Inspect the cylinder head for worn or damaged valves; refer to the appropriate service manual, engine chapter. For repair and replacement procedures, refer to the appropriate service manual, engine chapter.
3. Inspect the cylinder kit components for worn or damaged liners, pistons or piston rings; refer to the appropriate service manual, engine chapter.

All information subject to change without notice.
Copyright © 2007 DETROIT DIESEL CORPORATION

https://truckmanualshub.com/

4. Verification of repairs made to cylinder valve(s) or cylinder kit components is required; refer to section 3.5.1.1.

3.5.1.1 Verification of Repair for Worn or Damaged Valve or Cylinder Kit

Perform the following steps to determine if the repaired valve or cylinder kit resolved the misfiring cylinder condition:

1. Refer to section3.5 for the exhaust caution before preceding. Start the engine.
2. Run the engine speed up to the occurrence of the misfiring.
3. Listen for misfiring cylinder.
   [a] If the engine is not misfiring, no further troubleshooting is required.
   [b] If the engine is misfiring, call the Detroit Diesel Customer Support Center 313–592–5800.

3.5.1.2 Cylinder Compression Test

Perform the following steps for a compression test on a Series 60 Engine:

WARNING:

PERSONAL INJURY

To avoid injury from inhaling engine exhaust, always operate the engine in a well-ventilated area. Engine exhaust is toxic.

1. Start and run the engine until normal operating temperature is reached. Stop the engine.
2. Disconnect the batteries.
3. Disconnect the fuel pump feed line from the fuel tank. Place a suitable container under the line to catch the spilling fuel. Turn the ¼ turn valve off on the outlet fitting of the secondary fuel filter.
4. Disconnect the fuel supply line to the cylinder head. Place a suitable container under the line to catch the spilled fuel. Disconnect the fuel return line from the doser valve and place a suitable container under the line to catch the spilled fuel.

All information subject to change without notice.
Copyright © 2007 DETROIT DIESEL CORPORATION

https://truckmanualshub.com/

WARNING:

EYE INJURY

To avoid injury from flying debris when using compressed air, wear adequate eye protection (face shield or safety goggles) and do not exceed 276 kPa (40 psi) air pressure.

NOTICE:

All the fuel must be removed from the cylinder head before removing injectors. This prevents the fuel from entering the cylinder and causing cylinder wall lube oil wash down or a hydrostatic lock at startup.

5. Blow low pressure regulated air no more than 207 kPa (30 psi) into the inlet fitting for 20 to 30 seconds or until all the fuel is purged from the head.
6. Clean and remove the rocker cover, it is not necessary to remove the bottom rocker cover. If equipped with Jake Brakes remove the Jake Brake assembly.
7. Remove all the rocker shaft mounting bolts and nut from the front or rear rocker shaft assembly. Using rocker arm lifter (J–35996–A), see Figure 3-1, lift the assembly straight up and off of the head and place in a clean area on the bench.

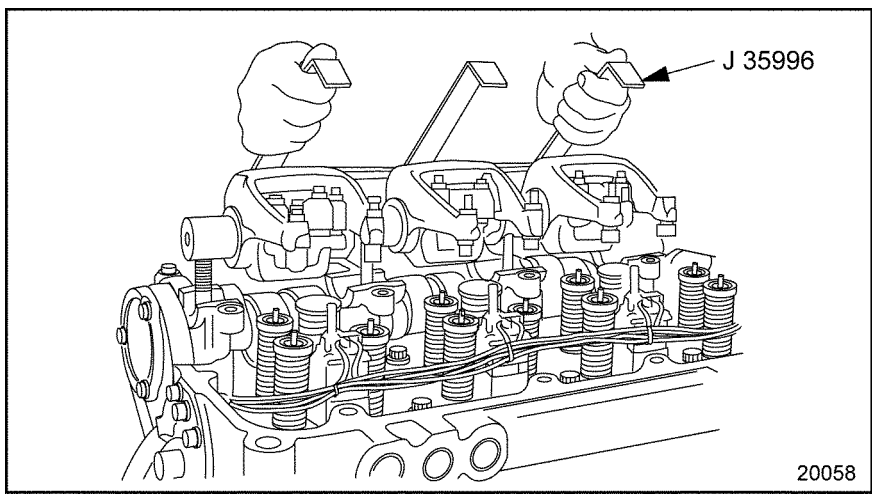

Figure 3-1 Rocker Arm/Shaft Assembly Removal/Installation

8. Use tool J-47808 to remove the 4–pin electrical connection from the injector.
9. Disengage the locking tang on the harness plug connection, grasp the connector and gently pull it from the socket.
10. Remove the injector hold down clamps.

All information subject to change without notice.
Copyright © 2007 DETROIT DIESEL CORPORATION

https://truckmanualshub.com/

NOTICE:

Use extreme care when handling injectors to avoid costly damage by dropping or mishandling. Always install new O-rings when replacing injectors.

11. Remove the three injectors to be tested from the cylinder head.
12. Place the compression test adaptors (J-47373) into the injector holes. It is recommended to have three test adaptors (J-47373) when performing this routine.
13. Install the injector hold down clamps and torque hold down bolts to 58-66 N·m (43-49 lb·ft).
14. Carefully remove the shaft from the rocker arm assembly by slowly pulling it out of the assembly. Place the shaft on the bench. Do not disturb the stack-up of the rocker arm sets.
15. Remove the three injector rocker arms and replace with spacers (J–38768–5) .
16. Lubricate the shaft with clean engine oil. With sleeves in place, carefully reinstall the shaft through each rocker arm shaft. Make sure cup plug end faces inboard.
17. Install the modified rocker arm shaft assembly on the head. If the engine is equipped with a Jake Brake®, use non-Jake Brake rocker arm shaft bolts 8929129. Torque the three bolts and the nut to 102-108 N·m (75-80 lb·ft).

NOTE:
Verify that the bolt holes for the rocker shafts are clean as not to hydro lock the bolts causing damage to the cylinder head.

18. Disconnect both connectors at the valve cover for the injectors.

NOTE:
Disconnect both connectors at the valve cover for the injectors.

WARNING:

PERSONAL INJURY

To avoid injury when working on or near an operating engine, wear protective clothing, eye protection, and hearing protection.

All information subject to change without notice.
Copyright © 2007 DETROIT DIESEL CORPORATION

https://truckmanualshub.com/

WARNING:

PERSONAL INJURY

To avoid injury from hot surfaces, wear protective gloves, or allow engine to cool before removing any component.

WARNING:

ENGINE EXHAUST

To avoid injury from inhaling engine exhaust, always operate the engine in a well-ventilated area. Engine exhaust is toxic.

19. Attach cylinder compression gauge (J–6692–B) to the first adaptor. See Figure 3-2.

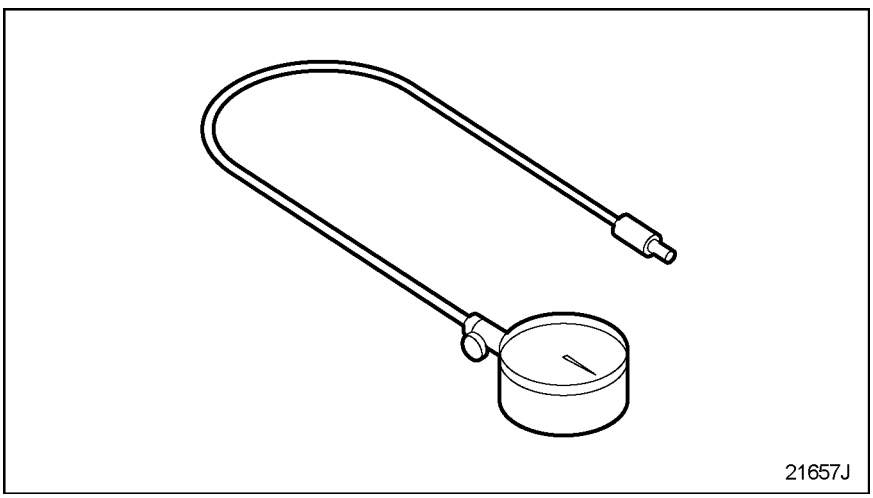

Figure 3-2 Attach Cylinder Compression Gauge J 6692–B

20. Reconnect the batteries.
21. Crank the engine over using the starter motor 5 compression strokes record the compression reading on the gauge.

NOTE:
Verify that the batteries voltage does not go low enough to affect engine cranking speed. If the cranking speed is affected then the results will be inaccurate. If needed connect a battery charge to maintain battery voltage.

22. The compression reading should be 3102-3793 kPa (450-550 psi) with no two cylinders differing by more than 276 kPa (40 psi). If compression readings are below specifications, repeat step 20 to be certain of the reading.

All information subject to change without notice.
Copyright © 2007 DETROIT DIESEL CORPORATION

https://truckmanualshub.com/

23. After testing all three cylinders, remove bolts from the modified rocker arm shaft assembly and, using rocker arm lifter (J–35996), lift the assembly straight up and off the cylinder head. Place in a clean area on the bench.
24. Carefully remove the shaft from the rocker arm assembly, remove the three rocker arm sleeves. Replace the three injector rocker arms. Lubricate the shaft with clean engine oil and carefully reinstall through each rocker arm.
25. Remove the injector hold down clamps discard the hold down bolt and remove the compression test adaptors from the cylinder head.
26. Using new sealing rings and injector hold down bolt install the injectors back into the cylinder head and torque to specifications; Torque bolt to 50 Nm (37 lb ft) Loosen the bolt 60 degrees (1/6 of a turn or one bolt flat) Do not fully loosen the bolt. Torque the bolt to 35 Nm (26 lb ft) Tighten the bolt an additional 90 degrees.
27. Replace the completed rocker arm shaft assembly on the engine and torque nut and bolts to specifications torque to 102-108 N•m (75-80 lb•ft)
28. Repeat steps 4b-26 for the rear 3 cylinders
29. Install upper valve cover, insuring that the bolt hole are clear of dirt and oil as not to damage the lower rocker cover.
30. Check test results

All information subject to change without notice.
Copyright © 2007 DETROIT DIESEL CORPORATION

https://truckmanualshub.com/

All information subject to change without notice.
Copyright © 2007 DETROIT DIESEL CORPORATION

https://truckmanualshub.com/

4 STARTING DIFFICULTY – ENGINE ROTATES

Section **Page**

4.1 EMPTY FUEL TANK 4-3
4.2 LOW BATTERY VOLTAGE 4-3
4.3 CORRODED OR DAMAGED BATTERY TERMINALS 4-4
4.4 DEFECTIVE MAGNETIC SWITCH 4-5
4.5 DEFECTIVE STARTER 4-6
4.6 LOW CRANKING SPEED 4-7
4.7 FUEL SUPPLY VALVE 4-8
4.8 PLUGGED FUEL FILTER(S) 4-9
4.9 FUEL PUMP 4-10
4.10 AERATED FUEL 4-11
4.11 RESTRICTIVE AIR FILTER 4-12
4.12 LOW COMPRESSION 4-13
4.13 EXTENDED CRANK TIME 4-19
4.14 CRANK NO START 4-21

https://truckmanualshub.com/

All information subject to change without notice.
Copyright © 2007 DETROIT DIESEL CORPORATION

https://truckmanualshub.com/

4.1 EMPTY FUEL TANK

To determine if an empty fuel tank is causing starting difficulty, determine the amount of fuel in fuel tank; refer to OEM guidelines.

1. If fuel is at recommended level, check for a weak battery; refer to section 4.2.
2. If fuel is below recommended level, refer to section 4.1.1.

4.1.1 Low Fuel Level Resolution

Perform the following steps to resolve low fuel level:

1. Fill fuel tank to full; refer to OEM guidelines.
2. Verify fuel tank refill; refer to section 4.1.1.1.

4.1.1.1 Test Engine with Filled Tank

To determine if a filled fuel tank resolved starting difficulty, attempt to start and run the engine.

1. If the engine starts and runs, no further troubleshooting is required. Shut down the engine.
2. If the engine fails to start and run, check the battery; refer to section 4.2.

4.2 LOW BATTERY VOLTAGE

To determine if a weak battery is causing starting difficulty, perform the following steps:

1. Measure the battery voltage; refer to OEM guidelines.
2. Analyze your findings.
   [a] If voltage is between 10.5 - 14 volts (21 - 26 volts for a 24 volt system), check the terminals; refer to section 4.3.
   [b] If voltage is less than 10.5 volts (21 volts for a 24 volt system), replacement is necessary; refer to section 4.2.1.

4.2.1 Battery Replacement

Perform the following steps for battery repair:

1. Remove and replace the battery; refer to OEM guidelines.
2. Verify battery replacement; refer to section 4.2.1.1.

All information subject to change without notice.
Copyright © 2007 DETROIT DIESEL CORPORATION

https://truckmanualshub.com/

4.2.1.1 Test Engine with Replaced Battery

Perform the following steps to determine if the battery replacement resolved starting difficulty:

1. Attempt to start and run the engine.
   [a] If the engine starts and runs, no further troubleshooting is required. Shut down the engine.
   [b] If the engine fails to start and run, check the terminals; refer to section 4.3.

4.3 CORRODED OR DAMAGED BATTERY TERMINALS

Corroded or damaged terminals may cause starting difficulties.

4.3.1 Corroded or Damaged Battery Terminal Repair

To determine if corroded or damaged terminals is causing starting difficulty:

1. Visually inspect terminals for corrosion or damage.
   [a] If corrosion or damage is not found, check the magnetic switch; refer to section 4.4.
   [b] If corrosion or damage is found, repair is necessary; go to step 2.
2. Repair or replace any corroded or damaged terminals; refer to OEM guidelines.
3. Verify repair of corroded or damaged terminals; refer to section 4.3.1.1.

4.3.1.1 Test with Repaired Battery Terminals

Perform the following steps to determine if the repair resolved starting difficulty:

1. Attempt to start and run the engine.
   [a] If the engine starts and runs, no further troubleshooting is required. Shut down the engine.
   [b] If the engine fails to start and run, check the magnetic switch; refer to section 4.4.

All information subject to change without notice.
Copyright © 2007 DETROIT DIESEL CORPORATION

https://truckmanualshub.com/

4.4 DEFECTIVE MAGNETIC SWITCH

To determine if a defective magnetic switch is causing starting difficulty:

1. Start engine.
2. Clamp a heavy gauge battery jumper cable between the two large studs of the magnetic switch. See Figure 4-1.

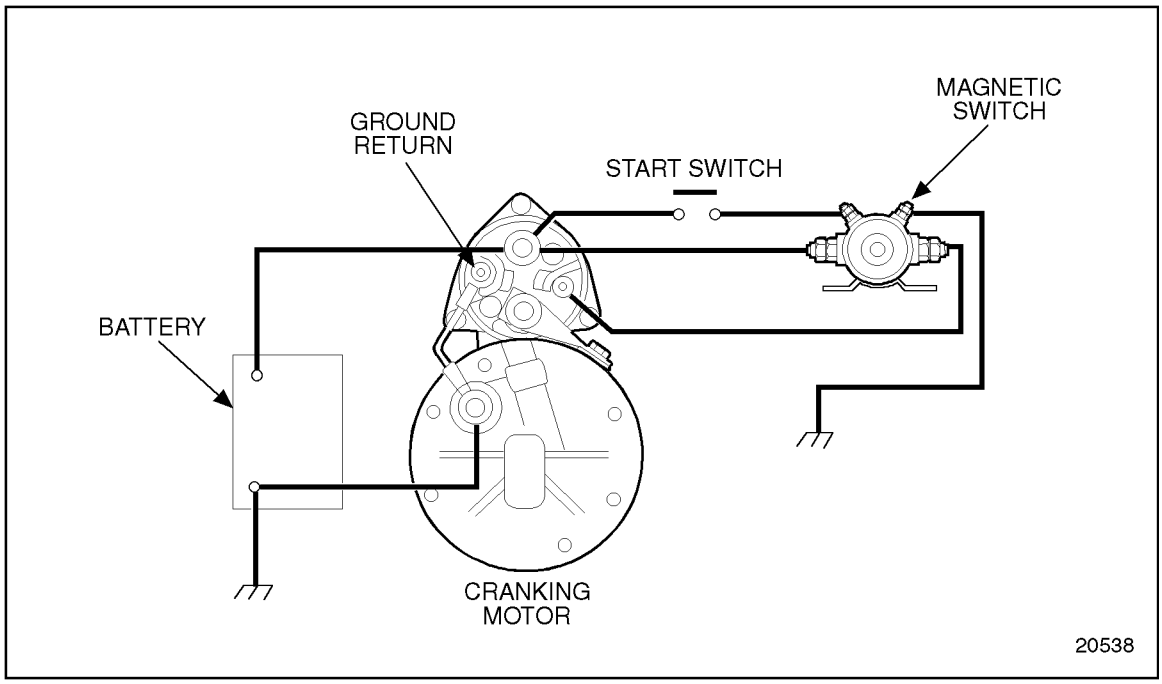

Figure 4-1 Basic Cranking Circuit

[a] If the engine cranked with the jumper cable in place, the magnetic switch must be replaced; refer to section 4.4.1.

[b] If the engine did not crank with the jumper cable in place, check the starter; refer to section 4.5.

4.4.1 Magnetic Switch Replacement

Replace the magnetic switch; refer to OEM guidelines then verify magnetic switch replacement; refer to section 4.4.1.1

4.4.1.1 Test Engine with Replaced Magnetic Switch

Refer to section4.4 for the exhaust caution before proceeding. To determine if the magnetic switch replacement resolved starting difficulty, attempt to start and run the engine.

1. If the engine starts and runs, no further troubleshooting is required. Shut down the engine.
2. If the engine fails to start and run, check the starter; refer to section 4.5.

All information subject to change without notice.
Copyright © 2007 DETROIT DIESEL CORPORATION

https://truckmanualshub.com/

4.5 DEFECTIVE STARTER

To determine if a defective starter is causing starting difficulty, perform the following steps:

1. Place the red lead of a voltmeter to the solenoid "BAT" terminal, see Figure 4-2.

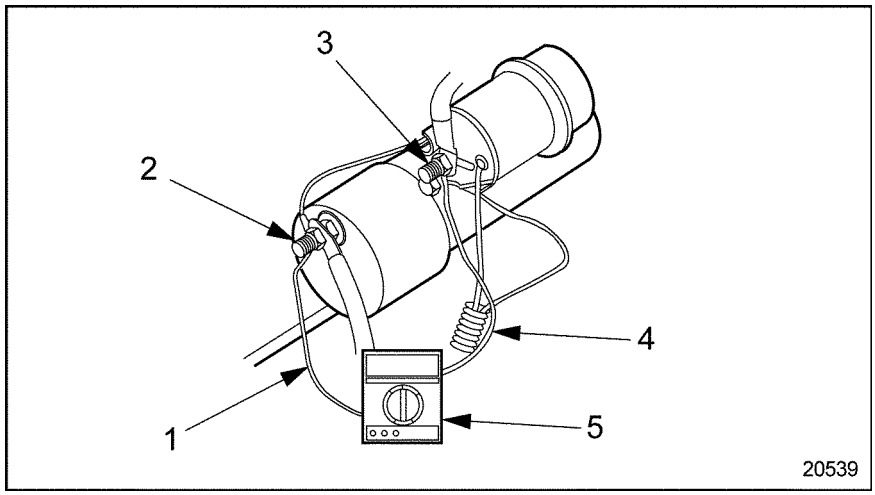

1. Black Voltmeter Lead
2. Starter Ground Terminal Lug
3. Red Voltmeter Lead
4. Harness Tube
5. Volt Ohm Meter

Figure 4-2 Cranking Motor Available Voltage Test

2. Place the black voltmeter lead to the starter ground terminal, see Figure 4-1.
3. Engage the starter switch.
4. View the voltage reading on the meter.
   [a] If the voltage is less than specification while cranking the engine, replacement is necessary; refer to section 4.5.1.
   [b] If the voltage is to specification while cranking the engine, check the cranking speed; refer to section 4.6.

4.5.1 Starter Replacement

Perform the following steps for starter replacement:

1. Replace the starter; refer to the appropriate service manual, electrical equipment chapter.
2. Verify replacement of starter; refer to section 4.5.1.1.

All information subject to change without notice.
Copyright © 2007 DETROIT DIESEL CORPORATION

https://truckmanualshub.com/

4.5.1.1 Test Engine with Replaced Starter

Perform the following steps to determine if the replaced starter resolved starting difficulty:

1. Attempt to start and run the engine. If the engine starts and runs, no further troubleshooting is required. Shut down the engine.
2. If the engine fails to start and run, check the cranking speed; refer to section 4.6.

4.6 LOW CRANKING SPEED

To determine if low cranking speed is causing starting difficulty, perform the following steps:

1. Install a tachometer to the engine.
2. Record engine revolution while cranking the engine; refer to OEM for guidelines.
   [a] If the cranking speed is greater than 100 rpm, check the fuel supply valve; refer to section 4.7.
   [b] If the cranking speed is less than 100 rpm; refer to section 4.6.1.

4.6.1 Low Cranking Speed Repair

Perform the following steps for low cranking speed repair:

1. Drain the engine oil; refer to the appropriate service manual, preventive maintenance engine chapter.
2. Remove oil filter(s); refer to the appropriate service manual, preventive maintenance chapter.
3. Install new oil filter(s); refer to the appropriate service manual, preventive maintenance chapter.
4. Refill the lubrication system with new oil; refer to the appropriate service manual, preventive maintenance chapter.
5. Verify low cranking speed repair; refer to section 4.6.1.1.

4.6.1.1 Test Engine with Replaced Oil

To determine if the replaced oil resolved starting difficulty, attempt to start and run the engine.

1. If the engine starts and runs, no further troubleshooting is required. Shut down the engine.
2. If the engine fails to start and run, check the fuel supply valve; refer to section 4.7.

All information subject to change without notice.
Copyright © 2007 DETROIT DIESEL CORPORATION

https://truckmanualshub.com/

4.7 FUEL SUPPLY VALVE

To determine if the fuel supply valve is causing starting difficulty, check that fuel supply valve is open; refer to OEM guidelines.

1. Check that fuel supply valve.
2. Is the valve open?
   [a] If the fuel supply valve is open, check the fuel filters; refer to section 4.8.
   [b] If the fuel supply valve is closed, repair is necessary; refer to section 4.7.1.

4.7.1 Fuel Supply Valve Repair

Perform the following steps for fuel supply valve repair:

1. Open the closed valve; refer to the appropriate service manual, fuel system chapter.
2. Prime the fuel system; refer to the appropriate service manual, operation and verification chapter.
3. Verify fuel supply valve repair; refer to section 4.7.1.1.

4.7.1.1 Test Engine with Fuel Supply Valve Open

To determine if opening the fuel supply valve resolved starting difficulty, attempt to start and run the engine.

1. If the engine starts and runs, no further troubleshooting is required. Shut down the engine.
2. If the engine fails to start and run, check the fuel filters; refer to section 4.8.

All information subject to change without notice.
Copyright © 2007 DETROIT DIESEL CORPORATION

https://truckmanualshub.com/

4.8 PLUGGED FUEL FILTER(S)

To determine if a plugged fuel filters is causing starting difficulty, perform the following steps:

1. Disconnect the fuel line return hose from the fitting located at the fuel tank.
2. Place the opened end of fuel line into a five gallon container.
3. Start the engine.
4. Run the engine at 1000 rpm.
5. Clock fuel rate for one minute.
6. Measure the amount of fuel flowed into the container.
   [a] If the fuel flow is greater than 3.8 L/min (1 gal/min), check for air in fuel; refer to section 4.10.
   [b] If the fuel flow is less than 3.8 L/min (1 gal/min), replace the fuel filters; refer to section 4.8.1.

4.8.1 Plugged Fuel Filter(s) Replacement

Perform the following steps to replace fuel filter(s):

1. Replace the fuel filter; refer to the appropriate service manual, preventive maintenance chapter.
2. Test the engine to determine if starting has been improved; refer to section 4.8.1.1.

4.8.1.1 Test Engine with Replaced Fuel Filters

To determine if the replaced fuel filters resolved the starting difficulty, refer to section4.8 for the exhaust caution before proceeding. Attempt to start and run the engine.

1. If the engine starts and runs, no further troubleshooting is required. Shut down the engine.
2. If the engine fails to start and run, check the fuel pump; refer to section 4.9.

All information subject to change without notice.
Copyright © 2007 DETROIT DIESEL CORPORATION

https://truckmanualshub.com/

4.9 FUEL PUMP

To determine if the fuel pump is causing starting difficulty, perform the following steps:

1. Insert a piece of wire through the pump flange drain hole, see Figure 4-3.

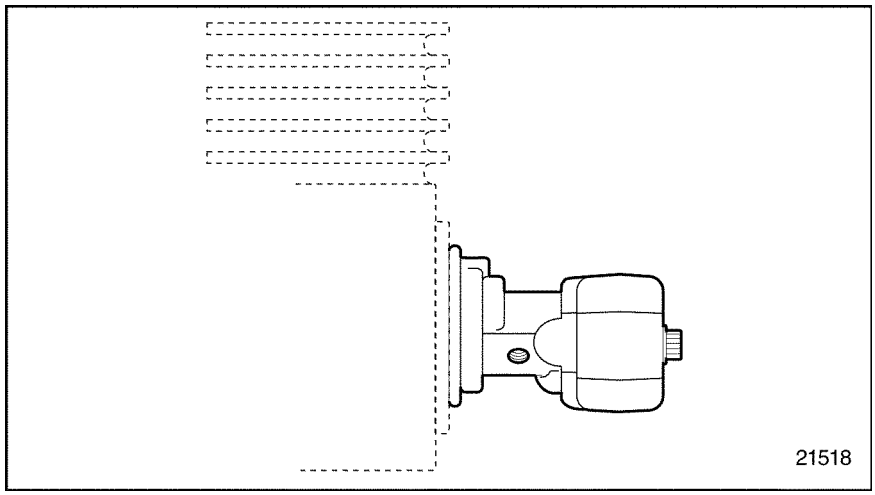

Figure 4-3 Fuel Pump Flange Drain Hole Location

2. Crank the engine momentarily and feel for wire vibration.
   [a] If the wire did not vibrate, determine if the drive hub or coupling should be replaced; refer to section 4.9.1.
   [b] If the wire did vibrate, check for aerated fuel. Refer to section 4.10.

4.9.1 Drive Hubs and Coupling Replacement

Perform the following steps for drive hub or coupling replacement:

1. Replace the drive hub or coupling; refer to the appropriate service manual, fuel system chapter.
2. Test the engine to determine if starting has been improved; refer to section 4.9.1.1.

4.9.1.1 Engine Test with Replaced Drive Hubs or Replaced Coupling

To determine if replaced drive hubs or coupling resolved starting difficulty, attempt to start and run the engine.

1. If the engine starts and runs, no further troubleshooting is required. Shut down the engine.
2. If the engine fails to start and run, check for aerated fuel; refer to section 4.10.

All information subject to change without notice.
Copyright © 2007 DETROIT DIESEL CORPORATION

https://truckmanualshub.com/

4.10 AERATED FUEL

To determine if aerated fuel is causing starting difficulty, perform the following steps:

1. Disconnect the fuel line return hose from the fitting located at the fuel tank; refer to OEM guidelines.
2. Place the opened end of the fuel line into a suitable container.
3. Start the engine.
4. Run the engine at 1000 rpm.
5. Visually check to see if air bubbles are rising to the surface of the fuel within the container.
   [a] If air bubbles are present, repair is necessary; refer to section 4.10.1.
   [b] If air bubbles are not present, check for a restrictive air filter. Shut down the engine; refer to section 4.11.

4.10.1 Aerated Fuel Resolution

Perform the following steps for aerated fuel resolution:

1. Shut down engine.
2. Tighten all fuel line connections between fuel tank and fuel pump; refer to OEM guidelines.
3. Visually inspect all fuel lines between fuel tank and fuel pump for leaks.
4. Replace damaged components as required; refer to OEM guidelines.
5. Verify aerated fuel resolution; refer to section 4.10.1.1.

4.10.1.1 Test Engine with Aerated Fuel Resolution

Refer to section4.10 for exhaust caution before proceeding. Perform the following steps to determine if aerated fuel resolution resolved starting difficulty:

1. Attempt to start and run the engine. If the engine starts and runs, no further troubleshooting is required. Shut down the engine.
2. If the engine fails to start and run, check for a restrictive air filter; refer to section 4.11.

All information subject to change without notice.
Copyright © 2007 DETROIT DIESEL CORPORATION

https://truckmanualshub.com/

4.11 RESTRICTIVE AIR FILTER

To determine if a restrictive air filter is causing starting difficulty, perform the following steps:

1. Remove the air filter element; refer to OEM guidelines.
2. Attempt to start and run the engine.
   [a] If the engine starts and runs, no further troubleshooting is required. Shut down the engine.
   [b] If the engine fails to start and run, refer to section 4.11.1.

4.11.1 Air Filter Replacement

Perform the following steps for air filter replacement:

1. Visually inspect the air filter for clogging and replace as necessary; refer to OEM guidelines.
2. Visually inspect gaskets for deterioration and replace as necessary; refer to OEM guidelines.
3. Visually inspect air inlets for restrictions and clean as necessary; refer to OEM guidelines.
4. Verify air filter replacement; refer to section 4.11.1.1.

4.11.1.1 Test Engine with Replaced Air Filter

Refer to section 4.11 for the exhaust before proceeding. Perform the following steps to determine if the replaced air filter resolved starting difficulty:

1. Attempt to start and run the engine. If the engine starts and runs, no further troubleshooting is required. Shut down the engine.
2. If the engine fails to start and run, check compression; refer to section 4.12.

All information subject to change without notice.
Copyright © 2007 DETROIT DIESEL CORPORATION

https://truckmanualshub.com/

4.12 LOW COMPRESSION

To determine if low compression is causing starting difficulty, perform the following steps:

1. Perform a cylinder compression test. Refer to section 4.12.1.2.
2. Compare cylinder compression test results to specifications.
   [a] If cylinder pressure is below specifications; refer to section 4.12.1.
   [b] If cylinder pressure is within specifications, call Detroit Diesel Customer Support Center (313-592-5800).

4.12.1 Low Compression Repair

Perform the following steps for low compression repair:

1. Remove cylinder head; refer to the appropriate service manual, engine chapter.
2. Inspect the cylinder head for worn or damaged valves; refer to the appropriate service manual, engine chapter.
3. Replace damaged valves; refer to the appropriate service manual, engine chapter.
4. Inspect the cylinder kit components for worn or damaged liners, pistons or piston rings; refer to the appropriate service manual, engine chapter.
5. Verify repairs made to cylinder head valve(s) or cylinder kit components; refer to section 4.12.1.1.

All information subject to change without notice.
Copyright © 2007 DETROIT DIESEL CORPORATION

https://truckmanualshub.com/

4.12.1.1 Test Engine with Repaired Cylinder Head Valve(s), and Cylinder Kit

Perform the following steps to determine if the cylinder head valve and cylinder kit repair resolved starting difficulty:

1. Attempt to start and run the engine. If the engine starts and runs, no further troubleshooting is required. Shut down the engine.
2. If the engine fails to start and run, call the Detroit Diesel Customer Support Center at 313–592–5800.

4.12.1.2 Cylinder Compression Test

Perform the following steps for a compression test on a Series 60 Engine:

WARNING:

PERSONAL INJURY

To avoid injury from inhaling engine exhaust, always operate the engine in a well-ventilated area. Engine exhaust is toxic.

1. Start and run the engine until normal operating temperature is reached. Stop the engine.
2. Disconnect the batteries.
3. Disconnect the fuel pump feed line from the fuel tank. Place a suitable container under the line to catch the spilling fuel. Turn the ¼ turn valve off on the outlet fitting of the secondary fuel filter.
4. Disconnect the fuel supply line to the cylinder head. Place a suitable container under the line to catch the spilled fuel. Disconnect the fuel return line from the doser valve and place a suitable container under the line to catch the spilled fuel.

All information subject to change without notice.
Copyright © 2007 DETROIT DIESEL CORPORATION

https://truckmanualshub.com/

WARNING:

EYE INJURY

To avoid injury from flying debris when using compressed air, wear adequate eye protection (face shield or safety goggles) and do not exceed 276 kPa (40 psi) air pressure.

NOTICE:

All the fuel must be removed from the cylinder head before removing injectors. This prevents the fuel from entering the cylinder and causing cylinder wall lube oil wash down or a hydrostatic lock at startup.

5. Blow low pressure regulated air no more than 207 kPa (30 psi) into the inlet fitting for 20 to 30 seconds or until all the fuel is purged from the head.
6. Clean and remove the rocker cover, it is not necessary to remove the bottom rocker cover. If equipped with Jake Brakes remove the Jake Brake assembly.
7. Remove all the rocker shaft mounting bolts and nut from the front or rear rocker shaft assembly. Using rocker arm lifter (J–35996–A), see Figure 4-4, lift the assembly straight up and off of the head and place in a clean area on the bench.

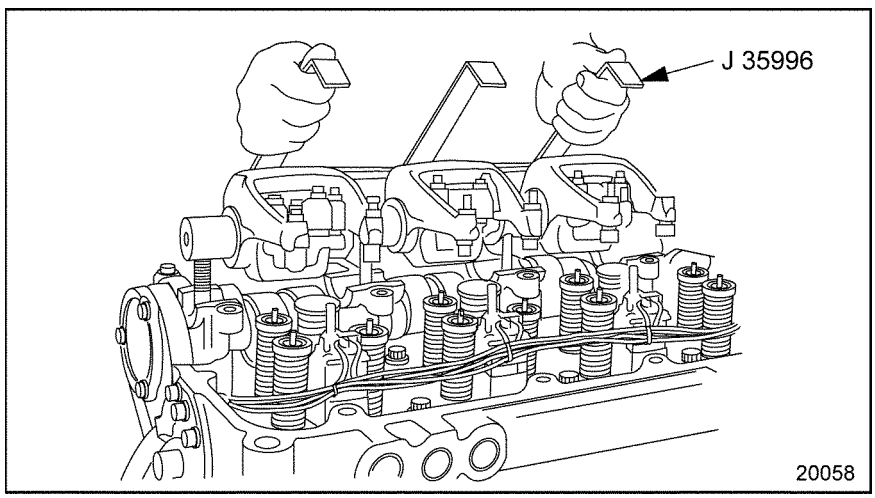

Figure 4-4 Rocker Arm/Shaft Assembly Removal/Installation

8. Use tool J-47808 to remove the 4–pin electrical connection from the injector.
9. Disengage the locking tang on the harness plug connection, grasp the connector and gently pull it from the socket.
10. Remove the injector hold down clamps.

All information subject to change without notice.
Copyright © 2007 DETROIT DIESEL CORPORATION

https://truckmanualshub.com/

NOTICE:

Use extreme care when handling injectors to avoid costly damage by dropping or mishandling. Always install new O-rings when replacing injectors.

11. Remove the three injectors to be tested from the cylinder head.
12. Place the compression test adaptors (J-47373) into the injector holes. It is recommended to have three test adaptors (J-47373) when performing this routine.
13. Install the injector hold down clamps and torque hold down bolts to 58-66 N·m (43-49 lb·ft).
14. Carefully remove the shaft from the rocker arm assembly by slowly pulling it out of the assembly. Place the shaft on the bench. Do not disturb the stack-up of the rocker arm sets.
15. Remove the three injector rocker arms and replace with spacers (J–38768–5) .
16. Lubricate the shaft with clean engine oil. With sleeves in place, carefully reinstall the shaft through each rocker arm shaft. Make sure cup plug end faces inboard.
17. Install the modified rocker arm shaft assembly on the head. If the engine is equipped with a Jake Brake®, use non-Jake Brake rocker arm shaft bolts 8929129. Torque the three bolts and the nut to 102-108 N·m (75-80 lb·ft).

NOTE:
Verify that the bolt holes for the rocker shafts are clean as not to hydro lock the bolts causing damage to the cylinder head.

18. Disconnect both connectors at the valve cover for the injectors.

NOTE:
Disconnect both connectors at the valve cover for the injectors.

WARNING:

PERSONAL INJURY

To avoid injury when working on or near an operating engine, wear protective clothing, eye protection, and hearing protection.

All information subject to change without notice.
Copyright © 2007 DETROIT DIESEL CORPORATION

https://truckmanualshub.com/

WARNING:

PERSONAL INJURY

To avoid injury from hot surfaces, wear protective gloves, or allow engine to cool before removing any component.

WARNING:

ENGINE EXHAUST

To avoid injury from inhaling engine exhaust, always operate the engine in a well-ventilated area. Engine exhaust is toxic.

19. Attach cylinder compression gauge (J–6692–B) to the first adaptor. See Figure 4-5.

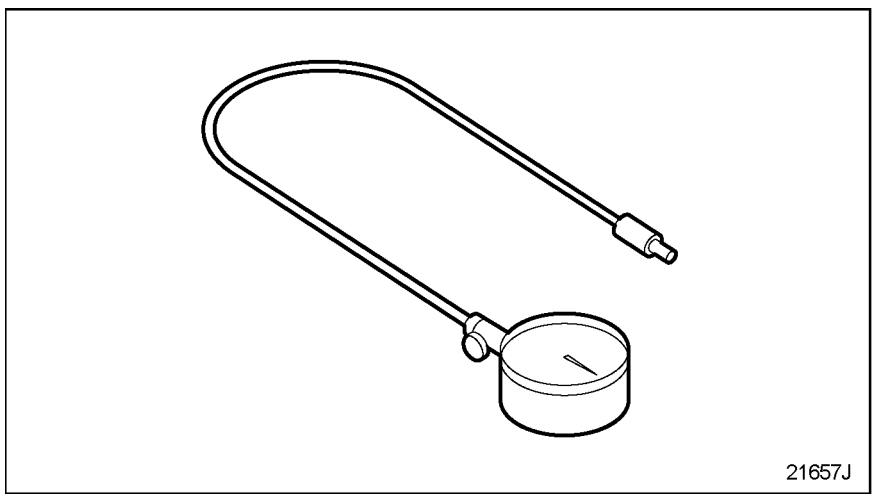

Figure 4-5 Attach Cylinder Compression Gauge J–6692–B

20. Reconnect the batteries.
21. Crank the engine over using the starter motor 5 compression strokes record the compression reading on the gauge.

NOTE:
Verify that the batteries voltage does not go low enough to affect engine cranking speed. If the cranking speed is affected then the results will be inaccurate. If needed connect a battery charge to maintain battery voltage.

22. The compression reading should be 3102-3793 kPa (450-550 psi) with no two cylinders differing by more than 276 kPa (40 psi). If compression readings are below specifications, repeat step 20 to be certain of the reading.

All information subject to change without notice.
Copyright © 2007 DETROIT DIESEL CORPORATION

https://truckmanualshub.com/

23. After testing all three cylinders, remove bolts from the modified rocker arm shaft assembly and, using rocker arm lifter (J–35996), lift the assembly straight up and off the cylinder head. Place in a clean area on the bench.
24. Carefully remove the shaft from the rocker arm assembly, remove the three rocker arm sleeves. Replace the three injector rocker arms. Lubricate the shaft with clean engine oil and carefully reinstall through each rocker arm.
25. Remove the injector hold down clamps discard the hold down bolt and remove the compression test adaptors from the cylinder head.
26. Using new sealing rings and injector hold down bolt install the injectors back into the cylinder head and torque to specifications; Torque bolt to 50 Nm (37 lb ft) Loosen the bolt 60 degrees (1/6 of a turn or one bolt flat) Do not fully loosen the bolt. Torque the bolt to 35 Nm (26 lb ft) Tighten the bolt an additional 90 degrees.
27. Replace the completed rocker arm shaft assembly on the engine and torque nut and bolts to specifications torque to 102-108 N•m (75-80 lb•ft)
28. Repeat steps 4b-26 for the rear 3 cylinders
29. Install upper valve cover, insuring that the bolt hole are clear of dirt and oil as not to damage the lower rocker cover.
30. Check test results

All information subject to change without notice.
Copyright © 2007 DETROIT DIESEL CORPORATION

https://truckmanualshub.com/

4.13 EXTENDED CRANK TIME

There are no fault codes present and the engine finally starts after an extended crank time.

4.13.1 Fuel Level/Leaks Check

Check as follows:

1. Visually inspect fuel tank for proper fuel level; if the tank is low/empty, fill the tank and verify repair, If fuel level is OK, go to next step.
2. Visually inspect the entire fuel system for leaks and damage. Repair as necessary. If no leaks are found, check fuel pressure. Refer to section 4.13.1.1, “Fuel Pressure Test.”

4.13.1.1 Fuel Pressure Test

Check as follows:

1. Verify that there is ample fuel in the fuel tank; if the tank is low, fill the tank with ultra low sulfur fuel.
2. Remove the supply fuel temperature sending unit from the fuel pump.
3. Attach a calibrated fuel gauge capable of reading 0-551 kPa (0-80 psi) to the fuel pump port. Crank-start the engine and record the fuel pressure gauge reading.
   [a] If the pressure is 0-60 kPa (0-10 psi) within 20 seconds of cranking, refer to section 4.13.1.2, “No or Low Fuel Pressure Test.”
   [b] If pressure is below 420 kPa (61 psi) with the engine running, refer to section 4.13.1.2, “No or Low Fuel Pressure Test.”
   [c] If pressure is above 490 kPa (71 psi) with the engine running, refer to section 4.13.1.3, “High Fuel Pressure Test.”

4.13.1.2 No or Low Fuel Pressure Test

Check as follows:

1. Remove the fuel suction line going to the fuel pump.
2. Tee in a vacuum gauge into the pump and the line. Start/Crank the engine over.
3. Is the reading on the gauge greater than 6-12 in. H_2O?
   [a] If yes, check the suction line from the fuel pump to the fuel tank for a restriction (bent, kinked, or internally collapsed). If there is no damage check fuel filter, get customer approval to replace the filters.
   [b] If no, go to step 4.
4. Replace the fuel pressure regulator and retest the fuel pressure. If the fuel pressure is still not within specs, refer to section 4.13.1.4, “Fuel Pump Test.”

All information subject to change without notice.
Copyright © 2007 DETROIT DIESEL CORPORATION

https://truckmanualshub.com/

4.13.1.3 High Fuel Pressure Test

Check as follows:

1. Tee in a pressure gauge into the return line after the fuel pressure regulator.
2. Start the engine and monitor the gauge.
3. Is the pressure reading on the gauge above 3 psi?
   [a] If yes, check the fuel return line for damage (kinked, internally collapsed, or bent closed) If damaged, repair as needed.
   [b] If no, replace the fuel pressure regulator.

4.13.1.4 Fuel Pump Test

Check as follows:

1. Remove the fuel pump from the engine.
2. Crank the engine over and visually inspect the air compressor shaft.
   [a] If air compressor shaft is not turning, verify air compressor operation. Refer to the Bendix web site at http:\\www.bendix.com or call the Bendix Technical Assistance Center at 1-800-AIR-BRAKE, (1-800-247-2725).
   [b] If air compressor shaft is turning, replace the fuel pump.

All information subject to change without notice.
Copyright © 2007 DETROIT DIESEL CORPORATION

https://truckmanualshub.com/

4.14 CRANK NO START

The engine cranks but does not start.

Check for the following:

- □ Low Fuel Level
- □ Air Inlet and Exhaust Restrictions
- □ No RPM While Cranking (using DDDL 7.0)
- □ Low Cranking Speed
- □ No or Low Fuel Pressure
- □ Defective Fuel Pump
- □ High Fuel Pressure
- □ Engine Timing Off
- □ Low Compression

4.14.1 Low Fuel Level and Air Inlet and Exhaust Restrictions

Check as follows:

1. Check for low fuel level.
   - [a] isually inspect fuel tank for proper fuel level; if low/empty, fill the tank and verify repairs.
   - [b] If fuel level is acceptable, go to the next step.
2. Check the air inlet and exhaust restrictions.
   - [a] Visually inspect the air intake and exhaust system for restrictions; if found, repair as necessary and verify repairs.
   - [b] If no damage is found, go to No RPM Data Received via DDDL 7.0, refer to section 4.14.2.

4.14.2 No RPM Data Received via DDDL 7.0

Check No RPM data received via DDDL 7.0 while cranking (if RPM is present while cranking, go to Low Cranking Speed, minimum crank speed 80 RPM, refer to section 4.14.3, “Low Cranking Speed”).

1. Disconnect the MCM 120–pin connector.
2. Install breakout box J-48475 and use cables J-48583.
3. Measure the resistance between pins 44 and 45 of the MCM 120 pin connector.
   - [a] If the resistance is less 140 Ω, go to step 4.
   - [b] If the resistance is greater than 140 Ω, go to step 6.
4. Disconnect the CMP Sensor.
5. Measure the resistance between pins 44 and 45 on the breakout box.

All information subject to change without notice.
Copyright © 2007 DETROIT DIESEL CORPORATION

https://truckmanualshub.com/

[a] If the resistance is less than 3 Ω, repair short between MCM pins 42 and 43 the CMP Sensor.

[b] If the resistance is greater than 3 Ω replace the CMP Sensor.

6. Disconnect the CMP Sensor.
7. Install a jumper wire between pins 1 and 2 on the CMP harness connector.
8. Measure the resistance between pins 44 and 45 on the breakout box.

   [a] If the resistance is greater than 3 Ω, go to step 9.

   [b] If the resistance is less than 3 Ω, replace the CMP Sensor.
9. Measure resistance between pin 44 on the breakout box and pin 1 on the harness side of the CMP connector.

   [a] If the resistance is less than 3 Ω, repair open on wire between pins 45 of the MCM 120–pin connector and pin 2 on the CMP connector.

   [b] If the resistance is greater than 3 Ω, repair the open wire between pin 44 of the MCM 120–pin connector and pin 1 on the harness side of the CMP connector.

4.14.3 Low Cranking Speed

Start troubleshooting by checking the battery voltage as follows:

1. Check the batteries by removing the surface charge from the batteries.

   [a] Turn the ignition OFF.

   [b] Turn ON the headlights for two to three minutes.
2. Check the battery voltage.

   [a] If the battery voltage is not below 12 volts, refer to section 4.14.3.1, “Battery Cable Voltage Drop Test.”

   [b] If the battery voltage is below 12 volts, charge the batteries then proceed with the next step.
3. Check the condition of the batteries individually; refer to diagnostics in the OEM manual.

   [a] If all the batteries are good, go to the next step.

   [b] If the batteries are not good, replace them and go to the next step.
4. Reconnect the batteries.
5. Start the engine. Does the engine start normally?

   [a] If yes, check the charging system diagnostics in the OEM manual.

   [b] If no, refer to section 4.14.3.1, “Battery Cable Voltage Drop Test.”

All information subject to change without notice.
Copyright © 2007 DETROIT DIESEL CORPORATION

https://truckmanualshub.com/

4.14.3.1 Battery Cable Voltage Drop Test

Check as follows:

1. Disable the engine from starting by disconnecting the MCM 120–pin connector. This allows cranking without starting the engine.
2. Attach a long jumper lead from the battery negative post to the negative lead of the voltmeter.
3. Connect the positive lead of the voltmeter to the three locations listed below, measuring voltage at each point, one at a time while the starter is cranking.
   - [a] Starter solenoid battery terminal
   - [b] Starter motor terminal on the starter solenoid
   - [c] Starter ground terminal
4. Connect the volt meter to the battery positive and negative terminals. Measure voltage when cranking the engine.
5. Compare the battery voltage to reading taken in step 4 to the voltage reading taken in step 3.
6. Is there more that a one volt difference between the battery voltage (go to step 4) and the voltage at the battery terminal on the starter solenoid (go to step 3[a])?
   - [a] If yes, repair bad connection or wire between the battery positive terminal and the battery terminal on the starter solenoid.
   - [b] If no, go to the next step.
7. Is there more than one volt difference between the batteries and the starter motor terminal on the starter solenoid?
   - [a] If yes, refer to the OEM manual for starter diagnostics.
   - [b] If no, go to the next step.
8. Is there more than one volt difference between the battery negative terminal and the starter ground terminal?
   - [a] If yes, repair bad connection or wire between the battery negative terminal and the starter ground terminal.
   - [b] If no, refer to starter diagnostics in the OEM manual.

All information subject to change without notice.
Copyright © 2007 DETROIT DIESEL CORPORATION

https://truckmanualshub.com/

4.14.4 No or Low Fuel Pressure/Leaks

Visually inspect the entire fuel system for leaks. If leaks are found, repair as necessary. If no leaks are found, check the fuel pressure. Refer to section 4.14.4.1.

4.14.4.1 Fuel Pressure Test

Test as follows:

1. Verify that there is ample fuel in the tanks, if tanks are low fill with Ultra Low Sulfur Fuel.
2. Remove the supply fuel temperature sending unit from the fuel pump.
3. Attach a calibrated gauge capable of reading 0-551 kPa (0-80 psi) to the fuel pump port. Crank or start the engine and record the reading on the gauge.
   [a] If pressure is 0-60 kPa (0-10 psi) within 20 seconds of cranking, refer to section 4.14.4.2, “No or Low Fuel Pressure Test.”
   [b] If pressure is below 420 kPa (61 psi) with the engine running, refer to section 4.14.4.2, “No or Low Fuel Pressure Test.”
   [c] If pressure is above 490 kPa (71 psi) with the engine running, refer to section 4.14.4.3, “High Fuel Pressure Test.”
   [d] If pressure is between 420–490 kPa (61 -71 psi) with the engine running, refer to section 12.1112.11, “Incorrect Camshaft Timing.”

4.14.4.2 No or Low Fuel Pressure Test

Check as follows:

1. Remove the fuel suction line going to the fuel pump.
2. Tee in a vacuum gauge into the pump and the line. Start/Crank the engine over.
3. Is the reading on the gauge greater than 6-12 in.H_2O?
   [a] If yes, check the suction line from the fuel pump to the fuel tank for a restriction (bent, kinked, or internally collapsed). If there is no damage check fuel filter, get customer approval to replace the filters.
   [b] If no, go to step 4.
4. Replace the fuel pressure regulator and retest the fuel pressure. If the fuel pressure is still not within specs, refer to section 4.14.4.4, “Fuel Pump Test.”

All information subject to change without notice.
Copyright © 2007 DETROIT DIESEL CORPORATION

https://truckmanualshub.com/

4.14.4.3 High Fuel Pressure Test

Check as follows:

1. Tee in a pressure gauge into the return line after the fuel pressure regulator.
2. Start the engine and monitor the gauge.
3. Is the pressure reading on the gauge above 3 psi?
   [a] If yes, check the fuel return line for damage (kinked, internally collapsed, or bent closed) If damaged repair as needed.
   [b] If no, replace the Fuel Pressure Regulator.

4.14.4.4 Fuel Pump Test

Check as follows:

1. Remove the fuel pump from the engine.
2. Crank the engine over and visually inspect the air compressor shaft.
   [a] If air compressor shaft is not turning, verify air compressor operation. Refer to the Bendix web site at http:\\www.bendix.com or call the Bendix Technical Assistance Center at 1-800-AIR-BRAKE, (1-800-247-2725).
   [b] If air compressor shaft is turning, replace the fuel pump.

4.14.5 Engine Timing

Check Cam timing, refer to section 12.11, “Incorrect Camshaft Timing” in the *EPA07 Series 60 Service Manual* (6SE2007).

4.14.6 Low Compression

Perform DDDL 7.0 compression test service routine, based on results then perform Manual Compression Test, (refer to section 4.12.1.2).

All information subject to change without notice.
Copyright © 2007 DETROIT DIESEL CORPORATION

https://truckmanualshub.com/

All information subject to change without notice.
Copyright © 2007 DETROIT DIESEL CORPORATION

https://truckmanualshub.com/

5 NO START - ENGINE WILL NOT ROTATE

Section **Page**

5.1 DISCHARGED BATTERY 5-3
5.2 DEFECTIVE MAGNETIC SWITCH 5-4
5.3 DEFECTIVE STARTER 5-5
5.4 INTERNAL ENGINE DAMAGE 5-6

https://truckmanualshub.com/

All information subject to change without notice.
Copyright © 2007 DETROIT DIESEL CORPORATION

https://truckmanualshub.com/

5.1 DISCHARGED BATTERY

To determine if a discharged battery is causing the engine not to start, measure and record the voltage at the battery terminals; refer to OEM guidelines.

1. If the voltage recorded is below OEM specifications and the engine failed to start, replacement is necessary; refer to section 5.1.1.
2. If the voltage recorded is at recommended OEM specifications and the engine failed to start, check the magnetic switch; refer to section 5.2.

5.1.1 Discharged Battery Resolution

Perform the following steps for battery replacement:

1. Replace the battery; refer to OEM guidelines.
2. Verify replacement of the battery; refer to section 5.1.1.1.

5.1.1.1 Test Engine with New Battery

To determine if the new battery resolved the no start condition, attempt to start and run the engine.

1. If the engine starts and runs, no further troubleshooting is required. Shut down the engine.
2. If the engine fails to start or run, check the magnetic switch; refer to section 5.2.

All information subject to change without notice.
Copyright © 2007 DETROIT DIESEL CORPORATION

https://truckmanualshub.com/

5.2 DEFECTIVE MAGNETIC SWITCH

To determine if a defective magnetic switch is causing no start:

1. Start engine.
2. Clamp a heavy gage battery jumper cable between the two large studs of the magnetic switch; see Figure 5-1.

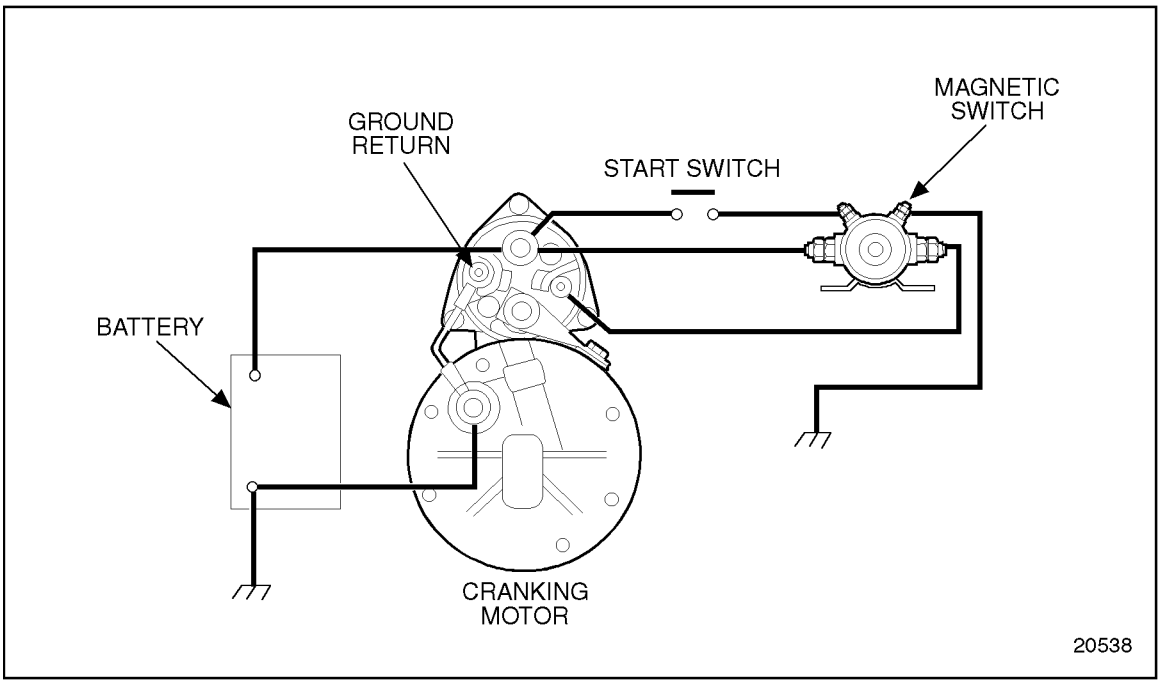

Figure 5-1 Basic Cranking Circuit

[a] If the engine cranked with the jumper cable in place, the magnetic switch must be replaced; go to step 3.

[b] If the engine did not crank with the jumper cable in place, check the starter; refer to section 5.3.

3. Replace the magnetic switch. Refer to OEM guidelines.
4. Verify magnetic switch replacement; refer to section 5.2.1.

5.2.1 Test Engine with New Magnetic Switch

Refer to section 5.2 for exhaust caution before proceeding. To determine if the magnetic switch replacement resolved the no start condition, attempt to start and run the engine.

1. If the engine starts and runs, no further troubleshooting is required. Shut down the engine.
2. If the engine fails to start or run, check the starter; refer to section

All information subject to change without notice.
Copyright © 2007 DETROIT DIESEL CORPORATION

https://truckmanualshub.com/

5.3 DEFECTIVE STARTER

To determine if a defective starter is causing no start, perform the following steps:

1. Connect a AMP meter lead from the tester around the positive battery cable.
2. Connect the positive red lead from the tester to the positive battery post.
3. Connect the negative black lead from the tester to the negative battery post.
4. Engage the starter
5. View the AMP reading when cranking the engine
   [a] If the APM reading is out of specification or the engine does not crank refer to section 5.4.
   [b] If the AMP reading is within specifications check the wiring on the Motor Control Module (MCM).

5.3.1 Test Engine with New Starter

To determine if the new starter resolved no start condition, attempt to start and run the engine.

1. If the engine starts and runs, no further troubleshooting is required. Shut down the engine.
2. If the engine fails to crank, check for internal engine damage. Refer to section 5.4.

All information subject to change without notice.
Copyright © 2007 DETROIT DIESEL CORPORATION

https://truckmanualshub.com/

5.4 INTERNAL ENGINE DAMAGE

To determine if internal engine damage is causing no start condition, perform the following steps:

1. Install a 3/4 in. breaker bar or ratchet and attempt to bar the engine over by hand.
2. Determine severity of internal engine damage.
   [a] If the engine rotates freely, replace the starter. Refer to appropriate service manual, engine chapter.
   [b] If the engine binds and will not rotate freely, refer to section 5.4.1.

5.4.1 Internal Engine Damage Replacement

Perform the following steps for crankshaft bearings, and cylinder liners replacement:

1. Replace the crankshaft bearings; refer to appropriate service manual, engine chapter.
2. Replace the cylinder liners; refer to appropriate service manual, engine chapter.
3. Verify replacement of components; refer to section 5.4.1.1.

5.4.1.1 Test Engine with Replaced Components

To determine if the new components resolved no start condition, attempt to start and run the engine.

1. If the engine starts and runs, no further troubleshooting is required. Shut down the engine.
2. If the engine fails to start, call the Detroit Diesel Customer Support Center at 313–592–5800.

All information subject to change without notice.
Copyright © 2007 DETROIT DIESEL CORPORATION

https://truckmanualshub.com/

6 EXCESSIVE OIL CONSUMPTION

Section **Page**

6.1 EXTERNAL OIL LEAKS 6-3
6.2 LEAKING OIL COOLER CORE 6-4
6.3 DEFECTIVE AIR COMPRESSOR 6-6
6.4 DEFECTIVE TURBOCHARGER 6-8
6.5 WORN OR DAMAGED VALVE OR CYLINDER KIT 6-9

https://truckmanualshub.com/

All information subject to change without notice.
Copyright © 2007 DETROIT DIESEL CORPORATION

https://truckmanualshub.com/

6.1 EXTERNAL OIL LEAKS

To determine if oil leaks are causing excessive oil consumption, perform the following:

1. Start and run the engine to operating temperature 88°C (190°F).
2. Check for leaks at oil lines, connections, mating joints, seals, and gaskets.
   [a] If no oil leaks are found, shut down the engine and check for a leaking oil cooler core; refer to section 6.2.
   [b] If oil leaks are found, shut down the engine; refer to section 6.1.1.

6.1.1 Engine Oil Leak Repair

Perform the following steps, as necessary, to resolve engine oil leaks:

1. Repair or replace components leaking oil; refer to appropriate service manual, lubrication system chapter.
2. Verify repairs made to correct oil leaks; refer to section 6.1.1.1.

6.1.1.1 Test Engine with Repairs Made to Correct Oil Leaks

Perform the following steps to determine if the repairs resolved the oil leaks:

1. Refer to section6.1 for exhaust caution before proceeding. Start and run the engine to operating temperature 88°C (190°F).
2. Shut down the engine.
3. Check the engine for oil leaks.
   [a] If no oil leaks are observed, no further troubleshooting is required Retest for oil consumption.
   [b] If external oil leaks are still present, repeat section 6.1.1.

All information subject to change without notice.
Copyright © 2007 DETROIT DIESEL CORPORATION

https://truckmanualshub.com/

6.2 LEAKING OIL COOLER CORE

To determine if a leaking oil cooler core is causing excessive oil consumption, perform the following:

1. Check for oil in the engine coolant or radiator.
   [a] If oil is present in either the engine coolant or radiator; perform step 2
   [b] If no oil is present in either the engine coolant or radiator, check for a defective air compressor; refer to section 6.3.
2. Remove the oil cooler core and housing; refer to appropriate service manual, lubrication system chapter.
3. Clean both the oil side and water side of oil cooler core; refer to appropriate service manual, lubrication system chapter.
4. Perform an oil cooler core pressure test; refer to appropriate service manual, lubrication system chapter.
5. Visually check to see if air bubbles are rising to the surface of the water within the container.
   [a] If air bubbles are present, refer to section 6.2.1.
   [b] If no air bubbles are present, complete a lube oil consumption report, call the Detroit Diesel Customer Support Center (313-592-5800) for a form.

6.2.1 Oil Cooler Core Replacement

Perform the following for oil cooler core replacement:

1. Remove and install a new oil cooler core; refer to appropriate service manual, lubrication system chapter.
2. Verify replacement of oil cooler core; refer to section 6.2.1.1.
3. If there is oil in the cooling system flush the cooling system and replace the coolant filter. Refer to the appropriate service manual.

All information subject to change without notice.
Copyright © 2007 DETROIT DIESEL CORPORATION

https://truckmanualshub.com/

6.2.1.1 Test Engine with New Oil Cooler Core

Perform the following steps to determine if the replaced oil cooler core reduced oil consumption:

1. Start and run the engine to operating temperature 88°C (190°F).
2. Shut down the engine.
3. Check the engine coolant for the presence of oil.
   [a] If no oil is present in the coolant, perform an lube oil consumption test report; refer to section 6.2.1.2.
   [b] If oil is present in the coolant, repeat section 6.2.1.

6.2.1.2 Test Engine for Reduced Oil Consumption

Perform a lube oil consumption report as follows:,

1. Call the Detroit Diesel Customer Support Center (313–592–5800) for a form.
2. Review the oil consumption report.
   [a] If the oil consumption report data is within specifications, check for defective air compressor. Refer to section 6.3.
   [b] If the oil consumption report data is not within specifications, no further troubleshooting is required.

All information subject to change without notice.
Copyright © 2007 DETROIT DIESEL CORPORATION

https://truckmanualshub.com/

6.3 DEFECTIVE AIR COMPRESSOR

To determine if a defective air compressor is causing excessive oil consumption, perform the following:

1. Perform a crankcase pressure test and record the test results. refer to appropriate service manual, preventive maintenance chapter. For crankcase pressure guidelines refer to Service Information Letter 02 TS-20 found on the DDC extranet.
2. Disconnect the air outlet line from the air compressor; see Figure 6-1; refer to appropriate service manual, special equipment chapter.

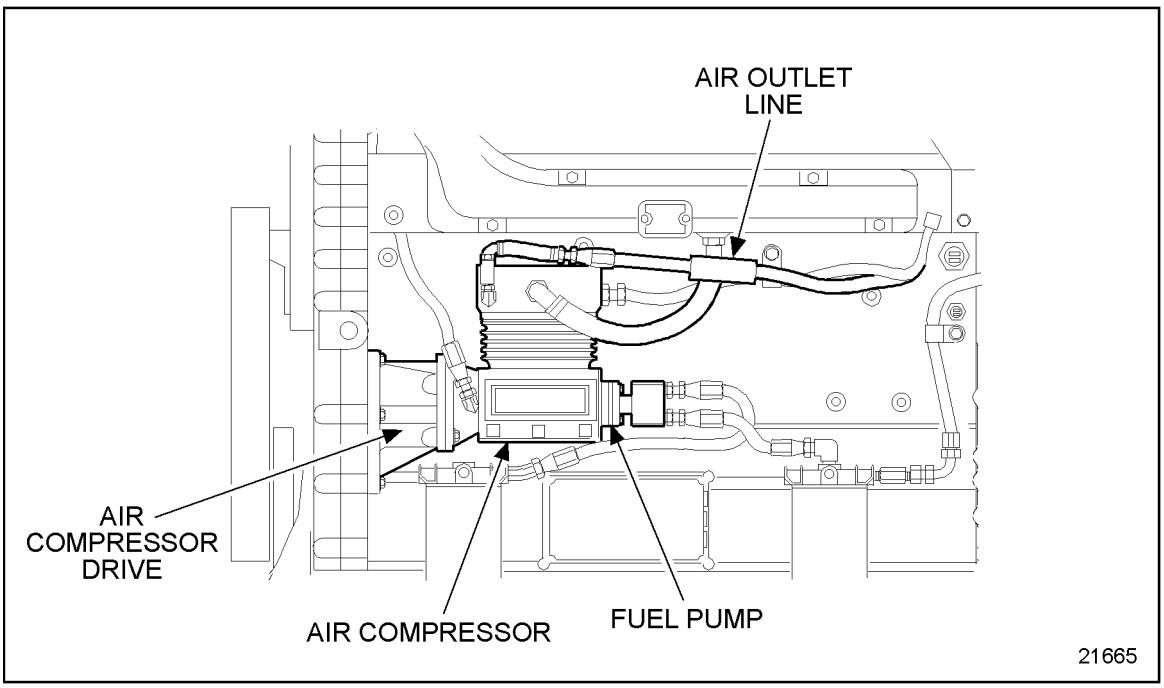

Figure 6-1 Air Compressor Air Outlet Line

3. Repeat step 1 and record the test results.
4. Compare the results of test one with test two.
   [a] If the engine crankcase pressure remained the same, check the turbocharger; refer to section 6.4.
   [b] If the engine crankcase pressure decreased, replace the air compressor; refer to section 6.3.1.

All information subject to change without notice.
Copyright © 2007 DETROIT DIESEL CORPORATION

https://truckmanualshub.com/

6.3.1 Air Compressor Removal

Perform the following steps to remove the defective air compressor:

1. Remove the air compressor from the engine; refer to appropriate service manual, special equipment chapter.
2. Disassemble and repair the air compressor; refer to OEM guidelines.
3. Install the repaired air compressor to the engine; refer to appropriate service manual, special equipment chapter.
4. Verify repair of the air compressor; refer to section 6.3.1.1.

6.3.1.1 Test Engine with Repaired Air Compressor

Perform the following steps to determine if the repaired air compressor resolved the excessive crankcase pressure:

1. Start and run the engine.
2. Perform a crankcase pressure test. Refer to appropriate service manual, preventive maintenance chapter.
   [a] If the engine crankcase pressure exceeds 1.25 kPa (5 in. H_2O), refer to section 6.4. Shut down the engine.
   [b] If the engine crankcase pressure is less than1.25 kPa (5 in. H_2O), shut down the engine; no further troubleshooting is required.

All information subject to change without notice.
Copyright © 2007 DETROIT DIESEL CORPORATION

https://truckmanualshub.com/

6.4 DEFECTIVE TURBOCHARGER

To determine if a defective turbocharger is causing excessive oil consumption, perform the following:

1. Remove the turbocharger drain line connected to the crankcase and place the drain line into a suitable container.

NOTICE:
Ensure that the engine is not allowed to operate longer than necessary to perform the crankcase pressure test. A complete loss of crankcase oil will severely damage the engine.

2. Perform a crankcase pressure test. Refer to appropriate service manual, preventive maintenance chapter.
   [a] If the engine crankcase pressure is less than 1.25 kPa (5 in. H_2O), replace the turbocharger; refer to appropriate service manual, air intake system chapter.
   [b] If the engine crankcase pressure is 1.25 kPa (5 in. H_2O) or more, check for worn or damaged valve and cylinder kit; refer to section 6.5.

6.4.1 Turbocharger Replacement

Perform the following steps to replace a defective turbocharger:

1. Remove the defective turbocharger from the engine; refer to appropriate service manual, air intake system chapter.
2. Tag removed turbocharger for remanufacture.
3. Install a new turbocharger to the engine; refer to appropriate service manual, air intake system chapter.
4. Verify replacement of new turbocharger; refer to section 6.4.1.1.

6.4.1.1 Test Engine with New Turbocharger

Perform the following steps to determine if a new turbocharger resolved the excessive crankcase pressure:

1. Perform a crankcase pressure test. Refer to appropriate service manual, preventive maintenance chapter.
   [a] If the engine crankcase pressure is greater than 1.25 kPa (5 in. H_2O), check for worn or damaged valve or cylinder kit; refer to section 6.5.
   [b] If the engine crankcase pressure is 1.25 kPa (5 in. H_2O) or less, no further troubleshooting is required.

All information subject to change without notice.
Copyright © 2007 DETROIT DIESEL CORPORATION

https://truckmanualshub.com/

6.5 WORN OR DAMAGED VALVE OR CYLINDER KIT

A loss of cylinder pressure can cause increased oil consumption. The detection and elimination of cylinder pressure losses is vital to engine life and efficient operation. To assist the mechanic in effectively measuring the loss of cylinder pressure, and locating the source of abnormal leaks in individual cylinders, the following test procedure has been developed.

1. Move the vehicle requiring test to the chassis dynamometer; refer to OEM guidelines.
2. Disconnect air compressor, refer to appropriate service manual, special equipment chapter.
3. Start the engine.
4. Run the engine and bring the engine coolant temperature to normal operating range.
5. Run vehicle to full load and rated speed.
6. Attach a manometer calibrated to read in inches of water, to the oil dipstick opening. Measure and record the crankcase pressure.
7. Shut down engine.
8. Remove the vehicle from the chassis dynamometer.
9. Review the crankcase pressure test results.
   [a] If the crankcase pressure exceeds 1.25 kPa (5 in. H_2O), repair worn or damaged valve(s) or cylinder kit; refer to section 6.5.1.
   [b] If the crankcase pressure was less than or equal to 1.25 kPa (5 in. H_2O), perform cylinder compression test.Refer to section 6.5.1.2.
10. Compare the cylinder compression test results to specifications.
    [a] If the cylinder compression is below specifications, repair worn or damaged valve(s) or cylinder kit; refer to section 6.5.1.
    [b] If the cylinder compression is within specification, call Detroit Diesel Customer Support Center (313-592-5800).

6.5.1 Worn or Damaged Valve(s) or Cylinder Kit(s) Repair

Perform the following steps to repair worn or damaged valve(s) and cylinder kit(s):

1. Remove cylinder head; refer to appropriate service manual, engine chapter.
2. Inspect the cylinder head for worn or damaged valves; refer to appropriate service manual, engine chapter.
3. Inspect the cylinder kit components for worn or damaged liners, pistons or piston rings; refer to appropriate service manual, engine chapter.
4. Replace damaged cylinder kit components; refer to appropriate service manual, engine chapter.
5. Verify repairs made to cylinder head valve(s) or cylinder kit components; refer to section 6.5.1.1.

All information subject to change without notice.
Copyright © 2007 DETROIT DIESEL CORPORATION

https://truckmanualshub.com/

6.5.1.1 Test Engine with Repaired Cylinder Head Valve(s), and Cylinder Kit

Refer to section 6.5 for exhaust caution before proceeding. To determine if the cylinder head valve and cylinder kit repair resolved the excessive oil consumption.

1. Perform a crankcase pressure test if reading is below 1.25 kPa (5psi) no further troubleshooting is required.
2. If the crankcase pressure test is reading over.25 kPa (5 psi), call the Detroit Diesel Customer Support Center at 313–592–5800.

6.5.1.2 Cylinder Compression Test

Perform the following steps for a compression test on a Series 60 Engine:

WARNING:

PERSONAL INJURY

To avoid injury from inhaling engine exhaust, always operate the engine in a well-ventilated area. Engine exhaust is toxic.

1. Start and run the engine until normal operating temperature is reached. Stop the engine.
2. Disconnect the batteries.
3. Disconnect the fuel pump feed line from the fuel tank. Place a suitable container under the line to catch the spilling fuel. Turn the ¼ turn valve off on the outlet fitting of the secondary fuel filter.
4. Disconnect the fuel supply line to the cylinder head. Place a suitable container under the line to catch the spilled fuel. Disconnect the fuel return line from the doser valve and place a suitable container under the line to catch the spilled fuel.

All information subject to change without notice.
Copyright © 2007 DETROIT DIESEL CORPORATION

https://truckmanualshub.com/

WARNING:

EYE INJURY

To avoid injury from flying debris when using compressed air, wear adequate eye protection (face shield or safety goggles) and do not exceed 276 kPa (40 psi) air pressure.

NOTICE:

All the fuel must be removed from the cylinder head before removing injectors. This prevents the fuel from entering the cylinder and causing cylinder wall lube oil wash down or a hydrostatic lock at startup.

5. Blow low pressure regulated air no more than 207 kPa (30 psi) into the inlet fitting for 20 to 30 seconds or until all the fuel is purged from the head.
6. Clean and remove the rocker cover, it is not necessary to remove the bottom rocker cover. If equipped with Jake Brakes remove the Jake Brake assembly.
7. Remove all the rocker shaft mounting bolts and nut from the front or rear rocker shaft assembly. Using rocker arm lifter (J–35996–A), see Figure 6-2, lift the assembly straight up and off of the head and place in a clean area on the bench.

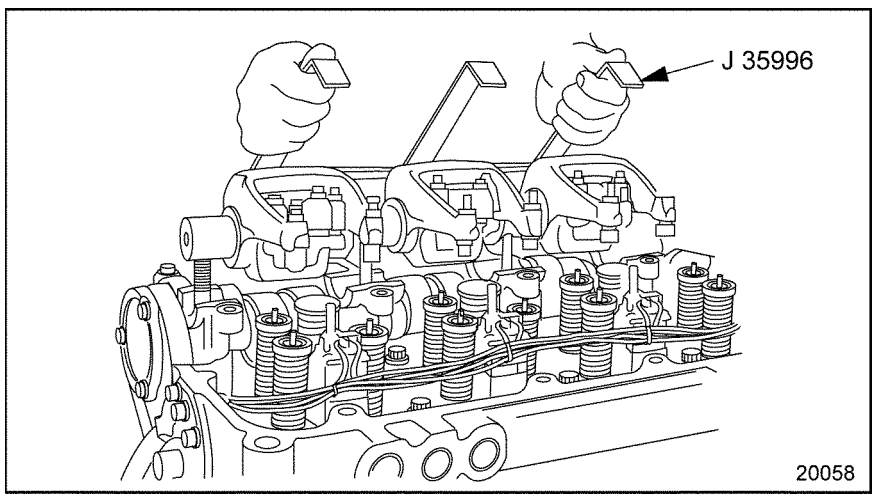

Figure 6-2 Rocker Arm/Shaft Assembly Removal/Installation

8. Use tool J-47808 to remove the 4–pin electrical connection from the injector.
9. Disengage the locking tang on the harness plug connection, grasp the connector and gently pull it from the socket.
10. Remove the injector hold down clamps.

All information subject to change without notice.
Copyright © 2007 DETROIT DIESEL CORPORATION

https://truckmanualshub.com/

NOTICE:

Use extreme care when handling injectors to avoid costly damage by dropping or mishandling. Always install new O-rings when replacing injectors.

11. Remove the three injectors to be tested from the cylinder head.
12. Place the compression test adaptors (J-47373) into the injector holes. It is recommended to have three test adaptors (J-47373) when performing this routine.
13. Install the injector hold down clamps and torque hold down bolts to 58-66 N·m (43-49 lb·ft).
14. Carefully remove the shaft from the rocker arm assembly by slowly pulling it out of the assembly. Place the shaft on the bench. Do not disturb the stack-up of the rocker arm sets.
15. Remove the three injector rocker arms and replace with spacers (J–38768–5) .
16. Lubricate the shaft with clean engine oil. With sleeves in place, carefully reinstall the shaft through each rocker arm shaft. Make sure cup plug end faces inboard.
17. Install the modified rocker arm shaft assembly on the head. If the engine is equipped with a Jake Brake®, use non-Jake Brake rocker arm shaft bolts 8929129. Torque the three bolts and the nut to 102-108 N·m (75-80 lb·ft).

NOTE:
Verify that the bolt holes for the rocker shafts are clean as not to hydro lock the bolts causing damage to the cylinder head.

18. Disconnect both connectors at the valve cover for the injectors.

NOTE:
Disconnect both connectors at the valve cover for the injectors.

WARNING:

PERSONAL INJURY

To avoid injury when working on or near an operating engine, wear protective clothing, eye protection, and hearing protection.

All information subject to change without notice.
Copyright © 2007 DETROIT DIESEL CORPORATION

https://truckmanualshub.com/

WARNING:

PERSONAL INJURY

To avoid injury from hot surfaces, wear protective gloves, or allow engine to cool before removing any component.

WARNING:

ENGINE EXHAUST

To avoid injury from inhaling engine exhaust, always operate the engine in a well-ventilated area. Engine exhaust is toxic.

19. Attach cylinder compression gauge (J–6692–B) to the first adaptor. See Figure 6-3.

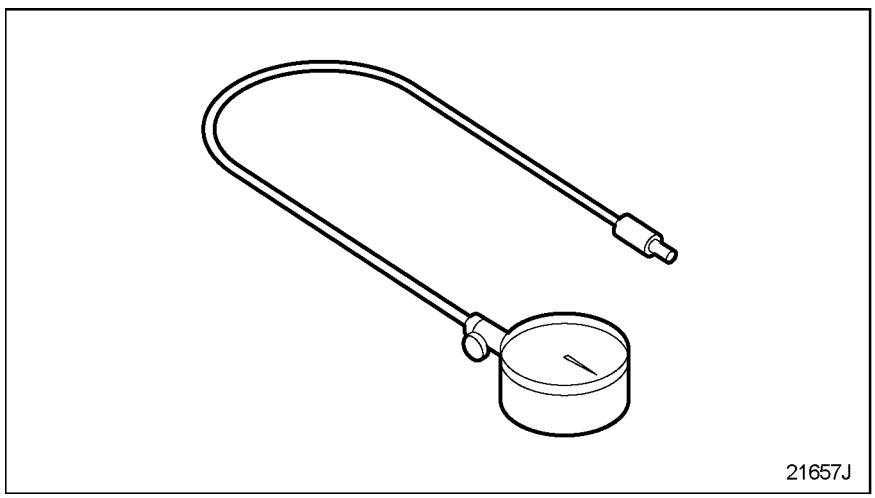

Figure 6-3 Attach Cylinder Compression Gauge J 6692–B

20. Reconnect the batteries.
21. Crank the engine over using the starter motor 5 compression strokes record the compression reading on the gauge.

NOTE:
Verify that the batteries voltage does not go low enough to affect engine cranking speed. If the cranking speed is affected then the results will be inaccurate. If needed connect a battery charge to maintain battery voltage.

22. The compression reading should be 3102-3793 kPa (450-550 psi) with no two cylinders differing by more than 276 kPa (40 psi). If compression readings are below specifications, repeat step 20 to be certain of the reading.

All information subject to change without notice.
Copyright © 2007 DETROIT DIESEL CORPORATION

https://truckmanualshub.com/

23. After testing all three cylinders, remove bolts from the modified rocker arm shaft assembly and, using rocker arm lifter (J–35996), lift the assembly straight up and off the cylinder head. Place in a clean area on the bench.
24. Carefully remove the shaft from the rocker arm assembly, remove the three rocker arm sleeves. Replace the three injector rocker arms. Lubricate the shaft with clean engine oil and carefully reinstall through each rocker arm.
25. Remove the injector hold down clamps discard the hold down bolt and remove the compression test adaptors from the cylinder head.
26. Using new sealing rings and injector hold down bolt install the injectors back into the cylinder head and torque to specifications; Torque bolt to 50 Nm (37 lb ft) Loosen the bolt 60 degrees (1/6 of a turn or one bolt flat) Do not fully loosen the bolt. Torque the bolt to 35 Nm (26 lb ft) Tighten the bolt an additional 90 degrees.
27. Replace the completed rocker arm shaft assembly on the engine and torque nut and bolts to specifications torque to 102-108 N•m (75-80 lb•ft)
28. Repeat steps 4b-26 for the rear 3 cylinders
29. Install upper valve cover, insuring that the bolt hole are clear of dirt and oil as not to damage the lower rocker cover.
30. Check test results

All information subject to change without notice.
Copyright © 2007 DETROIT DIESEL CORPORATION

https://truckmanualshub.com/

7 EXCESSIVE CRANKCASE PRESSURE

Section **Page**

7.1 OBSTRUCTION OR DAMAGE TO ROCKER COVER BREATHER 7-3

7.2 DEFECTIVE AIR COMPRESSOR 7-4

7.3 DEFECTIVE TURBOCHARGER 7-6

7.4 WORN OR DAMAGED VALVE OR CYLINDER KIT 7-7

https://truckmanualshub.com/

All information subject to change without notice.
Copyright © 2007 DETROIT DIESEL CORPORATION

https://truckmanualshub.com/

7.1 OBSTRUCTION OR DAMAGE TO ROCKER COVER BREATHER

To determine if an obstructed or damaged breather is causing excessive crankcase pressure, perform the following:

1. Perform a crankcase pressure test. Refer to appropriate service manual, preventive maintenance chapter. For crankcase pressure guidelines refer to Service Information Letter 02 TS-20 found on the DDC extranet.
2. Check the results, if the engine crankcase pressure is greater than 1.25 kPa (5 in. H_2O), replace wire mesh element. Refer to section 7.1.1.

7.1.1 Rocker Cover Breather Resolution

Perform the following steps to replace wire mesh element replacement:

1. Remove the valve rocker cover(s) (one-piece, two piece, three piece); refer to appropriate service manual, engine chapter.
2. Remove the wire mesh form the rocker cover; refer to appropriate service manual, engine chapter.
3. Install a new wire mesh element to the rocker cover; refer to appropriate service manual, engine chapter.
4. Install the rocker cover to the engine; (one-piece, two piece, three piece) refer to appropriate service manual, engine chapter.
5. Verify replacement of wire mesh element; refer to section 7.1.1.1.

7.1.1.1 Test Engine with New Wire Mesh Element

Perform the following steps to determine if the new wire mesh element resolved the excessive crankcase pressure:

1. Start and run the engine.
2. Perform a crankcase pressure test. Refer to appropriate service manual, preventive maintenance chapter. For crankcase pressure guidelines refer to Service Information Letter 02 TS-20 found on the DDC extranet.
   [a] If the engine crankcase pressure is less than 1.25 kPa (5 in. H_2O), no further troubleshooting is required. Shut down the engine.
   [b] If the engine crankcase pressure is greater than 1.25 kPa (5 in. H_2O), check the air compressor; refer to section 7.2. Shut down the engine.

All information subject to change without notice.
Copyright © 2007 DETROIT DIESEL CORPORATION

https://truckmanualshub.com/

7.2 DEFECTIVE AIR COMPRESSOR

To determine if a defective air compressor is causing excessive crankcase pressure, perform the following:

1. Perform a crankcase pressure test, refer to appropriate service manual, preventive maintenance chapter and record the test results. For crankcase pressure guidelines refer to Service Information Letter 02 TS-20 found on the DDC extranet.
2. Disconnect the air outlet line from the air compressor; see Figure 7-1; refer to appropriate service manual, special equipment chapter.

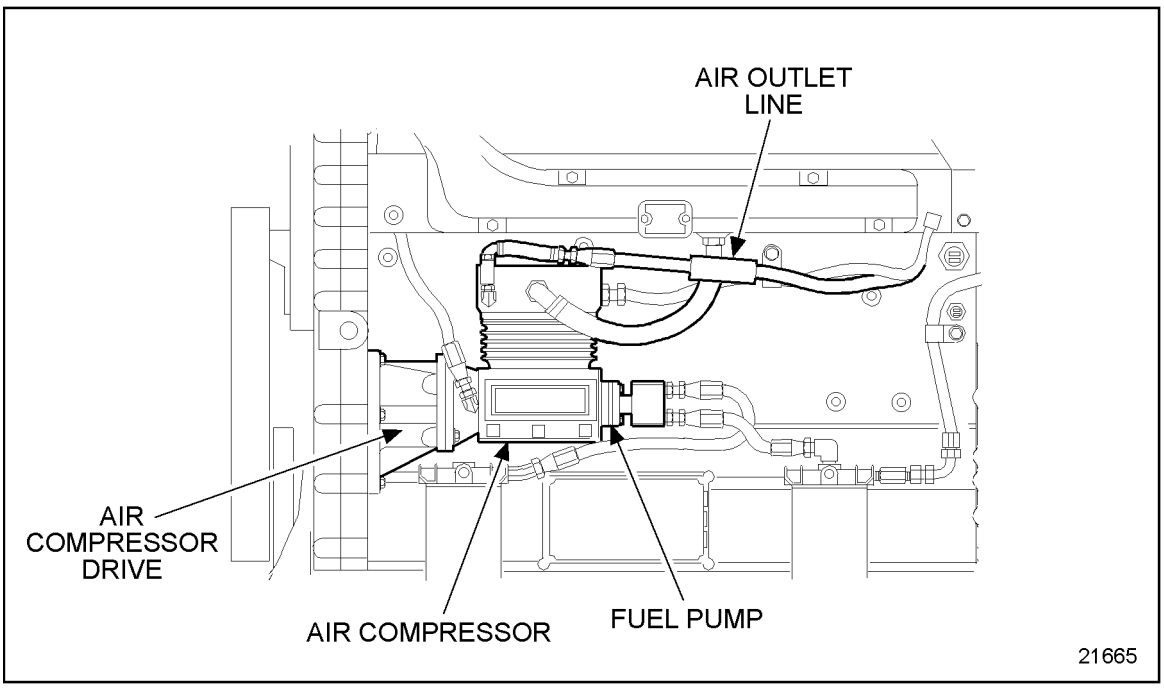

Figure 7-1 Air Compressor Air Outlet Line

3. Repeat step 1 and record the test results.
4. Compare the results of test one with test two.
   [a] If the engine crankcase pressure remained the same, check the turbocharger; refer to section 7.3.
   [b] If the engine crankcase pressure decreased, repair the air compressor; refer to section 7.2.1.

7.2.1 Air Compressor Repair

Perform the following steps to repair the defective air compressor:

1. Remove the air compressor from the engine; refer to appropriate service manual, special equipment chapter.

All information subject to change without notice.
Copyright © 2007 DETROIT DIESEL CORPORATION

https://truckmanualshub.com/

2. Install the repaired air compressor to the engine; refer to appropriate service manual, special equipment chapter.
3. Verify repair of the air compressor; refer to section 7.2.1.1.

7.2.1.1 Test Engine with Repaired Air Compressor

Perform the following steps to determine if a repaired air compressor resolved the excessive crankcase pressure:

1. Start and run the engine.
2. Perform a crankcase pressure test. Refer to appropriate service manual, preventive maintenance chapter. For crankcase pressure guidelines refer to Service Information Letter 02 TS-20 found on the DDC extranet.
   [a] If the engine crankcase pressure is within 1.25 kPa (5 in. H_2O), no further troubleshooting is required. Shut down the engine.
   [b] If the engine crankcase pressure is not within 1.25 kPa (5 in. H_2O), check the turbocharger, refer to section 7.3. Shut down the engine.

All information subject to change without notice.
Copyright © 2007 DETROIT DIESEL CORPORATION

https://truckmanualshub.com/

7.3 DEFECTIVE TURBOCHARGER

To determine if a defective turbocharger is causing excessive crankcase pressure, perform the following:

NOTICE:
Ensure that the engine is not allowed to operate longer than necessary to perform the crankcase pressure test. A complete loss of crankcase oil will severely damage the engine.

1. Remove the turbocharger drain line connected to the crankcase and place the drain line into a suitable container; refer to appropriate service manual, air intake system chapter.
2. Perform a crankcase pressure test. Refer to appropriate service manual, preventive maintenance chapter. For crankcase pressure guidelines refer to Service Information Letter 02 TS-20 found on the DDC extranet.
   [a] If the engine crankcase pressure is less than 1.25 kPa (5 in. H_2O), replace the turbocharger; refer to section 7.3.1. Shut down the engine.
   [b] If the engine crankcase pressure indicates no change, check for a worn or damaged valve or cylinder kit; refer to section 7.4. Shut down the engine.

7.3.1 Turbocharger Replacement

Perform the following steps to replace a defective turbocharger:

1. Remove defective turbocharger from the engine; refer to appropriate service manual, air intake system chapter.
2. Tag removed turbocharger for remanufacture.
3. Install a replacement turbocharger to the engine; refer to appropriate service manual, air intake system chapter.
4. Verify replacement of new turbocharger; refer to section 7.3.1.1.

7.3.1.1 Test Engine with New Turbocharger

To determine if a new turbocharger resolved the excessive crankcase pressure, perform a crankcase pressure test. Refer to appropriate service manual, preventive maintenance chapter. For crankcase pressure guidelines refer to Service Information Letter 02 TS-20 found on the DDC extranet.

1. If the engine crankcase pressure is 1.25 kPa (5 in. H_2O) or less, no further troubleshooting is required.
2. If the engine crankcase pressure is greater than 1.25 kPa (5 in. H_2O), check for a worn or damaged valve or cylinder kit; refer to section 7.4.

All information subject to change without notice.
Copyright © 2007 DETROIT DIESEL CORPORATION

https://truckmanualshub.com/

7.4 WORN OR DAMAGED VALVE OR CYLINDER KIT

To determine if a worn or damaged cylinder kit is causing excessive crankcase pressure, perform the following:

WARNING:

PERSONAL INJURY

To avoid injury from inhaling engine exhaust, always operate the engine in a well-ventilated area. Engine exhaust is toxic.

1. Move the vehicle requiring test to the chassis dynamometer; refer to OEM guidelines.
2. Disconnect air compressor, refer to appropriate service manual, special equipment chapter.
3. Start the engine.
4. Run the engine and bring the engine coolant temperature to normal operating range.
5. Run vehicle to full load and rated speed.
6. Attach a manometer calibrated to read in inches of water, to the oil dipstick opening. Measure and record the crankcase pressure.
7. Shut down engine.
8. Remove the vehicle from the chassis dynamometer.
9. Review the crankcase pressure test results.
   [a] If the crankcase pressure exceeds 1.25 kPa (5 in. H_2O), repair worn or damaged valve(s) or cylinder kit; refer to section 7.4.1.
   [b] If the crankcase pressure was less than or equal to 1.25 kPa (5 in. H_2O), perform cylinder compression test.Refer to section 7.4.1.2.
10. Compare the cylinder compression test results to specifications.
    [a] If the cylinder compression is below specifications, repair worn or damaged valve(s) or cylinder kit; refer to section 7.4.1.
    [b] If the cylinder compression is within specification, call Detroit Diesel Customer Support Center (313-592-5800).

7.4.1 Worn or Damaged Valve or Cylinder Kit Repair

Perform the following steps for worn or damaged valve or cylinder kit:

1. Remove the cylinder head; refer to appropriate service manual, engine chapter.
2. Inspect the cylinder head for worn or damaged valves; refer to appropriate service manual, engine chapter.

All information subject to change without notice.
Copyright © 2007 DETROIT DIESEL CORPORATION

https://truckmanualshub.com/

3. Inspect the cylinder kit components for worn or damaged liners, piston, or piston rings; refer to appropriate service manual, engine chapter.
4. Verify repair to cylinder valve(s) or cylinder kit components; refer to section 7.4.1.1.

7.4.1.1 Test Engine with Repairs Made to Correct Worn or Damaged Valve or Cylinder Kit

Perform the following to determine if the repaired valve or cylinder kit resolved the excessive crankcase pressure:

1. Move the vehicle requiring test to the chassis dynamometer; refer to OEM guidelines.
2. Disconnect air compressor; refer to appropriate service manual, special equipment chapter.
3. Refer to section7.4 for exhaust caution before proceeding. Start the engine.
4. Run the engine and bring the engine coolant temperature to normal operating range.
5. Run the vehicle to full load and rated speed.
6. Attach a manometer calibrated to read in inches of water, to the oil dipstick opening.
7. Measure and record crankcase pressure. For crankcase pressure guidelines refer to Service Information Letter 02 TS-20 found on the DDC extranet.
8. Shut down the engine.
9. Remove the vehicle from the chassis dynamometer.
10. Compare the cylinder pressure test results to specifications.
    [a] If cylinder pressure is within specifications, no further troubleshooting is required.
    [b] If cylinder pressure is not within specifications, call Detroit Diesel Customer Support Center at 313–592–5800.

7.4.1.2 Cylinder Compression Test

Perform the following steps for a compression test on a Series 60 Engine:

⚠ WARNING:

PERSONAL INJURY

To avoid injury from inhaling engine exhaust, always operate the engine in a well-ventilated area. Engine exhaust is toxic.

1. Start and run the engine until normal operating temperature is reached. Stop the engine.
2. Disconnect the batteries.

All information subject to change without notice.
Copyright © 2007 DETROIT DIESEL CORPORATION

https://truckmanualshub.com/

3. Disconnect the fuel pump feed line from the fuel tank. Place a suitable container under the line to catch the spilling fuel. Turn the ¼ turn valve off on the outlet fitting of the secondary fuel filter.
4. Disconnect the fuel supply line to the cylinder head. Place a suitable container under the line to catch the spilled fuel. Disconnect the fuel return line from the doser valve and place a suitable container under the line to catch the spilled fuel.

WARNING:

EYE INJURY

To avoid injury from flying debris when using compressed air, wear adequate eye protection (face shield or safety goggles) and do not exceed 276 kPa (40 psi) air pressure.

NOTICE:

All the fuel must be removed from the cylinder head before removing injectors. This prevents the fuel from entering the cylinder and causing cylinder wall lube oil wash down or a hydrostatic lock at startup.

5. Blow low pressure regulated air no more than 207 kPa (30 psi) into the inlet fitting for 20 to 30 seconds or until all the fuel is purged from the head.
6. Clean and remove the rocker cover, it is not necessary to remove the bottom rocker cover. If equipped with Jake Brakes remove the Jake Brake assembly.
7. Remove all the rocker shaft mounting bolts and nut from the front or rear rocker shaft assembly. Using rocker arm lifter (J–35996–A), see Figure 7-2, lift the assembly straight up and off of the head and place in a clean area on the bench.

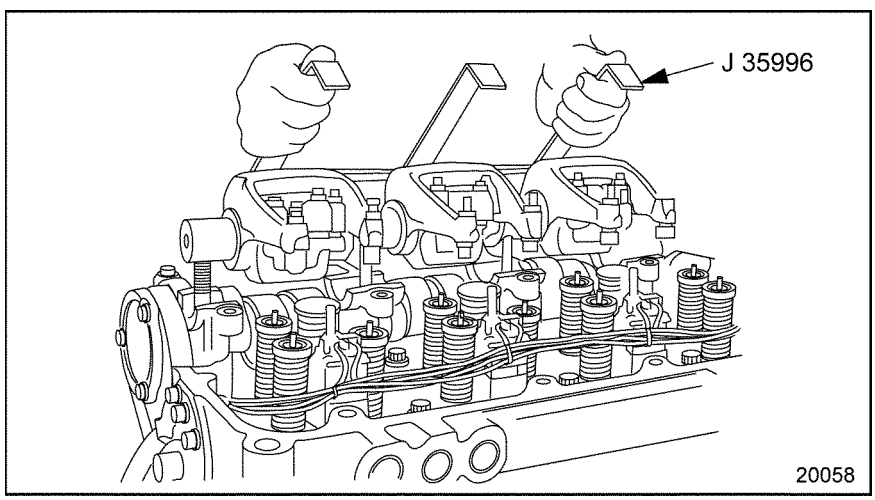

Figure 7-2 Rocker Arm/Shaft Assembly Removal/Installation

All information subject to change without notice.
Copyright © 2007 DETROIT DIESEL CORPORATION

https://truckmanualshub.com/

8. Use tool J-47808 to remove the 4–pin electrical connection from the injector.
9. Disengage the locking tang on the harness plug connection, grasp the connector and gently pull it from the socket.
10. Remove the injector hold down clamps.

NOTICE:

Use extreme care when handling injectors to avoid costly damage by dropping or mishandling. Always install new O-rings when replacing injectors.

11. Remove the three injectors to be tested from the cylinder head.
12. Place the compression test adaptors (J-47373) into the injector holes. It is recommended to have three test adaptors (J-47373) when performing this routine.
13. Install the injector hold down clamps and torque hold down bolts to 58-66 N·m (43-49 lb·ft).
14. Carefully remove the shaft from the rocker arm assembly by slowly pulling it out of the assembly. Place the shaft on the bench. Do not disturb the stack-up of the rocker arm sets.
15. Remove the three injector rocker arms and replace with spacers (J–38768–5) .
16. Lubricate the shaft with clean engine oil. With sleeves in place, carefully reinstall the shaft through each rocker arm shaft. Make sure cup plug end faces inboard.
17. Install the modified rocker arm shaft assembly on the head. If the engine is equipped with a Jake Brake®, use non-Jake Brake rocker arm shaft bolts 8929129. Torque the three bolts and the nut to 102-108 N·m (75-80 lb·ft).

NOTE:
Verify that the bolt holes for the rocker shafts are clean as not to hydro lock the bolts causing damage to the cylinder head.

18. Disconnect both connectors at the valve cover for the injectors.

NOTE:
Disconnect both connectors at the valve cover for the injectors.

WARNING:

PERSONAL INJURY

To avoid injury when working on or near an operating engine, wear protective clothing, eye protection, and hearing protection.

All information subject to change without notice.
Copyright © 2007 DETROIT DIESEL CORPORATION

https://truckmanualshub.com/

WARNING:

PERSONAL INJURY

To avoid injury from hot surfaces, wear protective gloves, or allow engine to cool before removing any component.

WARNING:

ENGINE EXHAUST

To avoid injury from inhaling engine exhaust, always operate the engine in a well-ventilated area. Engine exhaust is toxic.

19. Attach cylinder compression gauge (J–6692–B) to the first adaptor. See Figure 7-3.

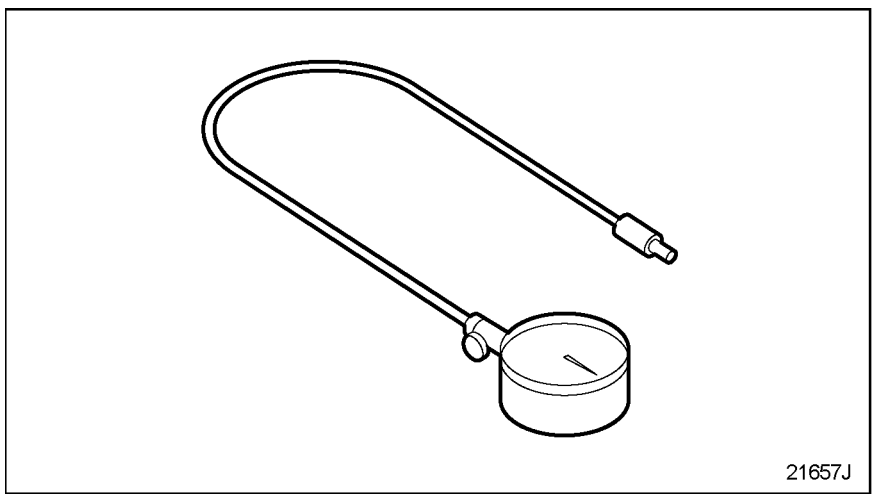

Figure 7-3 Attach Cylinder Compression Gauge J 6692–B

20. Reconnect the batteries.
21. Crank the engine over using the starter motor 5 compression strokes record the compression reading on the gauge.

NOTE:
Verify that the batteries voltage does not go low enough to affect engine cranking speed. If the cranking speed is affected then the results will be inaccurate. If needed connect a battery charge to maintain battery voltage.

22. The compression reading should be 3102-3793 kPa (450-550 psi) with no two cylinders differing by more than 276 kPa (40 psi). If compression readings are below specifications, repeat step 20 to be certain of the reading.

All information subject to change without notice.
Copyright © 2007 DETROIT DIESEL CORPORATION

https://truckmanualshub.com/

23. After testing all three cylinders, remove bolts from the modified rocker arm shaft assembly and, using rocker arm lifter (J–35996), lift the assembly straight up and off the cylinder head. Place in a clean area on the bench.
24. Carefully remove the shaft from the rocker arm assembly, remove the three rocker arm sleeves. Replace the three injector rocker arms. Lubricate the shaft with clean engine oil and carefully reinstall through each rocker arm.
25. Remove the injector hold down clamps discard the hold down bolt and remove the compression test adaptors from the cylinder head.
26. Using new sealing rings and injector hold down bolt install the injectors back into the cylinder head and torque to specifications; Torque bolt to 50 Nm (37 lb ft) Loosen the bolt 60 degrees (1/6 of a turn or one bolt flat) Do not fully loosen the bolt. Torque the bolt to 35 Nm (26 lb ft) Tighten the bolt an additional 90 degrees.
27. Replace the completed rocker arm shaft assembly on the engine and torque nut and bolts to specifications torque to 102-108 N•m (75-80 lb•ft)
28. Repeat steps 4b-26 for the rear 3 cylinders
29. Install upper valve cover, insuring that the bolt hole are clear of dirt and oil as not to damage the lower rocker cover.
30. Check test results

All information subject to change without notice.
Copyright © 2007 DETROIT DIESEL CORPORATION

https://truckmanualshub.com/

8 EXCESSIVE EXHAUST SMOKE - BLACK OR GRAY

Section **Page**

8.1 IMPROPER GRADE OF DIESEL FUEL 8-3
8.2 RESTRICTED AIR CLEANER ELEMENT 8-4
8.3 RESTRICTED OR CRACKED CHARGE AIR COOLER 8-5
8.4 FAULTY EXHAUST SYSTEM 8-7
8.5 FAULTY FUEL INJECTOR 8-8
8.6 DEFECTIVE TURBOCHARGER 8-9

https://truckmanualshub.com/

All information subject to change without notice.
Copyright © 2007 DETROIT DIESEL CORPORATION

https://truckmanualshub.com/

8.1 IMPROPER GRADE OF DIESEL FUEL

To determine if an improper grade of diesel fuel is causing excessive black or gray smoke, perform the following:

1. Acquire a fuel sample from the vehicle fuel tank(s).
2. Submit fuel sample for an ASTM test analysis.
   [a] If the fuel meets specifications, check for a restrictive air cleaner; refer to section 8.2.
   [b] If the fuel did not meet specifications, resolve improper grade of fuel; refer to section 8.1.1.

8.1.1 Improper Grade of Fuel Resolution

Perform the following steps to resolve the improper grade of fuel oil:

1. Drain the fuel oil tanks, refer to OEM guidelines, and dispose of properly.

NOTICE:
Use only Ultra-Low Sulfur Diesel (ULSD) fuel (15 ppm sulfur content maximum), based on ASTM D2622 test procedure.

2. Refill the fuel tanks with new ultra-low sulfur diesel fuel.
3. Verify fuel resolution; refer to section 8.1.1.1.

8.1.1.1 Test the Engine with New Fuel

Perform the following steps to determine if the fuel refill resolved the excessive exhaust smoke condition:

1. Start and run the engine.
2. Run the engine at idle with a no-load for approximately 5 minutes, allowing the engine coolant to reach normal operating range.
3. Visually inspect exhaust for excessive smoke.
   [a] If the engine exhaust smoke emission appears normal, no further troubleshooting is required. Shut down the engine.
   [b] If the engine exhaust smoke is excessively black or gray, shut down the engine. Check the air filter; refer to section 8.2.

All information subject to change without notice.
Copyright © 2007 DETROIT DIESEL CORPORATION

https://truckmanualshub.com/

8.2 RESTRICTED AIR CLEANER ELEMENT

To determine if a restrictive air cleaner is causing excessive black or gray smoke, perform the following:

1. Remove the air filter element from the air cleaner container; refer to OEM guidelines.
2. Visually inspect the air cleaner element for damage or clogging.
   [a] If no damage or clogging is found, check the charge air cooler; refer to section 8.3.
   [b] If damage or clogging is found, refer to section 8.2.1.

8.2.1 Air Filter Element Replacement

Perform the following to replace the air filter element:

1. Remove and replace the damaged or clogged air filter element; refer to OEM guidelines.
2. Verify air filter element replacement; refer to section 8.2.1.1.

8.2.1.1 Test the Engine with Replaced Air Filter Element

Perform the following to determine if the new filter element resolved excessive exhaust smoke:

1. Start and run the engine.
2. Run the engine at idle with a no-load for approximately 5 minutes, allowing the engine coolant to reach normal operating range.
3. Visually inspect exhaust for excessive smoke.
   [a] If the engine exhaust emission appears normal, no further troubleshooting is required. Shut down the engine.
   [b] If the engine exhaust emission is excessively black or gray, shut down the engine. Check the charge air cooler; refer to section 8.3.

All information subject to change without notice.
Copyright © 2007 DETROIT DIESEL CORPORATION

https://truckmanualshub.com/

8.3 RESTRICTED OR CRACKED CHARGE AIR COOLER

To determine if a charge air cooler is causing excessive exhaust smoke, perform the following:

NOTICE:
To avoid engine damage, follow the installation instructions provided with the air-to-air charge air cooler test kit.

1. Attach a WK93 air-to-air charge air cooler test kit; refer to OEM guidelines.
2. Disconnect the air inlet hose from the outlet side of the turbocharger compressor housing; refer to appropriate service manual, air intake system chapter.
3. Attach the air-to-air cooler test kit adaptor plug to fit into the hose at the compressor connector; refer to OEM guidelines.
4. Attach an air pressure hose to the air chuck at the regulator and gradually pressurize the air inlet system to a pressure of 177 kPa (25 psi).
5. Apply a water and soap solution to each hose connection, across the face of the charge air cooler.
6. Apply a water and soap solution to the air intake manifold and cylinder head mating surface area.
7. Visually inspect all joints for air leaks and all charge air cooler welded surfaces for stress cracks.
   [a] If air leaks are present around the joints, replace the charge air cooler; refer to section 8.3.1.
   [b] If any leaks are present around the air intake manifold, repair the air intake manifold; refer to section 8.3.2.
   [c] If no leaks are present, check for faulty exhaust system; refer to section 8.4.

8.3.1 Charge Air Cooler Replacement

Perform the following steps to replace the charge air cooler:

1. Replace the charge air cooler, refer to OEM guidelines.
2. Verify replacement of the charge air cooler; refer to section 8.3.2.1.

All information subject to change without notice.
Copyright © 2007 DETROIT DIESEL CORPORATION

https://truckmanualshub.com/

8.3.2 Air Intake Manifold Repair

Perform the following steps to repair the air intake manifold:

1. Remove the air intake manifold; refer to appropriate service manual, air intake system chapter.
2. Inspect the air intake manifold; refer to appropriate service manual, air intake system chapter.
3. Install the air intake manifold; refer to appropriate service manual, air intake system chapter.
4. Verify repair of the air intake manifold; refer to section 8.3.2.1.

8.3.2.1 Test the Engine with Replaced Charge Air Cooler and Air Intake Manifold

To determine if the replaced charge air cooler and air intake manifold resolved the excessive exhaust smoke condition, perform the following:

1. Start and run the engine.
2. Run the engine at idle with a no-load for approximately 5 minutes, allowing the engine coolant to reach normal operating range.
3. Visually inspect exhaust for excessive smoke.
   [a] If the engine exhaust emission appears normal, no further troubleshooting is required. Shut down the engine.
   [b] If the engine exhaust emission is excessively black or gray, shut down the engine. Check the faulty exhaust system; refer to section 8.4.

All information subject to change without notice.
Copyright © 2007 DETROIT DIESEL CORPORATION

https://truckmanualshub.com/

8.4 FAULTY EXHAUST SYSTEM

To determine if a faulty exhaust system is causing excessive exhaust smoke, perform the following:

1. Drill an 11/32 in. hole in the exhaust pipe, 5 to 12 in. (127 - 305 mm) from the turbocharger exhaust outlet.

NOTE:
The tapped hole must be in a comparatively straight area of the turbocharger exhaust outlet.

2. Tap the hole to accommodate an 1/8 in. pipe plug. Connect a manometer to the tapped hole.
3. Start and run the engine at idle with a no-load for approximately 5 minutes, allowing the engine coolant to reach normal operating range.
4. Run the engine speed to full load.
   [a] If the exhaust back pressure at full load is less than 10.1 kPa (3.0 in. Hg), check the fuel injectors, refer to section 8.5. Shut down the engine.
   [b] If the exhaust back pressure at full load is 10.1 kPa (3.0 in. Hg) or greater, refer to section 8.4.1. Shut down the engine.

8.4.1 Engine Exhaust System Resolution

Perform the following steps to resolve the engine exhaust system:

1. Visually inspect the engine exhaust system; refer to OEM guidelines.
2. Repair and replace defective exhaust system components; refer to OEM guidelines.
3. Verify exhaust system resolution; refer to section 8.4.1.1.

8.4.1.1 Test the Engine with Replaced Exhaust System

Perform the following steps to determine if replaced engine exhaust system components resolved excessive exhaust smoke condition:

1. Refer to section 8.4 for exhaust caution before proceeding. Start and run the engine.
2. Run the engine at idle with a no-load for approximately 5 minutes, allowing the engine coolant to reach normal operating range.
3. Visually inspect exhaust for excessive smoke.
   [a] If the engine exhaust emission appears normal, no further troubleshooting is required. Shut down the engine.
   [b] If the engine exhaust emission is excessively black or gray, shut down the engine. Check the fuel injectors; refer to section 8.5.

All information subject to change without notice.
Copyright © 2007 DETROIT DIESEL CORPORATION

https://truckmanualshub.com/

8.5 FAULTY FUEL INJECTOR

To determine if a faulty fuel injector is causing the cylinder to misfire, perform the following steps:

1. Install DDL adaptor to the data cable and plug the adaptor into the DDL connector in the vehicle; refer to OEM guidelines.
2. Start and run the engine at no-load.
3. From the DDEC VI Select Menu, scroll to select ENGINE and press the ENTER key.
4. Scroll to FUEL INJECTOR INFO (CUTOUT) and press the ENTER key.
5. Scroll to select NEW TEST and press the ENTER key.
6. Scroll to select RPM SETTING FOR CCO TEST NORMAL and scroll to select 1000 and press the ENTER key.
7. Scroll to select AUTO and press the ENTER key. Wait for END OF TEST.

NOTE:
If an injector cannot be cutout, an ERROR message will appear. Press FUNC to exit the cylinder cutout function, press the FUNC key.

8. Scroll the list to review the results of the cylinder cutout test. To find suspect injectors, look for a cylinder with a value that is within 0.2° of the NO CUTOUT PULSE WIDTH, by comparing the CUTOUT PULSE WIDTH values to the NO CUTOUT PULSE WIDTH values.
   [a] If any CUTOUT PULSE WIDTH values are within 0.2° of the NO CUTOUT PULSE WIDTH, shut down the engine; refer to section 8.5.1.
   [b] If any CUTOUT PULSE WIDTH values are not within 0.2° of the NO CUTOUT PULSE WIDTH, shut down the engine; refer to section 8.6.

8.5.1 Faulty Fuel Injector Repair

Perform the following steps for faulty fuel injector assembly(s):

1. Remove and replace injector assembly(s) whose values are within 0.2° of the NO CUTOUT PULSE WIDTH; refer to appropriate service manual, fuel system chapter.
2. Verify replaced injector assembly(s); refer to section 8.5.1.1.

8.5.1.1 Verification of Repair for Faulty Fuel Injector

Perform the following to determine if the replaced fuel injector(s) resolved the excessive exhaust smoke condition:

1. Refer to section 8.5 for exhaust caution before proceeding. Start the engine.
2. Run the engine speed to full load.
3. Visually inspect the exhaust for excessive smoke.

All information subject to change without notice.
Copyright © 2007 DETROIT DIESEL CORPORATION

https://truckmanualshub.com/

[a] If the engine exhaust emission appears normal, no further troubleshooting is required. Shut down the engine.

[b] If the engine exhaust emission is excessive, check for defective turbocharger; refer to section 8.6. Shut down the engine.

8.6 DEFECTIVE TURBOCHARGER

To determine if a defective turbocharger is causing excessive exhaust smoke, perform the following:

1. Remove the exhaust pipe from the turbine outlet and remove the air intake pipe from the compressor inlet.
2. Visually inspect the turbine and compressor wheels for missing blades or blade damage.
3. Inspect the turbine and compressor wheels for heavy deposits of dirt, coke or carbon.
4. Using a flashlight, check the wheels and housings for signs of rubbing.
5. Rotate the turbine wheel to check for freedom of movement.
6. Replace the turbocharger if there is any visible damage. refer to appropriate service manual, air intake system chapter.

8.6.1 Turbocharger Replacement

Perform the following steps to replace a defective turbocharger:

1. Remove defective turbocharger from the engine; refer to appropriate service manual, air intake system chapter.
2. Tag removed turbocharger for remanufacture.
3. Install a new turbocharger to the engine; refer to appropriate service manual, air intake system chapter.
4. Verify replacement of new turbocharger; refer to section 8.6.1.1.

8.6.1.1 Test Engine with Replaced Turbocharger

Perform the following steps to determine if a replaced turbocharger resolved the excessive exhaust smoke condition:

1. Start the engine.
2. Run the engine speed to full load.
3. Visually inspect the exhaust for excessive smoke.

   [a] If the engine exhaust emission appears normal, no further troubleshooting is required. Shut down the engine.

   [b] If the engine exhaust emission is excessive, shut down the engine. Call Detroit Diesel Customer Support Center (313-592-5800).

All information subject to change without notice.
Copyright © 2007 DETROIT DIESEL CORPORATION

https://truckmanualshub.com/

All information subject to change without notice.
Copyright © 2007 DETROIT DIESEL CORPORATION

https://truckmanualshub.com/

9 EXCESSIVE BLUE SMOKE

Section **Page**

9.1 DEFECTIVE TURBOCHARGER 9-3
9.2 WORN OR DAMAGED VALVE OR CYLINDER KIT 9-5

https://truckmanualshub.com/

All information subject to change without notice.
Copyright © 2007 DETROIT DIESEL CORPORATION

https://truckmanualshub.com/

9.1 DEFECTIVE TURBOCHARGER

To determine if a defective turbocharger is causing excessive exhaust smoke, perform the following:

1. Remove the charge air cooler inlet duct connected between the turbocharger and charge air cooler; see Figure 9-1.

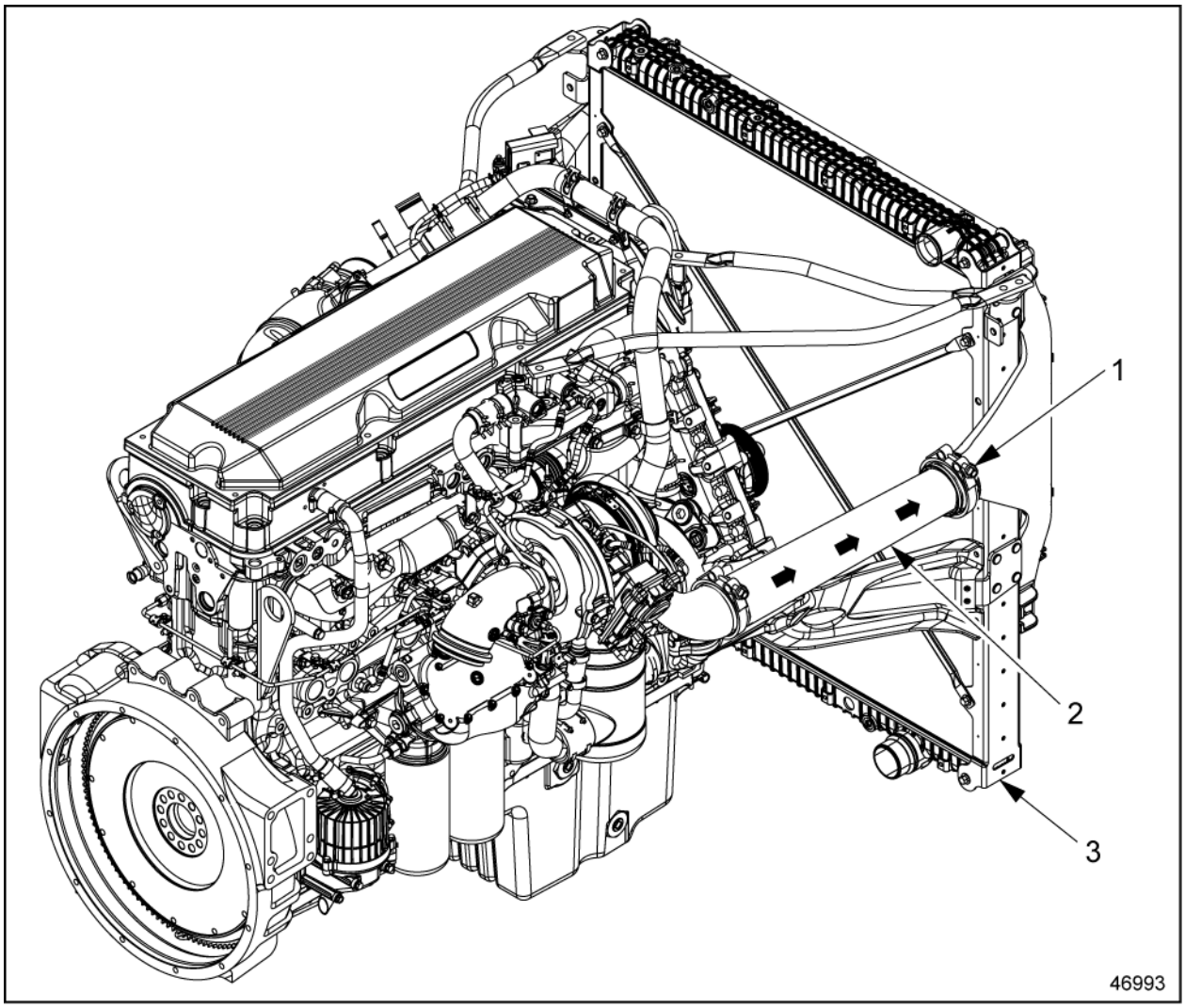

1. Flexible Coupling
2. Charge Air Cooler Outlet Duct
3. Charge Air Cooler Inlet Duct

Figure 9-1 Charge Air Cooler and Related Parts

All information subject to change without notice.
Copyright © 2007 DETROIT DIESEL CORPORATION

https://truckmanualshub.com/

2. Visually inspect the charge air cooler outlet duct.
   [a] If excessive engine lube oil is present, refer to section 9.1.1.
   [b] If no engine lube oil is present, check for worn or damaged valve or cylinder kit, refer to section 9.2.

9.1.1 Turbocharger Replacement

Perform the following steps to replace a defective turbocharger:

1. Remove defective turbocharger from the engine; refer to appropriate service manual, air intake system chapter.
2. Tag removed turbocharger for remanufacture.
3. Install a replacement turbocharger to the engine; refer to appropriate service manual, air intake system chapter.
4. Verify replacement of new turbocharger; refer to section 9.1.1.1.

9.1.1.1 Test Engine with Replaced Turbocharger

Perform the following steps to determine if a replaced turbocharger resolved the excessive exhaust smoke condition:

1. Start and run the engine.
2. Run the engine at idle with a no-load for approximately 5 minutes, allowing the engine coolant to reach normal operating range, 88-96°C (190-210°F).
3. Visually inspect exhaust for excessive smoke.
   [a] If the engine exhaust smoke emission appears normal, no further troubleshooting is required. Shut down the engine.
   [b] If the engine exhaust smoke is excessively black or gray, shut down the engine. Check for worn or damaged valve or cylinder kit; refer to section 9.2.

All information subject to change without notice.
Copyright © 2007 DETROIT DIESEL CORPORATION

https://truckmanualshub.com/

9.2 WORN OR DAMAGED VALVE OR CYLINDER KIT

To determine if a worn or damaged cylinder kit is causing excessive crankcase pressure, perform the following:

1. Move the vehicle requiring testing to the chassis dynamometer; refer to OEM guidelines.
2. Disconnect air compressor; refer to appropriate service manual, special equipment chapter.
3. Start the engine.
4. Run the engine and bring the engine coolant temperature to normal operating range.
5. Run the vehicle to full load and rated speed.
6. Attach a manometer calibrated to read in inches of water, to the oil dipstick opening.
7. Measure and record crankcase pressure. For crankcase pressure guidelines refer to Service Information Letter 02 TS-20 found on the DDC extranet.
8. Shut down the engine.
9. Remove the vehicle form the chassis dynamometer.
10. Review the crankcase pressure test. For crankcase pressure guidelines refer to Service Information Letter 02 TS-20 found on the DDC extranet.
    [a] If the crankcase pressure was greater than 1.25 kPa (5 in. H_2O), refer to section 9.2.1.
    [b] If the crankcase pressure was less than 1.25 kPa (5 in. H_2O), perform a cylinder compression test. Refer to section 9.2.1.2.
11. Compare the cylinder compression test results to specifications.
    [a] If cylinder pressure is below specifications, refer to section 9.2.1.
    [b] If cylinder pressure is within specifications, call Detroit Diesel Customer Support Center (313-592-5800).

9.2.1 Worn or Damaged Valve or Cylinder Kit Repair

Perform the following steps for worn or damaged valve or cylinder kit:

1. Remove the cylinder head; refer to appropriate service manual, engine chapter.
2. Inspect the cylinder head for worn or damaged valves; refer to appropriate service manual, engine chapter.
3. Inspect the cylinder kit components for worn or damaged liners, pistons, or piston roings; refer to appropriate service manual, engine chapter.
4. Verify repair to cylinder valve(s) or cylinder kit components; refer to section 9.2.1.1.

All information subject to change without notice.
Copyright © 2007 DETROIT DIESEL CORPORATION

https://truckmanualshub.com/

9.2.1.1 Test Engine with Repairs Made to Correct Worn or Damaged Valve or Cylinder Kit

Perform the following to determine if the repaired valve or cylinder kit resolved the excessive crankcase pressure:

1. Refer to section9.2 for exhaust caution before proceeding. Start the engine.
2. Run the engine and bring the engine coolant temperature to normal operating range, 88-96°C (190-210°F).
3. Run the vehicle to full load and rated speed.
4. Visually inspect exhaust for excessive smoke.
   [a] If the engine exhaust smoke emission appears normal, no further troubleshooting is required. Shut down the engine.
   [b] If the engine exhaust smoke is excessively black or gray, call the Detroit Diesel Customer Support Center (313-592-5800). Shut down the engine.

9.2.1.2 Cylinder Compression Test

Perform the following steps for a compression test on a Series 60 Engine:

WARNING:

PERSONAL INJURY

To avoid injury from inhaling engine exhaust, always operate the engine in a well-ventilated area. Engine exhaust is toxic.

1. Start and run the engine until normal operating temperature is reached. Stop the engine.
2. Disconnect the batteries.
3. Disconnect the fuel pump feed line from the fuel tank. Place a suitable container under the line to catch the spilling fuel. Turn the ¼ turn valve off on the outlet fitting of the secondary fuel filter.
4. Disconnect the fuel supply line to the cylinder head. Place a suitable container under the line to catch the spilled fuel. Disconnect the fuel return line from the doser valve and place a suitable container under the line to catch the spilled fuel.

All information subject to change without notice.
Copyright © 2007 DETROIT DIESEL CORPORATION

https://truckmanualshub.com/

WARNING:

EYE INJURY

To avoid injury from flying debris when using compressed air, wear adequate eye protection (face shield or safety goggles) and do not exceed 276 kPa (40 psi) air pressure.

NOTICE:

All the fuel must be removed from the cylinder head before removing injectors. This prevents the fuel from entering the cylinder and causing cylinder wall lube oil wash down or a hydrostatic lock at startup.

5. Blow low pressure regulated air no more than 207 kPa (30 psi) into the inlet fitting for 20 to 30 seconds or until all the fuel is purged from the head.
6. Clean and remove the rocker cover, it is not necessary to remove the bottom rocker cover. If equipped with Jake Brakes remove the Jake Brake assembly.
7. Remove all the rocker shaft mounting bolts and nut from the front or rear rocker shaft assembly. Using rocker arm lifter (J–35996–A), see Figure 9-2, lift the assembly straight up and off of the head and place in a clean area on the bench.

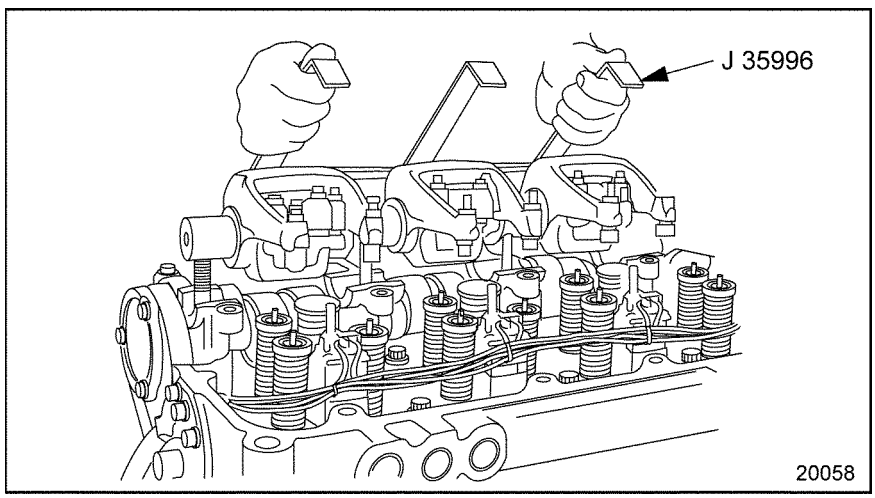

Figure 9-2 Rocker Arm/Shaft Assembly Removal/Installation

8. Use tool J-47808 to remove the 4–pin electrical connection from the injector.
9. Disengage the locking tang on the harness plug connection, grasp the connector and gently pull it from the socket.
10. Remove the injector hold down clamps.

All information subject to change without notice.
Copyright © 2007 DETROIT DIESEL CORPORATION

https://truckmanualshub.com/

NOTICE:

Use extreme care when handling injectors to avoid costly damage by dropping or mishandling. Always install new O-rings when replacing injectors.

11. Remove the three injectors to be tested from the cylinder head.
12. Place the compression test adaptors (J-47373) into the injector holes. It is recommended to have three test adaptors (J-47373) when performing this routine.
13. Install the injector hold down clamps and torque hold down bolts to 58-66 N·m (43-49 lb·ft).
14. Carefully remove the shaft from the rocker arm assembly by slowly pulling it out of the assembly. Place the shaft on the bench. Do not disturb the stack-up of the rocker arm sets.
15. Remove the three injector rocker arms and replace with spacers (J–38768–5) .
16. Lubricate the shaft with clean engine oil. With sleeves in place, carefully reinstall the shaft through each rocker arm shaft. Make sure cup plug end faces inboard.
17. Install the modified rocker arm shaft assembly on the head. If the engine is equipped with a Jake Brake®, use non-Jake Brake rocker arm shaft bolts 8929129. Torque the three bolts and the nut to 102-108 N·m (75-80 lb·ft).

NOTE:
Verify that the bolt holes for the rocker shafts are clean as not to hydro lock the bolts causing damage to the cylinder head.

18. Disconnect both connectors at the valve cover for the injectors.

NOTE:
Disconnect both connectors at the valve cover for the injectors.

WARNING:

PERSONAL INJURY

To avoid injury when working on or near an operating engine, wear protective clothing, eye protection, and hearing protection.

All information subject to change without notice.
Copyright © 2007 DETROIT DIESEL CORPORATION

https://truckmanualshub.com/

WARNING:

PERSONAL INJURY

To avoid injury from hot surfaces, wear protective gloves, or allow engine to cool before removing any component.

WARNING:

ENGINE EXHAUST

To avoid injury from inhaling engine exhaust, always operate the engine in a well-ventilated area. Engine exhaust is toxic.

19. Attach cylinder compression gauge (J–6692–B) to the first adaptor. See Figure 9-2.

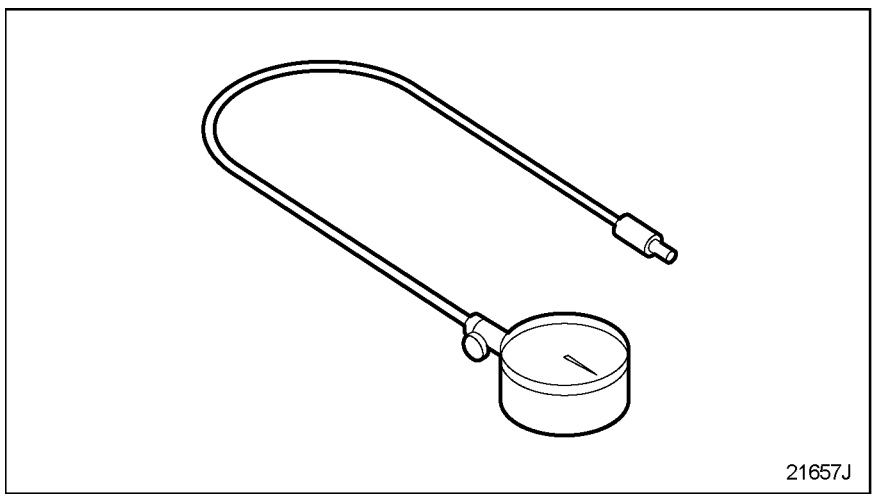

Figure 9-3 Attach Cylinder Compression Gauge J 6692–B

20. Reconnect the batteries.
21. Crank the engine over using the starter motor 5 compression strokes record the compression reading on the gauge.

NOTE:
Verify that the batteries voltage does not go low enough to affect engine cranking speed. If the cranking speed is affected then the results will be inaccurate. If needed connect a battery charge to maintain battery voltage.

22. The compression reading should be 3102-3793 kPa (450-550 psi) with no two cylinders differing by more than 276 kPa (40 psi). If compression readings are below specifications, repeat step 20 to be certain of the reading.

All information subject to change without notice.
Copyright © 2007 DETROIT DIESEL CORPORATION

https://truckmanualshub.com/

23. After testing all three cylinders, remove bolts from the modified rocker arm shaft assembly and, using rocker arm lifter (J–35996), lift the assembly straight up and off the cylinder head. Place in a clean area on the bench.
24. Carefully remove the shaft from the rocker arm assembly, remove the three rocker arm sleeves. Replace the three injector rocker arms. Lubricate the shaft with clean engine oil and carefully reinstall through each rocker arm.
25. Remove the injector hold down clamps discard the hold down bolt and remove the compression test adaptors from the cylinder head.
26. Using new sealing rings and injector hold down bolt install the injectors back into the cylinder head and torque to specifications; Torque bolt to 50 Nm (37 lb ft) Loosen the bolt 60 degrees (1/6 of a turn or one bolt flat) Do not fully loosen the bolt. Torque the bolt to 35 Nm (26 lb ft) Tighten the bolt an additional 90 degrees.
27. Replace the completed rocker arm shaft assembly on the engine and torque nut and bolts to specifications torque to 102-108 N•m (75-80 lb•ft)
28. Repeat steps 4b-26 for the rear 3 cylinders
29. Install upper valve cover, insuring that the bolt hole are clear of dirt and oil as not to damage the lower rocker cover.
30. Check test results

All information subject to change without notice.
Copyright © 2007 DETROIT DIESEL CORPORATION

https://truckmanualshub.com/

10 EXCESSIVE WHITE SMOKE

Section **Page**

10.1 IMPROPER GRADE OF FUEL 10-3
10.2 DEFECTIVE FUEL PUMP 10-4
10.3 AERATED FUEL 10-6
10.4 IMPROPER INJECTOR CALIBRATION SETTING 10-7
10.5 IMPROPER VALVE CLEARANCE OR INJECTOR HEIGHT, WORN OR DAMAGED CAMSHAFT LOBES AND ROLLERS 10-8
10.6 FAULTY FUEL INJECTOR 10-9

https://truckmanualshub.com/

All information subject to change without notice.
Copyright © 2007 DETROIT DIESEL CORPORATION

https://truckmanualshub.com/

10.1 IMPROPER GRADE OF FUEL

To determine if an improper grade of fuel is causing excessive white smoke, perform the following:

1. Acquire a fuel sample from the vehicle fuel tank(s).
2. Submit fuel oil sample for an ASTM test analysis.
   [a] If the fuel meets specifications, check the fuel pump; refer to section 10.2.
   [b] If the fuel did not meet specifications, resolve improper grade of fuel; refer to section 10.1.1.

10.1.1 Improper Grade of Fuel Resolution

Perform the following steps to resolve the improper grade of fuel oil:

1. Drain the fuel tank(s), refer to OEM guidelines, and dispose of properly.

NOTICE:
Use only Ultra-Low Sulfur Diesel (ULSD) fuel (15 ppm sulfur content maximum), based on ASTM D2622 test procedure.

2. Refill the fuel tanks with new fuel.
3. Verify fuel resolution; refer to section 10.1.1.1.

10.1.1.1 Test the Engine with New Fuel

Perform the following steps to determine if the new fuel refill resolved the excessive white smoke condition:

1. Start and run the engine.
2. Run the engine at idle with a no-load for approximately 5 minutes, allowing the engine coolant to reach normal operating range.
3. Visually inspect exhaust for excessive smoke.
   [a] If the engine exhaust smoke emission appears normal, no further troubleshooting is required. Shut down the engine.
   [b] If the engine exhaust smoke is excessively white, shut down the engine. Check the fuel pump; refer to section 10.2.

All information subject to change without notice.
Copyright © 2007 DETROIT DIESEL CORPORATION

https://truckmanualshub.com/

10.2 DEFECTIVE FUEL PUMP

To determine if the fuel pump is causing excessive white smoke, perform the following steps:

1. Insert a piece of wire through the fuel pump flange drain hole; see Figure 10-1.

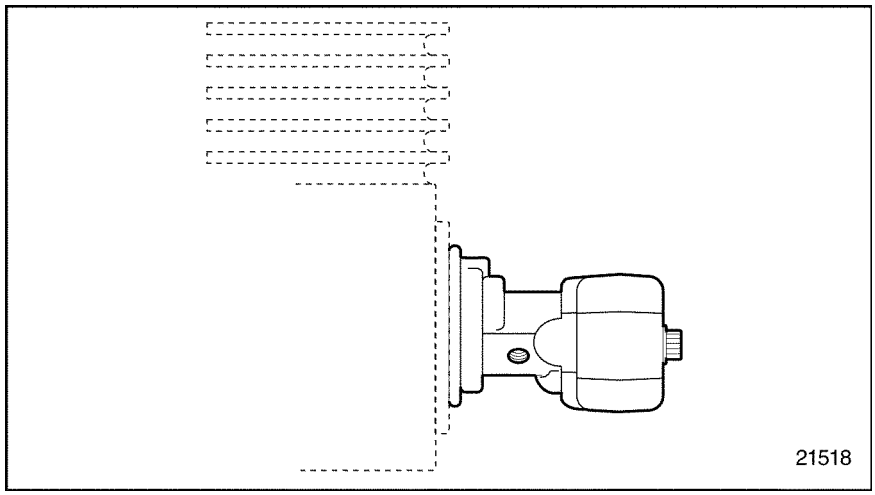

Figure 10-1 Fuel Pump Flange Drain Hole Location

2. Crank the engine momentarily and feel for wire vibration.
   [a] If the wire did not vibrate; refer to section 10.2.1.
   [b] If the wire did vibrate, check for aerated fuel; refer to section 10.3.

10.2.1 Drive Hubs and Coupling Replacement

Perform the following for drive hubs or coupling replacement:

1. Replace the drive hubs or coupling; refer to appropriate service manual, fuel system chapter.
2. Verify the drive hubs and coupling replacement; refer to section 10.2.1.1.

All information subject to change without notice.
Copyright © 2007 DETROIT DIESEL CORPORATION

https://truckmanualshub.com/

10.2.1.1 Engine Test with Replaced Drive Hubs or Replaced Coupling

Perform the following to determine if replaced drive hubs and coupling resolved excessive white smoke:

1. Start and run the engine.
2. Run the engine at idle with a no-load for approximately 5 minutes, allowing the engine coolant to reach normal operating range.
3. Visually inspect exhaust for excessive white smoke.
   [a] If the engine exhaust emission appears normal, no further troubleshooting is required. Shut down the engine.
   [b] If the engine exhaust emission is excessively white, shut down the engine. Check for aerated fuel; refer to section 10.3.

All information subject to change without notice.
Copyright © 2007 DETROIT DIESEL CORPORATION

https://truckmanualshub.com/

10.3 AERATED FUEL

To determine if aerated fuel is causing excessive white smoke, perform the following steps:

1. Disconnect the fuel line return hose from the fitting located at the fuel tank; refer to OEM guidelines.
2. Place the open end of the fuel line into a suitable container.
3. Start and run the engine.
4. Operate the engine at 1000 rpm.
5. Visually check to see if air bubbles are rising to the surface of the fuel within the container.
   [a] If air bubbles are present, shut down engine; refer to section 10.3.1.
   [b] If air bubbles are not present, shut down engine, check for improper injector calibration setting; refer to section 10.4.

10.3.1 Aerated Fuel Resolution

Perform the following to resolve aerated fuel:

1. Tighten all fuel line connections between fuel tank and fuel pump; refer to OEM guidelines.
2. Visually inspect all fuel lines between fuel tank and fuel pump for leaks.
3. Repair damaged components as required; refer to OEM guidelines.
4. Verify aerated fuel resolution; refer to section 10.3.1.1.

10.3.1.1 Test the Engine with Aerated Fuel Resolution

Perform the following to determine if aerated fuel resolution resolved excessive white smoke condition:

1. Refer to section 10.3 for the exhaust caution before proceeding. Start and run the engine.
2. Run the engine at idle with a no-load for approximately 5 minutes, allowing the engine coolant to reach normal operating range.
3. Visually inspect exhaust for excessive white smoke.
   [a] If the engine exhaust emission appears normal, no further troubleshooting is required. Shut down the engine.
   [b] If the engine exhaust emission is excessively white, shut down the engine. Check for improper injector calibration setting; refer to section 10.4.

All information subject to change without notice.
Copyright © 2007 DETROIT DIESEL CORPORATION

https://truckmanualshub.com/

10.4 IMPROPER INJECTOR CALIBRATION SETTING

To determine if an improper injector calibration setting is causing excessive white smoke, perform the following:

1. Check for improper injector setting repair.
2. Verify injector setting repair; refer to section 10.4.1.

10.4.1 Test Engine with Corrected Injector Setting

Perform the following to determine if injector setting repair resolved excessive white smoke:

1. Start and run the engine.
2. Run the engine at idle with a no-load for approximately 5 minutes, allowing the engine coolant to reach normal operating range.
3. Visually inspect exhaust for excessive white smoke.
   [a] If the engine exhaust emission appears normal, no further troubleshooting is required. Shut down the engine.
   [b] If the engine exhaust emission is excessively white, shut down the engine. Check for improper valve clearance or injector height, worn or damaged camshaft lobes and rollers; refer to section 10.5.

All information subject to change without notice.
Copyright © 2007 DETROIT DIESEL CORPORATION

https://truckmanualshub.com/

10.5 IMPROPER VALVE CLEARANCE OR INJECTOR HEIGHT, WORN OR DAMAGED CAMSHAFT LOBES AND ROLLERS

To determine if an improper valve clearance or injector height, worn or damaged camshaft lobes and rollers is causing excessive white smoke, perform the following:

1. Check for improper valve clearance or injector height, worn or damaged camshaft lobes and rollers.
2. Check for improper valve clearance or injector height repair.
3. Verify valve clearance or injector height, worn or damaged camshaft lobes and rollers repair; refer to section 10.5.1.

10.5.1 Test Engine with Corrected Valve Clearance or Injector Height, Worn or Damaged Camshaft Lobes and Rollers

Perform the following to determine if the valve clearance or injector height, worn or damaged camshaft lobes and rollers repair resolved excessive white smoke:

1. Start and run the engine.
2. Run the engine at idle with a no-load for approximately 5 minutes, allowing the engine coolant to reach normal operating range.
3. Visually inspect exhaust for excessive white smoke.
   [a] If the engine exhaust emission appears normal, no further troubleshooting is required. Shut down the engine.
   [b] If the engine exhaust emission is excessively white, shut down the engine. Check for faulty fuel injector; refer to section 10.6.

All information subject to change without notice.
Copyright © 2007 DETROIT DIESEL CORPORATION

https://truckmanualshub.com/

10.6 FAULTY FUEL INJECTOR

To determine if a faulty fuel injector is causing excessive white smoke, perform the following:

1. Check for faulty fuel injector.
2. Check for faulty fuel injector repair.
3. Verify fuel injector repair; refer to section 10.6.1.

10.6.1 Test the Engine with Repaired Fuel Injector

Perform the following to determine if the fuel injector repair resolved excessive white smoke:

1. Start and run the engine.
2. Run the engine at idle with a no-load for approximately 5 minutes, allowing the engine coolant to reach normal operating range.
3. Visually inspect exhaust for excessive white smoke.
   [a] If the engine exhaust emission appears normal, no further troubleshooting is required. Shut down the engine.
   [b] If the engine exhaust emission is excessively white, shut down the engine. Call the Detroit Diesel Customer Support Center (313–592–5800).

All information subject to change without notice.
Copyright © 2007 DETROIT DIESEL CORPORATION

https://truckmanualshub.com/

All information subject to change without notice.
Copyright © 2007 DETROIT DIESEL CORPORATION

https://truckmanualshub.com/

11 ROUGH RUNNING OR STALLING

Section **Page**

11.1 LOW BATTERY VOLTAGE 11-3
11.2 AERATED FUEL 11-4
11.3 INSUFFICIENT FUEL FLOW 11-4
11.4 HIGH FUEL TEMPERATURE RETURN 11-6
11.5 IMPROPER INJECTOR CALIBRATION SETTING 11-8
11.6 LOW COMPRESSION PRESSURE 11-8

https://truckmanualshub.com/

All information subject to change without notice.
Copyright © 2007 DETROIT DIESEL CORPORATION

https://truckmanualshub.com/

11.1 LOW BATTERY VOLTAGE

To determine if a weak battery is causing rough running or stalling, perform the following steps:

1. Start and run the engine.
2. Measure the battery voltage; refer to OEM guidelines.
   [a] If the battery voltage is greater than or equal to 10.5 volts, check for aerated fuel; refer to section 11.2.
   [b] If the battery voltage is less than 10.5 volts, replace the battery; refer to section 11.1.1.

11.1.1 Battery Replacement

Perform the following steps for battery replacement:

1. Remove and replace the battery; refer to OEM guidelines.
2. Verify battery replacement; refer to section 11.1.1.1.

11.1.1.1 Test Engine with Replaced Battery

Perform the following steps to determine if the battery replacement resolved difficulty:

WARNING:

ENGINE EXHAUST

To avoid injury from inhaling engine exhaust, always operate the engine in a well-ventilated area. Engine exhaust is toxic.

1. Start and run the engine.
2. Run the engine at idle with a no-load for approximately 5 minutes, allowing the engine coolant to reach normal operating range, 88-96°C (190-210°F).
   [a] If the engine is not running rough or stalling, no further troubleshooting is required. Shut down the engine.
   [b] If the engine is running rough or stalling shut down the engine. Check for aerated fuel; refer to section 11.2.

All information subject to change without notice.
Copyright © 2007 DETROIT DIESEL CORPORATION

https://truckmanualshub.com/

11.2 AERATED FUEL

To determine if aerated fuel is causing rough running or stalling, perform the following steps:

1. Test for aerated fuel; refer to section 10.3.
2. Aerated fuel resolution, refer to section 10.3.1.
3. Verify aerated fuel resolution; refer to section 11.2.1.

11.2.1 Test Engine with Aerated Fuel Resolution

Perform the following steps to determine if the aerated fuel resolution resolved rough running or stalling condition:

WARNING:

ENGINE EXHAUST

To avoid injury from inhaling engine exhaust, always operate the engine in a well-ventilated area. Engine exhaust is toxic.

1. Start and run the engine.
2. Run the engine through its operating range with no-load for approximately 5 minutes, allowing the engine coolant to reach normal operating range, 88-96°C (190-210°F).
   [a] If the engine is not running rough or stalling, no further troubleshooting is required. Shut down the engine.
   [b] If the engine is running rough or stalling, shut down the engine. Check for insufficient fuel flow; refer to section 11.3.

11.3 INSUFFICIENT FUEL FLOW

To determine if insufficient fuel flow is causing rough running or stalling, do the following steps:

1. Perform a fuel flow test.
2. Analyze the fuel flow test results.
   [a] If the fuel rate is 246 L/hr (65 gal/hr) or more, no further troubleshooting is required; refer to section 11.4.
   [b] If the fuel rate is less than 246 L/hr (65 gal/hr), resolve the insufficient fuel flow; refer to section 11.3.1.

11.3.1 Insufficient Fuel Flow Resolution

Perform the following steps to resolve the insufficient fuel flow:

All information subject to change without notice.
Copyright © 2007 DETROIT DIESEL CORPORATION

https://truckmanualshub.com/

1. Replace the fuel filter(s); refer to appropriate service manual, fuel system chapter.

NOTE:
Always fill the filter(s) with clean fuel before installing. Turn the filter(s) until they contact the gasket fully. Then, turn them an additional two-thirds by hand.

2. Inspect the fuel lines for restrictions due to pinching, kinking or other damage. If damage is found, repair as necessary; refer to OEM guidelines.
3. Inspect the cylinder head for a correct restricted fitting. If an incorrect fitting is found, replace with a new fitting; refer to appropriate service manual, engine chapter.
4. Inspect the fuel return check valve for restrictive movement; refer to appropriate service manual, fuel system chapter.
5. Inspect the fuel pump drive assembly. If damage is found, repair as necessary; refer to appropriate service manual, fuel system chapter.
6. Verify repairs done to correct insufficient fuel flow; refer to section 11.3.1.1.

11.3.1.1 Test the Engine with Resolved Fuel Flow

Perform the following steps to determine if the fuel flow resolution resolved rough running or stalling:

WARNING:

ENGINE EXHAUST

To avoid injury from inhaling engine exhaust, always operate the engine in a well-ventilated area. Engine exhaust is toxic.

1. Start and run the engine.
2. Run the engine at idle with a no-load for approximately 5 minutes, allowing the engine coolant to reach normal operating range, 88-96°C (190-210°F).
   [a] If the engine is not running rough or stalling, no further troubleshooting is required. Shut down the engine.
   [b] If the engine is running rough or stalling, shut down the engine. Check for high fuel temperature return; refer to section 11.4.

All information subject to change without notice.
Copyright © 2007 DETROIT DIESEL CORPORATION

https://truckmanualshub.com/

11.4 HIGH FUEL TEMPERATURE RETURN

To determine if high fuel temperature return is causing rough running or stalling, perform the following steps:

WARNING:

ENGINE EXHAUST

To avoid injury from inhaling engine exhaust, always operate the engine in a well-ventilated area. Engine exhaust is toxic.

1. Connect to DDDL 7.0.
2. Start and run the engine.
3. Run the engine at idle with a no-load for approximately 5 minutes, allowing the engine coolant to reach normal operating range, 88-96°C (190-210°F).
   [a] If the return fuel temperature is less than or equal to 60°C (140°F), check for improper injector calibration setting; refer to section 11.5.
   [b] If the return fuel temperature is greater than 60°C (140°F), resolve the high fuel temperature; refer to section 11.4.1.

11.4.1 High fuel Temperature Resolution

Perform the following steps to resolve high fuel temperature:

1. Remove and replace fuel filter(s); refer to appropriate service manual, fuel system chapter.
2. Inspect check valve for any restricted fitting; refer to appropriate service manual, fuel system chapter.
3. Replace both the restrictive fitting or check valve; refer to appropriate service manual, fuel system chapter.
4. Verify fuel filter(s) replacement; refer to section 11.4.1.1.

11.4.1.1 Test the Engine with Replaced Oil Filters

Perform the following steps to determine if the replaced oil filter(s) resolved the rough running or stalling condition:

1. Refer to section11.4 for exhaust caution before proceeding. Start and run the engine.
2. Run the engine through its operating range with no-load for approximately 5 minutes, allowing the engine coolant to reach normal operating range, 88-96°C (190-210°F).
   [a] If the engine is not running rough or stalling, no further troubleshooting is required. Shut down the engine.

All information subject to change without notice.
Copyright © 2007 DETROIT DIESEL CORPORATION

https://truckmanualshub.com/

[b] If the engine is running rough or stalling, shut down the engine. Check for improper injector calibration setting; refer to section 11.5.

All information subject to change without notice.
Copyright © 2007 DETROIT DIESEL CORPORATION

https://truckmanualshub.com/

11.5 IMPROPER INJECTOR CALIBRATION SETTING

To determine if improper injector calibration setting is causing rough running or stalling, perform the following steps:

1. Test for improper injector setting.
2. Compare the calibration code(s) shown on the Detroit Diesel Diagnostic Link display with the two digit calibration code(s) on the injector(s). See Figure 11-1.

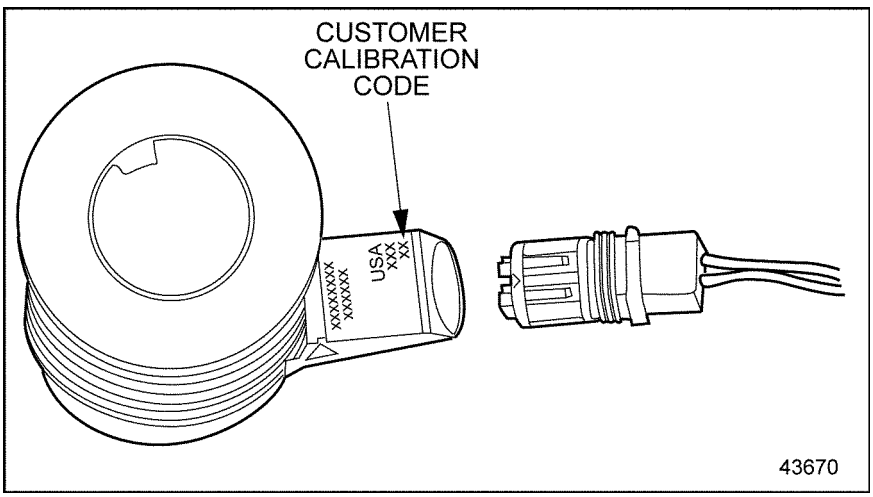

Figure 11-1 Injector Calibration Code

[a] If the calibration codes match, check compression pressure; refer to section 11.6.

[b] If the calibration code on the display is different then the calibration code on the suspect injector for that cylinder, the injector setting must be reset, see Figure 11-1; refer to section 11.5.1.

11.5.1 Improper Injector Setting Repair

Perform the following steps to recalibrate improper injector setting:

1. Reset incorrect injector setting.
2. Verify injector setting repair.

11.6 LOW COMPRESSION PRESSURE

To determine if low compression pressure is causing rough running or stalling, perform the cylinder compression test. Refer to section 11.6.1

11.6.1 Cylinder Compression Test

Perform the following steps for a compression test on a Series 60 Engine:

All information subject to change without notice.
Copyright © 2007 DETROIT DIESEL CORPORATION

https://truckmanualshub.com/

WARNING:

ENGINE EXHAUST

To avoid injury from inhaling engine exhaust, always operate the engine in a well-ventilated area. Engine exhaust is toxic.

1. Start and run the engine until normal operating temperature is reached. Stop the engine.
2. Disconnect the batteries.
3. Disconnect the fuel pump feed line from the fuel tank. Place a suitable container under the line to catch the spilling fuel. Turn the ¼ turn valve off on the outlet fitting of the secondary fuel filter.
4. Disconnect the fuel supply line to the cylinder head. Place a suitable container under the line to catch the spilled fuel. Disconnect the fuel return line from the doser valve and place a suitable container under the line to catch the spilled fuel.

WARNING:

EYE INJURY

To avoid injury from flying debris when using compressed air, wear adequate eye protection (face shield or safety goggles) and do not exceed 276 kPa (40 psi) air pressure.

NOTICE:

All the fuel must be removed from the cylinder head before removing injectors. This prevents the fuel from entering the cylinder and causing cylinder wall lube oil wash down or a hydrostatic lock at startup.

5. Blow low pressure regulated air no more than 207 kPa (30 psi) into the inlet fitting for 20 to 30 seconds or until all the fuel is purged from the head.
6. Clean and remove the rocker cover, it is not necessary to remove the bottom rocker cover. If equipped with Jake Brakes remove the Jake Brake assembly.

All information subject to change without notice.
Copyright © 2007 DETROIT DIESEL CORPORATION

https://truckmanualshub.com/

7. Remove all the rocker shaft mounting bolts and nut from the front or rear rocker shaft assembly. Using rocker arm lifter (J–35996–A), see Figure 11-2, lift the assembly straight up and off of the head and place in a clean area on the bench.

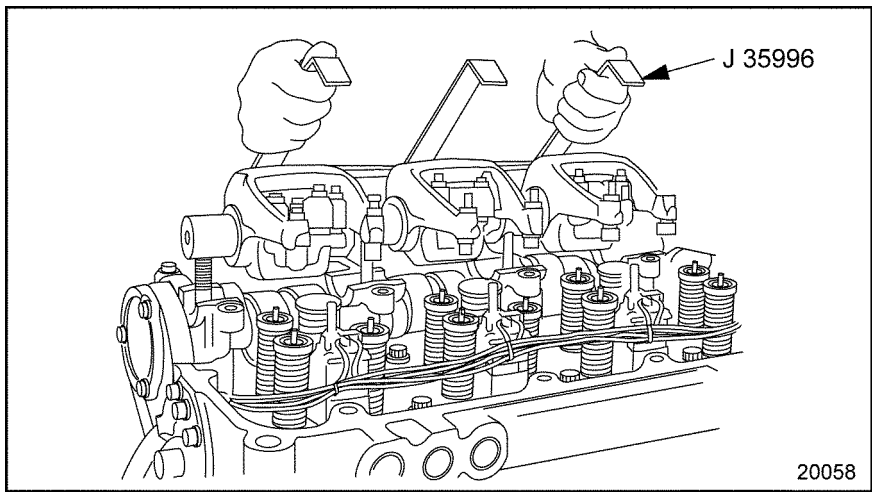

Figure 11-2 Rocker Arm/Shaft Assembly Removal/Installation

8. Use tool J-47808 to remove the 4–pin electrical connection from the injector.
9. Disengage the locking tang on the harness plug connection, grasp the connector and gently pull it from the socket.
10. Remove the injector hold down clamps.

NOTICE:
Use extreme care when handling injectors to avoid costly damage by dropping or mishandling. Always install new O-rings when replacing injectors.

11. Remove the three injectors to be tested from the cylinder head.
12. Place the compression test adaptors (J-47373) into the injector holes. It is recommended to have three test adaptors (J-47373) when performing this routine.
13. Install the injector hold down clamps and torque hold down bolts to 58-66 N·m (43-49 lb·ft).
14. Carefully remove the shaft from the rocker arm assembly by slowly pulling it out of the assembly. Place the shaft on the bench. Do not disturb the stack-up of the rocker arm sets.
15. Remove the three injector rocker arms and replace with spacers (J–38768–5) .
16. Lubricate the shaft with clean engine oil. With sleeves in place, carefully reinstall the shaft through each rocker arm shaft. Make sure cup plug end faces inboard.

All information subject to change without notice.
Copyright © 2007 DETROIT DIESEL CORPORATION

https://truckmanualshub.com/

17. Install the modified rocker arm shaft assembly on the head. If the engine is equipped with a Jake Brake®, use non-Jake Brake rocker arm shaft bolts 8929129. Torque the three bolts and the nut to 102-108 N·m (75-80 lb·ft).

NOTE:
Verify that the bolt holes for the rocker shafts are clean as not to hydro lock the bolts causing damage to the cylinder head.

18. Disconnect both connectors at the valve cover for the injectors.

NOTE:
Disconnect both connectors at the valve cover for the injectors.

WARNING:

PERSONAL INJURY

To avoid injury when working on or near an operating engine, wear protective clothing, eye protection, and hearing protection.

All information subject to change without notice.
Copyright © 2007 DETROIT DIESEL CORPORATION

https://truckmanualshub.com/

WARNING:

PERSONAL INJURY

To avoid injury from hot surfaces, wear protective gloves, or allow engine to cool before removing any component.

WARNING:

ENGINE EXHAUST

To avoid injury from inhaling engine exhaust, always operate the engine in a well-ventilated area. Engine exhaust is toxic.

19. Attach cylinder compression gauge (J–6692–B) to the first adaptor. See Figure 11-3.

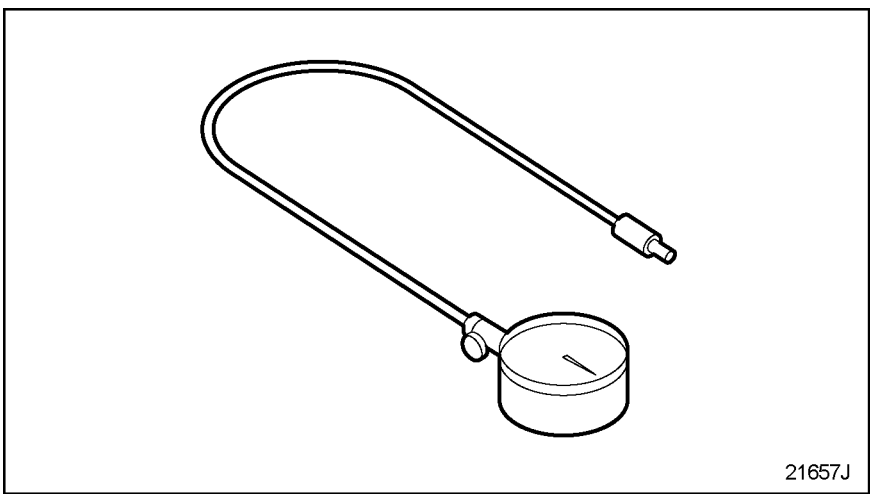

Figure 11-3 Attach Cylinder Compression Gauge J 6692–B

20. Reconnect the batteries.
21. Crank the engine over using the starter motor 5 compression strokes record the compression reading on the gauge.

NOTE:
Verify that the batteries voltage does not go low enough to affect engine cranking speed. If the cranking speed is affected then the results will be inaccurate. If needed connect a battery charge to maintain battery voltage.

22. The compression reading should be 3102-3793 kPa (450-550 psi) with no two cylinders differing by more than 276 kPa (40 psi). If compression readings are below specifications, repeat step 20 to be certain of the reading.

All information subject to change without notice.
Copyright © 2007 DETROIT DIESEL CORPORATION

https://truckmanualshub.com/

23. After testing all three cylinders, remove bolts from the modified rocker arm shaft assembly and, using rocker arm lifter (J–35996), lift the assembly straight up and off the cylinder head. Place in a clean area on the bench.
24. Carefully remove the shaft from the rocker arm assembly, remove the three rocker arm sleeves. Replace the three injector rocker arms. Lubricate the shaft with clean engine oil and carefully reinstall through each rocker arm.
25. Remove the injector hold down clamps discard the hold down bolt and remove the compression test adaptors from the cylinder head.
26. Using new sealing rings and injector hold down bolt install the injectors back into the cylinder head and torque to specifications; Torque bolt to 50 Nm (37 lb ft) Loosen the bolt 60 degrees (1/6 of a turn or one bolt flat) Do not fully loosen the bolt. Torque the bolt to 35 Nm (26 lb ft) Tighten the bolt an additional 90 degrees.
27. Replace the completed rocker arm shaft assembly on the engine and torque nut and bolts to specifications torque to 102-108 N•m (75-80 lb•ft)
28. Repeat steps 4b-26 for the rear 3 cylinders
29. Install upper valve cover, insuring that the bolt hole are clear of dirt and oil as not to damage the lower rocker cover.
30. Check test results. Repair if necessary.
31. Verify repairs to cylinder head valve or cylinder kit components; refer to section 11.6.1.1.

11.6.1.1 Test Engine with Repaired Cylinder Head Valve(s) and Cylinder Kit

Perform the following steps to determine if the cylinder head valve and cylinder kit repair resolved starting difficulty:

1. Start and run the engine.
2. Run the engine through its operating range with no-load for approximately 5 minutes, allowing the engine coolant to reach normal operating range, 88-96°C (190-210°F).
   [a] If the engine is not running rough or stalling, no further troubleshooting is required. Shut down the engine.
   [b] If the engine is running rough or stalling, shut down the engine. Call Detroit Diesel Customer Support Center (313-592-5800).

All information subject to change without notice.
Copyright © 2007 DETROIT DIESEL CORPORATION

https://truckmanualshub.com/

All information subject to change without notice.
Copyright © 2007 DETROIT DIESEL CORPORATION

https://truckmanualshub.com/

12 LOW POWER

Section		Page
12.1	FACTORS THAT AFFECT WHEEL HORSEPOWER	12-3
12.2	LOW HORSEPOWER INTERVIEW	12-6
12.3	AERATED FUEL	12-12
12.4	HIGH FUEL PRESSURE	12-13
12.5	HIGH FUEL TEMPERATURE RETURN	12-16
12.6	RESTRICTED AIR CLEANER ELEMENT	12-17
12.7	RESTRICTED OR CRACKED CHARGE AIR COOLER OR LEAKING INTAKE MANIFOLD	12-18
12.8	FAULTY EXHAUST SYSTEM	12-20
12.9	HIGH INLET AIR TEMPERATURE	12-21
12.10	HIGH ALTITUDE OPERATION	12-22
12.11	INCORRECT CAMSHAFT TIMING	12-24
12.12	POWER VERIFICATION WITH CHASSIS DYNAMOMETER	12-25

https://truckmanualshub.com/

All information subject to change without notice.
Copyright © 2007 DETROIT DIESEL CORPORATION

https://truckmanualshub.com/

12.1 FACTORS THAT AFFECT WHEEL HORSEPOWER

The factors affecting wheel horsepower are listed in Table 12-1.

To begin low horsepower diagnosis, refer to section 12.2

Factors	Considerations
DDEC Power Rating	Is the correct power rating programmed into the ECM? Is the driver aware of the effects that cruise power, or the lack of cruise power has on perceived power?
Road Speed Setting	Is the road speed setting causing a perceived lack of power?
Crank Case Overfilled	If the crank case level is too high, there will be a loss of power due to churning losses created by the crank shaft throws contacting the oil.
Fuel Temperature	Make sure there is sufficient fuel supply (at least 1/3 of normal capacity) in the fuel tanks. Check fuel temperature. For every 10°F increase in fuel inlet temperature above 100°F, the engine will experience a power loss of up to one percent.
Fuel Blend (specific gravity)	Check the specific gravity of the fuel/vehicle system. A good number 2 diesel fuel has a specific gravity of 0.840 or higher @ 60°F. It should be noted that No. 1 diesel fuel can reduce horsepower to 7% less than No. 2 fuel. Blends of No. 1 and No. 2 (common in winter) will produce less horsepower, depending on the percent of the blend. This is a common concern when dealing with low power complaints in cold climate locations.
Fuel Filter Restriction	Check for fuel flow restrictions which can be caused by fuel heaters, water separators, fuel flow meters, undersize or improperly routed/damaged fuel lines, faulty check valves, contaminated fuel filters or high fuel pressure resulting from a plugged restricted fitting or regulator valve. Replacing the fuel filter is often the best recommendation in lieu of testing for the filter condition.
Fuel Shut-Off Valve Position	Make sure the fuel shut-off valve is fully open.
Fuel System Leak	Fuel system leaks which result in aerated fuel are normally caused by a leak at the connections and /or filters between the suction side of the fuel pump to the supply tank and not between the pressure side of the pump and engine.
Fuel Tank Vent Restriction	A plugged fuel tank vent will create a vacuum in the tank and result in a loss in fuel pressure at the injectors. This will reduce fuel delivery rate.
Air in Fuel	Aerated fuel, caused by a fuel system leak, will result in reduced fuel delivery and late injection timing.
Plugged or Cracked Fuel Tank Stand Pipe	If the fuel tank stand pipe is plugged by a shop rag, fuel delivery will be restricted. A cracked stand pipe will allow air to enter the fuel system and reduce fuel flow and cause late injection timing.
Faulty Injector	A faulty injector will limit fuel delivery and alter the combustion process such that power is compromised.
Injector Codes	Incorrect injector codes will limit fuel delivery.
Valve Lash	Incorrect valve lash will alter the combustion process such that power is compromised.

All information subject to change without notice.
Copyright © 2007 DETROIT DIESEL CORPORATION

https://truckmanualshub.com/

Factors	Considerations
Camshaft Timing	Incorrect cam timing will alter the combustion process such that power is compromised.
Air Flow Restriction	Air flow must not be inhibited by plugged filter, or inadequate inlet air duct shrouding.
Faulty Turbocharger	A turbocharger that has wheel rubbing, oil leaks, bent blades, etc. will not provide adequate air supply.
Temperature Controlled Fan	A faulty thermo control will cause the fan to be locked on and drain power on a continuous basis.
Air System Leaks (gaskets and seals)	Air system leaks will result in insufficient air for optimum combustion.
Charge Air Cooler Leak	Air system leaks will result in insufficient air for optimum combustion.
Climate (fresh air temp)	The maximum allowable temperature rise from ambient air to engine inlet is 30°F. Undersized or dirty air cleaner element, as well as damaged or obstructed air inlet piping can cause low power. Make sure under-hood hot air is not being taken in. Pressure drop across the air to air charge cooler should be checked (3.0 in. Hg maximum from turbo discharge to intake manifold). Check turbocharger boost pressure and compare to specification.
Altitude Performance	Site altitude has an effect on engine horsepower. Expect approximately 2% loss in power when operating at an altitude of 1 mile, relative to sea level.
DDEC Parameter Settings	Make sure vehicle settings such as: axle ratio, tire size, top gear ratio, etc. are set correctly to avoid a false sense of engine performance.
EGR Valve	A misadjusted or malfunctioning EGR valve will alter the amount of oxygen available for combustion as well as introduce inert gas that does not promote combustion.
Exhaust Restriction	A damaged, undersized, or otherwise restricted muffler or exhaust system can result in high exhaust back pressure. Refer to the engine specification sheets for maximum allowable pressure.
Delta P Sensor	The Delta P sensor, along with the exhaust temperature, determines EGR flow rate. A faulty delta P sensor will cause the EGR system to malfunction and alter the amount of oxygen available for combustion as well as introduce inert gas that will not promote combustion.
Barometric Pressure Sensor	The engine will transition between EGR and boost mode at an altitude of 6500 ft. Altitude is determined by the Barometric Pressure Sensor located in the MCM. A faulty Barometric Pressure Sensor will compromise the availability of boost pressure.
Air Compressor Leak	An air compressor leak will cause the air compressor to work more and increase the parasitic load on the engine.
Air Conditioner Leak	An air conditioner leak will cause the air conditioner to work more and increase the parasitic load on the engine.
Excessive Play in Power Steering System	Continuous movement of the steering wheel will call for continuous work by the power steering unit. This will increase the parasitic load on the engine.
Alternator Load	Excessive use of vehicle electrical power will cause increased use of the alternator. This will increase the parasitic load on the engine.
Tire Pressure	Under inflated tires will significantly increase driveline resistance to rotation.

All information subject to change without notice.
Copyright © 2007 DETROIT DIESEL CORPORATION

https://truckmanualshub.com/

Factors	Considerations
Trailer Aerodynamics/Alignment	A trailer that has poor aerodynamics or has misaligned axles (causing dog tailing) will significantly increase vehicle inertia and resistance to forward motion.
Vehicle Payload	As vehicle loading increases, vehicle inertia and resistance to forward motion increases.
Winter-front Installation	Improper installation or usage of a winter-front will result in extremely high intake air temperatures and reduced mass flow of air into the combustion chamber.
Vehicle Application	Unusual applications such as triple drive axles, PTO's, pumps, high air compressor duty cycle, etc., will have higher parasitic loses resulting in less horsepower at the wheels.

Table 12-1 Factors Affecting Wheel Horsepower

All information subject to change without notice.
Copyright © 2007 DETROIT DIESEL CORPORATION

https://truckmanualshub.com/

12.2 LOW HORSEPOWER INTERVIEW

To determine if low horsepower is causing a power concern, use the driver questionnaire, the troubleshooting tree, and the low power troubleshooting chart.

For an example of the driver questionnaire see Figure 12-1.

Engine Diagnostic Questionnaire **RO #**
Customer Name: _____
Contact Person:_____

LOW POWER/POOR FUEL ECONOMY:
Does check engine light come on? Yes No
Does the engine miss, run rough, hard starting? Miss Run Rough Hard Starting
Power Loss sudden or has decreased with time? Sudden Decreased with time
Excessive engine exhaust smoke (see #3)? Yes No
If yes, what color? Black Blue White
Heard any unusual engine noise? Yes _____ No
Power loss occurs on Foot Cruise Both
Have injectors been replaced recently? Yes No
When was last tune up? Mileage_____Date_____
Comments: _____

ANY INTERMITTENT PROBLEMS:
Last time it happened:_____
Does the check engine light come on? Yes No
Does the problem occur only in damp or rainy conditions? Yes No
When the vehicle hits a bump or rough road? Yes No
Does the engine: Miss Drop to idle Quit running
Gauge Sweep Hard Starting
Comments: _____
e.g. Does the driver do anything to correct the problem?

SMOKING:
Where is the smoke coming from?_____
What color is the smoke? Blue Black White Bl/White
When does it smoke? Start-up Cold Eng. Hot Eng. U.Load
Have you noticed any oil consumption? Yes No
Have you noticed a miss in the engine? Yes No
Was the smoke intermittent?- Start all at once? Been getting worse over time?
Comments: _____

COOLANT LOSS
Has the oil level risen? Yes No
Have you noticed any coolant leaks? Yes No
How often do you add coolant?_____How Much?_____
What kind ofcoolant do you use?_____
What kind of inhibitor do you use?_____
Comments: _____

OIL CONSUMPTION:
How much oil are you adding?_____How often (miles)?_____
Have you noticed any oil leaks? Yes No
Have you noticed any smoke out the exhaust? Yes No
At Idle Light or no load Heavy load
How often do you change oil?_____What Brand?_____
Have you changed brands recently? Yes No
How & when do you check your oil?_____
Comments: _____

44272

Figure 12-1 Driver Questionnaire

All information subject to change without notice.
Copyright © 2007 DETROIT DIESEL CORPORATION

https://truckmanualshub.com/

12.2.1 Driver Questionnaire

This section should serve as a guideline for the technician.

Ask the driver to answer the following questions before attempting to repair an intermittent problem, or a problem with symptoms but no diagnostic codes. Use this and the response as a guideline. Refer to section 12.2.1.1, "Questionnaire Response Guideline."

1. How often does the problem occur? Can you and the driver take the vehicle and demonstrate the problem in less than 30 minutes?
2. Has the vehicle been to other shops for the same problem? If so, what was done there?
3. Did the radio, dash gages, or lights momentarily turn OFF when the problem occurred?
4. Does the problem occur only at specific operating conditions? If so, at what load? Is it light, medium, or heavy?
5. Does the problem occur at a specific engine operating temperature? If so, at what engine temperature?
6. Does the problem occur at a specific engine operating altitude? If so, at what altitude?
7. Does the problem occur only when above or below specific outside temperatures? If so, what temperature range?
8. Does the problem occur during other conditions e.g. during or after rain, spray washing, snow?
9. Did the problem occur at a specific vehicle speed? If so, at what vehicle speed?
10. Does the problem occur at specific engine RPM? If so, at what engine RPM?

12.2.1.1 Questionnaire Response Guideline

The following are typical responses to the driver questionnaire:

WARNING:

PERSONAL INJURY

To avoid injury from loss of vehicle/vessel control, the operator of a DDEC equipped engine must not use or read any diagnostic tool while the vehicle/vessel is moving.

1. If the problem is repeatable, take the vehicle for a drive with Detroit Diesel Diagnostic Link (DDDL 7.0) connected and note the conditions when the problem occurs. Be prepared to take snapshot data using DDDL 7.0. **Ensure you operate the vehicle after correcting the problem and duplicate the operating conditions before releasing the unit, in order to verify the problem is corrected.**
2. If the vehicle has been to other shops for the same problem, call the other shops and find out what has been done. Avoid replacing the same components again unless absolutely

All information subject to change without notice.
Copyright © 2007 DETROIT DIESEL CORPORATION

https://truckmanualshub.com/

sure they are the problem! It is unlikely a component will fail again following a recent replacement.

3. If other vehicle devices are affected, this indicates there may be something wrong with the ignition wiring.
4. Operate the engine under similar load and temperature conditions. Check the fuel system for restrictions, primary filter, and fuel tanks for foreign objects blocking the fuel supply. Also, check the air system. Utilize the DDDL 7.0 snapshot feature.
5. Operate the engine at this temperature while attempting to duplicate the problem. Use the DDDL 7.0 snapshot feature.
6. It may not be possible to duplicate the fault or problem unless you can operate the unit in a similar environment. You may want to talk to the Customer Support Center, or a dealer in that area. They may have helpful experience.
7. If possible, troubleshoot the problem in a similar temperature range.
8. If the problem seems to occur during or after the engine is subjected to rain/spray washing, thoroughly inspect the connectors for moisture entry.
9. If the problem occurs at a specific vehicle speed, check the parameters affecting vehicle speed to verify they are programmed close to the vehicle speed where the problem occurs. Check vehicle speed and watch DDDL 7.0 (snapshot) for changes to see if the pulse wheel (VSS signal) is loose.
10. If the problem occurs at a specific engine rpm, unplug the oil, coolant, and air temperature sensors, and note any changes to the problem. Gather this data and contact DDC Customer Support Center at 313-592-5800.

All information subject to change without notice.
Copyright © 2007 DETROIT DIESEL CORPORATION

https://truckmanualshub.com/

12.2.2 Troubleshooting Tree

Following is the troubleshooting tree for low horsepower:

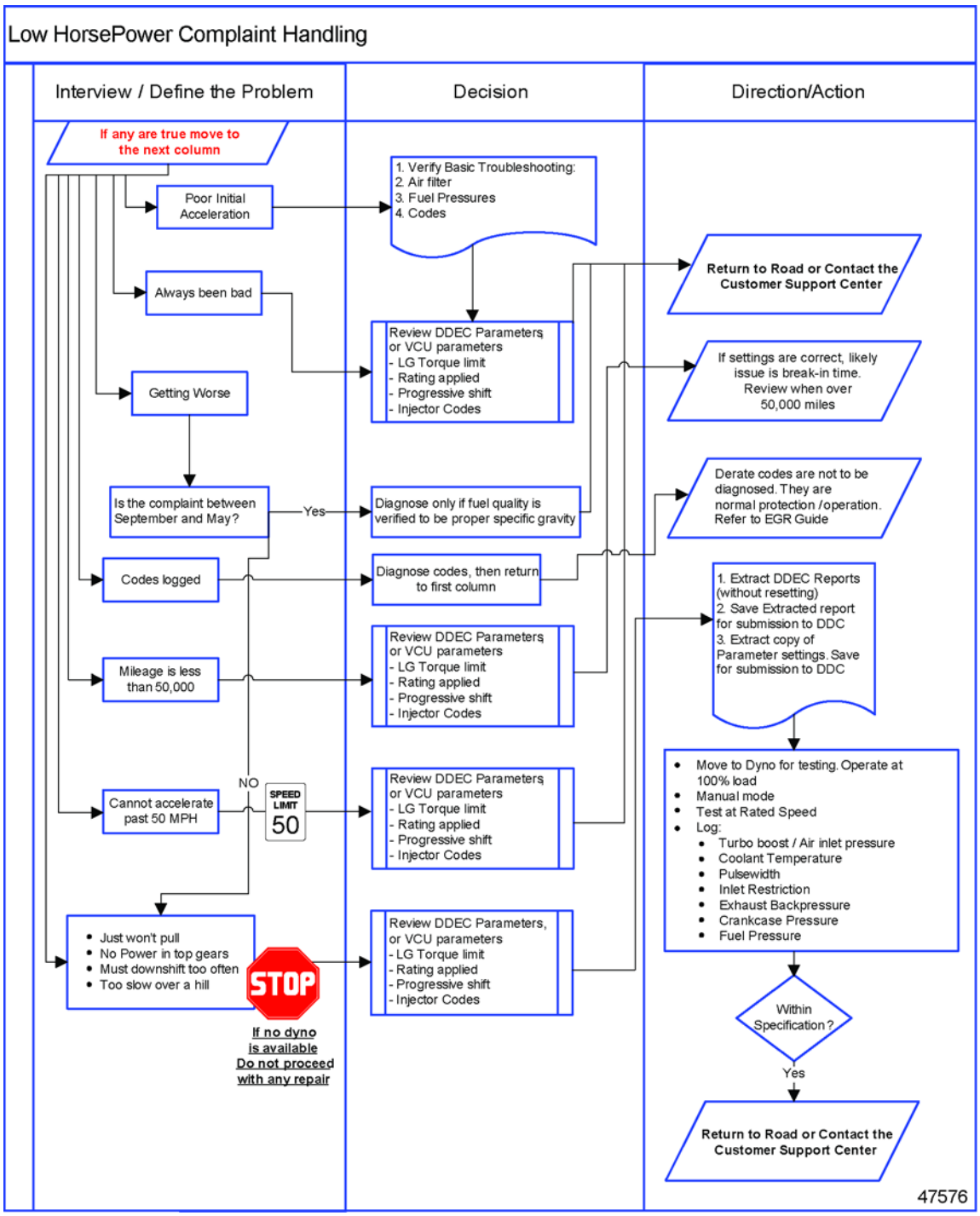

Figure 12-2 Troubleshooting Tree

Copyright © 2007 DETROIT DIESEL CORPORATION

https://truckmanualshub.com/

12.2.3 Low Power Troubleshooting Chart

There are three basic checks that should be performed:

- □ Check for active/historic codes. All causes need to be checked once the fault is identified. Record faults on the Application For Adjustment (AFA) claim, if there is to be a claim.
- □ Check the DDEC parameters, progressive shift settings, torque limiting values, and injector codes. Are they correct? Is proper rating applied? If vehicle is new, is it spec'd correctly?
- □ Check that the dyno-measured power is within DDC specifications as Listed in Table 12-4 for minimum acceptable wheel HP data. Record data on AFA claim.

NOTE:
Service information letter instructions published following the date of this document take precedence.

Possible causes of low power and symptoms are listed in Table 12-2.

All information subject to change without notice.
Copyright © 2007 DETROIT DIESEL CORPORATION

https://truckmanualshub.com/

Possible Causes	Symptoms						
	Loss of Power	Misfires	Poor Acceleration	Erratic Idle	Engine Dies	Black Smoke	Excessive Oil Consump-tion
Fuel Filter Restriction refer to section 12.1	X	X	X	—	X	—	—
Fuel Shut-Off Valve not Open refer to section 12.1	X	X	X	X	—	—	—
Air in the Fuel refer to section 12.3	X	X	X	X	—	—	—
Faulty Injector(s) refer to section 12.1	X	X	X	X	X	X	—
Faulty Turbocharger refer to section 12.1	X	—	X	—	—	X	—
EGR Valve* refer to section 12.1	X	—	X	X	—	X	—
Delta P Sensor or Plugged Lines* refer to section 12.1	X	—	X	X	—	X	—
Charge Air Cooler Leak refer to section 12.7	X	—	X	—	—	X	—
Intake or Exhaust Manifold Leak refer to section 12.7 and section 12.8	X	—	X	—	—	X	—
Quality/Grade of Fuel refer to section 12.1	X	X	X	X	—	X	—
High Fuel Temperature - Above 130°F refer to section 12.5	X	—	X	—	—	—	—
Restricted Air Intake refer to section 12.1	X	—	X	—	—	X	—
Crankcase Overfilled refer to section 12.1	X	—	X	—	—	—	X
Faulty Fan Operation, Always On refer to section 12.1	X	—	X	—	—	—	—
Debris in Fuel Tank - Air Vent Plugged refer to section 12.1	X	X	X	X	X	—	—

Table 12-2 Low Power Troubleshooting Chart

All information subject to change without notice.
Copyright © 2007 DETROIT DIESEL CORPORATION

https://truckmanualshub.com/

12.3 AERATED FUEL

To determine if aerated fuel is causing lack of power, perform the following steps:

1. Disconnect the fuel line return hose from the fitting located at the fuel tank; refer to OEM guidelines.
2. Place the open end of the fuel line into a suitable container.

CAUTION:

To avoid injury before starting and running the engine, ensure the vehicle is parked on a level surface, parking brake is set, and the wheels are blocked.

WARNING:

ENGINE EXHAUST

To avoid injury from inhaling engine exhaust, always operate the engine in a well-ventilated area. Engine exhaust is toxic.

3. Start and run the engine.
4. Operate the engine at 1000 rpm.
5. Visually check to see if air bubbles are rising to the surface of the fuel within the container.
   [a] If air bubbles are not present, shut down engine, check for high fuel pressure; refer to section 12.4.
   [b] If air bubbles are present, shut down engine; refer to section 12.3.1.

12.3.1 Aerated Fuel Resolution

Perform the following steps to resolve aerated fuel:

1. Tighten all fuel line connections between the fuel tank and fuel pump; refer to OEM guidelines.
2. Visually inspect all fuel lines between the fuel tank and fuel pump for leaks.
3. Repair damaged components as required; refer to OEM guidelines.
4. Verify aerated fuel resolution; refer to section 12.3.1.1.

All information subject to change without notice.
Copyright © 2007 DETROIT DIESEL CORPORATION

https://truckmanualshub.com/

12.3.1.1 Test the Engine with Aerated Fuel Resolution

Perform the following steps to determine if aerated fuel resolution resolved lack of power condition:

1. Start and run the engine.
2. Run the engine at idle with a no-load for approximately 5 minutes, allowing the engine coolant to reach normal operating range.
3. Test drive the vehicle to ensure lack of power has been resolved.
   [a] If no lack of power occurred during the test drive, no further troubleshooting is required. Shut down the engine.
   [b] If lack of power occurred during the test drive, shut down the engine. Check for high fuel pressure; refer to section 12.4.

12.4 HIGH FUEL PRESSURE

To determine if high fuel pressure is causing lack of power, perform the following steps:

1. Remove the Supply Fuel Temperature Sensor (SFT Sensor) fitting from the fuel pump. see Figure 12-3 for SFT Sensor.

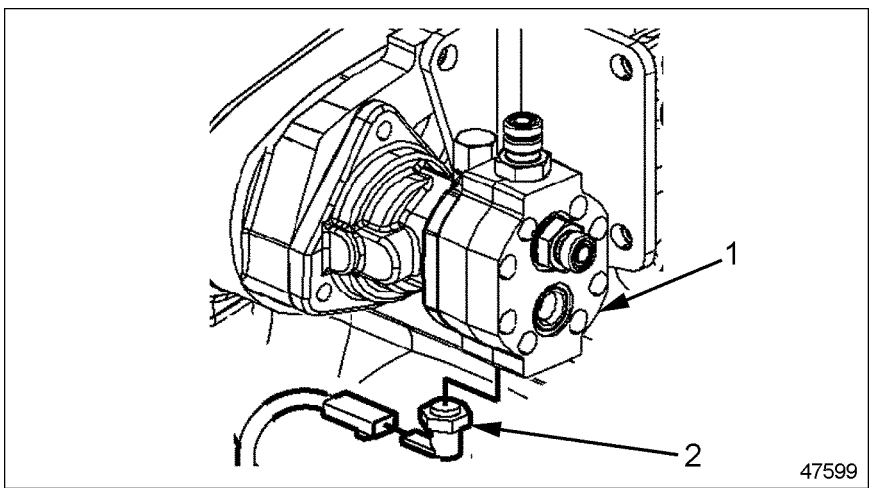

1. Fuel Pump
2. Fitting

Figure 12-3 Supply Fuel Temperature Sensor

2. Attach a calibrated gauge capable of reading 0-517 kPa (0-75 psi) to the fuel pump.

All information subject to change without notice.
Copyright © 2007 DETROIT DIESEL CORPORATION

https://truckmanualshub.com/

CAUTION:

To avoid injury before starting and running the engine, ensure the vehicle is parked on a level surface, parking brake is set, and the wheels are blocked.

WARNING:

ENGINE EXHAUST

To avoid injury from inhaling engine exhaust, always operate the engine in a well-ventilated area. Engine exhaust is toxic.

3. Start and run the engine to the speeds listed in Table 12-3 and record the fuel pressure:

NOTE:
When checking fuel pressure, start the engine, run at the speeds listed in Table 12-3, and record fuel pressure. Shut down the engine.

Engine Speed, rpm	Average Fuel Pressure, kPa (psi)
600	413 (60)
1200	413 (60)
1800	413 (60)
2100	413 (60)

Table 12-3 Fuel Pressure (DDEC VI with Regulator)

4. Shut down the engine.
5. Remove the calibrated gauge from the fuel pump.
6. Reinstall the SFT Sensor, refer to the *Series 60 Service manual (6SE2007)*, fuel system chapter.
7. Analyze the measured fuel pressure readings.
   [a] If the fuel pressure is within specification listed in Table 12-3, check for high fuel temperature return; refer to section 12.5.
   [b] If the fuel pressure is greater than specifications listed in Table 12-3, refer to section 12.4.1.

All information subject to change without notice.
Copyright © 2007 DETROIT DIESEL CORPORATION

https://truckmanualshub.com/

12.4.1 Fuel Pressure Regulator Replacement

Perform the following steps to replace the fuel regulator:

1. Remove the fuel pressure regulator; refer to appropriate service manual, fuel system chapter.
2. Install a new fuel pressure regulator; refer to appropriate service manual, fuel system chapter.
3. Verify new fuel pressure regulator replacement; refer to section 12.4.1.1.

12.4.1.1 Test the Engine with Replaced Fuel Pressure Regulator

Perform the following steps to determine if the replaced fuel pressure regulator resolved lack of power condition:

1. Start and run the engine.
2. Run the engine at idle with a no-load for approximately 5 minutes, allowing the engine coolant to reach normal operating range.
3. Test drive the vehicle to ensure lack of power has been resolved.
   [a] If no lack of power occurred during the test drive, no further troubleshooting is required. Shut down the engine.
   [b] If lack of power occurred during the test drive, shut down the engine. Check for high fuel temperature return; refer to section 12.5.

All information subject to change without notice.
Copyright © 2007 DETROIT DIESEL CORPORATION

https://truckmanualshub.com/

12.5 HIGH FUEL TEMPERATURE RETURN

To determine if high fuel temperature return is causing lack of power, perform the following steps:

1. Test for high fuel temperature return.
2. Analyze the high fuel temperature test results.
   [a] If the return fuel temperature is less than or equal to 54°C (130°F), check for air cleaner restriction; refer to section 12.6.
   [b] If the return fuel temperature is greater than 54°C (130°F), resolve the high fuel temperature return condition; refer to section 12.5.1.

12.5.1 High Fuel Temperature Resolution

Perform the following steps to resolve high fuel temperature return:

1. Remove and replace fuel filter(s); refer to *Series 60 Service manual (6SE2007),* fuel system chapter.
2. Inspect the combination check valve/regulator, replace if necessary; refer to *Series 60 Service manual (6SE2007),* fuel system chapter.
3. If equipped with a fuel cooler, refer to OEM for inspection guidelines.
4. Verify high fuel temperature repair; refer to section 12.5.1.1.

12.5.1.1 Test the Engine with Resolved High Fuel Temperature

Perform the following steps to determine if high fuel temperature repairs resolved lack of power condition:

CAUTION:

To avoid injury before starting and running the engine, ensure the vehicle is parked on a level surface, parking brake is set, and the wheels are blocked.

WARNING:

ENGINE EXHAUST

To avoid injury from inhaling engine exhaust, always operate the engine in a well-ventilated area. Engine exhaust is toxic.

1. Start and run the engine.
2. Test drive the vehicle to ensure lack of power has been resolved.

All information subject to change without notice.
Copyright © 2007 DETROIT DIESEL CORPORATION

https://truckmanualshub.com/

[a] If lack of power did not occur during the test drive, no further troubleshooting is required. Shut down the engine.

[b] If lack of power occurred during the test drive, shut down the engine. Check for a restricted air cleaner element; refer to section 12.6.

12.6 RESTRICTED AIR CLEANER ELEMENT

To determine if a restricted air cleaner element is causing lack of power, perform the following steps:

1. Remove the air filter element from the air cleaner container; refer to OEM guidelines.
2. Visually inspect the air cleaner element for damage or clogging.
   [a] If no damage or clogging is found, check the charge air cooler; refer to section 12.7.
   [b] If damage or clogging is found; refer to section 12.6.1.

NOTE:
Replace the air filter, if close to a maintenance interval.

12.6.1 Air Filter Element Replacement

Perform the following steps to replace the air filter element:

1. Remove and replace the damaged or clogged air filter element; refer to OEM guidelines.
2. Verify air filter element replacement; refer to section 12.6.1.1.

12.6.1.1 Test the Engine with Replaced Air Filter Element

Perform the following steps to determine if the new filter element resolved lack of power:

CAUTION:

To avoid injury before starting and running the engine, ensure the vehicle is parked on a level surface, parking brake is set, and the wheels are blocked.

WARNING:

ENGINE EXHAUST

To avoid injury from inhaling engine exhaust, always operate the engine in a well-ventilated area. Engine exhaust is toxic.

1. Start and run the engine.

All information subject to change without notice.
Copyright © 2007 DETROIT DIESEL CORPORATION

https://truckmanualshub.com/

2. Test drive the vehicle to ensure lack of power has been resolved.
   [a] If lack of power did not occur during the test drive, no further troubleshooting is required. Shut down the engine.
   [b] If lack of power occurred during the test drive, shut down the engine. Check the charge air cooler; refer to section 12.7.

12.7 RESTRICTED OR CRACKED CHARGE AIR COOLER OR LEAKING INTAKE MANIFOLD

To determine if a restricted or cracked charge air cooler or leaking manifold is causing lack of power, perform the following steps:

1. Attach air-to-air charge air cooler test kit, J-41473; refer to OEM guidelines.
2. Disconnect the air inlet hose from the outlet side of the turbocharger compressor housing; refer to appropriate service manual, air intake system chapter.
3. Attach the air-to-air cooler test kit adaptor plug to fit into the hose at the compressor connector; refer to OEM guidelines.
4. Attach an air pressure hose to the air chuck at the regulator and gradually pressurize the air inlet system to a pressure of 205 kPa (30 psi).
5. Apply a water and soap solution to each hose connection, across the face of the charge air cooler.
6. Apply a water and soap solution to the air intake manifold and cylinder head mating surface area.
7. Visually inspect all joints for air leaks and all charge air cooler welded surfaces for stress cracks.
   [a] If charge air cooler leaks are present around the joints, replace the charge air cooler; refer to section 12.7.1.
   [b] If the intake manifold leaks, repair intake manifold; refer to section 12.7.2.
   [c] If neither charge air cooler nor intake manifold leaked, check the exhaust system; refer to section 12.8.

12.7.1 Charge Air Cooler Replacement

Perform the following steps to replace the charge air cooler:

1. Remove and replace the charge air cooler; refer to OEM guidelines.
2. If the intake manifold doesn't leak, verify replacement of the charge air cooler; refer to section 12.7.2.1.
3. If the intake manifold leaks, repair intake manifold; refer to section 12.7.2.

All information subject to change without notice.
Copyright © 2007 DETROIT DIESEL CORPORATION

https://truckmanualshub.com/

12.7.2 Air Intake Manifold Repair

Perform the following steps to repair the air intake manifold:

1. Remove the air intake manifold; refer to *Series 60 Service manual (6SE2007),* Air system chapter.
2. Inspect the air intake manifold; refer to *Series 60 Service manual (6SE2007),* Air system chapter.
3. Install the air intake manifold; refer to *Series 60 Service manual (6SE2007),* Air system chapter.
4. Verify repair of the intake manifold; refer to section 12.7.2.1.

12.7.2.1 Test the Engine with Replaced Charge Air Cooler and Air Intake Manifold

To determine if the repairs resolved the lack of power condition, perform the following steps:

CAUTION:

To avoid injury before starting and running the engine, ensure the vehicle is parked on a level surface, parking brake is set, and the wheels are blocked.

WARNING:

ENGINE EXHAUST

To avoid injury from inhaling engine exhaust, always operate the engine in a well-ventilated area. Engine exhaust is toxic.

1. Start and run the engine.
2. Test drive the vehicle to ensure lack of power has been resolved.
   [a] If no lack of power occurred during the test drive, no further troubleshooting is required. Shut down the engine.
   [b] If lack of power occurred during the test drive, shut down the engine. Check the exhaust system; refer to section 12.8.

All information subject to change without notice.
Copyright © 2007 DETROIT DIESEL CORPORATION

https://truckmanualshub.com/

12.8 FAULTY EXHAUST SYSTEM

To determine if a faulty exhaust system is causing lack of power, perform the following steps:

1. Monitor the exhaust pressure using DDDL 7.0. Connect the scan tool and check the pressure on the DPF sensor.

CAUTION:

To avoid injury before starting and running the engine, ensure the vehicle is parked on a level surface, parking brake is set, and the wheels are blocked.

WARNING:

ENGINE EXHAUST

To avoid injury from inhaling engine exhaust, always operate the engine in a well-ventilated area. Engine exhaust is toxic.

2. Start and run the engine at idle with a no-load for approximately 5 minutes, allowing the engine coolant to reach normal operating range.
3. Install the vehicle on a chassis dynamometer and run the engine speed to full load.
   [a] If the exhaust back pressure at full load is less than 10.1 kPa (3.0 in.Hg), check for high inlet air temperature; refer to section 12.9.
   [b] If the exhaust back pressure at full load is 10.1 kPa (3.0 in.Hg) or greater, refer to section 12.8.1.

12.8.1 Engine Exhaust System Resolution

Perform the following steps to resolve the engine exhaust system:

1. Visually inspect the engine exhaust system; refer to OEM guidelines.
2. Remove the Aftertreatment Device (ATD), refer to the *Aftertreatment System Technician's Guide* (7SE63).
3. Install the aftertreatment test pipes (J-48388-1) for 5 inch exhaust, or aftertreatment test pipes (J-48388-2) for 4 inch exhaust. Deactivate the pressure and temperature sensors using DDDL 7.0.
4. Verify exhaust system resolution; refer to section 12.8.1.1.

All information subject to change without notice.
Copyright © 2007 DETROIT DIESEL CORPORATION

https://truckmanualshub.com/

12.8.1.1 Test the Engine with Replaced Exhaust System

Perform the following steps to determine if replaced engine exhaust system components resolved lack of power condition:

1. Start and run the engine.
2. Test drive the vehicle to ensure lack of power has been resolved.
   [a] If the lack of power has been resolved refer *Aftertreatment System Technician's Guide* (7SE63) for aftertreatment diagnostics.
   [b] If lack of power occurred during the test drive, shut down the engine. Reinstall the aftertreatmnet. Check for high inlet air temperature; refer to section 12.9.

12.9 HIGH INLET AIR TEMPERATURE

To determine if high inlet air temperature is causing lack of power, perform the following:

1. Test the radiator fan, fan drive, or fan shroud for proper operation or configuration; refer to OEM guidelines.

NOTE:
The engine will be torque limited to protect the turbocharger and charge air cooler; (you will receive derate codes 110 and 404, FMI 14). This is normal engine operation for component protection.

2. Examine test results.
   [a] If the radiator fan, fan drive, or fan shroud pass OEM test, check high altitude operation; refer to section 12.10.
   [b] If the radiator fan, drive or shroud did not operate correctly; refer to section 12.9.1.

12.9.1 Radiator Fan, Drive and Shroud Replacement

Perform the following steps to replace the radiator fan, drive and or shroud:

1. Remove and replace the radiator fan, drive and/or shroud; refer to OEM guidelines.
2. Verify replacement; refer to section 12.9.1.1.

All information subject to change without notice.
Copyright © 2007 DETROIT DIESEL CORPORATION

https://truckmanualshub.com/

12.9.1.1 Test the Engine with Radiator Fan, Fan Drive, or Fan Shroud Replacement

Perform the following steps to determine if replaced radiator fan, fan drive, or fan shroud resolved lack of power condition:

CAUTION:

To avoid injury before starting and running the engine, ensure the vehicle is parked on a level surface, parking brake is set, and the wheels are blocked.

WARNING:

ENGINE EXHAUST

To avoid injury from inhaling engine exhaust, always operate the engine in a well-ventilated area. Engine exhaust is toxic.

1. Start and run the engine.
2. Test drive the vehicle to ensure lack of power has been resolved.
   [a] If no lack of power occurred during the test drive, no further troubleshooting is required. Shut down the engine.
   [b] If lack of power occurred during the test drive, shut down the engine. Check high altitude operation; refer to section 12.10.

12.10 HIGH ALTITUDE OPERATION

To determine if high altitude operation is causing lack of power:

1. Examine the altitude performance curve, see Figure 12-4.
2. Based on the altitude curve data, , decide if high altitude is causing the lack of power.
   [a] If your vehicle is operating above sea level, a loss of power will be encountered, no further troubleshooting is required.
   [b] If your vehicle is operating at or below sea level and there is a lack of power, refer to section 12.11.

All information subject to change without notice.
Copyright © 2007 DETROIT DIESEL CORPORATION

https://truckmanualshub.com/

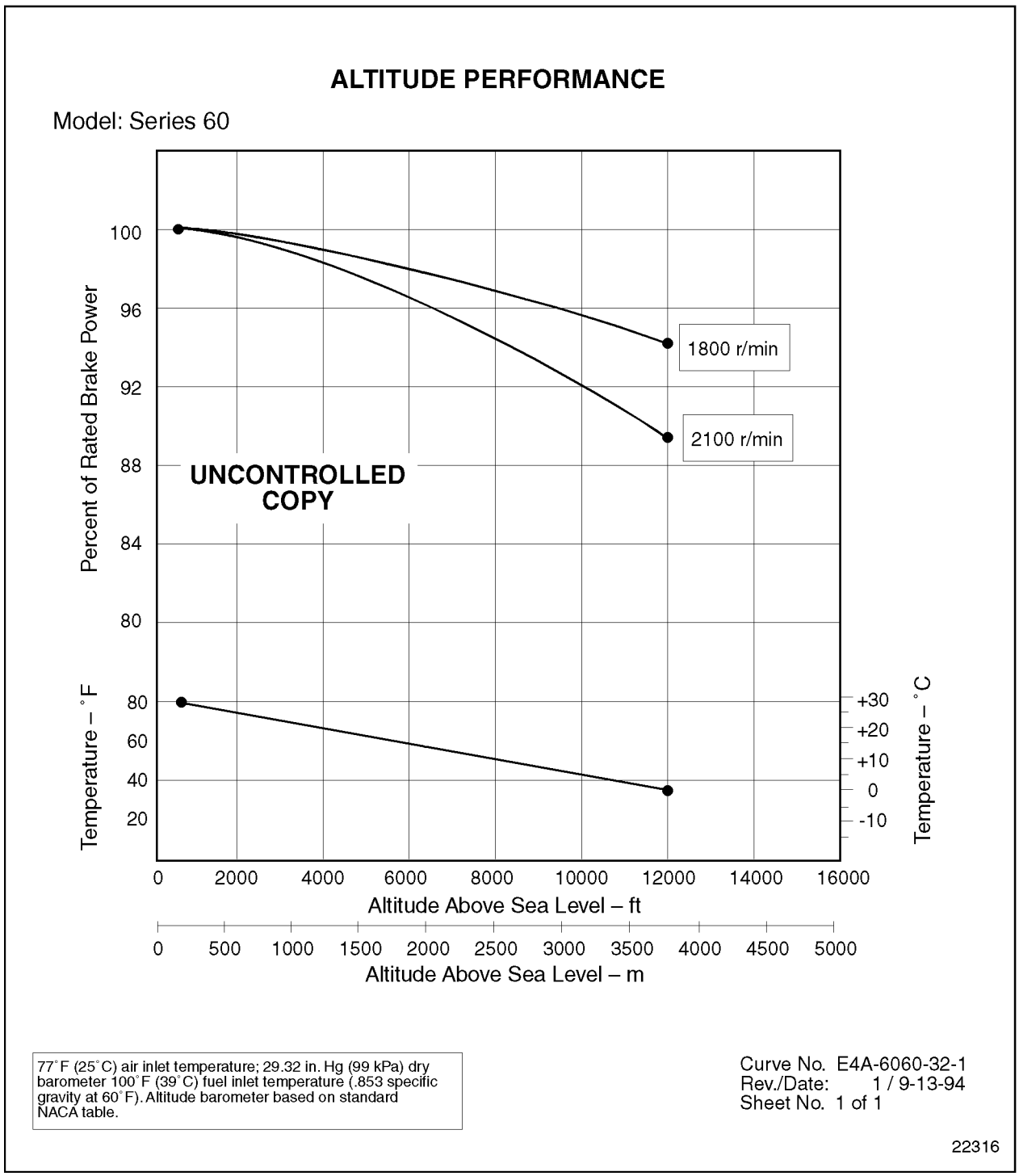

Figure 12-4 Altitude Performance Curve

All information subject to change without notice.
Copyright © 2007 DETROIT DIESEL CORPORATION

 https://truckmanualshub.com/

12.11 INCORRECT CAMSHAFT TIMING

To determine if incorrect camshaft timing is causing lack of power, perform the following steps:

Check the camshaft timing; if the dial indicator reading is within 0.262 - 0.284 in. (6.655 - 7.214 mm), no further troubleshooting is required. If the dial indicator reading is not within 0.262 - 0.284 in. (6.655 - 7.214 mm), check engine timing; refer to section 12.11.1.

NOTE:
The above camshaft timing settings apply to all 14L DDEC VI engine models.

12.11.1 Engine Timing Resolution

Perform the following steps to resolve incorrect engine timing:

1. Perform an engine gear train timing check; refer to appropriate service manual, engine chapter.
2. Verify engine timing resolution; refer to section 12.11.1.1.

12.11.1.1 Test Engine with Correct Timing

Perform the following steps to determine if corrected engine timing resolved lack of power condition:

CAUTION:

To avoid injury before starting and running the engine, ensure the vehicle is parked on a level surface, parking brake is set, and the wheels are blocked.

WARNING:

ENGINE EXHAUST

To avoid injury from inhaling engine exhaust, always operate the engine in a well-ventilated area. Engine exhaust is toxic.

1. Start and run the engine.
2. Test drive the vehicle to ensure lack of power has been resolved.
   [a] If no lack of power occurred during the test drive, no further troubleshooting is required. Shut down the engine.
   [b] If lack of power occurred during the test drive, shut down the engine. Call the Detroit Diesel Customer Support Center (313-592-5800).

All information subject to change without notice.
Copyright © 2007 DETROIT DIESEL CORPORATION

https://truckmanualshub.com/

12.12 POWER VERIFICATION WITH CHASSIS DYNAMOMETER

The chassis dynamometer is a device for applying specific loads to a vehicle to determine if the vehicle will perform to published specifications and to permit a physical inspection for leaks of any kind. It is an excellent method for detecting improper tune-up, misfiring injectors, low compression, and other malfunctions.

12.12.1 Chassis Dynamometer Room Ventilation Recommendations

For safe and accurate dynamometer readings, the chassis dynamometer room must be properly ventilated.

CAUTION:

To avoid injury before starting and running the engine, ensure the vehicle is parked on a level surface, parking brake is set, and the wheels are blocked.

WARNING:

ENGINE EXHAUST

To avoid injury from inhaling engine exhaust, always operate the engine in a well-ventilated area. Engine exhaust is toxic.

If a vehicle is tested on a dynamometer located in an area without proper ventilation, the engine will be subject to high ambient air temperatures. High air inlet temperatures can result in false low power readings on the dynamometer.

To help ensure accurate horsepower readings, the dynamometer room should have a ceiling-mounted fan with a 850 to 1133 m3 /min (30,000 to 40,000 ft3 /min) capacity. This will provide proper ventilation of exhaust gases and heat radiated by the operating engine.

For direct engine cooling, Detroit Diesel recommends the use of a 368 m3 /min (13,000 ft3 /min) or greater capacity barrel-type ram air fan. This should be portable so that it can be conveniently placed three to five feet (approximately one to two meters) in front of the truck and aimed directly at the radiator/charge air cooler package.

All information subject to change without notice.
Copyright © 2007 DETROIT DIESEL CORPORATION

https://truckmanualshub.com/

12.12.2 Chassis Dynamometer Test and Run-in Procedure

The function of the dynamometer is to absorb and measure the engine output after it has been transmitted through the vehicle transmission and driveline to the drive tires.

The vehicle is connected to dynamometer through the roller absorption unit. The load on the vehicle may be varied from zero to maximum by decreasing or increasing the resistance in the unit. The amount of power absorbed in a water brake type dynamometer, as an example, is governed by the volume of fluid within the working system. The fluid offers resistance to a rotating motion. By controlling the volume of water in the absorption unit, the load may be increased or decreased as required.

The following are some tips to keep in mind in preparing the vehicle before the dynamometer run and during the actual testing:

- □ Follow all applicable safety procedures from the chassis dynamometer manufacturer.
- □ Observe the air intake duct and charge air fan shrouding to identify misalignments. Correct as necessary.
- □ Make sure the differential lock is “on.”
- □ Make sure the radiator/charge air cooler system fan(s) are locked on.
- □ If the vehicle is equipped with anti-lock brakes (ABS), disable the ABS controller by unplugging it or removing its power fuse/breaker.
- □ Instrument the engine for fuel pressure, air inlet restriction, exhaust backpressure, and crankcase pressure, and note these readings during the dynamometer run.
- □ Make sure the vehicle hood is down and locked into its normal position.
- □ Make sure the engine is fully warmed up before placing the vehicle on the dynamometer. Both oil and coolant temperature should be at least 180° F (82° C).
- □ When loading the vehicle on the dynamometer, make sure the vehicle is positioned onto the rollers as straight as possible.
- □ For direct engine cooling, Detroit Diesel recommends the use of a 368 m3 /min (13,000 ft3 /min) or greater capacity barrel-type ram air fan. This should be portable so that it can be conveniently placed three to five feet (approximately one to two meters) in front of the truck and aimed directly at the charge air cooler. This is especially important at high altitudes.
- □ During high ambient temperature conditions (90+° F, 32+° C), it may also be necessary to use a water spray mist fan in front of the vehicle to prevent overheating.
- □ Running the dynamometer in “manual” mode instead of “automatic” mode allows for maximum control of the test process and may result in more consistent test results.
- □ During the horsepower test, make sure “percent engine load” and “torque limiting factor” are 100% by monitoring them with a computer equipped with DDDL 7.0.
- □ Select a transmission gear with a 1:1 gear ratio during the horsepower test.
- □ Take horsepower reading at 1500 rpm and 1750 rpm. Stabilize at rated speed for at least one minute before taking a final horsepower reading. Compare the recorded horsepower to the appropriate minimum horsepower tables below for particular ratings.

All information subject to change without notice.
Copyright © 2007 DETROIT DIESEL CORPORATION

https://truckmanualshub.com/

- Note that the following charts are for vehicles with manual transmissions. Vehicles with automatic transmissions (i.e. equipped with torque converters) will have slightly lower minimum horsepower values then listed in Table 12-4.

Model Number 6067-HG6E	
Rated Power bhp @ r/min	**Peak Torque lb•ft @ r/min**
425 @ 1800	1450 @ 1200
445 @ 1800	1450 @ 1200
455 @ 1800	1550 @ 1200
490 @ 1800	1550 @ 1200
515 @ 1800	1550 @ 1200
470 @ 1800	1650 @ 1200
515 @ 1800	1650 @ 1200
424 / 445 @ 1800	1450 @ 1200
455 / 490 @ 1800	1550 @ 1200
490 / 515 @ 1800	1550 @ 1200
470 / 515 @ 1800	1650 @ 1200

Note: All ratings certified with diesel fuel no. 2, unless otherwise specified.

Table 12-4 Minimum Acceptable Wheel HP

All information subject to change without notice.
Copyright © 2007 DETROIT DIESEL CORPORATION

https://truckmanualshub.com/

All information subject to change without notice.
Copyright © 2007 DETROIT DIESEL CORPORATION

https://truckmanualshub.com/

13 HIGH ENGINE COOLANT TEMPERATURE

Section **Page**

13.1 IMPROPER ENGINE COOLANT LEVEL 13-3
13.2 INSUFFICIENT RADIATOR AIR CIRCULATION 13-5
13.3 FAULTY PRESSURE CONTROL CAP 13-6
13.4 DEFECTIVE COOLANT HOSES 13-7
13.5 FAN BELTS ARE INCORRECTLY ADJUSTED 13-8
13.6 INOPERATIVE THERMO-MODULATED FAN 13-9
13.7 FAULTY THERMOSTATS 13-10
13.8 FAULTY WATER PUMP 13-11
13.9 COMBUSTION GASES IN COOLANT 13-13
13.10 ABNORMAL RADIATOR COOLANT FLOW 13-19

https://truckmanualshub.com/

All information subject to change without notice.
Copyright © 2007 DETROIT DIESEL CORPORATION

https://truckmanualshub.com/

13.1 IMPROPER ENGINE COOLANT LEVEL

To determine if improper engine coolant level is causing high engine coolant temperature, perform the following:

1. Visually inspect the radiator coolant level; refer to OEM guidelines.
2. Examine the results.
   [a] If the radiator coolant level is within 2.0 in. (approximately 50 mm) of the radiator filler neck, check insufficient radiator air circulation; refer to section 13.2.
   [b] If the radiator coolant level is not within 2 in. (approximately 50 mm) of the radiator filler neck, refer to section 13.1.1.

13.1.1 Improper Coolant Level Resolution

Perform the following steps to resolve improper coolant level:

1. Fill coolant system to correct level; refer to appropriate service manual, preventive maintenance chapter.
2. Verify coolant level resolution; refer to section 13.1.1.1.

13.1.1.1 Test Engine with Proper Coolant Level

Perform the following to determine if proper coolant level resolved high engine coolant temperature:

1. Start and run the engine.
2. Run the engine through its operating range with no-load for approximately 5 minutes, allowing the engine coolant to reach normal operating range.
   [a] If the engine coolant temperature is 88-96°C (190-210°F). Shut down the engine. Determine the cause of low coolant level.Refer to section 13.1.1.2
   [b] If the engine coolant temperature is not 88-96°C (190-210°F), shut down the engine. Check for insufficient radiator air circulation; refer to section 13.2.

13.1.1.2 Pressure Test the Cooling System

Perform the following to pressure test the cooling system:

1. Pressure test the cooling system with a pressure tester.
   [a] Check for external leaks on the engine, radiator, all coolant hoses and the heater core in the cab.
   [b] Repair any external leaks and perform the procedure in found in section 13.1.1.3.
   [c] If there are no external leaks perform the procedure found in section 13.2.

All information subject to change without notice.
Copyright © 2007 DETROIT DIESEL CORPORATION

https://truckmanualshub.com/

13.1.1.3 Test Engine with Coolant Leaks Repaired

Perform the following steps to test the engine with coolant leaks repaired:

1. Start and run the engine.
2. Run the engine through its operating range with no-load for approximately five minutes allowing the engine coolant to reach normal operating range.
   [a] If engine the coolant temperature is 88-96°C (190-210°F). Shut down the engine no further troubleshooting is required.
   [b] If the engine coolant temperature is not 88-96°C (190-210°F), shut down the engine. Check for insufficient radiator air circulation. Refer to section 13.2.

All information subject to change without notice.
Copyright © 2007 DETROIT DIESEL CORPORATION

https://truckmanualshub.com/

13.2 INSUFFICIENT RADIATOR AIR CIRCULATION

To determine if insufficient radiator air circulation is causing high engine coolant temperature, perform the following:

1. Visually examine the radiator and radiator shrouding.
2. Check for excessive clogging, a damaged shrouding or a faulty pressure control cap.

13.2.1 Exterior Radiator Repair

Perform the following for exterior radiator repair:

1. Clean the exterior radiator of all clogging, debris, or excessive dirt; refer to OEM guidelines.
2. Verify exterior radiator repair; refer to section 13.2.2.1.
   [a] If the radiator is absent of clogging, debris, and dirt, check the radiator shrouding for damage or incorrect positioning. If there is no damage or clogging to the radiator refer to section 13.3.
   [b] If the radiator shrouding is damaged, incorrectly positioned, or inadequate, refer to section 13.2.2.

13.2.2 Radiator Shroud Repair

Perform the following for radiator shroud repair:

1. Repair or replace damaged radiator shrouding; refer to OEM guidelines
2. Verify exterior radiator repair; refer to section 13.2.2.1.

13.2.2.1 Test Engine with Repaired Exterior Radiator and Shrouding

Perform the following to determine if exterior radiator and shrouding repair resolved high engine coolant temperature:

1. Start and run the engine.
2. Run the engine through its operating range with no-load for approximately 5 minutes, allowing the engine coolant to reach normal operating range.
   [a] If the engine coolant temperature is 88-96°C (190-210°F), no further troubleshooting is required. Shut down the engine.
   [b] If the engine coolant temperature is not 88-96°C (190-210°F), shut down the engine. Check the pressure control cap; refer to section 13.3.

All information subject to change without notice.
Copyright © 2007 DETROIT DIESEL CORPORATION

https://truckmanualshub.com/

13.3 FAULTY PRESSURE CONTROL CAP

To determine if a faulty pressure control cap is causing high engine coolant temperature, perform the following:

1. Perform coolant pressure control cap tests; refer to appropriate service manual, cooling system chapter.
2. Check the test results.
   [a] If the cooling system pressure is less than or equal to 48.3 kPa (7 psi), check the coolant hoses; refer to section 13.4.
   [b] If the cooling system pressure is greater than 48.3 kPa (7 psi), refer to section 13.3.1.

13.3.1 Pressure Control Cap Resolution

Perform the following steps to resolve faulty pressure control cap:

1. Remove and replace pressure control cap; refer to OEM guidelines.
2. Install a new pressure control cap; refer to OEM guidelines.
3. Verify pressure control repair; refer to section 13.3.1.1.

13.3.1.1 Test Engine with Replaced Pressure Control Cap

Perform the following to determine if exterior radiator repair resolved high engine coolant temperature:

1. Start and run the engine.
2. Run the engine through its operating range with no-load for approximately 5 minutes, allowing the engine coolant to reach normal operating range.
   [a] If the engine coolant temperature is normal, no further troubleshooting is required. Shut down the engine.
   [b] If the engine coolant temperature is not normal, shut down the engine. Check coolant hoses; refer to section 13.4.

All information subject to change without notice.
Copyright © 2007 DETROIT DIESEL CORPORATION

https://truckmanualshub.com/

13.4 DEFECTIVE COOLANT HOSES

To determine if defective coolant hoses is causing high engine coolant temperature, perform the following:

1. Visually examine cooling system hoses; refer to OEM guidelines.
2. Check for soft, deteriorated, or collapsed hoses.
   [a] If cooling system hoses are not soft, deteriorated, or collapsed, check the fan belts; refer to section 13.5.
   [b] If cooling system hoses are soft, deteriorated, or collapsed, refer to section 13.4.1.

13.4.1 Coolant System Hoses Replacement

Perform the following steps to resolve worn or damaged coolant system hoses:

1. Remove and replace damaged or worn coolant hoses as necessary; refer to OEM guidelines.
2. Install new coolant hoses as necessary; refer to OEM guidelines.
3. Verify replaced coolant system hoses; refer to section 13.4.1.1.

13.4.1.1 Test Engine with Replaced Coolant Hoses

Perform the following to determine if the new coolant hoses resolved high engine coolant temperature:

1. Start and run the engine.
2. Run the engine through its operating range with no-load for approximately 5 minutes, allowing the engine coolant to reach normal operating range, and visually examine replaced hoses for any leaks.
   [a] If the engine coolant temperature is 88-96°C (190-210°F) and no leaks are found, no further troubleshooting is required.
   [b] If the engine coolant temperature is 88-96°C (190-210°F) and leaks are found shut down the engine, repair leaks; refer to section 13.4.1.
   [c] If the engine coolant temperature is not 88-96°C (190-210°F) and no leaks are found, shut down the engine. Check fan belts; refer to section 13.5.

All information subject to change without notice.
Copyright © 2007 DETROIT DIESEL CORPORATION

https://truckmanualshub.com/

13.5 FAN BELTS ARE INCORRECTLY ADJUSTED

To determine if misadjusted fan belts are causing high engine coolant temperature, perform the following:

1. Test fan belt(s) tension; refer to appropriate service manual, preventive maintenance chapter.
2. Compare tension to belt specifications listed in Table 13-1.
   [a] If the belt(s) tension is within specification, check the thermo-modulated fan; refer to section 13.6.
   [b] If the belt(s) tension is not within specification,refer to section 13.5.1.

Single Belt, N (lb)	2 or 3 Belts, N (lb)
355 - 445 (80 - 100)	266 - 355 (60 - 80)

Table 13-1 Fan Belt Tension

13.5.1 Belt Tension Resolution

Perform the following steps to resolve incorrect belt tension:

1. Readjust belt(s) tension as necessary; refer to appropriate service manual, preventive maintenance chapter.
2. Verify belt tension resolution; refer to section 13.5.1.1.

13.5.1.1 Test Engine with Correct Belt Tension

Perform the following to determine if exterior radiator repair resolved high engine coolant temperature:

1. Start and run the engine.
2. Run the engine through its operating range with no-load for approximately 5 minutes, allowing the engine coolant to reach normal operating range.
   [a] If the engine coolant temperature is 88-96°C (190-210°F), no further troubleshooting is required. Shut down the engine.
   [b] If the engine coolant temperature is not 88-96°C (190-210°F), shut down the engine. Check thermo-modulated fan; refer to section 13.6.

All information subject to change without notice.
Copyright © 2007 DETROIT DIESEL CORPORATION

https://truckmanualshub.com/

13.6 INOPERATIVE THERMO-MODULATED FAN

To determine if an inoperative thermo-modulated fan is causing high engine coolant temperature, test the thermo-modulated fan; refer to OEM guidelines.

1. If the thermo-modulated fan is functioning correctly, check thermostats; refer to section 13.7.
2. If the thermo-modulated fan is not functioning correctly, refer to section 13.6.1.

13.6.1 Thermo-modulated Fan Replacement

Perform the following steps to replace inoperative thermo-modulated fan:

1. Replace inoperative thermo-modulated fan; refer to OEM guidelines.
2. Verify thermo-modulated fan replacement; refer to section 13.6.1.1.

13.6.1.1 Test Engine with Replaced Thermo-modulated Fan

Perform the following to determine if thermo-modulated fan replacement resolved high engine coolant temperature:

1. Start and run the engine.
2. Run the engine through its operating range with no-load for approximately 5 minutes, allowing the engine coolant to reach normal operating range.
   [a] If the engine coolant temperature is 88-96°C (190-210°F), no further troubleshooting is required. Shut down the engine.
   [b] If the engine coolant temperature is not 88-96°C (190-210°F), shut down the engine. Check thermostats; refer to section 13.7.

All information subject to change without notice.
Copyright © 2007 DETROIT DIESEL CORPORATION

https://truckmanualshub.com/

13.7 FAULTY THERMOSTATS

To determine if faulty thermostats are causing high engine coolant temperature, perform the following:

1. Remove thermostat from the thermostat housing; refer to appropriate service manual, cooling system chapter.
2. Inspect thermostat for correct operation; refer to appropriate service manual, cooling system chapter.
   [a] If thermostat opened at 97°C (207°F), check water pump; refer to section 13.8.
   [b] If thermostat did not open at 97°C (207°F), refer to section 13.7.1.

13.7.1 Thermostat Replacement

Perform the following steps to replace thermostats:

1. Install new thermostat; refer to appropriate service manual, cooling system chapter.
2. Verify replaced thermostat; refer to section 13.7.1.1.

13.7.1.1 Test Engine with New Thermostat

Perform the following to determine if thermostat replacement resolved high engine coolant temperature:

1. Start and run the engine.
2. Run the engine through its operating range with no-load for approximately 5 minutes, allowing the engine coolant to reach normal operating range.
   [a] If the engine coolant temperature is 88-96°C (190-210°F), no further troubleshooting is required. Shut down the engine.
   [b] If the engine coolant temperature is not 88-96°C (190-210°F), shut down the engine. Check water pump; refer to section 13.8.

All information subject to change without notice.
Copyright © 2007 DETROIT DIESEL CORPORATION

https://truckmanualshub.com/

13.8 FAULTY WATER PUMP

To determine if a faulty water pump is causing high engine coolant temperature, perform the following:

1. Remove the water pump, (gear case mounted) or (gear case cover mounted); refer to appropriate service manual, cooling system chapter.
2. Turn the water pump over and install J–35687, water pump impeller slip and lash tester, into the tapped holes provided in the impeller; see Figure 13-1.

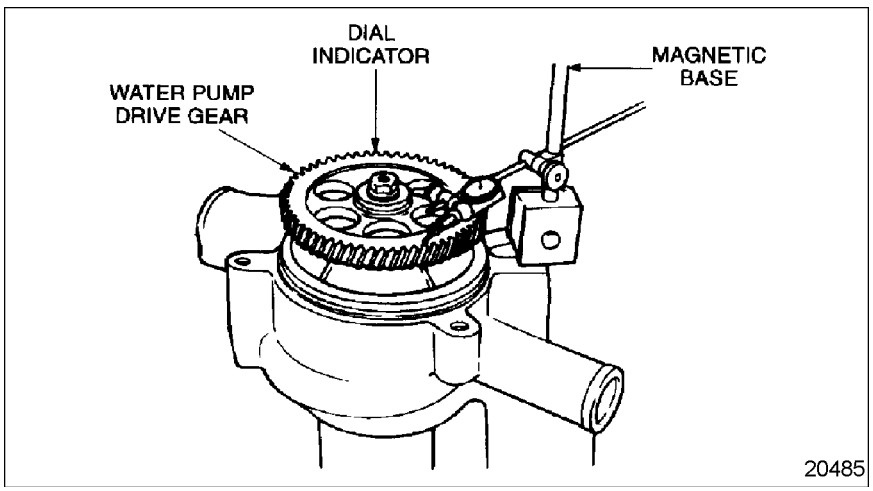

Figure 13-1 Measuring Water Pump Drive Gear Run-out

3. Clamp the water pump drive gear in a vise, with the impeller facing up. Use soft jaws to prevent damage to the gear teeth.
4. Using a 1/2 in. drive torque wrench in the hole provided in the center of the slip-lash tester, apply 68 N·m (50 lb·ft) torque in either direction. The impeller must withstand 68 N·m (50 lb·ft) torque without slipping.
   [a] If the torque 68 N·m (50 lb·ft) is satisfied without the impeller slipping, check combustion gases in coolant; refer to section 13.9.
   [b] If the torque 68 N·m (50 lb·ft) is not satisfied and the impeller is slipping, refer to section 13.8.1.

All information subject to change without notice.
Copyright © 2007 DETROIT DIESEL CORPORATION

https://truckmanualshub.com/

13.8.1 Water Pump Impeller Replacement

Perform the following steps to replace water pump impeller:

1. Disassemble the water pump and replace worn or damaged impeller for (gear case mounted) or (gear case cover mounted); refer to appropriate service manual, cooling system chapter.
2. Reassemble the water pump with new components as necessary for (gear case mounted) or (gear case cover mounted); refer to appropriate service manual, cooling system chapter.

13.8.1.1 Test Engine with Repaired Water Pump

Perform the following to determine if thermo-modulated fan replacement resolved high engine coolant temperature:

1. Start and run the engine.
2. Run the engine through its operating range with no-load for approximately 5 minutes, allowing the engine coolant to reach normal operating range.
   [a] If the engine coolant temperature is 88-96°C (190-210°F), no further troubleshooting is required. Shut down the engine.
   [b] If the engine coolant temperature is not 88-96°C (190-210°F), shut down the engine. Check combustion gases in coolant; refer to section 13.9.

All information subject to change without notice.
Copyright © 2007 DETROIT DIESEL CORPORATION

https://truckmanualshub.com/

13.9 COMBUSTION GASES IN COOLANT

To determine if combustion gases in coolant is causing high engine coolant temperature, perform the cylinder compression test. Refer to section 13.9.1.

13.9.1 Cylinder Compression Test

Perform the following steps for a compression test on a Series 60 Engine:

WARNING:

ENGINE EXHAUST

To avoid injury from inhaling engine exhaust, always operate the engine in a well-ventilated area. Engine exhaust is toxic.

1. Start and run the engine until normal operating temperature is reached. Stop the engine.
2. Disconnect the batteries.
3. Disconnect the fuel pump feed line from the fuel tank. Place a suitable container under the line to catch the spilling fuel. Turn the ¼ turn valve off on the outlet fitting of the secondary fuel filter.
4. Disconnect the fuel supply line to the cylinder head. Place a suitable container under the line to catch the spilled fuel. Disconnect the fuel return line from the doser valve and place a suitable container under the line to catch the spilled fuel.

WARNING:

EYE INJURY

To avoid injury from flying debris when using compressed air, wear adequate eye protection (face shield or safety goggles) and do not exceed 276 kPa (40 psi) air pressure.

NOTICE:

All the fuel must be removed from the cylinder head before removing injectors. This prevents the fuel from entering the cylinder and causing cylinder wall lube oil wash down or a hydrostatic lock at startup.

5. Blow low pressure regulated air no more than 207 kPa (30 psi) into the inlet fitting for 20 to 30 seconds or until all the fuel is purged from the head.
6. Clean and remove the rocker cover, it is not necessary to remove the bottom rocker cover. If equipped with Jake Brakes remove the Jake Brake assembly.

All information subject to change without notice.
Copyright © 2007 DETROIT DIESEL CORPORATION

https://truckmanualshub.com/

7. Remove all the rocker shaft mounting bolts and nut from the front or rear rocker shaft assembly. Using rocker arm lifter (J–35996–A), see Figure 13-2, lift the assembly straight up and off of the head and place in a clean area on the bench.

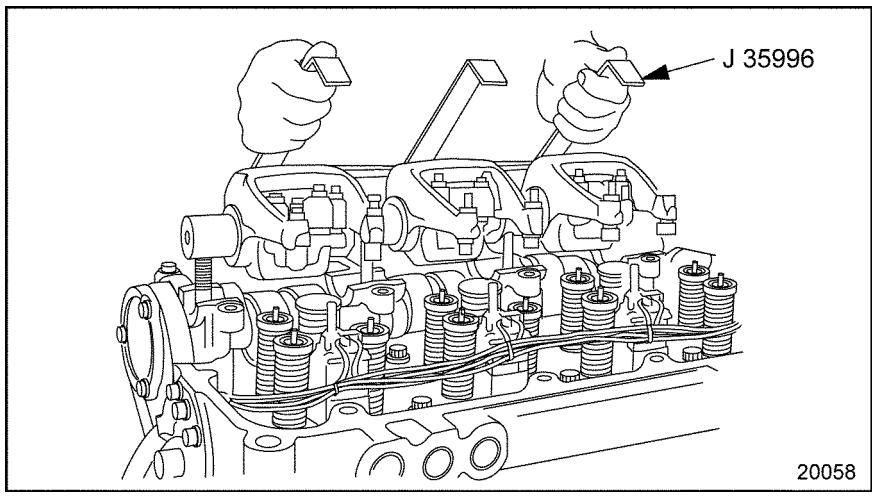

Figure 13-2 Rocker Arm/Shaft Assembly Removal/Installation

8. Use tool J-47808 to remove the 4–pin electrical connection from the injector.
9. Disengage the locking tang on the harness plug connection, grasp the connector and gently pull it from the socket.
10. Remove the injector hold down clamps.

NOTICE:
Use extreme care when handling injectors to avoid costly damage by dropping or mishandling. Always install new O-rings when replacing injectors.

11. Remove the three injectors to be tested from the cylinder head.
12. Place the compression test adaptors (J-47373) into the injector holes. It is recommended to have three test adaptors (J-47373) when performing this routine.
13. Install the injector hold down clamps and torque hold down bolts to 58-66 N·m (43-49 lb·ft).
14. Carefully remove the shaft from the rocker arm assembly by slowly pulling it out of the assembly. Place the shaft on the bench. Do not disturb the stack-up of the rocker arm sets.
15. Remove the three injector rocker arms and replace with spacers (J–38768–5) .
16. Lubricate the shaft with clean engine oil. With sleeves in place, carefully reinstall the shaft through each rocker arm shaft. Make sure cup plug end faces inboard.

All information subject to change without notice.
Copyright © 2007 DETROIT DIESEL CORPORATION

https://truckmanualshub.com/

17. Install the modified rocker arm shaft assembly on the head. If the engine is equipped with a Jake Brake®, use non-Jake Brake rocker arm shaft bolts 8929129. Torque the three bolts and the nut to 102-108 N·m (75-80 lb·ft).

NOTE:
Verify that the bolt holes for the rocker shafts are clean as not to hydro lock the bolts causing damage to the cylinder head.

18. Disconnect both connectors at the valve cover for the injectors.

NOTE:
Disconnect both connectors at the valve cover for the injectors.

All information subject to change without notice.
Copyright © 2007 DETROIT DIESEL CORPORATION

https://truckmanualshub.com/

WARNING:

PERSONAL INJURY

To avoid injury when working on or near an operating engine, wear protective clothing, eye protection, and hearing protection.

WARNING:

PERSONAL INJURY

To avoid injury from hot surfaces, wear protective gloves, or allow engine to cool before removing any component.

WARNING:

ENGINE EXHAUST

To avoid injury from inhaling engine exhaust, always operate the engine in a well-ventilated area. Engine exhaust is toxic.

19. Attach cylinder compression gauge (J–6692–B) to the first adaptor. See Figure 13-3.

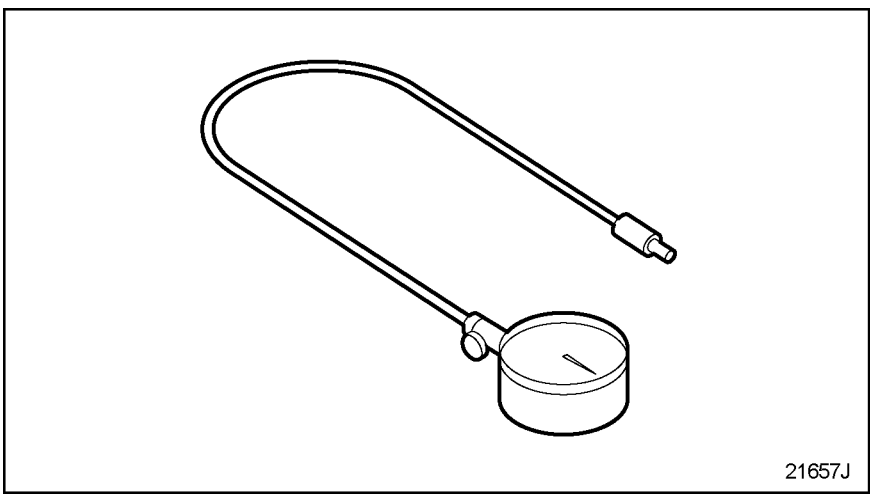

Figure 13-3 Attach Cylinder Compression Gauge J 6692–B

20. Reconnect the batteries.

All information subject to change without notice.
Copyright © 2007 DETROIT DIESEL CORPORATION

https://truckmanualshub.com/

CAUTION:

To avoid injury from inhaling engine exhaust, always operate the engine in a well-ventilated area. Engine exhaust is toxic.

21. Crank the engine over using the starter motor 5 compression strokes record the compression reading on the gauge.

NOTE:
Verify that the batteries voltage does not go low enough to affect engine cranking speed. If the cranking speed is affected then the results will be inaccurate. If needed connect a battery charge to maintain battery voltage.

22. The compression reading should be 3102-3793 kPa (450-550 psi) with no two cylinders differing by more than 276 kPa (40 psi). If compression readings are below specifications, repeat step 20 to be certain of the reading.
23. After testing all three cylinders, remove bolts from the modified rocker arm shaft assembly and, using rocker arm lifter (J–35996), lift the assembly straight up and off the cylinder head. Place in a clean area on the bench.
24. Carefully remove the shaft from the rocker arm assembly, remove the three rocker arm sleeves. Replace the three injector rocker arms. Lubricate the shaft with clean engine oil and carefully reinstall through each rocker arm.
25. Remove the injector hold down clamps discard the hold down bolt and remove the compression test adaptors from the cylinder head.
26. Using new sealing rings and injector hold down bolt install the injectors back into the cylinder head and torque to specifications; Torque bolt to 50 Nm (37 lb ft) Loosen the bolt 60 degrees (1/6 of a turn or one bolt flat) Do not fully loosen the bolt. Torque the bolt to 35 Nm (26 lb ft) Tighten the bolt an additional 90 degrees.
27. Replace the completed rocker arm shaft assembly on the engine and torque nut and bolts to specifications torque to 102-108 N•m (75-80 lb•ft)
28. Repeat steps 4b-26 for the rear 3 cylinders
29. Install upper valve cover, insuring that the bolt hole are clear of dirt and oil as not to damage the lower rocker cover.
30. Check test results

All information subject to change without notice.
Copyright © 2007 DETROIT DIESEL CORPORATION

https://truckmanualshub.com/

13.9.2 Cylinder Head Gasket Replacement

Perform the following steps to replace cylinder head gasket:

1. Remove and replace cylinder head gasket; refer to appropriate service manual, engine chapter.
2. Verify new cylinder head gasket replacement; refer to section 13.9.2.1.

13.9.2.1 Test Engine with Replaced Cylinder Head Gasket

Perform the following to determine if the cylinder head gasket replacement resolved high engine coolant temperature:

1. Start and run the engine.
2. Run the engine through its operating range with no-load for approximately 5 minutes, allowing the engine coolant to reach normal operating range.
   [a] If the engine coolant temperature is 88-96°C (190-210°F), no further troubleshooting is required. Shut down the engine.
   [b] If the engine coolant temperature is not 88-96°C (190-210°F), shut down the engine. Check radiator coolant flow; refer to section 13.10.

All information subject to change without notice.
Copyright © 2007 DETROIT DIESEL CORPORATION

https://truckmanualshub.com/

13.10 ABNORMAL RADIATOR COOLANT FLOW

To determine if abnormal radiator coolant flow is causing high engine coolant temperature, perform the following:

1. Install a sight glass with string (both ends) to the radiator outlet hose near radiator and before fill and heater return lines; see Figure 13-4.

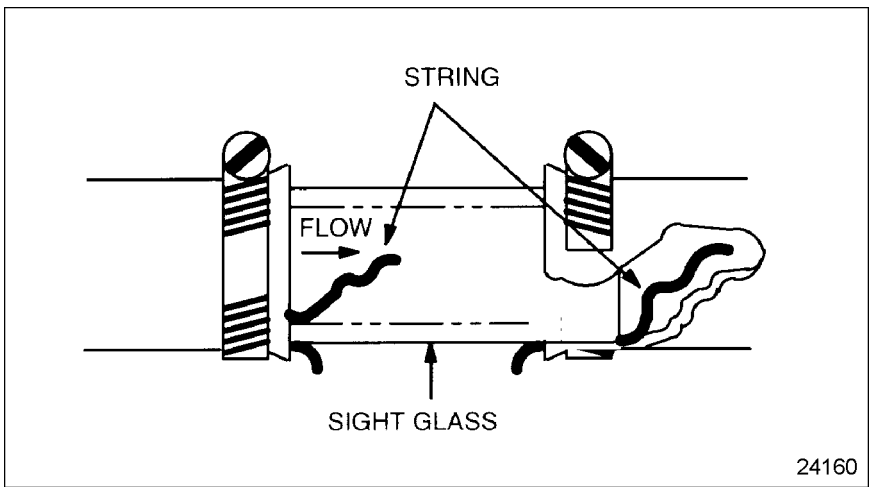

Figure 13-4 Radiator Flow Check

2. Start and run the engine at full load.
3. Observe the string for flow and direction as well as the fill and bleed lines. Continue observation while varying the engine speed between 1800 - 2100 rpm.
   [a] If a balanced coolant flow is observed in the sight, call Detroit Diesel Customer Support Center (313-592-5800). Shut down the engine.
   [b] If a balanced coolant flow is not observed in the sight glass, refer to section 13.10.1. Shut down the engine.

13.10.1 Abnormal Radiator Coolant Flow Resolution

Perform the following steps, as necessary, to resolve abnormal radiator coolant flow:

1. Correct bleed line size; refer to OEM guidelines.
2. Correct fill line size or connector fitting size; refer to OEM guidelines.
3. Correct restrictive top tank opening; refer to OEM guidelines.
4. Correct location of standpipe; refer to OEM guidelines.
5. Verify repairs made to correct abnormal radiator coolant flow; refer to section 13.10.1.1.

All information subject to change without notice.
Copyright © 2007 DETROIT DIESEL CORPORATION

https://truckmanualshub.com/

13.10.1.1 Test Engine with Resolved Radiator Coolant Flow

Perform the following to determine if thermo-modulated fan replacement resolved high engine coolant temperature:

1. Refer to section13.10 for the exhaust caution before proceeding. Start and run the engine.
2. Run the engine through its operating range with no-load for approximately 5 minutes, allowing the engine coolant to reach normal operating range.
   [a] If the engine coolant temperature is 88-96°C (190-210°F), no further troubleshooting is required. Shut down the engine.
   [b] If the engine coolant temperature is not 88-96°C (190-210°F), shut down the engine. Call the Detroit Diesel Customer Support Center at 313–592–5800.

All information subject to change without notice.
Copyright © 2007 DETROIT DIESEL CORPORATION

https://truckmanualshub.com/

14 LOW COOLANT TEMPERATURE

Section **Page**

14.1 FAULTY THERMOSTATS 14-3

https://truckmanualshub.com/

All information subject to change without notice.
Copyright © 2007 DETROIT DIESEL CORPORATION

https://truckmanualshub.com/

14.1 FAULTY THERMOSTATS

To determine if faulty thermostats are causing low engine coolant temperature, perform the following:

1. Remove thermostat from the thermostat housing; refer to appropriate service manual, cooling system chapter.
2. Inspect thermostat for correct operation; refer to appropriate service manual, cooling system chapter.
   [a] If thermostat did not open at 97°C (207°F), refer to section 14.1.1.

14.1.1 Thermostat Replacement

Perform the following steps to replace thermostats:

1. Install new thermostat; refer to appropriate service manual, cooling system chapter.
2. Verify replaced thermostat; refer to section 14.1.1.1.

14.1.1.1 Test Engine with New Thermostat

Perform the following to determine if thermostat replacement resolved low engine coolant temperature:

1. Start and run the engine.
2. Run the engine through its operating range with no-load for approximately 5 minutes, allowing the engine coolant to reach normal operating range.
   [a] If the engine coolant temperature is 88-96°C (190-210°F), no further troubleshooting is required. Shut down the engine.
   [b] If the engine coolant temperature is not 88-96°C (190-210°F), shut down the engine. Contact DDC Customer Support Center (313-592-5800).

All information subject to change without notice.
Copyright © 2007 DETROIT DIESEL CORPORATION

https://truckmanualshub.com/

All information subject to change without notice.
Copyright © 2007 DETROIT DIESEL CORPORATION

https://truckmanualshub.com/

15 POOR FUEL ECONOMY

Section **Page**

15.1 SOFTWARE VERSION 15-3

https://truckmanualshub.com/

All information subject to change without notice.
Copyright © 2007 DETROIT DIESEL CORPORATION

https://truckmanualshub.com/

15.1 SOFTWARE VERSION

The following section contains troubleshooting procedures for *Poor Engine Performance* on engines equipped with DDEC VI.

15.1.1 Poor Engine Performance DDEC VI Equipped Engines

To determine the cause of poor fuel economy for DDEC VI equipped engines perform the following steps:

1. Test the DDEC VI Motor Control Module (MCM) and check for codes by connecting the DDDL to the truck and retrieve the codes and DDEC reports.
   - [a] If there are codes displayed troubleshoot and repair the codes. Retest for poor fuel economy.
   - [b] If no codes are displayed proceed to step 2.
2. What version of software is DDEC VI MCM running?
   - [a] If the software version is not at the latest level, reprogram the MCM. Once the MCM has been reprogrammed, proceed to step 2.
   - [b] If the software is at the latest level, proceed to step 3.
3. Verify that the engine hardware has been campaigned or modified to the latest version.
   - [a] If you are uncertain or unable to determine that the engine has been campaigned or modified to the latest version, please contact the Detroit Diesel Customer Support Center (313-592-5800).
   - [b] If you have determined that the engine has been campaigned or modified to the latest version, proceed to step 4.
4. Verify that the fuel filters are not plugged. Refer to the “Preventive Maintenance “ section of the appropriate Service Manual for inspection steps.
   - [a] Verify that the fuel pressure is within specifications.
5. Visually inspect the air filter element for excess dirt, blocked filter elements, and damage. Refer to “Air Cleaner” section of the appropriate Service Manual for removal, inspection, and installation steps.
6. Perform test to verify that the CAC system is not damaged. Check turbocharger operation for maximum boost.
   - [a] Once the test has been completed, verify that the reported poor engine performance problem has been resolved. If the problem has been resolved, the troubleshooting test has been completed.
   - [b] Once the test has been completed, verify that the reported poor engine performance problem has been resolved. If the problem has not been resolved, please contact the Detroit Diesel Customer Support Center (313-592-5800).

All information subject to change without notice.
Copyright © 2007 DETROIT DIESEL CORPORATION

https://truckmanualshub.com/

All information subject to change without notice.
Copyright © 2007 DETROIT DIESEL CORPORATION

https://truckmanualshub.com/

16 AIR COMPRESSOR

Section **Page**

16.1 AIR COMPRESSOR TROUBLESHOOTING 16-3

https://truckmanualshub.com/

All information subject to change without notice.
Copyright © 2007 DETROIT DIESEL CORPORATION

https://truckmanualshub.com/

16.1 AIR COMPRESSOR TROUBLESHOOTING

Troubleshooting information for the Bendix® air compressor can be found on the Bendix web site at http:\\www.bendix.com or call the Bendix Technical Assistance Center at 1-800-AIR-BRAKE, (1-800-247-2725).

All information subject to change without notice.
Copyright © 2007 DETROIT DIESEL CORPORATION

https://truckmanualshub.com/

All information subject to change without notice.
Copyright © 2007 DETROIT DIESEL CORPORATION

https://truckmanualshub.com/

17 DDEC VI SYSTEM

Section **Page**

17.1 DDEC VI SYSTEM--HOW IT WORKS 17-3
17.2 MOTOR CONTROL MODULE 17-3
17.3 COMMON POWERTRAIN CONTROLLER 17-11
17.4 WIRES AND WIRING 17-21
17.5 CONDUIT AND LOOM 17-35
17.6 TAPE AND TAPING 17-36
17.7 SENSORS 17-37
17.8 INSTRUMENT PANEL LAMPS 17-51

https://truckmanualshub.com/

All information subject to change without notice.
Copyright © 2007 DETROIT DIESEL CORPORATION

https://truckmanualshub.com/

17.1 DDEC VI SYSTEM–HOW IT WORKS

DDEC VI is a system that monitors and determines all values required for the operation of the engine. A diagnostic interface is provided to connect to an external diagnosis tester. Besides the engine related sensors and the engine-resident control unit, the Motor Control Module (MCM), this system has a cab-mounted control unit for vehicle engine management, the Common Powertrain Controller (CPC). The connection to the vehicle is made via a CAN interface which digitally transmits the nominal values (e.g. torque, engine speed specification, etc.) and the actual values (e.g. engine speed, oil pressure, etc.).

17.1.1 Harnesses

There are two major harness: the Engine Harness (EH) and the Vehicle Interface Harness (VIH). The Engine Harness is installed at the factory and is delivered connected to all engine sensors, the fuel injection system, and the MCM.

The OEM supplied Vehicle Interface Harness connects the CPC to other vehicle systems.

17.2 MOTOR CONTROL MODULE

The engine mounted Motor Control Module (MCM) includes control logic to provide overall engine management. See Figure 17-1.

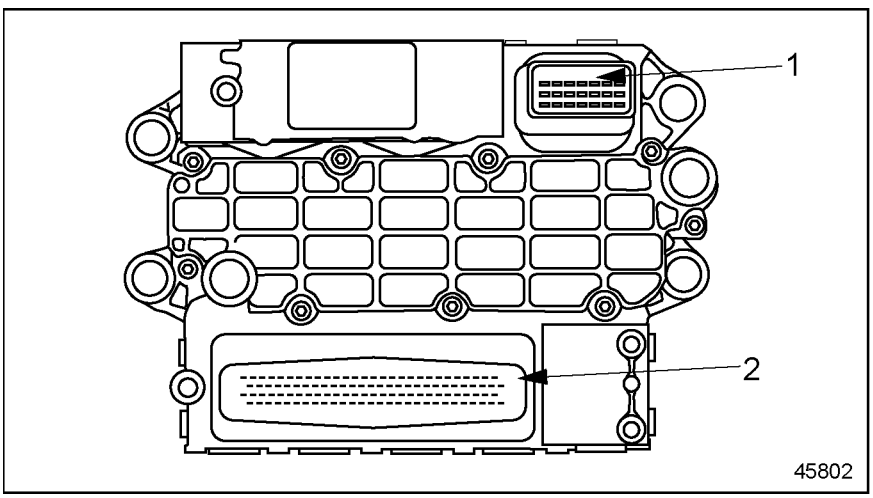

1. 21–pin Connector (OEM Responsibility)
2. 120–pin Connector (Detroit Diesel Responsibility)

Figure 17-1 Motor Control Module

NOTE:
Do NOT ground the MCM. This can result in false codes being logged.

All information subject to change without notice.
Copyright © 2007 DETROIT DIESEL CORPORATION

https://truckmanualshub.com/

17.2.1 Engine Harness

The MCM has a 120–pin connector Engine Harness which is factory installed. It also has a 21–pin connector which is the responsibility of the OEM. The pinouts for the 120–pin connector are listed in Table 17-1, Table 17-2, Table 17-3, and Table 17-4.

The pinout for the 21–pin connector is listed in Table 17-5.

Pin	Function	Connector
1	NC	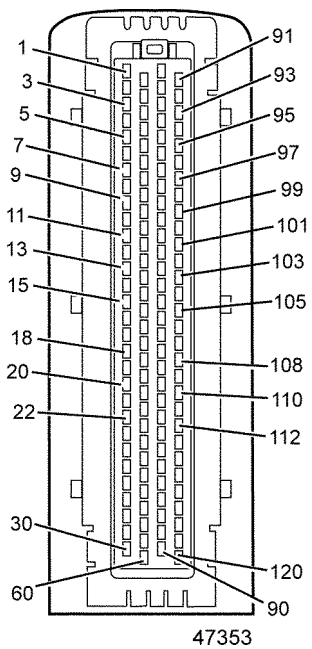
2	NC	
3	NC	
4	Spill Control Valve (cyl 4) - pin 4	
5	Spill Control Valve Common - pin 3	
6	Spill Control Valve (cyl 6) - pin 4	
7	Spill Control Valve Common - pin 3	
8	Spill Control Valve (cyl 5) - pin 4	
9	Spill Control Valve Common - pin 3	
10	Spill Control Valve (cyl 2) - pin 4	
11	Spill Control Valve Common - pin 3	
12	Spill Control Valve (cyl 3) - pin 4	
13	NC	
14	Spill Control Valve (cyl 1) - pin 4	
15	NC	
16	Needle Control Valve (cyl 4) - pin 2	
17	Needle Control Valve Common - pin 1	
18	Needle Control Valve (cyl 6) - pin 2	
19	Needle Control Valve Common - pin 1	
20	Needle Control Valve (cyl 5) - pin 2	
21	Needle Control Valve Common - pin 1	
22	Needle Control Valve (cyl 2) - pin 2	
23	Needle Control Valve Common (cyl 1,2,3) - pin 1	
24	Needle Control Valve (cyl 3) - pin 2	
25	NC	
26	Needle Control Valve (cyl 1) - pin 2	
27	NC	
28	NC	
29	DOC Outlet Temp Sensor	
30	DPF Outlet Pressure Sensor	

Table 17-1 MCM Connector – Series 60 (1 of 4)

All information subject to change without notice.
Copyright © 2007 DETROIT DIESEL CORPORATION

https://truckmanualshub.com/

Pin	Function	Connector
31	NC	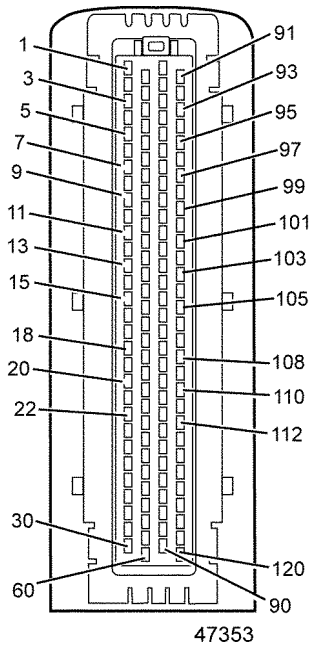
32	Jake 1	
33	Two-speed Fan or Variable Speed Fan	
34	NC	
35	NC	
36	NC	
37	NC	
38	Ground	
39	NC	
40	NC	
41	NC	
42	CKP/TRS (-)	
43	CKP/TRS (+)	
44	CMP/SRS (-)	
45	CMP/SRS (+)	
46	NC	
47	Fan Speed	
48	NC	
49	NC	
50	Sensor Ground	
51	Turbo Speed Sensor	
52	Sensor Ground	
53	NC	
54	Engine Oil Pressure Sensor	
55	Sensor Ground	
56	NC	
57	NC	
58	Sensor Power Supply	
59	NC	
60	EGR Valve Position	

Table 17-2 MCM Connector – Series 60 (2 of 4) – C Sample

All information subject to change without notice.
Copyright © 2007 DETROIT DIESEL CORPORATION

https://truckmanualshub.com/

Pin	Function	Connector
61	EGR Valve	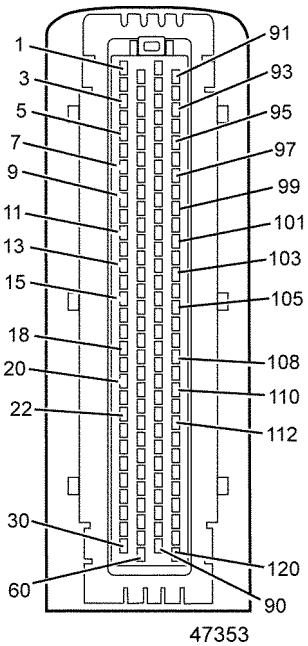
62	Power Supply	
63	NC	
64	Power Supply	
65	Doser	
66	Jake 2	
67	Ground	
68	NC	
69	Fuel Cutoff Valve	
70	Ether Start	
71	NC	
72	NC	
73	NC	
74	VNT CAN (-)	
75	VNT CAN (+)	
76	NC	
77	Supply Fuel Temperature Sensor	
78	NC	
79	NC	
80	NC	
81	NC	
82	Sensor Supply	
83	EGR Temperature Sensor	
84	Fuel Compensation Pressure Sensor	
85	Sensor Supply	
86	Turbo Compressor In Temp	
87	Intake Manifold Pressure Sensor	
88	Sensor Ground	
89	DOC Inlet Temp Sensor	
90	Intake Air Throttle Valve	

Table 17-3 MCM Connector – Series 60 (3 of 4) – C Sample

All information subject to change without notice.
Copyright © 2007 DETROIT DIESEL CORPORATION

https://truckmanualshub.com/

Pin	Function	Connector
91	Power Supply	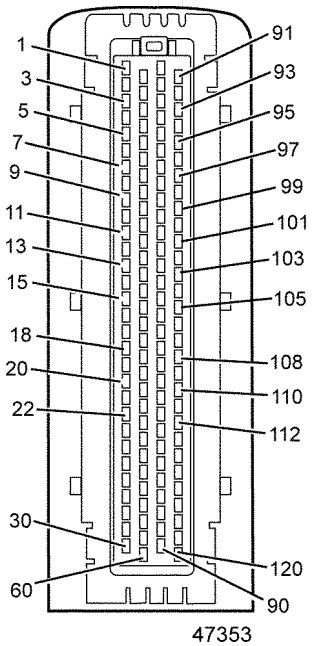
92	NC	
93	Power Supply	
94	NC	
95	NC	
96	NC	
97	NC	
98	Single-speed Fan or Two-speed Fan	
99	NC	
100	Intake Air Throttle (+)	
101	Intake Air Throttle (-)	
102	Sensor Ground	
103	Sensor Ground	
104	Sensor Ground	
105	Sensor Ground	
106	Intake Air Temperature Sensor	
107	NC	
108	Engine Oil Temperature Sensor	
109	EGR Delta Pressure Sensor	
110	Engine Coolant Temp Sensor	
111	Fuel Line Pressure Sensor	
112	Turbo Compressor Out Temp	
113	NC	
114	Sensor Ground	
115	DPF Outlet Temp Sensor	
116	NC	
117	Sensor Power Supply	
118	DPF Inlet Pressure Sensor	
119	NC	
120	NC	

Table 17-4 MCM Connector – Series 60 (4 of 4) – C Sample

All information subject to change without notice.
Copyright © 2007 DETROIT DIESEL CORPORATION

https://truckmanualshub.com/

17.2.1.1 Connector Brackets

The harnesses on MCM must be bracketed and held secure. The bracket design will change for different engines as the routing is different. The 120–pin connector and the 21-pin connector must be tie-wrapped to the brackets as shown in the following drawing for the Series 60 engine (see Figure 17-2).

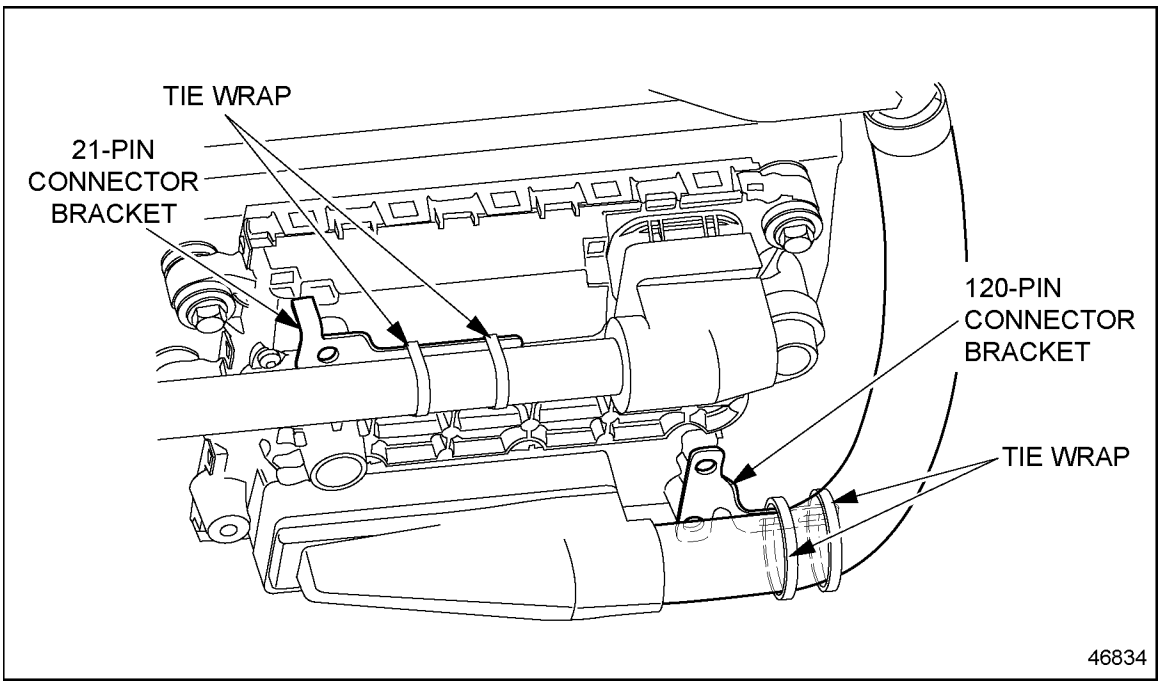

Figure 17-2 Series 60 Engine 120–pin Connector and 21–pin Connector Tie-wrapped to Brackets

All information subject to change without notice.
Copyright © 2007 DETROIT DIESEL CORPORATION

https://truckmanualshub.com/

17.2.1.2 MCM 21–pin and 31–pin Connectors

The wiring for the VIH 21–pin to the MCM is listed in Table 17-5. The side of the connector shown is looking into the pins.

Pin	Signal Type	Function	Connector
21/1	CAN2L	Not Used	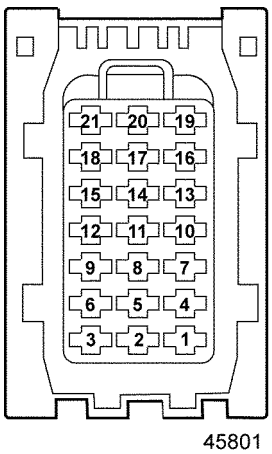 Front Looking into the Pins on the Harness
21/2	CAN2GND	Not Used	
21/3	CAN2H	Not Used	
21/4	CAN2GND	Not Used	
21/5	KL31	Battery (-)	
21/6	KL31	Battery (-)	
21/7	KL15	IGN	
21/8	KL31	Battery (-)	
21/9	KL31	Battery (-)	
21/10	CAN1GND	Engine CAN Shield	
21/11	KL30	Battery (+)	
21/12	KL30	Battery (+)	
21/13	CAN1H	Engine CAN +	
21/14	KL30	Battery (+)	
21/15	KL30	Battery (+)	
21/16	CAN1GND	Not Used	
21/17	BOOT	Not Used	
21/18	KDiag_S	Not Used	
21/19	CAN1L	Engine CAN –	
21/20	KL50	Crank Start Input	
21/21	START_B	Crank Activation Output	

Table 17-5 21–Pin Connector to the MCM

The pinout for the 31–pin pigtail on the Engine Harness is listed in Table 17-6. The OEM is responsible for wiring to this connector.

All information subject to change without notice.
Copyright © 2007 DETROIT DIESEL CORPORATION

https://truckmanualshub.com/

31–pin	120–pin	Function	Series 60
31/1	—	Spare	—
31/2	—	Power Supply (IGN)*	—
31/3	—	Fuel Heater Supply #1†	—
31/4	—	Spare	—
31/5	—	Full Heater Supply #2†	—
31/6	—	Spare	—
31/7	—	Power Supply Ground*	—
31/8	120/70	Ether Start	X
31/9	120/33	Fan Control #2 – High of Two-speed Fan or Variable Speed Fan	X
31/10	120/98	Single Speed Fan or Low for Two-speed Fan	X
31/11	—	Fuel Heater Ground #1†	—
31/12	—	Spare	—
31/13	—	Spare	—
31/14	120/71	Water-in-Fuel Sensor Supply	—
31/15	120/67	Water-in-Fuel Sensor Ground	—
31/16	120/96	Engine Brake Solenoid Control	—
31/17	120/29	DOC Outlet Temp Sensor (Exhaust Gas Temperature in Front of Particulate Trap)	X
31/18	120/89	DOC Inlet Temp Sensor	X
31/19	120/115	DPF Outlet Temp Sensor(Exhaust Gas Temperature After Particulate Trap)	X
31/20	—	Full Heater Ground #2†	—
31/21	—	Spare	—
31/22	120/91	Power Supply (Eng Brk, Fan, Ether)	X
31/23	120/47	Fan Speed	X
31/24	120/88	Sensor Ground	X
31/25	—	Spare	—
31/26	120/57	Water-in-Fuel Sensor	—
31/27	120/86	TCI Temp	X
31/28	120/114	Sensor Ground	X
31/29	120/85	Sensor Supply	X
31/30	120/30	DPF Outlet Pressure Sensor (Exhaust Gas Pressure After Particulate Filter)	X
31/31	120/118	DPF Inlet Pressure Sensor (Exhaust Gas Pressure Before Particulate Filter)	X

*Fused at 15 amps

† Optional for MBE 900 and HDE. Must use 14 AWG wire and fuse at 20A.

Table 17-6 31–pin MCM Pigtail Connector

All information subject to change without notice.
Copyright © 2007 DETROIT DIESEL CORPORATION

https://truckmanualshub.com/

17.3 COMMON POWERTRAIN CONTROLLER

The Common Powertrain Controller (CPC) has three 18–pin connectors and one 21–pin connector. The following sections contain the connector pin-outs for truck. vocational, transit bus and crane applications.

The CPC is the interface between the MCM and the vehicle/equipment for engine control and manages other vehicle/equipment functions. See Figure 17-3.

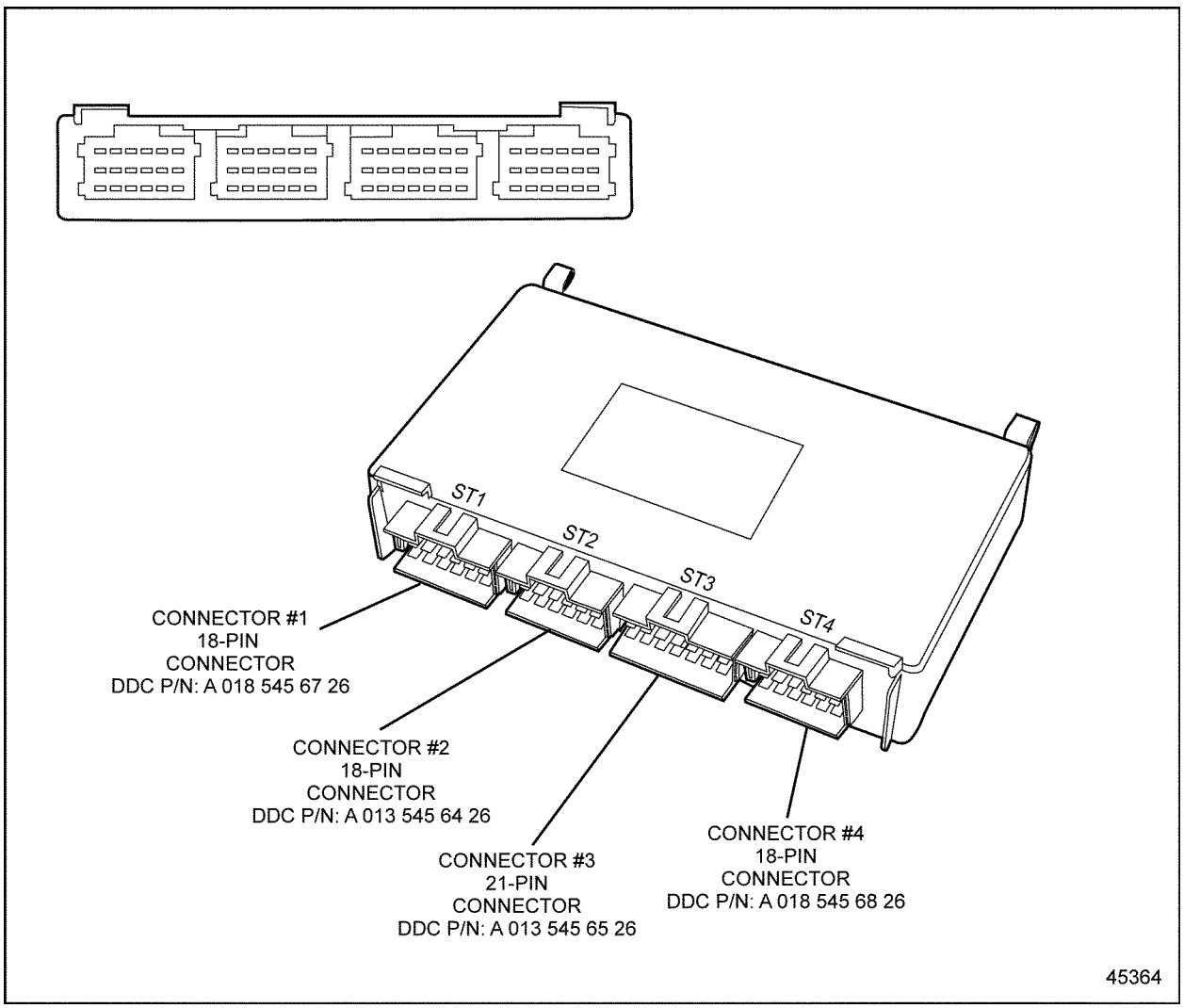

Figure 17-3 The Common Powertrain Controller

All information subject to change without notice.
Copyright © 2007 DETROIT DIESEL CORPORATION

https://truckmanualshub.com/

The OEM is responsible for mounting this part in an enclosed, protected environment. The mounting bracket is the responsibility of the OEM. There must be maximum physical separation of the VIH from other vehicle/equipment electrical systems. Other electrical system wires should ideally be at least three feet away from the VIH and should not be parallel to the VIH. This will eliminate coupling electromagnetic energy from other systems into the VIH.See Figure 17-4 for the CPC dimensions.

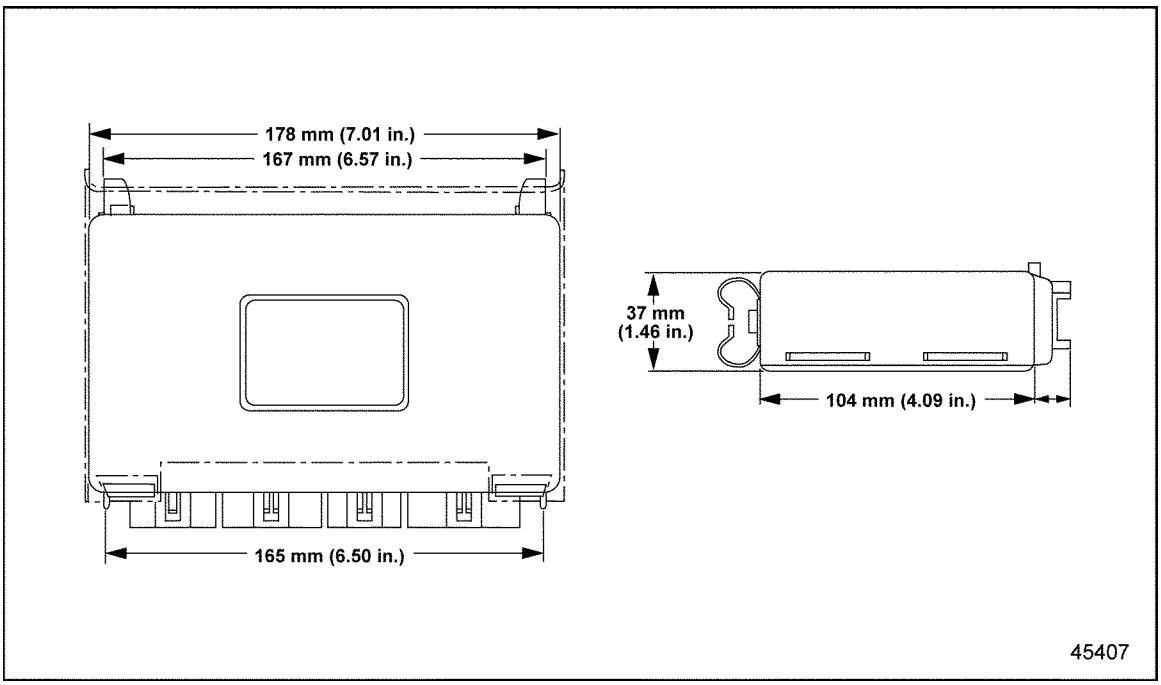

Figure 17-4 CPC Dimensions

NOTE:
The CPC should be mounted with the connectors pointing down.

All information subject to change without notice.
Copyright © 2007 DETROIT DIESEL CORPORATION

https://truckmanualshub.com/

The CPC communicates over the J1587 and J1939 Data Links to the vehicle (see Figure 17-5).

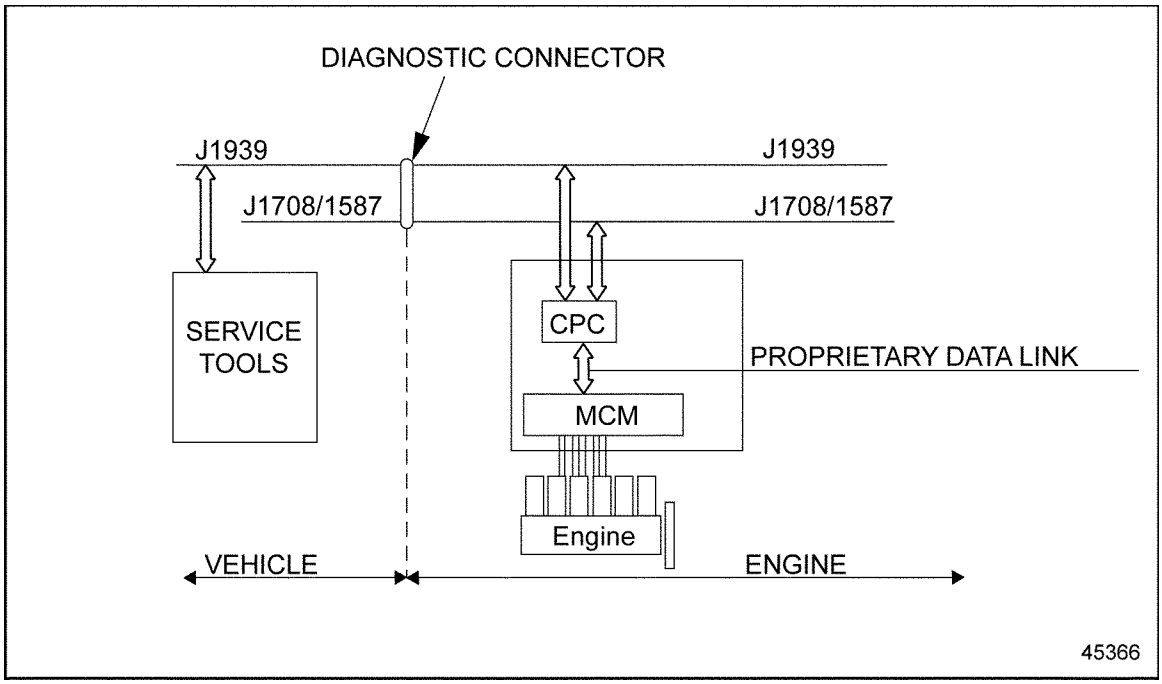

Figure 17-5 NAFTA Architecture On-highway

Within the CPC, sets of data for specific applications are stored. These include idle speed, maximum running speed, and speed limitation. Customer programmable parameters are also stored here.

The CPC receives data from the operator (accelerator pedal position, switches, various sensors) and other electronic control units (for example, synchronization controllers for more than one genset, air compressor controls).

From this data, instructions are computed for controlling the engine and transmitted to the MCM via the proprietary data link.

17.3.1 Environmental Conditions

Temperature, vibration, and water intrusion must be considered.

17.3.1.1 Temperature

The ambient operating temperature range is –40°F to 185°F (-40°C to 85°C).

17.3.1.2 Water Intrusion

The CPC is not water tight and cannot be subject to water spray. It must be mounted in an enclosed, protected environment.

Copyright © 2007 DETROIT DIESEL CORPORATION

https://truckmanualshub.com/

17.3.2 CPC Vehicle Interface Harness

The OEM supplied Vehicle Interface Harness (VIH) connects the CPC to the MCM and other vehicle systems (see Figure 17-6).

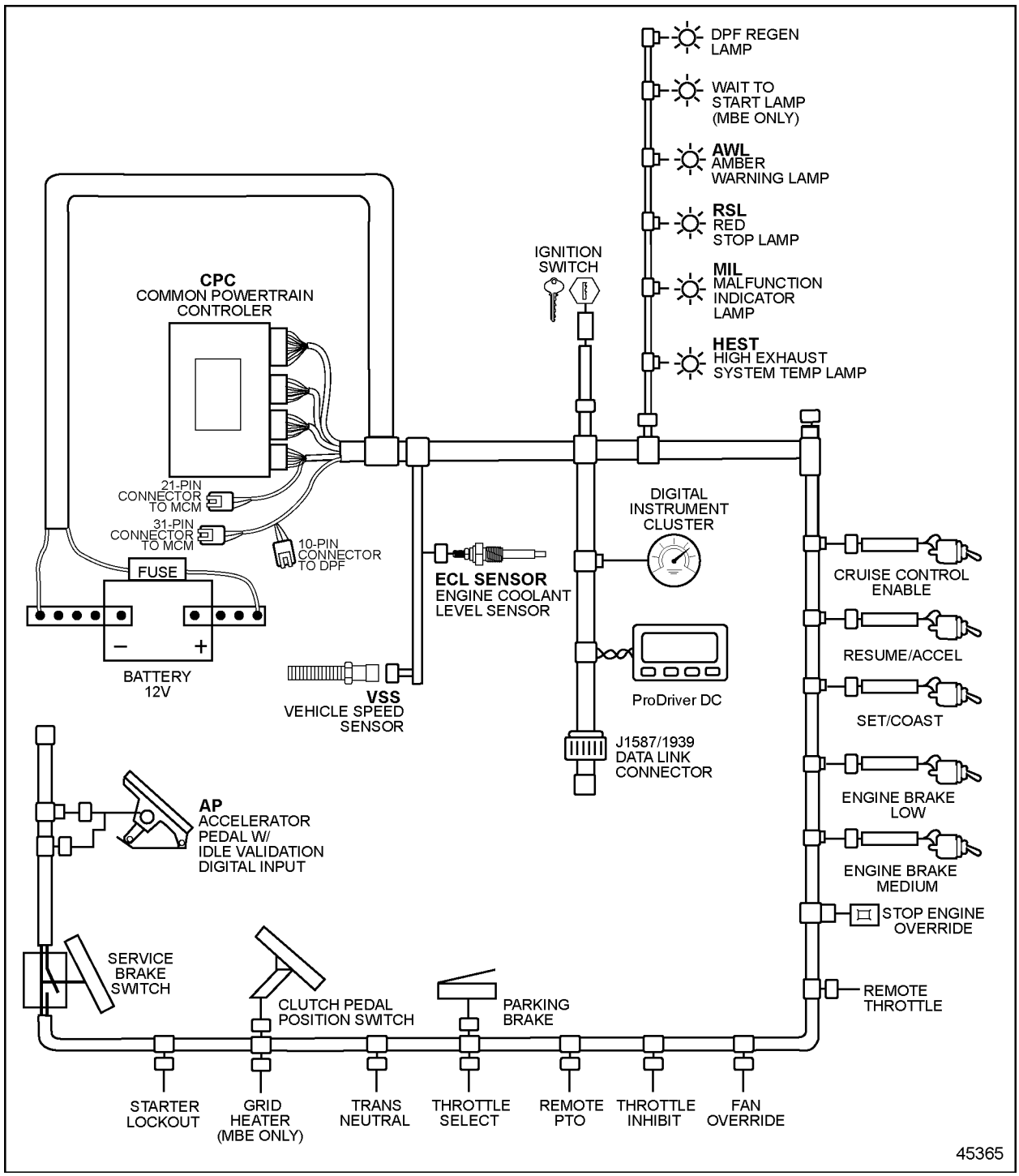

Figure 17-6 Vehicle Interface Harness

All information subject to change without notice.
Copyright © 2007 DETROIT DIESEL CORPORATION

https://truckmanualshub.com/

The following criteria are to be used when designing the VIH:

- The four vehicle connectors are designed to accept 18 AWG wires for all circuits.
- The conductor must be annealed copper, not aluminum, and must comply with the industry standard SAE J1128 document.
- Color code the wires as shown in the schematics. If the wires used are the same color, hot stamp the cavity number on the wires.

NOTE:
The Vehicle Speed Sensor (VSS) must be a twisted pair. The twists are a minimum of 12 turns per foot (305 mm) and are required to minimize electromagnetic field coupling.

NOTE:
J1939 cable is required for the J1939 datalink wires. Refer to SAE J1939–11 spec for specific requirements.

The low speed propriety Engine-CAN link between the MCM and the CPC must be a twisted shielded cable with 0.75 mm diameter wire (approximately 20 AWG), bundle shielded with drain wire and 30 twists per meter. The insulation is rated to 105°C. Termination resistors for the Engine-CAN link are located in the CPC and MCM.

17.3.2.1 Frequency Input

The CPC has one frequency input on the VIH that can accept a variable reluctance sensor. A typical frequency input functions is the Vehicle Speed Sensor (VSS). Requirements for a variable reluctance signal interface are listed in Table 17-7.

Parameter	Range
Input Amplitude Range	V Peak to Peak
Input Frequency Range	0 to 10,000 Hz

Table 17-7 Variable Reluctance Signal Interface

17.3.3 Power Supply – 12 Volt System

Normal operating voltage on a 12 V system for the CPC and MCM is 11-16 VDC.

NOTICE:
Operating the CPC or MCM over the voltage limits of 16 volts will cause damage to the CPC or MCM.

Operating the CPC and/or MCM between 8 and 11 volts may result in degraded engine operation. (Transient operation in this range during engine starting is considered normal for 12 volt systems.)

All information subject to change without notice.
Copyright © 2007 DETROIT DIESEL CORPORATION

https://truckmanualshub.com/

NOTICE:
Reversing polarity will cause damage to the CPC and/or MCM if the Power Harness is not properly fused.

NOTE:
All output loads, ignition and CPC power must be powered from the same battery voltage source.

17.3.3.1 Average Current Draw

The maximum average current draw is listed in Table 17-8. This information should be used to size the alternator.

System	Maximum Average Current Draw (12 V Nominal Supply)		
	Crank	Idle	Full Load/Rated Speed
MCM – Engine Loads	1.0 A avg	21.0 A avg	25.0 A avg
CPC – Vehicle Loads*	18.0 A peak	55.0 A peak	55.0 A peak

* Vehicle loads are controlled by the OEMs who can best determine the total maximum current draw for their installation.

Table 17-8 Maximum Average Current Draw

The current draw for a CPC configuration is listed in Table 17-9.

Configuration	Condition	Current
CPC	Ignition Off	<1 mA
	Ignition On and Engine Stopped	120 mA

Table 17-9 Current Draw for CPC Configuration

The current draw for a MCM is listed in Table 17-10.

Configuration	Condition	Current
MCM	Ignition Off	<1 mA
	Ignition On and Engine Stopped	400 mA

Table 17-10 Current Draw for MCM Configuration

17.3.3.2 Battery Isolator

A battery isolator is not required. However, some applications require a battery that is dedicated to the engine and completely isolated from the rest of the vehicle. Commercially available battery isolators can be used.

All information subject to change without notice.
Copyright © 2007 DETROIT DIESEL CORPORATION

https://truckmanualshub.com/

17.3.3.3 Main Power Shutdown

The main power supply shutdown schematic shows the DDC approved method for main power switch implementation. See Figure 17-7.

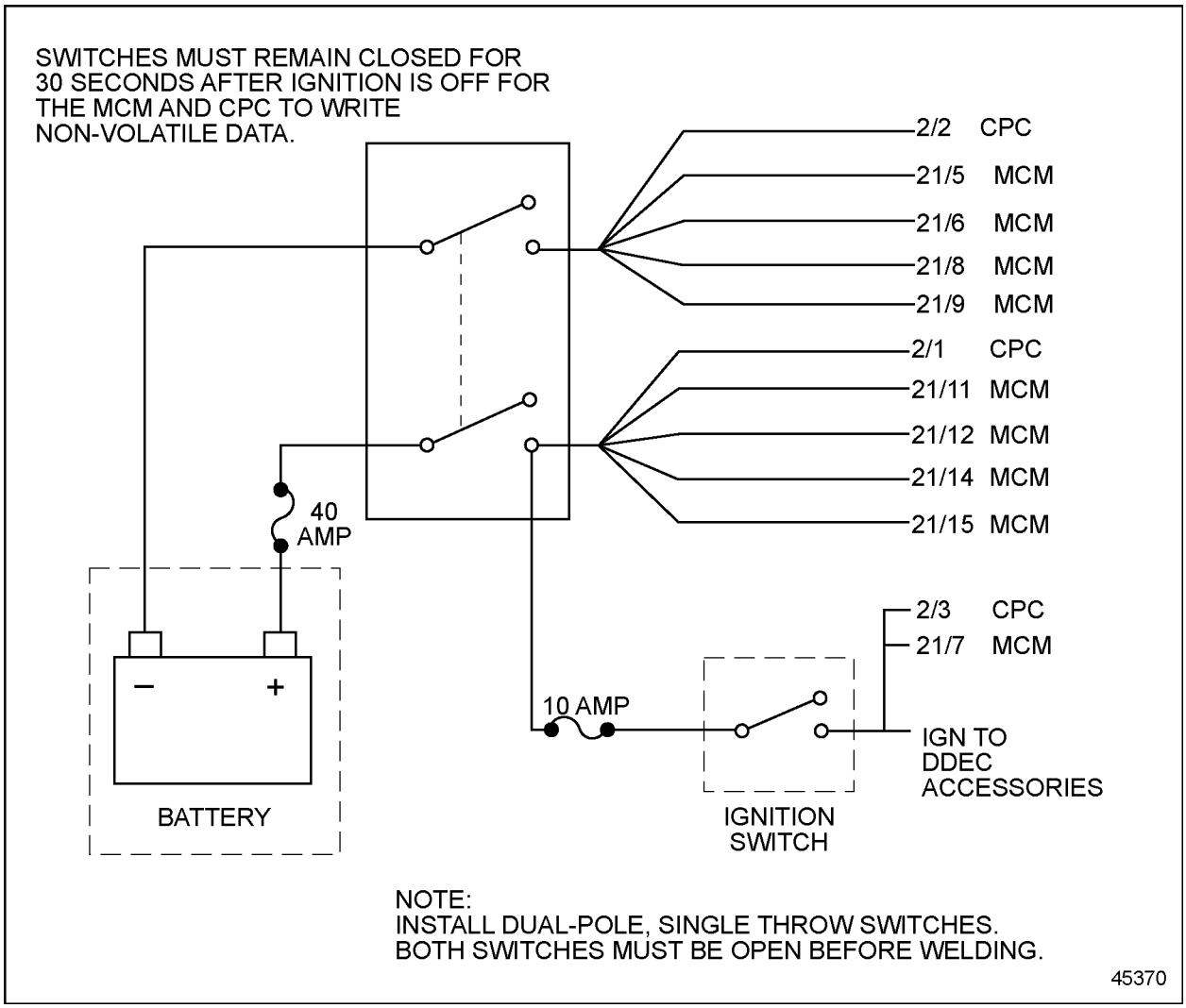

Figure 17-7 Main Power Supply Shutdown

NOTE:
Switches must remain closed for 30 seconds after ignition is off for the MCM and CPC to write non-volatile data.

NOTE:
It is recommended that both the positive (+) and negative (-) battery leads be disconnected.

All information subject to change without notice.
Copyright © 2007 DETROIT DIESEL CORPORATION

https://truckmanualshub.com/

NOTE:
Disconnecting positive power is not sufficient to isolate the CPC for welding purposes.

NOTICE:
When welding, the following must be done to avoid damage to the electronic controls or the engine: □ Both the positive (+) and negative (-) battery leads must be disconnected before welding. □ The welding ground wire must be in close proximity to welding location - the engine must never be used as a grounding point. □ Welding on the engine or engine mounted components is NEVER recommended.

NOTE:
The alternator should be connected directly to the battery for isolation purposes.

17.3.4 Fuses

A Battery (+) fuse and an ignition circuit fuse must be provided by the vehicle wiring harness. Blade-type automotive fuses are normally utilized; however, manual or automatic reset circuit breakers which meet the following requirements are also acceptable. The fuse voltage rating must be compatible with the CPC – MCM's maximum operating voltage of 16 volts.

CAUTION: FIRE
To avoid injury from fire, additional loads should not be placed on existing circuits. Additional loads may blow the fuse (or trip the circuit breaker) and cause the circuit to overheat and burn.

All information subject to change without notice.
Copyright © 2007 DETROIT DIESEL CORPORATION

https://truckmanualshub.com/

CAUTION:

FIRE

To avoid injury from fire, do not replace an existing fuse with a larger amperage fuse. The increased current may overheat the wiring, causing the insulation and surrounding materials to burn.

The ignition fuse current rating must be sized for the loads utilized in each application; however, a rating of between 5 and 10 amps is usually sufficient.

The Battery (+) fuse current rating must satisfy two criteria:

- Must not open during normal operation
- Must open before the MCM or CPC is damaged during a reverse battery condition

Bussmann ATC-30 and Delphi Packard Electric Systems MaxiFuse 30 amp rated fuses or equivalent will satisfy these requirements. Acceptable blow times versus current and temperature derating characteristics are listed in Table 17-11 and Table 17-12.

% of Rated Fuse Current	Minimum Blow Time	Maximum Blow Time
100%	100 hours	-
135%	1 minutes	30 minute
200%	6 seconds	40 seconds

Table 17-11 Fuse Current and Blow Time

Temperature	% of Rated Fuse Current
-40°C	110% max
+25°C	100%
+120°C	80% min

Table 17-12 Fuse Temperature and Current

17.3.5 Connectors

There are three 18–pin connectors and one 21–pin connector to the CPC. The OEM is responsible for the four connectors at the CPC, the 21–pin connector at the MCM, the 31–pin MCM pigtail connector and the 10–pin DPF connector.

NOTE:
The CPC connectors are not water tight and cannot be subject to water spray.

All information subject to change without notice.
Copyright © 2007 DETROIT DIESEL CORPORATION

https://truckmanualshub.com/

17.3.5.1 Data Link Connector

The SAE J1708/J1587 nine-pin data link connector is required. DDC recommends that the OEM-supplied Data Link Connector be conveniently positioned in a well protected location facilitating subsequent Detroit Diesel Diagnostic Link 7.0 (DDDL 7.0) usage (i.e., reprogramming, diagnostics, etc.).

NOTE:
REQUIRED: The J1939 data link must be wired to this connector.

The following illustration shows the wiring for the nine-pin connector (see see Figure 17-8).

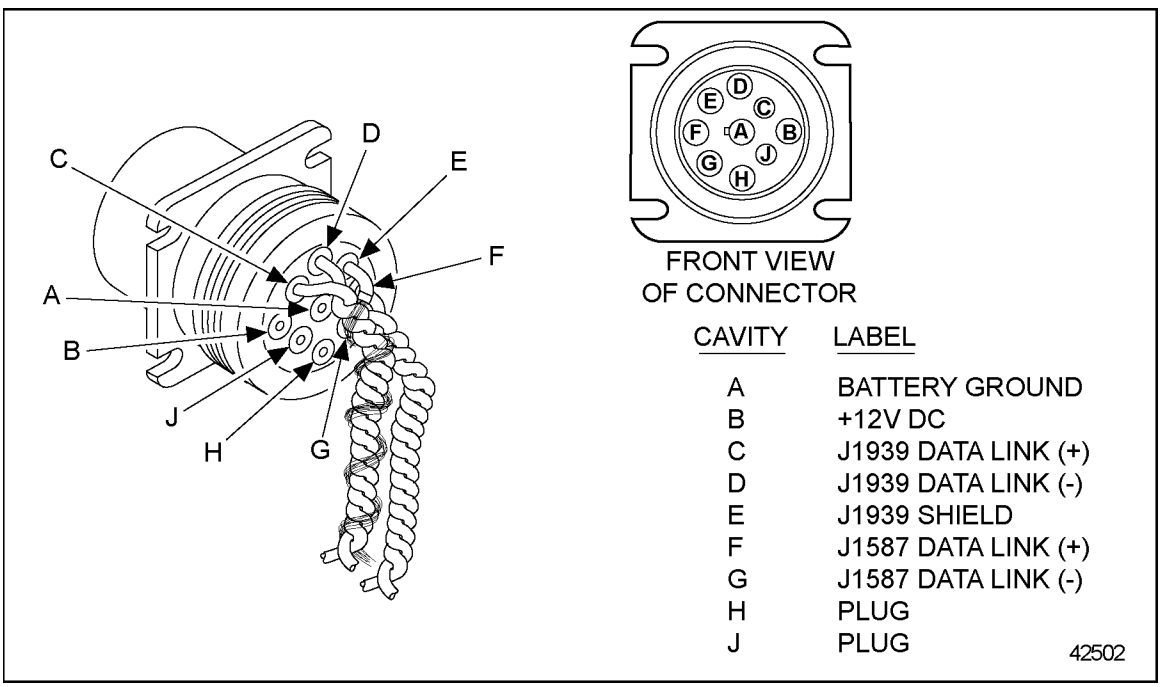

Figure 17-8 Wiring for 9-pin Data Link Connector

The SAE J1587/J1708 Data Link must be twisted pairs. The twists are a minimum of 12 turns per foot (305 mm). The maximum length for the SAE J1587/J1708 Data Link is 130 ft (40 m).

All information subject to change without notice.
Copyright © 2007 DETROIT DIESEL CORPORATION

https://truckmanualshub.com/

17.4 WIRES AND WIRING

Detroit Diesel Corporation recommends color coding and hot stamping wire numbers in contrasting colors at intervals of four inches or less.

17.4.1 General Requirements

NOTE:
Avoid renumbering DDC circuits since all troubleshooting guides reference the circuit numbers shown in the schematic. DDC suggests including a prefix or suffix with the DDC circuit numbers when conflicts exist.

17.4.2 General Wire

All wires used in conjunction with DDEC VI must meet the following criteria:

NOTICE:
DDC does not recommend using any type of terminal lubricant or grease compounds. These products may cause dirt or other harmful substances to be retained in the connector. DDC has not tested these products and cannot stand behind their use.

NOTICE:
Insulation must be free of nicks.

- Tape, conduit, loom or a combination thereof must be used to protect the wires. Refer to section 17.6 and refer to section 17.5.
- All wires must be annealed copper wire (not aluminum).
- All wires must comply with SAE J1128.
- All wires must be insulated with cross-link polyethylene (XLPE) such as GXL, or any self-extinguishing insulation having a minimum rating of -40°C (-40°F) to 125°C (257°F).

All information subject to change without notice.
Copyright © 2007 DETROIT DIESEL CORPORATION

https://truckmanualshub.com/

17.4.3 Crimp tools

The part numbers for the crimp tools for working with the MCM and CPC connectors are listed in Table 17-13.

Description	Part Number
Extraction Tool	726503–1
Hand Crimp Tool	169400–0
Crimp Dies for 0.5 mm – 1.0 mm Terminals	734262–0
Crimp Dies for 1.0 mm – 2.5 mm Terminals	169917–0

Table 17-13 Crimp Tools

17.4.4 Deutsch Terminal Installation And Removal

The method of terminal installation and removal varies. The following sections cover Deutsch terminal installation and removal.

17.4.4.1 Deutsch Terminal Installation Guidelines

Deutsch connectors have cable seals molded into the connector. These connectors are push-to-seat connectors with cylindrical terminals. The diagnostic connector terminals are gold plated for clarity.

NOTICE:

Improper selection and use of crimp tools have varying adverse effects on crimp geometry and effectiveness. Proper installation of terminals require specialized tools. Do not attempt to use alternative tools.

The crimp tool to use in Deutsch terminal installation is J–34182 (Kent-Moore part number).

NOTICE:

Terminal crimps must be made with the Deutsch crimp tool P/N: HDT-48-00 to assure gas tight connections.

NOTICE:

If a separate seal is required, be sure to install the seal onto the wire before stripping the insulation.

All information subject to change without notice.
Copyright © 2007 DETROIT DIESEL CORPORATION

https://truckmanualshub.com/

Use the following instructions for installing Deutsch terminals:

1. Strip approximately .25 inch (6 mm) of insulation from the cable.
2. Remove the lock clip, raise the wire gage selector, and rotate the knob to the number matching the gage wire that is being used.
3. Lower the selector and insert the lock clip.
4. Position the contact so that the crimp barrel is 1/32 of an inch above the four indenters. See Figure 17-9. Crimp the cable.

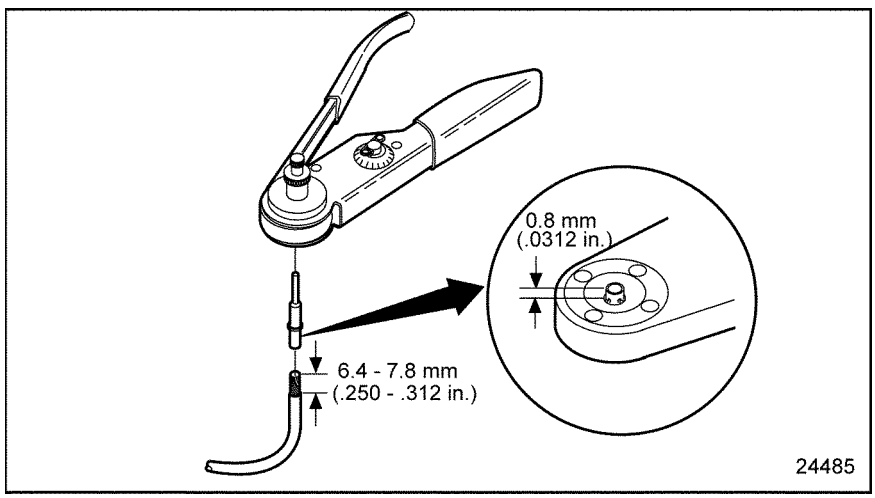

Figure 17-9 Setting Wire Gage Selector and Positioning the Contact

5. Grasp the contact approximately one inch behind the contact crimp barrel. Hold the connector with the rear grommet facing you. See Figure 17-10.

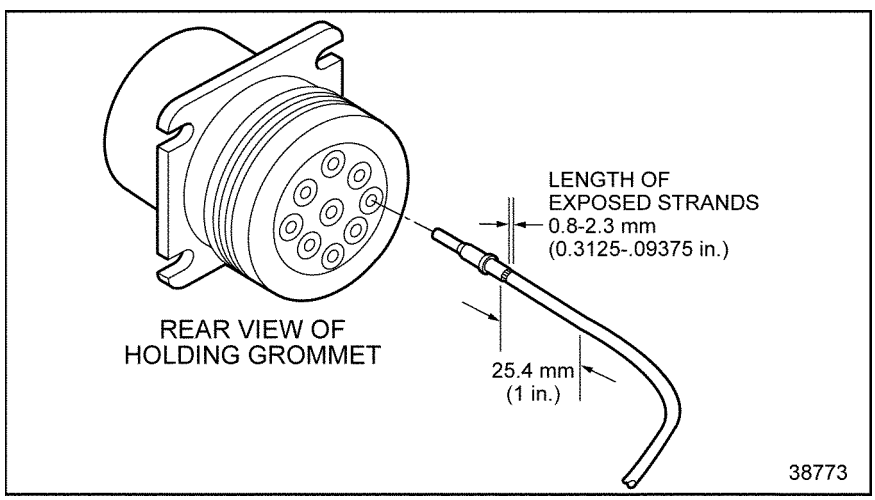

Figure 17-10 Pushing Contact Into Grommet

All information subject to change without notice.
Copyright © 2007 DETROIT DIESEL CORPORATION

https://truckmanualshub.com/

6. Push the contact into the grommet until a positive stop is felt. See Figure 17-10. A slight tug will confirm that it is properly locked into place. See Figure 17-11.

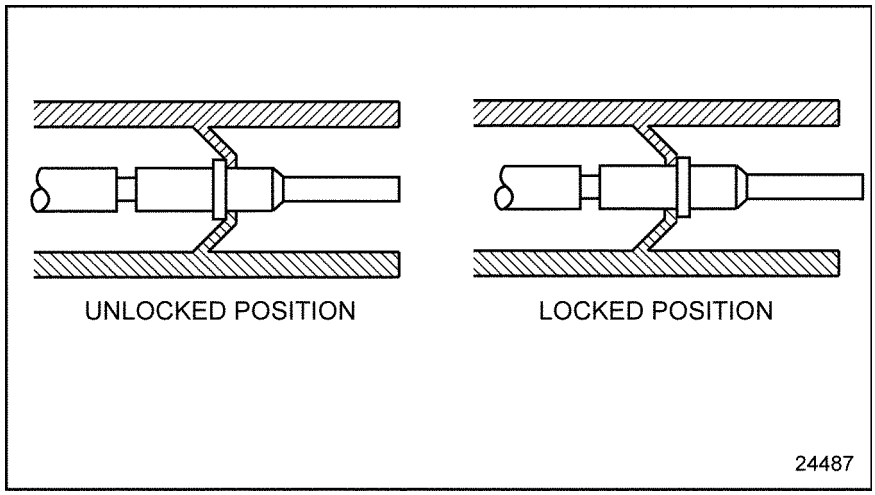

Figure 17-11 Locking Terminal Into Connector

17.4.4.2 Deutsch Terminal Removal

The appropriate size removal tool should be used when removing cables from connectors. The proper removal tools are listed in Table 17-14.

Tool	Kent-Moore Part Number
Removing (12 AWG)	J–37451
Removing (16-18 AWG)	J–34513-1

Table 17-14 Removal Tools for Deutsch Terminals

All information subject to change without notice.
Copyright © 2007 DETROIT DIESEL CORPORATION

https://truckmanualshub.com/

Remove Deutsch terminals as follows:

1. With the rear insert toward you, snap the appropriate size remover tool over the cable of contact to be removed. See Figure 17-12.

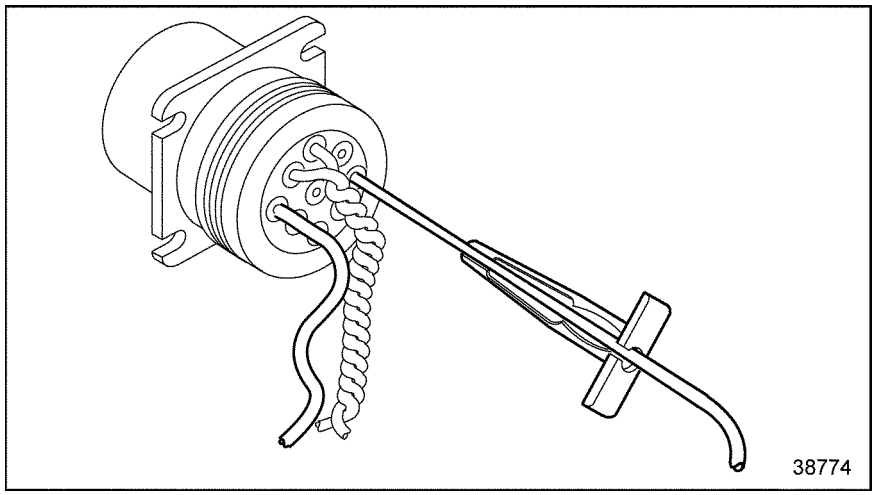

Figure 17-12 Removal Tool Position

2. Slide the tool along the cable into the insert cavity until it engages and resistance is felt. Do not twist or insert tool at an angle. See Figure 17-13.

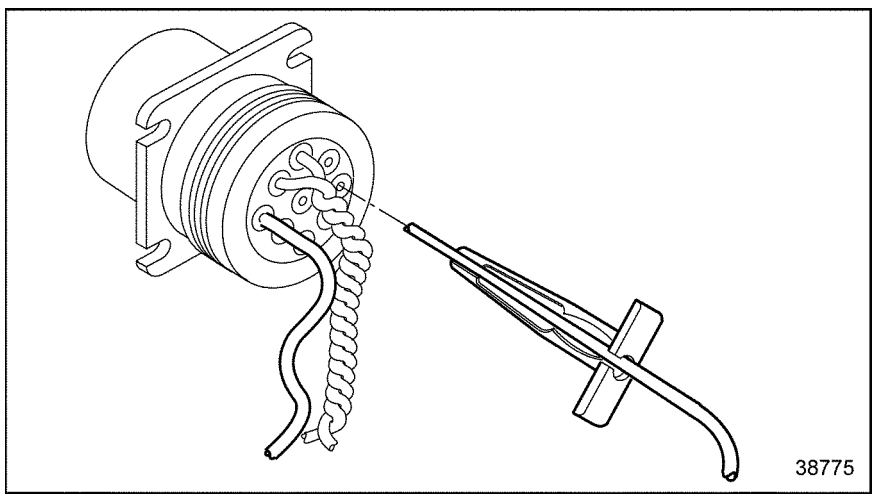

Figure 17-13 Removal Tool Insertion

3. Pull contact cable assembly out of the connector. Keep reverse tension on the cable and forward tension on the tool.

All information subject to change without notice.
Copyright © 2007 DETROIT DIESEL CORPORATION

https://truckmanualshub.com/

17.4.5 Splicing Guidelines

The following are guidelines which may be used for splices. The selection of crimpers and splice connectors is optional. Select a high quality crimper equivalent to the Kent-Moore tool, J–38706, and commercially available splice clips.

The recommended technique for splicing and repairing circuits (other than power and ignition circuits) is a clipped and soldered splice. Alternatively, any method that produces a high quality, tight (mechanically and electronically sound) splice with durable insulation is considered to be acceptable.

17.4.5.1 Clipped and Soldered Splicing Method

The tools required are listed in Table 17-15.

Tool	Part Number
Heat Gun	--
Sn 60 solder with rosin core flux	--
Wire Stripper	Kent-Moore J–35615 or equivalent
Splice Clips (commercially available)	Wire size dependent
Heat Shrink Tubing	Raychem HTAT or equivalent

Table 17-15 Recommended Splicing Tools

The criteria for splicing straight leads is:

- No more than one strand in a 16 strand wire may be cut or missing.
- Use Sn 60 solder with rosin core flux.
- The exposed wire must be clean before the splice is soldered.

All information subject to change without notice.
Copyright © 2007 DETROIT DIESEL CORPORATION

https://truckmanualshub.com/

Soldering splice connectors is optional. To solder splice connectors:

1. Position the leads, so one overlaps the other. See Figure 17-14.

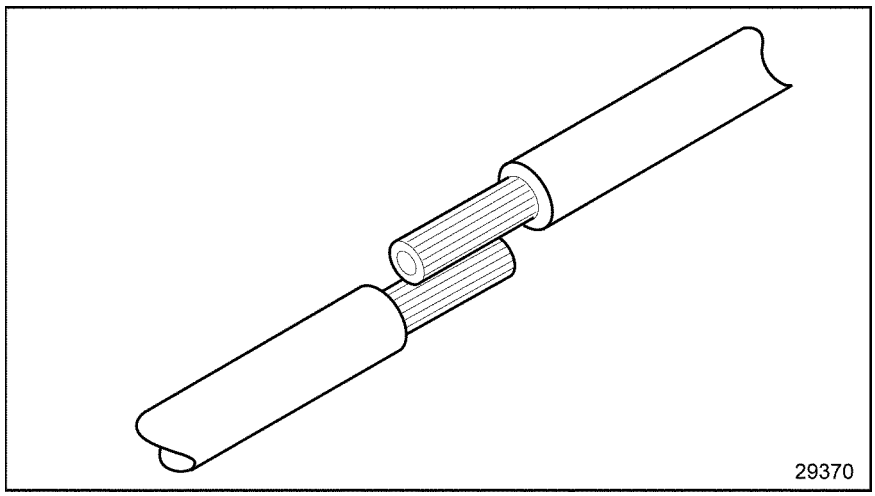

Figure 17-14 Positioning the Leads

2. Secure the leads with a commercially available clip and hand tool. See Figure 17-15.

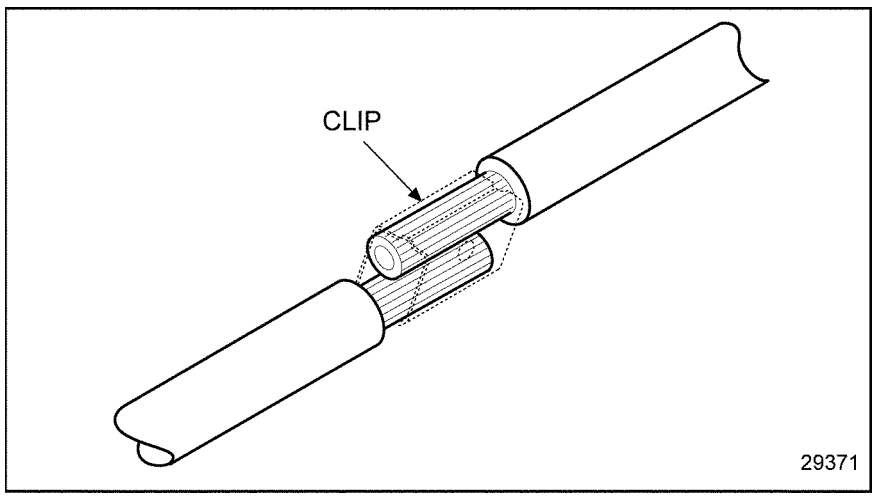

Figure 17-15 Securing the Leads With a Clip

3. Use a suitable electronic soldering iron to heat the wires. Apply the solder to the heated wire and clip (not to the soldering iron) allowing sufficient solder flow into the splice joint.

All information subject to change without notice.
Copyright © 2007 DETROIT DIESEL CORPORATION

https://truckmanualshub.com/

4. Pull on wire to assure crimping and soldering integrity. The criteria listed in Table 17-16 must be met.

Wire Gage	Must Withstand Applied Load
14 AWG	45 lb (200 N)
16 AWG	27 lb (120 N)
18 AWG	20 lb (90 N)

Table 17-16 Applied Load Criteria for Terminals

5. Loop the lead back over the spliced joint and tape. See Figure 17-16.

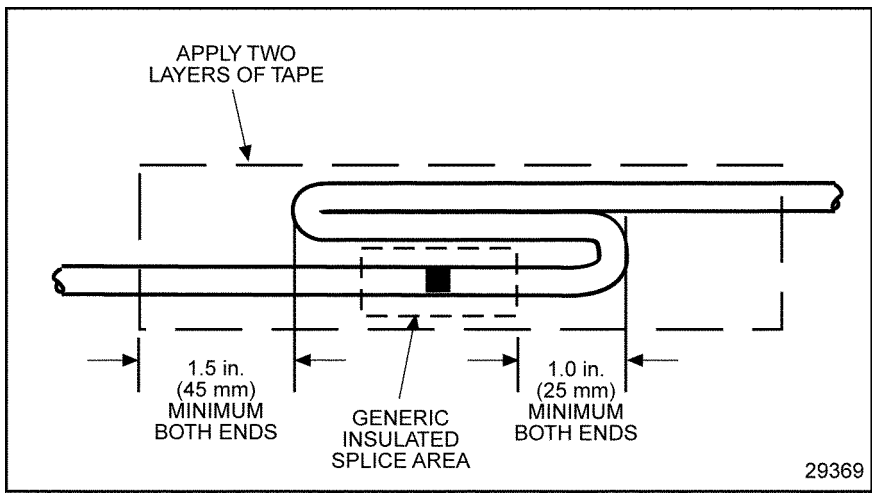

Figure 17-16 Recommended Strain Relief of Spliced Joint

17.4.5.2 Splicing and Repairing Straight Leads-Alternate Method 1

The tools required are listed in Table 17-17.

Tool	Part Number
Heat Gun	--
Wire Stripper	Kent-Moore J–35615 or equivalent
Splice Clips (commercially available)	Wire size dependent
Heat Shrink Tubing	Raychem HTAT or equivalent
Terminal Crimper for Metri-Pack 280 (12 AWG)	Kent-Moore J–38125-6
Terminal Crimper for Metri-Pack 280 (18 AWG)	Kent-Moore J–39848
Terminal Crimper for Weather Pack	Kent-Moore J–35606
Terminal Crimper for Deutsch	Kent-Moore J–34182
Terminal Crimper for Metri-Pack 150	Kent-Moore J–35123

Table 17-17 Recommended Splicing Tools

All information subject to change without notice.
Copyright © 2007 DETROIT DIESEL CORPORATION

https://truckmanualshub.com/

NOTE:
When splicing straight leads, no more than one strand in a 16 strand wire may be cut or missing.

The recommended method to splice straight leads follows:

1. Locate broken wire.
2. Remove insulation as required; be sure exposed wire is clean and not corroded.
3. Insert one wire into the splice clip until it butts against the clip. Stop and crimp (see Figure 17-17, A).
4. Insert the other wire into the splice clip until it butts against the clip stop (see Figure 17-17, B).

NOTICE:
Any terminal that is cracked or ruptured is unacceptable as malfunctions may occur.

5. Visually inspect the splice clip for cracks, rupture, or other crimping damage. Remove and replace damaged clips before proceeding.
6. Pull on wire to ensure the splice integrity. The criteria listed in Table 17-18 must be met.

Wire Gage	Must Withstand Applied Load
14 AWG	45 lb (200 N)
16 AWG	27 lb (120 N)
18 AWG	20 lb (90 N)

Table 17-18 Applied Load Criteria for Terminals

7. Shrink the splice clip insulative casing with a heat gun to seal the splice (see Figure 17-17, C).

All information subject to change without notice.
Copyright © 2007 DETROIT DIESEL CORPORATION

https://truckmanualshub.com/

NOTICE:
Splices may not be closer than 12 in. (.3 m) apart to avoid degradation in circuit performance. Replace wire to avoid having splices closer than 12 in. (.3 m) apart.

8. Loop the lead back over the spliced joint and tape. See Figure 17-16.

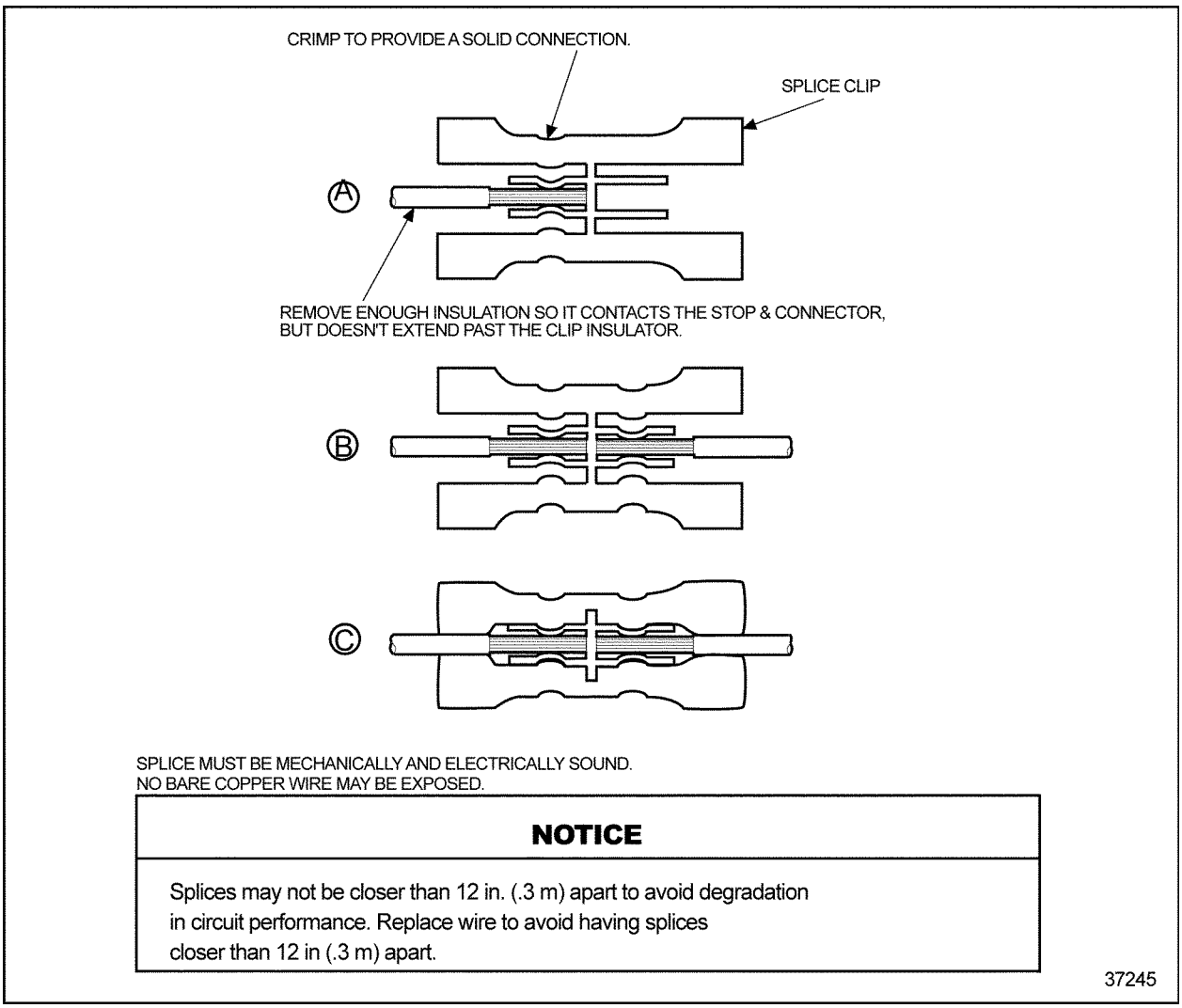

Figure 17-17 Splicing Straight Leads - Alternate Method 1

All information subject to change without notice.
Copyright © 2007 DETROIT DIESEL CORPORATION

https://truckmanualshub.com/

17.4.5.3 Splicing and Repairing Straight Leads - Alternate Method 2

This method is not allowed or recommended for power or ignition circuits. The tools required are listed in Table 17-19.

Tool	Part Number
Heat Gun	--
Wire Stripper	Kent-Moore J–35615 or equivalent
Splice Clips (commercially available)	Wire size dependent
Heat Shrink Tubing	Raychem HTAT or equivalent
Terminal Crimper for Metri-Pack 280 (12 AWG)	Kent-Moore J–38125-6
Terminal Crimper for Metri-Pack 280 (18 AWG)	Kent-Moore J–39848
Terminal Crimper for Weather Pack	Kent-Moore J–35606
Terminal Crimper for Deutsch	Kent-Moore J–34182
Terminal Crimper for Metri-Pack 150	Kent-Moore J–35123

Table 17-19 Recommended Splicing Tools

NOTE:
When splicing straight leads, no more than one strand in a 16 strand wire may be cut or missing.

An acceptable option for splicing straight leads is:

1. Locate broken wire.
2. Remove insulation as required; be sure exposed wire is clean and not corroded.
3. Slide a sleeve of glue lined, shrink tubing (Raychem HTAT or equivalent) long enough to cover the splice clip on the wire and overlap the wire insulation, about .25 in. (6 mm) on both sides (see Figure 17-18, A).
4. Insert one wire into splice clip until it butts against the splice clip. Stop and crimp (see Figure 17-18, B).
5. Insert the remaining wires into the splice clip one at a time until each butts against the splice clip; stop and crimp (see Figure 17-18, B).

NOTICE:
Any terminal that is cracked or ruptured is unacceptable as malfunctions may occur.

6. Visually inspect the terminal for cracks, rupture, or other crimping damage. Remove and replace damaged terminal before proceeding.
7. Slide the shrink tubing over the crimped splice clip (see Figure 17-18, C).
8. Shrink tubing with a heat gun to seal the splice (see Figure 17-18, D).

All information subject to change without notice.
Copyright © 2007 DETROIT DIESEL CORPORATION

https://truckmanualshub.com/

NOTICE:
A minimum of two layers of heat shrink tubing must be applied to splices that have more than one lead in or out.

9. Loop the lead back over the spliced joint and tape. See Figure 17-16.

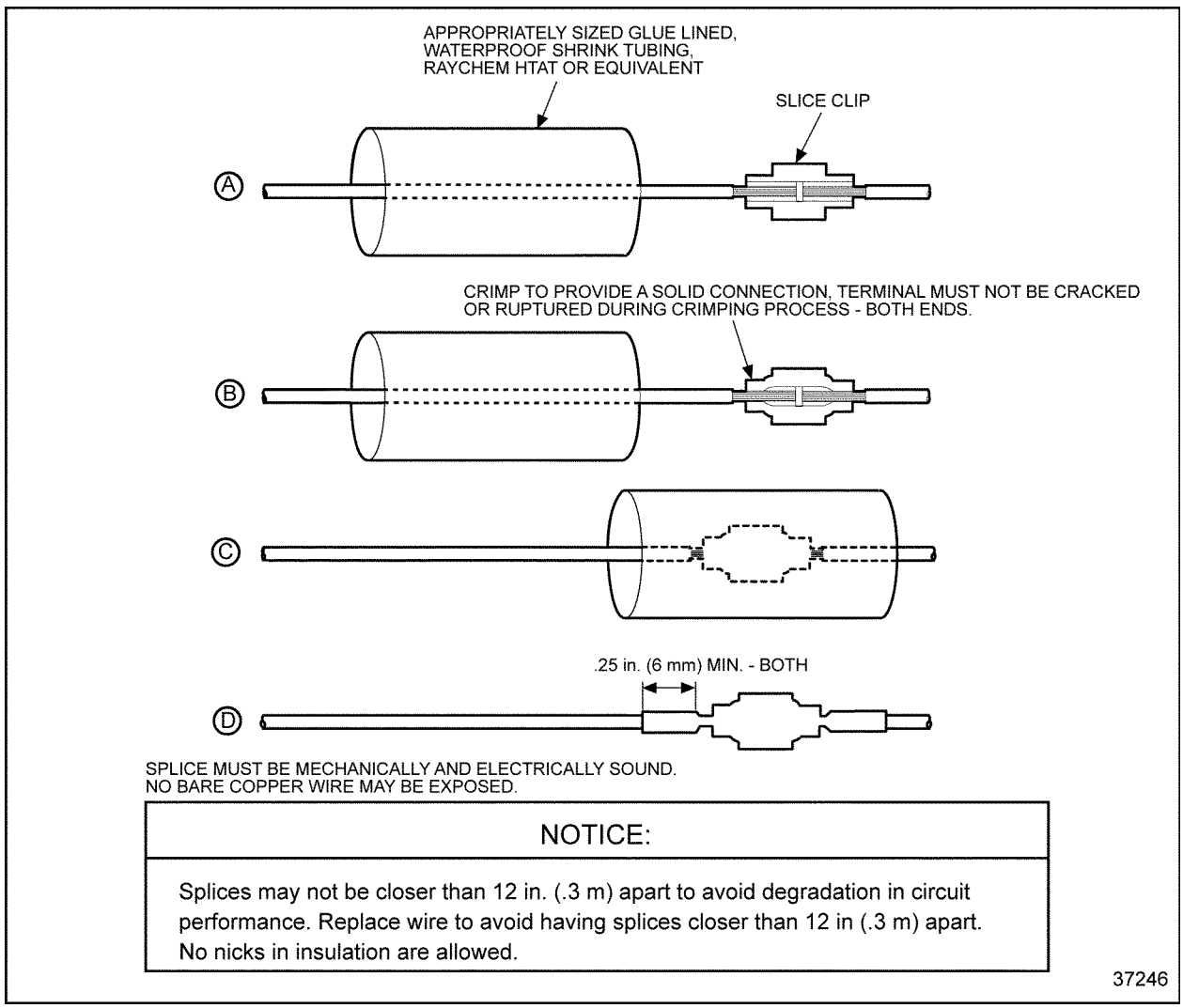

Figure 17-18 Splicing Straight Leads - Alternate Method 2

All information subject to change without notice.
Copyright © 2007 DETROIT DIESEL CORPORATION

https://truckmanualshub.com/

17.4.5.4 Shrink Wrap

Shrink wrap is required when splicing non insulated connections. Raychem HTAT or any equivalent heat shrink dual wall epoxy encapsulating adhesive polyolefin is required. Shrink wrap must extend at least .25 in. (6 mm) over wire insulation past splice in both directions.

To heat shrink wrap a splice:

NOTICE:
The heat shrink wrap must overlap the wire insulation about .25 in. (6 mm) on both sides of the splice.

1. Select the correct diameter to allow a tight wrap when heated.
2. Heat the shrink wrap with a heat gun; do not concentrate the heat in one location, but apply the heat over the entire length of shrink wrap until the joint is complete.
3. Repeat step 2 to apply a second layer of protection (if required by splicing guidelines).

All information subject to change without notice.
Copyright © 2007 DETROIT DIESEL CORPORATION

https://truckmanualshub.com/

17.4.5.5 Staggering Wire Splices

Position spliced wires properly as follows:

NOTICE:
You must stagger positions to prevent a large bulge in the harness and to prevent the wires from chafing against each other.

1. Stagger the position of each splice (see Figure 17-19) so there is at least a 2.5 in. (65 mm) separation between splices.

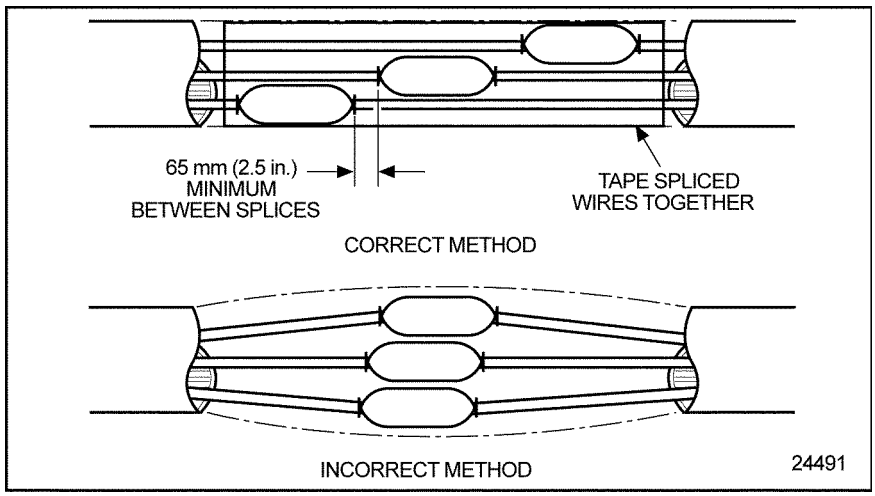

Figure 17-19 The Correct and Incorrect Method of Staggering Multiple Splices

NOTICE:
A minimum of two layers of heat shrink tubing extending .25 in. (6 mm) past the splice must be used to complete the splice.

2. Heat shrink a minimum of two layers of heat shrink tubing.
3. Tape the spliced wires to each other. Refer to section 17.5.

All information subject to change without notice.
Copyright © 2007 DETROIT DIESEL CORPORATION

https://truckmanualshub.com/

17.5 CONDUIT AND LOOM

Conduit must be used to protect the harness cable and cable splices.

NOTICE:
The conduit must not cover any connectors, switches, relays, fuses, or sensors.

The following guidelines should be used when designing a harness:

NOTICE:
Wires should be sized and cut to near equal length prior to installing conduit.

- The distance between the back of the connector or other listed devices to the end of the conduit should not exceed:
  - 0.5 in. (12.7 mm) for a single connector/device
  - 1.0 in. (25.4 mm) for a double connector/device
  - 1.5 in. (38.1 mm) for multiple (three or more) connectors/devices
- All cable breakouts and conduit ends must be secured in place with conduit outlet rings or tape.

17.5.1 Criteria for Conduit and Loom

Due to the wide variety of operating conditions and environments, it is the responsibility of the OEM to select a conduit that will survive the conditions of the specific applications. Flame retardant convoluted polypropylene conduit or equivalent may be used for most installations. Heat retardant nylon conduit or oil, water, acid, fire, and abrasion resistant non-metallic loom conforming to SAE J562A* is also acceptable. The diameter of conduit should be selected based on the number of wires being protected.

* If non-metallic loom is used, secure the ends with tightly wrapped nylon straps to prevent unraveling.

Conduit should cover the wires without binding and without being excessively large.

All information subject to change without notice.
Copyright © 2007 DETROIT DIESEL CORPORATION

https://truckmanualshub.com/

17.6 TAPE AND TAPING

Tape must be used when conduit is utilized. Be sure to follow the tape manufacturers' guidelines. The harness manufacturer may use tape under the harness covering (conduit or loom) to facilitate harness building. Tape must be tightly wrapped at all conduit interconnections with a minimum of two layers. Be sure to firmly secure the start and finish ends of tape.

17.6.1 Tape Criteria

In applications where the temperature doesn't exceed 176°F (80°C), black vinyl electrical tape that is flame retardant and weather resistant may be used.

NOTICE:
Black vinyl electrical tape should not be used in applications where the temperature exceeds 176°F (80°C).

In applications where temperature exceeds 176°F (80°C), vinyl electrical tape should not be used. For these applications, adhesive cloth backed, flame retardant polyethylene or fiber glass tape (Delphi #PM-2203, Polikan #165 or equivalent) is recommended.

17.6.2 Taping Criteria

The tape must extend a minimum of 1 in. (25 mm) past the conduit.

The tape must be crossed over butted conduit ends.

The tape must be extended a minimum of 1 in. (25 mm) in each direction at all branches.

All information subject to change without notice.
Copyright © 2007 DETROIT DIESEL CORPORATION

https://truckmanualshub.com/

17.7 SENSORS

DDEC is designed to operate with several types of sensors as listed in Table 17-20.

Sensor Type	Description
Variable Reluctance/Magnetic Pick-up	Used to monitor the crankshaft position, engine speed, turbo speed, and vehicle speed.
Thermistor	Used to monitor temperatures.
Variable Capacitance	Used to monitor manifold, and oil gallery pressures.
Variable Resistance (Potentiometer)	Used to sense throttle position.
Switch	Used to signal coolant level.

Table 17-20 Sensor Types

The sensors integrated into the Engine Harness are factory-installed (refer to section 17.7.1). The sensors integrated into the Vehicle Interface Harness are installed by the OEM (refer to section 17.7.2).

All information subject to change without notice.
Copyright © 2007 DETROIT DIESEL CORPORATION

https://truckmanualshub.com/

17.7.1 Factory-installed Sensors

The sensors integrated into the factory-installed Engine Harness are listed in Table 17-21.

Sensor	Function
Camshaft Position Sensor (CMP Sensor)	Indicates a specific cylinder in the firing order.
Crankshaft Position Sensor (CKP Sensor)	Senses crankshaft position and engine speed for functions such as fuel control strategy.
DPF Inlet Pressure Sensor	Sensor measures pressure between the Diesel Oxidation Catalyst (DOC) and the Diesel Particulate Filter (DPF) in the aftertreatment assembly located in the exhaust system of the vehicle.
DPF Outlet Pressure Sensor	Sensor measures pressure on the outlet of the after-treatment device in the exhaust system of the vehicle. Located after the DPF that is within the aftertreatment device.
DPF Outlet Temperature Sensor	Temperature measured at the outlet of the after-treatment system that is installed within the exhaust system of the vehicle. It's located after the DPF that is within the aftertreatment unit.
DOC Inlet Temperature	DOC Temperature In - Temperature measured at the inlet of the after-treatment device in the exhaust system of the vehicle. Located before the DOC that is within the after-treatment device.
DOC Outlet Temperature	Temperature measured between the DOC and the DPF in the aftertreatment assembly located in the exhaust system of the vehicle.
EGR Delta Pressure Sensor EGR Delta P Sensor	Senses EGR pressure for EGR control.
EGR Temperature Sensor	Senses EGR exhaust temperature after EGR cooler. Used for EGR system diagnosis.
Engine Coolant Temperature Sensor (ECT Sensor)	Senses coolant temperature for functions such as engine protection, fan control and engine fueling.
Engine Oil Pressure Sensor (EOP Sensor)	Senses gallery oil pressure for functions such as engine protection.
Engine Oil Temperature Sensor (EOT Sensor)	Senses oil temperature for functions such as reducing variation in fuel injection and fan control.
Fuel Line Pressure Sensor	Senses fuel line pressure
Fuel Compensation Pressure Sensor	Compensates fuel line pressure
Intake Manifold Pressure Sensor (IMP Sensor)	Senses turbo boost for functions such as smoke control and engine protection.
Intake Manifold Temperature Sensor (IMT Sensor)	Senses boost temperature
Supply Fuel Temperature Sensor (SFT Sensor)	Senses fuel temperature for functions such as engine fueling.
Turbo Compressor Temperature Out Sensor	Senses turbo out air temperature.
Turbo Speed Sensor (TSS)	Monitors turbo speed.
Water-in-Fuel Sensor (MBE 900 only)	Detects water in the fuel filter that alerts the owner/driver that the fuel filter needs to be dried out.

Table 17-21 Function of Factory-installed Sensors

All information subject to change without notice.
Copyright © 2007 DETROIT DIESEL CORPORATION

https://truckmanualshub.com/

See Figure 17-20 for the location of the sensors for the DOC and DPF.

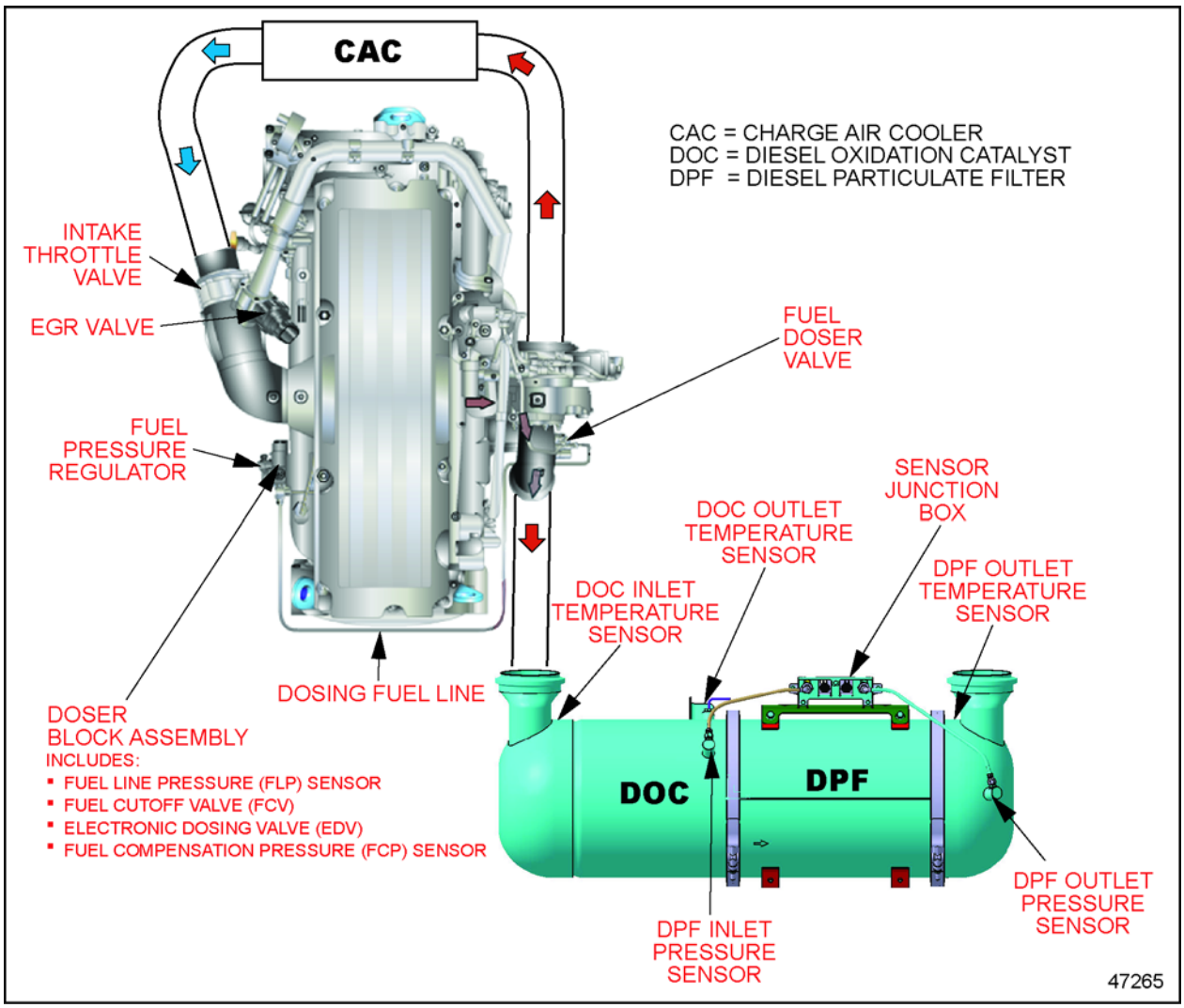

Figure 17-20 Sensor Location for the DOC and DPF

All information subject to change without notice.
Copyright © 2007 DETROIT DIESEL CORPORATION

https://truckmanualshub.com/

17.7.2 OEM-installed Sensors

All sensors must be of the proper type and continuously monitor vehicular and environmental conditions, so the MCM can react to changing situations.

The OEM is responsible for installing the sensors listed in Table 17-22.

Sensor	Function
Ambient Air Temperature Sensor (AAT Sensor)	Senses ambient air temperature specifically for the Ambient Air Temperature Override Disable feature or for OI. Refer to section 17.7.3.
Engine Coolant Level Sensor (ECL Sensor)	Senses coolant level for engine protection. Refer to section 17.7.4.
Turbo Compressor In Temperature Sensor	Senses the temperature of the turbo compressor inlet. Refer to section 17.7.5.
Vehicle Speed Sensor (VSS)	Senses vehicle speed for Cruise Control and Vehicle Speed Limiting. Refer to section 17.7.6.

* Available in some applications

Table 17-22 Function and Guidelines for OEM-installed Sensors

NOTE:
The OEM harness must be securely fastened every six (6) in. It is required that the harness be fastened within six (6) in. of the sensor.

All information subject to change without notice.
Copyright © 2007 DETROIT DIESEL CORPORATION

https://truckmanualshub.com/

17.7.3 Ambient Air Temperature Sensor

The AAT Sensor is a thermistor type sensor with a variable resistance that produces an analog signal between 0 and 5 V, representing the temperature of the ambient air. The AAT Sensor (see Figure 17-21) is used with the Idle Shutdown Timer, specifically for the Ambient Air Temperature Override Disable feature or for Optimized Idle. For additional information on these features refer to Chapter 5.

NOTE:
This sensor is optional.

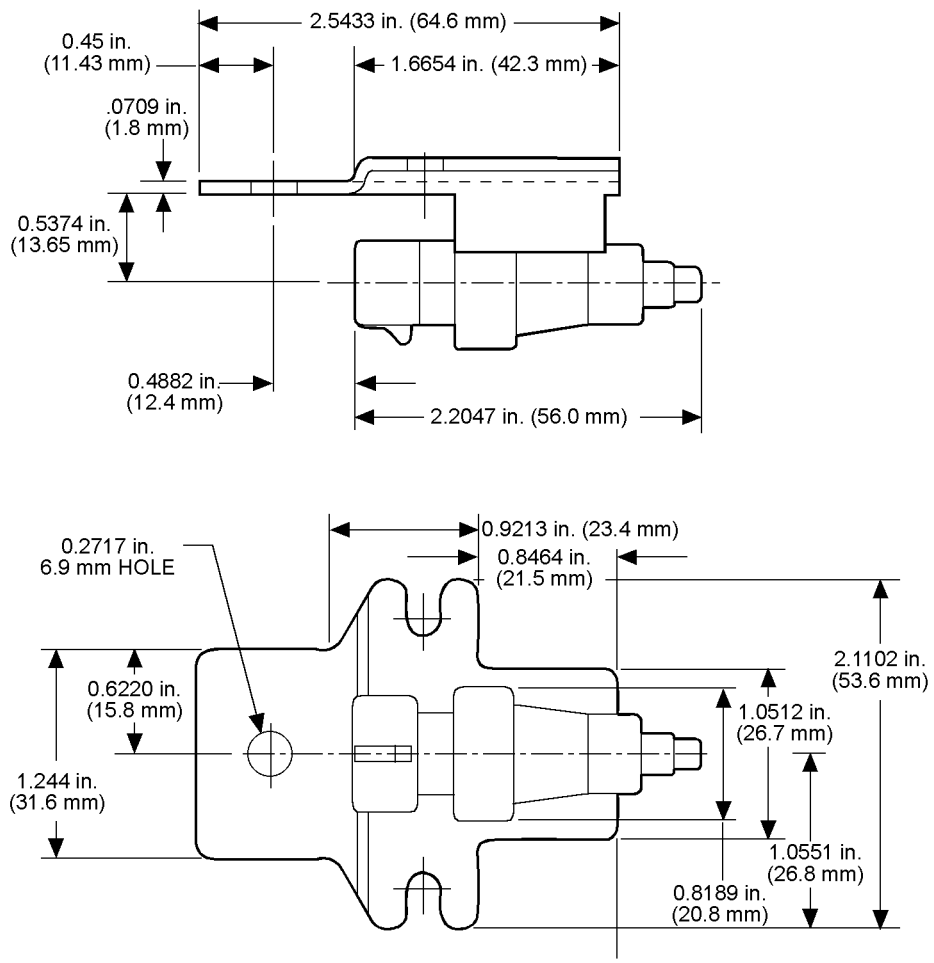

Figure 17-21 Ambient Air Temperatures Sensor Dimensions

Copyright © 2007 DETROIT DIESEL CORPORATION

https://truckmanualshub.com/

17.7.3.1 Ambient Air Temperature Sensor Installation

Install the AAT Senaor where ambient air temperature can be read. A protected location on the frame rails where it will not be splattered with dirt and grime and is removed from any heat source such as exhaust is preferred. See Figure 17-22 for AAT Sensor installation.

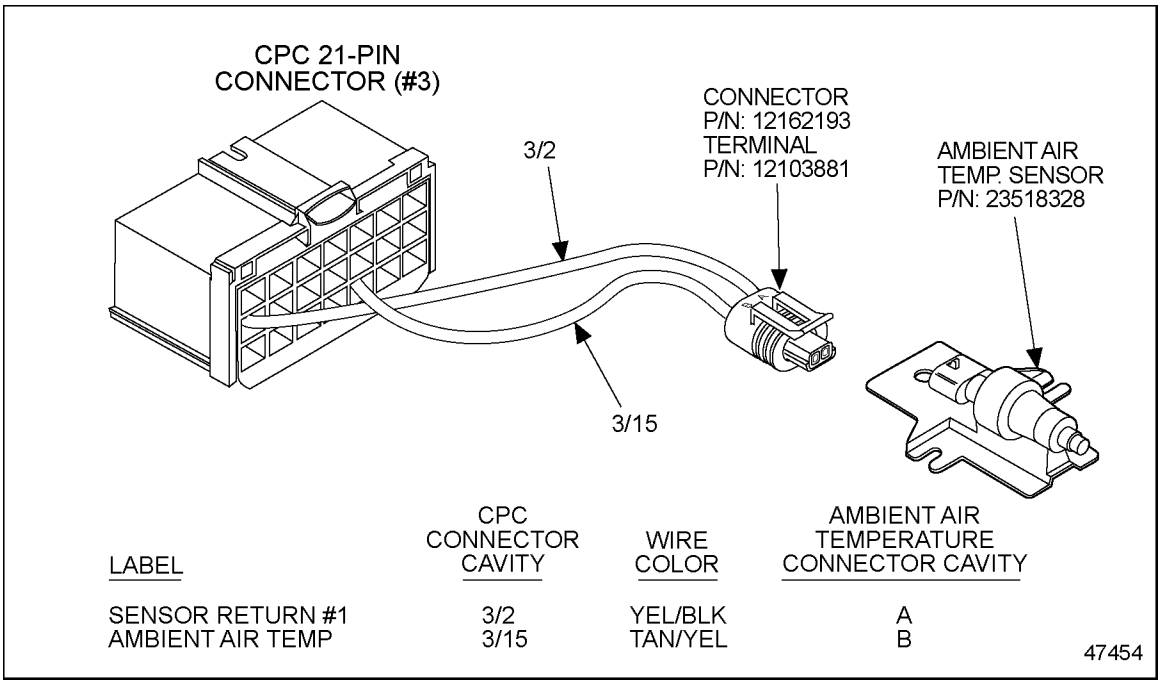

Figure 17-22 Ambient Air Temperature Sensor Installation

The parameter for the AAT Sensor are listed in Table 17-23.

Parameter Group	Parameter	Options	Default	Access
31	Ambient Air Temp Sensor Enable	0 – Not Available 1 – Hardwired 2 – Reserved for J1939 3 – J1587 4 – ECAN	0 – Not Available	VEPS, DRS
31	MID for Ambient Air Temp	0 — 255	0	VEPS, DRS

Table 17-23 Ambient Air Temperature Sensor Parameters

All information subject to change without notice.
Copyright © 2007 DETROIT DIESEL CORPORATION

https://truckmanualshub.com/

17.7.4 Engine Coolant Level Sensor

The ECL Sensor provides an input to the engine protection system and warn the operator if a low coolant level has been reached.

The main component of the ECL Sensor consists of a conductivity probe, which connects to the CPC (see Figure 17-23).

NOTICE:
The probe has an operational temperature range of -40 to 257°F (-40 to 125°C). Exposure to temperatures beyond this range may result in unacceptable component life, or degraded sensor accuracy.

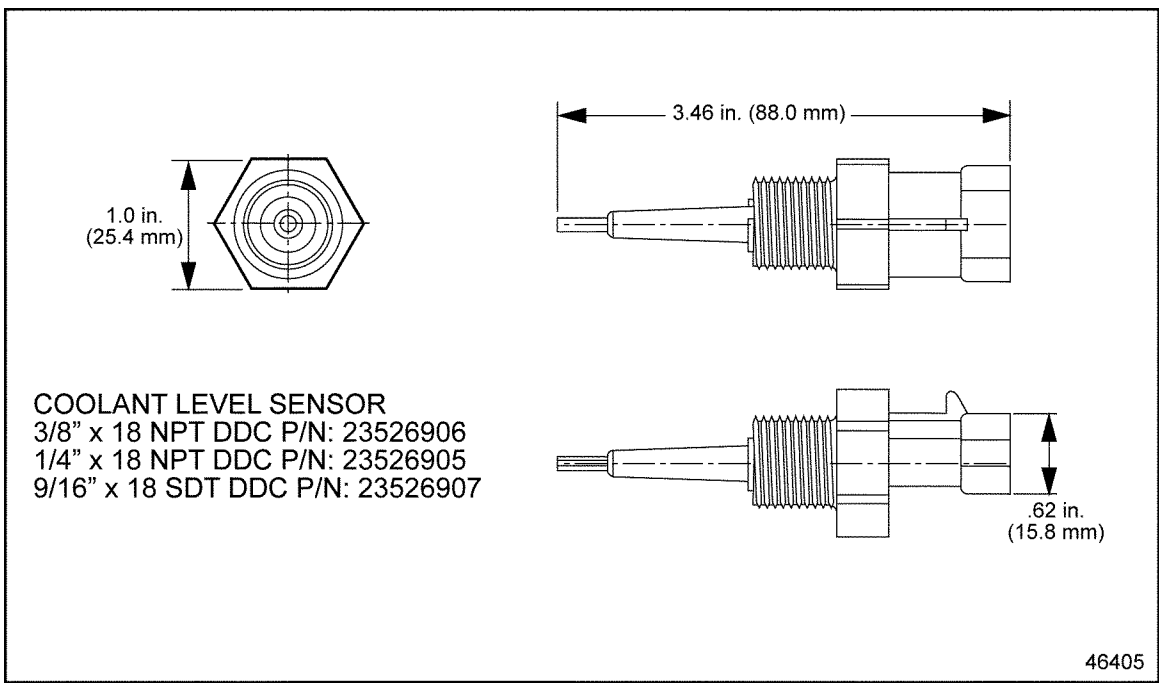

Figure 17-23 Engine Coolant Level Sensor Specifications

Copyright © 2007 DETROIT DIESEL CORPORATION

https://truckmanualshub.com/

The OEM must connect the ECL Sensor probe as shown in the next illustration (see Figure 17-24). Polarity of the ground and signal must be correct for proper operation.

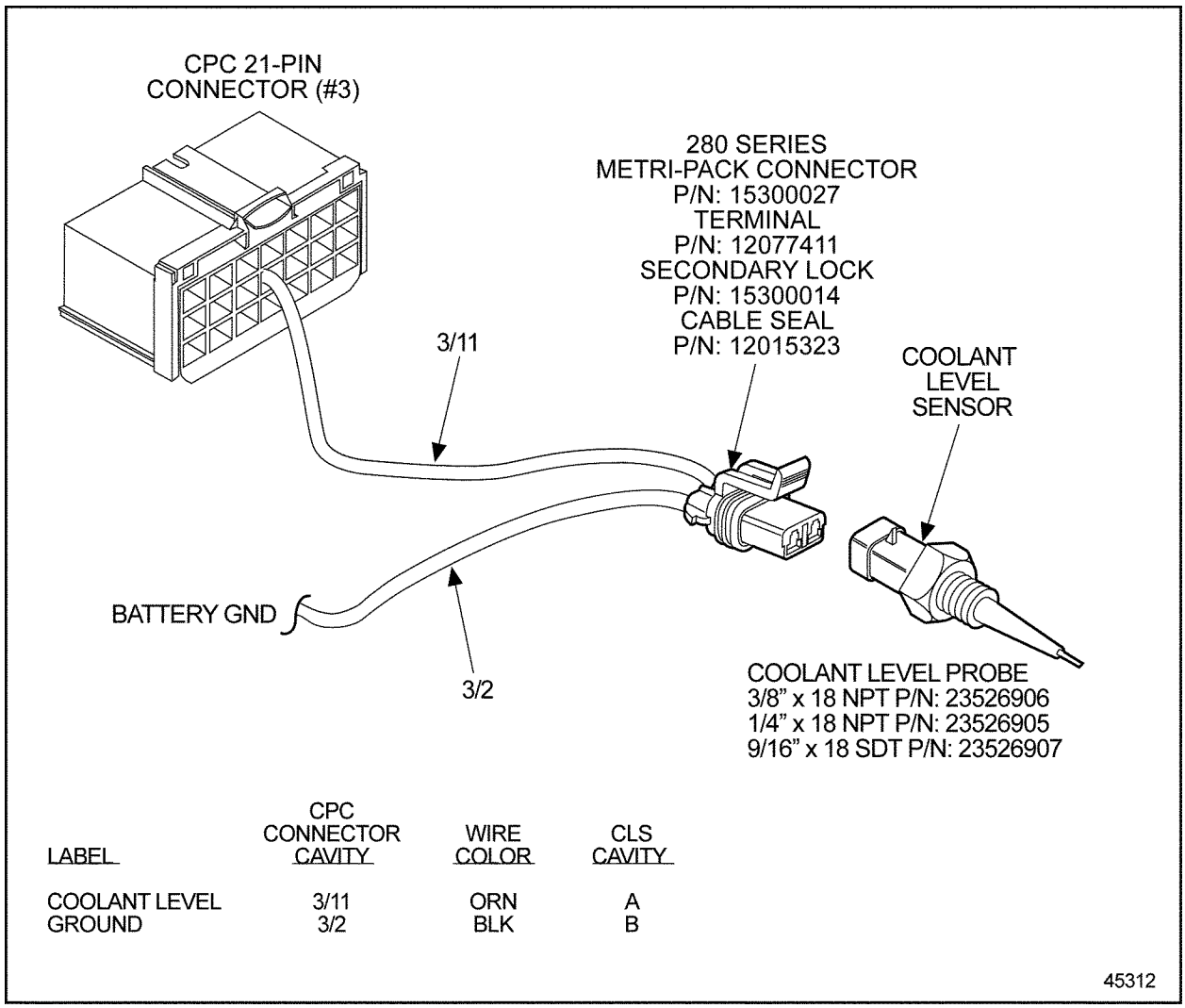

LABEL	CPC CONNECTOR CAVITY	WIRE COLOR	CLS CAVITY
COOLANT LEVEL	3/11	ORN	A
GROUND	3/2	BLK	B

Figure 17-24 Engine Coolant Level Sensor Installation for CPC

All information subject to change without notice.
Copyright © 2007 DETROIT DIESEL CORPORATION

https://truckmanualshub.com/

The probe should be located in either the radiator top tank or a remote mounted surge tank. It should be mounted horizontally in the center of the tank and must be in a position to signal low coolant before aeration occurs. Typically, this is a height representing 98% of the drawdown quantity. The probe should be located so that it is not splashed by deaeration line, stand pipe or coolant return line flows. The insulated portion of the probe should be inserted into the coolant 1/2 in. or more past the inside wall of the tank. See Figure 17-25.

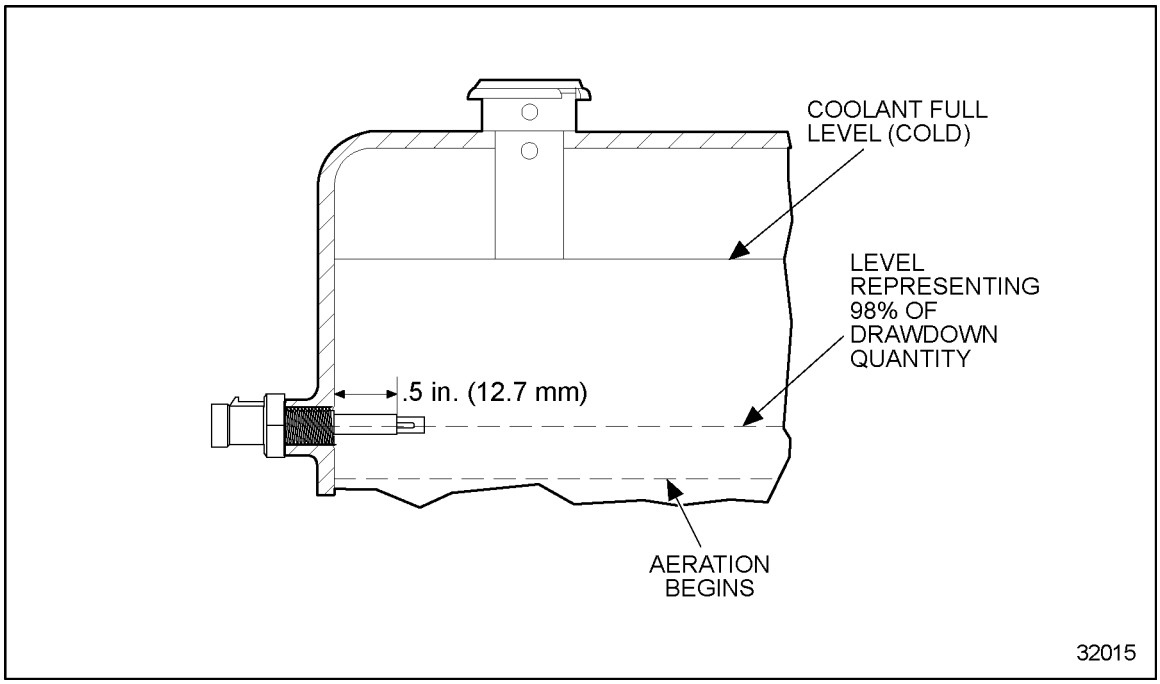

Figure 17-25 Engine Coolant Level Sensor Location - Top of Radiator Tank

Determine proper location for low coolant level sensor while running the drawdown test. It *must* actuate a warning before the satisfactory drawdown level is reached.

The ECL Sensor components are OEM supplied hardware and can be purchased as kits or individual components, depending on OEM requirements.

The sensor must be enabled with VEPS or the DRS as listed in Table 17-24.

Parameter Group	Parameter	Options	Default
32	Cool Level Sensor Input Enable	0 = Disabled 1 = Dual Level Probe Sensor (IMO), fixed threshold* 2 = Single Level Probe Sensor, temp dependent 3 = Dual Level Float Sensor (FTL), fixed threshold/FTL Gentec 4 = Single Level Probe Sensor, fixed threshold	2

Table 17-24 Enabling the Engine Coolant Level Sensor

All information subject to change without notice.
Copyright © 2007 DETROIT DIESEL CORPORATION

https://truckmanualshub.com/

17.7.5 Turbo Compressor In Temperature Sensor

The Turbo Compressor In Temperature Sensor (**required for Series 60**) produces a signal representing the temperature of the turbo compressor inlet. See Figure 17-26 and Figure 17-27.

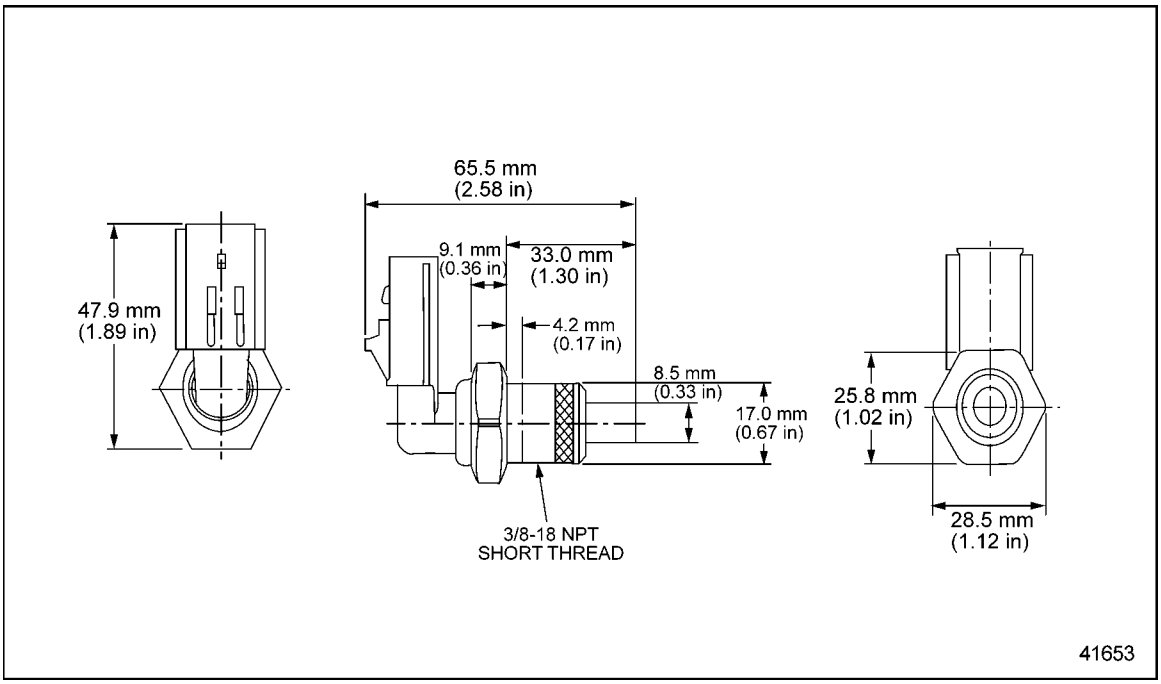

Figure 17-26 Turbo Compressor In Temperature Sensor

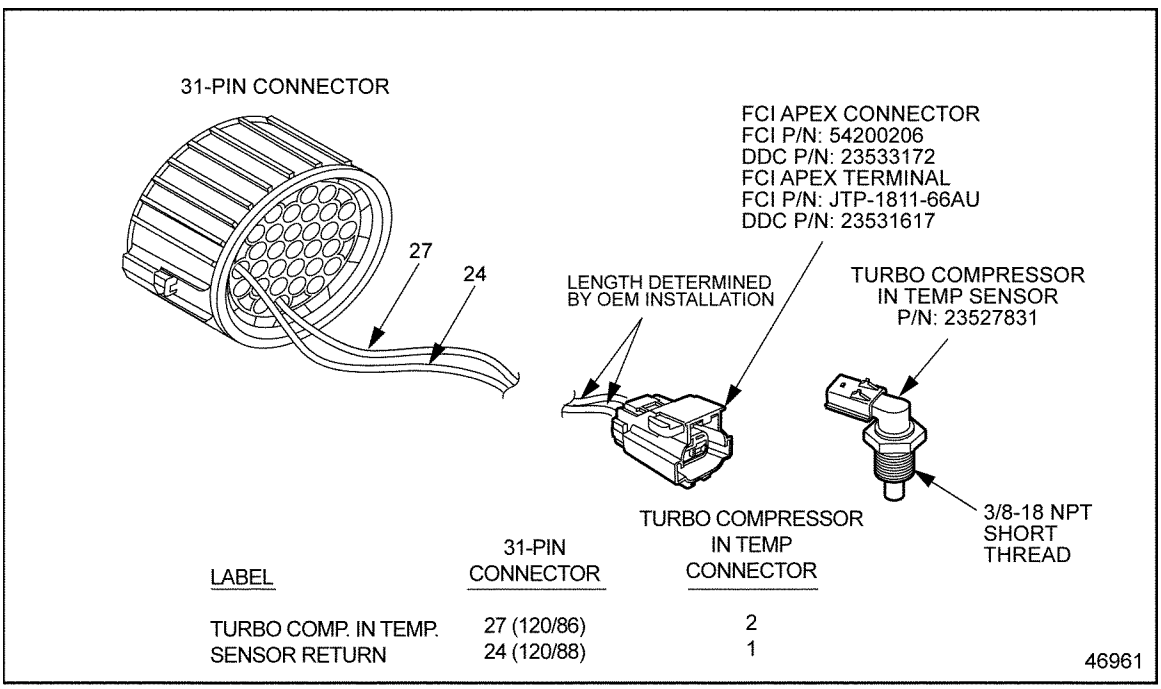

Figure 17-27 Turbo Compressor In Temperature Sensor Installation

All information subject to change without notice.
Copyright © 2007 DETROIT DIESEL CORPORATION

https://truckmanualshub.com/

17.7.6 Vehicle Speed Sensor

The CPC can calculate vehicle speed providing that it is properly programmed and interfaced with a Vehicle Speed Sensor (VSS) that meets requirements. The VSS (see Figure 17-28) provides a vehicle speed signal for use in Cruise Control and Vehicle Speed Limiting. The VSS signal type can be changed v

NOTE:
DDC does not approve of the use of signal generator sensors.

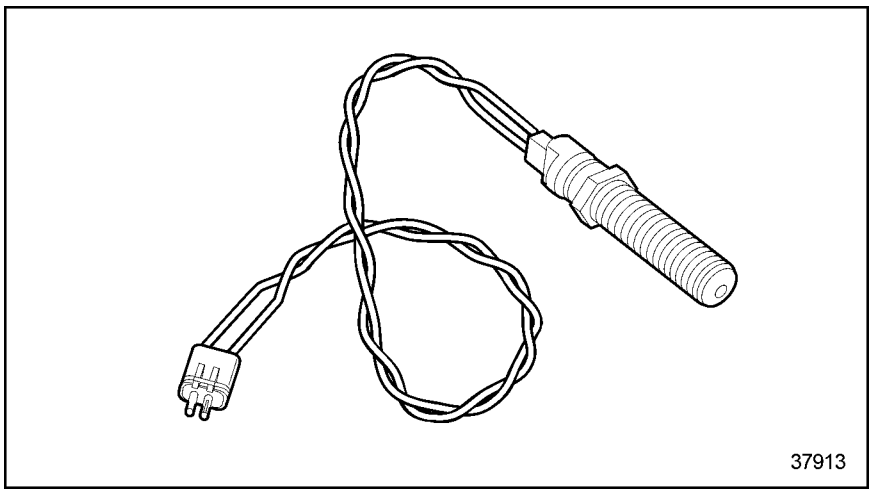

Figure 17-28 Vehicle Speed Sensor

All information subject to change without notice.
Copyright © 2007 DETROIT DIESEL CORPORATION

https://truckmanualshub.com/

To obtain accurate vehicle mileage, the parameters listed in Table 17-25 must be programmed with VEPS, DRS, or DDDL 7.0.

Parameter Group	Parameter	Range	Default
8	Vehicle Speed Sensor	0 = No Sensor 1 = C3 Sensor 2 = Square Wave (Hall Sensor) 3 = J1939 (ECT1) 4 = Magnetic Pickup 5 = J1939 (TCO1) 6 = J1939 (CCVS Source 1) 7 = J1939 (CCVS Source 2) 8 = J1939 (CCVS Source 3)	4 = Magnetic
8	Axle Ratio	1 – 20.0	5.29
8	Number of Output Shaft Teeth	0 – 250	16
8	Tire Revs per Unit Distance	160 – 1599	312
8	Top Gear Ratio	0.1 – 2.55	1
8	Second Highest Gear Ratio	0.1 – 5.75	2.54
8	Two Spd Axle Second Axle Ratio	1 – 20.0	5.29
8	Anti Tamper	0 = Disable 1 = Enable VSS Anti Tamper Function via ABS 2 = Enable Anti Tamper Function via Gear Ration	0 = Disable

Table 17-25 Vehicle Speed Sensor Parameters

17.7.6.1 Magnetic Pickup

The magnetic pickup requirements are listed in Table 17-26. Magnetic Pickup size is determined by installation requirements.

Parameters	Range
Frequency Range	0 - 10 kHz
Low Threshold Voltage	>1.8 Volts Peak to Peak

Table 17-26 Magnetic Pickup Vehicle Speed Sensor Requirements

The Vehicle Speed Sensor is wired to the 21–pin #3 connector of the CPC as listed in Table 17-27.

CPC Connector/Pin	Function
3/13	VSS (+)
3/14	VSS (-)

Table 17-27 Vehicle Speed Sensor Wiring

All information subject to change without notice.
Copyright © 2007 DETROIT DIESEL CORPORATION

https://truckmanualshub.com/

See Figure 17-29 for the installation of the Magnetic VSS.

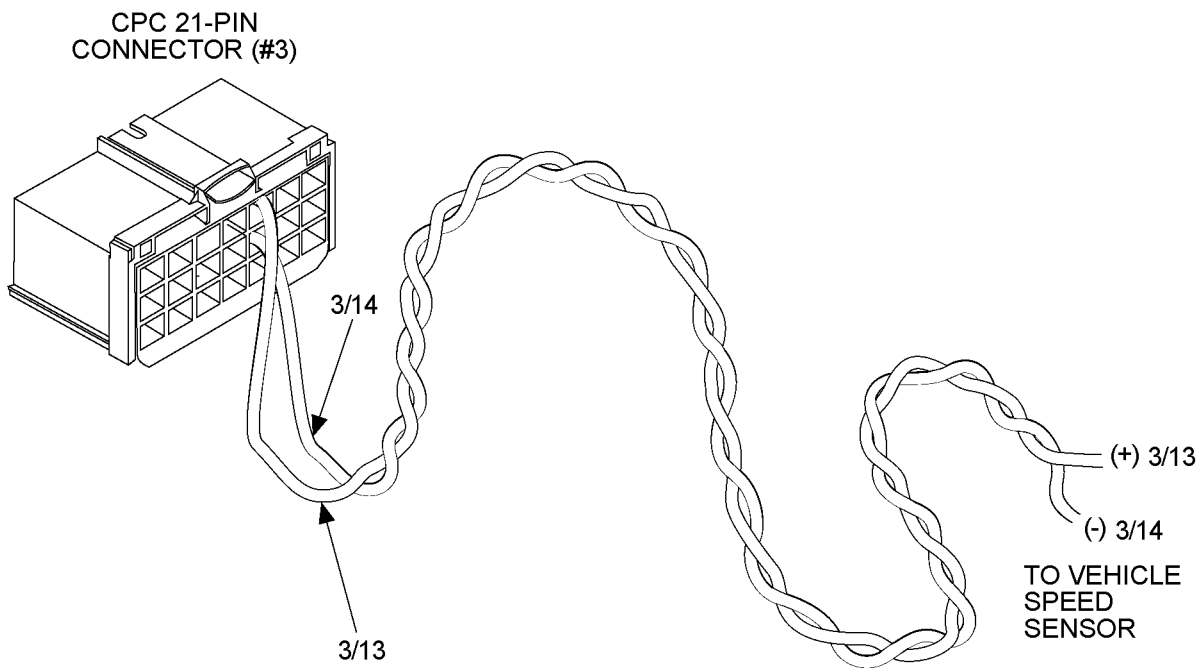

LABEL	CPC CONNECTOR CAVITY	WIRE COLOR	VSS CONNECTOR CAVITY
VEHICLE SPEED SENSOR (+)	3/13	LT BLU/ORN	SIGNAL
VEHICLE SPEED SENSOR (-)	3/14	LT BLU/BLK	RETURN

45313

Figure 17-29 Magnetic Vehicle Speed Sensor Installation – CPC

All information subject to change without notice.
Copyright © 2007 DETROIT DIESEL CORPORATION

https://truckmanualshub.com/

17.7.6.2 SAE J1939 Data Link

A VSS wired to the CPC is not required if the transmission output shaft speed message is being transmitted over the SAE J1939 Data Link. To obtain accurate vehicle mileage, the parameters listed in Table 17-28 must be programmed with VEPS.

Parameter Group	Parameter	Range	Default
8	Vehicle Speed Sensor	0 = No Sensor 1 = C3 Sensor 2 = Square Wave (Hall Sensor) 3 = J1939 (ECT1) 4 = Magnetic Pickup 5 = J1939 (TCO1) 6 = J1939 (CCVS Source 1) 7 = J1939 (CCVS Source 2) 8 = J1939 (CCVS Source 3)	4 = Magnetic
8	Axle Ratio	1 – 20.0	5.29
8	Tire Revs per Unit Distance	160 – 1599	312
8	Top Gear Ratio	0.1 – 2.55	1
8	Second Highest Gear Ratio	0 — 5.75	2.54
8	Two Spd Axle Second Axle Ratio	1 – 20.0	5.29
8	Anti Tamper	0 = Disable 1 = Enable VSS ABS Anti Tampering Function 2 = Enable VSS without ABS Anti Tampering Function	0 = Disable

Table 17-28 Vehicle Speed Sensor Parameters for Transmission Output Shaft Speed

17.7.6.3 VSS Anti-tamper

If the sensor appears to be working improperly, but the vehicle speed is not zero, VSS Anti-Tamper will log a VSS fault.

All information subject to change without notice.
Copyright © 2007 DETROIT DIESEL CORPORATION

https://truckmanualshub.com/

17.8 INSTRUMENT PANEL LAMPS

The instrument panel lamps are listed in Table 17-29.

Lamp	Lamp Name	Description	Driver Action
	Amber Warning Lamp (AWL)	Indicates a fault with the engine controls.	Truck can be driven to end of shift. Call for service.
	Red Stop Lamp (RSL)	Indicates a major engine fault that may result in engine damage Engine derate and / or shutdown sequence will be initiated.	Move the truck to the nearest safe location and shutdown the engine. Call for service
	DPF Regeneration Lamp	Solid yellow indicates a manual regeneration is required. Blinking yellow and derate or shutdown are possible if back pressure exceeds limits. Blinking yellow during stationary regeneration	Truck may be driven to end of shift. Call for service. Blinking light indicates attention required now.
	High Exhaust System Temperature Lamp (HET)	Lamp may be red or yellow. Indicates exhaust temperature is above a preset limit. Illuminates during regeneration process if speed below 30 mph and during stationary regeneration	Truck may be driven. If lamp remains illuminated for an extended period – longer than 40 minutes call for service.
	Malfunction Indicator Lamp (MIL)	Yellow lamp Indicates a failure of an Emission Control device. May illuminate at the same time as the Amber Warning Lamp	Truck may be driven to end of the shift. Call for service

Table 17-29 Instrument Panel Lamps

All information subject to change without notice.
Copyright © 2007 DETROIT DIESEL CORPORATION

https://truckmanualshub.com/

All information subject to change without notice.
Copyright © 2007 DETROIT DIESEL CORPORATION

https://truckmanualshub.com/

18 ENGINE MANUFACTURER DIAGNOSTICS

Section **Page**

18.1 ENGINE MANUFACTURER DIAGNOSTICS DEFINITIONS 18-3
18.2 ENGINE MANUFACTURER DIAGNOSTICS PARAMETER DESCRIPTIONS 18-4

https://truckmanualshub.com/

All information subject to change without notice.
Copyright © 2007 DETROIT DIESEL CORPORATION

https://truckmanualshub.com/

18.1 ENGINE MANUFACTURER DIAGNOSTICS DEFINITIONS

Description – lists the service fault code description which is displayed on the service tool and the extreme value which needs to be met for the fault to be set

Monitored Parameter – the component which is being monitored

Typical Enabling Conditions - conditions which also need to be true for enabling conditions to be active (i.e. coolant temp greater than 100°F)

Monitor Sequence – additional unique conditions which also need to be true in order for enabling conditions to be active (i.e. fault X must also be active in order to monitor a particular failure)

Execution Frequency – how often the fault is monitored when enabling condition (if any) are met

Typical Duration – length of time fault needs to be present to become active, may also include number of drive cycles which need to be completed for fault to become active

All information subject to change without notice.
Copyright © 2007 DETROIT DIESEL CORPORATION

https://truckmanualshub.com/

18.2 ENGINE MANUFACTURER DIAGNOSTICS PARAMETER DESCRIPTIONS

The following tables contain the Engine Manufacturer Diagnostic (EMD) descriptions as mandated by the U.S. government.

SPN 27/FMI 319.1	
Description	EGR Valve Position Circuit Failed High, voltage of sensor > 4.7 V
Monitored Parameter	EGR Valve Position Sensor
Typical Enabling Conditions	Always Enabled
Monitor Sequence	None
Execution Frequency	Always Enabled
Typical Duration	2 seconds

SPN 27/FMI 419.2	
Description	EGR Valve Position Circuit Failed Low, voltage of sensor < 0.25 V
Monitored Parameter	EGR Valve Position Sensor
Typical Enabling Conditions	Always Enabled
Monitor Sequence	None
Execution Frequency	Always Enabled
Typical Duration	2 seconds

SPN 27/FMI 719.3	
Description	EGR Valve Stuck Open, EGR Valve Position 10%
Monitored Parameter	EGR Valve
Typical Enabling Conditions	SPN 2791/FMI 7 Active
Monitor Sequence	SPN 2791/FMI 7 Active
Execution Frequency	Set
Typical Duration	2 seconds

SPN 51/FMI 2	
Description	Intake Throttle Position Feedback Rationality, difference between commanded and actual > 15%
Monitored Parameter	Intake Air Throttle (Position Sensor)
Typical Enabling Conditions	Engine coolant temperature > 60°C
Monitor Sequence	None
Execution Frequency	Continuous when enabling conditions are met
Typical Duration	5 seconds

All information subject to change without notice.
Copyright © 2007 DETROIT DIESEL CORPORATION

https://truckmanualshub.com/

SPN 51/FMI 3	
Description	Intake Air Throttle Circuit Failed High, voltage of sensor > 4.9 V
Monitored Parameter	Intake Air Throttle Position Sensor
Typical Enabling Conditions	Always Enabled
Monitor Sequence	None
Execution Frequency	Always Enabled
Typical Duration	2 seconds

SPN 51/FMI 4	
Description	Intake Air Throttle Circuit Failed Low, voltage of sensor < 0.4 V
Monitored Parameter	Intake Air Throttle Position Sensor
Typical Enabling Conditions	Always Enabled
Monitor Sequence	None
Execution Frequency	Always Enabled
Typical Duration	2 seconds

SPN 103/FMI 027.1	
Description	Turbo Charger Speed Above Threshold (Low Box), turbocharger speed >50000 RPM
Monitored Parameter	Turbocharger Speed
Typical Enabling Conditions	RPM: 575–650, Torque: –100–150 N·m
Monitor Sequence	None
Execution Frequency	Continuous when enabling conditions are met
Typical Duration	10 seconds every second drive cycle

SPN 103/FMI 127.2	
Description	Turbo Charger Speed Below Threshold (High Box), turbocharger speed < 35000 RPM
Monitored Parameter	Turbocharger Speed
Typical Enabling Conditions	RPM: 1400–1700,Torque: 1400–2300 N·m
Monitor Sequence	None
Execution Frequency	Continuous when enabling conditions are met
Typical Duration	10 seconds every second drive cycle

All information subject to change without notice.
Copyright © 2007 DETROIT DIESEL CORPORATION

https://truckmanualshub.com/

SPN 108/FMI 328.1	
Description	Barometric Pressure Circuit Failed High, voltage of sensor > 4.5 V
Monitored Parameter	Barometric Pressure Sensor
Typical Enabling Conditions	Always Enabled
Monitor Sequence	None
Execution Frequency	Always Enabled
Typical Duration	2 seconds

SPN 108/FMI 428.2	
Description	Barometric Pressure Circuit Failed Low, voltage of sensor < 1.8 V
Monitored Parameter	Barometric Pressure Sensor
Typical Enabling Conditions	Always Enabled
Monitor Sequence	None
Execution Frequency	Always Enabled
Typical Duration	2 seconds

SPN 110/FMI 329.2	
Description	Engine Coolant Outlet Temperature Circuit Failed High, voltage of sensor > 2.9 V
Monitored Parameter	Engine Coolant Outlet Temperature Sensor
Typical Enabling Conditions	Always Enabled
Monitor Sequence	None
Execution Frequency	Always Enabled
Typical Duration	2 seconds

SPN 110/FMI 487.2	
Description	Engine Coolant Outlet Temperature Circuit Failed Low, voltage of sensor < 0.10 V
Monitored Parameter	Engine Coolant Outlet Temperature Sensor
Typical Enabling Conditions	Always Enabled
Monitor Sequence	None
Execution Frequency	Always Enabled
Typical Duration	2 seconds

All information subject to change without notice.
Copyright © 2007 DETROIT DIESEL CORPORATION

https://truckmanualshub.com/

SPN 110/FMI 1429.4	
Description	Engine Coolant Temperature / Engine Oil Temperature Rationality Fault, Oil temp - Coolant temp 40°C
Monitored Parameter	Engine Coolant Temperature Sensor
Typical Enabling Conditions	Engine Oil Temperature > 75°C, engine on time > 1200 seconds
Monitor Sequence	None
Execution Frequency	Continuous when enabling conditions are met
Typical Duration	30 seconds every second drive cycle

SPN 132/FMI 131.1	
Description	Desired air mass flow is less than actual
Monitored Parameter	Air Mass Flow
Typical Enabling Conditions	Air Mass Flow > 0.167 kg/s
Monitor Sequence	None
Execution Frequency	Continuous when enabling conditions are met
Typical Duration	45 seconds

SPN 175/FMI 335.1	
Description	Engine Oil Temperature Circuit Failed High, voltage of sensor > 2.9677 V
Monitored Parameter	Engine Oil Temperature Sensor
Typical Enabling Conditions	Always Enabled
Monitor Sequence	None
Execution Frequency	Always Enabled
Typical Duration	2 seconds

SPN 175/FMI 435.2	
Description	Engine Oil Temperature Circuit Failed Low, voltage of sensor < 0.1026 V
Monitored Parameter	Engine Oil Temperature Sensor
Typical Enabling Conditions	Always Enabled
Monitor Sequence	None
Execution Frequency	Always Enabled
Typical Duration	2 seconds

All information subject to change without notice.
Copyright © 2007 DETROIT DIESEL CORPORATION

https://truckmanualshub.com/

SPN 175/FMI 1435.3	
Description	Engine Oil Temperature Sensor Rationality Fault, voltage of sensor < 0.1026 V
Monitored Parameter	Engine Oil Temperature Sensor
Typical Enabling Conditions	Engine coolant temperature out > 71°C, engine on time > 1200 seconds
Monitor Sequence	None
Execution Frequency	Continuous when enabling conditions are met
Typical Duration	30 seconds every second drive cycle

SPN 411/FMI 039.1	
Description	EGR Differential Pressure Failed (Low Box), voltage of sensor < 0.15 mbar
Monitored Parameter	EGR Delta Pressure Sensor
Typical Enabling Conditions	Time at conditions > 120 seconds EGR position demand < 5% RPM: 575–650, Torque: –100–150 N·m Engine run time > 10 seconds Time above Engine Coolant Temperature threshold > 60 seconds Engine Coolant Temperature > 80°C Engine Oil Temperature > 80°C
Monitor Sequence	None
Execution Frequency	Continuous when enabling conditions are met
Typical Duration	30 seconds

SPN 411/FMI 339.2	
Description	EGR Delta Pressure Sensor Circuit High, EGR Delta P > 12 mbar
Monitored Parameter	EGR Delta Pressure Sensor
Typical Enabling Conditions	Always Enabled
Monitor Sequence	None
Execution Frequency	Always Enabled
Typical Duration	2 seconds

SPN 411/FMI 439.3	
Description	EGR Delta Pressure Sensor Circuit Low, voltage of sensor < 0.15 V
Monitored Parameter	EGR Delta Pressure Sensor
Typical Enabling Conditions	Always Enabled
Monitor Sequence	None
Execution Frequency	Always Enabled
Typical Duration	2 seconds

All information subject to change without notice.
Copyright © 2007 DETROIT DIESEL CORPORATION

https://truckmanualshub.com/

SPN 412/FMI 340.1	
Description	EGR Temperature Sensor Circuit Failed High, voltage of sensor >, 2.9 V
Monitored Parameter	EGR Temperature Sensor
Typical Enabling Conditions	EGR on time > 120 seconds Intake manifold temperature > 30°C EGR flow demanded
Monitor Sequence	None
Execution Frequency	Continuous when enabling conditions are met
Typical Duration	2 seconds

SPN 412/FMI 440.2	
Description	EGR Temperature Sensor Circuit Failed Low, voltage of sensor <, 0.1 V
Monitored Parameter	EGR Temperature Sensor
Typical Enabling Conditions	Always Enabled
Monitor Sequence	None
Execution Frequency	Always Enabled
Typical Duration	2 seconds

SPN 625/FMI	
Description	No Data Received from Engine CAN Link
Monitored Parameter	CAN Communication between CPC and MCM
Typical Enabling Conditions	CAN communication status = missing
Monitor Sequence	None
Execution Frequency	Always Enabled
Typical Duration	1 second

SPN 625/FMI 252.1	
Description	Invalid Data on Engine CAN link
Monitored Parameter	CAN Communication between CPC and MCM
Typical Enabling Conditions	CAN communication status = error
Monitor Sequence	None
Execution Frequency	Always Enabled
Typical Duration	1 second

All information subject to change without notice.
Copyright © 2007 DETROIT DIESEL CORPORATION

https://truckmanualshub.com/

SPN 625/FMI 952.2	
Description	MCM Diagnostic Message Missing
Monitored Parameter	MCM_CPC CAN Bus
Typical Enabling Conditions	Diagnostic Message From MCM No Longer Being Received by CPC = missing
Monitor Sequence	None
Execution Frequency	Always Enabled
Typical Duration	7.5 seconds

SPN 625/FMI 952.2	
Description	No MCM Connection
Monitored Parameter	MCM_CPC CAN Bus
Typical Enabling Conditions	Incorrect MCM System ID Received =missing
Monitor Sequence	None
Execution Frequency	Always Enabled
Typical Duration	2 seconds

SPN 625/FMI 940.2	
Description	No ECAN Data
Monitored Parameter	MCM_CPC CAN Bus
Typical Enabling Conditions	MCM system ISD not Received or stopped arriving =missing
Monitor Sequence	None
Execution Frequency	Always Enabled
Typical Duration	0

SPN 625/FMI 10	
Description	MCM Diagnostic Message Implausible
Monitored Parameter	MCM_CPC CAN Bus
Typical Enabling Conditions	Diagnostic Message Inconsistent Number of Frames Received by CPC From MCM = implausible
Monitor Sequence	None
Execution Frequency	Always Enabled
Typical Duration	7.5 seconds

All information subject to change without notice.
Copyright © 2007 DETROIT DIESEL CORPORATION

https://truckmanualshub.com/

SPN 625/FMI 13	
Description	MCM Diagnostic Message Missing
Monitored Parameter	MCM_CPC CAN Bus
Typical Enabling Conditions	Diagnostic Message From MCM Not Received by CPC This Ignition Cycle =missing
Monitor Sequence	None
Execution Frequency	Always Enabled
Typical Duration	7.5 seconds

SPN 636/FMI 2	
Description	Incorrect Match of Camshaft and Crankshaft Signals
Monitored Parameter	Camshaft and Crankshaft Position Sensor
Typical Enabling Conditions	Incorrect tooth ratio detected for longer than 3 rotations
Monitor Sequence	None
Execution Frequency	Always enabled
Typical Duration	2 seconds

SPN 636/FMI 856.5	
Description	Crankshaft Position Sensor Time Out
Monitored Parameter	Crankshaft Position Sensor
Typical Enabling Conditions	No CRK-event happened within a defined period, engine speed > 400 RPM, time > 1.2 seconds
Monitor Sequence	None
Execution Frequency	Always enabled
Typical Duration	2 seconds

SPN 641/FMI 757.1	
Description	Turbo Actuator, Failsafe Mode, Motor On, Command signal from MCM, vane position status = missing, = error
Monitored Parameter	Turbocharger- VGT Actuator
Typical Enabling Conditions	Always enabled
Monitor Sequence	None
Execution Frequency	Always enabled
Typical Duration	7 seconds

All information subject to change without notice.
Copyright © 2007 DETROIT DIESEL CORPORATION

https://truckmanualshub.com/

SPN 641/FMI 957.3	
Description	Turbo Actuator, Failsafe Mode, Motor Off, motor failure or position reference missing = error
Monitored Parameter	Turbocharger- VGT Actuator
Typical Enabling Conditions	Always enabled
Monitor Sequence	None
Execution Frequency	Always enabled
Typical Duration	1 second

SPN 641/FMI 1157.5	
Description	Turbo Actuator, Restricted Operability, slow response, high effort, low voltage or position error > 100%
Monitored Parameter	Turbocharger- VGT Actuator
Typical Enabling Conditions	Always enabled
Monitor Sequence	None
Execution Frequency	Continuous when enabling conditions are met
Typical Duration	2 seconds

SPN 641/FMI 1457.5	
Description	Turbo Actuator, No Failsafe Mode, Motor Off, error status = error
Monitored Parameter	Turbocharger- VGT Actuator
Typical Enabling Conditions	Always enabled
Monitor Sequence	None
Execution Frequency	Always enabled
Typical Duration	7 seconds

SPN 651/FMI 6	
Description	Injector Cylinder #1 Needle Control Valve, Valve Shorted Circuit, driver status = short circuit
Monitored Parameter	Fuel Injector - Needle Control Cyl 1
Typical Enabling Conditions	Always enabled
Monitor Sequence	None
Execution Frequency	Always enabled
Typical Duration	< 5 seconds

All information subject to change without notice.
Copyright © 2007 DETROIT DIESEL CORPORATION

https://truckmanualshub.com/

SPN 651/FMI 1459.1	
Description	Injector Cylinder #1 Needle Control Valve Abnormal Operation
Monitored Parameter	Injector Needle Solenoid Cyl 1
Typical Enabling Conditions	Always enabled
Monitor Sequence	None
Execution Frequency	Always enabled
Typical Duration	< 5 seconds

SPN 652/FMI 6	
Description	Injector Cylinder #2 Needle Control Valve, Valve Shorted Circuit, driver status = short circuit
Monitored Parameter	Fuel Injector - Needle Control Cyl 2
Typical Enabling Conditions	Always enabled
Monitor Sequence	None
Execution Frequency	Always enabled
Typical Duration	< 5 seconds

SPN 652/FMI 1460.1	
Description	Injector Cylinder #2 Needle Control Valve Abnormal Operation
Monitored Parameter	Injector Needle Solenoid Cyl 2
Typical Enabling Conditions	Always enabled
Monitor Sequence	None
Execution Frequency	Always enabled
Typical Duration	< 5 seconds

SPN 653/FMI 6	
Description	Injector Cylinder #3 Needle Control Valve, Valve Shorted Circuit, driver status = short circuit
Monitored Parameter	Fuel Injector - Needle Control Cyl 3
Typical Enabling Conditions	Always enabled
Monitor Sequence	None
Execution Frequency	Always enabled
Typical Duration	< 5 seconds

All information subject to change without notice.
Copyright © 2007 DETROIT DIESEL CORPORATION

https://truckmanualshub.com/

SPN 653/FMI 1461.1	
Description	Injector Cylinder #3 Needle Control Valve Abnormal Operation
Monitored Parameter	Injector Needle Solenoid Cyl 3
Typical Enabling Conditions	Always enabled
Monitor Sequence	None
Execution Frequency	Always enabled
Typical Duration	< 5 seconds

SPN 654/FMI 6	
Description	Injector Cylinder #4 Needle Control Valve, Valve Shorted Circuit, driver status = short circuit
Monitored Parameter	Fuel Injector - Needle Control Cyl 4
Typical Enabling Conditions	Always enabled
Monitor Sequence	None
Execution Frequency	Always enabled
Typical Duration	< 5 seconds

SPN 654/FMI 1462.1	
Description	Injector Cylinder #4 Needle Control Valve Abnormal Operation
Monitored Parameter	Injector Needle Solenoid Cyl 4
Typical Enabling Conditions	Always enabled
Monitor Sequence	None
Execution Frequency	Always enabled
Typical Duration	< 5 seconds

SPN 655/FMI 6	
Description	Injector Cylinder #5 Needle Control Valve, Valve Shorted Circuit, driver status = short circuit
Monitored Parameter	Fuel Injector - Needle Control Cyl 5
Typical Enabling Conditions	Always enabled
Monitor Sequence	None
Execution Frequency	Always enabled
Typical Duration	< 5 seconds

All information subject to change without notice.
Copyright © 2007 DETROIT DIESEL CORPORATION

https://truckmanualshub.com/

SPN 655/FMI 1463.1	
Description	Injector Cylinder #5 Needle Control Valve Abnormal Operation
Monitored Parameter	Injector Needle Solenoid Cyl 5
Typical Enabling Conditions	Always enabled
Monitor Sequence	None
Execution Frequency	Always enabled
Typical Duration	< 5 seconds

SPN 656/FMI 6	
Description	Injector Cylinder #6 Needle Control Valve, Valve Shorted Circuit, driver status = short circuit
Monitored Parameter	Fuel Injector - Needle Control Cyl 6
Typical Enabling Conditions	Always enabled
Monitor Sequence	None
Execution Frequency	Always enabled
Typical Duration	< 5 seconds

SPN 656/FMI 1464.1	
Description	Injector Cylinder #6 Needle Control Valve Abnormal Operation
Monitored Parameter	Fuel Injector - Needle Control Cyl 6
Typical Enabling Conditions	Always enabled
Monitor Sequence	None
Execution Frequency	Always enabled
Typical Duration	< 5 seconds

SPN 723/FMI 877.3	
Description	Camshaft Position Sensor Time Out, No CAM-event happened within a defined period.
Monitored Parameter	Camshaft Position Sensor
Typical Enabling Conditions	Engine speed > 400 RPM:, time > 1.2 seconds
Monitor Sequence	None
Execution Frequency	Continuous when enabling conditions are met
Typical Duration	2 seconds

All information subject to change without notice.
Copyright © 2007 DETROIT DIESEL CORPORATION

https://truckmanualshub.com/

SPN 1172/FMI 284.1	
Description	Compressor Inlet Temp/Coolant Temp Rationality Error (lbox), 5°C
Monitored Parameter	Compressor Inlet and Coolant Temp Sensors
Typical Enabling Conditions	Engine coolant temperature > 80°C RPM: 575–650, Torque: –100–150 N·m
Monitor Sequence	None
Execution Frequency	Continuous when enabling conditions are met
Typical Duration	60 seconds

SPN 1172/FMI 384.2	
Description	Turbocharger Compressor Inlet Temperature Circuit Failed High, voltage of sensor > 2.9677 volts
Monitored Parameter	Turbocharger Compressor Inlet Temperature Sensor
Typical Enabling Conditions	Always Enabled
Monitor Sequence	None
Execution Frequency	Always Enabled
Typical Duration	2 seconds

SPN 1172/FMI 484.3	
Description	Turbocharger Compressor Inlet Temperature Circuit Failed Low, voltage of sensor > 0.1026 volts
Monitored Parameter	Turbocharger Compressor Inlet Temperature Sensor
Typical Enabling Conditions	Always Enabled
Monitor Sequence	None
Execution Frequency	Always Enabled
Typical Duration	2 seconds

SPN 1636/FMI 387.1	
Description	Intake Manifold Temperature Circuit Failed High, voltage of sensor > 2.9677 volts
Monitored Parameter	Intake Manifold Temperature Sensor
Typical Enabling Conditions	Always Enabled
Monitor Sequence	None
Execution Frequency	Always Enabled
Typical Duration	2 seconds

All information subject to change without notice.
Copyright © 2007 DETROIT DIESEL CORPORATION

https://truckmanualshub.com/

SPN 1636/FMI 487.2	
Description	Intake Manifold Temperature Circuit Failed Low, voltage of sensor > 0.1026 volts
Monitored Parameter	Intake Manifold Temperature Sensor
Typical Enabling Conditions	Always Enabled
Monitor Sequence	None
Execution Frequency	Always Enabled
Typical Duration	2 seconds

SPN 1636/FMI 14	
Description	Difference Intake Manifold Temperature and EGR Temp (Low Box)
Monitored Parameter	Intake Manifold and EGR Temperature Sensors
Typical Enabling Conditions	Intake throttle valve commanded position<= 1% Engine coolant temperature > 60°C EGR flow demanded Engine variant switch 1=s60 RPM: 1400–1700, Torque: 1400–2300 N·m
Monitor Sequence	None
Execution Frequency	Continuous when enabling conditions are met
Typical Duration	30 seconds

SPN 1636/FMI 2087.3	
Description	Intake Manifold Temperature Drift (Low Box)
Monitored Parameter	Intake Manifold Temperature
Typical Enabling Conditions	RPM: 575–650, Torque: –100–150 N·m
Monitor Sequence	None
Execution Frequency	Continuous when enabling conditions are met
Typical Duration	300 seconds

SPN 1636/FMI 2187.4	
Description	Intake Manifold Temperature Drift (High Box), Intake Manifold Temperature <= -20°C
Monitored Parameter	Intake Manifold Temperature
Typical Enabling Conditions	EGR mass flow demand > 0.0567 kg/s Engine Coolant Temperature> 60°C Engine in high_box No. 2 (Refer to Hbox and Lbox Tab for Calibrations) = 1400–1700 RPM:,Torque: 1400–2300 N·m
Monitor Sequence	None
Execution Frequency	Continuous when enabling conditions are met
Typical Duration	60 seconds

All information subject to change without notice.
Copyright © 2007 DETROIT DIESEL CORPORATION

https://truckmanualshub.com/

SPN 2629/FMI 391.1	
Description	Turbocharger Compressor Outlet Temperature Circuit Failed High, voltage of sensor >, 3.0 V
Monitored Parameter	Turbocharger Compressor Outlet Temperature Sensor
Typical Enabling Conditions	Minimum run time > 120 seconds Turbo outlet temperature > 50°C
Monitor Sequence	None
Execution Frequency	Continuous when enabling conditions are met
Typical Duration	2 seconds

SPN 2629/FMI 491.2	
Description	Turbocharger Compressor Outlet Temperature Circuit Failed Low, voltage of sensor < 0.1 V
Monitored Parameter	Turbocharger Compressor Outlet Temperature Sensor
Typical Enabling Conditions	Always Enabled
Monitor Sequence	None
Execution Frequency	Always Enabled
Typical Duration	2 seconds

SPN 2629/FMI 2091.3	
Description	Turbocharger Out Temperature, Temperature Too High (Low Box)
Monitored Parameter	Compressor Discharge Temperature
Typical Enabling Conditions	Intake Throttle Valved Position> = 0% RPM: 575–650, Torque: –100–150 N·m > 120 seconds
Monitor Sequence	None
Execution Frequency	Continuous when enabling conditions are met
Typical Duration	10 seconds

SPN 2629/FMI 2191.4	
Description	Turbocharger Out Temperature, Temperature Too Low (High Box), turbo compressor outlet temp < 150°C
Monitored Parameter	Compressor Discharge Temperature
Typical Enabling Conditions	Intake Throttle Valved Position> = 0% RPM: 1400–1700, Torque: 1400–2300 N·m > 120 Seconds
Monitor Sequence	None
Execution Frequency	Continuous when enabling conditions are met
Typical Duration	10 seconds

All information subject to change without notice.
Copyright © 2007 DETROIT DIESEL CORPORATION

https://truckmanualshub.com/

SPN 2659/FMI 092.1	
Description	EGR Flow Target Error Diagnostic - High Flow, 0.0583 kg/s
Monitored Parameter	EGR System
Typical Enabling Conditions	use intake pressure or intake cooler pressure (1 --> intake), 1=s60
Monitor Sequence	None
Execution Frequency	Continuous when enabling conditions are met
Typical Duration	120 seconds

SPN 2659/FMI 192.2	
Description	EGR Flow Target Error Diagnostic - Low Flow, -0.5 kg/s
Monitored Parameter	EGR System
Typical Enabling Conditions	EGR Flow Commanded
Monitor Sequence	None
Execution Frequency	Continuous when enabling conditions are met
Typical Duration	120 seconds

SPN 2791/FMI 393.1	
Description	EGR Valve Circuit Failed High, driver status = Short Circuit to Battery
Monitored Parameter	EGR Output Driver Circuit
Typical Enabling Conditions	Always Enabled
Monitor Sequence	None
Execution Frequency	Always Enabled
Typical Duration	0.4 seconds

SPN 2791/FMI 493.2	
Description	EGR Valve Circuit Failed Low, driver status = Short Circuit to Ground
Monitored Parameter	EGR Output Driver Circuit
Typical Enabling Conditions	Always Enabled
Monitor Sequence	None
Execution Frequency	Always Enabled
Typical Duration	1.8 seconds

All information subject to change without notice.
Copyright © 2007 DETROIT DIESEL CORPORATION

https://truckmanualshub.com/

SPN 2791/FMI 593.3	
Description	EGR Valve Circuit Failed Open, driver status = Open Load
Monitored Parameter	EGR Output Driver Circuit
Typical Enabling Conditions	Always Enabled
Monitor Sequence	None
Execution Frequency	Always Enabled
Typical Duration	2 seconds

SPN 2791/FMI 793.4	
Description	EGR Valve Position Incorrect, EGR command position different from EGR actual position 15%
Monitored Parameter	EGR Valve
Typical Enabling Conditions	Always Enabled
Monitor Sequence	None
Execution Frequency	Always Enabled
Typical Duration	1.8 seconds

SPN 2797/FMI 395.1	
Description	Injector Needle Control Valve Cylinder 1,2,3 Shorted to Battery, driver status = short circuit
Monitored Parameter	Fuel Injector - Needle Control Bank 1
Typical Enabling Conditions	Always Enabled
Monitor Sequence	None
Execution Frequency	Always Enabled
Typical Duration	< 5 seconds

SPN 2797/FMI 495.2	
Description	Injector Needle Control Valve Cylinder 1, 2, 3 Shorted to Ground, driver status = short circuit
Monitored Parameter	Fuel Injector - Needle Control Bank 1
Typical Enabling Conditions	Always Enabled
Monitor Sequence	None
Execution Frequency	Always Enabled
Typical Duration	< 5 seconds

All information subject to change without notice.
Copyright © 2007 DETROIT DIESEL CORPORATION

https://truckmanualshub.com/

SPN 2797/FMI 595.3	
Description	Injector Spill Control Valve Cylinder 1,2,3 Shorted to Battery, driver status = short circuit
Monitored Parameter	Fuel Injector - Spill Control Bank 1
Typical Enabling Conditions	Always Enabled
Monitor Sequence	None
Execution Frequency	Always Enabled
Typical Duration	< 5 seconds

SPN 2797/FMI 695.4	
Description	Injector Spill Control Valve Cylinder 1, 2, 3 Shorted to Ground, driver status = short circuit
Monitored Parameter	Fuel Injector - Spill Control Bank 1 Cyl 1,2,3
Typical Enabling Conditions	Always Enabled
Monitor Sequence	None
Execution Frequency	Always Enabled
Typical Duration	< 5 seconds

SPN 2798/FMI 396.1	
Description	Injector Needle Control Valve Cylinder 4,5,6 Shorted to Battery, driver status = short circuit
Monitored Parameter	Fuel Injector - Needle Control Bank 2
Typical Enabling Conditions	Always Enabled
Monitor Sequence	None
Execution Frequency	Always Enabled
Typical Duration	< 5 seconds

SPN 2798/FMI 496.2	
Description	Injector Needle Control Valve Cylinder 4, 5, 6 Shorted to Ground, driver status = short circuit
Monitored Parameter	Fuel Injector - Needle Control Bank 2
Typical Enabling Conditions	Always Enabled
Monitor Sequence	None
Execution Frequency	Always Enabled
Typical Duration	< 5 seconds

All information subject to change without notice.
Copyright © 2007 DETROIT DIESEL CORPORATION

https://truckmanualshub.com/

SPN 2798/FMI 596.1	
Description	Injector Spill Control Valve Cylinder 4,5,6 Shorted to Battery, driver status = short circuit
Monitored Parameter	Fuel Injector - Spill Control Bank 2
Typical Enabling Conditions	Always Enabled
Monitor Sequence	None
Execution Frequency	Always Enabled
Typical Duration	< 5 seconds

SPN 2798/FMI 696.4	
Description	Injector Spill Control Valve Cylinder 4, 5, 6 Shorted to Ground, driver status = short circuit
Monitored Parameter	Fuel Injector - Spill Control Bank 2, cyl 4,5,6
Typical Enabling Conditions	Always Enabled
Monitor Sequence	None
Execution Frequency	Always Enabled
Typical Duration	< 5 seconds

SPN 3246/FMI 0	
Description	DPF Outlet Temperature Too High, DPF temperature out > 760°C
Monitored Parameter	Diesel Particulate Filter
Typical Enabling Conditions	Always Enabled
Monitor Sequence	None
Execution Frequency	Always Enabled
Typical Duration	2 seconds

SPN 3246/FMI 3	
Description	DPF Outlet Temperature Sensor Failed High, voltage of sensor > 2 volts
Monitored Parameter	DPF Outlet Temp
Typical Enabling Conditions	Always Enabled
Monitor Sequence	None
Execution Frequency	Always Enabled
Typical Duration	2 seconds

All information subject to change without notice.
Copyright © 2007 DETROIT DIESEL CORPORATION

https://truckmanualshub.com/

SPN 3246/FMI 4	
Description	DPF Outlet Temperature Sensor Failed Low, voltage of sensor < 0.1994 volts
Monitored Parameter	DPF Outlet Temp
Typical Enabling Conditions	Always Enabled
Monitor Sequence	None
Execution Frequency	Always Enabled
Typical Duration	2 seconds

SPN 3246/FMI 10	
Description	DPF Outlet Temperature Sensor Stuck, temperature difference < 2°C
Monitored Parameter	DPF Outlet Temp
Typical Enabling Conditions	Time delay after calculation < 0 seconds Engine on time > 360 seconds RPM: 575–650, Torque: –100–150 N·m > 360 seconds RPM: 1400–1700, Torque: 1400–2300 N·m> 130 seconds
Monitor Sequence	None
Execution Frequency	Continuous when enabling conditions are met
Typical Duration	—

SPN 3251/FMI 0	
Description	DPF Pressure Out of Range High, Difference between desired and actual air mass > 0 kg/s DPF Pressure in - DPF Pressure out > See 2D Table 3 Time that limit is exceeded > 10 seconds Number of occurrences >= 4 Engine load >= 10% Engine load < 100% Engine RPM: >= 1200 min-1 Engine RPM: < 1800 min-1
Monitored Parameter	Diesel Particulate Filter
Typical Enabling Conditions	Always Enabled
Monitor Sequence	None
Execution Frequency	Always Enabled
Typical Duration	0 seconds

All information subject to change without notice.
Copyright © 2007 DETROIT DIESEL CORPORATION

https://truckmanualshub.com/

SPN 3251/FMI 1	
Description	DPF Pressure Out of Range Low, DPF Pressure in - DPF Pressure out < See 2D Table 4 Engine load < 100% Engine load >= 80% Engine RPM: < 1900 min-1 Engine RPM: >= 1500 min-1 Time that limit is exceeded > 15 seconds Number of occurrences >= 4
Monitored Parameter	Diesel Particulate Filter
Typical Enabling Conditions	Always Enabled
Monitor Sequence	None
Execution Frequency	Always Enabled
Typical Duration	0 seconds

SPN 3464/FMI 14	
Description	Intake Throttle Valve, Integrated Absolute Error Rationality, integrated absolute error > 20%, See 2D Table 2
Monitored Parameter	Intake Throttle Valve
Typical Enabling Conditions	eom engine state, ignition status stop, on
Monitor Sequence	None
Execution Frequency	Continuous when enabling conditions are met
Typical Duration	0 seconds

SPN 3509/FMI 3106.1	
Description	Multiplexer 1 channel 1 or channel 2, Shorted to High
Monitored Parameter	DOC temperature-out, DOC temperature-in, DPF temperature-out, detect voltage > 2.9677 volts (MUX1-CH1), Compressor temperature-in, detect voltage > 2.9677 volts (MUX1-CH2)
Typical Enabling Conditions	Always Enabled
Monitor Sequence	None
Execution Frequency	Always Enabled
Typical Duration	2 seconds

All information subject to change without notice.
Copyright © 2007 DETROIT DIESEL CORPORATION

https://truckmanualshub.com/

SPN 3510/FMI 3108.2	
Description	Multiplexer 2 channel 2, Shorted to High, detect voltage > 2.9677 volts
Monitored Parameter	Oil temperature, Fuel temperature (MUX2-CH2)
Typical Enabling Conditions	Always Enabled
Monitor Sequence	None
Execution Frequency	Always Enabled
Typical Duration	2 seconds

SPN 3511/FMI 3109.1	
Description	Multiplexer 3 channel 2, Shorted to High, detect voltage > 2.9677 volts
Monitored Parameter	Barometric pressure (MUX3-CH2)
Typical Enabling Conditions	Always Enabled
Monitor Sequence	None
Execution Frequency	Always Enabled
Typical Duration	2 seconds

SPN 3563/FMI 0111.1	
Description	Inlet Manifold Pressure Failed High, Inlet Manifold Pressure > 1600 mbar
Monitored Parameter	Intake Manifold Pressure Sensor
Typical Enabling Conditions	RPM: 575–650, Torque: –100–150 N·m Intake air throttle position < 10%
Monitor Sequence	None
Execution Frequency	Continuous when enabling conditions are met
Typical Duration	30 seconds

SPN 3563/FMI 1111.2	
Description	Inlet Manifold Pressure Failed Low, Inlet Manifold Pressure
Monitored Parameter	Intake Manifold Pressure Sensor
Typical Enabling Conditions	RPM: 1400–1700, Torque: 1700–2300 N·m Intake air throttle position < 10%
Monitor Sequence	None
Execution Frequency	Continuous when enabling conditions are met
Typical Duration	30 seconds

All information subject to change without notice.
Copyright © 2007 DETROIT DIESEL CORPORATION

https://truckmanualshub.com/

SPN 3563/FMI 3111.3	
Description	Intake Manifold Pressure Circuit Failed High, voltage of sensor > 4.785 volts
Monitored Parameter	Intake Manifold Pressure Sensor
Typical Enabling Conditions	Always Enabled
Monitor Sequence	None
Execution Frequency	Always Enabled
Typical Duration	Always Enabled

SPN 3563/FMI 4111.4	
Description	Intake Manifold Pressure Circuit Failed Low, voltage of sensor < 0.1515 volts
Monitored Parameter	Intake Manifold Pressure Sensor
Typical Enabling Conditions	Always Enabled
Monitor Sequence	None
Execution Frequency	Always Enabled
Typical Duration	Always Enabled

SPN 3563/FMI 20111.5	
Description	Ambient and Inlet Manifold Pressure Difference (Low Box)
Monitored Parameter	Intake Manifold and Baro Pressure Sensors
Typical Enabling Conditions	Intake air throttle position < 10% RPM: 575–650,Torque: –100–150 N·m
Monitor Sequence	None
Execution Frequency	Continuous when enabling conditions are met
Typical Duration	30 seconds

SPN 3563/FMI 21111.6	
Description	Ambient and Inlet Manifold Pressure Difference (High Box)
Monitored Parameter	Intake Manifold and Baro Pressure Sensors
Typical Enabling Conditions	Intake air throttle position < 10% RPM: 1400–1700, Torque: 1400–2300 N·m
Monitor Sequence	None
Execution Frequency	Continuous when enabling conditions are met
Typical Duration	30 seconds

All information subject to change without notice.
Copyright © 2007 DETROIT DIESEL CORPORATION

https://truckmanualshub.com/

SPN 3597/FMI 3	
Description	Proportional Valve Bank 1 Circuit Failed High, driver status = Short Circuit high
Monitored Parameter	MCM internal power supply
Typical Enabling Conditions	Always Enabled
Monitor Sequence	None
Execution Frequency	Always Enabled
Typical Duration	2 seconds

SPN 3597/FMI 4	
Description	Proportional Valve Bank 1 Circuit Failed Low, driver status = Short Circuit low
Monitored Parameter	MCM internal power supply
Typical Enabling Conditions	Always Enabled
Monitor Sequence	None
Execution Frequency	Always Enabled
Typical Duration	2 seconds

SPN 3598/FMI 3	
Description	Proportional Valve Bank 2 Circuit Failed High, driver status = Short Circuit high
Monitored Parameter	MCM internal power supply
Typical Enabling Conditions	Always Enabled
Monitor Sequence	None
Execution Frequency	Always Enabled
Typical Duration	2 seconds

SPN 3598/FMI 4	
Description	Proportional Valve Bank 2 Circuit Failed Low, driver status = Short Circuit low
Monitored Parameter	MCM internal power supply
Typical Enabling Conditions	Always Enabled
Monitor Sequence	None
Execution Frequency	Always Enabled
Typical Duration	2 seconds

All information subject to change without notice.
Copyright © 2007 DETROIT DIESEL CORPORATION

https://truckmanualshub.com/

SPN 3609/FMI 2	
Description	DPF Inlet Pressure Sensor Drifted High In Range Fault (High Box)
Monitored Parameter	DPF Inlet Pressure Sensor
Typical Enabling Conditions	RPM: 1400–1700, Torque: 1700–2300 N·m
Monitor Sequence	None
Execution Frequency	Continuous when enabling conditions are met
Typical Duration	3 seconds

SPN 3609/FMI 3	
Description	DPF Inlet Pressure Circuit Failed High, voltage of sensor > 4.8 volts
Monitored Parameter	DPF Inlet Pressure Sensor
Typical Enabling Conditions	Always Enabled
Monitor Sequence	None
Execution Frequency	Always Enabled
Typical Duration	2 seconds

SPN 3609/FMI 4	
Description	DPF Inlet Pressure Circuit Failed Low, voltage of sensor < 0.15 volts
Monitored Parameter	DPF Inlet Pressure Sensor
Typical Enabling Conditions	Always Enabled
Monitor Sequence	None
Execution Frequency	Always Enabled
Typical Duration	2 seconds

SPN 3609/FMI 10	
Description	DPF Inlet Pressure Sensor Stuck, DPF Inlet Pressure difference < 5 mbar
Monitored Parameter	DPF Inlet Pressure Sensor
Typical Enabling Conditions	Engine running for > 0 seconds Time since last regen > 300 seconds RPM: 575–650, Torque: –100–150 N·m > 270 seconds RPM: 1400–1700, Torque: 1700–2300 N·m > 15 seconds
Monitor Sequence	None
Execution Frequency	Continuous when enabling conditions are met
Typical Duration	0 seconds

All information subject to change without notice.
Copyright © 2007 DETROIT DIESEL CORPORATION

https://truckmanualshub.com/

SPN 3609/FMI 20	
Description	DPF Inlet Pressure Sensor Drifted High In Range Fault (Low Box), DPF Inlet Pressure
Monitored Parameter	DPF Inlet Pressure Sensor
Typical Enabling Conditions	RPM: 575–650, Torque: –100–150 N·m
Monitor Sequence	None
Execution Frequency	Continuous when enabling conditions are met
Typical Duration	10 seconds

SPN 3609/FMI 21	
Description	DPF Inlet Pressure Sensor Drifted Low In Range Fault (High Box), DPF Inlet Pressure
Monitored Parameter	DPF Inlet Pressure Sensor
Typical Enabling Conditions	RPM: 1400–1700, Torque: 1700–2300 N·m
Monitor Sequence	None
Execution Frequency	Continuous when enabling conditions are met
Typical Duration	15 seconds

SPN 3610/FMI 3	
Description	DPF Outlet Pressure Circuit Failed High, voltage of sensor > 4.785 volts
Monitored Parameter	DPF Outlet Pressure Sensor
Typical Enabling Conditions	Always Enabled
Monitor Sequence	None
Execution Frequency	Always Enabled
Typical Duration	2 seconds

SPN 3610/FMI 4	
Description	DPF Outlet Pressure Circuit Failed Low, voltage of sensor < 0.1515 volts
Monitored Parameter	DPF Outlet Pressure Sensor
Typical Enabling Conditions	Always Enabled
Monitor Sequence	None
Execution Frequency	Always Enabled
Typical Duration	2 seconds

All information subject to change without notice.
Copyright © 2007 DETROIT DIESEL CORPORATION

https://truckmanualshub.com/

SPN 3610/FMI 14	
Description	DPF Outlet Pressure Sensor Drifted High In Range Fault (High Box), DPF Outlet Pressure > 120 mbar
Monitored Parameter	DPF Outlet Pressure Sensor
Typical Enabling Conditions	RPM: 1400–1700, Torque: 1700–2300 N·m
Monitor Sequence	None
Execution Frequency	Continuous when enabling conditions are met
Typical Duration	10 seconds

SPN 3610/FMI 20	
Description	DPF Outlet Pressure Sensor Drifted High In Range Fault (Low Box)
Monitored Parameter	DPF Outlet Pressure Sensor
Typical Enabling Conditions	RPM: 575–650, Torque: –100–150 N·m
Monitor Sequence	None
Execution Frequency	Continuous when enabling conditions are met
Typical Duration	10 seconds

SPN 3659/FMI 6	
Description	Injector Cylinder #1 Spill Control Valve ("Amplifier"), Valve Shorted Circuit, driver status = short circuit
Monitored Parameter	Fuel Injector - Spill Control Valve Current EUI Cyl 1
Typical Enabling Conditions	Always Enabled
Monitor Sequence	None
Execution Frequency	Always Enabled
Typical Duration	< 5 seconds

SPN 3659/FMI 14117.1	
Description	Injector Cylinder #1 Spill Control Valve Abnormal Operation, Verifies appropriate peak current is achieved in specified time duration
Monitored Parameter	Fuel Injector Spill Solenoid Cyl 1
Typical Enabling Conditions	When there is no circuit continuity on relevant cylinder or injector bank
Monitor Sequence	None
Execution Frequency	Always Enabled
Typical Duration	< 5 seconds

All information subject to change without notice.
Copyright © 2007 DETROIT DIESEL CORPORATION

https://truckmanualshub.com/

SPN 3660/FMI 6	
Description	Injector Cylinder #2 Spill Control Valve ("Amplifier"), Valve Shorted Circuit, driver status = short circuit
Monitored Parameter	Fuel Injector - Spill Control Valve Current EUI Cyl 2
Typical Enabling Conditions	Always Enabled
Monitor Sequence	None
Execution Frequency	Always Enabled
Typical Duration	< 5 seconds

SPN 3660/FMI 14118.1	
Description	Injector Cylinder #2 Spill Control Valve Abnormal Operation, Verifies appropriate peak current is achieved in specified time duration
Monitored Parameter	Fuel Injector Spill Solenoid Cyl 2
Typical Enabling Conditions	When there is no circuit continuity on relevant cylinder or injector bank
Monitor Sequence	None
Execution Frequency	Always Enabled
Typical Duration	< 5 seconds

SPN 3661/FMI 6	
Description	Injector Cylinder #3 Spill Control Valve ("Amplifier"), Valve Shorted Circuit, driver status = short circuit
Monitored Parameter	Fuel Injector - Spill Control Valve Current EUI Cyl 3
Typical Enabling Conditions	Always Enabled
Monitor Sequence	None
Execution Frequency	Always Enabled
Typical Duration	< 5 seconds

SPN 3661/FMI 14119.1	
Description	Injector Cylinder #3 Spill Control Valve Abnormal Operation, Verifies appropriate peak current is achieved in specified time duration
Monitored Parameter	Fuel Injector Spill Solenoid Cyl 3
Typical Enabling Conditions	When there is no circuit continuity on relevant cylinder or injector bank
Monitor Sequence	None
Execution Frequency	Always Enabled
Typical Duration	< 5 seconds

All information subject to change without notice.
Copyright © 2007 DETROIT DIESEL CORPORATION

https://truckmanualshub.com/

SPN 3662/FMI 6	
Description	Injector Cylinder #4 Spill Control Valve ("Amplifier"), Valve Shorted Circuit, driver status = short circuit
Monitored Parameter	Fuel Injector - Spill Control Valve Current EUI Cyl 4
Typical Enabling Conditions	Always Enabled
Monitor Sequence	None
Execution Frequency	Always Enabled
Typical Duration	< 5 seconds

SPN 3662/FMI 14120.1	
Description	Injector Cylinder #4 Spill Control Valve Abnormal Operation, Verifies appropriate peak current is achieved in specified time duration
Monitored Parameter	Fuel Injector Spill Solenoid Cyl 4
Typical Enabling Conditions	When there is no circuit continuity on relevant cylinder or injector bank
Monitor Sequence	None
Execution Frequency	Always Enabled
Typical Duration	< 5 seconds

SPN 3663/FMI 6	
Description	Injector Cylinder #5 Spill Control Valve ("Amplifier"), Valve Shorted Circuit, driver status = short circuit
Monitored Parameter	Fuel Injector - Spill Control Valve Current EUI Cyl 5
Typical Enabling Conditions	Always Enabled
Monitor Sequence	None
Execution Frequency	Always Enabled
Typical Duration	< 5 seconds

SPN 3663/FMI 14121.1	
Description	Injector Cylinder #5 Spill Control Valve Abnormal Operation, Verifies appropriate peak current is achieved in specified time duration
Monitored Parameter	Fuel Injector Spill Solenoid Cyl 5
Typical Enabling Conditions	When there is no circuit continuity on relevant cylinder or injector bank
Monitor Sequence	None
Execution Frequency	Always Enabled
Typical Duration	< 5 seconds

All information subject to change without notice.
Copyright © 2007 DETROIT DIESEL CORPORATION

https://truckmanualshub.com/

SPN 3664/FMI 6	
Description	Injector Cylinder #6 Spill Control Valve ("Amplifier"), Valve Shorted Circuit, driver status = short circuit
Monitored Parameter	Fuel Injector - Spill Control Valve Current EUI Cyl 6
Typical Enabling Conditions	Always Enabled
Monitor Sequence	None
Execution Frequency	Always Enabled
Typical Duration	< 5 seconds

SPN 3664/FMI 14122.1	
Description	Injector Cylinder #6 Spill Control Valve Abnormal Operation, Verifies appropriate peak current is achieved in specified time duration
Monitored Parameter	Fuel Injector Spill Solenoid Cyl 6
Typical Enabling Conditions	When there is no circuit continuity on relevant cylinder or injector bank
Monitor Sequence	None
Execution Frequency	Always Enabled
Typical Duration	< 5 seconds

All information subject to change without notice.
Copyright © 2007 DETROIT DIESEL CORPORATION

https://truckmanualshub.com/

All information subject to change without notice.
Copyright © 2007 DETROIT DIESEL CORPORATION

https://truckmanualshub.com/

19 SPN 27 - EGR VALVE POSITION CIRCUIT FAULT

Section **Page**

19.1 SPN 27/FMI 3 19-3
19.2 SPN 27/FMI 4 19-4
19.3 SPN 27/FMI 7 19-7

https://truckmanualshub.com/

All information subject to change without notice.
Copyright © 2007 DETROIT DIESEL CORPORATION

https://truckmanualshub.com/

19.1 SPN 27/FMI 3

This diagnostic condition is typically the EGR valve position circuit failed high.

19.1.1 EGR Valve Position Circuit Check

Check as follows:

1. Disconnect the EGR valve.
2. Turn the ignition ON (key ON, engine OFF).
3. Measure the voltage between pin 4 of the EGR connector harness and ground.
   [a] If the voltage is present, repair the short to power between pin 4 of the EGR connector harness and pin 60 of the 120–pin MCM connector. Refer to section 19.1.1.1.
   [b] If there is no voltage present, go to step 4.
4. Measure the voltage between pin 3 of the EGR connector harness and ground.
   [a] If the voltage is present, repair the short to power between pin 3 of the EGR connector harness and pin 67 of the 120–pin MCM connector. Refer to section 19.1.1.1.
   [b] If there is no voltage present, go to step 5.
5. Turn the ignition OFF.
6. Disconnect the MCM 120–pin connector.
7. Measure the resistance from pin 3 of the EGR connector harness and pin 67 of the 120–pin MCM connector.
   [a] If the resistance is greater than 2 Ω, repair the open between pin 3 of the EGR connector harness and pin 67 of the 120–pin MCM connector. Refer to section 19.1.1.1.
   [b] If the resistance is less than 3 Ω, replace the EGR valve. Refer to section 19.1.1.1.

19.1.1.1 Verify Repairs

Verify repairs as follows:

1. Turn ignition OFF.
2. Reconnect any electrical connections that were disconnected to perform the diagnosis.
3. Clear codes with DDDL 7.0 or latest version.
4. Start and bring engine up to operating temperature (over 140°F/60°C).
5. Verify operation is satisfactory and no warning lamps illuminate. If warning lamps illuminate, troubleshoot the codes. If assistance is required, call the Detroit Diesel Customer Support Center at 313–592–5800.

All information subject to change without notice.
Copyright © 2007 DETROIT DIESEL CORPORATION

https://truckmanualshub.com/

19.2 SPN 27/FMI 4

This diagnostic condition is typically a circuit failed high.

19.2.1 EGR Valve Position Circuit Check

Check as follows:

1. Check for multiple codes.
   - [a] If 27/4, 2791/5 and 1073/4 are present, repair the open between pin 62 of the 120–pin MCM connector, the EGR valve and the Front Jake Brake Solenoid. Refer to section 19.2.1.1.
   - [b] If 27/4 and 3471/4 are present, go to step 6.
   - [c] If 27/4 and 3482/4 are present, go to step 8.
   - [d] If 27/4 and 1073/4 are present, go to step 10.
   - [e] If 27/4 and 615/4 are present, go to step 14.
   - [f] If only 27/4 is present, go to step 2.
2. Disconnect the EGR valve harness connector.
3. Measure the resistance between pin 4 of the EGR valve harness connector and ground.
   - [a] If the resistance is less than 1 kΩ, repair the short to ground between pin 4 of the EGR valve harness connector and pin 60 of the 120–pin MCM connector. Refer to section 19.2.1.1.
   - [b] If the resistance is greater than 1 kΩ, go to step 4.
4. Disconnect the MCM 120–pin connector.
5. Measure the resistance between pin 4 of the EGR valve harness connector and pin 60 of the 120–pin MCM connector.
   - [a] If the resistance is greater than 3 Ω, repair the open between pin 4 of the EGR valve harness connector and pin 60 of the 120–pin MCM connector. Refer to section 19.2.1.1.
   - [b] If the resistance is less than 3 Ω, replace the EGR valve. Refer to section 19.2.1.1.
6. Monitor the active codes; unplug the Electronic Dosing Valve (EDV). Does the code become inactive?
   - [a] If yes, replace the EDV. Refer to section 19.2.1.1.
   - [b] If no, go to step 7.
7. Unplug the EGR valve. Does the code become inactive?
   - [a] If yes, replace the EGR valve. Refer to section 19.2.1.1.
   - [b] If no, repair the short to ground on circuit 65 of the 120–pin MCM connector. Refer to section 19.2.1.1.

All information subject to change without notice.
Copyright © 2007 DETROIT DIESEL CORPORATION

https://truckmanualshub.com/

8. Monitor the active codes; unplug the Fuel Cutoff Valve (FCV). Does the code become inactive?
   [a] If yes, replace the FCV. Refer to section 19.2.1.1.
   [b] If no, go to step 9.
9. Unplug the EGR valve. Does the code become inactive?
   [a] If yes, replace the EGR valve. Refer to section 19.2.1.1.
   [b] If no, repair the short to ground on circuit 69 of the 120–pin MCM connector. Refer to section 19.2.1.1.
10. Monitor the active codes; unplug the EGR valve. Does the code become inactive?
   [a] If yes, replace the EGR valve. Refer to section 19.2.1.1.
   [b] If no, go to step 11.
11. Turn the ignition to the OFF position.
12. Remove the upper valve cover.
13. Disconnect the front Jake Brake solenoid. Does the code become inactive?
   [a] If yes, replace the front Jake Brake solenoid. Refer to section 19.2.1.1.
   [b] If no, repair the short to ground on circuit 32 of the 120–pin MCM connector. Refer to section 19.2.1.1.
14. Monitor the active codes; unplug the Fuel Cutoff Valve (FCV). Does the code become inactive?
   [a] If yes, replace the FCV. Refer to section 19.2.1.1.
   [b] If no, go to step 15.
15. Unplug the EGR valve. Does the code become inactive?
   [a] If yes, replace the EGR valve. Refer to section 19.2.1.1.
   [b] If no, replace the FCV. go to step 16.
16. Unplug the Electronic Dosing Valve (EDV). Does the code become inactive?
   [a] If yes, replace the EDV. Refer to section 19.2.1.1.
   [b] If no, repair the short to ground on circuits 62 and/or 64 of the 120–pin MCM connector. Refer to section 19.2.1.1..

All information subject to change without notice.
Copyright © 2007 DETROIT DIESEL CORPORATION

https://truckmanualshub.com/

19.2.1.1 Verify Repairs

Verify repairs as follows:

1. Turn ignition OFF.
2. Reconnect any electrical connections that were disconnected to perform the diagnosis.
3. Clear codes with DDDL 7.0 or latest version.
4. Start and bring engine up to operating temperature (over 140°F/60°C).
5. Verify operation is satisfactory and no warning lamps illuminate. If warning lamps illuminate, troubleshoot the codes. If assistance is required, call the Detroit Diesel Customer Support Center at 313–592–5800.

All information subject to change without notice.
Copyright © 2007 DETROIT DIESEL CORPORATION

https://truckmanualshub.com/

19.3 SPN 27/FMI 7

This diagnostic condition is typically the EGR valve stuck open.

19.3.1 Valve Function Check

Check as follows:

1. Turn the ignition ON (key ON, engine OFF).
2. Using DDDL 7.0, monitor the EGR Actual Position while activating PWM1 to 50% for 15 seconds.
3. Is the EGR Actual Position reading between 42 and 48%?
   [a] If yes, go to step 6.
   [b] If no, go to step 4.
4. Remove the EGR valve.
5. Inspect the EGR valve butterfly for signs of excessive soot or white residue.
   [a] If white residue is found, repair the cause of coolant contamination and possible EGR cooler failure. Once the source of coolant contamination is repaired, replace the EGR valve. Refer to section 19.3.1.1.
   [b] If excessive soot residue if found, correct the cause of soot contamination and possible CAC system leaks. Once the source of soot contamination is repaired, replace the EGR valve. Refer to section 19.3.1.1.
   [c] If no contamination is found, replace the EGR valve. Refer to section 19.3.1.1.
6. Disconnect the EGR valve connector.
7. Inspect the connector for bent, spread or corroded pins.
   [a] If damage is found, repair as necessary.
   [b] If no damage is found, contact the Detroit Diesel Customer Support Center at 313–592–5800.

19.3.1.1 Verify Repairs

Verify repairs as follows:

1. Turn ignition OFF.
2. Reconnect any electrical connections that were disconnected to perform the diagnosis.
3. Clear codes with DDDL 7.0 or latest version.
4. Start and bring engine up to operating temperature (over 140°F/60°C).
5. Verify operation is satisfactory and no warning lamps illuminate. If warning lamps illuminate, troubleshoot the codes. If assistance is required, call the Detroit Diesel Customer Support Center at 313–592–5800.

All information subject to change without notice.
Copyright © 2007 DETROIT DIESEL CORPORATION

https://truckmanualshub.com/

All information subject to change without notice.
Copyright © 2007 DETROIT DIESEL CORPORATION

https://truckmanualshub.com/

20 SPN 51 - INTAKE THROTTLE VALVE ABOVE OR BELOW NORMAL OPERATING RANGE

Section **Page**

20.1 SPN 51/FMI 2, 3 OR 4 20-3

https://truckmanualshub.com/

All information subject to change without notice.
Copyright © 2007 DETROIT DIESEL CORPORATION

https://truckmanualshub.com/

20.1 SPN 51/FMI 2, 3 OR 4

The troubleshooting procedures for this SPN can be found in the *Aftertreatment System Technician's Guide* (7SE63), refer to Chapter 7.

All information subject to change without notice.
Copyright © 2007 DETROIT DIESEL CORPORATION

https://truckmanualshub.com/

All information subject to change without notice.
Copyright © 2007 DETROIT DIESEL CORPORATION

https://truckmanualshub.com/

21 SPN 70 (CPC) - J1939 PARK BRAKE SWITCH SIGNAL ERRATIC OR MISSING

Section **Page**

21.1 SPN 70/FMI 13 21-3
21.2 SPN 70/FMI 19 21-3

https://truckmanualshub.com/

All information subject to change without notice.
Copyright © 2007 DETROIT DIESEL CORPORATION

https://truckmanualshub.com/

21.1 SPN 70/FMI 13

This fault is typically the J1939 Park Brake Switch signal from Source #1 is missing.

21.1.1 Missing Signal from Source #1, #2, or #3 Check

Check as follows:

1. Check for multiple codes:
   [a] If CPC SPN 168/FMI 0/14/18 (Battery Voltage) are present troubleshoot these first.
   [b] If MCM SPN 625/FMI 9 is present, repair the CAN line faults.
   [c] If only a “J1939 Error” fault is present, go to step 2.
2. Has the CPC been recently reprogrammed?
   [a] If yes, check the proper configuration of the CPC.
   [b] If no, connect ServiceLink to determine which modules are configured for the vehicle and their communication status. Once this is done, follow the appropriate module communication troubleshooting procedures for the affected module.

21.2 SPN 70/FMI 19

This fault is typically J1939 Park Brake Switch signal from Source #1 is erratic.

21.2.1 Erratic Signal from Source #1, #2, or #3 Check

Check as follows:

1. Check for multiple codes:
   [a] If CPC SPN 168/FMI 0/14/18 (Battery Voltage) are present troubleshoot and repair these first.
   [b] If MCM SPN 625/FMI 9 is present, troubleshoot and repair the CAN line.
   [c] If only a “J1939 Error” fault is present, go to step 2.
2. Has the CPC been recently reprogrammed?
   [a] If yes, check the proper configuration of the CPC.
   [b] If no, connect ServiceLink to determine which modules are configured for the vehicle and their communication status. Once this is done, follow the appropriate module communication troubleshooting procedures for the affected module.

All information subject to change without notice.
Copyright © 2007 DETROIT DIESEL CORPORATION

https://truckmanualshub.com/

All information subject to change without notice.
Copyright © 2007 DETROIT DIESEL CORPORATION

https://truckmanualshub.com/

22 SPN 84 (CPC) - J1939 WHEEL-BASED VEHICLE SPEED SIGNAL ERRATIC OR MISSING

Section **Page**

22.1 SPN 84/FMI 13 22-3
22.2 SPN 84/FMI 19 22-3

https://truckmanualshub.com/

All information subject to change without notice.
Copyright © 2007 DETROIT DIESEL CORPORATION

https://truckmanualshub.com/

22.1 SPN 84/FMI 13

This fault is typically the J1939 wheel-based vehicle speed signal from Source #1 is missing.

22.1.1 Missing Signal from Source #1, #2, or #3 Check

Check as follows:

1. Check for multiple codes:
   [a] If CPC SPN 168/FMI 0/14/18 (Battery Voltage) are present troubleshoot these first.
   [b] If MCM SPN 625/FMI 9 is present, repair the CAN line faults.
   [c] If only a “J1939 Error” fault is present, go to step 2.
2. Has the CPC been recently reprogrammed?
   [a] If yes, check the proper configuration of the CPC.
   [b] If no, connect ServiceLink to determine which modules are configured for the vehicle and their communication status. Once this is done, follow the appropriate module communication troubleshooting procedures for the affected module.

22.2 SPN 84/FMI 19

This fault is typically J1939 wheel-based vehicle speed signal from Source #1, #2, or #3 is erratic.

22.2.1 Erratic Signal from Source #1, #2, or #3 Check

Check as follows:

1. Check for multiple codes:
   [a] If CPC SPN 168/FMI 0/14/18 (Battery Voltage) are present troubleshoot and repair these first.
   [b] If MCM SPN 625/FMI 9 is present, troubleshoot and repair the CAN line.
   [c] If only a “J1939 Error” fault is present, go to step 2.
2. Has the CPC been recently reprogrammed?
   [a] If yes, check the proper configuration of the CPC.
   [b] If no, connect ServiceLink to determine which modules are configured for the vehicle and their communication status. Once this is done, follow the appropriate module communication troubleshooting procedures for the affected module.

All information subject to change without notice.
Copyright © 2007 DETROIT DIESEL CORPORATION

https://truckmanualshub.com/

All information subject to change without notice.
Copyright © 2007 DETROIT DIESEL CORPORATION

https://truckmanualshub.com/

23 SPN 84 (CPC) – VEHICLE SPEED SENSOR

Section **Page**

23.1 SPN 84/FMI 2 23-3
23.2 SPN 84/FMI 3 23-3
23.3 SPN 84/FMI 4 23-4
23.4 SPN 84/FMI 6 23-4
23.5 SPN 84/FMI 8 23-5

https://truckmanualshub.com/

All information subject to change without notice.
Copyright © 2007 DETROIT DIESEL CORPORATION

https://truckmanualshub.com/

23.1 SPN 84/FMI 2

Contact the Detroit Diesel Support Center at 313–592–5800.

23.2 SPN 84/FMI 3

This diagnostic condition is typically VSS open circuit.

23.2.1 Open Circuit Check

Check as follows:

1. Disconnect the Vehicle Speed Sensor (VSS).
2. Measure the resistance between pin 13 of the CPC connector #3 (21–pin) and pin 1 of the VSS.
   [a] If the resistance is greater than 3 Ω, repair the open between pin 13 of the CPC connector #3 (21–pin) and pin 1 of the VSS. Refer to section 23.2.1.1.
   [b] If the resistance is less than 3 Ω, go to step 3.
3. Measure the resistance between pin 14 of the CPC connector #3 (21–pin) and pin 2 of the VSS sensor.
   [a] If the resistance is greater than 3 Ω, repair the open wire between pin 14 of the CPC #3 connector (21–pin) and pin 2 of the VSS. Refer to section 23.2.1.1.
   [b] If the resistance is less than 3 Ω, go to step 4.
4. Measure the resistance between pin 13 of the CPC connector #3 (21–pin) and pin 1 of the VSS sensor.
   [a] If the resistance greater than 3 Ω, replace the VSS. Refer to section 23.2.1.1.
   [b] If the resistance is less than 3 Ω, repair the short in the harness between pins 13 and 14 of the CPC connector #3 (21–pin). Refer to section 23.2.1.1.

23.2.1.1 Verify Repairs

Verify repairs as follows:

1. Turn ignition OFF.
2. Reconnect any electrical connections that were disconnected to perform the diagnosis.
3. Clear codes with DDDL 7.0 or latest version.
4. Start and bring engine up to operating temperature (over 140°F/60°C).
5. Verify operation is satisfactory and no warning lamps illuminate. If warning lamps illuminate, troubleshoot the codes. If assistance is required, call the Detroit Diesel Customer Support Center at 313–592–5800.

All information subject to change without notice.
Copyright © 2007 DETROIT DIESEL CORPORATION

https://truckmanualshub.com/

23.3 SPN 84/FMI 4

This diagnostic condition is typically VSS circuit failed low.

23.3.1 Short Circuit Check

Check for a short as follows:

1. Disconnect the VSS connector.
2. Disconnect the CPC #3 connector (21–pin).
3. Measure the resistance between pin 1 and pin 2 of the VSS harness connector.
   [a] If the resistance measurement is less than 5 Ω, repair the short pin 13 and pin 14 of the CPC #3 connector (21–pin). Refer to section 23.3.1.1.
   [b] If the resistance measurement is greater than 5 Ω, go to step 4.
4. Measure the resistance between pin 1 of the VSS harness connector and ground.
   [a] If the resistance measurement is less than 5 Ω, repair the short to ground between pin 13 of the CPC #3 connector (21–pin) and pin 1 of the VSS harness connector. Refer to section 23.3.1.1.
   [b] If the resistance measurement is greater than 5 Ω, go to step 5.
5. Measure the resistance between pin 2 of the VSS harness connector and ground.
   [a] If the resistance measurement is less than 5 Ω, repair the short to ground between pin 14 of the CPC #3 connector (21–pin) and pin 2 of the VSS harness connector. Refer to section 23.3.1.1.
   [b] If the resistance measurement is greater than 5 Ω, replace the VSS. Refer to section 23.3.1.1.

23.3.1.1 Verify Repairs

Verify repairs as follows:

1. Turn ignition OFF.
2. Reconnect any electrical connections that were disconnected to perform the diagnosis.
3. Clear codes with DDDL 7.0 or latest version.
4. Start and bring engine up to operating temperature (over 140°F/60°C).
5. Verify operation is satisfactory and no warning lamps illuminate. If warning lamps illuminate, troubleshoot the codes. If assistance is required, call the Detroit Diesel Customer Support Center at 313–592–5800.

23.4 SPN 84/FMI 6

Contact the Detroit Diesel Support Center at 313–592–5800.

All information subject to change without notice.
Copyright © 2007 DETROIT DIESEL CORPORATION

https://truckmanualshub.com/

23.5 SPN 84/FMI 8

Contact the Detroit Diesel Support Center at 313–592–5800.

All information subject to change without notice.
Copyright © 2007 DETROIT DIESEL CORPORATION

https://truckmanualshub.com/

All information subject to change without notice.
Copyright © 2007 DETROIT DIESEL CORPORATION

https://truckmanualshub.com/

24 SPN 91 (CPC) – ACCELERATOR PEDAL SENSOR FAULT

Section **Page**

24.1 SPN 91/FMI 2 24-3
24.2 SPN 91/FMI 3 24-4
24.3 SPN 91/FMI 4 24-5

https://truckmanualshub.com/

All information subject to change without notice.
Copyright © 2007 DETROIT DIESEL CORPORATION

https://truckmanualshub.com/

24.1 SPN 91/FMI 2

A typical diagnosis for the fault is erratic data.

24.1.1 Erratic Data Check

Check as follows:

1. Disconnect the Accelerator Pedal (AP).
2. Turn ON the ignition (key ON, engine OFF).
3. Measure the voltage between pins B and C of the AP harness connector. See Figure 24-1.

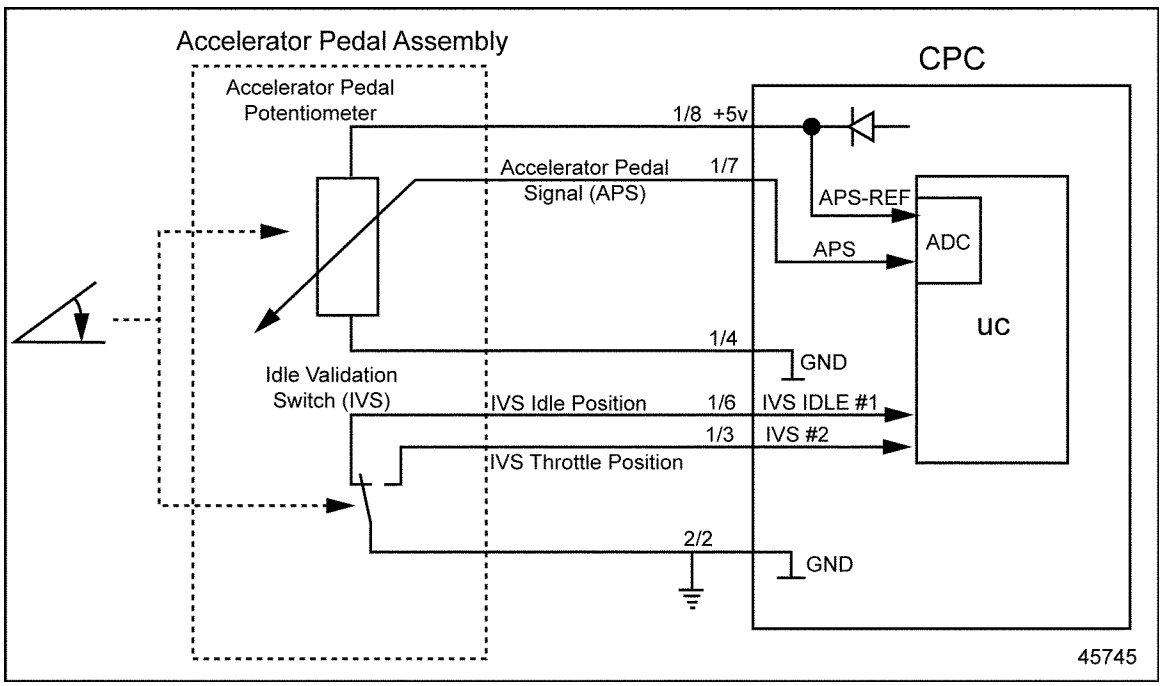

Figure 24-1 Accelerator Pedal Assembly Installation

[a] If the voltage is between 4.5 and 5.5 volts, go to step 5.

[b] If the voltage is less than 4.5, go to step 4.

4. Measure the voltage between pin C of the AP harness connector and ground.

   [a] If the voltage is between 4.5 and 5.5 volts, repair the open circuit between pin B of the AP harness connector and pin 4 of the CPC #1 connector. Refer to section 24.1.1.1.

   [b] If the voltage is less than 4.5, repair the open circuit between pin C of the AP harness connector and pin 8 of the CPC #1 connector.Refer to section 24.1.1.1.

5. Turn OFF the ignition.
6. Disconnect the CPC #1 connector.

All information subject to change without notice.
Copyright © 2007 DETROIT DIESEL CORPORATION

https://truckmanualshub.com/

7. Measure the resistance between pin A of the AP harness connector and pin 7 of the CPC #1 connector.
   [a] If the resistance is greater than 3 Ω, repair the open circuit between pin A of the AP harness connector and pin 7 of the CPC #1 connector. Refer to section 24.1.1.1.
   [b] If the resistance is less than 3 Ω, replace the Accelerator Pedal. Refer to section 24.1.1.1.

24.1.1.1 Verify Repairs

Verify repairs as follows:

1. Turn ignition OFF.
2. Reconnect any electrical connections that were disconnected to perform the diagnosis.
3. Clear codes with DDDL 7.0 or latest version.
4. Start and bring engine up to operating temperature (over 140°F/60°C).
5. Verify operation is satisfactory and no warning lamps illuminate. If warning lamps illuminate, troubleshoot the codes. If assistance is required, call the Detroit Diesel Customer Support Center at 313–592–5800.

24.2 SPN 91/FMI 3

The typical diagnosis for this fault is circuit failed high.

24.2.1 High Voltage Check

Check as follows:

1. Disconnect the Accelerator Pedal (AP).
2. Turn ON the ignition (key ON, engine OFF).
3. Measure the voltage between pins B and C of the AP harness connector.
   [a] If the voltage is between 4.5 and 5.5 volts, go to step 5.
   [b] If the voltage is less than 4.5, go to step 4.
4. Measure the voltage between pins C of the AP harness connector and ground.
   [a] If the voltage is between 4.5 and 5.5 volts, repair the open circuit between pin B of the AP harness connector and pin 4 of the CPC #1 connector. Refer to section 24.2.1.1.
   [b] If the voltage is less than 4.5, repair the open circuit between pin C of the AP harness connector and pin 8 of the CPC #1 connector. Refer to section 24.2.1.1.
5. Turn OFF the ignition.
6. Disconnect the CPC #1 connector.

All information subject to change without notice.
Copyright © 2007 DETROIT DIESEL CORPORATION

https://truckmanualshub.com/

7. Measure the resistance between pin A of the AP harness connector and pin 7 of the CPC #1 connector.
   [a] If the resistance is greater than 3 Ω, repair the open circuit between pin A of the AP harness connector and pin 7 of the CPC #1 connector. Refer to section 24.2.1.1.
   [b] If the resistance is less than 3 Ω, replace the Accelerator Pedal. Refer to section 24.2.1.1.

24.2.1.1 Verify Repairs

Verify repairs as follows:

1. Turn ignition OFF.
2. Reconnect any electrical connections that were disconnected to perform the diagnosis.
3. Clear codes with DDDL 7.0 or latest version.
4. Start and bring engine up to operating temperature (over 140°F/60°C).
5. Verify operation is satisfactory and no warning lamps illuminate. If warning lamps illuminate, troubleshoot the codes. If assistance is required, call the Detroit Diesel Customer Support Center at 313–592–5800.

24.3 SPN 91/FMI 4

The typical diagnosis for this fault is circuit failed low.

24.3.1 Low Voltage Check

Perform the following steps to troubleshoot low voltage.

1. Disconnect the Accelerator Pedal (AP).
2. Turn ON the ignition (key ON, engine OFF).
3. Measure the voltage between pins B and C of the AP harness connector.
   [a] If the voltage is between 4.5 and 5.5 volts, go to step 5.
   [b] If the voltage is less than 4.5, go to step 4.
4. Measure the voltage between pin C of the AP harness connector and ground.
   [a] If the voltage is between 4.5 and 5.5 volts, repair the open circuit between pin B of the AP harness connector and pin 4 of the CPC #1 connector. Refer to section 24.3.1.1.
   [b] If the voltage is less than 4.5, repair the open circuit between pin C of the AP harness connector and pin 8 of the CPC #1 connector. Refer to section 24.3.1.1.
5. Turn OFF the ignition.
6. Disconnect the CPC #1 connector.
7. Measure the resistance between pin B and pin C of the AP connector.

All information subject to change without notice.
Copyright © 2007 DETROIT DIESEL CORPORATION

https://truckmanualshub.com/

[a] If the resistance is less than 5 Ω, repair the short between wires 8 and 4 of the CPC #1 connector. Refer to section 24.3.1.1.

[b] If the resistance is greater than 5 Ω, go to step 8.

8. Measure the resistance between pin A and B of the AP connector.

[a] If the resistance is less than 5 Ω, repair the short between wires 7 and 4 of the CPC #1 connector. Refer to section 24.3.1.1.

[b] If the resistance is greater than 5 Ω, go to step 9.

9. Measure the resistance between pin C of the AP connector and ground.

[a] If the resistance is less than 5 Ω, repair the short circuit between pin C of the AP connector and ground. Refer to section 24.3.1.1.

[b] If the resistance is greater than 5 Ω, go to step 10.

10. Measure the resistance between pin A of the AP connector and ground.

[a] If the resistance is less than 5 Ω, repair the short circuit between pin A of the AP connector and ground. Refer to section 24.3.1.1.

[b] If the resistance is greater than 5 Ω, replace the Accelerator Pedal. Refer to section 24.3.1.1.

24.3.1.1 Verify Repairs

Verify repairs as follows:

1. Turn ignition OFF.
2. Reconnect any electrical connections that were disconnected to perform the diagnosis.
3. Clear codes with DDDL 7.0 or latest version.
4. Start and bring engine up to operating temperature (over 140°F/60°C).
5. Verify operation is satisfactory and no warning lamps illuminate. If warning lamps illuminate, troubleshoot the codes. If assistance is required, call the Detroit Diesel Customer Support Center at 313–592–5800.

All information subject to change without notice.
Copyright © 2007 DETROIT DIESEL CORPORATION

https://truckmanualshub.com/

25 SPN 94 – FUEL COMPENSATION PRESSURE SENSOR CIRCUIT FAULT

Section **Page**

25.1 SPN 94/FMI 3 OR 4 25-3

https://truckmanualshub.com/

All information subject to change without notice.
Copyright © 2007 DETROIT DIESEL CORPORATION

https://truckmanualshub.com/

25.1 SPN 94/FMI 3 OR 4

The troubleshooting procedures for this SPN can be found in the *Aftertreatment System Technician's Guide* (7SE63), refer to Chapter 8.

All information subject to change without notice.
Copyright © 2007 DETROIT DIESEL CORPORATION

https://truckmanualshub.com/

All information subject to change without notice.
Copyright © 2007 DETROIT DIESEL CORPORATION

https://truckmanualshub.com/

26 SPN 100 — ENGINE OIL PRESSURE OUTSIDE OF NORMAL OPERATING RANGE

Section **Page**

26.1 SPN 100/FMI 1 26-3
26.2 SPN 100/FMI 3 26-4
26.3 SPN 100/FMI 4 26-6
26.4 SPN 100/FMI 18 26-8

https://truckmanualshub.com/

All information subject to change without notice.
Copyright © 2007 DETROIT DIESEL CORPORATION

https://truckmanualshub.com/

26.1 SPN 100/FMI 1

SPN 100/FMI is typically low engine oil pressure.

26.1.1 Low Oil Pressure Check

Check as follows:

1. Check for multiple codes.
   [a] If fault codes 100/1 and 100/3 are both active, refer to section 26.2.1.
   [b] If fault codes 100/1 and 100/4 are both active, refer to section 26.3.1
   [c] If only fault code 100/1 is active, go to step 2.
2. Observe the stability of the oil pressure.
   [a] If the oil pressure is in normal operating range and stable, go to step 3.
   [b] If the oil pressure is fluctuating, go to step 4.
3. Check the oil level.

NOTE:
An increase in the engine oil level indicates fuel may be leaking into the engine oil.

   [a] If the oil level is high, check for fuel entering into the engine oil system and repair as required. Change the engine oil. Refer to section 26.1.1.1.
   [b] If the engine oil level is low, fill oil to proper level. Refer to section 26.1.1.1.
4. Check the operation of the oil gage.
   [a] If the oil gage readings are erratic, repair or replace the oil gage as required.Refer to section 26.1.1.1.
   [b] If the oil gage readings are fine, go to step 5.
5. Check the condition of the oil pump suction pipe.
   [a] If the pipe is loose or cracked, replace a cracked pipe and reinstall a loose pipe. Refer to section 26.1.1.1.
   [b] If there is no problem with the oil pump suction pipe, go to step 6.
6. Check the condition of the oil pump drive and driven gears.
   [a] If either gear is loose, repair or replace loose gears as required. Refer to section 26.1.1.1.
   [b] If neither gear is loose, go to step 7.
7. Check for a faulty oil pressure relief valve.
   [a] If the relief valve does not open at the set pressure or sticks open, repair or replace a faulty oil pressure relief valve as required. Refer to section 26.1.1.1.
   [b] If the relief valve is fine, refer to section 26.1.1.1.

All information subject to change without notice.
Copyright © 2007 DETROIT DIESEL CORPORATION

https://truckmanualshub.com/

26.1.1.1 Verify Repairs

Verify repairs as follows:

1. Turn ignition OFF.
2. Reconnect any electrical connections that were disconnected to perform the diagnosis.
3. Clear codes with DDDL 7.0 or latest version.
4. Start and bring engine up to operating temperature (over 140°F/60°C).
5. Verify operation is satisfactory and no warning lamps illuminate. If warning lamps illuminate, troubleshoot the codes. If assistance is required, call the Detroit Diesel Customer Support Center at 313–592–5800.

26.2 SPN 100/FMI 3

A typical diagnosis is an Engine Oil Pressure Sensor circuit failed high.

26.2.1 Failed High Circuit Check

Check as follows:

1. Turn the ignition ON (key On, engine OFF).
2. Check for multiple codes:
   [a] If 100/3, 94/3 and 4407/3 are present repair the short to power between pin 82 of the 120–pin MCM connector and the Engine Oil, Doser Fuel Line and Doser Fuel Compensation Sensors. Refer to section 26.2.1.1.
   [b] If only 100/3 is present, go to step 3.
3. Disconnect the Engine Oil Pressure Sensor.

All information subject to change without notice.
Copyright © 2007 DETROIT DIESEL CORPORATION

https://truckmanualshub.com/

4. Measure the voltage between pin 3 of the EOP Sensor harness connector and ground. See Figure 26-1.

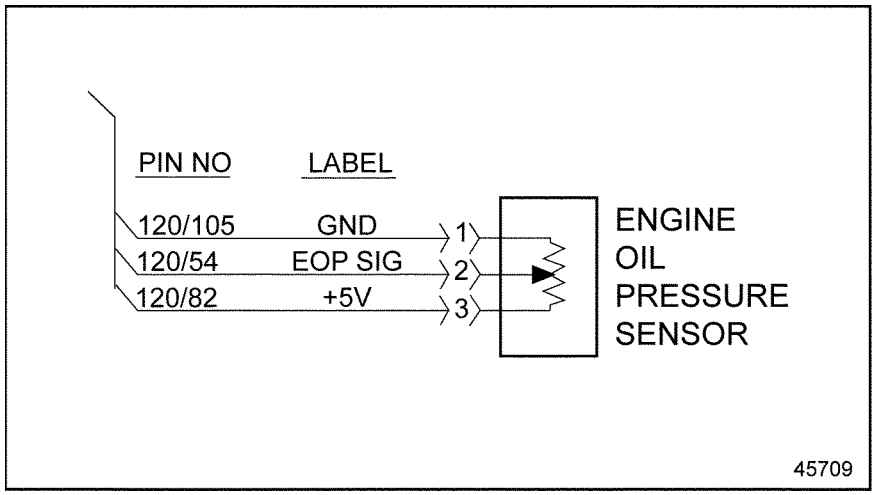

Figure 26-1 Engine Oil Pressure Sensor Wiring

[a] If voltage is greater than 5 volts, repair the short to power between pin 82 of the 120–pin MCM connector and pin 2 of the EOP Sensor connector. (see Figure 26-2). Refer to section 26.2.1.1.

[b] If no voltage is present, go to step 5 (see Figure 26-2).

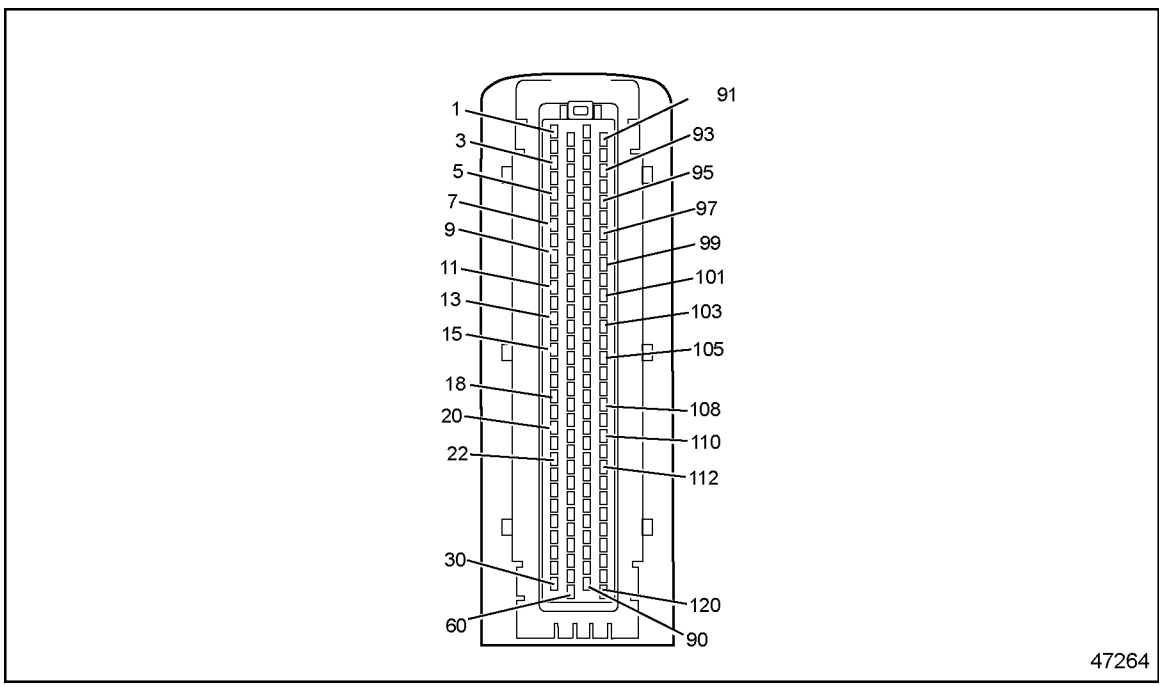

Figure 26-2 120–pin MCM Connector

5. Measure the voltage between pin 2 of the EOP Sensor harness connector and ground.

All information subject to change without notice.
Copyright © 2007 DETROIT DIESEL CORPORATION

https://truckmanualshub.com/

[a] If voltage is greater than 5 volts, repair the short to power between pin 105 of the 120–pin MCM connector and pin 3 of the EOP Sensor connector. (see Figure 26-2). Refer to section 26.2.1.1.

[b] If no voltage is present, go to step 6.

6. Measure the voltage between pins 1 and 3 of the EOP Sensor.

   [a] If voltage is less than 5 volts, repair the open between pin 105 of the 120–pin MCM connector and pin 1 of the EOP Sensor connector. Refer to section 26.2.1.1.

   [b] If the voltage is between 4.5 and 5 volts, repair the open between pin 54 of the 120–pin MCM connector and pin 2 of the EOP Sensor connector. Refer to section 26.2.1.1.

26.2.1.1 Verify Repairs

Verify repairs as follows:

1. Turn ignition OFF.
2. Reconnect any electrical connections that were disconnected to perform the diagnosis.
3. Clear codes with DDDL 7.0 or latest version.
4. Start and bring engine up to operating temperature (over 140°F/60°C).
5. Verify operation is satisfactory and no warning lamps illuminate. If warning lamps illuminate, troubleshoot the codes. If assistance is required, call the Detroit Diesel Customer Support Center at 313–592–5800.

26.3 SPN 100/FMI 4

This diagnosis is typically an Engine Oil Pressure Sensor circuit failed low.

26.3.1 Failed Low Circuit Check

Check as follows:

1. Turn the ignition ON (key On, engine OFF).
2. Check for multiple codes:

   [a] If 100/4, 94/4, 4407/4, 3609/4 and 3610/4 are present, repair the short to ground between pin 82 of the 120–pin MCM and the Engine Oil, Doser Fuel Line, Doser Fuel Compensation, DPF Inlet and DPF Outlet Pressure sensors. Refer to section 26.3.1.1.

   [b] If 100/4, 94/4 and 4407/4 are present, repair the open between pin 82 of the 120–pin MCM connector and the Engine Oil, Doser Fuel Line and Doser Fuel Compensation Sensors. Refer to section 26.3.1.1.

   [c] If only 100/4 is present, go to step 3.

3. Disconnect the Engine Oil Pressure Sensor.

All information subject to change without notice.
Copyright © 2007 DETROIT DIESEL CORPORATION

https://truckmanualshub.com/

4. Measure the voltage between pins 1 and 3 of the EOP Sensor harness connector. See Figure 26-3.

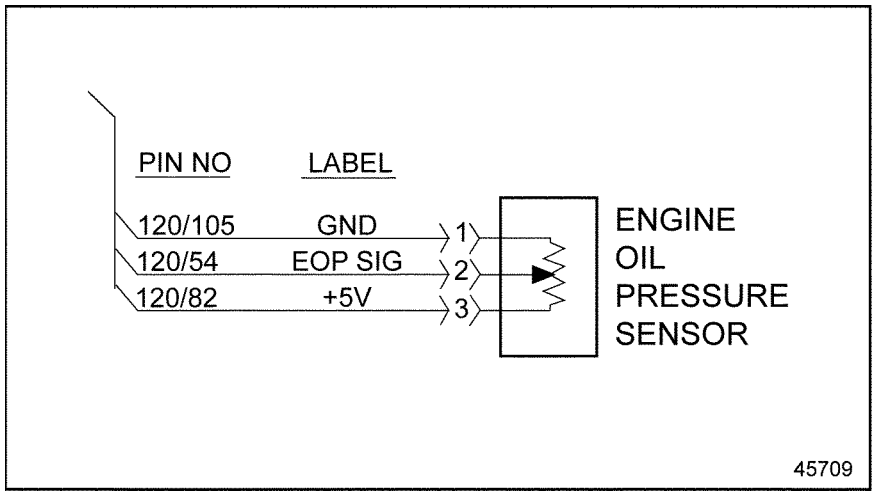

Figure 26-3 Engine Oil Pressure Sensor Wiring

[a] If the voltage is less than 4.5 volts, repair the open between pin 82 of the 120–pin MCM connector and pin 3 of the EOP Sensor harness connector. Refer to section 26.3.1.1.

[b] If the voltage is greater than 4.5 volts, go to step 5.

5. Turn the ignition OFF.
6. Measure the resistance between pin 2 of the EOP Sensor harness connector and pin 54 of the 120–pin MCM connector.

[a] If the resistance is less than 5 Ω, repair the open between pin 2 of the EOP Sensor harness connector and pin 54 of the 120–pin MCM connector. Refer to section 26.3.1.1.

[b] If the resistance is greater than 5 Ω, repair the short to ground between pin 2 of the EOP Sensor harness connector and pin 54 of the 120–pin MCM connector. Refer to section 26.3.1.1.

26.3.1.1 Verify Repairs

Verify repairs as follows:

1. Turn ignition OFF.
2. Reconnect any electrical connections that were disconnected to perform the diagnosis.
3. Clear codes with DDDL 7.0 or latest version.
4. Start and bring engine up to operating temperature (over 140°F/60°C).

All information subject to change without notice.
Copyright © 2007 DETROIT DIESEL CORPORATION

https://truckmanualshub.com/

5. Verify operation is satisfactory and no warning lamps illuminate. If warning lamps illuminate, troubleshoot the codes. If assistance is required, call the Detroit Diesel Customer Support Center at 313–592–5800.

26.4 SPN 100/FMI 18

This diagnosis is typically oil pressure very low. Perform the following steps to troubleshoot an oil pressure very low fault

26.4.1 Multiple Codes Check

Check for multiple codes as follows:

1. Check for additional active fault codes.
   [a] If fault code 100/3 is active in addition to code 100/4, refer to section 26.2.1.
   [b] If fault code 100/4 is active in addition to code 100/4, refer to section 26.3.1.
   [c] If only fault code 100/18 is active, go to step 2.
2. Start engine and check oil pressure.
   [a] If pressure is fluctuating, go to step 3.
   [b] If pressure is low but stable, go to step 4.
3. Stop the engine and allow sufficient time for the oil to drain into the oil pan. Perform the following steps:
   [a] Check the oil level. Add recommended oil to bring it to the proper level, if required.
   [b] Check for faulty oil gage. Replace, if required.
   [c] Check for loose or cracked oil pump suction pipe. Repair or replace, as required.
   [d] Check for loose drive or driven oil pump gear. Repair or replace, as required.
   [e] Check for faulty oil pressure relief valve. Repair or replace, as required.
   [f] Refer to section 26.4.1.1.
4. Stop the engine and allow sufficient time for the oil to drain into the oil pan. Check the oil level.
   [a] If oil is above maximum level with no oil previously added, go to step 5.
   [b] If oil is not above maximum level, contact Detroit Diesel Customer Support Center (313–592–5800).
5. Check for possible fuel in oil.
   [a] If fuel is found, locate and repair source of fuel leak. Change the Oil. Refer to section 26.4.1.1.
   [b] If fuel is not found, contact Detroit Diesel Customer Support Center at 313–592–5800.

All information subject to change without notice.
Copyright © 2007 DETROIT DIESEL CORPORATION

https://truckmanualshub.com/

26.4.1.1 Verify Repairs

Verify repairs as follows:

1. Turn ignition OFF.
2. Reconnect any electrical connections that were disconnected to perform the diagnosis.
3. Clear codes with DDDL 7.0 or latest version.
4. Start and bring engine up to operating temperature (over 140°F/60°C).
5. Verify operation is satisfactory and no warning lamps illuminate. If warning lamps illuminate, troubleshoot the codes. If assistance is required, call the Detroit Diesel Customer Support Center at 313–592–5800.

All information subject to change without notice.
Copyright © 2007 DETROIT DIESEL CORPORATION

https://truckmanualshub.com/

All information subject to change without notice.
Copyright © 2007 DETROIT DIESEL CORPORATION

https://truckmanualshub.com/

27 SPN 103 – TURBO NO REVOLUTION

Section **Page**

27.1 SPN 103/FMI 0 27-3
27.2 SPN 103/FMI 1 27-4
27.3 SPN 103/FMI 4 27-5

https://truckmanualshub.com/

All information subject to change without notice.
Copyright © 2007 DETROIT DIESEL CORPORATION

https://truckmanualshub.com/

27.1 SPN 103/FMI 0

This diagnosis is typically turbocharger speed below threshold (Low Box).

27.1.1 Low Speed Check (Low Box)

Check as follows:

1. Inspect the entire air intake system for leaks and/or restrictions.
   [a] If leaks or restrictions are found, repair as necessary. Refer to section 27.1.1.1.
   [b] If no air intake system leaks or restrictions are found, go to step 2.
2. Connect to DDDL 7.0
3. Turn the ignition ON (key On, engine OFF).
4. Perform the DDDL Turbo Hysteresis Test.
   [a] If the test passed, replace the Turbo Speed Sensor (TSS). Refer to section 27.1.1.1.
   [b] If the test failed, refer to section 6.5 in the *Series 60 Service Manual* (6SE2007).

All information subject to change without notice.
Copyright © 2007 DETROIT DIESEL CORPORATION

https://truckmanualshub.com/

27.1.1.1 Verify Repairs

Verify repairs as follows:

1. Turn ignition OFF.
2. Reconnect any electrical connections that were disconnected to perform the diagnosis.
3. Clear codes with DDDL 7.0 or latest version.
4. Start and bring engine up to operating temperature (over 140°F/60°C).
5. Verify operation is satisfactory and no warning lamps illuminate. If warning lamps illuminate, troubleshoot the codes. If assistance is required, call the Detroit Diesel Customer Support Center at 313–592–5800.

27.2 SPN 103/FMI 1

This diagnosis is typically turbocharger speed below threshold (High Box).

27.2.1 Low Speed Check (High Box)

Check as follows:

1. Inspect the entire air intake system for leaks and/or restrictions.
   [a] If leaks or restrictions are found, repair as necessary. Refer to section 27.2.1.1.
   [b] If no air intake system leaks or restrictions are found, go to step 2.
2. Connect to DDDL 7.0
3. Turn the ignition ON (key On, engine OFF).
4. Perform the DDDL Turbo Hysteresis Test.
   [a] If the test passed, replace the Turbo Speed Sensor (TSS). Refer to section 27.2.1.1.
   [b] If the test failed, refer to section 6.5 in the *Series 60 Service Manual* (6SE2007).

27.2.1.1 Verify Repairs

Verify repairs as follows:

1. Turn ignition OFF.
2. Reconnect any electrical connections that were disconnected to perform the diagnosis.
3. Clear codes with DDDL 7.0 or latest version.
4. Start and bring engine up to operating temperature (over 140°F/60°C).
5. Verify operation is satisfactory and no warning lamps illuminate. If warning lamps illuminate, troubleshoot the codes. If assistance is required, call the Detroit Diesel Customer Support Center at 313–592–5800.

All information subject to change without notice.
Copyright © 2007 DETROIT DIESEL CORPORATION

https://truckmanualshub.com/

27.3 SPN 103/FMI 4

This diagnosis is typically circuit failed low.

27.3.1 Short Circuit Check

Check for short as follows:

1. Disconnect the Turbo Speed Sensor (TSS).
2. Disconnect the 120–pin MCM connector.
3. Measure the resistance across pins 1 and 2 of the TSS connector.
   [a] If the resistance is less than 5 Ω, repair the short between the 120–pin MCM connector wires 50 and 51. Refer to section 27.3.1.1.
   [b] If the resistance is greater than 5 Ω, go to step 4.
4. Measure the resistance between pin 1 of the TSS harness connector and ground.
   [a] If the resistance is less than 5 Ω, repair the short between pin 1 of the TSS harness connector and ground. Refer to section 27.3.1.1.
   [b] If the resistance is greater than 5 Ω, go to step 5.
5. Measure the resistance between pin 2 of the TSS harness connector and ground.
   [a] If the resistance is less than 5 Ω, repair the short between pin 2 of the TSS harness connector and ground. Refer to section 27.3.1.1.
   [b] If the resistance is greater than 5 Ω, refer to section 27.3.1.1.

27.3.1.1 Verify Repairs

Verify repairs as follows:

1. Turn ignition OFF.
2. Reconnect any electrical connections that were disconnected to perform the diagnosis.
3. Clear codes with DDDL 7.0 or latest version.
4. Start and bring engine up to operating temperature (over 140°F/60°C).
5. Verify operation is satisfactory and no warning lamps illuminate. If warning lamps illuminate, troubleshoot the codes. If assistance is required, call the Detroit Diesel Customer Support Center at 313–592–5800.

All information subject to change without notice.
Copyright © 2007 DETROIT DIESEL CORPORATION

https://truckmanualshub.com/

All information subject to change without notice.
Copyright © 2007 DETROIT DIESEL CORPORATION

https://truckmanualshub.com/

28 SPN 108 - BAROMETRIC PRESSURE SENSOR CIRCUIT FAULT

Section **Page**

28.1 SPN 108/FMI 3 28-3
28.2 SPN 108/FMI 4 28-3

https://truckmanualshub.com/

All information subject to change without notice.
Copyright © 2007 DETROIT DIESEL CORPORATION

https://truckmanualshub.com/

28.1 SPN 108/FMI 3

This diagnosis is typically the Barometric Pressure Sensor circuit failed low. If SPN 108/FMI 3 is present contact the Detroit Diesel Customer Support Center at 313–592–5800 for MCM replacement authorization.

28.2 SPN 108/FMI 4

This diagnosis is typically the Barometric Pressure Sensor circuit failed high. If SPN 108/FMI 4 is present contact the Detroit Diesel Customer Support Center at 313–592–5800 for MCM replacement authorization.

All information subject to change without notice.
Copyright © 2007 DETROIT DIESEL CORPORATION

https://truckmanualshub.com/

All information subject to change without notice.
Copyright © 2007 DETROIT DIESEL CORPORATION

https://truckmanualshub.com/

29 SPN 110 — COOLANT TEMPERATURE ABOVE OR BELOW NORMAL OPERATING RANGE

Section **Page**

29.1 SPN 110/FMI 0 29-3
29.2 SPN 110/FMI 3 29-3
29.3 SPN 110/FMI 4 29-6
29.4 SPN 110/FMI 14 29-7
29.5 SPN 110/FMI 16 29-8

https://truckmanualshub.com/

All information subject to change without notice.
Copyright © 2007 DETROIT DIESEL CORPORATION

https://truckmanualshub.com/

29.1 SPN 110/FMI 0

The diagnostic condition is typically engine coolant temperature high.

29.1.1 System Checks to Resolve Fault

Check as follows:

1. Check for multiple codes.
   [a] If fault 110/3 is active in addition to 110/0, refer to section 29.2.1.
   [b] If fault 110/4 is active in addition to 110/0, refer to section 29.3.1.
   [c] If fault 111/1 is active in addition to 110/0, refer to section 30.1.
   [d] If only fault code 110/0 is active, go to step 2.
2. Check for coolant loss.
3. Check for blockage in radiator and charge air cooler.
4. Check fan belt condition (slippage).
5. Check for proper location of fan shroud.
6. Check for proper radiator hose condition (no collapsed hoses).
7. Check for proper viscous fan operation.
8. Once checks and repairs are finished, refer to section 29.1.1.1.

29.1.1.1 Verify Repairs

Verify repairs as follows:

1. Turn ignition OFF.
2. Reconnect any electrical connections that were disconnected to perform the diagnosis.
3. Clear codes with DDDL 7.0 or latest version.
4. Start and bring engine up to operating temperature (over 140°F/60°C).
5. Verify operation is satisfactory and no warning lamps illuminate. If warning lamps illuminate, troubleshoot the codes. If assistance is required, call the Detroit Diesel Customer Support Center at 313–592–5800.

29.2 SPN 110/FMI 3

SPN 110/FMI 3 indicates that the Engine Coolant Temperature Sensor (ECT Sensor) input to the MCM has exceeded 95% of the sensor supply voltage. The diagnostic condition is typically engine coolant temperature open circuit or short to power.

All information subject to change without notice.
Copyright © 2007 DETROIT DIESEL CORPORATION

https://truckmanualshub.com/

29.2.1 Open Circuit/Short to Power Check

Check as follows:

1. Turn the ignition ON (key ON, engine OFF).
2. Check for multiple codes.
   [a] If codes 110/3, 174/3, 175/3 and 3510/3 are active, go to step 3.
   [b] If only fault 110/3 is active, go to step 6.
3. Disconnect the Supply Fuel Temperature Sensor.
4. Measure the voltage between pin 1 of the SFT Sensor and ground.
   [a] If the voltage is greater than 2.75 volts, repair the short to power between pin 55 of the MCM 120–pin connector and the Engine Coolant Temperature Sensor, the Engine Oil Temperature Sensor and the Supply Fuel Temperature Sensor. Refer to section 29.2.1.1.
   [b] If no voltage is present on pin 1 of the SFT Sensor, repair the open between pin 55 of the MCM 120–pin connector and the Engine Coolant Temperature Sensor, the Engine Oil Temperature Sensor and the Supply Fuel Temperature Sensor. Refer to section 29.2.1.1.
5. Disconnect the ECT Sensor.
6. Measure the resistance across pins 1 and 2 of the ECT Sensor. See Figure 29-1.

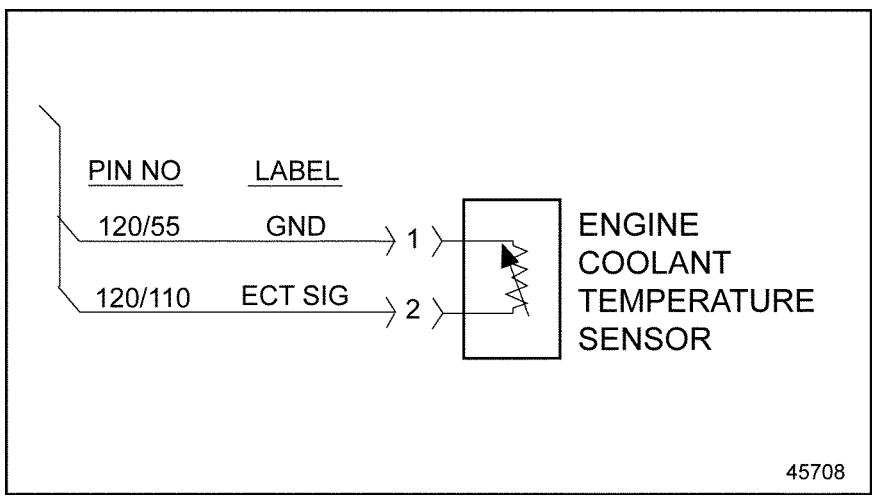

Figure 29-1 Engine Coolant Temperature Sensor Wiring

   [a] If the resistance is greater than 4 kΩ, replace the sensor. Refer to section 29.2.1.1.
   [b] If the resistance is less than 4 kΩ, go to step 7.
7. Turn the ignition ON (key On, engine OFF).
8. Measure the voltage between pins 1 and 2 of the ECT Sensor harness connector.

All information subject to change without notice.
Copyright © 2007 DETROIT DIESEL CORPORATION

https://truckmanualshub.com/

[a] If the voltage is between 2.75 and 3.25 volts, refer to section 29.2.1.1.

[b] If the voltage is less than 2.75 volts, go to step 9.

9. Measure the voltage between pin 2 of the ECT Sensor harness connector and ground.

   [a] If the voltage is between 2.75 and 3.25 volts, repair the open circuit between pin 1 of the ECT Sensor harness connector and pin 55 of the 120–pin MCM connector (see Figure 29-2). Refer to section 29.2.1.1.

   [b] If the voltage is less than 2.75 volts, repair the open circuit between pin 2 of the ECT Sensor harness connector and pin 110 of the 120–pin MCM connector (see Figure 29-2). Refer to section 29.2.1.1.

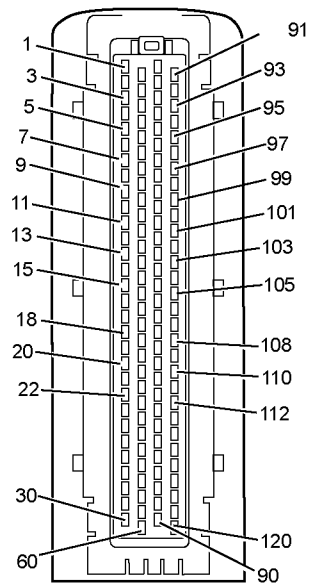

Figure 29-2 MCM Connector

29.2.1.1 Verify Repairs

Verify repairs as follows:

1. Turn ignition OFF.
2. Reconnect any electrical connections that were disconnected to perform the diagnosis.
3. Clear codes with DDDL 7.0 or latest version.
4. Start and bring engine up to operating temperature (over 140°F/60°C).
5. Verify operation is satisfactory and no warning lamps illuminate. If warning lamps illuminate, troubleshoot the codes. If assistance is required, call the Detroit Diesel Customer Support Center at 313–592–5800.

All information subject to change without notice.
Copyright © 2007 DETROIT DIESEL CORPORATION

https://truckmanualshub.com/

29.3 SPN 110/FMI 4

The diagnostic condition is typically engine coolant temperature circuit failed low.

29.3.1 Short to Ground Check

Check as follows:

1. Disconnect the ECT Sensor.
2. Disconnect the 120–pin MCM connector.
3. Measure the resistance across pins 1 and 2 of the ECT Sensor harness connector. See Figure 29-1.
   [a] If resistance is greater than 5 Ω, go to step 4.
   [b] If resistance is less than 5 Ω, repair short to ground between pins 55 and 110 of the 120-pin MCM connector. Refer to section 29.3.1.1.
4. Measure the resistance between pin 2 of the ECT Sensor harness connector and ground.
   [a] If resistance is greater than 5 Ω, repeat steps 3 through 4. If the results are the same, call the Detroit Diesel Customer Support Center (313–592–5800).
   [b] If resistance is less than 5 Ω, repair the short circuit between pin 2 of the ECT Sensor harness connector and ground. Refer to section 29.3.1.1.

29.3.1.1 Verify Repairs

Verify repairs as follows:

1. Turn ignition OFF.
2. Reconnect any electrical connections that were disconnected to perform the diagnosis.
3. Clear codes with DDDL 7.0 or latest version.
4. Start and bring engine up to operating temperature (over 140°F/60°C).
5. Verify operation is satisfactory and no warning lamps illuminate. If warning lamps illuminate, troubleshoot the codes. If assistance is required, call the Detroit Diesel Customer Support Center at 313–592–5800.

All information subject to change without notice.
Copyright © 2007 DETROIT DIESEL CORPORATION

https://truckmanualshub.com/

29.4 SPN 110/FMI 14

This condition is typically coolant temperature out of range (drifted low/high).

NOTE:
When diagnosing rationality erratic data faults (FMI 14) always refer to SILs or SIBs for any known issues first.

29.4.1 Rationality Check for Temperature Drift

Check as follows:

1. Check cooling system integrity (lack of heat complaints).
2. Connect DDDL 7.0 and monitor the engine oil temperature and the engine coolant temperature.
3. With the engine running at idle and the engine oil temperature above 160°, is the coolant temperature within X degrees of the oil temperature?
   [a] If yes, go to step 4.
   [b] If no, disconnect the ECT Sensor and the MCM connector. Bridge pins X and X of the sensor, measure the resistance at the MCM between pins X and X. If the resistance is greater than 3 Ω, repair the harness. If the resistance is less than 3 Ω, replace the sensor. Refer to section 29.4.1.1.
4. With the engine running at 1500 rpm and oil temperature above 160°, check the coolant temperature. Is it within X degrees of the oil temperature?
   [a] If yes, contact the Detroit Diesel Customer Support Center (313–592–5800).
   [b] If no, disconnect the ECT Sensor and the MCM connector. Bridge pins X and X of the sensor and measure resistance at the MCM between pins X and X. If the resistance is greater than 3 Ω repair the harness. If the resistance is less than 3 Ω, replace the sensor. Refer to section 29.4.1.1.

29.4.1.1 Verify Repairs

Verify repairs as follows:

1. Turn ignition OFF.
2. Reconnect any electrical connections that were disconnected to perform the diagnosis.
3. Clear codes with DDDL 7.0 or latest version.
4. Start and bring engine up to operating temperature (over 140°F/60°C).
5. Verify operation is satisfactory and no warning lamps illuminate. If warning lamps illuminate, troubleshoot the codes. If assistance is required, call the Detroit Diesel Customer Support Center at 313–592–5800.

All information subject to change without notice.
Copyright © 2007 DETROIT DIESEL CORPORATION

https://truckmanualshub.com/

29.5 SPN 110/FMI 16

The diagnostic condition is typically engine coolant temperature very high.

29.5.1 Multiple Codes Check

Check as follows:

1. Turn vehicle ignition switch ON (key ON, engine OFF).
2. Plug in the diagnostic tool.
3. Read active codes:
   [a] If only fault code 110/16 is active, refer to section 29.5.2.
   [b] If fault code 110/3 is active in addition to fault code 110/16, refer to section 29.2.1.
   [c] If fault code 110/4 is active in addition to fault code 110/16, refer to section 29.3.1.

29.5.2 System Checks to Resolve Fault

Perform the following checks and any corrections necessary to resolve a coolant temperature very high fault. Repair or replace, as required.

1. Check for coolant loss.
2. Check for blockage in radiator and charge air cooler.
3. Check fan belt condition (slippage).
4. Check for proper location of fan shroud.
5. Check for proper radiator hose condition (no collapsed hoses).
6. Check for proper viscous fan operation.
7. Once checks and repairs are finished, refer to section 29.5.2.1.

29.5.2.1 Verify Repairs

Verify repairs as follows:

1. Turn ignition OFF.
2. Reconnect any electrical connections that were disconnected to perform the diagnosis.
3. Clear codes with DDDL 7.0 or latest version.
4. Start and bring engine up to operating temperature (over 140°F/60°C).
5. Verify operation is satisfactory and no warning lamps illuminate. If warning lamps illuminate, troubleshoot the codes. If assistance is required, call the Detroit Diesel Customer Support Center at 313–592–5800.

All information subject to change without notice.
Copyright © 2007 DETROIT DIESEL CORPORATION

https://truckmanualshub.com/

30 SPN 111 (CPC) – COOLANT LEVEL OUTSIDE NORMAL OPERATING RANGE

Section **Page**

30.1 SPN 111/FMI 1 30-3
30.2 SPN 111/FMI 3 30-5
30.3 SPN 111/FMI 4 30-7

https://truckmanualshub.com/

All information subject to change without notice.
Copyright © 2007 DETROIT DIESEL CORPORATION

https://truckmanualshub.com/

30.1 SPN 111/FMI 1

This diagnosis typically coolant level low.

30.1.1 Engine Coolant Level Sensor Check

Check as follows:

1. Turn the vehicle ignition switch ON (key On, engine OFF).
2. Check for multiple codes.
   [a] If other faults are active in addition to fault 111/1, troubleshoot the other faults first.
   [b] If only fault 111/1 is active, go to step 3.
3. Check the coolant level in the reservoir. See Figure 30-1.

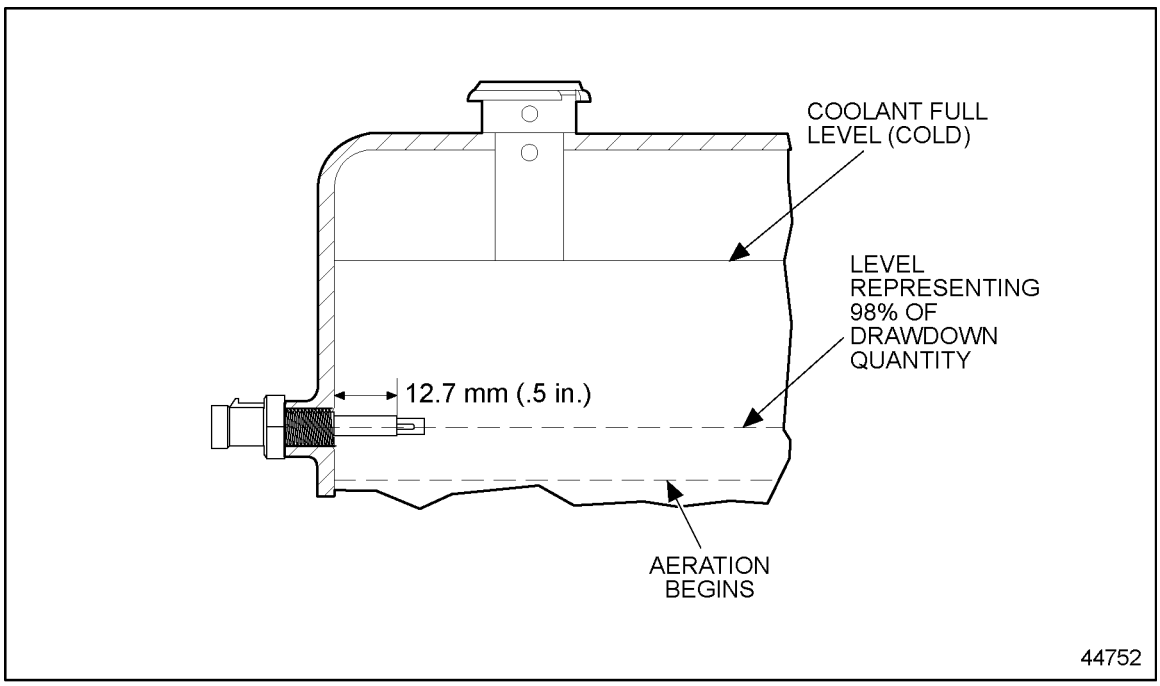

Figure 30-1 Engine Coolant Level Sensor Mounted in Radiator Top Tank

[a] If the coolant level in the reservoir is not within limit, refer to section 30.1.2.

All information subject to change without notice.
Copyright © 2007 DETROIT DIESEL CORPORATION

https://truckmanualshub.com/

[b] If the coolant level in the reservoir is within limit, replace the sensor (see Figure 30-2). Refer to section 30.1.2.1.

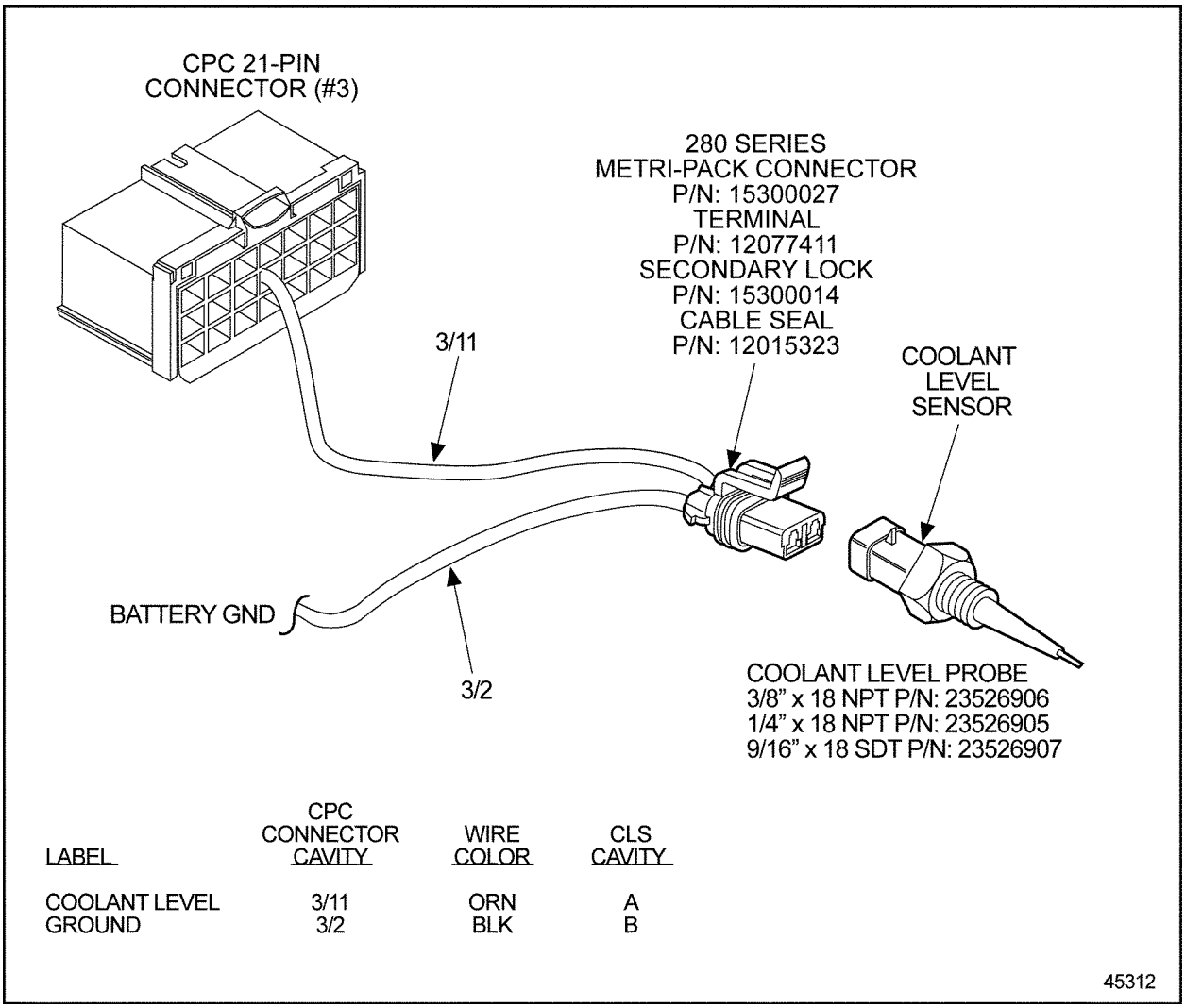

LABEL	CPC CONNECTOR CAVITY	WIRE COLOR	CLS CAVITY
COOLANT LEVEL	3/11	ORN	A
GROUND	3/2	BLK	B

Figure 30-2 Engine Coolant Level Sensor Installation for CPC

30.1.2 Coolant Leak or Faulty Radiator Cap Check

Check as follows:

1. Check for coolant leak at cylinder head gasket.
2. Check for coolant leak at air compressor head gasket.
3. Check for external coolant leak at hose connections.
4. Check for coolant in oil.
5. Check for loose or faulty radiator cap.
6. When these checks and subsequent repairs are finished, Refer to section 30.1.2.1.

All information subject to change without notice.
Copyright © 2007 DETROIT DIESEL CORPORATION

https://truckmanualshub.com/

30.1.2.1 Verify Repairs

Verify repairs as follows:

1. Turn ignition OFF.
2. Reconnect any electrical connections that were disconnected to perform the diagnosis.
3. Clear codes with DDDL 7.0 or latest version.
4. Start and bring engine up to operating temperature (over 140°F/60°C).
5. Verify operation is satisfactory and no warning lamps illuminate. If warning lamps illuminate, troubleshoot the codes. If assistance is required, call the Detroit Diesel Customer Support Center at 313–592–5800.

30.2 SPN 111/FMI 3

This condition is typically a circuit failed high.

30.2.1 Open Circuit Check

Check as follows:

1. Check for multiple codes.
   [a] If other faults are active in addition to fault 111/3, troubleshoot the other faults first.
   [b] If only fault 111/3 is active, go to step 2.
2. Disconnect the ECL Sensor.
3. Measure the resistance between pin 1 and 2 of the ECL Sensor.

All information subject to change without notice.
Copyright © 2007 DETROIT DIESEL CORPORATION

https://truckmanualshub.com/

[a] If the resistance is greater than 600 kΩ (submerged) or open, replace ECL sensor. See Figure 30-3. Refer to section 30.2.1.1.

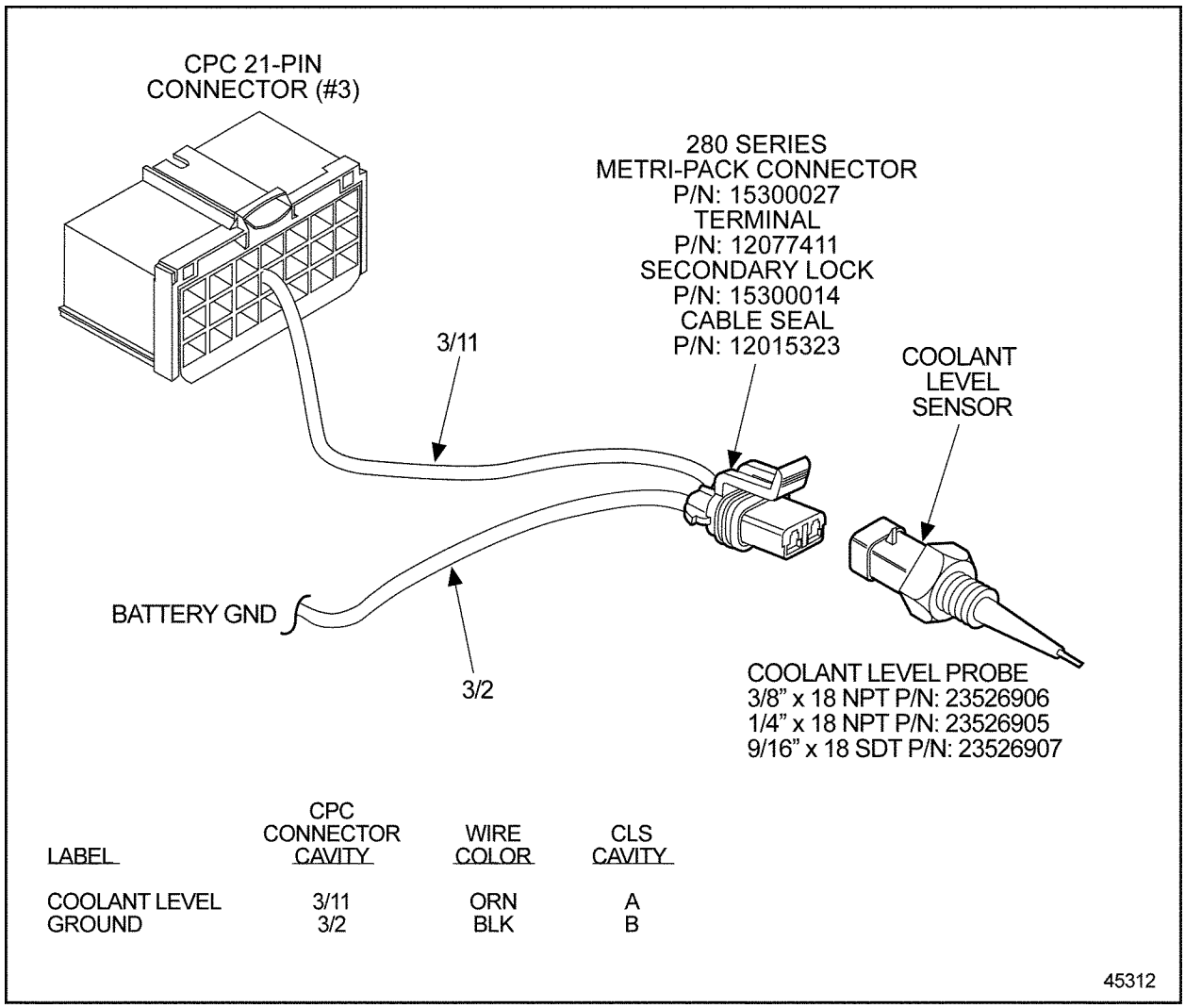

LABEL	CPC CONNECTOR CAVITY	WIRE COLOR	CLS CAVITY
COOLANT LEVEL	3/11	ORN	A
GROUND	3/2	BLK	B

Figure 30-3 Engine Coolant Level Sensor Installation for CPC

[b] If the resistance is less than 600 kΩ, go to step 4.

4. Turn the ignition ON (key On, engine OFF).
5. Measure the voltage between pins 1 and 2 of the ECL Sensor harness connector.
   [a] If the voltage is greater than 2.75 volts, go to step 7.
   [b] If the voltage is less than 2.75 volts, go to step 6.
6. Measure the voltage between pin 1 of the ECL Sensor harness connector and ground.
   [a] If the voltage is greater than 2.75 volts, repair the open between pin 2 of the CPC #3 connector and the ECL Sensor harness. Refer to section 30.2.1.1.

All information subject to change without notice.
Copyright © 2007 DETROIT DIESEL CORPORATION

https://truckmanualshub.com/

[b] If the voltage is less than 2.75 volts, repair the open between pin 11 of the CPC #3 connector and the ECL Sensor harness. Refer to section 30.2.1.1.

7. Disconnect the CPC #3 connector.
8. Measure the resistance between pins 1 and 2 of the ECL Sensor harness connector.
   [a] If the resistance is less than 5 Ω, repair the short between the ECL Sensor harness connector pins 1 and 2 and pins 2 and 11 of the CPC #3 connector. Refer to section 30.2.1.1.
   [b] If the resistance is greater than 5 Ω, review steps 3 through 8. If the results are the same, call the Detroit Diesel Customer Support Center (313–592–5800).

30.2.1.1 Verify Repairs

Verify repairs as follows:

1. Turn ignition OFF.
2. Reconnect any electrical connections that were disconnected to perform the diagnosis.
3. Clear codes with DDDL 7.0 or latest version.
4. Start and bring engine up to operating temperature (over 140°F/60°C).
5. Verify operation is satisfactory and no warning lamps illuminate. If warning lamps illuminate, troubleshoot the codes. If assistance is required, call the Detroit Diesel Customer Support Center at 313–592–5800.

30.3 SPN 111/FMI 4

This fault is typically a circuit failed low.

30.3.1 Short to Ground Check

Check for a short to ground as follows:

1. Turn the ignition ON (key On, engine OFF).
2. Read the diagnostic codes displayed.
   [a] If other faults are active in addition to fault 111/4, troubleshoot the other faults first.
   [b] If only fault 111/4 is active, go to step 3.

All information subject to change without notice.
Copyright © 2007 DETROIT DIESEL CORPORATION

https://truckmanualshub.com/

3. Disconnect the ECL Sensor. See Figure 30-4.

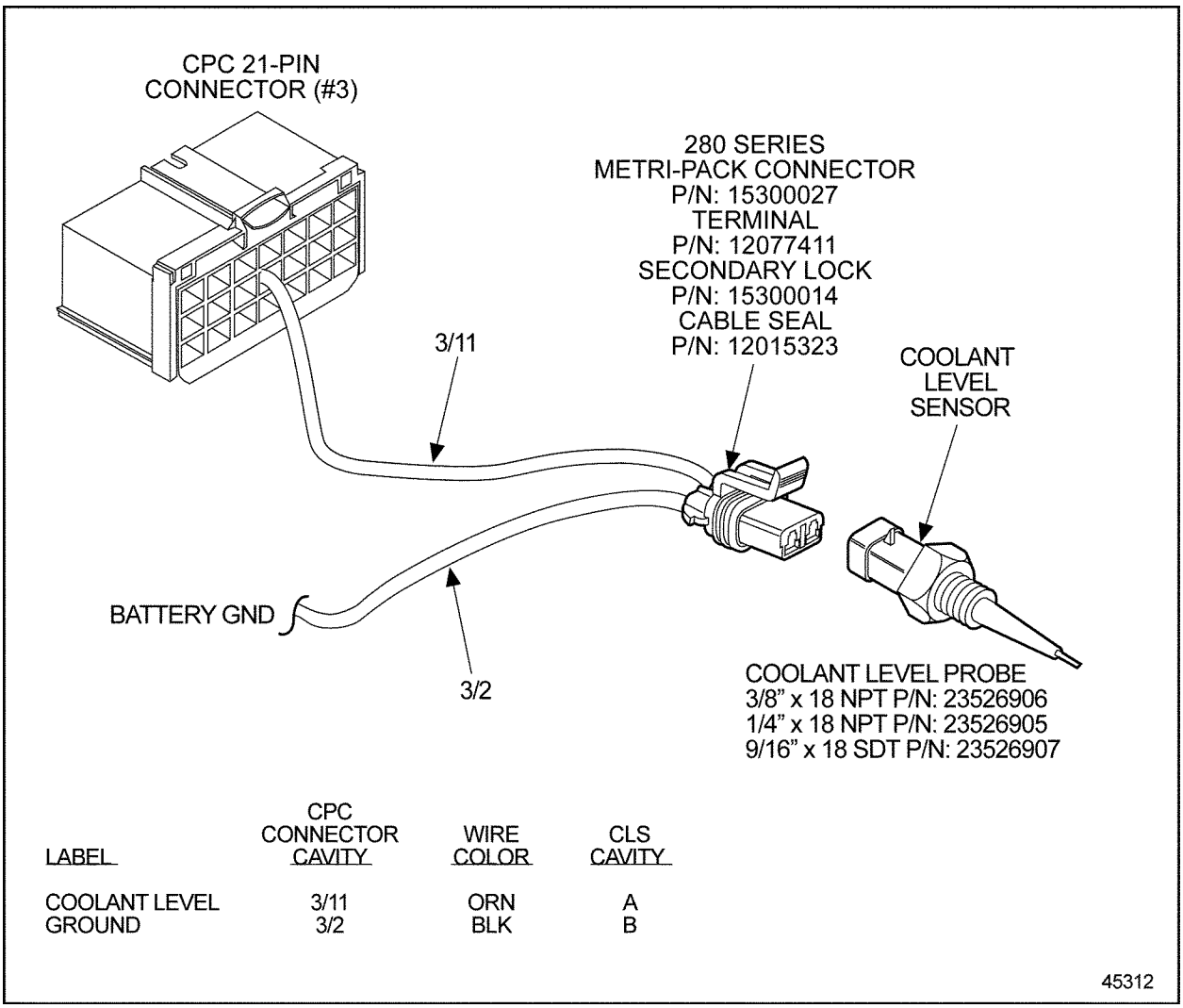

LABEL	CPC CONNECTOR CAVITY	WIRE COLOR	CLS CAVITY
COOLANT LEVEL	3/11	ORN	A
GROUND	3/2	BLK	B

Figure 30-4 Engine Coolant Level Sensor Installation for CPC

4. Disconnect the CPC #3 connector (21-pin).
5. Measure the resistance across pins 1 and 2 of the ECL Sensor connector.
   [a] If the resistance is less than 5 Ω, repair the short between the wires 2 and 11 of the CPC #3 connector. Refer to section 30.3.1.1.
   [b] If the resistance is greater than 5 Ω, go to step 6.
6. Measure the resistance between pin 1 of the ECL Sensor harness connector and ground.
   [a] If the resistance is less than 5 Ω, repair the short circuit between pin 1 of the ECL Sensor harness connector and ground. Refer to section 30.3.1.1.
   [b] If the resistance is greater than 5 Ω, go to step 7.
7. Measure the resistance between pin 2 of the ECL Sensor harness connector and ground.

All information subject to change without notice.
Copyright © 2007 DETROIT DIESEL CORPORATION

https://truckmanualshub.com/

[a] If the resistance is less than 5 Ω, repair the short circuit between pin 2 of the ECL Sensor harness connector and ground. Refer to section 30.3.1.1.

[b] If the resistance is greater than 5 Ω, review steps 30.3.1.1 through 7. If the results are the same, call the Detroit Diesel Customer Support Center (313–592–5800).

30.3.1.1 Verify Repairs

Verify repairs as follows:

1. Turn ignition OFF.
2. Reconnect any electrical connections that were disconnected to perform the diagnosis.
3. Clear codes with DDDL 7.0 or latest version.
4. Start and bring engine up to operating temperature (over 140°F/60°C).
5. Verify operation is satisfactory and no warning lamps illuminate. If warning lamps illuminate, troubleshoot the codes. If assistance is required, call the Detroit Diesel Customer Support Center at 313–592–5800.

All information subject to change without notice.
Copyright © 2007 DETROIT DIESEL CORPORATION

https://truckmanualshub.com/

All information subject to change without notice.
Copyright © 2007 DETROIT DIESEL CORPORATION

https://truckmanualshub.com/

31 SPN 132 - AIR MASS FLOW NOT NORMAL

Section **Page**

31.1 SPN 132/FMI1 31-3

https://truckmanualshub.com/

All information subject to change without notice.
Copyright © 2007 DETROIT DIESEL CORPORATION

https://truckmanualshub.com/

31.1 SPN 132/FMI1

This code typically means the air mass flow is too low.

31.1.1 Low Air Mass Flow Check

Check as follows:

1. Check for multiple codes.
   [a] If any other fault codes are present, repair them first.
   [b] If only 132/1 is present, go to the next step.
2. Perform pressure check/visual inspection of the following and repair as necessary.
   - □ Plugged inlet air filters
   - □ Charge air cooler leaks
   - □ Leaking intake manifold
   - □ Exhaust leaks/plugging

All information subject to change without notice.
Copyright © 2007 DETROIT DIESEL CORPORATION

https://truckmanualshub.com/

All information subject to change without notice.
Copyright © 2007 DETROIT DIESEL CORPORATION

https://truckmanualshub.com/

32 SPN 168 – BATTERY VOLTAGE OUTSIDE NORMAL OPERATING RANGE

Section **Page**

32.1 SPN 168/FMI 0 32-3
32.2 SPN 168/FMI 1 32-4

https://truckmanualshub.com/

All information subject to change without notice.
Copyright © 2007 DETROIT DIESEL CORPORATION

https://truckmanualshub.com/

32.1 SPN 168/FMI 0

This diagnosis is typically battery voltage high.

32.1.1 Measure Battery Voltage

Check as follows:

1. Measure battery voltage with the engine running at maximum rpm.
2. If greater than 16 volts, check for proper alternator operation and repair or replace, as required. Refer to section 32.1.1.1.

32.1.1.1 Verify Repairs

Verify repairs as follows:

1. Turn ignition OFF.
2. Reconnect any electrical connections that were disconnected to perform the diagnosis.
3. Clear codes with DDDL 7.0 or latest version.
4. Start and bring engine up to operating temperature (over 140°F/60°C).
5. Verify operation is satisfactory and no warning lamps illuminate. If warning lamps illuminate, troubleshoot the codes. If assistance is required, call the Detroit Diesel Customer Support Center at 313–592–5800.

All information subject to change without notice.
Copyright © 2007 DETROIT DIESEL CORPORATION

https://truckmanualshub.com/

32.2 SPN 168/FMI 1

This diagnosis is typically battery voltage low.

32.2.1 Alternator and Battery Check

Check as follows:

1. Check the condition of the alternator drive belt and replace, if required.
   [a] If fault is no longer active, refer to section 32.2.2.1.
   [b] If fault is still active, go to step 2.
2. Check for loose alternator mounting and retighten or repair, as required.
   [a] If fault is no longer active, refer to section 32.2.2.1.
   [b] If fault is still active, go to step 3.
3. Check for proper alternator operation and repair or replace, as required.
   [a] If fault is no longer active, erase fault code memory.
   [b] If fault is still active, go to step 4.
4. Check the condition of the battery (does it hold the charge?) and replace, if required.
   [a] If fault is no longer active, refer to section 32.2.2.1.
   [b] If fault is still active, refer to section 32.2.2.

32.2.2 Measure the Resistance

Measure the resistance as follows:

1. Measure the resistance of the individual wires in the ground circuit (MCM 21/5, 21/6, 21/8, 21/9 and CPC 2/2). See Figure 32-1.
   [a] If resistance is greater than 0.5 Ω in any wire, repair or replace the wire and connector.Refer to section 32.2.2.1.

All information subject to change without notice.
Copyright © 2007 DETROIT DIESEL CORPORATION

https://truckmanualshub.com/

[b] If resistance is less than 0.5 Ω in all wires, go to step 2.

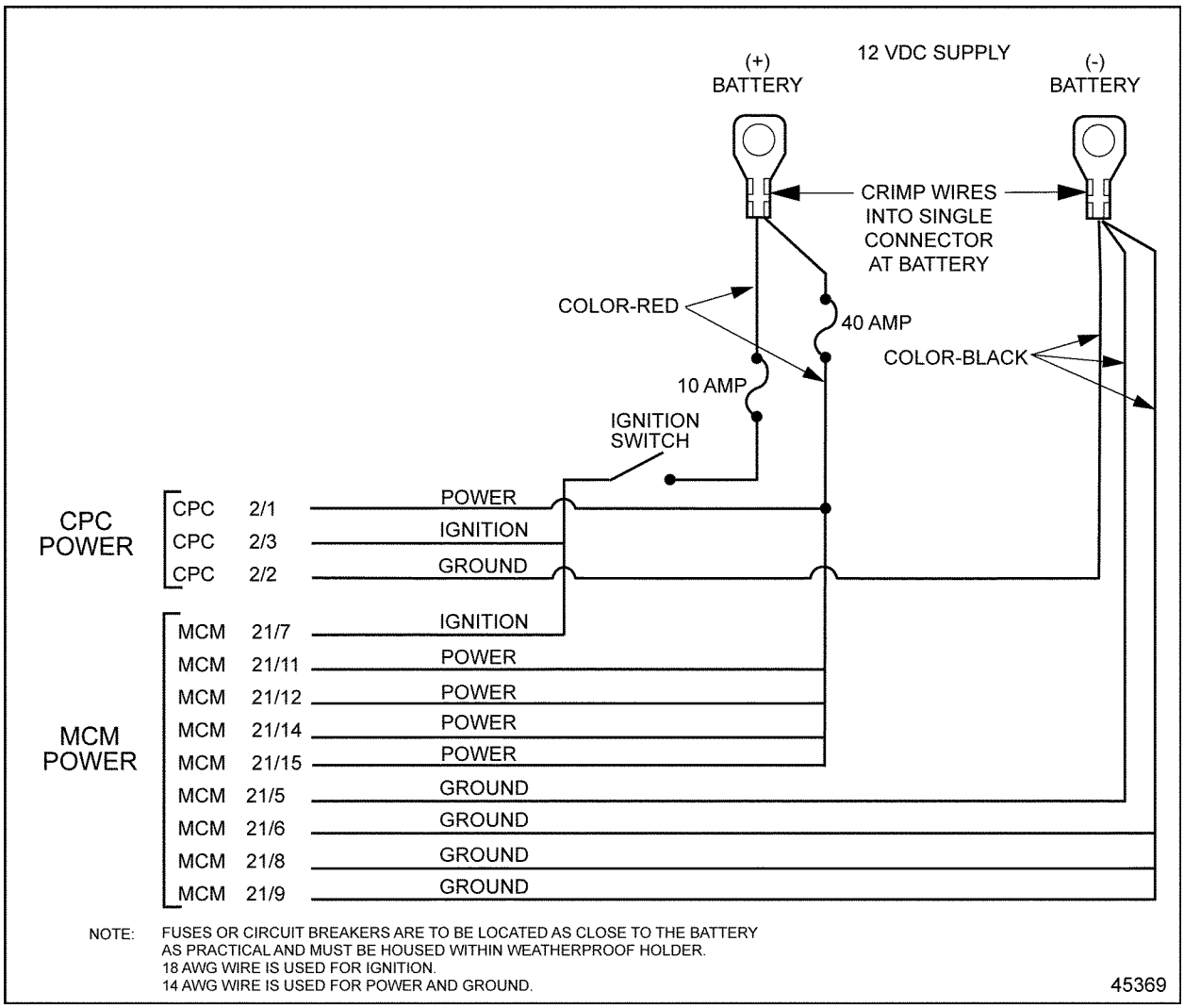

Figure 32-1 Power Wiring

2. Measure the resistance of the individual wires in the power circuit (MCM 21/11, 21/12, 21/14, 21/15 and CPC 2/1) with the engine running and battery voltage greater than 12.5 V. See Figure 32-1.

   [a] If resistance is greater than 0.5 Ω in any wire, repair or replace the power circuit wires and connector. Refer to section 32.2.2.1.

   [b] If resistance is less than 0.5 Ω in any wire, go to step 3.

3. Measure the current drop of the individual wires in the ground circuit (MCM 21/5, 21/6, 21/8, 21/9 and CPC 2/2). See Figure 32-1.

   [a] If the current drop is more than 0.2 volts in any wire, repair or replace the ground circuit wires and connector. Refer to section 32.2.2.1.

   [b] If the current drop is less than 0.2 volts in any wire, go to step 4.

All information subject to change without notice.
Copyright © 2007 DETROIT DIESEL CORPORATION

https://truckmanualshub.com/

4. Measure the current drop of the individual wires in the power circuit (MCM 21/11, 21/12, 21/14, 21/15 and CPC 2/1).See Figure 32-1
   [a] If the current drop is more than 0.2 volts in any wire, repair or replace the power circuit wires and connector. Refer to section 32.2.2.1.
   [b] If the current drop is more than 0.2 volts in any wire, refer to section 32.2.2.1.

32.2.2.1 Verify Repairs

Verify repairs as follows:

1. Turn ignition OFF.
2. Reconnect any electrical connections that were disconnected to perform the diagnosis.
3. Clear codes with DDDL 7.0 or latest version.
4. Start and bring engine up to operating temperature (over 140°F/60°C).
5. Verify operation is satisfactory and no warning lamps illuminate. If warning lamps illuminate, troubleshoot the codes. If assistance is required, call the Detroit Diesel Customer Support Center at 313–592–5800.

All information subject to change without notice.
Copyright © 2007 DETROIT DIESEL CORPORATION

https://truckmanualshub.com/

33 SPN 171 (CPC) - J1587 AMBIENT AIR TEMPERATURE SENSOR DATA NOT RECEIVED

Section **Page**

33.1 SPN 171/FMI 9 33-3
33.2 SPN 171/FMI 14 33-3

https://truckmanualshub.com/

All information subject to change without notice.
Copyright © 2007 DETROIT DIESEL CORPORATION

https://truckmanualshub.com/

33.1 SPN 171/FMI 9

This is typically J1587 Ambient Air Temperature Sensor data stopped arriving. Call the Detroit Diesel Customer Support Center at 313–592–5088.

33.2 SPN 171/FMI 14

This is typically J1587 Ambient Air Temperature Sensor data not received this ignition cycle. Call the Detroit Diesel Customer Support Center at 313–592–5088.

All information subject to change without notice.
Copyright © 2007 DETROIT DIESEL CORPORATION

https://truckmanualshub.com/

All information subject to change without notice.
Copyright © 2007 DETROIT DIESEL CORPORATION

https://truckmanualshub.com/

34 SPN 174 – SUPPLY FUEL TEMPERATURE FAULT

Section **Page**

34.1 SPN 174/FMI 3 34-3
34.2 SPN 174/FMI 4 34-5

https://truckmanualshub.com/

All information subject to change without notice.
Copyright © 2007 DETROIT DIESEL CORPORATION

https://truckmanualshub.com/

34.1 SPN 174/FMI 3

SPN 174/FMI 3 indicates a SFT Sensor open circuit or short to power.

34.1.1 Open Circuit/Short to Power Check

Check as follows:

1. Turn the ignition ON (key ON, engine OFF).
2. Check for multiple codes.
   [a] If codes 110/3, 174/3, 175/3 and 3510/3 are active at the same time, go to step 3.
   [b] If only fault 174/3 is active, go to step 5.
3. Disconnect the Supply Fuel Temperature Sensor (ECT Sensor).
4. Measure the voltage between pin 1 of the SFT Sensor and ground.
   [a] If the voltage is greater than 2.75 volts, repair the short to power between pin 55 of the MCM 120–pin connector and the Engine Coolant Temperature Sensor, the Engine Oil Temperature Sensor and the Supply Fuel Temperature Sensor. Refer to section 34.1.1.1.
   [b] If no voltage is present on pin 1 of the SFT Sensor, repair the open between pin 55 of the MCM 120–pin connector and the Engine Coolant Temperature Sensor, the Engine Oil Temperature Sensor and the Supply Fuel Temperature Sensor. Refer to section 34.1.1.1.
5. Disconnect the SFT Sensor.
6. Measure the resistance across pins 1 and 2 of the SFT Sensor. See Figure 34-1.

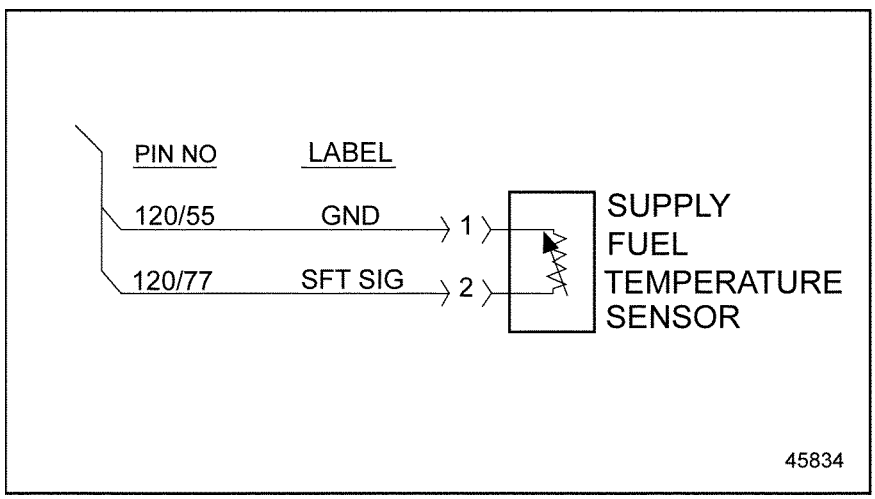

Figure 34-1 Supply Fuel Temperature Sensor

[a] If the resistance is greater than 4k Ω, replace SFT Sensor. Refer to section 34.1.1.1.

All information subject to change without notice.
Copyright © 2007 DETROIT DIESEL CORPORATION

https://truckmanualshub.com/

[b] If the resistance is less than 4k Ω, go to step 7.

7. Turn the ignition ON (key ON, engine OFF).
8. Measure the voltage between pins 1 and 2 of the SFT Sensor harness connector.
   [a] If the voltage is between 2.75 and 3.25 volts, refer to section 34.1.1.1.
   [b] If the voltage is less than 2.75 volts, go to step 9.
9. Measure the voltage between pin 2 of the SFT Sensor harness connector and ground.
   [a] If the voltage is between 2.75 and 3.25 volts, repair the open circuit between pin 1 of the SFT Sensor harness connector and pin 55 of the 120–pin MCM connector.See Figure 34-2. Refer to section 34.1.1.1.
   [b] If the voltage is less than 2.75 volts, repair the open circuit between pin 2 of the SFT Sensor harness connector and pin 77 of the 120–pin MCM connector.See Figure 34-2. Refer to section 34.1.1.1.

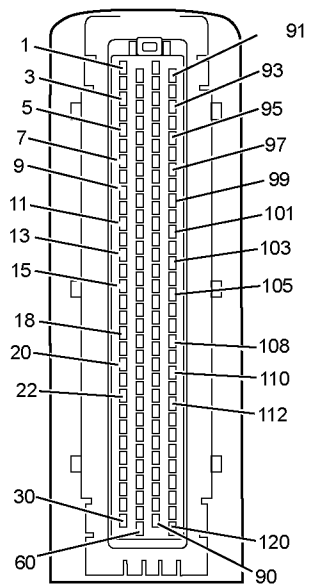

Figure 34-2 MCM 120–pin Connector

34.1.1.1 Verify Repairs

Verify repairs as follows:

1. Turn ignition OFF.
2. Reconnect any electrical connections that were disconnected to perform the diagnosis.
3. Clear codes with DDDL 7.0 or latest version.
4. Start and bring engine up to operating temperature (over 140°F/60°C).

All information subject to change without notice.
Copyright © 2007 DETROIT DIESEL CORPORATION

https://truckmanualshub.com/

5. Verify operation is satisfactory and no warning lamps illuminate. If warning lamps illuminate, troubleshoot the codes. If assistance is required, call the Detroit Diesel Customer Support Center at 313–592–5800.

34.2 SPN 174/FMI 4

SPN 174/FMI 4 indicates a SFT Sensor short to ground.

34.2.1 Short to Ground Check

Check as follows:

1. Disconnect the SFT Sensor.
2. Disconnect the 120-pin MCM connector.
3. Measure the resistance across pins 1 and 2 of the SFT Sensor connector.
   [a] If resistance is less than 5 Ω, repair short between wires 55 and 77 of the 120-pin MCM connector. Refer to section 34.2.1.1.
   [b] If resistance is greater than 5 Ω, go to step 4.
4. Measure the resistance between pin 2 of the SFT Sensor harness connector and ground.
   [a] If resistance is less than 5 Ω, repair the short circuit between pin 2 of the SFT Sensor harness connector and ground. Refer to section 34.2.1.1.
   [b] If resistance is greater than 5 Ω, review steps 3 through 4. If the results are the same, contact Detroit Diesel Customer Support Center (313–592–5800).

34.2.1.1 Verify Repairs

Verify repairs as follows:

1. Turn ignition OFF.
2. Reconnect any electrical connections that were disconnected to perform the diagnosis.
3. Clear codes with DDDL 7.0 or latest version.
4. Start and bring engine up to operating temperature (over 140°F/60°C).
5. Verify operation is satisfactory and no warning lamps illuminate. If warning lamps illuminate, troubleshoot the codes. If assistance is required, call the Detroit Diesel Customer Support Center at 313–592–5800.

All information subject to change without notice.
Copyright © 2007 DETROIT DIESEL CORPORATION

https://truckmanualshub.com/

All information subject to change without notice.
Copyright © 2007 DETROIT DIESEL CORPORATION

https://truckmanualshub.com/

35 SPN 175 – ENGINE OIL TEMPERATURE OUT OF NORMAL RANGE

Section **Page**

35.1 SPN 175/FMI 3 35-3
35.2 SPN 175/FMI 4 35-5
35.3 SPN 175/FMI 14 35-5

https://truckmanualshub.com/

All information subject to change without notice.
Copyright © 2007 DETROIT DIESEL CORPORATION

https://truckmanualshub.com/

35.1 SPN 175/FMI 3

This diagnosis is typically engine oil temperature circuit failed high.

35.1.1 Open Circuit/Short to Power Check

Check as follows:

1. Turn the ignition the ON (key ON, engine OFF).
2. Check for multiple codes.
   [a] If codes 110/3, 174/3, 175/3 and 3510/3 are active at the same time, go to step 3.
   [b] If only fault 175/3 is active, go to step 5.
3. Disconnect the Fuel Supply Temperature Sensor.
4. Measure the voltage between pin 1 of the SFT Sensor and ground.
   [a] If the voltage is greater than 2.75 volts, repair the short to power between pin 55 of the MCM 120–pin connector and the Engine Coolant Temperature Sensor, the Engine Oil Temperature Sensor and the Supply Fuel Temperature Sensor. Refer to section 35.1.1.1.
   [b] If no voltage is present on pin 1 of the SFT Sensor, repair the open between pin 55 of the MCM 120–pin connector and the Engine Coolant Temperature Sensor, the Engine Oil Temperature Sensor and the Supply Fuel Temperature Sensor. Refer to section 35.1.1.1.
5. Disconnect the EOT Sensor.
6. Check the resistance across pins 1 and 2 of the EOT Sensor.
   [a] If the resistance is greater than 4 kΩ, replace the sensor. Refer to section 35.1.1.1.
   [b] If he resistance is less than 4 kΩ, go to step 7.
7. Turn the ignition On (key ON, engine OFF).
8. Measure the voltage between pins 1 and 2 of the EOT Sensor harness connector.
   [a] If the voltage is between 2.75 and 3.24 volts, Refer to section 35.1.1.1.
   [b] If the voltage is less than 2.75 volts, go to step 9.
9. Measure the voltage between pin 2 of the EOT Sensor harness connector and ground.
   [a] If the voltage is between 2.75 and 3.24 volts, repair the open circuit between pin 1 of the EOT Sensor harness connector and pin 55 of the 120–pin MCM connector. Refer to section 35.1.1.1.
   [b] If the voltage is less than 2.75 volts, repair the open circuit between pin 2of the EOT Sensor harness connector and pin 108 of the 120–pin MCM connector. Refer to section 35.1.1.1.

All information subject to change without notice.
Copyright © 2007 DETROIT DIESEL CORPORATION

https://truckmanualshub.com/

35.1.1.1 Verify Repairs

Verify repairs as follows:

1. Turn ignition OFF.
2. Reconnect any electrical connections that were disconnected to perform the diagnosis.
3. Clear codes with DDDL 7.0 or latest version.
4. Start and bring engine up to operating temperature (over 140°F/60°C).
5. Verify operation is satisfactory and no warning lamps illuminate. If warning lamps illuminate, troubleshoot the codes. If assistance is required, call the Detroit Diesel Customer Support Center at 313–592–5800.

All information subject to change without notice.
Copyright © 2007 DETROIT DIESEL CORPORATION

https://truckmanualshub.com/

35.2 SPN 175/FMI 4

This diagnosis is typically oil temperature circuit failed low‘.

35.2.1 Short to Ground Check

Check as follows:

1. Disconnect the EOT Sensor.
2. Disconnect the 120–pin connector at the MCM.
3. Measure the resistance across pins 1 and 2 of the EOT Sensor harness connector.
   [a] If resistance is greater than 5 Ω, go to step 4.
   [b] If resistance is less than 5 Ω, repair short to ground between pins 55 and 108 of the 120-pin MCM connector.refer to section 35.2.1.1.
4. Measure the resistance between pin 2 of the EOT Sensor harness connector and ground.
   [a] If resistance is greater than 5 Ω, repeat steps 3 through 4. If the results are the same, call the Detroit Diesel Customer Support Center (313–592–5800).
   [b] If resistance is less than 5 Ω, repair the short circuit between pin 2 of the EOT Sensor harness connector and ground. Refer to section 35.2.1.1.

35.2.1.1 Verify Repairs

Verify repairs as follows:

1. Turn ignition OFF.
2. Reconnect any electrical connections that were disconnected to perform the diagnosis.
3. Clear codes with DDDL 7.0 or latest version.
4. Start and bring engine up to operating temperature (over 140°F/60°C).
5. Verify operation is satisfactory and no warning lamps illuminate. If warning lamps illuminate, troubleshoot the codes. If assistance is required, call the Detroit Diesel Customer Support Center at 313–592–5800.

35.3 SPN 175/FMI 14

This diagnosis is typically engine oil temperature out of range (drifted low/high).

NOTE:
When diagnosing rationality erratic data faults (FMI 14) always refer to SILs or SIBs or any known issues first.

35.3.1 Rationality Check for Temperature Drift

Check as follows:

All information subject to change without notice.
Copyright © 2007 DETROIT DIESEL CORPORATION

https://truckmanualshub.com/

1. Check engine oil level. Add oil if needed and recheck for fault codes. If SPN 175/FMI 14 is still active, go to step 2.
2. Disconnect the Engine Oil Temperature Sensor.
3. Inspect the Engine Oil Temperature Sensor for bent, spread or corroded pins. If pin damage is found, repair as necessary or replace the sensor. Refer to section 35.3.1.1.

35.3.1.1 Verify Repairs

Verify repairs as follows:

1. Turn ignition OFF.
2. Reconnect any electrical connections that were disconnected to perform the diagnosis.
3. Clear codes with DDDL 7.0 or latest version.
4. Start and bring engine up to operating temperature (over 140°F/60°C).
5. Verify operation is satisfactory and no warning lamps illuminate. If warning lamps illuminate, troubleshoot the codes. If assistance is required, call the Detroit Diesel Customer Support Center at 313–592–5800.

All information subject to change without notice.
Copyright © 2007 DETROIT DIESEL CORPORATION

https://truckmanualshub.com/

36 SPN 190 - ENGINE SPEED HIGH

Section **Page**

36.1 SPN 190/FMI 2 36-3

https://truckmanualshub.com/

All information subject to change without notice.
Copyright © 2007 DETROIT DIESEL CORPORATION

https://truckmanualshub.com/

36.1 SPN 190/FMI 2

This is an information code only. SPN 190/FMI 2 is active when the MCM detects an engine speed greater than 2,500 rpm for a specific amount of time. The driver should be questioned about vehicle driving conditions.

All information subject to change without notice.
Copyright © 2007 DETROIT DIESEL CORPORATION

https://truckmanualshub.com/

All information subject to change without notice.
Copyright © 2007 DETROIT DIESEL CORPORATION

https://truckmanualshub.com/

37 SPN 191 (CPC) - J1939 ETC1 MESSAGE MISSING AND TRANSMISSION OUTPUT SHAFT SPEED SIGNAL ERRATIC OR MISSING

Section **Page**

37.1 SPN 191/FMI 9 37-3
37.2 SPN 191/FMI 13 37-3
37.3 SPN 191/FMI 19 37-4

https://truckmanualshub.com/

All information subject to change without notice.
Copyright © 2007 DETROIT DIESEL CORPORATION

https://truckmanualshub.com/

37.1 SPN 191/FMI 9

This fault is typically the J1939 ETC1 message is missing.

37.1.1 Missing ETC1 Message Check

Check as follows:

1. Check for multiple codes:
   [a] If CPC SPN 168/FMI 0/14/18 (Battery Voltage) are present troubleshoot these first.
   [b] If MCM SPN 625/FMI 9 is present, troubleshoot and repair the CAN line.
   [c] If only a “J1939 Error” fault is present, go to step 2.
2. Has the CPC been recently reprogrammed?
   [a] If yes, check the proper configuration of the CPC.
   [b] If no, connect ServiceLink to determine which modules are configured for the vehicle and their communication status. Once this is done, follow the appropriate module communication troubleshooting procedures for the affected module.

37.2 SPN 191/FMI 13

This fault is typically the transmission output speed shaft signal is missing.

37.2.1 Missing Transmission Output Speed Shaft Signal Check

Check as follows:

1. Check for multiple codes:
   [a] If CPC SPN 168/FMI 0/14/18 (Battery Voltage) are present troubleshoot these first.
   [b] If MCM SPN 625/FMI 9 is present, troubleshoot and repair the CAN line.
   [c] If only a “J1939 Error” fault is present, go to step 2.
2. Has the CPC been recently reprogrammed?
   [a] If yes, check the proper configuration of the CPC.
   [b] If no, connect ServiceLink to determine which modules are configured for the vehicle and their communication status. Once this is done, follow the appropriate module communication troubleshooting procedures for the affected module.

All information subject to change without notice.
Copyright © 2007 DETROIT DIESEL CORPORATION

https://truckmanualshub.com/

37.3 SPN 191/FMI 19

This fault is typically the transmission output speed shaft signal is erratic.

37.3.1 Erratic Transmission Output Speed Shaft Signal Check

Check as follows:

1. Check for multiple codes:
   [a] If CPC SPN 168/FMI 0/14/18 (Battery Voltage) are present troubleshoot these first.
   [b] If MCM SPN 625/FMI 9 is present, troubleshoot and repair the CAN line.
   [c] If only a “J1939 Error” fault is present, go to step 2.
2. Has the CPC been recently reprogrammed?
   [a] If yes, check the proper configuration of the CPC.
   [b] If no, connect ServiceLink to determine which modules are configured for the vehicle and their communication status. Once this is done, follow the appropriate module communication troubleshooting procedures for the affected module.

All information subject to change without notice.
Copyright © 2007 DETROIT DIESEL CORPORATION

https://truckmanualshub.com/

38 SPN 247 (CPC) – MCM ENGINE HOURS DATA HIGHER OR LOWER THAN EXPECTED

Section **Page**

38.1 SPN 247/FMI 0 38-3
38.2 SPN 247/FMI 1 38-3
38.3 SPN 247/FMI 9 38-4

https://truckmanualshub.com/

All information subject to change without notice.
Copyright © 2007 DETROIT DIESEL CORPORATION

https://truckmanualshub.com/

38.1 SPN 247/FMI 0

MCM engine hours data higher than expected – This fault usually occurs after reprogramming the CPC or MCM. The internal clocks of the CPC or MCM do not match. After reprogramming either module, all fault codes *must* be cleared.

NOTE:
The CPC digital outputs have the same SPN as some MCM faults. DDDL 7.0 makes the distinction between the MCM and CPC when diagnosing a fault.

38.2 SPN 247/FMI 1

MCM engine hours data lower than expected – This fault usually occurs after reprogramming the CPC or MCM. The internal clocks of the CPC or MCM do not match. After reprogramming either module, all fault codes *must* be cleared.

NOTE:
The CPC digital outputs have the same SPN as some MCM faults. DDDL 7.0 makes the distinction between the MCM and CPC when diagnosing a fault.

All information subject to change without notice.
Copyright © 2007 DETROIT DIESEL CORPORATION

https://truckmanualshub.com/

38.3 SPN 247/FMI 9

MCM engine hours data not received or stopped arriving – This fault usually occurs after reprogramming the CPC or MCM. The internal clocks of the CPC or MCM do not match. After reprogramming either module, all fault codes *must* be cleared.

NOTE:
The CPC digital outputs have the same SPN as some MCM faults. DDDL 7.0 makes the distinction between the MCM and CPC when diagnosing a fault.

All information subject to change without notice.
Copyright © 2007 DETROIT DIESEL CORPORATION

https://truckmanualshub.com/

39 SPN 411 — EGR DIFFERENTIAL PRESSURE OR DELTA P SENSOR CIRCUIT OUTSIDE OF NORMAL OPERATING RANGE

Section **Page**

39.1 SPN 411/FMI 0 39-3
39.2 SPN 411/FMI 3 39-4
39.3 SPN 411/FMI 4 39-6
39.4 SPN 411/FMI 13 39-8

https://truckmanualshub.com/

All information subject to change without notice.
Copyright © 2007 DETROIT DIESEL CORPORATION

https://truckmanualshub.com/

39.1 SPN 411/FMI 0

This diagnosis is typically EGR differential pressure failed high (High Box).

39.1.1 EGR Delta P Sensor Check

Check as follows:

1. Disconnect the EGR Delta P Sensor.
2. Inspect the EGR Delta P Sensor harness connector for bent, spread or corroded pins.
   [a] If connector damage is found, repair as necessary. Refer to section 39.1.1.1.
   [b] If no damage is found, go to step 3.
3. Remove the EGR Delta P Sensor.
4. Inspect the sensor tubes for plugging.
   [a] If no EGR tube obstructions are found, replace the EGR Delta P Sensor. Refer to section 39.1.1.1.
   [b] If EGR tube obstructions are found clean or replace tubes as necessary. Refer to section 39.1.1.1.

All information subject to change without notice.
Copyright © 2007 DETROIT DIESEL CORPORATION

https://truckmanualshub.com/

39.1.1.1 Verify Repairs

Verify repairs as follows:

1. Turn ignition OFF.
2. Reconnect any electrical connections that were disconnected to perform the diagnosis.
3. Clear codes with DDDL 7.0 or latest version.
4. Start and bring engine up to operating temperature (over 140°F/60°C).
5. Verify operation is satisfactory and no warning lamps illuminate. If warning lamps illuminate, troubleshoot the codes. If assistance is required, call the Detroit Diesel Customer Support Center at 313–592–5800.

39.2 SPN 411/FMI 3

This diagnosis is typically EGR Delta P Sensor circuit failed high.

39.2.1 Open Circuit Check

Check as follows:

1. Disconnect the EGR Delta P Sensor.
2. Measure the resistance across pins 1 and 3 of the EGR Delta P Sensor.
   [a] If the resistance is greater than 130 kΩ, replace the EGR Delta P Sensor. Refer to section 39.2.1.1.
   [b] If the resistance is less than 130 kΩ, go to step 3.
3. Measure the resistance between pins 1 and 2 of the EGR Delta P Sensor.
   [a] If the resistance is greater than 130 kΩ, replace the EGR Delta P Sensor. Refer to section 39.2.1.1.
   [b] If the resistance is less than 130 kΩ,, go to step 4.
4. Turn the ignition ON (key ON, engine OFF).
5. Measure the voltage between pins 1 and 2 of the EGR Delta P Sensor harness connector.
   [a] If the voltage is between 4.5 and 5.5 volts, go to step 7.
   [b] If the voltage is less than 4.5 volts, go to step 6.
6. Measure the voltage between pin 1 of the EGR Delta P Sensor harness connector and ground.

All information subject to change without notice.
Copyright © 2007 DETROIT DIESEL CORPORATION

https://truckmanualshub.com/

[a] If the voltage is between 4.5 and 5.5 volts, repair the open circuit between pin 2 of the EGR Delta P Sensor harness connector and pin 103 of the 120–pin MCM connector. See Figure 39-1. Refer to section 39.2.1.1.

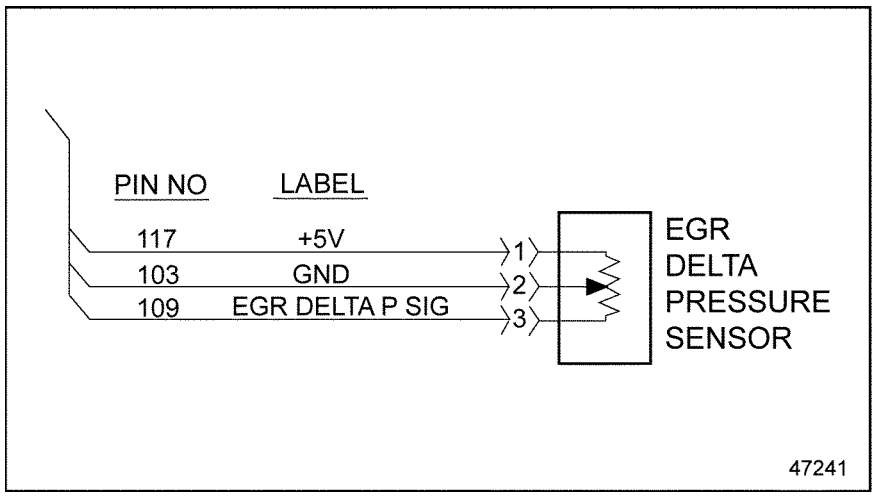

Figure 39-1 EGR Delta P Sensor

[b] If the voltage is less than 4.5 volts, repair the open circuit between pin 1 of the EGR Delta P Sensor harness connector and pin 117 of the 120–pin MCM connector. Refer to section 39.2.1.1.

7. Turn the ignition OFF.
8. Disconnect the 120–pin MCM connector.
9. Measure the resistance between pins 1 and 3 of the EGR Delta P Sensor harness connector.

   [a] If the resistance is less than 5 Ω, repair the short in wires between pins 1 and 3 of the EGR Delta P Sensor harness connector and pins 117 and 109 of the 120–pin MCM connector. Refer to section 39.3.1.1.

   [b] If the resistance is greater than 5 Ω, go to step 10.

10. Measure the resistance across pins 2 and 3 of the EGR Delta P Sensor harness connector.

    [a] If the resistance is less than 5 Ω, repair the short in wires between pins 109 and 103 of the 120–pin MCM connector. Refer to section 39.3.1.1

    [b] If the resistance is greater than 5 Ω, go to step 11.

11. Measure the resistance between pin 1of the EGR Delta P Sensor harness connector and ground.

    [a] If the resistance is less than 5 Ω, repair the short circuit between pin 117 of the 120–pin MCM connector and ground. Refer to section 39.3.1.1.

    [b] If the resistance is greater than 5 Ω, go to step 12.

12. Measure the resistance between pin 3 of the EGR Delta P Sensor harness connector and ground..

All information subject to change without notice.
Copyright © 2007 DETROIT DIESEL CORPORATION

https://truckmanualshub.com/

[a] If the resistance is less than 5 Ω, repair the short between pin 109 of the 120–pin MCM connector and ground. Refer to section 39.2.1.1.

[b] If the resistance is greater than 5 Ω, repair the open circuit between pin 3 of the EGR Delta P Sensor harness connector and pin 109 of the 120–pin MCM connector. Refer to section 39.2.1.1.

39.2.1.1 Verify Repairs

Verify repairs as follows:

1. Turn ignition OFF.
2. Reconnect any electrical connections that were disconnected to perform the diagnosis.
3. Clear codes with DDDL 7.0 or latest version.
4. Start and bring engine up to operating temperature (over 140°F/60°C).
5. Verify operation is satisfactory and no warning lamps illuminate. If warning lamps illuminate, troubleshoot the codes. If assistance is required, call the Detroit Diesel Customer Support Center at 313–592–5800.

39.3 SPN 411/FMI 4

This diagnosis is typically EGR Delta P Sensor short to ground.

39.3.1 Short to Ground Check

Check as follows:

1. Disconnect the EGR Delta P Sensor.
2. Disconnect the 120–pin MCM connector.
3. Measure the resistance between pins 1 and 2 of the EGR Delta P Sensor.

   [a] If the resistance is greater than 5Ω, go to step 4.

   [b] If the resistance is less than 5Ω, repair the short between pins 103 and 117 of the 120–pin MCM connector. Refer to section 39.3.1.1.
4. Measure the resistance between pins 2 and 3 of the EGR Delta P Sensor.

   [a] If the resistance is greater than 5Ω, go to step 5.

All information subject to change without notice.
Copyright © 2007 DETROIT DIESEL CORPORATION

https://truckmanualshub.com/

[b] If the resistance is less than 5Ω, repair the short between pins 103 and 109 of the 120–pin MCM connector. See Figure 39-2. Refer to section 39.3.1.1.

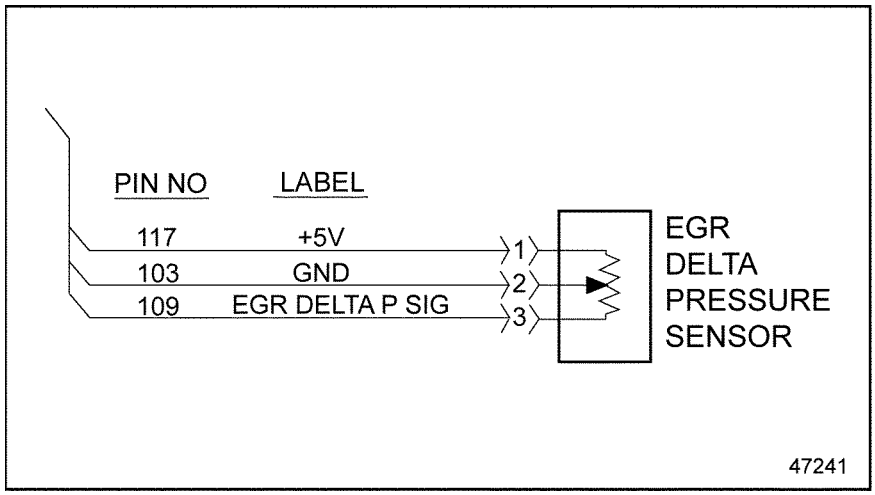

Figure 39-2 EGR Delta P Sensor

5. Measure the resistance between pin 1 of the EGR Delta P Sensor and ground.
   [a] If the resistance is greater than 3Ω, go to step 6.
   [b] If the resistance is less than 3Ω, repair the short circuit between pin 1 of the EGR Delta P Sensor harness connector and ground. Refer to section 39.3.1.1.
6. Measure the resistance between pin 3 of the EGR Delta P Sensor and ground.
   [a] If the resistance is greater than 3Ω, repeat steps 3 through 6. If the results are the same, call the Detroit Diesel Customer Support Center (313–592–5800).
   [b] If the resistance is less than 3Ω, repair the short circuit between pin 3 of the EGR Delta P Sensor harness connector and ground. Refer to section 39.3.1.1.

39.3.1.1 Verify Repairs

Verify repairs as follows:

1. Turn ignition OFF.
2. Reconnect any electrical connections that were disconnected to perform the diagnosis.
3. Clear codes with DDDL 7.0 or latest version.
4. Start and bring engine up to operating temperature (over 140°F/60°C).
5. Verify operation is satisfactory and no warning lamps illuminate. If warning lamps illuminate, troubleshoot the codes. If assistance is required, call the Detroit Diesel Customer Support Center at 313–592–5800.

All information subject to change without notice.
Copyright © 2007 DETROIT DIESEL CORPORATION

https://truckmanualshub.com/

39.4 SPN 411/FMI 13

This diagnosis is typically EGR Delta P Sensor out of calibration.

39.4.1 EGR Delta P Sensor Check

Check as follows”

1. Disconnect the EGR Delta P Sensor.
2. Inspect the EGR Delta P Sensor connector for bent, spread or corroded pins.
   [a] If pin damage is found, repair as necessary. Refer to section 39.4.1.1.
   [b] If no pin damage is found, go to step 3.
3. Replace the EGR Delta P Sensor. When the sensor is replaced, connect DDDL 7.0 and perform the EGR valve calibration service routine.

39.4.1.1 Verify Repairs

Verify repairs as follows:

1. Turn ignition OFF.
2. Reconnect any electrical connections that were disconnected to perform the diagnosis.
3. Clear codes with DDDL 7.0 or latest version.
4. Start and bring engine up to operating temperature (over 140°F/60°C).
5. Verify operation is satisfactory and no warning lamps illuminate. If warning lamps illuminate, troubleshoot the codes. If assistance is required, call the Detroit Diesel Customer Support Center at 313–592–5800.

All information subject to change without notice.
Copyright © 2007 DETROIT DIESEL CORPORATION

https://truckmanualshub.com/

40 SPN 412 - EGR TEMPERATURE IS OUTSIDE OF THE NORMAL RANGE

Section **Page**

40.1 SPN 412/FMI 3 40-3
40.2 SPN 412/FMI 4 40-6
40.3 SPN 412/FMI 16 40-8
40.4 SPN 412/FMI 20 40-9

https://truckmanualshub.com/

All information subject to change without notice.
Copyright © 2007 DETROIT DIESEL CORPORATION

https://truckmanualshub.com/

40.1 SPN 412/FMI 3

This diagnosis is typically EGR temperature circuit failed high.

40.1.1 Open Circuit/Short to Power Check

Check as follows:

1. Turn the ignition the ON (key ON, engine OFF).
2. Check for multiple codes.
   [a] If codes 1636/3, 2629/3 and 412/3 are active at the same time, 3.
   [b] If only fault 412/3 is active, go to step 5.
3. Disconnect the Intake Air Temperature Sensor.
4. Measure the voltage between pin 1 of the Intake Air Temperature Sensor and ground.
   [a] If the voltage is greater than 2.75 volts, repair the short to power between pin 52 of the MCM 120–pin connector and the Intake Air Temperature Sensor, the Turbo Compressor Out Sensor and the EGR Temperature Sensor. Refer to section 40.1.1.1.
   [b] If no voltage is present on pin 1 of the Intake Air Temperature Sensor, repair the open circuit between pin 52 of the MCM 120–pin connector and the Intake Air Temperature Sensor, the Turbo Compressor Out Sensor and the EGR Temperature Sensor. Refer to section 40.1.1.1.
5. Disconnect the EGR Temperature Sensor.
6. Measure the resistance across pins 1 and 2 of the EGR Temperature Sensor.
   [a] If the resistance is not within the range listed in Table 40-1, replace the EGR Temperature Sensor. Refer to section 40.1.1.1.

All information subject to change without notice.
Copyright © 2007 DETROIT DIESEL CORPORATION

https://truckmanualshub.com/

[b] If the resistance is within the range listed in Table 40-1, go to step 7.

Temperature (°F)	Temperature (°C)	Maximum Resistance (KΩ)	Minimum Resistance (KΩ)
32	0	1053.00	634.00
50	10	601.75	367.98
68	20	357.27	224.97
86	30	219.54	142.08
104	40	139.17	92.40
122	50	90.75	61.72
140	60	60.72	42.23
158	70	41.58	29.55
176	80	29.10	21.09
194	90	20.77	15.34

Table 40-1 EGR Temperature Sensor Resistance

7. Turn the ignition ON (key ON, engine OFF).
8. Measure the voltage between pins 1 and 2 of the EGR Temperature Sensor harness connector.
   [a] If the voltage is between 2.75 and 3.25 volts, refer to section 40.1.1.1.
   [b] If the voltage is less than 2.75 volts, go to step 9.
9. Measure the voltage between pin 2 of the EGR Temperature Sensor harness connector and ground.
   [a] If the voltage is between 2.75 and 3.25 volts, repair the open circuit between pin 1 of the EGR Temperature Sensor harness connector and pin 52 of the 120–pin MCM connector. See Figure 40-1. Refer to section 40.1.1.1.

All information subject to change without notice.
Copyright © 2007 DETROIT DIESEL CORPORATION

https://truckmanualshub.com/

[b] If the voltage is less than 2.75 volts, repair the open circuit between pin 2 of the EGR Temperature Sensor harness connector and pin 83 of the 120–pin MCM connector. See Figure 40-1. Refer to section 40.1.1.1.

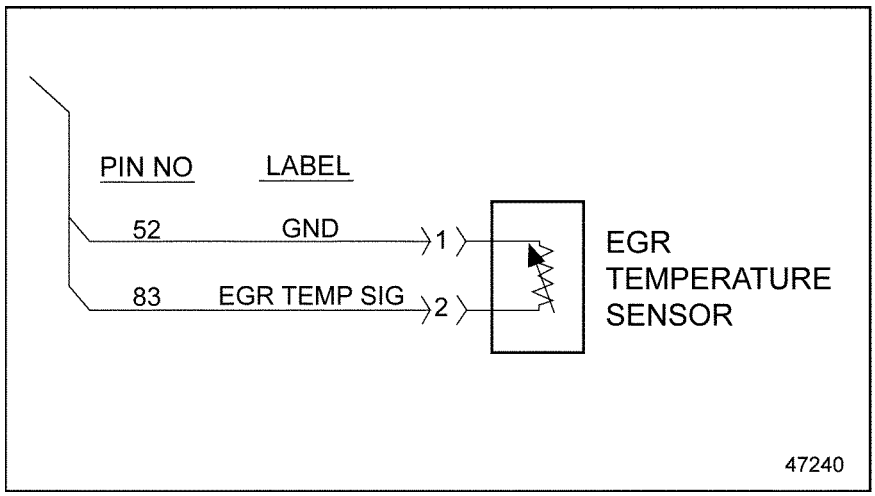

Figure 40-1 EGR Temperature Sensor

40.1.1.1 Verify Repairs

Verify repairs as follows:

1. Turn ignition OFF.
2. Reconnect any electrical connections that were disconnected to perform the diagnosis.
3. Clear codes with DDDL 7.0 or latest version.
4. Start and bring engine up to operating temperature (over 140°F/60°C).
5. Verify operation is satisfactory and no warning lamps illuminate. If warning lamps illuminate, troubleshoot the codes. If assistance is required, call the Detroit Diesel Customer Support Center at 313–592–5800.

All information subject to change without notice.
Copyright © 2007 DETROIT DIESEL CORPORATION

https://truckmanualshub.com/

40.2 SPN 412/FMI 4

This diagnosis is typically EGR temperature circuit failed low.

40.2.1 Short Circuit Check

Check for a short circuit as follows:

1. Disconnect the EGR Temperature Sensor.
2. Disconnect the 120–pin MCM connector.
3. Measure the resistance between pin 1 and 2 of the EGR Temperature Sensor connector.
   [a] If the resistance is less than 5 Ω, repair the short between wires 52 and 83 of the 120–pin MCM connector. See Figure 40-2. Refer to section 40.2.1.1.

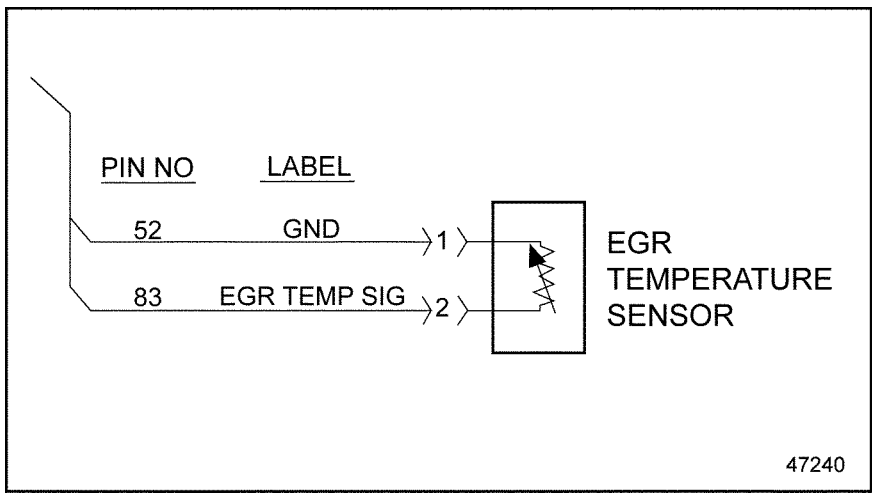

Figure 40-2 EGR Temperature Sensor

   [b] If the resistance is greater than 5 Ω, go to step 4.
4. Measure the resistance between pin 2of the EGR Temperature Sensor harness connector and ground.
   [a] If the resistance is less than 3 Ω, repair the short circuit between pin 2 of the EGR Temperature Sensor harness connector and ground. Refer to section 40.2.1.1.
   [b] If the resistance is greater than 5 Ω, repeat steps 3 through 4. If the results are the same, contact the Detroit Diesel Customer Support Center (313–5925044).

All information subject to change without notice.
Copyright © 2007 DETROIT DIESEL CORPORATION

https://truckmanualshub.com/

40.2.1.1 Verify Repairs

Verify repairs as follows:

1. Turn ignition OFF.
2. Reconnect any electrical connections that were disconnected to perform the diagnosis.
3. Clear codes with DDDL 7.0 or latest version.
4. Start and bring engine up to operating temperature (over 140°F/60°C).
5. Verify operation is satisfactory and no warning lamps illuminate. If warning lamps illuminate, troubleshoot the codes. If assistance is required, call the Detroit Diesel Customer Support Center at 313–592–5800.

All information subject to change without notice.
Copyright © 2007 DETROIT DIESEL CORPORATION

https://truckmanualshub.com/

40.3 SPN 412/FMI 16

This diagnosis is typically EGR temperature is too high.

40.3.1 EGR Temperature Check

Check as follows:

1. Visually inspect the EGR cooler for physical damage, leaks, etc.
   [a] If damage is found, repair as necessary. Refer to section 40.3.1.1.
   [b] If no damage is found, go to step 2.
2. Disconnect the EGR Valve Temperature Sensor.
3. Inspect the EGR Valve Temperature Sensor connectors for bent, spread or corroded pins.
   [a] If pin damage is found, repair as necessary. Refer to section 40.3.1.1.
   [b] If no pin damage is found, replace the EGR Valve Temperature Sensor. Refer to section 40.3.1.1.

40.3.1.1 Verify Repairs

Verify repairs as follows:

1. Turn ignition OFF.
2. Reconnect any electrical connections that were disconnected to perform the diagnosis.
3. Clear codes with DDDL 7.0 or latest version.
4. Start and bring engine up to operating temperature (over 140°F/60°C).
5. Verify operation is satisfactory and no warning lamps illuminate. If warning lamps illuminate, troubleshoot the codes. If assistance is required, call the Detroit Diesel Customer Support Center at 313–592–5800.

All information subject to change without notice.
Copyright © 2007 DETROIT DIESEL CORPORATION

https://truckmanualshub.com/

40.4 SPN 412/FMI 20

This diagnosis is typically EGR temperature drift (high box).

40.4.1 EGR Temperature Check

Check as follows:

1. Visually inspect the EGR cooler for physical damage (broken/stuck butterfly).
   [a] If damage is found, repair as necessary. Refer to section 40.4.1.1.
   [b] If no damage is found, go to step 2.
2. Disconnect the EGR Valve Temperature Sensor.
3. Inspect the EGR Valve Temperature Sensor connectors for bent, spread or corroded pins.
   [a] If pin damage is found, repair as necessary. Refer to section 40.4.1.1.
   [b] If no pin damage is found, replace the EGR Valve Temperature Sensor. Refer to section 40.4.1.1.

40.4.1.1 Verify Repairs

Verify repairs as follows:

1. Turn ignition OFF.
2. Reconnect any electrical connections that were disconnected to perform the diagnosis.
3. Clear codes with DDDL 7.0 or latest version.
4. Start and bring engine up to operating temperature (over 140°F/60°C).
5. Verify operation is satisfactory and no warning lamps illuminate. If warning lamps illuminate, troubleshoot the codes. If assistance is required, call the Detroit Diesel Customer Support Center at 313–592–5800.

All information subject to change without notice.
Copyright © 2007 DETROIT DIESEL CORPORATION

https://truckmanualshub.com/

All information subject to change without notice.
Copyright © 2007 DETROIT DIESEL CORPORATION

https://truckmanualshub.com/

41 SPN 523 (CPC) - TRANSMISSION CURRENT GEAR SIGNAL ERRATIC OR MISSING

Section **Page**

41.1 SPN 523/FMI 19 41-3
41.2 SPN 523/FMI 13 41-3

https://truckmanualshub.com/

All information subject to change without notice.
Copyright © 2007 DETROIT DIESEL CORPORATION

https://truckmanualshub.com/

41.1 SPN 523/FMI 19

This fault is typically the transmission current gear signal is erratic.

41.1.1 Erratic Transmission Current Gear Signal Check

Check as follows:

1. Check for multiple codes:
   [a] If CPC SPN 168/FMI 0/14/18 (Battery Voltage) are present troubleshoot these first.
   [b] If MCM SPN 625/FMI 9 is present, troubleshoot and repair the CAN line.
   [c] If only a “J1939 Error” fault is present, go to step 2.
2. Has the CPC been recently reprogrammed?
   [a] If yes, check the proper configuration of the CPC.
   [b] If no, connect ServiceLink to determine which modules are configured for the vehicle and their communication status. Once this is done, follow the appropriate module communication troubleshooting procedures for the affected module.

41.2 SPN 523/FMI 13

This fault is typically the transmission current gear signal is missing.

41.2.1 Missing Transmission Current Gear Signal Check

Check as follows:

1. Check for multiple codes:
   [a] If CPC SPN 168/FMI 0/14/18 (Battery Voltage) are present troubleshoot these first.
   [b] If MCM SPN 625/FMI 9 is present, troubleshoot and repair the CAN line.
   [c] If only a “J1939 Error” fault is present, go to step 2.
2. Has the CPC been recently reprogrammed?
   [a] If yes, check the proper configuration of the CPC.
   [b] If no, connect ServiceLink to determine which modules are configured for the vehicle and their communication status. Once this is done, follow the appropriate module communication troubleshooting procedures for the affected module.

All information subject to change without notice.
Copyright © 2007 DETROIT DIESEL CORPORATION

https://truckmanualshub.com/

All information subject to change without notice.
Copyright © 2007 DETROIT DIESEL CORPORATION

https://truckmanualshub.com/

42 SPN 524 (CPC) - J1939 ETC2 MESSAGE IS MISSING

Section **Page**

42.1 SPN 523/FMI 9 42-3

https://truckmanualshub.com/

All information subject to change without notice.
Copyright © 2007 DETROIT DIESEL CORPORATION

https://truckmanualshub.com/

42.1 SPN 523/FMI 9

This fault is typically the J1939 ETC2 message is missing.

42.1.1 Missing J1939 ETC2 Message Check

Check as follows:

1. Check for multiple codes:
   [a] If CPC SPN 168/FMI 0/14/18 (Battery Voltage) are present troubleshoot these first.
   [b] If MCM SPN 625/FMI 9 is present, troubleshoot and repair the CAN line.
   [c] If only a “J1939 Error” fault is present, go to step 2.
2. Has the CPC been recently reprogrammed?
   [a] If yes, check the proper configuration of the CPC.
   [b] If no, connect ServiceLink to determine which modules are configured for the vehicle and their communication status. Once this is done, follow the appropriate module communication troubleshooting procedures for the affected module.

All information subject to change without notice.
Copyright © 2007 DETROIT DIESEL CORPORATION

https://truckmanualshub.com/

All information subject to change without notice.
Copyright © 2007 DETROIT DIESEL CORPORATION

https://truckmanualshub.com/

43 SPN 527 (CPC) - J1939 CCVS MESSAGE MISSING

Section **Page**

43.1 SPN 527/FMI 9 43-3

https://truckmanualshub.com/

All information subject to change without notice.
Copyright © 2007 DETROIT DIESEL CORPORATION

https://truckmanualshub.com/

43.1 SPN 527/FMI 9

This fault is typically the J1939 CCVS message from Source #1, #2, or #3 is missing.

43.1.1 Missing J1939 CCVS Message from Source #1, #2, or #3 Check

Check as follows:

1. Check for multiple codes:
   [a] If CPC SPN 168/FMI 0/14/18 (Battery Voltage) are present troubleshoot these first.
   [b] If MCM SPN 625/FMI 9 is present, troubleshoot and repair the CAN line.
   [c] If only a “J1939 Error” fault is present, go to step 2.
2. Has the CPC been recently reprogrammed?
   [a] If yes, check the proper configuration of the CPC.
   [b] If no, connect ServiceLink to determine which modules are configured for the vehicle and their communication status. Once this is done, follow the appropriate module communication troubleshooting procedures for the affected module.

All information subject to change without notice.
Copyright © 2007 DETROIT DIESEL CORPORATION

https://truckmanualshub.com/

All information subject to change without notice.
Copyright © 2007 DETROIT DIESEL CORPORATION

https://truckmanualshub.com/

44 SPN 558 (CPC) - IDLE VALIDATION SWITCH

Section **Page**

44.1 SPN 558/FMI 1 44-3
44.2 SPN 558/FMI 3 44-3
44.3 SPN 558/FMI 4 44-5

https://truckmanualshub.com/

All information subject to change without notice.
Copyright © 2007 DETROIT DIESEL CORPORATION

https://truckmanualshub.com/

44.1 SPN 558/FMI 1

This fault is a typically incorrect wiring of the Idle Validation Switch (IVS).

44.1.1 Check Idle Validation Switch Wiring

Check as follows:

1. Connect the diagnostic tool
2. Turn ignition ON (key ON, engine OFF).
3. Monitor IVS #1 and IVS #2 with the throttle pedal in the idle position.
4. If IVS #1 reads OFF and IVS #2 reads ON, verify the proper wire pin outs.
   - □ IVS #1 should be routed from Idle Validation Switch pin 5 to pin 6 of the CPC #1 connector.
   - □ IVS #2 should be routed from Validation Switch pin 6 to pin 3 of the CPC #1 connector.
5. If wiring checks OK, contact the Detroit Diesel Customer Support Center (313–592–5800).

44.2 SPN 558/FMI 3

This diagnostic condition is typically an open circuit.

44.2.1 Open Circuit Check

Check as follows:

1. Disconnect the Idle Validation Switch.
2. Turn the ignition ON (key ON, engine OFF).
3. Measure the voltage between the Idle Validation Switch pins 4 and 6.
   - [a] If the voltage is greater than 11.5 volts, go to step 7.
   - [b] If the voltage is less than 11.5 volts, go to step 4.
4. Measure the voltage between the Idle Validation Switch pin 4 and ground.
   - [a] If the voltage is greater than 11.5 volts, go to step 5.
   - [b] If the voltage is less than 11.5 volts, repair the open wire between pin 6 of the CPC #1 connector and pin 4 of the Idle Validation Switch. Refer to section 44.2.1.1.
5. Disconnect the CPC #2 connector.
6. Measure the resistance between pin 2 of the CPC #2 connector and pin 6 of the Idle Validation Switch.
   - [a] If the resistance is greater than 5Ω, repair the open the wire between pin 2 of the CPC #2 connector and pin 6 of the Idle Validation Switch. Refer to section 44.2.1.1.
   - [b] If the resistance is less than 5Ω, replace the Idle Validation Switch. Refer to section 44.2.1.1.

All information subject to change without notice.
Copyright © 2007 DETROIT DIESEL CORPORATION

https://truckmanualshub.com/

7. Measure the voltage between the Idle Validation Switch pins 5 and 6.
   [a] If the voltage is greater than 11.5 volts, replace the Idle Validation Switch. Refer to section 44.2.1.1.
   [b] If the voltage is less than 11.5 volts, repair the open the wire between pin 3 of the CPC #1 connector and pin 5 of the Idle Validation Switch. Refer to section 44.2.1.1.

44.2.1.1 Verify Repairs

Verify repairs as follows:

1. Turn ignition OFF.
2. Reconnect any electrical connections that were disconnected to perform the diagnosis.
3. Clear codes with DDDL 7.0 or latest version.
4. Start and bring engine up to operating temperature (over 140°F/60°C).
5. Verify operation is satisfactory and no warning lamps illuminate. If warning lamps illuminate, troubleshoot the codes. If assistance is required, call the Detroit Diesel Customer Support Center at 313–592–5800.

All information subject to change without notice.
Copyright © 2007 DETROIT DIESEL CORPORATION

https://truckmanualshub.com/

44.3 SPN 558/FMI 4

This diagnostic condition is typically either a short to ground or an open wire.

44.3.1 Check for Short to Ground

Check for short to ground as follows:

1. Disconnect the Idle Validation Switch. See Figure 44-1.

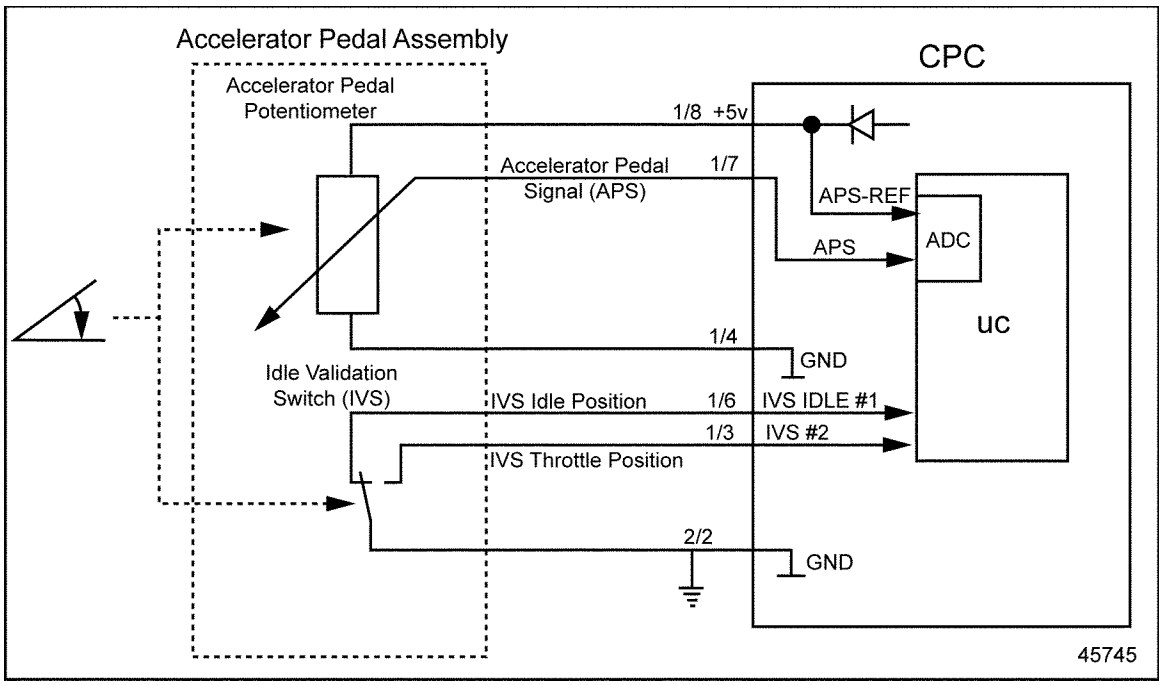

Figure 44-1 Idle Validation Switch, Part of the Accelerator Pedal Assembly

2. Disconnect the CPC #1 connector.
3. Measure the resistance between pin 4 of the Idle Validation Switch connector and ground.
   [a] If the resistance is less than 5 Ω, repair the short to ground between pin 6 of the CPC #1 connector and pin 4 of the Idle Validation Switch connector. Refer to section 44.3.1.1.
   [b] If the resistance is greater than 5 Ω, go to step 4.
4. Measure the resistance between pin 5 of the Idle Validation Switch connector and ground.
   [a] If the resistance is less than 5 Ω, repair the short to ground between pin 3 of the CPC #1 connector and pin 5 of the Idle Validation Switch connector. Refer to section 44.3.1.1.
   [b] If the resistance is greater than 5 Ω, replace the Idle Validation Switch. Refer to section 44.3.1.1.

All information subject to change without notice.
Copyright © 2007 DETROIT DIESEL CORPORATION

https://truckmanualshub.com/

44.3.1.1 Verify Repairs

Verify repairs as follows:

1. Turn ignition OFF.
2. Reconnect any electrical connections that were disconnected to perform the diagnosis.
3. Clear codes with DDDL 7.0 or latest version.
4. Start and bring engine up to operating temperature (over 140°F/60°C).
5. Verify operation is satisfactory and no warning lamps illuminate. If warning lamps illuminate, troubleshoot the codes. If assistance is required, call the Detroit Diesel Customer Support Center at 313–592–5800.

All information subject to change without notice.
Copyright © 2007 DETROIT DIESEL CORPORATION

https://truckmanualshub.com/

45 SPN 596 (CPC) - CRUISE CONTROL ENABLE SWITCH SIGNAL ERRATIC OR MISSING

Section **Page**

45.1 SPN 596/FMI 13 45-3
45.2 SPN 596/FMI 19 45-3

https://truckmanualshub.com/

All information subject to change without notice.
Copyright © 2007 DETROIT DIESEL CORPORATION

https://truckmanualshub.com/

45.1 SPN 596/FMI 13

This fault is typically the J1939 Cruise Control Enable Switch signal from Source #1, #2, or #3 is missing.

45.1.1 Missing Cruise Control Enable Switch Signal from Source #1, #2, or #3 Check

Check as follows:

1. Check for multiple codes:
   [a] If CPC SPN 168/FMI 0/14/18 (Battery Voltage) are present troubleshoot these first.
   [b] If MCM SPN 625/FMI 9 is present, repair the CAN line faults.
   [c] If only a “J1939 Error” fault is present, go to step 2.
2. Has the CPC been recently reprogrammed?
   [a] If yes, check the proper configuration of the CPC.
   [b] If no, connect ServiceLink to determine which modules are configured for the vehicle and their communication status. Once this is done, follow the appropriate module communication troubleshooting procedures for the affected module.

45.2 SPN 596/FMI 19

This fault is typically J1939 Cruise Control Enable Switch signal from Source #1, #2, or #3 is erratic.

45.2.1 Erratic Cruise Control Enable Switch Signal from Source #1, #2, or #3 Check

Check as follows:

1. Check for multiple codes:
   [a] If CPC SPN 168/FMI 0/14/18 (Battery Voltage) are present troubleshoot and repair these first.
   [b] If MCM SPN 625/FMI 9 is present, troubleshoot and repair the CAN line.
   [c] If only a “J1939 Error” fault is present, go to step 2.
2. Has the CPC been recently reprogrammed?
   [a] If yes, check the proper configuration of the CPC.
   [b] If no, connect ServiceLink to determine which modules are configured for the vehicle and their communication status. Once this is done, follow the appropriate module communication troubleshooting procedures for the affected module.

All information subject to change without notice.
Copyright © 2007 DETROIT DIESEL CORPORATION

https://truckmanualshub.com/

All information subject to change without notice.
Copyright © 2007 DETROIT DIESEL CORPORATION

https://truckmanualshub.com/

46 SPN 597 (CPC) - SERVICE BRAKE SWITCH SIGNAL ERRATIC OR MISSING

Section **Page**

46.1 SPN 597/FMI 13 46-3
46.2 SPN 597/FMI 19 46-3

https://truckmanualshub.com/

All information subject to change without notice.
Copyright © 2007 DETROIT DIESEL CORPORATION

https://truckmanualshub.com/

46.1 SPN 597/FMI 13

This fault is typically the J1939 Service Brake Switch signal from Source #1, #2, or #3 is missing.

46.1.1 Missing Service Brake Switch Signal from Source #1, #2, or #3 Check

Check as follows:

1. Check for multiple codes:
   [a] If CPC SPN 168/FMI 0/14/18 (Battery Voltage) are present troubleshoot these first.
   [b] If MCM SPN 625/FMI 9 is present, repair the CAN line faults.
   [c] If only a “J1939 Error” fault is present, go to step 2.
2. Has the CPC been recently reprogrammed?
   [a] If yes, check the proper configuration of the CPC.
   [b] If no, connect ServiceLink to determine which modules are configured for the vehicle and their communication status. Once this is done, follow the appropriate module communication troubleshooting procedures for the affected module.

46.2 SPN 597/FMI 19

This fault is typically J1939 Service Brake Switch signal from Source #1, #2, or #3 is erratic.

46.2.1 Erratic Service Brake Switch Signal from Source #1, #2, or #3 Check

Check as follows:

1. Check for multiple codes:
   [a] If CPC SPN 168/FMI 0/14/18 (Battery Voltage) are present troubleshoot and repair these first.
   [b] If MCM SPN 625/FMI 9 is present, troubleshoot and repair the CAN line.
   [c] If only a “J1939 Error” fault is present, go to step 2.
2. Has the CPC been recently reprogrammed?
   [a] If yes, check the proper configuration of the CPC.
   [b] If no, connect ServiceLink to determine which modules are configured for the vehicle and their communication status. Once this is done, follow the appropriate module communication troubleshooting procedures for the affected module.

All information subject to change without notice.
Copyright © 2007 DETROIT DIESEL CORPORATION

https://truckmanualshub.com/

All information subject to change without notice.
Copyright © 2007 DETROIT DIESEL CORPORATION

https://truckmanualshub.com/

47 SPN 599 (CPC) - CRUISE CONTROL SWITCHES NOT FUNCTIONING PROPERLY

Section **Page**

47.1 SPN 599/FMI 4 47-3

https://truckmanualshub.com/

All information subject to change without notice.
Copyright © 2007 DETROIT DIESEL CORPORATION

https://truckmanualshub.com/

47.1 SPN 599/FMI 4

This diagnosis is typically both Cruise Control switches, SET and RES, are shorted to ground.

47.1.1 Short to Ground Check

Check as follows:

1. Turn the ignition ON (key ON, engine OFF) and place the Cruise Control Switch in the OFF position. DO NOT start the engine.
2. Check the driver console display.
   [a] If Cruise Control switch status RES is displayed, go to step 3.
   [b] If Cruise Control switch status SET is displayed, go to step 4.
3. Unplug the RES Cruise Control Switch.
   [a] If RES status is no longer displayed, replace the Cruise Control RES Switch. Refer to section 47.1.1.1.
   [b] If RES status is still displayed, repair the short to ground in the wire from the RES switch to pin 16 of the CPC #1 connector. Refer to section 47.1.1.1.
4. Unplug the SET Cruise Control Switch.
   [a] If SET status is no longer displayed, replace the Cruise Control SET Switch. Refer to section 47.1.1.1.
   [b] If SET status is still displayed, repair the short to ground in the wire from the SET switch to pin 12 of the CPC #1 connector. Refer to section 47.1.1.1.

47.1.1.1 Verify Repairs

Verify repairs as follows:

1. Turn ignition OFF.
2. Reconnect any electrical connections that were disconnected to perform the diagnosis.
3. Clear codes with DDDL 7.0 or latest version.
4. Start and bring engine up to operating temperature (over 140°F/60°C).
5. Verify operation is satisfactory and no warning lamps illuminate. If warning lamps illuminate, troubleshoot the codes. If assistance is required, call the Detroit Diesel Customer Support Center at 313–592–5800.

All information subject to change without notice.
Copyright © 2007 DETROIT DIESEL CORPORATION

https://truckmanualshub.com/

All information subject to change without notice.
Copyright © 2007 DETROIT DIESEL CORPORATION

https://truckmanualshub.com/

48 SPN 600 (CPC) - CRUISE CONTROL COAST SWITCH SIGNAL ERRATIC OR MISSING

Section **Page**

48.1 SPN 600/FMI 13 48-3
48.2 SPN 600/FMI 19 48-3

https://truckmanualshub.com/

All information subject to change without notice.
Copyright © 2007 DETROIT DIESEL CORPORATION

https://truckmanualshub.com/

48.1 SPN 600/FMI 13

This fault is typically the J1939 Cruise Control Coast Switch signal from Source #1, #2, or #3 is missing.

48.1.1 Missing Cruise Control Coast Switch Signal from Source #1, #2, or #3 Check

Check as follows:

1. Check for multiple codes:
   [a] If CPC SPN 168/FMI 0/14/18 (Battery Voltage) are present troubleshoot these first.
   [b] If MCM SPN 625/FMI 9 is present, repair the CAN line faults.
   [c] If only a “J1939 Error” fault is present, go to step 2.
2. Has the CPC been recently reprogrammed?
   [a] If yes, check the proper configuration of the CPC.
   [b] If no, connect ServiceLink to determine which modules are configured for the vehicle and their communication status. Once this is done, follow the appropriate module communication troubleshooting procedures for the affected module.

48.2 SPN 600/FMI 19

This fault is typically J1939 Cruise Control Coast Switch signal from Source #1, #2, or #3 is erratic.

48.2.1 Erratic Cruise Control Coast Switch Signal from Source #1 Check

Check as follows:

1. Check for multiple codes:
   [a] If CPC SPN 168/FMI 0/14/18 (Battery Voltage) are present troubleshoot and repair these first.
   [b] If MCM SPN 625/FMI 9 is present, troubleshoot and repair the CAN line.
   [c] If only a “J1939 Error” fault is present, go to step 2.
2. Has the CPC been recently reprogrammed?
   [a] If yes, check the proper configuration of the CPC.
   [b] If no, connect ServiceLink to determine which modules are configured for the vehicle and their communication status. Once this is done, follow the appropriate module communication troubleshooting procedures for the affected module.

All information subject to change without notice.
Copyright © 2007 DETROIT DIESEL CORPORATION

https://truckmanualshub.com/

All information subject to change without notice.
Copyright © 2007 DETROIT DIESEL CORPORATION

https://truckmanualshub.com/

49 SPN 602 (CPC) - CRUISE CONTROL ACCELERATE SWITCH SIGNAL ERRATIC OR MISSING

Section **Page**

49.1 SPN 602/FMI 13 49-3
49.2 SPN 602/FMI 19 49-3

https://truckmanualshub.com/

All information subject to change without notice.
Copyright © 2007 DETROIT DIESEL CORPORATION

https://truckmanualshub.com/

49.1 SPN 602/FMI 13

This fault is typically the J1939 Cruise Control Accelerate Switch signal from Source #1, #2, or #3 is missing.

49.1.1 Missing Cruise Control Accelerate Switch Signal from Source #1, #2, or #3 Check

Check as follows:

1. Check for multiple codes:
   - [a] If CPC SPN 168/FMI 0/14/18 (Battery Voltage) are present troubleshoot these first.
   - [b] If MCM SPN 625/FMI 9 is present, repair the CAN line faults.
   - [c] If only a “J1939 Error” fault is present, go to step 2.
2. Has the CPC been recently reprogrammed?
   - [a] If yes, check the proper configuration of the CPC.
   - [b] If no, connect ServiceLink to determine which modules are configured for the vehicle and their communication status. Once this is done, follow the appropriate module communication troubleshooting procedures for the affected module.

49.2 SPN 602/FMI 19

This fault is typically J1939 Cruise Control Accelerate Switch signal from Source #1, #2, or #3 is erratic.

49.2.1 Erratic Cruise Control Accelerate Switch Signal from Source #1, #2, or #3 Check

Check as follows:

1. Check for multiple codes:
   - [a] If CPC SPN 168/FMI 0/14/18 (Battery Voltage) are present troubleshoot and repair these first.
   - [b] If MCM SPN 625/FMI 9 is present, troubleshoot and repair the CAN line.
   - [c] If only a “J1939 Error” fault is present, go to step 2.
2. Has the CPC been recently reprogrammed?
   - [a] If yes, check the proper configuration of the CPC.
   - [b] If no, connect ServiceLink to determine which modules are configured for the vehicle and their communication status. Once this is done, follow the appropriate module communication troubleshooting procedures for the affected module.

All information subject to change without notice.
Copyright © 2007 DETROIT DIESEL CORPORATION

https://truckmanualshub.com/

All information subject to change without notice.
Copyright © 2007 DETROIT DIESEL CORPORATION

https://truckmanualshub.com/

50 SPN 609 - MCM FAULT (ERRONEOUS DATA)

Section **Page**

50.1 SPN 609/FMI 12 50-3
50.2 SPN 609/FMI 14 50-4

https://truckmanualshub.com/

All information subject to change without notice.
Copyright © 2007 DETROIT DIESEL CORPORATION

https://truckmanualshub.com/

50.1 SPN 609/FMI 12

This diagnostic condition is typically MCM failed or programmed incorrectly.

50.1.1 MCM Parameter Check

Check as follows:

1. Using your diagnostic tool, reset the parameters on the MCM.
   [a] If fault code 233/12 is not active after resetting parameters, troubleshooting is finished.
   [b] If fault code 233/12 is still active after resetting parameters, go to step 2.
2. Check the MCM parameters to ensure they are correct for the vehicle configuration.
   [a] If parameters are not correct, reset parameters on the MCM.
   [b] If parameters are correct, contact Detroit Diesel Customer Support Center (313–592–5800) for authorization to replace the MCM. Set parameters on the new MCM.

All information subject to change without notice.
Copyright © 2007 DETROIT DIESEL CORPORATION

https://truckmanualshub.com/

50.2 SPN 609/FMI 14

This diagnostic condition is typically MCM incorrect or not programmed correctly.

50.2.1 MCM Check

Check as follows:

1. Check to ensure the MCM is correct for the engine.
   [a] If MCM is correct for the engine, go to step 2.
   [b] If MCM is not correct for the engine, contact Detroit Diesel Customer Support Center (313–592–5800) for authorization to replace the MCM. Set parameters on the new MCM.
2. Reset the MCM parameters.
   [a] If fault code 233/14 is not active after the MCM parameters are reset, troubleshooting is complete.
   [b] If fault code 233/14 is still active after the MCM parameters are reset, go to step 3.
3. Check the MCM parameters to ensure they are correct for the vehicle configuration.
   [a] If the MCM parameters are not correct, reset the parameters.
   [b] If the MCM parameters are correct, contact Detroit Diesel Customer Support Center (313–592–5800) for authorization to replace the MCM. Set the parameters on the new MCM.

All information subject to change without notice.
Copyright © 2007 DETROIT DIESEL CORPORATION

https://truckmanualshub.com/

51 SPN 615 (CPC) - J1939 DM1 MESSAGE FROM TRANSMISSION MISSING

Section **Page**

51.1 SPN 615/FMI 9 51-3

https://truckmanualshub.com/

All information subject to change without notice.
Copyright © 2007 DETROIT DIESEL CORPORATION

https://truckmanualshub.com/

51.1 SPN 615/FMI 9

This fault is typically the J1939 DM1 message from the transmission is missing.

51.1.1 Missing J1939 DM1 Message Check

Check as follows:

1. Check for multiple codes:
   [a] If CPC SPN 168/FMI 0/14/18 (Battery Voltage) are present troubleshoot these first.
   [b] If MCM SPN 625/FMI 9 is present, troubleshoot and repair the CAN line.
   [c] If only a “J1939 Error” fault is present, go to step 2.
2. Has the CPC been recently reprogrammed?
   [a] If yes, check the proper configuration of the CPC.
   [b] If no, connect ServiceLink to determine which modules are configured for the vehicle and their communication status. Once this is done, follow the appropriate module communication troubleshooting procedures for the affected module.

All information subject to change without notice.
Copyright © 2007 DETROIT DIESEL CORPORATION

https://truckmanualshub.com/

All information subject to change without notice.
Copyright © 2007 DETROIT DIESEL CORPORATION

https://truckmanualshub.com/

52 SPN 625 - CAN FAULT

Section **Page**

52.1 SPN 625/FMI 2 52-3
52.2 SPN 625/FMI 9 52-5

https://truckmanualshub.com/

All information subject to change without notice.
Copyright © 2007 DETROIT DIESEL CORPORATION

https://truckmanualshub.com/

52.1 SPN 625/FMI 2

This fault is typically erratic data or the CAN propriety data link has failed due to no communication between the MCM and the CPC.

NOTE:
The following diagnostics pertain to faults received from the MCM and /or the CPC.

52.1.1 Data Link Check

Check as follows:

1. Have the MCM and/or the CPC been recently changed or reprogrammed?
   [a] If yes, verify the that the correct MCM calibration and/or the correct CPC parameter list has been installed. If the correct calibration and correct parameter list have been installed, go to the next step.
   [b] If no, go to the next step.
2. Disconnect the MCM 21–pin connector.
3. Turn the ignition ON (key ON, engine OFF).
4. Measure the ignition voltage at pin 7 on the MCM 21–pin connector.
   [a] If the ignition voltage is less than 10.5 volts, restore the ignition voltage at pin 7. Refer to section 52.1.1.1.
   [b] If the ignition voltage is greater than 10.5 volts, go to the next step.
5. Measure the battery voltage at pins 11, 12, 14, and 15 on the MCM 21–pin connector.
   [a] If the battery voltage is less than 10.5 volts, restore the battery voltage at pins 11, 12, 14, and 15 on the MCM 21–pin connector. Refer to section 52.1.1.1.

NOTE:
Poor battery grounds can be a possible cause of low battery voltage.

   [b] If the battery voltage is greater than 10.5 volts, go to the next step.
6. Turn ignition OFF, leave the 21–pin MCM connector disconnected.
7. Disconnect the CPC #4 connector.
8. Measure the resistance between pins 1 and 3 of the CPC #4 connector.
   [a] If the resistance is greater than 5 Ω, go to the next step.
   [b] If the resistance is less than 5 Ω, repair the short circuit in the wires between pins 1 and 3 of the CPC #4 connector and pins 13 and 19 of the 21–pin MCM connector. Refer to section 52.1.1.1.
9. Measure the resistance between pin 1 of the CPC #4 connector and ground.
   [a] If the resistance is greater than 5 Ω, go to the next step.

All information subject to change without notice.
Copyright © 2007 DETROIT DIESEL CORPORATION

https://truckmanualshub.com/

[b] If the resistance is less than 5 Ω, repair the short circuit to ground between pin 1 of the CPC #4 connector and ground. Refer to section 52.1.1.1.

10. Check the resistance between pin 3 of the CPC #4 connector and ground.
    [a] If the resistance is greater than 5 Ω, go to the next step.
    [b] If the resistance is less than 5 Ω, repair the short circuit to ground between pin 3 of the CPC #4 connector and ground. Refer to section 52.1.1.1.
11. Measure the resistance between pin 1 of the CPC #4 connector and pin 19 of the 21–pin MCM connector.
    [a] If the resistance is greater than 5 Ω, repair the open circuit between pin 1 of the CPC #4 connector and pin 19 of the 21–pin MCM connector. Refer to section 52.1.1.1.
    [b] If the resistance is less than 5 Ω, go to the next step.
12. Measure the resistance between pin 3 of the CPC #4 connector and pin 13 of the 21–pin MCM connector.
    [a] If the resistance is greater than 5 Ω, repair the open circuit between pin 3 of the CPC #4 connector and pin 13 of the 21–pin MCM connector. Refer to section 52.1.1.1.
    [b] If the resistance is less than 5 Ω, call the DDC Customer Support Center (313–592–5800).

52.1.1.1 Verify Repairs

Verify repairs as follows:

1. Turn ignition OFF.
2. Reconnect any electrical connections that were disconnected to perform the diagnosis.
3. Clear codes with DDDL 7.0 or latest version.
4. Start and bring engine up to operating temperature (over 140°F/60°C).
5. Verify operation is satisfactory and no warning lamps illuminate. If warning lamps illuminate, troubleshoot the codes. If assistance is required, call the Detroit Diesel Customer Support Center at 313–592–5800.

All information subject to change without notice.
Copyright © 2007 DETROIT DIESEL CORPORATION

https://truckmanualshub.com/

52.2 SPN 625/FMI 9

This fault is typically erratic data or the CAN propriety data link has failed due to no communication between the MCM and the CPC.

NOTE:
The following diagnostics pertain to faults received from the MCM and /or the CPC.

52.2.1 Data Link Check

Check as follows:

1. Have the MCM and/or the CPC been recently changed or reprogrammed?
   [a] If yes, verify the that the correct MCM calibration and/or the correct CPC parameter list has been installed. If the correct calibration and correct parameter list have been installed, go to the next step.
   [b] If no, go to the next step.
2. Disconnect the MCM 21–pin connector.
3. Turn the ignition ON (key ON, engine OFF).
4. Measure the ignition voltage at pin 7 on the MCM 21–pin connector.
   [a] If the ignition voltage is less than 10.5 volts, restore the ignition voltage at pin 7. Refer to section 52.2.1.1.
   [b] If the ignition voltage is greater than 10.5 volts, go to the next step.
5. Measure the battery voltage at pins 11, 12, 14, and 15 on the MCM 21–pin connector.
   [a] If the battery voltage is less than 10.5 volts, restore the battery voltage at pins 11, 12, 14, and 15 on the MCM 21–pin connector.

NOTE:
Poor battery grounds can be a possible cause of low battery voltage.

   [b] If the battery voltage is greater than 10.5 volts, go to the next step.
6. Turn ignition OFF, leave the 21–pin MCM connector disconnected.
7. Disconnect the CPC #4 connector.
8. Measure the resistance between pins 1 and 3 of the CPC #4 connector.
   [a] If the resistance is greater than 5 Ω, go to the next step.
   [b] If the resistance is less than 5 Ω, repair the short circuit in the wires between pins 1 and 3 of the CPC #4 connector and pins 13 and 19 of the 21–pin MCM connector. Refer to section 52.2.1.1.
9. Measure the resistance between pin 1 of the CPC #4 connector and ground.
   [a] If the resistance is greater than 5 Ω, go to the next step.

All information subject to change without notice.
Copyright © 2007 DETROIT DIESEL CORPORATION

https://truckmanualshub.com/

[b] If the resistance is less than 5 Ω, repair the short circuit to ground between pin 1 of the CPC #4 connector and ground. Refer to section 52.2.1.1.

10. Check the resistance between pin 3 of the CPC #4 connector and ground.
    [a] If the resistance is greater than 5 Ω, go to the next step.
    [b] If the resistance is less than 5 Ω, repair the short circuit to ground between pin 3 of the CPC #4 connector and ground. Refer to section 52.2.1.1.
11. Measure the resistance between pin 1 of the CPC #4 connector and pin 19 of the 21–pin MCM connector.
    [a] If the resistance is greater than 5 Ω, repair the open circuit between pin 1 of the CPC #4 connector and pin 19 of the 21–pin MCM connector. Refer to section 52.2.1.1.
    [b] If the resistance is less than 5 Ω, go to the next step.
12. Measure the resistance between pin 3 of the CPC #4 connector and pin 13 of the 21–pin MCM connector.
    [a] If the resistance is greater than 5 Ω, repair the open circuit between pin 3 of the CPC #4 connector and pin 13 of the 21–pin MCM connector. Refer to section 52.2.1.1.
    [b] If the resistance is less than 5 Ω, call the DDC Customer Support Center (313–592–5800).

52.2.1.1 Verify Repairs

Verify repairs as follows:

1. Turn ignition OFF.
2. Reconnect any electrical connections that were disconnected to perform the diagnosis.
3. Clear codes with DDDL 7.0 or latest version.
4. Start and bring engine up to operating temperature (over 140°F/60°C).
5. Verify operation is satisfactory and no warning lamps illuminate. If warning lamps illuminate, troubleshoot the codes. If assistance is required, call the Detroit Diesel Customer Support Center at 313–592–5800.

All information subject to change without notice.
Copyright © 2007 DETROIT DIESEL CORPORATION

https://truckmanualshub.com/

53 SPN 628 (CPC) - MULTIPLE FAULTS

Section **Page**

53.1 SPN 628/FMI 13 (ALL FAULT DESCRIPTIONS) 53-3
53.2 SPN 628/FMI 14 53-3

https://truckmanualshub.com/

All information subject to change without notice.
Copyright © 2007 DETROIT DIESEL CORPORATION

https://truckmanualshub.com/

53.1 SPN 628/FMI 13 (ALL FAULT DESCRIPTIONS)

There are multiple fault descriptions for SPN 628/FMI 13. The troubleshooting solution is the same for any and all fault descriptions: reprogram the CPC with the latest software release.

53.2 SPN 628/FMI 14

SPN 628/FMI 14 indicates an XFLASH failure. Replace the CPC and reprogram with the latest software release.

All information subject to change without notice.
Copyright © 2007 DETROIT DIESEL CORPORATION

https://truckmanualshub.com/

All information subject to change without notice.
Copyright © 2007 DETROIT DIESEL CORPORATION

https://truckmanualshub.com/

54 SPN 629 (CPC) - MULTIPLE FAULTS

Section **Page**

54.1 SPN 629/FMI 2 54-3
54.2 SPN 629/FMI 12 54-4

https://truckmanualshub.com/

All information subject to change without notice.
Copyright © 2007 DETROIT DIESEL CORPORATION

https://truckmanualshub.com/

54.1 SPN 629/FMI 2

There are multiple fault descriptions for SPN 629/FMI 2. The troubleshooting solution is the same for any and all fault descriptions: Replace the CPC and reprogram with the latest software release.

All information subject to change without notice.
Copyright © 2007 DETROIT DIESEL CORPORATION

https://truckmanualshub.com/

54.2 SPN 629/FMI 12

There are multiple fault descriptions for SPN 629/FMI 12. The troubleshooting solution is the same for any and all fault descriptions: Replace the CPC and reprogram with the latest software release.

All information subject to change without notice.
Copyright © 2007 DETROIT DIESEL CORPORATION

https://truckmanualshub.com/

55 SPN 630 (CPC) - MULTIPLE FAULTS

Section **Page**

55.1 SPN 630/FMI 14 55-3

https://truckmanualshub.com/

All information subject to change without notice.
Copyright © 2007 DETROIT DIESEL CORPORATION

https://truckmanualshub.com/

55.1 SPN 630/FMI 14

There are multiple fault descriptions for SPN 630/FMI 14. They are listed with the troubleshooting solution:

- CPC failed to download MCM static fault data. Reprogram the CPC with the latest software release.
- MCM reporting inconsistent static fault code data. Reprogram the MCM with the latest software release
- MCM contains more MUs than the current CPC2 software version is able to store. Reprogram the CPC with the latest software release.
- MCM is reporting inconsistent static fault code data. Reprogram the MCM with the latest software release.

All information subject to change without notice.
Copyright © 2007 DETROIT DIESEL CORPORATION

https://truckmanualshub.com/

All information subject to change without notice.
Copyright © 2007 DETROIT DIESEL CORPORATION

https://truckmanualshub.com/

56 SPN 636 — CRANKSHAFT POSITION SENSOR OUTSIDE OF NORMAL OPERATING CONDITIONS

Section **Page**

56.1 SPN 636/FMI 1 56-3
56.2 SPN 636/FMI 3 56-4
56.3 SPN 636/FMI 4 56-6
56.4 SPN 636/FMI 7 56-7
56.5 SPN 636/FMI 8 56-9
56.6 SPN 636/FMI 14 56-11

https://truckmanualshub.com/

All information subject to change without notice.
Copyright © 2007 DETROIT DIESEL CORPORATION

https://truckmanualshub.com/

56.1 SPN 636/FMI 1

The diagnostic condition is typically CKP Sensor Signal Voltage Too Low.

56.1.1 Low Signal Voltage Check

Check low signal voltage as follows:

1. If fault occurs only when cranking the engine (and engine will not start), check that the CKP and Camshaft Position (CMP) sensors are correctly wired to the MCM. See Figure 56-1.

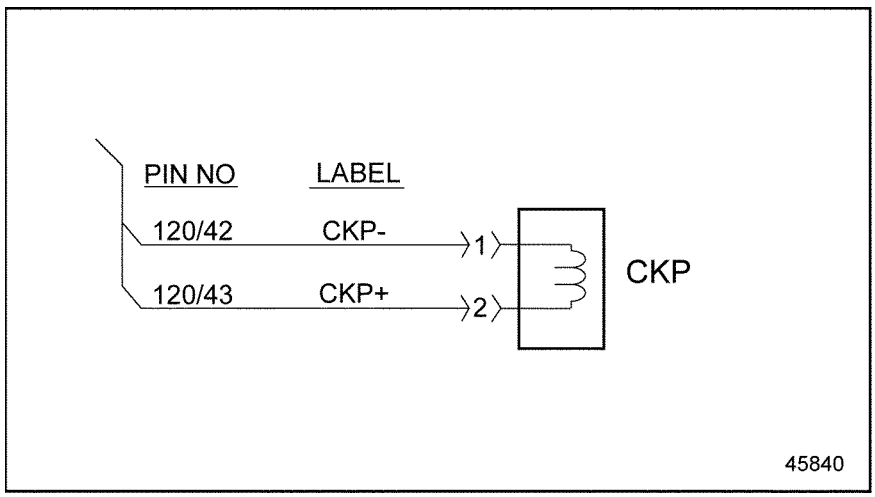

Figure 56-1 Crankshaft Position Sensor Wiring

   [a] If wires are not correctly wired, repair or replace wires as required. Refer to section 56.1.1.1.

   [b] If wires are correctly wired, go to step 2.

2. If fault occurs at other times then when cranking the engine, check that the CKP Sensor position is correct (the sensor is seated in all the way).

   [a] If fault is not active after checking CKP Sensor position, repair the CKP Sensor clamping sleeve. Refer to section 56.1.1.1.

   [b] If fault is still active after checking the CKP Sensor position, go to step 3.

3. Check the flywheel position through the inspection window of the timing case using turning tool. Look for timing marks and damage.

   [a] If the flywheel is out of position, repair or replace, as required. Refer to section 56.1.1.1.

   [b] If the flywheel is not out of position, go to step 4.

4. Check crankshaft axial play.

All information subject to change without notice.
Copyright © 2007 DETROIT DIESEL CORPORATION

https://truckmanualshub.com/

[a] If axial play is not within specifications, repair or replace crankshaft thrust bearings, as required. Refer to section 56.1.1.1.

[b] If axial play is within specifications, replace the MCM. Refer to section 56.1.1.1.

56.1.1.1 Verify Repairs

Verify repairs as follows:

1. Turn ignition OFF.
2. Reconnect any electrical connections that were disconnected to perform the diagnosis.
3. Clear codes with DDDL 7.0 or latest version.
4. Start and bring engine up to operating temperature (over 140°F/60°C).
5. Verify operation is satisfactory and no warning lamps illuminate. If warning lamps illuminate, troubleshoot the codes. If assistance is required, call the Detroit Diesel Customer Support Center at 313–592–5800.

56.2 SPN 636/FMI 3

The diagnostic condition is typically CKP Sensor has an open circuit.

56.2.1 Open Circuit Check

Check as follows:

1. Disconnect the CKP Sensor.
2. Measure the resistance across pins 1 and 2 of the CKP Sensor. See Figure 56-2.
   [a] If the resistance is greater than 140 Ω, replace CKP Sensor. Refer to section 56.2.2.1.
   [b] If the resistance is less than 140 Ω, go to step 3.
3. Disconnect the 120–pin MCM connector.
4. Measure the resistance across pins 1 and 2 of the CKP Sensor harness connector.
   [a] If the resistance is greater than 5 Ω, go to step 5.

All information subject to change without notice.
Copyright © 2007 DETROIT DIESEL CORPORATION

https://truckmanualshub.com/

[b] If the resistance is less than 5 Ω, repair the short between pins 1 and 2 of the CKP Sensor harness connector and pins 42 and 43 of the 120–pin MCM connector. See Figure 56-2. Refer to section 56.2.2.1.

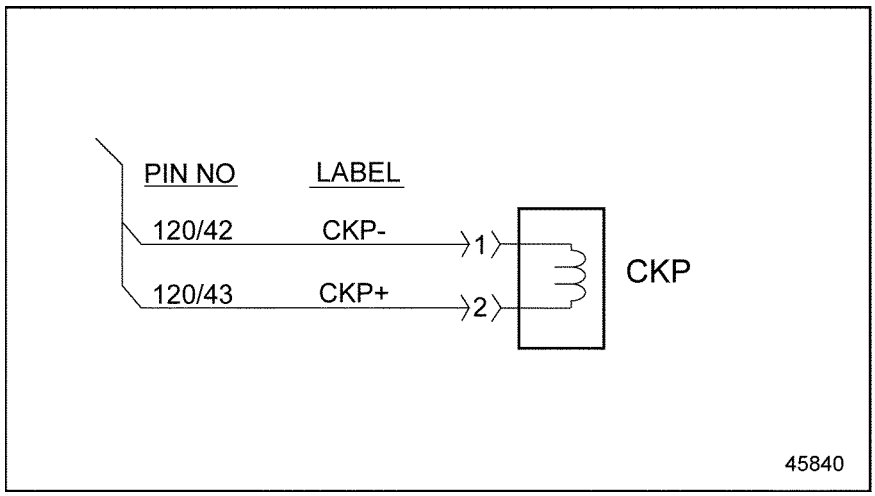

Figure 56-2 Crankshaft Position Sensor Wiring

5. Measure the resistance between pin 1 of the CKP Sensor harness connector and pin 42 of the 120–pin MCM connector.
   [a] If the resistance is greater than 5 Ω, repair the open between pin 1 of the CKP Sensor harness connector and pin 42 of the 120–pin MCM connector. Refer to section 56.2.2.1.
   [b] If the resistance is less than 5 Ω, go to step 6.
6. Measure the resistance between pin 2 of the CKP Sensor harness connector and pin 43 of the 120–pin MCM connector.
   [a] If the resistance is greater than 5 Ω, repair the open between pin 2 of the CKP Sensor harness connector and pin 43 of the 120–pin MCM connector. Refer to section 56.2.2.1.
   [b] If the resistance is less than 5 Ω, refer to section 56.2.2.

56.2.2 Crankshaft Position Sensor Gap Check

Check as follows:

1. Bar the engine until the CKP Sensor is over a CKP tooth of the pulse wheel.
2. Check the gap between the CKP Sensor and the tooth of the pulse wheel (0.020 to 0.040 in.). A depth micrometer can be used.
   [a] If the gap setting is correct, repeat steps 1 and 2. If the results are the same, call the Detroit Diesel Customer Support Center (313–592–5800).

All information subject to change without notice.
Copyright © 2007 DETROIT DIESEL CORPORATION

https://truckmanualshub.com/

[b] If the gap setting is not correct, adjust the CKP Sensor until the gap setting is correct and refer to section 56.2.2.1. If the problem returns, the pulse wheel may be loose or bad or damaged.

56.2.2.1 Verify Repairs

Verify repairs as follows:

1. Turn ignition OFF.
2. Reconnect any electrical connections that were disconnected to perform the diagnosis.
3. Clear codes with DDDL 7.0 or latest version.
4. Start and bring engine up to operating temperature (over 140°F/60°C).
5. Verify operation is satisfactory and no warning lamps illuminate. If warning lamps illuminate, troubleshoot the codes. If assistance is required, call the Detroit Diesel Customer Support Center at 313–592–5800.

56.3 SPN 636/FMI 4

This diagnostic condition is typically the CKP Sensor shorted to ground.

56.3.1 Short to Ground Check

Check as follows:

1. Disconnect the CKP Sensor.
2. Measure the resistance between pin 1 of the CKP Sensor and ground.
   [a] If the resistance is greater than 5 Ω, go to step 3.
   [b] If the resistance is less than 5 Ω, replace the sensor. Refer to section 56.3.1.1.
3. Measure the resistance between pin 2 of the CKP Sensor and ground.
   [a] If the resistance is greater than 5 Ω, go to step 4.
   [b] If the resistance is less than 5 Ω, replace the sensor. Refer to section 56.3.1.1.
4. Disconnect the 120–pin MCM connector.
5. Measure the resistance across pins 1 and 2 of the CKP Sensor harness connector.
   [a] If the resistance is greater than 5 Ω, go to step 6.
   [b] If the resistance is less than 5 Ω, repair the short between the CKP Sensor harness connector pins 1 and 2 and pins 42 and 43 of the 120–pin MCM connector. Refer to section 56.3.1.1.
6. Measure the resistance between pin 1 of the CKP Sensor harness connector and ground.
   [a] If the resistance is greater than 5 Ω, go to step 7.

All information subject to change without notice.
Copyright © 2007 DETROIT DIESEL CORPORATION

https://truckmanualshub.com/

[b] If the resistance is less than 5 Ω, repair the short to ground between pin 1 of the CKP Sensor harness connector and pin 42 of the 120–pin MCM connector. Refer to section 56.3.1.1.

7. Measure the resistance between pin 2 of the CKP Sensor harness connector and pin 43 of the 120–pin MCM connector.

   [a] If the resistance is greater than 5 Ω, reconnect the 120–pin MCM connector and review steps 2 through 7. If the results are the same, call the Detroit Diesel Customer Support Center (313–592–5800).

   [b] If the resistance is less than 5 Ω, repair the short to ground between pin 2 of the CKP Sensor harness connector and pin 43 of the 120–pin MCM connector. Refer to section 56.3.1.1.

56.3.1.1 Verify Repairs

Verify repairs as follows:

1. Turn ignition OFF.
2. Reconnect any electrical connections that were disconnected to perform the diagnosis.
3. Clear codes with DDDL 7.0 or latest version.
4. Start and bring engine up to operating temperature (over 140°F/60°C).
5. Verify operation is satisfactory and no warning lamps illuminate. If warning lamps illuminate, troubleshoot the codes. If assistance is required, call the Detroit Diesel Customer Support Center at 313–592–5800.

56.4 SPN 636/FMI 7

This diagnostic condition is typically camshaft and crankshaft signals not matching.

56.4.1 Camshaft and Crankshaft Signals Not Matching

Check as follows:

1. Remove CKP and CMP sensors.
2. Reseat the CKP Sensor until it touches the flywheel and reseat the CMP Sensor until it touches the cam gear. Check codes.

   [a] If 636/7 is not active, refer to section 56.4.1.1.

   [b] If 636/7 is active, go to step 3.

3. Remove CKP and CMP sensors.
4. Remove O-ring in CMP Sensor opening.
5. Reseat CKP Sensor until it touches the flywheel and reseat the CMP Sensor without the O-ring until the sensor touches the cam gear.

All information subject to change without notice.
Copyright © 2007 DETROIT DIESEL CORPORATION

https://truckmanualshub.com/

[a] If 636/7 is not active, replace the O-ring with a smaller O-ring. Refer to section 56.4.1.1.

[b] If 636/7 is active, go to step 6.

6. Disconnect the CKP Sensor connector and measure the sensor reisitance.

   [a] If the sensor resistance is not between 1000 Ω and 1385 Ω, replace the sensor. refer to section 56.4.1.1.

   [b] If the sensor resistance is between 1000 Ω and 1385 Ω, go to step 7.

7. Verify that all flywheel holes or slots are present by viewing through the access hole on the flywheel housing.

   [a] If the flywheel holes or slots are missing or damaged, replace the flywheel as needed. refer to section 56.4.1.1.

   [b] If the flywheel holes or slots are all present, go to step 8.

8. Replace the MCM. Refer to section 56.4.1.1.

56.4.1.1 Verify Repairs

Verify repairs as follows:

1. Turn ignition OFF.
2. Reconnect any electrical connections that were disconnected to perform the diagnosis.
3. Clear codes with DDDL 7.0 or latest version.
4. Start and bring engine up to operating temperature (over 140°F/60°C).
5. Verify operation is satisfactory and no warning lamps illuminate. If warning lamps illuminate, troubleshoot the codes. If assistance is required, call the Detroit Diesel Customer Support Center at 313–592–5800.

All information subject to change without notice.
Copyright © 2007 DETROIT DIESEL CORPORATION

https://truckmanualshub.com/

56.5 SPN 636/FMI 8

The diagnostic condition is typically CKP Sensor Time Out.

56.5.1 Sensor Time Out Check

Check as follows:

1. Disconnect the MCM 120–pin connector.
2. Measure the resistance between pins 42 and 43 of the MCM 120–pin connector.
   [a] If the resistance is less than 140 Ω, go to step 3.
   [b] If the resistance is greater than 140 Ω, go to step 5.
3. Disconnect the CKP Sensor.
4. Measure the resistance between pins 42 and 43 of the MCM 120–pin connector.
   [a] If the resistance is less than 3 Ω, repair the short between pins 42 and 43 of the MCM 120–pin connector and the CKP Sensor. Refer to section 56.5.1.1.
   [b] If the resistance is greater than 3 Ω, replace the CKP Sensor. Refer to section 56.5.1.1.
5. Disconnect the CKP Sensor. See Figure 56-3.

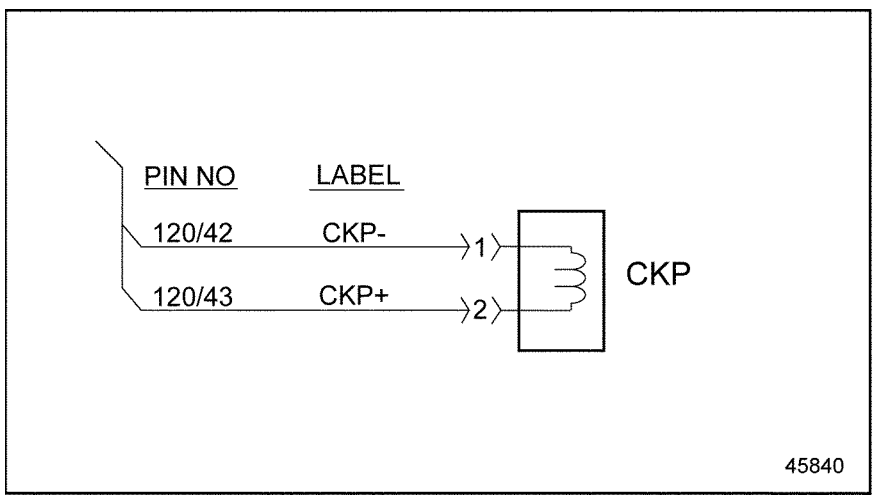

Figure 56-3 Crankshaft Position Sensor

6. Jumper pins 1 and 2 of the CKP Sensor harness.
7. Measure the resistance between pins 42 and 43 of the MCM 120–pin connector.
   [a] If the resistance is greater than 3 Ω, repair the open between pins 42 and 43 of the MCM 120–pin connector and the CKP Sensor connector. Refer to section 56.5.1.1.
   [b] If the resistance is less than 3 Ω, replace the CKP Sensor. Refer to section 56.5.1.1.

All information subject to change without notice.
Copyright © 2007 DETROIT DIESEL CORPORATION

https://truckmanualshub.com/

56.5.1.1 Verify Repairs

Verify repairs as follows:

1. Turn ignition OFF.
2. Reconnect any electrical connections that were disconnected to perform the diagnosis.
3. Clear codes with DDDL 7.0 or latest version.
4. Start and bring engine up to operating temperature (over 140°F/60°C).
5. Verify operation is satisfactory and no warning lamps illuminate. If warning lamps illuminate, troubleshoot the codes. If assistance is required, call the Detroit Diesel Customer Support Center at 313–592–5800.

All information subject to change without notice.
Copyright © 2007 DETROIT DIESEL CORPORATION

https://truckmanualshub.com/

56.6 SPN 636/FMI 14

A typical diagnosis is swapped pins.

If this SPN and FM:I are active, verify that the wiring from CKP Sensor pin 1 to pin 41 of the MCM 120–pin connector and that the wiring from CKP Sensor pin 2 to pin 43 of the MCM 120–pin connector is correct. See Figure 56-4.

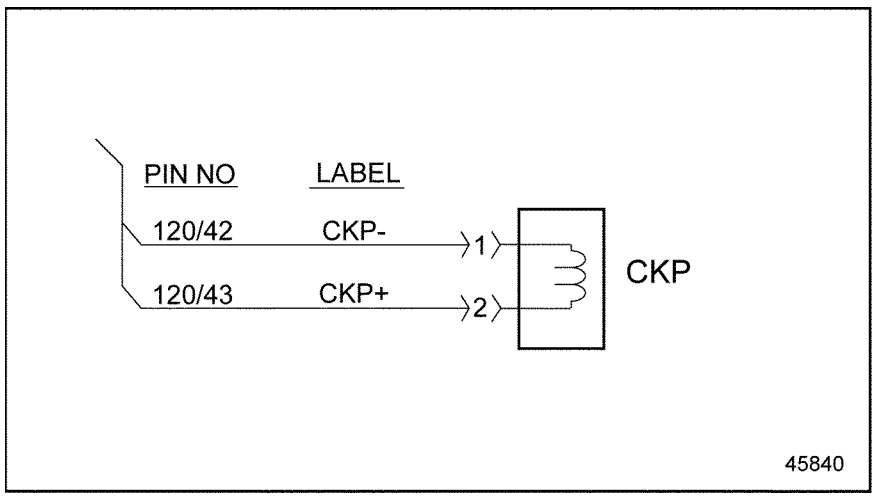

Figure 56-4 Crankshaft Position Sensor

All information subject to change without notice.
Copyright © 2007 DETROIT DIESEL CORPORATION

https://truckmanualshub.com/

All information subject to change without notice.
Copyright © 2007 DETROIT DIESEL CORPORATION

https://truckmanualshub.com/

57 SPN 641 - SMART REMOTE ACTUATOR 5 (VGT) ABNORMAL OPERATION

Section **Page**

57.1 SPN 641/FMI 7 57-3
57.2 SPN 641/FMI 8 57-5
57.3 SPN 641/FMI 9 57-6
57.4 SPN 641/FMI 11 57-7
57.5 SPN 641/FMI 14 57-9
57.6 SPN 641/FMI 31 57-12

https://truckmanualshub.com/

All information subject to change without notice.
Copyright © 2007 DETROIT DIESEL CORPORATION

https://truckmanualshub.com/

57.1 SPN 641/FMI 7

This code typically means the Smart Remote Actuator 5 is in Failsafe Mode, Motor On.

57.1.1 Actuator Check

Check as follows:

1. Using DDDL 7.0, perform the Turbo Hysteresis test.
   [a] If the test results pass, repeat the hysteresis test. If results are the same, refer to section 57.1.1.1. If the test results fail, go to the next step.
   [b] If the test results fail, go to the next step.
2. Turn the ignition OFF.
3. Inspect the turbocharger electrical connectors.
   [a] If bent, corroded or damaged pins are found, repair as necessary. Refer to section 57.1.1.1.
   [b] If electrical connections are OK, go to the next step.
4. Remove the turbo actuator.
5. Physically move the sector gear on the turbocharger from 1 to 2, see Figure 57-1.

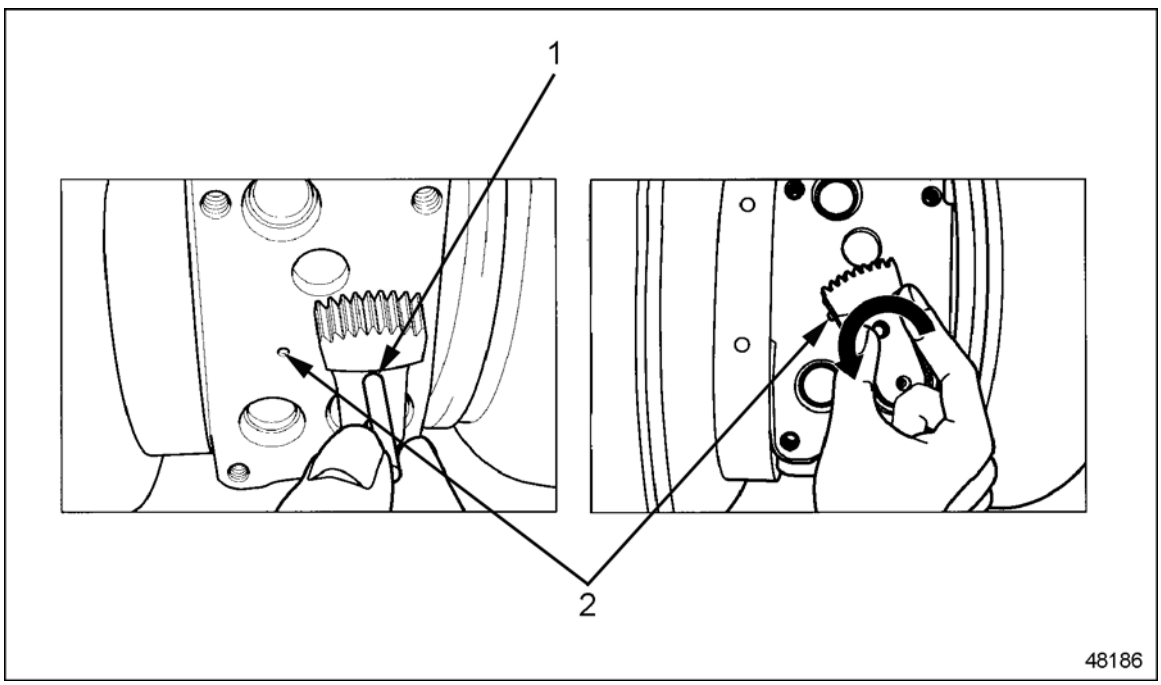

1. Alignment Hole – Alignment pin fits into housing
2. Reference Indentation – Sector shaft covers one-half of indentation

Figure 57-1 Moving the Sector Gear

All information subject to change without notice.
Copyright © 2007 DETROIT DIESEL CORPORATION

https://truckmanualshub.com/

6. Check the free movement from 1 to 2 (see Figure 57-1), return back to 1 and install the pin to insure proper alignment. Once you have proper alignment, remove the pin.
   [a] If there is free movement, replace the turbo actuator. Refer to section 57.1.1.1.
   [b] If there is not free movement, go to the next step.
7. Remove the turbocharger and inspect for signs of foreign material contamination.
   [a] If foreign material damage is found, repair the source of material entry and contact the Detroit Diesel Customer Support Center at 313–592–5800 for turbocharger replacement authorization.
   [b] If no foreign material damage is found but there is no free movement, contact the Detroit Diesel Customer Support Center at 313–592–5800 for turbocharger replacement authorization.

57.1.1.1 Verify Repairs

Verify repairs as follows:

1. Turn ignition OFF.
2. Reconnect any electrical connections that were disconnected to perform the diagnosis.
3. Clear codes with DDDL 7.0 or latest version.
4. Start and bring engine up to operating temperature (over 140°F/60°C).
5. Verify operation is satisfactory and no warning lamps illuminate. If warning lamps illuminate, troubleshoot the codes. If assistance is required, call the Detroit Diesel Customer Support Center at 313–592–5800.

All information subject to change without notice.
Copyright © 2007 DETROIT DIESEL CORPORATION

https://truckmanualshub.com/

57.2 SPN 641/FMI 8

This code typically means the Smart Remote Actuator 5 has an internal test running.

57.2.1 Actuator Check

Check as follows:

1. Disconnect the turbo actuator.
2. Disconnect the MCM 120–pin connector.
3. Measure the resistance between pin 3 of the turbo actuator harness connector and pin 74 of the MCM 120–pin connector.
   [a] If the resistance is less than 3 Ω, go to step 4.
   [b] If the resistance is greater than 3 Ω, repair the open between pin 3 of the turbo actuator harness connector and pin 74 of the MCM 120–pin connector. Refer to section 57.2.1.1.
4. Measure the resistance between pin 4 of the turbo actuator harness connector and pin 75 of the MCM 120–pin connector.
   [a] If the resistance is less than 3 Ω, replace the turbo actuator. Refer to section 57.2.1.1.
   [b] If the resistance is greater than 3 Ω, repair the open between pin 4 of the turbo actuator harness connector and pin 75 of the MCM 120–pin connector. Refer to section 57.2.1.1.

57.2.1.1 Verify Repairs

Verify repairs as follows:

1. Turn ignition OFF.
2. Reconnect any electrical connections that were disconnected to perform the diagnosis.
3. Clear codes with DDDL 7.0 or latest version.
4. Start and bring engine up to operating temperature (over 140°F/60°C).
5. Verify operation is satisfactory and no warning lamps illuminate. If warning lamps illuminate, troubleshoot the codes. If assistance is required, call the Detroit Diesel Customer Support Center at 313–592–5800.

All information subject to change without notice.
Copyright © 2007 DETROIT DIESEL CORPORATION

https://truckmanualshub.com/

57.3 SPN 641/FMI 9

This code typically means the Smart Remote Actuator 5 is in Failsafe Mode, Motor Off.

57.3.1 Actuator Check

Check as follows:

1. Disconnect the turbo actuator.
2. Inspect the turbo actuator connector and harness for damaged, bent or spread pins.
   [a] If damage is found, repair as necessary. Refer to section 57.3.1.1.
   [b] If no damage is found, go to the next step.
3. Disconnect the MCM 120–pin connector.
4. Measure the resistance between pin 3 of the turbo actuator harness connector and pin 74 of the MCM 120–pin connector.
   [a] If the resistance is greater than 3 Ω, repair the open circuit between pin 3 of the turbo actuator harness connector and pin 74 of the MCM 120–pin connector. Refer to section 57.3.1.1.
   [b] If the resistance is less than 3 Ω, go to the next step.
5. Measure the resistance between pin 4 of the turbo actuator harness connector and pin 75 of the MCM 120–pin connector.
   [a] If the resistance is greater than 3 Ω, repair the open circuit between pin 4 of the turbo actuator harness connector and pin 75 of the MCM 120–pin connector. Refer to section 57.3.1.1.
   [b] If the resistance is less than 3 Ω, replace the turbo actuator. Refer to section 57.3.1.1.

57.3.1.1 Verify Repairs

Verify repairs as follows:

1. Turn ignition OFF.
2. Reconnect any electrical connections that were disconnected to perform the diagnosis.
3. Clear codes with DDDL 7.0 or latest version.
4. Start and bring engine up to operating temperature (over 140°F/60°C).
5. Verify operation is satisfactory and no warning lamps illuminate. If warning lamps illuminate, troubleshoot the codes. If assistance is required, call the Detroit Diesel Customer Support Center at 313–592–5800.

All information subject to change without notice.
Copyright © 2007 DETROIT DIESEL CORPORATION

https://truckmanualshub.com/

57.4 SPN 641/FMI 11

This code typically means the Smart Remote Actuator 5 has restricted operability.

57.4.1 Actuator Check

Check as follows:

1. Check for multiple codes.
   [a] If 168/1 (low battery voltage) is present with 641/11 troubleshoot 168/1 first.
   [b] If only 641/11 is present, go to the next step.
2. Using DDDL 7.0, perform the Turbo Hysteresis test.
   [a] If you are unable to perform the Turbo Hysteresis test, go to step 10.
   [b] If the Turbo Hysteresis test fails, go to step 6.
   [c] If the Turbo Hysteresis test is a pass, repeat the test to see if the results are the same. If the results are the same, refer to section 57.4.1.1. If the repeat test fails, go to the next step.
3. Disconnect the turbo actuator.
4. Check the actuator supply voltage.
5. Measure the voltage between pins 1 and 2 of the turbo actuator harness connector.
   [a] If the voltage is less than 11 volts, repair the cause of the low voltage. Refer to section 57.4.1.1.
   [b] If the voltage is greater than 11 volts, go to the next step.
6. Turn the ignition OFF.
7. Disconnect the MCM 120–pin connector.
8. Measure the resistance between pin 3 of the turbo actuator harness connector and pin 74 of the MCM 120–pin connector.
   [a] If the resistance is greater than 3 Ω, repair the open circuit between pin 3 of the turbo actuator harness connector and pin 74 of the MCM 120–pin connector. Refer to section 57.4.1.1.
   [b] If the resistance is less than 3 Ω, go to the next step.
9. Measure the resistance between pin 4 of the turbo actuator harness connector and pin 75 of the MCM 120–pin connector.
   [a] If the resistance is greater than 3 Ω, repair the open circuit between pin 4 of the turbo actuator harness connector and pin 75 of the MCM 120–pin connector. Refer to section 57.3.1.1.
   [b] If the resistance is less than 3 Ω, replace the turbo actuator. Refer to section 57.3.1.1.
10. Remove the turbo actuator.

All information subject to change without notice.
Copyright © 2007 DETROIT DIESEL CORPORATION

https://truckmanualshub.com/

11. Physically move the sector gear on the turbo from 1 to 2, see Figure 57-2.

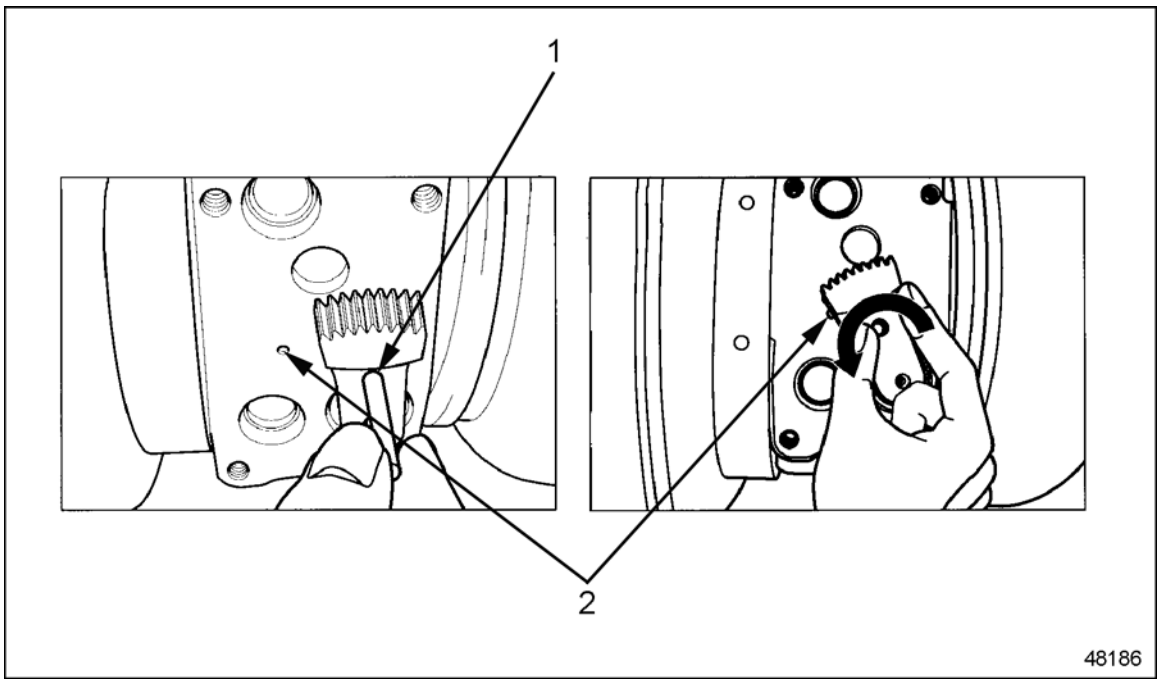

1. Alignment Hole – Alignment pin fits into housing
2. Reference Indentation – Sector shaft covers one-half of indentation

Figure 57-2 Moving the Sector Gear

12. Check the free movement from 1 to 2 (see Figure 57-1), return back to 1 and install the pin to insure proper alignment. Once you have proper alignment, remove the pin.
    [a] If there is free movement, replace the turbo actuator. Refer to section 57.4.1.1.
    [b] If there is not free movement, go to the next step.
13. Remove the turbocharger and inspect for signs of foreign material contamination.
    [a] If foreign material damage is found, repair the source of material entry and contact the Detroit Diesel Customer Support Center at 313–592–5800 for turbocharger replacement authorization.
    [b] If no foreign material damage is found but there is no free movement, contact the Detroit Diesel Customer Support Center at 313–592–5800 for turbocharger replacement authorization.

All information subject to change without notice.
Copyright © 2007 DETROIT DIESEL CORPORATION

https://truckmanualshub.com/

57.4.1.1 Verify Repairs

Verify repairs as follows:

1. Turn ignition OFF.
2. Reconnect any electrical connections that were disconnected to perform the diagnosis.
3. Clear codes with DDDL 7.0 or latest version.
4. Start and bring engine up to operating temperature (over 140°F/60°C).
5. Verify operation is satisfactory and no warning lamps illuminate. If warning lamps illuminate, troubleshoot the codes. If assistance is required, call the Detroit Diesel Customer Support Center at 313–592–5800.

57.5 SPN 641/FMI 14

This code typically means the Smart Remote Actuator 5, no Failsafe Mode, Motor Off.

57.5.1 Actuator Check

Check as follows:

1. Using DDDL 7.0, perform the Turbo Hysteresis test.
   [a] If the Turbo Hysteresis test fails, go to step 5.
   [b] If you are unable to perform the Turbo Hysteresis test, go to the next step.
   [c] If the Turbo Hysteresis test is a pass, repeat the test to see if the results are the same. If the results are the same, refer to section 57.5.1.1.. If the repeat test fails, go to the next step.
2. Disconnect the turbo actuator.
3. Check the actuator supply voltage.
4. Measure the voltage between pins 1 and 2 of the turbo actuator harness connector.
   [a] If the voltage is less than 11 volts, repair the cause of the low voltage. Refer to section 57.5.1.1.
   [b] If the voltage is greater than 11 volts, go to the next step.
5. Turn the ignition OFF.
6. Disconnect the MCM 120–pin connector.
7. Measure the resistance between pin 3 of the turbo actuator harness connector and pin 74 of the MCM 120–pin connector.
   [a] If the resistance is greater than 3 Ω, repair the open circuit between pin 3 of the turbo actuator harness connector and pin 74 of the MCM 120–pin connector. Refer to section 57.5.1.1.
   [b] If the resistance is less than 3 Ω, go to the next step.

All information subject to change without notice.
Copyright © 2007 DETROIT DIESEL CORPORATION

https://truckmanualshub.com/

8. Measure the resistance between pin 4 of the turbo actuator harness connector and pin 75 of the MCM 120–pin connector.
   [a] If the resistance is greater than 3 Ω, repair the open circuit between pin 4 of the turbo actuator harness connector and pin 75 of the MCM 120–pin connector. Refer to section 57.5.1.1.
   [b] If the resistance is less than 3 Ω, replace the turbo actuator. Refer to section 57.5.1.1.
9. Remove the turbo actuator.
10. Physically move the sector gear on the turbo from 1 to 2, see Figure 57-3.

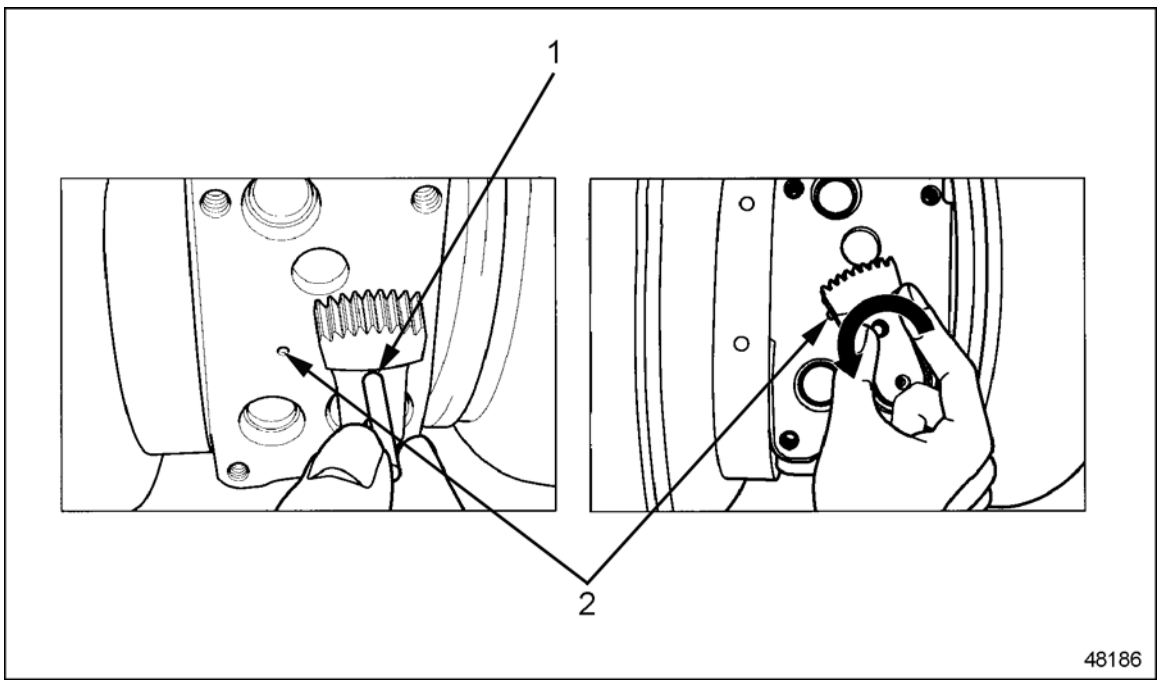

1. Alignment Hole – Alignment pin fits into housing
2. Reference Indentation – Sector shaft covers one-half of indentation

Figure 57-3 Moving the Sector Gear

11. Check the free movement from 1 to 2 (see Figure 57-1), return back to 1 and install the pin to insure proper alignment. Once you have proper alignment, remove the pin.
    [a] If there is free movement, replace the turbo actuator. Refer to section 57.5.1.1.
    [b] If there is not free movement, go to the next step.
12. Remove the turbocharger and inspect for signs of foreign material contamination.
    [a] If foreign material damage is found, repair the source of material entry and contact the Detroit Diesel Customer Support Center at 313–592–5800 for turbocharger replacement authorization.

All information subject to change without notice.
Copyright © 2007 DETROIT DIESEL CORPORATION

https://truckmanualshub.com/

[b] If no foreign material damage is found but there is no free movement, contact the Detroit Diesel Customer Support Center at 313–592–5800 for turbocharger replacement authorization.

57.5.1.1 Verify Repairs

Verify repairs as follows:

1. Turn ignition OFF.
2. Reconnect any electrical connections that were disconnected to perform the diagnosis.
3. Clear codes with DDDL 7.0 or latest version.
4. Start and bring engine up to operating temperature (over 140°F/60°C).
5. Verify operation is satisfactory and no warning lamps illuminate. If warning lamps illuminate, troubleshoot the codes. If assistance is required, call the Detroit Diesel Customer Support Center at 313–592–5800.

All information subject to change without notice.
Copyright © 2007 DETROIT DIESEL CORPORATION

https://truckmanualshub.com/

57.6 SPN 641/FMI 31

This code typically means a turbo actuator internal error code, problem unknown.

57.6.1 Actuator Check

Check as follows:

1. Check for multiple codes.
   [a] If 641/9, 641/11, 641/14 or 2795/9 are present, service those faults first.
   [b] If only 641/31 is present, go to the next step.
2. Disconnect the turbo actuator.
3. Turn the ignition ON (key ON, engine OFF).
4. Measure the voltage between pins 1 and 2 of the turbo actuator connector on the engine harness side.
   [a] If the voltage is less than 11.5 volts, go to the next step.
   [b] If the voltage is greater than 11.5 volts, go to step 6.
5. Measure the voltage between pin 1 of the turbo actuator harness connector and ground.
   [a] If the voltage is less than 11.5 volts, repair the cause of low voltage between pin 1 of the turbo actuator harness connector and pin 93 of the MCM 120–pin connector. Refer to section 57.6.1.1.
   [b] If the voltage is greater than 11.5 volts, repair the open between pin 2 of the turbo actuator connector on the engine harness side and pin 38 of the MCM 120–pin connector. Refer to section 57.6.1.1.
6. Turn ignition OFF.
7. Disconnect the MCM 120–pin connector.
8. Measure the resistance between pin 3 of the turbo actuator harness connector and pin 74 of the MCM 120–pin connector.
   [a] If the resistance is less than 3 Ω, go to the next step.
   [b] If the resistance is greater than 3 Ω, repair the harness between pin 3 of the turbo actuator harness connector and pin 74 of the MCM 120–pin connector. Refer to section 57.6.1.1.
9. Measure the resistance between pin 4 of the turbo actuator harness connector and pin 75 of the MCM 120–pin connector.
   [a] If the resistance is less than 3 Ω, replace the turbo actuator.
   [b] If the resistance is greater than 3 Ω, repair the harness between pin 4 of the turbo actuator harness connector and pin 75 of the MCM 120–pin connector. Refer to section 57.6.1.1.

All information subject to change without notice.
Copyright © 2007 DETROIT DIESEL CORPORATION

https://truckmanualshub.com/

57.6.1.1 Verify Repairs

Verify repairs as follows:

1. Turn ignition OFF.
2. Reconnect any electrical connections that were disconnected to perform the diagnosis.
3. Clear codes with DDDL 7.0 or latest version.
4. Start and bring engine up to operating temperature (over 140°F/60°C).
5. Verify operation is satisfactory and no warning lamps illuminate. If warning lamps illuminate, troubleshoot the codes. If assistance is required, call the Detroit Diesel Customer Support Center at 313–592–5800.

All information subject to change without notice.
Copyright © 2007 DETROIT DIESEL CORPORATION

https://truckmanualshub.com/

All information subject to change without notice.
Copyright © 2007 DETROIT DIESEL CORPORATION

https://truckmanualshub.com/

58 SPN 647 - SINGLE-SPEED FAN (LOW-SIDE DIGITAL OUTPUT #3) FAULT

Section **Page**

58.1 SPN 647/FMI 3 58-3
58.2 SPN 647/FMI 4 58-4
58.3 SPN 647/FMI 5 58-5

https://truckmanualshub.com/

All information subject to change without notice.
Copyright © 2007 DETROIT DIESEL CORPORATION

https://truckmanualshub.com/

58.1 SPN 647/FMI 3

This fault code indicates that there is a short to power.

58.1.1 Short to Power Check

Check as follows:

1. Turn the ignition OFF.
2. Disconnect the fan control solenoid connector.
3. Turn the ignition ON (key On, engine OFF).
4. Measure the voltage between pin 1 of the fan control solenoid connector and ground.
   [a] If the voltage is greater than 11.5 volts, repair the short to power between pin 1 of the fan control solenoid connector and pin 98 of the 120–pin MCM connector. Refer to section 58.1.1.1.
   [b] If the voltage is less than 11.5 volts, replace the fan control solenoid. Refer to section 58.1.1.1.

58.1.1.1 Verify Repairs

Verify repairs as follows:

1. Turn ignition OFF.
2. Reconnect any electrical connections that were disconnected to perform the diagnosis.
3. Clear codes with DDDL 7.0 or latest version.
4. Start and bring engine up to operating temperature (over 140°F/60°C).
5. Verify operation is satisfactory and no warning lamps illuminate. If warning lamps illuminate, troubleshoot the codes. If assistance is required, call the Detroit Diesel Customer Support Center at 313–592–5800.

All information subject to change without notice.
Copyright © 2007 DETROIT DIESEL CORPORATION

https://truckmanualshub.com/

58.2 SPN 647/FMI 4

This fault code indicates that there is a short to ground.

58.2.1 Short to Ground Check

Check as follows:

1. Turn the ignition OFF.
2. Disconnect the fan control solenoid connector.
3. Disconnect the 120–pin MCM connector.
4. Measure the resistance between pin 1 of the fan control solenoid connector and ground.
   [a] If the resistance is less than 5 Ω, repair the short to ground between pin 1 of the fan control solenoid connector and pin 98 of the 120–pin MCM connector. Refer to section 58.2.1.1.
   [b] If the resistance is greater than 5 Ω, repair the short to ground between pin 2 of the fan control solenoid connector and pin 91 of the 120–pin MCM connector. Refer to section 58.2.1.1.

58.2.1.1 Verify Repairs

Verify repairs as follows:

1. Turn ignition OFF.
2. Reconnect any electrical connections that were disconnected to perform the diagnosis.
3. Clear codes with DDDL 7.0 or latest version.
4. Start and bring engine up to operating temperature (over 140°F/60°C).
5. Verify operation is satisfactory and no warning lamps illuminate. If warning lamps illuminate, troubleshoot the codes. If assistance is required, call the Detroit Diesel Customer Support Center at 313–592–5800.

All information subject to change without notice.
Copyright © 2007 DETROIT DIESEL CORPORATION

https://truckmanualshub.com/

58.3 SPN 647/FMI 5

This fault code indicates that there is an open circuit.

58.3.1 Open Circuit Check

Check as follows:

1. Check for multiple codes.
   [a] If SPN 1071/5, SPN 1672/5, and SPN 647/5 are active, repair the open in between pin 91 of the 120–pin MCM connector and the fan and the Jake Brake solenoids. Refer to section 58.3.1.1.
   [b] If only SPN 647/5 is active, go to step 2.
2. Disconnect the fan control solenoid connector.
3. Turn the ignition ON (key On, engine OFF).
4. Measure the voltage between pin 1 and 2 of the fan control solenoid connector.
   [a] If the voltage is less than 11.5 volts, go to step 5.
   [b] If the voltage is between 11.5 and 13.5 volts, replace the fan control solenoid. Refer to section 58.3.1.1.
5. Measure the voltage between pin 2 of the fan control solenoid connector and pin 91 of the 120–pin MCM connector. Refer to section 58.3.1.1.
   [a] If the voltage is less than 11.5 volts, repair the open between pin 2 of the fan control solenoid connector and ground. Refer to section 58.3.1.1.
   [b] If the voltage is greater than 11.5, repair the open between pin 1 of the fan control solenoid connector and pin 98 of the 120–pin MCM connector. Refer to section 58.3.1.1.

58.3.1.1 Verify Repairs

Verify repairs as follows:

1. Turn ignition OFF.
2. Reconnect any electrical connections that were disconnected to perform the diagnosis.
3. Clear codes with DDDL 7.0 or latest version.
4. Start and bring engine up to operating temperature (over 140°F/60°C).
5. Verify operation is satisfactory and no warning lamps illuminate. If warning lamps illuminate, troubleshoot the codes. If assistance is required, call the Detroit Diesel Customer Support Center at 313–592–5800.

All information subject to change without notice.
Copyright © 2007 DETROIT DIESEL CORPORATION

https://truckmanualshub.com/

All information subject to change without notice.
Copyright © 2007 DETROIT DIESEL CORPORATION

https://truckmanualshub.com/

59 SPN 651 – INJECTOR #1 NEEDLE VALVE NOT OPERATING NORMALLY

Section **Page**

59.1 SPN 651/FMI 14 59-3

https://truckmanualshub.com/

All information subject to change without notice.
Copyright © 2007 DETROIT DIESEL CORPORATION

https://truckmanualshub.com/

59.1 SPN 651/FMI 14

This diagnosis is typically an open circuit, short to ground or short to power.

59.1.1 Open Circuit, Short to Ground or Short to Power Check

Check as follows:

1. Check for multiple codes.
   [a] If fault code 168/1 is active in addition to other codes, service 168/1 first. Refer to section 32.2.
   [b] If fault 652/14 and 653/14 are active in addition to 651/14, go to step 2.
   [c] If only fault code 651/14 is active, go to step 10.
2. Turn the ignition OFF.
3. Disconnect the Front Injector Harness 12–pin connector.
4. Inspect the Front Injector Harness 12–pin connector for bent or spread pins, inspect the connector seal for damage (signs of water or oil intrusion).
   [a] If the water or oil intrusion, bent or spread pins are found, repair as necessary. Refer to section 59.1.1.1.
   [b] If connector shows no signs of damage, go to step 5.
5. Measure the resistance between pin 10 and pins 1 on the valve cover side of the Front Injector Harness. If using J-48671–10, measure between injector #1 pins 1 and 2.
   [a] If the resistance is greater than 3 Ω, replace the under valve cover injector harness.Refer to section 59.1.1.1.
   [b] If the resistance is less than 3 Ω, go to step 6.
6. Disconnect the MCM 120–pin connector.
7. Measure the resistance between pin 11of the MCM 120–pin connector and pin 10 of the Front Injector Harness 12–pin connector. See Figure 59-1.
   [a] If the resistance is less than 3 Ω, go to step 8.
   [b] If the resistance is greater than 3 Ω, repair the open between pin 11 of the MCM 120–pin connector and pin 10 of the Front Injector Harness 12–pin connector. Refer to section 59.1.1.1.
8. Disconnect the negative battery cable.
9. Measure the resistance between the positive battery post and pin 11of the MCM 120–pin connector.
   [a] If the resistance is greater than 3 Ω, contact the Detroit Diesel Customer Support Center at 313–592–5800 for MCM replacement authorization.

All information subject to change without notice.
Copyright © 2007 DETROIT DIESEL CORPORATION

https://truckmanualshub.com/

[b] If the resistance is less than 3 Ω, repair the short to power between battery positive and pin 11of the MCM 120–pin connector. See Figure 59-1. Refer to section 59.1.1.1.

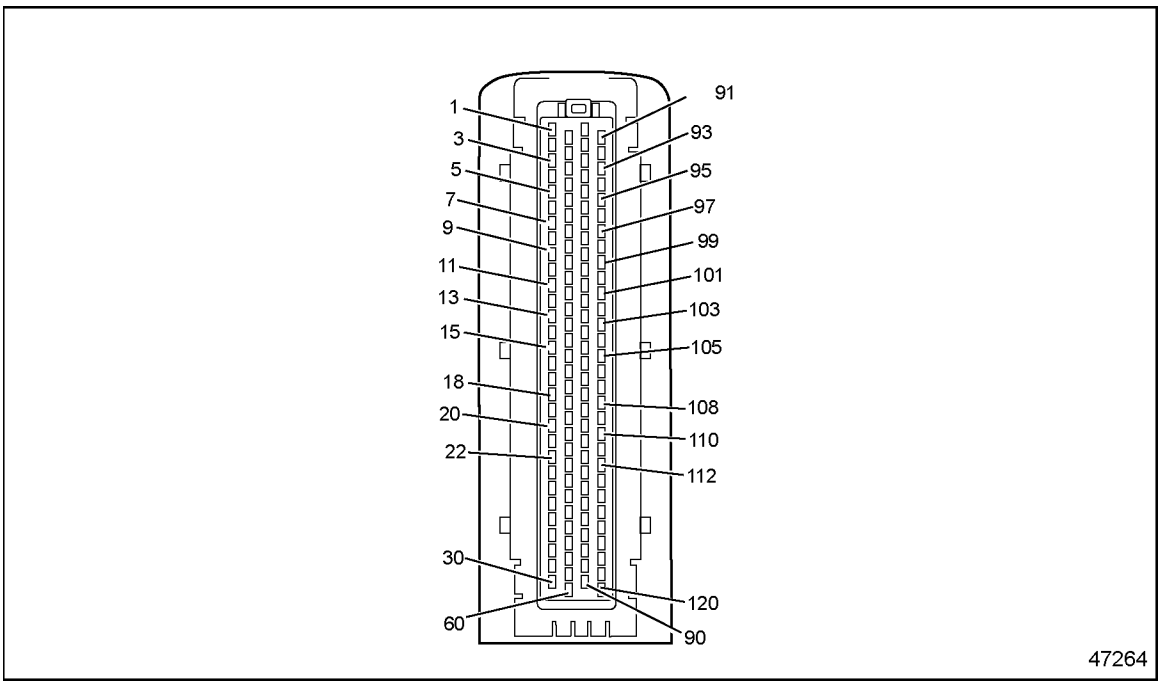

Figure 59-1 120–pin MCM Connector

10. Turn the ignition OFF.
11. Disconnect the Front Injector Harness 12–pin connector.
12. Measure the resistance between pin 10 and pin 1 on the valve cover side of the injector harness.
    [a] If the resistance is greater than 3 Ω, go to step 13.
    [b] If the resistance is less than 3 Ω, go to step 18.
13. Remove the upper valve cover.
14. Disconnect injector #1.
15. Measure the resistance between pin 10 and pin 1 on the valve cover side of the injector harness and pin 1 of the injector #1 harness connector.
    [a] If the resistance is greater than 3 Ω, replace the under valve cover injector harness. Refer to section 59.1.1.1.
    [b] If the resistance is less than 3 Ω, go to step 16.
16. Measure the resistance between pin 1 on the valve cover side of the injector harness and pin 2 of the injector #1 harness connector.
    [a] If the resistance is less than 3 Ω, go to step 17.

All information subject to change without notice.
Copyright © 2007 DETROIT DIESEL CORPORATION

https://truckmanualshub.com/

[b] If the resistance is greater than 3 Ω, replace the under valve cover injector harness. Refer to section 59.1.1.1.

17. Measure the resistance between pin 1 on the valve cover side of the injector harness and ground.
    [a] If the resistance is less than 3 Ω, replace the under valve cover injector harness. Refer to section 59.1.1.1.
    [b] If the resistance is greater than 3 Ω, replace injector #1. Refer to section 59.1.1.1.
18. Measure the resistance between pin 1 on the valve cover side of the injector harness and ground. If using J-48671–10, measure between injector #1 pin 1 and ground.
    [a] If the resistance is less than 3 Ω, go to step 19.
    [b] If the resistance is greater than 3 Ω, go to step 22.
19. Remove the upper valve cover.
20. Disconnect the injector #1 connector.
21. Measure the resistance between pin 1 on the valve cover side of the injector harness and ground. If using J-48671–10, measure between injector #1 pin 1 and ground.
    [a] If the resistance is less than 3 Ω, replace the under valve cover injector harness. Refer to section 59.1.1.1.
    [b] If the resistance is greater than 3 Ω, replace injector #1. Refer to section 59.1.1.1.
22. Disconnect the MCM
23. Measure the resistance between pin 1 on the MCM side of the injector harness connector and pin 26 of the 120–pin MCM connector.
    [a] If the resistance is greater than 3 Ω, repair the open circuit between pin 1 of the Front Injector Harness 12–pin connector and pin 26 of the 120–pin MCM connector. Refer to section 59.1.1.1.
    [b] If the resistance is less than 3 Ω, repair the short to ground between pin 1 of the Front Injector Harness 12–pin connector and pin 26 of the 120–pin MCM connector. Refer to section 59.1.1.1.

59.1.1.1 Verify Repairs

Verify repairs as follows:

1. Turn ignition OFF.
2. Reconnect any electrical connections that were disconnected to perform the diagnosis.
3. Clear codes with DDDL 7.0 or latest version.
4. Start and bring engine up to operating temperature (over 140°F/60°C).
5. Verify operation is satisfactory and no warning lamps illuminate. If warning lamps illuminate, troubleshoot the codes. If assistance is required, call the Detroit Diesel Customer Support Center at 313–592–5800.

All information subject to change without notice.
Copyright © 2007 DETROIT DIESEL CORPORATION

https://truckmanualshub.com/

All information subject to change without notice.
Copyright © 2007 DETROIT DIESEL CORPORATION

https://truckmanualshub.com/

60 SPN 652 – INJECTOR #2 NEEDLE VALVE NOT OPERATING NORMALLY

Section **Page**

60.1 SPN 652/FMI 14 60-3

https://truckmanualshub.com/

All information subject to change without notice.
Copyright © 2007 DETROIT DIESEL CORPORATION

https://truckmanualshub.com/

60.1 SPN 652/FMI 14

This diagnosis is typically an open circuit, short to ground or short to power.

60.1.1 Open Circuit, Short to Ground or Short to Power Check

Check as follows:

1. Check for multiple codes.
   [a] If fault code 168/1 is active in addition to other codes, service 168/1 first. Refer to section 32.2.
   [b] If fault 651/14 and 653/14 are active in addition to 652/14, go to step 2.
   [c] If only fault code 652/14 is active, go to step 10.
2. Turn the ignition OFF.
3. Disconnect the Front Injector Harness 12–pin connector.
4. Inspect the Front Injector Harness 12–pin connector for bent or spread pins, inspect the connector seal for damage (signs of water or oil intrusion).
   [a] If the water or oil intrusion, bent or spread pins are found, repair as necessary. Refer to section 60.1.1.1.
   [b] If connector shows no signs of damage, go to step 5.
5. Measure the resistance between pin 10 and pins 1 on the valve cover side of the Front Injector Harness. If using J-48671–10, measure between injector #2 pins 1 and 2.
   [a] If the resistance is greater than 3 Ω, replace the under valve cover injector harness.Refer to section 60.1.1.1.
   [b] If the resistance is less than 3 Ω, go to step 6.
6. Disconnect the MCM 120–pin connector.
7. Measure the resistance between pin 11of the MCM 120–pin connector and pin 10 of the Front Injector Harness 12–pin connector. See Figure 60-1.
   [a] If the resistance is less than 3 Ω, go to step 8.
   [b] If the resistance is greater than 3 Ω, repair the open between pin 11 of the MCM 120–pin connector and pin 10 of the Front Injector Harness 12–pin connector. Refer to section 60.1.1.1.
8. Disconnect the negative battery cable.
9. Measure the resistance between the positive battery post and pin 11of the MCM 120–pin connector.
   [a] If the resistance is greater than 3 Ω, contact the Detroit Diesel Customer Support Center at 313–592–5800 for MCM replacement authorization.

All information subject to change without notice.
Copyright © 2007 DETROIT DIESEL CORPORATION

https://truckmanualshub.com/

[b] If the resistance is less than 3 Ω, repair the short to power between battery positive and pin 11of the MCM 120–pin connector. See Figure 60-1. Refer to section 60.1.1.1.

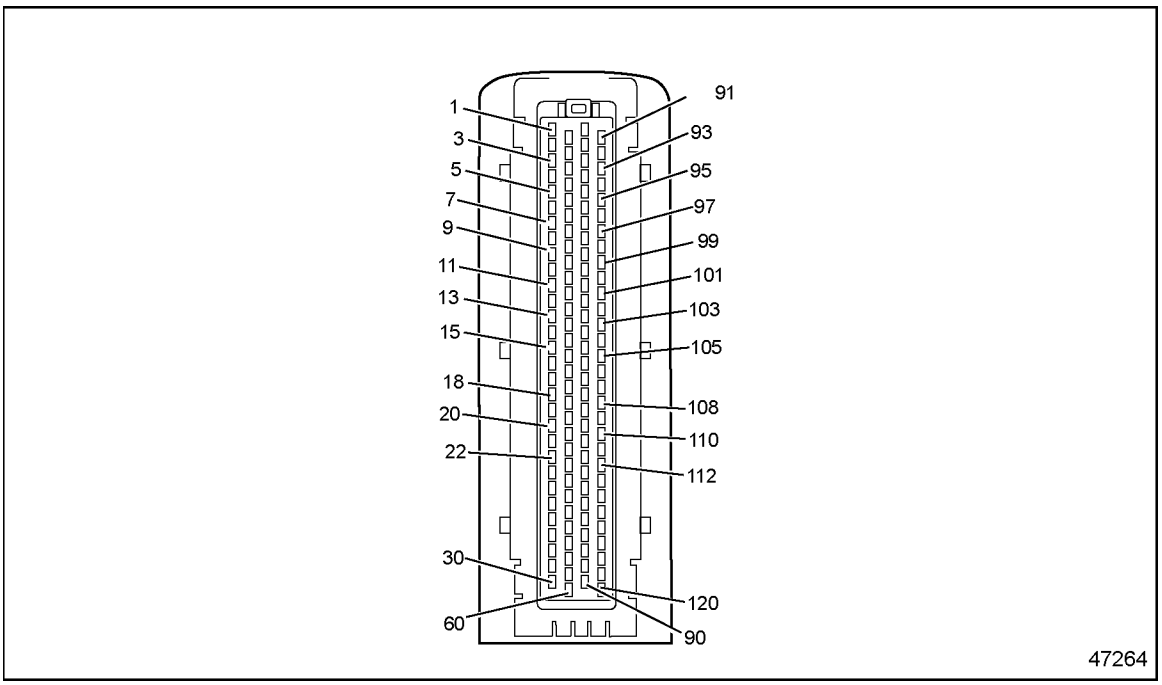

Figure 60-1 120–pin MCM Connector

10. Turn the ignition OFF.
11. Disconnect the Front Injector Harness 12–pin connector.
12. Measure the resistance between pin 10 and pin 1 on the valve cover side of the injector harness.
    [a] If the resistance is greater than 3 Ω, go to step 13.
    [b] If the resistance is less than 3 Ω, go to step 18.
13. Remove the upper valve cover.
14. Disconnect injector #2.
15. Measure the resistance between pin 10 and pin 1 on the valve cover side of the injector harness and pin 1 of the injector #2 harness connector.
    [a] If the resistance is greater than 3 Ω, replace the under valve cover injector harness. Refer to section 60.1.1.1.
    [b] If the resistance is less than 3 Ω, go to step 16.
16. Measure the resistance between pin 3 on the valve cover side of the injector harness and pin 2 of the injector #2 harness connector.
    [a] If the resistance is less than 3 Ω, go to step 17.

All information subject to change without notice.
Copyright © 2007 DETROIT DIESEL CORPORATION

https://truckmanualshub.com/

[b] If the resistance is greater than 3 Ω, replace the under valve cover injector harness. Refer to section 60.1.1.1.

17. Measure the resistance between pin 3 on the valve cover side of the injector harness and ground.

    [a] If the resistance is less than 3 Ω, replace the under valve cover injector harness. Refer to section 60.1.1.1.

    [b] If the resistance is greater than 3 Ω, replace injector #2. Refer to section 60.1.1.1.

18. Measure the resistance between pin 3 on the valve cover side of the injector harness and ground. If using J-48671–10, measure between injector #2 pin 1 and ground.

    [a] If the resistance is less than 3 Ω, go to step 19.

    [b] If the resistance is greater than 3 Ω, go to step 22.

19. Remove the upper valve cover.

20. Disconnect the injector #2 connector.

21. Measure the resistance between pin 3 on the valve cover side of the injector harness and ground. If using J-48671–10, measure between injector #2 pin 1 and ground.

    [a] If the resistance is less than 3 Ω, replace the under valve cover injector harness. Refer to section 60.1.1.1.

    [b] If the resistance is greater than 3 Ω, replace injector #2. Refer to section 60.1.1.1.

22. Disconnect the MCM

23. Measure the resistance between pin 3 on the MCM side of the injector harness connector and pin 22 of the 120–pin MCM connector.

    [a] If the resistance is greater than 3 Ω, repair the open circuit between pin 3 of the Front Injector Harness 12–pin connector and pin 22 of the 120–pin MCM connector. Refer to section 60.1.1.1.

    [b] If the resistance is less than 3 Ω, repair the short to ground between pin 3 of the Front Injector Harness 12–pin connector and pin 22 of the 120–pin MCM connector. Refer to section 60.1.1.1.

All information subject to change without notice.
Copyright © 2007 DETROIT DIESEL CORPORATION

https://truckmanualshub.com/

60.1.1.1 Verify Repairs

Verify repairs as follows:

1. Turn ignition OFF.
2. Reconnect any electrical connections that were disconnected to perform the diagnosis.
3. Clear codes with DDDL 7.0 or latest version.
4. Start and bring engine up to operating temperature (over 140°F/60°C).
5. Verify operation is satisfactory and no warning lamps illuminate. If warning lamps illuminate, troubleshoot the codes. If assistance is required, call the Detroit Diesel Customer Support Center at 313–592–5800.

All information subject to change without notice.
Copyright © 2007 DETROIT DIESEL CORPORATION

https://truckmanualshub.com/

61 SPN 653 – INJECTOR #3 NEEDLE VALVE NOT OPERATING NORMALLY

Section **Page**

61.1 SPN 653/FMI 14 61-3

https://truckmanualshub.com/

All information subject to change without notice.
Copyright © 2007 DETROIT DIESEL CORPORATION

https://truckmanualshub.com/

61.1 SPN 653/FMI 14

This diagnosis is typically an open circuit, short to ground or short to power.

61.1.1 Open Circuit, Short to Ground or Short to Power Check

Check as follows:

1. Check for multiple codes.
   [a] If fault code 168/1 is active in addition to other codes, service 168/1 first. Refer to section 32.2.
   [b] If fault 651/14 and 652/14 are active in addition to 653/14, go to step 2.
   [c] If only fault code 653/14 is active, go to step 10.
2. Turn the ignition OFF.
3. Disconnect the Front Injector Harness 12–pin connector.
4. Inspect the Front Injector Harness 12–pin connector for bent or spread pins, inspect the connector seal for damage (signs of water or oil intrusion).
   [a] If the water or oil intrusion, bent or spread pins are found, repair as necessary. Refer to section 61.1.1.1.
   [b] If connector shows no signs of damage, go to step 5.
5. Measure the resistance between pin 10 and pins 1 on the valve cover side of the Front Injector Harness. If using J-48671–10, measure between injector #3 pins 1 and 2.
   [a] If the resistance is greater than 3 Ω, replace the under valve cover injector harness.Refer to section 61.1.1.1.
   [b] If the resistance is less than 3 Ω, go to step 6.
6. Disconnect the MCM 120–pin connector.
7. Measure the resistance between pin 11of the MCM 120–pin connector and pin 10 of the Front Injector Harness 12–pin connector. See Figure 61-1.
   [a] If the resistance is less than 3 Ω, go to step 8.
   [b] If the resistance is greater than 3 Ω, repair the open between pin 11 of the MCM 120–pin connector and pin 10 of the Front Injector Harness 12–pin connector. Refer to section 61.1.1.1.
8. Disconnect the negative battery cable.
9. Measure the resistance between the positive battery post and pin 11of the MCM 120–pin connector.
   [a] If the resistance is greater than 3 Ω, contact the Detroit Diesel Customer Support Center at 313–592–5800 for MCM replacement authorization.

All information subject to change without notice.
Copyright © 2007 DETROIT DIESEL CORPORATION

https://truckmanualshub.com/

[b] If the resistance is less than 3 Ω, repair the short to power between battery positive and pin 11of the MCM 120–pin connector. See Figure 61-1. Refer to section 61.1.1.1.

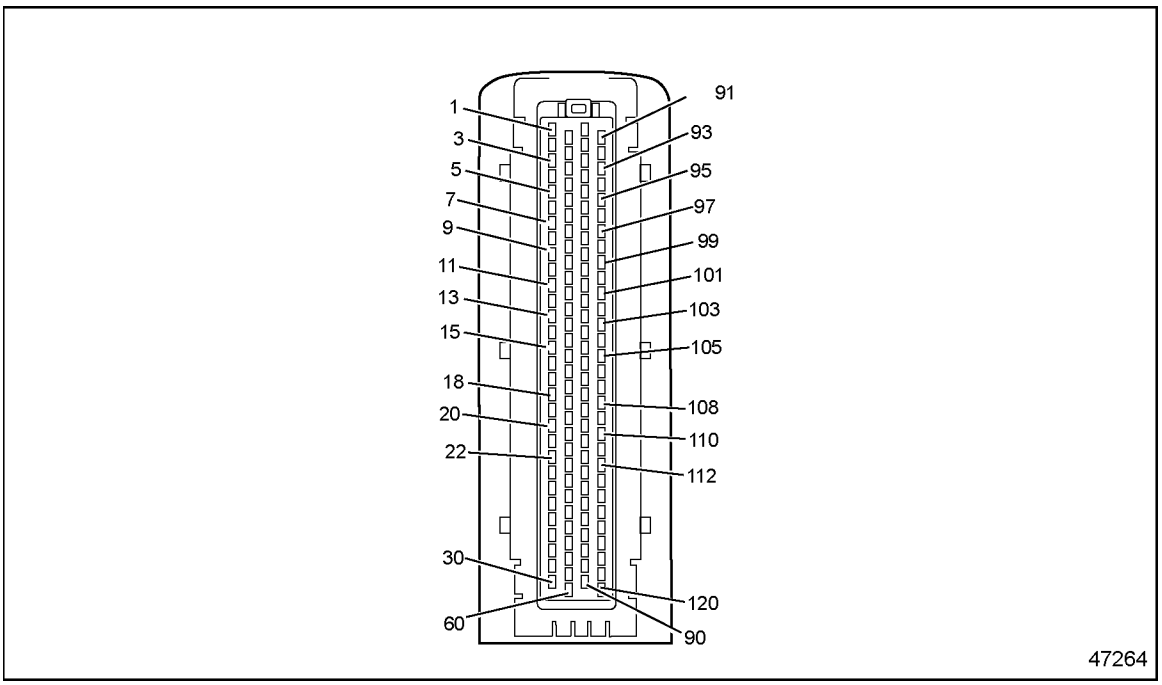

Figure 61-1 120–pin MCM Connector

10. Turn the ignition OFF.
11. Disconnect the Front Injector Harness 12–pin connector.
12. Measure the resistance between pin 10 and pin 5 on the valve cover side of the injector harness.
    [a] If the resistance is greater than 3 Ω, go to step 13.
    [b] If the resistance is less than 3 Ω, go to step 18.
13. Remove the upper valve cover.
14. Disconnect injector #3.
15. Measure the resistance between pin 10 and pin 1 on the valve cover side of the injector harness and pin 1 of the injector #3 harness connector.
    [a] If the resistance is greater than 3 Ω, replace the under valve cover injector harness. Refer to section 61.1.1.1.
    [b] If the resistance is less than 3 Ω, go to step 16.
16. Measure the resistance between pin 5 on the valve cover side of the injector harness and pin 2 of the injector #3 harness connector.
    [a] If the resistance is less than 3 Ω, go to step 17.

All information subject to change without notice.
Copyright © 2007 DETROIT DIESEL CORPORATION

https://truckmanualshub.com/

[b] If the resistance is greater than 3 Ω, replace the under valve cover injector harness. Refer to section 61.1.1.1.

17. Measure the resistance between pin 5 on the valve cover side of the injector harness and ground.

    [a] If the resistance is less than 3 Ω, replace the under valve cover injector harness. Refer to section 61.1.1.1.

    [b] If the resistance is greater than 3 Ω, replace injector #3. Refer to section 61.1.1.1.

18. Measure the resistance between pin 5 on the valve cover side of the injector harness and ground. If using J-48671–10, measure between injector #3 pin 1 and ground.

    [a] If the resistance is less than 3 Ω, go to step 19.

    [b] If the resistance is greater than 3 Ω, go to step 22.

19. Remove the upper valve cover.

20. Disconnect the injector #3 connector.

21. Measure the resistance between pin 5 on the valve cover side of the injector harness and ground. If using J-48671–10, measure between injector #3 pin 1 and ground.

    [a] If the resistance is less than 3 Ω, replace the under valve cover injector harness. Refer to section 61.1.1.1.

    [b] If the resistance is greater than 3 Ω, replace injector #3. Refer to section 61.1.1.1.

22. Disconnect the MCM

23. Measure the resistance between pin 5 on the MCM side of the injector harness connector and pin 24 of the 120–pin MCM connector.

    [a] If the resistance is greater than 3 Ω, repair the open circuit between pin 1 of the Front Injector Harness 12–pin connector and pin 24 of the 120–pin MCM connector. Refer to section 61.1.1.1.

    [b] If the resistance is less than 3 Ω, repair the short to ground between pin 5 of the Front Injector Harness 12–pin connector and pin 24 of the 120–pin MCM connector. Refer to section 61.1.1.1.

All information subject to change without notice.
Copyright © 2007 DETROIT DIESEL CORPORATION

https://truckmanualshub.com/

61.1.1.1 Verify Repairs

Verify repairs as follows:

1. Turn ignition OFF.
2. Reconnect any electrical connections that were disconnected to perform the diagnosis.
3. Clear codes with DDDL 7.0 or latest version.
4. Start and bring engine up to operating temperature (over 140°F/60°C).
5. Verify operation is satisfactory and no warning lamps illuminate. If warning lamps illuminate, troubleshoot the codes. If assistance is required, call the Detroit Diesel Customer Support Center at 313–592–5800.

All information subject to change without notice.
Copyright © 2007 DETROIT DIESEL CORPORATION

https://truckmanualshub.com/

62 SPN 654 – INJECTOR #4 NEEDLE VALVE NOT OPERATING NORMALLY

Section **Page**

62.1 SPN 654/FMI 14 62-3

https://truckmanualshub.com/

All information subject to change without notice.
Copyright © 2007 DETROIT DIESEL CORPORATION

https://truckmanualshub.com/

62.1 SPN 654/FMI 14

This diagnosis is typically an open circuit, short to ground or short to power.

62.1.1 Open Circuit, Short to Ground and Short to Power Check

Check as follows:

1. Check for multiple codes.
   [a] If fault code 168/1 is active in addition to any other codes, service 168/1 first. Refer to section 32.2.
   [b] If fault codes 655/14 and 656/14 are active in addition to 654/14, go to step 2.
   [c] If only fault code 654/14 is active, go to step 9.
2. Turn the ignition OFF.
3. Disconnect the Rear Injector Harness 12–pin connector.
4. Inspect the Rear Injector Harness 12–pin connector for bent or spread pins, inspect the connector seal for damage (signs of water or oil intrusion).
   [a] If the water or oil intrusion, bent or spread pins are found, repair as necessary. Refer to section 62.1.1.1.
   [b] If connector shows no signs of damage, go to step 5.
5. Turn the ignition ON (ignition ON, engine OFF).
6. Measure for voltage between pin 3 on the MCM side of the Rear Injector Harness 12–pin connector and ground.
   [a] If voltage is present, repair the short to power between pin 3 of the Rear Injector Harness 12–pin connector and pin 17 of the 120–pin MCM connector. See Figure 62-1. Refer to section 62.1.1.1.
   [b] If no voltage is present, go to step 7.
7. Measure for voltage between pin 5 on the MCM side of the Rear Injector Harness 12–pin connector and ground.
   [a] If voltage is present, repair the short to power between pin 5 of the Rear Injector Harness 12–pin connector and pin 19 of the 120–pin MCM connector. See Figure 62-1. Refer to section 62.1.1.1.
   [b] If no voltage is present, go to step 8.
8. Measure for voltage between pin 9 on the MCM side of the Rear Injector Harness 12–pin connector and ground.
   [a] If voltage is present, repair the short to power between pin 9 of the Rear Injector Harness 12–pin connector and pin 21 of the 120–pin MCM connector. See Figure 62-1. Refer to section 62.1.1.1.

All information subject to change without notice.
Copyright © 2007 DETROIT DIESEL CORPORATION

https://truckmanualshub.com/

[b] If no voltage is present, contact the Detroit Diesel Customer Support Center at 313–592–5800 for MCM replacement authorization.

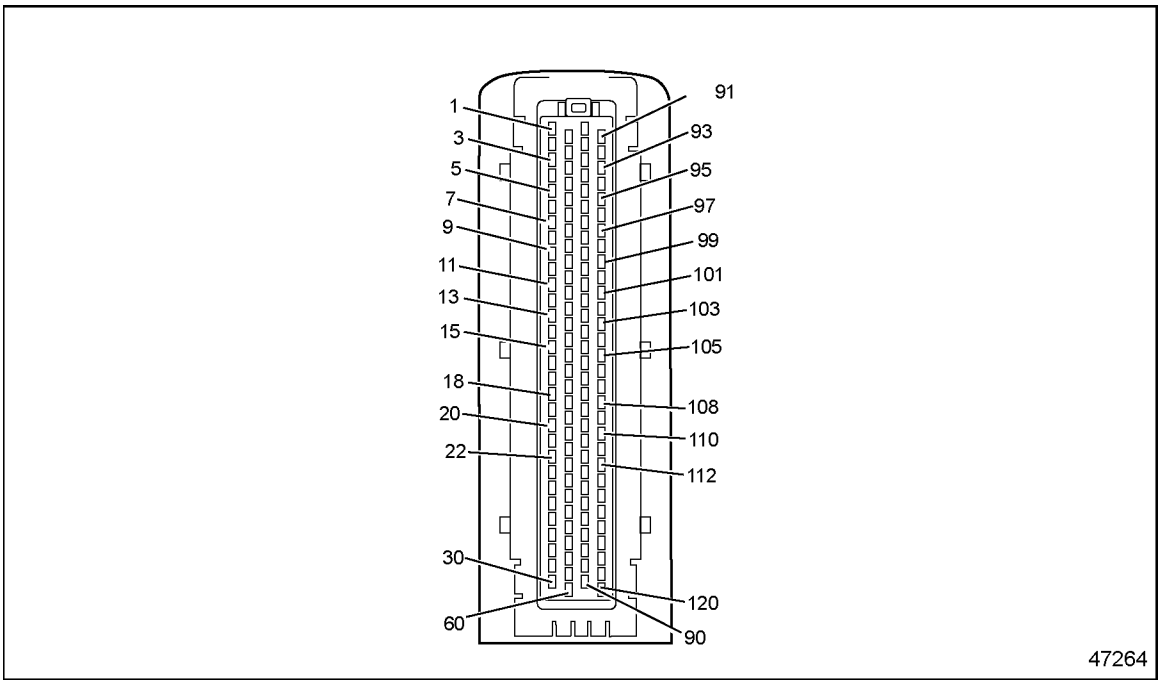

Figure 62-1 120–pin MCM Connector

9. Turn the ignition OFF.
10. Disconnect the Rear Injector Harness 12–pin connector.
11. Measure the resistance between pin 3 and pin 2 on the valve cover side of the Rear Injector Harness 12–pin connector. If using J-48671–10, measure between injector #4 pins 1 and 2.
    [a] If the resistance is greater than 3 Ω, go to step 13.
    [b] If the resistance is less than 3 Ω, go to step 12.
12. Measure the resistance between pin 3 and ground on the valve cover side of the Rear Injector Harness 12–pin connector. If using J-48671–10, measure between injector #4 pins 1 and ground.
    [a] If the resistance is greater than 3 Ω, repair the open between pin 3 of the Rear Injector Harness 12–pin connector on the valve cover side and pin 17 of the 120–pin MCM connector. Refer to section 62.1.1.1.
    [b] If the resistance is less than 3 Ω, go to step 13.
13. Remove the upper valve cover.
14. Disconnect injector #4.
15. Measure the resistance between pin 3 (injector #4 pin 1 if using J-48671–10) on the valve cover side of the injector harness and pin 1 of the injector #4 harness connector.

All information subject to change without notice.
Copyright © 2007 DETROIT DIESEL CORPORATION

https://truckmanualshub.com/

[a] If the resistance is greater than 3 Ω, replace the under valve cover injector harness. Refer to section 62.1.1.1.

[b] If the resistance is less than 3 Ω, go to step 16.

16. Measure the resistance between pin 2 (injector #4 pin 2 if using J-48671–10) on the valve cover side of the injector harness and pin 2 of the injector #4 harness connector.

    [a] If the resistance is greater than 3 Ω, replace the under valve cover injector harness. Refer to section 62.1.1.1.

    [b] If the resistance is less than 3 Ω, replace injector #4. Refer to section 62.1.1.1.

62.1.1.1 Verify Repairs

Verify repairs as follows:

1. Turn ignition OFF.
2. Reconnect any electrical connections that were disconnected to perform the diagnosis.
3. Clear codes with DDDL 7.0 or latest version.
4. Start and bring engine up to operating temperature (over 140°F/60°C).
5. Verify operation is satisfactory and no warning lamps illuminate. If warning lamps illuminate, troubleshoot the codes. If assistance is required, call the Detroit Diesel Customer Support Center at 313–592–5800.

All information subject to change without notice.
Copyright © 2007 DETROIT DIESEL CORPORATION

https://truckmanualshub.com/

All information subject to change without notice.
Copyright © 2007 DETROIT DIESEL CORPORATION

https://truckmanualshub.com/

63 SPN 655 – INJECTOR #5 NEEDLE VALVE NOT OPERATING NORMALLY

Section **Page**

63.1 SPN 655/FMI 14 63-3

https://truckmanualshub.com/

All information subject to change without notice.
Copyright © 2007 DETROIT DIESEL CORPORATION

https://truckmanualshub.com/

63.1 SPN 655/FMI 14

This diagnosis is typically an open circuit, short to ground or short to power.

63.1.1 Open Circuit, Short to Ground and Short to Power Check

Check as follows:

1. Check for multiple codes.
   [a] If fault code 168/1 is active in addition to any other fault codes, service 168/1 first. Refer to section 32.2.
   [b] If fault codes 654/14 and 656/14 are active in addition to 655/14, go to step 2.
   [c] If only fault code 655/14 is active, go to step 9.
2. Turn the ignition OFF.
3. Disconnect the Rear Injector Harness 12–pin connector.
4. Inspect the Rear Injector Harness 12–pin connector for bent or spread pins, inspect the connector seal for damage (signs of water or oil intrusion).
   [a] If the water or oil intrusion, bent or spread pins are found, repair as necessary. Refer to section 63.1.1.1.
   [b] If connector shows no signs of damage, go to step 5.
5. Turn the ignition ON (ignition ON, engine OFF).
6. Measure for voltage between pin 3 on the MCM side of the Rear Injector Harness 12–pin connector and ground.
   [a] If voltage is present, repair the short to power between pin 3 of the Rear Injector Harness 12–pin connector and pin 17 of the 120–pin MCM connector. See Figure 63-1. Refer to section 63.1.1.1.
   [b] If no voltage is present, go to step 7.
7. Measure for voltage between pin 5 on the MCM side of the Rear Injector Harness 12–pin connector and ground.
   [a] If voltage is present, repair the short to power between pin 5 of the Rear Injector Harness 12–pin connector and pin 19 of the 120–pin MCM connector. See Figure 63-1. Refer to section 63.1.1.1.
   [b] If no voltage is present, go to step 8.
8. Measure for voltage between pin 9 on the MCM side of the Rear Injector Harness 12–pin connector and ground.
   [a] If voltage is present, repair the short to power between pin 9 of the Rear Injector Harness 12–pin connector and pin 21 of the 120–pin MCM connector. See Figure 63-1. Refer to section 63.1.1.1.

All information subject to change without notice.
Copyright © 2007 DETROIT DIESEL CORPORATION

https://truckmanualshub.com/

[b] If no voltage is present, contact the Detroit Diesel Customer Support Center at 313–592–5800 for MCM replacement authorization.

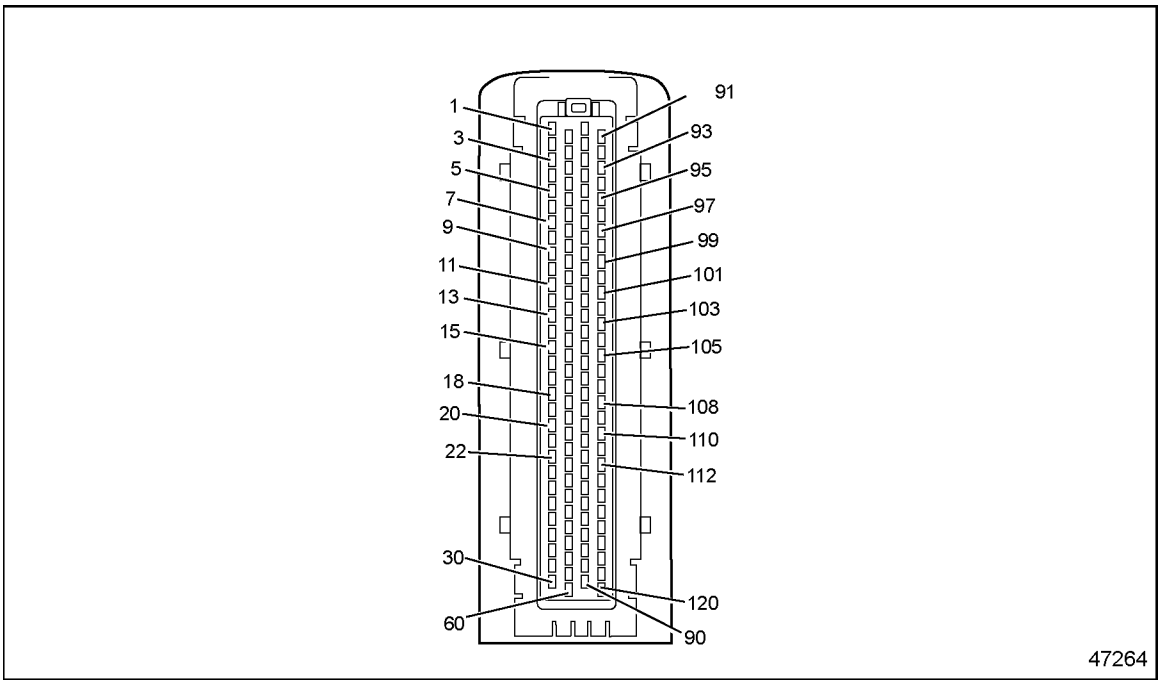

Figure 63-1 120–pin MCM Connector

9. Turn the ignition OFF.
10. Disconnect the Rear Injector Harness 12–pin connector.
11. Measure the resistance between pin 5 and pin 6 on the valve cover side of the Rear Injector Harness 12–pin connector. If using J-48671–10, measure between injector #5 pins 1 and 2.
    [a] If the resistance is greater than 3 Ω, go to step 13.
    [b] If the resistance is less than 3 Ω, go to step 12.
12. Measure the resistance between pin 5 and ground on the valve cover side of the Rear Injector Harness 12–pin connector. If using J-48671–10, measure between injector #5 pins 1 and ground.
    [a] If the resistance is greater than 3 Ω, repair the open between pin 5 of the Rear Injector Harness 12–pin connector on the valve cover side and pin 19 of the 120–pin MCM connector. Refer to section 63.1.1.1.
    [b] If the resistance is less than 3 Ω, go to step 13.
13. Remove the upper valve cover.
14. Disconnect injector #5.
15. Measure the resistance between pin 5 (injector #5 pin 1 if using J-48671–10) on the valve cover side of the injector harness and pin 1 of the injector #5 harness connector.

All information subject to change without notice.
Copyright © 2007 DETROIT DIESEL CORPORATION

https://truckmanualshub.com/

[a] If the resistance is greater than 3 Ω, replace the under valve cover injector harness. Refer to section 63.1.1.1.

[b] If the resistance is less than 3 Ω, go to step 16.

16. Measure the resistance between pin 6 (injector #5 pin 2 if using J-48671–10) on the valve cover side of the injector harness and pin 2 of the injector #5 harness connector.

    [a] If the resistance is greater than 3 Ω, replace the under valve cover injector harness. Refer to section 63.1.1.1.

    [b] If the resistance is less than 3 Ω, replace injector #5. Refer to section 63.1.1.1.

63.1.1.1 Verify Repairs

Verify repairs as follows:

1. Turn ignition OFF.
2. Reconnect any electrical connections that were disconnected to perform the diagnosis.
3. Clear codes with DDDL 7.0 or latest version.
4. Start and bring engine up to operating temperature (over 140°F/60°C).
5. Verify operation is satisfactory and no warning lamps illuminate. If warning lamps illuminate, troubleshoot the codes. If assistance is required, call the Detroit Diesel Customer Support Center at 313–592–5800.

All information subject to change without notice.
Copyright © 2007 DETROIT DIESEL CORPORATION

https://truckmanualshub.com/

All information subject to change without notice.
Copyright © 2007 DETROIT DIESEL CORPORATION

https://truckmanualshub.com/

64 SPN 656 – INJECTOR #6 NEEDLE VALVE NOT OPERATING NORMALLY

Section **Page**

64.1 SPN 656/FMI 14 64-3

https://truckmanualshub.com/

All information subject to change without notice.
Copyright © 2007 DETROIT DIESEL CORPORATION

https://truckmanualshub.com/

64.1 SPN 656/FMI 14

This diagnosis is typically an open circuit, short to ground or short to power.

64.1.1 Open Circuit, Short to Ground and Short to Power Check

Check as follows:

1. Check for multiple codes.
   [a] If fault code 168/1 is active in addition to any other codes, service 168/1 first. Refer to section 32.2.
   [b] If fault codes 654/14 and 655/14 are active in addition to 656/14, go to step 2 Refer to section 64.1.1.1.
   [c] If only fault code 656/14 is active, go to step 9.
2. Turn the vehicle ignition OFF.
3. Disconnect the Rear Injector Harness 12–pin connector.
4. Inspect the Rear Injector Harness 12–pin connector for bent or spread pins, inspect the connector seal for damage (signs of water or oil intrusion).
   [a] If the water or oil intrusion, bent or spread pins are found, repair as necessary. Refer to section 64.1.1.1.
   [b] If connector shows no signs of damage, go to step 5.
5. Turn the ignition ON (ignition ON, engine OFF).
6. Measure for voltage between pin 3 on the MCM side of the Rear Injector Harness 12–pin connector and ground.
   [a] If voltage is present, repair the short to power between pin 3 of the Rear Injector Harness 12–pin connector and pin 17 of the 120–pin MCM connector. See Figure 64-1. Refer to section 64.1.1.1.
   [b] If no voltage is present, go to step 7.
7. Measure for voltage between pin 5 on the MCM side of the Rear Injector Harness 12–pin connector and ground.
   [a] If voltage is present, repair the short to power between pin 5 of the Rear Injector Harness 12–pin connector and pin 19 of the 120–pin MCM connector. See Figure 64-1. Refer to section 64.1.1.1.
   [b] If no voltage is present, go to step 8.
8. Measure for voltage between pin 9 on the MCM side of the Rear Injector Harness 12–pin connector and ground.
   [a] If voltage is present, repair the short to power between pin 9 of the Rear Injector Harness 12–pin connector and pin 21 of the 120–pin MCM connector. See Figure 64-1. Refer to section 64.1.1.1.

All information subject to change without notice.
Copyright © 2007 DETROIT DIESEL CORPORATION

https://truckmanualshub.com/

[b] If no voltage is present, contact the Detroit Diesel Customer Support Center at 313–592–5800 for MCM replacement authorization.

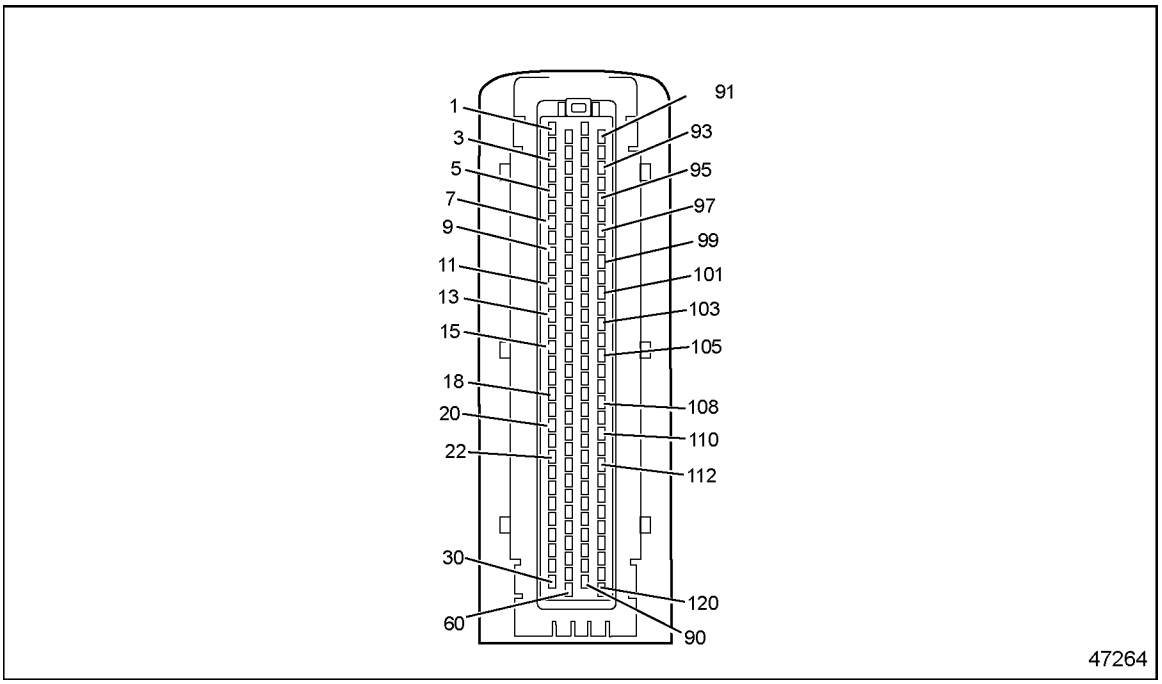

Figure 64-1 120–pin MCM Connector

9. Turn the ignition OFF.
10. Disconnect the Rear Injector Harness 12–pin connector.
11. Measure the resistance between pin 9 and pin 10 on the valve cover side of the Rear Injector Harness 12–pin connector. If using J-48671–10, measure between injector #6 pins 1 and 2.
    [a] If the resistance is greater than 3 Ω, go to step 13.
    [b] If the resistance is less than 3 Ω, go to step 12.
12. Measure the resistance between pin 9 and ground on the valve cover side of the Rear Injector Harness 12–pin connector. If using J-48671–10, measure between injector #6 pins 1 and ground.
    [a] If the resistance is greater than 3 Ω, repair the open between pin 9 of the Rear Injector Harness 12–pin connector on the valve cover side and pin 19 of the 120–pin MCM connector. Refer to section 64.1.1.1.
    [b] If the resistance is less than 3 Ω, go to step 13.
13. Remove the upper valve cover.
14. Disconnect injector #6.
15. Measure the resistance between pin 9 (injector #6 pin 1 if using J-48671–10) on the valve cover side of the injector harness and pin 1 of the injector #6 harness connector.

All information subject to change without notice.
Copyright © 2007 DETROIT DIESEL CORPORATION

https://truckmanualshub.com/

[a] If the resistance is greater than 3 Ω, replace the under valve cover injector harness. Refer to section 64.1.1.1.

[b] If the resistance is less than 3 Ω, go to step 16.

16. Measure the resistance between pin 10 (injector #6 pin 2 if using J-48671–10) on the valve cover side of the injector harness and pin 2 of the injector #6 harness connector.

    [a] If the resistance is greater than 3 Ω, replace the under valve cover injector harness. Refer to section 64.1.1.1.

    [b] If the resistance is less than 3 Ω, replace injector #6. Refer to section 64.1.1.1.

64.1.1.1 Verify Repairs

Verify repairs as follows:

1. Turn ignition OFF.
2. Reconnect any electrical connections that were disconnected to perform the diagnosis.
3. Clear codes with DDDL 7.0 or latest version.
4. Start and bring engine up to operating temperature (over 140°F/60°C).
5. Verify operation is satisfactory and no warning lamps illuminate. If warning lamps illuminate, troubleshoot the codes. If assistance is required, call the Detroit Diesel Customer Support Center at 313–592–5800.

All information subject to change without notice.
Copyright © 2007 DETROIT DIESEL CORPORATION

https://truckmanualshub.com/

All information subject to change without notice.
Copyright © 2007 DETROIT DIESEL CORPORATION

https://truckmanualshub.com/

65 SPN 703 (CPC) - ASG2 BACKUP LAMP

Section **Page**

65.1 SPN 703/FMI 3 65-3
65.2 SPN 703/FMI 4 65-3

https://truckmanualshub.com/

All information subject to change without notice.
Copyright © 2007 DETROIT DIESEL CORPORATION

https://truckmanualshub.com/

65.1 SPN 703/FMI 3

ASG2 backup lamp - indicates a short to power/open circuit on pin 9 of the CPC #3 connector. For wiring schematic information refer to OEM literature.

NOTE:
The CPC digital outputs have the same SPN as some MCM faults. DDDL 7.0 makes the distinction between the MCM and CPC when diagnosing a fault.

65.2 SPN 703/FMI 4

ASG2 backup lamp - indicates a short to ground on the pin 9 circuit of the CPC #3 connector. For wiring schematic information refer to OEM literature.

NOTE:
The CPC digital outputs have the same SPN as some MCM faults. DDDL 7.0 makes the distinction between the MCM and CPC when diagnosing a fault.

All information subject to change without notice.
Copyright © 2007 DETROIT DIESEL CORPORATION

https://truckmanualshub.com/

All information subject to change without notice.
Copyright © 2007 DETROIT DIESEL CORPORATION

https://truckmanualshub.com/

66 SPN 704 (CPC) - HIGH EXHAUST SYSTEM TEMPERATURE LAMP

Section **Page**

66.1 SPN 704/FMI 3 66-3
66.2 SPN 704/FMI 4 66-3

https://truckmanualshub.com/

All information subject to change without notice.
Copyright © 2007 DETROIT DIESEL CORPORATION

https://truckmanualshub.com/

66.1 SPN 704/FMI 3

High Exhaust System Temperature Lamp - indicates a short to power/open circuit on pin 7 of the CPC #4 connector. For wiring schematic information refer to OEM literature.

NOTE:
The CPC digital outputs have the same SPN as some MCM faults. DDDL 7.0 makes the distinction between the MCM and CPC when diagnosing a fault.

66.2 SPN 704/FMI 4

High Exhaust System Temperature Lamp - indicates a short to ground on the pin 7 circuit of the CPC #4 connector. For wiring schematic information refer to OEM literature.

NOTE:
The CPC digital outputs have the same SPN as some MCM faults. DDDL 7.0 makes the distinction between the MCM and CPC when diagnosing a fault.

All information subject to change without notice.
Copyright © 2007 DETROIT DIESEL CORPORATION

https://truckmanualshub.com/

All information subject to change without notice.
Copyright © 2007 DETROIT DIESEL CORPORATION

https://truckmanualshub.com/

67 SPN 704 - TURBO ACTUATOR CONTROL (AUX PWM #10)

Section **Page**

67.1 SPN 704/FMI 3 67-3
67.2 SPN 704/FMI 4 67-4
67.3 SPN 704/FMI 5 67-5

https://truckmanualshub.com/

All information subject to change without notice.
Copyright © 2007 DETROIT DIESEL CORPORATION

https://truckmanualshub.com/

67.1 SPN 704/FMI 3

This diagnosis is typically a short to power.

67.1.1 Short to Power Check

Check as follows:

1. Disconnect the turbo actuator connector.
2. Turn the ignition ON (key ON, engine OFF).
3. Measure the voltage between pin 3 of the turbo actuator connector and chassis ground.
   [a] If the voltage is greater than 4.5 volts, repair the short to power between pin 3 of the turbo actuator connector and pin 35 of the 120–pin MCM connector. Refer to section 67.1.1.1.
   [b] If the voltage is less than 4.5 volts, go to step 4.
4. Turn the ignition OFF.
5. Disconnect the 120–pin MCM connector.
6. Measure the resistance between pin 1 and pin 3 of the turbo actuator connector.
   [a] If the resistance is less than 5 Ω, repair the short between pins 1 and 3 of the turbo actuator connector and pins 35 and 93 of the 120–pin MCM connector. Refer to section 67.1.1.1.
   [b] If the resistance is greater than 5 Ω, refer to section 67.1.1.1.

67.1.1.1 Verify Repairs

Verify repairs as follows:

Verify repairs as follows:

1. Turn ignition OFF.
2. Reconnect any electrical connections that were disconnected to perform the diagnosis.
3. Clear codes with DDDL 7.0 or latest version.
4. Start and bring engine up to operating temperature (over 140°F/60°C).
5. Verify operation is satisfactory and no warning lamps illuminate. If warning lamps illuminate, troubleshoot the codes. If assistance is required, call the Detroit Diesel Customer Support Center at 313–592–5800.

All information subject to change without notice.
Copyright © 2007 DETROIT DIESEL CORPORATION

https://truckmanualshub.com/

67.2 SPN 704/FMI 4

This diagnosis is typically a short to ground.

67.2.1 Short Circuit Check

Check as follows:

1. Disconnect the turbo actuator connector.
2. Disconnect the 120–pin MCM connector.
3. Measure the resistance between pins 1 and 3 of the turbo actuator connector.
   [a] If the resistance is less than 5 Ω, repair the short between pins 35 and 93 of the 120–pin MCM connector. Refer to section 67.2.1.1.
   [b] If the resistance is greater than 5 Ω, go to step 4.
4. Measure the resistance between pins 2 and 3 of the turbo actuator connector.
   [a] If the resistance is less than 5 Ω, repair the short between pins 35 and 38 of the 120–pin MCM connector. Refer to section 67.2.1.1.
   [b] If the resistance is greater than 5 Ω, go to step 5.
5. Measure the resistance between pin 3 of the turbo actuator connector and ground.
   [a] If the resistance is less than 5 Ω, repair the short between pin 3 of the turbo actuator connector and ground. Refer to section 67.2.1.1.
   [b] If the resistance is greater than 5 Ω, go to step 6.
6. Measure the resistance between pin 1 of the turbo actuator connector and ground.
   [a] If the resistance is less than 5 Ω, repair the short between pin 1 of the turbo actuator connector and ground. Refer to section 67.2.1.1.
   [b] If the resistance is greater than 5 Ω, refer to section 67.2.1.1.

67.2.1.1 Verify Repairs

Verify repairs as follows:

1. Turn ignition OFF.
2. Reconnect any electrical connections that were disconnected to perform the diagnosis.
3. Clear codes with DDDL 7.0 or latest version.
4. Start and bring engine up to operating temperature (over 140°F/60°C).
5. Verify operation is satisfactory and no warning lamps illuminate. If warning lamps illuminate, troubleshoot the codes. If assistance is required, call the Detroit Diesel Customer Support Center at 313–592–5800.

All information subject to change without notice.
Copyright © 2007 DETROIT DIESEL CORPORATION

https://truckmanualshub.com/

67.3 SPN 704/FMI 5

This diagnosis is typically an open circuit.

67.3.1 Open Circuit Check

Check as follows:

1. Perform the Turbo Actuator Hysteresis Test using Artesian software and a turbo interface cable.
   [a] If the hysteresis test fails, replace the turbo actuator.
   [b] If the hysteresis test result is pass or unable to perform hysteresis test, go to step 2.
2. Disconnect the turbo actuator connector.
3. Turn the ignition ON (key ON, engine OFF).
4. Measure the voltage between pins 1 and 2 of the turbo actuator connector.
   [a] If the voltage is greater than 11.5 volts, go to step 6.
   [b] If the voltage is less than 11.5 volts, go to step 5.
5. Measure the voltage between pin 1 of the turbo actuator connector and chassis ground.
   [a] If the voltage is between 11 and 13 volts, repair the open in the wire between pin 38 of the 120–pin MCM connector and pin 2 of the turbo actuator connector. Refer to section 67.1.1.1.
   [b] If the voltage is less than 11 volts, repair the open in the wire between pin 93 of the 120–pin MCM connector and pin 1 of the turbo actuator connector. Refer to section 67.1.1.1.
6. Turn the ignition OFF.
7. Disconnect the 120–pin MCM connector.
8. Measure the resistance between pin 3 of the turbo actuator connector and pin 35 of the 120–pin MCM connector.
   [a] If the resistance is less than 3 Ω, re-verify this procedure. If the results are the same contact the Detroit Diesel Customer Support Center (313–5925800).
   [b] If the resistance is greater than 3 Ω, repair the open circuit in the wire between pin 3 of the turbo actuator connector and pin 35 of the MCM 120–pin connector. Refer to section 67.1.1.1.

All information subject to change without notice.
Copyright © 2007 DETROIT DIESEL CORPORATION

https://truckmanualshub.com/

67.3.1.1 Verify Repairs

Verify repairs as follows:

1. Turn ignition OFF.
2. Reconnect any electrical connections that were disconnected to perform the diagnosis.
3. Clear codes with DDDL 7.0 or latest version.
4. Start and bring engine up to operating temperature (over 140°F/60°C).
5. Verify operation is satisfactory and no warning lamps illuminate. If warning lamps illuminate, troubleshoot the codes. If assistance is required, call the Detroit Diesel Customer Support Center at 313–592–5800.

All information subject to change without notice.
Copyright © 2007 DETROIT DIESEL CORPORATION

https://truckmanualshub.com/

68 SPN 705 (CPC) - MALFUNCTION INDICATOR LAMP

Section **Page**

68.1 SPN 705/FMI 3 68-3
68.2 SPN 705/FMI 4 68-3

https://truckmanualshub.com/

All information subject to change without notice.
Copyright © 2007 DETROIT DIESEL CORPORATION

https://truckmanualshub.com/

68.1 SPN 705/FMI 3

Malfunction Indicator Lamp (MIL)- indicates a short to power/open circuit on pin 13of the CPC #1 connector. For wiring schematic information refer to OEM literature.

NOTE:
The CPC digital outputs have the same SPN as some MCM faults. DDDL 7.0 makes the distinction between the MCM and CPC when diagnosing a fault.

68.2 SPN 705/FMI 4

Malfunction Indicator Lamp (MIL) - indicates a short to ground on the pin 13 circuit of the CPC #1 connector. For wiring schematic information refer to OEM literature.

NOTE:
The CPC digital outputs have the same SPN as some MCM faults. DDDL 7.0 makes the distinction between the MCM and CPC when diagnosing a fault.

All information subject to change without notice.
Copyright © 2007 DETROIT DIESEL CORPORATION

https://truckmanualshub.com/

All information subject to change without notice.
Copyright © 2007 DETROIT DIESEL CORPORATION

https://truckmanualshub.com/

69 SPN 706 (CPC) - ASG2 CHECK TRANS TEMP LAMP

Section **Page**

69.1 SPN 706/FMI 3 69-3
69.2 SPN 706/FMI 4 69-3

https://truckmanualshub.com/

All information subject to change without notice.
Copyright © 2007 DETROIT DIESEL CORPORATION

https://truckmanualshub.com/

69.1 SPN 706/FMI 3

ASG2 Check Trans Temp Lamp - indicates a short to power/open circuit on pin 10 of the CPC #3 connector. For wiring schematic information refer to OEM literature.

NOTE:
The CPC digital outputs have the same SPN as some MCM faults. DDDL 7.0 makes the distinction between the MCM and CPC when diagnosing a fault.

69.2 SPN 706/FMI 4

ASG2 Check Trans Temp Lamp - indicates a short to ground on the pin 10 circuit of the CPC #3 connector. For wiring schematic information refer to OEM literature.

NOTE:
The CPC digital outputs have the same SPN as some MCM faults. DDDL 7.0 makes the distinction between the MCM and CPC when diagnosing a fault.

All information subject to change without notice.
Copyright © 2007 DETROIT DIESEL CORPORATION

https://truckmanualshub.com/

All information subject to change without notice.
Copyright © 2007 DETROIT DIESEL CORPORATION

https://truckmanualshub.com/

70 SPN 707 (CPC) - AMBER WARNING LAMP

Section **Page**

70.1 SPN 707/FMI 3 70-3
70.2 SPN 707/FMI 4 70-3

https://truckmanualshub.com/

All information subject to change without notice.
Copyright © 2007 DETROIT DIESEL CORPORATION

https://truckmanualshub.com/

70.1 SPN 707/FMI 3

Amber Warning Lamp (AWL)- indicates a short to power/open circuit on pin 10 of the CPC #2 connector. For wiring schematic information refer to OEM literature.

NOTE:
The CPC digital outputs have the same SPN as some MCM faults. DDDL 7.0 makes the distinction between the MCM and CPC when diagnosing a fault.

70.2 SPN 707/FMI 4

Amber Warning Lamp (AWL) - indicates a short to ground on the pin 10 circuit of the CPC #2 connector. For wiring schematic information refer to OEM literature.

NOTE:
The CPC digital outputs have the same SPN as some MCM faults. DDDL 7.0 makes the distinction between the MCM and CPC when diagnosing a fault.

All information subject to change without notice.
Copyright © 2007 DETROIT DIESEL CORPORATION

https://truckmanualshub.com/

All information subject to change without notice.
Copyright © 2007 DETROIT DIESEL CORPORATION

https://truckmanualshub.com/

71 SPN 708 (CPC) - ASG2 CHECK TRANS LAMP

Section **Page**

71.1 SPN 708/FMI 3 71-3
71.2 SPN 708/FMI 4 71-3

https://truckmanualshub.com/

All information subject to change without notice.
Copyright © 2007 DETROIT DIESEL CORPORATION

https://truckmanualshub.com/

71.1 SPN 708/FMI 3

ASG2 Check Trans Lamp - indicates a short to power/open circuit on pin 12 of the CPC #3 connector. For wiring schematic information refer to OEM literature.

NOTE:
The CPC digital outputs have the same SPN as some MCM faults. DDDL 7.0 makes the distinction between the MCM and CPC when diagnosing a fault.

71.2 SPN 708/FMI 4

ASG2 Check Trans Lamp - indicates a short to ground on the pin 12 circuit of the CPC #3 connector. For wiring schematic information refer to OEM literature.

NOTE:
The CPC digital outputs have the same SPN as some MCM faults. DDDL 7.0 makes the distinction between the MCM and CPC when diagnosing a fault.

All information subject to change without notice.
Copyright © 2007 DETROIT DIESEL CORPORATION

https://truckmanualshub.com/

All information subject to change without notice.
Copyright © 2007 DETROIT DIESEL CORPORATION

https://truckmanualshub.com/

72 SPN 709 (CPC) - RED STOP LAMP

Section **Page**

72.1 SPN 709/FMI 3 72-3
72.2 SPN 709/FMI 4 72-3

https://truckmanualshub.com/

All information subject to change without notice.
Copyright © 2007 DETROIT DIESEL CORPORATION

https://truckmanualshub.com/

72.1 SPN 709/FMI 3

Red Stop Lamp (RSL) - indicates a short to power/open circuit on pin 16 of the CPC #3 connector. For wiring schematic information refer to OEM literature.

NOTE:
The CPC digital outputs have the same SPN as some MCM faults. DDDL 7.0 makes the distinction between the MCM and CPC when diagnosing a fault.

72.2 SPN 709/FMI 4

Red Stop Lamp (RSL) - indicates a short to ground on the pin 16 circuit of the CPC #3 connector. For wiring schematic information refer to OEM literature.

NOTE:
The CPC digital outputs have the same SPN as some MCM faults. DDDL 7.0 makes the distinction between the MCM and CPC when diagnosing a fault.

All information subject to change without notice.
Copyright © 2007 DETROIT DIESEL CORPORATION

https://truckmanualshub.com/

All information subject to change without notice.
Copyright © 2007 DETROIT DIESEL CORPORATION

https://truckmanualshub.com/

73 SPN 711 (CPC) - DPF REGEN LAMP

Section **Page**

73.1 SPN 711/FMI 3 73-3
73.2 SPN 711/FMI 4 73-3

https://truckmanualshub.com/

All information subject to change without notice.
Copyright © 2007 DETROIT DIESEL CORPORATION

https://truckmanualshub.com/

73.1 SPN 711/FMI 3

DPF Regen Lamp - indicates a short to power/open circuit on pin 5 of the CPC #1 connector. For wiring schematic information refer to OEM literature.

NOTE:
The CPC digital outputs have the same SPN as some MCM faults. DDDL 7.0 makes the distinction between the MCM and CPC when diagnosing a fault.

73.2 SPN 711/FMI 4

DPF Regen Lamp - indicates a short to ground on the pin 5 circuit of the CPC #1 connector. For wiring schematic information refer to OEM literature.

NOTE:
The CPC digital outputs have the same SPN as some MCM faults. DDDL 7.0 makes the distinction between the MCM and CPC when diagnosing a fault.

All information subject to change without notice.
Copyright © 2007 DETROIT DIESEL CORPORATION

https://truckmanualshub.com/

All information subject to change without notice.
Copyright © 2007 DETROIT DIESEL CORPORATION

https://truckmanualshub.com/

74 SPN 713 (CPC) - TOP2 LOCKOUT SOLENOID

Section **Page**

74.1 SPN 713/FMI 3 74-3
74.2 SPN 713/FMI 4 74-3
74.3 SPN 713/FMI 5 74-3
74.4 SPN 713/FMI 7 74-3

https://truckmanualshub.com/

All information subject to change without notice.
Copyright © 2007 DETROIT DIESEL CORPORATION

https://truckmanualshub.com/

74.1 SPN 713/FMI 3

TOP2 Lockout Solenoid - indicates a short to power on the pin 7 circuit of the CPC #3 connector. For wiring schematic information refer to OEM literature.

NOTE:
The CPC digital outputs have the same SPN as some MCM faults. DDDL 7.0 makes the distinction between the MCM and CPC when diagnosing a fault.

74.2 SPN 713/FMI 4

TOP2 Lockout Solenoid - indicates a short to ground circuit on pin 7 of the CPC #3 connector. For wiring schematic information refer to OEM literature.

NOTE:
The CPC digital outputs have the same SPN as some MCM faults. DDDL 7.0 makes the distinction between the MCM and CPC when diagnosing a fault.

74.3 SPN 713/FMI 5

TOP2 Lockout Solenoid - indicates an open circuit on the pin 7 circuit of the CPC #3 connector. For wiring schematic information refer to OEM literature.

NOTE:
The CPC digital outputs have the same SPN as some MCM faults. DDDL 7.0 makes the distinction between the MCM and CPC when diagnosing a fault.

74.4 SPN 713/FMI 7

TOP2 Shift Failure – indicates an open, ground or shot to power on the pin 7 of the CPC #3 connector. For wiring schematic information refer to OEM literature.

NOTE:
The CPC digital outputs have the same SPN as some MCM faults. DDDL 7.0 makes the distinction between the MCM and CPC when diagnosing a fault.

All information subject to change without notice.
Copyright © 2007 DETROIT DIESEL CORPORATION

https://truckmanualshub.com/

All information subject to change without notice.
Copyright © 2007 DETROIT DIESEL CORPORATION

https://truckmanualshub.com/

75 SPN 714 (CPC) - TOP2 SHIFT SOLENOID

Section **Page**

75.1 SPN 714/FMI 3 75-3
75.2 SPN 714/FMI 4 75-3
75.3 SPN 714/FMI 5 75-3

https://truckmanualshub.com/

All information subject to change without notice.
Copyright © 2007 DETROIT DIESEL CORPORATION

https://truckmanualshub.com/

75.1 SPN 714/FMI 3

TOP2 Shift Solenoid - indicates a short to power on the pin 8 circuit CPC #3 connector. For wiring schematic information refer to OEM literature.

NOTE:
The CPC digital outputs have the same SPN as some MCM faults. DDDL 7.0 makes the distinction between the MCM and CPC when diagnosing a fault.

75.2 SPN 714/FMI 4

TOP2 Shift Solenoid - indicates a short to ground circuit on pin 8 of the CPC #3 connector. For wiring schematic information refer to OEM literature.

NOTE:
The CPC digital outputs have the same SPN as some MCM faults. DDDL 7.0 makes the distinction between the MCM and CPC when diagnosing a fault.

75.3 SPN 714/FMI 5

TOP2 Shift Solenoid - indicates a open circuit on the pin 8 circuit of the CPC #3 connector. For wiring schematic information refer to OEM literature.

NOTE:
The CPC digital outputs have the same SPN as some MCM faults. DDDL 7.0 makes the distinction between the MCM and CPC when diagnosing a fault.

All information subject to change without notice.
Copyright © 2007 DETROIT DIESEL CORPORATION

https://truckmanualshub.com/

All information subject to change without notice.
Copyright © 2007 DETROIT DIESEL CORPORATION

https://truckmanualshub.com/

76 SPN 715 (CPC) - VEHICLE POWER SHUTDOWN

Section **Page**

76.1 SPN 715/FMI 3 76-3
76.2 SPN 715/FMI 4 76-3
76.3 SPN 715/FMI 5 76-3

https://truckmanualshub.com/

All information subject to change without notice.
Copyright © 2007 DETROIT DIESEL CORPORATION

https://truckmanualshub.com/

76.1 SPN 715/FMI 3

Vehicle Power Shutdown - indicates a short to power on the pin 10 circuit of the CPC #4 connector. For wiring schematic information refer to OEM literature.

NOTE:
The CPC digital outputs have the same SPN as some MCM faults. DDDL 7.0 makes the distinction between the MCM and CPC when diagnosing a fault.

76.2 SPN 715/FMI 4

Vehicle Power Shutdown - indicates a short to ground circuit on pin 10 of the CPC #4 connector. For wiring schematic information refer to OEM literature.

NOTE:
The CPC digital outputs have the same SPN as some MCM faults. DDDL 7.0 makes the distinction between the MCM and CPC when diagnosing a fault.

76.3 SPN 715/FMI 5

Vehicle Power Shutdown - indicates a open circuit on the pin 10 circuit of the CPC #4 connector. For wiring schematic information refer to OEM literature.

NOTE:
The CPC digital outputs have the same SPN as some MCM faults. DDDL 7.0 makes the distinction between the MCM and CPC when diagnosing a fault.

All information subject to change without notice.
Copyright © 2007 DETROIT DIESEL CORPORATION

https://truckmanualshub.com/

All information subject to change without notice.
Copyright © 2007 DETROIT DIESEL CORPORATION

https://truckmanualshub.com/

77 SPN 723 – CAMSHAFT POSITION SENSOR FAULT

Section **Page**

77.1 SPN 723/FMI 3 77-3
77.2 SPN 723/FMI 4 77-5
77.3 SPN 723/FMI 8 77-6
77.4 SPN 723/FMI 14 77-7

https://truckmanualshub.com/

All information subject to change without notice.
Copyright © 2007 DETROIT DIESEL CORPORATION

https://truckmanualshub.com/

77.1 SPN 723/FMI 3

The diagnostic condition is typically an open circuit.

77.1.1 Open Circuit Check

Perform the following steps to troubleshoot an open circuit.

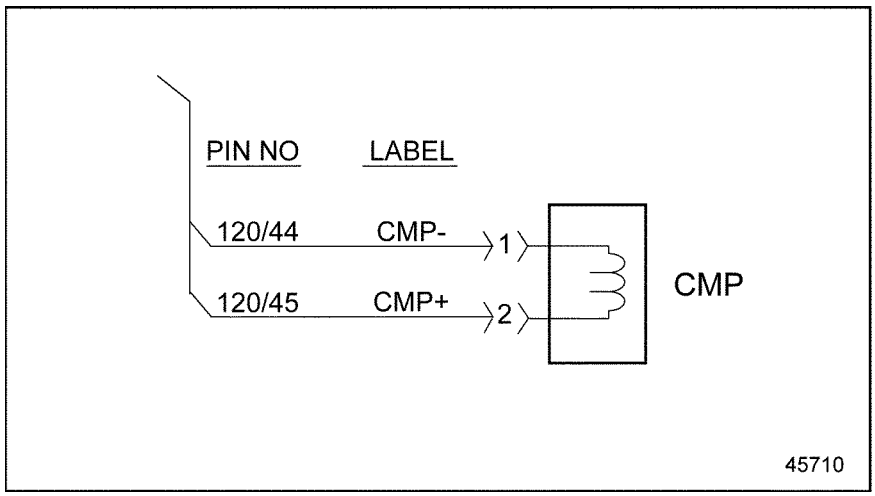

Figure 77-1 MCM — Camshaft Position Sensor Schematic

1. Disconnect CMP Sensor
2. Measure the resistance across pins 1 and 2 of the CMP Sensor.See Figure 77-1.
   [a] If the resistance is less than 140 Ω, go to step 3.
   [b] If the resistance is greater than 140 Ω, replace the CMP Sensor. Refer to section 77.1.1.1.
3. Disconnect the 120–pin MCM connector.
4. Measure the resistance across pins 1 and 2 of the CMP harness connector.
   [a] If the resistance is less than 5 Ω, repair short between pins 1 and 2 of the CMP harness connector and the pins 44 and 45 of the MCM 120 pin connector. Refer to section 77.1.1.1.
   [b] If the resistance is greater than 5 Ω, go to step 5.
5. Measure the resistance between pin 1 of the CMP harness connector and pin 44 of the MCM 120 pin connector
   [a] If the resistance is greater then 5 ohms, repair open between pin 1 of the CMP harness connector and pin 44 of the MCM 120 pin connector. Refer to section 77.1.1.1.
   [b] If the resistance is less than 5 Ω, go to step 6.

All information subject to change without notice.
Copyright © 2007 DETROIT DIESEL CORPORATION

https://truckmanualshub.com/

6. Measure the resistance between pin 2 of the CMP harness connector and pin 45 of the MCM 120 pin connector.
   [a] If the resistance is greater then 5 ohms, repair open between pin 2 of the CMP harness connector and pin 45 of the MCM 120 pin connector. Refer to section 77.1.1.1.
   [b] If the resistance is less than 5 Ω, review steps 2 through 6. If the results are the same, contact the Detroit Diesel Customer Support Center (313–592–5800).

77.1.1.1 Verify Repairs

Verify repairs as follows:

1. Turn ignition OFF.
2. Reconnect any electrical connections that were disconnected to perform the diagnosis.
3. Clear codes with DDDL 7.0 or latest version.
4. Start and bring engine up to operating temperature (over 140°F/60°C).
5. Verify operation is satisfactory and no warning lamps illuminate. If warning lamps illuminate, troubleshoot the codes. If assistance is required, call the Detroit Diesel Customer Support Center at 313–592–5800.

All information subject to change without notice.
Copyright © 2007 DETROIT DIESEL CORPORATION

https://truckmanualshub.com/

77.2 SPN 723/FMI 4

A typical diagnosis is a short to ground.

77.2.1 Short to Ground Check

Perform the following step to troubleshoot a short to ground.

1. Disconnect the CMP Sensor.
2. Measure the resistance between pin 1 of the CMP Sensor and ground. See Figure 77-2.

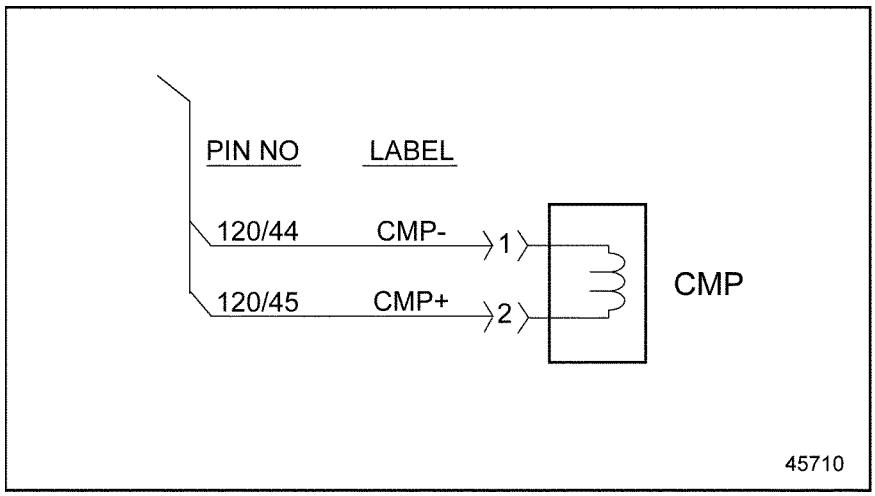

Figure 77-2 MCM — Camshaft Position Sensor Schematic

   [a] If the resistance is greater than 5 Ω, go to step 3.

   [b] If the resistance is less than 5 Ω, replace the CMP Sensor.Refer to section 77.2.1.1.

3. Measure the resistance between pin 2 of the CMP Sensor and ground.

   [a] If the resistance is greater than 5 Ω, go to step 4.

   [b] If the resistance is less than 5 Ω, replace the CMP Sensor.Refer to section 77.2.1.1.

4. Disconnect 120-pin MCM connector.
5. Measure the resistance across pins 1 and 2 of the CMP harness connector.

   [a] If the resistance is greater than 5 Ω, go to step 6.

   [b] If the resistance is less than 5 Ω, repair the short between pins 1 and 2 of the CMP harness connector and pins 44 and 45 of the 120–pin MCM connector. Refer to section 77.2.1.1.

6. Measure the resistance between pin 1 of the CMP harness connector and ground.

   [a] If the resistance is greater than 5 Ω, go to step 7.

All information subject to change without notice.
Copyright © 2007 DETROIT DIESEL CORPORATION

https://truckmanualshub.com/

[b] If the resistance is less than 5 Ω, repair the short to ground between pin 1 of the CMP harness connector and pin 44 of the 120–pin MCM connector. Refer to section 77.2.1.1.

7. Measure the resistance between pin 2 of the CMP harness connector and pin 45 of the 120–pin MCM connector.

   [a] If the resistance is greater than 5 Ω, review steps 2 through 7. If the results are the same, contact Detroit Diesel Customer Support Center (313–592–5800).

   [b] If the resistance is less than 5 Ω, repair the short to ground between pin 2 of the CMP harness connector and pin 45 of the 120–pin MCM connector. Refer to section 77.2.1.1.

77.2.1.1 Verify Repairs

Verify repairs as follows:

1. Turn ignition OFF.
2. Reconnect any electrical connections that were disconnected to perform the diagnosis.
3. Clear codes with DDDL 7.0 or latest version.
4. Start and bring engine up to operating temperature (over 140°F/60°C).
5. Verify operation is satisfactory and no warning lamps illuminate. If warning lamps illuminate, troubleshoot the codes. If assistance is required, call the Detroit Diesel Customer Support Center at 313–592–5800.

77.3 SPN 723/FMI 8

A typical diagnosis is time out.

77.3.1 Time Out Check

Check as follows:

1. Disconnect the MCM 120–pin connector.
2. Measure the resistance between pins 44 and 45 of the MCM 120–pin connector.

   [a] If the resistance is greater than 140 Ω, go to step 5.

   [b] If the resistance is less than 140 Ω, go to step 3.

3. Disconnect the CMP Sensor.
4. Measure the resistance between pins 44 and 45 of the MCM 120–pin connector.

   [a] If the resistance is less than 3 Ω, repair the short between pins 44 and 45 of the MCM 120–pin connector and the CMP Sensor. Refer to section 77.3.1.1.

   [b] If the resistance is greater than 3 Ω, replace the CKP Sensor. Refer to section 77.3.1.1.

5. Disconnect the CMP Sensor.

All information subject to change without notice.
Copyright © 2007 DETROIT DIESEL CORPORATION

https://truckmanualshub.com/

6. Jumper pins 1 and 2 of the CKP Sensor harness.
7. Measure the resistance between pins 44 and 45 of the MCM 120–pin connector.
   [a] If the resistance is greater than 3 Ω, repair the open between pins 42 and 43 of the MCM 120–pin connector and the CKP Sensor connector. Refer to section 77.3.1.1.
   [b] If the resistance is less than 3 Ω, replace the CKP Sensor. Refer to section 77.3.1.1.

77.3.1.1 Verify Repairs

Verify repairs as follows:

1. Turn ignition OFF.
2. Reconnect any electrical connections that were disconnected to perform the diagnosis.
3. Clear codes with DDDL 7.0 or latest version.
4. Start and bring engine up to operating temperature (over 140°F/60°C).
5. Verify operation is satisfactory and no warning lamps illuminate. If warning lamps illuminate, troubleshoot the codes. If assistance is required, call the Detroit Diesel Customer Support Center at 313–592–5800.

77.4 SPN 723/FMI 14

A typical diagnosis is swapped pins.

If this SPN and FM:I are active, verify that the wiring from CMP Sensor pin 1 to pin 44 of the MCM 120–pin connector and that the wiring from CMP Sensor pin 2 to pin 45 of the MCM 120–pin connector is correct. See Figure 77-3.

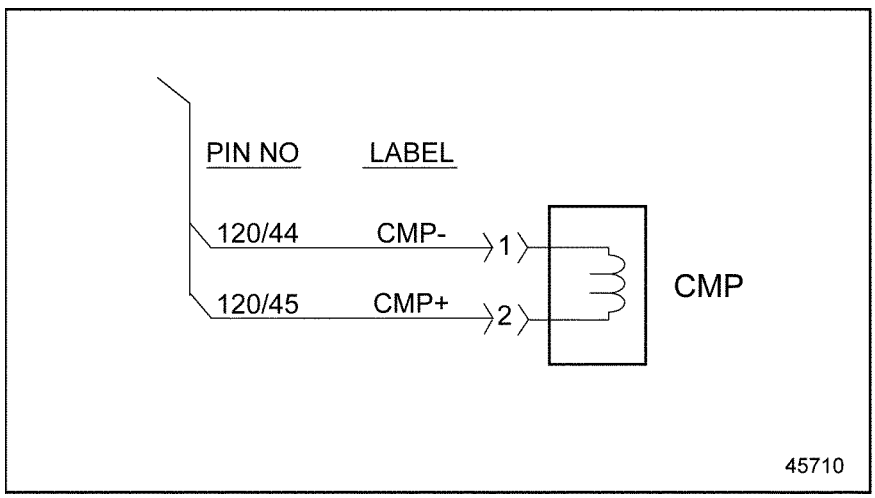

Figure 77-3 Camshaft Position Sensor

All information subject to change without notice.
Copyright © 2007 DETROIT DIESEL CORPORATION

https://truckmanualshub.com/

All information subject to change without notice.
Copyright © 2007 DETROIT DIESEL CORPORATION

https://truckmanualshub.com/

78 SPN 904 (CPC) - J1939 EBC2 MESSAGE MISSING AND FRONT AXLE SPEED SIGNAL ERRATIC OR MISSING

Section **Page**

78.1 SPN 904/FMI 9 78-3
78.2 SPN 904/FMI 13 78-3
78.3 SPN 904/FMI 19 78-4

https://truckmanualshub.com/

All information subject to change without notice.
Copyright © 2007 DETROIT DIESEL CORPORATION

https://truckmanualshub.com/

78.1 SPN 904/FMI 9

This fault is typically the J1939 EBC2 message from the ABS is missing.

78.1.1 Missing EBC2 Message from ABS Check

Check as follows:

1. Check for multiple codes:
   [a] If CPC SPN 168/FMI 0/14/18 (Battery Voltage) are present troubleshoot these first.
   [b] If MCM SPN 625/FMI 9 is present, troubleshoot and repair the CAN line.
   [c] If only a “J1939 Error” fault is present, go to step 2.
2. Has the CPC been recently reprogrammed?
   [a] If yes, check the proper configuration of the CPC.
   [b] If no, connect ServiceLink to determine which modules are configured for the vehicle and their communication status. Once this is done, follow the appropriate module communication troubleshooting procedures for the affected module.

78.2 SPN 904/FMI 13

This fault is typically the front axle speed signal is missing.

78.2.1 Missing Front Axle Speed Signal Check

Check as follows:

1. Check for multiple codes:
   [a] If CPC SPN 168/FMI 0/14/18 (Battery Voltage) are present troubleshoot these first.
   [b] If MCM SPN 625/FMI 9 is present, troubleshoot and repair the CAN line.
   [c] If only a “J1939 Error” fault is present, go to step 2.
2. Has the CPC been recently reprogrammed?
   [a] If yes, check the proper configuration of the CPC.
   [b] If no, connect ServiceLink to determine which modules are configured for the vehicle and their communication status. Once this is done, follow the appropriate module communication troubleshooting procedures for the affected module.

All information subject to change without notice.
Copyright © 2007 DETROIT DIESEL CORPORATION

https://truckmanualshub.com/

78.3 SPN 904/FMI 19

This fault is typically the front axle speed signal is erratic.

78.3.1 Erratic Front Axle Speed Signal Check

Check as follows:

1. Check for multiple codes:
   [a] If CPC SPN 168/FMI 0/14/18 (Battery Voltage) are present troubleshoot these first.
   [b] If MCM SPN 625/FMI 9 is present, troubleshoot and repair the CAN line.
   [c] If only a “J1939 Error” fault is present, go to step 2.
2. Has the CPC been recently reprogrammed?
   [a] If yes, check the proper configuration of the CPC.
   [b] If no, connect ServiceLink to determine which modules are configured for the vehicle and their communication status. Once this is done, follow the appropriate module communication troubleshooting procedures for the affected module.

All information subject to change without notice.
Copyright © 2007 DETROIT DIESEL CORPORATION

https://truckmanualshub.com/

79 SPN 973 (CPC) - J1939 EBC1 MESSAGE MISSING AND ENGINE RETARDER SELECTION SIGNAL IS ERRATIC OR MISSSING

Section **Page**

79.1 SPN 973/FMI 9 79-3
79.2 SPN 973/FMI 13 79-3
79.3 SPN 973/FMI 19 79-4

https://truckmanualshub.com/

All information subject to change without notice.
Copyright © 2007 DETROIT DIESEL CORPORATION

https://truckmanualshub.com/

79.1 SPN 973/FMI 9

This fault is typically the J1939 EBC1 message from the transmission is missing.

79.1.1 Missing EBC1 Transmission from ABS Check

Check as follows:

1. Check for multiple codes:
   [a] If CPC SPN 168/FMI 0/14/18 (Battery Voltage) are present troubleshoot these first.
   [b] If MCM SPN 625/FMI 9 is present, troubleshoot and repair the CAN line.
   [c] If only a “J1939 Error” fault is present, go to step 2.
2. Has the CPC been recently reprogrammed?
   [a] If yes, check the proper configuration of the CPC.
   [b] If no, connect ServiceLink to determine which modules are configured for the vehicle and their communication status. Once this is done, follow the appropriate module communication troubleshooting procedures for the affected module.

79.2 SPN 973/FMI 13

This fault is typically the engine retarder selection signal is missing.

79.2.1 Missing Engine Retarder Selection Signal Check

Check as follows:

1. Check for multiple codes:
   [a] If CPC SPN 168/FMI 0/14/18 (Battery Voltage) are present troubleshoot these first.
   [b] If MCM SPN 625/FMI 9 is present, troubleshoot and repair the CAN line.
   [c] If only a “J1939 Error” fault is present, go to step 2.
2. Has the CPC been recently reprogrammed?
   [a] If yes, check the proper configuration of the CPC.
   [b] If no, connect ServiceLink to determine which modules are configured for the vehicle and their communication status. Once this is done, follow the appropriate module communication troubleshooting procedures for the affected module.

All information subject to change without notice.
Copyright © 2007 DETROIT DIESEL CORPORATION

https://truckmanualshub.com/

79.3 SPN 973/FMI 19

This fault is typically the engine retarder selection signal is erratic.

79.3.1 Erratic Engine Retarder Selection Signal Check

Check as follows:

1. Check for multiple codes:
   [a] If CPC SPN 168/FMI 0/14/18 (Battery Voltage) are present troubleshoot these first.
   [b] If MCM SPN 625/FMI 9 is present, troubleshoot and repair the CAN line.
   [c] If only a “J1939 Error” fault is present, go to step 2.
2. Has the CPC been recently reprogrammed?
   [a] If yes, check the proper configuration of the CPC.
   [b] If no, connect ServiceLink to determine which modules are configured for the vehicle and their communication status. Once this is done, follow the appropriate module communication troubleshooting procedures for the affected module.

All information subject to change without notice.
Copyright © 2007 DETROIT DIESEL CORPORATION

https://truckmanualshub.com/

80 SPN 986 (CPC) - J1939 CM1 MESSAGE IS MISSING

Section **Page**

80.1 SPN 986/FMI 9 80-3

https://truckmanualshub.com/

All information subject to change without notice.
Copyright © 2007 DETROIT DIESEL CORPORATION

https://truckmanualshub.com/

80.1 SPN 986/FMI 9

This fault is typically the J1939 CM1 message is missing.

80.1.1 Missing J1939 CM1 Message Check

Check as follows:

1. Check for multiple codes:
   [a] If CPC SPN 168/FMI 0/14/18 (Battery Voltage) are present troubleshoot these first.
   [b] If MCM SPN 625/FMI 9 is present, troubleshoot and repair the CAN line.
   [c] If only a “J1939 Error” fault is present, go to step 2.
2. Has the CPC been recently reprogrammed?
   [a] If yes, check the proper configuration of the CPC.
   [b] If no, connect ServiceLink to determine which modules are configured for the vehicle and their communication status. Once this is done, follow the appropriate module communication troubleshooting procedures for the affected module.

All information subject to change without notice.
Copyright © 2007 DETROIT DIESEL CORPORATION

https://truckmanualshub.com/

All information subject to change without notice.
Copyright © 2007 DETROIT DIESEL CORPORATION

https://truckmanualshub.com/

81 SPN 1071 - TWO-SPEED FAN (AUX PWM #6) FAULT

Section **Page**

81.1 SPN 1071/FMI 3 81-3
81.2 SPN 1071/FMI 4 81-4
81.3 SPN 1071/FMI 5 81-5

https://truckmanualshub.com/

All information subject to change without notice.
Copyright © 2007 DETROIT DIESEL CORPORATION

https://truckmanualshub.com/

81.1 SPN 1071/FMI 3

This fault code indicates that there is a short to power.

81.1.1 Short to Power Check

Check as follows:

1. Turn the ignition OFF.
2. Disconnect the fan control solenoid connector.
3. Turn the ignition ON (key On, engine OFF).
4. Measure the voltage between pin 1 of the fan control solenoid connector and ground.
   [a] If the voltage is greater than 11.5 volts, repair the short to power between pin 1 of the fan control solenoid connector and pin 33 of the 120–pin MCM connector. Refer to section 81.1.1.1.
   [b] If the voltage is less than 11.5 volts, replace the fan control solenoid. Refer to section 81.1.1.1.

81.1.1.1 Verify Repairs

Verify repairs as follows:

1. Turn ignition OFF.
2. Reconnect any electrical connections that were disconnected to perform the diagnosis.
3. Clear codes with DDDL 7.0 or latest version.
4. Start and bring engine up to operating temperature (over 140°F/60°C).
5. Verify operation is satisfactory and no warning lamps illuminate. If warning lamps illuminate, troubleshoot the codes. If assistance is required, call the Detroit Diesel Customer Support Center at 313–592–5800.

All information subject to change without notice.
Copyright © 2007 DETROIT DIESEL CORPORATION

https://truckmanualshub.com/

81.2 SPN 1071/FMI 4

This fault indicates that there is a short to ground.

81.2.1 Short to Ground Check

Check as follows:

1. Turn the ignition OFF.
2. Disconnect the fan control solenoid.
3. Disconnect the 120–pin MCM connector.
4. Measure the resistance between pin 1 of the fan control solenoid and ground.
   [a] If the resistance is less than 5 Ω, repair the short to ground between pin 1 of the fan control solenoid and pin 33 of the 120–pin MCM connector. Refer to section 81.2.1.1.
   [b] If the resistance is greater than 5 Ω, repair the short to ground between pin 2 of the fan control solenoid and pin 91 of the 120–pin MCM connector. Refer to section 81.2.1.1.

81.2.1.1 Verify Repairs

Verify repairs as follows:

1. Turn ignition OFF.
2. Reconnect any electrical connections that were disconnected to perform the diagnosis.
3. Clear codes with DDDL 7.0 or latest version.
4. Start and bring engine up to operating temperature (over 140°F/60°C).
5. Verify operation is satisfactory and no warning lamps illuminate. If warning lamps illuminate, troubleshoot the codes. If assistance is required, call the Detroit Diesel Customer Support Center at 313–592–5800.

All information subject to change without notice.
Copyright © 2007 DETROIT DIESEL CORPORATION

https://truckmanualshub.com/

81.3 SPN 1071/FMI 5

This fault code indicates that there is an open circuit.

81.3.1 Open Circuit Check

Check as follows:

1. Check for multiple codes.
   [a] If SPN 647/5, SPN 1072/5 and SPN 1071/5 are active repair the open in between the pin 91 of the 120–pin MCM connector and the fan and the Jake Brake solenoids. Refer to section 81.3.1.1.
   [b] If only SPN 1071/5 is active, go to step 2.
2. Disconnect the fan control solenoid connector.
3. Turn the ignition ON (key On, engine OFF).
4. Measure the voltage between pin 1 and 2 of the fan control solenoid connector.
   [a] If the voltage is less than 11.5 volts, go to step 5.
   [b] If the voltage is between 11.5 and 13.5 volts, replace the fan control solenoid. Refer to section 81.3.1.1.
5. Measure the voltage between pin 2 of the fan control solenoid connector and ground.
   [a] If the voltage is less than 11.5 volts, repair the open between pin 2 of the fan control solenoid connector and pin 91 of the 120–pin MCM connector. Refer to section 81.3.1.1.
   [b] If the voltage is greater than 11.5, repair the open between pin 1 of the fan control solenoid connector and pin 33 of the 120–pin MCM connector. Refer to section 81.3.1.1.

81.3.1.1 Verify Repairs

Verify repairs as follows:

1. Turn ignition OFF.
2. Reconnect any electrical connections that were disconnected to perform the diagnosis.
3. Clear codes with DDDL 7.0 or latest version.
4. Start and bring engine up to operating temperature (over 140°F/60°C).
5. Verify operation is satisfactory and no warning lamps illuminate. If warning lamps illuminate, troubleshoot the codes. If assistance is required, call the Detroit Diesel Customer Support Center at 313–592–5800.

All information subject to change without notice.
Copyright © 2007 DETROIT DIESEL CORPORATION

https://truckmanualshub.com/

All information subject to change without notice.
Copyright © 2007 DETROIT DIESEL CORPORATION

https://truckmanualshub.com/

82 SPN 1072 – JAKE BRAKES STAGE 1 (AUX PWM #7) OPEN OR SHORT

Section **Page**

82.1 SPN 1072/FMI 4 82-3
82.2 SPN 1072/FMI 5 82-4

https://truckmanualshub.com/

All information subject to change without notice.
Copyright © 2007 DETROIT DIESEL CORPORATION

https://truckmanualshub.com/

82.1 SPN 1072/FMI 4

This fault code indicates that the Jake Brake Stage 1 circuit failed low.

82.1.1 Short to Ground Check

Check as follows:

1. Disconnect the front injector valve cover harness.
2. Measure resistance between pins 7 and ground on the front injector valve cover harness connector. If you are using J-48671–10, measure either rear Jake pin and ground.
   [a] If the resistance is greater than 15 Ω, repair short to ground between pin 7 of the front injector valve cover harness connector and pin 60 of the 120–pin MCM connector. Refer to section 82.1.1.1.
   [b] If the resistance is less than 5 Ω, go to step 3.
3. Remove the upper valve cover.
4. Disconnect the rear Jake Brake harness.
5. Measure resistance between either terminal on the Jake Brake solenoid and ground.
   [a] If the resistance is less than 5 ohms, replace the Jake Brake solenoid. Refer to section 82.1.1.1.
   [b] If the resistance is greater than 5 Ω, repair the short to ground between pins 7 and 8 of the front injector valve cover harness and the Jake Brake solenoid. Refer to section 82.1.1.1.

82.1.1.1 Verify Repairs

Verify repairs as follows:

1. Turn ignition OFF.
2. Reconnect any electrical connections that were disconnected to perform the diagnosis.
3. Clear codes with DDDL 7.0 or latest version.
4. Start and bring engine up to operating temperature (over 140°F/60°C).
5. Verify operation is satisfactory and no warning lamps illuminate. If warning lamps illuminate, troubleshoot the codes. If assistance is required, call the Detroit Diesel Customer Support Center at 313–592–5800.

All information subject to change without notice.
Copyright © 2007 DETROIT DIESEL CORPORATION

https://truckmanualshub.com/

82.2 SPN 1072/FMI 5

This fault code indicates that the Jake Brake Stage 1 circuit failed open.

82.2.1 Open Circuit Check

Check as follows:

1. Check for multiple codes.
   [a] If SPN 647/5, SPN 1071/5 and SPN 1072/5 are active repair the open in between pin 91 of the 120–pin MCM connector and the rear Jake Brake and fan control solenoids. Refer to section 82.2.1.1.
   [b] If only SPN 1072/5 is active, go to step 2.
2. Disconnect the front injector valve cover harness.
3. Measure the resistance between pin 7 and 8 on the front injector valve cover harness connector. If you are using J-48671–10, measure across the rear Jake pins.
   [a] If the resistance is less than 15 Ω, repair the open between pin 7 of the front injector valve cover harness connector and pin 66 of the 120–pin MCM connector.
   [b] If the resistance is greater than 15 Ω, go to step 4.
4. Remove the valve cover.
5. Measure the resistance across the Jake Brake solenoid.
   [a] If the resistance is greater than 15 Ω, replace the Jake Brake solenoid. Refer to section 82.2.1.1.
   [b] If the resistance is less than 15 Ω, repair the open between pins 7 and 8 of the front injector valve cover harness connector and the Jake Brake solenoid. Refer to section 82.2.1.1.

82.2.1.1 Verify Repairs

Verify repairs as follows:

1. Turn ignition OFF.
2. Reconnect any electrical connections that were disconnected to perform the diagnosis.
3. Clear codes with DDDL 7.0 or latest version.
4. Start and bring engine up to operating temperature (over 140°F/60°C).
5. Verify operation is satisfactory and no warning lamps illuminate. If warning lamps illuminate, troubleshoot the codes. If assistance is required, call the Detroit Diesel Customer Support Center at 313–592–5800.

All information subject to change without notice.
Copyright © 2007 DETROIT DIESEL CORPORATION

https://truckmanualshub.com/

83 SPN 1073 – JAKE BRAKE STAGE 2 (AUX PWM #13) OPEN OR SHORT

Section **Page**

83.1 SPN 1073/FMI 4 83-3
83.2 SPN 1073/FMI 5 83-4

https://truckmanualshub.com/

All information subject to change without notice.
Copyright © 2007 DETROIT DIESEL CORPORATION

https://truckmanualshub.com/

83.1 SPN 1073/FMI 4

This fault code indicates that the Jake Brake Stage 2 circuit failed low.

83.1.1 Short to Ground Check

Check as follows:

1. Disconnect the front injector valve cover harness.
2. Measure resistance between pin 12 and ground on the front injector valve cover harness connector. If you are using J-48671–10, measure across the rear Jake pins.
   [a] If the resistance is greater than 15 Ω, repair short to ground between pin 12 of the front injector valve cover harness connector and pin 32 of the 120–pin MCM connector. Refer to section 83.1.1.1.
   [b] If the less is greater than 5 Ω, go to step 3.
3. Remove the upper valve cover.
4. Disconnect the Front Jake Brake Harness
5. Measure resistance between either terminal on the Jake Brake solenoid and ground.
   [a] If the resistance is less than 5 ohms, replace the Jake Brake solenoid. Refer to section 83.1.1.1.
   [b] If the resistance is greater than 5 Ω, repair the short to ground between pins 11 and 12 of the front injector valve cover harness. Refer to section 83.1.1.1.

83.1.1.1 Verify Repairs

Verify repairs as follows:

1. Turn ignition OFF.
2. Reconnect any electrical connections that were disconnected to perform the diagnosis.
3. Clear codes with DDDL 7.0 or latest version.
4. Start and bring engine up to operating temperature (over 140°F/60°C).
5. Verify operation is satisfactory and no warning lamps illuminate. If warning lamps illuminate, troubleshoot the codes. If assistance is required, call the Detroit Diesel Customer Support Center at 313–592–5800.

All information subject to change without notice.
Copyright © 2007 DETROIT DIESEL CORPORATION

https://truckmanualshub.com/

83.2 SPN 1073/FMI 5

This fault code indicates that the Jake Brake Stage 2 circuit failed open.

83.2.1 Open Circuit Check

Check as follows:

1. Check for multiple codes.
   [a] If SPN 1073/5 and SPN 2791/5 are active repair the open between the pin 62 of the 120–pin MCM connector and the front Jake Brake and fan control solenoids.
   [b] If only SPN 1073/5 is active, go to step 2.
2. Disconnect the front injector valve cover harness.
3. Measure the resistance between pins 11 and 12 on the front injector valve cover harness connector. If you are using J-48671–10, measure across the front Jake pins.
   [a] If the resistance is greater than 150 Ω, go to step 4.
   [b] If the resistance is less than 15 Ω, repair the open between pin 12 of the front injector valve cover harness connector and pin 32 of the 120–pin MCM connector. Refer to section 83.2.1.1.
4. Remove the upper valve cover.
5. Measure the resistance across the front Jake Brake solenoid.
   [a] If the resistance is greater than 15 Ω, replace the Jake Brake solenoid. Refer to section 83.2.1.1.
   [b] If the resistance is less than 15 Ω, repair the open between pins 11 and 12 of the front injector valve cover harness connector and the Jake Brake solenoid. Refer to section 83.2.1.1.

83.2.1.1 Verify Repairs

Verify repairs as follows:

1. Turn ignition OFF.
2. Reconnect any electrical connections that were disconnected to perform the diagnosis.
3. Clear codes with DDDL 7.0 or latest version.
4. Start and bring engine up to operating temperature (over 140°F/60°C).
5. Verify operation is satisfactory and no warning lamps illuminate. If warning lamps illuminate, troubleshoot the codes. If assistance is required, call the Detroit Diesel Customer Support Center at 313–592–5800.

All information subject to change without notice.
Copyright © 2007 DETROIT DIESEL CORPORATION

https://truckmanualshub.com/

84 SPN 1172 -TURBO COMPRESSOR IN TEMP HIGH OR LOW

Section **Page**

84.1 SPN 1172/FMI 2 84-3
84.2 SPN 1172/FMI 3 84-3
84.3 SPN 1172/FMI 4 84-6

https://truckmanualshub.com/

All information subject to change without notice.
Copyright © 2007 DETROIT DIESEL CORPORATION

https://truckmanualshub.com/

84.1 SPN 1172/FMI 2

This code is typically a coolant temperature/compressor inlet temperature plausibility error.

84.1.1 Turbo Compressor Inlet Temperature Sensor Check

Check as follows:

1. Disconnect the Turbo Compressor Inlet Temperature Sensor.
2. Inspect the Turbo Compressor Inlet Temperature Sensor connectors for bent, damaged or corroded pins.
   [a] If damaged pins are found, repair as necessary. Refer to section 84.1.1.1.
   [b] If no damage is found, replace the Turbo Compressor Inlet Temperature Sensor. Refer to section 84.1.1.1.

84.1.1.1 Verify Repairs

Verify repairs as follows:

1. Turn ignition OFF.
2. Reconnect any electrical connections that were disconnected to perform the diagnosis.
3. Clear codes with DDDL 7.0 or latest version.
4. Start and bring engine up to operating temperature (over 140°F/60°C).
5. Verify operation is satisfactory and no warning lamps illuminate. If warning lamps illuminate, troubleshoot the codes. If assistance is required, call the Detroit Diesel Customer Support Center at 313–592–5800.

84.2 SPN 1172/FMI 3

This code is typically sensor or circuit failed high.

84.2.1 Open Circuit Check

Check as follows:

1. Turn the ignition ON (key ON, engine OFF).
2. Check for multiple codes.
   [a] If 1172/3, 3250/3, 3242/3 and 3246/3 are present, go to step 3.
   [b] If only 1172/3 is present, go to step 5
3. Disconnect the Turbo Compressor Inlet Temperature Sensor (TCI Sensor).
4. Measure the voltage between pin 1 of the TCI Sensor and ground.

All information subject to change without notice.
Copyright © 2007 DETROIT DIESEL CORPORATION

https://truckmanualshub.com/

[a] If the voltage is greater than 2.75 volts, repair the short to power between pin 88 of the 120–pin MCM connector and the TCI Sensor, DOC Inlet Temperature Sensor, DOC Outlet Temperature Sensor and the DPF Outlet Temperature Sensor. Refer to section 84.2.1.1.

[b] If no voltage is present on pin 1 of the Intake Air Temperature Sensor, repair the open between pin 88 of the 120–pin MCM connector and the TCI Sensor, DOC Inlet Temperature Sensor, DOC Outlet Temperature Sensor and the DPF Outlet Temperature Sensor. Refer to section 84.2.1.1.

5. Disconnect the Turbo Compressor Inlet Temperature Sensor.
6. Measure the voltage between pin 1 and pin 2 of the Turbo Compressor Inlet Temperature Sensor.

   [a] If the voltage is less than 2.75 volts, go to step 7.

   [b] If the voltage is greater than 2.75 volts, replace the sensor. Refer to section 84.2.1.1.

7. Measure the voltage between pin 2 of the Turbo Compressor Inlet Temperature Sensor and ground.

   [a] If the voltage is less than 2.75 volts, repair the open between pin 2 of the Turbo Compressor Inlet Temperature Sensor and pin 86 of the 120–pin MCM connector. Refer to section 84.2.1.1.

   [b] If the voltage is greater than 2.75 volts, repair the open between pin 1 of the Turbo Compressor Inlet Temperature Sensor and pin 86 of the 120–pin MCM connector. Refer to section 84.2.1.1.

All information subject to change without notice.
Copyright © 2007 DETROIT DIESEL CORPORATION

https://truckmanualshub.com/

84.2.1.1 Verify Repairs

Verify repairs as follows:

1. Turn ignition OFF.
2. Reconnect any electrical connections that were disconnected to perform the diagnosis.
3. Clear codes with DDDL 7.0 or latest version.
4. Start and bring engine up to operating temperature (over 140°F/60°C).
5. Verify operation is satisfactory and no warning lamps illuminate. If warning lamps illuminate, troubleshoot the codes. If assistance is required, call the Detroit Diesel Customer Support Center at 313–592–5800.

All information subject to change without notice.
Copyright © 2007 DETROIT DIESEL CORPORATION

https://truckmanualshub.com/

84.3 SPN 1172/FMI 4

This code is typically sensor or circuit failed low.

84.3.1 Short Circuit Check

Check as follows:

1. Turn the ignition OFF.
2. Disconnect the TCI Sensor.
3. Disconnect the 120–pin MCM connector.
4. Measure resistance between pin 1 and pin 2 of the TCI Sensor Harness connector.
   [a] If the resistance is less than 3 Ω, repair the short between pin 1 and pin 2 of the TCI Sensor Harness connector and pin86 and pin 88 of the 120–pin MCM connector. Refer to section 84.3.1.1.
   [b] If the resistance is greater than 3 Ω, repair the short to ground between pin 2 of the TCI Sensor and pin 86 of the 120–pin MCM connector. Refer to section 84.3.1.1.

84.3.1.1 Verify Repairs

Verify repairs as follows:

1. Turn ignition OFF.
2. Reconnect any electrical connections that were disconnected to perform the diagnosis.
3. Clear codes with DDDL 7.0 or latest version.
4. Start and bring engine up to operating temperature (over 140°F/60°C).
5. Verify operation is satisfactory and no warning lamps illuminate. If warning lamps illuminate, troubleshoot the codes. If assistance is required, call the Detroit Diesel Customer Support Center at 313–592–5800.

All information subject to change without notice.
Copyright © 2007 DETROIT DIESEL CORPORATION

https://truckmanualshub.com/

85 SPN 1590 (CPC) - J1939 ACC1 MESSAGE FROM ADAPTIVE CRUISE CONTROL IS MISSING

Section **Page**

85.1 SPN 1590/FMI 9 85-3

https://truckmanualshub.com/

All information subject to change without notice.
Copyright © 2007 DETROIT DIESEL CORPORATION

https://truckmanualshub.com/

85.1 SPN 1590/FMI 9

This fault is typically the J1939 ACC1 messag2 from Adaptive Cruise control is missing.

85.1.1 Missing J1939 ACC1 Message Check

Check as follows:

1. Check for multiple codes:
   [a] If CPC SPN 168/FMI 0/14/18 (Battery Voltage) are present troubleshoot these first.
   [b] If MCM SPN 625/FMI 9 is present, troubleshoot and repair the CAN line.
   [c] If only a “J1939 Error” fault is present, go to step 2.
2. Has the CPC been recently reprogrammed?
   [a] If yes, check the proper configuration of the CPC.
   [b] If no, connect ServiceLink to determine which modules are configured for the vehicle and their communication status. Once this is done, follow the appropriate module communication troubleshooting procedures for the affected module.

All information subject to change without notice.
Copyright © 2007 DETROIT DIESEL CORPORATION

https://truckmanualshub.com/

All information subject to change without notice.
Copyright © 2007 DETROIT DIESEL CORPORATION

https://truckmanualshub.com/

86 SPN 1624 (CPC) - J1939 TCO1 MESSAGE IS MISSING AND TACHOGRAPH VEHICLE SPEED SIGNAL IS ERRATIC AND MISSING

Section **Page**

86.1 SPN 1624/FMI 9 86-3
86.2 SPN 1624/FMI 13 86-3
86.3 SPN 1624/FMI 19 86-4

https://truckmanualshub.com/

All information subject to change without notice.
Copyright © 2007 DETROIT DIESEL CORPORATION

https://truckmanualshub.com/

86.1 SPN 1624/FMI 9

This fault is typically the J1939 TCO1 message is missing.

86.1.1 Missing TCO1 Message Check

Check as follows:

1. Check for multiple codes:
   [a] If CPC SPN 168/FMI 0/14/18 (Battery Voltage) are present troubleshoot these first.
   [b] If MCM SPN 625/FMI 9 is present, troubleshoot and repair the CAN line.
   [c] If only a “J1939 Error” fault is present, go to step 2.
2. Has the CPC been recently reprogrammed?
   [a] If yes, check the proper configuration of the CPC.
   [b] If no, connect ServiceLink to determine which modules are configured for the vehicle and their communication status. Once this is done, follow the appropriate module communication troubleshooting procedures for the affected module.

86.2 SPN 1624/FMI 13

This fault is typically the tachograph vehicle speed signal is missing.

86.2.1 Missing Tachograph Vehicle Speed Signal Check

Check as follows:

1. Check for multiple codes:
   [a] If CPC SPN 168/FMI 0/14/18 (Battery Voltage) are present troubleshoot these first.
   [b] If MCM SPN 625/FMI 9 is present, troubleshoot and repair the CAN line.
   [c] If only a “J1939 Error” fault is present, go to step 2.
2. Has the CPC been recently reprogrammed?
   [a] If yes, check the proper configuration of the CPC.
   [b] If no, connect ServiceLink to determine which modules are configured for the vehicle and their communication status. Once this is done, follow the appropriate module communication troubleshooting procedures for the affected module.

All information subject to change without notice.
Copyright © 2007 DETROIT DIESEL CORPORATION

https://truckmanualshub.com/

86.3 SPN 1624/FMI 19

This fault is typically the tachograph vehicle speed signal is erratic.

86.3.1 Erattic Tachograph Vehicle Speed Signal Check

Check as follows:

1. Check for multiple codes:
   [a] If CPC SPN 168/FMI 0/14/18 (Battery Voltage) are present troubleshoot these first.
   [b] If MCM SPN 625/FMI 9 is present, troubleshoot and repair the CAN line.
   [c] If only a “J1939 Error” fault is present, go to step 2.
2. Has the CPC been recently reprogrammed?
   [a] If yes, check the proper configuration of the CPC.
   [b] If no, connect ServiceLink to determine which modules are configured for the vehicle and their communication status. Once this is done, follow the appropriate module communication troubleshooting procedures for the affected module.

All information subject to change without notice.
Copyright © 2007 DETROIT DIESEL CORPORATION

https://truckmanualshub.com/

87 SPN 1636 – INTAKE AIR TEMPERATURE OUTSIDE OF NORMAL OPERATING RANGE

Section **Page**

87.1 SPN 1636/FMI 3 87-3
87.2 SPN 1636/FMI 4 87-5
87.3 SPN 1636/FMI 20 87-6
87.4 SPN 1636/FMI 21 87-7
87.5 SPN 1636/FMI 31 87-8

https://truckmanualshub.com/

All information subject to change without notice.
Copyright © 2007 DETROIT DIESEL CORPORATION

https://truckmanualshub.com/

87.1 SPN 1636/FMI 3

This diagnostic condition is typically Intake Air Temperature Sensor open circuit or short to power.

87.1.1 Intake Air Temperature Sensor Open Circuit/Short to Power Check

Check as follows:

1. Turn the ignition the ON (key On, engine OFF).
2. Check for multiple codes.
   [a] If codes 1636/3, 2629/3 and 412/3 are active at the same time, go to step 3.
   [b] If only fault 412/3 is active, disconnect the Intake Air Temperature Sensor and go to step 5.
3. Disconnect the Intake Air Temperature Sensor.
4. Measure the voltage between pin 1 of the Intake Air Temperature Sensor and ground.
   [a] If the voltage is greater than 2.75 volts, repair the short to power between pin 52 of the MCM 120–pin connector and the Intake Air Temperature Sensor, the Turbo Compressor Out Sensor and the EGR Temperature Sensor.
   [b] If no voltage is present on pin 1 of the Intake Air Temperature Sensor, repair the open between pin 52 of the MCM 120–pin connector and the Intake Air Temperature Sensor, the Turbo Compressor Out Sensor and the EGR Temperature Sensor.
5. Measure the resistance across pins 1 and 2 of the sensor (see Figure 87-1).
   [a] If the resistance is greater than 4k Ω, replace the sensor.Refer to section 87.1.1.1.

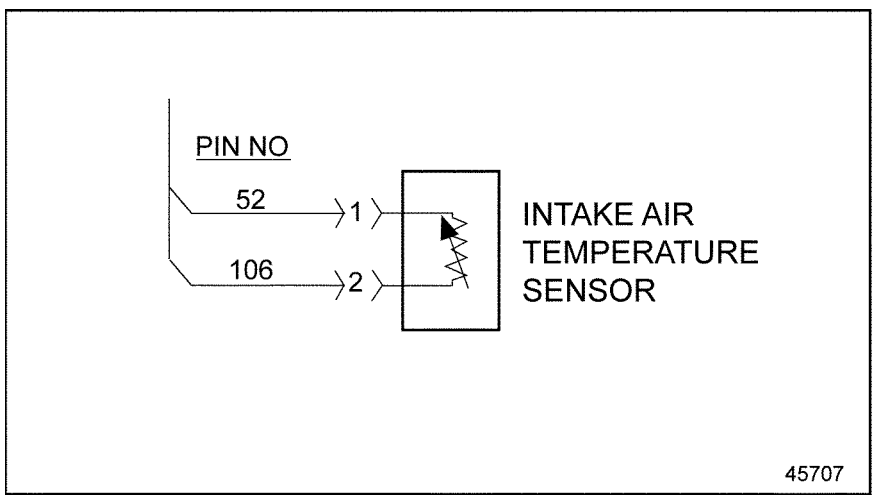

Figure 87-1 Intake Air Temperature Sensor Wiring

   [b] If the resistance is less than 4k Ω, go to step 6.
6. Turn the ignition switch to the ON position.

All information subject to change without notice.
Copyright © 2007 DETROIT DIESEL CORPORATION

https://truckmanualshub.com/

7. Measure the voltage between pins 1 and 2 of the IAT Senor harness connector.
   [a] If the voltage is between 2.75 and 3.25 volts, refer to section 87.1.1.1.
   [b] If the voltage is less than 2.75 volts, go to step 8.
8. Measure the voltage between pin 2 of the IAT Senor harness connector and ground.
   [a] If the voltage is between 2.75 and 3.25 volts, repair the open circuit between pin 1 of the IAT Senor harness connector and pin 52 of the MCM 120–pin connector. Refer to section 87.1.1.1.
   [b] If the voltage is less than 2.75 volts, repair the open circuit between pin 2 of the IAT Senor harness connector and pin 106 of the MCM 120–pin connector. Refer to section 87.1.1.1.

87.1.1.1 Verify Repairs

Verify repairs as follows:

1. Turn ignition OFF.
2. Reconnect any electrical connections that were disconnected to perform the diagnosis.
3. Clear codes with DDDL 7.0 or latest version.
4. Start and bring engine up to operating temperature (over 140°F/60°C).
5. Verify operation is satisfactory and no warning lamps illuminate. If warning lamps illuminate, troubleshoot the codes. If assistance is required, call the Detroit Diesel Customer Support Center at 313–592–5800.

All information subject to change without notice.
Copyright © 2007 DETROIT DIESEL CORPORATION

https://truckmanualshub.com/

87.2 SPN 1636/FMI 4

A typical diagnosis is IAT Sensor Short to Ground.

87.2.1 Intake Air Temperature Sensor Short to Ground Check

Perform the following steps to troubleshoot an IAT Sensor short to ground fault:

1. Disconnect the IAT Sensor.
2. Disconnect the 120–pin MCM connector.
3. Measure the resistance across pins 1 and 2 of the IAT Sensor connector.
   [a] If the resistance is less than 5k Ω, repair the short between wires 52 and 106 of the 120–pin MCM Connector. Refer to section 87.2.1.1.
   [b] If the resistance is greater than 5k Ω, go to step 4.
4. Measure the resistance between pin 2 of the sensor harness connector and ground.
   [a] If the resistance is less than 5 Ω, repair the short circuit between pin 2 of the sensor harness connector and ground. Refer to section 87.2.1.1.
   [b] If the resistance is greater than 5 Ω, refer to section 87.2.1.1.

87.2.1.1 Verify Repairs

Verify repairs as follows:

1. Turn ignition OFF.
2. Reconnect any electrical connections that were disconnected to perform the diagnosis.
3. Clear codes with DDDL 7.0 or latest version.
4. Start and bring engine up to operating temperature (over 140°F/60°C).
5. Verify operation is satisfactory and no warning lamps illuminate. If warning lamps illuminate, troubleshoot the codes. If assistance is required, call the Detroit Diesel Customer Support Center at 313–592–5800.

All information subject to change without notice.
Copyright © 2007 DETROIT DIESEL CORPORATION

https://truckmanualshub.com/

87.3 SPN 1636/FMI 20

This diagnosis is typically intake manifold temperature drift (low box).

87.3.1 Intake Manifold Sensor Check

Check as follows:

1. Disconnect the Intake Manifold Temperature Sensor.
2. Inspect the Intake Manifold Temperature Sensor connector for bent, spread or corroded pins.
   [a] If connector damage is found, repair as necessary. Refer to section 87.3.1.1.
   [b] If no connector damage is found, replace the Intake Manifold Temperature Sensor. Refer to section 87.3.1.1.

87.3.1.1 Verify Repairs

Verify repairs as follows:

1. Turn ignition OFF.
2. Reconnect any electrical connections that were disconnected to perform the diagnosis.
3. Clear codes with DDDL 7.0 or latest version.
4. Start and bring engine up to operating temperature (over 140°F/60°C).
5. Verify operation is satisfactory and no warning lamps illuminate. If warning lamps illuminate, troubleshoot the codes. If assistance is required, call the Detroit Diesel Customer Support Center at 313–592–5800.

All information subject to change without notice.
Copyright © 2007 DETROIT DIESEL CORPORATION

https://truckmanualshub.com/

87.4 SPN 1636/FMI 21

This diagnosis is typically intake manifold temperature drift (high box).

87.4.1 Intake Manifold Sensor Check

Check as follows:

1. Disconnect the Intake Manifold Temperature Sensor.
2. Inspect the Intake Manifold Temperature Sensor connector for bent, spread or corroded pins.
   [a] If connector damage is found, repair as necessary. Refer to section 87.4.1.1.
   [b] If no connector damage is found, replace the Intake Manifold Temperature Sensor. Refer to section 87.4.1.1.

87.4.1.1 Verify Repairs

Verify repairs as follows:

1. Turn ignition OFF.
2. Reconnect any electrical connections that were disconnected to perform the diagnosis.
3. Clear codes with DDDL 7.0 or latest version.
4. Start and bring engine up to operating temperature (over 140°F/60°C).
5. Verify operation is satisfactory and no warning lamps illuminate. If warning lamps illuminate, troubleshoot the codes. If assistance is required, call the Detroit Diesel Customer Support Center at 313–592–5800.

All information subject to change without notice.
Copyright © 2007 DETROIT DIESEL CORPORATION

https://truckmanualshub.com/

87.5 SPN 1636/FMI 31

This diagnosis is typically the difference between intake manifold temperature dand EGR temperature is less than threshold (low box).

87.5.1 Temperature Difference Check

Check as follows:

1. Inspect the entire air intake system including the CAC for leaks, cracks or plugging.
   [a] If damage is found, repair as necessary. Refer to section 87.5.1.1.
   [b] If no damage is found, go to step 2.
2. Disconnect the Intake Manifold Temperature Sensor.
3. Inspect the Intake Manifold Temperature Sensor connectors for bent, spread or corroded pins.
   [a] If pin damage is found, repair as necessary. Refer to section 87.5.1.1.
   [b] If no pin damage is found, replace the Intake Manifold Temperature Sensor. Refer to section 87.5.1.1.

87.5.1.1 Verify Repairs

Verify repairs as follows:

1. Turn ignition OFF.
2. Reconnect any electrical connections that were disconnected to perform the diagnosis.
3. Clear codes with DDDL 7.0 or latest version.
4. Start and bring engine up to operating temperature (over 140°F/60°C).
5. Verify operation is satisfactory and no warning lamps illuminate. If warning lamps illuminate, troubleshoot the codes. If assistance is required, call the Detroit Diesel Customer Support Center at 313–592–5800.

All information subject to change without notice.
Copyright © 2007 DETROIT DIESEL CORPORATION

https://truckmanualshub.com/

88 SPN 1716 (CPC) - J1939 ERC1 MESSAGE IS MISSING

Section **Page**

88.1 SPN 1716/FMI 9 88-3

https://truckmanualshub.com/

All information subject to change without notice.
Copyright © 2007 DETROIT DIESEL CORPORATION

https://truckmanualshub.com/

88.1 SPN 1716/FMI 9

This fault is typically the J1939 ERC1 message is missing.

88.1.1 Missing ERC1 Message Check

Check as follows:

1. Check for multiple codes:
   [a] If CPC SPN 168/FMI 0/14/18 (Battery Voltage) are present troubleshoot these first.
   [b] If MCM SPN 625/FMI 9 is present, troubleshoot and repair the CAN line.
   [c] If only a “J1939 Error” fault is present, go to step 2.
2. Has the CPC been recently reprogrammed?
   [a] If yes, check the proper configuration of the CPC.
   [b] If no, connect ServiceLink to determine which modules are configured for the vehicle and their communication status. Once this is done, follow the appropriate module communication troubleshooting procedures for the affected module.

All information subject to change without notice.
Copyright © 2007 DETROIT DIESEL CORPORATION

https://truckmanualshub.com/

All information subject to change without notice.
Copyright © 2007 DETROIT DIESEL CORPORATION

https://truckmanualshub.com/

89 SPN 1845 (CPC) - J1939 TCFG2 MESSAGE IS MISSING

Section **Page**

89.1 SPN 1845/FMI 9 89-3

https://truckmanualshub.com/

All information subject to change without notice.
Copyright © 2007 DETROIT DIESEL CORPORATION

https://truckmanualshub.com/

89.1 SPN 1845/FMI 9

This fault is typically the J1939 TCFG2 message is missing.

89.1.1 Missing TCFG2 Message Check

Check as follows:

1. Check for multiple codes:
   [a] If CPC SPN 168/FMI 0/14/18 (Battery Voltage) are present troubleshoot these first.
   [b] If MCM SPN 625/FMI 9 is present, troubleshoot and repair the CAN line.
   [c] If only a “J1939 Error” fault is present, go to step 2.
2. Has the CPC been recently reprogrammed?
   [a] If yes, check the proper configuration of the CPC.
   [b] If no, connect ServiceLink to determine which modules are configured for the vehicle and their communication status. Once this is done, follow the appropriate module communication troubleshooting procedures for the affected module.

All information subject to change without notice.
Copyright © 2007 DETROIT DIESEL CORPORATION

https://truckmanualshub.com/

All information subject to change without notice.
Copyright © 2007 DETROIT DIESEL CORPORATION

https://truckmanualshub.com/

90 SPN 2623 (CPC) - PWM ACCELERATOR PEDAL GAS1 AND GAS2 SIGNAL MISSING

Section **Page**

90.1 SPN 2623/FMI 4 90-3
90.2 SPN 2623/FMI 14 90-3

https://truckmanualshub.com/

All information subject to change without notice.
Copyright © 2007 DETROIT DIESEL CORPORATION

https://truckmanualshub.com/

90.1 SPN 2623/FMI 4

This fault is typically the PWM Accelerator Pedal J1939 GAS2 signal is missing.

90.1.1 Missing PWM Accelerator Pedal GAS2 Signal Check

Check as follows:

1. Check for multiple codes:
   [a] If CPC SPN 168/FMI 0/14/18 (Battery Voltage) are present troubleshoot these first.
   [b] If MCM SPN 625/FMI 9 is present, troubleshoot and repair the CAN line.
   [c] If only a “J1939 Error” fault is present, go to step 2.
2. Has the CPC been recently reprogrammed?
   [a] If yes, check the proper configuration of the CPC.
   [b] If no, connect ServiceLink to determine which modules are configured for the vehicle and their communication status. Once this is done, follow the appropriate module communication troubleshooting procedures for the affected module.

90.2 SPN 2623/FMI 14

This fault is typically the PWM Accelerator Pedal J1939 GAS1 and GAS2 signals are missing..

90.2.1 Missing PWM Accelerator Pedal GAS1 and GAS2 Signal Check

Check as follows:

1. Check for multiple codes:
   [a] If CPC SPN 168/FMI 0/14/18 (Battery Voltage) are present troubleshoot these first.
   [b] If MCM SPN 625/FMI 9 is present, troubleshoot and repair the CAN line.
   [c] If only a “J1939 Error” fault is present, go to step 2.
2. Has the CPC been recently reprogrammed?
   [a] If yes, check the proper configuration of the CPC.
   [b] If no, connect ServiceLink to determine which modules are configured for the vehicle and their communication status. Once this is done, follow the appropriate module communication troubleshooting procedures for the affected module.

All information subject to change without notice.
Copyright © 2007 DETROIT DIESEL CORPORATION

https://truckmanualshub.com/

All information subject to change without notice.
Copyright © 2007 DETROIT DIESEL CORPORATION

https://truckmanualshub.com/

91 SPN 2629 - TURBO COMPRESSOR OUT TEMP HIGH OR LOW

Section **Page**

91.1 SPN 2629/FMI 3 91-3
91.2 SPN 2629/FMI 4 91-6
91.3 SPN 2629/FMI 20 91-7
91.4 SPN 2629/FMI 21 91-8

https://truckmanualshub.com/

All information subject to change without notice.
Copyright © 2007 DETROIT DIESEL CORPORATION

https://truckmanualshub.com/

91.1 SPN 2629/FMI 3

This condition is typically open circuit or short to power.

91.1.1 Open Circuit/Short to Power Check

Check as follows:

1. Turn the ignition ON (key ON, engine OFF).
2. Check for multiple codes.
   [a] If codes 1636/3, 2629/3 and 412/3 are active at the same time, go to step 3.
   [b] If only fault 2629/3 is active, go to step 5.
3. Disconnect the Intake Air Temperature Sensor.
4. Measure the voltage between pin 1 of the Intake Air Temperature Sensor and ground.
   [a] If the voltage is greater than 2.75 volts, repair the short to power between pin 52 of the MCM 120–pin connector and the Intake Air Temperature Sensor, the Turbo Compressor Out Temperature Sensor (TCO Sensor) and the EGR Temperature Sensor. Refer to section 91.1.1.1.
   [b] If no voltage is present on pin 1 of the Intake Air Temperature Sensor, repair the open circuit between pin 52 of the MCM 120–pin connector and the Intake Air Temperature Sensor, the Turbo Compressor Out Temperature Sensor and the EGR Temperature Sensor. Refer to section 91.1.1.1.
5. Disconnect the TCO Sensor.
6. Measure the resistance across pins 1 and 2 of the TCO Sensor.
   [a] If the resistance is not within the range listed in Table 91-1, replace the TCO Sensor. Refer to section 91.1.1.1

All information subject to change without notice.
Copyright © 2007 DETROIT DIESEL CORPORATION

https://truckmanualshub.com/

[b] If the resistance is within the range listed in Table 91-1, go to step 7.

Temperature (°F)	Temperature (°C)	Maximum Resistance (KΩ)	Minimum Resistance (KΩ)
32	0	1053.00	634.00
50	10	601.75	367.98
68	20	357.27	224.97
86	30	219.54	142.08
104	40	139.17	92.40
122	50	90.75	61.72
140	60	60.72	42.23
158	70	41.58	29.55
176	80	29.10	21.09
194	90	20.77	15.34

Table 91-1 Turbo Compressor Outlet Temperature Sensor Resistance

7. Turn the ignition ON (key ON, engine OFF).
8. Measure the voltage between pins 1 and 2 of the TCO Sensor harness connector.
   [a] If the voltage is between 2.75 and 3.25 volts, refer to section 91.1.1.1.
   [b] If the voltage is less than 2.75 volts, go to step 9.
9. Measure the voltage between pin 2 of the TCO Sensor harness connector and ground.
   [a] If the voltage is between 2.75 and 3.25 volts, repair the open circuit between pin 1 of the TCO Sensor harness connector and pin 52 of the 120–pin MCM connector. See Figure 91-1. Refer to section 91.1.1.1.

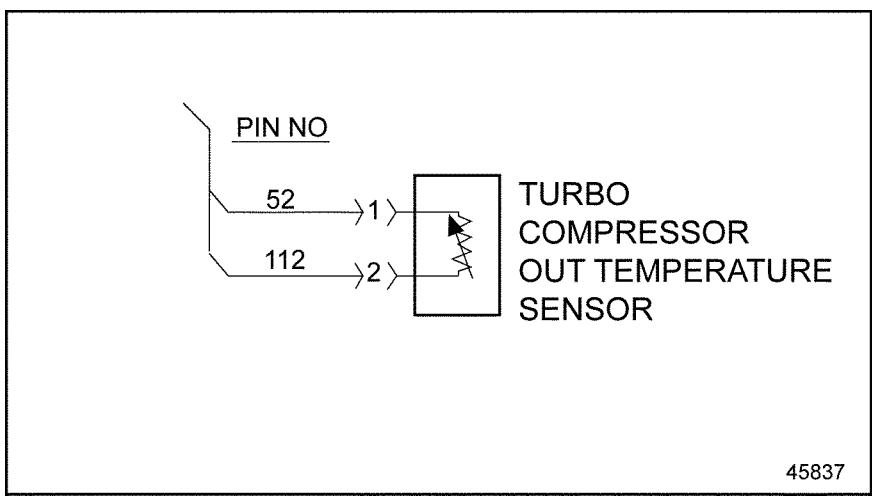

Figure 91-1 Turbo Compressor Outlet Temperature Sensor

All information subject to change without notice.
Copyright © 2007 DETROIT DIESEL CORPORATION

https://truckmanualshub.com/

[b] If the voltage is less than 2.75 volts, repair the open circuit between pin 2 of the TCO Sensor harness connector and pin 112 of the 120–pin MCM connector. Refer to section 91.1.1.1.

91.1.1.1 Verify Repairs

Verify repairs as follows:

1. Turn ignition OFF.
2. Reconnect any electrical connections that were disconnected to perform the diagnosis.
3. Clear codes with DDDL 7.0 or latest version.
4. Start and bring engine up to operating temperature (over 140°F/60°C).
5. Verify operation is satisfactory and no warning lamps illuminate. If warning lamps illuminate, troubleshoot the codes. If assistance is required, call the Detroit Diesel Customer Support Center at 313–592–5800.

All information subject to change without notice.
Copyright © 2007 DETROIT DIESEL CORPORATION

https://truckmanualshub.com/

91.2 SPN 2629/FMI 4

This condition is typically a short circuit.

91.2.1 Short Circuit Check

Check as follows:

1. Disconnect the TCO Sensor.
2. Disconnect the 120–pin MCM connector.
3. Measure the resistance
   [a] If the resistance is less than 5k Ω, repair the short between the 120–pin MCM connector wire 52 and 112. See Figure 91-2. Refer to section 91.2.1.1.

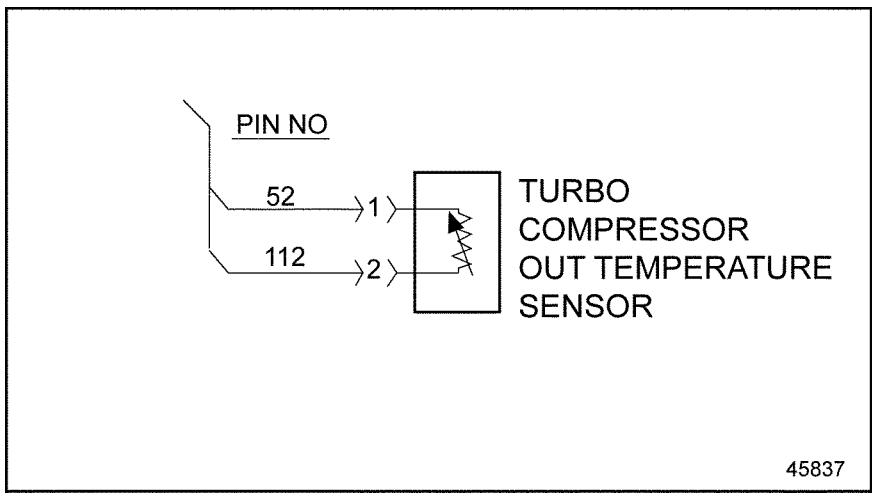

Figure 91-2 Turbo Compressor Outlet Temperature Sensor

   [b] If the resistance is greater than 5k Ω, go to step 4.
4. Measure the resistance between pin 2 of the TCO Sensor connector and ground.
   [a] If the resistance is less than 5k Ω, repair the short circuit between pin 2 of the TCO Sensor connector and ground. Refer to section 91.2.1.1.
   [b] If the resistance is greater than 5k Ω, contact the Detroit Diesel Customer Support Center (313–592–5800) for authorization to replace the MCM.

91.2.1.1 Verify Repairs

Verify repairs as follows:

1. Turn ignition OFF.
2. Reconnect any electrical connections that were disconnected to perform the diagnosis.
3. Clear codes with DDDL 7.0 or latest version.

All information subject to change without notice.
Copyright © 2007 DETROIT DIESEL CORPORATION

https://truckmanualshub.com/

4. Start and bring engine up to operating temperature (over 140°F/60°C).
5. Verify operation is satisfactory and no warning lamps illuminate. If warning lamps illuminate, troubleshoot the codes. If assistance is required, call the Detroit Diesel Customer Support Center at 313–592–5800.

91.3 SPN 2629/FMI 20

This condition is typically temperature too high from the turbo outlet.

91.3.1 Turbocharger Check

Check as follows:

1. Inspect the turbocharger outlet plumbing and charge air cleaner for blockage, leaks or cracks. Repair as necessary
2. Turn the ignition ON (key ON, engine OFF).
3. Perform the turbo hysterisis test.
   [a] If the test fails, replace the turbo actuator. Refer to section 91.3.1.1.
   [b] If the test is a pass, go to step 4.
4. Disconnect the Turbo Compressor Out Temperature Sensor.
   [a] Inspect the connectors for damage, corrosion, spread or bent pins. Repair as necessary. Refer to section 91.3.1.1.
   [b] If the connectors are OK, replace the Turbo Out Temperature Sensor. Refer to section 91.3.1.1.

91.3.1.1 Verify Repairs

Verify repairs as follows:

1. Turn ignition OFF.
2. Reconnect any electrical connections that were disconnected to perform the diagnosis.
3. Clear codes with DDDL 7.0 or latest version.
4. Start and bring engine up to operating temperature (over 140°F/60°C).
5. Verify operation is satisfactory and no warning lamps illuminate. If warning lamps illuminate, troubleshoot the codes. If assistance is required, call the Detroit Diesel Customer Support Center at 313–592–5800.

All information subject to change without notice.
Copyright © 2007 DETROIT DIESEL CORPORATION

https://truckmanualshub.com/

91.4 SPN 2629/FMI 21

This condition is typically temperature too low from the turbo outlet.

91.4.1 Turbocharger Check

Check as follows:

1. Disconnect the TCO Sensor.
2. Measure the resistance across pins 1 and 2 of the TCO Sensor.
   [a] If the resistance is greater than 500k Ω, replace the TCO Sensor. Refer to section 91.4.1.1.
   [b] If the resistance is less than 300k Ω, go to step 3.
3. Turn the ignition ON (key On, engine OFF).
4. Measure the voltage between pins 1 and 2 of the TCO Sensor harness connector.
   [a] If the voltage is between 2.75 and 3.25 volts, go to step 6.
   [b] If the voltage is less than 2.75 volts, go to step 5.
5. Measure the voltage between pin 2 of the TCO Sensor harness connector and ground.
   [a] If the voltage is between 2.75 and 3.25 volts, repair the open circuit between pin 1 of the TCO Sensor harness connector and pin 52 of the 120–pin MCM connector. Refer to section 91.4.1.1.
   [b] If the voltage is less than 2.75 volts, repair the open circuit between pin 2 of the TCO Sensor harness connector and pin 112 of the 120–pin MCM connector. Refer to section 91.4.1.1.
6. Inspect the intake air and turbocharger outlet plumbing for leaks or cracks.
   [a] Repair if necessary. Refer to section 91.4.1.1.
   [b] If no repairs are necessary, go to the next step.
7. Perform the turbo hysterisis test
   [a] If the test fails, replace the turbo actuator. Refer to section 91.4.1.1.
   [b] If the test is a pass, go to step 8.
8. Disconnect the Turbo Out Temperature Sensor.
   [a] Inspect the connectors for damage, corrosion, spread or bent pins. Repair if necessary. Refer to section 91.4.1.1.
   [b] If the connectors are OK, replace the Turbo Out Temperature Sensor. Refer to section 91.4.1.1.

All information subject to change without notice.
Copyright © 2007 DETROIT DIESEL CORPORATION

https://truckmanualshub.com/

91.4.1.1 Verify Repairs

Verify repairs as follows:

1. Turn ignition OFF.
2. Reconnect any electrical connections that were disconnected to perform the diagnosis.
3. Clear codes with DDDL 7.0 or latest version.
4. Start and bring engine up to operating temperature (over 140°F/60°C).
5. Verify operation is satisfactory and no warning lamps illuminate. If warning lamps illuminate, troubleshoot the codes. If assistance is required, call the Detroit Diesel Customer Support Center at 313–592–5800.

All information subject to change without notice.
Copyright © 2007 DETROIT DIESEL CORPORATION

https://truckmanualshub.com/

All information subject to change without notice.
Copyright © 2007 DETROIT DIESEL CORPORATION

https://truckmanualshub.com/

92 SPN 2659 - EGR FLOW NOT NORMAL

Section **Page**

92.1 SPN 2659/FMI 0 92-3
92.2 SPN 2659/FMI 1 92-4

https://truckmanualshub.com/

All information subject to change without notice.
Copyright © 2007 DETROIT DIESEL CORPORATION

https://truckmanualshub.com/

92.1 SPN 2659/FMI 0

The code is typically an EGR flow target error (high flow).

92.1.1 EGR High Flow Check

Check as follows:

1. Inspect the Delta P pressure tubes for damage or plugging.
   [a] If damage or plugging is found, repair as necessary. Refer to section 92.1.1.1.
   [b] If no damage is found, go to step 2.
2. Inspect the EGR valve for physical damage (broken butterfly).
   [a] If the EGR valve is damaged, replace the EGR valve. Refer to section 92.1.1.1.
   [b] If no damage is found, replace the EGR Delta P Sensor. Refer to section 92.1.1.1.

92.1.1.1 Verify Repairs

Verify repairs as follows:

1. Turn ignition OFF.
2. Reconnect any electrical connections that were disconnected to perform the diagnosis.
3. Clear codes with DDDL 7.0 or latest version.
4. Start and bring engine up to operating temperature (over 140°F/60°C).
5. Verify operation is satisfactory and no warning lamps illuminate. If warning lamps illuminate, troubleshoot the codes. If assistance is required, call the Detroit Diesel Customer Support Center at 313–592–5800.

All information subject to change without notice.
Copyright © 2007 DETROIT DIESEL CORPORATION

https://truckmanualshub.com/

92.2 SPN 2659/FMI 1

The code is typically an EGR flow target error (low flow).

92.2.1 EGR Low Flow Check

Check as follows:

1. Inspect the EGR delivery pipe for external leaks.
   [a] If leaks are found, repair as necessary. Refer to section 92.2.1.1.
   [b] If no leaks are found, go to step 2.
2. Inspect the Delta P pressure tubes for damage or plugging.
   [a] If damage or plugging is found, repair as necessary. Refer to section 92.2.1.1.
   [b] If no damage is found, go to step 3.
3. Remove the EGR Delta P Sensor and inspect the O-rings for damage.
   [a] If the O-rings are damaged, repair as necessary. Refer to section 92.2.1.1.
   [b] If no damage is found, go to step 4.
4. Inspect the EGR valve for physical damage (broken butterfly).
   [a] If the EGR valve is damaged, replace the EGR valve. Refer to section 92.2.1.1.
   [b] If no damage is found, replace the EGR Delta P Sensor. Refer to section 92.2.1.1.

92.2.1.1 Verify Repairs

Verify repairs as follows:

1. Turn ignition OFF.
2. Reconnect any electrical connections that were disconnected to perform the diagnosis.
3. Clear codes with DDDL 7.0 or latest version.
4. Start and bring engine up to operating temperature (over 140°F/60°C).
5. Verify operation is satisfactory and no warning lamps illuminate. If warning lamps illuminate, troubleshoot the codes. If assistance is required, call the Detroit Diesel Customer Support Center at 313–592–5800.

All information subject to change without notice.
Copyright © 2007 DETROIT DIESEL CORPORATION

https://truckmanualshub.com/

93 SPN 2791 – EGR VALVE (AUX PWM #1) FAILED OR OPEN CIRCUIT

Section **Page**

93.1 SPN 2791/FMI 3 93-3
93.2 SPN 2791/FMI 4 93-4
93.3 SPN 2791/FMI 5 93-4
93.4 SPN 2791/FMI 7 93-6

https://truckmanualshub.com/

All information subject to change without notice.
Copyright © 2007 DETROIT DIESEL CORPORATION

https://truckmanualshub.com/

93.1 SPN 2791/FMI 3

This diagnostic condition is typically a short to power fault.

93.1.1 Short Circuit Check

Check as follows:

1. Disconnect the EGR valve connector.
2. Turn the ignition ON (key On, engine OFF).
3. Measure the voltage between pin 1 of the EGR valve connector and ground.
   [a] If the voltage is greater than 11.5 volts, repair the short to power between pin 1 of the EGR valve connector and pin 61 of the 120–pin MCM connector. Refer to section 93.1.1.1.
   [b] If the voltage is less than 11.5 volts, replace the EGR valve.

93.1.1.1 Verify Repairs

Verify repairs as follows:

1. Turn ignition OFF.
2. Reconnect any electrical connections that were disconnected to perform the diagnosis.
3. Clear codes with DDDL 7.0 or latest version.
4. Start and bring engine up to operating temperature (over 140°F/60°C).
5. Verify operation is satisfactory and no warning lamps illuminate. If warning lamps illuminate, troubleshoot the codes. If assistance is required, call the Detroit Diesel Customer Support Center at 313–592–5800.

All information subject to change without notice.
Copyright © 2007 DETROIT DIESEL CORPORATION

https://truckmanualshub.com/

93.2 SPN 2791/FMI 4

This diagnosis is typically short to ground.

93.2.1 Check for Short

Check as follows:

1. Disconnect EGR valve connector.
2. Disconnect 120–pin MCM connector.
3. Measure the resistance between pin 1 of the EGR valve connector and ground.
   [a] If the resistance is less than 5 Ω, repair the short circuit between pin 1 of the EGR valve connector and ground. Refer to section 93.2.1.1.
   [b] If the resistance is greater than 5 Ω, replace the EGR valve.

93.2.1.1 Verify Repairs

Verify repairs as follows:

1. Turn ignition OFF.
2. Reconnect any electrical connections that were disconnected to perform the diagnosis.
3. Clear codes with DDDL 7.0 or latest version.
4. Start and bring engine up to operating temperature (over 140°F/60°C).
5. Verify operation is satisfactory and no warning lamps illuminate. If warning lamps illuminate, troubleshoot the codes. If assistance is required, call the Detroit Diesel Customer Support Center at 313–592–5800.

93.3 SPN 2791/FMI 5

This diagnostic condition is typically an open circuit fault.

93.3.1 Open Circuit Check

Check as follows:

1. Check for multiple codes.
   [a] If 2791/5, 27/4, and 1073/4 are present, repair the open between pin 62 of the 120–pin MCM connector and EGR valve and front Jake Brake solenoid. Refer to section 93.3.1.1.
   [b] If only 2791/5 is present, go to step 2.
2. Disconnect the EGR valve.
3. Disconnect the 120–pin MCM connector.

All information subject to change without notice.
Copyright © 2007 DETROIT DIESEL CORPORATION

https://truckmanualshub.com/

4. Measure the resistance between pin 1 of the EGR valve harness connector and pin 61 of the 120–pin MCM connector.
   [a] If the resistance is greater than 3 Ω, repair the open between pin 1 of the EGR valve harness connector and pin 61 of the 120–pin MCM connector. Refer to section 93.3.1.1.
   [b] If the resistance is less than 3 Ω, replace the EGR valve. Refer to section 93.3.1.1.

93.3.1.1 Verify Repairs

Verify repairs as follows:

1. Turn ignition OFF.
2. Reconnect any electrical connections that were disconnected to perform the diagnosis.
3. Clear codes with DDDL 7.0 or latest version.
4. Start and bring engine up to operating temperature (over 140°F/60°C).
5. Verify operation is satisfactory and no warning lamps illuminate. If warning lamps illuminate, troubleshoot the codes. If assistance is required, call the Detroit Diesel Customer Support Center at 313–592–5800.

All information subject to change without notice.
Copyright © 2007 DETROIT DIESEL CORPORATION

https://truckmanualshub.com/

93.4 SPN 2791/FMI 7

This diagnosis is typically the EGR valve is in an incorrect position.

93.4.1 EGR Valve Position Check

Check as follows:

1. Turn the ignition ON (key ON, engine OFF).
2. Using DDDL 7.0, monitor the EGR actual position while activating active PWM1 to 50% for 15 seconds.
3. Is the EGR actual position reading between 42% and 58%?
   [a] If yes, go to step 6.
   [b] If no, go to step 4.
4. Remove the EGR valve.
5. Inspect the EGR valve butterfly for signs of excessive soot or white residue.
   [a] If white residue is found, repair the cause/source of coolant contamination and possible EGR cooler failure. Also replace the EGR valve. Refer to section 93.4.1.1.
   [b] If excessive soot residue is found, correct the cause of soot contamination and any possible CAC system leaks. Repair the source of soot contamination and replace the EGR valve. Refer to section 93.4.1.1.
   [c] If no contamination is found, replace the EGR valve. Refer to section 93.4.1.1.
6. Disconnect the EGR valve connector.
7. Inspect the connector for bent, spread or corroded pins.
   [a] If connector damage is found, repair as necessary. Refer to section 93.4.1.1.
   [b] If no damage is found, contact the Detroit Diesel Customer Support Center at 313–592–5800 for further assistance.

93.4.1.1 Verify Repairs

Verify repairs as follows:

1. Turn ignition OFF.
2. Reconnect any electrical connections that were disconnected to perform the diagnosis.
3. Clear codes with DDDL 7.0 or latest version.
4. Start and bring engine up to operating temperature (over 140°F/60°C).
5. Verify operation is satisfactory and no warning lamps illuminate. If warning lamps illuminate, troubleshoot the codes. If assistance is required, call the Detroit Diesel Customer Support Center at 313–592–5800.

All information subject to change without notice.
Copyright © 2007 DETROIT DIESEL CORPORATION

https://truckmanualshub.com/

94 SPN 2795 - CAN COMMUNICATION ERROR

Section **Page**

94.1 SPN 2795/FMI 9 94-3

https://truckmanualshub.com/

All information subject to change without notice.
Copyright © 2007 DETROIT DIESEL CORPORATION

https://truckmanualshub.com/

94.1 SPN 2795/FMI 9

This diagnosis is typically a CAN3 communication error.

94.1.1 CAN3 Check

Check as follows:

1. Check for multiple codes.
   [a] If codes other than SPN 2795/FMI 9 are present, repair those first.
   [b] If only SPN 2795/FMI 9 is present, go to step 2.
2. Disconnect the turbo actuator connector.
3. Turn the ignition ON (key ON, engine OFF).
4. Measure the voltage between pin 1 of the turbo actuator connector and ground.
   [a] If the voltage is less than 11 volts, repair the cause of low or no voltage between pin 1 of the turbo actuator connector and pin 93 of the MCM 120–pin connector. Refer to section 94.1.1.1.
   [b] If the voltage is greater than 11 volts, go to step 5.
5. Turn the ignition OFF.
6. Disconnect the MCM 120–pin connector.
7. Measure the resistance between pin 4 of the turbo actuator connector and ground.
   [a] If the resistance is less than 5 Ω, repair the short to ground between pin 4 of the turbo actuator connector and pin 75 of the MCM 120–pin connector. Refer to section 94.1.1.1.
   [b] If the resistance is greater than 5 Ω, go to step 8.
8. Measure the resistance between pin 2 of the turbo actuator connector and pin 38 of the MCM 120–pin connector.
   [a] If the resistance is greater than 5 Ω, repair the open between pin 2 of the turbo actuator connector and pin 38 of the MCM 120–pin connector. Refer to section 94.1.1.1.
   [b] If the resistance is less than 5 Ω, go to step 9.
9. Measure the resistance between pin 3 of the turbo actuator connector and pin 74 of the MCM 120–pin connector.
   [a] If the resistance is greater than 5 Ω, repair the open between pin 3 of the turbo actuator connector and pin 74 of the MCM 120–pin connector. Refer to section 94.1.1.1.
   [b] If the resistance is less than 5 Ω, go to step 10.
10. Measure the resistance between pin 4 of the turbo actuator connector and pin 75 of the MCM 120–pin connector.

All information subject to change without notice.
Copyright © 2007 DETROIT DIESEL CORPORATION

https://truckmanualshub.com/

[a] If the resistance is greater than 5 Ω, repair the open between pin 4 of the turbo actuator connector and pin 75 of the MCM 120–pin connector. Refer to section 94.1.1.1.

[b] If the resistance is less than 5 Ω, replace the turbo actuator. Refer to section 94.1.1.1.

94.1.1.1 Verify Repairs

Verify repairs as follows:

1. Turn ignition OFF.
2. Reconnect any electrical connections that were disconnected to perform the diagnosis.
3. Clear codes with DDDL 7.0 or latest version.
4. Start and bring engine up to operating temperature (over 140°F/60°C).
5. Verify operation is satisfactory and no warning lamps illuminate. If warning lamps illuminate, troubleshoot the codes. If assistance is required, call the Detroit Diesel Customer Support Center at 313–592–5800.

All information subject to change without notice.
Copyright © 2007 DETROIT DIESEL CORPORATION

https://truckmanualshub.com/

95 SPN 2797 - INJECTOR #1, 2, OR 3 NEEDLE OR SPILL CONTROL VALVE NOT OPERATING NORMALLY

Section **Page**

95.1 SPN 2797/FMI 3 95-3
95.2 SPN 2797/FMI 4 95-4
95.3 SPN 2797/FMI 5 95-6
95.4 SPN 2797/FMI 6 95-7

https://truckmanualshub.com/

All information subject to change without notice.
Copyright © 2007 DETROIT DIESEL CORPORATION

https://truckmanualshub.com/

95.1 SPN 2797/FMI 3

This diagnosis is typically injector #1, 2, or 3 needle control valve circuit has a short to battery/power.

95.1.1 Short to Battery/Power Check

Check as follows:

1. Disconnect the Front Injector Harness 12–pin connector.
2. Turn the ignition ON (key ON, engine OFF).
3. Measure the voltage between pin 1 on the MCM side of the Front Injector Harness 12–pin connector and ground.
   [a] If there is voltage present, repair the short to power between pin 1 of the Front Injector Harness 12–pin connector and pin 26 of the 120–pin MCM connector. Refer to section 95.1.1.1.
   [b] If there is no voltage present, go to step 4.
4. Measure the voltage between pin 2 on the MCM side of the Front Injector Harness 12–pin connector and ground.
   [a] If there is voltage present, repair the short to power between pin 3 of the Front Injector Harness connector and pin 22 of the 120–pin MCM connector. Refer to section 95.1.1.1.
   [b] If there is no voltage present, repair the short to power between pin 5 of the Front Injector Harness connector and pin 24 of the 120–pin MCM connector. Refer to section 95.1.1.1.

95.1.1.1 Verify Repairs

Verify repairs as follows:

1. Turn ignition OFF.
2. Reconnect any electrical connections that were disconnected to perform the diagnosis.
3. Clear codes with DDDL 7.0 or latest version.
4. Start and bring engine up to operating temperature (over 140°F/60°C).
5. Verify operation is satisfactory and no warning lamps illuminate. If warning lamps illuminate, troubleshoot the codes. If assistance is required, call the Detroit Diesel Customer Support Center at 313–592–5800.

All information subject to change without notice.
Copyright © 2007 DETROIT DIESEL CORPORATION

https://truckmanualshub.com/

95.2 SPN 2797/FMI 4

This diagnosis is typically injector #1, 2, or 3 needle control valve circuit is shorted to ground.

95.2.1 Short to Ground Check

Check as follows:

1. Disconnect the Front Injector Harness 12–pin connector.
2. Inspect the Front Injector Harness 12–pin connector for bent or spread pins, inspect the connector seal for damage (signs of water or oil intrusion).
   [a] If the water or oil intrusion, bent or spread pins are found, repair as necessary.
   [b] If connector shows no signs of damage, go to step 3.
3. Measure the resistance between pin 10 on the valve cover side of the Front Injector Harness 12–pin connector and ground. If you are using J-48671–10, measure between injector #1 pin 1 and ground.
   [a] If the resistance is greater than 3 Ω, go to step 11.
   [b] If the resistance is less than 3 Ω, go to step 4.
4. Remove the valve cover.
5. Disconnect injector #1.
6. Measure the resistance between pin 10 on the valve cover side of the Front Injector Harness 12–pin connector and ground. If you are using J-48671–10, measure between injector #1 pin 1 and ground.
   [a] If the resistance is greater than 3 Ω, replace the #1 injector. Refer to section 95.2.1.1.
   [b] If the resistance is less than 3 Ω, go to step 7.
7. Disconnect injector #2.
8. Measure the resistance between pin 10 of the valve cover side on the Front Injector Harness 12–pin connector and ground. If you are using J-48671–10, measure between injector #2 pin 1 and ground.
   [a] If the resistance is greater than 3 Ω, replace the #2 injector. Refer to section 95.2.1.1.
   [b] If the resistance is less than 3 Ω, go to step 9.
9. Disconnect injector #3.
10. Measure the resistance between pin 10 on the valve cover side of the Front Injector Harness 12–pin connector and ground.
    [a] If the resistance is greater than 3 Ω, replace the #3 injector. Refer to section 95.2.1.1.
    [b] If the resistance is less than 3 Ω, replace the under valve cover Injector Harness. Refer to section 95.2.1.1.
11. Disconnect the 120–pin MCM connector.

All information subject to change without notice.
Copyright © 2007 DETROIT DIESEL CORPORATION

https://truckmanualshub.com/

12. Measure the resistance between pin 10 on the Front Injector Harness 12–pin connector and ground. If you are using J-48671–10, measure between injector #3 pin 1 and ground.
    [a] If the resistance is less than 3 Ω, repair the short to ground between pin 11 of the MCM 120–pin connector and pin 10 of the Front Injector Harness 12–pin connector. Refer to section 95.2.1.1.
    [b] If the resistance is greater than 3 Ω, call the Detroit Diesel Customer Support Center at 313–592–5800 for MCM replacement authorization.

95.2.1.1 Verify Repairs

Verify repairs as follows:

1. Turn ignition OFF.
2. Reconnect any electrical connections that were disconnected to perform the diagnosis.
3. Clear codes with DDDL 7.0 or latest version.
4. Start and bring engine up to operating temperature (over 140°F/60°C).
5. Verify operation is satisfactory and no warning lamps illuminate. If warning lamps illuminate, troubleshoot the codes. If assistance is required, call the Detroit Diesel Customer Support Center at 313–592–5800.

All information subject to change without notice.
Copyright © 2007 DETROIT DIESEL CORPORATION

https://truckmanualshub.com/

95.3 SPN 2797/FMI 5

This diagnosis is typically injector #1, 2, or 3 spill control valve circuit is shorted to battery/power.

95.3.1 Short to Battery/Power Check

Check as follows:

1. Disconnect the Front Injector Harness 12–pin connector.
2. Turn the ignition ON (key ON, engine OFF).
3. Measure the voltage between pin 2 on the MCM side of the Front Injector Harness 12–pin connector and ground.
   [a] If there is voltage present, repair the short to power between pin 2 of the Front Injector Harness 12–pin connector and pin 14 of the 120–pin MCM connector. Refer to section 95.3.1.1.
   [b] If there is no voltage present, go to step 4.
4. Measure the voltage between pin 4 on the MCM side of the Front Injector Harness 12–pin connector and ground.
   [a] If there is voltage present, repair the short to power between pin 4 of the Front Injector Harness connector and pin 10 of the 120–pin MCM connector. Refer to section 95.3.1.1.
   [b] If there is no voltage present, repair the short to power between pin 6 of the Front Injector Harness connector and pin 12 of the 120–pin MCM connector. Refer to section 95.3.1.1.

95.3.1.1 Verify Repairs

Verify repairs as follows:

1. Turn ignition OFF.
2. Reconnect any electrical connections that were disconnected to perform the diagnosis.
3. Clear codes with DDDL 7.0 or latest version.
4. Start and bring engine up to operating temperature (over 140°F/60°C).
5. Verify operation is satisfactory and no warning lamps illuminate. If warning lamps illuminate, troubleshoot the codes. If assistance is required, call the Detroit Diesel Customer Support Center at 313–592–5800.

All information subject to change without notice.
Copyright © 2007 DETROIT DIESEL CORPORATION

https://truckmanualshub.com/

95.4 SPN 2797/FMI 6

This diagnosis is typically injector #1, 2, or 3 spill control valve circuit is shorted to ground.

95.4.1 Short to Ground Check

Check as follows:

1. Disconnect the Front Injector Harness 12–pin connector.
2. Inspect the Front Injector Harness 12–pin connector for bent or spread pins, inspect the connector seal for damage (signs of water or oil intrusion).
   [a] If the water or oil intrusion, bent or spread pins are found, repair as necessary.
   [b] If connector shows no signs of damage, go to step 3.
3. Measure the resistance between pin 9 on the valve cover side of the Front Injector Harness 12–pin connector and ground. If you are using J-48671–10, measure between injector #1 pin 3 and ground.
   [a] If the resistance is greater than 3 Ω, go to step 11.
   [b] If the resistance is less than 3 Ω, go to step 4.
4. Remove the valve cover.
5. Disconnect injector #1.
6. Measure the resistance between pin 9 on the valve cover side of the Front Injector Harness 12–pin connector and ground. If you are using J-48671–10, measure between injector #1 pin 3 and ground.
   [a] If the resistance is greater than 3 Ω, replace the #1 injector. Refer to section 95.4.1.1.
   [b] If the resistance is less than 3 Ω, go to step 7.
7. Disconnect injector #2.
8. Measure the resistance between pin 9 of the valve cover side on the Front Injector Harness 12–pin connector and ground. If you are using J-48671–10, measure between injector #2 pin 3 and ground.
   [a] If the resistance is greater than 3 Ω, replace the #2 injector. Refer to section 95.4.1.1.
   [b] If the resistance is less than 3 Ω, go to step 9.
9. Disconnect injector #3.
10. Measure the resistance between pin 9 on the valve cover side of the Front Injector Harness 12–pin connector and ground.
    [a] If the resistance is greater than 3 Ω, replace the #3 injector. Refer to section 95.4.1.1.
    [b] If the resistance is less than 3 Ω, replace the under valve cover Injector Harness. Refer to section 95.4.1.1.
11. Disconnect the 120–pin MCM connector.

All information subject to change without notice.
Copyright © 2007 DETROIT DIESEL CORPORATION

https://truckmanualshub.com/

12. Measure the resistance between pin 9 on the Front Injector Harness 12–pin connector and ground. If you are using J-48671–10, measure between injector #3 pin 3 and ground.
    [a] If the resistance is less than 3 Ω, repair the short to ground between pin 11 of the MCM 120–pin connector and pin 9 of the Front Injector Harness 12–pin connector. Refer to section 95.4.1.1.
    [b] If the resistance is greater than 3 Ω, call the Detroit Diesel Customer Support Center at 313–592–5800 for MCM replacement authorization.

95.4.1.1 Verify Repairs

Verify repairs as follows:

1. Turn ignition OFF.
2. Reconnect any electrical connections that were disconnected to perform the diagnosis.
3. Clear codes with DDDL 7.0 or latest version.
4. Start and bring engine up to operating temperature (over 140°F/60°C).
5. Verify operation is satisfactory and no warning lamps illuminate. If warning lamps illuminate, troubleshoot the codes. If assistance is required, call the Detroit Diesel Customer Support Center at 313–592–5800.

All information subject to change without notice.
Copyright © 2007 DETROIT DIESEL CORPORATION

https://truckmanualshub.com/

96 SPN 2798 - INJECTOR #4, 5, OR 6 NEEDLE OR SPILL CONTROL VALVE NOT OPERATING NORMALLY

Section **Page**

96.1 SPN 2798/FMI 3 96-3
96.2 SPN 2798/FMI 4 96-4
96.3 SPN 2798/FMI 5 96-6
96.4 SPN 2798/FMI 6 96-7

https://truckmanualshub.com/

All information subject to change without notice.
Copyright © 2007 DETROIT DIESEL CORPORATION

https://truckmanualshub.com/

96.1 SPN 2798/FMI 3

This diagnosis is typically injector #4, 5, or 6 needle control valve circuit has a short to battery/power.

96.1.1 Short to Battery/Power Check

Check as follows:

1. Disconnect the Rear Injector Harness 12–pin connector.
2. Turn the ignition ON (key ON, engine OFF).
3. Measure the voltage between pin 2 on the MCM side of the Rear Injector Harness 12–pin connector and ground.
   [a] If there is voltage present, repair the short to power between pin 2 of the Rear Injector Harness 12–pin connector and pin 16 of the 120–pin MCM connector. Refer to section 96.1.1.1.
   [b] If there is no voltage present, go to step 4.
4. Measure the voltage between pin 2 on the MCM side of the Rear Injector Harness 12–pin connector and ground.
   [a] If there is voltage present, repair the short to power between pin 3 of the Rear Injector Harness connector and pin 22 of the 120–pin MCM connector. Refer to section 96.1.1.1.
   [b] If there is no voltage present, repair the short to power between pin 5 of the Rear Injector Harness connector and pin 24 of the 120–pin MCM connector. Refer to section 96.1.1.1.

96.1.1.1 Verify Repairs

Verify repairs as follows:

1. Turn ignition OFF.
2. Reconnect any electrical connections that were disconnected to perform the diagnosis.
3. Clear codes with DDDL 7.0 or latest version.
4. Start and bring engine up to operating temperature (over 140°F/60°C).
5. Verify operation is satisfactory and no warning lamps illuminate. If warning lamps illuminate, troubleshoot the codes. If assistance is required, call the Detroit Diesel Customer Support Center at 313–592–5800.

All information subject to change without notice.
Copyright © 2007 DETROIT DIESEL CORPORATION

https://truckmanualshub.com/

96.2 SPN 2798/FMI 4

This diagnosis is typically injector # 4, 5, or 6 needle control valve circuit is shorted to ground.

96.2.1 Short to Ground Check

Check as follows:

1. Disconnect the Rear Injector Harness 12–pin connector.
2. Inspect the Rear Injector Harness 12–pin connector for bent or spread pins, inspect the connector seal for damage (signs of water or oil intrusion).
   [a] If the water or oil intrusion, bent or spread pins are found, repair as necessary.
   [b] If connector shows no signs of damage, go to step 3.
3. Measure the resistance between pin 3 on the valve cover side of the Rear Injector Harness 12–pin connector and ground. If you are using J-48671–10, measure between injector #4 pin 1 and ground.
   [a] If the resistance is greater than 3 Ω, go to step 4.
   [b] If the resistance is less than 3 Ω, go to step 6.
4. Measure the resistance between pin 5 on the valve cover side of the Rear Injector Harness 12–pin connector and ground. If you are using J-48671–10, measure between injector #5 pin 1 and ground.
   [a] If the resistance is greater than 3 Ω, go to step 5.
   [b] If the resistance is less than 3 Ω, go to step 6.
5. Measure the resistance between pin 9 on the valve cover side of the Rear Injector Harness 12–pin connector and ground. If you are using J-48671–10, measure between injector #6 pin 1 and ground.
   [a] If the resistance is greater than 3 Ω, go to step 13.
   [b] If the resistance is less than 3 Ω, go to step 6.
6. Remove the upper valve cover.
7. Disconnect injector #4.
8. Measure the resistance between pin 3 on the valve cover side of the Rear Injector Harness 12–pin connector and ground. If you are using J-48671–10, measure between injector #4 pin 1 and ground.
   [a] If the resistance is greater than 3 Ω, replace the #4 injector. Refer to section 96.2.1.1.
   [b] If the resistance is less than 3 Ω, go to step 9.
9. Disconnect injector #5.
10. Measure the resistance between pin 5 on the valve cover side of the Rear Injector Harness 12–pin connector and ground. If you are using J-48671–10, measure between injector #5 pin 1 and ground.

All information subject to change without notice.
Copyright © 2007 DETROIT DIESEL CORPORATION

https://truckmanualshub.com/

[a] If the resistance is greater than 3 Ω, replace the #5 injector. Refer to section 96.2.1.1.

[b] If the resistance is less than 3 Ω, go to step 11.

11. Disconnect injector #6.
12. Measure the resistance between pin 9 on the valve cover side of the Rear Injector Harness 12–pin connector and ground. If you are using J-48671–10, measure between injector #6 pin 1 and ground.

    [a] If the resistance is greater than 3 Ω, replace the #6 injector. Refer to section 96.2.1.1.

    [b] If the resistance is less than 3 Ω, replace the under valve cover injector harness. Refer to section 96.2.1.1.

13. Disconnect the 120–pin MCM connector.
14. Measure the resistance between pin 10 on the valve cover side of the Rear Injector Harness 12–pin connector and ground.

    [a] If the resistance is less than 3 Ω, repair the short to ground between pin 11 of the MCM 120–pin connector and pin 10 of the Rear Injector Harness 12–pin connector. Refer to section 96.2.1.1.

    [b] If the resistance is greater than 3 Ω, call the Detroit Diesel Customer Support Center at 313–592–5800 for MCM replacement authorization.

96.2.1.1 Verify Repairs

Verify repairs as follows:

1. Turn ignition OFF.
2. Reconnect any electrical connections that were disconnected to perform the diagnosis.
3. Clear codes with DDDL 7.0 or latest version.
4. Start and bring engine up to operating temperature (over 140°F/60°C).
5. Verify operation is satisfactory and no warning lamps illuminate. If warning lamps illuminate, troubleshoot the codes. If assistance is required, call the Detroit Diesel Customer Support Center at 313–592–5800.

All information subject to change without notice.
Copyright © 2007 DETROIT DIESEL CORPORATION

https://truckmanualshub.com/

96.3 SPN 2798/FMI 5

This diagnosis is typically injector #4, 5, or 6 spill control valve circuit has a short to battery/power.

96.3.1 Short to Battery/Power Check

Check as follows:

1. Disconnect the Rear Injector Harness 12–pin connector.
2. Turn the ignition ON (key ON, engine OFF).
3. Measure the voltage between pin 1 on the MCM side of the Rear Injector Harness 12–pin connector and ground.
   [a] If there is voltage present, repair the short to power between pin 1 of the Rear Injector Harness 12–pin connector and pin 4 of the 120–pin MCM connector. Refer to section 96.3.1.1.
   [b] If there is no voltage present, go to step 4.
4. Measure the voltage between pin 8 on the MCM side of the Rear Injector Harness 12–pin connector and ground.
   [a] If there is voltage present, repair the short to power between pin 8 of the Rear Injector Harness connector and pin 8 of the 120–pin MCM connector. Refer to section 96.3.1.1.
   [b] If there is no voltage present, repair the short to power between pin 12 of the Rear Injector Harness connector and pin 6 of the 120–pin MCM connector. Refer to section 96.3.1.1.

96.3.1.1 Verify Repairs

Verify repairs as follows:

1. Turn ignition OFF.
2. Reconnect any electrical connections that were disconnected to perform the diagnosis.
3. Clear codes with DDDL 7.0 or latest version.
4. Start and bring engine up to operating temperature (over 140°F/60°C).
5. Verify operation is satisfactory and no warning lamps illuminate. If warning lamps illuminate, troubleshoot the codes. If assistance is required, call the Detroit Diesel Customer Support Center at 313–592–5800.

All information subject to change without notice.
Copyright © 2007 DETROIT DIESEL CORPORATION

https://truckmanualshub.com/

96.4 SPN 2798/FMI 6

This diagnosis is typically injector #4, 5, or 6 spill control valve circuit has a short to ground.

96.4.1 Short to Ground Check

Check as follows:

1. Disconnect the Rear Injector Harness 12–pin connector.
2. Inspect the Rear Injector Harness 12–pin connector for bent or spread pins, inspect the connector seal for damage (signs of water or oil intrusion).
   [a] If the water or oil intrusion, bent or spread pins are found, repair as necessary. Refer to section 96.4.1.1.
   [b] If connector shows no signs of damage, go to step 3.
3. Measure the resistance between pin 3 on the valve cover side of the Rear Injector Harness 12–pin connector and ground. If you are using J-48671–10, measure between injector #4 pin 1 and ground.
   [a] If the resistance is greater than 3 Ω, go to step 4.
   [b] If the resistance is less than 3 Ω, go to step 6.
4. Measure the resistance between pin 5 on the valve cover side of the Rear Injector Harness 12–pin connector and ground. If you are using J-48671–10, measure between injector #5 pin 1 and ground.
   [a] If the resistance is greater than 3 Ω, go to step 5.
   [b] If the resistance is less than 3 Ω, go to step 6.
5. Measure the resistance between pin 9 on the valve cover side of the Rear Injector Harness 12–pin connector and ground. If you are using J-48671–10, measure between injector #6 pin 1 and ground.
   [a] If the resistance is greater than 3 Ω, go to step 13.
   [b] If the resistance is less than 3 Ω, go to step 6.
6. Remove the upper valve cover.
7. Disconnect injector #4.
8. Measure the resistance between pin 3 on the valve cover side of the Rear Injector Harness 12–pin connector and ground. If you are using J-48671–10, measure between injector #4 pin 1 and ground.
   [a] If the resistance is greater than 3 Ω, replace injector #4. Refer to section 96.4.1.1.
   [b] If the resistance is less than 3 Ω, go to step 9.
9. Disconnect injector #5.

All information subject to change without notice.
Copyright © 2007 DETROIT DIESEL CORPORATION

https://truckmanualshub.com/

10. Measure the resistance between pin 5 on the valve cover side of the Rear Injector Harness 12–pin connector and ground. If you are using J-48671–10, measure between injector #5 pin 1 and ground.
    [a] If the resistance is greater than 3 Ω, replace injector #5. Refer to section 96.4.1.1.
    [b] If the resistance is less than 3 Ω, go to step 11.
11. Disconnect injector #6.
12. Measure the resistance between pin 9 on the valve cover side of the Rear Injector Harness 12–pin connector and ground. If you are using J-48671–10, measure between injector #6 pin 1 and ground.
    [a] If the resistance is greater than 3 Ω, replace the #6 injector. Refer to section 96.4.1.1.
    [b] If the resistance is less than 3 Ω, replace the under valve cover injector harness. Refer to section 96.4.1.1.
13. Disconnect the 120–pin MCM connector.
14. Measure the resistance between pin 4 of the Rear Injector Harness 12–pin connector and ground.
    [a] If the resistance is greater than 3 Ω, go to step 15.
    [b] If the resistance is less than 3 Ω, repair the short to ground between pin 5 of the MCM 120–pin connector and pin 4 of the Rear Injector Harness 12–pin connector. Refer to section 96.4.1.1.
15. Measure the resistance between pin 7 of the Rear Injector Harness 12–pin connector and ground.
    [a] If the resistance is greater than 3 Ω, go to step 16.
    [b] If the resistance is less than 3 Ω, repair the short to ground between pin 7 of the MCM 120–pin connector and pin 7 of the Rear Injector Harness 12–pin connector. Refer to section 96.4.1.1.
16. Measure the resistance between pin 11 of the Rear Injector Harness 12–pin connector and ground.
    [a] If the resistance is greater than 3 Ω, call the Detroit Diesel Customer Support Center at 313–592–5800 for MCM replacement authorization.
    [b] If the resistance is less than 3 Ω, repair the short to ground between pin 9 of the MCM 120–pin connector and pin 11 of the Rear Injector Harness 12–pin connector.

96.4.1.1 Verify Repairs

Verify repairs as follows:

1. Turn ignition OFF.
2. Reconnect any electrical connections that were disconnected to perform the diagnosis.
3. Clear codes with DDDL 7.0 or latest version.

All information subject to change without notice.
Copyright © 2007 DETROIT DIESEL CORPORATION

https://truckmanualshub.com/

4. Start and bring engine up to operating temperature (over 140°F/60°C).
5. Verify operation is satisfactory and no warning lamps illuminate. If warning lamps illuminate, troubleshoot the codes. If assistance is required, call the Detroit Diesel Customer Support Center at 313–592–5800.

All information subject to change without notice.
Copyright © 2007 DETROIT DIESEL CORPORATION

https://truckmanualshub.com/

All information subject to change without notice.
Copyright © 2007 DETROIT DIESEL CORPORATION

https://truckmanualshub.com/

97 SPN 2900 (CPC) - J1939 ETC7 MESSAGE IS MISSING

Section **Page**

97.1 SPN 2900/FMI 9 97-3

https://truckmanualshub.com/

All information subject to change without notice.
Copyright © 2007 DETROIT DIESEL CORPORATION

https://truckmanualshub.com/

97.1 SPN 2900/FMI 9

This fault is typically the J1939 ETC7 message is missing.

97.1.1 Missing ETC7 Message Check

Check as follows:

1. Check for multiple codes:
   [a] If CPC SPN 168/FMI 0/14/18 (Battery Voltage) are present troubleshoot these first.
   [b] If MCM SPN 625/FMI 9 is present, troubleshoot and repair the CAN line.
   [c] If only a “J1939 Error” fault is present, go to step 2.
2. Has the CPC been recently reprogrammed?
   [a] If yes, check the proper configuration of the CPC.
   [b] If no, connect ServiceLink to determine which modules are configured for the vehicle and their communication status. Once this is done, follow the appropriate module communication troubleshooting procedures for the affected module.

All information subject to change without notice.
Copyright © 2007 DETROIT DIESEL CORPORATION

https://truckmanualshub.com/

All information subject to change without notice.
Copyright © 2007 DETROIT DIESEL CORPORATION

https://truckmanualshub.com/

98 SPN 3050 - ENGINE AIR FLOW ABOVE OR BELOW NORMAL OPERATING RANGE

Section **Page**

98.1 SPN 3050 98-3

https://truckmanualshub.com/

All information subject to change without notice.
Copyright © 2007 DETROIT DIESEL CORPORATION

https://truckmanualshub.com/

98.1 SPN 3050

The troubleshooting procedures for this SPN can be found in the *Aftertreatment System Technician's Guide* (7SE63).

All information subject to change without notice.
Copyright © 2007 DETROIT DIESEL CORPORATION

https://truckmanualshub.com/

All information subject to change without notice.
Copyright © 2007 DETROIT DIESEL CORPORATION

https://truckmanualshub.com/

99 SPN 3242 - DOC INLET TEMPERATURE SENSOR ABOVE OR BELOW NORMAL OPERATING RANGE

Section **Page**

99.1 SPN 3242/FMI 2, 3, 4 OR 10 99-3

https://truckmanualshub.com/

All information subject to change without notice.
Copyright © 2007 DETROIT DIESEL CORPORATION

https://truckmanualshub.com/

99.1 SPN 3242/FMI 2, 3, 4 OR 10

The troubleshooting procedures for this SPN can be found in the *Aftertreatment System Technician's Guide* (7SE63), refer to Chapter 9.

All information subject to change without notice.
Copyright © 2007 DETROIT DIESEL CORPORATION

https://truckmanualshub.com/

All information subject to change without notice.
Copyright © 2007 DETROIT DIESEL CORPORATION

https://truckmanualshub.com/

100 SPN 3246 - DPF OUTLET TEMPERATURE SENSOR OPERATING ABOVE OR BELOW NORMAL

Section **Page**

100.1 SPN 3246/FMI 0, 2, 3, 4, 10, 14, 31 100-3

https://truckmanualshub.com/

All information subject to change without notice.
Copyright © 2007 DETROIT DIESEL CORPORATION

https://truckmanualshub.com/

100.1 SPN 3246/FMI 0, 2, 3, 4, 10, 14, 31

The troubleshooting procedures for this SPN can be found in the *Aftertreatment System Technician's Guide* (7SE63), refer to Chapter 10.

All information subject to change without notice.
Copyright © 2007 DETROIT DIESEL CORPORATION

https://truckmanualshub.com/

All information subject to change without notice.
Copyright © 2007 DETROIT DIESEL CORPORATION

https://truckmanualshub.com/

101 SPN 3250 - DPF INLET TEMPERATURE SENSOR ABOVE OR BELOW NORMAL OPERATING RANGE

Section **Page**

101.1 SPN 3250/FMI 0, 2, 3, 4, 10, 14, 31 101-3

https://truckmanualshub.com/

All information subject to change without notice.
Copyright © 2007 DETROIT DIESEL CORPORATION

https://truckmanualshub.com/

101.1 SPN 3250/FMI 0, 2, 3, 4, 10, 14, 31

The troubleshooting procedures for this SPN can be found in the *Aftertreatment System Technician's Guide* (7SE63), refer to Chapter 11.

All information subject to change without notice.
Copyright © 2007 DETROIT DIESEL CORPORATION

https://truckmanualshub.com/

All information subject to change without notice.
Copyright © 2007 DETROIT DIESEL CORPORATION

https://truckmanualshub.com/

102 SPN 3251 - DPF OUTLET PRESSURE ABOVE OR BELOW NORMAL OPERATING RANGE

Section **Page**

102.1 SPN 3251/FMI 0, 1 OR 16 102-3

https://truckmanualshub.com/

All information subject to change without notice.
Copyright © 2007 DETROIT DIESEL CORPORATION

https://truckmanualshub.com/

102.1 SPN 3251/FMI 0, 1 OR 16

The troubleshooting procedures for this SPN can be found in the *Aftertreatment System Technician's Guide* (7SE63), refer to Chapter 12.

All information subject to change without notice.
Copyright © 2007 DETROIT DIESEL CORPORATION

https://truckmanualshub.com/

All information subject to change without notice.
Copyright © 2007 DETROIT DIESEL CORPORATION

https://truckmanualshub.com/

103 SPN 3471 - ELECTRONIC DOSING VALVE SENSOR ABOVE OR BELOW NORMAL OPERATING RANGE

Section **Page**

103.1 SPN 3471/FMI 1, 3, 4 OR 5 103-3

https://truckmanualshub.com/

All information subject to change without notice.
Copyright © 2007 DETROIT DIESEL CORPORATION

https://truckmanualshub.com/

103.1 SPN 3471/FMI 1, 3, 4 OR 5

The troubleshooting procedures for this SPN can be found in the *Aftertreatment System Technician's Guide* (7SE63), refer to Chapter 13.

All information subject to change without notice.
Copyright © 2007 DETROIT DIESEL CORPORATION

https://truckmanualshub.com/

All information subject to change without notice.
Copyright © 2007 DETROIT DIESEL CORPORATION

https://truckmanualshub.com/

104 SPN 3480 - FUEL LINE PRESSURE SENSOR ABOVE OR BELOW NORMAL OPERATING RANGE

Section **Page**

104.1 SPN 3480/FMI 1, 2 OR 14 104-3

https://truckmanualshub.com/

All information subject to change without notice.
Copyright © 2007 DETROIT DIESEL CORPORATION

https://truckmanualshub.com/

104.1 SPN 3480/FMI 1, 2 OR 14

The troubleshooting procedures for this SPN can be found in the *Aftertreatment System Technician's Guide* (7SE63), refer to Chapter 14.

All information subject to change without notice.
Copyright © 2007 DETROIT DIESEL CORPORATION

https://truckmanualshub.com/

All information subject to change without notice.
Copyright © 2007 DETROIT DIESEL CORPORATION

https://truckmanualshub.com/

105 SPN 3482 - FUEL CUTOFF VALVE SENSOR ABOVE OR BELOW NORMAL OPERATING RANGE

Section **Page**

105.1 SPN 3482/FMI 3, 4, 5 OR 7 105-3

https://truckmanualshub.com/

All information subject to change without notice.
Copyright © 2007 DETROIT DIESEL CORPORATION

https://truckmanualshub.com/

105.1 SPN 3482/FMI 3, 4, 5 OR 7

The troubleshooting procedures for this SPN can be found in the Aftertreatment System Technician's Guide (7SE63), refer to Chapter 15.

All information subject to change without notice.
Copyright © 2007 DETROIT DIESEL CORPORATION

https://truckmanualshub.com/

All information subject to change without notice.
Copyright © 2007 DETROIT DIESEL CORPORATION

https://truckmanualshub.com/

106 SPN 3509 - MULTIPLEXER 1 CHANNEL 1 OR 2 SHORT OR OPEN CIRCUIT HIGH

Section **Page**

106.1 SPN 3509/FMI 3 106-3

https://truckmanualshub.com/

All information subject to change without notice.
Copyright © 2007 DETROIT DIESEL CORPORATION

https://truckmanualshub.com/

106.1 SPN 3509/FMI 3

This diagnosis typically is Multiplexer 1, Channel 1 or 2 has a short or open circuit high.

106.1.1 Channel 1

Multiplexer 1 Channel 1, shorted high will set if the input voltage from either the DOC Temp In, DOC Temp Out or DPF Temp Out exceeds 2.97 volts, which may be caused by a short circuit, or more likely an open circuit. This is an information code only indicating a default value will be used for the other sensor inputs.

106.1.2 Channel 2

Multiplexer 1 Channel 2, shorted high will set if the input voltage from the Turbo Compressor Inlet Temperature Sensor exceeds 2.97 volts, which may be caused by a short circuit, or more likely an open circuit. This is an information code only indicating a default value will be used for the sensor input.

All information subject to change without notice.
Copyright © 2007 DETROIT DIESEL CORPORATION

https://truckmanualshub.com/

All information subject to change without notice.
Copyright © 2007 DETROIT DIESEL CORPORATION

https://truckmanualshub.com/

107 SPN 3510 - MULTIPLEXER 2 CHANNEL 1 OR 2 SHORT OR OPEN CIRCUIT HIGH

Section **Page**

107.1 SPN 3510/FMI 3 107-3

https://truckmanualshub.com/

All information subject to change without notice.
Copyright © 2007 DETROIT DIESEL CORPORATION

https://truckmanualshub.com/

107.1 SPN 3510/FMI 3

This diagnosis is typically Multiplexer 2 Channel 1 or 2 short or open circuit high.

107.1.1 Channel 1

Multiplexer 2 Channel 1, shorted high will set if the input voltage from either the Engine Coolant Temperature Sensor, EGR Temperature Sensor or Turbo Compressor Outlet Temperature Sensor exceeds 2.97 volts, which may be caused by a short circuit, or more likely an open circuit. This is an information code only indicating a default value will be used for the other sensor inputs.

107.1.2 Channel 2

Multiplexer 2 Channel 2, shorted high will set if the input voltage from either the Engine Oil Temperature Sensor or Engine Fuel Temperature Sensor exceeds 2.97 volts, which may be caused by a short circuit, or more likely an open circuit. This is an information code only indicating a default value will be used for the other sensor inputs.

All information subject to change without notice.
Copyright © 2007 DETROIT DIESEL CORPORATION

https://truckmanualshub.com/

All information subject to change without notice.
Copyright © 2007 DETROIT DIESEL CORPORATION

https://truckmanualshub.com/

108 SPN 3510 – ACCELERATOR PEDAL SUPPLY OUTSIDE OF NORMAL OPERATING RANGE

Section **Page**

108.1 SPN 3510/FMI 2 108-3
108.2 SPN 3510/FMI 3 108-5
108.3 SPN 3510/FMI 4 108-6

https://truckmanualshub.com/

All information subject to change without notice.
Copyright © 2007 DETROIT DIESEL CORPORATION

https://truckmanualshub.com/

108.1 SPN 3510/FMI 2

This fault indicates that the throttle pedal supply is receiving erratic data.

108.1.1 Erratic Data Check

Check as follows:

1. Disconnect the Accelerator Pedal (AP).
2. Turn the ignition ON.
3. Measure the voltage between pins 1 and 3 of the AP harness connector. See Figure 108-1.

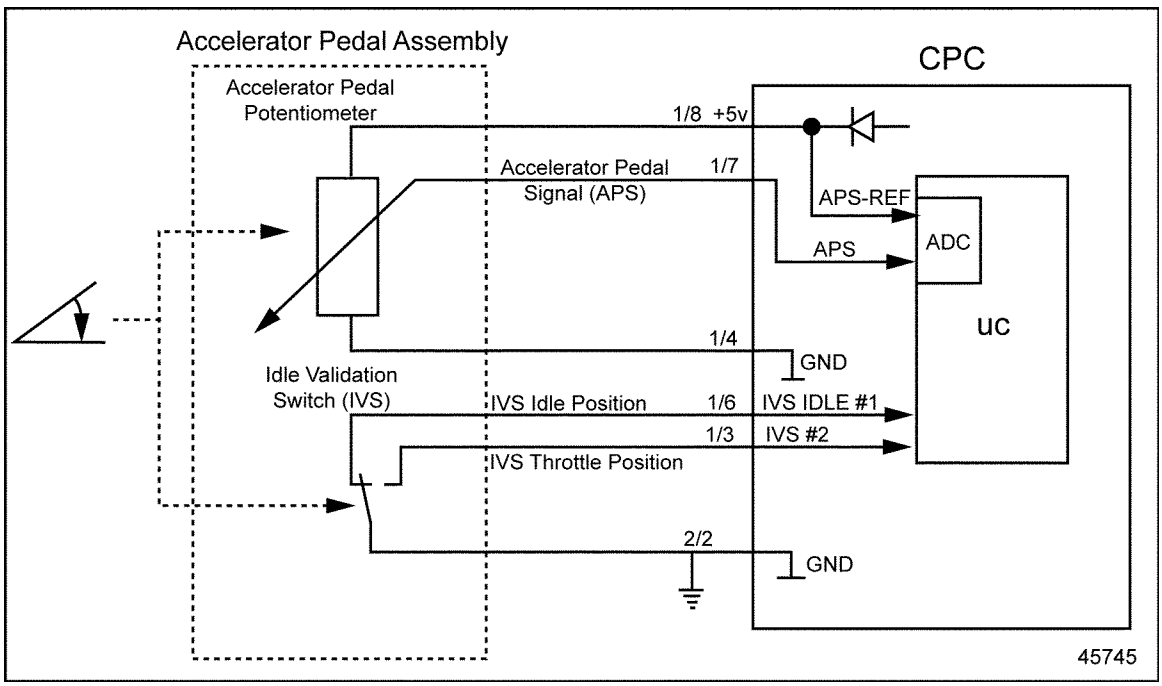

Figure 108-1 Accelerator Pedal Assembly Installation

[a] If the voltage is between 4.5 and 5.5 volts, go to step 5.

[b] If the voltage is less than 4.5, go to step 4.

4. Measure the voltage between pins 1 of the AP harness connector and ground.

   [a] If the voltage is between 4.5 and 5.5 volts, repair the open circuit between pin 3 of the AP harness connector and pin 4 of the CPC #1 connector. Refer to section 108.1.1.1.

   [b] If the voltage is less than 4.5, repair the open circuit between pin 1 of the AP harness connector and pin 8 of the CPC #1 connector. Refer to section 108.1.1.1.

5. Turn the ignition OFF.
6. Disconnect the CPC #1 connector.

All information subject to change without notice.
Copyright © 2007 DETROIT DIESEL CORPORATION

https://truckmanualshub.com/

7. Measure the resistance between pin 2 of the AP harness connector and pin 7 of the CPC #1 connector.
   [a] If the resistance is greater than 3 Ω, repair the open between pin 2 of the AP harness connector and pin 7 of the CPC #1 connector. Refer to section 108.1.1.1.
   [b] If the resistance is less than 3 Ω, replace the Accelerator Pedal. Refer to section 108.1.1.1.

108.1.1.1 Verify Repairs

Verify repairs as follows:

1. Turn ignition OFF.
2. Reconnect any electrical connections that were disconnected to perform the diagnosis.
3. Clear codes with DDDL 7.0 or latest version.
4. Start and bring engine up to operating temperature (over 140°F/60°C).
5. Verify operation is satisfactory and no warning lamps illuminate. If warning lamps illuminate, troubleshoot the codes. If assistance is required, call the Detroit Diesel Customer Support Center at 313–592–5800.

All information subject to change without notice.
Copyright © 2007 DETROIT DIESEL CORPORATION

https://truckmanualshub.com/

108.2 SPN 3510/FMI 3

The typical diagnosis for this fault is high voltage.

108.2.1 High Voltage Check

Check as follows:

1. Disconnect the Accelerator Pedal (AP).
2. Turn the ignition ON (key On, engine OFF).
3. Measure the voltage between pins 1 and 3 of the AP harness connector.
   [a] If the voltage is between 4.5 and 5.5 volts, go to step 5.
   [b] If the voltage is less than 4.5, go to step 4.
4. Measure the voltage between pins 1 of the AP harness connector and ground.
   [a] If the voltage is between 4.5 and 5.5 volts, repair the open circuit between pin 3 of the AP harness connector and pin 4 of the CPC #1 connector. Refer to section 108.2.1.1.
   [b] If the voltage is less than 4.5, repair the open circuit between pin 1 of the AP harness connector and pin 8 of the CPC #1 connector. Refer to section 108.2.1.1.
5. Turn the ignition OFF.
6. Disconnect the CPC #1 connector.
7. Measure the resistance between pin 2 of the AP harness connector and pin 7 of the CPC #1 connector.
   [a] Measure the resistance between pin 2 of the AP harness connector and pin 7 of the CPC #1 connector. Refer to section 108.2.1.1.
   [b] If the resistance is less than 3 Ω, replace the Accelerator Pedal. Refer to section 108.2.1.1.

108.2.1.1 Verify Repairs

Verify repairs as follows:

1. Turn ignition OFF.
2. Reconnect any electrical connections that were disconnected to perform the diagnosis.
3. Clear codes with DDDL 7.0 or latest version.
4. Start and bring engine up to operating temperature (over 140°F/60°C).
5. Verify operation is satisfactory and no warning lamps illuminate. If warning lamps illuminate, troubleshoot the codes. If assistance is required, call the Detroit Diesel Customer Support Center at 313–592–5800.

All information subject to change without notice.
Copyright © 2007 DETROIT DIESEL CORPORATION

https://truckmanualshub.com/

108.3 SPN 3510/FMI 4

The typical diagnosis for this fault is voltage low.

108.3.1 Low Voltage Check

Check as follows:

1. Disconnect the Accelerator Pedal (AP) connector.
2. Disconnect the #1 connector of the CPC.
3. Measure the resistance between pin 1 and pin 3 of the AP connector.
   [a] If the resistance is less than 5 Ω, repair the short between wires 8 and 4 of the CPC #1 connector. Refer to section 108.3.1.1.
   [b] If the resistance is greater than 5 Ω, go to step 4.
4. Measure the resistance between pin 2 and 3 of the AP connector.
   [a] If the resistance is less than 5 Ω, repair the short between wires 7 and 14 of the CPC #! connector. Refer to section 108.3.1.1.
   [b] If the resistance is greater than 5 Ω, go to step 5.
5. Measure the resistance between pin 1 of the AP connector and ground.
   [a] If the resistance is less than 5 Ω, repair the short circuit between pin 1 of the AP connector and ground. Refer to section 108.3.1.1.
   [b] If the resistance is greater than 5 Ω, go to step 6.
6. Measure the resistance between pin 2 of the AP connector and ground.
   [a] If the resistance is less than 5 Ω, repair the short circuit between pin 2 of the AP connector and ground. Refer to section 108.3.1.1.
   [b] If the resistance is greater than 5 Ω, replace the Accelerator Pedal. Refer to section 108.3.1.1.

All information subject to change without notice.
Copyright © 2007 DETROIT DIESEL CORPORATION

https://truckmanualshub.com/

108.3.1.1 Verify Repairs

Verify repairs as follows:

1. Turn ignition OFF.
2. Reconnect any electrical connections that were disconnected to perform the diagnosis.
3. Clear codes with DDDL 7.0 or latest version.
4. Start and bring engine up to operating temperature (over 140°F/60°C).
5. Verify operation is satisfactory and no warning lamps illuminate. If warning lamps illuminate, troubleshoot the codes. If assistance is required, call the Detroit Diesel Customer Support Center at 313–592–5800.

All information subject to change without notice.
Copyright © 2007 DETROIT DIESEL CORPORATION

https://truckmanualshub.com/

All information subject to change without notice.
Copyright © 2007 DETROIT DIESEL CORPORATION

https://truckmanualshub.com/

109 SPN 3511 - MULTIPLEXER 3 CHANNEL 1 0R 2 SHORT OR OPEN CIRCUIT HIGH

Section **Page**

109.1 SPN 3511/FMI 3 109-3

https://truckmanualshub.com/

All information subject to change without notice.
Copyright © 2007 DETROIT DIESEL CORPORATION

https://truckmanualshub.com/

109.1 SPN 3511/FMI 3

This diagnosis typically is Multiplexer 3, Channel 1 or 2 has a short or open circuit high.

109.1.1 Channel 1

Multiplexer 3 Channel 1, shorted high will set if the input voltage from either the Intake Manifold Temperature Sensor, Engine Oil Temperature Sensor, Engine Coolant Temperature Sensor or Engine Fuel Temperature Sensor exceeds 2.97 volts, which may be caused by a short circuit, or more likely an open circuit. This is an information code only indicating a default value will be used for the other sensor inputs.

109.1.2 Channel 2

Multiplexer 3 Channel 2, shorted high will set if the input voltage from the Barometric Pressure Sensor exceeds 2.97 volts, which may be caused by a short circuit, or more likely an open circuit. This is an information code only indicating a default value will be used for the sensor input.

All information subject to change without notice.
Copyright © 2007 DETROIT DIESEL CORPORATION

https://truckmanualshub.com/

All information subject to change without notice.
Copyright © 2007 DETROIT DIESEL CORPORATION

https://truckmanualshub.com/

110 SPN 3556 - ELECTRONIC DOSING VALVE ABOVE OR BELOW NORMAL OPERATING RANGE

Section **Page**

110.1 SPN 3556/FMI 0 OR 1 110-3

https://truckmanualshub.com/

All information subject to change without notice.
Copyright © 2007 DETROIT DIESEL CORPORATION

https://truckmanualshub.com/

110.1 SPN 3556/FMI 0 OR 1

The troubleshooting procedures for this SPN can be found in the *Aftertreatment System Technician's Guide* (7SE63), refer to Chapter 16.

All information subject to change without notice.
Copyright © 2007 DETROIT DIESEL CORPORATION

https://truckmanualshub.com/

All information subject to change without notice.
Copyright © 2007 DETROIT DIESEL CORPORATION

https://truckmanualshub.com/

111 SPN 3563– INTAKE MANIFOLD PRESSURE OUTSIDE NORMAL RANGE

Section **Page**

111.1 SPN 3563/FMI 0 111-3
111.2 SPN 3563/FMI 1 111-4
111.3 SPN 3563/FMI 3 111-5
111.4 SPN 3563/FMI 4 111-6
111.5 SPN 3563/FMI 20 111-8
111.6 SPN 3563/FMI 21 111-12

https://truckmanualshub.com/

All information subject to change without notice.
Copyright © 2007 DETROIT DIESEL CORPORATION

https://truckmanualshub.com/

111.1 SPN 3563/FMI 0

The typical diagnosis for this fault is the intake manifold pressure failed high.

111.1.1 Air Intake System Check

Check as follows:

1. Inspect entire air intake system for leaks and/or restrictions.
   [a] If air intake system leaks and/or restrictions are found, repair as necessary. Refer to section 111.1.1.1.
   [b] If no air intake system leaks and/or restrictions are found, go to step 2.
2. Connect DDDL 7.0.
3. Turn the ignition ON (key ON, engine OFF).
4. Perform the Turbo Actuator Hysteresis test..
   [a] If the test fails, refer to section 6.5 in the *Series 60 Service Manual* (6SE2007).
   [b] If he test passed , go to step 5.
5. Check for a faulty turbocharger (compressor wheel does not spin freely or is rubbing on side walls).
   [a] If the turbocharger is faulty, replace it. Refer to section 111.1.1.1.
   [b] If the turbocharger is not faulty, go to step 6.
6. Disconnect the Intake Manifold Pressure Sensor.
7. Inspect the Intake Manifold Pressure Sensor connector for bent, spread or corroded pins.
   [a] If damage is found, repair the connector as necessary. Refer to section 111.1.1.1.
   [b] If no damage is found, replace the Intake Manifold Pressure Sensor. Refer to section 111.1.1.1.

111.1.1.1 Verify Repairs

Verify repairs as follows:

1. Turn ignition OFF.
2. Reconnect any electrical connections that were disconnected to perform the diagnosis.
3. Clear codes with DDDL 7.0 or latest version.
4. Start and bring engine up to operating temperature (over 140°F/60°C).
5. Verify operation is satisfactory and no warning lamps illuminate. If warning lamps illuminate, troubleshoot the codes. If assistance is required, call the Detroit Diesel Customer Support Center at 313–592–5800.

All information subject to change without notice.
Copyright © 2007 DETROIT DIESEL CORPORATION

https://truckmanualshub.com/

111.2 SPN 3563/FMI 1

The typical diagnosis for this fault is the intake manifold pressure failed high.

111.2.1 Air Intake System Check

Check as follows:

1. Inspect entire air intake system for leaks and/or restrictions.
   [a] If air intake system leaks and/or restrictions are found, repair as necessary. Refer to section 111.2.1.1.
   [b] If no air intake system leaks and/or restrictions are found, go to step 2.
2. Connect DDDL 7.0.
3. Turn the ignition ON (key ON, engine OFF).
4. Perform the Turbo Actuator Hysteresis test.
   [a] If the test fails, refer to section 6.5 in the *Series 60 Service Manual* (6SE2007).
   [b] If he test passed , go to step 5.
5. Disconnect the Intake Manifold Pressure Sensor.
6. Inspect the Intake Manifold Pressure Sensor connector for bent, spread or corroded pins.
   [a] If damage is found, repair the connector as necessary. Refer to section 111.2.1.1.
   [b] If no damage is found, replace the Intake Manifold Pressure Sensor. Refer to section 111.2.1.1.

111.2.1.1 Verify Repairs

Verify repairs as follows:

1. Turn ignition OFF.
2. Reconnect any electrical connections that were disconnected to perform the diagnosis.
3. Clear codes with DDDL 7.0 or latest version.
4. Start and bring engine up to operating temperature (over 140°F/60°C).
5. Verify operation is satisfactory and no warning lamps illuminate. If warning lamps illuminate, troubleshoot the codes. If assistance is required, call the Detroit Diesel Customer Support Center at 313–592–5800.

All information subject to change without notice.
Copyright © 2007 DETROIT DIESEL CORPORATION

https://truckmanualshub.com/

111.3 SPN 3563/FMI 3

The typical diagnosis for this fault is an Intake Manifold Pressure Sensor short circuit.

111.3.1 Short Circuit Check

Check as follows:

1. Disconnect the Intake Manifold Pressure Sensor (IMP Sensor).
2. Disconnect the 120–pin MCM connector.
3. Measure the resistance between pin 2 and 3 of the IMP Sensor connector. See Figure 111-1.
   [a] If the resistance is less than 5 Ω, repair the short between pins 87 and 102 of the 120–pin MCM connector.Refer to section 111.3.1.1.

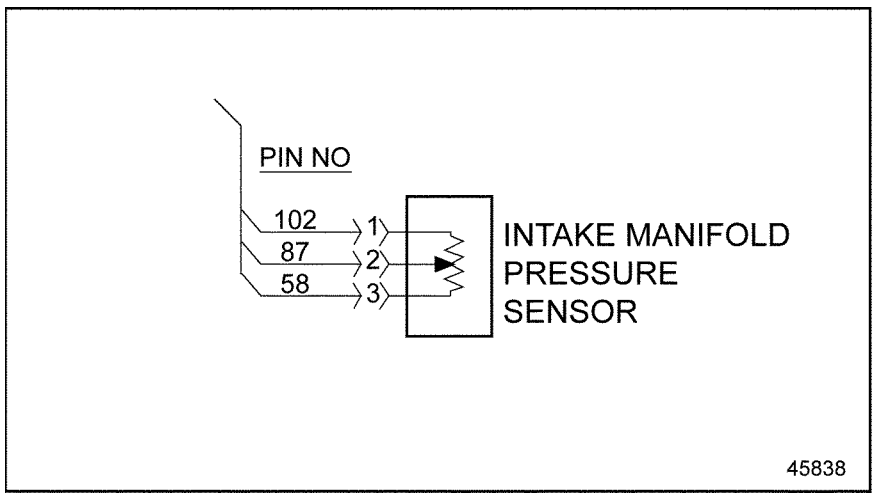

Figure 111-1 Intake Manifold Pressure Sensor

   [b] If the resistance is greater than 5 Ω, repair the short to power on pin 87 of the 120–pin MCM connector. Refer to section 111.3.1.1.

111.3.1.1 Verify Repairs

Verify repairs as follows:

1. Turn ignition OFF.
2. Reconnect any electrical connections that were disconnected to perform the diagnosis.
3. Clear codes with DDDL 7.0 or latest version.
4. Start and bring engine up to operating temperature (over 140°F/60°C).
5. Verify operation is satisfactory and no warning lamps illuminate. If warning lamps illuminate, troubleshoot the codes. If assistance is required, call the Detroit Diesel Customer Support Center at 313–592–5800.

All information subject to change without notice.
Copyright © 2007 DETROIT DIESEL CORPORATION

https://truckmanualshub.com/

111.4 SPN 3563/FMI 4

The typical diagnosis for this fault is an Intake Manifold Pressure Sensor open circuit.

111.4.1 Open Circuit Check

Check as follows:

1. Disconnect the Intake Manifold Pressure Sensor (IMP Sensor).
2. Measure the resistance between pin 1 and 3 of the IMP Sensor.
   [a] If resistance is greater than 130 kΩ, replace the IMP Sensor. Refer to section 111.4.1.1.
   [b] If resistance is less than 130 kΩ, go to step 3.
3. Measure the resistance between pins 1 and 2 of the sensor. See Figure 111-2.

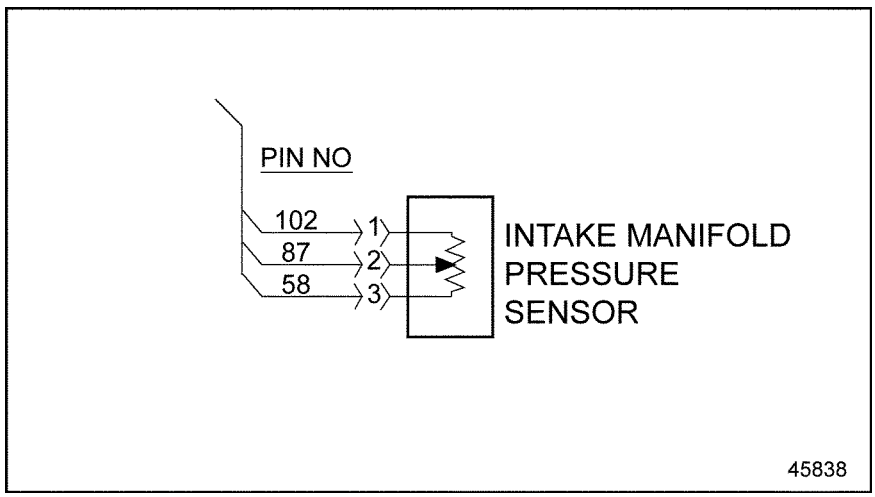

Figure 111-2 Intake Manifold Pressure Sensor

   [a] If resistance is greater than 130 kΩ, replace the IMP Sensor. Refer to section 111.4.1.1.
   [b] If resistance is less than 130 kΩ, go to step 4.
4. Turn the ignition switch to the ON position.
5. Measure the voltage between pins 1 and 3 of the IMP Sensor harness connector.
   [a] If the voltage is between 4.5 and 5.5 volts, go to step 7.
   [b] If the voltage is less than 4.5 volts, go to step 6.
6. Measure the voltage between pin 3 of the IMP Sensor harness connector and ground.
   [a] If the voltage is between 4.5 and 5.5 volts, repair the open circuit between pin 1 of the IMP Sensor harness connector and pin 105 of the 120–pin MCM connector. Refer to section 111.4.1.1.

All information subject to change without notice.
Copyright © 2007 DETROIT DIESEL CORPORATION

https://truckmanualshub.com/

[b] If the voltage is less than 4.5 volts, repair the open circuit between pin 3 of the IMP Sensor harness connector and pin 82 of the 120–pin MCM connector. Refer to section 111.4.1.1.

7. Turn the ignition OFF.
8. Disconnect the 120–pin MCM connector.
9. Measure the resistance between pins 1 and 3 of the IMP Sensor harness connector.
   [a] If the resistance is greater than 5 Ω, go to step 10.
   [b] If the resistance is less than 5 Ω, repair the short between pins 105 and 82 of the 120–pin MCM connector. Refer to section 111.4.1.1.
10. Measure the resistance between pins 1 and 2 of the IMP Sensor harness connector.
    [a] If the resistance is greater than 5 Ω, go to step 11.
    [b] If the resistance is less than 5 Ω, repair the short between pins 105 and 54 of the 120–pin MCM connector. Refer to section 111.4.1.1.
11. Measure the resistance between pin 3 of the IMP Sensor harness connector and ground.
    [a] If the resistance is greater than 5 Ω, go to step 12.
    [b] If the resistance is less than 5 Ω, repair the short between pin 82 of the 120–pin MCM connector and ground. Refer to section 111.4.1.1.
12. Measure the resistance between pin 2 of the IMP Sensor harness connector and ground.
    [a] If the resistance is greater than 5 Ω, repair the open circuit between pin 2 of the IMP Sensor harness connector and pin 54 of the 120–pin MCM connector. Refer to section 111.4.1.1.
    [b] If the resistance is less than 5 Ω, repair the short between pin 54 of the 120–pin MCM connector. Refer to section 111.4.1.1.

111.4.1.1 Verify Repairs

Verify repairs as follows:

1. Turn ignition OFF.
2. Reconnect any electrical connections that were disconnected to perform the diagnosis.
3. Clear codes with DDDL 7.0 or latest version.
4. Start and bring engine up to operating temperature (over 140°F/60°C).
5. Verify operation is satisfactory and no warning lamps illuminate. If warning lamps illuminate, troubleshoot the codes. If assistance is required, call the Detroit Diesel Customer Support Center at 313–592–5800.

All information subject to change without notice.
Copyright © 2007 DETROIT DIESEL CORPORATION

https://truckmanualshub.com/

111.5 SPN 3563/FMI 20

This diagnosis is typically a ambient and inlet manifold pressure difference (Low Box).

111.5.1 Air System Check

Check as follows:

1. Inspect the entire air intake system for leaks and/or restrictions.
   [a] If air intake system leaks and/or restrictions are found, repair as necessary. Refer to section 111.5.1.1.
   [b] If no air intake system leaks are found, go to step 2.
2. Connect to DDDL 7.0.
3. Turn the ignition ON (key On, engine OFF).
4. Perform the Turbo Actuator Hysteresis test.
   [a] If the test fails, refer to section 6.5 in the *Series 60 Service Manual* (6SE2007).
   [b] If the test passed, go to step 5.
5. With the ignition ON (key On, engine OFF) compare the barometric pressure to the intake manifold pressure (the correct barometric pressure readings for your local altitude or your local weather report are listed in Table 111-1).
   [a] If the barometric pressure is within range for your altitude, go to step 6.
   [b] If the barometric pressure is not within range for your altitude, contact the Detroit Diesel Customer Support Center at 313–592–5800 for MCM replacement authorization.

Baro (kPa)	Altitude (Ft)	Altitude (M)
100.01	0	0
99.4	200	61
98.7	400	121
98.0	600	182
97.4	800	242
96.7	1000	303
96.1	1200	364
95.4	1400	424
94.8	1600	485
94.2	1800	545
93.5	2000	606
92.9	2200	667
92.3	2400	727

All information subject to change without notice.
Copyright © 2007 DETROIT DIESEL CORPORATION

https://truckmanualshub.com/

Baro (kPa)	Altitude (Ft)	Altitude (M)
91.6	2600	788
91.0	2800	848
90.4	3000	909
89.8	3200	970
89.1	3400	1030
88.5	3600	1091
87.9	3800	1152
87.3	4000	1212
86.7	4200	1273
86.1	4400	1333
85.5	4600	1394
84.9	4800	1455
84.3	5000	1515
83.7	5200	1576
83.1	5400	1636
82.5	5600	1697
81.9	5800	1758
81.3	6000	1818
80.7	6200	1879
80.1	6400	1939
79.5	6600	2000
79.0	6800	2061
78.4	7000	2121
77.8	7200	2182
77.2	7400	2242
76.7	7600	2303
76.1	7800	2364
75.5	8000	2424
75.0	8200	2485
74.4	8400	2545
73.8	8600	2606
73.3	8800	2667
72.7	9000	2727
72.2	9200	2788
71.6	9400	2848
71.1	9600	2909
70.6	9800	2970

All information subject to change without notice.
Copyright © 2007 DETROIT DIESEL CORPORATION

https://truckmanualshub.com/

Baro (kPa)	Altitude (Ft)	Altitude (M)
70.0	10000	3030
69.5	10200	3091
68.9	10400	3152
68.4	10600	3212
67.9	10800	3273
67.3	11000	3333
66.8	11200	3394
66.3	11400	3455
65.8	11600	3515
65.2	11800	3576
64.7	12000	3636
64.2	12200	3697
63.7	12400	3758
63.2	12600	3818
62.7	12800	3879
62.2	13000	3939
61.7	13200	4000
61.2	13400	4061
60.7	13600	4121
60.2	13800	4182
59.7	14000	4242
59.2	14200	4303
58.7	14400	4364
58.2	14600	4424
57.7	14800	4485
57.3	15000	4545
56.8	15200	4606
56.3	15400	4667
55.8	15600	4727
55.4	15800	4788
54.9	16000	4848

Table 111-1 Barometric Pressure

6. Disconnect the Intake Manifold Pressure Sensor.
7. Inspect the Intake Manifold Pressure Sensor connector for bent, spread or corroded pins.
   [a] If damage is found, repair the connector as necessary. Refer to section 111.5.1.1.

All information subject to change without notice.
Copyright © 2007 DETROIT DIESEL CORPORATION

https://truckmanualshub.com/

[b] If no damage is found, replace the Intake Manifold Pressure Sensor. Refer to section 111.5.1.1.

111.5.1.1 Verify Repairs

Verify repairs as follows:

1. Turn ignition OFF.
2. Reconnect any electrical connections that were disconnected to perform the diagnosis.
3. Clear codes with DDDL 7.0 or latest version.
4. Start and bring engine up to operating temperature (over 140°F/60°C).
5. Verify operation is satisfactory and no warning lamps illuminate. If warning lamps illuminate, troubleshoot the codes. If assistance is required, call the Detroit Diesel Customer Support Center at 313–592–5800.

All information subject to change without notice.
Copyright © 2007 DETROIT DIESEL CORPORATION

https://truckmanualshub.com/

111.6 SPN 3563/FMI 21

This diagnosis is typically a ambient and inlet manifold pressure difference (High Box).

111.6.1 Air System Check

Check as follows:

1. Inspect the entire air intake system for leaks and/or restrictions.
   [a] If air intake system leaks and/or restrictions are found, repair as necessary. Refer to section 111.6.1.1.
   [b] If no air intake system leaks are found, go to step 2.
2. Connect to DDDL 7.0.
3. Turn the ignition ON (key On, engine OFF).
4. Perform the Turbo Actuator Hysteresis test.
   [a] If the test fails, refer to section 6.5 in the *Series 60 Service Manual* (6SE2007).
   [b] If the test passed, go to step 5.
5. With the ignition ON (key On, engine OFF) compare the barometric pressure to the intake manifold pressure (the correct barometric pressure readings for your local altitude or your local weather report are listed in Table 111-2).
   [a] If the barometric pressure is within range for your altitude, go to step 6.
   [b] If the barometric pressure is not within range for your altitude, contact the Detroit Diesel Customer Support Center at 313–592–5800 for MCM replacement authorization.

Baro (kPa)	Altitude (Ft)	Altitude (M)
100.01	0	0
99.4	200	61
98.7	400	121
98.0	600	182
97.4	800	242
96.7	1000	303
96.1	1200	364
95.4	1400	424
94.8	1600	485
94.2	1800	545
93.5	2000	606
92.9	2200	667
92.3	2400	727

All information subject to change without notice.
Copyright © 2007 DETROIT DIESEL CORPORATION

https://truckmanualshub.com/

Baro (kPa)	Altitude (Ft)	Altitude (M)
91.6	2600	788
91.0	2800	848
90.4	3000	909
89.8	3200	970
89.1	3400	1030
88.5	3600	1091
87.9	3800	1152
87.3	4000	1212
86.7	4200	1273
86.1	4400	1333
85.5	4600	1394
84.9	4800	1455
84.3	5000	1515
83.7	5200	1576
83.1	5400	1636
82.5	5600	1697
81.9	5800	1758
81.3	6000	1818
80.7	6200	1879
80.1	6400	1939
79.5	6600	2000
79.0	6800	2061
78.4	7000	2121
77.8	7200	2182
77.2	7400	2242
76.7	7600	2303
76.1	7800	2364
75.5	8000	2424
75.0	8200	2485
74.4	8400	2545
73.8	8600	2606
73.3	8800	2667
72.7	9000	2727
72.2	9200	2788
71.6	9400	2848
71.1	9600	2909
70.6	9800	2970

All information subject to change without notice.
Copyright © 2007 DETROIT DIESEL CORPORATION

https://truckmanualshub.com/

Baro (kPa)	Altitude (Ft)	Altitude (M)
70.0	10000	3030
69.5	10200	3091
68.9	10400	3152
68.4	10600	3212
67.9	10800	3273
67.3	11000	3333
66.8	11200	3394
66.3	11400	3455
65.8	11600	3515
65.2	11800	3576
64.7	12000	3636
64.2	12200	3697
63.7	12400	3758
63.2	12600	3818
62.7	12800	3879
62.2	13000	3939
61.7	13200	4000
61.2	13400	4061
60.7	13600	4121
60.2	13800	4182
59.7	14000	4242
59.2	14200	4303
58.7	14400	4364
58.2	14600	4424
57.7	14800	4485
57.3	15000	4545
56.8	15200	4606
56.3	15400	4667
55.8	15600	4727
55.4	15800	4788
54.9	16000	4848

Table 111-2 Barometric Pressure

6. Disconnect the Intake Manifold Pressure Sensor.
7. Inspect the Intake Manifold Pressure Sensor connector for bent, spread or corroded pins.
   [a] If damage is found, repair the connector as necessary. Refer to section 111.6.1.1.

All information subject to change without notice.
Copyright © 2007 DETROIT DIESEL CORPORATION

https://truckmanualshub.com/

[b] If no damage is found, replace the Intake Manifold Pressure Sensor. Refer to section 111.6.1.1.

111.6.1.1 Verify Repairs

Verify repairs as follows:

1. Turn ignition OFF.
2. Reconnect any electrical connections that were disconnected to perform the diagnosis.
3. Clear codes with DDDL 7.0 or latest version.
4. Start and bring engine up to operating temperature (over 140°F/60°C).
5. Verify operation is satisfactory and no warning lamps illuminate. If warning lamps illuminate, troubleshoot the codes. If assistance is required, call the Detroit Diesel Customer Support Center at 313–592–5800.

All information subject to change without notice.
Copyright © 2007 DETROIT DIESEL CORPORATION

https://truckmanualshub.com/

All information subject to change without notice.
Copyright © 2007 DETROIT DIESEL CORPORATION

https://truckmanualshub.com/

112 SPN 3588 - ETHER START (LOW-SIDE DIGITAL OUTPUT #8) FAULT

Section **Page**

112.1 SPN 3588/FMI 3 112-3
112.2 SPN 3588/FMI 4 112-4
112.3 SPN 3588/FMI 5 112-5

https://truckmanualshub.com/

All information subject to change without notice.
Copyright © 2007 DETROIT DIESEL CORPORATION

https://truckmanualshub.com/

112.1 SPN 3588/FMI 3

SPN 3588/FMI 3 is typically a short to power.

112.1.1 Short to Power Check

Check as follows:

1. Turn the ignition OFF.
2. Disconnect the Ether Start connector.
3. Turn the ignition ON (key On, engine OFF).
4. Measure the voltage between pin C of the Ether Start connector and ground.
   [a] If the voltage is greater than 4.5 volts, repair the short to power between pin C and pin 70 of the 120–pin MCM connector. Refer to section 112.1.1.1.
   [b] If the voltage is less than 4.5 volts, go to step 5.
5. Review steps 1 through 4. If the results are the same, contact the Detroit Diesel Customer Support Center (313–592–5800).

112.1.1.1 Verify Repairs

Verify repairs as follows:

1. Turn ignition OFF.
2. Reconnect any electrical connections that were disconnected to perform the diagnosis.
3. Clear codes with DDDL 7.0 or latest version.
4. Start and bring engine up to operating temperature (over 140°F/60°C).
5. Verify operation is satisfactory and no warning lamps illuminate. If warning lamps illuminate, troubleshoot the codes. If assistance is required, call the Detroit Diesel Customer Support Center at 313–592–5800.

All information subject to change without notice.
Copyright © 2007 DETROIT DIESEL CORPORATION

https://truckmanualshub.com/

112.2 SPN 3588/FMI 4

The diagnosis for SPN 3588/FMI 4 is typically a short to ground.

112.2.1 Short Circuit Check

Check as follows:

1. Disconnect the Ether Start connector at the Ether Injection Relay.
2. Disconnect the 120–pin MCM connector.
3. Measure the resistance between pin C of the Ether Start connector and ground.
   [a] If the resistance is less than 5 Ω, repair the short circuit between pin C of the Ether Start connector and ground. Refer to section 112.2.1.1.
   [b] If the resistance is greater than 5 Ω, replace the Ether Injection Relay.

112.2.1.1 Verify Repairs

Verify repairs as follows:

1. Turn ignition OFF.
2. Reconnect any electrical connections that were disconnected to perform the diagnosis.
3. Clear codes with DDDL 7.0 or latest version.
4. Start and bring engine up to operating temperature (over 140°F/60°C).
5. Verify operation is satisfactory and no warning lamps illuminate. If warning lamps illuminate, troubleshoot the codes. If assistance is required, call the Detroit Diesel Customer Support Center at 313–592–5800.

All information subject to change without notice.
Copyright © 2007 DETROIT DIESEL CORPORATION

https://truckmanualshub.com/

112.3 SPN 3588/FMI 5

This diagnosis for SPN 3588/FMI 5 is typically an open circuit.

112.3.1 Open Circuit Check

Check as follows:

1. Disconnect the Ether Start connector at the Ether Injection Relay.
2. Turn the ignition ON (key ON, engine OFF).
3. Measure the voltage between pin A of the Ether Injection Relay connector and ground.
   [a] If the voltage is greater than 11.5 volts, go to step 4.
   [b] If the voltage is less than 1.5 volts, repair the open between pin A of the Ether Injection Relay connector and pin 91 of the 120–pin connector. Refer to section 112.3.1.1.
4. Check the resistance across the Ether Injection Relay connector.
   [a] If the resistance is less than 5 Ω, repair the open between the Ether Injection Relay connector and pin 70 of the 120–pin MCM connector. Refer to section 112.3.1.1.
   [b] If the resistance is greater than 15 Ω or open, replace the Ether Injection Relay. Refer to section 112.3.1.1.

112.3.1.1 Verify Repairs

Verify repairs as follows:

1. Turn ignition OFF.
2. Reconnect any electrical connections that were disconnected to perform the diagnosis.
3. Clear codes with DDDL 7.0 or latest version.
4. Start and bring engine up to operating temperature (over 140°F/60°C).
5. Verify operation is satisfactory and no warning lamps illuminate. If warning lamps illuminate, troubleshoot the codes. If assistance is required, call the Detroit Diesel Customer Support Center at 313–592–5800.

All information subject to change without notice.
Copyright © 2007 DETROIT DIESEL CORPORATION

https://truckmanualshub.com/

All information subject to change without notice.
Copyright © 2007 DETROIT DIESEL CORPORATION

https://truckmanualshub.com/

113 SPN 3597 - PROPORTIONAL VALVE BANK 1 CIRCUIT

Section **Page**

113.1 SPN 3597/FMI 3 113-3

https://truckmanualshub.com/

All information subject to change without notice.
Copyright © 2007 DETROIT DIESEL CORPORATION

https://truckmanualshub.com/

113.1 SPN 3597/FMI 3

This diagnosis is typically proportional valve bank 1 circuit failed low.

113.1.1 Circuit Check

Check as follows:

1. Turn the ignition ON (key ON, engine OFF).
2. Monitor the active codes.
3. Disconnect the rear valve cover injector harness.
4. Does SPN 3597/FMI 3 become inactive?
   [a] If yes, go to step 5.
   [b] If no, go to step 9.
5. Reconnect the rear valve cover injector harness.
6. Remove the upper valve cover.
7. Disconnect the rear Jake Brake® solenoid.
8. Does SPN 3597/FMI 3 become inactive?
   [a] If yes, replace the rear Jake Brake solenoid. Refer to section 113.1.1.1.
   [b] If no, replace the injector wiring harness. Refer to section 113.1.1.1.
9. Disconnect the turbo actuator.
10. Does SPN 3597/FMI 3 become inactive?
    [a] If yes, replace the turbo actuator. Refer to section 113.1.1.1.
    [b] If no, go to step 11.
11. Disconnect the fan control solenoid.
12. Does SPN 3597/FMI 3 become inactive?
    [a] If yes, replace the fan control solenoid. Refer to section 113.1.1.1.
    [b] If no, go to step 13.
13. Turn the ignition OFF.
14. Disconnect the MCM 120–pin connector.
15. Measure the resistance between pin 91 of the MCM 120–pin connector and ground.
    [a] If the resistance is less than 5 Ω, repair the short to ground between pin 91 of the MCM 120–pin connector and the rear injector valve cover connector, turbo actuator connector and or fan control solenoid. Refer to section 113.1.1.1.
    [b] If the resistance is greater than 5 Ω, go to step 16.
16. Measure the resistance between pin 93 of the MCM 120–pin connector and ground.

All information subject to change without notice.
Copyright © 2007 DETROIT DIESEL CORPORATION

https://truckmanualshub.com/

[a] If the resistance is less than 5 Ω, repair the short to ground between pin 93 of the MCM 120–pin connector and the rear injector valve cover connector, turbo actuator connector and or fan control solenoid. Refer to section 113.1.1.1.

[b] If the resistance is greater than 5 Ω, contact the Detroit Diesel Customer Support Center at 313–592–5800 for MCM replacement.

113.1.1.1 Verify Repairs

Verify repairs as follows:

1. Turn ignition OFF.
2. Reconnect any electrical connections that were disconnected to perform the diagnosis.
3. Clear codes with DDDL 7.0 or latest version.
4. Start and bring engine up to operating temperature (over 140°F/60°C).
5. Verify operation is satisfactory and no warning lamps illuminate. If warning lamps illuminate, troubleshoot the codes. If assistance is required, call the Detroit Diesel Customer Support Center at 313–592–5800.

All information subject to change without notice.
Copyright © 2007 DETROIT DIESEL CORPORATION

https://truckmanualshub.com/

114 SPN 3603 (CPC) - J1939 ESS MESSAGE IS MISSING

Section **Page**

114.1 SPN 3603/FMI 9 114-3

https://truckmanualshub.com/

All information subject to change without notice.
Copyright © 2007 DETROIT DIESEL CORPORATION

https://truckmanualshub.com/

114.1 SPN 3603/FMI 9

This fault is typically the J1939 ESS message is missing.

114.1.1 Missing ESS Message Check

Check as follows:

1. Check for multiple codes:
   [a] If CPC SPN 168/FMI 0/14/18 (Battery Voltage) are present troubleshoot these first.
   [b] If MCM SPN 625/FMI 9 is present, troubleshoot and repair the CAN line.
   [c] If only a “J1939 Error” fault is present, go to step 2.
2. Has the CPC been recently reprogrammed?
   [a] If yes, check the proper configuration of the CPC.
   [b] If no, connect ServiceLink to determine which modules are configured for the vehicle and their communication status. Once this is done, follow the appropriate module communication troubleshooting procedures for the affected module.

All information subject to change without notice.
Copyright © 2007 DETROIT DIESEL CORPORATION

https://truckmanualshub.com/

All information subject to change without notice.
Copyright © 2007 DETROIT DIESEL CORPORATION

https://truckmanualshub.com/

115 SPN 3609 - DPF INLET PRESSURE SENSOR ABOVE OR BELOW NORMAL OPERATING RANGE

Section **Page**

115.1 SPN 3609FMI 2, 3, 4, 10, 20 OR 21 115-3

https://truckmanualshub.com/

All information subject to change without notice.
Copyright © 2007 DETROIT DIESEL CORPORATION

https://truckmanualshub.com/

115.1 SPN 3609FMI 2, 3, 4, 10, 20 OR 21

The troubleshooting procedures for this SPN can be found in the *Aftertreatment System Technician's Guide* (7SE63), refer to Chapter 17.

All information subject to change without notice.
Copyright © 2007 DETROIT DIESEL CORPORATION

https://truckmanualshub.com/

All information subject to change without notice.
Copyright © 2007 DETROIT DIESEL CORPORATION

https://truckmanualshub.com/

116 SPN 3610 - DPF OUTLET PRESSURE SENSOR ABOVE OR BELOW NORMAL OPERATING RANGE

Section **Page**

116.1 SPN 3610/FMI 2, 3, 4, 14, 20 OR 21 116-3

https://truckmanualshub.com/

All information subject to change without notice.
Copyright © 2007 DETROIT DIESEL CORPORATION

https://truckmanualshub.com/

116.1 SPN 3610/FMI 2, 3, 4, 14, 20 OR 21

The troubleshooting procedures for this SPN can be found in the *Aftertreatment System Technician's Guide* (7SE63), refer to Chapter 18.

All information subject to change without notice.
Copyright © 2007 DETROIT DIESEL CORPORATION

https://truckmanualshub.com/

All information subject to change without notice.
Copyright © 2007 DETROIT DIESEL CORPORATION

https://truckmanualshub.com/

117 SPN 3659 – INJECTOR #1 SPILL VALVE NOT OPERATING NORMALLY

Section **Page**

117.1 SPN 3659/FMI 14 117-3

https://truckmanualshub.com/

All information subject to change without notice.
Copyright © 2007 DETROIT DIESEL CORPORATION

https://truckmanualshub.com/

117.1 SPN 3659/FMI 14

This diagnosis is typically an open circuit, short to ground or short to power.

117.1.1 Open Circuit, Short to Ground or Short to Power Check

Check as follows:

1. Check for multiple codes.
   [a] If fault code 168/1 is active , service 168/1 first. Refer to section 32.2.
   [b] If fault 3660/14 and 3661/14 are active in addition to 3659/14, go to step 2.
   [c] If only fault code 3659/14 is active, go to step 10.
2. Turn the ignition OFF.
3. Disconnect the Front Injector Harness 12–pin connector.
4. Inspect the Front Injector Harness 12–pin connector for bent or spread pins, inspect the connector seal for damage (signs of water or oil intrusion).
   [a] If the water or oil intrusion, bent or spread pins are found, repair as necessary. Refer to section 117.1.1.1.
   [b] If connector shows no signs of damage, go to step 5.
5. Measure the resistance between pins 9 and 2 on the valve cover side of the Front Injector Harness. If using J-48671–10, measure between injector #1 pins 3 and 4.
   [a] If the resistance is greater than 3 Ω, replace the under valve cover injector harness. Refer to section 117.1.1.1.
   [b] If the resistance is less than 3 Ω, 6.
6. Disconnect the MCM 120–pin connector.
7. Measure the resistance between pin 11of the MCM 120–pin connector and pin 9 of the Front Injector Harness 12–pin connector.
   [a] If the resistance is less than 3 Ω, go to step 8.
   [b] If the resistance is greater than 3 Ω, repair the open between pin 11 of the MCM 120–pin connector and pin 9 of the Front Injector Harness 12–pin connector. Refer to section 117.1.1.1.
8. Disconnect the negative battery cable.
9. Measure the resistance between the positive battery post and pin 11of the MCM 120–pin connector.
   [a] If the resistance is greater than 3 Ω, contact the Detroit Diesel Customer Support Center at 313–592–5800 for MCM replacement authorization.

All information subject to change without notice.
Copyright © 2007 DETROIT DIESEL CORPORATION

https://truckmanualshub.com/

[b] If the resistance is less than 3 Ω, repair the short to power between battery positive and pin 11 of the MCM 120–pin connector. See Figure 117-1.

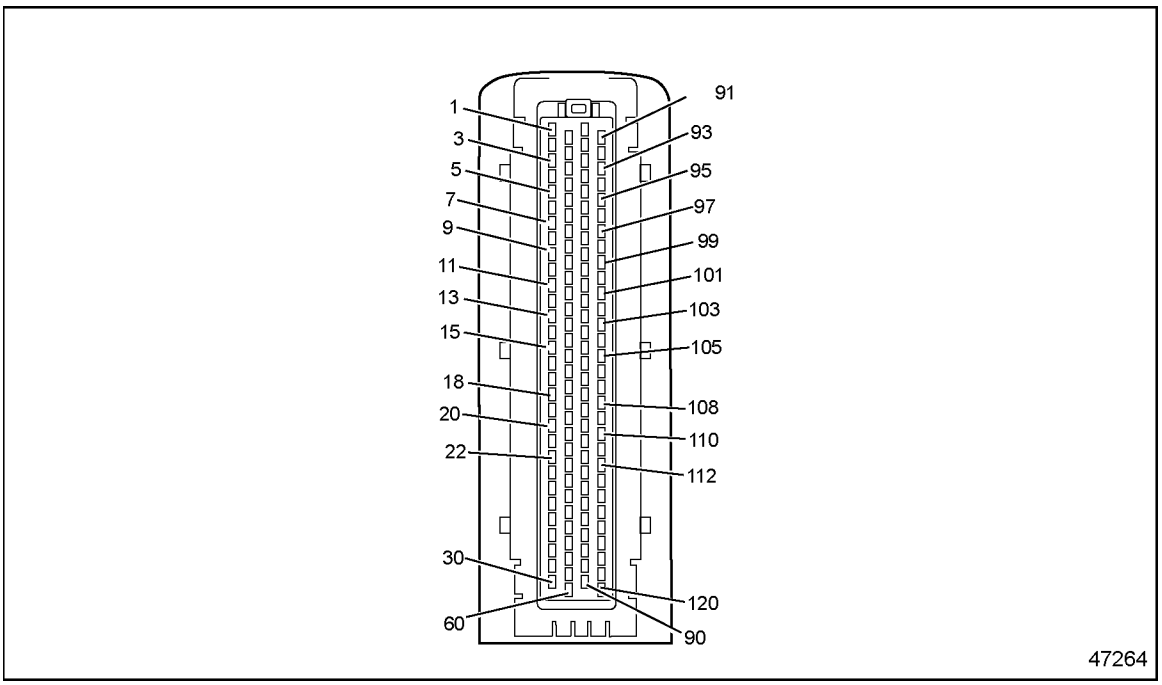

Figure 117-1 120–pin MCM Connector

10. Turn the ignition OFF.
11. Disconnect the Front Injector Harness 12–pin connector.
12. Measure the resistance between pin 10 and pin 1 on the valve cover side of the injector harness. If using J-48671–10, measure between injector #1 pins 3 and 4.
    [a] If the resistance is greater than 3 Ω, 13.
    [b] If the resistance is less than 3 Ω, go to step 18.
13. Remove the upper valve cover.
14. Disconnect injector #1.
15. Measure the resistance between pin 9 on the valve cover side of the Front Injector Harness and pin 3 of the injector #1 harness connector. If usingJ-48671–10, measure between injector #1 pin 3 and the injector #1 harness connector pin 3.
    [a] If the resistance is greater than 3 Ω, replace the under valve cover injector harness. Refer to section 117.1.1.1.
    [b] If the resistance is less than 3 Ω, go to step 16.
16. Measure the resistance between pin 2 on the valve cover side of the Front Injector Harness and pin 4 of the injector #1 harness connector. If using J-48671–10, measure between injector #1 pin 4 and the injector #1 harness connector pin 4.

All information subject to change without notice.
Copyright © 2007 DETROIT DIESEL CORPORATION

https://truckmanualshub.com/

[a] If the resistance is greater than 3 Ω, replace the under valve cover injector harness. Refer to section 117.1.1.1.

[b] If the resistance is less than 3 Ω, go to step 17.

17. Measure the resistance between pin 2 on the valve cover side of the Front Injector Harness and ground. If using J-48671–10, measure between injector #1 pin 4 and ground.

    [a] If the resistance is greater than 3 Ω, replace injector #1. Refer to section 117.1.1.1.

    [b] If the resistance is less than 3 Ω, replace the under valve cover injector harness. Refer to section 117.1.1.1.

18. Measure the resistance between pin 2 on the valve cover side of the Front Injector Harness and ground. If using J-48671–10, measure between injector #1 pin 4 and ground.

    [a] If the resistance is greater than 3 Ω, repair the short to ground between pin 14 of the 120–pin MCM connector and pin 2 of the Front Injector Harness 12–pin connector. Refer to section 117.1.1.1.

    [b] If the resistance is less than 3 Ω, go to step 19.

19. Remove the upper valve cover.
20. Disconnect the injector #1 connector.
21. Measure the resistance between pin 2 on the valve cover side of the Front Injector Harness and ground. If using J-48671–10, measure between injector #1 pin 4 and ground.

    [a] If the resistance is greater than 3 Ω, replace injector #1. Refer to section 117.1.1.1.

    [b] If the resistance is less than 3 Ω, replace the under valve cover injector harness. Refer to section 117.1.1.1.

117.1.1.1 Verify Repairs

Verify repairs as follows:

1. Turn ignition OFF.
2. Reconnect any electrical connections that were disconnected to perform the diagnosis.
3. Clear codes with DDDL 7.0 or latest version.
4. Start and bring engine up to operating temperature (over 140°F/60°C).
5. Verify operation is satisfactory and no warning lamps illuminate. If warning lamps illuminate, troubleshoot the codes. If assistance is required, call the Detroit Diesel Customer Support Center at 313–592–5800.

All information subject to change without notice.
Copyright © 2007 DETROIT DIESEL CORPORATION

https://truckmanualshub.com/

All information subject to change without notice.
Copyright © 2007 DETROIT DIESEL CORPORATION

https://truckmanualshub.com/

118 SPN 3660 - INJECTOR #2 SPILL VALVE NOT OPERATING NORMALLY

Section **Page**

118.1 SPN 3660/FMI 14 118-3

https://truckmanualshub.com/

All information subject to change without notice.
Copyright © 2007 DETROIT DIESEL CORPORATION

https://truckmanualshub.com/

118.1 SPN 3660/FMI 14

This diagnosis is typically an open circuit, short to ground or short to power.

118.1.1 Open Circuit, Short to Ground or Short to Power Check

Check as follows:

1. Check for multiple codes.
   [a] If fault code 168/1 is active , service 168/1 first. Refer to section 32.2.
   [b] If fault 3659/14 and 3661/14 are active in addition to 3660/14, go to step 2.
   [c] If only fault code 3660/14 is active, go to step 10.
2. Turn the ignition OFF.
3. Disconnect the Front Injector Harness 12–pin connector.
4. Inspect the Front Injector Harness 12–pin connector for bent or spread pins, inspect the connector seal for damage (signs of water or oil intrusion).
   [a] If the water or oil intrusion, bent or spread pins are found, repair as necessary. Refer to section 118.1.1.1.
   [b] If connector shows no signs of damage, go to step 5.
5. Measure the resistance between pins 9 and 4 on the valve cover side of the Front Injector Harness. If using J-48671–10, measure between injector #2 pins 3 and 4.
   [a] If the resistance is greater than 3 Ω, replace the under valve cover injector harness. Refer to section 118.1.1.1.
   [b] If the resistance is less than 3 Ω, go to step 6.
6. Disconnect the MCM 120–pin connector.
7. Measure the resistance between pin 11of the MCM 120–pin connector and pin 9 of the Front Injector Harness 12–pin connector.
   [a] If the resistance is less than 3 Ω, go to step 8.
   [b] If the resistance is greater than 3 Ω, repair the open between pin 11 of the MCM 120–pin connector and pin 9 of the Front Injector Harness 12–pin connector. Refer to section 118.1.1.1.
8. Disconnect the negative battery cable.
9. Measure the resistance between the positive battery post and pin 11of the MCM 120–pin connector.
   [a] If the resistance is greater than 3 Ω, contact the Detroit Diesel Customer Support Center at 313–592–5800 for MCM replacement authorization.

All information subject to change without notice.
Copyright © 2007 DETROIT DIESEL CORPORATION

https://truckmanualshub.com/

[b] If the resistance is less than 3 Ω, repair the short to power between battery positive and pin 11 of the MCM 120–pin connector. See Figure 118-1. Refer to section 118.1.1.1.

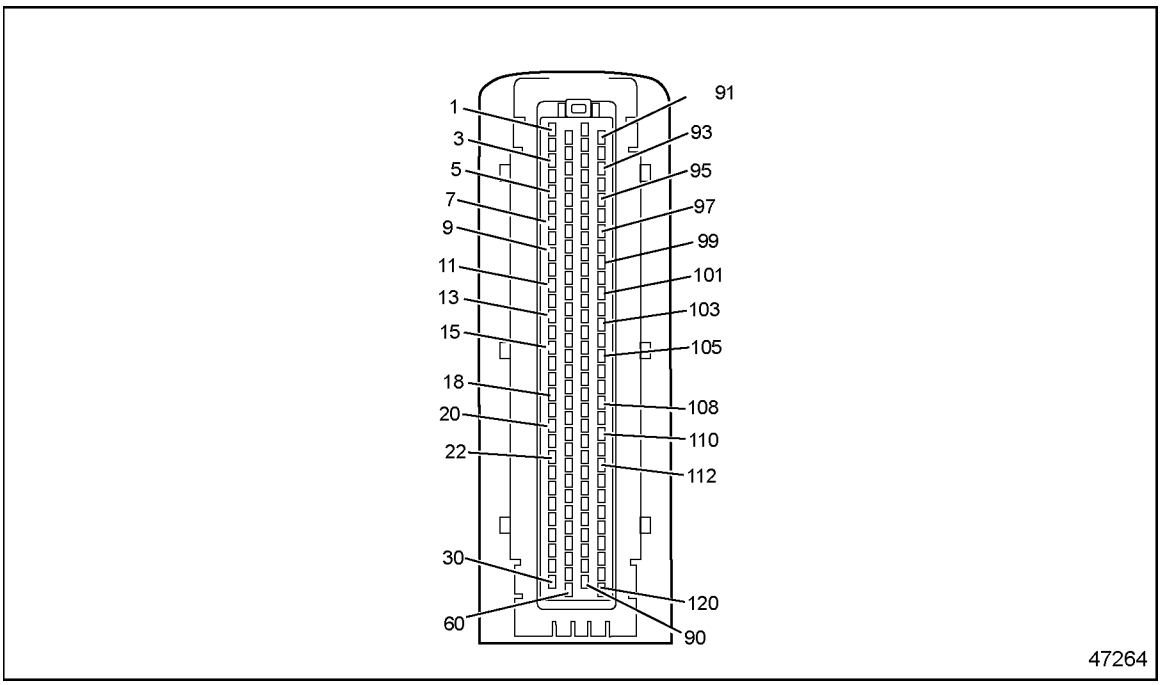

Figure 118-1 120–pin MCM Connector

10. Turn the ignition OFF.
11. Disconnect the Front Injector Harness 12–pin connector.
12. Measure the resistance between pin 9 and pin 4 on the valve cover side of the injector harness. If using J-48671–10, measure between injector #2 pins 3 and 4.
    [a] If the resistance is greater than 3 Ω, go to step 13.
    [b] If the resistance is less than 3 Ω, go to step 18.
13. Remove the upper valve cover.
14. Disconnect injector #2.
15. Measure the resistance between pin 9 on the valve cover side of the Front Injector Harness and pin 3 of the injector #2 harness connector. If using J-48671–10, measure between injector #2 pin 3 and the injector #2 harness connector pin 3.
    [a] If the resistance is greater than 3 Ω, replace the under valve cover injector harness. Refer to section 118.1.1.1.
    [b] If the resistance is less than 3 Ω, go to step 16.
16. Measure the resistance between pin 4 on the valve cover side of the Front Injector Harness and pin 4 of the injector #2 harness connector. If using J-48671–10, measure between injector #2 pin 4 and the injector #2 harness connector pin 4.

All information subject to change without notice.
Copyright © 2007 DETROIT DIESEL CORPORATION

https://truckmanualshub.com/

[a] If the resistance is greater than 3 Ω, replace the under valve cover injector harness. Refer to section 118.1.1.1.

[b] If the resistance is less than 3 Ω, go to step 17.

17. Measure the resistance between pin 4 on the valve cover side of the Front Injector Harness and ground. If using J-48671–10, measure between injector #2 pin 4 and ground.

    [a] If the resistance is greater than 3 Ω, replace injector #2. Refer to section 118.1.1.1.

    [b] If the resistance is less than 3 Ω, replace the under valve cover injector harness. Refer to section 118.1.1.1.

18. Measure the resistance between pin 4 on the valve cover side of the Front Injector Harness and ground. If using J-48671–10, measure between injector #2 pin 4 and ground.

    [a] If the resistance is greater than 3 Ω, repair the short to ground between pin 10 of the 120–pin MCM connector and pin 2 of the Front Injector Harness 12–pin connector. Refer to section 118.1.1.1.

    [b] If the resistance is less than 3 Ω, go to step 19.

19. Remove the upper valve cover.
20. Disconnect the injector #2 connector.
21. Measure the resistance between pin 4 on the valve cover side of the Front Injector Harness and ground. If using J-48671–10, measure between injector #2 pin 4 and ground.

    [a] If the resistance is greater than 3 Ω, replace injector #2. Refer to section 118.1.1.1.

    [b] If the resistance is less than 3 Ω, replace the under valve cover injector harness. Refer to section 118.1.1.1.

118.1.1.1 Verify Repairs

Verify repairs as follows:

1. Turn ignition OFF.
2. Reconnect any electrical connections that were disconnected to perform the diagnosis.
3. Clear codes with DDDL 7.0 or latest version.
4. Start and bring engine up to operating temperature (over 140°F/60°C).
5. Verify operation is satisfactory and no warning lamps illuminate. If warning lamps illuminate, troubleshoot the codes. If assistance is required, call the Detroit Diesel Customer Support Center at 313–592–5800.

All information subject to change without notice.
Copyright © 2007 DETROIT DIESEL CORPORATION

https://truckmanualshub.com/

All information subject to change without notice.
Copyright © 2007 DETROIT DIESEL CORPORATION

https://truckmanualshub.com/

119 SPN 3661 - INJECTOR #3 SPILL VALVE NOT OPERATING NORMALLY

Section **Page**

119.1 SPN 3661/FMI 14 119-3

https://truckmanualshub.com/

All information subject to change without notice.
Copyright © 2007 DETROIT DIESEL CORPORATION

https://truckmanualshub.com/

119.1 SPN 3661/FMI 14

This diagnosis is typically an open circuit, short to ground or short to power.

119.1.1 Open Circuit, Short to Ground or Short to Power Check

Check as follows:

1. Check for multiple codes.
   [a] If fault code 168/1 is active , service 168/1 first. Refer to section 32.2.
   [b] If fault 3659/14 and 3660/14 are active in addition to 3661/14, go to step 2.
   [c] If only fault code 3661/14 is active, go to step 10.
2. Turn the ignition OFF.
3. Disconnect the Front Injector Harness 12–pin connector.
4. Inspect the Front Injector Harness 12–pin connector for bent or spread pins, inspect the connector seal for damage (signs of water or oil intrusion).
   [a] If the water or oil intrusion, bent or spread pins are found, repair as necessary. Refer to section 119.1.1.1.
   [b] If connector shows no signs of damage, go to step 5.
5. Measure the resistance between pins 9 and 6 on the valve cover side of the Front Injector Harness. If using J-48671–10, measure between injector #3 pins 3 and 4.
   [a] If the resistance is greater than 3 Ω, replace the under valve cover injector harness. Refer to section 119.1.1.1.
   [b] If the resistance is less than 3 Ω, go to step 6.
6. Disconnect the MCM 120–pin connector.
7. Measure the resistance between pin 11of the MCM 120–pin connector and pin 9 of the Front Injector Harness 12–pin connector.
   [a] If the resistance is less than 3 Ω, go to step 8.
   [b] If the resistance is greater than 3 Ω, repair the open between pin 11 of the MCM 120–pin connector and pin 9 of the Front Injector Harness 12–pin connector. Refer to section 119.1.1.1.
8. Disconnect the negative battery cable.
9. Measure the resistance between the positive battery post and pin 11of the MCM 120–pin connector.
   [a] If the resistance is greater than 3 Ω, contact the Detroit Diesel Customer Support Center at 313–592–5800 for MCM replacement authorization.

All information subject to change without notice.
Copyright © 2007 DETROIT DIESEL CORPORATION

https://truckmanualshub.com/

[b] If the resistance is less than 3 Ω, repair the short to power between battery positive and pin 11 of the MCM 120–pin connector. See Figure 119-1. Refer to section 119.1.1.1.

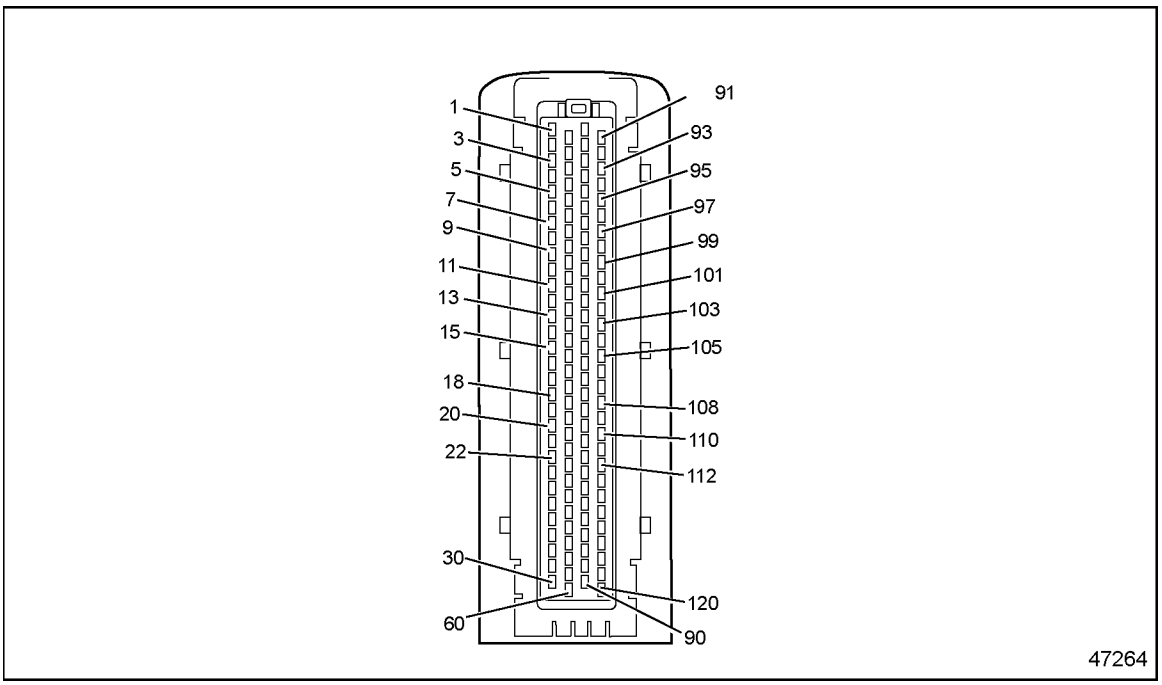

Figure 119-1 120–pin MCM Connector

10. Turn the ignition OFF.
11. Disconnect the Front Injector Harness 12–pin connector.
12. Measure the resistance between pin 9 and pin 6 on the valve cover side of the injector harness. If using J-48671–10, measure between injector #3 pins 3 and 4.
    [a] If the resistance is greater than 3 Ω, go to step 13.
    [b] If the resistance is less than 3 Ω, go to step 18.
13. Remove the upper valve cover.
14. Disconnect injector #3.
15. Measure the resistance between pin 9 on the valve cover side of the Front Injector Harness and pin 3 of the injector #3 harness connector. If usingJ-48671–10, measure between injector #3 pin 3 and the injector #3 harness connector pin 3.
    [a] If the resistance is greater than 3 Ω, replace the under valve cover injector harness. Refer to section 119.1.1.1.
    [b] If the resistance is less than 3 Ω, go to step 16.
16. Measure the resistance between pin 6 on the valve cover side of the Front Injector Harness and pin 4 of the injector #3 harness connector. If using J-48671–10, measure between injector #3 pin 4 and the injector #3 harness connector pin 4.

All information subject to change without notice.
Copyright © 2007 DETROIT DIESEL CORPORATION

https://truckmanualshub.com/

[a] If the resistance is greater than 3 Ω, replace the under valve cover injector harness. Refer to section 119.1.1.1.

[b] If the resistance is less than 3 Ω, go to step 17.

17. Measure the resistance between pin 4 on the valve cover side of the Front Injector Harness and ground. If using J-48671–10, measure between injector #3 pin 4 and ground.

    [a] If the resistance is greater than 3 Ω, replace injector #3. Refer to section 117.1.1.1.

    [b] If the resistance is less than 3 Ω, replace the under valve cover injector harness. Refer to section 119.1.1.1.

18. Measure the resistance between pin 4 on the valve cover side of the Front Injector Harness and ground. If using J-48671–10, measure between injector #3 pin 4 and ground.

    [a] If the resistance is greater than 3 Ω, repair the short to ground between pin 12 of the 120–pin MCM connector and pin 2 of the Front Injector Harness 12–pin connector. Refer to section 119.1.1.1.

    [b] If the resistance is less than 3 Ω, go to step 19.

19. Remove the upper valve cover.
20. Disconnect the injector #3 connector.
21. Measure the resistance between pin 4 on the valve cover side of the Front Injector Harness and ground. If using J-48671–10, measure between injector #3 pin 4 and ground.

    [a] If the resistance is greater than 3 Ω, replace injector #3. Refer to section 119.1.1.1.

    [b] If the resistance is less than 3 Ω, replace the under valve cover injector harness. Refer to section 119.1.1.1.

119.1.1.1 Verify Repairs

Verify repairs as follows:

1. Turn ignition OFF.
2. Reconnect any electrical connections that were disconnected to perform the diagnosis.
3. Clear codes with DDDL 7.0 or latest version.
4. Start and bring engine up to operating temperature (over 140°F/60°C).
5. Verify operation is satisfactory and no warning lamps illuminate. If warning lamps illuminate, troubleshoot the codes. If assistance is required, call the Detroit Diesel Customer Support Center at 313–592–5800.

All information subject to change without notice.
Copyright © 2007 DETROIT DIESEL CORPORATION

https://truckmanualshub.com/

All information subject to change without notice.
Copyright © 2007 DETROIT DIESEL CORPORATION

https://truckmanualshub.com/

120 SPN 3662 - INJECTOR #4 SPILL VALVE NOT OPERATING NORMALLY

Section **Page**

120.1 SPN 3662/FMI 14 120-3

https://truckmanualshub.com/

All information subject to change without notice.
Copyright © 2007 DETROIT DIESEL CORPORATION

https://truckmanualshub.com/

120.1 SPN 3662/FMI 14

This diagnosis is typically an open circuit, short to ground or short to power.

120.1.1 Open Circuit, Short to Ground or Short to Power Check

Check as follows:

1. Check for multiple codes.
   [a] If fault code 168/1 is active , service 168/1 first. Refer to section 32.2.
   [b] If fault 3663/14 and 3664/14 are active in addition to 3662/14, go to step 2.
   [c] If only fault code 3662/14 is active, go to step 9.
2. Turn the ignition OFF.
3. Disconnect the Rear Injector Harness 12–pin connector.
4. Inspect the Rear Injector Harness 12–pin connector for bent or spread pins, inspect the connector seal for damage (signs of water or oil intrusion).
   [a] If the water or oil intrusion, bent or spread pins are found, repair as necessary. Refer to section 120.1.1.1.
   [b] If connector shows no signs of damage, go to step 5.
5. Turn the ignition ON (ignition ON, engine OFF).
6. Measure for voltage between pin 4 on the MCM side of the Rear Injector Harness 12–pin connector and ground.
   [a] If voltage is present, repair the short to power between pin 4 of the Rear Injector Harness 12–pin connector and pin 5 of the 120–pin MCM connector. Refer to section 120.1.1.1.
   [b] If no voltage is present, go to step 7.
7. Measure for voltage between pin 7 on the MCM side of the Rear Injector Harness 12–pin connector and ground.
   [a] If voltage is present, repair the short to power between pin 7 of the Rear Injector Harness 12–pin connector and pin 7 of the 120–pin MCM connector. Refer to section 120.1.1.1.
   [b] If no voltage is present, go to step 8.
8. Measure for voltage between pin 11 on the MCM side of the Rear Injector Harness 12–pin connector and ground.
   [a] If voltage is present, repair the short to power between pin 11 of the Rear Injector Harness 12–pin connector and pin 7 of the 120–pin MCM connector. See Figure 120-1. Refer to section 120.1.1.1

All information subject to change without notice.
Copyright © 2007 DETROIT DIESEL CORPORATION

https://truckmanualshub.com/

[b] If no voltage is present, contact the Detroit Diesel Customer Support Center at 313–592–5800 for MCM replacement authorization.

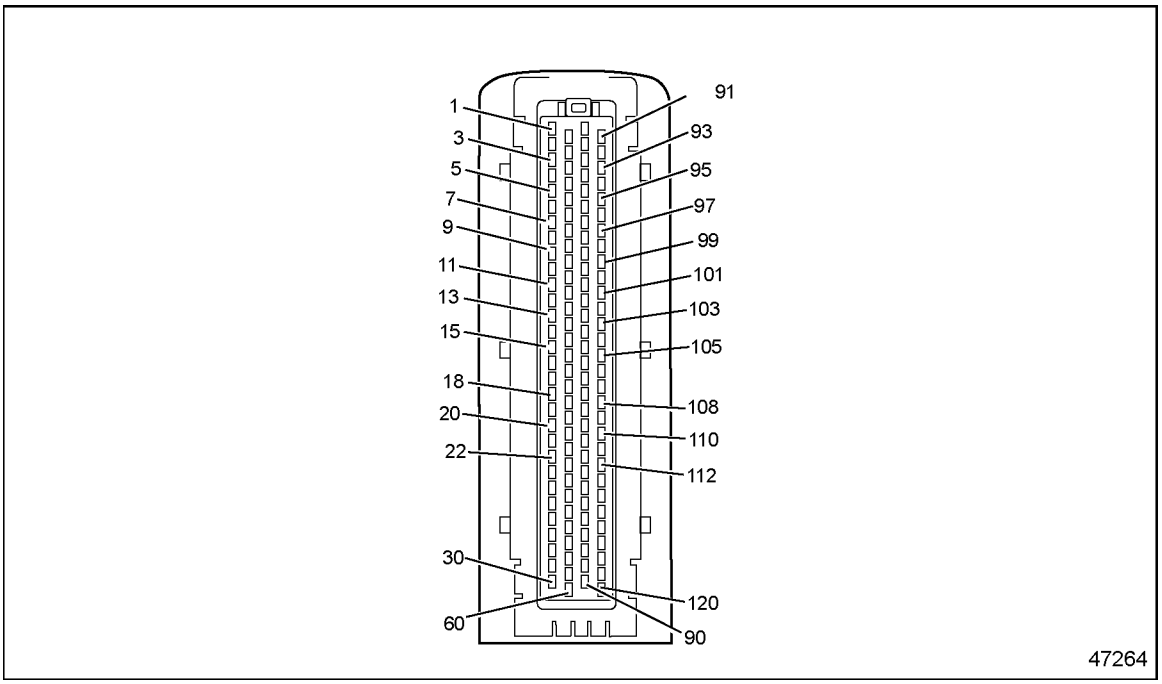

Figure 120-1 120–pin MCM Connector

9. Turn the ignition OFF.
10. Disconnect the Rear Injector Harness 12–pin connector.
11. Measure the resistance between pin 4 and pin 1 on the valve cover side of the injector harness. If usingJ-48671–10, measure between injector #4 pins 3 and 4.
    [a] If the resistance is greater than 3 Ω, go to step 13.
    [b] If the resistance is less than 3 Ω, go to step 12.
12. Measure the resistance between pin 4 on the valve cover side of the Rear Injector Harness and ground. If using J-48671–10, measure between injector #4 pin 3 and ground.
    [a] If the resistance is greater than 3 Ω, repair the open between pin 4 of the Rear Injector Harness and pin 5 of the MCM 120–pin connector. Refer to section 120.1.1.1.
    [b] If the resistance is less than 3 Ω, go to step 13.
13. Remove the upper valve cover.
14. Disconnect injector #4.
15. Measure the resistance between pin 4 on the valve cover side of the Rear Injector Harness and pin 3 of the injector #4 harness connector. If using J-48671–10, measure between injector #4 pin 3 and the injector #4 harness connector pin 3.
    [a] If the resistance is greater than 3 Ω, replace the under valve cover injector harness. Refer to section 120.1.1.1.

All information subject to change without notice.
Copyright © 2007 DETROIT DIESEL CORPORATION

https://truckmanualshub.com/

[b] If the resistance is less than 3 Ω, go to step 16.

16. Measure the resistance between pin 1 on the valve cover side of the Rear Injector Harness and pin 4 of the injector #4 harness connector. If using J-48671–10, measure between injector #4 pin 4 and the injector #4 harness connector pin 4.

    [a] If the resistance is greater than 3 Ω, replace the under valve cover injector harness. Refer to section 120.1.1.1.

    [b] If the resistance is less than 3 Ω, replace injector #4. Refer to section 120.1.1.1

120.1.1.1 Verify Repairs

Verify repairs as follows:

1. Turn ignition OFF.
2. Reconnect any electrical connections that were disconnected to perform the diagnosis.
3. Clear codes with DDDL 7.0 or latest version.
4. Start and bring engine up to operating temperature (over 140°F/60°C).
5. Verify operation is satisfactory and no warning lamps illuminate. If warning lamps illuminate, troubleshoot the codes. If assistance is required, call the Detroit Diesel Customer Support Center at 313–592–5800.

All information subject to change without notice.
Copyright © 2007 DETROIT DIESEL CORPORATION

https://truckmanualshub.com/

All information subject to change without notice.
Copyright © 2007 DETROIT DIESEL CORPORATION

https://truckmanualshub.com/

121 SPN 3663 - INJECTOR #5 SPILL VALVE NOT OPERATING NORMALLY

Section **Page**

121.1 SPN 3663/FMI 14 121-3

https://truckmanualshub.com/

All information subject to change without notice.
Copyright © 2007 DETROIT DIESEL CORPORATION

https://truckmanualshub.com/

121.1 SPN 3663/FMI 14

This diagnosis is typically an open circuit, short to ground or short to power.

121.1.1 Open Circuit, Short to Ground or Short to Power Check

Check as follows:

1. Check for multiple codes.
   [a] If fault code 168/1 is active in addition to 3662/5, service 168/1 first. Refer to section 32.2.
   [b] If fault 3662/14 and 3664/14 are active in addition to 3663/14,. go to step 2.
   [c] If only fault code 3663/14 is active, go to step 9.
2. Turn the ignition OFF.
3. Disconnect the Rear Injector Harness 12–pin connector.
4. Inspect the Rear Injector Harness 12–pin connector for bent or spread pins, inspect the connector seal for damage (signs of water or oil intrusion).
   [a] If the water or oil intrusion, bent or spread pins are found, repair as necessary. .
   [b] If connector shows no signs of damage, go to step 5.
5. Turn the ignition ON (ignition ON, engine OFF).
6. Measure for voltage between pin 4 on the MCM side of the Rear Injector Harness 12–pin connector and ground.
   [a] If voltage is present, repair the short to power between pin 4 of the Rear Injector Harness 12–pin connector and pin 5 of the 120–pin MCM connector. Refer to section 121.1.1.1.
   [b] If no voltage is present, go to step 7.
7. Measure for voltage between pin 7 on the MCM side of the Rear Injector Harness 12–pin connector and ground.
   [a] If voltage is present, repair the short to power between pin 7 of the Rear Injector Harness 12–pin connector and pin 7 of the 120–pin MCM connector. Refer to section 121.1.1.1.
   [b] If no voltage is present, go to step 8.
8. Measure for voltage between pin 11 on the MCM side of the Rear Injector Harness 12–pin connector and ground.
   [a] If voltage is present, repair the short to power between pin 11 of the Rear Injector Harness 12–pin connector and pin 9 of the 120–pin MCM connector. See Figure 121-1. Refer to section 121.1.1.1.

All information subject to change without notice.
Copyright © 2007 DETROIT DIESEL CORPORATION

https://truckmanualshub.com/

[b] If no voltage is present, contact the Detroit Diesel Customer Support Center at 313–592–5800 for MCM replacement authorization.

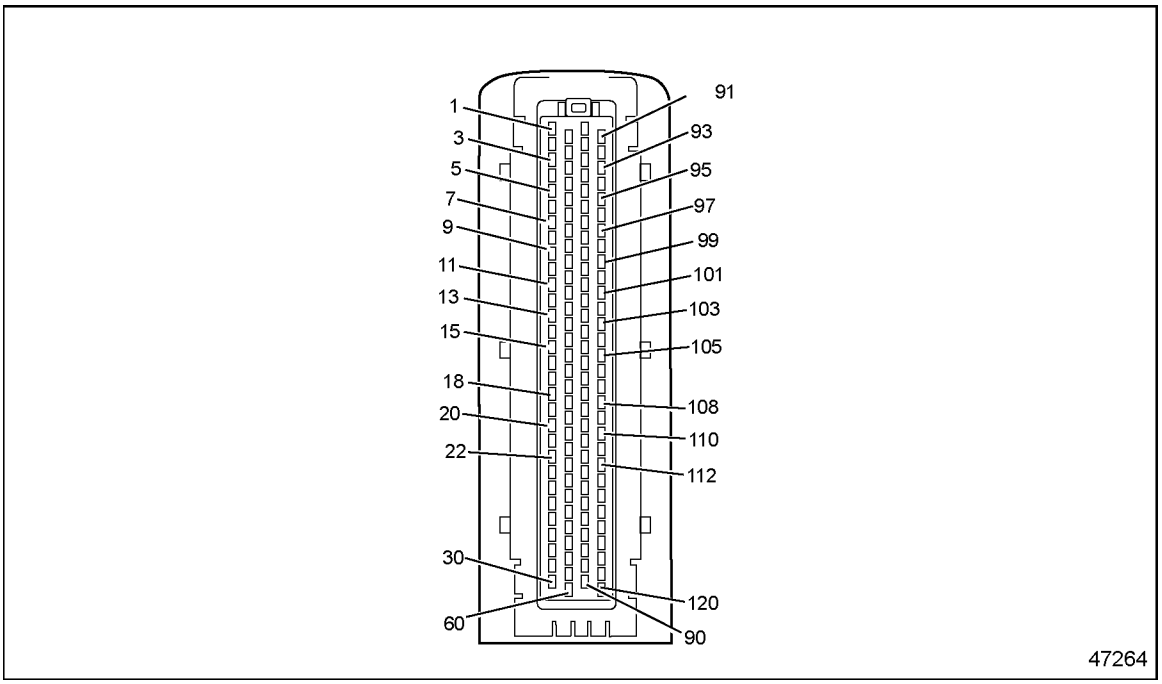

Figure 121-1 120–pin MCM Connector

9. Turn the ignition OFF.
10. Disconnect the Rear Injector Harness 12–pin connector.
11. Measure the resistance between pin 7 and pin 8 on the valve cover side of the injector harness. If using J-48671–10, measure between injector #5 pins 3 and 4.
    [a] If the resistance is greater than 3 Ω, go to step 13.
    [b] If the resistance is less than 3 Ω, go to step 12.
12. Measure the resistance between pin 8 on the valve cover side of the Rear Injector Harness and ground. If using J-48671–10, measure between injector #5 pin 3 and ground.
    [a] If the resistance is greater than 3 Ω, repair the open between pin 8 of the Rear Injector Harness 12–pin connector on the harness side and pin 8 of the 120–pin MCM connector. Refer to section 121.1.1.1.
    [b] If the resistance is less than 3 Ω, go to step 13.
13. Remove the upper valve cover.
14. Disconnect injector #5.
15. Measure the resistance between pin 7 on the valve cover side of the Rear Injector Harness and pin 3 of the injector #5 harness connector. If using J-48671–10, measure between injector #5 pin 3 and the injector #5 harness connector pin 3.

All information subject to change without notice.
Copyright © 2007 DETROIT DIESEL CORPORATION

https://truckmanualshub.com/

[a] If the resistance is greater than 3 Ω, replace the under valve cover injector harness. Refer to section 121.1.1.1.

[b] If the resistance is less than 3 Ω, go to step 16.

16. Measure the resistance between pin 8 on the valve cover side of the Rear Injector Harness and pin 4 of the injector #5 harness connector. If using J-48671–10, measure between injector #5 pin 4 and the injector #5 harness connector pin 4.

    [a] If the resistance is greater than 3 Ω, replace the under valve cover injector harness. Refer to section 121.1.1.1.

    [b] If the resistance is less than 3 Ω, replace injector #5. Refer to section 121.1.1.1.

121.1.1.1 Verify Repairs

Verify repairs as follows:

1. Turn ignition OFF.
2. Reconnect any electrical connections that were disconnected to perform the diagnosis.
3. Clear codes with DDDL 7.0 or latest version.
4. Start and bring engine up to operating temperature (over 140°F/60°C).
5. Verify operation is satisfactory and no warning lamps illuminate. If warning lamps illuminate, troubleshoot the codes. If assistance is required, call the Detroit Diesel Customer Support Center at 313–592–5800.

All information subject to change without notice.
Copyright © 2007 DETROIT DIESEL CORPORATION

https://truckmanualshub.com/

All information subject to change without notice.
Copyright © 2007 DETROIT DIESEL CORPORATION

https://truckmanualshub.com/

122 SPN 3664 - INJECTOR #6 SPILL VALVE NOT OPERATING NORMALLY

Section **Page**

122.1 SPN 3664/FMI 14 122-3

https://truckmanualshub.com/

All information subject to change without notice.
Copyright © 2007 DETROIT DIESEL CORPORATION

https://truckmanualshub.com/

122.1 SPN 3664/FMI 14

This diagnosis is typically an open circuit, short to ground or short to power.

122.1.1 Open Circuit, Short to Ground or Short to Power Check

Check as follows:

1. Check for multiple codes.
   [a] If fault code 168/1 is active in addition to 3662/5, service 168/1 first. Refer to section 32.2.
   [b] If fault 3662/14 and 3663/14 are active in addition to 3664/14, go to step 2.
   [c] If only fault code 3664/5 is active, go to step 9.
2. Turn the ignition OFF.
3. Disconnect the Rear Injector Harness 12–pin connector.
4. Inspect the Rear Injector Harness 12–pin connector for bent or spread pins, inspect the connector seal for damage (signs of water or oil intrusion).
   [a] If the water or oil intrusion, bent or spread pins are found, repair as necessary. Refer to section 122.1.1.1.
   [b] If connector shows no signs of damage, go to step 5.
5. Turn the ignition ON (ignition ON, engine OFF).
6. Measure for voltage between pin 4 on the MCM side of the Rear Injector Harness 12–pin connector and ground.
   [a] If voltage is present, repair the short to power between pin 4 of the Rear Injector Harness 12–pin connector and pin 5 of the 120–pin MCM connector. Refer to section 122.1.1.1.
   [b] If no voltage is present,go to step 7.
7. Measure for voltage between pin 7 on the MCM side of the Rear Injector Harness 12–pin connector and ground.
   [a] If voltage is present, repair the short to power between pin 7 of the Rear Injector Harness 12–pin connector and pin 7 of the 120–pin MCM connector. Refer to section 122.1.1.1.
   [b] If no voltage is present, go to step 8.
8. Measure for voltage between pin 11 on the MCM side of the Rear Injector Harness 12–pin connector and ground.

All information subject to change without notice.
Copyright © 2007 DETROIT DIESEL CORPORATION

https://truckmanualshub.com/

[a] If voltage is present, repair the short to power between pin 11 of the Rear Injector Harness 12–pin connector and pin 9 of the 120–pin MCM connector. See Figure 122-1. Refer to section 122.1.1.1.

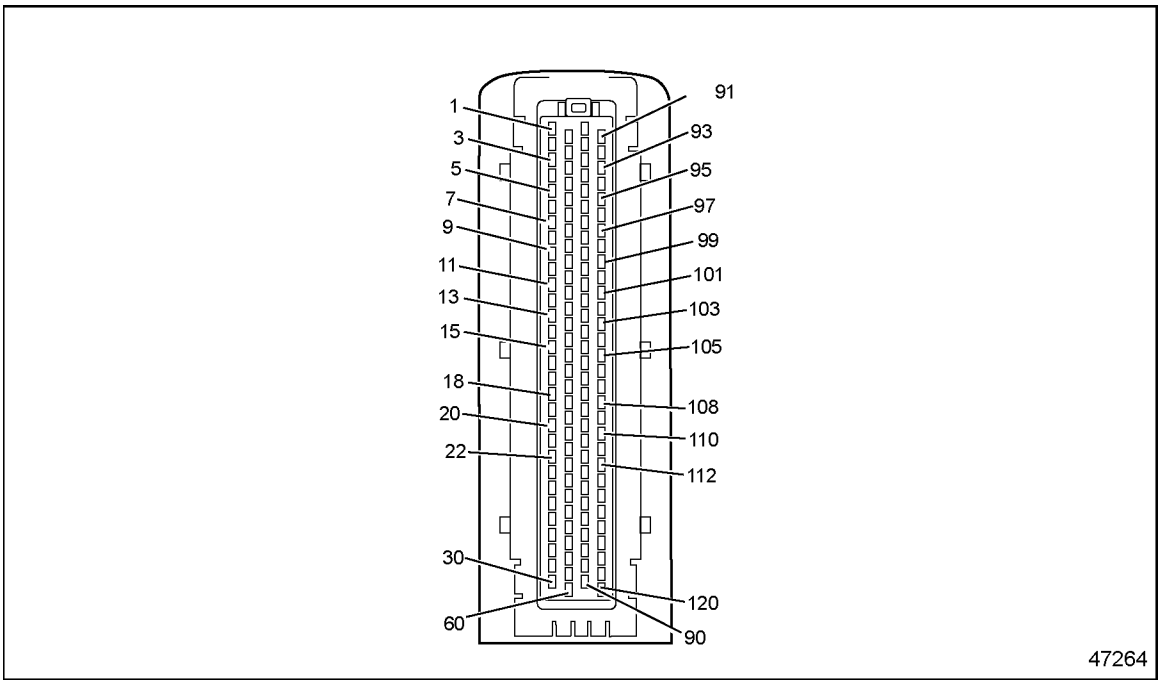

Figure 122-1 120–pin MCM Connector

[b] If no voltage is present, contact the Detroit Diesel Customer Support Center at 313–592–5800 for MCM replacement authorization.

9. Turn the ignition OFF.
10. Disconnect the Rear Injector Harness 12–pin connector.
11. Measure the resistance between pin 11 and pin 12 on the valve cover side of the injector harness. If using J-48671–10, measure between injector #6 pins 3 and 4.
    [a] If the resistance is greater than 3 Ω, go to step 13.
    [b] If the resistance is less than 3 Ω, go to step 12.
12. Measure the resistance between pin 12 on the valve cover side of the Rear Injector Harness and ground. If using J-48671–10, measure between injector #6 pin 3 and ground.
    [a] If the resistance is greater than 3 Ω, repair the open between pin 12 of the Rear Injector Harness 12–pin connector on the harness side and pin 6 of the 120–pin MCM connector. Refer to section 122.1.1.1.
    [b] If the resistance is less than 3 Ω, go to step 13.
13. Remove the upper valve cover.
14. Disconnect injector #6.

All information subject to change without notice.
Copyright © 2007 DETROIT DIESEL CORPORATION

https://truckmanualshub.com/

15. Measure the resistance between pin 11 on the valve cover side of the Rear Injector Harness and pin 3 of the injector #6 harness connector. If using J-48671–10, measure between injector #6 pin 3 and the injector #6 harness connector pin 3.
    [a] If the resistance is greater than 3 Ω, replace the under valve cover injector harness. Refer to section 122.1.1.1.
    [b] If the resistance is less than 3 Ω, go to step 16.
16. Measure the resistance between pin 12 on the valve cover side of the Rear Injector Harness and pin 4 of the injector #6 harness connector. If using J-48671–10, measure between injector #6 pin 4 and the injector #6 harness connector pin 4.
    [a] If the resistance is greater than 3 Ω, replace the under valve cover injector harness. Refer to section 122.1.1.1.
    [b] If the resistance is less than 3 Ω, replace injector #6. Refer to section 122.1.1.1.

122.1.1.1 Verify Repairs

Verify repairs as follows:

1. Turn ignition OFF.
2. Reconnect any electrical connections that were disconnected to perform the diagnosis.
3. Clear codes with DDDL 7.0 or latest version.
4. Start and bring engine up to operating temperature (over 140°F/60°C).
5. Verify operation is satisfactory and no warning lamps illuminate. If warning lamps illuminate, troubleshoot the codes. If assistance is required, call the Detroit Diesel Customer Support Center at 313–592–5800.

All information subject to change without notice.
Copyright © 2007 DETROIT DIESEL CORPORATION

https://truckmanualshub.com/

All information subject to change without notice.
Copyright © 2007 DETROIT DIESEL CORPORATION

https://truckmanualshub.com/

123 SPN 3695 (CPC) - DPF REGEN MUX SWITCH MESSAGES NOT OPERATING NORMALLY

Section **Page**

123.1 SPN 3695/FMI 9 123-3
123.2 SPN 3695/FMI 13 123-4
123.3 SPN 3695/FMI 14 123-4
123.4 SPN 3695/FMI 19 123-5

https://truckmanualshub.com/

All information subject to change without notice.
Copyright © 2007 DETROIT DIESEL CORPORATION

https://truckmanualshub.com/

123.1 SPN 3695/FMI 9

This fault is typically one of the following:

- DPF Regen Inhibit Switch message stopped arriving
- DPF Regen Force Switch message stopped arriving

123.1.1 Missing DPF Regen Inhibit Switch or Force Switch Message Check

Check as follows:

1. Check for multiple codes:
   [a] If CPC SPN 168/FMI 0/14/18 (Battery Voltage) are present troubleshoot and repair these first.
   [b] If MCM SPN 625/FMI 9 is present, troubleshoot and repair the CAN line.
   [c] If only a “J1939 Error” fault is present, go to step 2.
2. Has the CPC been recently reprogrammed?
   [a] If yes, check the proper configuration of the CPC.
   [b] If no, connect ServiceLink to determine which modules are configured for the vehicle and their communication status. Once this is done, follow the appropriate module communication troubleshooting procedures for the affected module.

All information subject to change without notice.
Copyright © 2007 DETROIT DIESEL CORPORATION

https://truckmanualshub.com/

123.2 SPN 3695/FMI 13

This fault is typically one of the following: .

- DPF Regen Inhibit Switch message contains a SNV indicator
- DPF Regen Force Switch message contains a SNV indicator

123.2.1 DPF Regen Inhibit Switch or Force Switch Message SNV Indicator Check

Check as follows:

1. Check for multiple codes:
   [a] If CPC SPN 168/FMI 0/14/18 (Battery Voltage) are present troubleshoot and repair these first.
   [b] If MCM SPN 625/FMI 9 is present, troubleshoot and repair the CAN line.
   [c] If only a “J1939 Error” fault is present, go to step 2.
2. Has the CPC been recently reprogrammed?
   [a] If yes, check the proper configuration of the CPC.
   [b] If no, connect ServiceLink to determine which modules are configured for the vehicle and their communication status. Once this is done, follow the appropriate module communication troubleshooting procedures for the affected module.

123.3 SPN 3695/FMI 14

This fault is typically one of the following:

- DPF Regen Inhibit Switch message not received this ignition cycle
- DPF Regen Force Switch message not received this ignition cycle

123.3.1 DPF Regen Inhibit Switch or Force Switch Message not Received Check

Check as follows:

1. Check for multiple codes:
   [a] If CPC SPN 168/FMI 0/14/18 (Battery Voltage) are present troubleshoot and repair these first.
   [b] If MCM SPN 625/FMI 9 is present, troubleshoot and repair the CAN line.
   [c] If only a “J1939 Error” fault is present, go to step 2.
2. Has the CPC been recently reprogrammed?
   [a] If yes, check the proper configuration of the CPC.

All information subject to change without notice.
Copyright © 2007 DETROIT DIESEL CORPORATION

https://truckmanualshub.com/

[b] If no, connect ServiceLink to determine which modules are configured for the vehicle and their communication status. Once this is done, follow the appropriate module communication troubleshooting procedures for the affected module.

123.4 SPN 3695/FMI 19

This fault is typically one of the following:

- □ DPF Regen Inhibit Switch message contains a data error indicator
- □ DPF Regen Force Switch message contains a data error indicator

123.4.1 DPF Regen Inhibit Switch or Force Switch Message Data Error Indicator Check

Check as follows:

1. Check for multiple codes:
   [a] If CPC SPN 168/FMI 0/14/18 (Battery Voltage) are present troubleshoot and repair these first.
   [b] If MCM SPN 625/FMI 9 is present, troubleshoot and repair the CAN line.
   [c] If only a “J1939 Error” fault is present, go to step 2.
2. Has the CPC been recently reprogrammed?
   [a] If yes, check the proper configuration of the CPC.
   [b] If no, connect ServiceLink to determine which modules are configured for the vehicle and their communication status. Once this is done, follow the appropriate module communication troubleshooting procedures for the affected module.

All information subject to change without notice.
Copyright © 2007 DETROIT DIESEL CORPORATION

https://truckmanualshub.com/

All information subject to change without notice.
Copyright © 2007 DETROIT DIESEL CORPORATION

https://truckmanualshub.com/

124SPN 3719 - SOOT LEVEL ABOVE NORMAL

Section **Page**

124.1 SPN 3719/FMI 0, 15,16,OR 31 124-3

https://truckmanualshub.com/

All information subject to change without notice.
Copyright © 2007 DETROIT DIESEL CORPORATION

https://truckmanualshub.com/

124.1 SPN 3719/FMI 0, 15,16,OR 31

The troubleshooting procedures for this SPN can be found in the *Aftertreatment System Technician's Guide* (7SE63), refer to Chapter 19.

All information subject to change without notice.
Copyright © 2007 DETROIT DIESEL CORPORATION

https://truckmanualshub.com/

All information subject to change without notice.
Copyright © 2007 DETROIT DIESEL CORPORATION

https://truckmanualshub.com/

125 SPN 3798 - PROPORTIONAL VALVE BANK 2 CIRCUIT

Section **Page**

125.1 SPN 3798/FMI 4 125-3

https://truckmanualshub.com/

All information subject to change without notice.
Copyright © 2007 DETROIT DIESEL CORPORATION

https://truckmanualshub.com/

125.1 SPN 3798/FMI 4

This diagnosis is typically proportional valve bank 2 circuit failed low.

125.1.1 Circuit Check

Check as follows:

1. Turn the ignition ON (key ON, engine OFF).
2. Monitor the active codes.
3. Disconnect the front valve cover injector harness.
4. Does SPN 3798/FMI 4 become inactive?
   [a] If yes, go to step 5.
   [b] If no, go to step 9.
5. Reconnect the front valve cover injector harness.
6. Remove the upper valve cover
7. Disconnect the front Jake Brake® solenoid.
8. Does SPN 3798/FMI 4 become inactive?
   [a] If yes, replace the front Jake Brake solenoid. Refer to section 125.1.1.1.
   [b] If no, replace the injector wiring harness. Refer to section 125.1.1.1.
9. Disconnect the EGR valve.
10. Does SPN 3798/FMI 4 become inactive?
    [a] If yes, replace the EGR valve. Refer to section 125.1.1.1.
    [b] If no, go to step 11.
11. Disconnect the Electronic Dosing Valve.
12. Does SPN 3798/FMI 4 become inactive?
    [a] If yes, replace the Electronic Dosing Valve. Refer to section 125.1.1.1.
    [b] If no, go to step 13.
13. Disconnect the Fuel Cutoff Valve.
14. Does SPN 3798/FMI 4 become inactive?
    [a] If yes, replace the Fuel Cutoff Valve. Refer to section 125.1.1.1.
    [b] If no, go to step 15.
15. Turn the ignition OFF.
16. Disconnect the MCM 120–pin connector.
17. Measure the resistance between pin 62 of the MCM 120–pin connector and ground.

All information subject to change without notice.
Copyright © 2007 DETROIT DIESEL CORPORATION

https://truckmanualshub.com/

[a] If the resistance is less than 5 Ω, repair the short to ground between pin 62 of the MCM 120–pin connector and the front injector valve cover connector, EGR Valve, Fuel Cutoff Valve and or Electronic Dosing Valve. Refer to section 125.1.1.1.

[b] If the resistance is greater than 5 Ω, go to step 18.

18. Measure the resistance between pin 64 of the MCM 120–pin connector and ground.

    [a] If the resistance is less than 5 Ω, repair the short to ground between pin 64 of the MCM 120–pin connector and the front injector valve cover connector, EGR Valve, Fuel Cutoff Valve and or Electronic Dosing Valve. Refer to section 125.1.1.1.

    [b] If the resistance is greater than 5 Ω, contact the Detroit Diesel Customer Support Center at 313–592–5800 for MCM replacement.

125.1.1.1 Verify Repairs

Verify repairs as follows:

1. Turn ignition OFF.
2. Reconnect any electrical connections that were disconnected to perform the diagnosis.
3. Clear codes with DDDL 7.0 or latest version.
4. Start and bring engine up to operating temperature (over 140°F/60°C).
5. Verify operation is satisfactory and no warning lamps illuminate. If warning lamps illuminate, troubleshoot the codes. If assistance is required, call the Detroit Diesel Customer Support Center at 313–592–5800.

All information subject to change without notice.
Copyright © 2007 DETROIT DIESEL CORPORATION

https://truckmanualshub.com/

126SPN 3720 - ASH LEVEL ABOVE NORMAL

Section **Page**

126.1 SPN 3720/FMI 15 OR 16 126-3

https://truckmanualshub.com/

All information subject to change without notice.
Copyright © 2007 DETROIT DIESEL CORPORATION

https://truckmanualshub.com/

126.1 SPN 3720/FMI 15 OR 16

The troubleshooting procedures for this SPN can be found in the *Aftertreatment System Technician's Guide* (7SE63), refer to Chapter 20.

All information subject to change without notice.
Copyright © 2007 DETROIT DIESEL CORPORATION

https://truckmanualshub.com/

All information subject to change without notice.
Copyright © 2007 DETROIT DIESEL CORPORATION

https://truckmanualshub.com/

127 SPN 4077 FUEL LINE PRESSURE SENSOR CIRCUIT FAULT

Section **Page**

127.1 SPN 4077/FMI 3, 4 OR 14 127-3

https://truckmanualshub.com/

All information subject to change without notice.
Copyright © 2007 DETROIT DIESEL CORPORATION

https://truckmanualshub.com/

127.1 SPN 4077/FMI 3, 4 OR 14

The troubleshooting procedures for this SPN can be found in the *Aftertreatment System Technician's Guide* (7SE63), refer to Chapter 21.

All information subject to change without notice.
Copyright © 2007 DETROIT DIESEL CORPORATION

https://truckmanualshub.com/

All information subject to change without notice.
Copyright © 2007 DETROIT DIESEL CORPORATION

https://truckmanualshub.com/

128SPN 4228 - VGT TEMPERATURE WARNING

Section **Page**

128.1 SPN 4228/FMI 15 128-3
128.2 SPN 4228/FMI 16 128-4

https://truckmanualshub.com/

All information subject to change without notice.
Copyright © 2007 DETROIT DIESEL CORPORATION

https://truckmanualshub.com/

128.1 SPN 4228/FMI 15

This fault typically results from high load operation in high ambients. No action is necessary (this is a “silent” fault, the fan will be turned on).

NOTE:
This fault is a concern only if the fan on times are excessive but coolant temperatures are in the normal operating range.

128.1.1 Temperature Warning Check

Check as follows:

1. Check for multiple codes:
   [a] If SPN 110/FMI 0 is also present, repair the cooling system first. Refer to section 128.1.1.1.
   [b] If only SPN 4228/FMI 15 is present, go to step 2.
2. Visually inspect the turbo for signs of exhaust leak in the area of the actuator.
   [a] If exhaust leaks are present, repair as necessary. Refer to section 128.1.1.1.
   [b] If no exhaust leaks are present, go to step3.
3. Remove and inspect turbo and actuator cooler lines and fittings.
   [a] If coolant lines or fittings are kinked or plugged, repair/replace the damaged component. Refer to section 128.1.1.1.
   [b] If coolant lines are not damaged and problem still persists, contact the Detroit Diesel Customer Support Center at 313–592–5800.

128.1.1.1 Verify Repairs

Verify repairs as follows:

1. Turn ignition OFF.
2. Reconnect any electrical connections that were disconnected to perform the diagnosis.
3. Clear codes with DDDL 7.0 or latest version.
4. Start and bring engine up to operating temperature (over 140°F/60°C).
5. Verify operation is satisfactory and no warning lamps illuminate. If warning lamps illuminate, troubleshoot the codes. If assistance is required, call the Detroit Diesel Customer Support Center at 313–592–5800.

All information subject to change without notice.
Copyright © 2007 DETROIT DIESEL CORPORATION

https://truckmanualshub.com/

128.2 SPN 4228/FMI 16

This fault typically arises from operating under extreme load and high ambient temperatures and/or high altitude operation.

128.2.1 Temperature Warning Check128.1.1.1.

Check as follows:

1. Check for multiple codes:
   [a] If SPN 110/FMI 0 is also present, repair the cooling system first. Refer to section 128.2.1.1.
   [b] If only SPN 4228/FMI 15 is present, go to step 2.
2. Visually inspect the turbo for signs of exhaust leak in the area of the actuator.
   [a] If exhaust leaks are present, repair as necessary. Refer to section 128.2.1.1.
   [b] If no exhaust leaks are present, go to step 3.
3. Remove and inspect turbo and actuator cooler lines and fittings.
   [a] If coolant lines or fittings are kinked or plugged, repair/replace the damaged component. Refer to section 128.2.1.1.
   [b] If coolant lines are not damaged and problem still persists, contact the Detroit Diesel Customer Support Center at 313–592–5800.

128.2.1.1 Verify Repairs

Verify repairs as follows:

1. Turn ignition OFF.
2. Reconnect any electrical connections that were disconnected to perform the diagnosis.
3. Clear codes with DDDL 7.0 or latest version.
4. Start and bring engine up to operating temperature (over 140°F/60°C).
5. Verify operation is satisfactory and no warning lamps illuminate. If warning lamps illuminate, troubleshoot the codes. If assistance is required, call the Detroit Diesel Customer Support Center at 313–592–5800.

All information subject to change without notice.
Copyright © 2007 DETROIT DIESEL CORPORATION

https://truckmanualshub.com/

129 DDEC VI SCHEMATICS

Section **Page**

129.1 CRUISE CONTROL 129-3
129.2 FAN CONTROL 129-4
129.3 OPTIMIZED IDLE 129-10

https://truckmanualshub.com/

All information subject to change without notice.
Copyright © 2007 DETROIT DIESEL CORPORATION

https://truckmanualshub.com/

129.1 CRUISE CONTROL

See Figure 129-1 for a diagram of the Cruise Control circuit.

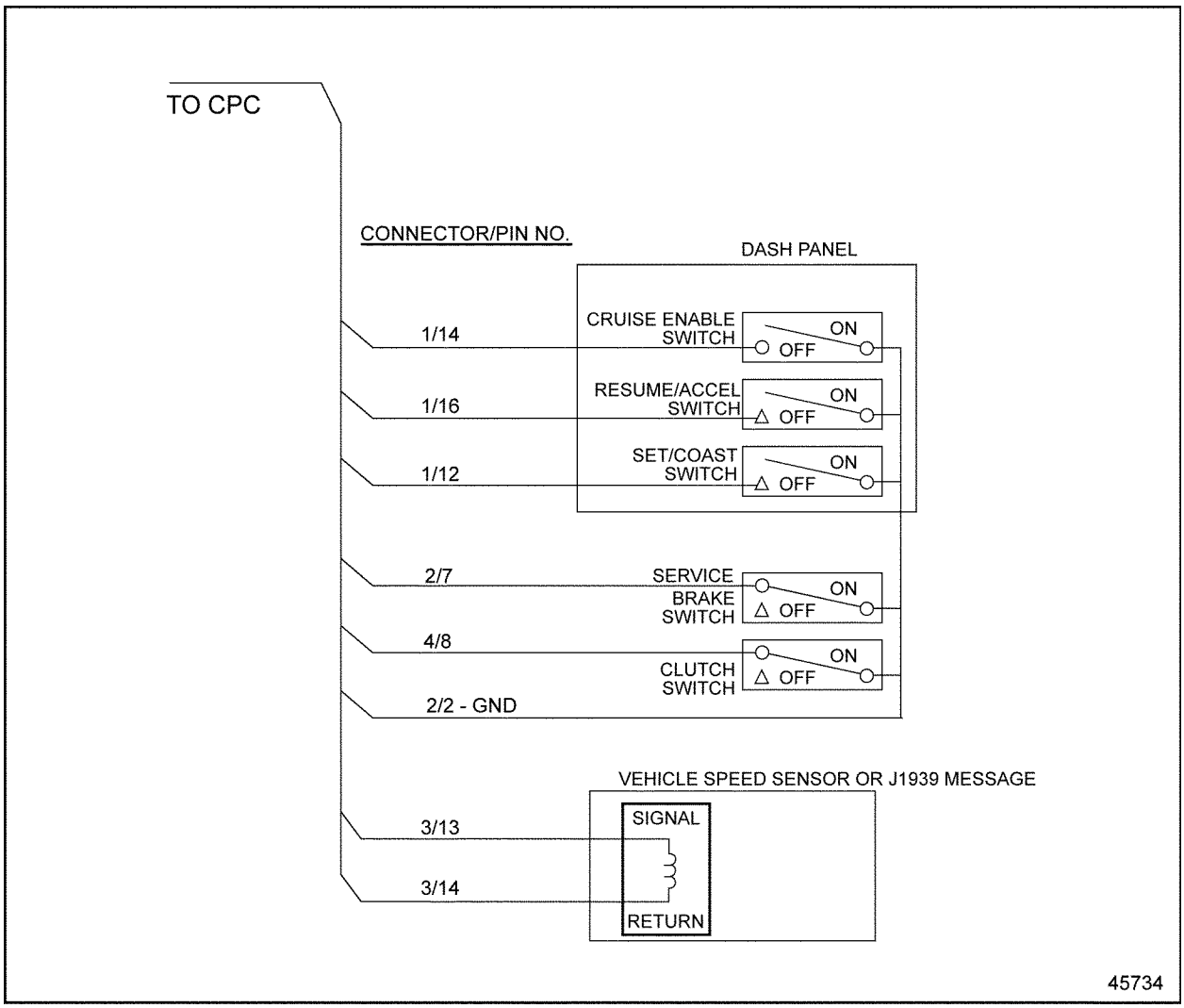

Figure 129-1 Cruise Control Circuit

All information subject to change without notice.
Copyright © 2007 DETROIT DIESEL CORPORATION

https://truckmanualshub.com/

129.2 FAN CONTROL

DDEC VI provides fan control for four different fan configurations.

129.2.1 Single-speed Fan – Fan Type 4

This fan type must be used if the current exceeds 2A. See Figure 129-2.

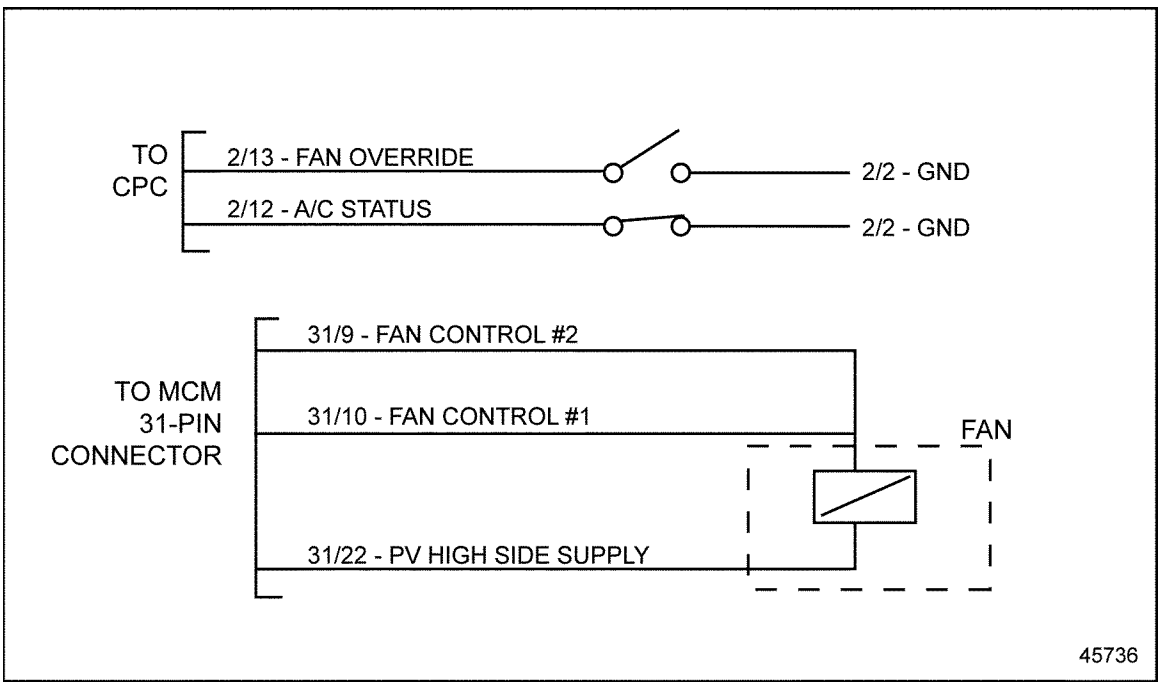

Figure 129-2 Single-speed Fan – Fan Type 4

All information subject to change without notice.
Copyright © 2007 DETROIT DIESEL CORPORATION

https://truckmanualshub.com/

129.2.2 Single-speed Fan – Fan Type 7

This fan type can be used if the current is less than 2.0 A. See Figure 129-3.

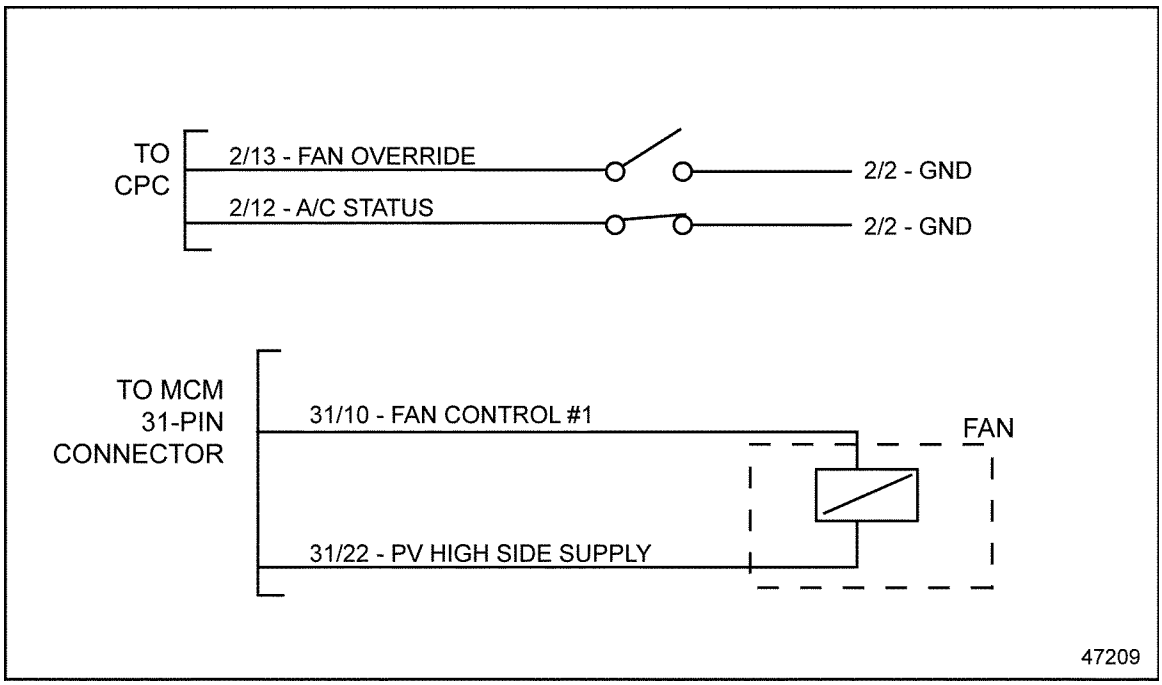

Figure 129-3 Single-speed Fan – Fan Type 7

All information subject to change without notice.
Copyright © 2007 DETROIT DIESEL CORPORATION

https://truckmanualshub.com/

129.2.3 Dual Fan – Fan Type 6

The two fans are independent of one another and are controlled by different conditions. Both fans will be activated when either the Fan Control Override is enabled or when the conditions are met for Fan Engine Brake. See Figure 129-4.

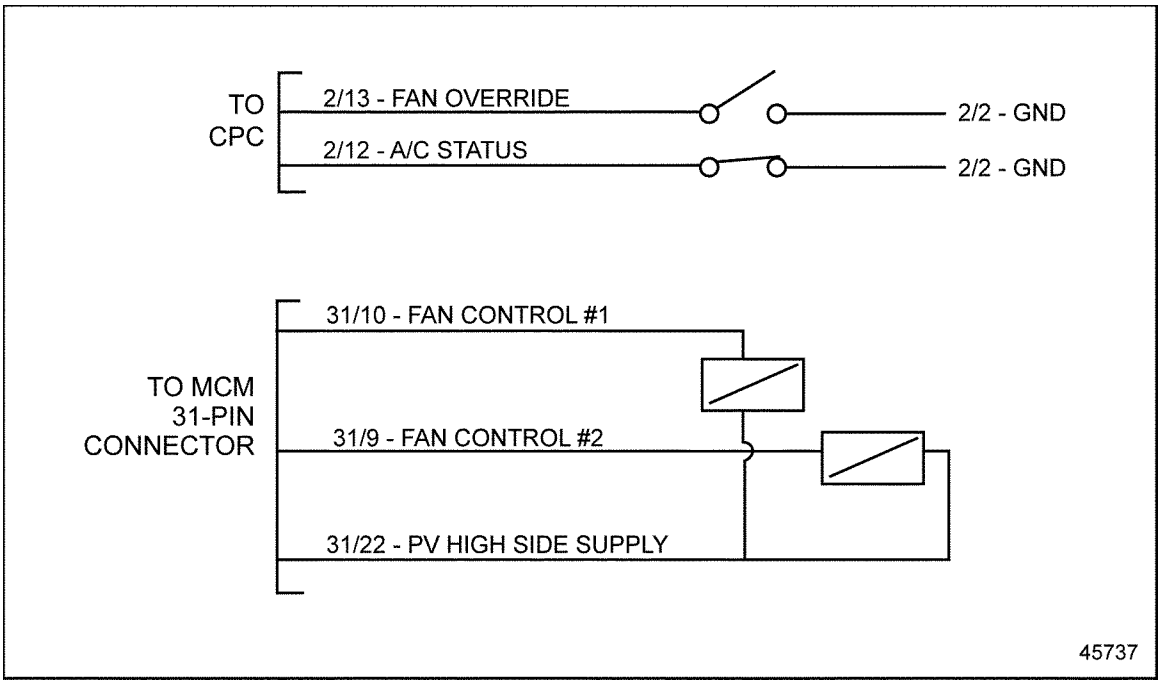

Figure 129-4 Dual Fan – Fan Type 6

All information subject to change without notice.
Copyright © 2007 DETROIT DIESEL CORPORATION

https://truckmanualshub.com/

129.2.4 Two-speed Fan – Fan Type 0 or 1

This configuration uses two digital outputs, Fan Control #1 and Fan Control #2, to drive a two-speed fan. See Figure 129-5.

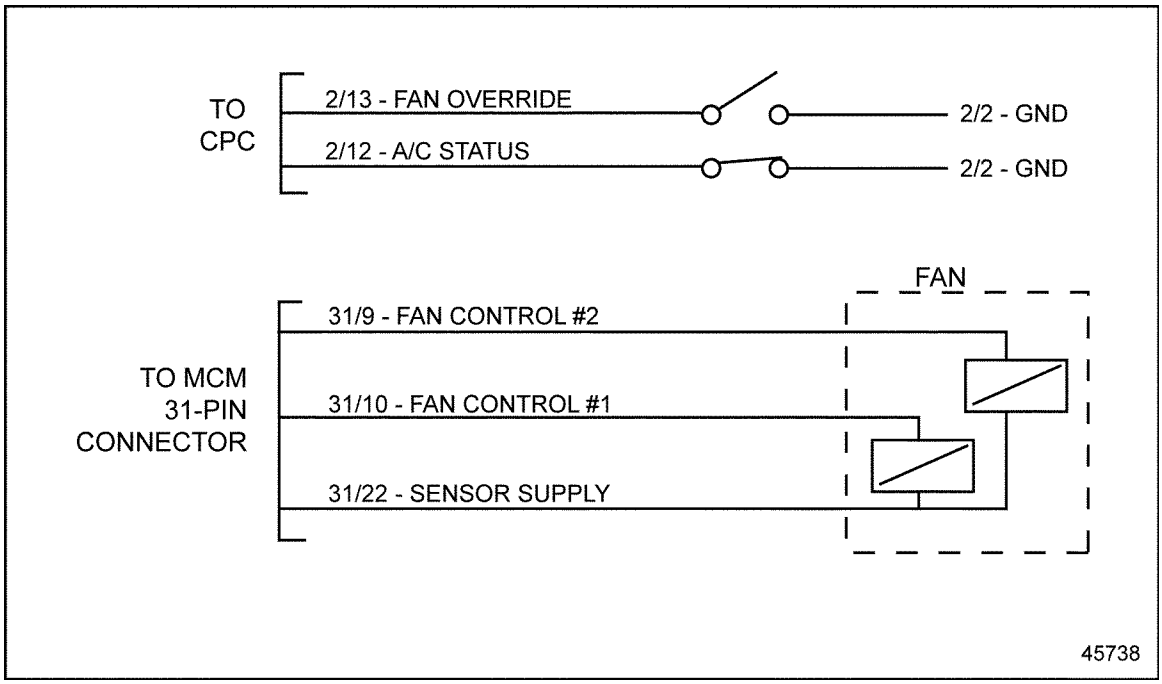

Figure 129-5 Two-speed Fan (Fan type 0 or 1)

All information subject to change without notice.
Copyright © 2007 DETROIT DIESEL CORPORATION

https://truckmanualshub.com/

129.2.5 Variable Speed Fan without Fan Speed Feedback – Fan Type 3

DDEC VI uses a pulse width modulated (PWM) output to drive a variable speed fan. See Figure 129-6

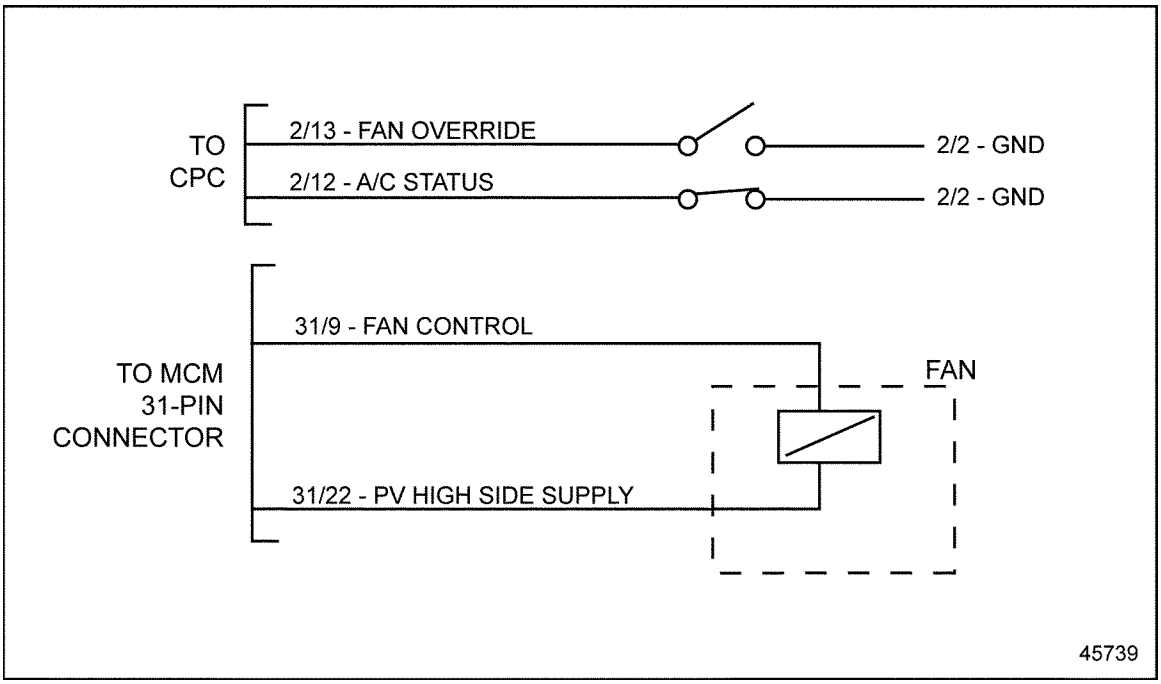

Figure 129-6 Variable Speed Fan without Fan Speed Feedback (Fan Type 3)

All information subject to change without notice.
Copyright © 2007 DETROIT DIESEL CORPORATION

https://truckmanualshub.com/

129.2.6 Variable Speed Fan with Fan Speed Feedback - Fan Type 2

DDEC VI uses a pulse width modulated (PWM) output to drive a variable speed fan. See Figure 129-7.

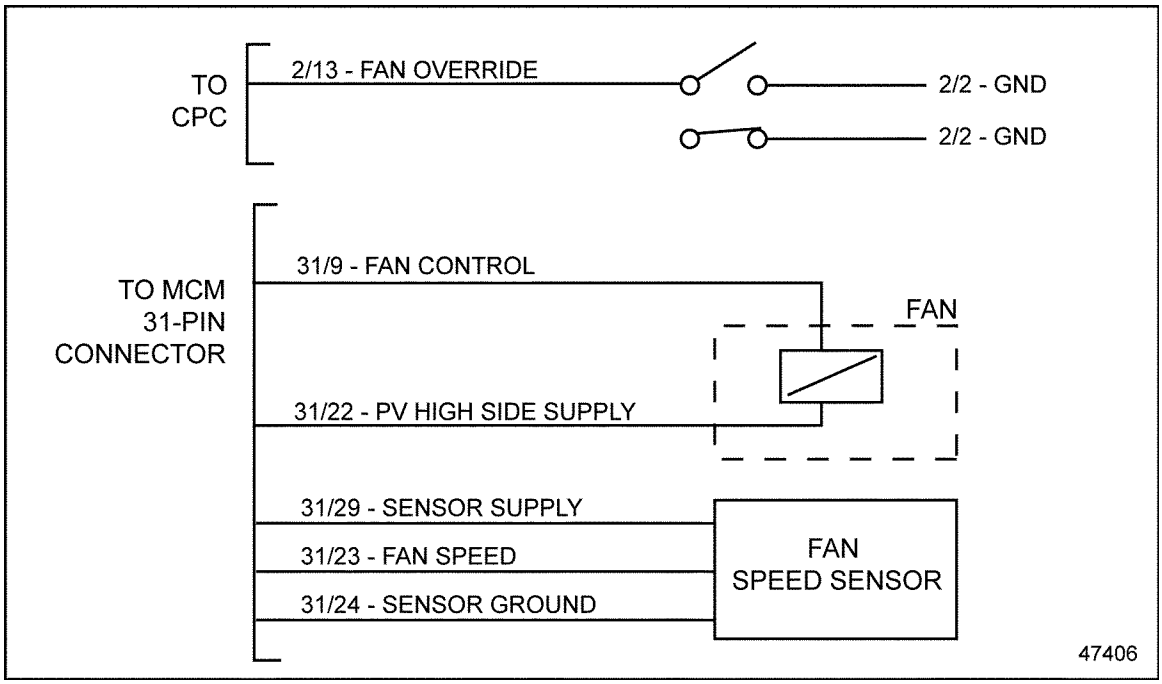

Figure 129-7 Variable Speed Fan with Fan Speed Feedback (Fan Type 2)

All information subject to change without notice.
Copyright © 2007 DETROIT DIESEL CORPORATION

https://truckmanualshub.com/

129.3 OPTIMIZED IDLE

See Figure 129-8 for the Optimized Idle overall system schematic.

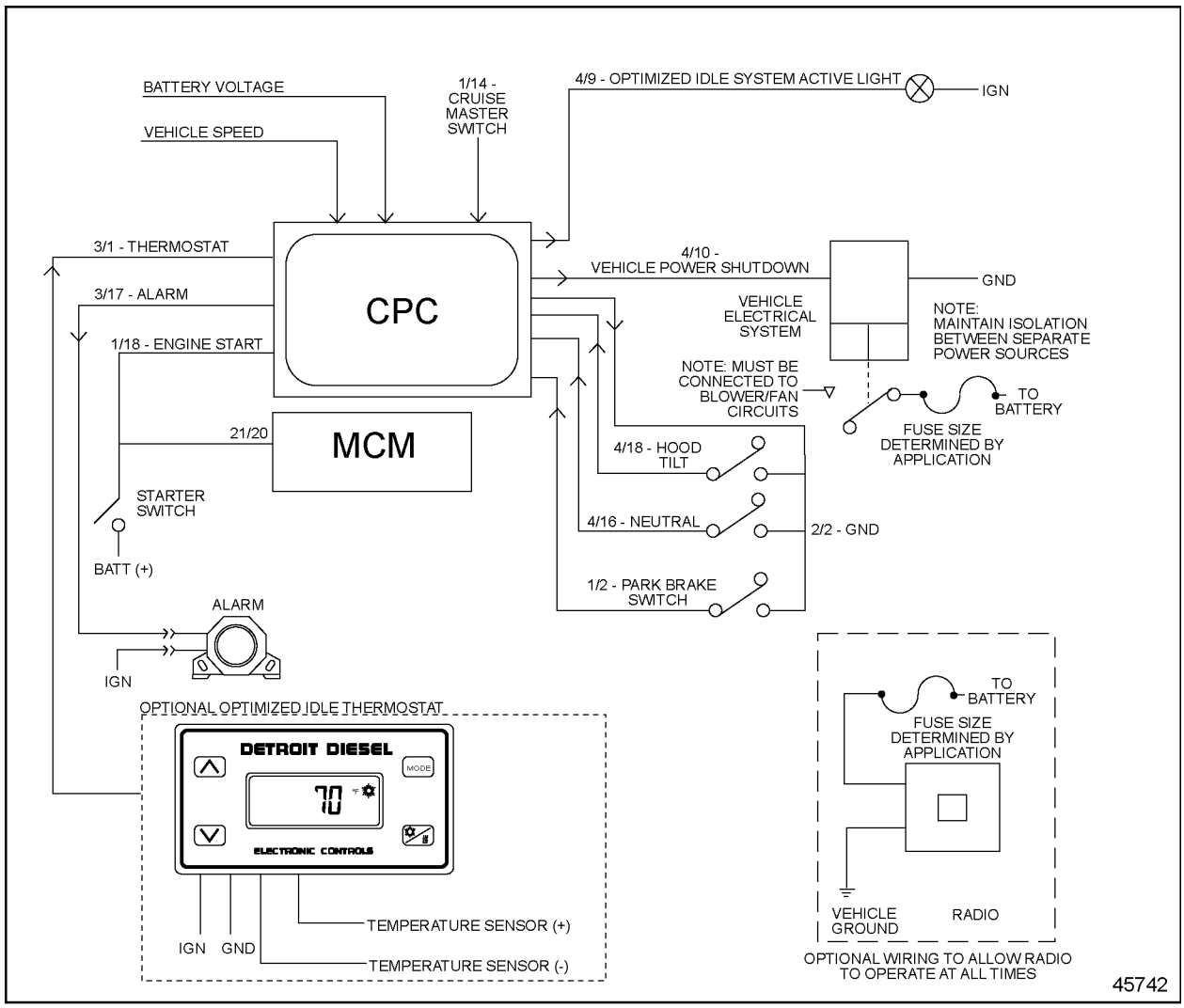

Figure 129-8 Optimized Idle System

All information subject to change without notice.
Copyright © 2007 DETROIT DIESEL CORPORATION

INDEX

A

Abnormal Radiator Coolant Flow, 13-19
Abnormal Radiator Coolant Flow Resolution, 13-19
Test Engine with Resolved Radiator Coolant Flow, 13-20
Aerated Fuel, 11-4–10-6, 4-11–12-12
Aerated Fuel Repair, 3-5
Test the Engine with Repair, 3-5
Aerated Fuel Resolution, 10-6, 4-11–12-12
Test Engine with Aerated Fuel Resolution, 4-11
Test the Engine with Aerated Fuel Resolution, 10-6, 12-13
Test Engine with Aerated Fuel Resolution, 11-4

C

Combustion Gases in Coolant, 13-13
Cylinder Head Gasket Replacement, 13-18
Cylinder Compression Test, 13-13
Test Engine with Replaced Cylinder Head Gasket, 13-18
Common Powertrain Controller (CPC), 17-11
Connectors, 17-19
Environmental conditions, 17-13
Vehicle Interface Harness (VIH), 17-14
Conduit and Loom, 17-35
Criteria, 17-35
Connectors
CPC connectors, 17-19
Deutsch connector, 17-20
Corroded or Damaged Battery Terminals, 4-4
Corroded or Damaged Battery Terminal Repair, 4-4
Test with Repaired Battery Terminals, 4-4

D

DDEC VI System--How It Works, 17-3
Harnesses, 17-3
Defective Air Compressor, 7-4, 6-6
Air Compressor Removal, 6-7

All information subject to change without notice.
Copyright © 2007 DETROIT DIESEL CORPORATION

https://truckmanualshub.com/

Test Engine with Repaired Air Compressor, 6-7
Air Compressor Repair, 7-4
Test Engine with Repaired Air Compressor, 7-5
Defective Bypass Valve, 2-12
Oil Filter Adaptor Repair, 2-12
Test Engine with Repaired Oil Filter Adaptor, 2-12
Defective Coolant Hoses, 13-7
Coolant System Hoses Replacement, 13-7
Test Engine with Replaced Coolant Hoses, 13-7
Defective Crankshaft Main Bearing Shells, 2-15
Crankshaft Main Bearing Shell Repair, 2-15
Test Engine with New Crankshaft Main Bearing Shells, 2-15
Defective Fuel Pump, 10-4
Drive Hubs and Coupling Replacement, 10-4
Engine Test with Replaced Drive Hubs or Replaced Coupling, 10-5
Defective Magnetic Switch, 5-4–4-5
Magnetic Switch Replacement, 4-5
Test Engine with New Magnetic Switch, 5-4
Test Engine with Replaced Magnetic Switch, 4-5
Defective Oil Pump Assembly, 2-16
Oil Pump Assembly Repair, 2-16
Test Engine with Repaired Oil Pump Assembly, 2-16
Defective Pickup Screen Tube and Screen Assembly, 2-14
Pickup Screen Tube and Screen Assembly Repair, 2-14
Test Engine with Repaired Pickup Screen Tube and Screen Assembly, 2-14
Defective Pressure Relief Valve, 2-13
Pressure Relief Valve Repair, 2-13
Test Engine with Repaired Relief Valve, 2-13
Defective Starter, 5-5–4-6
Starter Replacement, 4-6
Test Engine with New Starter, 5-5
Test Engine with Replaced Starter, 4-7
Defective Turbocharger, 9-3, 7-6, 6-8–8-9
Turbocharger Replacement, 9-4, 7-6, 6-8–8-9
Test Engine with New Turbocharger, 7-6, 6-8
Test Engine with Replaced Turbocharger, 9-4, 8-9

All information subject to change without notice.
Copyright © 2007 DETROIT DIESEL CORPORATION

https://truckmanualshub.com/

Detecting Internal Fuel Leaks, 2-17
Fuel Leak Tests (E3 Injectors Installed/Engine Off), 2-17
Fuel Pressure Test, 2-18
Prepare Test Fuel, 2-17
Deutsch Connectors, 17-22
Deutsch Terminals
Installation, 17-22
Removal, 17-24
Discharged Battery, 5-3
Discharged Battery Resolution, 5-3
Test Engine with New Battery, 5-3

E

Empty Fuel Tank, 4-3
Low Fuel Level Resolution, 4-3
Test Engine with Filled Tank, 4-3
External Oil Leaks, 6-3
Engine Oil Leak Repair, 6-3
Test Engine with Repairs Made to Correct Oil Leaks, 6-3

F

Fan Belts are Incorrectly Adjusted, 13-8
Belt Tension Resolution, 13-8
Test Engine with Correct Belt Tension, 13-8
Faulty Electronic Control Unit, 3-7
Faulty MCM Repair, 3-7
Verification of Repair, 3-7
Faulty Exhaust System, 8-7, 12-20
Engine Exhaust System Resolution, 8-7, 12-20
Test the Engine with Replaced Exhaust System, 8-7, 12-21
Faulty Fuel Injector, 3-6, 8-8–10-9
Faulty Fuel Injector Repair, 3-6, 8-8
Verification of Repair, 3-6, 8-8
Test the Engine with Repaired Fuel Injector, 10-9
Faulty Oil Pressure Gauge Sensor, 2-6
Oil Pressure Gage Sensor Replacement, 2-6

All information subject to change without notice.
Copyright © 2007 DETROIT DIESEL CORPORATION

https://truckmanualshub.com/

Test the Engine with Replaced Oil Pressure Gage Sensor, 2-6
Faulty Pressure Control Cap, 13-6
Pressure Control Cap Resolution, 13-6
Test Engine with Replaced Pressure Control Cap, 13-6
Faulty Thermostats, 14-3, 13-10
Thermostat Replacement, 14-3, 13-10
Test Engine with New Thermostat, 14-3, 13-10
Faulty Water Pump, 13-11
Water Pump Impeller Replacement, 13-12
Test Engine with Repaired Water Pump, 13-12
Fuel Pump, 4-10
Drive Hubs and Coupling Replacement, 4-10
Engine Test with Replaced Drive Hubs or Replaced Coupling, 4-10
Fuel Supply Valve, 4-8
Fuel Supply Valve Repair, 4-8
Test Engine with Fuel Supply Valve Open, 4-8

G

Guide Scope and Use, 1-4
Electronic Troubleshooting, 1-5
Mechanical Troubleshooting, 1-4

H

High Altitude Operation, 12-22
High Fuel Pressure, 12-13
Fuel Pressure Regulator Replacement, 12-15
Test the Engine with Fuel Pressure Regulator, 12-15
High fuel Temperature Return
High fuel Temperature Resolution, 11-6
Test the Engine with Replaced Oil Filters, 11-6
High Fuel Temperature Return, 11-6, 12-16
High Fuel Temperature Resolution, 12-16
Test the Engine with Resolved High Fuel Temperature, 12-16
High Inlet Air Temperature, 12-21
Radiator Fan, Drive and Shroud Replacement, 12-21
Test the Engine with Radiator Fan, Fan Drive, or Fan Shroud Replacement, 12-22

All information subject to change without notice.
Copyright © 2007 DETROIT DIESEL CORPORATION

https://truckmanualshub.com/

I

Improper Engine Coolant Level, 13-3
Improper Coolant Level Resolution, 13-3
Pressure Test the Cooling System, 13-3
Test Engine with Coolant Leaks Repaired, 13-4
Test Engine with Proper Coolant Level, 13-3
Improper Engine Oil Level, 2-3
Low Engine Oil Level Resolution, 2-3
Test for Proper Engine Oil Level, 2-3
Improper Grade, 10-3
Improper Grade, 10-3
Test the Engine with New Fuel Oil, 10-3
Improper Injector Calibration Setting, 10-7–11-8
Improper Injector Setting Repair, 11-8
Test Engine with Corrected Injector Setting, 10-7
Improper Lubricating Oil Viscosity, 2-4
Lubricating Oil Replacement, 2-4
Test Engine with Replaced Lubricating Oil, 2-4
Improper Valve Clearance or Injector Height, Worn or Damaged Camshaft Lobes and Rollers, 10-8
Test Engine with Corrected Valve Clearance or Injector Height, Worn or Damaged Camshaft Lobes and Rollers, 10-8
Incorrect Camshaft Timing, 12-24
Engine Timing Resolution, 12-24
Test Engine with Correct Timing, 12-24
Inoperative Thermo-modulated Fan, 13-9
Thermo-modulated Fan Replacement, 13-9
Test Engine with Replaced Thermo-modulated Fan, 13-9
Insufficient Fuel Flow, 11-4
Insufficient fuel Flow Resolution
Test the Engine with Resolved Fuel Flow, 11-5
Insufficient Fuel Flow Resolution, 11-4
Insufficient Radiator Air Circulation, 13-5
Exterior Radiator Repair, 13-5
Radiator Shroud Repair, 13-5
Test Engine with Repaired Exterior Radiator and Shrouding, 13-5

All information subject to change without notice.
Copyright © 2007 DETROIT DIESEL CORPORATION

https://truckmanualshub.com/

Internal Engine Damage, 5-6
Internal Engine Damage Replacement, 5-6
Test Engine with Replaced Components, 5-6

L

Leaking Oil Cooler Core, 6-4
Oil Cooler Core Replacement, 6-4
Test Engine for Reduced Oil Consumption, 6-5
Test Engine with New Oil Cooler Core, 6-5
Low Battery Voltage, 4-3
Battery Replacement, 4-3
Test Engine with Replaced Battery, 11-3–4-4
Low Compression, 4-13
Low Compression Repair, 4-13
Cylinder Compression Test, 9-6, 6-10, 4-14
Test Engine with Repaired Cylinder Head Valve(s), and Cylinder Kit, 4-14
Low Compression Pressure, 11-8
Low Compression Repair
Test Engine with Repaired Cylinder Head Valve(s) and Cylinder Kit, 11-13
Low Cranking Speed, 4-7
Low Cranking Speed Repair, 4-7
Test Engine with Replaced Oil, 4-7
Lubricating Oil Diluted With Fuel Oil or Engine Coolant, 2-5
Contaminated Lubricating Oil Resolution, 2-5
Test Replaced Lubricating Oil, 2-5

M

Motor Control Module (MCM), 17-3
120–pin connector, Series 60, 17-4–17-7
21–pin connector, 17-9
31–pin pigtail connector, 17-10
Connector Brackets, 17-8
Engine Harness, 17-4

N

Nonfunctional or Sticking Oil Pressure Regulator Valve, 2-10
Oil Pressure Regulator Valve Repair, 2-11

All information subject to change without notice.
Copyright © 2007 DETROIT DIESEL CORPORATION

https://truckmanualshub.com/

Test Engine with Repaired Oil Pressure Regulator Valve, 2-11

O

Obstruction or Damage to Rocker Cover Breather, 7-3
Rocker Cover Breather Resolution, 7-3
Test Engine with New Wire Mesh Element, 7-3

P

Plugged Fuel Filter(s), 4-9
Plugged Fuel Filter(S)
Plugged Fuel Filter(s) Replacement, 4-9
Test Engine with Replaced Fuel Filters, 4-9
Poor Vehicle Ground, 3-3
Negative Lead Repair, 3-3
Verification of Repair, 3-4

R

Restricted Air Cleaner Element, 8-4, 12-17
Air Filter Element Replacement, 8-4, 12-17
Test the Engine with Replaced Air Filter Element, 8-4, 12-17
Restricted Oil Cooler, 2-9
Oil Cooler Repair, 2-9
Test Engine with Repaired Oil Cooler, 2-9
Restricted or Cracked Charge Air Cooler, 8-5
Air Intake Manifold Repair, 8-6
Test the Engine with Replaced Charge Air Cooler and Air Intake Manifold, 8-6
Charge Air Cooler Replacement, 8-5
Restricted or Cracked Charge Air Cooler or Leaking Intake Manifold, 12-18
Air Intake Manifold Repair, 12-19
Test the Engine with Replaced Charge Air Cooler and Air Intake Manifold, 12-19
Charge Air Cooler Replacement, 12-18
Restrictive Air Filter, 4-12
Air Filter Replacement, 4-12
Test Engine with Replaced Air Filter, 4-12
Rocker Arm Shaft Plugs Missing (New or Rebuilt Engines Only), 2-7
Leaking Rocker Arm Shaft Plug Repair, 2-7
Missing Rocker Arm Shaft Plug Repair, 2-7

All information subject to change without notice.
Copyright © 2007 DETROIT DIESEL CORPORATION

https://truckmanualshub.com/

Test Engine with Repaired Rocker Shaft Plugs, 2-8

S

Safety Precautions, 1-6
Batteries, 1-12
Cleaning Agent, 1-13
Diagnostic Equipment, 1-13
Ether Start, 1-7
Exhaust (Start/Run Engine), 1-8
Fire, 1-13
Fluoroelastomer, 1-15
Fuel, 1-11
Glasses, 1-8
Optimized Idle, 1-15
Pressurized Fluids, 1-10
Welding, 1-9
Working on a Running Engine, 1-14
Sensors, 17-37
Factory-installed Sensors, 17-38
OEM-installed Sensors, 17-40
Software Version
Poor Engine Performance DDEC VI Equipped Engines, 15-3
SPN 100/FMI 1, 26-3
Check Low Oil Pressure, 26-3
SPN 100/FMI 18, 26-8
Check for Multiple Codes, 26-8
SPN 100/FMI 3, 26-4
Failed High Circuit Check, 26-4
SPN 100/FMI 4, 26-6
Check for Open, 26-6
SPN 103/FMI 0, 27-3
Check Equipment, 27-3
SPN 103/FMI 1, 27-4
Check Equipment, 27-4
SPN 103/FMI 4, 27-5
Check for Short, 27-5

All information subject to change without notice.
Copyright © 2007 DETROIT DIESEL CORPORATION

https://truckmanualshub.com/

SPN 1071/FMI 3, 81-3
Check for Short to Power, 81-3
SPN 1071/FMI 4, 81-4
Check for Short to Ground, 81-4
SPN 1071/FMI 5, 81-5
Check for Open, 81-5
SPN 1072/FMI 4, 82-3
Check for Short to Ground, 82-3
SPN 1072/FMI 5, 82-4
Check for Open, 82-4
SPN 1073/FMI 4, 83-3
Check for Short to Ground, 83-3
SPN 1073/FMI 5, 83-4
Check for Open, 83-4
SPN 110/FMI 0, 29-3
System Checks to Resolve Fault, 29-3
SPN 110/FMI 14, 29-7
Rationality Check, 29-7
System Checks to Resolve Fault, 29-8
SPN 110/FMI 16, 29-8
Check for Multiple Codes, 29-8
SPN 110/FMI 3, 29-3
Check for Open Circuit, 29-4
SPN 110/FMI 4, 29-6
Check for Short to Ground, 29-6
SPN 111/FMI 1, 30-3
Check, 30-4
Check Coolant Level Sensor, 30-3
SPN 111/FMI 3, 30-5
Check for Open Circuit, 30-5
SPN 111/FMI 4, 30-7
Check for Short to Ground, 30-7
SPN 1172/FMI 3, 84-3
Check for Open, 84-3
SPN 1172/FMI 4, 84-6

All information subject to change without notice.
Copyright © 2007 DETROIT DIESEL CORPORATION

https://truckmanualshub.com/

Check for Short, 84-6
SPN 1636 /FMI 20
Intake Manifold Sensor Check, 87-6
SPN 1636 /FMI 21
Intake Manifold Sensor Check, 87-7
SPN 1636 /FMI 3, 87-3
Check Intake Air Temperature Sensor, 87-3
SPN 1636 /FMI 4, 87-5
Check for Intake Air Temperature Sensor Short to Ground, 87-5
SPN 168/FMI 0, 32-3
Measure Battery Voltage, 32-3
SPN 168/FMI 1, 32-4
Check the Alternator and the Battery, 32-4
Measure the Resistance, 32-4
SPN 171/FMI 14, 33-3
SPN 171/FMI 9, 33-3
SPN 174/FMI 3, 34-3
Open Circuit/Short to Power Check, 34-3
SPN 174/FMI 4, 34-5
Check for Short to Ground, 34-5
SPN 175/FMI 14, 35-5
Rationality Check, 35-5
SPN 175/FMI 3, 35-3
Check for Open Circuit, 35-3
SPN 175/FMI 4, 35-5
Check for Short to Ground, 35-5
SPN 190/FMI 2, 36-3
SPN 191/FMI 13
Missing Transmission Output Speed Shaft Signal Check, 37-3
SPN 191/FMI 19
Erratic Transmission Output Speed Shaft Signal Check, 37-4
SPN 191/FMI 9
Missing ETC1 Message Check, 37-3
SPN 2629/FMI 3, 91-3
Open Circuit/Short to Power Check, 91-3

All information subject to change without notice.
Copyright © 2007 DETROIT DIESEL CORPORATION

https://truckmanualshub.com/

SPN 2629/FMI 4, 91-6
Short Circuit Check, 91-6
SPN 27/FMI 3, 19-3
EGR Valve Position Circuit Check, 19-3
SPN 27/FMI 4, 19-4
Check for Short, 19-4
SPN 27/FMI 7, 19-7
Check Valve Function, 19-7
SPN 2791/FMI 3, 93-3
Check for Short, 93-3
SPN 2791/FMI 4, 93-4
Check for Short, 93-4
SPN 2791/FMI 5, 93-4
Check for Open, 93-4
SPN 3510/FMI 2, 108-3
Check for Erratic Data, 108-3
SPN 3510/FMI 3, 108-5
Check for High Voltage, 108-5
SPN 3510/FMI 4, 108-6
Check for Low Voltage, 108-6
SPN 3563/FMI 0, 111-3
Air Intake System Check, 111-3
SPN 3563/FMI 1, 111-4
Air Intake System Check, 111-4
SPN 3563/FMI 3, 111-5
Check for a Short Circuit, 111-5
SPN 3563/FMI 4, 111-6
Check for Open, 111-6
SPN 3588/FMI 3, 112-3
Check for Short to Power, 112-3
SPN 3588/FMI 4, 112-4
Check for Short, 112-4
SPN 3588/FMI 5, 112-5
Check for Open, 112-5
SPN 3659/FMI 14, 117-3

All information subject to change without notice.
Copyright © 2007 DETROIT DIESEL CORPORATION

https://truckmanualshub.com/

Open Circuit, Short to Ground or Short to Power Check, 117-3
SPN 3660/FMI 14, 118-3
Open Circuit, Short to Ground or Short to Power Check, 118-3
SPN 3661/FMI 14, 119-3
Open Circuit, Short to Ground or Short to Power Check, 119-3
SPN 3662/FMI 14, 120-3
Open Circuit, Short to Ground or Short to Power Check, 120-3
SPN 3663/FMI 14, 121-3
SPN 3664/FMI 14, 122-3
Open Circuit, Short to Ground or Short to Power Check, 122-3
SPN 411/FMI 0, 39-3
Check EGR Delta P Sensor, 39-3
SPN 411/FMI 3, 39-4
Check for Open Circuit, 39-4
SPN 411/FMI 4, 39-6
Check for Short, 39-6
SPN 412/FMI 3, 40-3
Open Circuit/Short to Power Check, 40-3
SPN 412/FMI 4, 40-6
Check for Short, 40-6
SPN 558/FMI 1
Check IVS Wiring, 44-3
SPN 558/FMI 3, 44-3
Check for Open, 44-3
SPN 558/FMI 4, 44-5
Check for Short to Ground, 44-5
SPN 599/FMI 4, 47-3
Check for Short, 47-3
SPN 609/FMI 12, 50-3
Check MCM Parameters, 50-3
SPN 609/FMI 14, 50-4
Check MCM, 50-4
SPN 625/FMI 2, 52-3
SPN 625/FMI 9, 52-5
Check the Data Link, 52-5

All information subject to change without notice.
Copyright © 2007 DETROIT DIESEL CORPORATION

https://truckmanualshub.com/

SPN 625/FMI 92
Check the Data Link, 52-3
SPN 636/FMI 1, 56-3
Check Low Signal Voltage, 56-3
SPN 636/FMI 3, 56-4
Check Crankshaft Position Sensor Gap, 56-5
Check for Open Circuit, 56-4
SPN 636/FMI 4, 56-6
Check for Short to Ground, 56-6
SPN 636/FMI 7, 56-7
Check for Camshaft and Crankshaft Signals Not Matching, 56-7
SPN 636/FMI 8, 56-9
Check Sensor Time Out, 56-9
SPN 647/FMI 3, 58-3
Check for Short to Power, 58-3
SPN 647/FMI 4, 58-4
Check for Short to Ground, 58-4
SPN 647/FMI 5, 58-5
Check for Open, 58-5
SPN 651/FMI 14, 59-3
Open Circuit, Short to Ground or Short to Power Check, 59-3
SPN 652/FMI 14, 60-3
Open Circuit, Short to Ground or Short to Power Check, 60-3
SPN 653/FMI 14, 61-3
Open Circuit, Short to Ground or Short to Power Check, 61-3
SPN 654/FMI 14, 62-3
Open Circuit, Short to Ground and Short to Power Check, 62-3
SPN 655/FMI 14
Open Circuit, Short to Ground and Short to Power Check, 63-3
SPN 655/FMI 5, 63-3
SPN 656/FMI 14, 64-3
Open Circuit, Short to Ground and Short to Power Check, 64-3
SPN 704/FMI 3, 67-3
Check for Short to Power, 67-3
SPN 704/FMI 4, 67-4

All information subject to change without notice.
Copyright © 2007 DETROIT DIESEL CORPORATION

https://truckmanualshub.com/

Check for Short, 67-4
SPN 704/FMI 5, 67-5
Check for Open Circuit, 67-5
SPN 723/FMI 14, 77-7
SPN 723/FMI 3, 77-3
Check for Open Circuit, 77-3
SPN 723/FMI 4, 77-5
Check for Short to Ground, 77-5
SPN 723/FMI 8, 77-6
Check for Time Out, 77-6
SPN 84/FMI 3, 23-3
Check for Open, 23-3
SPN 84/FMI 4, 23-4
Check for Short, 23-4
SPN 91/FMI 2, 24-3
Check for Erratic Data, 24-3
SPN 91/FMI 3, 24-4
Check for High Voltage, 24-4
SPN 91/FMI 4, 24-5
Check for Low Voltage, 24-5

T

Tape and Taping, 17-36
Tape Criteria, 17-36
Taping Criteria, 17-36
Terminal Installation
Deutsch connectors, 17-22
Terminal Removal
Deutsch terminals, 17-24

W

Wires
Recommendations, 17-21
Requirements, 17-21
Worn or Damaged Valve or Cylinder Kit, 9-5, 7-7–6-9
Worn or Damaged Valve or Cylinder Kit Repair, 9-5, 7-7–3-8

All information subject to change without notice.
Copyright © 2007 DETROIT DIESEL CORPORATION

https://truckmanualshub.com/

Cylinder Compression Test, 3-9
Test Engine with Repairs Made to Correct Worn or Damaged Valve or Cylinder Kit, 9-6, 7-8
Verification of Repair for Worn or Damaged Valve or Cylinder Kit, 3-9
Worn or Damaged Valve(s) or Cylinder Kit(s) Repair, 6-9
Test Engine with Repaired Cylinder Head Valve(s), and Cylinder Kit, 6-10

All information subject to change without notice.
Copyright © 2007 DETROIT DIESEL CORPORATION