https://truckmanualshub.com/

DOOSAN

CRAWLER EXCAVATORS

DX140LC	14 400 kg	31,746 lb.	109 hp (82 kw)
DX180LC	18 710 kg	41,248 lb.	125 hp (93 kw)
DX225LC	22 500 kg	49,604 lb.	167 hp (124 kw)
DX255LC	25 700 kg	56,659 lb.	185 hp (138 kw)

14 – 28 Metric Ton

https://truckmanualshub.com/

DOOSAN DELIVERS *a heritage of dedication*

DOOSAN, a strong, stable and global company with a 115-year legacy, has a heritage in equipment manufacturing that began in 1937. Since 2005, we've grown to become the fifth largest construction equipment manufacturer in the world.

https://truckmanualshub.com/

Doosan can be found in every area of the infrastructure support business, which encompasses many facets of the heavy construction equipment industry.

Many contractors might be surprised to know that, while Doosan is a relatively young brand in the North American construction equipment market, the organization has a global manufacturing history going back more than 75 years.

Today, Doosan Infracore Construction Equipment America (DICEA) and its affiliates are industry leaders in the engineering, manufacturing and marketing of construction equipment including skid-steers, excavators, wheel loaders, articulated dump trucks, attachments, air compressors, lighting systems and generators as well as compact construction equipment and engine power systems.

Building Your Tomorrow Today

Our construction equipment group leads Doosan's infrastructure support business (ISB) segment. Other ISB businesses include:

- Forklifts & Material Handling
- Machine Tools
- Castings & Forgings
- Construction & Engineering
- Power Generation
- Water Treatment & Desalination
- Renewable Energy

Your North American partners.

Throughout our decades of selling equipment in North America, we've been building a network of dealers designed to surpass the standards for customer service. From coast to coast, there's a solid infrastructure that supports your equipment, including a parts distribution facility in Chicago and a service training facility in Georgia, sales training center in Arizona, attachments design and development in Minnesota and sales & marketing support in North Dakota.

https://truckmanualshub.com/

DOOSAN DELIVERS *Performance*

Performance is what it's all about; Doosan delivers what you need and then some. For decades, Doosan machines have proven themselves on thousands of jobsites around the world. Our long carriage (LC) design provides superior stability and optimizes working width for superior performance in heavy digging and lifting operations. Powerful hydraulic, arm and bucket forces – with horsepower to spare – help you get the job done quickly and efficiently.

Arm and Bucket Force

Save time digging, loading trucks and more with best-in-class hydraulics. You can rely on consistent, reliable power delivery to the arm and bucket – and when you need it, a one-touch power boost momentarily amplifies your hydraulic power. With Doosan, you can confidently take on tough digging conditions that slow other machines down.

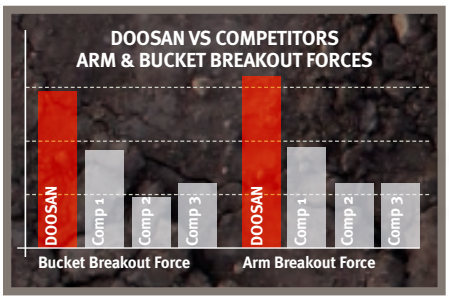

Swing Torque

The newest Doosan models have an 8-11 percent increase in swing torque. That means you can easily swing uphill and backfill faster, with better results. Now, every foot of trench eats up less of your schedule.

Four Power Modes

With four selectable power modes, you have more control over your excavator's performance. Balance fuel consumption and machine power to match your working conditions without even leaving the cab.

Power+ mode delivers the fastest workgroup speeds to save more time loading trucks. Top digging performance delivers extra power for penetrating hard ground and other tough conditions.

Power mode provides excellent power and superior performance for tough digging and heavy lifting. It also provides quick truck loading and fast travel speed to save time.

Standard power mode optimizes your fuel consumption and delivers high performance in everyday digging, grading and lifting.

Economy mode reduces fuel consumption for low-demand applications and slows down machine movement, which is handy for fine digging, light grading conditions and jobsite conditions that require extra precision.

https://truckmanualshub.com/

One-Touch Power Boost

The convenient button on the right-hand joystick provides momentary increased hydraulic power to break through hard ground and other tough digging conditions.

Lifting Capacity

Complete the job faster and lift more with every cycle. Doosan excavators are designed and tested to maximize lifting capability. An optimal swing radius, lift height, and lift position enable you to confidently lift and place objects or dig loads of material in less time.

https://truckmanualshub.com/

DOOSAN DELIVERS *Productivity*

With quick cycle times, efficient designs and plenty of power, you'll fit more work into fewer hours with Doosan excavators.

X-Chassis Undercarriage
Get increased ground clearance and maneuverability in softer ground with the X-Chassis undercarriage design. The sloped surfaces also shed debris faster, reducing material buildup and cutting back your cleanup time.

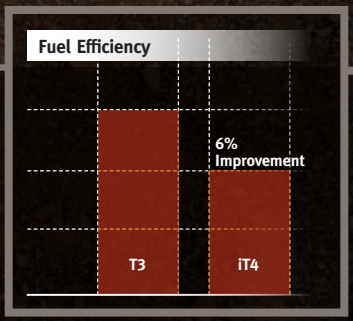

Fuel Efficiency
The Doosan excavator's efficient horsepower curve delivers increased torque with less fuel. The high pressure common rail (HPCR) fuel injection system helps reduce emissions and allows the interim Tier 4-compliant engine to save fuel and improve performance.

https://truckmanualshub.com/

Fast Cycle Times

Two variable displacement axial piston pumps deliver fast cycle times. Hydraulic flow regeneration delivers the power you need while maximizing efficiency.

Electronic Power Optimizing System (EPOS)
The EPOS works in conjunction with the engine's ECU to monitor and optimize machine performance for increasing productivity while reducing fuel consumption.

Auto Idle
To reduce noise, improve jobsite communications and save fuel, the standard auto idle feature idles your engine automatically when machine functions are not used for 4 seconds. When you move the controls, the excavator automatically returns to your previous throttle setting.

Auto Downshift
When turning, pushing and maneuvering, auto downshift reduces the hydraulic flow to the drive system — improving machine responsiveness and controllability. When the load decreases, the excavator automatically shifts back into high range.

Interim Tier 4 (iT4) Compliant
Optimized to provide the ultimate in power delivery and fuel economy, Doosan excavators are designed with iT4 compliant engines to reduce air pollution.

Cooled Exhaust Gas Recirculation (CEGR)
CEGR recycles a portion of the engine exhaust to reduce oxygen and lower the temperature in the combustion chamber. This greatly reduces nitrogen oxide emissions (NOX).

Diesel Oxidation Catalyst (DOC)
Using DOC technology, particulate matter (PM) emissions are transformed into harmless water and carbon dioxide.

Diesel Particulate Filter (DPF)
Exhaust enters the DPF where it's filtered further. The result is cleaner diesel exhaust and a healthier environment.

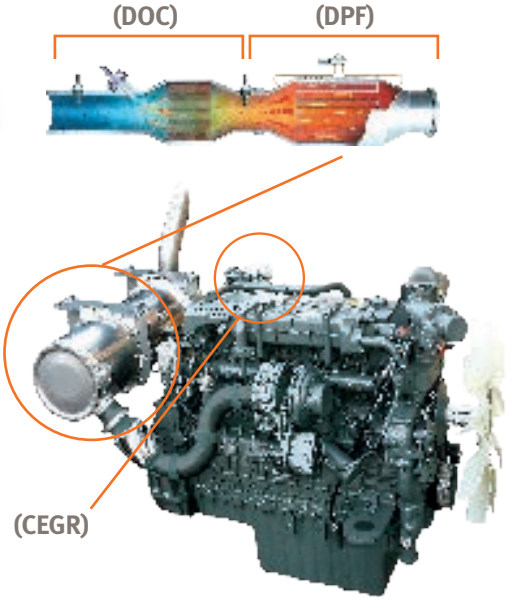

Regeneration
The DPF requires continuous regeneration to filter exhaust properly. Passive regeneration occurs with exhaust heat only. An active regeneration initiates automatically if the ECU detects certain levels of particulate matter in the DPF and does not interfere with normal machine operation. If required, manual regeneration can be initiated by the operator.

https://truckmanualshub.com/

DOOSAN DELIVERS *Durability/Reliability*

Your reputation depends on a reliable, durable machine, and Doosan excavators are designed to be ready when you are. They're protected with solid construction and smart designs you can see. Their heavy-duty features keep you running longer in the field—so you spend less time in the shop and more time making money.

Cast Ends and Pin Bosses

If you want a workgroup that lasts in the toughest applications, take a look at Doosan. All major pin points on the boom and arm are cast for extra strength in tough working conditions. Plus, there is additional reinforcement around the bosses and internal gussets to ensure a long life for your workgroup.

https://truckmanualshub.com/

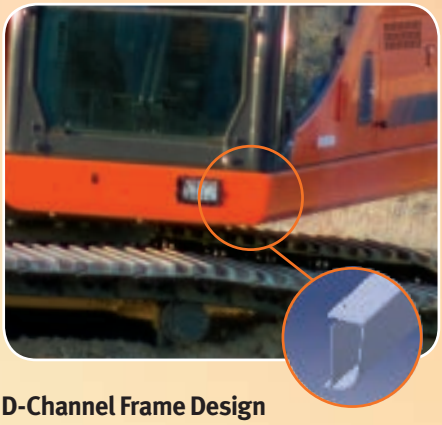

D-Channel Frame Design
The Doosan frame can withstand more shock from the side thanks to an innovative upper structure frame design that adds strength and protects vital machine components.

Air-to-Air Fuel Cooler
The air-to-air fuel cooler reduces fuel temperature to increase your machine's overall efficiency and protect engine components.

Heavy Duty Wear Plates
Ultra-hard and wear-resistant, these plates at the end of your arm and H-link extend the service intervals for your bucket pin-up point. By minimizing the tolerance between the bucket and arm, they maintain high breakout forces and allow for greater productivity.

Cooling System
An electric fan clutch optimizes the hydraulic system and engine temperatures, even in severe working conditions. The system operates when necessary based on cooling capacity requirements helping to reduce noise as well as fuel consumption while protecting and extending the life of engine components.

Permanently Sealed, Lubricated Track Pins
Pin links on Doosan excavator tracks never need greasing because they are permanently sealed. That means you reduce your operating costs and increase your uptime.

Recessed Drive Motors
Drive motors contained and recessed within the track width are protected from potential damage, resulting in more uptime.

https://truckmanualshub.com/

DOOSAN DELIVERS *Comfort*

You can't do as much work if you're not comfortable. Operator comfort is essential. Great visibility; a deluxe, adjustable seat and numerous perks and comfort features help operators to push performance to the limit. Easy to enter, exit and work in, Doosan cabins give you remarkable standard features that bring superior comfort to the job.

Visibility
The Doosan cabin allows you to focus on your work – instead of struggling to see it. The large Doosan cabin provides an excellent viewing area on the front and side windows. When loading trucks or working overhead, the overhead window gives you great visibility above the machine. Narrow corner pillars, small window joints and a wiper mounted on the pillar – instead of on the glass surface – give an unobstructed view. Sun shades on the front and top windows shield operators from the sun and reduce eye strain.

Other Cabin Features
- Improved floor space for your feet, increased cab space for your legs, arms, and head
- 180-degree swinging door
- Wide entry/exit area
- Grab handles
- Standard radio and antenna
- Standard CD player and MP3 player input
- 12 V power port
- Adjustable side window openings for fresh air

https://truckmanualshub.com/

Quiet Operation
A complete, sound-isolating cabin seal reduces the noise inside the pressurized cab to an extremely low level. Compartmentalized components reduce noise output outside the cab. Even the cabin frame and seat are designed to absorb vibration and significantly increase operator comfort.

Adjustable Comfort
The standard air suspension seat has multiple adjustment points, allowing you to select the most comfortable position.

A Control Stand/Seat Base Fore/Aft
B Control Stand/Seat move with suspension
C Control Stand/Seat Height
D Seat Fore/Aft
E Seat Cushion Fore/Aft
F Seat Cushion Angle
G Back Recline
H Lumbar Support
I Headrest Fore/Aft & Up/Down
J Control Stands Up/Down
K Seat Heater

Automotive Style Heat and Air Conditioning
High capacity heating and cooling vents and an easy-to-control temperature keep you comfortable all year long. Automatic temperature control senses and adjusts to the temperature setting automatically. A memory function returns it to your preferred temperature if you shut the machine off and restart later.

Standard Rearview Camera
Provides the operator with an additional means to view the machine's surroundings, allowing for increased productivity.

Easy-to-Read LCD Display Panel
An easy-to-read LCD display panel is placed within easy view for monitoring critical machine data, receiving errors or warnings, and the rearview camera display. A big, seven-inch display also switches to a night view.

https://truckmanualshub.com/

DOOSAN DELIVERS *Easy Maintenance*

Ground level access to all filters

Even the best equipment needs regular maintenance. Doosan makes it easy to care for your excavator with onboard diagnostic systems, easy component access, plus a fleet management system that comes standard. If you want a machine that lasts, with minimal effort, Doosan delivers everything you need.

Easy access to regular inspection points

Easy Component Access
Access panels are easy to find and open from the top, bottom and sides of the excavator. A large engine cover provides plenty of room to reach the top side of the engine, while a hinged belly pan allows access from the bottom. Solid steel side panels provide access to regular daily maintenance items which make for quick, easy service and a lower cost of operation.

https://truckmanualshub.com/

Doosan Telematics (GPS)
Access location information and a full range of machine operational information on any web-enabled computer or cell phone, via a simple user interface. You share this data with your dealer and Doosan, enabling a complete machine maintenance management strategy that reduces operating costs.

Oil & Filter Life
Easily review the hours since the last maintenance for filters and oils. Your machine will remind you when each oil and filter needs replacing 10 working hours before service is due, assisting you in regular maintenance scheduling.

Doosan Monitoring System with Laptop Access
During operation, the Doosan Monitoring System monitors all critical data and provides a complete history of operation and a real-time log of machine failures to your dealer's technician. Armed with information like this, dealer service personnel can fix issues faster — and you can get back to work.

Auxiliary Mode Switch
If needed, an auxiliary mode switch allows you to finish a job or move your excavator to a convenient location for service.

Self-Diagnostics
An LCD monitor helps you track critical systems in real time and access historical machine alerts from within the cabin.

Centralized Boom Grease Points
Daily maintenance is critical—and it's simple with the centralized grease banks on the base of the boom.

https://truckmanualshub.com/

DOOSAN DELIVERS *Versatility*

Doosan excavators are made to do more because they are optimized for attachment versatility. Virtually any attachment designed for its operating weight can be matched to your excavator, and you can easily increase your utilization.

Doosan Infracore Attachments

Gear up for your job with the hard-working line of Doosan attachments for excavators and loaders. Doosan builds its own tough breakers, grapples, clamps, plate compactors and a wide array of bucket types and sizes. All of them are built to Doosan machine specifications for superior reliability and performance.

Selectable Work Modes

Tailor your excavator's performance to the job at hand with four unique work modes. Two modes recalibrate machine power for digging or lifting. Two change the auxiliary hydraulic flow for specific types of attachments. Just change a few settings with the LCD display panel to quickly optimize performance and protect your hydraulic components:

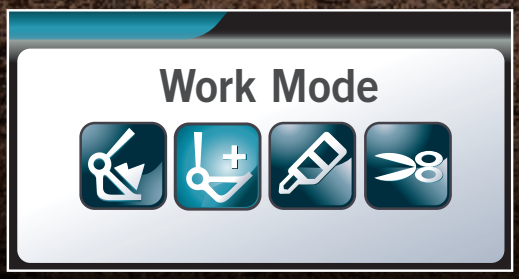

Digging

Your default setting delivers the performance you need for general excavation, loading and lifting. The four power modes give it a huge range of versatility for many different digging applications.

Lifting

The increased pump torque, low engine RPMs and automatic power boost provide extra muscle when lifting materials – like pipe or concrete barriers.

https://truckmanualshub.com/

Hydraulic Attachment Management
Via the LCD screen, the operator can configure 10 different attachment presets: five each for 1-way and 2-way flow. Each preset configuration can be matched to specific operational requirements of an attachment by limiting the maximum pressure and the minimum/maximum flow rate that is delivered to the attachment.

When changing hydraulic attachments, just select the appropriate preset to optimize machine and attachment functionality. Password protection functionality within the system discourages improper attachment preset selection for operators or rental users with limited understanding of hydraulic systems.

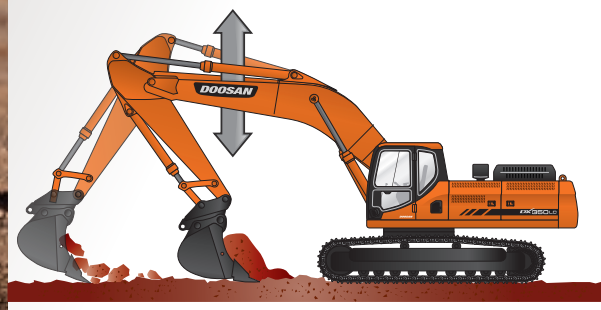

Breaker, or one-way auxiliary hydraulic flow, works great for attachments that only require hydraulic power from one direction, such as breakers or plate compactors. This mode also maintains consistent downward pressure for maximum attachment performance and component protection with optional boom float engaged.

Shear, or two-way auxiliary hydraulic flow, is best for attachments that need bi-directional hydraulic flow, such as a hydraulic clamp, tilting bucket or shear.

The work attachment work modes and the resulting control over auxiliary hydraulic flow allows you to be more productive with a clamp or grapple as well. You control the speed at which jaws close or open and get a fast, tight grip on hard-to-move materials.

Intelligent Floating Boom
Ideal for finishing work, operators can focus on the arm and bucket with the intelligent floating boom. This setting allows the boom to move freely with the contours of the ground. When engaged, the boom does not utilize hydraulic flow, increasing efficiency and productivity by saving fuel and improving cycle times.

https://truckmanualshub.com/

General

STANDARD CONFIGURATION

	UNIT	DX140LC-3	DX180LC-3	DX225LC-3	DX255LC-3
ENGINE					
MODEL		DOOSAN DL06K	DOOSAN DL06K	DOOSAN DL06K	DOOSAN DL06K
NUMBER OF CYLINDERS		6	6	6	6
RATED POWER GROSS (HP per SAE J1995)	hp (kW) @ rpm	109 (82) @ 1,850	125 (93) @ 1,950	167 (124) @ 1,800	185 (138) @ 1,900
RATED POWER NET (HP per SAE J1349) NET	hp (kW) @ rpm	107 (80) @ 1,850	122 (91) @ 1,950	163 (121) @ 1,800	180 (134) @ 1,900
MAXIMUM TORQUE (GROSS) (SAE J1995)	ft.-lb. (Nm) @ rpm	354 (481) @ 1,400	391 (530) @ 1,400	557 (755) @ 1,400	593 (804) @ 1,400
PISTON DISPLACEMENT	in.^{3} (cc)	359 (5890)	359 (5890)	359 (5890)	359 (5890)
BORE AND STROKE	in. x in. (mm x mm)	4 x 5 (100 x 125)	4 x 5 (100 x 125)	4 x 5 (100 x 125)	4 x 5 (100 x 125)
STARTER	V, kW	24V, 6.0 kW	24V, 6.0 kW	24V, 6.0 kW	24V, 6.0 kW
BATTERIES	V, AH	2 x 12V, 100AH	2 x 12V, 150AH	2 x 12V, 150AH	2 x 12V, 150AH
AIR CLEANER		Double Elements	Double Elements	Double Elements	Double Elements
HYDRAULICS					
MAIN PUMPS	gpm (L/min)	2 x 30 (2 x 114)	2 x 40 (2 x 152)	2 x 55 (2 x 206.5)	2 x 57.9 (2 x 219)
PILOT PUMP Gear design	gpm (L/min)	7.3 (27.75)	4.9 (18.5)	7.1 (27)	7.5 (28.5)
RELIEF PRESSURE	Normal/Boost psi (kg/cm^2)	4,694/4,978 (330/350)	4,694/4,978 (330/350)	4,694/4,978 (330/350)	4,978/5,263 (350/370)
MAXIMUM SYSTEM PRESSURE					
BOOM/ARM/BUCKET (Normal Mode)	psi (kg/cm^2)	4,694 (330)	4,694 (330)	4,694 (330)	4,978 (350)
BOOM/ARM/BUCKET (Power Mode)	psi (kg/cm^2)	4,978 (350)	4,978 (350)	4,978 (350)	5,263 (370)
TRAVEL (Normal Mode)	psi (kg/cm^2)	4,694 (330)	4,694 (330)	4,694 (330)	4,978 (350)
TRAVEL (Power Mode)	psi (kg/cm^2)	4,978 (350)	4,978 (350)	4,978 (350)	5,263 (370)
SWING (Normal Mode)	psi (kg/cm^2)	4,694 (330)	4,694 (330)	4,694 (330)	4,978 (350)
SWING (Power Mode)	psi (kg/cm^2)	4,978 (350)	4,978 (350)	4,978 (350)	5,263 (370)
UNDERCARRIAGE					
UPPER ROLLERS (Each Track)		1	2	2	2
LOWER ROLLERS (Each Track)		7	7	8	10
NUMBER OF SHOES (LINKS PER SIDE)		46	44	49	51
TOTAL LENGTH OF TRACK	ft. in. (mm)	12'4" (3755)	13' (3968)	14'7" (4445)	15'2" (4625)
ENVIRONMENT					
SOUND LEVEL (2000/14/EC)	dB(A)	101	102	102	102
CABIN SOUND LEVEL (ISO 6396)	dB(A)	70	70	70	70
SWING MECHANISM					
SWING SPEED	rpm	11	10.6	10.9	9.9
SWING TORQUE	lbf.-ft. (kgf-m)	32,771 (4531)	44,563 (6450)	60,757 (8400)	71,462 (9880)
DRIVE SYSTEM					
TRAVEL SPEED [LOW - HIGH]	mph (km/h)	1.9/3.1 (3.0/5.0)	1.9/3.2 (3.1/5.1)	1.9/3.4 (3.0/5.5)	2.0/3.5 (3.2/5.6)
DRAWBAR PULL	lbf. (kgf)	31,747 (14 400)	45,195 (20 500)	60,715 (27 540)	62,832 (28 500)
MAXIMUM GRADE	% / Degrees	70 / 35°	70 / 35°	70 / 35°	70 / 35°
REFILL CAPACITIES					
FUEL TANK	gal. (L)	70 (265)	77.4 (293)	105.7 (400)	108.3 (410)
COOLING SYSTEM (RADIATOR CAPACITY)	gal. (L)	5.5 (21)	5.5 (21)	5.9 (22.3)	7.4 (28)
ENGINE OIL	gal. (L)	6.6 (25)	6.6 (25)	7.1 (27)	7.1 (27)
SWING DRIVE	gal. (L)	1.3 (5)	1.3 (5)	1.3 (5)	1.8 (7)
FINAL DRIVE (EACH SIDE)	gal. (L)	0.8 (3)	0.8 (3)	0.9 (3.3)	1 (3.9)
HYDRAULIC SYSTEM	gal. (L)	44.9 (170)	55.5 (210)	63.4 (240)	74 (280)
HYDRAULIC TANK (Level)	gal. (L)	26.4 (100)	33.0 (125)	37 (140)	40 (150)

NOTE — Where applicable, dimensions are in accordance with Society of Automotive Engineers (SAE) and ISO standards. Specifications and design are subject to change without notice. Pictures of Doosan excavators may show other than standard equipment. All dimensions are shown in inches. Respective metric dimensions are enclosed by parentheses. Doosan Construction Equipment is manufactured with a Quality Management System that is in compliance with ISO 9001:2008.

All dimensions are given for Doosan excavators equipped with standard tracks and the US20 configuration unless otherwise noted.

https://truckmanualshub.com/

Weight

	UNIT	DX140LC-3	DX180LC-3	DX225LC-3	DX255LC-3
CATEGORY					
BOOM	ft. in. (mm)	15'1" (4600)	17'1" (5200)	18'8" (5700)	19'4" (5900)
ARM	ft. in. (mm)	9'10" (3000)	8'6" (2600)	9'6" (2900)	9'10" (3000)
BUCKET	yd^3 (m^3)	.59 (0.45)	.92 (0.70)	1.2 (.92)	1.4 (1.1)
DIMENSIONS (TRIPLE GROUSER)					
SHOE WIDTH - 1'8" (500mm) OPERATING WEIGHT GROUND PRESSURE	lb. (kg) psi (kgf/cm^2)		39,930 (18 112) 7.4 (.52)		
SHOE WIDTH - 2'0" (600mm) OPERATING WEIGHT GROUND PRESSURE	lb. (kg) psi (kgf/cm^2)	31,746 (14 400)* 5.12 (.36)*	40,433 (18 340) 6.2 (.44)	48,281 (21 900) 6.5 (.46)	55,336 (25 100) 7.3 (.51)
SHOE WIDTH - 2'4" (700mm) OPERATING WEIGHT GROUND PRESSURE	lb. (kg) psi (kgf/cm^2)	31,967 (14 500) 4.4 (.31)	41,248 (18 710)* 5.5 (.39)*	48,943 (22 200) 5.7 (.40)	55,997 (25 400) 6.3 (.44)
SHOE WIDTH - 2'7" (800mm) OPERATING WEIGHT GROUND PRESSURE	lb. (kg) psi (kgf/cm^2)	67,770 (30 740) 6.3(0.44)	41,813 (18 966) 4.9 (.35)	49,604 (22 500)* 5.12 (.36)*	56,593 (25 670)* 5.6 (.39)*
SHOE WIDTH - 2'11" (900mm) OPERATING WEIGHT GROUND PRESSURE	lb. (kg) psi (kgf/cm^2)		42,364 (19 216) 4.3 (.30)	50,265 (22 800) 4.6 (.32)	57,320 (26 000) 5 (.35)
CATEGORY				**DX225LC-3 SLR**	
BOOM	ft. in. (mm)			27'11" (8500)	
ARM	ft. in. (mm)			20'4" (6200)	
BUCKET	yd^3 (m^3)			.51 (.39)	
DIMENSIONS (TRIPLE GROUSER)					
SHOE WIDTH - 2'11" (900mm) OPERATING WEIGHT GROUND PRESSURE	lb. (kg) psi (kgf/cm^2)			54,564 (24 750) 5.0 (.35)	

* = Standard Shoe Size

Hydraulic Cylinders

	UNIT	DX140LC-3	DX180LC-3	DX225LC-3	DX255LC-3
BOOM (2)					
BORE x ROD DIAMETER x STROKE (STD & SLR)	in. x in. x in. (mm x mm x mm)	4.3 x 2.95 x 42.7 (110 x 75 x 1085)	4.5 x 3.14 x 47.1 (115 x 80 x 1195)	4.9 x 3.4 x 49.7 (125 x 85 x 1263)	5.1 x 3.5 x 53.7 (130 x 90 x 1365)
ARM (1)					
BORE x ROD DIAMETER x STROKE (STD & SLR)	in. x in. x in. (mm x mm x mm)	4.5 x 3.15 x 43.6 (115 x 80 x 1108)	4.9 x 3.5 x 57.9 (125 x 90 x 1470)	5.5 x 3.9 x 57.1 (140 x 100 x 1450)	5.5 x 3.9 x 65.2 (140 x 100 x 1655)
BUCKET (1)					
BORE x ROD DIAMETER x STROKE (STD)	in. x in. x in. (mm x mm x mm)	3.9 x 2.76 x 35.43 (100 x 70 x 900)	4.3 x 2.9 x 40.4 (110 x 75 x 1025)	4.7 x 3.14 x 41.7 (120 x 80 x 1060)	4.9 x 3.4 x 42.5 (125 x 85 x 1080)
BORE x ROD DIAMETER x STROKE (SLR)	in. x in. x in. (mm x mm x mm)			3.7 x 2.6 x 35.4 (95 x 65 x 900)	

The piston rods and cylinder bodies are made of high-strength steel. A shock absorbing mechanism is fitted in all cylinders to ensure shock-free operation and extend piston life.

https://truckmanualshub.com/

Bucket

DX140LC-3

				BOOM	15” 1’ (4600 mm)			
				ARM	9’ 10” (3000 mm)		9’ 10” (3000 mm)	
				TRACK TYPE	FIXED		FIXED w/DOZER	
				SHOE SIZE	23.6” (600 mm)		23.6” (600 mm)	
				MOUNT	PIN ON	QUICK COUPLER	PIN ON	QUICK COUPLER
BUCKET TYPE	MODEL	CAPACITY[1] yd³ (m³)	WIDTH in. (mm)	WEIGHT lb. (kg)				
HEAVY DUTY [2,3]	HF40-018	0.27 (0.21)	20 (508)	796 (361)	A	A	A	A
	HF40-024	0.41 (0.31)	26 (660)	902 (409)	A	A	A	A
	HF40-030	0.55 (0.42)	32 (813)	1,037 (470)	A	B	A	B
	HF40-036	0.68 (0.52)	38 (965)	1,171 (531)	B	C	B	C
	HF40-042	0.82 (0.63)	44 (1118)	1,253 (568)	C	X	C	C
DITCHING [4]	BS8B48	0.64 (0.49)	48 (1219)	602 (273)	A	B	A	A
	BS8B60	0.80 (0.61)	60 (1524)	908 (412)	C	C	B	B
	BS8B72	0.98 (0.75)	72 (1829)	1,047 (475)	C	X	C	X

DX180LC-3

				BOOM	17’ (5200 mm)							
				ARM	8’ 6 “ (2600 mm)		10’ 2” (3100 mm)		8’ 6 “ (2600 mm)		8’ 6” (2600 mm)	
				TRACK TYPE	FIXED		FIXED		FIXED W/DOZER		NARROW	
				SHOE SIZE	27.6” (700 mm)		27.6” (700 mm)		27.6” (700 mm)		23.6” (600 mm)	
				MOUNT	PIN ON	QUICK COUPLER	PIN ON	QUICK COUPLER	PIN ON	QUICK COUPLER	PIN ON	QUICK COUPLER
BUCKET TYPE	MODEL	CAPACITY[1] yd³ (m³)	WIDTH in. (mm)	WEIGHT lb. (kg)								
HEAVY DUTY [2,3]	HF46-018	0.38 (0.29)	20 (508)	973 (441)	A	A	A	A	A	A	A	A
	HF46-024	0.55 (0.42)	26 (660)	1,107 (502)	A	A	A	A	A	A	A	A
	HF46-030	0.72 (0.55)	32 (813)	1,266 (574)	A	A	A	A	A	A	A	A
	HF46-036	0.85 (0.65)	38 (965)	1,424 (646)	A	A	A	B	A	A	A	B
	HF46-042	1.02 (0.78)	44 (1118)	1,557 (706)	A	C	B	C	A	B	B	C
	HF46-048	1.19 (0.91)	50 (1270)	1,790 (812)	B	C	C	X	B	C	C	X
DITCHING [4]	BS8B48	0.64 (0.49)	48 (1219)	602 (273)	A	A	A	A	A	A	A	A
	BS8B60	0.80 (0.61)	60 (1524)	908 (412)	A	A	A	A	A	A	A	A
	BS8B72	0.98 (0.75)	72 (1829)	1,047 (475)	A	B	A	B	A	A	A	B

1 Capacity based on ISO 7451
2 Equipped with Side Cutters
3 Equipped with Bolt On Teeth
4 Equipped with Bolt On Cutting Edge

Maximum Suitable Material Density
A 3,370 lb./yd³ (2,000 kg/m³)
B 2,700 lb./yd³ (1,600 kg/m³)
C 1,850 lb./yd³ (1,100 kg/m³)
X Not Approved

https://truckmanualshub.com/

Bucket

DX225LC-3

				BOOM	18' 8" (5690 mm)							
				ARM	9' 6 " (2900 mm)		11' 6" (3500 mm)		9' 6" (2900 mm)		8' 6" (2600 mm)	
				TRACK TYPE	FIXED		FIXED		FIXED W/DOZER		NARROW	
				SHOE SIZE	31.5" (800 mm)		34.5" (900 mm)		31.5" (800 mm)		23.6" (600 mm)	
				MOUNT	PIN ON	QUICK COUPLER	PIN ON	QUICK COUPLER	PIN ON	QUICK COUPLER	PIN ON	QUICK COUPLER
BUCKET TYPE	MODEL	CAPACITY[1] yd³ (m³)	WIDTH in. (mm)	WEIGHT lb. (kg)								
HEAVY DUTY [2,3]	HF49-024	0.59 (0.45)	26 (660)	1,277 (579)	A	A	A	A	A	A	A	A
	HF49-030	0.78 (0.60)	32 (813)	1,466 (665)	A	A	A	A	A	A	A	A
	HF49-036	0.99 (0.76)	38 (965)	1,665 (755)	A	A	A	A	A	A	A	A
	HF49-042	1.20 (0.92)	44 (1118)	1,820 (826)	A	B	A	A	A	A	A	B
	HF49-048	1.41 (1.08)	50 (1270)	1,976 (896)	B	C	B	B	A	A	B	C
DITCHING [4]	B33B48	0.93 (0.71)	48 (1219)	903 (410)	A	A	A	A	A	A	A	A
	B33B60	0.98 (0.75)	60 (1524)	1,307 (593)	A	A	A	A	A	A	A	A
	B33B72	1.2 (0.92)	72 (1829)	1,499 (680)	A	A	A	A	A	A	A	B

DX225LC-3 SLR

				BOOM	27' 11" (8500 mm)
				ARM	20'4" (6200 mm)
				TRACK TYPE	FIXED
				SHOE SIZE	35.4" (900 mm)
				MOUNT	PIN ON
BUCKET TYPE	MODEL	CAPACITY[1] yd³ (m³)	WIDTH in. (mm)	WEIGHT lb. (kg)	
HEAVY DUTY [2,3]	HF40-018	0.27 (0.21)	20 (508)	796 (361)	A
	HF40-024	0.41 (0.31)	26 (660)	902 (409)	A
	HF40-030	0.55 (0.42)	32 (813)	1,037 (470)	B
	HF40-036	0.68 (0.52)	38 (965)	1,171 (531)	C
	HF40-042	0.82 (0.63)	44 (1118)	1,253 (568)	C
DITCHING [4]	BS8B48	0.64 (0.49)	48 (1219)	602 (273)	B
	BS8B60	0.80 (0.61)	60 (1524)	908 (412)	C

DX255LC-3

				BOOM	19' 4" (5893 mm)			
				ARM	9' 10" (3000 mm)		11' 5" (3500 mm)	
				TRACK TYPE	FIXED		FIXED	
				SHOE SIZE	31.5" (800 mm)		35.4" (900 mm)	
				MOUNT	PIN ON	QUICK COUPER	PIN ON	QUICK COUPLER
BUCKET TYPE	MODEL	CAPACITY[1] yd³ (m³)	WIDTH in. (mm)	WEIGHT lb. (kg)				
HEAVY DUTY [2,3]	HF49-024	0.59 (0.45)	26 (660)	1,277 (579)	A	A	A	A
	HF49-030	0.78 (0.60)	32 (813)	1,466 (665)	A	A	A	A
	HF49-036	0.99 (0.76)	38 (965)	1,665 (755)	A	A	A	A
	HF49-042	1.20 (0.92)	44 (1118)	1,820 (826)	A	A	A	A
	HF49-048	1.41 (1.08)	50 (1270)	1,976 (896)	A	A	A	A
DITCHING [4]	B33B48	0.93 (0.71)	48 (1219)	903 (410)	A	A	A	A
	B33B60	0.98 (0.75)	60 (1524)	1,307 (593)	A	A	A	A
	B33B72	1.20 (0.92)	72 (1829)	1,499 (680)	A	A	A	A

1 Capacity based on ISO 7451
2 Equipped with Side Cutters
3 Equipped with Bolt On Teeth
4 Equipped with Bolt On Cutting Edge

Maximum Suitable Material Density
A 3,370 lb./yd³ (2,000 kg/m³)
B 2,700 lb./yd³ (1,600 kg/m³)
C 1,850 lb./yd³ (1,100 kg/m³)
X Not Approved

https://truckmanualshub.com/

Dimensions

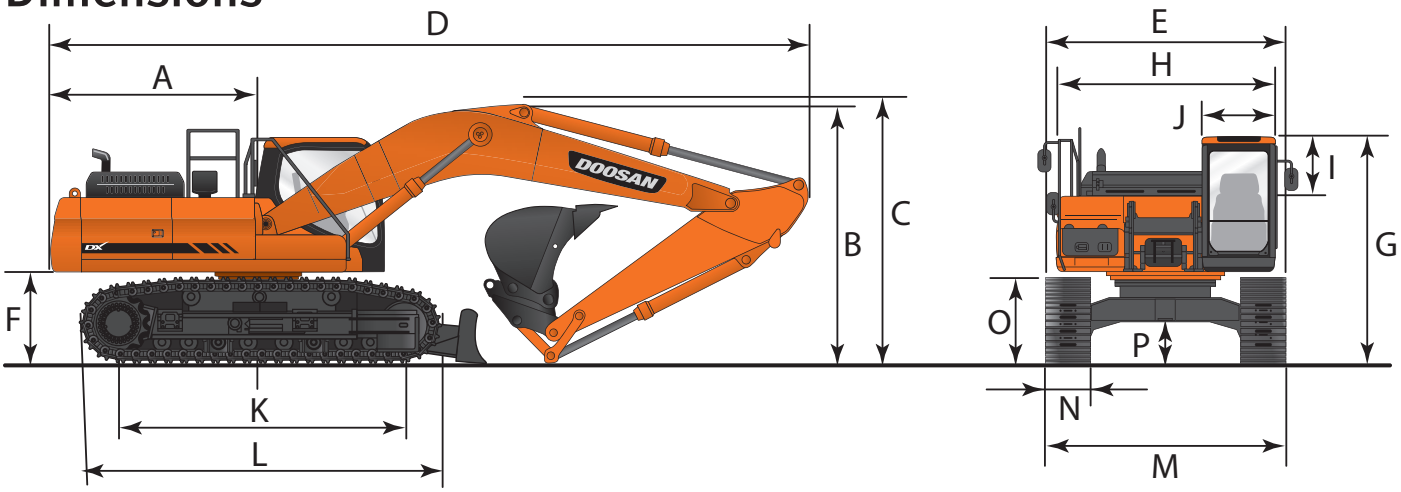

DX140LC-3

BOOM TYPE		ft.-in. (mm)	15'1" (4600) STD
ARM TYPE		ft.-in. (mm)	9'10" (3000) STD
BUCKET TYPE (SAE)		yd³ (m³)	0.59 (0.45)
TRACK TYPE			STANDARD
TAIL SWING RADIUS	A	ft.-in. (mm)	7'3" (2200)
SHIPPING HEIGHT (BOOM)	B	ft.-in. (mm)	10'1" (3065)
SHIPPING HEIGHT (HOSE)	C	ft.-in. (mm)	10'5" (3180)
SHIPPING LENGTH	D	ft.-in. (mm)	25'1" (7635)
SHIPPING WIDTH	E	ft.-in. (mm)	8'6" (2590)
COUNTER WEIGHT CLEARANCE	F	ft.-in. (mm)	2'11" (894)
CABIN HEIGHT	G	ft.-in. (mm)	9'1" (2773)
UPPER STRUCTURE WIDTH	H	ft.-in. (mm)	8'4" (2540)
CABIN HEIGHT ABOVE HOUSE	I	ft.-in. (mm)	3'5" (1045)
CABIN WIDTH	J	ft.-in. (mm)	3'4" (1010)
TUMBLER DISTANCE	K	ft.-in. (mm)	9'11" (3035)
OVERALL TRACK LENGTH	L	ft.-in. (mm)	12'4" (3755)
UNDERCARRIAGE WIDTH	M	ft.-in. (mm)	8'6" (2590)
TRACK SHOE WIDTH	N	in. (mm)	23.6" (600)
TRACK HEIGHT	O	ft.-in. (mm)	2'7" (794)
CAR BODY CLEARANCE	P	ft.-in. (mm)	1'4" (410)

DX180LC-3

BOOM TYPE		ft.-in. (mm)	17'1" (5200) STD		
ARM TYPE		ft.-in. (mm)	8' 6" (2,600) STD	10' 2" (3,100)	8' 6" (2,600)
BUCKET TYPE (SAE)		yd³ (m³)	0.92 (0.70)	0.75 (0.57)	0.92 (0.70)
TRACK TYPE			STANDARD	STANDARD	NARROW
TAIL SWING RADIUS	A	ft.-in. (mm)	8' (2450)	8' (2450)	8' (2450)
SHIPPING HEIGHT (BOOM)	B	ft.-in. (mm)	8'11" (2725)	9'4" (2975)	8'11" (2725)
SHIPPING HEIGHT (HOSE)	C	ft.-in. (mm)	9'4" (2855)	9'10" (3150)	9'4" (2855)
SHIPPING LENGTH	D	ft.-in. (mm)	28'4" (8630)	28'7" (8705)	28'4" (8630)
SHIPPING WIDTH	E	ft.-in. (mm)	9'6" (2900)	9'6" (2900)	8'6" (2590)
COUNTER WEIGHT CLEARANCE	F	ft.-in. (mm)	3'5" (1035)	3'5" (1035)	3'5" (1035)
CABIN HEIGHT	G	ft.-in. (mm)	9'7" (2925)	9'7" (2925)	9'7" (2925)
UPPER STRUCTURE WIDTH	H	ft.-in. (mm)	8'4" (2540)	8'4" (2540)	8'4" (2540)
CABIN HEIGHT ABOVE HOUSE	I	ft.-in. (mm)	2' 9" (845)	2' 9" (845)	2' 9" (845)
CABIN WIDTH	J	ft.-in. (mm)	3'4" (1010)	3'4" (1010)	3'4" (1010)
TUMBLER DISTANCE	K	ft.-in. (mm)	10'5" (3180)	10'5" (3180)	10'5" (3180)
OVERALL TRACK LENGTH	L	ft.-in. (mm)	13' (3968)	13' (3968)	13' (3968)
UNDERCARRIAGE WIDTH	M	ft.-in. (mm)	9'6" (2900)	9'6" (2900)	8'6" (2590)
TRACK SHOE WIDTH	N	in. (mm)	27.5" (700)	27.5" (700)	23.6" (600)
TRACK HEIGHT	O	ft.-in. (mm)	3' (917)	3' (917)	3' (917)
CAR BODY CLEARANCE	P	ft.-in. (mm)	1'6" (455)	1'6" (455)	1'6" (455)

DX225LC-3

BOOM TYPE		ft.-in. (mm)	18' 8" (5700) STD		27' 10" (8500) SLR
ARM TYPE		ft.-in. (mm)	9'6" (2,900) STD	11' 6" (3500)	20' 4" (6200)
BUCKET TYPE (SAE)		yd³ (m³)	1.2 (0.92)	1.06 (0.81)	0.51 (0.39)
TRACK TYPE			STANDARD	STANDARD	STANDARD
TAIL SWING RADIUS	A	ft.-in. (mm)	9'2" (2790)	9'2" (2790)	9'2" (2790)
SHIPPING HEIGHT (BOOM)	B	ft.-in. (mm)	9'5" (2870)	10'3" (3130)	10'6" (3190)
SHIPPING HEIGHT (HOSE)	C	ft.-in. (mm)	9'10" (3005)	10'11" (3330)	10'9" (3275)
SHIPPING LENGTH	D	ft.-in. (mm)	31'2" (9490)	31'4" (9540)	40'6" (12 355)
SHIPPING WIDTH	E	ft.-in. (mm)	10'6" (3190)	10'10" (3290)	10'10" (3290)
COUNTER WEIGHT CLEARANCE	F	ft.-in. (mm)	3'6" (1055)	3'6" (1055)	3'6" (1055)
CABIN HEIGHT	G	ft.-in. (mm)	9'9" (2975)	9'9" (2975)	9'9" (2975)
UPPER STRUCTURE WIDTH	H	ft.-in. (mm)	8'11" (2710)	8'11" (2710)	8'11" (2710)
CABIN HEIGHT ABOVE HOUSE	I	ft.-in. (mm)	2'9" (845)	2'9" (845)	2'9" (845)
CABIN WIDTH	J	ft.-in. (mm)	3'4" (1010)	3'4" (1010)	3'4" (1010)
TUMBLER DISTANCE	K	ft.-in. (mm)	12' (3650)	12' (3650)	12' (3650)
OVERALL TRACK LENGTH	L	ft.-in. (mm)	14'7" (4445)	14'7" (4445)	14'7" (4445)
UNDERCARRIAGE WIDTH	M	ft.-in. (mm)	10'6" (3190)	10'10" (3290)	10'10" (3290)
TRACK SHOE WIDTH	N	in. (mm)	31.5" (800)	35.4" (900)	35.4" (900)
TRACK HEIGHT	O	ft.-in. (mm)	3'1" (947)	3'1" (947)	3'1" (947)
CAR BODY CLEARANCE	P	ft.-in. (mm)	1'7" (480)	1'7" (480)	1'7" (480)

DX255LC-3

19'4" (5900) STD	
9'10" (3000) STD	11'5" (3500)
1.44 (1.1)	1.2 (0.92)
STANDARD	STANDARD
9'10" (2995)	9'10" (2995)
9'10" (2995)	11'1" (3380)
10'6" (3200)	11'8" (3555)
32'11" (10 035)	33' (10 060)
11'2" (3400)	11'6" (3500)
3'8" (1110)	3'8" (1110)
9'9" (2970)	9'9" (2970)
8'11" (2710)	8'11" (2710)
2'9" (845)	2'9" (845)
3'4" (1010)	3'4" (1010)
12'7" (3835)	12'7" (3835)
15'2" (4625)	15'2" (4625)
11'2" (3400)	11'6" (3500)
31.5" (800)	35.4" (900)
3'3" (992)	3'3" (992)
1'6" (450)	1'6" (450)

https://truckmanualshub.com/

Working Range

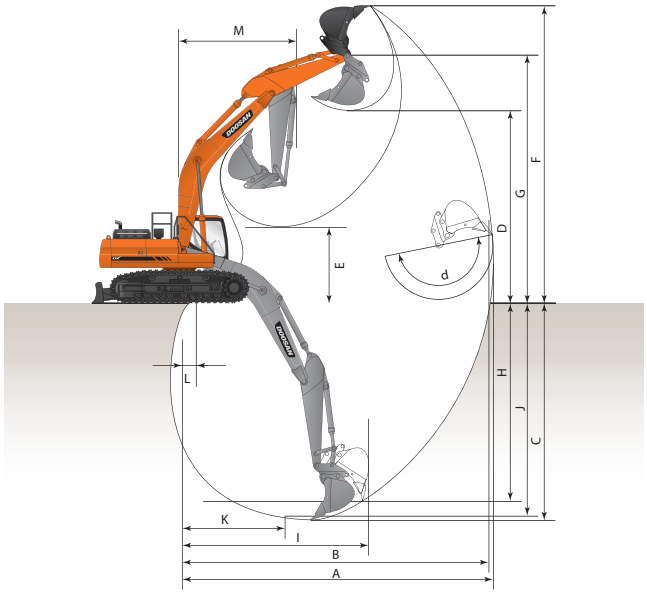

DX140LC-3

BOOM TYPE		ft.-in. (mm)	15'1" (4600)
ARM TYPE		ft.-in. (mm)	9'10" STD (3000)
BUCKET TYPE (SAE) PCSA		yd³ (m³)	0.59 yd³ (0.45 m³)
TRACK T YPE			STANDARD
MAX. DIGGING REACH	A	ft.-in. (mm)	28'5" (8665)
MAX. DIGGING REACH (GROUND)	B	ft.-in. (mm)	28' (8530)
MAX. DIGGING DEPTH	C	ft.-in. (mm)	20'2" (6135)
MAX. LOADING HEIGHT	D	ft.-in. (mm)	21'2" (6440)
MIN. LOADING HEIGHT	E	ft.-in. (mm)	5'8" (1725)
MAX. DIGGING HEIGHT	F	ft.-in. (mm)	28'8" (8745)
MAX. BUCKET PIN HEIGHT	G	ft.-in. (mm)	25'1" (7655)
MAX. VERTICAL WALL DEPTH	H	ft.-in. (mm)	15'5" (4685)
MAX. RADIUS VERTICAL	I	ft.-in. (mm)	19'7" (5970)
MAX. DEPTH TO 8' LINE	J	ft.-in. (mm)	19'4" (5890)
MIN. RADIUS 8' LINE	K	ft.-in. (mm)	6' (1825)
MIN. DIGGING REACH	L	ft.-in. (mm)	-9" (-225)
MIN. SWING RADIUS	M	ft.-in. (mm)	8'7" (2625)
BUCKET ANGLE (DEG)	d	Degrees	174°

DX180LC-3

BOOM TYPE		17' (5200)	
ARM TYPE		8'6" (2600)	10'2" (3100)
BUCKET TYPE (SAE) PCSA		0.92 (0.70)	0.75 (0.57)
TRACK TYPE		STANDARD OR NARROW	STANDARD
MAX. DIGGING REACH	A	29'11" (9130)	31'1" (9485)
MAX. DIGGING REACH (GROUND)	B	29'5" (8960)	30'7" (9325)
MAX. DIGGING DEPTH	C	20'1" (6110)	21'8" (6610)
MAX. LOADING HEIGHT	D	21'4" (6500)	21'4" (6500)
MIN. LOADING HEIGHT	E	7'10" (2380)	6'2" (1880)
MAX. DIGGING HEIGHT	F	30'1" (9170)	29'10" (9090)
MAX. BUCKET PIN HEIGHT	G	26' (7920)	26' (7915)
MAX. VERTICAL WALL DEPTH	H	16'4" (4985)	16'6" (5030)
MAX. RADIUS VERTICAL	I	20' (6105)	21'7" (6590)
MAX. DEPTH TO 8' LINE	J	19'4" (5900)	21' (6400)
MIN. RADIUS 8' LINE	K	7'10" (2380)	7'5" (2270)
MIN. DIGGING REACH	L	12" (315)	-11" (-270)
MIN. SWING RADIUS	M	10'4" (3150)	10'4" (3155)
BUCKET ANGLE (DEG)	d	176°	176°

DX225LC-3

BOOM TYPE		ft.-in. (mm)	18'8" (5700) STD		27'10" (8500) SLR
ARM TYPE		ft.-in. (mm)	9'6" (2900) STD	11'5" (3500)	20' 4" (6200)
BUCKET TYPE (SAE) PCSA		yd³ (m³)	1.20 (0.92)	1.06 (0.81)	0.51 (0.39)
TRACK TYPE			STANDARD	STANDARD	STANDARD
MAX. DIGGING REACH	A	ft.-in. (mm)	32'5" (9885)	34'1" (10 390)	50'6" (15 380)
MAX. DIGGING REACH (GROUND)	B	ft.-in. (mm)	31'10" (9710)	33'6" (10 220)	50'1" (15 265)
MAX. DIGGING DEPTH	C	ft.-in. (mm)	21'7" (6585)	23'7" (7190)	38'3" (11 650)
MAX. LOADING HEIGHT	D	ft.-in. (mm)	22'5" (6840)	22'11" (6980)	35'7" (10 845)
MIN. LOADING HEIGHT	E	ft.-in. (mm)	8'2" (2500)	6'3" (1900)	6'3" (1900)
MAX. DIGGING HEIGHT	F	ft.-in. (mm)	31'4" (9560)	31'8" (9660)	42'11" (13 075)
MAX. BUCKET PIN HEIGHT	G	ft.-in. (mm)	27'3" (8295)	27'8" (8440)	39'7" (12 075)
MAX. VERTICAL WALL DEPTH	H	ft.-in. (mm)	18'5" (5625)	19'7" (5975)	31'10" (9710)
MAX. RADIUS VERTICAL	I	ft.-in. (mm)	20'11" (6380)	22'1" (6740)	33' (10 065)
MAX. DEPTH TO 8' LINE	J	ft.-in. (mm)	21' (6400)	23' (7020)	37'11" (11 550)
MIN. RADIUS 8' LINE	K	ft.-in. (mm)	9'4" (2855)	9'3" (2825)	15'11" (4850)
MIN. DIGGING REACH	L	ft.-in. (mm)	1'8" (510)	-9" (-230)	6" (155)
MIN. SWING RADIUS	M	ft.-in. (mm)	11'9" (3580)	11'11" (3620)	16'3" (4960)
BUCKET ANGLE (DEG)	d	Degrees	177°	177°	177°

DX255LC-3

19'4" (5,900) STD	
9'10"(3000) STD	11'5" (3500)
1.44 (1.1)	1.2 (0.92)
STANDARD	STANDARD
33'5" (10 175)	34'10" (10 605)
32'10" (9995)	34'3" (10 430)
22'4" (6810)	24' (7315)
23'1" (7025)	23'6" (7170)
8'6" (2600)	6'10" (2090)
31'10" (9705)	32'3" (9820)
27'11" (8500)	28'4" (8640)
17'1" (5200)	18'1" (5520)
23'8" (7225)	24'8" (7520)
21'9" (6630)	23'5" (7145)
9'9" (2960)	9'8" (2945)
2'3" (690)	7" (190)
12'2" (3720)	12'3" (3745)
174°	174°

https://truckmanualshub.com/

Digging Force (ISO)

DX140LC-3

BUCKET (PCSA)	BUCKET SIZE (SAE)	0.59 yd³ (0.45 m³) STD	0.67 yd³ (0.51 m³)	0.77 yd³ (0.59 m³)
DIGGING FORCE	lbf.	24,471	24,471	24,471
	kgf	11 100	11 100	11 100
	kN	109	109	109
ARM	ARM SIZE	9'10" (3,000 mm) STD		
DIGGING FORCE	lbf.	13,228		
	kgf	6000		
	kN	59		

DX180LC-3

BUCKET (PCSA)	BUCKET SIZE (SAE)	0.92 yd³ (0.7 m³) STD	0.75 yd³ (0.57 m³)	0.99 yd³ (0.76 m³)
DIGGING FORCE	lbf.	28,881	28,881	28,881
	kgf	13 100	13 100	13 100
	kN	128	128	128
ARM	ARM SIZE	8'6" (2,600 mm) STD	10'2" (3,100 mm)	
DIGGING FORCE	lbf.	20,503	18,960	
	kgf	9300	8600	
	kN	91	84	

DX225LC-3

BUCKET (PCSA)	BUCKET SIZE (SAE)	1.20 yd³ (0.92 m³) STD	1.06 yd³ (0.81 m³)	1.37 yd³ (1.05 m³)	0.51 yd³ (0.39 m³) SLR
DIGGING FORCE	lbf.	33,510	33,510	33,510	22,046
	kgf	15 200	15 200	15 200	10 000
	kN	149	149	149	98
ARM	ARM SIZE	9'6" (2,900 mm) STD	11'6" (3,500 mm)	20'4" (6200 mm) SLR	
DIGGING FORCE	lbf.	23,810	21,385	13,228	
	kgf	10 800	9700	6000	
	kN	106	95	59	

DX255LC-3

BUCKET (PCSA)	BUCKET SIZE (SAE)	1.44 yd³ (1.10 m³) STD	1.20 yd³ (0.92 m³)	1.53 yd³ (1.17 m³)
DIGGING FORCE	lbf	39,463	39,463	39,463
	kgf	17 900	17 900	17 900
	kN	176	176	176
ARM	ARM SIZE	9'10" (3000 mm) STD	11'6" (3,500 mm)	
DIGGING FORCE	lbf	28,219	25,794	
	kgf	12 800	11 700	
	kN	126	115	

https://truckmanualshub.com/

Lifting Capacity

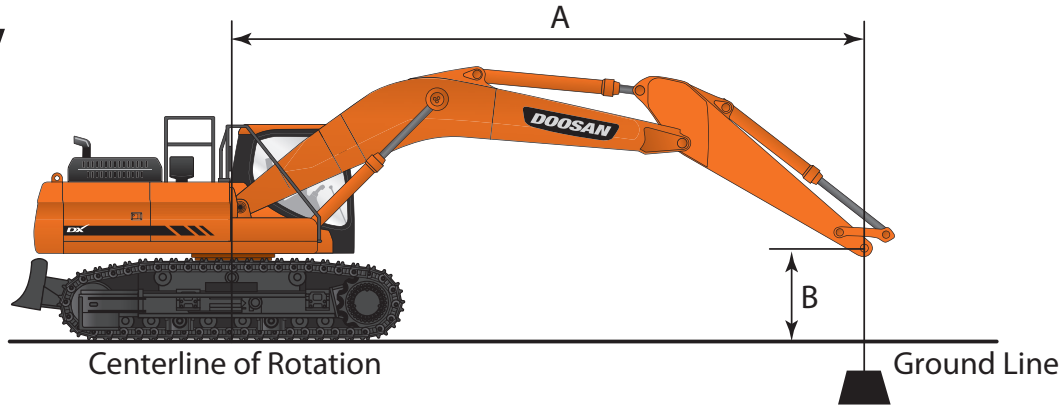

DX140LC-3

Track Width: 8'6" (2590 mm) STD TRACK	Bucket: None	Blade: None	Load Radius Over Front
Boom: 15'1" (4600 mm)	Track Shoe Width: 23.6" (600 mm)		Load Radius Over Side
Arm: 9'10" (3000 mm)	Counter Weight: 4,850 lb (2200 kg)	Unit: 1,000 lb (1000 kg)	

Feet

A ft / B ft	5		10		15		20		MAX F	MAX S	MAX REACH
											A ft
25									5.46 *	5.46 *	Max. at(ft) 13.62
20									4.53 *	4.53 *	Max. at(ft) 19.15
15					7.33 *	7.33 *	6.80 *	5.27	4.27 *	4.27 *	Max. at(ft) 22.25
10			11.55 *	11.55*	9.48 *	8	7.92	5.1	4.30 *	3.78	Max. at(ft) 23.91
5			19.10*	13.61	11.99	7.42	7.65	4.85	4.58 *	3.55	Max. at(ft) 24.44
0 (GROUND)			19.28*	12.63	11.47	6.97	7.42	4.64	5.16 *	3.59	Max. at(ft) 23.91
-5	11.63 *	11.63 *	22.94	12.39	11.23	6.76	7.3	4.54	6.29	3.93	Max. at(ft) 22.25
-10	18.43 *	18.43 *	22.47*	12.54	11.27	6.79			7.86	4.89	Max. at(ft) 19.14
-15			16.80 *	13.08					11.82 *	8.24	Max. at(ft) 13.59

Metric

A m / B m	1.5		3		4.5		6		MAX F	MAX S	MAX REACH
											A m
7.5									2.42 *	2.42 *	Max. at(m) 4.34
6									2.04 *	2.04 *	Max. at(m) 5.91
4.5					3.34 *	3.34 *	3.20 *	2.45	1.94 *	1.94 *	Max. at(m) 6.81
3			5.40 *	5.40 *	4.37 *	3.71	3.68	2.37	1.95 *	1.71	Max. at(m) 7.30
1.5			8.89 *	6.32	5.57	3.44	3.55	2.25	2.08 *	1.61	Max. at(m) 7.45
0 (GROUND)			8.35 *	5.87	5.33	3.23	3.44	2.15	2.34 *	1.63	Max. at(m) 7.29
-1.5	5.20 *	5.20 *	10.12 *	5.77	5.22	3.14	3.39	2.1	2.85	1.78	Max. at(m) 6.79
-3	8.20 *	8.20 *	10.39 *	5.83	5.24	3.15			3.53	2.2	Max. at(m) 5.87
-4.5			7.93 *	6.07					5.35 *	3.59	Max. at(m) 4.25

*Hydraulically Limited

- Load point is the end of the arm.
- Capacities marked with an asterisk (*) are limited by hydraulic capacities.
- Lift capacities shown do not exceed 75% of minimum tipping loads or 87% of hydraulic capacities.
- The least stable position is over the side.
- Lift capacities are in compliance with ISO 10567.

https://truckmanualshub.com/

Lifting Capacity

DX180LC-3

Track Width: 9'6" (2900 mm) STD TRACK	**Bucket:** None	**Blade:** None	Load Radius Over Front
Boom: 17'1" (5200 mm)	**Track Shoe Width:** 27.5" (700 mm)		Load Radius Over Side
Arm: 8'6" (2600 mm)	**Counter Weight:** 7,275 lb (3300 kg)	**Unit:** 1,000 lb (1000 kg)	

Feet

B ft \ A ft	5		10		15		20		25		MAX REACH		
													A ft
25											7.56 *	7.56 *	Max. at(ft) 16.37
20							9.12 *	8.19			6.56 *	6.56 *	Max. at(ft) 20.99
15					12.11 *	12.11 *	10.83 *	8.06			6.26 *	6.05	Max. at(ft) 23.71
10			23.01 *	22.22	14.94 *	11.89	11.23	7.72	6.93 *	5.43	6.31 *	5.38	Max. at(ft) 25.13
5					16.79	11.05	10.82	7.35	7.75	5.29	6.68 *	5.14	Max. at(ft) 25.49
0 (GROUND)			15.18 *	15.18 *	16.23	10.56	10.53	7.08			7.45 *	5.24	Max. at(ft) 24.84
-5	14.88 *	14.88 *	25.14 *	19.67	16.08	10.43	10.43	6.99			8.56	5.8	Max. at(ft) 23.07
-10	25.60 *	25.60 *	22.84 *	20.06	16.23 *	10.59					10.69	7.21	Max. at(ft) 19.93
-15			14.38 *	14.38 *							9.52 *	9.52 *	Max. at(ft) 14.42

Metric

B m \ A m	1.5		3		4.5		6		7.5		MAX REACH		
													A m
7.5											3.37 *	3.37 *	Max. at(m) 5.13
6							4.50 *	3.82			2.96 *	2.96 *	Max. at(m) 6.47
4.5					5.58 *	5.58 *	4.95 *	3.75			2.84 *	2.72	Max. at(m) 7.25
3			10.79 *	10.29	6.92 *	5.51	5.21	3.58	3.67	2.53	2.87 *	2.43	Max. at(m) 7.67
1.5					7.8	5.12	5.02	3.41	3.6	2.46	3.03 *	2.33	Max. at(m) 7.77
0 (GROUND)			6.61 *	6.61 *	7.55	4.9	4.89	3.28	3.55	2.41	3.38 *	2.38	Max. at(m) 7.57
-1.5	6.65 *	6.65 *	11.04 *	9.17	7.48	4.84	4.84	3.24			3.87	2.62	Max. at(m) 7.05
-3	11.39 *	11.39 *	10.56 *	9.35	7.53 *	4.91	4.92	3.31			4.8	3.24	Max. at(m) 6.11
-4.5			6.85 *	6.85 *	4.44 *	4.44 *					4.40 *	4.40 *	Max. at(m) 4.51

*Hydraulically Limited

https://truckmanualshub.com/

Lifting Capacity

Track Width: 9'6" (2900 mm) STD TRACK	**Bucket:** None	**Blade:** None	Load Radius Over Front
Boom: 17'1" (5200 mm)	**Track Shoe Width:** 27.5" (700 mm)		Load Radius Over Side
Arm: 10'2" (3100 mm)	**Counter Weight:** 7,275 lb (3300 kg)	**Unit:** 1,000 lb (1000 kg)	

Feet

B ft \ A ft	5		10		15		20		25		MAX REACH		
													A ft
25											6.90 *	6.90 *	Max. at(ft) 18.13
20							9.26 *	8.39			6.23 *	6.23 *	Max. at(ft) 22.42
15							9.98 *	8.2			6.07 *	5.64	Max. at(ft) 24.95
10			19.92 *	19.92 *	13.74 *	12.15	11.25 *	7.83	7.98	5.5	6.22 *	5.04	Max. at(ft) 26.31
5			19.16 *	19.16 *	16.83 *	11.22	10.9	7.41	7.78	5.31	6.65 *	4.8	Max. at(ft) 26.66
0 (GROUND)			18.29 *	18.29 *	16.29	10.6	10.54	7.08	7.62	5.16	7.19	4.87	Max. at(ft) 26.03
-5	14.93 *	14.93 *	25.22 *	19.46	16.02	10.36	10.37	6.92			7.86	5.31	Max. at(ft) 24.36
-10	23.41 *	23.41 *	24.91 *	19.74	16.09	10.42	10.44	6.99			9.51	6.41	Max. at(ft) 21.40
-15			18.04 *	18.04 *	12.39 *	10.85					10.72 *	9.56	Max. at(ft) 16.45

Metric

B m \ A m	1.5		3		4.5		6		7.5		MAX REACH		
													A m
7.5											3.09 *	3.09 *	Max. at(m) 5.67
6							4.28 *	3.91			2.82 *	2.82 *	Max. at(m) 6.90
4.5							4.57 *	3.81	3.24 *	2.62	2.75 *	2.54	Max. at(m) 7.64
3			9.33 *	9.33 *	6.36 *	5.63	5.18 *	3.63	3.71	2.56	2.82 *	2.28	Max. at(m) 8.03
1.5			8.07 *	8.07 *	7.79 *	5.2	5.06	3.44	3.61	2.47	3.02 *	2.18	Max. at(m) 8.12
0 (GROUND)			8.00 *	8.00 *	7.58	4.92	4.89	3.28	3.54	2.39	3.26	2.21	Max. at(m) 7.93
-1.5	6.69 *	6.69 *	11.10 *	9.07	7.45	4.81	4.81	3.21			3.55	2.4	Max. at(m) 7.44
-3	10.43 *	10.43 *	11.52 *	9.2	7.48	4.84	4.84	3.23			4.28	2.88	Max. at(m) 6.56
-4.5			8.48 *	8.48 *	5.90 *	5.02					4.88 *	4.22	Max. at(m) 5.10

*Hydraulically Limited

https://truckmanualshub.com/

Lifting Capacity

DX225LC-3

Track Width: 10'6" (3190 mm) STD TRACK	Bucket: None	Blade: None	Load Radius Over Front
Boom: 18'8" (5700 mm)	Track Shoe Width: 31.5" (800 mm)		Load Radius Over Side
Arm: 9'6" (2900 mm)	Counter Weight: 9,480 lb (4300 kg)	Unit: 1,000 lb (1000 kg)	

Feet

B ft \ A ft	5		10		15		20		25		MAX REACH		
													A ft
25							9.54 *	9.54 *			9.47 *	9.47 *	Max. at(ft) 20.06
20							11.82 *	11.71			8.78 *	8.69	Max. at(ft) 23.85
15							12.87 *	11.36	11.80 *	7.95	8.63 *	7.35	Max. at(ft) 26.16
10					18.69 *	16.56	14.61 *	10.83	12.02	7.74	8.85 *	6.7	Max. at(ft) 27.37
5					22.20 *	15.45	16.36 *	10.3	11.75	7.49	9.45 *	6.46	Max. at(ft) 27.63
0 (GROUND)			14.12 *	14.12 *	23.91 *	14.84	16.02	9.93	11.55	7.31	10.38	6.59	Max. at(ft) 26.96
-5	15.04 *	15.04 *	24.10 *	24.10 *	23.69 *	14.68	15.85	9.78	11.51	7.27	11.34	7.17	Max. at(ft) 25.29
-10	25.68 *	25.68 *	30.06 *	28.74	21.54 *	14.84	15.90 *	9.89			13.41 *	8.57	Max. at(ft) 22.38
-15			22.50 *	22.50 *	16.28 *	15.39					12.96 *	12.26	Max. at(ft) 17.66

Metric

B m \ A m	1.5		3		4.5		6		7.5		MAX REACH		
													A m
7.5							4.95 *	4.95 *			4.26 *	4.26 *	Max. at(m) 6.22
6							5.38 *	5.38 *			3.97 *	3.89	Max. at(m) 7.32
4.5							5.91 *	5.27	5.46 *	3.7	3.91 *	3.32	Max. at(m) 8.00
3					8.67 *	7.67	6.73 *	5.02	5.59	3.59	4.02 *	3.03	Max. at(m) 8.35
1.5					10.28 *	7.16	7.55 *	4.77	5.46	3.47	4.29 *	2.93	Max. at(m) 8.42
0 (GROUND)			6.16 *	6.16 *	11.04 *	6.89	7.44	4.6	5.36	3.39	4.71	2.99	Max. at(m) 8.22
-1.5	6.73 *	6.73 *	10.62 *	10.62 *	10.92 *	6.82	7.36	4.54	5.34	3.37	5.13	3.25	Max. at(m) 7.72
-3	11.44 *	11.44 *	13.87 *	13.41	9.96 *	6.89	7.40 *	4.58			6.08 *	3.86	Max. at(m) 6.86
-4.5			10.53 *	10.53 *	7.68 *	7.13					5.90 *	5.43	Max. at(m) 5.47

*Hydraulically Limited

https://truckmanualshub.com/

Lifting Capacity

DX225LC-3

Track Width: 10'10" (3290 mm) STD TRACK	**Bucket:** None	**Blade:** None	Load Radius Over Front
Boom: 18'8" (5700 mm)	**Track Shoe Width:** 35.4" (900 mm)		Load Radius Over Side
Arm: 11'6" (3500 mm)	**Counter Weight:** 11,684 lb (5300 kg)	**Unit:** 1,000 lb (1000 kg)	

Feet

A ft / B ft	5		10		15		20		25		MAX REACH		
													A ft
25											7.93 *	7.93 *	Max. at(ft) 22.26
20									8.81 *	8.81 *	7.47 *	7.47 *	Max. at(ft) 25.74
15							11.61 *	11.61 *	10.92 *	9.09	7.39 *	7.39 *	Max. at(ft) 27.90
10			25.15 *	25.15 *	16.77 *	16.77 *	13.46 *	12.33	11.78 *	8.81	7.60 *	6.96	Max. at(ft) 29.03
5					20.70 *	17.64	15.43 *	11.71	12.77 *	8.5	8.11 *	6.73	Max. at(ft) 29.28
0 (GROUND)			16.91 *	16.91 *	23.15 *	16.81	16.90 *	11.24	12.81	8.25	9.01 *	6.83	Max. at(ft) 28.65
-5	14.66 *	14.66 *	23.61 *	23.61 *	23.70 *	16.48	17.42 *	11	12.68	8.13	10.60 *	7.33	Max. at(ft) 27.08
-10	22.80 *	22.80 *	32.36 *	31.82	22.41 *	16.52	16.58 *	11			12.69 *	8.48	Max. at(ft) 24.41
-15	33.63 *	33.63 *	26.25 *	26.25 *	18.68 *	16.91	13.08 *	11.35			12.87 *	11.24	Max. at(ft) 20.16

Metric

A m / B m	1.5		3		4.5		6		7.5		MAX REACH		
													A m
7.5											3.57 *	3.57 *	Max. at(m) 6.89
6									4.33 *	4.3	3.38 *	3.38 *	Max. at(m) 7.90
4.5							5.33 *	5.33 *	4.99 *	4.22	3.36 *	3.36 *	Max. at(m) 8.53
3			11.79 *	11.79 *	7.77 *	7.77 *	6.20 *	5.71	5.40 *	4.09	3.46 *	3.15	Max. at(m) 8.86
1.5					9.58 *	8.18	7.12 *	5.43	5.87 *	3.95	3.68 *	3.05	Max. at(m) 8.92
-1.5	6.57 *	6.57 *	10.43 *	10.43 *	10.94 *	7.65	8.04 *	5.1	5.88	3.77	4.80 *	3.32	Max. at(m) 8.26
-3	10.17 *	10.17 *	14.94 *	14.85	10.36 *	7.67	7.68 *	5.1			5.75 *	3.83	Max. at(m) 7.47
-4.5	14.90 *	14.90 *	12.22 *	12.22 *	8.72 *	7.84	6.23 *	5.24			5.84 *	5.01	Max. at(m) 6.22

*Hydraulically Limited

https://truckmanualshub.com/

Lifting Capacity

DX225LC-3 SLR

Track Width: 10'10" (3290 mm) STD TRACK	Bucket: None	Blade: None	Load Radius Over Front
Boom: 27'10" (8500 mm)	Track Shoe Width: 35.4" (900 mm)		Load Radius Over Side
Arm: 20'4" (6200 mm)	Counter Weight: 11,684 lb (5300 kg)	Unit: 1,000 lb (1000 kg)	

Feet

A ft / B ft	5		10		15		20		25	
35										
30										
25										
20										
15										
10			21.84 *	21.84 *	13.42 *	13.42 *	10.07 *	10.07 *	8.28 *	8.28 *
5					17.04 *	15.65	12.05 *	10.61	9.49 *	7.77
0 (GROUND)			8.41 *	8.41 *	16.84 *	14.11	13.62 *	9.66	10.53 *	7.16
-5	8.00 *	8.00 *	10.12 *	10.12 *	16.14 *	13.39	14.61 *	9.05	11.23	6.72
-10	10.18 *	10.18 *	12.31 *	12.31 *	17.57 *	13.14	15.01 *	8.74	10.94	6.45
-15	12.46 *	12.46 *	14.82 *	14.82 *	19.93 *	13.19	14.88 *	8.66	10.82	6.35
-20	14.93 *	14.93 *	17.73 *	17.73 *	18.68 *	13.43	14.21 *	8.76	10.86	6.38
-25	17.68 *	17.68 *	21.21 *	21.21 *	16.65 *	13.88	12.87 *	9.02	10.27 *	6.57
-30			18.14 *	18.14 *	13.52 *	13.52 *	10.58 *	9.48	8.30 *	6.95

Metric

A m / B m	1.5		3		4.5		6		7.5	
12										
10.5										
9										
7.5										
6										
4.5										
3			9.26 *	9.26 *	6.25 *	6.25 *	4.66 *	4.66 *	3.82 *	3.82 *
1.5					7.91 *	7.24	5.58 *	4.91	4.38 *	3.6
0 (GROUND)			3.74 *	3.74 *	7.36 *	6.54	6.30 *	4.47	4.86 *	3.32
-1.5	3.61 *	3.61 *	4.53 *	4.53 *	7.13 *	6.21	6.75 *	4.2	5.21 *	3.12
-3	4.58 *	4.58 *	5.50 *	5.50 *	7.78 *	6.11	6.93 *	4.06	5.08	2.99
-4.5	5.59 *	5.59 *	6.62 *	6.62 *	8.89 *	6.12	6.87 *	4.02	5.02	2.94
-6	6.69 *	6.69 *	7.90 *	7.90 *	8.64 *	6.24	6.57 *	4.06	5.04	2.96
-7.5	7.90 *	7.90 *	9.42 *	9.42 *	7.75 *	6.43	5.99 *	4.17	4.79 *	3.04
-9			8.57 *	8.57 *	6.37 *	6.37 *	5.00 *	4.38	3.96 *	3.2

*Hydraulically Limited

https://truckmanualshub.com/

30		35		40		45		MAX REACH		
										A ft
		2.77 *	2.77 *					1.89 *	1.89 *	Max. at(ft) 36.24
		4.33 *	4.33 *					1.78 *	1.78 *	Max. at(ft) 39.72
		5.17 *	5.17 *	3.46 *	3.46 *			1.72 *	1.72 *	Max. at(ft) 42.37
		5.56 *	5.46	4.54 *	4.2			1.70 *	1.70 *	Max. at(ft) 44.27
6.43 *	6.43 *	5.97 *	5.22	5.41 *	4.05	2.30 *	2.30 *	1.73 *	1.73 *	Max. at(ft) 45.54
7.19 *	6.38	6.46 *	4.93	5.96 *	3.87	3.10 *	3.05	1.79 *	1.79 *	Max. at(ft) 46.25
7.96 *	5.93	6.97 *	4.64	6.05	3.69	3.46 *	2.95	1.89 *	1.89 *	Max. at(ft) 46.40
8.67 *	5.53	7.19	4.38	5.87	3.52	3.32 *	2.85	2.04 *	2.04 *	Max. at(ft) 46.00
8.68	5.22	6.97	4.16	5.73	3.38	2.33 *	2.33 *	2.24 *	2.24 *	Max. at(ft) 45.06
8.46	5.02	6.82	4.03	5.65	3.3			2.55 *	2.55 *	Max. at(ft) 43.49
8.37	4.93	6.76	3.97	5.32 *	3.3			2.99 *	2.99 *	Max. at(ft) 41.29
8.4	4.96	6.82	4.03					3.69 *	3.6	Max. at(ft) 38.28
8.25 *	5.13							4.94 *	4.35	Max. at(ft) 34.31
								6.57 *	5.79	Max. at(ft) 28.91

9		10.5		12		13.5		MAX REACH		
										A m
								0.94 *	0.94 *	Max. at(m) 9.81
		1.50 *	1.50 *					0.85 *	0.85 *	Max. at(m) 11.17
		2.07 *	2.07 *	1.05 *	1.05 *			0.80 *	0.80 *	Max. at(m) 12.19
		2.40 *	2.40 *	1.76 *	1.76 *			0.78 *	0.78 *	Max. at(m) 12.97
		2.54 *	2.54 *	2.20 *	1.96	0.81 *	0.81 *	0.77 *	0.77 *	Max. at(m) 13.52
2.96 *	2.96 *	2.74 *	2.43	2.58 *	1.89	1.36 *	1.36 *	0.78 *	0.78 *	Max. at(m) 13.90
3.31 *	2.96	2.97 *	2.3	2.73 *	1.81	1.69 *	1.43	0.81 *	0.81 *	Max. at(m) 14.10
3.67 *	2.75	3.21 *	2.16	2.82	1.72	1.87 *	1.38	0.86 *	0.86 *	Max. at(m) 14.14
4.00 *	2.57	3.34	2.04	2.73	1.64	1.86 *	1.33	0.92 *	0.92 *	Max. at(m) 14.02
4.03	2.42	3.23	1.94	2.66	1.57	1.52 *	1.3	1.02 *	1.02 *	Max. at(m) 13.74
3.93	2.33	3.16	1.87	2.62	1.53			1.15 *	1.15 *	Max. at(m) 13.27
3.88	2.29	3.14	1.84	2.61	1.53			1.35 *	1.35 *	Max. at(m) 12.62
3.89	2.3	3.16	1.86					1.65 *	1.62	Max. at(m) 11.73
3.87 *	2.37	2.47 *	1.95					2.18 *	1.94	Max. at(m) 10.57
2.99 *	2.53							2.99 *	2.54	Max. at(m) 9.00

https://truckmanualshub.com/

Lifting Capacity

DX255LC-3

Track Width: 11'2" (3400 mm) STD TRACK
Boom: 19'4" (5900 mm)
Arm: 9'10" (3000 mm)
Bucket: None
Track Shoe Width: 31.5" (800 mm)
Counter Weight: 11,023 lb (5000 kg)
Blade: None
Unit: 1,000 lb (1000 kg)
Load Radius Over Front
Load Radius Over Side

Feet

B ft \ A ft	5		10		15		20		25		MAX REACH		
													A ft
25							13.85 *	13.85 *			10.90 *	10.90 *	Max. at(ft) 21.44
20							14.34 *	14.34 *			10.25 *	10.25 *	Max. at(ft) 24.99
15							15.89 *	14.83	14.61 *	10.47	10.15 *	9.13	Max. at(ft) 27.17
10					23.51 *	21.67	18.19 *	14.16	15.07	10.17	10.45 *	8.39	Max. at(ft) 28.31
5					27.90 *	20.32	20.45 *	13.51	14.72	9.85	11.17 *	8.13	Max. at(ft) 28.53
0 (GROUND)			15.59 *	15.59 *	29.97 *	19.62	20.11	13.06	14.46	9.61	12.4	8.3	Max. at(ft) 27.85
-5	17.43 *	17.43 *	26.82 *	26.82 *	29.76 *	19.44	19.9	12.87	14.38	9.54	13.48	8.98	Max. at(ft) 26.21
-10	29.10 *	29.10 *	38.11 *	38.11 *	27.39 *	19.62	20.01	12.97			15.99	10.58	Max. at(ft) 23.38
-15			29.69 *	29.69 *	21.78 *	20.19					16.28 *	14.61	Max. at(ft) 18.85

Metric

B m \ A m	1.5		3		4.5		6		7.5		MAX REACH		
													A m
7.5							6.42 *	6.42 *			4.91 *	4.91 *	Max. at(m) 6.64
6							6.55 *	6.55 *	5.44 *	4.94	4.64 *	4.64 *	Max. at(m) 7.67
4.5							7.31 *	6.88	6.68 *	4.87	4.61 *	4.12	Max. at(m) 8.31
3					10.92 *	10.05	8.39 *	6.56	7	4.72	4.75 *	3.8	Max. at(m) 8.64
1.5					12.92 *	9.43	9.44 *	6.26	6.83	4.57	5.07 *	3.69	Max. at(m) 8.70
0 (GROUND)			6.81 *	6.81 *	13.84 *	9.11	9.35	6.05	6.71	4.46	5.62	3.76	Max. at(m) 8.49
-1.5	7.80 *	7.80 *	11.84 *	11.84 *	13.72 *	9.03	9.25	5.97	6.67	4.42	6.11	4.07	Max. at(m) 8.00
-3	12.98 *	12.98 *	17.57 *	17.57 *	12.66 *	9.11	9.29	6.01			7.19	4.76	Max. at(m) 7.17
-4.5			13.84 *	13.84 *	10.20 *	9.36					7.41 *	6.48	Max. at(m) 5.83

Track Width: 11'6" (3500 mm) STD TRACK
Boom: 19'4" (5900 mm)
Arm: 11'5" (3500 mm)
Bucket: None
Track Shoe Width: 35.4" (900 mm)
Counter Weight: 11,023 lb (5000 kg)
Blade: None
Unit: 1,000 lb (1000 kg)
Load Radius Over Front
Load Radius Over Side

Feet

B ft \ A ft	5		10		15		20		25		MAX REACH		
													A ft
25											9.82 *	9.82 *	Max. at(ft) 23.29
20									12.29 *	10.96	9.34 *	9.34 *	Max. at(ft) 26.60
15							14.77 *	14.77 *	13.75 *	10.76	9.29 *	8.6	Max. at(ft) 28.65
10					21.73 *	21.73 *	17.20 *	14.54	14.93 *	10.42	9.57 *	7.96	Max. at(ft) 29.74
5					26.62 *	20.91	19.70 *	13.83	15	10.06	10.20 *	7.72	Max. at(ft) 29.95
0 (GROUND)			17.88 *	17.88 *	29.49 *	20	20.46	13.3	14.69	9.77	11.30 *	7.84	Max. at(ft) 29.30
-5	16.73 *	16.73 *	26.13 *	26.13 *	30.06 *	19.65	20.15	13.03	14.53	9.62	12.57	8.4	Max. at(ft) 27.74
-10	26.24 *	26.24 *	38.23 *	38.23 *	28.48 *	19.71	20.15	13.03	14.62	9.7	14.55	9.66	Max. at(ft) 25.09
-15	38.66 *	38.66 *	33.64 *	33.64 *	24.17 *	20.13	17.49 *	13.37			16.16 *	12.59	Max. at(ft) 20.96

Metric

B m \ A m	1.5		3		4.5		6		7.5		9		MAX REACH		
															A m
7.5													4.43 *	4.43 *	Max. at(m) 7.19
6									5.86 *	5.1			4.23 *	4.23 *	Max. at(m) 8.16
4.5							6.79 *	6.79 *	6.29 *	5			4.22 *	3.88	Max. at(m) 8.76
3					10.08 *	10.08 *	7.93 *	6.74	6.85 *	4.84	4.72 *	3.65	4.35 *	3.6	Max. at(m) 9.07
1.5					12.33 *	9.7	9.09 *	6.41	6.97	4.67	5.31	3.58	4.63 *	3.5	Max. at(m) 9.13
0 (GROUND)			7.85 *	7.85 *	13.62 *	9.28	9.51	6.17	6.82	4.53			5.13 *	3.56	Max. at(m) 8.93
-1.5	7.50 *	7.50 *	11.55 *	11.55 *	13.87 *	9.13	9.37	6.04	6.74	4.46			5.69	3.8	Max. at(m) 8.47
-3	11.71 *	11.71 *	16.85 *	16.85 *	13.16 *	9.16	9.36	6.04	6.77	4.49			6.56	4.36	Max. at(m) 7.68
-4.5	17.14 *	17.14 *	15.64 *	15.64 *	11.26 *	9.34	8.25 *	6.18					7.33 *	5.61	Max. at(m) 6.46

*Hydraulically Limited

https://truckmanualshub.com/

Standard/Optional Equipment

- • Standard Equipment
- ■ Optional Equipment
- – N/A

	DX140LC-3	DX180LC-3	DX225CL-3	DX255LC-3
ENGINE				
Emissions (EPA)	iT4	iT4	iT4	iT4
Cooled Exhaust Gas Recirculation (CEGR)	•	•	•	•
Diesel Particulate Filter (DPF)	•	•	•	•
High Pressure Common Rail (HPCR)	•	•	•	•
Fuel Filter with Water Separator	•	•	•	•
Coolant Recovery tank	•	•	•	•
Dual Element dry-type air filter with Evacuator	•	•	•	•
Pre Cleaner	•	•	•	•
Electronic Engine Control	•	•	•	•
Auto-Idle	•	•	•	•
Overheat & Low Oil Pressure Engine Protection	•	•	•	•
Variable Speed Radiator Cooling Fan	•	•	•	•
Diesel Powered Coolant Heater	■	■	■	■
HYDRAULIC				
Electronic Power Optimizing System (EPOS)	•	•	•	•
Variable Axial Piston Main Pump (Tandem)	•	•	•	•
Cross Sensing Pump Control	•	•	•	•
Pilot Operated Control Valves	•	•	•	•
Gear Pilot Pump	•	•	•	•
Axial Piston Swing Motor	•	•	•	•
Spring Applied Hydraulic Release Brake	•	•	•	•
Axial Piston Travel Motor (High/Low, Auto)	•	•	•	•
Auxiliary Hydraulics, One-Way	•	•	•	•
Auxiliary Hydraulics, Two-Way	■	■	■	■
Adjustable Auxiliary Flow & Pressure, 10 Presets	•	•	•	•
Intelligent Floating Boom	■	■	■	■
Boom Lock Valve	■	■	■	■
CABIN				
Steel, All-Weather & Sound Suppressed	•	•	•	•
ROPS (ISO 12117-2:2008)	•	•	•	•
Viscous Mount	•	•	•	•
Front Window with Wiper/Washer	•	•	•	•
Tinted Safety Glass	•	•	•	•
Skylight	•	•	•	•
Visor, Front Window and Skylight	•	•	•	•
Pull Up Type Top Front Window	•	•	•	•
Removable Lower Front Window with Storage Behind Seat	•	•	•	•
Adjustable Sliding Side Door Windows	•	•	•	•
Defrost, Front Window	•	•	•	•
Lockable Doors	•	•	•	•
Seat - Heated - Air Suspension - 2" (51 mm) Seat Belt - Adjustable Height & Recline - Adjustable Arm Rests	•	•	•	•
3" (76 mm) Seat Belt	■	■	■	■
Control Stands - Height adjustable - Mounted to Seat Base	•	•	•	•
Storage for Operator's Manuals	•	•	•	•
Mirrors	•	•	•	•
Fully Automatic HVAC w/ ambient temperature sensor	•	•	•	•
7" Multi-Function LCD	•	•	•	•
Cigarette Lighter	•	•	•	•
AM/FM Stereo with CD Player & MP3 port	•	•	•	•
Speakers (2)	•	•	•	•
Antenna, Roof Mounted	•	•	•	•
Emergency Breakout Tool	•	•	•	•
Hot/Cold Beverage Compartment	•	•	•	•
Power Socket, 12V	•	•	•	•
Beverage Holder	•	•	•	•
Interior Light	•	•	•	•
Coat Hanger	•	•	•	•
Rain Shield	■	■	■	■
Guard, FOGS	■	■	■	■
Guard, front window guard	■	■	■	■
Vandalism Window Covers	■	■	■	■
ELECTRICAL				
Alternator - 24V, 60 Amp	•	•	•	•
Alternator - 24V, 80 Amp	■	■	■	■
2 x 12V Batteries, 100 AH Reserve Capacity	•			
2 x 12V Batteries, 150 AH Reserve Capacity		•	•	•
Blade Type Fuse Panel	•	•	•	•
Main Circuit Breaker	•	•	•	•
Light, Work (Halogen): Machine (2), Boom (2)	•	•	•	•
Light, Work (Halogen): Cabin (2)	■	■	■	■
Light, Work (Halogen): Cabin (4 Front, 2 Rear)	■	■	■	■

Standard Equipment based on STD configuration

	DX140LC-3	DX180LC-3	DX225CL-3	DX255LC-3
ELECTRICAL (CONT.)				
Rotating Beacon	■	■	■	■
Hour Meter	•	•	•	•
Engine Restart Prevention System	•	•	•	•
Rear View Camera	•	•	•	•
Laptop Service Port	•	•	•	•
Self-Diagnostics System	•	•	•	•
Telematics	•	•	•	•
DISPLAY MONITOR & WARNINGS				
Buzzer - Engine Oil Pressure - Coolant Temperature	•	•	•	•
Gauges - Engine Coolant Temperature - Fuel Level - Hydraulic Oil Temperature - Engine RPM - Battery Voltage - Hydraulic Pump Pressure	•	•	•	•
Warning & Indicator Lights -Engine Coolant Temperature -Fuel Level -Hydraulic Oil Temperature -ECO -Digital Clock -Warning & Indicator Lights -Hydraulic Oil Temperature - High -Fuel Level - Low -Air Filter - Clogged -Hydraulic Pilot Filter - Clogged -Hydraulic Return Filter - Clogged -Check Engine -Engine Oil Pressure - Low -Hydraulic Charge Pressure - Low -Coolant Temperature - High -Work Lights On -Water in Fuel -DPF Regeneration -DPF High Temperature Exhaust	•	•	•	•
Swing Alarm	■	■	■	■
Travel Alarm	•	•	•	•
UNDERCARRIAGE				
Track Guards and Chains with Adjusters	•	•	•	•
Track Rollers, Upper (Each Side)	1	2	2	2
Track Rollers, Lower (Each Side)	7	7	8	10
In-Shoe Motor Protection	•	•	•	•
Shoes, Triple Grouser - 500 mm (46 Each Side)	–	■	–	–
Shoes, Triple Grouser - 600 mm (44 Each Side)	•	■	–	–
Shoes, Triple Grouser - 700 mm (Each Side)	■	•	■	■
Shoes, Triple Grouser - 800 mm (Each Side)	–	■	•	•
Shoes, Triple Grouser - 900 mm Each Side)	–	■	■	■
Shoes	46	44	49	51
CONTROLS				
Joystick Controls	•	•	•	•
Pattern Control Change Valve (SAE, ISO)	•	•	•	•
Joystick Attachment Control Switches/Buttons - One-way - Two-way - Power Boost	•	•	•	•
Control Stands - Height Adjustable - Sliding (Fore/Aft)"	•	•	•	•
Engine Speed Control Dial	•	•	•	•
Travel Pedals with Hand Levers	•	•	•	•
Straight Travel Pedal	■	■	■	■
Switches, Console mounted - Starter (Key) - Travel Speed Selector - Work Light - DPF Regeneration - Auxiliary Mode Switch - Emergency Stop Switch	•	•	•	•
Power Mode (P+, P, S, E)	•	•	•	•
Work Mode (Digging, Lifting, Breaker, Shear)	•	•	•	•
Jog Dial Display Control	•	•	•	•
Wiper Control Panel	•	•	•	•
Audio Control Panel	•	•	•	•
OTHER				
Centralized Lubrication - Boom - Swing Bearing	•	•	•	•
Dozer Blade	■	■	■	–
Handrails	•	•	•	•
Skid-Resistant Steps	•	•	•	•
Manuals - Operations & Maintenance - Parts, - AEM Safety Manual	•	•	•	•
Telematics, 1 Year Subscription	•	•	•	•
Vandalism Protection - Lockable panels - Lockable fluid fill points	•	•	•	•
48-Hour Parts Guarantee	•	•	•	•
Air Compressor	■	■	■	■

https://truckmanualshub.com/

Doosan is the fifth largest construction equipment manufacturer in the world with a heritage that goes back more than 115 years. We deliver solid machines, unsurpassed customer service and an expanding dealer network plus our unrivaled 48-hour parts guarantee.

Doosan Delivers

www.doosanequipment.com/HEX 1.877.613.7970

DOOSAN

Printed on 10% recycled paper

Doosan and the Doosan logo are registered trademarks of Doosan Corp. in the United States and various other countries around the world. ©2013 Doosan Infracore Construction Equipment America. All rights reserved.

D-1017 (09/13) Printed in U.S.A. Kn-20M-913-#34442-01-F