https://truckmanualshub.com/

FREIGHTLINER
Run Smart™

108SD AND 114SD MAINTENANCE MANUAL

Models: 108SD
114SD

STI-496-7 (02/03/2022)

Published by
Daimler Trucks North America LLC
4747 N. Channel Ave.
Portland, OR 97217
Printed in U.S.A.

https://truckmanualshub.com/

https://truckmanualshub.com/

Foreword

Performing scheduled maintenance operations is important in obtaining safe, reliable operation of your vehicle. A proper maintenance program will also help to minimize downtime and safeguard warranties.

IMPORTANT: The maintenance operations in this manual are **not all-inclusive**. Also refer to other component and body manufacturers' instructions for specific inspection and maintenance instructions.

Perform the operations in this maintenance manual at scheduled intervals. Perform the pretrip and post-trip inspections, and daily/weekly/monthly maintenance, as outlined in the vehicle driver's manual. Major components, such as engines, transmissions, and rear axles, are covered in their own maintenance and operation manuals, that are provided with the vehicle. Perform any maintenance operations listed at the intervals scheduled in those manuals. Your Freightliner Dealership has the qualified technicians and equipment to perform this maintenance for you. They can also set up a scheduled maintenance program tailored specifically to your needs. Optionally, they can assist you in learning how to perform these maintenance procedures.

IMPORTANT: Descriptions and specifications in this manual were in effect at the time of printing. Freightliner Trucks reserves the right to discontinue models and to change specifications or design at any time without notice and without incurring obligation. Descriptions and specifications contained in this publication provide no warranty, expressed or implied, and are subject to revision and editions without notice.

Refer to **https://northamerica.daimlertruck.com/** and **https://freightliner.com/** for more information, or contact Daimler Trucks North America LLC at the address below.

Environmental and Safety Concerns and Recommendations

Whenever you see instructions in this manual to discard materials, you should attempt to reclaim and recycle them. To preserve our environment, follow appropriate environmental rules and regulations when disposing of materials.

Servicing vehicles may result in contact with items known to the state of California to cause harm.

⚠ WARNING

Breathing diesel engine exhaust exposes you to chemicals known to the State of California to cause cancer and birth defects or other reproductive harm.

Always start and operate the engine in a well-ventilated area. If in an enclosed are, vent the exhaust to the outside. Do not modify or tamper with the exhaust system. Do not idle the engine except as necessary.

For more information go to www.P65warnings.ca.gov/diesel.

⚠ WARNING

Cancer and Reproductive Harm www.P65warnings.ca.gov/diesel.

NOTICE: Parts Replacement Considerations

Do not replace suspension, axle, or steering parts (such as springs, wheels, hubs, and steering gears) with used parts. Used parts may have been subjected to collisions or improper use and have undetected structural damage.

https://truckmanualshub.com/

© 2011–2022 Daimler Trucks North America LLC

All rights reserved. No part of this publication, in whole or in part, may be translated, reproduced, stored in a retrieval system, or transmitted in any form by any means, electronic, mechanical, photocopying, recording, or otherwise, without the prior written permission of Daimler Trucks North America LLC. Daimler Trucks North America LLC is a Daimler company.

Daimler Trucks North America LLC
Service Systems and Documentation (CVI-SSD)
P.O. Box 3849
Portland, Oregon 97208-3849

https://truckmanualshub.com/

Descriptions of Service Publications

Daimler Trucks North America LLC distributes the following major service publications in paper and electronic formats. Refer to **www.DTNAConnect.com**.

Workshop/Service Manual

Workshop/service manuals contain service and repair information for all vehicle systems and components, except for major components such as engines, transmissions, and rear axles. Each workshop/service manual section is divided into subjects that can include general information, principles of operation, removal, disassembly, assembly, installation, and specifications.

Maintenance Manual

Maintenance manuals contain routine maintenance procedures and intervals for vehicle components and systems. They have information such as lubrication procedures and tables, fluid replacement procedures, fluid capacities, specifications, and procedures for adjustments and for checking the tightness of fasteners. Maintenance manuals do not contain detailed repair or service information.

Driver's/Operator's Manual

Driver's/operator's manuals contain information needed to enhance the driver's understanding of how to operate and care for the vehicle and its components. Each manual contains a chapter that covers pretrip and post-trip inspections, and daily, weekly, and monthly maintenance of vehicle components. Driver's/operator's manuals do not contain detailed repair or service information.

Service Bulletins

Service bulletins provide the latest service tips, field repairs, product improvements, and related information. Some service bulletins are updates to information in the workshop/service manual. These bulletins take precedence over workshop/service manual information, until the latter is updated; at that time, the bulletin is usually canceled. The service bulletins manual is available only to dealers. When doing service work on a vehicle system or part, check for a valid service bulletin for the latest information on the subject.

IMPORTANT: Before using a particular service bulletin, check the current service bulletin validity list to be sure the bulletin is valid.

Parts Technical Bulletins

Parts technical bulletins provide information on parts. These bulletins contain lists of parts and BOMs needed to do replacement and upgrade procedures.

Web-based repair, service, and parts documentation can be accessed using the following applications on the **www.DTNAConnect.com** website.

DTNAConnect

DTNAConnect provides Web-based access to the most up-to-date versions of the publications listed above. In addition, the Service Solutions feature provides diagnostic assistance with Symptoms Search, by connecting to a large knowledge base gathered from technicians and service personnel. Search results for both documents and service solutions can be narrowed by initially entering vehicle identification data.

PartsPro

PartsPro® is an electronic parts catalog system, showing the specified vehicle's build record.

EZWiring

EZWiring™ makes Freightliner, Sterling, Western Star, Thomas Built Buses, and Freightliner Custom Chassis Corporation products' wiring drawings and floating pin lists available online for viewing and printing. EZWiring can also be accessed from within PartsPro.

https://truckmanualshub.com/

Descriptions of Service Publications

Warranty-related service information available on the **www.DTNAConnect.com** website includes the following documentation.

Recall Campaigns Recall campaigns cover situations that involve service work or replacement of parts in connection with a recall notice. These campaigns pertain to matters of vehicle safety. All recall campaigns are distributed to dealers; customers receive notices that apply to their vehicles.

Field Service Campaigns Field service campaigns are concerned with non-safety-related service work or replacement of parts. All field service campaigns are distributed to dealers; customers receive notices that apply to their vehicles.

https://truckmanualshub.com/

Page Description

For an example of a *108SD and 114SD Maintenance Manual* page, see **Fig. 1**.

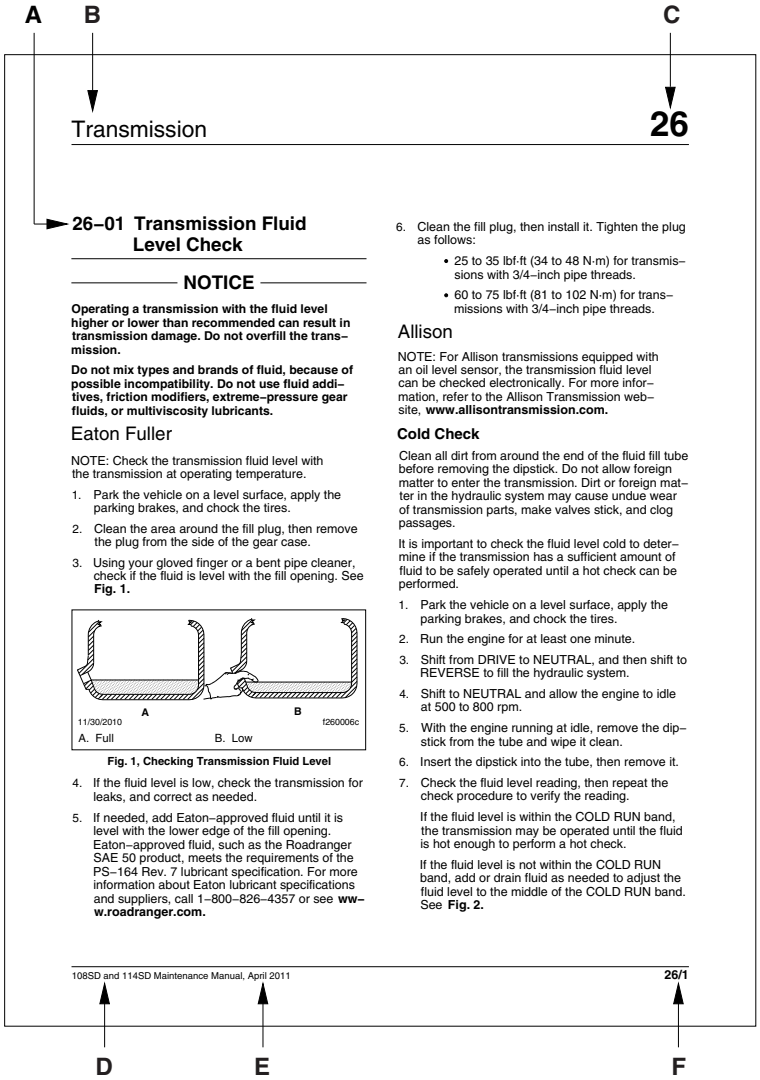

02/04/2011 f020176

A. Maintenance Operation Number consists of the Group Number followed by the Sequence Number
B. Group Title
C. Group Number
D. Vehicle Name
E. Release Date
F. Group Number/Page Number

Fig. 1, Example of a 108SD and 114SD Maintenance Manual Page

https://truckmanualshub.com/

Maintenance Manual Contents

Group No.	Group Title
00	General Information
01	Engine
09	Air Intake
13	Air Compressor
15	Alternators and Starters
20	Engine Cooling/Radiator
25	Clutch
26	Transmission
31	Frame and Frame Components
32	Suspension
33	Front Axle
35	Rear Axle
40	Wheels and Tires
41	Driveline
42	Brakes
46	Steering
47	Fuel
49	Exhaust
60	Cab
72	Doors
83	Heater and Air Conditioner
88	Hood, Grille, and Cab Fenders

https://truckmanualshub.com/

Index, Alphabetical

Title of Maintenance Operation (MOP)	MOP Number
00–01 Determining Scheduled Maintenance Intervals	00–01
00–02 Initial Maintenance (IM) Operations	00–02
00–03 M1 Maintenance Interval Operations	00–03
00–04 M2 Maintenance Interval Operations	00–04
00–05 M3 Maintenance Interval Operations	00–05
00–06 M4 Maintenance Interval Operations	00–06
00–07 M5 Maintenance Interval Operations	00–07
00–08 Maintenance Sequence and Log	00–08
00–09 Noise Emission Controls	00–09
00–10 Verification of Inspections Log	00–10

https://truckmanualshub.com/

https://truckmanualshub.com/

Determining Scheduled Maintenance Intervals

Performing regular maintenance will help ensure that your vehicle delivers safe, reliable service and optimum performance. A proper maintenance program will also help to minimize downtime and safeguard warranties.

To determine the correct maintenance intervals for your vehicle, you must first determine the type of service or conditions the vehicle will be operating in. Most vehicles operate in conditions that fall within one of two schedules. Before placing your vehicle in service, determine which schedule applies to your vehicle.

Schedules

Schedule I (severe service) applies to vehicles that travel up to 6,000 miles (10,000 kilometers) annually or that operate under severe conditions. Examples of Schedule I usage are:

- operation on extremely poor roads or where there is heavy dust accumulation
- constant exposure to extreme hot, cold, salt air, or other extreme climates
- frequent short-distance travel
- construction-site operation
- city operation such as fire truck and garbage truck.
- farm operation

Schedule II (short-haul transport) applies to vehicles that travel 6,000 miles (10,000 kilometers) or more annually and operate under normal conditions. Examples of Schedule II usage are:

- operation primarily in cities and densely populated areas
- local transport with infrequent freeway travel
- high percentage of stop-and-go travel

Schedule III (long-haul transport) applies to vehicles that travel more than 60,000 miles (100,000 kilometers) annually with minimal city or stop-and-go operation. Examples of Schedule III usage are:

- regional delivery that is mostly freeway miles.
- interstate transport
- any road operation with high annual mileage

Maintenance Intervals

After determining the schedule appropriate to your vehicle, refer to **Table 1** to determine when to perform the Initial Maintenance (IM) and the frequency of performing subsequent maintenance intervals for each schedule.

Maintenance Operations

This manual has an index at the beginning of each Group that lists the title and number of each maintenance operation (MOP) for that Group. Follow the instructions under the MOP number to perform the required maintenance.

In addition to the maintenance operations required for the maintenance interval, perform all daily, weekly, and monthly maintenance operations listed in Chapter 21, "Pretrip and Post-Trip Inspections and Maintenance", of the *108SD and 114SD Driver's Manual*.

https://truckmanualshub.com/

00–01 Determining Scheduled Maintenance Intervals

Maintenance Schedules					
Schedule	Maintenance Intervals				
	Maintenance Interval	Frequency	Mileage	km	Hours
Schedule I* (severe service) for vehicles that travel up to 6,000 miles (10,000 km) annually	Initial Maintenance (IM)	first	1000	1600	100
	Maintenance 1 (M1)	every	1000	1600	100
	Maintenance 2 (M2)	every	4000	6400	400
	Maintenance 3 (M3)	every	8000	12 800	800
	Maintenance 4 (M4)	every	16,000	25 600	1600
	Maintenance 5 (M5)	every	32,000	51 200	3200
Schedule II (short-haul transport) for vehicles that travel 6,000 miles (10,000 km) or more annually	Initial Maintenance (IM)	first	8000	12 000	—
	Maintenance 1 (M1)	every	8000	12 000	
	Maintenance 2 (M2)	every	16,000	24 000	
	Maintenance 3 (M3)	every	32,000	48 000	
	Maintenance 4 (M4)	every	64,000	96 000	
	Maintenance 5 (M5)	every	128,000	192 000	
Schedule III (long-haul transport) for vehicles that travel 60,000 miles (100,000 km) or more annually	Initial Maintenance (IM)	first	25,000	40,200	—
	Maintenance 1 (M1)	every	25,000	40,200	
	Maintenance 2 (M2)	every	50,000	80,400	
	Maintenance 3 (M3)	every	50,000	80,400	
	Maintenance 4 (M4)	every	100,000	160,800	
	Maintenance 5 (M5)	every	300,000	482,400	

* For Schedule I vehicles equipped with an hourmeter, use maintenance intervals based on hours of operation rather than mileage.

Table 1, Maintenance Schedules

https://truckmanualshub.com/

00–02 Initial Maintenance (IM) Operations

Table 2 lists all maintenance operations that are to be performed at the initial maintenance (IM) interval. Maintenance operation numbers are reference numbers used to help you find detailed instructions in this manual on the maintenance operations to be performed. All operations listed in **Table 2**, along with the operations listed in the M1 Maintenance Interval Operations table (**Table 3**) must be performed to complete the initial maintenance (IM).

Initial Maintenance (IM) Operations	
Number	**Title**
00-03	Perform All M1 Maintenance Interval Operations
31-01	Frame Fastener Torque Check
32-03	Suspension U-Bolt Torque Check
33-04	Alignment Check
42-12	Bendix Automatic Drain Valve Operating and Leakage Tests*
47-01	Fuel Tank Band Nut Tightening

* The automatic drain valve should be inspected every 6 months or 1500 operating hours, whichever comes first.

Table 2, Initial Maintenance (IM) Operations

https://truckmanualshub.com/

00–03 M1 Maintenance Interval Operations

Table 3 lists all maintenance operations that are to be performed at the M1 maintenance interval. Maintenance operation numbers are reference numbers used to help you find detailed instructions in this manual on the maintenance operations to be performed.

IMPORTANT: After performing all operations listed in this table, perform all daily, weekly, and monthly maintenance operations given in Chapter 21, "Pretrip and Post-Trip Inspections and Maintenance", of the *108SD and 114SD Driver's Manual*.

M1 Maintenance Interval Operations	
Number	**Title**
25-01	Eaton Fuller Clutch Release Bearing Lubrication
25-02	Eaton Fuller Clutch Release Cross-Shaft Lubrication
25-03	Fluid Level Check, Hydraulic Clutch Control
25-05	Clutch Adjustment, Manually Adjusted Clutches
26-01	Transmission Fluid Level Check
26-03	Allison and Eaton Fuller Transmission Breather Check
31-02	Fifth Wheel Inspection
31-03	Fifth Wheel Lubrication
31-04	Trailer Electrical Connector Protection
32-01	Suspension Inspection
32-02	Suspension Lubrication
33-01	Knuckle Pin Lubrication*
33-02	Tie Rod Inspection
33-03	Tie Rod Lubrication*
33-06	Steer Axle Hub Cap Vent Plug Inspection
35-01	Axle Lubricant Level Check
35-02	Axle Breather Check
40-02	Tire Check
41-01	Driveline Inspection
41-02	Driveline Lubrication†
42-01	Air Brake System Valve Inspection
42-02	Bendix Air Dryer Desiccant Replacement‡
42-05	Brake Inspection
42-06	Slack Adjuster Lubrication
42-10	WABCO System Saver Air Dryer Desiccant Cartridge Replacement‡
42-11	Versajust Slack Adjuster Inspection and Lubrication§
42-12	Bendix Automatic Drain Valve Operating and Leakage Tests¶
46-03	Power Steering Fluid Level Inspection
46-05	Drag Link Lubrication
47-04	LNG Fuel System Inspection
47-07	CNG High-Pressure Fuel Filter Element Replacement**

https://truckmanualshub.com/

00–03 M1 Maintenance Interval Operations

M1 Maintenance Interval Operations	
Number	**Title**
60-02	Aerodynamic Component Inspection
72-01	Door Seals Lubrication
83-01	Air Conditioner Inspection
88-01	Hood Rear Support Lubrication

* For Detroit axles, complete this procedure once a year or at the following applicable interval, whichever comes first: every 5000 miles (8000 km) for Schedule I vehicles; every 25,000 miles (40 000 km) for Schedule II vehicles; or every 100,000 miles (161 000 km) for Schedule III vehicles.

† For driveline lubrication, the M1 maintenance interval is for Dana Spicer drivelines only; for Meritor drivelines see the M2 maintenance interval.

‡ If equipped with an oil-coalescing desiccant cartridge, replace the cartridge once a year, regardless of mileage. Otherwise use the M5 maintenance interval.

§ Complete this procedure every 25,000 miles (40 225 km), 3 months, or 500 operating hours, whichever comes first.

¶ The automatic drain valve should be inspected every 6 months or 1500 operating hours, whichever comes first.

** M1 maintenance interval should be used as a general guideline; the actual frequency of filter element replacement will vary depending on cleanliness of the fuel station system.

Table 3, M1 Maintenance Interval Operations

https://truckmanualshub.com/

00–04 M2 Maintenance Interval Operations

Table 4 lists all maintenance operations that are to be performed at the M2 maintenance interval. Maintenance operation numbers are reference numbers used to help you find detailed instructions in this manual on the maintenance operations to be performed. Perform all M1 maintenance interval operations (see **Table 3**) at the M2 maintenance interval.

M2 Maintenance Interval Operations	
Number	**Title**
00-03	Perform All M1 Maintenance Interval Operations
13-01	Air Compressor Inspection
20-01	Radiator Cap Inspection
20-03	Fan Drive Check (Noise Emission Control)
26-02	Eaton Fuller Transmission Fluid Change, and Magnetic Plug Cleaning
41-02	Driveline Lubrication*
42-03	Governor Check
42-04	Air Dryer Check
42-07	Meritor Camshaft Bracket Lubrication
46-04	Power Steering Gear Lubrication
47-02	Fuel/Water Separator Element Check and Replacement
47-03	Fuel Filter Replacement
47-06	CNG Fuel System Inspection
47-08	CNG Fuel Cylinder Inspection†
49-01	Exhaust System Inspection (Noise Emission Control)

* For driveline lubrication, the M2 maintenance interval is for Meritor drivelines only; for Dana Spicer drivelines see the M1 maintenance interval.

† The fuel cylinder should be inspected every year or 100,000 miles (160 900 km), whichever comes first.

Table 4, M2 Maintenance Interval Operations

https://truckmanualshub.com/

00–05 M3 Maintenance Interval Operations

Table 5 lists all maintenance operations that are to be performed at the M3 maintenance interval. Maintenance operation numbers are reference numbers used to help you find detailed instructions in this manual on the maintenance operations to be performed. Perform all M1 (**Table 3**) and M2 (**Table 4**) maintenance interval operations at the M3 maintenance interval.

M3 Maintenance Interval Operations	
Number	**Title**
00-03	Perform All M1 Maintenance Interval Operations
00-04	Perform All M2 Maintenance Interval Operations
01-01	Engine Drive Belt Inspection
26-04	Allison Transmission Fluid and Filter Change
32-03	Suspension U-Bolt Torque Check
40-01	Wheel Nut Check
42-09	Air Brake Inspection and Leak Test
46-01	Drag Link Inspection
47-05	LNG Vacuum Integrity Test
83-02	HVAC Air Filter Replacement*

* Replace the HVAC air filter at the recommended interval or every six months.

Table 5, M3 Maintenance Interval Operations

https://truckmanualshub.com/

00–06 M4 Maintenance Interval Operations

Table 6 lists all maintenance operations that are to be performed at the M4 maintenance interval. Maintenance operation numbers are reference numbers used to help you find detailed instructions in this manual on the maintenance operations to be performed. Perform all M1 (**Table 3**), M2 (**Table 4**), and M3 (**Table 5**) maintenance interval operations at the M4 maintenance interval.

M4 Maintenance Interval Operations	
Number	**Title**
00-03	Perform All M1 Maintenance Interval Operations
00-04	Perform All M2 Maintenance Interval Operations
00-05	Perform All M3 Maintenance Interval Operations
09-01	Air Cleaner Element Inspection and Replacement
15-01	Alternator, Battery, and Starter Connections Check
20-02	Radiator Pressure Flush and Coolant Change
31-01	Frame Fastener Torque Check
33-05	Wheel End Inspection, Front Axle*
35-03	Axle Lubricant and Filter Change, and Magnetic Strainer Cleaning and Check†
35-04	Wheel End Inspection, Rear Axle*
46-02	Power Steering Fluid and Filter Change
60-01	Mirror Folding Check

* Complete this operation at the mileage given for the applicable maintenance schedule, or annually, whichever comes first.

† For Dana Spicer axles, if using a Roadranger synthetic drive axle lubricant, the lubricant change interval is extended to 180,000 miles (288 000 km).

Table 6, M4 Maintenance Interval Operations

https://truckmanualshub.com/

00–07 M5 Maintenance Interval Operations

Table 7 lists all maintenance operations that are to be performed at the M5 maintenance interval. Maintenance operation numbers are reference numbers used to help you find detailed instructions in this manual on the maintenance operations to be performed. Perform all M1 (**Table 3**), M2 (**Table 4**), M3 (**Table 5**), and M4 (**Table 6**) maintenance interval operations at the M5 maintenance interval.

M5 Maintenance Interval Operations	
Number	**Title**
00-03	Perform All M1 Maintenance Interval Operations
00-04	Perform All M2 Maintenance Interval Operations
00-05	Perform All M3 Maintenance Interval Operations
00-06	Perform All M4 Maintenance Interval Operations
25-04	Fluid Change, Hydraulic Clutch Control
42-08	Foot-Control Valve, E-6, Inspection and Lubrication

Table 7, M5 Maintenance Interval Operations

https://truckmanualshub.com/

00–08 Maintenance Sequence and Log

Maintenance Sequence for Schedule I					
Maintenance Sequence	Maintenance Interval	Service Date	Miles	km	Hours
1st	IM and M1		1000	1600	100
2nd	M1		2000	3200	200
3rd	M1		3000	4800	300
4th	M1 and M2		4000	6400	400
5th	M1		5000	8000	500
6th	M1		6000	9600	600
7th	M1		7000	11 200	700
8th	M1, M2, and M3		8000	12 800	800
9th	M1		9000	14 400	900
10th	M1		10,000	16 000	1000
11th	M1		11,000	17 600	1100
12th	M1 and M2		12,000	19 200	1200
13th	M1		13,000	20 800	1300
14th	M1		14,000	22 400	1400
15th	M1		15,000	24 000	1500
16th	M1, M2, M3, and M4		16,000	25 600	1600
17th	M1		17,000	27 200	1700
18th	M1		18,000	28 800	1800
19th	M1		19,000	30 400	1900
20th	M1 and M2		20,000	32 000	2000
21st	M1		21,000	33 600	2100
22nd	M1		22,000	35 200	2200
23rd	M1		23,000	36 800	2300
24th	M1, M2, and M3		24,000	38 400	2400
25th	M1		25,000	40 000	2500
26th	M1		26,000	41 600	2600
27th	M1		27,000	43 200	2700
28th	M1 and M2		28,000	44 800	2800
29th	M1		29,000	46 400	2900
30th	M1		30,000	48 000	3000
31st	M1		31,000	49 600	3100
32nd	M1, M2, M3, M4, and M5		32,000	51 200	3200

Table 8, Maintenance Sequence for Schedule I

https://truckmanualshub.com/

Maintenance Sequence for Schedule II				
Maintenance Sequence	**Maintenance Interval**	**Service Date**	**Miles**	**km**
1st	IM and M1		8000	12 000
2nd	M1 and M2		16,000	24 000
3rd	M1		24,000	36 000
4th	M1, M2, and M3		32,000	48 000
5th	M1		40,000	60 000
6th	M1 and M2		48,000	72 000
7th	M1		56,000	84 000
8th	M1, M2, M3, and M4		64,000	96 000
9th	M1		72,000	108 000
10th	M1 and M2		80,000	120 000
11th	M1		88,000	132 000
12th	M1, M2, and M3		96,000	144 000
13th	M1		104,000	156 000
14th	M1, and M2		112,000	168 000
15th	M1		120,000	180 000
16th	M1, M2, M3, M4, and M5		128,000	192 000
17th	M1		136,000	204 000
18th	M1 and M2		144,000	216 000
19th	M1		152,000	228 000
20th	M1, M2, and M3		160,000	240 000
21st	M1		168,000	252 000
22nd	M1 and M2		176,000	264 000
23rd	M1		184,000	276 000
24th	M1, M2, M3, and M4		192,000	288 000
25th	M1		200,000	300 000
26th	M1 and M2		208,000	312 000
27th	M1		216,000	324 000
28th	M1, M2, and M3		224,000	336,000
29th	M1		232,000	348 000
30th	M1 and M2		240,000	360 000
31st	M1		248,000	372 000
32nd	M1, M2, M3, M4, and M5		256,000	384 000

Table 9, Maintenance Sequence for Schedule II

https://truckmanualshub.com/

00–08 Maintenance Sequence and Log

Maintenance Sequence for Schedule III				
Maintenance Sequence	**Maintenance Interval**	**Service Date**	**Miles**	**km**
1st	IM and M1		25,000	40,200
2nd	M1 ,M2 and M3		50,000	80,400
3rd	M1		75,000	120,600
4th	M1, M2, M3 and M4		100,000	160,800
5th	M1		125,000	201,000
6th	M1, M2 and M3		150,000	241,200
7th	M1		175,000	281,400
8th	M1, M2, M3, and M4		200,000	321,600
9th	M1		225,000	361,800
10th	M1 ,M2 and M3		250,000	402,000
11th	M1		275,000	442,200
12th	M1, M2, M3, M4 and M5		300,000	482,400
13th	M1		325,000	522,600
14th	M1, M2 and M3		350,000	562,800
15th	M1		375,000	603,000
16th	M1, M2, M3,and M4		400,000	643,200
17th	M1		425,000	683,400
18th	M1, M2 and M3		450,000	723,600
19th	M1		475,000	763,800
20th	M1, M2, M3 and M4		500,000	804,000
21st	M1		525,000	844,400
22nd	M1 ,M2 and M3		550,000	884,400
23rd	M1		575,000	924,600
24th	M1, M2, M3, M4 and M5		600,000	964,800
25th	M1		625,000	1,005,000
26th	M1, M2 and M3		650,000	1,045,200
27th	M1		675,000	1,085,400
28th	M1, M2, M3 and M4		700,000	1,125,600
29th	M1		725,000	1,165,800
30th	M1, M2 and M3		750,000	1,206,000
31st	M1		775,000	1,246,200
32nd	M1, M2, M3 and M4		800,000	1,286,400

Table 10, Maintenance Sequence for Schedule III

https://truckmanualshub.com/

Noise Emission Control Maintenance

Federal Law, Part 205: Transportation Equipment Noise Emission Controls

Part 205, Transportation Equipment Noise Emission Controls, requires the vehicle manufacturer to furnish, with each new vehicle, such written instructions for the proper maintenance, use, and repair of the vehicle by the ultimate purchaser to provide reasonable assurance of the elimination or minimization of noise-emission-control degradation throughout the life of the vehicle. In compliance with the law, the noise emission controls maintenance information in each applicable group of this manual, in conjunction with the vehicle workshop manual, provides these instructions to owners.

Recommendations for Replacement Parts

Replacement parts used for maintenance or repair of noise emission controls should be genuine Freightliner parts. If other than genuine Freightliner parts are used for replacement or repair of components affecting noise emission control, the owner should be sure that such parts are warranted by their manufacturer to be equivalent to genuine Freightliner parts in performance and durability.

Freightliner Noise Emission Controls Warranty

Refer to the vehicle owner's warranty information book for warranty information concerning noise emission controls.

Tampering with Noise Controls is Prohibited

Federal law prohibits the following acts or the causing thereof:

1. The removal or rendering inoperative by any person (other than for purposes of maintenance, repair, or replacement) of any device or element of design incorporated into any new vehicle for the purpose of noise control, prior to its sale or delivery to the ultimate purchaser, or while it is in use.
2. The use of the vehicle after such device or element of design has been removed or rendered inoperative by any person.

   Among those acts presumed to constitute tampering are the acts listed below:

   A. Removal of engine noise-deadening panels.

   B. Removal of cab-tunnel or hood noise-deadening panels.

   C. Removal of, or rendering inoperative, the engine speed governor so as to allow engine speed to exceed manufacturer's specifications.

   D. Removal of, or rendering inoperative, the fan clutch, including bypassing the control on any thermostatic fan drive to cause it to operate continuously.

   E. Removal of the fan shroud.

   F. Removal of, or rendering inoperative, exhaust components, including exhaust pipe clamping.

   G. Removal of air intake components.

Maintenance Instructions

Scheduled intervals are in the maintenance tables in this group. A "Verification of Inspections Log (Groups 01, 20, and 49)" follows, and should be filled in each time noise emission controls on the vehicle are maintained or repaired.

https://truckmanualshub.com/

Verification of Inspections Log

The "Verification of Inspections Log" should be filled out each time the vehicle's noise emission controls are maintained or repaired.

Verification of Inspections Log, Group 20

Verification of Inspections Log, Group 20, Engine Cooling/Radiator				
Date	**Mileage**	**Item**	**Cost**	**Maintenance Facility**

Verification of Inspections Log, Group 49

Verification of Inspections Log, Group 49, Exhaust				
Date	**Mileage**	**Item**	**Cost**	**Maintenance Facility**

https://truckmanualshub.com/

Index, Alphabetical

Title of Maintenance Operation (MOP)	MOP Number
Engine Drive Belt Inspection	01–01
Safety Precautions	01–00

https://truckmanualshub.com/

https://truckmanualshub.com/

01–00 Safety Precautions

Safety Precautions in this section apply to all procedures within this group.

⚠ DANGER

When working on the vehicle, shut down the engine or motor, set the parking brake, and chock the tires. Before working under the vehicle, always place jack stands under the frame rails to ensure the vehicle cannot drop. Failure to follow these steps could result in serious personal injury or death.

01–01 Engine Drive Belt Inspection

Worn or loose drive belts may cause engine overheating or loss of alternator power. Excessive tension, or too little tension on the belt may result in excessive and premature belt wear or accessory bearing failure. Serpentine belts are retained by a belt tensioner that requires no tension adjustment. Replace the drive belt if any conditions described below are found. To inspect a belt, gently twist it to view the belt sidewalls and bottom.

IMPORTANT: For EPDM rubber drive belts, do not rely on cracking as an indicator of belt wear. EPDM rubber drive belts resist cracking better than Neoprene belts. A better indicator of wear on EPDM belts is material loss.

Belt and Pulley Inspection

1. Check the belt contact surfaces for damage. See **Fig. 1**.
2. Inspect the belt for glazing. Glazing is represented by shiny sidewalls, and is caused by friction created when a loose belt slips in the pulleys. It can also be caused by oil or grease on the pulleys.
3. Check the belt for ply separation. Oil, grease, or belt dressing can cause the belt to fall apart in layers. Repair any oil or coolant leaks that are affecting the belts before replacing the drive belts. Do not use belt dressing on any belt.
4. Check the belt for a jagged or streaked sidewall. Jagged or streaked sidewalls are the result of foreign objects, such as sand or gravel in the pulley, or a rough pulley surface.
5. Check for tensile breaks (breaks in the cord body). Cuts in a belt are usually caused by foreign objects in the pulley, or by prying or forcing the belt during removal or installation.
6. Check for uneven ribs on serpentine belts. Foreign objects in the pulley will erode the undercord ribs, causing the belt to lose its gripping power.
7. For EPDM belts, check the belt for material loss, which causes the belt to seat further down in the pulley and to ride directly on the pulley tips. See **Fig. 2**.
8. For Neoprene belts, check the drive belts for cracks. Small irregular cracks are usually signs of an old belt.
9. Inspect the pulleys for excessive play or wobble. Excessive play or wobble indicates a failure of the pulley bearing. Check for belt squealing or squeaking. Replace the bearings as necessary.

NOTE: If it is difficult to distinguish the location of a supposed bearing noise, place a stethoscope on the component being checked, not the pulley, to isolate the area from outside interference.

10. Inspect all pulleys for foreign objects, oil, or grease in the grooves.

Belt Tensioner Inspection

Belt tension is automatically adjusted with a spring tensioner. See **Fig. 3** and **Fig. 4**. Check that the tensioner is holding tension on the belt by inserting the end of a breaker bar in the 1/2-inch square hole on the forward face of the tensioner, and rotating the tensioner away from the belt. When the breaker bar is slowly released, the tensioner should return to its original position. The tensioner should rotate smoothly with no binding. If not, see **Group 01** of the *108SD and 114SD Workshop Manual* for replacement instructions.

https://truckmanualshub.com/

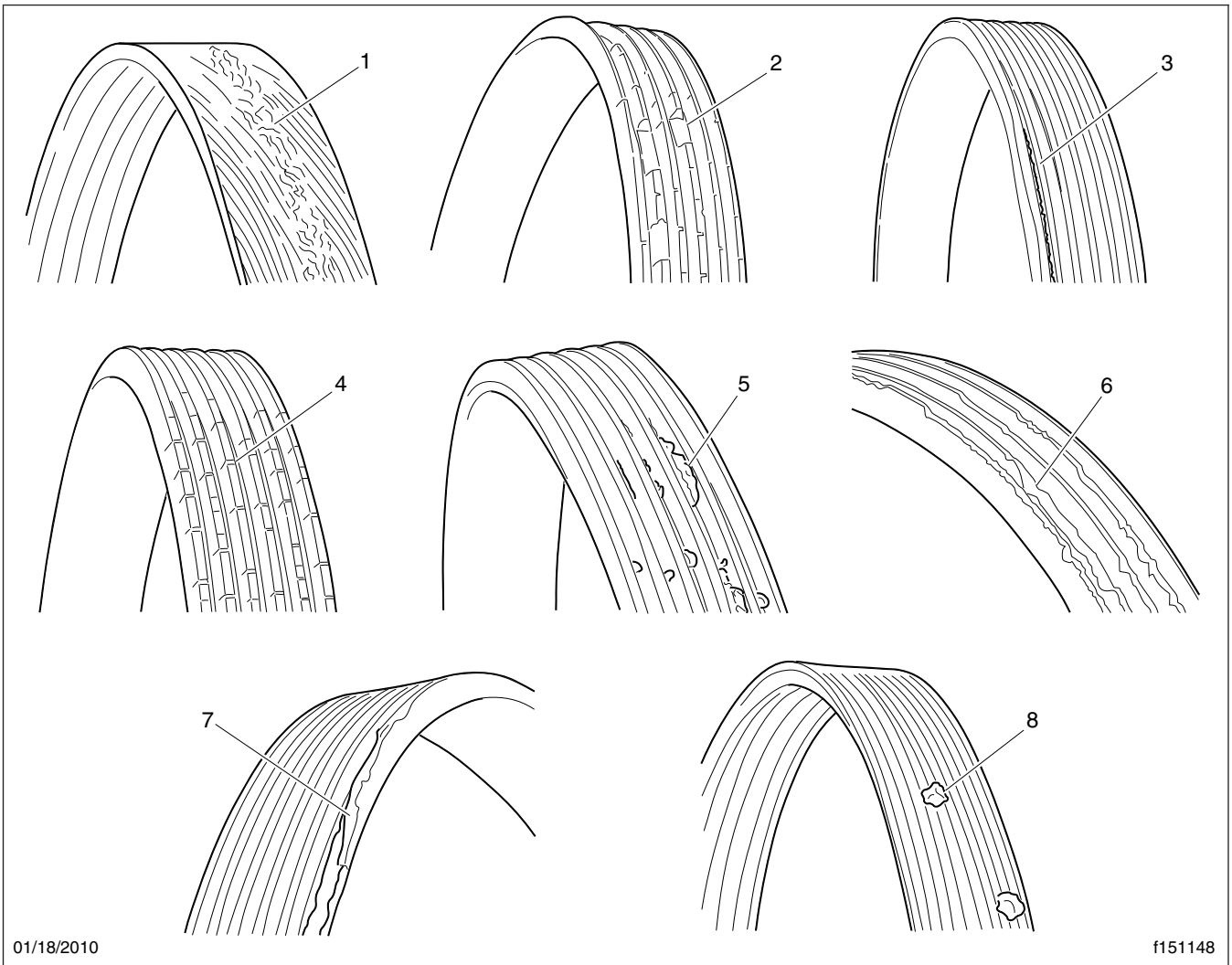

1. Abrasion
2. Chunk-out
3. Improper Install
4. Cracking
5. Pilling
6. Uneven Rib Wear
7. Misalignment
8. Gravel Penetration

Fig. 1, Damaged Belts

https://truckmanualshub.com/

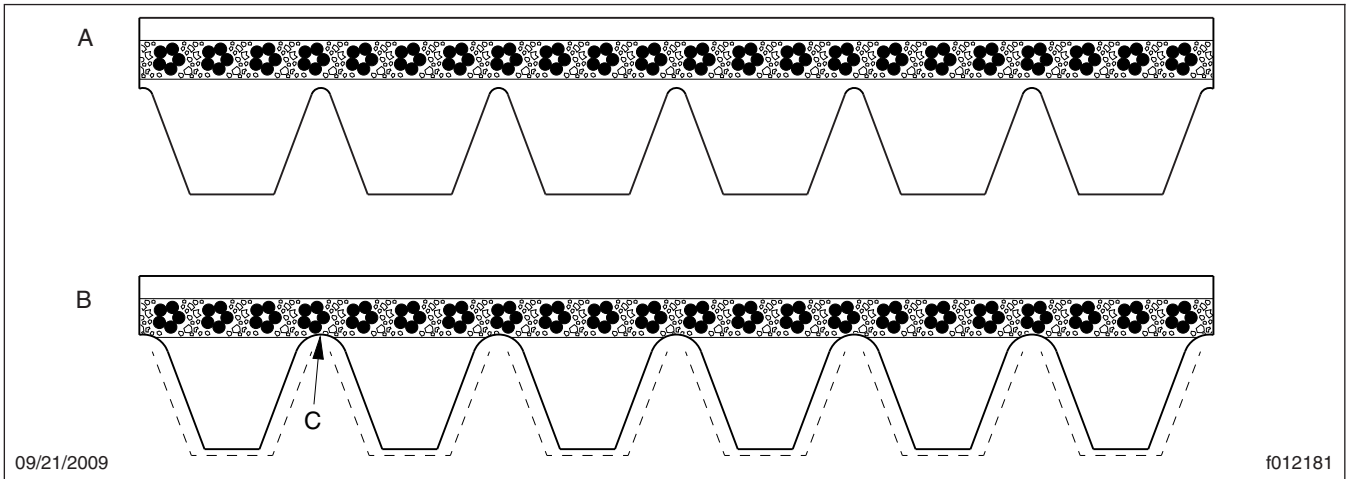

A. New Belt
B. Worn Belt
C. Material loss results in belt riding directly on pulley tips.

Fig. 2, Six-Rib Serpentine Belt (cross section view)

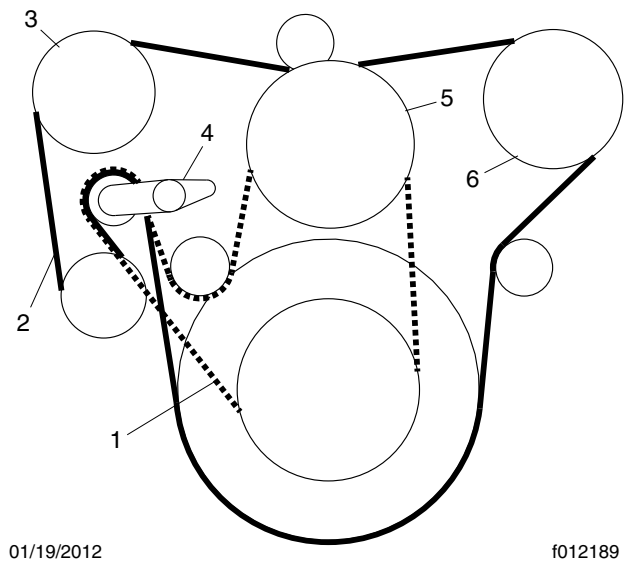

1. Front Belt
2. Rear Belt
3. AC Compressor
4. Spring Tensioner
5. Fan Clutch
6. Water Pump

Fig. 3, DD 13/15/16 Drive Belt Routing

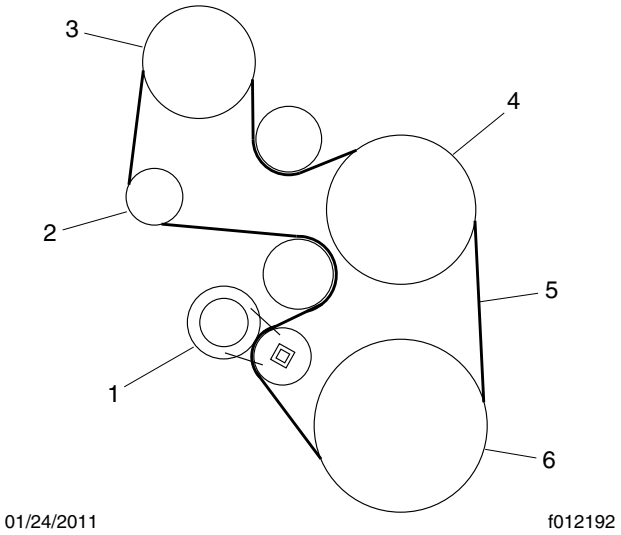

1. Spring Tensioner
2. Alternator Pulley
3. AC Compressor
4. Fan Clutch
5. Drive Belt
6. Crank Shaft Pulley

Fig. 4, Cummins ISC/ISL Drive Belt Routing

https://truckmanualshub.com/

https://truckmanualshub.com/

Index, Alphabetical

Title of Maintenance Operation (MOP) **MOP Number**

Air Cleaner Element Inspection and Replacement 09–01

https://truckmanualshub.com/

https://truckmanualshub.com/

09–01 Air Cleaner Element Inspection and Replacement

Restriction of air flow through the air cleaner element is measured at the tap in the air cleaner outlet. Check the restriction indicator at the air cleaner or in the cab if the vehicle is equipped with a dash-mounted restriction gauge.

Vehicles may be equipped with either a manual-reset restriction indicator with graduations (**Fig. 1**), or a go/no-go restriction indicator without graduations (**Fig. 2**).

1. Inspect the air restriction indicator to see if air restriction equals or exceeds the maximum allowable restriction. For instructions, see the vehicle Driver's Manual.

NOTICE

Do not use aftermarket air-cleaner elements. Aftermarket air-cleaner elements may not seal the housing correctly, which can lead to engine damage and potentially the loss of warranty. When replacing an air-cleaner element, use only the part listed in PartsPro for the serial number of the vehicle.

2. If necessary, replace the air cleaner element. For air cleaner element replacement instructions, see **Group 09** of the vehicle Workshop Manual.
3. Inspect the air cleaner housing for cracks, leaks, or any other damage. If the air cleaner housing or element is damaged, replace it.
4. Reset the air restriction indicator.
5. Each time the air cleaner housing is replaced, perform the procedures in **MOP 13–01**.

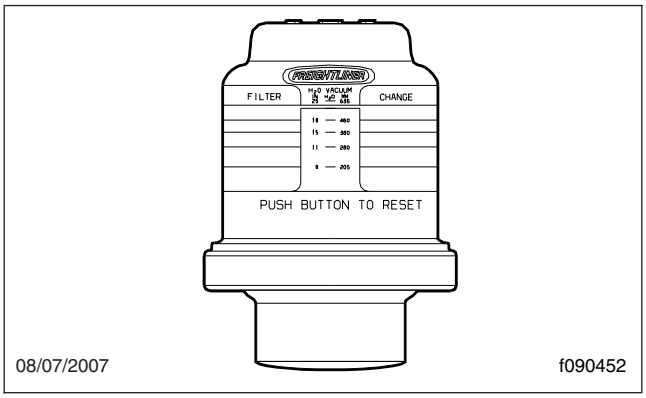

Fig. 1, Manual-Reset Air Restriction Indicator, Graduated

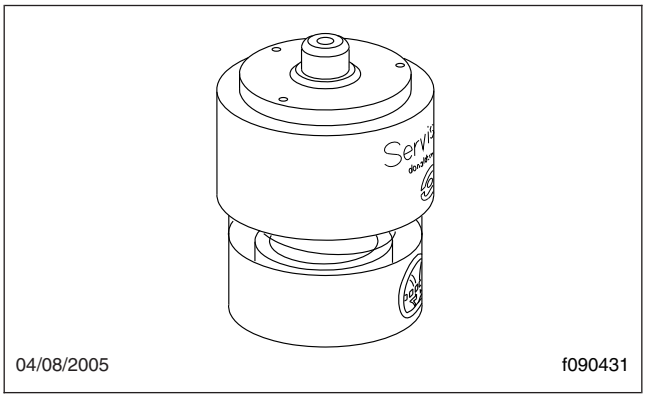

Fig. 2, Manual-Reset Air Restriction Indicator, Go/No-Go

https://truckmanualshub.com/

https://truckmanualshub.com/

Index, Alphabetical

Title of Maintenance Operation (MOP)	MOP Number
Air Compressor Inspection	13–01
Safety Precautions	13–00

https://truckmanualshub.com/

https://truckmanualshub.com/

13–00 Safety Precautions

Safety Precautions in this section apply to all procedures within this group.

⚠ DANGER

When working on the vehicle, shut down the engine or motor, set the parking brake, and chock the tires. Before working under the vehicle, always place jack stands under the frame rails to ensure the vehicle cannot drop. Failure to follow these steps could result in serious personal injury or death.

13–01 Air Compressor Inspection

1. Inspect the air compressor intake hoses and connections at the air intake and air compressor for physical damage. If needed, change the hoses, and/or tighten or replace the connections.
2. Inspect the coolant supply and return lines for tight connections. Tighten the connections and replace the lines and fasteners if needed.
3. For the air governor, inspect the piping and connections for leaks. Replace gaskets and faulty components as needed.

https://truckmanualshub.com/

https://truckmanualshub.com/

Index, Alphabetical

Title of Maintenance Operation (MOP)	MOP Number
Alternator, Battery, and Starter Connections Check	15–01
Safety Precautions	15–00

https://truckmanualshub.com/

https://truckmanualshub.com/

15–00 Safety Precautions

Safety Precautions in this section apply to all procedures within this group.

⚠ DANGER

When working on the vehicle, shut down the engine or motor, set the parking brake, and chock the tires. Before working under the vehicle, always place jack stands under the frame rails to ensure the vehicle cannot drop. Failure to follow these steps could result in serious personal injury or death.

15–01 Alternator, Battery, and Starter Connections Check

⚠ WARNING

Batteries generate explosive gas as a by-product of their chemical process. Do not smoke when working around batteries. Put out all flames and remove any source of sparks or intense heat in the vicinity of the battery compartment. Make sure the battery compartment has been completely vented before disconnecting or connecting the battery cables.

Battery acid is extremely harmful if splashed in the eyes or on the skin. Always wear a face shield and protective clothing when working around batteries.

1. Disconnect the batteries.
2. Check the tightness of the alternator fasteners; tighten as needed. For torque values, see **Group 15** of the *108SD and 114SD Workshop Manual*.
3. Inspect the alternator drive belt for cracking, glazing, and wear; see **Group 01**. Replace the belt if it shows any of these symptoms.

NOTE: Engines equipped with a serpentine belt have automatic belt tensioners, and do not require belt tension adjustment.

4. Check the alternator wiring for missing insulation, kinks, and heat damage. Replace or repair as needed.
5. Check that all electrical connections at the alternator and starter are free of corrosion. Clean and tighten all charging system electrical connections, including the connections at the starter B+ terminal and ground terminals, the magnetic switch, and where the alternator charging cables terminate. Apply red dielectric enamel to all exposed connections.
6. Inspect the battery retainer assembly or hold-downs, and the battery box. Replace worn or damaged parts. Remove any corrosion with a wire brush, and wash with a weak solution of baking soda and water. Flush with clean water, and dry. Paint the retainer assembly if needed, to prevent rusting.
7. Check that foreign material, such as road debris, is removed from the battery box.
8. Inspect and clean the battery cables, terminals, and clamps as follows. See **Group 54** of the *108SD and 114SD Workshop Manual* for troubleshooting instructions, and for adjustment, repair, and replacement instructions.
   - 8.1 Inspect the battery cables, and replace any that are damaged.
   - 8.2 Clean and tighten the battery ground cables, terminals, and clamps. Clean the cable connector terminals with a wire brush.
   - 8.3 Connect the cables to the batteries and tighten them to the torque specifications listed on the battery, generally 10 to 15 lbf·ft (14 to 20 N·m).
   - 8.4 Coat the battery terminals and cable connections with dielectric grease.
9. Check the connections at the power net distribution box. Clean and protect the power cables with dielectric enamel as necessary.

https://truckmanualshub.com/

https://truckmanualshub.com/

Index, Alphabetical

Title of Maintenance Operation (MOP)	MOP Number
Fan Drive Check (Noise Emission Control)	20–03
Radiator Cap Inspection	20–01
Radiator Pressure Flush and Coolant Change	20–02
Safety Precautions	20–00

https://truckmanualshub.com/

https://truckmanualshub.com/

20–00 Safety Precautions

Safety Precautions in this section apply to all procedures within this group.

⚠ DANGER

When working on the vehicle, shut down the engine or motor, set the parking brake, and chock the tires. Before working under the vehicle, always place jack stands under the frame rails to ensure the vehicle cannot drop. Failure to follow these steps could result in serious personal injury or death.

20–01 Radiator Cap Inspection

⚠ WARNING

Do not remove or loosen the radiator cap until the engine and cooling system have completely cooled. Use extreme care when removing the cap. A sudden release of pressure from removing the cap prior to the system cooling can result in a surge of scalding coolant that could cause serious personal injury.

NOTICE

The radiator cap currently installed may not be the same one installed when the vehicle was built. If the radiator cap must be replaced, make sure that it is the correct cap for the cooling system of the vehicle. Because the radiator cap pressure rating affects the operating temperature of the engine, installing an improperly rated radiator cap may have adverse effects on the cooling system, and engine operating temperatures. This could cause premature engine wear or damage.

1. Using a radiator-cap tester, check the pressure cap to see if it maintains pressure to within 10 percent of the pressure rating marked on the cap. If it doesn't, replace the cap. Make sure that the replacement radiator cap is correctly rated for the cooling system of the vehicle.
2. There is a second valve in the radiator cap that opens under vacuum. This prevents the collapse of hoses and other parts that are not internally supported when the system cools. Inspect the vacuum-relief valve to be sure it is not stuck.
3. Make sure that the cap seals properly on the coolant filler neck seat, and that the radiator cap gasket is not damaged. On vehicles with screw-on caps with O-rings, make sure that the O-ring is not cracked or deteriorated. Replace the cap if the gasket shows deterioration or damage.

20–02 Radiator Pressure Flush and Coolant Change

NOTE: For additional instructions on cleaning and flushing the cooling system, see the engine maintenance and operation manual.

⚠ WARNING

Drain the coolant only when the coolant and engine are cool. Draining it when these are hot could cause severe personal injury due to scalding.

1. Drain the radiator, as follows.
   - 1.1 Place a large container under the radiator.
   - 1.2 Remove the surge tank cap.
   - 1.3 Open the petcock at the bottom of the radiator to drain the engine coolant.
2. Disconnect the radiator inlet and outlet hose connections.
3. Flush the radiator, as follows.
   - 3.1 Attach a flushing gun nozzle to the radiator outlet.
   - 3.2 Add water to the radiator until it is full.

NOTICE

When flushing the radiator, do not apply more than 20 psi (138 kPa) air pressure. Excessive pressure can damage the radiator or heater core.

   - 3.3 Apply no more than 20 psi (138 kPa) air pressure intermittently to help dislodge sediment buildup in the core.

https://truckmanualshub.com/

4. Drain the radiator, then flush the radiator until clean water flows from it. Remove the flushing gun.
5. Close the petcock.
6. Using clamps, connect the hoses to the radiator. Tighten the clamps 33 to 38 lbf·in (370 to 430 N·cm).

IMPORTANT: On vehicles with EPA10 compliant engines, the coolant capacity varies depending on the engine and accessory installation. After servicing the cooling system, always verify that the coolant level is between the MIN and MAX lines on the surge tank.

7. Fill the cooling system with approved coolant. Refer to the engine manufacturer's service literature for specific coolant information. Refer to PartsPro (module 103) for coolant system capacities.

20–03 Fan Drive Check (Noise Emission Control)

BorgWarner Kysor® K26RA and K22RA Fan Drives

1. Check the fan for missing, cracked, chipped, or damaged blades. Tighten loose components. Replace damaged fans if necessary.
2. Check for adequate clearance around the fan. The fan should be centered in the shroud to prevent contact between the fan and the shroud.
3. Check the fan belt for proper alignment and condition. If the belt is worn or frayed, replace the belt.
4. Verify the fan drive engagement. With the engine and ignition key switch off, apply at least 90 psi (620 kPa) to the clutch; the fan should rotate freely. Remove air pressure from the clutch and the fan should not rotate.
5. With the fan drive disengaged, check for air leaks at the front of the clutch and between the clutch and the drive hub. If an air leak is detected, the clutch seals and hub must be inspected for wear or damage. If necessary, the seals of the clutch can be replaced with a Kysor rebuild kit. If inspection of the hub indicates excessive wear, rebuild the hub using a hub rebuild kit from Kysor.
6. Any time the clutch is removed for repair or replacement, the pulley hub and bearings should be inspected for play, roughness, or damage. Hub bearing service kits are available from Kysor.
7. Check the lining with the System Alert Tool™. If the lining is worn, install the appropriate lining kit. A lining that is prematurely worn is caused by control air supply problems. Inspect and correct the vehicle control system before placing the vehicle back in service.
8. Check the air line entry and routing at the front or rear of the fan drive. Look for cracked, damaged, or improperly routed air lines. Make sure the connections are tight and that there are no air leaks.
9. Check the electrical connections at the solenoid valve, which is typically mounted to the frontwall. Check the exhaust port for restrictions. If a restriction is found, clear it.

Horton DriveMaster® Fan Clutch

NOTE: If any part of the fan clutch needs to be repaired or replaced after performing the checks below, see **Group 20** of the *108SD and 114SD Workshop Manual*.

⚠ WARNING

Make sure the batteries are disconnected before checking the fan clutch. If the engine starts during this procedure, the fan could engage, which could result in serious personal injury.

1. Disconnect the batteries at the negative terminals. Drain all air from the air system. If equipped with an air starter, drain the air starter reservoir.
2. Inspect the electrical connections and wires to the fan clutch solenoid. Secure the connection if loose; replace wires and connectors if damaged.
3. Clean the fan clutch air solenoid valve filter, if equipped.
   3.1 Unscrew the fan clutch solenoid valve air filter assembly, and remove the filter element.

https://truckmanualshub.com/

3.2 Clean the filter element with cleaning solvent.

3.3 Using a clean, lint-free cloth, wipe off any excess solvent.

3.4 Reassemble the clutch valve solenoid air filter assembly, and install it on the vehicle.

4. Visually check the fan for bent, cracked, or damaged blades. Replace if damaged. Check for adequate clearance between the fan and other components.
5. Check the fan belt for wear, tension, and alignment. Correct, if necessary.
6. Check for wear on the friction facing. Replace the friction facing if it is worn to a 3/16-inch (4.8-mm) thickness or less. Also check the facing for signs of oil contamination or burn marks. If evidence of oil or burn marks are found, replace the friction facing.
7. Connect the battery cables. Start the engine, and charge the air system to 120 psi (827 kPa). Manually engage and disengage the fan clutch.

   Check the fan and the fan clutch from a distance. Look for vibration, fan blade contact, fan clutch slippage, and overall fan clutch operation.

   If the fan clutch does not operate correctly, see **Group 20** of the *108SD and 114SD Workshop Manual* for troubleshooting and repair procedures.
8. With the air system charged to 120 psi (827 kPa), check for air leaks at the fan clutch, solenoid valve, air hoses, and fittings from the fan clutch to the air tanks. Use a suitable listening device, and, as needed, a soapy water solution.
9. If a leak is detected, remove the fan blade. Install a new seal kit. See **Group 20** of the *108SD and 114SD Workshop Manual* for repair procedures.
10. Check the fan drive for discoloration or any other signs of slipping or overheating.

NOTE: The fan clutch may slip if the air supply pressure is below 70 psi (483 kPa) or if there is a leak inside the fan clutch. Any leak must be remedied.

11. Check the fan clutch bearings.

11.1 Turn the fan in both directions and feel for worn hub bearings.

11.2 If possible, remove the drive belt and check for worn sheave bearings by turning the sheave in both directions.

11.3 If either the hub or sheave bearings are worn, replace them using a Horton Drive-Master Super Kit.

For repair kit information, see Horton's website, **www.hortonww.com**.

For instructions, see **Group 20** of the *108SD and 114SD Workshop Manual*.

https://truckmanualshub.com/

https://truckmanualshub.com/

Index, Alphabetical

Title of Maintenance Operation (MOP)	MOP Number
Clutch Adjustment, Manually Adjusted Clutches	25–05
Eaton Fuller Clutch Release Bearing Lubrication	25–01
Eaton Fuller Clutch Release Cross-Shaft Lubrication	25–02
Fluid Change, Hydraulic Clutch Control	25–04
Fluid Level Check, Hydraulic Clutch Control	25–03
Safety Precautions	25–00

https://truckmanualshub.com/

https://truckmanualshub.com/

25–00 Safety Precautions

Safety Precautions in this section apply to all procedures within this group.

⚠ DANGER

When working on the vehicle, shut down the engine or motor, set the parking brake, and chock the tires. Before working under the vehicle, always place jack stands under the frame rails to ensure the vehicle cannot drop. Failure to follow these steps could result in serious personal injury or death.

25–01 Eaton Fuller Clutch Release Bearing Lubrication

If the vehicle is not equipped with a maintenance-free sealed clutch release bearing, lubricate the bearing as follows:

1. Park the vehicle on a level surface. Apply the parking brakes, and chock the rear tires.
2. Remove the clutch inspection plate.

NOTE: For lubricating the release bearing, Eaton Fuller recommends a lithium-base grease that can operate up to at least 325°F (163·C) and meets the NLGI grade two or three specification.

3. Wipe the dirt away from the grease fitting. See **Fig. 1**. Use a low-pressure-type grease gun equipped with the recommended grease, and lubricate the bearing until excess grease purges from the rear of the release bearing (toward the transmission).

NOTICE

Do not over-lubricate the clutch release bearing. Over-lubrication could contaminate the clutch internally, causing clutch slippage and premature failure. Do not use chassis grease or multipurpose lubricants.

4. Wipe off excess grease and apply it to both the yoke finger and sleeve bushing contact points. See **Fig. 2**.

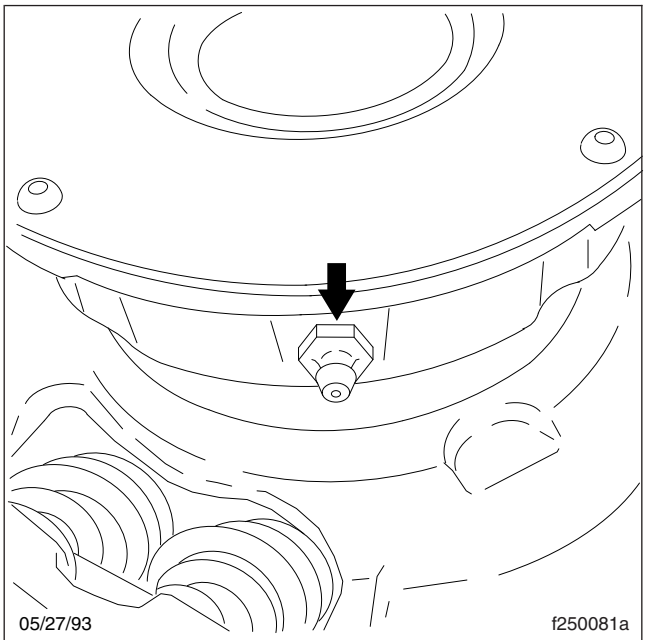

NOTE: Some clutch release bearings are equipped with a lubrication extension that protrudes from the clutch housing.

Fig. 1, Release Bearing Grease Fitting

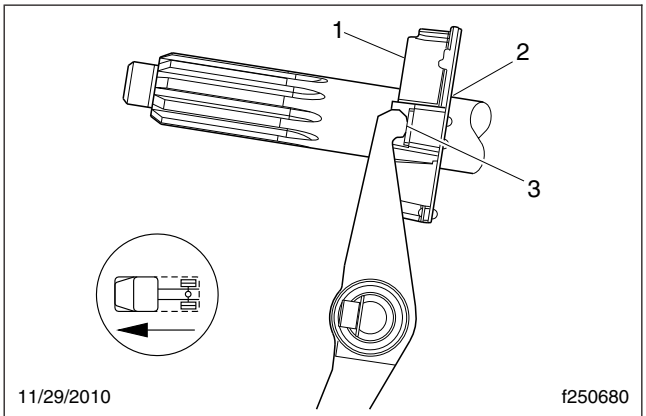

1. Release Bearing
2. Sleeve Bushing Contact Point
3. Yoke Finger Contact Points

Fig. 2, Grease the Contact Points

5. Install the clutch inspection plate.

https://truckmanualshub.com/

25–02 Eaton Fuller Clutch Release Cross-Shaft Lubrication

IMPORTANT: This maintenance operation pertains only to vehicles equipped with mechanical (not hydraulic) linkages.

The clutch release cross-shaft is equipped with two grease fittings in the transmission clutch housing. See **Fig. 3**. Wipe the dirt from the grease fittings and lubricate with multipurpose chassis grease.

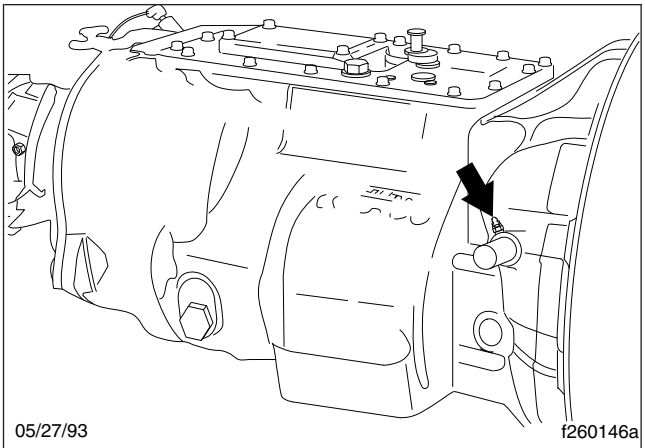

NOTE: There are grease fittings on both the left and right side of the housing.

Fig. 3, Cross-Shaft Grease Fitting

25–03 Fluid Level Check, Hydraulic Clutch Control

⚠ WARNING

Use only approved fluid (DOT 4 brake fluid) in the hydraulic clutch control system. Do not mix different types of brake fluid. The wrong fluid will damage the rubber parts of the system, causing loss of clutch function and the risk of serious personal injury.

NOTICE

Do not allow the fluid level in the reservoir to go below the MIN line. If air enters the system, the hydraulic system will not operate correctly, and the clutch could be damaged.

If the fluid level is below the MIN line, fill the reservoir with new DOT 4 brake fluid from a tightly sealed container until the level reaches the MAX line. See **Fig. 4**.

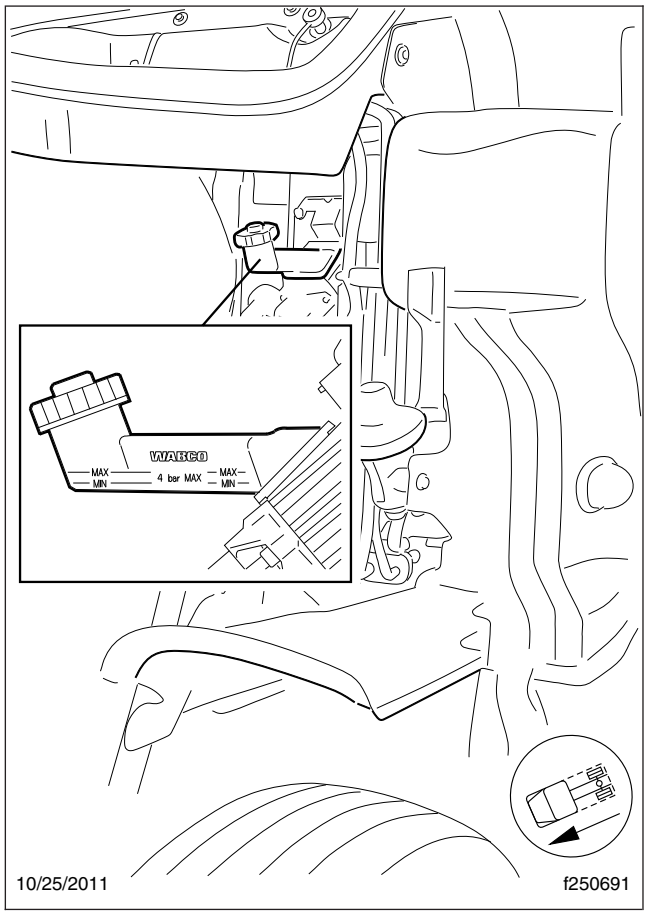

Fig. 4, Reservoir, Hydraulic Clutch Control

25–04 Fluid Change, Hydraulic Clutch Control

Replace the hydraulic clutch control fluid to ensure clutch function is reliable and correct. It can be changed by pressure bleeding or manual bleeding. Pressure bleeding can be done by one person and manual bleeding requires two.

https://truckmanualshub.com/

⚠ WARNING

Hydraulic clutch control fluid (DOT 4 brake fluid) is hazardous. It may be a skin irritant and can cause blindness if it gets in your eyes. Always wear safety glasses when handling it or bleeding hydraulic lines. If you get it on your skin, wash it off as soon as possible.

NOTICE

Do not spill hydraulic clutch control fluid on the cab paint. Clean it off immediately if any is spilled. Brake fluid can damage paint.

IMPORTANT: The pressure line must slope continuously downward between the master and slave cylinders. On some vehicles, the securing clamps may need to be removed to achieve this and allow the air to be purged.

Pressure Bleeding

NOTE: A bleeder system (J-29532) and a bleed adaptor (J-35798) for the fluid reservoir are available through SPX Kent-Moore Tools and may be used to complete the following procedure. To order these parts, call Kent-Moore at 1-800-328-6657.

1. Park the vehicle on a level surface, shut down the engine, and set the parking brake. Chock the tires and raise the hood.
2. Prepare the pressure bleeding equipment according to the manufacturer's instructions. Use new DOT 4 brake fluid from a tightly sealed container. Pressurize the bleeder system to 15 psi (103 kPa).
3. Remove the reservoir lid (see **Fig. 4**) and install the pressure bleed adaptor on the reservoir.
4. Bleed the hydraulic system as follows.
   - 4.1 Open the bleed valve on the bleed tank to pressurize the reservoir.
   - 4.2 Remove the cap from the bleed valve of the slave cylinder. See **Fig. 5**. On the valve, install a transparent drain hose connected to a catch bottle. The hose needs to fit the bleed valve tight enough so it does not fall off when fluid is pumped out.
   - 4.3 Open the bleed valve on the slave cylinder.
   - 4.4 When the draining fluid is clear and free of air bubbles, close the bleed valve.

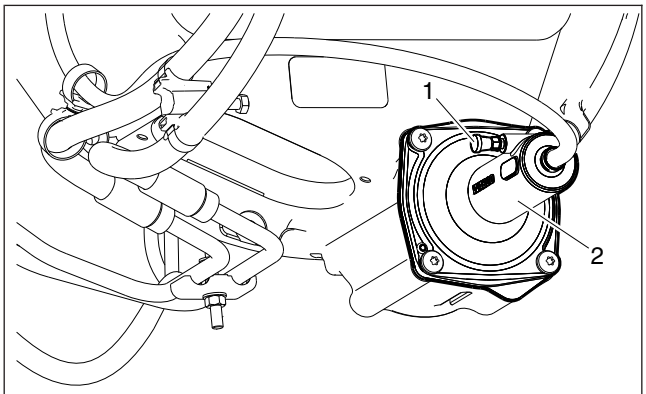

1. Bleed Valve 2. Slave Cylinder

Fig. 5, Slave Cylinder, Hydraulic Clutch Control

5. Check the fluid level in the reservoir. If necessary, add or drain fluid to bring the fluid level to between the MIN and MAX lines marked on the side of the reservoir. Install the reservoir lid.
6. Disconnect the transparent hose. Tighten the bleed screw 88 lbf·in (1000 N·cm) and install the cap on the slave cylinder bleed valve.
7. Depress the clutch pedal a few times. There should be resistance over the full pedal stroke.

Manual Bleeding

1. Park the vehicle on a level surface, shut down the engine, and set the parking brake. Chock the tires and open the hood.

NOTE: The hydraulic system holds approximately 0.5 quart (0.5 liter) of fluid. It may need to be refilled during the bleeding process to prevent air from re-entering the system.

2. Remove the reservoir lid and fill the reservoir (see **Fig. 4**) with new DOT 4 brake fluid from a tightly sealed container.
3. Remove the cap from the bleed valve of the slave cylinder. See **Fig. 5**. On the valve, install a

https://truckmanualshub.com/

transparent drain hose connected to a catch bottle. The hose needs to fit the bleed valve tight enough so it does not fall off when fluid is pumped out.

NOTE: The following steps require two people – one in the cab to work the clutch pedal, and one to open and close the bleed valve and watch the fluid.

4. Bleed the system, as follows.
   - 4.1 Open the bleed valve.
   - 4.2 Depress the clutch pedal until it stops.
   - 4.3 Close the bleed valve.
   - 4.4 Return the pedal to the upper position.
   - 4.5 Repeat the previous steps until the fluid is clear and free of air bubbles.
   - 4.6 Depress the clutch pedal. There should be resistance over the full pedal stroke.
5. Check the fluid level in the reservoir. If necessary, add or drain fluid to bring the fluid level to between the MIN and MAX lines marked on the side of the reservoir. Install the reservoir lid.
6. Disconnect the transparent hose. Tighten the bleed valve 88 lbf·in (1000 N·cm) and install the cap on the slave cylinder bleed valve.

25–05 Clutch Adjustment, Manually Adjusted Clutches

NOTE: This procedure is only required for vehicles equipped with non-synchronized transmissions and manually adjusted clutches.

Release bearing travel is the clearance between the rear surface of the release bearing housing and the forward surface of the clutch brake disc. This distance must be maintained between 1/2 and 9/16 inch (12.7 and 14.3 mm).

1. Remove the clutch inspection cover from the bell housing. See **Fig. 6**.
2. Slide the clutch brake tight against the transmission input-shaft bearing cap.

IMPORTANT: Release bearing travel tool A02-12419-000 is available through the PDCs. The fork at one end of the tool has green tape on it, and has two 0.50-inch (12.7-mm) diameter tips; the fork at the other end has blue tape on it, and has 0.56-inch (14.3-mm) diameter tips. See **Fig. 7**.

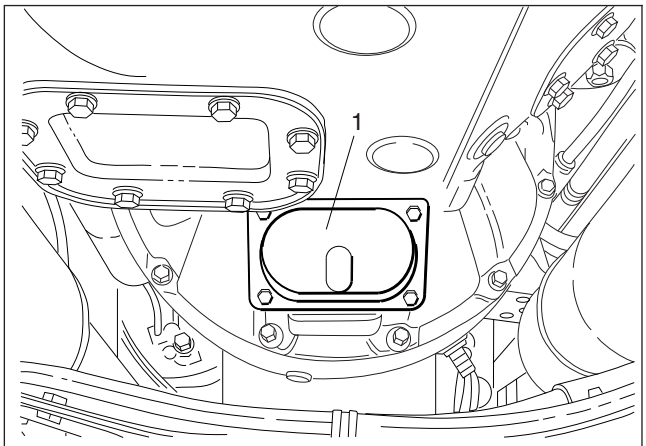

1. Clutch Inspection Cover

Fig. 6, Remove the Clutch Inspection Cover

3. Measure the release bearing travel. See **Fig. 8** for the correct dimension to measure. Using both ends of the release bearing travel tool, check this gap as follows:

   Position the tool so that the legs of the fork at the blue 0.56-inch (14.3-mm) end straddle the transmission input shaft. If the tool fits loosely, the gap is too wide and adjustment is needed. Go to the next step.

   If the blue 0.56-inch (14.3-mm) end can't be inserted in the gap, then try to insert the green 0.50-inch (12.7-mm) end.

   If the green end of the tool can't be inserted in the gap, adjustment is needed. Go to the next step.

   If the green end of the tool fits — snugly or loosely — then no adjustment is needed. Nothing more needs to be done. Install the clutch inspection cover.
4. Release the clutch by depressing the pedal. Block the pedal in the released position, or have someone assist you by holding the pedal down during the adjustment procedure.

https://truckmanualshub.com/

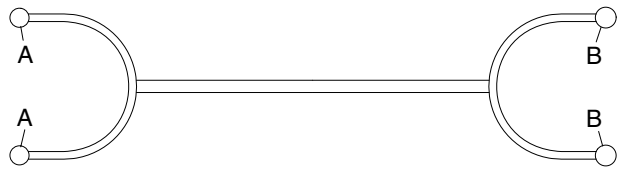

03/26/96 f580133

A. Green End (0.50 inch or 12.7 mm)
B. Blue End (0.56 inch or 14.3 mm)

Fig. 7, Release Bearing Travel Tool A02-12419-000

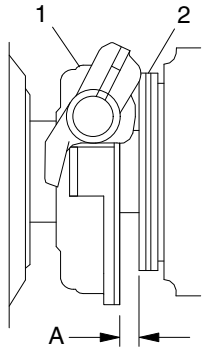

10/14/94 f250199a

A. Clearance between release bearing housing and clutch brake must be 1/2 to 9/16 inch (12.7 to 14.3 mm).
1. Release Bearing Housing
2. Clutch Brake

Fig. 8, Release Bearing Travel Measurement

NOTE: An open-end wrench is not recommended for the following step.

5. Adjust the clutch, using a 5/8-inch box-end or socket wrench on the adjustment bolt. See **Fig. 9**.

   5.1 Insert the 5/8-inch box-end or socket wrench through the inspection cover opening.

   5.2 To begin the adjustment, release the adjustment bolt by pressing down on the bolt head.

   NOTE: On Easy-Pedal 2000 clutches, each complete turn of the adjustment bolt represents about 0.125 inch (3 mm) of release bearing movement.

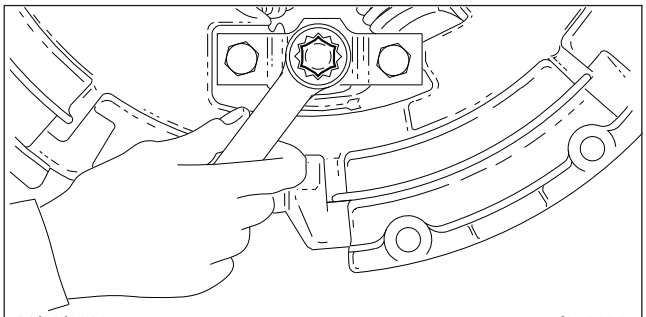

11/29/2010 f250683

Fig. 9, Manual Adjustment, Easy-Pedal Clutch (shown with bell housing removed)

   Normal wear increases the gap between the release bearing and the transmission.

   5.3 *To decrease the gap*: If clearance between the release bearing housing and the clutch brake is *more than* 9/16 inch (14.3 mm), turn the adjustment bolt clockwise (the release bearing moves toward the transmission).

   To increase the gap: If clearance between the release bearing housing and the clutch brake is *less than* 1/2 inch (12.7 mm), turn the adjustment bolt counterclockwise (the release bearing moves toward the engine).

   5.4 When the adjustment is complete, make sure the adjustment bolt is locked (pulled up flush with the mounting bolts).

6. After adjusting, release the pedal and check the clearance between the release bearing housing and the clutch brake. When the adjustment is correct, the green end of the tool should go in and the blue should not (clearance of 1/2 to 9/16 inch, or 12.7 to 14.3 mm).

7. Install the clutch inspection cover.

https://truckmanualshub.com/

https://truckmanualshub.com/

Index, Alphabetical

Title of Maintenance Operation (MOP)	MOP Number
Allison Transmission Fluid and Filter Change	26–04
Allison and Eaton Fuller Transmission Breather Check	26–03
Eaton Fuller Transmission Fluid Change, and Magnetic Plug Cleaning	26–02
Safety Precautions	26–00
Transmission Fluid Level Check	26–01

https://truckmanualshub.com/

https://truckmanualshub.com/

26–00 Safety Precautions

Safety Precautions in this section apply to all procedures within this group.

⚠ DANGER

When working on the vehicle, shut down the engine or motor, set the parking brake, and chock the tires. Before working under the vehicle, always place jack stands under the frame rails to ensure the vehicle cannot drop. Failure to follow these steps could result in serious personal injury or death.

26–01 Transmission Fluid Level Check

NOTICE

Operating a transmission with the fluid level higher or lower than recommended can result in transmission damage. Do not overfill the transmission.

Do not mix types and brands of fluid, because of possible incompatibility. Do not use fluid additives, friction modifiers, extreme-pressure gear fluids, or multiviscosity lubricants.

Eaton Fuller

NOTE: Check the transmission fluid level with the transmission at operating temperature.

1. Park the vehicle on a level surface, apply the parking brakes, and chock the tires.
2. Clean the area around the fill plug, then remove the plug from the side of the gear case.
3. Using your gloved finger or a bent pipe cleaner, check if the fluid is level with the fill opening. See **Fig. 1**.
4. If the fluid level is low, check the transmission for leaks, and correct as needed.
5. If needed, add Eaton-approved fluid until it is level with the lower edge of the fill opening. See **Table 1** for approved transmission lubricants.

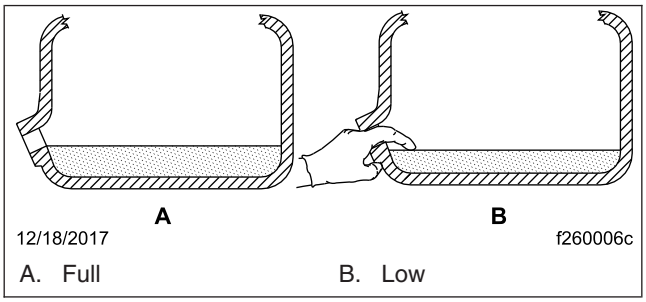

Fig. 1, Checking Transmission Fluid Level

For more information and a complete listing of approved lubricants, refer to the Eaton website, **www.roadranger.com**.

Eaton Approved Manual and Automated Transmission Lubricants		
Lubricant Type*	**Temperature**	**SAE Viscosity**
Synthetic transmission lubricant meeting Eaton PS-386 lubricant specification	All	—

* Do not mix types or brands of lubricant.

Table 1, Eaton Approved Manual and Automated Transmission Lubricants

6. Clean the fill plug, then install it. Tighten the plug as follows:
   - 25 to 35 lbf·ft (34 to 48 N·m) for transmissions with 3/4-inch pipe threads.
   - 60 to 75 lbf·ft (81 to 102 N·m) for transmissions with 1-1/4-inch pipe threads.

Allison

NOTE: For Allison transmissions equipped with an oil level sensor, the transmission fluid level can be checked electronically. For more information, refer to the Allison Transmission website, **www.allisontransmission.com**.

Cold Check

Clean all dirt from around the end of the fluid fill tube before removing the dipstick. Do not allow foreign matter to enter the transmission. Dirt or foreign matter in the hydraulic system may cause undue wear of transmission parts, make valves stick, and clog passages.

https://truckmanualshub.com/

It is important to check the fluid level cold to determine if the transmission has a sufficient amount of fluid to be safely operated until a hot check can be performed.

1. Park the vehicle on a level surface, apply the parking brakes, and chock the tires.
2. Run the engine for at least one minute.
3. Shift from DRIVE to NEUTRAL, and then shift to REVERSE to fill the hydraulic system.
4. Shift to NEUTRAL and allow the engine to idle at 500 to 800 rpm.
5. With the engine running at idle, remove the dipstick from the tube and wipe it clean.
6. Insert the dipstick into the tube, then remove it.
7. Check the fluid level reading, then repeat the check procedure to verify the reading.

   If the fluid level is within the COLD RUN band, the transmission may be operated until the fluid is hot enough to perform a hot check.

   If the fluid level is not within the COLD RUN band, add or drain fluid as needed to adjust the fluid level to the middle of the COLD RUN band. See **Fig. 2**.

NOTICE

As the fluid temperature increases, so does the fluid level. Do not fill above the COLD RUN band if the transmission fluid is below normal operating temperature.

NOTE: Perform a hot check at the first opportunity after the normal operating temperature, 160 to 200°F (71 to 93°C), has been reached.

Hot Check

1. Park the vehicle on a level surface, apply the parking brakes, and chock the tires.
2. Shift the transmission to NEUTRAL.
3. Operate the engine at idle (500 to 800 rpm) until normal operating temperature is reached. Check that the sump temperature is 160 to 200°F (71 to 93°C). Check that the converter-out temperature is 180 to 220°F (82 to 104°C).
4. With the engine idling, remove the dipstick from the tube and wipe it clean.
5. Insert the dipstick into the tube, then remove it.
6. Check the fluid level reading, then repeat the check procedure to verify the reading. Safe operating level is within the HOT RUN band on the dipstick. The HOT RUN band is between the HOT FULL and HOT ADD marks.

   If the fluid level is not within the HOT RUN band, add or drain fluid as needed to bring the fluid level within the HOT RUN band. See **Fig. 2**.

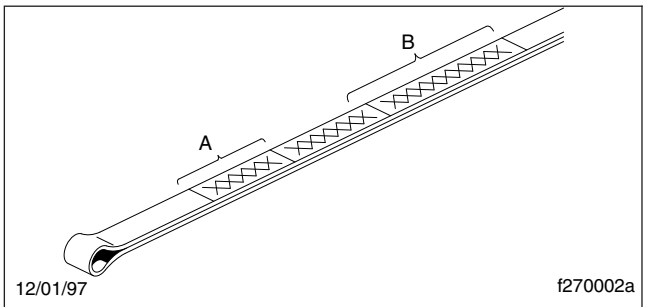

A. Cold Run Band B. Hot Run Band

Fig. 2, Dipstick Markings

26–02 Eaton Fuller Transmission Fluid Change, and Magnetic Plug Cleaning

NOTICE

Operating a transmission with the fluid level higher or lower than recommended can result in transmission damage. Do not overfill the transmission. Overfilling will force fluid out of the case through the main shaft openings.

Do not mix types and brands of fluid, because of possible incompatibility. Do not use fluid additives, friction modifiers, extreme-pressure gear fluids, or multiviscosity lubricants.

NOTE: Fluid change intervals are extended to 500,000 miles (800 000 km) on any vehicles filled with synthetic transmission fluid.

1. If the transmission fluid is not at normal operating temperature, run the engine until the fluid reaches operating temperature.

https://truckmanualshub.com/

2. Park the vehicle on level ground, apply the parking brakes, shift the transmission to neutral (N), shut down the engine, and chock the tires.
3. Place a large drain pan under the transmission.
4. Clean the area around the fill plug, and remove it from the side of the gear case. Remove each drain plug from the bottom of the case.
5. Clean the fill and drain plugs. For magnetic plugs, use a piece of key stock or any other convenient steel slug to short the two magnetic poles and divert the magnetic field.

   Install and tighten each drain plug 50 lbf·ft (68 N·m).

NOTE: The optional transmission fluid filter may be a remote-mount, spin-on type, located between the transmission and the fluid cooler. The filter bracket is attached to the frame rail or some other nearby location. The filter is mounted in a vertical position, and should be filled with fluid before installation to assure the proper fluid level. For optimum transmission performance, change the filter each time that the fluid is changed.

6. For a transmission equipped with a transmission fluid filter(s), replace the fluid filter(s) as follows.

   6.1 Place a drain pan under the transmission fluid filter.

CAUTION

To prevent skin burns from hot transmission fluid, wear protective gloves when removing the filter.

   6.2 Place a strap or chain wrench around the filter canister, and rotate it in a counterclockwise motion to separate the filter from the mounting. Carefully spin the filter off the mount and remove it from the vehicle.

   6.3 Apply a light coat of transmission fluid to the O-ring gasket on the new filter. Fill the filter with specified transmission fluid, and spin the filter onto the mount.

   NOTE: The filter fills slowly, so be patient to ensure the proper fluid level has been reached.

   6.4 Once the filter makes contact with the mount, use a strap wrench to rotate the canister an additional 180 to 270 degrees to firmly tighten the filter. Wipe the filter clean of any fluid after it is tightened.

7. Add Eaton-approved fluid until it is level with the lower edge of the fill opening. See **Table 2** for approved transmission lubricants, and **Table 3** for transmission lubricant capacities.

   For more information and a complete listing of approved lubricants, refer to the Eaton website, **www.roadranger.com**.

Eaton Approved Manual and Automated Transmission Lubricants		
Lubricant Type*	**Temperature**	**SAE Viscosity**
Synthetic transmission lubricant meeting Eaton PS-386 lubricant specification	All	—

* Do not mix types or brands of lubricant.

Table 2, Eaton Approved Manual and Automated Transmission Lubricants

Eaton Fuller Transmission Lubricant Capacities		
Transmission Model*		**Capacity: qt (L)**
Prefix	**Number**	
FR, FRO	11210 12210 13210 14210 15210 16210	11.75 (11)†
RTO, RTLO	11908 12910 14908 14909 14910 14913 14915 14918 16908 16909 16910 16913 16915 16918	14 (13)†

https://truckmanualshub.com/

Eaton Fuller Transmission Lubricant Capacities		
Transmission Model*		Capacity: qt (L)
Prefix	Number	
TX	14607	18 (17)†

* For models not listed in this table see the Eaton Fuller website, **www.roadranger.com**.

† Quantities listed are approximate. Capacity of transmissions equipped with PTOs or oil coolers are greater than capacities listed. Fill transmission until lubricant is level with bottom of fill hole with vehicle in normal operating position.

Table 3, Eaton Fuller Transmission Lubricant Capacities

NOTE: In all cases, the correct fluid level is established by checking at the fill opening.

8. Operate the engine for five minutes after filling the transmission, then check the fluid level again.
9. Clean the fill plug, then install it in the transmission. Tighten the plug as follows:
   - 25 to 35 lbf·ft (34 to 48 N·m) for Eaton Fuller transmissions with 3/4-inch pipe threads.
   - 60 to 75 lbf·ft (81 to 102 N·m) for Eaton Fuller transmissions with 1-1/4-inch pipe threads.
10. Operate the vehicle to check for correct operation.

26–03 Allison and Eaton Fuller Transmission Breather Check

If the transmission is equipped with a housing breather (see **Fig. 3**), it must remain clear. A plugged breather could result in pressure build-up, which could cause oil leakage.

IMPORTANT: Do not spray water, steam, or cleaning solution directly at the breather. These actions can force water or cleaning solution into the transmission and contaminate the transmission fluid.

If the breather is plugged, clean or replace it. If replacing it, use a correct-size wrench (pliers or a pipe wrench can crush or damage the breather stem and produce metal particles that could enter the transmission).

Check more often if the vehicle is operating under very dusty conditions.

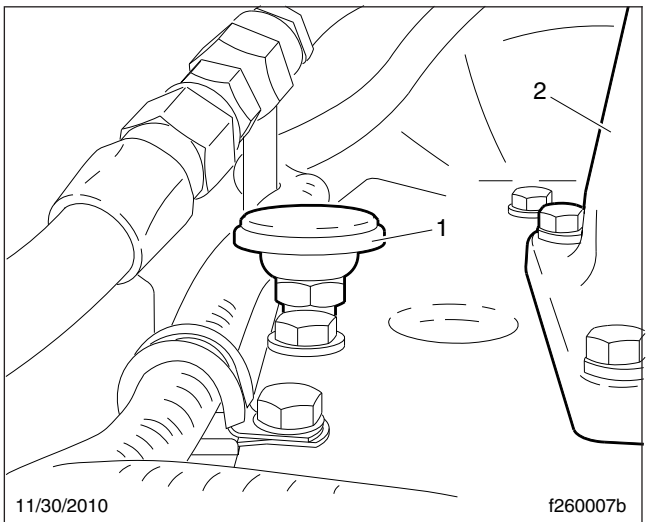

NOTE: Location of the transmission breather will vary depending on transmission model.

1. Breather
2. Shift Tower

Fig. 3, Transmission Breather (Eaton Fuller shown)

26–04 Allison Transmission Fluid and Filter Change

Allison 3000 Family and 4000 Family Transmissions

NOTE: When the optional prognostics feature is enabled on an Allison transmission, the system monitors oil life and filter life. To reset the indicator, press the Mode button (on the electronic shift control) for 10 seconds with the ignition on but the engine not running. For more information, see the Allison Transmission website, **www.allisontransmission.com**.

1. Park the vehicle on a level surface and apply the parking brakes.
2. Operate the vehicle until the transmission reaches normal operating temperature: 160 to 200°F (71 to 93°C).

https://truckmanualshub.com/

NOTICE

To prevent dirt from entering the transmission, use only clean containers and fillers for the transmission fluid. Do not use fillers or containers that have been used for water or antifreeze. Dirt, water, or antifreeze could damage the transmission.

Engine coolant in the transmission hydraulic system requires immediate action to prevent malfunction and possible serious transmission damage. For more information, see the Allison Transmission website, www.allisontransmission.com.

IMPORTANT: When draining transmission fluid, check for evidence of dirt or water contamination. A small amount of condensation will appear in the fluid during operation.

Water contamination is normally characterized as a milky discoloration of the transmission fluid. Obvious contamination of the transmission fluid indicates a leak between the water and fluid areas of the transmission cooler. Inspect and pressure-test the cooler to confirm the leak; replace leaking transmission coolers.

NOTE: If only the filter is being changed, do not drain the fluid.

3. Clean the area around the drain plug and the transmission fluid pan. Place a drain pan under the transmission and remove the drain plug. Examine the fluid as it drains.
4. Remove the 12 mounting capscrews (six each) from the two filter covers. See **Fig. 4**.

NOTE: A lot of fluid will drain when the filter covers are removed.

5. Remove the filter covers, gaskets, O-rings, and filters from the transmission.
6. Lubricate the new O-rings with transmission fluid, and install them on the covers.
7. Install the filter over the gaskets.
8. Install the fluid filters on the cover assemblies.
9. Install the filter and cover assemblies into the filter compartment. Align each cover assembly with the holes in the channel plate sump, and push the cover assemblies in by hand to seat the seals.

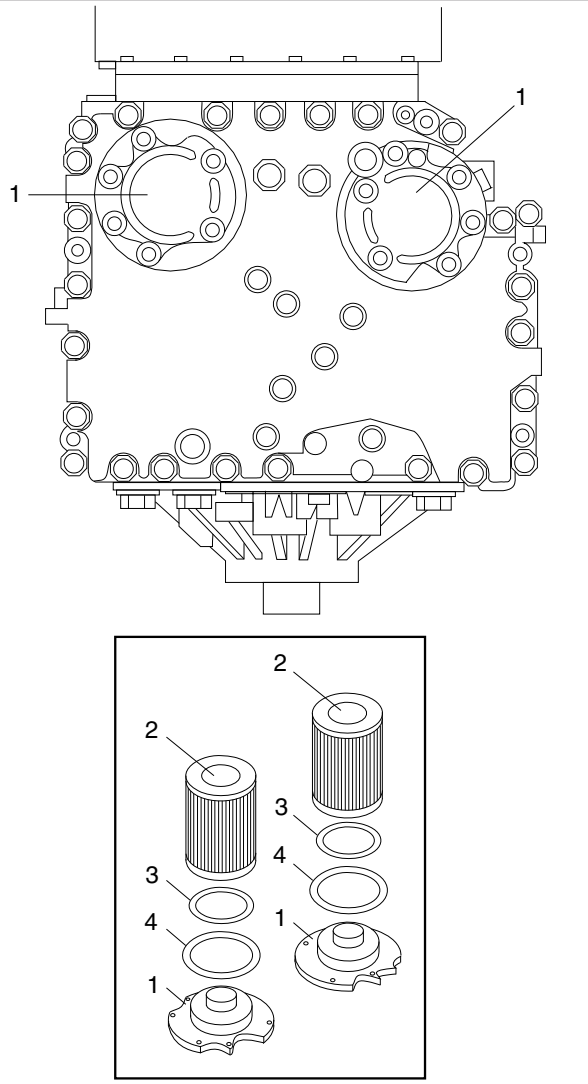

NOTE: Allison 4000 Family transmission shown. Components and location are similar for Allison 3000 Family transmissions.

1. Filter Cover
2. Filter
3. Filter Element O-Ring
4. Square-Cut Seal

Fig. 4, Allison Transmission Filter Locations and Components

NOTICE

Do not use the capscrews to draw the filter covers to the sump. This can damage the covers, seals, or sump.

https://truckmanualshub.com/

10. Install six capscrews in each cover, and torque the bolts 38 to 44 lbf·ft (51 to 61 N·m).
11. Install a new drain plug O-ring, and install the drain plug. Tighten the drain plug 18 to 24 lbf·ft (25 to 32 N·m).

NOTE: Fluids meeting specification TES 295 are preferred over TES 389 fluids for use in Allison 3000 and 4000 family transmissions. See the Allison Transmission website (**www.allison-transmission.com**) for a list of approved transmission fluids and usage recommendations.

12. Refill the transmission with fresh transmission fluid. Use only a fluid that meets Allison Transmission specification TES 295 or TES 389. Castrol TranSynd® is a TES 295 fluid available through Allison distributors and dealerships. See **Table 4** for lubricant refill capacities.

Lubricant Refill Capacities, Allison 3000 and 4000 Family Transmissions*		
Family	**Sump Size**	**Capacity : qt (L)**
3000	4 Inch	19 (18)
	2 Inch	17 (16)
4000	4 Inch	39 (37)†
	2 Inch	31 (30)†

* Quantities listed are approximate. Add listed amount of fluid, then perform a "hot check" and add fluid as needed. Do not overfill.

† Add 3 qt (2.8 L) for transmissions with PTO.

Table 4, Lubricant Refill Capacities, Allison 3000 and 4000 Family Transmissions

13. Check and adjust the fluid level using the appropriate Allison Transmission procedures in **MOP 26–01**.

https://truckmanualshub.com/

Index, Alphabetical

Title of Maintenance Operation (MOP)	MOP Number
Fifth Wheel Inspection	31–02
Fifth Wheel Lubrication	31–03
Frame Fastener Torque Check	31–01
Safety Precautions	31–00
Trailer Electrical Connector Protection	31–04

https://truckmanualshub.com/

https://truckmanualshub.com/

31–00 Safety Precautions

Safety Precautions in this section apply to all procedures within this group.

⚠ DANGER

When working on the vehicle, shut down the engine or motor, set the parking brake, and chock the tires. Before working under the vehicle, always place jack stands under the frame rails to ensure the vehicle cannot drop. Failure to follow these steps could result in serious personal injury or death.

31–01 Frame Fastener Torque Check

Frame brackets and components secured with Huckbolt® fasteners do not require a torque check, however, they should be inspected for damage. Frame brackets and components secured with conventional bolts and nuts are to be checked at initial maintenance (IM).

Check the torque of frame fasteners to offset the effects of bedding in or seating. When possible, always check the torque of the nut, not the bolt head. This will give a true torque reading by eliminating bolt-body friction.

When checking the torque of frame fasteners, inspect the frame for cracks and other damage.

Set a click-type torque wrench to the maximum torque of the fastener you are checking. Apply pressure until the torque wrench clicks. Do not loosen the bolt to check the torque. See **Group 00** in the vehicle workshop manual for torque specifications.

NOTICE

Make sure frame fasteners are properly tightened. Continued vehicle operation with loose fasteners could result in bracket or frame damage.

Check the fasteners at the following locations:

- axle stops
- deck plates
- equalizer brackets
- exhaust brackets
- fifth wheel legs
- fifth wheel mountings
- frame crossmembers and gussets
- front frame brackets
- front suspension spring brackets
- fuel tank brackets
- radius rods
- rear suspension spring brackets
- shock absorbers
- all other suspension fasteners
- all other axle fasteners
- all other frame fasteners

Any component that shows signs of cracking or damage must be repaired or replaced. See the applicable group in the *108SD and 114SD Workshop Manual* for repair or replacement information.

31–02 Fifth Wheel Inspection

⚠ WARNING

All fifth wheel maintenance, adjustment, and rebuilding must be done only by a qualified mechanic. Improper or incomplete procedures could result in a possible disengagement of the trailer from the tractor, which could result in personal injury or property damage.

Parts are under spring compression. Wear safety goggles while servicing the fifth wheel. Failure to do so can result in personal injury, due to parts ejecting with force.

Holland FWS1

1. Disconnect the tractor from the trailer. For instructions, see the *108SD and 114SD Driver's Manual*.
2. Thoroughly steam clean the fifth wheel.
3. Check the fifth wheel plate for cracks. Check for sharp edges on top; the chamfer should be 1/8 to 1/4 inch (3 to 6 mm).

https://truckmanualshub.com/

4. When the wheel is locked, the safety latch must swing free and fall freely into position. See **Fig. 1**.

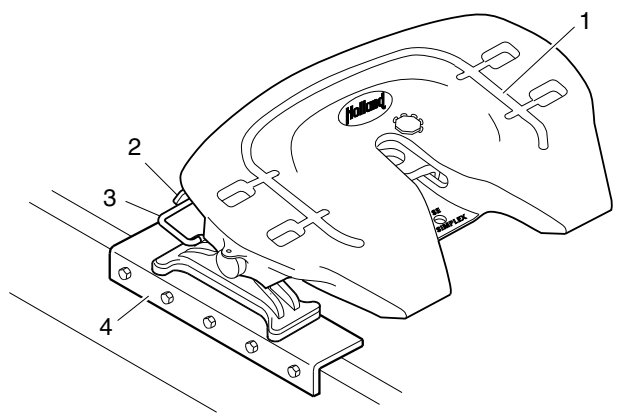

1. Lubricant Grooves
2. Safety Latch
3. Release Handle
4. Mount

Fig. 1, Holland FWS1 Fifth Wheel

5. The lever bar and release handle must be in proper alignment. See **Fig. 2**. Compare the lever bar and release handle alignment to a new, or a properly operating lever bar and release handle. Replace any bent or misaligned lever bar or release handle.

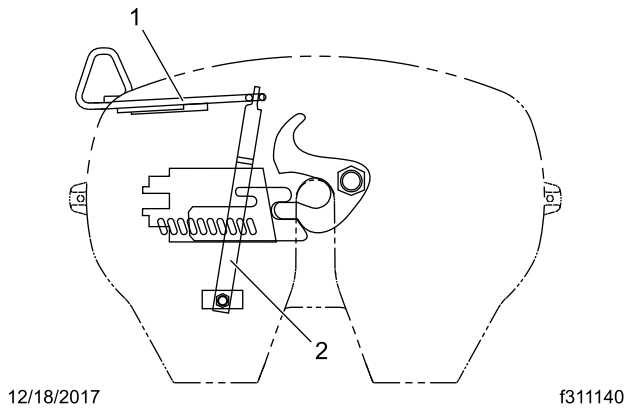

1. Release Handle
2. Lever Bar

Fig. 2, Lever Bar and Release Handle Alignment

6. Check all cotter pins for cracking or damage. Replace any cotter pin that shows any signs of damage.
7. Check all mounting bolts for signs of fatigue, and tighten them to the proper torque. For torque specifications, see **Group 00**. Inspect all angles, plates, and brackets for cracks or other damage.
8. Replace cracked, worn, or damaged parts with new parts. Replace all loose mounting bolts with 5/8–11 SAE grade 8 bolts, grade C locknuts, and hardened washers. *Do not* re-use bolts, nuts, and washers on fifth wheel mountings.
9. After inspecting the fifth wheel, lubricate all moving parts with a chassis or multipurpose grease. See **MOP 31–03** for lubrication instructions.

Holland FW35

1. Thoroughly steam clean all fifth wheel components before inspection.
2. Check for cracks in the fifth wheel assembly, mounting brackets, and mounting parts.
3. Check the fastener torques on the fifth wheel assembly and fifth wheel mounting. Tighten bolts and nuts as needed. Replace missing or damaged bolts.
4. Inspect the fifth wheel for bent, worn, damaged, and missing parts; replace them as needed with genuine Holland parts.
5. Using a Holland Kingpin Lock Tester (Holland tool number TF-TLN-5001, available through the PDCs as HLD TFTLN5001), check the operation of the locking mechanism by opening and closing the locks. See **Fig. 3**.
6. After inspecting the fifth wheel, lubricate all moving parts with a chassis or multipurpose grease. See **MOP 31–03** for lubrication instructions.

Fontaine

1. Disconnect the tractor from the trailer. For instructions, see the *108SD and 114SD Driver's Manual*.
2. Thoroughly steam clean the fifth wheel.
3. Check for cracks in the fifth wheel assembly, mounting brackets, and mounting parts.
4. Ensure that both bracket pins are in place and secured by retainer pins and cotter pins. See **Fig. 4**.
5. For fifth wheels equipped with bracket liners, rock the fifth wheel. If it does not rock freely, re-

https://truckmanualshub.com/

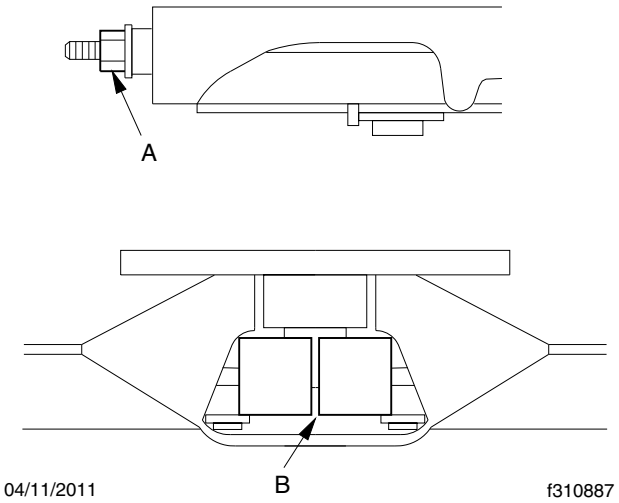

A. The nut and washer should be snug against the fifth wheel.
B. The locks should be completely closed around the kingpin.

Fig. 3, Holland Fifth Wheel Properly Closed

move the top plate and inspect the bracket liners. Replace liners that are broken or less than 0.125 inch (3 mm) thick at the top of the liners. For the liner replacement procedure, see the Fontaine website, **www.fifthwheel.com**.

6. Check the jaw and stationary jaw for mushrooming, and check that the serrations at the jaw and wedge are in good condition.
7. Test the secondary safety lock latch for ease of operation.
8. Check for loose nuts or bolts on the fifth wheel and the mounting. Set a torque wrench to the maximum torque value for the bolt being checked, and confirm that the torque is to specification. Do not loosen the bolt to check the torque. See **Group 00** for bolt torque specifications.
9. Check all springs to see if they are securely fastened, and are not deformed.

⚠ WARNING

Do not disassemble the fifth wheel to inspect the springs. The springs are under extreme pressure, and could cause serious injury.

10. Check the wedge adjustment.
    10.1 Close the fifth wheel on a standard 2-inch (50-mm) kingpin or similar 2-inch (50-mm) diameter shaft so that it locks.
    10.2 Push on the wedge stop rod with hand pressure. It should move in 1/4 inch (6 mm) and spring back out on release.

    If the free travel is not 1/4 inch (6 mm), adjust the distance to 1/4 inch (6 mm) by turning the wedge stop rod, on the right side of the top plate, clockwise to reduce the gap and counter-clockwise to increase it.
11. Replace cracked, worn, or damaged parts with new parts. Replace all loose mounting bolts with 5/8–11 SAE grade 8 bolts, grade C locknuts, and hardened washers. *Do not* re-use bolts, nuts, and washers on fifth wheel mountings.
12. After inspecting the fifth wheel, lubricate all moving parts with a chassis or multipurpose grease. Apply a generous coating of grease to the top plate to fill the grooves, or depressions, on the top plate. See **MOP 31–03** for lubrication instructions.

Jost

1. Disconnect the tractor from the trailer. For instructions, see the *108SD and 114SD Driver's Manual*.
2. Thoroughly steam clean the fifth wheel.
3. Check the mounting for missing or damaged fasteners, and broken components. Replace or repair as needed.
4. Inspect the bracket pin bolts. Make sure the locking tabs are properly securing the bolts in place. See **Fig. 5**.
5. Check the fifth wheel for bent, worn, or broken parts. Replace as needed.
6. If the fifth wheel is equipped with low-lube plates, check the plates and replace if damaged or worn down to the securing bolts. It is normal for outside edges of the plate to pucker slightly; this does not affect performance.
7. Check the fifth wheel adjustment. Using a lock tester, lock and unlock the fifth wheel several times. Make sure that the locking mechanism works properly.

https://truckmanualshub.com/

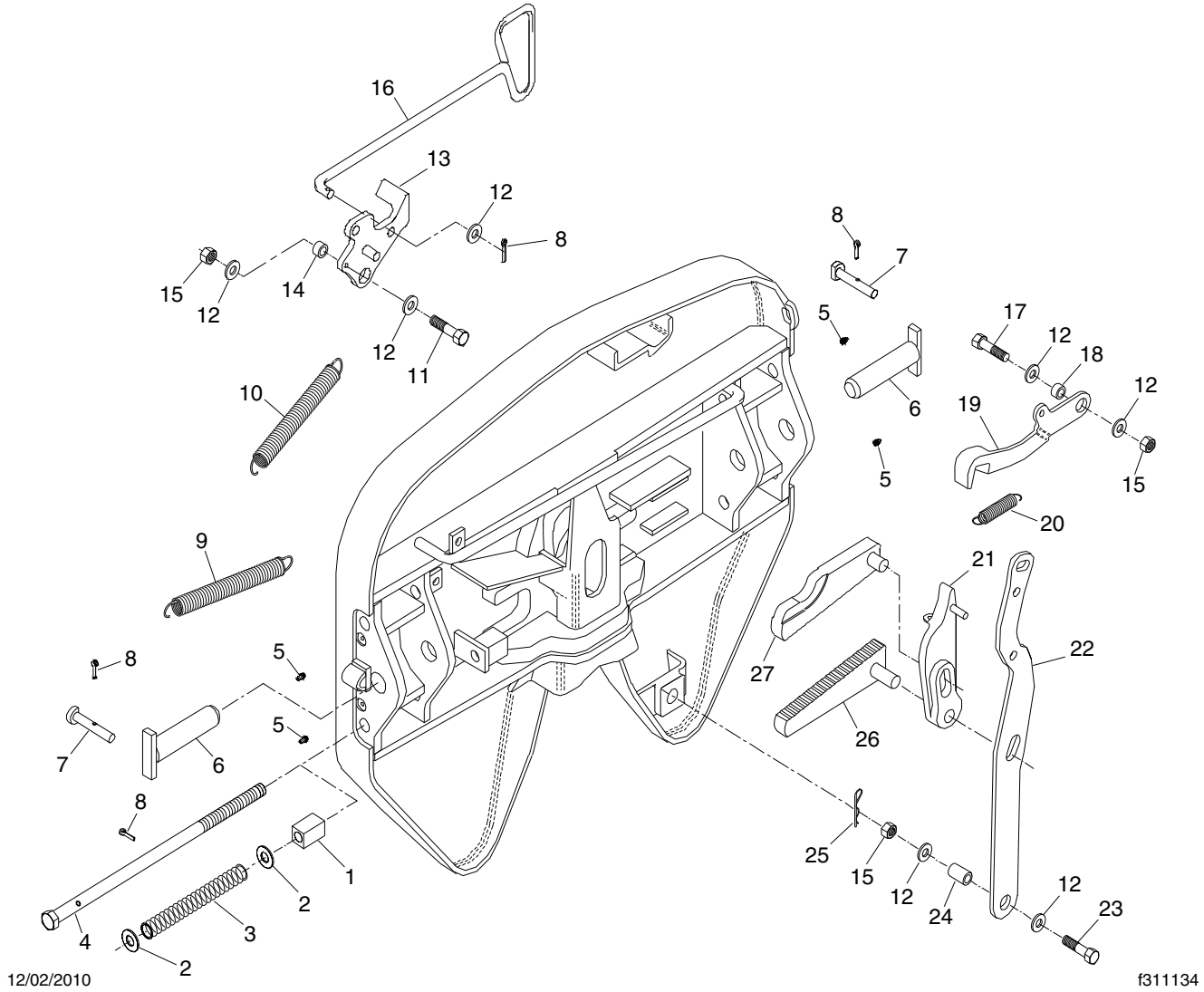

NOTE: 6000 Series shown; 7000 Series fifth wheels use similar parts.

1. Wedge Stop Rod Nut
2. Flat Washer, 5/8"
3. Wedge Stop Rod Spring
4. Wedge Stop Rod
5. Grease Fitting
6. Bracket Pin
7. Bracket Retainer Pin
8. Cotter Pin, 3/16" x 1"
9. Bumper Spring
10. Handle Spring
11. Bolt, Secondary Safety Lock
12. Flat Washer
13. Secondary Safety Lock
14. Bushing, Secondary Safety Lock
15. Hex Locknut
16. Pull Handle
17. Bolt, Bumper
18. Bushing
19. Bumper
20. Timer Spring
21. Timer
22. Operating Handle
23. Bolt, Operating Handle
24. Bushing, Operating Handle
25. Hair Pin Cotter
26. Wedge
27. Step Jaw

Fig. 4, Fontaine Fifth Wheel

https://truckmanualshub.com/

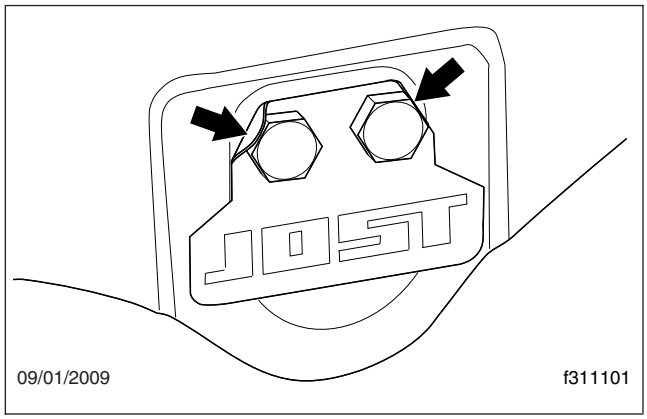

Fig. 5, Bracket Pin Bolt Locking Tabs

The lock is properly adjusted if: the wheel locks and unlocks easily each time and the lock tester rotates freely.

The lock is too loose if: you feel fore-aft play when pulling and pushing on the lock tester handle. See **Fig. 6**, Ref. A.

The lock is too tight if: the lock tester does not rotate freely in the lock. See **Fig. 6**, Ref. B.

8. If the lock is improperly adjusted, correct as follows.

   If the lock is too tight, loosen the jam nut, turn the adjustment bolt *clockwise* one full turn, then reset the jam nut. Lock and unlock the mechanism several times to test. Repeat if necessary. See **Fig. 7**.

   If the lock is too loose, loosen the jam nut, turn the adjustment bolt *counterclockwise* one full turn, then reset the jam nut. Lock and unlock the mechanism several times to test. Repeat if necessary. See **Fig. 7**.

9. If the fifth wheel is equipped with a sliding mechanism, inspect and adjust it as follows.

   9.1 Check the bracket for any cracks or missing and damaged parts.

   9.2 Inspect the locking plungers for full engagement.

   9.3 Check the locking mechanism for proper operation.

   If the plungers will not release, check the air cylinder or plunger adjustment.

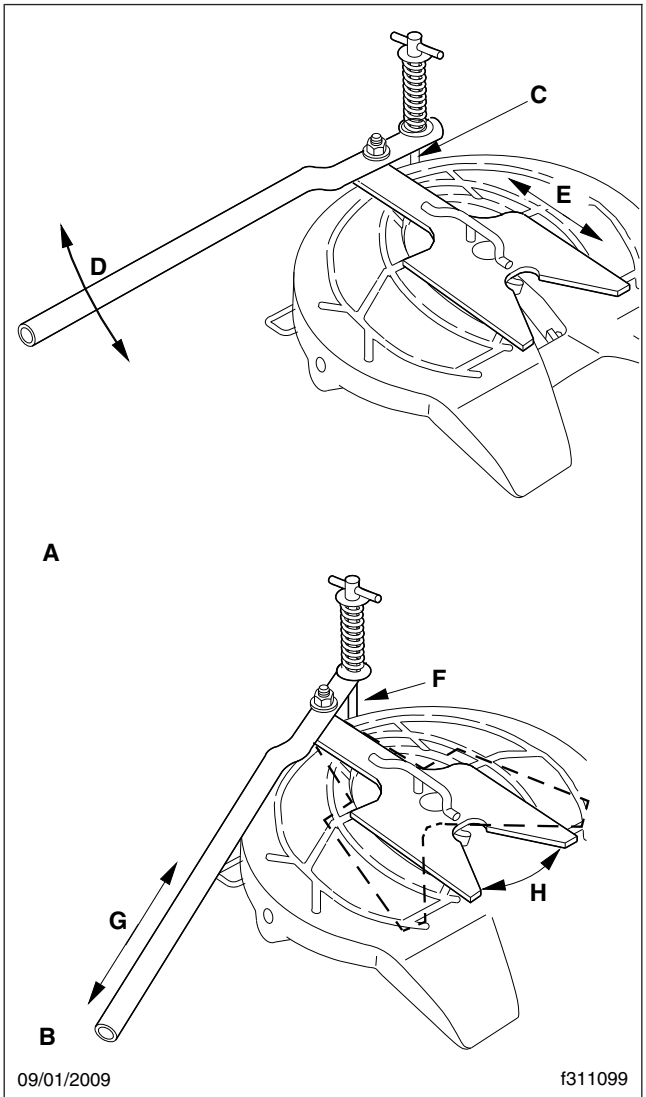

A. Checking for fore/aft play.
B. Rotating tester in lock.
C. Engage hook.
D. Pull/push handle fore/aft.
E. Check for movement of kingpin in lock.
F. Disengage hook.
G. Push/pull handle inboard/outboard.
H. Rotate lock tester.

Fig. 6, Jost Fifth Wheel Adjustment

If the plungers are loose, check the plunger adjustment and the plunger springs for proper compression. Replace if needed.

https://truckmanualshub.com/

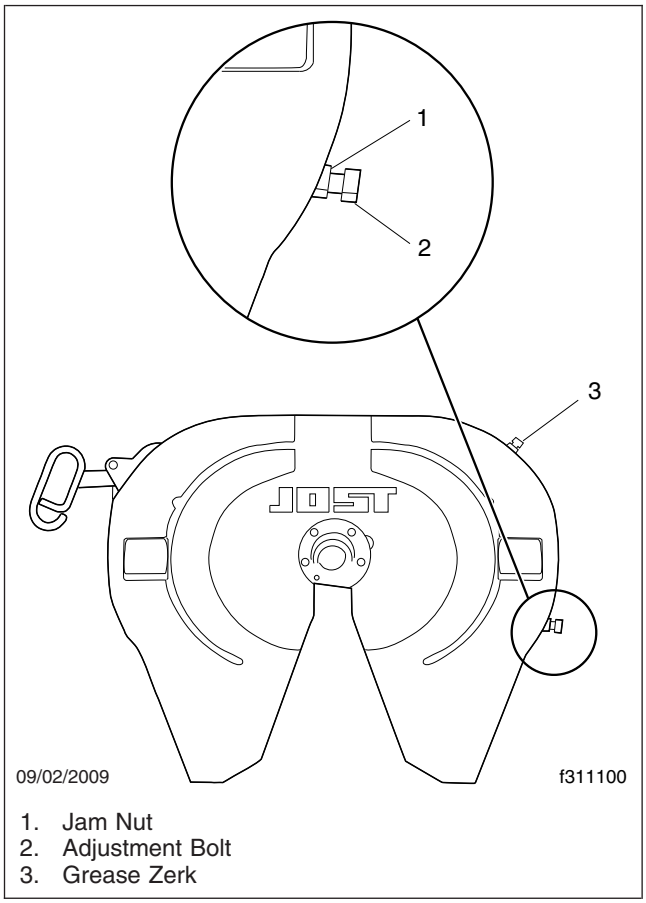

1. Jam Nut
2. Adjustment Bolt
3. Grease Zerk

Fig. 7, Jost Fifth Wheel

9.4 The outboard slider assembly requires no adjustment. If the plungers are loose, inspect and replace locking mechanism parts as needed.

9.5 The inboard slider is adjustable for frame width and plunger engagement. For adjustment, refer to the fifth wheel installation instructions.

10. Replace cracked, worn, or damaged parts with new parts. Replace all loose mounting bolts with 5/8–11 SAE grade 8 bolts, grade C locknuts, and hardened washers. *Do not* re-use bolts, nuts, and washers on fifth wheel mountings.
11. After inspecting the fifth wheel, lubricate all moving parts with a chassis or multipurpose grease. Apply a generous coating of grease to the top plate to fill the grooves, or depressions, on the top plate. See **MOP 31–03** for lubrication instructions.

31–03 Fifth Wheel Lubrication

To maintain proper fifth wheel operation, always lubricate the fifth wheel after an inspection has been performed.

IMPORTANT: Lubricate the fifth wheel:

- After power washing, or steam cleaning.
- If the vehicle operates in harsh conditions such as salt spray from road surfaces, or in extremely dusty environments.
- After any service that requires removal of lubrication from the fifth wheel top plate or components.

⚠ WARNING

Failure to properly lubricate the fifth wheel could result in a possible disengagement of the trailer from the tractor, which could result in personal injury or property damage.

Fontaine

1. Tilt the top plate forward (the front of the fifth wheel is down) and apply grease to each bearing area through the zerk fittings located on each side of the top plate just to the front of the bracket pins. Continue to apply grease until it is coming out of the back of the bearing. It may be necessary to raise the rear of the fifth wheel with a pry bar to open up the pocket slightly and allow the grease to flow through. A substantial amount of grease may be required initially to fill the reservoir.

   Tilt the fifth wheel ramps down (the rear of the fifth wheel is down) and repeat the greasing procedure. Rock the top plate back and forth several times to spread the grease over the bearing surface.
2. Inspect the trailer kingpin plate and top surface of the fifth wheel to make sure each is properly greased. A liberal coating of grease should be applied to the complete surfaces of both the trailer kingpin plate and the top surface of the fifth wheel.

https://truckmanualshub.com/

NOTE: Do not use a lube plate (high density polyethylene) on top of the fifth wheel or on the kingpin instead of grease without prior approval by Fontaine Fifth Wheel. The additional thickness of this material can prevent the proper operation of the fifth wheel and may cause a dangerous condition.

NOTE: Fontaine suggests the use of a Moly based lubricant such as Mobilgrease XHP 320 or equivalent when applying lubricant to the locking jaw and wedge.

3. Lubricate the fifth wheel prior to opening and closing it. Separate the jaw and wedge with a screwdriver, and grease the full length of their mating surfaces. Lubricate the top and bottom contact surfaces of the jaw and wedge. See **Fig. 5**. Open and close the fifth wheel several times to further distribute the grease.

   Lightly oil other moving parts in the fifth wheel.

4. Apply grease to the top plate. Spread grease all over the mating surface of the top plate. Be sure the grease pockets built into the top plates are full of grease.

Holland FWS1

Apply a heavy coat of grease to the top plate, either through the grease fittings located on the underside of the top plate, or by direct application.

Holland FW35

1. Using a water-resistant lithium-base grease, grease the top plate.
2. Using a light oil (such as SAE 10W or 20W motor oil), lubricate the cam track and pivot. See **Fig. 8**.
3. Grease the yoke tips, locks, and the release handle and spring; see **Fig. 9**. Grease the mounting bracket supports through the grease fittings. A “low temp” grade grease rated for -30°F (-34°C) or lower such as Cato Oil and Grease #5213, Craftsman Chemical Co. #LTF 2, Mystic LP-200, or equivalent is recommended.

Jost

Lubricate the kingpin lock using a hand pump grease gun through the grease zerk on the skirt of the fifth

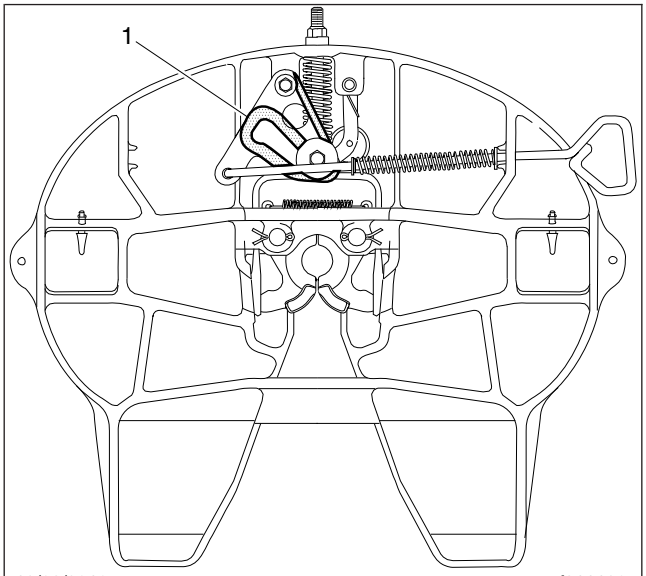

Use a light oil (such as SAE 10W or 20W motor oil) to lubricate the cam track and pivot.

1. Cam Plate

Fig. 8, Holland FW35 Fifth Wheel, Oil Lubrication

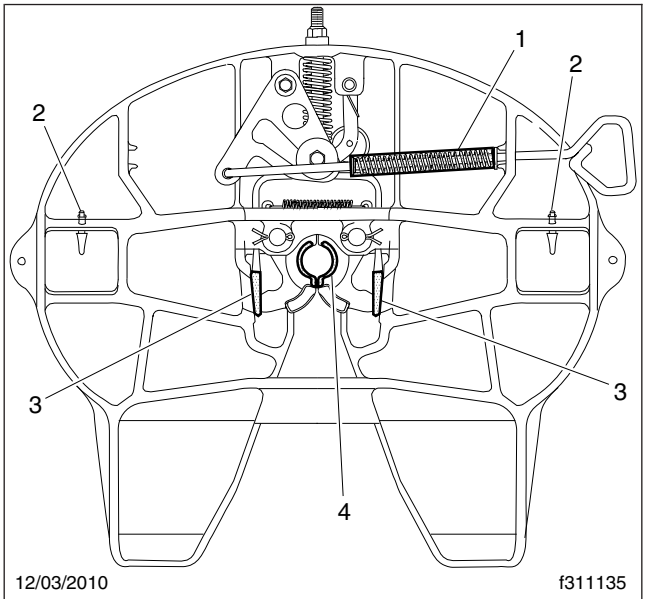

1. Release Handle and Spring
2. Grease Fitting
3. Yoke Tip
4. Locks

Fig. 9, Holland FW35 Fifth Wheel, Grease Lubrication

https://truckmanualshub.com/

wheel; see **Fig. 7**. Apply a light oil to all moving parts. For sliding fifth wheels spray diesel fuel on the slide path of the base plate.

NOTICE

Do not use a power grease gun. The pressure will damage the lube line.

If the fifth wheel is not equipped with low-lube plates, apply a lithium-based grease with extreme pressure (EP) additive to the trailer contact surface of the fifth wheel.

NOTE: If the fifth wheel is equipped with low-lube plates, the top plate only requires lubrication at the new product break-in stage. The low-lube plates require no further lubrication.

31–04 Trailer Electrical Connector Protection

In some cases, failure of trailer cables occurs due to intrusion of chloride-based road deicing chemicals into the trailer connector. Once inside the connector, the chloride-based chemicals corrode the brass terminals and create bridging between positive and ground terminals.

NOTE: The use of soap is not recommended for cleaning the electrical connector, as some soaps may increase the corrosion process.

1. Wash out any existing grease, dirt, and corrosion on the trailer connectors with electrical contact cleaner spray.
2. Grease the trailer connector with a lithium-based dielectric grease.

https://truckmanualshub.com/

Index, Alphabetical

Title of Maintenance Operation (MOP)	MOP Number
Safety Precautions	32–00
Suspension Inspection	32–01
Suspension Lubrication	32–02
Suspension U-Bolt Torque Check	32–03

https://truckmanualshub.com/

https://truckmanualshub.com/

32–00 Safety Precautions

Safety Precautions in this section apply to all procedures within this group.

DANGER

When working on the vehicle, shut down the engine or motor, set the parking brake, and chock the tires. Before working under the vehicle, always place jack stands under the frame rails to ensure the vehicle cannot drop. Failure to follow these steps could result in serious personal injury or death.

32–01 Suspension Inspection

Front Suspension Check

WARNING

Do not replace individual leaves of a damaged leaf spring assembly; replace the complete spring assembly. Visible damage (cracks or breaks) to one leaf causes hidden damage to other leaves. Replacement of only the visibly damaged part(s) is no assurance that the spring is safe. On front spring assemblies, if cracks or breaks exist in the two top leaves, a loss of vehicle control could occur. Failure to replace a damaged spring assembly could cause an accident resulting in property damage, serious personal injury, or death.

Inspect the front spring assemblies for cracked, broken, or abnormally bent leaves. If any of these conditions exist, replace the spring assembly. See **Group 32** of the *108SD and 114SD Workshop Manual* for instructions.

Shock Absorber Check, Front and Rear Suspensions

Make sure the shock absorber brackets are tight, and the shock absorber is not striking or rubbing the frame or some other part of the chassis. Striking or rubbing the frame is characterized by chafe marks on the shock absorber body and the frame rail. Check the rubber mounting bushings for cracks, cuts, swelling, and dry rot. Also, check the bushings for missing pieces. Replace the bushings as needed.

Inspect the shock absorber for oil leakage. If the shock absorber is damaged or leaking, replace it with a new one. See **Group 32** of the *108SD and 114SD Workshop Manual* for replacement instructions.

Rear Suspension Check

Freightliner Spring Suspension

WARNING

Do not replace individual leaves of a damaged leaf spring assembly; replace the complete spring assembly. Visible damage (cracks or breaks) to one leaf causes hidden damage to other leaves. Replacement of only visibly damaged parts is no assurance that the spring is safe. Failure to replace a damaged spring assembly could cause an accident, resulting in serious personal injury or property damage.

Replace worn, cracked, or damaged spring brackets. Failure to do so could result in bracket breakage, possibly leading to loss of vehicle control and resulting in personal injury or property damage.

1. Inspect the forward and rear spring brackets and equalizer brackets for wear, cracks, and other damage. If any of these conditions exist, replace the damaged bracket(s). See **Group 32** of the *108SD and 114SD Workshop Manual* for instructions.
2. Inspect the tandem-axle frame crossmember and gussets for wear, cracks, and other damage. If any of these conditions exist, replace the damaged parts. See **Group 31** of the *108SD and 114SD Workshop Manual* for instructions.

NOTICE

Failure to replace the suspension crossmember or gussets if they are cracked, worn, or otherwise damaged could result in damage to the vehicle chassis.

3. Without detaching the torque arms, attempt to move (by hand) each radius-rod end up, down, in, and out. If there is any movement, replace the torque arm. If a torque arm needs to be replaced, see **Group 32** of the *108SD and 114SD Workshop Manual* for instructions.

https://truckmanualshub.com/

4. Inspect the weld seams between the torque arm tube and the shorter bushing tubes. If there are cracks, replace the torque arm. Do not weld the torque arm for any reason.
5. Inspect the rubber bushing ends. See **Fig. 1**. Replace the torque arm for any of the following reasons:
   - if there are gaps between the rubber bushing and the pin or outer steel sleeve;
   - if either bushing end contacts a torque arm pin mounting bolt;
   - if there are cracks in the bushing;
   - if part of the rubber bushing extends beyond the outer circumference of the outer bushing sleeve.

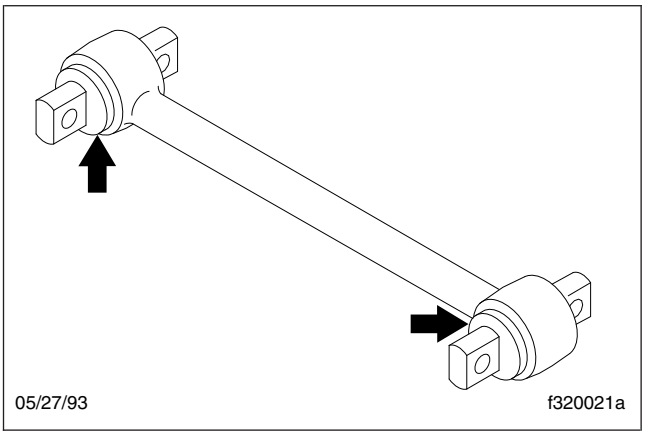

Fig. 1, Torque Arm Bushings

6. Block up the frame enough to take chassis weight off the springs. Attempt to move the equalizer up and down, using a pry bar between the top of the equalizer and top of the equalizer bracket; apply hand pressure only. See **Fig. 2**. If movement at the center of the equalizer exceeds 1/8 inch (3 mm), replace the equalizer bushings. See **Group 32** of the *108SD and 114SD Workshop Manual* for instructions.
7. With the vehicle unloaded, attempt to move the equalizer side to side, using a pry bar between the equalizer and frame rail. Apply hand pressure only. See **Fig. 3**. If clearance between the equalizer assembly and any frame component or fastener is less than 1/8 inch (3 mm), replace the equalizer bushings. See **Group 32** of the *108SD and 114SD Workshop Manual* for instructions.

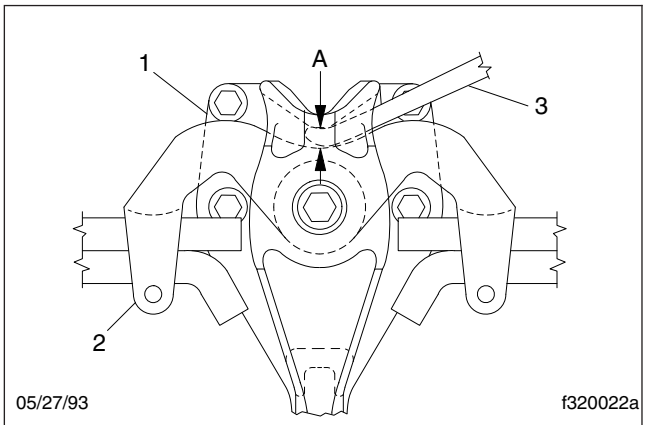

A. Measure the change in gap at this point.
1. Equalizer Bracket
2. Equalizer
3. Pry Bar

Fig. 2, Side View of the Equalizer

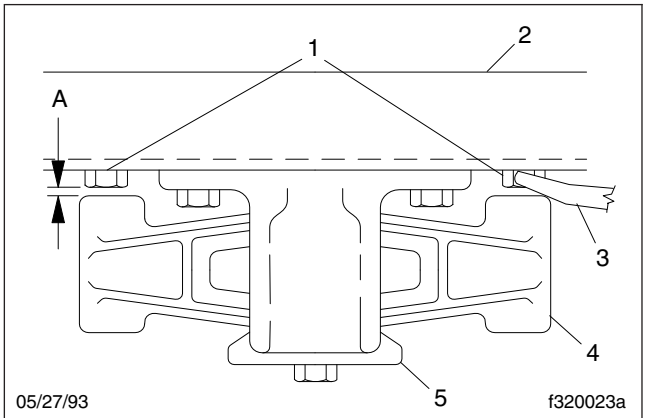

A. 1/8" (3 mm) Clearance
1. Frame Fasteners
2. Frame Rail
3. Pry Bar
4. Equalizer
5. Equalizer Bracket

Fig. 3, Top View of the Equalizer

Freightliner AirLiner Suspension

⚠ WARNING

Do not replace individual leaves of a damaged leaf spring assembly; replace the complete spring assembly. Visible damage (cracks or breaks) to one leaf causes hidden damage to other leaves. Replacement of only the visibly damaged part(s) is no assurance that the spring is safe. On front spring assemblies, if cracks or breaks exist in the

https://truckmanualshub.com/

two top leaves, a loss of vehicle control could occur. Failure to replace a damaged spring assembly could cause an accident resulting in property damage, serious personal injury, or death.

1. Inspect the forward and rear spring brackets for wear, cracks, and other damage. If any of these conditions exist, replace the damaged bracket(s). See **Group 32** of the *108SD and 114SD Workshop Manual* for instructions.

WARNING

Replace worn, cracked, or damaged spring brackets. Failure to do so could result in bracket breakage, possibly leading to loss of vehicle control and resulting in personal injury or property damage.

2. Inspect the crossmember(s) and gussets for wear, cracks, and other damage. If any of these conditions exist, replace the damaged parts. See **Group 31** of the *108SD and 114SD Workshop Manual* for instructions.
3. Visually check the air spring piston for cracks, chips, and broken areas. Check the air bag for rips, tears, and holes. Verify that the air spring assembly does not leak. If any of these conditions exist, replace the damaged parts. See **Group 32** of the *108SD and 114SD Workshop Manual* for instructions.

Freightliner AirLiner Component Inspection and Operation Check

WARNING

Inspect the components and check their operation as described below. Failure to perform these inspections and checks could result in separation of worn suspension components and loss of vehicle control, possibly causing personal injury or death, or property damage.

1. Chock the front tires. Raise the rear of the vehicle so the tires just clear the ground and the suspension is fully extended. Place safety stands under the vehicle frame.
2. Squeeze all air springs to check for complete deflation.
3. Inspect the air spring piston for cracks, chips, and broken areas. Check the air bag for rips, tears, and holes. Verify that the air spring assembly does not leak.
4. Check the axle connection welds (beam seat to equalizing beam) and axle adapter to axle for cracks. If welds are cracked, grind them out and reweld the parts observing the welding precautions given in **Group 31** of the *108SD and 114SD Workshop Manual*.
5. Move the axle up and down while checking for signs of looseness due to worn parts at the front pivot connections. Replace any worn parts.
6. Inspect the shock absorbers for oil leaks and worn rubber bushings. Replace the shock absorbers and/or rubber bushings if wear or damage is noted.
7. Inspect the stabilizer bar, if so equipped, for irregular bushing wear or cracks in the brackets. The stabilizer bar is optional on 10,000- and 15,000-pound AirLiner suspension systems.
8. Remove the safety stands and lower the rear of the vehicle to the ground. Run the engine until air pressure of at least 100 psi (689 kPa) is maintained throughout the system.
9. Check that all air springs are inflated.

Freightliner AirLiner Control Rod Check

NOTE: The Freightliner AirLiner Suspension is manufactured at numerous weight ratings. The control rod on the 46,000-pound-rated suspension is larger, and is fastened differently than on other applications.

1. Without disconnecting the control rods, use your hand to attempt to move each of the control rod ends up, down, in, and out. If there is any movement, examine the control rods for wear or damage. Replace if necessary.
2. Inspect the rubber bushings for cracks or cuts.
3. Check for any shifting of the barpin.
4. Check for cracks in the metal components and welds.

Ride Height Valve Check

IMPORTANT: Before checking the AirLiner suspension height, make sure there is no load on the chassis, and the trailer is unhitched.

https://truckmanualshub.com/

NOTICE

To prevent voiding the warranty on Barksdale height-control valves, observe the following:

- When removing or loosening a Barksdale height-control valve from a mounting bracket, always hold the valve-side mounting studs in place with an Allen wrench while loosening or tightening the nuts that attach the valve to the bracket. Because the mounting studs are threaded into the valve body, loosening the nuts without holding the studs can tighten the studs, which can crush the valve body and damage the valve. Conversely, tightening the nuts without holding the studs can back the studs out, causing a separation of the two halves of the valve body, and possibly a leak.
- Do not overtighten the bolts in the Barksdale height-control valve housing. The bolts should not be loose, and should not require tightening. Only if necessary, tighten the valve housing bolts 45 lbf·in (500 N·cm). Any damage to the valve housing will void the warranty.
- Do not attempt to disassemble the Barksdale valve body or the control lever. There are no serviceable parts in the valve, and any disassembly will void the warranty.

1. Park the vehicle on a level surface, using a light application of the brakes. Do not apply the parking brakes. Shift the transmission into neutral, and build the secondary air pressure to at least 100 psi (690 kPa). Shut down the engine.
2. Mark the location of the front and rear tires on the floor, and chock the tires on one axle only.
3. Check that the height-control valve vertical linkage is connected and oriented correctly.

NOTE: The stud bolt that fastens the height-control valve horizontal lever to the vertical linkage is oriented correctly when the linkage rod is vertical, as viewed from the side of the vehicle; see **Fig. 4**. The rod may be on the forward or aft side of the lever to get it to be vertical.

4. Measure the distance from the axle stop to the top of the axle U-bolt pad. The correct distance is determined by the axle and suspension configurations; refer to **Group 32** of the *108SD and 114SD Workshop Manual* for details.

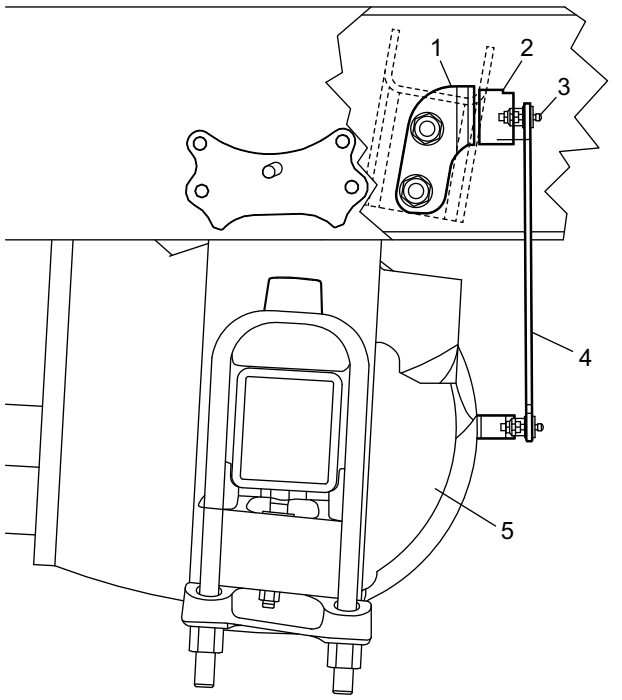

1. Valve Mounting Bracket
2. Height-Control Valve
3. Stud Bolt
4. Linkage Rod
5. Axle

Fig. 4, Typical Barksdale Height-Control Valve Installation (side view)

5. If the axle stop measurement is not correct, see **Group 32** of the *108SD and 114SD Workshop Manual* for adjustment procedures.
6. Apply the parking brakes, and remove the chocks.

Freightliner TufTrac

1. Inspect the suspension spring assemblies for pitted, cracked, broken, or abnormally bent leaves, and extreme rust. If any of these conditions exist, replace the spring assembly.

⚠ WARNING

Do not replace individual leaves of a damaged leaf spring assembly; replace the complete spring assembly. Visible damage (cracks or breaks) to one leaf causes hidden damage to other leaves. Replacement of only the visibly damaged part(s) is no assurance that the spring is safe. On front

https://truckmanualshub.com/

spring assemblies, if cracks or breaks exist in the two top leaves, a loss of vehicle control could occur. Failure to replace a damaged spring assembly could cause an accident resulting in property damage, serious personal injury, or death.

IMPORTANT: On multi-leaf suspensions, closely inspect each component of the leaf spring assemblies, including the brackets, U-bolts, and related parts.

2. Inspect the brackets for cracks in the castings. Inspect the V-rod tower welds for cracking or other signs of damage. Also check for contact between the frame rail and the upper axle clamp brackets. If contact exists, check the V-rod bushing for wear. Check the V-rod fastener torques.
3. Inspect the rubber center bearing and spring tip pads for excessive wear, including de-lamination of the rubber-to-metal shim interface, and distortion and degradation of rubber.
4. Inspect the V-rods and lower control rods for wear and looseness.
   - 4.1 Without disconnecting the control rods, use your hand to attempt to move each of the control rod ends up, down, in, and out. If there is any movement, examine the control rods for wear or damage. Replace if necessary.
   - 4.2 Inspect the rubber bushings for cracks or cuts.
   - 4.3 Check for any shifting of the barpin.
   - 4.4 Check for cracks in the metal components and welds.
5. Check all fasteners for looseness.
6. Inspect the shock absorbers for oil leaks and worn rubber bushings. Replace the shock absorbers and/or rubber bushings if wear or damage is noted.

Chalmers Suspension

1. Chock the front tires, place the transmission in neutral, and release the parking brakes.
2. Power wash the suspension, or clean it with a hard-bristle brush before performing a visual inspection.
3. Inspect the rubber bushings for cracks or other damage.

   Try to move the torque rod ends using your hands only, and check for any free-play. If free-play is felt, replace the torque rod end bushing. Do not use a pry bar to check for free-play. Use of a pry bar may lead to premature bushing replacement.
4. Lift the rear of the vehicle and support the frame on jack stands to unload the suspension components. The vehicle is lifted high enough when the beam ends are off of the saddles.

   Inspect the walking beam for cracks or other damage. If damage is found, replace the walking beam.

   Keep the vehicle supported by the jack stands for the next operation.
5. Manipulate the walking beam so that a micrometer, vernier, or dial caliper can be used to determine the wear area thickness on the bottom face. See **Fig. 5.** Measurements should be taken a minimum of 1/2 inch from the beam flange edges to eliminate any edge wear that may have occurred. Subtract the wear area thickness (see **Fig. 5**, Ref. B) from the thickness at the non-wear area (see **Fig. 5**, Ref. A) to determine the amount of wear.

   If the beams show any wear greater than 0.062 inch (1.5 mm), a Chalmers wear plate must be installed, or the walking beam must be replaced.
6. Rotate the restrictor cans 360 degrees and inspect the cans for cracks, severe corrosion, and distortion. If any of these conditions are present, or the restrictor can is missing, replace the restrictor can.

⚠ WARNING

Replace all cracked or missing restrictor cans. Failure to do so could lead to loss of vehicle control, which could result in property damage, serious personal injury, or death.

32–02 Suspension Lubrication

Freightliner Spring Front Suspension

Wipe all dirt from the grease fittings at the forward spring pin and the spring shackle pins. Then apply

https://truckmanualshub.com/

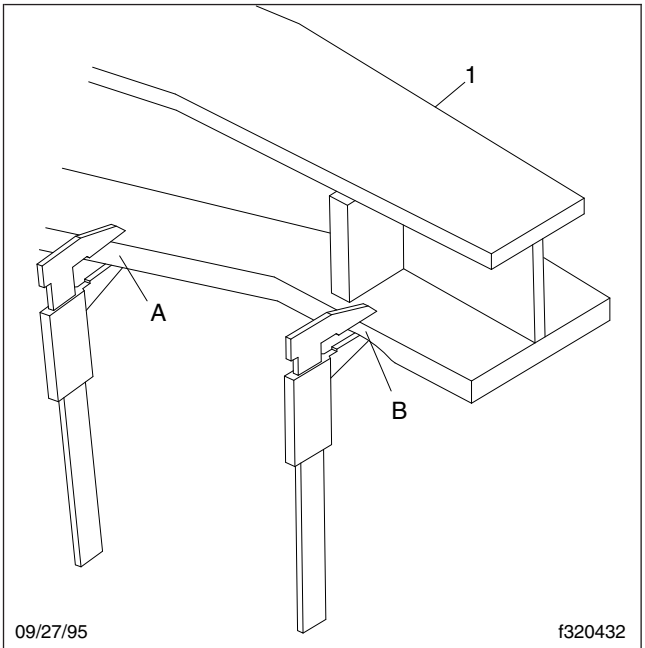

A. Non-Wear Area
B. Wear Area
1. Walking Beam

Fig. 5, Walking Beam End Wear Thickness

multipurpose chassis grease with a pressure gun until the old grease is forced out.

Freightliner Spring Rear Suspension

Single Axle

Lubrication is not required on single-axle spring rear suspensions.

Tandem Axle

NOTICE

If the equalizer cap and tube assembly is equipped with a nonrelief grease fitting, excessive lubrication can damage the bushings.

Lubricate the equalizer cap and tube assembly bushings by applying multipurpose chassis grease at the pressure relief grease fitting. See **Fig. 6**. Lubricate with a hand gun or pressure gun until grease is forced out from the base of the pressure-relief fitting.

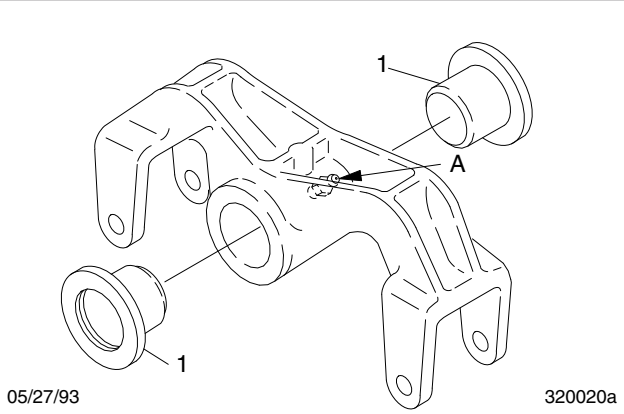

A. Lubricate here.
1. Cap and Tube Assembly Bushing

Fig. 6, Equalizer Assembly Lubrication

Hendrickson

The Hendrickson RS Series Haulmaax®, HN®, and Primaax® suspensions do not require lubrication.

For Hendrickson RT® and RTE® series suspensions, lubricate the bronze, ball-indented bushings in the spring eye, as follows:

1. Park the vehicle on a level surface, apply the parking brakes, and chock the front tires.
2. Raise the rear of the vehicle until the rear wheels are suspended in the air, then support the vehicle with safety stands. This relieves the load on the bushings and pins to allow the proper flow of lubricant around them.
3. Using a multipurpose chassis grease, lubricate the bronze, ball-indented bushings in the spring eyes at the grease fitting; see **Fig. 7**. Continue to lubricate until grease exits both ends of the bushing. If the pin will not accept lubricant, remove the pin and clean the lubrication channels where lubricant may have hardened.
4. Lower the vehicle and remove the safety stands.

32–03 Suspension U-Bolt Torque Check

Check the U-bolt torque of both the front and rear axles where applicable.

https://truckmanualshub.com/

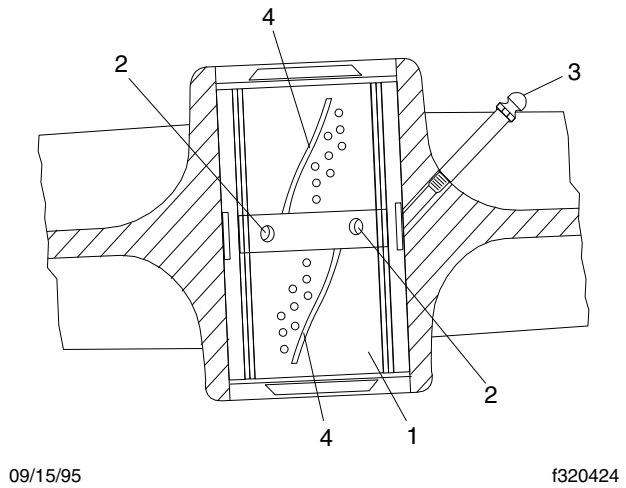

1. Bronze Bushing
2. Lubrication Hole
3. Grease Fitting
4. Lubrication Groove

Fig. 7, Hendrickson RT2 and RTE2 Series Bushing Lubrication

NOTICE

Failure to tighten the U-bolt nuts to the specified torque value could result in spring breakage and abnormal tire wear.

1. Park the vehicle on a flat surface and apply the parking brakes. Chock the tires to prevent the vehicle from moving.
2. Check the U-bolt torque in a diagonal pattern. Set a click-type torque wrench to the highest torque value for the fastener being checked. See **Fig. 8** for the tightening pattern. See **Table 1** for U-bolt torque specifications. Turn the wrench in a clockwise motion (looking up) until the torque wrench clicks.

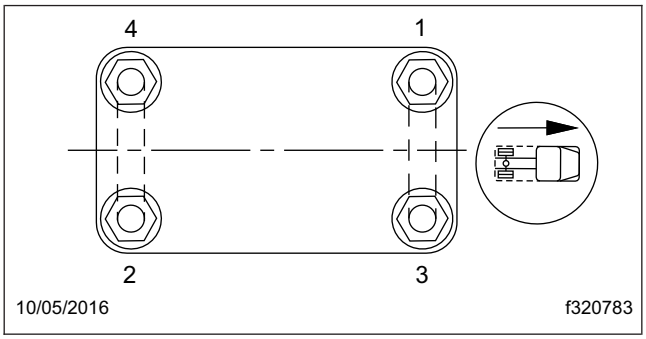

Fig. 8, Tightening Pattern for U-Bolt High Nuts

Spring Assembly U-Bolt High Nut Torque Values*	
Size	**Torque: lbf·ft (N·m)**
5/8–18	Stage 1: Hand-tighten Stage 2: 60 (81) Stage 3: 200 (271) Stage 4: 180 to 230 (245 to 313)
3/4–16	Stage 1: Hand-tighten Stage 2: 60 (81) Stage 3: 200 (271) Stage 4: 270 to 330 (367 to 449)
7/8–14	Stage 1: Hand-tighten Stage 2: 60 (81) Stage 3: 200 (271) Stage 4: 420 to 500 (571 to 680)
1–14	Stage 1: Hand-tighten Stage 2: 60 (81) Stage 3: 200 (271) Stage 4: 520 to 600 (707 to 816)

* Tighten in a diagonal pattern as shown in **Fig. 8**.

Table 1, Spring Assembly U-Bolt High Nut Torque Values

https://truckmanualshub.com/

https://truckmanualshub.com/

Index, Alphabetical

Title of Maintenance Operation (MOP)	MOP Number
Alignment Check	33–04
Knuckle Pin Lubrication	33–01
Safety Precautions	33–00
Steer Axle Hub Cap Vent Plug Inspection	33–06
Tie Rod Inspection	33–02
Tie Rod Lubrication	33–03
Wheel End Inspection, Front Axle	33–05

https://truckmanualshub.com/

https://truckmanualshub.com/

33–00 Safety Precautions

Safety Precautions in this section apply to all procedures within this group.

DANGER

When working on the vehicle, shut down the engine or motor, set the parking brake, and chock the tires. Before working under the vehicle, always place jack stands under the frame rails to ensure the vehicle cannot drop. Failure to follow these steps could result in serious personal injury or death.

33–01 Knuckle Pin Lubrication

NOTICE

Use regulated pressure when lubricating the knuckle assemblies, otherwise damage could result to the knuckle caps.

Detroit™ Axles

1. Park the vehicle on a level surface, shut down the engine, and set the parking brake. Chock the tires. When lubricating upper and lower knuckle assemblies, do not raise the front axle.
2. Wipe the fittings clean.
3. Apply multipurpose chassis grease, NLGI Grade 1 (6% 12-hydroxy lithium stearate grease) or NLGI Grade 2 (8% 12-hydroxy lithium stearate grease), until new grease is seen at the junctions of the axle beam and knuckles. For locations of grease fittings, see **Fig. 1**; for grease exit points, see **Fig. 2**.

Dana Spicer Axles

Park the vehicle on a level surface, apply the parking brakes, and chock the tires. When lubricating upper and lower knuckle assemblies, do not raise the front axle. Wipe the fittings clean, then apply multipurpose chassis grease, NLGI Grade 1 (6% 12-hydroxy lithium stearate grease) or NLGI Grade 2 (8% 12-hydroxy lithium stearate grease), until new grease is seen at the junctions of the axle beam and knuckles. See **Fig. 3**. Knuckle pins without grease fittings are permanently lubricated.

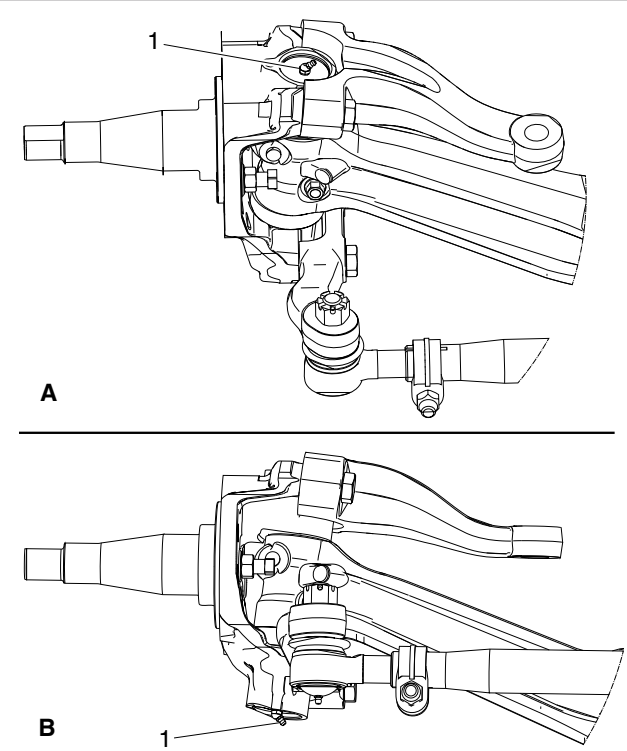

06/07/2012 f330272

A Upper View, LH Side B Lower View, LH Side
1. Grease Fitting

Fig. 1, Grease Fittings, Detroit Axles

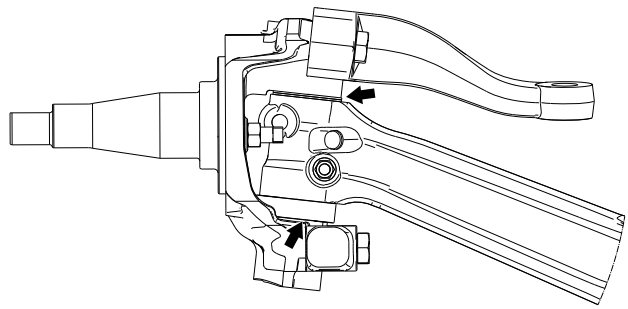

09/13/2012 f330275

Fig. 2, Knuckle Pin Grease Exit Points, Detroit Axles

Meritor Axles

Park the vehicle on a level surface, apply the parking brakes, and chock the tires. When lubricating knuckle pin bushings, do not raise the front axle. Wipe the lube fittings clean, and apply multipurpose chassis

https://truckmanualshub.com/

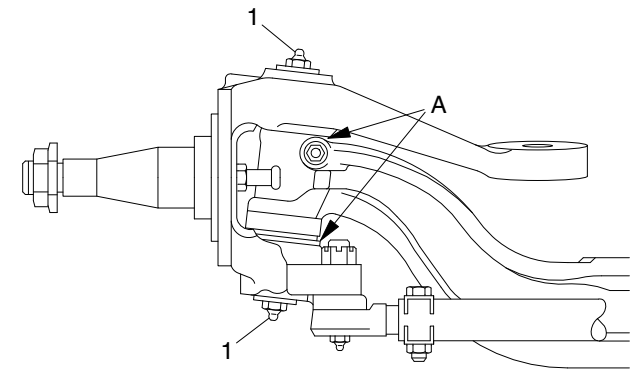

11/21/95 f330129

A. Grease exits
1. Grease Fitting

Fig. 3, Dana Spicer Knuckle Pin Lubrication

grease, NLGI Grade 2 (8% 12-hydroxy lithium stearate grease), until new grease is seen at the bushing grease seal opposite the fittings. The grease seal will accept grease pressure without damage, and is designed to have grease pumped out through it during lubrication. Even if grease leaks out around the top, or bottom-plate gasket, continue pumping until new grease is seen at the bushing seal opposite the grease fitting; see **Fig. 4**.

NOTE: For operation in very cold climates, use NLGI Grade 1 (6% 12-hydroxy lithium stearate grease).

33–02 Tie Rod Inspection

IMPORTANT: If the tie rod end boot is torn or missing, replace the entire tie rod end. Do not replace the boot only.

1. Shut off the engine, apply the brakes, and chock the rear tires.
2. Check the tie rod boot for cracks, tears, or other damage. If the tie rod boot is damaged, replace the entire tie rod end.
3. The threaded portion of the tie-rod end assembly must be inserted all the way into the cross-tube split for adequate clamping. See **Fig. 5**. Replace the components if this cannot be done. For instructions, refer to **Group 33** of the *108SD and 114SD Workshop Manual*.

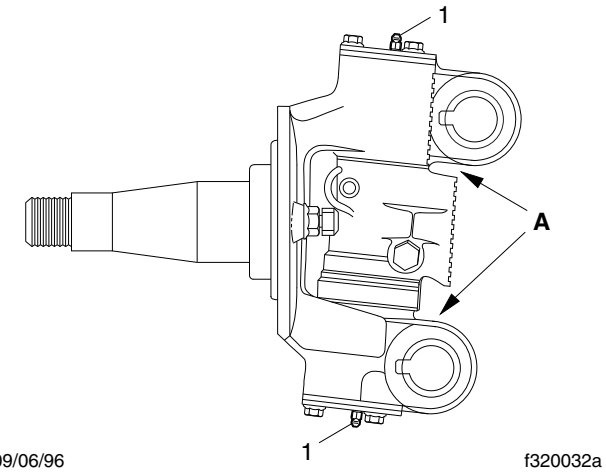

09/06/96 f320032a

A. Grease Exits
1. Grease Fitting

Fig. 4, Knuckle Pin Lubrication, Meritor Axles

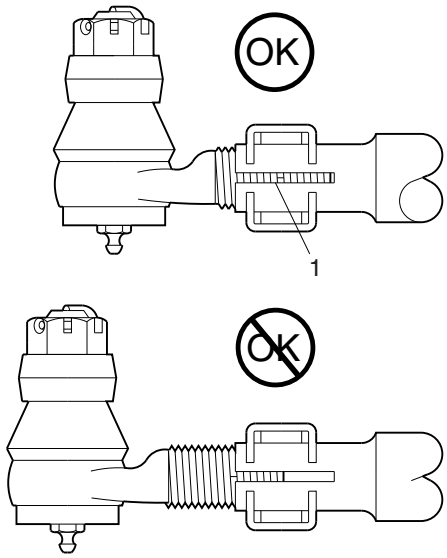

02/27/2007 f320033a

NOTE: Shown without pinch bolt to provide clarity.

1. Cross-Tube Split

Fig. 5, Tie-Rod End Adjustment

4. Grasp by hand (or use a pipe wrench with jaw protectors to avoid gouging the cross tube) and slightly rotate the cross tube toward the front of the vehicle and then slightly toward the rear.

https://truckmanualshub.com/

Then center the cross tube between the stop positions. If the cross tube does not rotate in either direction, replace both tie rod ends.

5. Position yourself directly below the ball stud socket. Using both hands, grab the end as close to the socket as possible, no more than 6 inches (15.2 cm) from the end. Firmly apply about 100 pounds of hand pressure in an up and down motion several times. When moving the assembly, check for any movement at both tie rod ends. See **Fig. 6**.

   If any movement is detected at one tie rod end, replace **both** tie rod ends. Always replace tie rod ends in pairs, even if only one tie rod end is damaged.

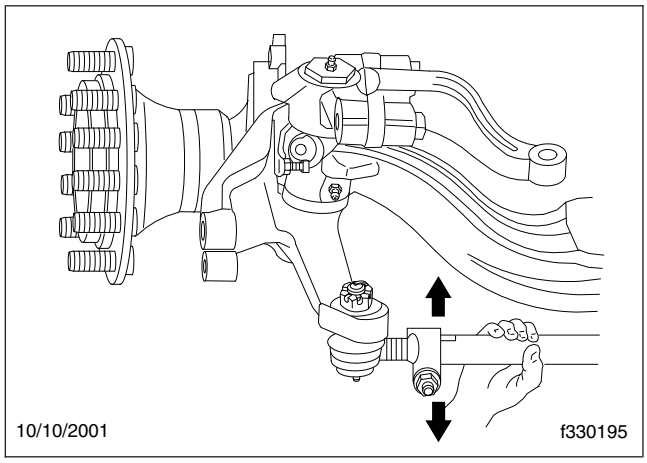

Fig. 6, Check Movement of Tie Rod End

NOTICE

Do not attempt to straighten a bent cross tube. Doing so could result in damage to the axle. Be sure to replace the cross tube with an original equipment cross tube with the same length, diameter, and thread size as the existing cross tube.

6. Check the cross tube for cracks or other damage. If the cross tube is bent or damaged, replace the cross tube.
7. Check the clamps for damage. If a clamp is damaged, replace the clamp. Replace the entire cross tube assembly if either clamp is welded to the cross tube.
8. Check for proper installation of the tie rod end clamp to the cross tube. Make sure that the tie rod ends are threaded in the cross tube past the clamps and the slots at the cross tube ends.
9. Check the zerk fittings for damage. If a zerk fitting is damaged, replace it.

   Some tie rod ends have no zerk fittings because they are not greaseable. Do not install a zerk fitting on a nongreaseable tie rod end.
10. Check that the cotter pin is in place. If it is not, tighten the tie rod end nut to one of the following specs depending on the axle manufacturer.

    For Detroit axles, tighten the castle nut to 120 to 170 lbf·ft (163 to 230 N·m). To align the cotter pin hole with the castle nut slot, turn the nut up to 1/6 turn (maximum).

    For Meritor axles, tighten the tie rod end nut per the size of the stud:

    - 7/8–14, 160 to 300 lbf·ft (217 to 406 N·m)
    - 1–14, 250 to 450 lbf·ft (339 to 610 N·m)
    - 1-1/8–12, 350 to 650 lbf·ft (475 to 881 N·m)
    - 1-1/4–12, 500 to 675 lbf·ft (678 to 915 N·m)
11. Check the steering arm bolts for a minimum torque of 300 lbf·ft (406 N·m). If the steering arm bolt torque has fallen below this specification, remove the bolt, clean all the threads, and apply new Loctite® 680. Tighten the bolt 300 to 450 lbf·ft (406 to 610 N·m).
12. Remove the chocks from the tires.

33–03 Tie Rod Lubrication

Detroit and Meritor Axles

For any Detroit or Meritor axle that requires lubrication of the tie-rod ends, wipe the grease fittings clean, then pump multipurpose chassis grease, NLGI Grade 1 (6% 12-hydroxy lithium stearate grease) or NLGI Grade 2 (8% 12-hydroxy lithium stearate grease), into the tie-rod ends until all used grease is forced out and fresh grease is seen at the ball stud neck. See **Fig. 7**.

Dana Spicer Axles

For any Dana Spicer axle that requires lubrication of the tie-rod ends, wipe the grease fittings clean, then

https://truckmanualshub.com/

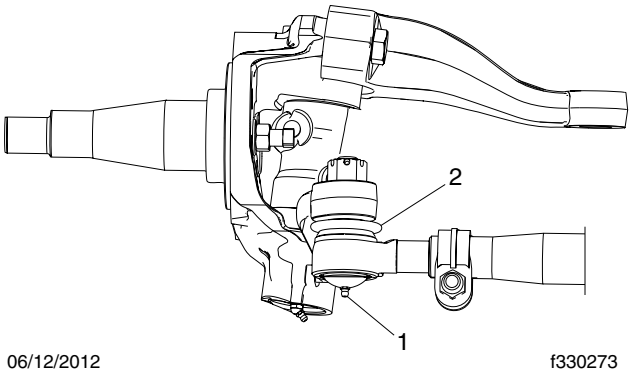

06/12/2012 f330273

NOTE: No grease should emit from the tie-rod boot. If grease emits from the tie-rod boot, the boot is damaged.

1. Grease Fitting 2. Boot

Fig. 7, Grease Fitting and Boot (Detroit axle shown)

pump multipurpose chassis grease, NLGI Grade 2 (8% 12-hydroxy lithium stearate grease), into the tie-rod ends until all used grease is forced out and fresh grease is seen at the ball stud neck.

NOTE: For operation in very cold climates, use NLGI Grade 1 (6% 12-hydroxy lithium stearate grease).

33–04 Alignment Check

Drive Axle Alignment Checking

Check the axle alignment, parallelism, and thrust angle measurements for the rear drive axles. For specifications and procedures, see **Group 35** of the *108SD and 114SD Workshop Manual*.

Toe-In Inspection

For vehicle alignment to be accurate, the shop floor must be level in every direction. The turn plates for the front wheels must rotate freely without friction, and the alignment equipment must be calibrated every three months by a qualified technician from the equipment manufacturer. Freightliner dealers must have proof of this calibration history.

1. Apply the parking brakes and chock the rear tires.
2. Raise the front of the vehicle until the tires clear the ground. Place safety stands under the axle.
3. Using spray paint or a piece of chalk, mark the entire center rib of each front tire.
4. Place a scribe or pointed instrument against the marked center rib of each tire, and turn the tires. The scribe must be held firmly in place so that a single straight line is scribed all the way around each front tire.
5. Place a turn-plate or turntable under both front tires. Remove the safety stands and lower the vehicle. Remove the lock-pins from the gauges; make sure the tires are exactly straight ahead.

NOTE: If turn-plates or turntables are not available, lower the vehicle. Remove the chocks from the rear tires and release the parking brakes. Move the vehicle backward, then forward about six feet (two meters).

6. Place a trammel bar at the rear of the front tires; locate the trammel pointers at spindle height, and adjust the pointers to line up with the scribe lines on the center ribs of the front tires. See **Fig. 8**. Lock in place. Check that the scale is set on zero.

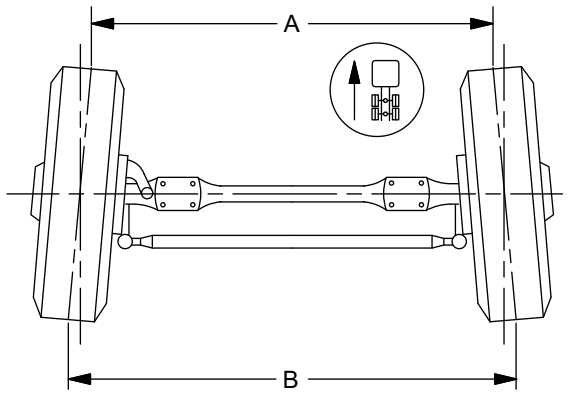

10/05/2016 f330082a

NOTE: B minus A equals toe-in.

Fig. 8, Wheel Toe-In (overhead view)

7. Place the trammel bar at the front of the tires (see **Fig. 9**) and adjust the scale end so that the pointers line up with the scribe lines. See **Fig. 10**.
8. Read the toe-in from the scale, and compare it to the toe-in specification in **Group 33** of the *108SD and 114SD Workshop Manual*. If corrections are needed, refer to **Group 33** of the

https://truckmanualshub.com/

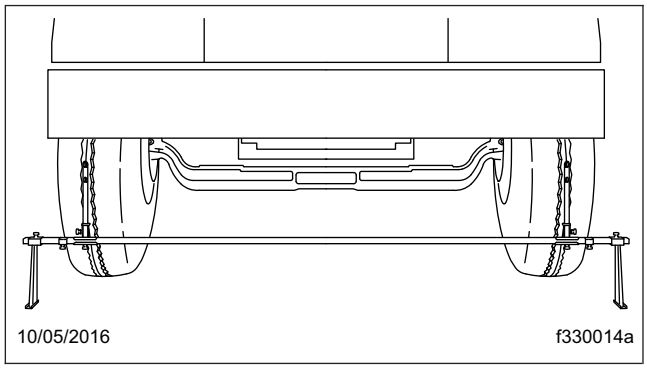

Fig. 9, Trammel Bar Positioning

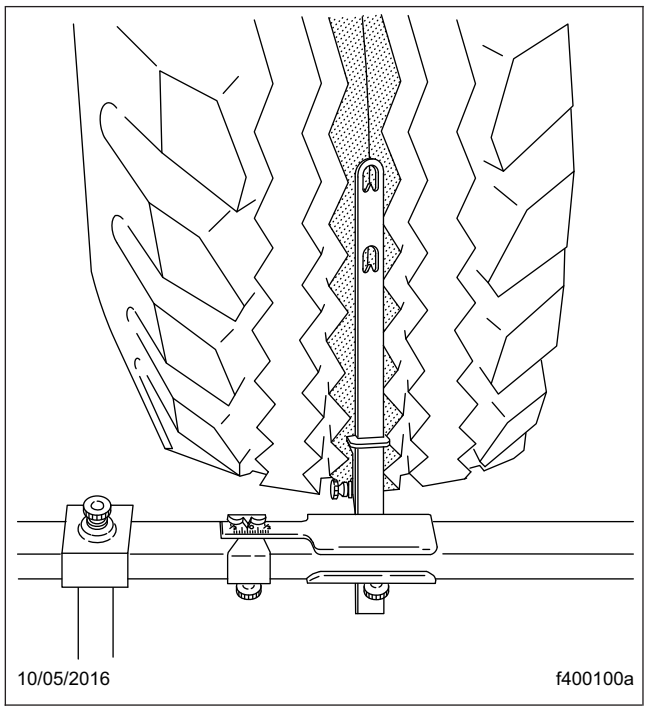

Fig. 10, Setting Trammel Bar Pointers

108SD and 114SD Workshop Manual for instructions on adjusting the toe-in.

33–05 Wheel End Inspection, Front Axle

1. Park the vehicle on a level surface, shut down the engine, set the parking brake, and chock the tires.

⚠ WARNING

Never work around or under a vehicle that is supported only by a jack. Always support the vehicle with safety stands. Jacks can slip, causing the vehicle to fall, which could result in serious injury or death.

2. Raise the front of the vehicle and support it with safety stands.
3. Remove the front wheel and tire assemblies. For instructions, see **Group 40** of the *108SD and 114SD Workshop Manual*.
4. Remove the brake drum. For more information, see **Group 33** of the *108SD and 114SD Workshop Manual*.
5. Check for loose, damaged, or missing fasteners and hubcaps.
6. Check for lubricant around the hub cap and wheel. If lubricant is present, investigate the cause and take corrective action.
7. Check for lubricant around the hub, brake hardware, and brake shoes (if installed). If lubricant is present, check the oil seal and replace it as necessary. For instructions, see **Section 33.02** of the *108SD and 114SD Workshop Manual*.
8. Inspect the lubricant for discoloration. Under normal conditions, the lubricant will darken; a white or milky appearance indicates water contamination. If the lubricant is discolored, service the wheel end. See the *108SD and 114SD Workshop Manual* and manufacturer literature for procedures.

IMPORTANT: Do not mix different types of lubricants.

9. Inspect the lubricant for the presence of foreign matter. Use a magnet to detect any metallic materials present in the lubricant. If the lubricant is contaminated, service the hub. See the *108SD and 114SD Workshop Manual* and manufacturer literature for procedures.
10. Rotate the hub and check for free, smooth, and quiet rotation. If rotation is hampered, service the hub immediately. See the *108SD and 114SD Workshop Manual* and manufacturer literature for procedures.

https://truckmanualshub.com/

⚠ WARNING

Correct wheel-bearing end play is crucial to the safe and sound operation of the vehicle. If the end play is not correct, the wheel bearings could fail and cause the loss of the wheel and hub assembly and result in an accident causing property damage, serious injury, or death. Use a dial indicator to measure the end play.

IMPORTANT: Do not measure the wheel bearing end play with the wheel mounted on the hub; you cannot accurately measure or adjust bearing end play with the wheel mounted on the hub. Also, ensure that the brakes are not applied so that that drum and hub can move freely.

11. Using a dial indicator, measure the end play as follows.

    11.1 Attach the magnetic base of a dial indicator to the end of the spindle, and place the measuring end of the indicator against the hub cap mounting flange. See **Fig. 11**.

    IMPORTANT: Maintain continual pressure on the hub until you have taken both the inboard and outboard measurements. If you release the hub, an accurate measurement is not possible.

    11.2 To seat the bearings, grip the hub at the three o'clock and nine o'clock positions, and push inward while oscillating it approximately 45 degrees. Maintain pressure on the hub, note the inboard measurement, and then pull the hub outward while oscillating it as before. Maintain pressure on the hub, and note the outboard measurement. See **Fig. 12**.

    The end play is the difference between the two measurements. The end play limit for PreSet hubs is 0.006 inch (0.15 mm); for non-PreSet hubs the acceptable range is 0.001 to 0.005 inch (0.03 to 0.13 mm) inclusive.

    If the end play does not exceed the limit and no other problems were found in the previous steps, no additional service is necessary. If the end play exceeds the limit, service the hub. See the *108SD and 114SD Workshop Manual* and manufacturer literature for procedures.

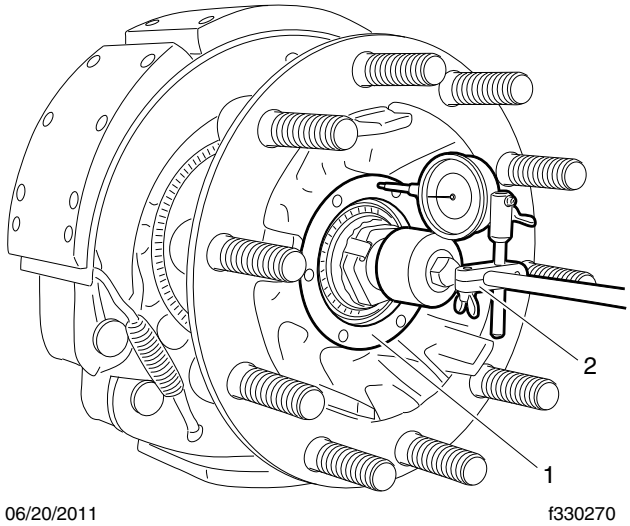

1. Hub Cap Mounting Flange
2. Dial Indicator (with magnetic base)

Fig. 11, Dial Indicator Setup

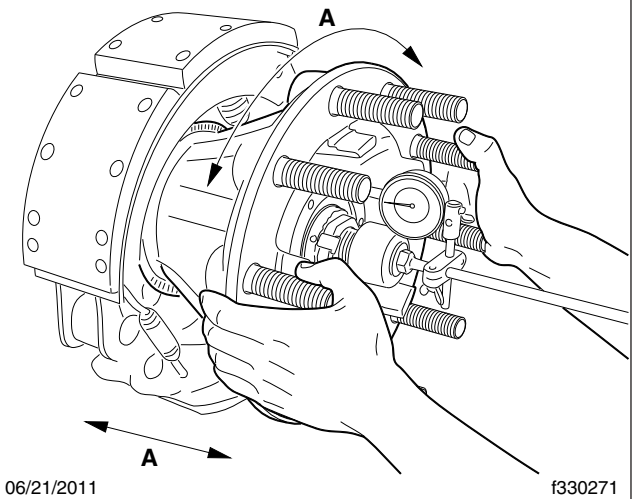

A. Pull and push the hub while oscillating it.

Fig. 12, Measuring End Play

https://truckmanualshub.com/

33–06 Steer Axle Hub Cap Vent Plug Inspection

General Information

As a function of their design, hubcap vent plugs will on occasion exhibit signs of hub oil on their exterior surface. Depending on environmental conditions and/or age of the plug, the amount of oil present can vary. This is a normal result of the venting process due to pressure increase within the hub cavity. For an example of normal vent plug appearance, see **Fig. 13**.

09/01/2016 f330298

Fig. 13, Normal Oil Venting

A vent plug can wear or be damaged and cause excessive leakage, or allow water to enter the hub and contaminate the oil. For examples of a leaking vent plug, see **Fig. 14** and **Fig. 15**. Evidence of a leaking vent plug may appear as;

- Oil splatter around the wheel
- Gooey/gummy oil around the vent plug purge point
- Hub/plug area is dirty, and water contaminated oil in the hub.
- Hub/plug area is clean, but there is water contaminated oil in the hub. (pressure washing is the most likely cause)

09/01/2016 f330299

Fig. 14, Excessive Leakage

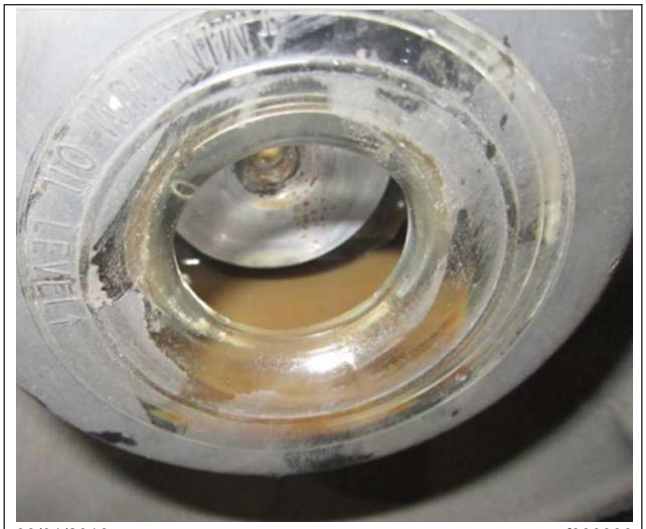

09/01/2016 f330300

Fig. 15, Water in Oil

Inspection

NOTICE

Only remove vent plugs by hand. They can be damaged if a tool is used. Wipe the hub/plug area

https://truckmanualshub.com/

clean before checking the oil. Do not use a pressure washer to clean the hub/plug area. The plug has a vent and this can contaminate the oil with water.

1. Park the vehicle on a level surface, shut down the engine and set the parking brakes. Chock the tires.
2. Inspect the axle hub cap and vent plug for evidence of excessive leakage.
3. Wipe the hub cap and vent plug clean with a rag.
4. Remove the vent plug and check the oil for evidence of water contamination.

   If there is evidence of water contaminated oil in the hub, disassemble the effected axle end, clean, inspect, and reassemble the axle end. For instructions, refer to **Group 33** of the vehicle's Workshop Manual.

   If there is evidence of excessive leakage, remove the damaged part and replace it with a new part.
5. Check the oil level in the hub, and fill the hub with new approved oil as needed.

https://truckmanualshub.com/

Index, Alphabetical

Title of Maintenance Operation (MOP)	MOP Number
Axle Breather Check	35–02
Axle Lubricant Level Check	35–01
Axle Lubricant and Filter Change, and Magnetic Strainer Cleaning and Check	35–03
Safety Precautions	35–00
Wheel End Inspection, Rear Axle	35–04

https://truckmanualshub.com/

https://truckmanualshub.com/

35–00 Safety Precautions

Safety Precautions in this section apply to all procedures within this group.

DANGER

When working on the vehicle, shut down the engine or motor, set the parking brake, and chock the tires. Before working under the vehicle, always place jack stands under the frame rails to ensure the vehicle cannot drop. Failure to follow these steps could result in serious personal injury or death.

35–01 Axle Lubricant Level Check

NOTICE

Failure to keep the rear axle filled to the proper level with the recommended lubricant can result in rear axle damage.

1. Park the vehicle on a level surface, shut down the engine, and set the parking brake. Chock the tires.
2. If the vehicle has just been driven, allow a few minutes for the lubricant to settle.

NOTE: Some Detroit and Meritor axles have a small tapped and plugged hole located below the housing oil fill hole. This smaller hole is for the lubricant temperature sensor only and must not be used as a fill or level hole.

3. Clean the oil fill hole plug (located in the carrier or the side of the axle housing) and the area surrounding it, then remove the plug.

   For Detroit axles, see **Fig. 1**; for Meritor axles, see **Fig. 2**; for Dana Spicer axles, see **Fig. 3**.

IMPORTANT: A lubricant level close enough to be seen or touched is not sufficient. It must be level with the bottom of the fill hole.

4. Check the level of the lubricant. The lubricant must be level with the bottom of the oil fill hole. See **Fig. 4**. If low, add lubricant.

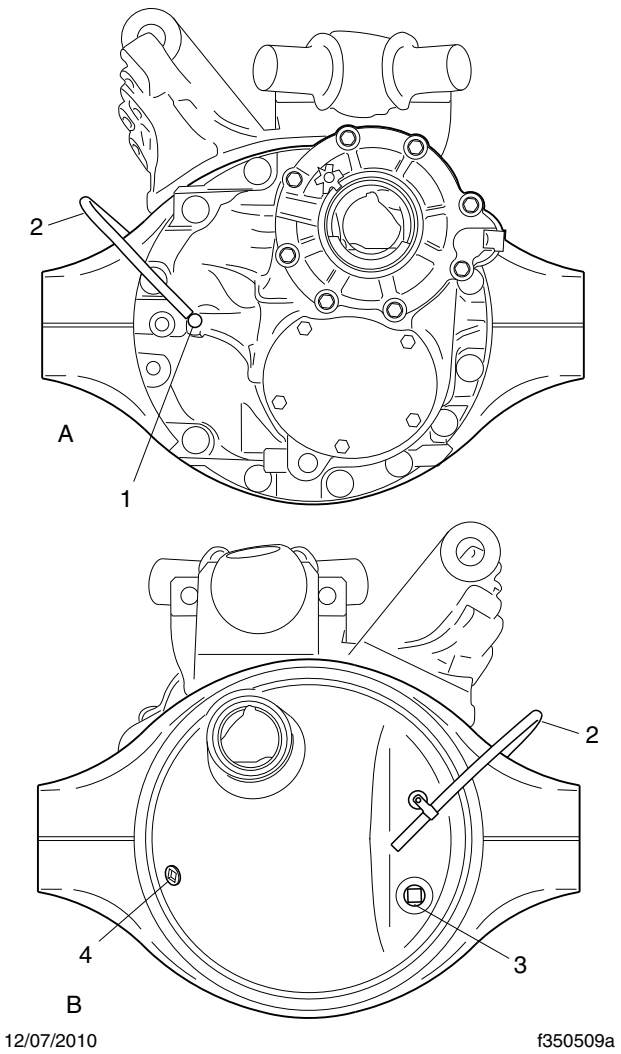

A. Front View
B. Rear View
1. Axle Breather
2. Breather Hose
3. Temperature Sensor Port
4. Oil Fill Plug

Fig. 1, Detroit Tandem Axle (forward axle shown)

For Detroit axles, see **Table 1** for approved axle lubricants and **Table 2** for lubricant capacities.

For Meritor axles, see **Table 3** for approved axle lubricants, and **Table 4** or **Table 5** for axle capacities.

https://truckmanualshub.com/

For Dana Spicer axles, see **Table 6** for approved axle lubricants, and **Table 7** for axle capacities.

5. Install the oil fill hole plug and tighten it per the following:
   - For Detroit axles: 30 lbf·ft (41 N·m).
   - For Meritor axles: 35 lbf·ft (47 N·m).
   - For Dana Spicer axles: 50 lbf·ft (68 N·m).
6. On non-drive axles using oil-lubricated wheel bearings, clean the hub cap and plug to minimize the possibility of dirt and road grime entering the assembly. Remove the plug, and check the oil level. If low, add fluid using the same lubricant recommended for the drive axle.

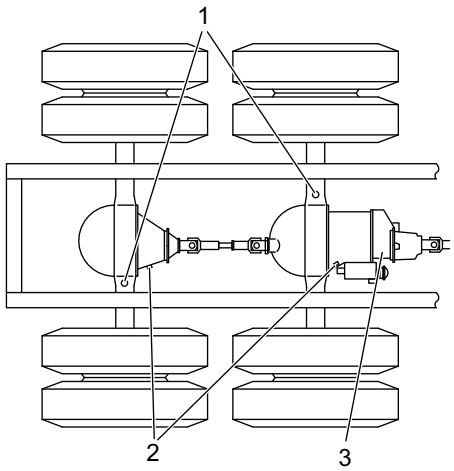

10/05/2016 f350062a

1. Axle Housing Breathers
2. Carrier Oil Fill Plugs
3. Interaxle Differential

Fig. 2, Fill Hole Plug and Axle Housing Breather Locations, Meritor Axles

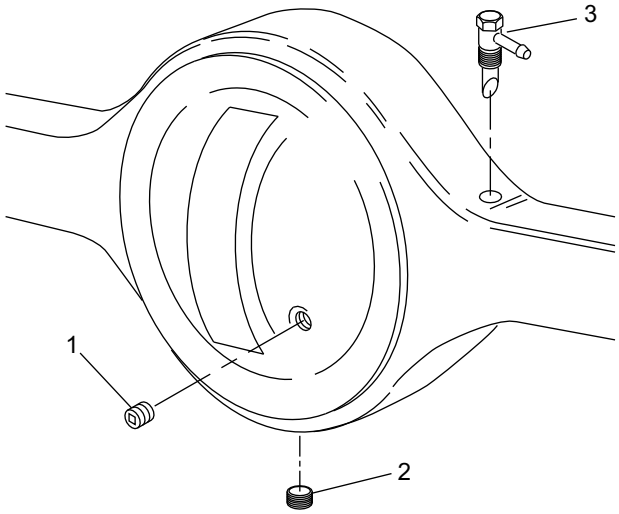

02/21/2017 f350531

1. Oil Fill Plug
2. Oil Drain Plug
3. Axle Breather

Fig. 3, Oil Fill and Drain Plugs and Axle Breather, Dana Spicer Axles

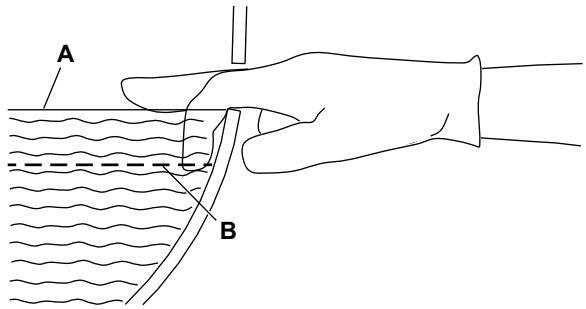

10/05/2016 f350061a

A. Correct (lube level at bottom of fill hole)
B. Incorrect (lube level below fill hole)

Fig. 4, Axle Lubricant Level Check

https://truckmanualshub.com/

Detroit Drive Axle Lubricants*		
IMPORTANT: Lubricant used in Detroit rear axles must meet Mercedes-Benz specification 235.20 (mineral) or 235.8 (synthetic). Mobil Delvac™ Gear Oil A 80W-90 and Mobilube™ HD-A Plus 80W-90 meet specification 235.20. Mobil Delvac 1 Gear Oil 75W-90 and Mobilube 1 SHC 75W-90 meet specification 235.8. For more product information, see http://bevo.mercedes-benz.com.		
Type	**Ambient Temperature**	**SAE Viscosity Grade**
Mineral Oil	–15°F (–26.1°C) and up†	80W–90
Synthetic Oil	–40°F (–40°C) and up†	75W–90

* Detroit rear axles do not require the use of friction modifiers.

† There is no upper limit on the ambient temperature, but axle sump temperature must never exceed 250°F (121°C).

Table 1, Detroit Drive Axle Lubricants

Detroit Rear Axle Lubricant Capacity (Hubs Full)	
Axle	**Oil Capacity: Quarts (liters)**
Forward-Rear, Model 4	14.3 (13.5)*
Single and Rearmost Tandem, Model 4	10.6 (10.0)*
Single, Model 2	5.8 (5.5)*

* These values assume the wheel ends are properly lubricated. Actual oil capacity might vary slightly depending on gear ratio.

Table 2, Detroit Rear Axle Lubricant Capacity

35–02 Axle Breather Check

The axle housing breather must remain clean. When the axle lubricant level is checked, check that the axle breather is open. Check more often under adverse operating conditions. If the breather is plugged, clean it or replace it as needed.

For the location of the breather on Detroit axles, see **Fig. 1**; for Meritor axles, see **Fig. 2**; and for Dana Spicer axles, see **Fig. 3**.

Meritor Drive Axle Recommended Lubricant			
Lubricant Type	**Ambient Temperature**	**Viscosity Grade**	**Meritor Specification**
Non-Extended Drain Lubricants	10°F (–12.2°C) and up*	85W–140	0–76–A
	–15°F (–26.1°C) and up*	80W–140	0–76–B
	–15°F (–26.1°C) and up*	80W–90	0–76–D
	–40°F (–40°C) and up*	75W–90	0–76–E
	–40°F (–40°C) to 35°F (2°C)	75W	0–76–J
	–40°F (–40°C) and up*	75W–140	0–76–L
Extended Drain Lubricants	–40°F (–40°C) and up*	75W–90	0–76–N
	–40°F (–40°C) and up*	75W–140	0–76–M

* There is no upper limit on the ambient temperature, but axle sump temperature must never exceed 250° (121°C).

Table 3, Meritor Drive Axle Recommended Lubricant

https://truckmanualshub.com/

Meritor Drive Axle Lubricant Capacities for Single Axles	
Axle Model	**Capacity*: Pints (liters)**
RS–23–160	39.5 (18.7)
RS–23–161	37.2 (17.6)
RS–23–186	47.3 (22.4)
RS–25–160	37 (17)
RS–26–185	46.0 (22.0)
RS–30–185	46.0 (22.0)
RS–30–380	58.2 (27.5)
RS–38–380	53.1 (25.1)

* Quantities listed are approximate and include 1 pint (0.5 liter) for each wheel end and with the drive pinion at 3 degrees.

Table 4, Meritor Drive Axle Lubricant Capacities for Single Axles

Meritor Drive Axle Lubricant Capacities for Tandem Axles		
Axle Model	**Axle Position**	**Capacity:* Pints (liters)**
RT–40–145	Forward	30.2 (14.3)
	Rear	25.8 (12.2)
RT–40–145P	Forward	30.2 (14.3)
	Rear	25.8 (12.2)
RT–40–160	Forward	39.1 (18.5)
	Rear	34.4 (16.3)
RT–44–145 RT–44–145P	Forward	29.3 (13.9)
	Rear	25.1 (11.9)
RT–46–160	Forward	39.1 (18.5)
	Rear	34.4 (16.3)
RT–46–164EH/P	Forward	38.0 (18.0)
	Rear	33.0 (15.0)
RT–50–160	Forward	38.0 (18.0)
	Rear	33.0 (15.0)
RT–52–185	Forward	56.1 (26.5)
	Rear	36.1 (17.1)

Meritor Drive Axle Lubricant Capacities for Tandem Axles		
Axle Model	**Axle Position**	**Capacity:* Pints (liters)**
RT–58–185	Forward	56.1 (26.5)
	Rear	36.1 (17.1)

* Quantities listed are approximate and include 1 pint (0.5 liter) for each wheel end and with the drive pinion at 3 degrees.

Table 5, Meritor Drive Axle Lubricant Capacities for Tandem Axles

Dana Spicer Drive Axle Recommended Lubricant		
Lubricant Type	**Condition**	**Lubricant SAE Viscosity Grade**
Dana Spicer Roadranger® Synthetic Drive Axle Lubricants, or Equivalent with Military Specification MIL–L–2105D	Over-the-Road Service	75W–90
	Off-Highway Equipment, or Under Extra Heavy Loads	80W–140

Table 6, Dana Spicer Drive Axle Recommended Lubricant

Dana Spicer Drive Axle Lubricant Capacities	
Axle Model	**Capacity*: Pints (liters)**
DD405	31 (14.7)†
DP463P	40 (18.9)†

* Quantities listed are approximate. Fill axle until lubricant is level with bottom of fill hole with vehicle on level ground.

† Add 2 pints (1 L) of additional lubricant to the power divider.

Table 7, Dana Spicer Drive Axle Lubricant Capacities

35–03 Axle Lubricant and Filter Change, and Magnetic Strainer Cleaning and Check

NOTICE

When operating under adverse conditions, it may be necessary to change the axle lubricant at more frequent intervals than listed in the scheduled

https://truckmanualshub.com/

maintenance tables. Failure to do so could result in axle damage.

Detroit Axles

1. Park the vehicle on a level surface, shut down the engine, and set the parking brake. Chock the tires.
2. Clean the oil fill plug and the area around it, then remove the plug from the oil fill hole. See **Fig. 1**.

CAUTION

Be careful when draining the axle oil. It may be very hot, and could cause personal injury if it contacts the skin.

3. Place a drain pan under the rear axle drain plug. Drain the oil when it is warm. At this temperature, the oil will run more freely and ensure that the axle is flushed.
4. Clean the fill and drain plugs as follows. Change them if necessary.
   - 4.1 For magnetic plugs, use a piece of key stock or any other convenient steel slug to short the two magnetic poles and divert the magnetic field.
   - 4.2 Clean away the collected material deposited on each pole. Magnets will rapidly lose their effectiveness as collected material bridges the gap between the two poles.
   - 4.3 Inspect the drain plug for large quantities of metal particles.
   - 4.4 After cleaning, install the drain plug(s) and tighten to 30 lbf·ft (41 N·m).

NOTE: Some Detroit axles have a small tapped and plugged hole near and below the housing oil fill hole. This smaller hole is for a lubricant temperature indicator only, and should not be used as a fill or level hole.

5. Fill the axle with the recommended lubricant as follows. See **Table 1** for approved axle lubricants and **Table 2** for lubricant capacities.
   - 5.1 With the vehicle on a level surface, fill the axle through the oil fill hole. Lubricant should be level with the bottom of the oil fill hole.
   - 5.2 Check the fluid level; see **Fig. 4**.
   - 5.3 Install and tighten the fill plug 30 lbf·ft (41 N·m).

Meritor Axles

IMPORTANT: If using synthetic lubricant, the lubricant change interval is extended to 100,000 miles (160 000 km). On axles with a pump and filter system, the filter change interval is 100,000 miles (160 000 km).

1. Park the vehicle on level ground, apply the parking brakes, and chock the front tires.

NOTE: Some Meritor axles have a small tapped and plugged hole near and below the housing lubricant fill hole. This smaller hole is for a lubricant temperature indicator only, and should not be used as a fill or level hole.

2. Clean the area around the fill plug, then remove the fill plug.
3. Place a drain pan under the drain plug, then remove the drain plug from the bottom of the housing. Completely drain the lubricant while the unit is warm, to allow the lubricant to drain faster.

   On tandem-drive axles, it is also necessary to remove the plug at the bottom of the interaxle differential housing to drain that lubricant.
4. If equipped with an oil pump, replace the filter.

   NOTE: There may be about one pint (0.5 L) of lubricant remaining in the filter.
   - 4.1 Remove the axle oil filter using a suitable filter strap wrench (see **Fig. 5**) and discard it.
   - 4.2 Using recommended drive axle lubricant (see **Table 3**), coat the face of the gasket on the new oil filter.
   - 4.3 Install the filter over the adapter, and tighten the filter one full turn after the gasket contacts the base; do not overtighten.
5. Clean the fill and drain plugs as follows. Change them if necessary.
   - 5.1 For magnetic plugs, use a piece of key stock or any other convenient steel slug

https://truckmanualshub.com/

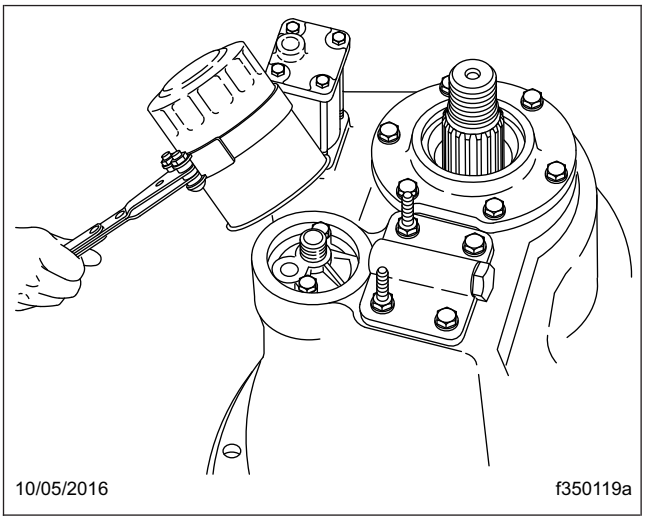

Fig. 5, Meritor Axle Oil Filter Removal

to short the two magnetic poles and divert the magnetic field.

5.2 Check the drain plug for metal particles every 100,000 miles (160 000 km). Clean away the collected material deposited on each pole. Magnets will rapidly lose their effectiveness as collected material bridges the gap between the two poles.

5.3 Meritor recommends plugs with elements having a minimum pickup capacity of 1.5 pounds (0.7 kg) of low-carbon steel. Each time the oil is changed, replace any magnetic drain plug that does not meet the minimum pickup capacity.

5.4 Install the drain plug(s) and tighten to 35 lbf·ft (47 N·m).

6. Fill the axle with recommended lubricant as follows. For lubricant capacities, see **Table 4** (single axles) or **Table 5** (tandem axles). See **Table 3** for recommended lubricant.

6.1 With the vehicle on a level surface, fill the axle through the oil fill hole. Allow a few minutes for the oil to flow into the axle. Lubricant should be level with the bottom of the oil fill hole.

6.2 Check the fluid level; see **Fig. 4**.

6.3 Install and tighten the fill plug 35 lbf·ft (47 N·m).

7. Whenever the interaxle differential housing has been drained, add an additional 2 pints (0.9 L) of the recommended lubricant directly into the interaxle differential housing.

8. Remove the chocks, then drive the vehicle, unloaded, for 1 or 2 miles (2 or 3 km) at speeds not to exceed 25 mph (40 km/h), to thoroughly circulate lubricant throughout the carrier and housing assemblies.

Dana Spicer Axles

NOTE: If using a Roadranger synthetic drive axle lubricant, the lubricant change interval is extended to 180,000 miles (288 000 km).

1. Park the vehicle on level ground, set the parking brakes, and chock the tires.

NOTE: Some Dana Spicer axles have a small tapped and plugged hole near and below the housing oil fill hole. This smaller hole is for a lubricant temperature indicator only, and should not be used as a fill or level hole.

2. Clean the oil fill plug and the area around it (see **Fig. 3**), then remove it from the oil fill hole.

3. Place a drain pan under the rear axle drain plug; see **Fig. 3**. Drain the oil at normal operating temperature, 150°F to 200°F (65°C to 93°C). At this temperature, the oil will run more freely and ensure that the axle is flushed.

NOTE: Some tandem-drive axles are equipped with a cylindrical magnetic strainer, located below the lube pump on the front of the power divider cover. All rear axles are fitted with magnetic drain and fill plugs.

4. At each axle oil change, remove and clean the magnetic strainer, if equipped, as follows.

4.1 Remove the magnetic strainer from the power divider cover. See **Fig. 6**.

⚠ WARNING

Always wear eye protection when using compressed air to clean parts, as flying debris could cause permanent damage to unprotected eyes. Do not point the air stream in the direction of other persons.

https://truckmanualshub.com/

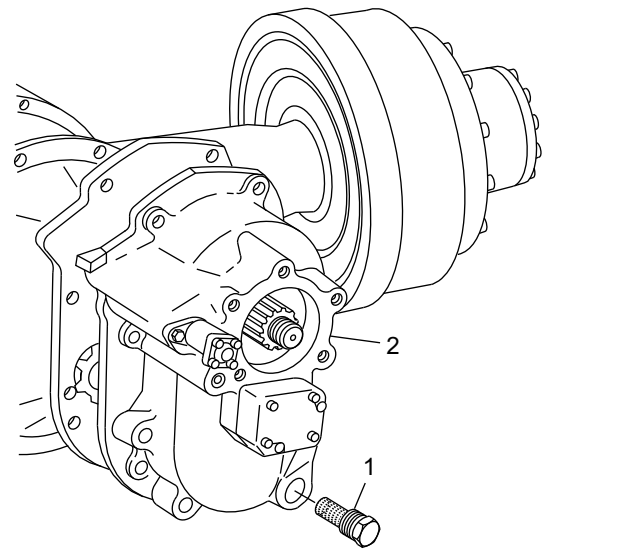

1. Magnetic Strainer 2. Power Divider

Fig. 6, Dana Spicer Tandem-Drive Axle Magnetic Strainer

4.2 Wash the strainer in solvent, and blow it dry with compressed air to remove oil and metal particles.

4.3 Install and tighten the magnetic strainer 40 to 60 lbf·ft (54 to 81 N·m).

5. Clean the fill and drain plugs as follows. Change them if necessary.

5.1 For magnetic plugs, use a piece of key stock or any other convenient steel slug to short the two magnetic poles and divert the magnetic field.

5.2 Clean away the collected material deposited on each pole. Magnets will rapidly lose their effectiveness as collected material bridges the gap between the two poles.

5.3 Inspect the drain plug for large quantities of metal particles.

5.4 After cleaning, install the drain plug(s) and tighten to 40 to 60 lbf·ft (54 to 81 N·m).

IMPORTANT: The use of friction modifiers is not approved in Dana drive axles.

6. Fill the axle with the recommended lubricant as follows. See **Table 6** for recommended lubricants, and **Table 7** for drive axle lubricant capacities.

6.1 With the vehicle on a level surface, fill the axle through the oil fill hole. Lubricant should be level with the bottom of the oil fill hole.

6.2 Check the fluid level; see **Fig. 4**.

6.3 Install and tighten the fill plug 50 lbf·ft (68 N·m).

35–04 Wheel End Inspection, Rear Axle

1. Park the vehicle on a level surface, shut down the engine, set the parking brake, and chock the tires.

⚠ WARNING

Never work around or under a vehicle that is supported only by a jack. Always support the vehicle with safety stands. Jacks can slip, causing the vehicle to fall, which could result in serious injury or death.

2. Raise the rear of the vehicle until the tires clear the ground. Then place safety stands under the axle.
3. Remove the rear wheel and tire assemblies. For instructions, see **Group 40** of the *108SD and 114SD Workshop Manual*.
4. Remove the brake drum. For more information, see **Group 35** of the *108SD and 114SD Workshop Manual*.
5. Check for loose, damaged, or missing fasteners.
6. Check for lubricant at the wheel seal and drive flange gasket. If lubricant is present, investigate the cause and take corrective action.
7. Check for lubricant around the hub, brake hardware, and brake shoes (if installed). If lubricant is present, check the oil seal and replace it as necessary. For instructions, see **Section 35.02** of the *108SD and 114SD Workshop Manual*.
8. Remove the axle shaft.

https://truckmanualshub.com/

9. Inspect the lubricant for discoloration. Under normal conditions, the lubricant will darken; a white or milky appearance indicates water contamination. If the lubricant is discolored, service the wheel end. See the *108SD and 114SD Workshop Manual* and manufacturer literature for procedures.

IMPORTANT: Do not mix different types of lubricants.

10. Inspect the lubricant for the presence of foreign matter. Use a magnet to detect any metallic materials present in the lubricant. If the lubricant is contaminated, service the hub. See the *108SD and 114SD Workshop Manual* and manufacturer literature for procedures.
11. Rotate the hub and check for free, smooth, and quiet rotation. If rotation is hampered or rough, or any unusual noise is heard, service the hub immediately. See the *108SD and 114SD Workshop Manual* and manufacturer literature for procedures.

⚠ WARNING

Correct wheel-bearing end play is crucial to the safe and sound operation of the vehicle. If the end play is not correct, the wheel bearings could fail and cause the loss of the wheel and hub assembly and result in an accident causing property damage, serious injury, or death. Use a dial indicator to measure the end play.

IMPORTANT: Do not measure the wheel bearing end play with the wheel mounted on the hub; you cannot accurately measure or adjust bearing end play with the wheel mounted on the hub. Also, ensure that the brakes are not applied so that that drum and hub can move freely.

12. Using a dial indicator, measure the end play as follows.

    12.1 Attach the magnetic base of a dial indicator to the spindle, and place the measuring end of the indicator squarely against the flange as shown in **Fig. 7**.

    IMPORTANT: Maintain continual pressure on the hub until you have taken both the inboard and outboard measurements. If you release the hub, an accurate measurement is not possible.

    12.2 To seat the bearings, grip the hub at the three o'clock and nine o'clock positions, and push inward while oscillating it approximately 45 degrees. Maintain pressure on the hub, note the inboard measurement, and then pull the hub outward while oscillating it as before. Maintain pressure on the hub, and note the outboard measurement.

    The end play is the difference between the two measurements. The end play limit for PreSet hubs is 0.006 inch (0.15 mm); for non-PreSet hubs the acceptable range is 0.001 to 0.005 inch (0.03 to 0.13 mm) inclusive.

    If the end play does not exceed the limit and no other problems were found in the previous steps, no additional service is necessary. If the end play exceeds the limit, service the hub. See the *108SD and 114SD Workshop Manual* and manufacturer literature for procedures.

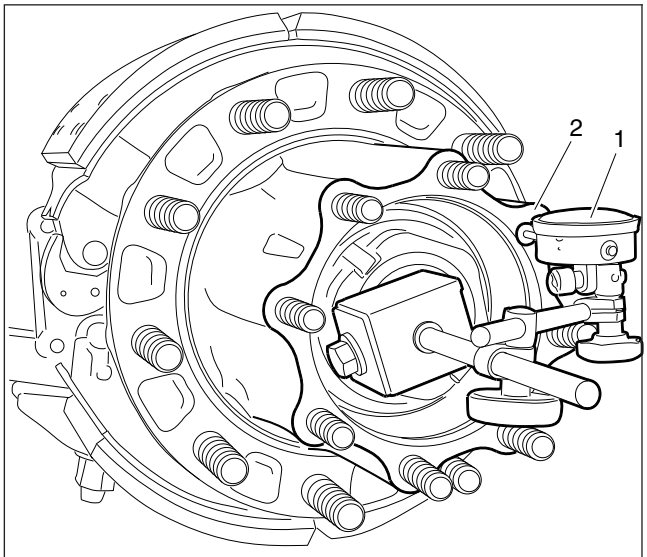

07/05/2011 f350538

1. Dial Indicator (with magnetic base)
2. Axle Shaft Mounting Flange

Fig. 7, Dial Indicator Setup

https://truckmanualshub.com/

Index, Alphabetical

Title of Maintenance Operation (MOP)	MOP Number
Tire Check	40–02
Wheel Nut Check	40–01

https://truckmanualshub.com/

https://truckmanualshub.com/

40–01 Wheel Nut Check

IMPORTANT: After a wheel has been installed, the wheel nut torque must be rechecked after 50 to 100 miles (80 to 160 km) of operation.

NOTICE

Insufficient wheel nut (rim nut) torque can cause wheel shimmy, resulting in wheel damage, stud breakage, and extreme tire tread wear. Excessive wheel nut torque can break studs, damage threads, and crack discs in the stud hole area.

Follow the tightening sequence shown in **Fig. 1**, using the recommended torque values in **Table 1**.

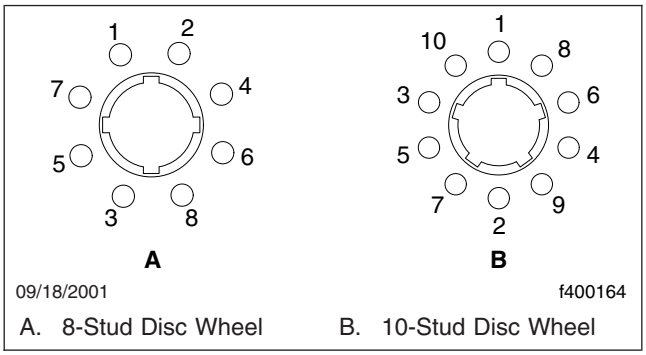

Fig. 1, Wheel Nut Tightening Sequence

Disc Wheel Fastener Torques			
Description	**Nut Size**	**Wheel Manufacturer**	**Torque: lbf·ft (N·m)**
*10-Hole and 8-Hole Hub-Piloted Disc Wheel With Two-Piece Flange Nuts**			
Front and Rear Wheel Nut	M22 x 1.5	All	450–500 (610–678)

* Torque values for hub-piloted wheels are given for lubricated threads. Lubricate threads with SAE 30W engine oil. Do not apply thread lubricant to ball seats of the nuts and wheels. Wipe it off if it is applied accidentally.

Table 1, Disc Wheel Fastener Torques

40–02 Tire Check

Tires should be inspected closely during the first 3000 to 10,000 miles (5000 to 16 000 km) for abnormal wear.

Maintain the proper pressures for carried loads, per the tire manufacturers' recommendations, or the tire pressure label on the driver's door.

Have the wheel alignment checked after the first 10,000 miles (16 000 km), then every 40,000 miles (60 000 km) thereafter.

Do not continue to drive the vehicle if tires develop any of the following:

- blisters;
- cuts or punctures that reach to the cord;
- a nail, screw, rock, or other puncturing object;
- flat spots or irregular wear;
- tread worn to a minimum depth;
- inability to maintain proper tire pressure.

https://truckmanualshub.com/

https://truckmanualshub.com/

Index, Alphabetical

Title of Maintenance Operation (MOP)	MOP Number
Driveline Inspection	41–01
Driveline Lubrication	41–02
Safety Precautions	41–00

https://truckmanualshub.com/

https://truckmanualshub.com/

41–00 Safety Precautions

Safety Precautions in this section apply to all procedures within this group.

DANGER

When working on the vehicle, shut down the engine or motor, set the parking brake, and chock the tires. Before working under the vehicle, always place jack stands under the frame rails to ensure the vehicle cannot drop. Failure to follow these steps could result in serious personal injury or death.

41–01 Driveline Inspection

1. Park the vehicle on a flat, level surface, apply the parking brakes, and chock the tires.

WARNING

Self-locking bearing-cup or bearing-strap capscrews must not be reused; replace the capscrews with new ones. Also, do not undertighten or overtighten any bearing-cup or bearing-strap capscrews. A loose or broken fastener at any point in the driveline weakens the driveline connection, which could cause serious vehicle damage, or could result in a driveshaft separating from the vehicle, possibly causing loss of vehicle control that could result in serious personal injury or death.

2. Check the torque of the U-joint capscrews; see **Table 1** for installed torque values.

   Remove and discard any loose capscrews. Do not reuse any loosened self-locking capscrews; they are designed for one-time installation only. Replace all loosened and removed capscrews with new ones. Tighten the new capscrews as specified in **Table 1**.

   For half-round yokes with bearing straps , tighten the bearing-strap capscrews following the tightening sequence shown in **Fig. 1**, in increments of 20 lbf·ft (25 N·m) to the torque specifications listed in **Table 1**.

3. Check the driveline yokes for cracks, and check end-yokes for looseness; see **Fig. 2**.

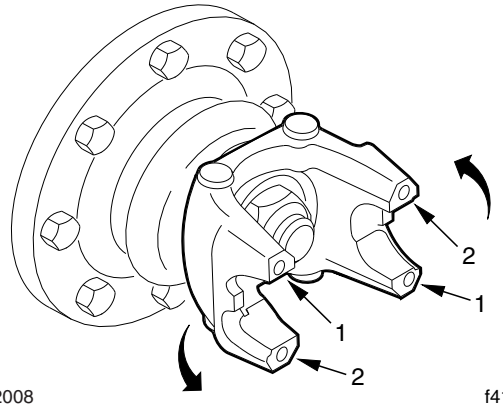

12/16/2008 f410529

Tighten the capscrews in a counterclockwise sequence, starting with either number 1 position.

Fig. 1, Tightening Sequence, Half-Round Yoke Bearing Strap Capscrews

   Replace cracked yokes.

   If any end-yoke can be moved in or out on its shaft, or can be rocked on its shaft, disconnect the driveshaft and U-joint from the yoke, then check the drive component's shaft seal for leakage or other visible damage that may have been caused by the loose yoke. Replace the seal if needed, then tighten the yoke nut. Refer to **Section 41.00, Specifications 400** of the *108SD and 114SD Workshop Manual* for torque specifications. If the yoke is still loose after tightening the yoke nut, replace the end-yoke and yoke nut.

   Replace the prevailing torque locknut (end-yoke nut) if it was removed for yoke replacement, seal replacement, or any other reason.

4. Check U-joint assemblies for wear by moving the driveshaft up and down, and from side to side. If any movement of the U-joint cross in the bearings can be felt or seen, replace the U-joint assembly.

5. Check if the midship bearing and mounting are loose or have deteriorated, by attempting to move the driveshaft up and down, and from side to side. If the bearing is loose on its shaft, or rattles, replace it. If the bearing mount is loose on the frame, tighten the mounting fasteners to the proper torque value. See **Section 41.00, Specifications 400** of the *108SD and 114SD Workshop Manual* for torque specifications. Replace the midship bearing assembly if the rubber cushion is deteriorated or oil-soaked.

https://truckmanualshub.com/

6. Check slip joints for spline wear by moving the sleeve-yoke and splined shaft back and forth; see **Fig. 3**. If the slip joint can be twisted in a clockwise, or counterclockwise movement greater than 0.007 inch (0.18 mm), replace both the sleeve-yoke and the splined shaft.
7. Examine the driveshaft tubes for dents, bends, twists, or other damage. If any tube appears to be damaged, refer to **Section 41.00** of the *108SD and 114SD Workshop Manual* for repair and replacement instructions.
8. Examine the driveshaft for evidence of missing balance weights, and for build-up of foreign material. Remove any foreign material. If there is any evidence that balance weights are missing, remove the driveshaft and have it balanced.

U-Joint Capscrew Torque Specifications		
Yoke	**Capscrew Size**	**Torque: lbf·ft (N·m)**
Half-Round Yokes with Bearing Straps (see **Fig. 2**, item 8)	0.375"	45–60 (60–80)
	0.5"	115–135 (155–183)
	12 mm	115–135 (155–183)
Full-Round Yokes with Bearing Cups (**Fig. 4**)	0.375"	38–48 (52–65)
Meritor RPL Series U-Joints with Bearing Cups (**Fig. 5**)	0.5"	115-135 (155-183)

Table 1, U-Joint Capscrew Torque Specifications

9. For driveshafts with slip joints, check to be sure the yoke plug is not loose or missing; see **Fig. 6**, item 2. Repair or replace the yoke plug as needed. If the yoke plug is missing, the splined shaft may be hitting the plug and knocking it out; contact your Regional Service Office for assistance in determining the correct driveshaft length.

41–02 Driveline Lubrication

Universal Joint Lubrication

NOTE: Vehicles equipped with Meritor RPL Series drivelines do not require periodic lubrication.

1. Park the vehicle on a flat surface, apply the parking brakes, and chock the tires.
2. Wipe all old grease and dirt from each U-joint grease fitting; see **Fig. 6**, item 8.
3. Use a hand-type grease gun, or a high-pressure gun with a low-pressure adapter, to lubricate U-joints. If a low-pressure adapter is not used, U-joints may not receive enough grease.

   Using lithium 12-Hydroxy stearate grease (NLGI Grade 2, with EP additives), lubricate until *new* grease can be seen at *all four* U-joint seals. Fresh grease must be seen escaping from *all four* bearing-cap seals of each U-joint. On full-round yokes equipped with a bearing cup, if most of the grease being added to a U-joint can be seen escaping from just one of the U-joint seals, check the torque on the capscrews at that seal.
4. Tighten the bearing-cup capscrews 38 to 48 lbf·ft (52 to 65 N·m) as needed. If the capscrews were already tight, or all of the U-joint seals still do not purge, remove the bearing cup at that seal, and examine the seal for damage. If the seal is damaged, replace the complete U-joint.
5. If grease does not appear at one seal, use a prying tool to pry the U-joint trunnion away from the

https://truckmanualshub.com/

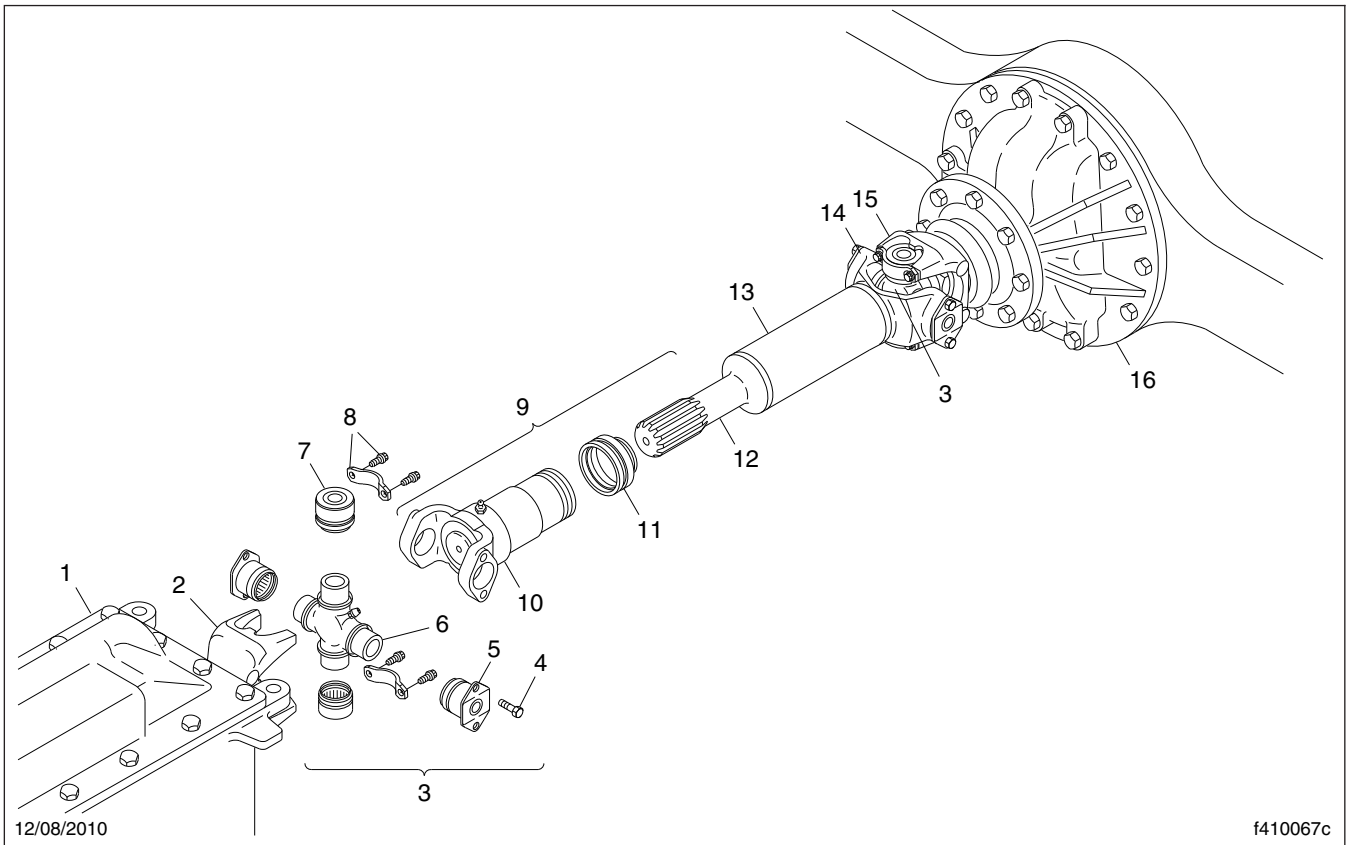

NOTE: Not all fasteners are shown.

1. Transmission
2. Transmission Output-Shaft End-Yoke (half-round)
3. U-Joint Assembly
4. Bearing Plate Self-Locking Capscrew
5. Bearing Cup (for full-round yoke)
6. U-Joint Cross
7. Bearing Cup (for half-round yoke)
8. Bearing Strap and Bearing-Strap Capscrew
9. Slip-Joint Assembly
10. Sleeve-Yoke (full-round)
11. Dust Cap
12. Splined Stub Shaft
13. Driveshaft Tube
14. Tube-Yoke (full-round)
15. Axle Input-Shaft End-Yoke (half-round)
16. Rear Axle

Fig. 2, Components of a Basic Driveline

https://truckmanualshub.com/

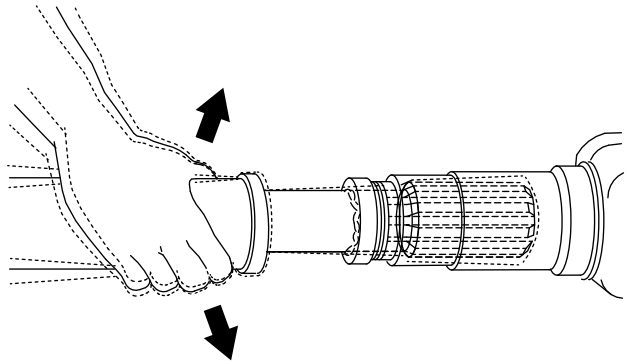

10/06/2016 f410012a

Attempt to move the sleeve-yoke and splined shaft back and forth.

Fig. 3, Slip Joint Spline Wear Checking

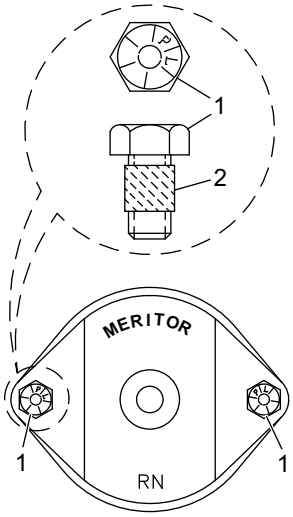

10/06/2016 f410155a

1. Self-Locking Capscrew
2. Adhesive Band

Fig. 4, Meritor U-Joint Fasteners for Full-Round Yokes

non-purging seal, or tap the driveshaft or yoke with a plastic or rawhide mallet on the side opposite the dry seal, while continuing to lubricate. If grease still does not appear, loosen the capscrews at the bearing with the dry seal, to relieve seal tension. Lubricate the U-joint until new grease is seen at the seal, then tighten the capscrews to the correct torque specifications. If the bearing will not take grease, replace the U-joint; see **Group 41** of the *108SD and 114SD Workshop Manual*.

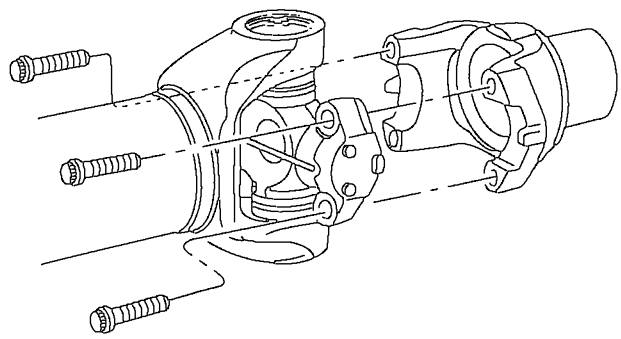

10/06/2016 f410182

Fig. 5, Meritor RPL Series U-Joint

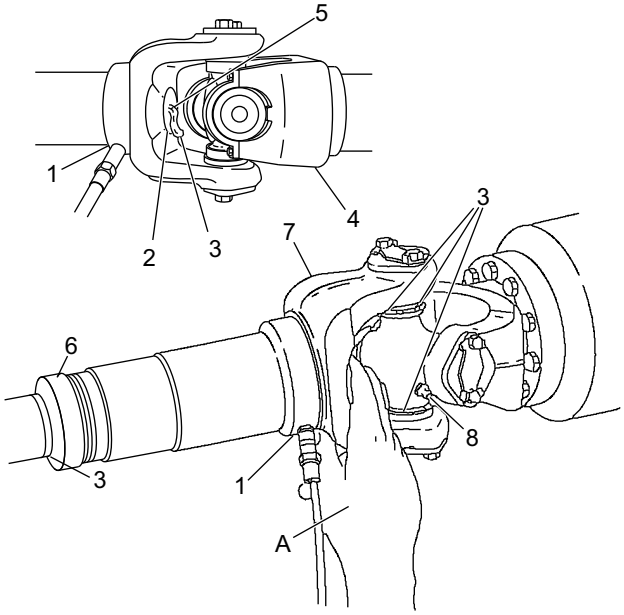

10/07/2016 f410050a

A. After grease appears, cover the pressure-relief hole while continuing to lubricate.
1. Slip Joint Grease Fitting (with grease gun attached)
2. Yoke Plug
3. Grease
4. Half-Round Yoke
5. Yoke Plug Pressure-Relief Hole
6. Slip Joint Seal
7. Full-Round Yoke
8. U-Joint Grease Fitting

Fig. 6, Slip Joint and U-Joint Lubrication

6. Check the purged grease. If it appears rusty, gritty, or burned, replace the U-joint.

https://truckmanualshub.com/

7. Wipe the purged grease from the seals, and any excess grease from the grease fitting.

Slip Joint Spline Lubrication

NOTE: Vehicles equipped with Meritor RPL Series drivelines do not require periodic lubrication.

1. If equipped with a grease fitting, wipe all old grease and dirt from the slip joint grease fitting; see **Fig. 6**, item 1.
2. Use a hand-type grease gun or a high-pressure gun with a low-pressure adapter, to lubricate the slip joint. Add multipurpose chassis grease (lithium 12-hydroxy stearate, NLGI Grade 2, with EP additives) until it appears at the pressure-relief hole in the yoke plug. Then cover the relief hole with your finger, while continuing to apply gun pressure until new grease appears at the slip joint seal; see **Fig. 6**. This ensures complete lubrication of the splines.
3. Wipe the purged grease from the pressure-relief hole and slip joint seal, and any excess grease from the grease fitting.

https://truckmanualshub.com/

https://truckmanualshub.com/

Index, Alphabetical

Title of Maintenance Operation (MOP)	MOP Number
Air Brake Inspection and Leak Test	42–09
Air Brake System Valve Inspection	42–01
Air Dryer Check	42–04
Bendix Air Dryer Desiccant Replacement	42–02
Bendix Automatic Drain Valve Operating and Leakage Tests	42–12
Brake Inspection	42–05
Foot-Control Valve, E-6, Inspection and Lubrication	42–08
Governor Check	42–03
Meritor Camshaft Bracket Lubrication	42–07
Safety Precautions	42–00
Slack Adjuster Lubrication	42–06
Versajust Slack Adjuster Inspection and Lubrication	42–11
WABCO System Saver Air Dryer Desiccant Cartridge Replacement	42–10

https://truckmanualshub.com/

https://truckmanualshub.com/

42–00 Safety Precautions

Safety Precautions in this section apply to all procedures within this group.

⚠ DANGER

When working on the vehicle, shut down the engine or motor, set the parking brake, and chock the tires. Before working under the vehicle, always place jack stands under the frame rails to ensure the vehicle cannot drop. Failure to follow these steps could result in serious personal injury or death.

42–01 Air Brake System Valve Inspection

IMPORTANT: There is no scheduled (Bendix) air valve maintenance that requires disassembly of the valve within the warranty period. If the valve does not function within the warranty period, do not disassemble the part as this will void the warranty.

See the following maintenance operations for information about Bendix air valve maintenance.

42–02 Bendix Air Dryer Desiccant Replacement

IMPORTANT: For vehicles equipped with an oil-coalescing air dryer desiccant cartridge, replace the cartridge once a year, regardless of mileage.

AD–9

1. Park the vehicle on a level surface, apply the parking brakes, and chock the tires.
2. Completely drain all air reservoirs. Air pressure gauges should read 0 psi (0 kPa).

NOTE: The compressor discharge line may still contain residual air pressure, open the line slowly.

3. Identify, tag, and disconnect the three air lines from the end cover.
4. Disconnect the harness connector from the heater and thermostat assembly.
5. Loosen the bolt that secures the upper mounting bracket strap.
6. Remove the two bolts and Nylok® nuts that secure the air dryer to the lower mounting bracket. Mark the position of the mounting bracket to the end cover and mark the bolts to ease installation.
7. Remove the upper mounting bracket strap fasteners, then remove the strap and the air dryer.
8. Place the air dryer on a bench and remove the remaining 6 bolts, 12 washers, 6 Nylok nuts, and the air dryer housing. See **Fig. 1**. Discard the Nylok nuts. Remove the end-cover-to-housing O-ring.
9. Clamp the desiccant cartridge in a vise.

⚠ WARNING

Clamping the end cover or housing in a vise could seriously compromise the air dryer's ability to hold air pressure, which could cause a failure in the brake system, resulting in property damage, personal injury, or death.

10. Twist the end cover counterclockwise to release the cartridge from the end cover. Rotate the end cover until it completely separates from the desiccant cartridge.

NOTE: A substantial torque, up to 50 lbf·ft (68 N·m), may be necessary to remove the desiccant cartridge.

NOTICE

Dirt or obstructions in the O-ring grooves can cause an O-ring failure that will result in an air leak.

11. Inspect the condition of the O-ring seals. If they are cracked, crimped, or otherwise damaged, replace them to ensure an airtight seal. Clean the O-ring grooves of any dirt or obstruction.
12. Lubricate the O-rings with silicone or lithium grease and install them in the end cover.
13. Install the desiccant cartridge on the end cover. Turn the cartridge clockwise until the desiccant cartridge makes contact with the end cover.

https://truckmanualshub.com/

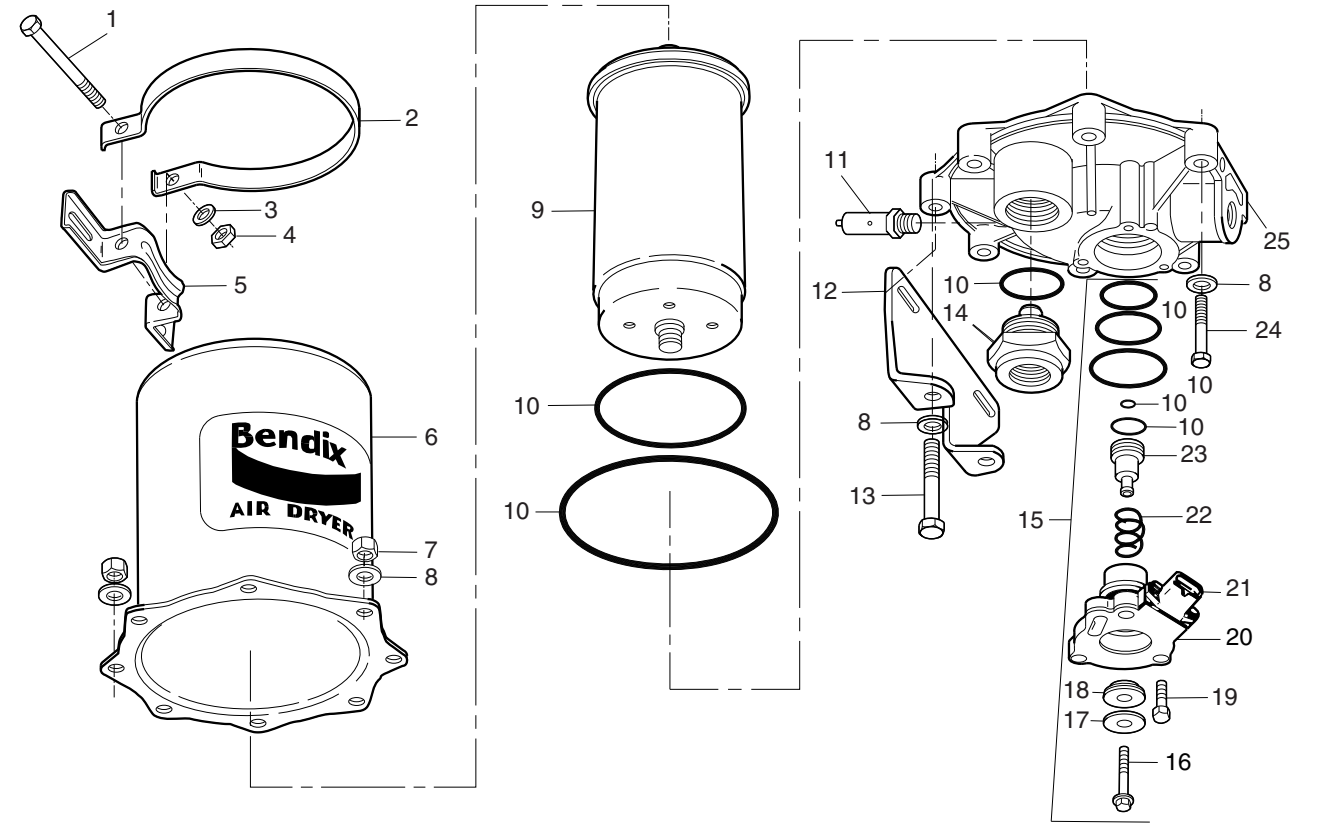

1. 5/16 x 4-1/2 Upper Mounting Bracket Bolt
2. Upper Mounting Bracket Strap
3. Lockwasher
4. 5/16-Inch Nylok Nut
5. Upper Mounting Bracket
6. Housing
7. Nylok Nut
8. 3/8-Inch Special Washer
9. Desiccant Cartridge
10. O-Ring
11. Safety Valve
12. Lower Mounting Bracket
13. 3/8-Inch Bolt (long)
14. Check Valve Assembly
15. Purge Valve Assembly
16. Purge Valve Capscrew
17. Exhaust Diaphragm
18. Purge Valve
19. 1/4-Inch Tapping Screw
20. Purge Valve Housing
21. Heater and Thermostat Housing
22. Return Spring
23. Purge Piston
24. 3/8-Inch Bolt
25. End Cover

Fig. 1, AD–9 Air Dryer (exploded view)

14. Place the desiccant cartridge in a vise, and turn the end cover clockwise an additional 180 to 225 degrees to fully tighten the desiccant cartridge to the end cover.

NOTE: Desiccant cartridge torque should not exceed 50 lbf·ft (68 N·m).

15. Place the housing over the desiccant cartridge and align the mounting holes with the end cover.

IMPORTANT: Replace, do not reuse the Nylok nuts on the air dryer cover.

16. Install the 6 bolts, 12 washers, and 6 new Nylok nuts. Torque the Nylok nuts in a star pattern 17 to 24 lbf·ft (23 to 33 N·m). See **Fig. 2**.
17. Install the air dryer on the lower mounting bracket. Install the two previously marked bolts, four washers, and two new Nylok nuts. Torque the two remaining Nylok nuts 17 to 24 lbf·ft (23

https://truckmanualshub.com/

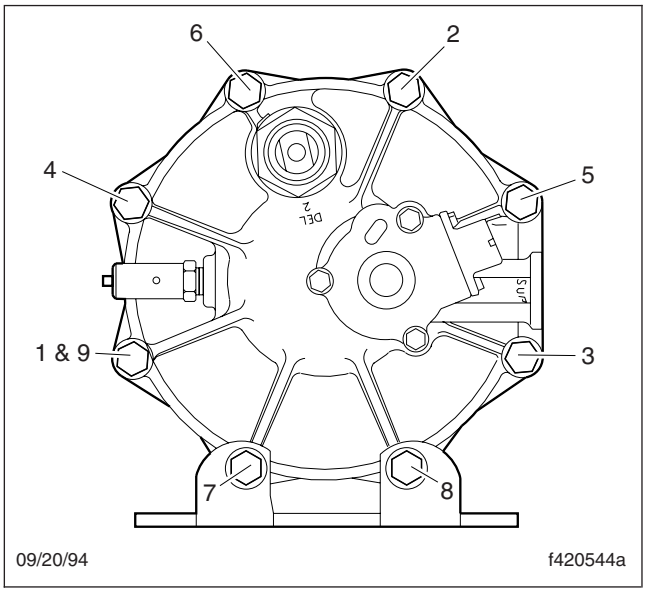

Fig. 2, AD–9 End Cover to Housing Torque Pattern

to 33 N·m). Install the bolt, two washers, and a new Nylok nut in the upper mounting bracket strap. Torque the upper mounting bracket strap Nylok nut 80 to 120 lbf·in (900 to 1360 N·cm).

18. Connect and tighten the three air lines. Connect the harness connector to the heater and thermostat assembly until the lock tab snaps in place.
19. Start the engine, build the air pressure, and check the air brake system for leaks. If any air leaks are present, see **Group 42** of the vehicle Workshop Manual for diagnosis and repair information.

AD–IP

1. Park the vehicle on a level surface, apply the parking brakes, and chock the tires.
2. Using a wrench or a socket, loosen the desiccant cartridge bolt. Then separate the desiccant cartridge from the end cover.
3. Pull the cartridge bolt out of the cover and remove the cartridge.

⚠ WARNING

Do not attempt to disassemble the desiccant cartridge assembly. Parts for the assembly are not available and the cartridge contains a 150 lb spring that cannot be mechanically caged. Disassembly could release the spring, resulting in personal injury.

4. Remove and discard both O-rings from the cartridge bolt.
5. Using a clean rag, wipe clean the inside of the end cover. Clean the cartridge bolt bore in the end cover, and the sealing surfaces for the large- and small-diameter desiccant cartridge sealing rings.
6. Inspect the end cover for physical damage, then inspect all air line fittings for corrosion; replace as necessary.
7. Clean and inspect the bolt, paying attention to the threads and O-ring grooves.

IMPORTANT: Use only the grease supplied with Bendix replacement kits.

8. Lubricate the O-rings, bolt O-ring grooves, sealing rings, and cartridge grooves. Lubricate the end cover bore for the bolt.
9. Install both O-rings on the cartridge bolt, then, using a twisting motion, insert the assembled desiccant cartridge bolt in the end cover.
10. Install the desiccant cartridge on the end cover, making sure the cartridge is properly seated and flush on the end cover.

NOTE: It may be necessary to rotate the cartridge slightly until the anti-rotation lugs are properly aligned and allow the cartridge to rest flush against the end cover.

11. Using a wrench or socket, tighten the desiccant cartridge bolt 70 lbf·ft (95 N·m). **Do not** overtorque.
12. Before placing the vehicle in service, perform the test below.
    - 12.1 Close all reservoir drain cocks.
    - 12.2 Build system pressure to governor cut-out, and note that the AD-IP air dryer purges with an audible escape of air.
    - 12.3 Fan the service brakes to reduce system air pressure to governor cut-in. Note that the system once again builds to full pressure and is followed by a purge at the AD-IP air dryer exhaust.

https://truckmanualshub.com/

12.4 Check for excessive leakage around the head of the desiccant cartridge where it contacts the end cover. With the compressor in loaded mode (compressing air), apply a soapy solution to these areas, and observe that any leakage does not exceed a 1-inch bubble in 1 second. If leakage exceeds this measure, remove and re-install the desiccant cartridge.

AD-9si and AD–IS

1. Park the vehicle on a level surface, apply the parking brakes, and chock the tires.
2. Drain the air reservoirs.
3. Using a strap wrench or equivalent, loosen the desiccant cartridge. Spin the cartridge off by hand and discard it. See **Fig. 3**.

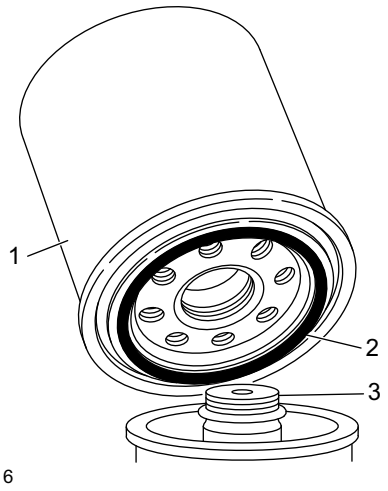

1. Desiccant Cartridge
2. Cartridge Sealing Ring
3. Threaded Base Post

Fig. 3, Desiccant Cartridge Replacement

4. On the new desiccant cartridge, lubricate the sealing rings with silicone grease.

IMPORTANT: Only use the silicone grease supplied with Bendix replacement kits.

5. Screw the desiccant cartridge onto the body by hand until the seal makes contact with the body. Rotate the cartridge clockwise about one full turn. Tighten the cartridge firmly.

42–03 Governor Check

IMPORTANT: Review the warranty policy before performing any intrusive maintenance procedures. An extended warranty may be voided if intrusive maintenance is performed during this period.

Every 12 months, 100,000 miles (160 900 km), or 3600 operating hours, perform the operational test below.

Operational Test

1. Start the vehicle engine, build air pressure in the brake system, and check the pressure registered by a dash or test gauge at the time the governor cuts-out, stopping the compression of air by the compressor. Cut-out pressure should be in accordance with the pressure setting of the piece number being used. Common cut-out pressures are 125 to 135 psi (862 to 931 kPa). With the engine still running, make a series of brake applications to reduce the air pressure, and observe at what pressure the governor cuts-in the compressor. As in the case of cut-out pressure, cut-in pressure should be in accordance with the pressure setting of the piece number being used. Common cut-in pressure is 105 psi (724 kPa).

NOTE: If the governor cover is marked nonadjustable, and the adjusting stem has been sheared off, this is a non-serviceable governor and it must be replaced with a new or remanufactured unit.

2. Never condemn or adjust the governor pressure settings unless they're checked with an accurate test gauge or a dash gauge that's registering accurately. If the pressure settings of the D-2 governor are inaccurate or it's necessary that they be changed, the adjustment procedure follows.

   2.1 Remove the top cover from the governor.

   2.2 Loosen the adjusting screw locknut.

   2.3 To raise the pressure setting, turn the adjusting screw counterclockwise; to lower the setting, turn the screw clockwise. Be careful not to overadjust. Each 1/4 turn of the adjusting screw raises or lowers the pressure setting approximately 4 psi (28 kPa).

https://truckmanualshub.com/

2.4 When proper adjustment is obtained, tighten the adjusting screw locknut, and install the top cover. The pressure range between cut-in and cut-out is not adjustable.

Cut-In Position

Apply soap solution around the cover and to the exhaust port. Slight bubble leakage is permitted. Excessive leakage indicates a faulty inlet valve or faulty lower piston O-ring.

Cut-Out Position

Apply soap solution around the cover and to the exhaust port. Slight bubble leakage is permitted. Excessive leakage indicates a faulty exhaust valve seat, exhaust stem O-ring, or O-ring at the top of the piston.

If the governor does not function as described, or if leakage is excessive, it is recommended that it be replaced with a new or remanufactured unit, or repaired with genuine Bendix parts.

42–04 Air Dryer Check

The information in this MOP applies to Bendix AD-9, AD-IP, and AD-IS/DRM air dryers.

IMPORTANT: Review the warranty policy before performing any intrusive maintenance procedures. An extended-warranty may be voided if intrusive maintenance is performed during this period.

Because no two vehicles operate under identical conditions, maintenance and maintenance intervals will vary. Experience is a valuable guide in determining the best maintenance interval for any one particular operation.

Every 900 operating hours, or 25,000 miles (40 225 km), or 3 months:

1. Check for moisture in the air brake system by opening reservoir drain valves and checking for the presence of water. If moisture is present, the desiccant cartridge may require replacement; however, the following conditions can also cause water accumulation and should be considered before replacing the desiccant:

   1.1 An outside air source has been used to charge the system. This air did not pass through the drying bed.

   1.2 Air usage is exceptionally high and not normal. This may be due to high air system leakage.

   1.3 In areas where more than a 30-degree range of temperature occurs in one day, small amounts of water can temporarily accumulate in the air brake system due to condensation. Under these conditions, the presence of small amounts of moisture is normal.

NOTE: A small amount of oil in the system is normal and should not be considered as a reason to replace the desiccant cartridge. Some oil at the dryer exhaust is normal.

2. Visually check for physical damage such as chaffed or broken air and electrical lines and broken or missing parts.
3. Check mounting bolts for tightness. Tighten 30 to 35 lbf·ft (41 to 47 N·m).
4. Perform the operational and leakage tests listed below.

Operational and Leakage Tests

1. Check all lines and fittings leading to and from the air dryer for leakage and integrity. Repair any leaks found.
2. Build system pressure to governor cutout, and note that the dryer purges with an audible escape of air. Watch the system pressure and note the pressure fall-off for a 10-minute period. If the pressure drop exceeds 1 psi/minute from either service reservoir for a single vehicle; or 3 psi/minute for a tractor trailer, inspect the vehicle air systems for sources of leakage, and repair them. Refer to troubleshooting information in Bendix service literature.
3. Check for excessive leakage around the purge valve with the compressor in the loaded mode (compressing air). Apply a soap solution to the purge valve exhaust port and observe that leakage does not exceed a 1-inch (25-mm) bubble in 1 second. If the leakage exceeds the maximum specified, refer to troubleshooting information in the Bendix service literature.

https://truckmanualshub.com/

4. Build system pressure to governor cutout, and note that the dryer purges with an audible escape of air. Fan the service brakes to reduce system air pressure to governor cut-in. Note that the system once again builds to full pressure and is followed by a dryer purge. If the system does not follow this pattern, refer to troubleshooting information in the Bendix service literature.
5. Check operation of the end cover heater and thermostat assembly during cold weather, as follows:
   5.1 Electric Power to the Dryer: With the ignition or engine kill switch in the ON position, check for voltage to the heater and thermostat assembly using a voltmeter or testlight. Unplug the electrical connector at the air dryer and place the test leads on each of the connections of the female connector on the vehicle power lead. If there is no voltage, look for a blown fuse, broken wires, or corrosion in the vehicle wiring harness. Check to see if a good ground path exists.
   5.2 Thermostat and Heater Assembly Operation: These tests are not possible except in cold-weather operation. Turn off the ignition switch, and cool the thermostat and heater assembly to below 40°F (4°C). Using an ohmmeter, check resistance between the electrical pins in the air dryer connector half. Resistance should be 1.5 to 3.0 ohms for the 12-volt heater assembly, and 6.0 to 9.0 ohms for the 24-volt heater assembly.

   NOTE: Some models of the AD-9 may have a resistance reading of 1.0 to 2.5 ohms.

   Warm the thermostat and heater assembly to approximately 90°F (32°C) and again check the resistance. Resistance should exceed 1000 ohms. If resistance values obtained are within stated limits, the thermostat and heater assembly is operating properly. If resistance values obtained are outside stated limits, replace the heater and thermostat assembly.
6. On the AD-IS/dryer reservoir module (DRM) only, observe the pressure gauges of the vehicle as system pressure builds from zero. The primary gauge should rise until it reaches approximately 109±5 psi (751±34 kPa), then level off (or a momentary slight fall) as the second pressure protection valve opens supplying the secondary reservoir. When the secondary pressure gauge passes through approximately 55±5 psi (379±34 kPa) and then 85±5 psi (586±34 kPa) there should be an associated levelling off (or momentary slight fall) of pressure as the third and fourth pressure protection valves open. Finally, both the primary and secondary gauges should reach their full pressure of approximately 130±5 psi (896±34 kPa). If the AD-IS does not perform within the pressure ranges described above, recheck using gauges known to be accurate. If readings remain outside the ranges outlined above, replace the AD-IS.

   There are no kits available for servicing the pressure protection valves.

WARNING

Do not attempt to adjust or service the pressure protection valves. Incorrect pressure protection valve settings can result in automatic application of the vehicle spring brakes without prior warning. This can cause personal injury or property damage.

42–05 Brake Inspection

IMPORTANT: This procedure should be performed prior to lubrication of the brake components.

Parking Brake Operational Check

CAUTION

Perform the following check in a clear, safe area. If the parking brakes fail to hold the vehicle, personal injury or property damage may result.

1. With the engine running, and air pressure at cutout pressure, set the parking brake.
2. Put the vehicle in the lowest gear and gently attempt to move it forward. The vehicle should not move. If the vehicle moves, the parking brakes are not operating correctly and must be repaired before the vehicle is returned to service. See

https://truckmanualshub.com/

Group 42 of the *108SD and 114SD Workshop Manual* for repair procedures.

Brake Component Inspection

Air Disc Brakes

IMPORTANT: The following step to inspect the caliper mounting bolts should only be performed at the initial maintenance (IM) interval.

Vehicles may have both **axial and radial** mounted calipers. Follow the instructions based on the type of calipers installed on the vehicle.

Axial Mounted Brakes

IMPORTANT: The following information applies to all types of axial mounted brake applications.

1. Park the vehicle on a level surface, shut down the engine, and set the parking brake. Chock the tires.
2. Raise the vehicle and support it on jack stands.
3. Remove all of the wheel assemblies. For instructions, see **Group 40** of the *108SD and 114SD Workshop Manual*.

NOTE: In all steps that require a torque wrench, use a Snap On torque wrench ATECH4RS600, or an equivalent, with a center to handle length of 47 inches (119 cm).

4. Set a torque wrench to 350 lbf·ft (475 N·m) and tighten the caliper mounting bolts following the tightening pattern shown in **Fig. 4**. If they do not turn, no further work is needed. If they turn, take the vehicle to an authorized Freightliner dealer to have all of the caliper bolts on that wheel end replaced. Due to limited caliper bolt access, it may be necessary to use tool DDC DSN-CHA018005 referenced in tool letter 18TL18. See **Fig. 5**. If the tool is needed, see **Table 1** for torque specifications for a 47 in (119 cm) long wrench.

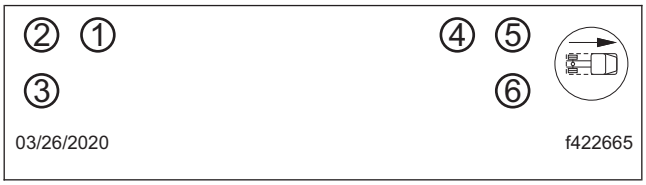

Fig. 4, Axial Bolt Tightening Pattern

Fig. 5, DDC DSNCHA018005 30mm Air Disc Brake Caliper Brake Bolt Torque Adaptor

https://truckmanualshub.com/

Torque Check with 47 Inch (119 cm) Torque Wrench and Tool DDC DSNCHA018005			
Angle View	**Extension Angle (degrees)**	**Target Torque [lbf·ft (N·m)]**	**Tool Setting [lbf·ft (N·m)]**
11/28/2016 f422613	0	350 (475)	296 (401)
11/28/2016 f422614	45		310 (420)
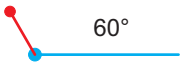 11/06/2018 f422668	60		320 (434)
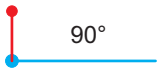 11/28/2016 f422615	90		350 (475)
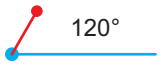 11/06/2018 f422669	120		386 (523)
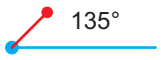 11/28/2016 f422616	135		402 (545)

Table 1, Torque Check with 47 Inch (119 cm) Torque Wrench and Tool DDC DSNCHA018005

5. Install the wheel assemblies. For instructions, see **Group 40** of the *108SD and 114SD Workshop Manual*.
6. Remove the jack stands and lower the vehicle.

Radial Mounted Brakes

Bendix Calipers

1. Park the vehicle on a level surface, shut down the engine, and set the parking brake. Chock the tires.
2. Raise the vehicle and support it on jack stands.
3. Remove all of the wheel assemblies. For instructions, see **Group 40** of the *108SD and 114SD Workshop Manual*.
4. Set a torque wrench to 200 lbf·ft (271 N·m) and tighten the caliper mounting bolts following the tightening pattern shown in **Fig. 6**. If they do not turn, no further work is needed. If they turn, take the vehicle to an authorized Freightliner dealer to have all of the caliper bolts on that wheel end replaced.

https://truckmanualshub.com/

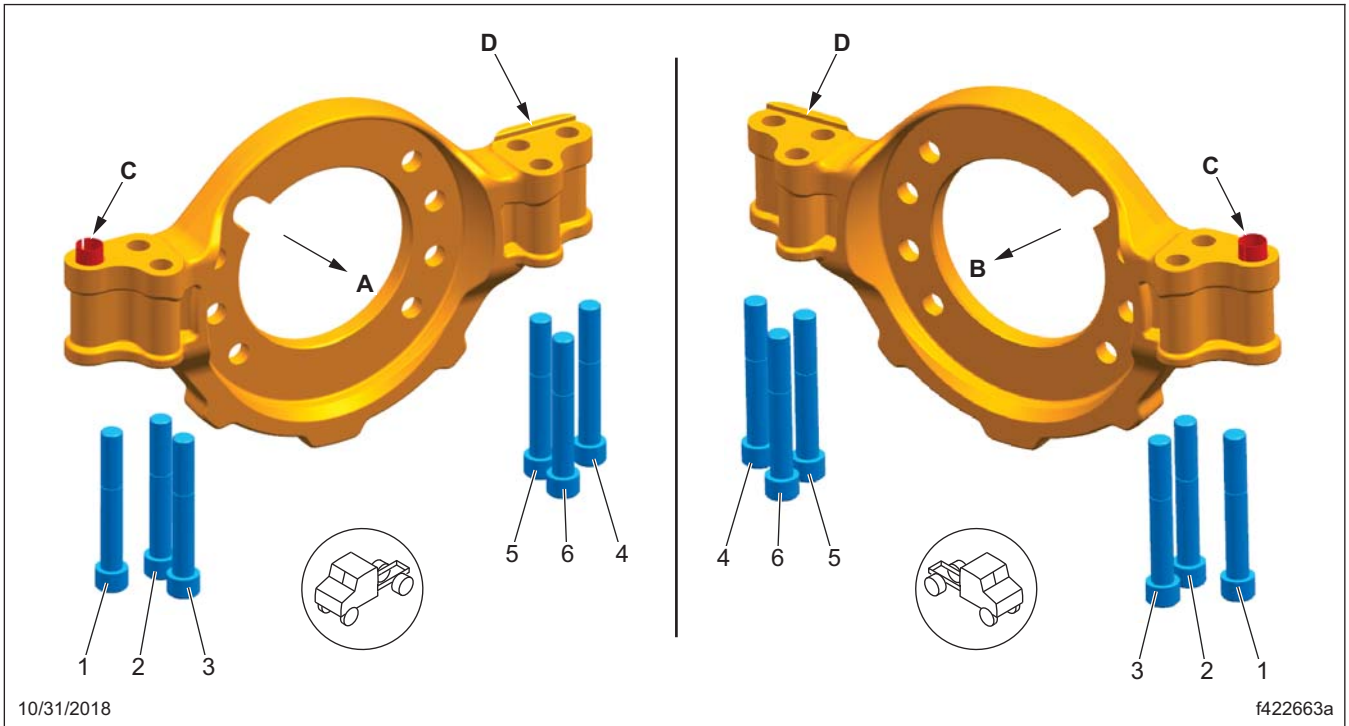

A. Right-hand brake **(viewed from below)**.
B. Left-hand brake **(viewed from below)**.
C. Sheer sleeve above in this location.
D. Shelf above in this location.

Fig. 6, Bendix Radial Mounted Caliper Tightening Pattern (viewed from below)

5. Install the wheel assemblies. For instructions, see **Group 40** of the *108SD and 114SD Workshop Manual*.
6. Remove the jack stands and lower the vehicle.

Meritor Calipers

1. Park the vehicle on a level surface, shut down the engine, and set the parking brake. Chock the tires.
2. Raise the vehicle and support it on jack stands.
3. Remove all of the wheel assemblies. For instructions, see **Group 40** of the *108SD and 114SD Workshop Manual*.
4. Set a torque wrench to 350 lbf·ft (475 N·m) and tighten the caliper mounting bolts following the tightening pattern shown in **Fig. 7**. If they do not turn, no further work is needed. If they turn, take the vehicle to an authorized Freightliner dealer to have all of the caliper bolts on that wheel end replaced.
5. Install the wheel assemblies. For instructions, see **Group 40** of the *108SD and 114SD Workshop Manual*.
6. Remove the jack stands and lower the vehicle.

WABCO Maxxus Calipers

1. Park the vehicle on a level surface, shut down the engine, and set the parking brake. Chock the tires.
2. Raise the vehicle and support it on jack stands.
3. Remove all of the wheel assemblies. For instructions, see **Group 40** of the *108SD and 114SD Workshop Manual*.
4. Set a torque wrench to 273 lbf·ft (370 N·m) and tighten the caliper mounting bolts following the tightening pattern shown in **Fig. 8**. If they do not turn, no further work is needed. If they turn, take the vehicle to an authorized Freightliner dealer to have all of the caliper bolts on that wheel end replaced.

https://truckmanualshub.com/

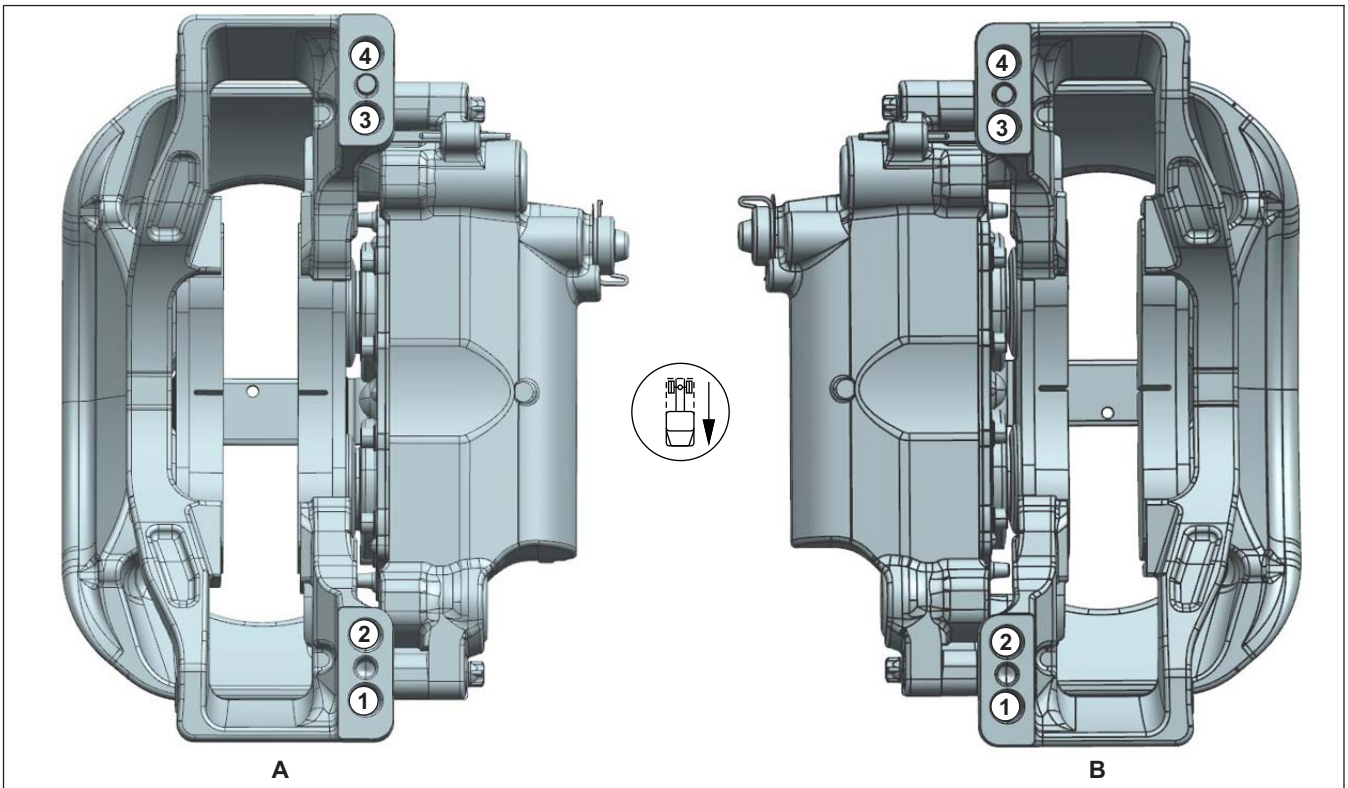

07/30/2018 f422655

Tighten the fasteners in the order indicated.

A. Left Hand, Bottom View

B. Right Hand, Bottom View

Fig. 7, Meritor Radial Mounted Caliper Tightening Pattern

5. Install the wheel assemblies. For instructions, see **Group 40** of the *108SD and 114SD Workshop Manual*.
6. Remove the jack stands and lower the vehicle.

Drum Brakes

1. Park the vehicle on a level surface, shut down the engine, and set the parking brake. Chock the tires. Once the tires are chocked, release the parking brake.

⚠ WARNING

Manually adjusting an automatic slack adjuster to bring the pushrod stroke within legal limits is likely masking a mechanical problem. Adjustment is not repairing. Before adjusting an automatic slack adjuster, troubleshoot the foundation brake system and inspect it for worn or damaged components. Improperly maintaining the vehicle braking system may lead to brake failure, resulting in property damage, personal injury, or death.

2. With the engine off, and 100 psi (690 kPa) of air tank pressure, have an assistant apply and hold an 80 to 90 psi (552 to 621 kPa) brake application.
3. Check to see if the colored over-stroke band on each brake chamber pushrod is exposed.

   If a band shows, the stroke is too long. Check the foundation brake components for wear or damage, and repair as needed. See **Group 42** of the *108SD and 114SD Workshop Manual* for inspection, troubleshooting, and repair procedures.
4. Measure the applied chamber stroke. See **Table 2** for the proper stroke for the type of chamber being used. If the stroke is too short, the brakes may drag or will not fully apply. Check

https://truckmanualshub.com/

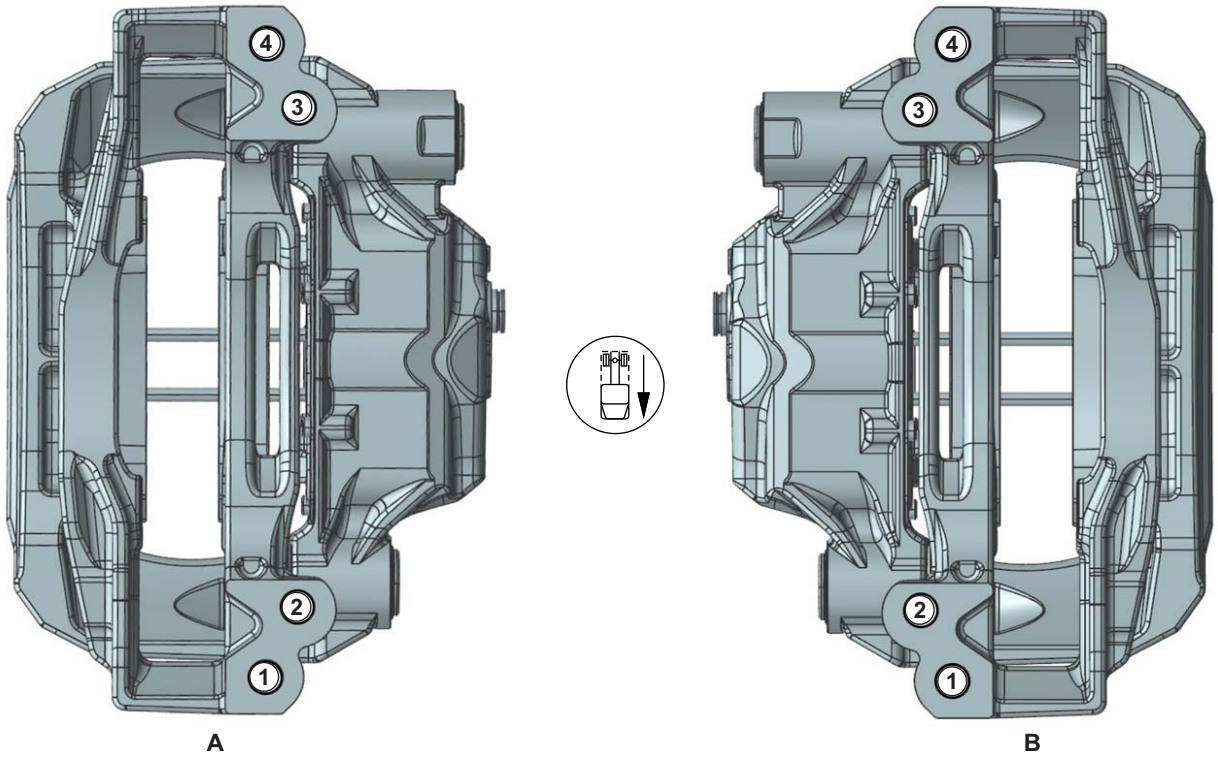

07/30/2018 f422657

Tighten the fasteners in the order indicated.

A. Left Hand, Bottom View

B. Right Hand, Bottom View

Fig. 8, Wabco Maxxus Radial Mounted Caliper Tightening Pattern

for improper operation or adjustment of the automatic slack adjuster. See **Group 42** of the *108SD and 114SD Workshop Manual* for inspection and troubleshooting procedures.

5. Check all of the foundation brake components for damage, wear, and loose or missing parts. Repair as needed. See **Group 42** of the *108SD and 114SD Workshop Manual* for repair procedures.

https://truckmanualshub.com/

Brake Chamber Stroke Specifications			
Chamber			Max Applied Stroke: inch (mm)
Manufacturer	Type*	Size†	
Gunite	Standard Stroke	9	1-3/8 (35)
		12	
		16	1-3/4 (45)
		20	
		24	
		30	2 (51)
		36‡	2-1/4 (57)
	Long Stroke	16	2 (51)
		20	
		24	
		24	2-1/2 (64)
		30	
Haldex	Standard Stroke	12	1-3/8 (35)
		16	1-3/4 (44)
		20	
		24	
	2-1/2-Inch Extended Stroke	24	2 (51)
	3-Inch Extended Stroke	24	2-1/2 (64)
	Standard Stroke	30	2 (51)
	Long Stroke	30	2-1/2 (64)
Meritor	Standard Stroke	9	Less than 1-1/2 (38)
		12	
		16	Less than 1-3/4 (44)
		20	
		24	Less than 1-7/8 (48)
	Long Stroke	24	Less than 2 (51)
	Standard Stroke	30	

* Long stroke design is indicated by a tag, or embossing, on the brake chamber.

† Specifications are relative to a brake application with 80 to 90 psi (550 to 620 kPa) air pressure in the brake chambers.

‡ If type 36 chamber is used, slack length should be less than 6 inches.

Table 2, Brake Chamber Stroke Specifications

https://truckmanualshub.com/

42–06 Slack Adjuster Lubrication

IMPORTANT: Perform **MOP 42-05** before lubricating the slack adjusters.

Automatic slack adjusters that have a grease fitting must be lubricated periodically to ensure proper brake operation.

⚠ WARNING

Failure to lubricate slack adjusters could lead to dragging brakes or a brake failure, resulting in property damage, personal injury, or death.

Meritor

NOTE: If equipped with an extended-maintenance Q Plus™ brake system, the slack adjuster will not have a grease fitting. These slack adjusters use a special NLGI grade synthetic polyurea grease, and do not require lubrication for 3 years or 500,000 miles (800 000 km), whichever comes first. Extended-maintenance slack adjusters are lubricated during the brake reline service interval. For service and lubrication instructions, see **Group 42** of the *108SD and 114SD Workshop Manual*.

For slack adjusters with grease fittings and for operating temperatures above –40°F (–40°C), use an NLGI Grade 1 clay-base grease or an NLGI Grade 1 or 2 lithium-base grease.

For slack adjusters with grease fittings, and for operating temperatures below –40°F (–40°C) and above –65°F (–54°C), use an NLGI Grade 2 synthetic oil or a clay-base grease.

Lubricate the slack adjuster at the grease fitting until grease is forced past the pressure-relief capscrew or past the gear splines around the inboard snap ring. See **Fig. 9**.

Haldex

NOTICE

Do not use moly-disulfide-loaded grease or oil. Both the life and reliability of the slack adjuster will be reduced if this type of grease is used.

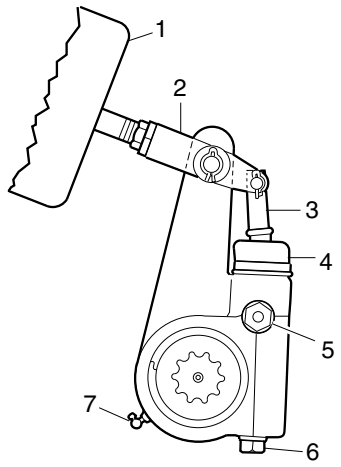

10/20/93 f420012a

1. Brake Chamber
2. Clevis
3. Actuator Rod
4. Boot
5. Pull-Pawl Seal
6. Manual Adjusting Nut
7. Grease Fitting (or plug)

Fig. 9, Meritor Automatic Slack Adjuster

Lubricate the automatic slack adjuster at the grease fitting. See **Fig. 10**. Use standard chassis lubricant for Haldex slack adjusters.

Gunite

For operating temperatures of –20°F (–29°C) and higher, use Texaco Multifak EP-2 or Mobil Grease No. 77.

For operating temperatures between –20°F (–29°C) and –40°F (–40°C), use Lubriplate Aero grease.

Lubricate a Gunite automatic slack adjuster at the grease fitting until grease appears on the camshaft, or flows from the grease relief. See **Fig. 11**.

Gunite automatic slack adjusters are produced without a grease relief. During lubrication with a grease gun, the lubricant is forced through the drilled worm wheel onto the camshaft. Lubricate the automatic slack adjuster at the grease fitting until grease appears on the camshaft. See **Fig. 12**.

https://truckmanualshub.com/

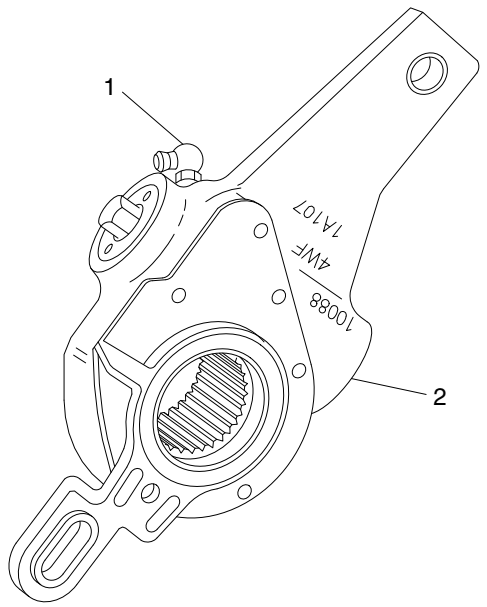

02/01/2001 f421649a

1. Grease Fitting
2. Slack Adjuster

Fig. 10, Haldex Slack Adjuster Grease Fitting

42–07 Meritor Camshaft Bracket Lubrication

IMPORTANT: Perform **MOP 42-05** before lubricating the camshaft brackets.

NOTE: If equipped with an extended-maintenance Q Plus™ brake system, the camshaft bracket will not have a grease fitting. These camshafts use a special NLGI grade synthetic polyurea grease, and do not require lubrication for 3 years or 500,000 miles (800 000 km), whichever comes first. Extended-maintenance camshaft bushings are lubricated during the brake reline service interval. For service and lubrication instructions, see **Group 42** of the *108SD and 114SD Workshop Manual*.

For camshaft brackets with grease fittings, use an NLGI Grade 1 or Grade 2 multipurpose chassis grease. Lubricate the camshaft bushings through the grease fitting on the camshaft bracket or the spider until new grease flows from the inboard seal. See **Fig. 13**.

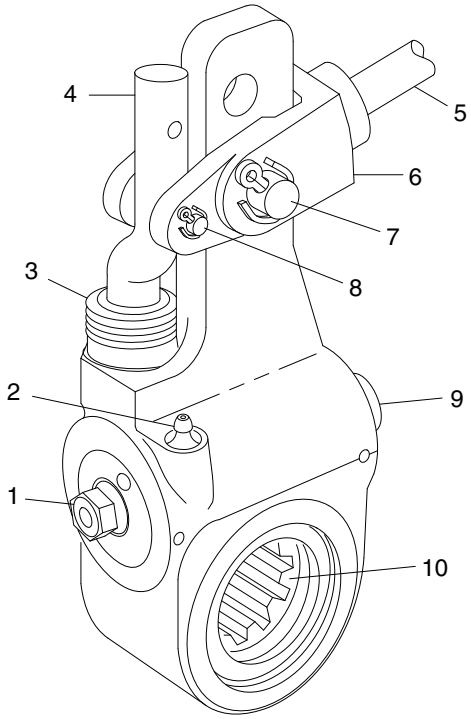

10/27/93 f420653a

1. 7/16-Inch Adjusting Nut
2. Grease Fitting
3. Boot
4. Link
5. Brake Chamber Piston Rod
6. Clevis
7. 1/2-Inch Clevis Pin
8. 1/4-Inch Clevis Pin
9. Grease Relief Opening
10. Slack Adjuster Spline

Fig. 11, Gunite Automatic Slack Adjuster

⚠ WARNING

If grease leaks out under the camhead, the camshaft bracket grease seal is worn or damaged. See Group 42 of the *108SD and 114SD Workshop Manual* for grease seal replacement instructions. If this seal is not replaced, the brake linings could become contaminated with grease. The stopping distance of the vehicle will be increased, which could result in personal injury or property damage.

https://truckmanualshub.com/

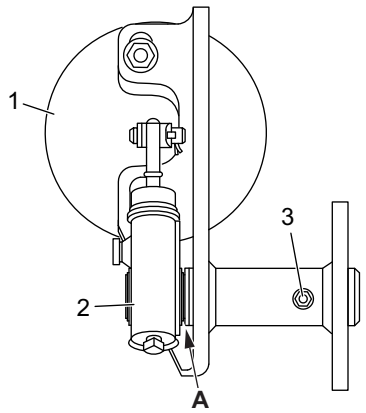

10/07/2016 f420011a

A. Grease Exit
1. Brake Chamber
2. Slack Adjuster
3. Non-Pressure-Relief Grease Fitting

Fig. 12, Camshaft Bracket Lubrication

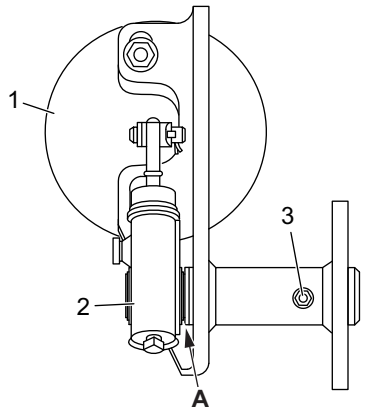

10/07/2016 f420011a

A. Grease Exit
1. Brake Chamber
2. Slack Adjuster
3. Non-Pressure-Relief Grease Fitting

Fig. 13, Camshaft Bracket Lubrication

42–08 Foot-Control Valve, E-6, Inspection and Lubrication

1. Remove the brake valve from the vehicle. See **Section 42.08, Subject 110** of the *108SD and 114SD Workshop Manual* for instructions.
2. Remove the roll pin from the brake pedal pivot pin. See **Fig. 14**.

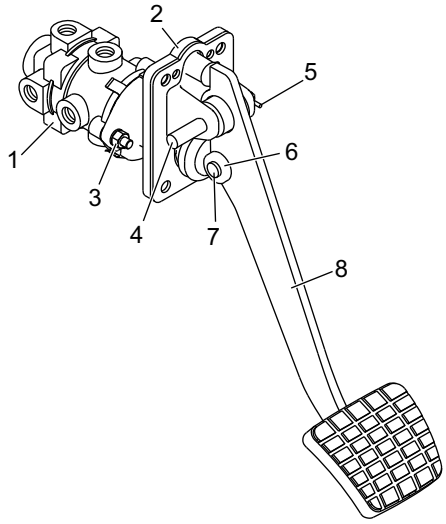

11/01/2016 f430405

1. Foot-Control Valve, E-6
2. Mounting Plate
3. Nut and Washer
4. Pivot Pin
5. Roll Pin
6. Roller
7. Roller Pin
8. Pedal

Fig. 14, Brake Pedal and Valve Assembly

3. Remove the brake pedal pivot pin.
4. Remove the brake pedal.
5. Check the brake pedal mounting plate adapter for signs of wear or cracks at the bosses (the area from which the pivot pin was removed). Replace it as needed.
6. Check the brake pedal rollers for signs of wear or cracks. Replace the rollers as needed.
7. If the rollers are replaced, replace the roller pin, install a new cotter pin, bend it 90 degrees, and apply Torque Seal (OPG F900 White) to the cotter pin.
8. Remove the plunger from the valve. Clean the existing grease from the plunger, using alcohol. Check the plunger for signs of wear or cracks. Replace it as needed.
9. Lubricate the plunger with synthetic grease of NLGI Grade 1.5, such as 76 Triton synthetic EP Grease (FTL Sped 48-25432-000).
10. Insert the plunger in the valve.

https://truckmanualshub.com/

11. Install the brake pedal with the pivot pin.
12. Install a new roll pin, then apply Torque Seal (OPG F900 White) to the roll pin.
13. Install the brake valve assembly. See **Section 42.08, Subject 110** of the *108SD and 114SD Workshop Manual* for instructions.
14. Test the brakes before returning the vehicle to service.

42–09 Air Brake Inspection and Leak Test

IMPORTANT: If any of the tests in the following procedure fail, refer to **Group 42** of the *108SD and 114SD Workshop Manual* to test individual air brake components and valves.

⚠ WARNING

Some steps in this operation require the parking brakes to be released. Make sure the vehicle is on a level surface and all tires are chocked. Failure to do so could result in the vehicle rolling, causing personal injury and/or vehicle damage.

1. With the vehicle parked on a level surface, shut down the engine, apply the parking brakes, and chock all tires.
2. Completely drain all air reservoirs.
3. Install accurate test gauges in the primary and secondary reservoirs.
4. Start the engine and run it at a fast idle.
5. Record reservoir pressures when the low-pressure warning turns off.
6. Record governor cut-out pressure and air dryer purge pressure.
7. Reduce service air pressure by applying and releasing the service brakes several times, and record governor cut-in pressure.
8. Charge the air system to governor cut-out, shut down the engine, and apply the parking brakes.
9. Allow pressure to stabilize for one minute.
10. Observe the installed service reservoir gauges. The pressure should not drop more than 10 psi (69 kPa) within five minutes.
11. If necessary, start the engine and charge the air system. Shut down the engine and release the parking brakes.
12. Make and hold a full service brake application, allowing the pressure to stabilize for one minute. Observe the installed service reservoir gauges. The pressure should not drop more than 15 psi (103 kPa) in five minutes.
13. With the air system at full pressure and the engine idling, perform the following:
    - On trucks, operate the parking brake control valve and note that the parking brakes apply and release promptly as the control valve knob is pulled out and pushed in on the spring brake axles only.
    - On tractors, operate the trailer supply control valve knob. Note the air coming out of the trailer control coupling. Operate the park control knob and note that the parking brakes apply and release promptly as the knob is pulled out and pushed in. Block the trailer supply coupling, and push the trailer supply control valve and park control valve knobs in. When the park control valve knob is pulled out, the trailer supply knob should also come out.
14. Build air system pressure to cut-out and shut down the engine.
15. Completely drain the secondary (front axle) reservoir. On vehicles equipped with a Dryer Reservoir Module (DRM) or AD-IS with the air dryer attached to the reservoir, the primary (rear axle) reservoir pressure should not drop below 65 psi (448 kPa). On vehicles equipped with single check valves, where the air dryer is not attached to the reservoir, the primary reservoir should not lose pressure.
16. Make a service brake application. The rear axle brakes should apply and release and the brake lights should illuminate.

    On tractors, with the trailer supply knob pushed in, the trailer control coupling should deliver air during the brake application.
17. Push the trailer air supply valve knob in. With the secondary reservoir still completely drained, slowly drain the primary reservoir and record the

https://truckmanualshub.com/

pressure at which the knob automatically comes out. This pressure should be 20 to 45 psi (138 to 310 kPa).

18. Close the drain cocks, recharge the system, and completely drain the primary reservoir. On vehicles equipped with a DRM or AD-IS with the air dryer attached to the reservoir, the secondary reservoir pressure should not drop below 65 psi (448 kPa). On vehicles equipped with single check valves, where the air dryer is not attached to the reservoir, the secondary reservoir should not lose air pressure.
19. On tractors only:
    - 19.1 Start the engine and build the system air pressure to governor cut-out.
    - 19.2 Shut down the engine and leave the parking brakes released.
    - 19.3 Completely drain the primary reservoir.
    - 19.4 Make a modulated service brake application by depressing the brake pedal. The front brakes should apply and release and the brake lights should illuminate. In addition to the front brakes, with the trailer supply knob pushed in, the trailer control coupling should deliver air during the brake application.
20. On trucks only:
    - 20.1 Start the engine and charge the air system until governor cut-out.
    - 20.2 Shut down the engine and leave the parking brakes released.
    - 20.3 Completely drain the primary reservoir.
    - 20.4 Make a modulated service brake application. Both front and rear brakes should modulate. At a steady full brake application, the pressure should not drop more than 10 psi (69 kPa) within five minutes.
21. Drain all reservoirs and remove the gauges from the service reservoirs. Close the reservoir drain cocks.
22. Remove the chocks from the tires.

42–10 WABCO System Saver Air Dryer Desiccant Cartridge Replacement

NOTE: The following instructions apply to the System Saver 1200 Plus and Twin air dryers.

NOTICE

The WABCO System Saver air dryers can use either a standard or oil coalescing desiccant cartridge. When replacing the desiccant cartridge, it is very important to use the same type of cartridge that was originally installed on the dryer. Oil coalescing cartridges can be used in any application, but require more frequent service intervals (every 1 to 2 years instead of every 2 to 3 years for a standard cartridge). Do not replace an oil coalescing cartridge with a standard cartridge, as this may result in contamination and malfunctioning of downstream air system components.

Refer to **Fig. 15** for cartridge replacement.

1. Drain the air system.

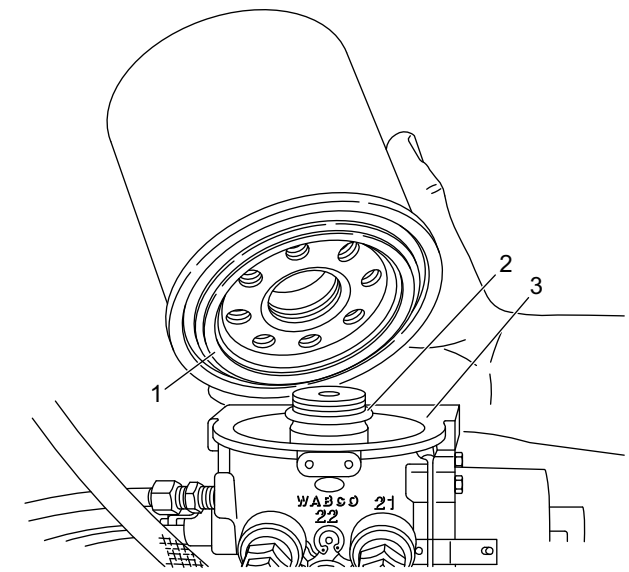

1. Seal
2. O-Ring
3. Air Dryer Base

Fig. 15, Desiccant Cartridge Replacement

https://truckmanualshub.com/

2. Using a strap wrench, turn the desiccant cartridge counterclockwise and remove it.
3. Remove and discard the O-ring.
4. Clean the top surface of the dryer base with a commercial cleaning solvent.

IMPORTANT: If the air dryer base is damaged, preventing a tight seal, replace the air dryer.

5. Using a multipurpose, high-temperature grease that resists water, steam, and alkali, lightly coat the surfaces of the new O-ring and the dryer base. Install the O-ring.
6. Thread the desiccant cartridge onto the dryer base (turn clockwise). When the seal contacts the base, tighten the cartridge one complete turn more. Do not overtighten.

42–11 Versajust Slack Adjuster Inspection and Lubrication

IMPORTANT: Perform the **Brake Inspection** maintenance operation before lubricating the slack adjusters.

1. Visually check for physical damage, such as broken air lines and broken or missing parts.
2. Using a quality multipurpose chassis lubricant, NLGI Grade 2, lubricate the slack adjuster through the grease fitting until clean lubricant flows from the grease relief opening in the boot.
3. Perform the "In Service Inspection."

In Service Inspection

1. Apply and release the brakes several times while observing the slack adjuster. The slack adjuster and brake actuator should move freely, without binding or interference, and should return to the full released position. Observe the looseness that exists between the clevis and adapter bushing and the yoke and link pins and their mating parts (clevis, body, link). Replace these parts if looseness appears excessive. Make certain the brake actuator pushrod jam nut is tightened securely.
2. Inspect the slack adjuster for physical damage, paying attention to the link, boot, and clevis. If any components are damaged, repair or replace them as necessary.
3. Measure the brake actuator pushrod stroke while making an 80 to 90 psi (552 to 621 kPa) brake application. Actuator pushrod strokes should not exceed the values shown in **Table 3** and **Table 4**. To achieve the correct pressure for this test, build the system pressure up to a 100 psi (690 kPa). Shut down the engine. Fan the brakes to attain a 90 to 95 psi (621 to 655 kPa) reading. Make and hold a full brake application while the strokes are checked.

Actuator Stroke–Standard Stroke	
Brake Actuator Size	**Recommended Maximum Operating Stroke (Inches)**
30	2
24	1-3/4
20	1-3/4
16	1-3/4
12	1-3/8

Table 3, Actuator Stroke–Standard Stroke

Actuator Stroke–Long Stroke	
Brake Actuator Size	**Recommended Maximum Operating Stroke (Inches)**
30 Long Stroke	2-1/2
24 Long	2
24 Long Stroke	2-1/2
20 Long	2
16 Long	2

Table 4, Actuator Stroke–Long Stroke

42–12 Bendix Automatic Drain Valve Operating and Leakage Tests

Operating Test

Perform the following test after repairing or replacing the DV-2 valve, to ensure that the valve is functioning properly.

With the system charged, apply the brakes several times. Each time the brakes are applied, an exhaust

https://truckmanualshub.com/

of air should occur from the exhaust port of the drain valve. If no air comes out, push the wire stem located inside the exhaust port. If no air comes out after pushing the wire stem, there may be a plugged filter in the adapter which should be replaced.

If the drain valve does not function properly, repair or replace it. See **Section 42.14** of the *Severe Duty Workshop Manual*.

Leakage Test

Perform the following test after repairing or replacing the DV-2 valve, to ensure that the valve is functioning properly.

With the system charged and pressure stabilized in the system, there should be no leaks at the drain valve exhaust port. A constant slight exhaust of air at the drain valve exhaust port could be caused by excessive leakage in the air brake system.

If the drain valve is leaking excessively, repair or replace it. See **Section 42.14** of the *Severe Duty Workshop Manual*.

https://truckmanualshub.com/

https://truckmanualshub.com/

Index, Alphabetical

Title of Maintenance Operation (MOP)	MOP Number
Drag Link Inspection	46–01
Drag Link Lubrication	46–05
Power Steering Fluid Level Inspection	46–03
Power Steering Fluid and Filter Change	46–02
Power Steering Gear Lubrication	46–04
Safety Precautions	46–00

https://truckmanualshub.com/

https://truckmanualshub.com/

46–00 Safety Precautions

Safety Precautions in this section apply to all procedures within this group.

DANGER

When working on the vehicle, shut down the engine or motor, set the parking brake, and chock the tires. Before working under the vehicle, always place jack stands under the frame rails to ensure the vehicle cannot drop. Failure to follow these steps could result in serious personal injury or death.

46–01 Drag Link Inspection

WARNING

All steering system components are critical for safe operation of the vehicle. Failure to maintain the steering system as specified may result in loss of steering control, which could lead to personal injury and property damage.

Have someone turn the steering wheel from left to right. As the steering wheel is turned, check for looseness between the ball stud and the pitman arm, and between the other ball stud and the steering arm. Check for loose ball stud castle nuts. See **Fig. 1**.

If there is looseness in either ball stud end, replace the drag link. See **Section 46.03** of the *108SD and 114SD Workshop Manual* for replacement instructions. If there is 1/8-inch (3-mm) movement or more, do not drive the vehicle until the drag link is replaced.

If a ball stud nut is loose, replace the nut and cotter pin. See **Section 46.03** of the *108SD and 114SD Workshop Manual* for torque specifications.

Inspect the drag link boots (at both the pitman arm and the steering arm ends) for cracks, splits, or other damage. Replace boots as needed. See **Section 46.03** of the *108SD and 114SD Workshop Manual* for drag link removal and installation instructions.

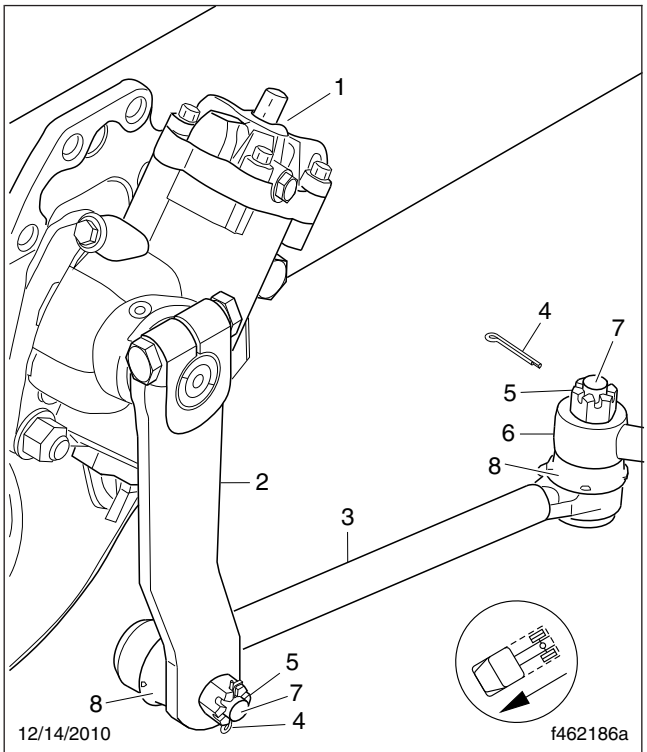

1. Steering Gear
2. Pitman Arm
3. Drag Link
4. Cotter Pin
5. Castle Nut
6. Steering Arm
7. Ball Stud
8. Boot

Fig. 1, Drag Link Assembly

46–02 Power Steering Fluid and Filter Change

WARNING

Fill only with approved clean fluid. Failure to use the proper fluid could cause seal deterioration and leaks. Fluid leaks could eventually cause loss of power steering assist. This could lead to an accident resulting in personal injury or property damage. Wear eye protection when changing the fluid and filter.

1. Park the vehicle on a level surface, shut down the engine, apply the parking brakes, and chock the rear tires.
2. Place a drain pan under the power steering reservoir.

https://truckmanualshub.com/

3. Remove the retaining ring from the reservoir. See **Fig. 2**.

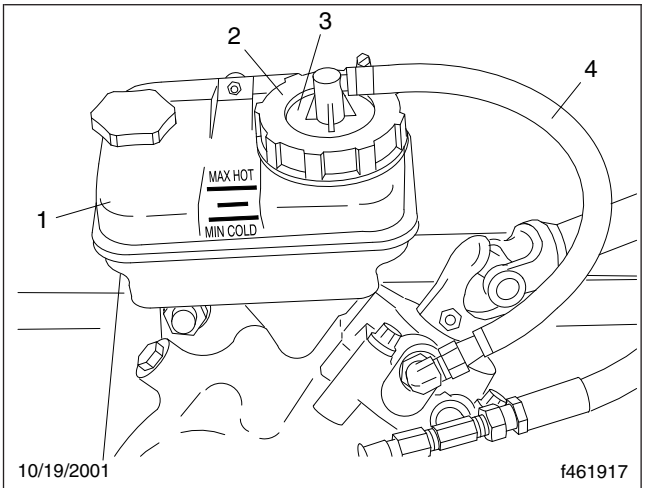

1. Power Steering Reservoir
2. Retaining Ring
3. Filter Cover
4. Return Hose

Fig. 2, Power Steering Reservoir

4. Remove the filter, filter cover, and gasket from the reservoir. Drain the fluid from the filter into the drain pan. Leave the filter hanging over the drain pan.
5. Remove the nuts, bolts, and washers that attach the power steering reservoir to the mounting bracket, but do not remove the supply line to the reservoir. Drain the power steering fluid from the reservoir.
6. Using bolts, nuts, and washers, attach the reservoir to the mounting bracket.
7. Using ATF fluid that meets Dexron III or TES-389 specifications, fill the reservoir to the line between the MIN COLD and MAX HOT lines. See **Fig. 2**.
8. Raise the front of the vehicle and support it with jack stands.
9. Start the engine and operate it at idle. Turn the steering wheel from full left to full right several times until clean fluid starts flowing from the power steering filter. Add fluid to the reservoir to maintain the fluid level between the MIN COLD and MAX HOT lines.
10. Shut down the engine.

NOTE: Always install a new power steering reservoir filter when changing the fluid.

11. Disconnect the filter from the filter cover, and discard the filter.
12. Apply a thin film of power steering fluid on the gasket of the new filter. Then attach the filter to the filter cover. Hand-tighten the filter, then turn it an additional 1/4 turn.
13. Install the filter and filter cover in the reservoir. Make sure that the gasket under the filter cover is not damaged. If the gasket is damaged, replace it. Install the gasket on the reservoir.
14. Attach the retaining ring to the reservoir to secure the filter and filter cover.
15. Start the engine and check that the power steering fluid level is between the MIN COLD and MAX HOT lines. Add more power steering fluid if needed.
16. Raise the vehicle, remove the jack stands, and lower the vehicle.

46–03 Power Steering Fluid Level Inspection

1. Apply the parking brakes and chock the rear tires.
2. With the engine cool, the fluid level should be between the MIN COLD and MAX HOT lines with the engine off.
3. Add or remove fluid as necessary to bring the fluid level to the line between the MIN COLD and MAX HOT lines. Use ATF fluid that meets Dexron III or TES-389 specifications.
4. With the engine hot, the fluid level should be at the MAX HOT ine with the engine off.
5. Add or remove fluid as necessary to bring the fluid level to the MAX HOT line. Use ATF fluid that meets Dexron III or TES-389 specifications.

https://truckmanualshub.com/

46–04 Power Steering Gear Lubrication

TRW TAS and THP Series Sector Shaft

NOTICE

Apply grease to the sector shaft with a hand-type grease gun only. Use of a high-pressure power grease gun will supply grease too quickly and could affect the high pressure seal, contaminating the hydraulic fluid.

Using a hand-type grease gun, apply NLGI Grade 2 or 3 multipurpose chassis grease until it starts to come out past the sector shaft seal. **Fig. 3**.

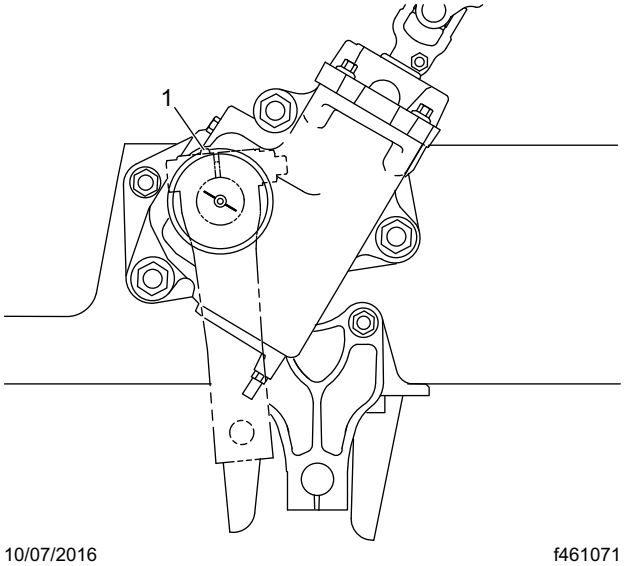

1. Sector Shaft Grease Fitting

Fig. 3, TRW TAS Series Sector Shaft Lubrication

46–05 Drag Link Lubrication

1. Using a clean rag, wipe all dirt from both drag link grease fittings; see **Fig. 4**.
2. Using a grease gun, apply clean grease at the grease fittings until old grease is forced out of the socket. Use multipurpose chassis grease NLGI Grade 2 (8% 12-hydroxy lithium stearate grease) or NLGI Grade 1 (6% 12-hydroxy lithium stearate grease). Grade 2 is preferred.

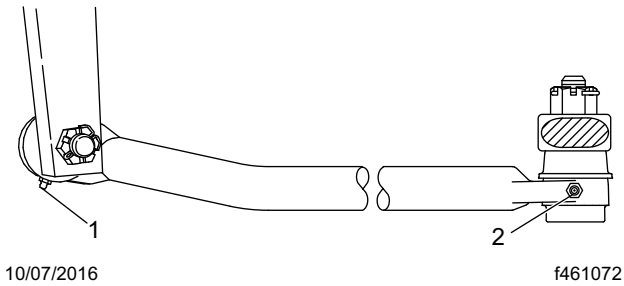

1. Grease Fitting at Pitman Arm
2. Grease Fitting at Axle Steering Arm

Fig. 4, Drag Link

https://truckmanualshub.com/

https://truckmanualshub.com/

Index, Alphabetical

Title of Maintenance Operation (MOP)	MOP Number
CNG Fuel Cylinder Inspection	47–08
CNG Fuel System Inspection	47–06
CNG High-Pressure Fuel Filter Element Replacement	47–07
Fuel Filter Replacement	47–03
Fuel Tank Band Nut Tightening	47–01
Fuel/Water Separator Element Check and Replacement	47–02
LNG Fuel System Inspection	47–04
LNG Vacuum Integrity Test	47–05
Safety Precautions	47–00

https://truckmanualshub.com/

https://truckmanualshub.com/

47–00 Safety Precautions

Safety Precautions in this section apply to all procedures within this group.

⚠ DANGER

When working on the vehicle, shut down the engine or motor, set the parking brake, and chock the tires. Before working under the vehicle, always place jack stands under the frame rails to ensure the vehicle cannot drop. Failure to follow these steps could result in serious personal injury or death.

47–01 Fuel Tank Band Nut Tightening

IMPORTANT: Do not overtighten the nuts.

Rectangular Fuel Tank

Hold the retention nut on the fuel tank band with a wrench while backing off the jam nut. Then tighten the retention nut 13 to 17 lbf·ft (18 to 23 N·m). After the retention nut has been tightened, hold the retention nut with a wrench while tightening the jam nut 13 to 17 lbf·ft (18 to 23 N·m).

Cylindrical Fuel Tank

Hold the retention nut on the fuel tank band with a wrench while backing off the jam nut. Then tighten the retention nut 30 to 35 lbf·ft (41 to 46 N·m). After the retention nut has been tightened, hold the retention nut with a wrench while tightening the jam nut 30 to 35 lbf·ft (41 to 46 N·m).

47–02 Fuel/Water Separator Element Check and Replacement

Alliance/Racor

The only maintenance necessary on an Alliance or Racor fuel/water separator is to replace the filter element.

1. Shut down the engine, apply the parking brakes, and chock the tires. Open the hood.
2. Place a suitable container under the fuel/water separator.

IMPORTANT: When draining fluid from a fuel/water separator, drain the fluid into an appropriate container, and dispose of it properly. Many states now issue fines for draining fuel/water separators onto the ground.

3. Turn the drain plug counterclockwise to open it.
4. When the fuel/water separator is completely drained, turn the drain plug clockwise to close it.

⚠ WARNING

Do not expose the fuel to open fire. Do not work with the fuel system near open flame or intense heat. To do so could cause fire, possibly resulting in serious personal injury or property damage.

5. Disconnect the wiring harnesses from the water-in-fuel sensor and, if equipped, the heater. See **Fig. 1**.
6. Spin off the sight bowl and the filter element as a unit. Remove the O-ring from the top of the filter element.
7. Remove the sight bowl from the filter element. Clean the O-ring seating surface.
8. Apply a thin coating of clean diesel fuel or engine oil to the O-rings.
9. Spin the sight bowl onto the new filter element and then fill the filter element and sight bowl assembly with clean diesel fuel.
10. Spin the entire assembly onto the mounting head and tighten by hand until snug.
11. Connect the wiring harnesses for the water-in-fuel sensor and, if equipped, the heater.
12. Prime the fuel/water separator, as follows.

    If equipped with a primer pump, operate the primer pump until fuel comes out at the drain.

    If not equipped with a primer pump, fill the filter element and sight bowl with clean fuel and crank the engine until it starts.
13. Start the engine and check for leaks.
14. Shut down the engine and repair any leaks.

https://truckmanualshub.com/

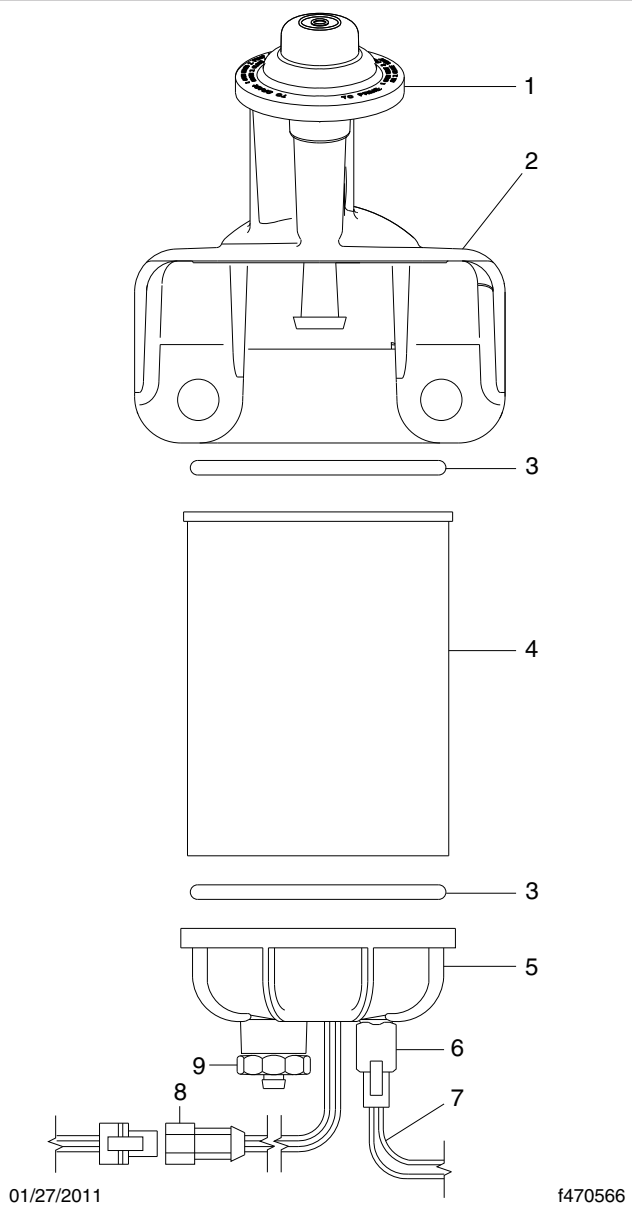

1. Primer Pump
2. Mounting Head
3. O-Ring
4. Filter Element
5. Sight Bowl
6. Water-in-Fuel Sensor
7. Wiring Harness, Water-in-Fuel Sensor
8. Wiring Harness, Heater
9. Drain Plug

Fig. 1, Alliance Fuel/Water Separator Assembly

DAVCO Fuel Pro® 382 and 482

NOTE: In the event of an emergency, when the filter needs replacement but a DAVCO filter is not available, a temporary filter can be used; see Chapter 24 of the *108SD and 114SD Driver's Manual* for instructions.

⚠ WARNING

Fluid circulated through the fuel/water separator to heat the fuel may be diesel fuel returned from the engine, or engine coolant. Drain the fuel/water separator only when the engine and fluids have cooled. Draining it when the engine is hot could cause severe personal injury due to scalding.

If returning fuel is released into the atmosphere, its vapors can ignite in the presence of any ignition source. Do not expose the fuel to, or work with the fuel system near, open flame or intense heat. To do so could cause fire, possibly resulting in serious personal injury or property damage.

The filter element should be changed only when the fuel level has reached the top of the filter element. There is no significant restriction to fuel flow until the element is completely clogged.

1. Shut down the engine, apply the parking brake, and chock the tires.
2. Check the fuel level in the fuel filter. Replace the fuel/water separator element **only** when the filter element is completely covered. If the fuel level has reached the top of the filter element, follow the procedure below to replace the element.
3. Put a clean receptacle under the fuel/water separator and attach a piece of hose to the drain valve, to direct fuel into the receptacle.

   The drain valve has a 1/2-inch (12.7-mm) pipe; use a hose with a 1/2-inch pipe thread to fit correctly.
4. Remove the vent cap (**Fig. 2**, Item 10) and open the drain valve (**Fig. 2**, Item 1) to drain the fuel completely, then close the drain valve.
5. Using a DAVCO Collar Wrench (**Fig. 3**), remove the clear cover and collar.

NOTE: Broken vent cap and collar warranty claims will not be accepted if any tool other than a DAVCO Collar Wrench is used for removal.

https://truckmanualshub.com/

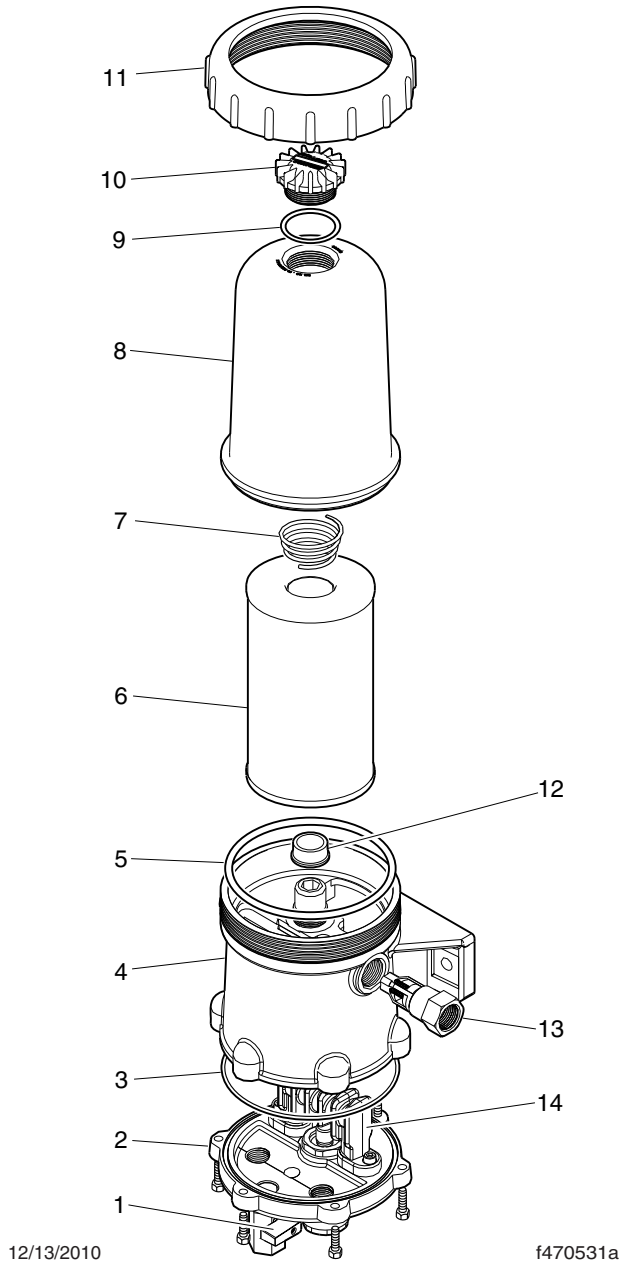

1. Drain Valve
2. Bottom Plate Assembly
3. Bottom Plate O-Ring
4. Lower Housing
5. Cover O-Ring
6. Filter Element
7. Spring
8. Clear Cover
9. Vent Cap O-Ring
10. Vent Cap
11. Collar
12. Grommet
13. Inlet Port/Check Valve
14. Heat Exchanger

Fig. 2, DAVCO Fuel Pro 382

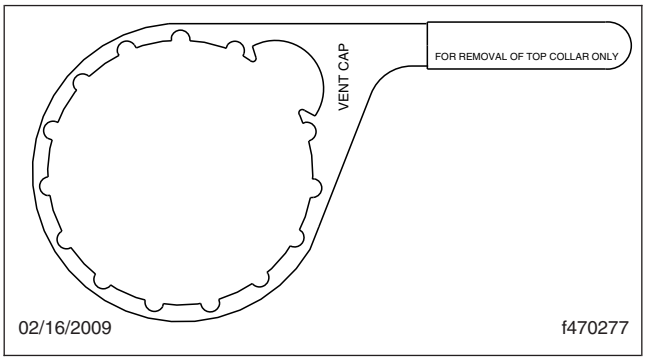

Fig. 3, DAVCO Collar Wrench

During installation, the vent cap is to be **hand-tightened only**, not tightened with a wrench. Use part number 482017 on Fuel Pro 482 units; part number 380134 on Fuel Pro 382 units.

6. Remove the filter, cover O-ring, and vent cap O-ring. Dispose of them in an environmentally acceptable manner. See **Fig. 2** or **Fig. 4.**
7. Clean all threads and sealing surfaces very thoroughly. Even a small amount of dirt will prevent the fuel/water separator from sealing, and an air leak may result.
8. On Fuel Pro 382 units, install the grommet on the bottom of the new filter.
9. Install the new filter and grommet assembly and cover O-ring on the housing.
10. Install the clear cover and the collar. Simultaneously apply downward pressure to the top of the clear cover until it is seated on the body of the lower housing and hand tighten the collar until it no longer spins freely. Using the collar wrench, tighten the cover 18 lbf·ft (24 N·m). This is equivalent to rotating the collar clockwise two or three additional ribs, depending on the specific filter model.
11. Prime the system.
    - 11.1 Ensure that the drain valve is closed.
    - 11.2 Fill the housing to the top of the filter element with clean diesel fuel.
    - 11.3 Install and hand-tighten the vent cap O-ring and vent cap.
    - 11.4 Start the engine. When the lubricating oil reaches its normal operating pressure,

https://truckmanualshub.com/

increase engine speed to high idle for one to two minutes to purge air from the system.

11.5 While the engine is running, and after the air is purged from the system, loosen the vent cap until the fuel level falls to about one inch (2.5 cm) above the collar, then hand-tighten the vent cap.

11.6 Check for leaks and shut down the engine.

DAVCO Fuel Pro® 487

⚠ WARNING

Fluid circulated through the fuel/water separator to heat the fuel may be diesel fuel returned from the engine, or engine coolant. Drain the fuel/water separator only when the engine and fluids have cooled. Draining it when the engine is hot could cause severe personal injury due to scalding.

If returning fuel is released into the atmosphere, its vapors can ignite in the presence of any ignition source. Do not expose the fuel to, or work with the fuel system near, open flame or intense heat. To do so could cause fire, possibly resulting in serious personal injury or property damage.

1. Shut down the engine, apply the parking brake, and chock the tires.
2. Check the fuel level in the fuel filter. Replace the fuel/water separator element **only** when the filter element is completely covered. If the fuel level has reached the top of the filter element, follow the procedure below to replace the element.
3. Put a clean receptacle under the fuel/water separator and attach a piece of hose to the drain valve, to direct fuel into the receptacle.

   On older models, the drain valve has a 1/2-inch (12.7-mm) pipe with threads. Use a hose with a 1/2-inch pipe thread to fit correctly and open the drain valve by turning it one-quarter revolution.

   On new models, the drain valve has a 3/4-inch (19-mm) slip-on hose connection; pipe threads are no longer used. Open the drain valve by turning it one to one-and-a-half revolutions.
4. Remove the vent cap, shown in **Fig. 5**, to drain the fuel completely, then close the drain valve.

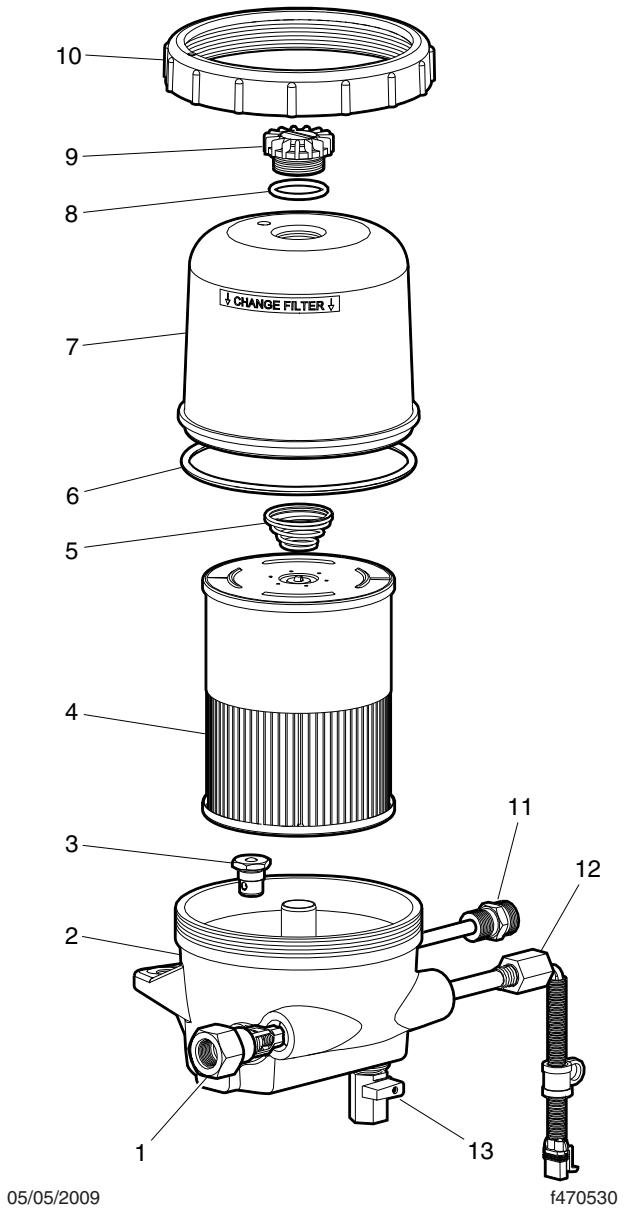

1. Inlet Port/Check Valve
2. Lower Housing
3. Bypass Valve
4. Filter Element
5. Spring
6. Clear Cover O-Ring
7. Clear Cover
8. Vent Cap O-Ring
9. Vent Cap
10. Lower Housing Collar
11. 120VAC Pre-Heater
12. 12VDC Pre-Heater
13. Drain Valve

Fig. 4, DAVCO Fuel Pro 482

https://truckmanualshub.com/

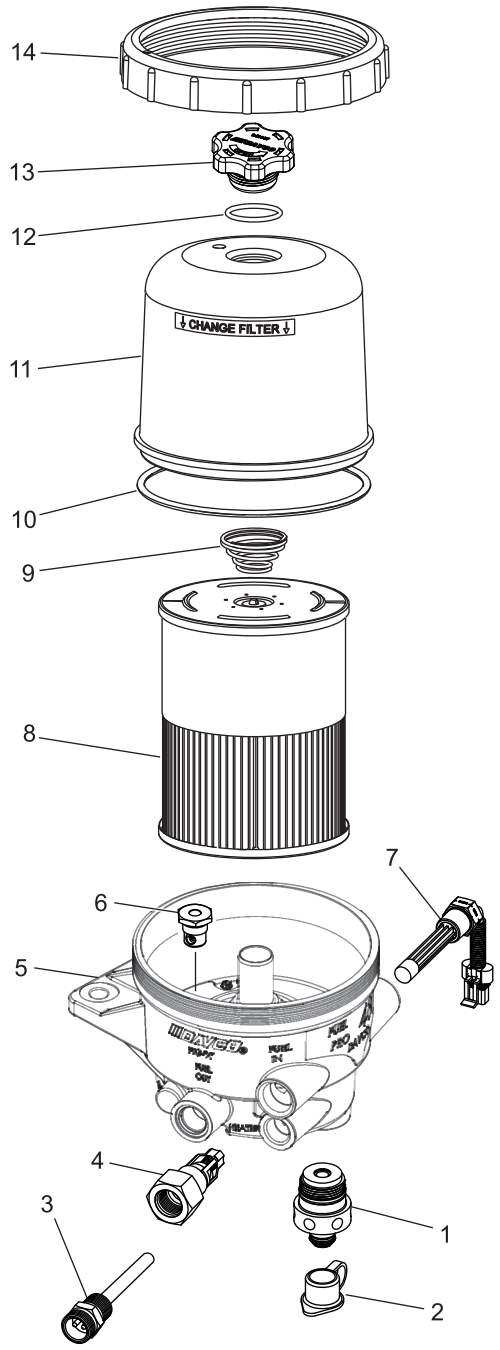

10/31/2017 f470707

1. Drain Valve
2. Drain Valve Cap
3. 120VAC Pre-Heater
4. Inlet Port/Check Valve
5. Lower Housing
6. Bypass Valve
7. 12VDC Pre-Heater
8. Filter Element
9. Spring
10. Cover O-Ring
11. Clear Cover
12. Vent Cap O-Ring
13. Vent Cap
14. Collar

Fig. 5, DAVCO Fuel Pro 487

5. Using a DAVCO Collar Wrench, shown in **Fig. 3**, remove the clear cover and collar.

NOTE: Broken vent cap and collar warranty claims will not be accepted if any tool other than a DAVCO Collar Wrench (part number 482017) is used for removal. During installation, the vent cap is to be **hand-tightened only**, not tightened with a wrench.

6. Remove the filter, cover O-ring, and vent cap O-ring. Dispose of them in an environmentally acceptable manner. See **Fig. 5.**
7. Clean all threads and sealing surfaces very thoroughly. Even a small amount of dirt will prevent the fuel/water separator from sealing, and an air leak may result.
8. Install the new filter and grommet assembly and cover O-ring on the housing.

   Position the filter element so the key is lined up with the keyway on the separator plate of the housing. Use the arrow on the top of the endplate to align the filter. See **Fig. 6**. Ensure the filter element is fully seated by firmly pushing on the endplate. The filter should not rotate freely.

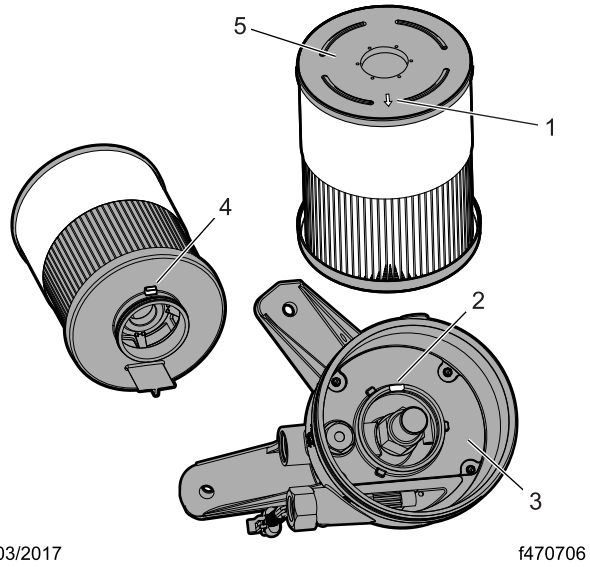

10/03/2017 f470706

1. Arrow (on the endplate)
2. Keyway
3. Separator Plate
4. Key
5. Endplate

Fig. 6, Positioning the Filter Element

https://truckmanualshub.com/

9. Install the clear cover and the collar. Simultaneously apply downward pressure to the top of the clear cover until it is seated on the body of the lower housing and hand tighten the collar until it no longer spins freely. Using the collar wrench, tighten the cover 18 lbf·ft (24 N·m). This is equivalent to rotating the collar clockwise two or three additional ribs, depending on the specific filter model.
10. Prime the system
    - 10.1 Ensure that the drain valve is closed.
    - 10.2 Fill the housing to the top of the filter element with clean diesel fuel.
    - 10.3 Install and hand-tighten the vent cap O-ring and vent cap.
    - 10.4 Start the engine. When the lubricating oil reaches its normal operating pressure, increase engine speed to high idle for one to two minutes to purge air from the system.
    - 10.5 While the engine is running, and after the air is purged from the system, loosen the vent cap until the fuel level falls to just above the collar, then hand-tighten the vent cap.
    - 10.6 Check for leaks and shut down the engine.

Detroit

The only maintenance necessary on an Detroit fuel/water separator is to replace the filter element. See **Fig. 7**.

⚠ WARNING

Fluid circulated through the fuel/water separator to heat the fuel may be diesel fuel returned from the engine, or engine coolant. Drain the fuel/water separator only when the engine and fluids have cooled. Draining it when the engine is hot could cause severe personal injury due to scalding.

If returning fuel is released into the atmosphere, its vapors can ignite in the presence of any ignition source. Do not expose the fuel to, or work with the fuel system near, open flame or intense heat. To do so could cause fire, possibly resulting in serious personal injury or property damage.

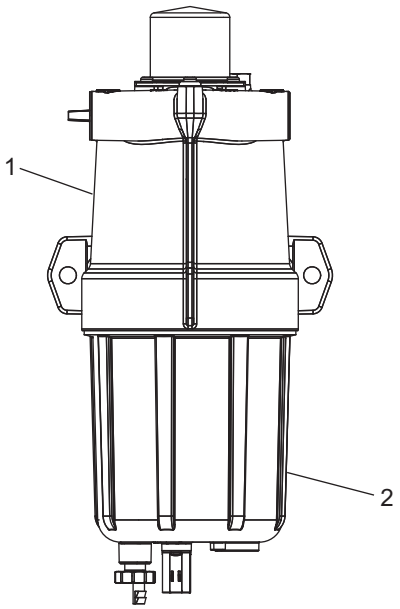

06/09/2016 f470689

1. Mounting Head 2. Sight Bowl

Fig. 7, Detroit Fuel/Water Separator

1. Drain off some fuel by loosening the vent plug and opening the drain valve.
2. Disconnect the water sensor and heater connections if equipped.
3. Remove the bowl by turning counterclockwise.
4. Remove the element, bowl O-ring, and element o-ring. Dispose of them in an environmentally acceptable manner.
5. Thoroughly clean all of the threads and sealing surfaces. Even a small amount of dirt will prevent the fuel/water separator from sealing, and an air leak may result.
6. Apply a coating of clean fuel or motor oil to the new O-ring and to the new element o-ring.
7. Insert the new element into the upper housing.

IMPORTANT: Do not use tools to tighten the bowl and element.

8. Spin the bowl onto the onto the upper housing by hand only.
9. Connect the water sensor and heater connectors if equipped.

https://truckmanualshub.com/

10. If equipped with a primer pump, prime the fuel/water separator as follows.
    10.1 Loosen the vent plug. Then operate the primer pump until the fuel purges at the vent plug.
    10.2 Close the vent plug.
11. Start the engine and check for fuel leaks.
12. Shut down the engine and correct any fuel leaks.

47–03 Fuel Filter Replacement

For engine-mounted fuel filter replacement, refer to the engine manufacturer's service manual for removal and installation procedures.

47–04 LNG Fuel System Inspection

WARNING

Natural gas is highly flammable. See the safety precautions listed in Chapter 21 of the *108SD and 114SD Driver's Manual* or *Group 47* of the *108SD and 114SD Workshop Manual*. Failure to observe these precautions could lead to the ignition of the natural gas, which could cause severe bodily injury, death, or property damage.

NOTICE

Do not use a high-pressure washer or steam cleaner on natural gas fuel system plumbing components, as this can introduce moisture and contaminants into the threads of the fittings and damage the sealants.

Gas detection sensors are located on the cab overhead console and in the engine compartment on the frontwall. The sensors are located in high areas, where rising gas vapors will pass by or accumulate. Do not use a high-pressure washer, steam cleaner, or silicone-based chemicals on the gas detection sensors, as this may permanently disable the sensors. When cleaning the vehicle, cover the sensors with a plastic covering. Keep the sensors covered until the area has been cleared of any cleaning fumes. Harsh chemicals and extremely high temperatures may damage the sensor.

The following inspections must be performed by a qualified technician, in accordance with the manufacturer's established inspection criteria.

All tank components should be allowed to defrost before conducting the following inspections.

Fuel Tank and Shroud Inspecting

See **Fig. 8** for fuel tank and shroud component locations.

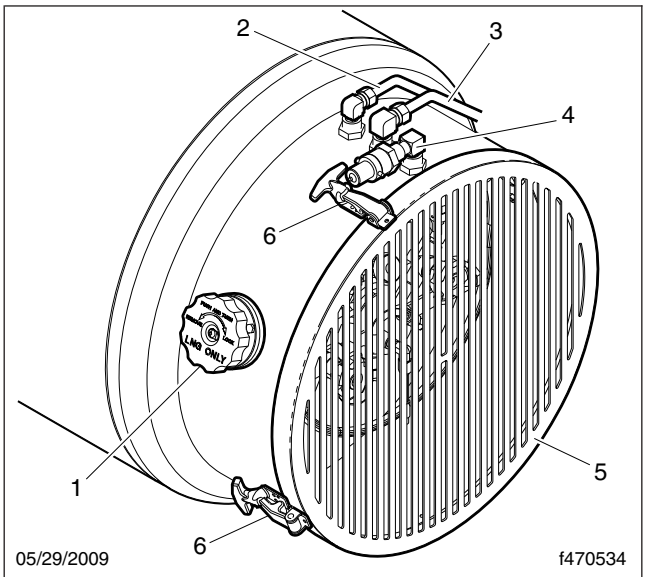

1. Fuel Fill Fitting
2. Fuel Outlet Line (liquid)
3. Primary Relief Vent Line (relief valve)
4. Fill Vent Fitting (vent)
5. Shroud Cover
6. Shroud Cover Latches

Fig. 8, Fuel Tank Outer Shell

1. Inspect the fuel tank outer shell for dents or other signs of damage. Inspect the bottom of the tank for deep scratches, flat spots, or gouges.

   Replace a leaking fuel tank.
2. Ensure that the fuel tank is secured to its mounting brackets and that the mounting brackets are secured to the frame. Inspect for any signs of looseness.

https://truckmanualshub.com/

3. Ensure that all rubber isolator straps are present and secure.
4. Look for signs of abrasion between the fuel tank and mounting brackets.
5. Inspect the fuel fill fitting for signs of damage or leaks. Ensure the fuel fill cap is present and in good condition, and the fitting is mounted securely on the tank.
6. Inspect the fuel outlet line and fitting for signs of leaks or damage.
7. Inspect the primary relief vent and pipe-away line for damage, kinks, chafing, or loose connections.
8. Inspect the fill vent fitting for signs of damage.
9. Inspect the shroud cover for dents or other signs of damage. Ensure that the shroud cover latches are in working condition and fasten the shroud cover securely to the tank.
10. Replace leaking or damaged fuel lines. Repair or replace leaking or damaged fittings.

Plumbing Components Inspecting

See **Fig. 9** for plumbing component locations.

Use a bubble solution to check for leaks while performing the following visual inspection.

1. Check the following components for signs of damage or leaks:
   - pressure control regulator
   - vapor shutoff valve
   - secondary relief valve
   - primary relief valve and threaded connections
   - excess flow valve
   - fuel shutoff valve
   - fill check valve
2. Inspect the fuel fill line for signs of damage, kinked or crushed piping, or chafing.
3. Ensure the red cap is present on the secondary relief valve.
4. Inspect the fuel tank pressure gauge for cracks in the sight glass. Ensure the indicator needle is present and in working condition. Inspect the gauge face for accuracy and legibility.
5. Inspect all vent lines for kinks, and signs of leaks or damage.
6. Replace leaking or damaged fuel lines. Repair or replace leaking or damaged fittings.

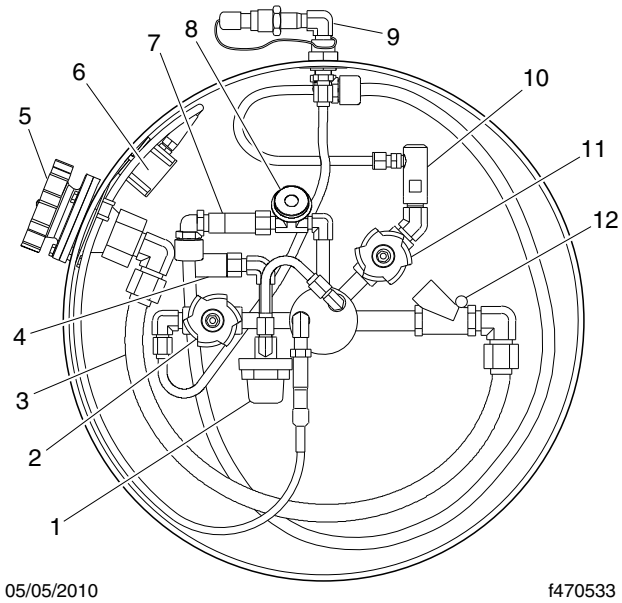

1. Pressure Control Regulator
2. Vapor Shutoff Valve
3. Fuel Fill Hose
4. Secondary Relief Valve (red cap)
5. Fuel Fill Fitting
6. Fuel Level Sender Box
7. Primary Relief Valve
8. Tank Pressure Gauge
9. Fill Vent Fitting
10. Excess Flow Valve
11. Fuel Shutoff Valve (liquid)
12. Fill Check Valve

Fig. 9, Fuel Tank Plumbing Components

Fuel Level Sender Component Inspecting

1. Inspect the fuel level sender wiring harness for signs of loose connections or damage. Look for cracking or signs of moisture intrusion.
2. Inspect the fuel level sender box (**Fig. 9**, Item 6) for signs of leaks or damage. Ensure that the retainer clips are installed on the mounting ears.
3. Inspect all connectors and wiring for signs of loose connections, damage, or chafing.

https://truckmanualshub.com/

4. Turn the ignition switch to the ON position and check for fuel gauge response.
5. Repair or replace any damaged fuel gauge components.

Vaporizer Inspecting

See **Fig. 10** for plumbing component locations.

4. Inspect all fittings for leaks.
5. Inspect the fuel shutoff solenoid valve for signs of leaks or damage. Inspect the solenoid mounting bracket for looseness.
6. Inspect the overpressure regulator for signs of leaks or damage.

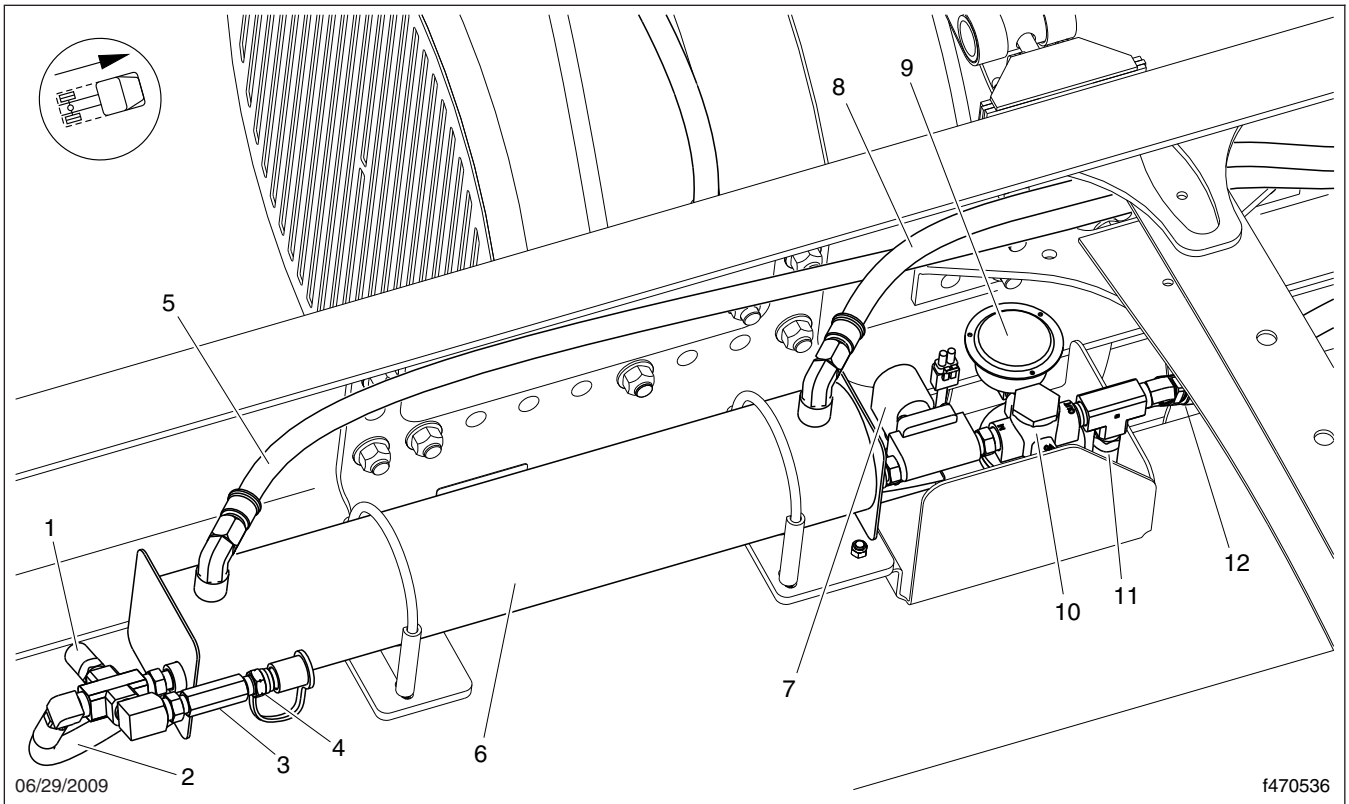

1. Pressure Relief Device
2. Fuel Inlet Line
3. Check Valve
4. CNG Quick-Connect Port
5. Coolant Inlet Line
6. Vaporizer
7. Fuel Shutoff Solenoid Valve
8. Coolant Outlet Line
9. Pressure Gauge
10. Overpressure Regulator
11. Pressure Relief Valve
12. Fuel Outlet Line

Fig. 10, LNG Vaporizer Assembly

1. Ensure that the vaporizer is secured to its mounting brackets and that the mounting brackets are secured to the frame. Inspect for any signs of looseness.
2. Inspect the vaporizer fuel inlet and outlet lines for signs of chafing, damage, or leaks.
3. Inspect the vaporizer coolant hoses for signs of chafing, damage, or leaks.

6.1 Ensure that the regulator is mounted securely.

6.2 Check the overpressure regulator fittings for signs of leaks or damage.

6.3 Ensure that the adjustment handle locking nut (at the bottom of the overpressure regulator) is tightened securely.

https://truckmanualshub.com/

6.4 Inspect the pressure gauge for damage. Ensure that the gauge sight glass is clear and legible.

7. Repair or replace any leaking or damaged vaporizer components.

47–05 LNG Vacuum Integrity Test

WARNING

Natural gas is highly flammable. See the safety precautions listed in Chapter 21 of the *108SD and 114SD Driver's Manual* or *Group 47* of the *108SD and 114SD Workshop Manual*. Failure to observe these precautions could lead to the ignition of the natural gas, which could cause severe bodily injury, death, or property damage.

1. Ensure the fuel tank is between 50 and 75 percent full.
2. Check the fuel tank pressure gauge (**Fig. 9**, Item 8) to ensure that pressure is within the normal range of 120 to 150 psi (827 to 1034 kPa).
3. Inspect the fuel tank for signs of frost spots or outer surface sweating. Frosting or condensation on the outer surface of the fuel tank may indicate a loss of vacuum.
4. Check for a large variance in temperatures between the fuel tank and the fuel tank shroud. A large variance in temperatures between the fuel tank and the shroud may indicate a loss of vacuum.
5. Operate the vehicle for ten minutes. Shut down the engine, apply the parking brakes, and note the time.
6. Wait fifteen minutes after shutting down the engine, then record the fuel tank pressure and note the time.
7. Allow the vehicle to stand for at least eight hours, then record the fuel tank pressure again.
8. Use **Table 1** to determine whether the pressure increase is within an acceptable range.

Vacuum Integrity Test Results	
Pressure Increase Over Eight-Hour Period	**Remedy**
Less than 20 psi (138 kPa)	None – Tank is normal
20 to 50 psi (138 to 345 kPa)	Monitor tank and test vacuum integrity again at next maintenance date
More than 50 psi (345 kPa)	Remove vehicle from service and evacuate the tank per the tank manufacturer's instructions

Table 1, Vacuum Integrity Test Results

47–06 CNG Fuel System Inspection

WARNING

Natural gas is highly flammable. See the safety precautions listed in Chapter 21 of the *108SD and 114SD Driver's Manual* or *Group 47* of the *108SD and 114SD Workshop Manual*. Failure to observe these precautions could lead to the ignition of the natural gas, which could cause severe bodily injury, death, or property damage.

The following inspections must be performed by a qualified technician, in accordance with the manufacturer's established inspection criteria.

NOTICE

Do not use a high-pressure washer or steam cleaner on natural gas fuel system plumbing components, as this can introduce moisture and contaminants into the threads of the fittings and damage the sealants.

Gas detection sensors are located on the cab overhead console and in the engine compartment

https://truckmanualshub.com/

on the frontwall. The sensors are located in high areas, where rising gas vapors will pass by or accumulate. Do not use a high-pressure washer, steam cleaner, or silicone-based chemicals on the gas detection sensors, as this may permanently disable the sensors. When cleaning the vehicle, cover the sensors with a plastic covering. Keep the sensors covered until the area has been cleared of any cleaning fumes. Harsh chemicals and extremely high temperatures may damage the sensor.

Use a bubble solution to check for leaks while performing the following inspection.

1. Inspect the fuel cylinders for dents or other signs of damage.

   Replace any leaking fuel cylinders.

2. Ensure that the fuel cylinders are secured within the fuel cylinder storage box.
3. Ensure that the fuel cylinder storage box is secured to the frame. Inspect for any signs of looseness. If necessary, tighten the storage box mounting bolts 160 lbf·ft (217 N·m). See **Fig. 11**.

NOTE: During initial pre-delivery inspection (PDI), tighten the storage box mounting bolts (shown in **Fig. 11**) 180 lbf·ft (244 N·m).

4. Inspect the fuel fill port for signs of damage or leaks. Ensure the port dust cover and the O-ring inside the port are both present and in good condition. See **Fig. 12**.
5. Inspect the pressure gauges on the fuel box for cracks. Ensure the indicator needles are present and in working condition. Inspect the gauge faces for accuracy and legibility.
6. Ensure blue caps are present on all pressure relief devices. Each fuel cylinder is equipped with two caps (one on each end), which are visible on the back of the CNG fuel cylinder storage box. One cap is located on the pressure relief valve on the inboard side of the CNG fuel box, next to the fuel outlet line. Check the primary relief valve on the inboard side of the CNG fuel box for signs of damage or leaks.
7. Check the following components for signs of damage or leaks:
   - manual fuel shutoff valve
   - fuel cylinder shutoff valves (see **Fig. 13**)

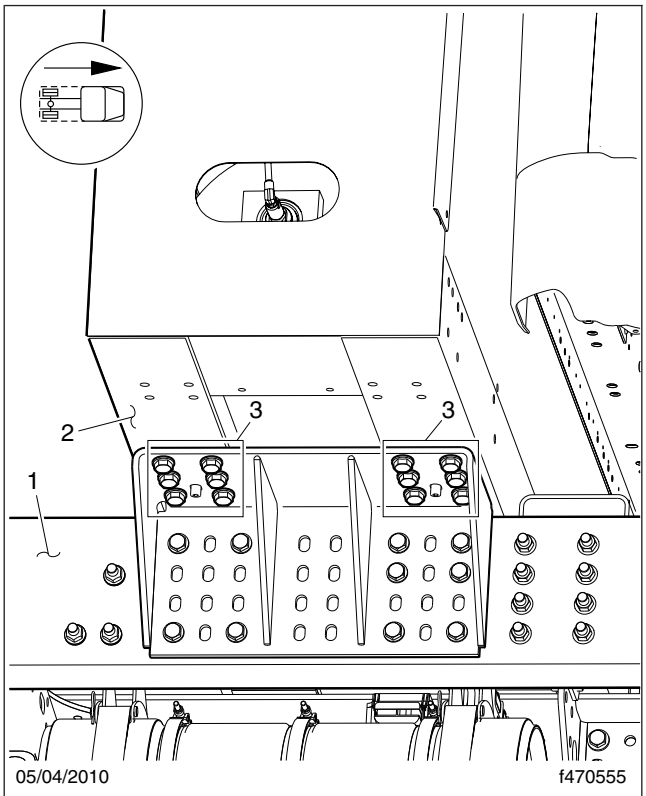

1. Frame Rail
2. CNG Fuel Cylinder Storage Box
3. Mounting Bolts (qty 12 per side)

Fig. 11, Fuel Cylinder Storage Box Mounting Bracket (passenger side shown)

   - coolant hoses and fittings
   - fuel lines and fittings
   - all fittings, connections, and joints
8. Replace leaking or damaged fuel lines. Repair or replace leaking or damaged fittings.

47–07 CNG High-Pressure Fuel Filter Element Replacement

CNG filter element replacement cycles are an important factor in maintaining the CNG fuel system integrity and ensuring maximum operating performance. Actual frequency of the filter element replacement

https://truckmanualshub.com/

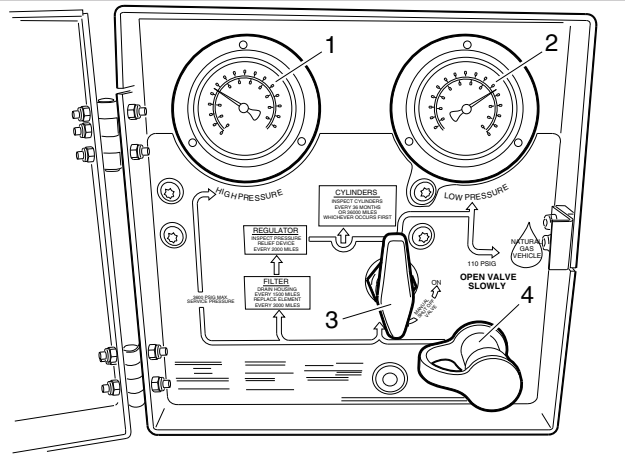

04/30/2010 f470556

1. High Pressure Gauge
2. Low Pressure Gauge
3. Manual Fuel Shutoff Valve
4. Fuel Fill Port and Dust Cap

Fig. 12, CNG Fuel Panel

could increase or decrease depending on the cleanliness of the fill station fueling system.

1. Shut down the engine and apply the parking brake.
2. Close the CNG fuel cylinder shutoff valves.
3. Start the engine and let it idle until the fuel lines are empty and the engine stops. The gauges on the fuel panel should now read at or near 0 psi.
4. Close the manual fuel shutoff valve on the fuel panel.
5. Remove the two capscrews that secure the access cover to the fill panel, then remove the access cover. See **Fig. 14**. Save the capscrews for reinstallation.
6. Slowly open the bleed valve on the manifold to relieve remaining fuel pressure within the system. See **Fig. 15**.

IMPORTANT: Some pressure may remain in the fuel system between the solenoid valve and the engine. Use caution when loosening fittings, as a small amount of gas may leak out.

7. Put a clean receptacle under the filter assembly. Using a 1-1/4-inch wrench, unscrew the filter bowl from the filter housing.

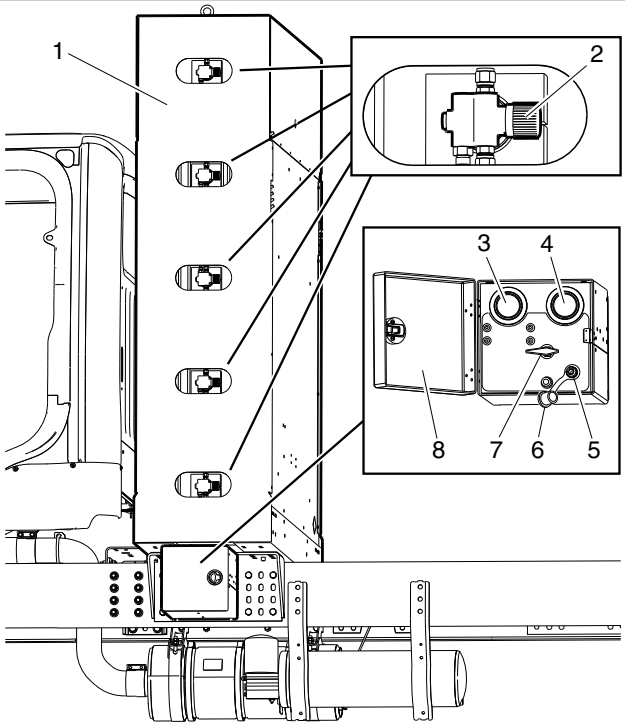

04/22/2010 f470554

1. Fuel Cylinder Storage Box
2. Fuel Cylinder Shutoff Valves (qty 5)
3. High-Pressure Gauge
4. Low-Pressure Gauge
5. Fuel Fill Port
6. Dust Cap
7. Manual Shutoff Valve
8. Fuel Panel Access Door

Fig. 13, CNG Fuel Cylinder Storage Box (5-cylinder system shown)

8. Remove and discard the filter element.
9. Install a new filter element in the filter housing.
10. Inspect the O-ring on the filter housing for damage or cracks. If necessary, replace the O-ring.
11. Install the filter bowl on the filter housing. Tighten 90 lbf·ft (122 N·m).
12. Close the bleed valve on the manifold and open the manual fuel shutoff valve on the fuel panel.
13. Open the fuel cylinder shutoff valves.
14. Using a methane detector, leak test all fuel system components between the fuel cylinders and the solenoid valve. A bubble solution can be used to pinpoint the exact location of leaks.

    Repair or replace any leaking components.

https://truckmanualshub.com/

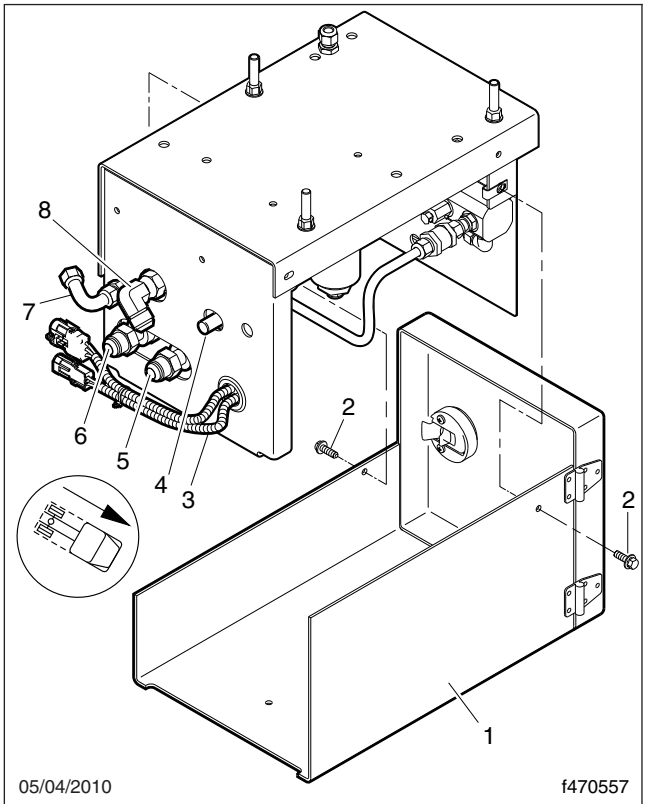

1. Fuel Panel Access Cover
2. Capscrews (qty 2)
3. Wiring Harness
4. Pressure Relief Valve and Cap
5. Coolant Outlet Line
6. Coolant Inlet Line
7. Fuel Inlet Line (to fuel cylinders)
8. Fuel Outlet Line (to engine)

Fig. 14, CNG Fuel Panel Assembly

15. Using the two capscrews removed previously, install the access cover on the fill panel.

47–08 CNG Fuel Cylinder Inspection

Have a qualified inspector inspect compressed natural gas (CNG) fuel cylinders for damage or deterioration. Note cuts, cracks, gouges, abrasions, discoloration, broken fibers, loose brackets, damaged gaskets or isolators, heat damage, or other problems.

Refer to Compressed Gas Assocation (CGA) pamphlet C-6.4, *Methods for External Visual Inspection of*

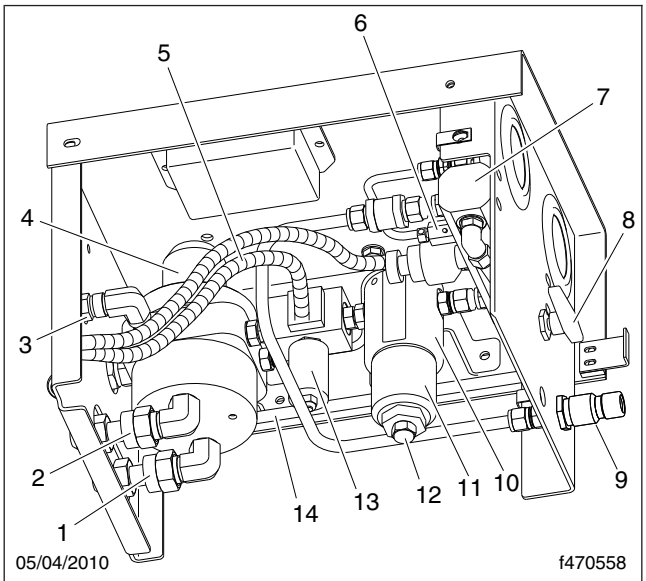

1. Coolant Inlet Port
2. Coolant Outlet Port
3. Pressure Relief Valve
4. Pressure Regulator
5. Wiring Harness
6. Manifold Bleed Valve
7. Manifold
8. Manual Fuel Shutoff Valve
9. Fuel Fill Port
10. Filter Housing
11. Filter Bowl
12. Filter Drain Plug
13. Solenoid Valve
14. Fuel Line To Cylinders

Fig. 15, CNG Fuel Panel Components

Natural Gas Fuel Containers and Their Installations, for inspection requirements and inspector qualifications.

For more information, go to **www.cganet.com**.

After inspection, an accurate and reliable written report should be provided for each container inspected. Place an inspection label stating the inspection date and inspecting agency identification on each container.

https://truckmanualshub.com/

https://truckmanualshub.com/

Index, Alphabetical

Title of Maintenance Operation (MOP)	MOP Number
Exhaust System Inspection (Noise Emission Control)	49–01
Safety Precautions	49–00

https://truckmanualshub.com/

https://truckmanualshub.com/

49–00 Safety Precautions

Safety Precautions in this section apply to all procedures within this group.

⚠ DANGER

When working on the vehicle, shut down the engine or motor, set the parking brake, and chock the tires. Before working under the vehicle, always place jack stands under the frame rails to ensure the vehicle cannot drop. Failure to follow these steps could result in serious personal injury or death.

49–01 Exhaust System Inspection (Noise Emission Control)

In addition to inspecting the exhaust system at the scheduled maintenance interval, inspect the exhaust system if the noise level of the vehicle has increased. Freightliner Trucks recommends replacing parts that show leakage, wear, or damage, with genuine Freightliner parts.

The exhaust system must be free of leaks, binding, grounding, and excessive vibrations. These conditions are usually caused by loose, broken, or misaligned clamps, brackets, or pipes. If any of these conditions exist, check the exhaust system components and alignment. Align or replace as necessary; see **Group 49** of the *108SD and 114SD Workshop Manual*, or take the vehicle to an authorized Freightliner dealer.

It is a violation of US federal law to alter exhaust plumbing or aftertreatment in any way that would bring the engine out of compliance with certification requirements. (Ref: 42 U.S.C. S7522(a) (3).) It is the owner's responsibility to maintain the vehicle so that it conforms to EPA regulations.

EPA10 and Newer Exhaust System

Definitions of Aftertreatment (ATS) Terms

NOTE: Diagrams of ATS configurations are provided later in this chapter. For Detroit Diesel, see **Fig. 1**, **Fig. 2**, and **Fig. 3**. For Cummins, see **Fig. 4**, **Fig. 5**, and **Fig. 6**.

Refer to the following list of definitions of ATS terms and components.

- Aftertreatment System (ATS)—the entire exhaust system from the turbocharger to the exhaust stack or tail pipe.
- Aftertreatment Device (ATD)—a housing that contains the DOC and DPF.
- BlueTec®—Daimler's proprietary SCR technology.
- Diesel Oxidation Catalyst (DOC)—a flow through device located at the ATD inlet that enhances the oxidation of hydrocarbons in order to reduce particulate emissions.
- Diesel Particulate Filter (DPF)—a device installed on a diesel engine system that captures and reduces particulate matter (PM) from the exhaust gas.
- Diesel Exhaust Fluid (DEF)—the chemical agent that reacts with the exhaust gases in the SCR to reduce NOx.
- DEF Pump—filters and supplies DEF to the DEF metering unit.
- DEF Tank—holds DEF and regulates its temperature.
- DEF Metering Unit—mixes DEF with compressed air, and meters this mixture into the exhaust flow via an injection nozzle.
- SCR Catalyst—the housing containing a treated ceramic flow-through block where the DEF and exhaust gases undergo selective catalytic reduction (SCR).
- Selective Catalytic Reduction (SCR)—a process used to reduce NOx emissions.

https://truckmanualshub.com/

Inspection

Model year 2007 and later diesel engines in vehicles domiciled in the U.S. or Canada are required to meet all EPA exhaust gas emission regulations effective per the applicable emission model year and are equipped with an emission aftertreatment system (ATS).

Vehicles domiciled outside of the U.S. and Canada may not have aftertreatment equipment, depending upon local statutory emissions guidelines.

IMPORTANT: The aftertreatment device (ATD), which is part of the aftertreatment system (ATS), requires special attention during regularly scheduled maintenance inspections. No leaks are allowed anywhere in the system. If any discrepancies are discovered, refer to the engine manufacturer's service literature for repair instructions. Also see the engine manufacturer's maintenance literature for maintenance procedures not listed here.

1. Check for leakage at the clamp that attaches the exhaust pipe to the turbocharger exhaust outlet. If leakage exists, tighten the nut on the clamp to the required torque. If leakage persists, install a new clamp.
2. Check the exhaust pipe, bellows, and each exhaust seal clamp for leakage, wear, cracks, or damage. Replace damaged components as needed. If leakage exists at a clamp, tighten the nuts to the required torque. If leakage persists, install a new exhaust seal clamp. Do not reuse seal clamps. Once a seal clamp is loosened or removed, it must be replaced.
3. If present, check the condition of the insulation material around the exhaust pipe between the turbocharger and the ATD.
4. Check the ATD mounting bands for tightness, if installed. Tighten to 30 lbf·ft (41 N·m) if needed. Do not overtighten.
5. Check for leaks around the clamps that attach the ATD in the ATS, and around the clamps that retain the DPF in the ATD.

NOTE: Diesel exhaust fluid creeps, causing white crystals to form around the line fittings. The presence of crystals does not mean the system has a leak. Replacing fittings or troubleshooting components is not necessary unless there is a system failure or a fault code.

6. Check the DEF tank, pump, metering unit, and lines for leaks. See **Section 49.01** of the *108SD and 114SD Workshop Manual* for repair procedures.
7. Check any wires, lines, or hoses within 4 inches (10 cm) of the exhaust system for heat damage. Repair or reroute as needed.

Diesel Exhaust Fluid (DEF) Filter Replacement

The Environmental Protection Agency's 2010 regulations require lower nitrogen oxide (NOx) exhaust emissions. Selective catalytic reduction (SCR) uses diesel exhaust fluid (DEF) to lower NOx emissions in the vehicle exhaust. A filter in the DEF pump prevents clogging of the DEF metering unit injection nozzle.

See the engine manufacturer's maintenance manual for filter replacement intervals; and see **Section 49.01** of the *108SD and 114SD Workshop Manual* for the filter replacement procedure.

https://truckmanualshub.com/

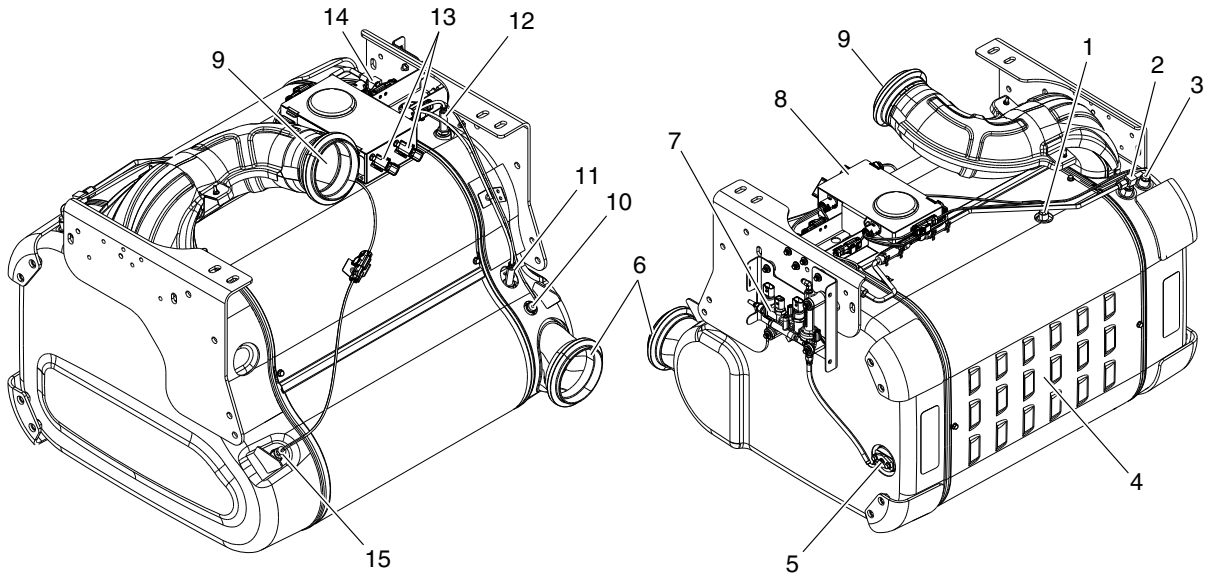

08/20/2009 f490355

NOTE: The sensor box (item 8) contains the SCR inlet and outlet NOx sensors, DPF outlet pressure sensor, and the DOC inlet pressure sensor.

1. DOC Outlet Temperature Sensor
2. DOC Inlet Pressure Sensor Port
3. DOC Inlet Temperature Sensor
4. Front Heat Shield
5. DEF Nozzle
6. Exhaust Outlet
7. DEF Metering Unit
8. Sensor Box (see note above)
9. Exhaust Inlet
10. SCR Outlet Temperature Sensor
11. SCR Outlet NOx Sensor Port
12. SCR Inlet NOx Sensor Port
13. 14-Pin Connectors
14. DPF Outlet Pressure Sensor Port
15. SCR Inlet Temperature Sensor

Fig. 1, Detroit Diesel One-Box ATS (with Sensor Locations)

https://truckmanualshub.com/

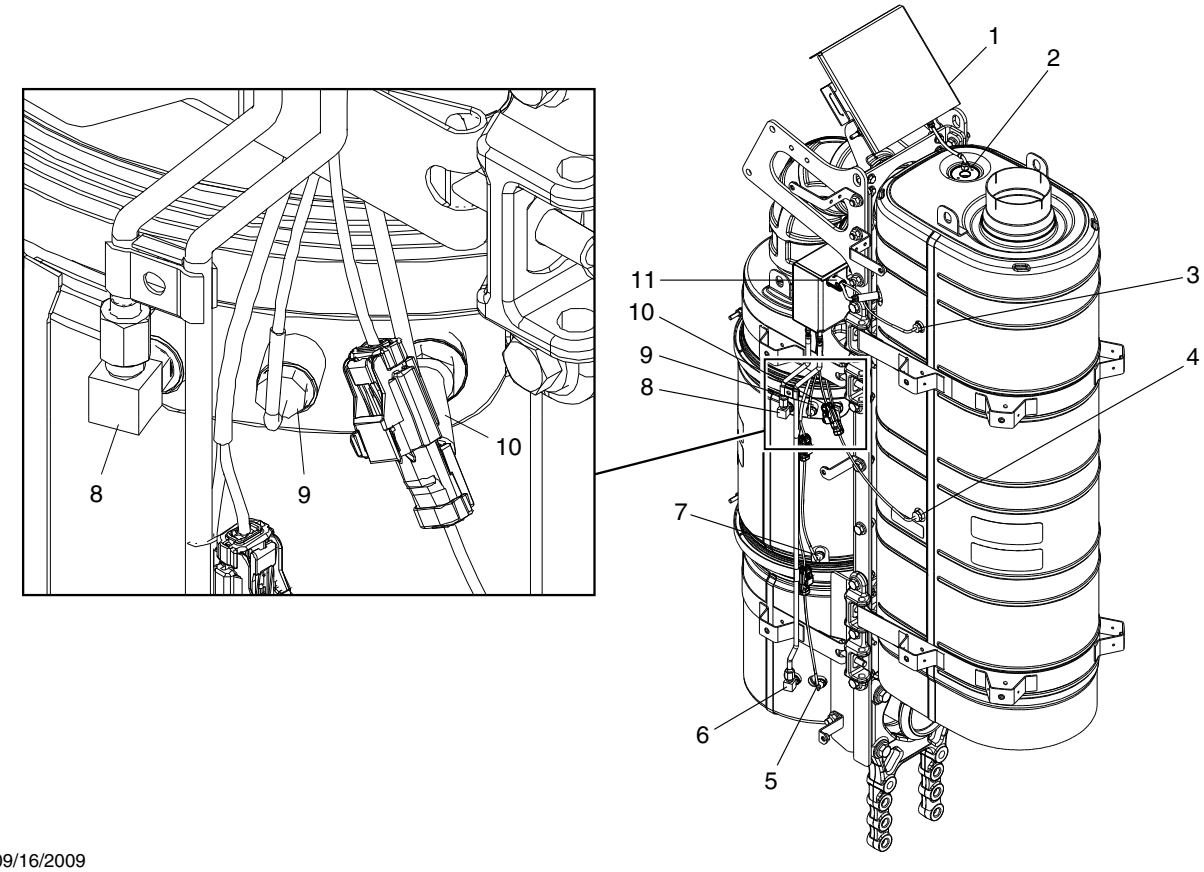

1. DEF Metering Unit
2. DEF Nozzle
3. SCR Outlet Temperature Sensor
4. SCR Inlet Temperature Sensor
5. DOC Inlet Temperature Sensor
6. DOC Inlet Pressure Sensor
7. DPF Inlet Temperature Sensor
8. DPF Outlet Pressure Sensor
9. DPF Outlet Temperature Sensor
10. DPF Outlet NOx Sensor
11. SCR Outlet NOx Sensor

Fig. 2, Detroit Diesel 2V2 Two-Box ATS (with Sensor Locations)

https://truckmanualshub.com/

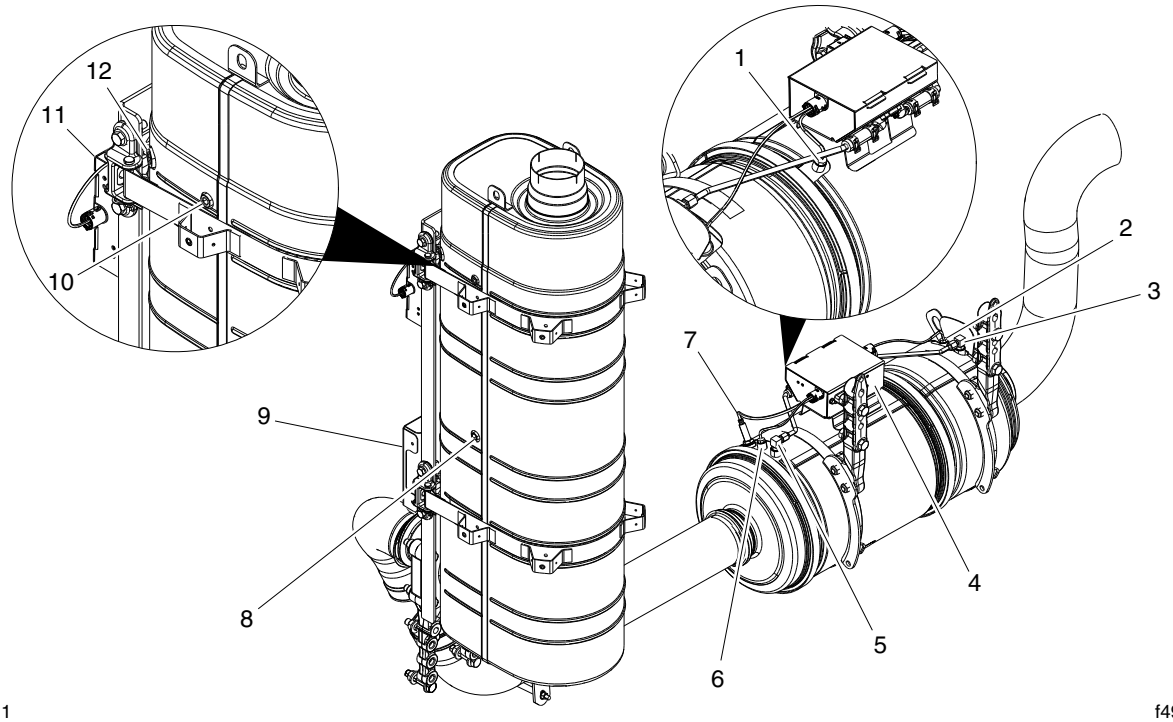

1. DPF Inlet Temperature Sensor
2. DOC Inlet Temperature Sensor
3. DOC Inlet Pressure Sensor
4. DPF Sensor Box
5. DPF Outlet Pressure Sensor
6. DPF Outlet Temperature Sensor
7. DPF Outlet NOx Sensor
8. SCR Inlet Temperature Sensor
9. DEF Metering Unit
10. SCR Outlet Temperature Sensor
11. SCR Sensor Box
12. SCR Outlet NOx Sensor

Fig. 3, Detroit Diesel 2HV Two-Box ATS (with Sensor Locations)

https://truckmanualshub.com/

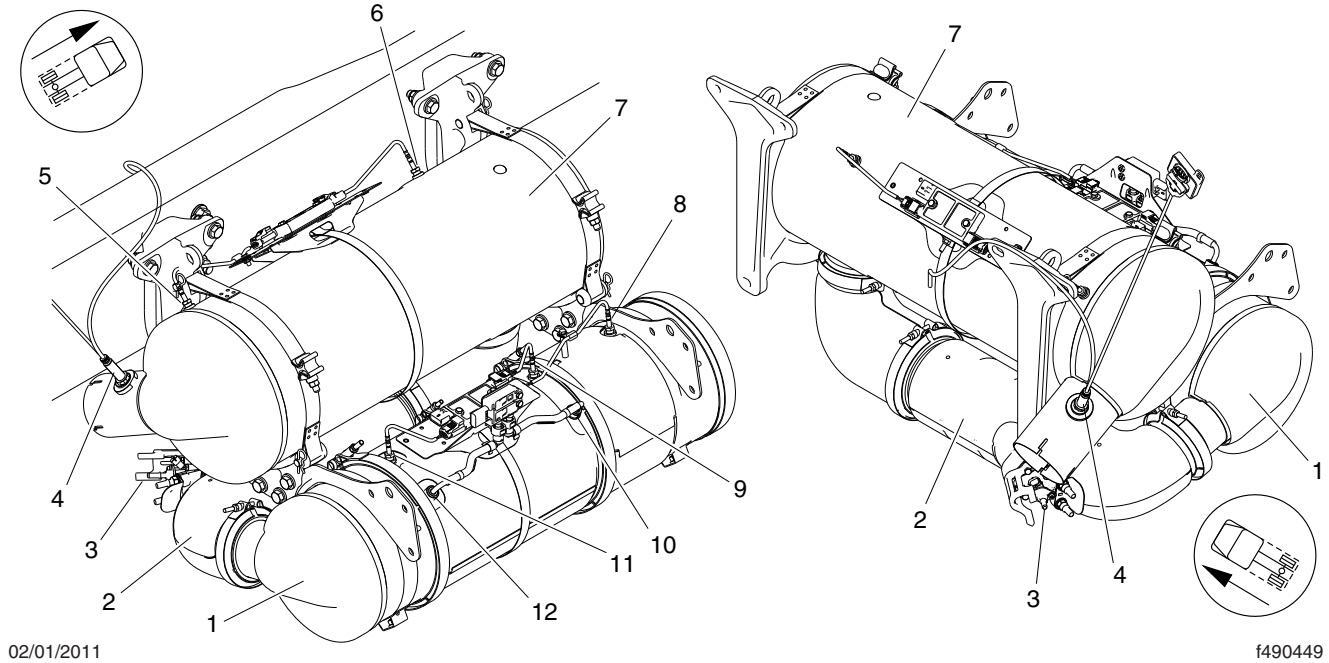

1. ATD
2. Mixer Tube
3. DEF Injector
4. NOx Sensor
5. SCR Outlet Temperature Sensor
6. SCR Inlet Temperature Sensor
7. SCR Catalyst
8. DOC Inlet Temperature Sensor
9. DPF Inlet Temperature Sensor
10. DPF Inlet Pressure Sensor
11. DPF Outlet Temperature Sensor
12. DPF Outlet Pressure Sensor

Fig. 4, Cummins Switchback Understep ATS (with Sensor Locations)

https://truckmanualshub.com/

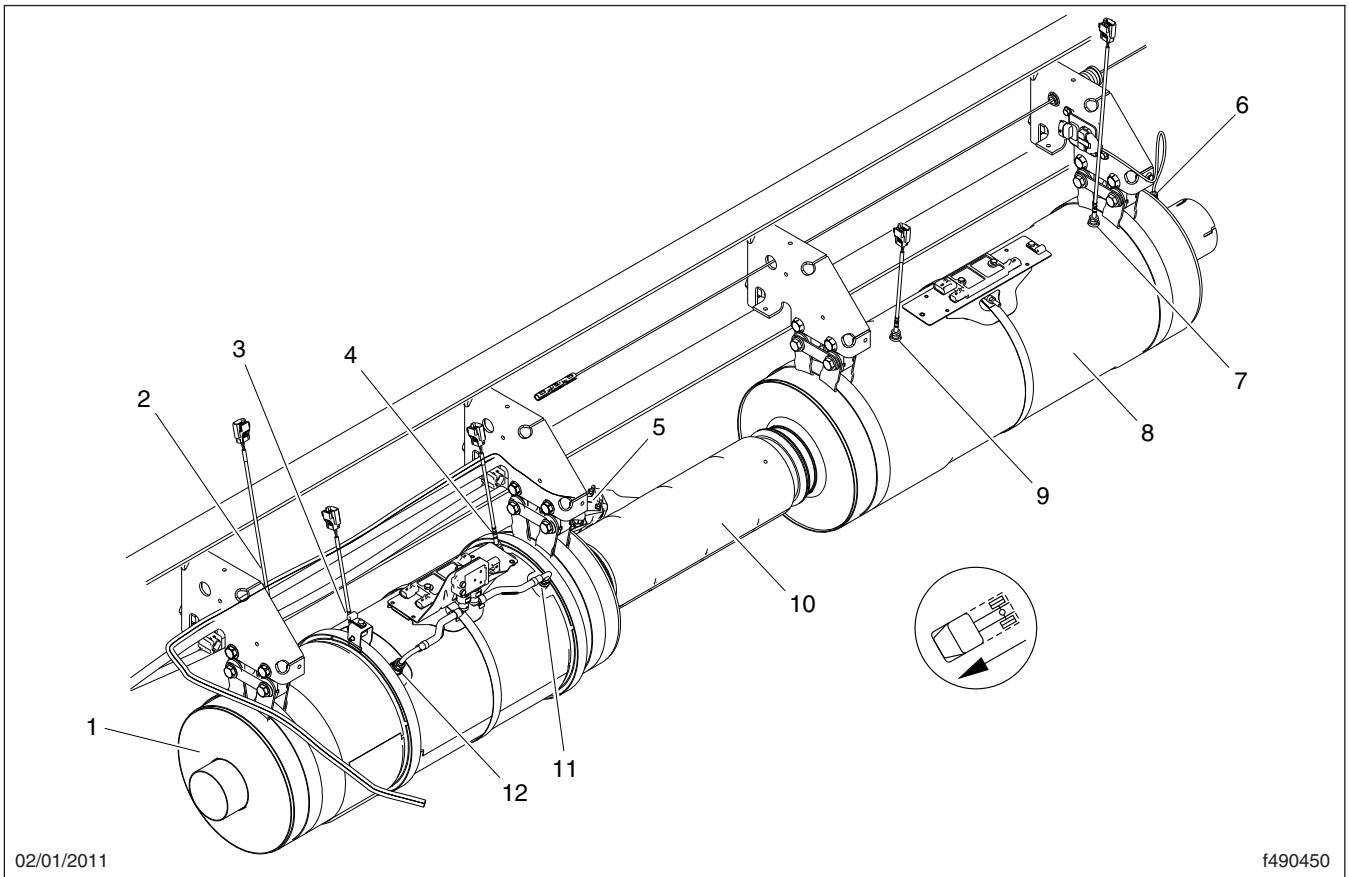

1. ATD
2. DOC Inlet Temperature Sensor
3. DPF Inlet Temperature Sensor
4. DPF Outlet Temperature Sensor
5. DEF Injector
6. NOx Sensor
7. SCR Outlet Temperature Sensor
8. SCR Catalyst
9. SCR Inlet Temperature Sensor
10. Mixer Tube
11. DPF Outlet Pressure Sensor
12. DPF Inlet Pressure Sensor

Fig. 5, Cummins 2HH ATS (with Sensor Locations)

https://truckmanualshub.com/

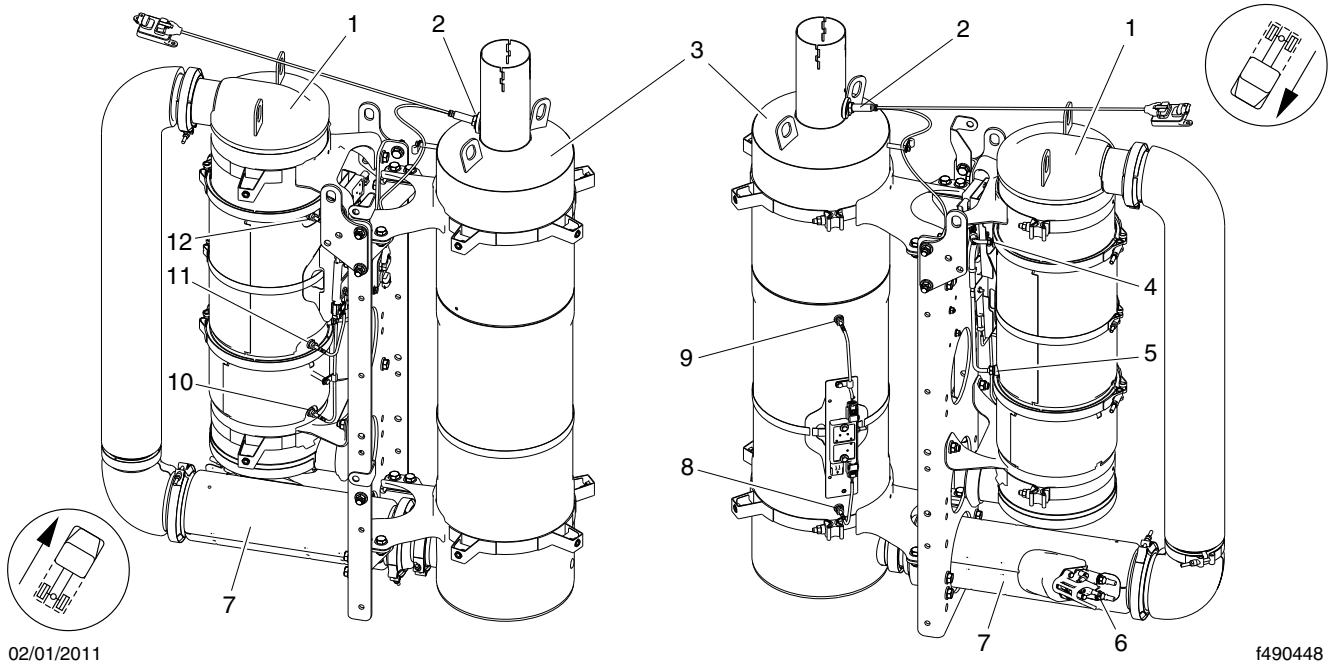

1. ATD
2. NOx Sensor
3. SCR Catalyst
4. DPF Outlet Pressure Sensor
5. DPF Inlet Pressure Sensor
6. DEF Injector
7. Mixer Tube
8. SCR Inlet Temperature Sensor
9. SCR Outlet Temperature Sensor
10. DOC Inlet Temperature Sensor
11. DPF Inlet Temperature Sensor
12. DPF Outlet Temperature Sensor

Fig. 6, Cummins Switchback 2V2 ATS (with Sensor Locations)

https://truckmanualshub.com/

Index, Alphabetical

Title of Maintenance Operation (MOP)	MOP Number
Electrical Component Inspection	54–02
Trailer Cable Inspection and Cleaning	54–01

https://truckmanualshub.com/

https://truckmanualshub.com/

54–01 Trailer Cable Inspection and Cleaning

1. Disconnect the trailer electrical cables from the sockets at the cab.
2. Inspect the cables and sockets for evidence of corrosion, and clean as necessary. If a socket is too badly corroded to clean, replace it. Freightliner recommends also replacing the socket's harness as well, if the corrosion has gotten into the wires and connectors inside the socket.

IMPORTANT: If using a spray cleaner to remove corrosion, be careful to protect any surrounding painted surfaces.

3. Coat the inside of the sockets with a lithium-based dielectric grease such as Lubriplate FLP DS–ES.
4. Connect the cables.

54–02 Electrical Component Inspection

1. Park the vehicle, apply the parking brakes, and shut down the engine. Chock the tires.
2. Disconnect the batteries.
3. Inspect the condition of the electrical component. Check for signs of excess dirt/debris build up on or around component. If exterior cleaning is needed for a thorough inspection, clean exterior debris from the component using a dry method such as a vacuum cleaner or using an electrical contact cleaner such as CRC QD® Electronic Cleaner.
4. Check all mounting points for loose, broken, or missing parts. Component must be securely mounted. All loose, broken, or missing parts must be repaired to maintain proper component function.
5. Inspect the component protective cover for proper fit and function. Inspect cover for cracks, broken mounting, missing sealing surfaces, warped or bulged surfaces. The cover must prevent moisture and debris from entering the components protected area. Missing, leaking, or damaged covers will result in moisture and debris entering the component and will result in component failure. When it is determined that a cover has not properly prevented moisture and debris from entering the component, the entire component must be replaced.
6. Inspect component exterior for signs of thermal distortion, warping, bulging, discoloration, amperage related heating, color variance or shading across component which could be a sign of internal failure requiring replacement of the component. The root source causing conditions of high heat, excess amperage, and/or circuit overload component failures must be diagnosed and repaired prior to replacing the component.
7. Inspect component housing sub-assembly clips and fasteners for correct fit and location and that component sub-assembly housing seams are tight and secure. Missing, leaking, or damaged component housings must be replaced.
8. Check main power cable connections for a clean and secure fit. Connections should be free of corrosion, dirt and moisture. Connections should not have signs of thermal distortion, warping, discoloration, high amperage heating or discoloring. If needed, disconnect cables, scrub and clean as needed using a nylon brush. Clean debris with vacuum or electrical contact cleaner such as CRC QD® Electronic Cleaner, inspect terminals and mating contact terminal plating. If the terminal plating exhibits signs of unrecoverable corrosion, the component and terminal will need replaced. Indications of unrecoverable corrosion on terminal plating are:
   - Heavy staining that cannot be cleaned off with nylon brush or contact cleaner;
   - erosion and pitting on terminal plating causing uneven surfaces; or
   - discoloration caused by outer layer of plating being removed by corrosion or wear exposing the under layer material of terminal.
9. Check all electrical connectors for correct fit and that the connector locking tabs are in place and will hold the connector firmly into the component. Inspect connector terminals for signs of corrosion, thermal distortion, warping, discoloration, high amperage heating or discoloring. If needed, remove connectors and terminals, scrub and clean as needed using a nylon brush. Clean debris with vacuum or electrical contact cleaner

https://truckmanualshub.com/

such as CRC QD® Electronic Cleaner, inspect terminals and mating contact terminal plating. If the terminal plating exhibits signs of unrecoverable corrosion, the component and terminal will need to be replaced.

10. Inspect sealed harness connectors for presence of connector housing seals and connector pin seals designed to keep moisture and debris from entering the connector and component. Missing, leaking, or damaged seals will result in moisture and debris entering the connection and the component and will result in component failure. When it is determined that connector seals have not properly prevented moisture and debris from entering the component, the entire component must be replaced.
11. Inspect component harnesses for secured routing that prevents excess harness movement and prevents the harness from pulling too tight on the connector. Inspect harnesses for signs of rubbing or chafing that could result in wire circuit damage. Damaged wiring and/or damage to harness protective wrap must be repaired and harness must be wrapped and secured to prevent further damage. When possible, harness should be routed with drip loop.
12. Inspect fuses and relays for correct fit, and that the terminals hold the fuses and relays firmly in place. Inspect fuses and relays for signs of corrosion, thermal distortion, warping, discoloration, and high amperage heating or discoloring. If loose or corroded, remove, inspect, clean, and replace as needed.
13. Connect the batteries.

https://truckmanualshub.com/

Index, Alphabetical

Title of Maintenance Operation (MOP)	MOP Number
Aerodynamic Component Inspection	60–02
Mirror Folding Check	60–01

https://truckmanualshub.com/

https://truckmanualshub.com/

60–01 Mirror Folding Check

For vehicles with folding main mirrors, make sure that the mirrors fold freely on the pivot points. Pivot each mirror fully forward and backward two times to break loose any debris that may affect the fold-away feature of the mirror.

60–02 Aerodynamic Component Inspection

Inspect aerodynamic components, if equipped, for structural damage, cracks, or wear. These may include:

- Cab side extenders
- Roof fairing/deflector
- Bumper
- Hood

Replace or repair damaged or missing components as needed.

https://truckmanualshub.com/

https://truckmanualshub.com/

Index, Alphabetical

Title of Maintenance Operation (MOP)	MOP Number
Door Seals Lubrication	72–01

https://truckmanualshub.com/

https://truckmanualshub.com/

72–01 Door Seals Lubrication

NOTE: Only the door seals require lubrication. Do *not* lubricate the door latches or hinges. They come from the manufacturer with lifetime lubrication and require no maintenance.

Lightly coat the door seals with a lubricant that is safe for rubber.

https://truckmanualshub.com/

https://truckmanualshub.com/

Index, Alphabetical

Title of Maintenance Operation (MOP)	MOP Number
Air Conditioner Inspection	83–01
HVAC Air Filter Replacement	83–02
Safety Precautions	83–00

https://truckmanualshub.com/

https://truckmanualshub.com/

83–00 Safety Precautions

Safety Precautions in this section apply to all procedures within this group.

⚠ DANGER

When working on the vehicle, shut down the engine or motor, set the parking brake, and chock the tires. Before working under the vehicle, always place jack stands under the frame rails to ensure the vehicle cannot drop. Failure to follow these steps could result in serious personal injury or death.

83–01 Air Conditioner Inspection

1. With the vehicle parked on a level surface, apply the parking brakes and chock the tires.
2. Operate the heater and, if equipped with an air conditioner, the air conditioner to check for proper operation in all modes.
3. Open the hood.
4. Inspect the refrigerant compressor drive belt for damage. If needed, replace the drive belt.
5. Check the tightness of the compressor mounting fasteners. The torque value for the mounting fasteners is 15 to 19 lbf·ft (20 to 26 N·m).
6. Inspect the drive plate. If the friction surface of the drive plate shows visible signs of damage due to excessive heat, make sure the refrigerant compressor turns freely. If the compressor does turn freely, replace the drive plate and clutch assembly. For instructions, see **Section 83.02, Subject 140** of the *108SD and 114SD Workshop Manual*. If the compressor does not turn freely, replace the compressor. For instructions, see **Section 83.02, Subject 120** of the *108SD and 114SD Workshop Manual*
7. Use a feeler gauge to check that the drive plate clutch clearance is 0.016 to 0.031 inch (0.4 to 0.8 mm). Check the gap at three equally spaced locations on the drive plate, and average the measurements to account for pulley misalignment. If the overall gap is out of spec, remove the drive plate assembly and change the shims as necessary. For instructions, see **Section 83.02, Subject 140** of the *108SD and 114SD Workshop Manual*.
8. Check that the wiring harness connector is not damaged or loose. Replace the wiring harness if it is damaged.
9. Check the overall condition of the air conditioning hoses. Look for cracks, cuts, and abrasions on the hoses. Replace damaged hoses.
10. Check for a buildup of road debris on the condenser fins. Using air pressure and a whisk broom or a soapy spray of water, carefully clean off the condenser. Be careful not to bend the fins.

83–02 HVAC Air Filter Replacement

The HVAC air filter must be replaced every six months or 60,000 miles (97 000 km) to permit proper operation of the HVAC system.

1. With the vehicle parked, apply the parking brakes, and chock the tires.
2. Remove the lower HVAC cover in the cab. For instructions, see **Group 60** of the *108SD and 114SD Workshop Manual*.
3. Disconnect the wiring harness from the evaporator probe.
4. Remove the capscrews that attach the evaporator service cover to the HVAC assembly. Remove the evaporator service cover.
5. Pull the filter out of the HVAC assembly.
6. Install a new filter in the HVAC assembly. Be sure that the arrow on the filter is pointing toward the evaporator. See **Fig. 1**.
7. Remove the condensate seal from the evaporator service cover and install a new condensate seal on the cover.
8. Using capscrews, attach the evaporator service cover to the HVAC assembly.
9. Connect the wiring harness to the evaporator probe.
10. Attach the lower HVAC cover to the dash panel. For instructions, see **Group 60** of the *108SD and 114SD Workshop Manual*.

https://truckmanualshub.com/

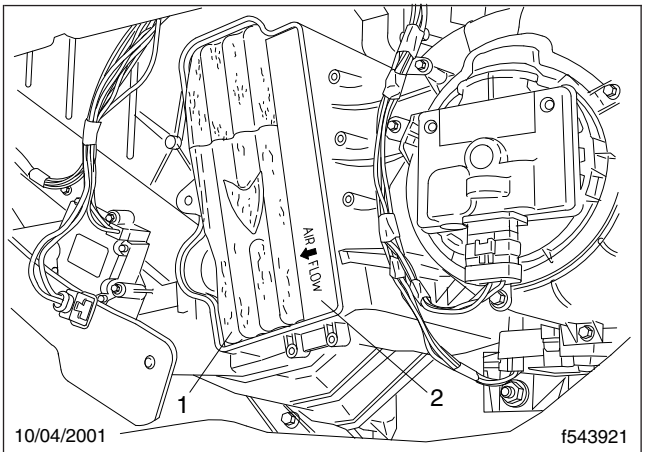

1. Evaporator 2. Filter

Fig. 1, HVAC Assembly Filter

https://truckmanualshub.com/

Index, Alphabetical

Title of Maintenance Operation (MOP) **MOP Number**

Hood Rear Support Lubrication 88–01

https://truckmanualshub.com/

https://truckmanualshub.com/

88–01 Hood Rear Support Lubrication

1. Apply the parking brakes and chock the tires.
2. Open the hood.
3. Clean both the hood- and cab-mounted hood rear support components with a soapy water solution.
4. Cover all contact surfaces of the hood rear support brackets and isolators with an approved multi-purpose, lithium-complex, soap-based grease; see **Table 1**.

Approved Suppliers of Multi-Purpose Lithium Grease	
Supplier	**Grease**
Chevron	Delo Heavy Duty EP
Exxon	Unirex EP2
Mobil	Mobil Grease XHP 222
Shell	Retinax LC Grease
Texaco	Starplex 2

Table 1, Approved Suppliers of Multi-Purpose Lithium Grease

https://truckmanualshub.com/