https://truckmanualshub.com/

FREIGHTLINER
Run Smart™

122SD AND CORONADO 132 MAINTENANCE MANUAL

Models: 122SD
Coronado 132

STI-494-8 (02/03/2022)

Published by
Daimler Truck North America LLC
4747 N. Channel Ave.
Portland, OR 97217
Printed in U.S.A.

https://truckmanualshub.com/

https://truckmanualshub.com/

Foreword

Scheduled maintenance provides a key element for the safe operation of your vehicle. A proper maintenance program also helps to minimize downtime and to safeguard warranties. This maintenance manual provides information necessary for years of safe, reliable, and cost-efficient vehicle operation.

IMPORTANT: The maintenance operations in this manual are **not all-inclusive**. Also refer to other component and body manufacturers' instructions for specific inspection and maintenance instructions. A listing of many OEM websites of vehicle component or system providers can be found in the *122SD and Coronado Workshop Manual*, **Section 00.02**.

Perform the operations in this maintenance manual at scheduled intervals. Perform the pretrip and post-trip inspections, and daily/weekly/monthly maintenance, as outlined in the vehicle driver's manual. Major components, such as engines, transmissions, and rear axles, are covered in their own maintenance and operation manuals, that are provided with the vehicle. Perform any maintenance operations listed at the intervals scheduled in those manuals. Your Freightliner Dealership has the qualified technicians and equipment to perform this maintenance for you. They can also set up a scheduled maintenance program tailored specifically to your needs. Optionally, they can assist you in learning how to perform these maintenance procedures.

IMPORTANT: Descriptions and specifications in this manual were in effect at the time of printing. Freightliner Trucks reserves the right to discontinue models and to change specifications or design at any time without notice and without incurring obligation. Descriptions and specifications contained in this publication provide no warranty, expressed or implied, and are subject to revision and editions without notice.

Refer to **https://northamerica.daimlertruck.com/** and **https://freightliner.com/** for more information, or contact Daimler Truck North America LLC at the address below.

Environmental and Safety Concerns and Recommendations

Whenever you see instructions in this manual to discard materials, you should attempt to reclaim and recycle them. To preserve our environment, follow appropriate environmental rules and regulations when disposing of materials.

Servicing vehicles may result in contact with items known to the state of California to cause harm.

⚠ WARNING

Breathing diesel engine exhaust exposes you to chemicals known to the State of California to cause cancer and birth defects or other reproductive harm.

Always start and operate the engine in a well-ventilated area. If in an enclosed are, vent the exhaust to the outside. Do not modify or tamper with the exhaust system. Do not idle the engine except as necessary.

For more information go to www.P65warnings.ca.gov/diesel.

⚠ WARNING

Cancer and Reproductive Harm www.P65warnings.ca.gov/diesel.

NOTICE: Parts Replacement Considerations

Do not replace suspension, axle, or steering parts (such as springs, wheels, hubs, and steering gears) with used parts. Used parts may have been subjected to collisions or improper use and have undetected structural damage.

https://truckmanualshub.com/

© 2010–2022 Daimler Truck North America LLC

All rights reserved. No part of this publication, in whole or in part, may be translated, reproduced, stored in a retrieval system, or transmitted in any form by any means, electronic, mechanical, photocopying, recording, or otherwise, without the prior written permission of Daimler Truck North America LLC. Daimler Truck North America LLC is a Daimler company.

Daimler Truck North America LLC
Service Systems and Documentation (CVI-SSD)
P.O. Box 3849
Portland, OR 97208–3849

https://truckmanualshub.com/

Descriptions of Service Publications

Daimler Truck North America LLC distributes the following major service publications in paper and electronic formats. Refer to **www.DTNAConnect.com**.

Workshop/Service Manual

Workshop/service manuals contain service and repair information for all vehicle systems and components, except for major components such as engines, transmissions, and rear axles. For service and repair information of major components, refer to the OEM website. A listing of many OEM websites can be found in **Section 00.02** of the workshop/service manual. Each workshop/service manual section is divided into subjects that can include general information, principles of operation, removal, disassembly, assembly, installation, and specifications.

Maintenance Manual

Maintenance manuals contain routine maintenance procedures and intervals for vehicle components and systems. They have information such as lubrication procedures and tables, fluid replacement procedures, fluid capacities, specifications, and procedures for adjustments and for checking the tightness of fasteners. Maintenance manuals do not contain detailed repair or service information.

Driver's/Operator's Manual

Driver's/operator's manuals contain information needed to enhance the driver's understanding of how to operate and care for the vehicle and its components. Each manual contains a chapter that covers pretrip and post-trip inspections, and daily, weekly, and monthly maintenance of vehicle components. Driver's/operator's manuals do not contain detailed repair or service information.

Service Bulletins

Service bulletins provide the latest service tips, field repairs, product improvements, and related information. Some service bulletins are updates to information in the workshop/service manual. These bulletins take precedence over workshop/service manual information, until the latter is updated; at that time, the bulletin is usually canceled. The service bulletins manual is available only to dealers. When doing service work on a vehicle system or part, check for a valid service bulletin for the latest information on the subject.

IMPORTANT: Before using a particular service bulletin, check the current service bulletin validity list to be sure the bulletin is valid.

Parts Technical Bulletins

Parts technical bulletins provide information on parts. These bulletins contain lists of parts and BOMs needed to do replacement and upgrade procedures.

Web-based repair, service, and parts documentation can be accessed using the following applications on the **www.DTNAConnect.com** website.

DTNAConnect

DTNAConnect provides Web-based access to the most up-to-date versions of the publications listed above. In addition, the Service Solutions feature provides diagnostic assistance with Symptoms Search, by connecting to a large knowledge base gathered from technicians and service personnel. Search results for both documents and service solutions can be narrowed by initially entering vehicle identification data.

PartsPro

PartsPro® is an electronic parts catalog system, showing the specified vehicle's build record.

EZWiring

EZWiring™ makes Freightliner, Sterling, Western Star, Thomas Built Buses, and Freightliner Custom Chassis Corporation products' wiring drawings and floating pin lists available online for viewing and printing. EZWiring can also be accessed from within PartsPro.

https://truckmanualshub.com/

Descriptions of Service Publications

Warranty-related service information available on the **www.DTNAConnect.com** website includes the following documentation.

Recall Campaigns Recall campaigns cover situations that involve service work or replacement of parts in connection with a recall notice. These campaigns pertain to matters of vehicle safety. All recall campaigns are distributed to dealers; customers receive notices that apply to their vehicles.

Field Service Campaigns Field service campaigns are concerned with non-safety-related service work or replacement of parts. All field service campaigns are distributed to dealers; customers receive notices that apply to their vehicles.

https://truckmanualshub.com/

Page Description

For an example of a *122SD and Coronado 132 Maintenance Manual* page, see **Fig. 1**.

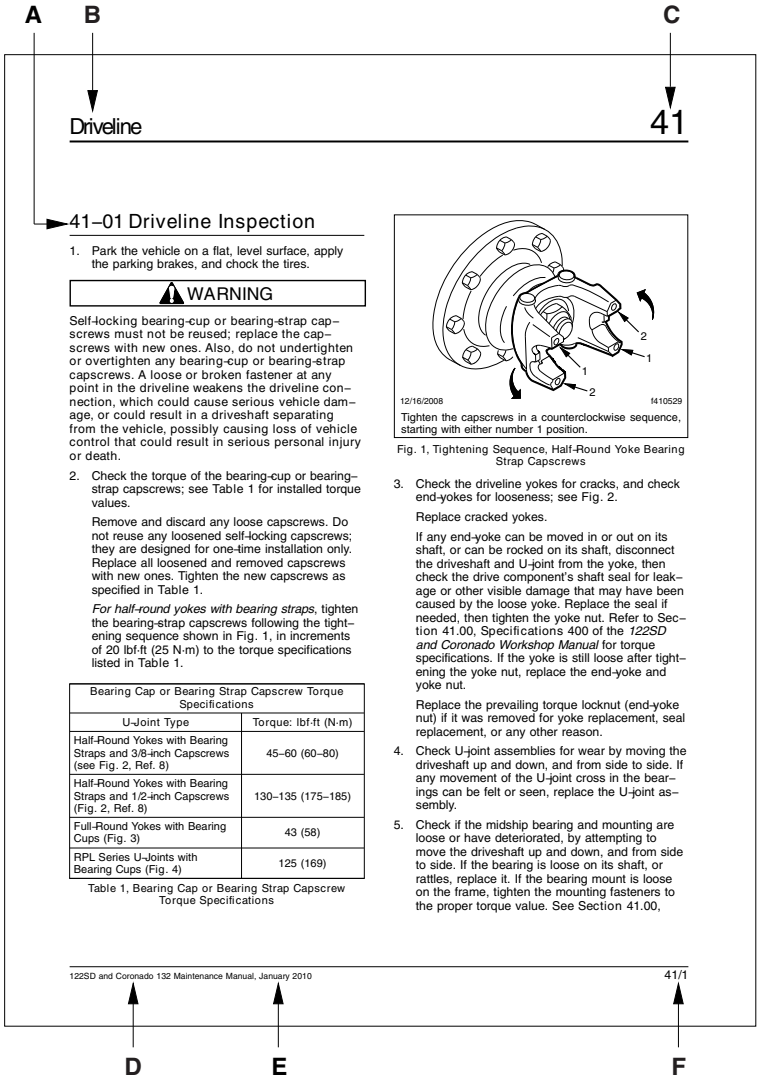

A B C

Driveline 41

41–01 Driveline Inspection

1. Park the vehicle on a flat, level surface, apply the parking brakes, and chock the tires.

WARNING

Self-locking bearing-cup or bearing-strap cap–screws must not be reused; replace the cap–screws with new ones. Also, do not undertighten or overtighten any bearing-cup or bearing-strap capscrews. A loose or broken fastener at any point in the driveline weakens the driveline con–nection, which could cause serious vehicle dam–age, or could result in a driveshaft separating from the vehicle, possibly causing loss of vehicle control that could result in serious personal injury or death.

2. Check the torque of the bearing-cup or bearing–strap capscrews; see Table 1 for installed torque values.

   Remove and discard any loose capscrews. Do not reuse any loosened self-locking capscrews; they are designed for one-time installation only. Replace all loosened and removed capscrews with new ones. Tighten the new capscrews as specified in Table 1.

   For half-round yokes with bearing straps, tighten the bearing-strap capscrews following the tight–ening sequence shown in Fig. 1, in increments of 20 lbf·ft (25 N·m) to the torque specifications listed in Table 1.

Bearing Cap or Bearing Strap Capscrew Torque Specifications	
U-Joint Type	Torque: lbf·ft (N·m)
Half-Round Yokes with Bearing Straps and 3/8-inch Capscrews (see Fig. 2, Ref. 8)	45–60 (60–80)
Half-Round Yokes with Bearing Straps and 1/2-inch Capscrews (Fig. 2, Ref. 8)	130–135 (175–185)
Full-Round Yokes with Bearing Cups (Fig. 3)	43 (58)
RPL Series U-Joints with Bearing Cups (Fig. 4)	125 (169)

Table 1, Bearing Cap or Bearing Strap Capscrew Torque Specifications

12/16/2008 f410529

Tighten the capscrews in a counterclockwise sequence, starting with either number 1 position.

Fig. 1, Tightening Sequence, Half-Round Yoke Bearing Strap Capscrews

3. Check the driveline yokes for cracks, and check end-yokes for looseness; see Fig. 2.

   Replace cracked yokes.

   If any end-yoke can be moved in or out on its shaft, or can be rocked on its shaft, disconnect the driveshaft and U-joint from the yoke, then check the drive component's shaft seal for leak–age or other visible damage that may have been caused by the loose yoke. Replace the seal if needed, then tighten the yoke nut. Refer to Sec–tion 41.00, Specifications 400 of the *122SD and Coronado Workshop Manual* for torque specifications. If the yoke is still loose after tight–ening the yoke nut, replace the end-yoke and yoke nut.

   Replace the prevailing torque locknut (end-yoke nut) if it was removed for yoke replacement, seal replacement, or any other reason.

4. Check U-joint assemblies for wear by moving the driveshaft up and down, and from side to side. If any movement of the U-joint cross in the bear–ings can be felt or seen, replace the U-joint as–sembly.

5. Check if the midship bearing and mounting are loose or have deteriorated, by attempting to move the driveshaft up and down, and from side to side. If the bearing is loose on its shaft, or rattles, replace it. If the bearing mount is loose on the frame, tighten the mounting fasteners to the proper torque value. See Section 41.00,

122SD and Coronado 132 Maintenance Manual, January 2010 41/1

D E F

08/13/2013 f020185

A. Maintenance Operation Number consists of the Group Number followed by the Sequence Number
B. Group Title
C. Group Number
D. Vehicle Names
E. Release Date
F. Group Number/Page Number

Fig. 1, Example of a 122SD and Coronado 132 Maintenance Manual Page

https://truckmanualshub.com/

Maintenance Manual Contents

Group No.	Group Title
00	General Information
01	Engine
09	Air Intake
13	Air Compressor
15	Alternators and Starters
20	Engine Cooling/Radiator
25	Clutch
26	Transmission
31	Frame and Frame Components
32	Suspension
33	Front Axle
35	Rear Axle
40	Wheels and Tires
41	Driveline
42	Brakes
46	Steering
47	Fuel
49	Exhaust
60	Cab
72	Doors
83	Heater and Air Conditioner
88	Hood, Grille, and Cab Fenders

https://truckmanualshub.com/

Index, Alphabetical

Title of Maintenance Operation (MOP)	MOP Number
Determining Scheduled Maintenance Intervals	00–01
Initial Maintenance (IM) Operations	00–03
M1 Maintenance Interval Operations	00–04
M2 Maintenance Interval Operations	00–05
M3 Maintenance Interval Operations	00–06
Noise Emission Controls Maintenance	00–07
Vehicle Maintenance Schedule Tables	00–02
Verification of Inspections Log	00–08

https://truckmanualshub.com/

https://truckmanualshub.com/

Determining Scheduled Maintenance Intervals

Performing regular maintenance on your Freightliner vehicle will help ensure that your vehicle delivers safe reliable service and optimum performance for years to come. Failure to follow a regular maintenance program can result in inefficient operation and unscheduled down time.

Determine the correct maintenance intervals and operations for your vehicle as follows.

1. Using **Table 1**, determine the type of service or conditions the vehicle will be operating in. Generally, most vehicles operate under conditions that fall within one of the four types of service listed.
2. Using **Table 2**, determine how often maintenance should be performed, based on the vehicle's service schedule.
3. When the vehicle reaches the distance (or hours of operation) given for a maintenance interval, as shown in the appropriate table in **Vehicle Maintenance Schedule Tables: 00-02**, see the appropriate Maintenance Interval Operation Table (listed below) for a list of the maintenance operations to be performed.
   - **Initial Maintenance (IM) Operations: 00-03**
   - **M1 Maintenance Interval Operations: 00-04**
   - **M2 Maintenance Interval Operations: 00-05**
   - **M3 Maintenance Interval Operations: 00-06**

   Use the maintenance operation reference numbers in the Maintenance Interval Operation Tables to find detailed instructions in the manual on each operation.

NOTE: Maintenance instructions in this manual are based on average vehicle use and normal operating conditions. Unusual vehicle operating conditions may require service at more frequent intervals.

Types of Service	
Service Schedule	**Service Conditions**
Schedule I * (Severe Service)	Vehicles that annually travel *less than* 6000 miles (10 000 kilometers) *or* that operate under severe conditions. Examples of severe service, Schedule I usage include: • Operation on extremely poor roads or where there is heavy dust accumulation; • Constant exposure to extreme hot, cold, salt-air, or other extreme climates; • Frequent short-distance travel; • Construction-site operation; • City operation (fire truck); • Farm operation.
Schedule II † (Short-Haul Transport)	Vehicles that annually travel *less than* 60,000 miles (100 000 kilometers) and operate under normal conditions. Examples of Schedule II usage are: • Operation primarily in cities and densely populated areas; • Local transport with infrequent freeway travel; • High percentage of stop-and-go travel.
Schedule III† (Long-Haul Transport)	Vehicles that annually travel *more than* 60,000 miles (100 000 kilometers) with minimal city or stop-and-go operation. Examples of Schedule III usage are: • Regional delivery that is mostly freeway miles; • Interstate transport; • Any road operation with high annual mileage.

https://truckmanualshub.com/

Determining Scheduled Maintenance Intervals: 00–01

Types of Service	
Service Schedule	**Service Conditions**
Schedule IV† (Long-Haul Transport for Optimized Vehicle Configuration)	Vehicles that annually travel **over** 60,000 miles (100 000 km) **and** meet the following qualifications: • Meritor 15-1/2 inch dampened/ceramic Lite Pedal LTD clutch with sealed release bearing. • Synthetic transmission fluid used in transmission. • Meritor FF–961 or FF–981 front axle (12,000 lb. capacity) with synthetic lubricant. • Front suspension with maintenance-free rubber bushings for 12,000 lb. capacity suspension. • Meritor RPL series, or Dana Spicer SPL series driveline U-joints. • Synthetic lubricant used in rear axle. • Equipped with any Freightliner AirLiner suspension. • Equipped with Meritor Q-Plus extended-lube cam brakes and automatic slack adjusters, front and rear. • Standard brake system package including Bendix AD-9 air dryer with heater, and a Bendix air compressor. • TRW TAS65 power steering.

* For Schedule I (severe service) vehicles equipped with an hourmeter, use maintenance intervals based on hours of operation rather than distance traveled.

† Use Schedule I (severe service) maintenance intervals for vehicles that operate under severe conditions, such as extremely poor roads, heavy dust accumulation, extreme climate, frequent short distance travel, construction-site operation, city operation (garbage truck), or farm operation.

Table 1, Types of Service

Service Schedule					
Service Schedule	**Maintenance Interval Operation**	**Maintenance Interval**			
		Frequency	**Miles**	**km**	**Hours**
Schedule I (Severe Service)	Initial Maintenance (IM)	first	1000	1600	50
	Maintenance 1 (M1)	every	1000	1600	50
	Maintenance 2 (M2)	every	5000	8000	500
	Maintenance 3 (M3)	every	15,000	24 000	1500
Schedule II (Short-Haul Transport)	Initial Maintenance (IM)	first	10,000	16 000	—
	Maintenance 1 (M1)	every	10,000	16 000	
	Maintenance 2 (M2)	every	50,000	80 000	
	Maintenance 3 (M3)	every	150,000	240 000	
Schedule III (Long-Haul Transport) and **Schedule IV** (Long-Haul Transport for Optimized Vehicle Configuration)	Initial Maintenance (IM)	first	25,000	40 000	—
	Maintenance 1 (M1)	every	25,000	40 000	
	Maintenance 2 (M2)	every	100,000	161 000	
	Maintenance 3 (M3)	every	300,000	483 000	

Table 2, Service Schedule

https://truckmanualshub.com/

Vehicle Maintenance Schedule Tables: 00–02

Maintenance for Service Schedules I and II							
Maint. No.	Maintenance Interval	Service Date	Service Schedule I			Service Schedule II	
			Miles	km	Hours	Miles	km
1	IM and M1		1000	1600	100	10,000	16 000
2	M1		2000	3200	200	20,000	32 000
3	M1		3000	4800	300	30,000	48 000
4	M1		4000	6400	400	40,000	64 000
5	M1 and M2		5000	8000	500	50,000	80 000
6	M1		6000	9600	600	60,000	96 000
7	M1		7000	11 200	700	70,000	112 000
8	M1		8000	12 800	800	80,000	128 000
9	M1		9000	14 400	900	90,000	144 000
10	M1 and M2		10,000	16 000	1000	100,000	160 000
11	M1		11,000	17 600	1100	110,000	176 000
12	M1		12,000	19 200	1200	120,000	192 000
13	M1		13,000	20 800	1300	130,000	208 000
14	M1		14,000	22 400	1400	140,000	224 000
15	M1, M2, and M3		15,000	24 000	1500	150,000	240 000
16	M1		16,000	25 600	1600	160,000	256 000
17	M1		17,000	27 200	1700	170,000	272 000
18	M1		18,000	28 800	1800	180,000	288 000
19	M1		19,000	30 400	1900	190,000	304 000
20	M1 and M2		20,000	32 000	2000	200,000	320 000
21	M1		21,000	33 600	2100	210,000	336 000
22	M1		22,000	35 200	2200	220,000	352 000
23	M1		23,000	36 800	2300	230,000	368 000
24	M1		24,000	38 400	2400	240,000	384 000
25	M1 and M2		25,000	40 000	2500	250,000	400 000
26	M1		26,000	41 600	2600	260,000	416 000
27	M1		27,000	43 200	2700	270,000	432 000
28	M1		28,000	44 800	2800	280,000	448 000
29	M1		29,000	46 400	2900	290,000	464 000
30	M1, M2, and M3		30,000	48 000	3000	300,000	480 000
31	M1		31,000	49 600	3100	310,000	496 000
32	M1		32,000	51 200	3200	320,000	512 000
33	M1		33,000	52 800	3300	330,000	528 000
34	M1		34,000	54 400	3400	340,000	544 000
35	M1 and M2		35,000	56 000	3500	350,000	560 000

https://truckmanualshub.com/

Vehicle Maintenance Schedule Tables: 00–02

Maintenance for Service Schedules I and II							
Maint. No.	Maintenance Interval	Service Date	Service Schedule I			Service Schedule II	
			Miles	km	Hours	Miles	km
36	M1		36,000	57 600	3600	360,000	576 000
37	M1		37,000	59 200	3700	370,000	592 000
38	M1		38,000	60 800	3800	380,000	608 000
39	M1		39,000	62 400	3900	390,000	624 000
40	M1 and M2		40,000	64 000	4000	400,000	640 000
41	M1		41,000	65 600	4100	410,000	656 000
42	M1		42,000	67 200	4200	420,000	672 000
43	M1		43,000	68 800	4300	430,000	688 000
44	M1		44,000	70 400	4400	440,000	704 000
45	M1, M2, and M3		45,000	72 000	4500	450,000	720 000
46	M1		46,000	73 600	4600	460,000	736 000
47	M1		47,000	75 200	4700	470,000	752 000
48	M1		48,000	76 800	4800	480,000	768 000
49	M1		49,000	78 400	4900	490,000	784 000
50	M1 and M2		50,000	80 000	5000	500,000	800 000
51	M1		51,000	82 000	5100	510,000	820 000
52	M1		52,000	83 700	5200	520,000	837 000
53	M1		53,000	85 300	5300	530,000	853 000
54	M1		54,000	86 900	5400	540,000	869 000
55	M1 and M2		55,000	88 500	5500	550,000	885 000
56	M1		56,000	90 100	5600	560,000	901 000
57	M1		57,000	91 700	5700	570,000	917 000
58	M1		58,000	93 300	5800	580,000	933 000
59	M1		59,000	94 900	5900	590,000	949 000
60	M1, M2, and M3		60,000	96 500	6000	600,000	965 000
61	M1		61,000	98 200	6100	610,000	982 000
62	M1		62,000	99 800	6200	620,000	998 000
63	M1		63,000	101 400	6300	630,000	1 014 000
64	M1		64,000	103 000	6400	640,000	1 030 000
65	M1 and M2		65,000	104 600	6500	650,000	1 046 000
66	M1		66,000	106 200	6600	660,000	1 062 000
67	M1		67,000	107 800	6700	670,000	1 078 000
68	M1		68,000	109 400	6800	680,000	1 094 000
69	M1		69,000	111 000	6900	690,000	1 110 000
70	M1 and M2		70,000	112 700	7000	700,000	1 127 000

https://truckmanualshub.com/

Maintenance for Service Schedules I and II							
Maint. No.	Maintenance Interval	Service Date	Service Schedule I			Service Schedule II	
			Miles	km	Hours	Miles	km
71	M1		71,000	114 300	7100	710,000	1 143 000
72	M1		72,000	115 900	7200	720,000	1 159 000
73	M1		73,000	117 500	7300	730,000	1 175 000
74	M1		74,000	119 100	7400	740,000	1 191 000
75	M1, M2, and M3		75,000	120 700	7500	750,000	1 207 000
76	M1		76,000	122 300	7600	760,000	1 223 000
77	M1		77,000	123 900	7700	770,000	1 239 000
78	M1		78,000	125 500	7800	780,000	1 255 000
79	M1		79,000	127 100	7900	790,000	1 271 000
80	M1 and M2		80,000	128 700	8000	800,000	1 287 000
81	M1		81,000	130 400	8100	810,000	1 304 000
82	M1		82,000	132 000	8200	820,000	1 320 000
83	M1		83,000	134 000	8300	830,000	1 340 000
84	M1		84,000	135 200	8400	840,000	1 352 000
85	M1 and M2		85,000	137 000	8500	850,000	1 370 000
86	M1		86,000	138 400	8600	860,000	1 384 000
87	M1		87,000	140 000	8700	870,000	1 400 000
88	M1		88,000	141 600	8800	880,000	1 416 000
89	M1		89,000	143 200	8900	890,000	1 432 000
90	M1, M2, and M3		90,000	144 800	9000	900,000	1 448 000
91	M1		91,000	146 500	9100	910,000	1 465 000
92	M1		92,000	148 100	9200	920,000	1 481 000
93	M1		93,000	150 000	9300	930,000	1 500 000
94	M1		94,000	151 300	9400	940,000	1 513 000
95	M1 and M2		95,000	153 000	9500	950,000	1 530 000
96	M1		96,000	155 000	9600	960,000	1 550 000
97	M1		97,000	156 100	9700	970,000	1 561 000
98	M1		98,000	157 700	9800	980,000	1 577 000
99	M1		99,000	159 300	9900	990,000	1 593 000
100	M1 and M2		100,000	160 900	10,000	1,000,000	1 609 000

Table 3, Maintenance for Service Schedules I and II

https://truckmanualshub.com/

Vehicle Maintenance Schedule Tables: 00–02

Maintenance for Service Schedules III and IV				
Maint. No.	Maintenance Interval	Service Date	Service Schedules III and IV	
			Miles	km
1	IM and M1		25,000	40 000
2	M1		50,000	80 000
3	M1		75,000	121 000
4	M1 and M2		100,000	161 000
5	M1		125,000	201 000
6	M1		150,000	241 000
7	M1		175,000	281 000
8	M1 and M2		200,000	322 000
9	M1		225,000	362 000
10	M1		250,000	402 000
11	M1		275,000	443 000
12	M1, M2, and M3		300,000	483 000
13	M1		325,000	523 000
14	M1		350,000	563 000
15	M1		375,000	604 000
16	M1 and M2		400,000	644 000
17	M1		425,000	684 000
18	M1		450,000	724 000
19	M1		475,000	764 000
20	M1 and M2		500,000	805 000
21	M1		525,000	845 000
22	M1		550,000	885 000
23	M1		575,000	925 000
24	M1, M2, and M3		600,000	966 000
25	M1		625,000	1 005 800
26	M1		650,000	1 046 000
27	M1		675,000	1 086 000
28	M1 and M2		700,000	1 127 000
29	M1		725,000	1 167 000
30	M1		750,000	1 207 000
31	M1		775,000	1 248 000
32	M1 and M2		800,000	1 287 000
33	M1		825,000	1 328 000
34	M1		850,000	1 368 000
35	M1		875,000	1 408 000

https://truckmanualshub.com/

Maintenance for Service Schedules III and IV				
Maint. No.	Maintenance Interval	Service Date	Service Schedules III and IV	
			Miles	km
36	M1, M2, and M3		900,000	1 448 000
37	M1		925,000	1 490 000
38	M1		950,000	1 529 000
39	M1		975,000	1 569 000
40	M1 and M2		1,000,000	1 609 000

Table 4, Maintenance for Service Schedules III and IV

https://truckmanualshub.com/

Initial Maintenance (IM) Operations: 00–03

The Initial Maintenance table lists all maintenance operations that are to be performed at the initial maintenance (IM) interval. Maintenance operation numbers are reference numbers used to help you find detailed instructions in this manual on the maintenance operations to be performed. All operations listed in the table, along with the operations listed in the applicable M1 maintenance interval table, must be performed to complete the initial maintenance (IM).

Maintenance Operation Number	Initial Maintenance (IM) Operations for Service Schedules I, II, III, and IV • Schedule I: at 1000 miles (1600 km) or 50 hours • Schedule II: at 10,000 miles (16 000 km) • Schedule III: at 25,000 miles (40 000 km)	Check
00–04	Perform all M1 Operations	
31–03	Frame Fastener Torque Check	
31–05	Premier 690 Coupling Inspection	
32–03	Suspension U-Bolt Torque Check	
33–06	All-Axle Alignment Check	
40–01	Wheel Nut Check	
42-13	Bendix Automatic Drain Valve Operating and Leakage Tests*	
47–03	Fuel Tank Band-Nut Tightening	

* The automatic drain valve should be inspected every 6 months or 1500 operating hours, whichever comes first.

Table 5, Initial Maintenance (IM) Operations for Service Schedules I, II, III, and IV

https://truckmanualshub.com/

M1 Maintenance Interval Operations: 00–04

The M1 Maintenance Interval Operations tables list all maintenance operations that are to be performed at the M1 maintenance interval. Maintenance operation numbers are reference numbers used to help you find detailed instructions in this manual on the maintenance operations to be performed.

IMPORTANT: After performing all operations listed in this table, perform all daily, weekly, and monthly maintenance operations listed in the "Pretrip and Post-Trip Inspections and Maintenance" chapter of the *122SD and Coronado 132 Driver's Manual*.

Maintenance Operation Number	M1 Maintenance Interval Operations for Service Schedules I, II, and III • Schedule I: every 1000 miles (1600 km) or 50 hours • Schedule II: every 10,000 miles (16 000 km) • Schedule III: every 25,000 miles (40 000 km)	Check
13–01	Air Compressor Inspection	
25–01	Eaton Fuller Heavy-Duty Clutch Release Bearing Lubrication	
26–04	Allison Transmission Fluid and Filter Change (TES 389 or Dexron-VI)	
31–01	Fifth Wheel Inspection	
31–02	Fifth Wheel Lubrication	
31–04	Trailer Electrical Connector Lubrication	
31–05	Premier 690 Coupling Inspection	
32–02	Suspension Lubrication	
33–01	Knuckle Pin Lubrication, Detroit™ and Dana Spicer Axles*	
33–04	Tie Rod Lubrication, Detroit and Dana Spicer Axles*	
33–07	Steer Axle Hub Cap Vent Plug Inspection	
40–02	Tire Check	
41–01	Driveline Inspection	
41–02	Driveline Lubrication	
42–02	Bendix Air Dryer Desiccant Replacement (with an oil-coalescing desiccant cartridge)†	
42–05	Brake Inspection	
42–06	Meritor Camshaft Bracket Lubrication	
42–08	Dana Spicer Camshaft Bracket Lubrication	
42–09	Dana Spicer, Haldex, and Gunite Slack Adjuster Lubrication	
42–11	WABCO System Saver Air Dryer Desiccant Cartridge Replacement†	
42–12	Versajust Slack Adjuster Inspection and Lubrication‡	
42–13	Bendix Automatic Drain Valve Operating and Leakage Tests§	
49–01	Exhaust System Inspection (noise emission control)	
60–02	Aerodynamic Component Inspection	
72–01	Door Seal and Door Latch Lubrication	

https://truckmanualshub.com/

M1 Maintenance Interval Operations: 00–04

Maintenance Operation Number	M1 Maintenance Interval Operations for Service Schedules I, II, and III • Schedule I: every 1000 miles (1600 km) or 50 hours • Schedule II: every 10,000 miles (16 000 km) • Schedule III: every 25,000 miles (40 000 km)	Check
88–01	Hood Rear Support Lubrication	

* For Detroit axles, complete this procedure once a year or at the following applicable interval, whichever comes first: every 5000 miles (8000 km) for Schedule I vehicles; every 25,000 miles (40 000 km) for Schedule II vehicles; or every 100,000 miles (161 000 km) for Schedule III vehicles.

† If equipped with an oil-coalescing desiccant cartridge, replace the cartridge once a year, regardless of mileage. Otherwise use the M3 maintenance interval.

‡ Complete this procedure every 25,000 miles (40 225 km), 3 months, or 500 operating hours, whichever comes first.

§ The automatic drain valve should be inspected every 6 months or 1500 operating hours, whichever comes first.

Table 6, M1 Maintenance Interval Operations for Service Schedules I, II, and III

Maintenance Operation Number	M1 Maintenance Interval Operations for Service Schedule IV • Schedule IV: every 25,000 miles (40 000 km)	Check
13–01	Air Compressor Inspection	
31–01	Fifth Wheel Inspection	
31–02	Fifth Wheel Lubrication	
31–04	Trailer Electrical Connector Lubrication	
31–05	Premier 690 Coupling Inspection	
33–07	Steer Axle Hub Cap Vent Plug Inspection	
40–02	Tire Check	
42–02	Bendix Air Dryer Desiccant Replacement (with an oil-coalescing desiccant cartridge)*	
42–05	Brake Inspection	
42–06	Meritor Camshaft Bracket Lubrication	
42–11	WABCO System Saver Air Dryer Desiccant Cartridge Replacement*	
42–12	Versajust Slack Adjuster Inspection and Lubrication†	
42–13	Bendix Automatic Drain Valve Operating and Leakage Tests‡	
49–01	Exhaust System Inspection (noise emission control)	
60–02	Aerodynamic Component Inspection	
72–01	Door Seal and Door Latch Lubrication	
88–01	Hood Rear Support Lubrication	

* If equipped with an oil-coalescing desiccant cartridge, replace the cartridge once a year, regardless of mileage. Otherwise use the M3 maintenance interval.

† Complete this procedure every 25,000 miles (40 225 km), 3 months, or 500 operating hours, whichever comes first.

‡ The automatic drain valve should be inspected every 6 months or 1500 operating hours, whichever comes first.

Table 7, M1 Maintenance Interval Operations for Service Schedule IV

https://truckmanualshub.com/

M2 Maintenance Interval Operations: 00–05

The M2 Maintenance Interval Operations tables list all maintenance operations that are to be performed at the M2 maintenance interval. Maintenance operation numbers are reference numbers used to help you find detailed instructions in this manual on the maintenance operations to be performed. Perform all M1 maintenance interval operations at the M2 maintenance interval.

Maintenance Operation Number	M2 Maintenance Interval Operations for Service Schedules I, II, and III • Schedule I: every 5000 miles (8000 km) or 500 hours • Schedule II: every 50,000 miles (80 000 km) • Schedule III: every 100,000 miles (161 000 km)	Check
00–04	Perform All M1 Operations	
01–02	Engine Drive Belt Inspection	
15–01	Alternator, Battery, and Starter Connections Check	
20–01	Pressure Relief Cap Check	
20–03	Fan Clutch Check (noise emission control)	
25–02	Clutch Release Cross-Shaft Lubrication	
25–03	Meritor Clutch Release Bearing Lubrication	
26–02	Transmission Fluid Level Inspection	
26–03	Manual Transmission Air Filter/Regulator Check, Cleaning, or Replacement	
26–04	Allison Transmission Fluid and Filter Change (Castrol TranSynd or other TES 295 fluid)	
32–01	Suspension Inspection	
32–03	Suspension U-Bolt Torque Check	
33–02	Knuckle Pin Lubrication, Meritor Axles	
33–03	Tie Rod Inspection	
33–05	Tie Rod Lubrication, Meritor Axles	
35–02	Axle Breather and Axle Lubricant Level Inspection	
40–01	Wheel Nut Check	
42–01	Air Brake System Valve Inspection	
42–03	Air Dryer Inspection	
42–04	Alcohol Evaporator Cleaning and Inspection	
42–07	Meritor Slack Adjuster Lubrication	
46–01	Drag Link Inspection	
46–03	Power Steering Fluid Level Inspection	
46–04	Power Steering Gear Lubrication	
46–05	Drag Link Lubrication	
47–01	Fuel Filter Replacement	
47–02	Fuel/Water Separator Element Checking and Replacement	
60–01	Mirror Folding Check	
83–01	Air Conditioner Inspection	

https://truckmanualshub.com/

M2 Maintenance Interval Operations: 00–05

Maintenance Operation Number	M2 Maintenance Interval Operations for Service Schedules I, II, and III • Schedule I: every 5000 miles (8000 km) or 500 hours • Schedule II: every 50,000 miles (80 000 km) • Schedule III: every 100,000 miles (161 000 km)	Check
83–02	Air Filter Replacement *	

* Replace the HVAC filters every 6 months regardless of mileage, more often if the vehicle is operated under extreme conditions.

Table 8, M2 Maintenance Interval Operations for Service Schedules I, II, and III

Maintenance Operation Number	M2 Maintenance Interval Operations for Service Schedule IV • Schedule IV: every 100,000 miles (161 000 km)	Check
00–04	Perform All M1 Operations	
01–01	Engine Drive Belt Inspection	
15–01	Alternator, Battery, and Starter Connections Check	
20–01	Pressure Relief Cap Check	
20–03	Fan Clutch Check (noise emission control)	
25–02	Clutch Release Cross-Shaft Lubrication	
26–02	Transmission Fluid Level Inspection	
26–03	Manual Transmission Air Filter/Regulator Check, Cleaning, or Replacement	
32–01	Suspension Inspection	
32–03	Suspension U-Bolt Torque Check	
33–02	Knuckle Pin Lubrication, Meritor Axles	
33–03	Tie Rod Inspection	
33–05	Tie Rod Lubrication, Meritor Axles	
35–02	Axle Breather and Axle Lubricant Level Inspection	
40–01	Wheel Nut Check	
41–01	Driveline Inspection	
41–02	Driveline Lubrication	
42–01	Air Brake System Valve Inspection	
42–03	Air Dryer Inspection	
42–04	Alcohol Evaporator Cleaning and Inspection	
46–01	Drag Link Inspection	
46–03	Power Steering Fluid Level Inspection	
46–04	Power Steering Gear Lubrication	
46–05	Drag Link Lubrication	
47–01	Fuel Filter Replacement	
47–02	Fuel/Water Separator Element Checking and Replacement	
60–01	Mirror Folding Check	
83–01	Air Conditioner Inspection	

https://truckmanualshub.com/

M2 Maintenance Interval Operations: 00–05

Maintenance Operation Number	M2 Maintenance Interval Operations for Service Schedule IV • Schedule IV: every 100,000 miles (161 000 km)	Check
83–02	Air Filter Replacement *	

* Replace the HVAC filters every 6 months regardless of mileage, more often if the vehicle is operated under extreme conditions.

Table 9, M2 Maintenance Interval Operations for Service Schedule IV

https://truckmanualshub.com/

M3 Maintenance Interval Operations: 00–06

The M3 Maintenance Interval Operations table lists all maintenance operations that are to be performed at the M3 maintenance interval. Maintenance operation numbers are reference numbers used to help you find detailed instructions in this manual on the maintenance operations to be performed. Perform all M1 and M2 maintenance interval operations at the M3 maintenance interval.

Maintenance Operation Number	M3 Maintenance Interval Operations for Service Schedules I, II, III, and IV • Schedule I: every 15,000 miles (24 000 km) or 1500 hours • Schedule II: every 150,000 miles (240 000 km) • Schedule III: every 300,000 miles (483 000 km) • Schedule IV: every 300,000 miles (483 000 km)	Check
00–04	Perform All M1 Operations	
00–05	Perform All M2 Operations	
09–01	Air Cleaner Inspection	
20–02	Radiator Pressure-Flushing and Coolant Change	
26–01	Eaton Fuller Transmission Fluid Change, and Magnetic Plug Cleaning	
35–01	Axle Lubricant and Filter Change, and Magnetic Strainer Cleaning (synthetic lubricant)	
42–02	Bendix Air Dryer Desiccant Replacement	
42–10	Bendix E–6 Foot Control Valve Inspection and Lubrication	
42–11	WABCO System Saver Air Dryer Desiccant Cartridge Replacement	
46–02	Power Steering Fluid and Filter Change	

Table 10, M3 Maintenance Interval Operations for Service Schedules I, II, III, and IV

https://truckmanualshub.com/

Noise Emission Control Maintenance

Federal Law, Part 205: Transportation Equipment Noise Emission Controls

Part 205, Transportation Equipment Noise Emission Controls, requires the vehicle manufacturer to furnish, with each new vehicle, such written instructions for the proper maintenance, use, and repair of the vehicle by the ultimate purchaser to provide reasonable assurance of the elimination or minimization of noise-emission-control degradation throughout the life of the vehicle. In compliance with the law, the noise emission controls maintenance information in each applicable group of this manual, in conjunction with the vehicle workshop manual, provides these instructions to owners.

Recommendations for Replacement Parts

Replacement parts used for maintenance or repair of noise emission controls should be genuine Freightliner parts. If other than genuine Freightliner parts are used for replacement or repair of components affecting noise emission control, the owner should be sure that such parts are warranted by their manufacturer to be equivalent to genuine Freightliner parts in performance and durability.

Freightliner Noise Emission Controls Warranty

Refer to the vehicle owner's warranty information book for warranty information concerning noise emission controls.

Tampering with Noise Controls is Prohibited

Federal law prohibits the following acts or the causing thereof:

1. The removal or rendering inoperative by any person (other than for purposes of maintenance, repair, or replacement) of any device or element of design incorporated into any new vehicle for the purpose of noise control, prior to its sale or delivery to the ultimate purchaser, or while it is in use.
2. The use of the vehicle after such device or element of design has been removed or rendered inoperative by any person.

   Among those acts presumed to constitute tampering are the acts listed below:

   A. Removal of engine noise-deadening panels.

   B. Removal of cab-tunnel or hood noise-deadening panels.

   C. Removal of, or rendering inoperative, the engine speed governor so as to allow engine speed to exceed manufacturer's specifications.

   D. Removal of, or rendering inoperative, the fan clutch, including bypassing the control on any thermostatic fan drive to cause it to operate continuously.

   E. Removal of the fan shroud.

   F. Removal of, or rendering inoperative, exhaust components, including exhaust pipe clamping.

   G. Removal of air intake components.

Maintenance Instructions

Scheduled intervals are in the maintenance tables in this group. A "Verification of Inspections Log (Groups 01, 20, and 49)" follows, and should be filled in each time noise emission controls on the vehicle are maintained or repaired.

https://truckmanualshub.com/

Verification of Inspections Log

Verification of Inspections Log, Group 01

Verification of Inspections Log — Group 01 — Engine Mounts				
Date	Mileage	Item	Cost	Maintenance Facility

Verification of Inspections Log, Group 20

Verification of Inspections Log — Group 20 — Fan Clutch				
Date	Mileage	Item	Cost	Maintenance Facility

https://truckmanualshub.com/

Verification of Inspections Log, Group 49

Verification of Inspections Log — Group 49 — Exhaust System Components				
Date	**Mileage**	**Item**	**Cost**	**Maintenance Facility**

https://truckmanualshub.com/

https://truckmanualshub.com/

Index, Alphabetical

Title of Maintenance Operation (MOP)	MOP Number
Engine Drive Belt Inspection	01–01
Safety Precautions	01–00

https://truckmanualshub.com/

https://truckmanualshub.com/

01–00 Safety Precautions

Safety Precautions in this section apply to all procedures within this group.

⚠ DANGER

When working on the vehicle, shut down the engine or motor, set the parking brake, and chock the tires. Before working under the vehicle, always place jack stands under the frame rails to ensure the vehicle cannot drop. Failure to follow these steps could result in serious personal injury or death.

01–01 Engine Drive Belt Inspection

Worn or loose drive belts may cause engine overheating or loss of alternator power. Excessive tension, or too little tension on the belt may result in excessive and premature belt wear or accessory bearing failure. Serpentine belts are retained by a belt tensioner that requires no tension adjustment. Replace the drive belt if any conditions described below are found. To inspect a belt, gently twist it to view the belt sidewalls and bottom.

IMPORTANT: For EPDM rubber drive belts, do not rely on cracking as an indicator of belt wear. EPDM rubber drive belts resist cracking better than Neoprene belts. A better indicator of wear on EPDM belts is material loss.

Belt and Pulley Inspection

1. Inspect the belt for glazing. Glazing is represented by shiny sidewalls, and is caused by friction created when a loose belt slips in the pulleys. It can also be caused by oil or grease on the pulleys.
2. Check the belt for ply separation. Oil, grease, or belt dressing can cause the belt to fall apart in layers. Repair any oil or coolant leaks that are affecting the belts before replacing the drive belts. Do not use belt dressing on any belt.
3. Check the belt for a jagged or streaked sidewall. Jagged or streaked sidewalls are the result of foreign objects, such as sand or gravel in the pulley, or a rough pulley surface.
4. Check for tensile breaks (breaks in the cord body). Cuts in a belt are usually caused by foreign objects in the pulley, or by prying or forcing the belt during removal or installation.
5. Check for uneven ribs on serpentine belts. Foreign objects in the pulley will erode the undercord ribs, causing the belt to lose its gripping power.
6. For EPDM belts, check the belt for material loss, which causes the belt to seat further down in the pulley and to ride directly on the pulley tips. See **Fig. 1**.
7. For Neoprene belts, check the drive belts for cracks. Small irregular cracks are usually signs of an old belt.
8. Inspect the pulleys for excessive play or wobble. Excessive play or wobble indicates a failure of the pulley bearing. Check for belt squealing or squeaking. Replace the bearings as necessary.

NOTE: If it is difficult to distinguish the location of a supposed bearing noise, place a stethoscope on the component being checked, not the pulley, to isolate the area from outside interference.

9. Inspect all pulleys for foreign objects, oil, or grease in the grooves.

Belt Tensioner Inspection

On belts equipped with a spring tensioner, belt tension is automatically adjusted. Check that the tensioner is holding tension on the belt by inserting the end of a breaker bar in the 1/2-inch square hole on the forward face of the tensioner, and rotating the tensioner away from the belt. When the breaker bar is slowly released, the tensioner should return to its original position. The tensioner should rotate smoothly with no binding. If not, see **Group 01** of the *122SD and Coronado Workshop Manual* for replacement instructions.

https://truckmanualshub.com/

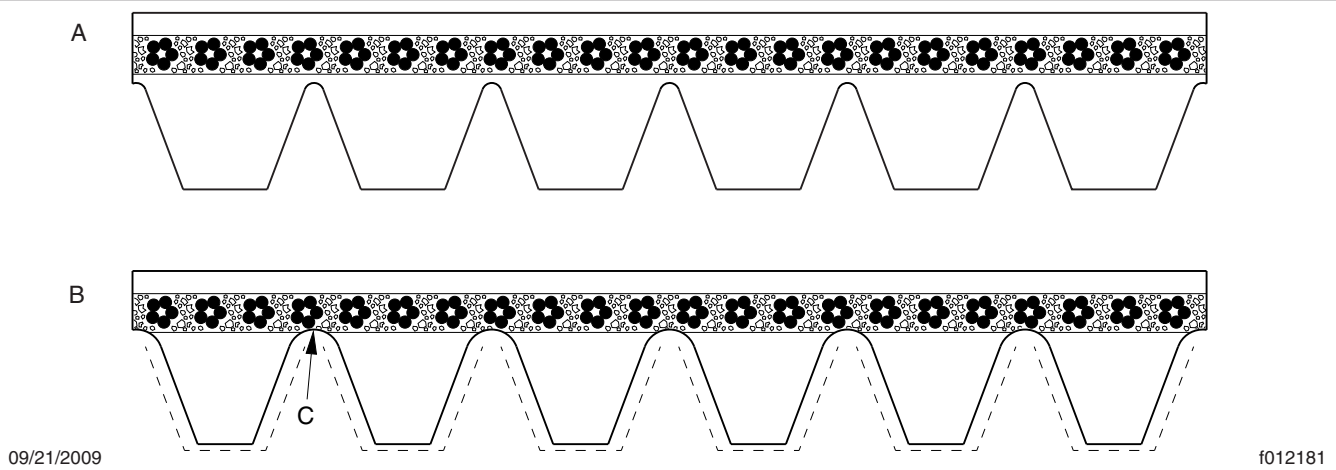

A. New Belt
B. Worn Belt
C. Material loss results in belt riding directly on pulley tips.

Fig. 1, EPDM Belt Wear

https://truckmanualshub.com/

Index, Alphabetical

Title of Maintenance Operation (MOP) **MOP Number**

Air Cleaner Inspection 09–01

https://truckmanualshub.com/

https://truckmanualshub.com/

09–01 Air Cleaner Inspection

Restriction of air flow through the air cleaner element is measured at the tap in the air cleaner outlet. Check the restriction indicator at the air cleaner or in the cab if the vehicle is equipped with a dash-mounted restriction gauge.

Vehicles may be equipped with either a manual-reset restriction indicator with graduations (**Fig. 1**), or a go/no-go restriction indicator without graduations (**Fig. 2**).

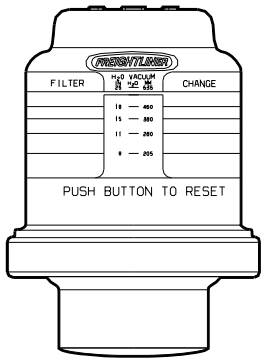

Fig. 1, Manual-Reset Air Restriction Indicator, Graduated

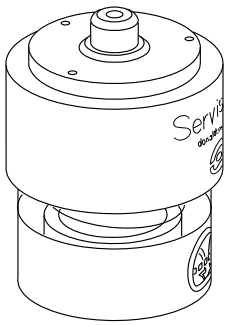

Fig. 2, Manual-Reset Air Restriction Indicator, Go/No-Go

1. Inspect the air restriction indicator to see if air restriction equals or exceeds the maximum allowable restriction. For instructions, see **Group 09** of the *122SD and Coronado Workshop Manual*.
2. Inspect the air cleaner housing for cracks, leaks, or any other damage. If the air cleaner housing or element is damaged, replace it.
3. Check the inserts at all four assembly fastener locations (see **Fig. 3**). Each insert should protrude from the housing as shown in **Fig. 4**.

   If the head/flange of any of the threaded inserts is flush with or countersunk into the housing, replace the air cleaner assembly. See **Section 09.01** of the *122SD and Coronado Workshop Manual* for replacement instructions.

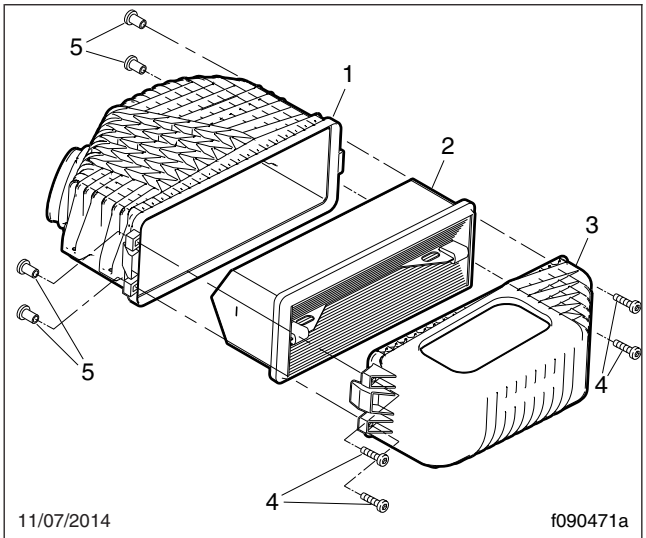

1. Air Cleaner Element Housing
2. Air Cleaner Element
3. Housing Cover
4. Screws
5. Inserts

Fig. 3, Air Cleaner Assembly

NOTICE

Do not use aftermarket air cleaner elements. Aftermarket air cleaner elements may not seal the housing correctly, which can lead to engine damage and potentially the loss of warranty. When replacing an air cleaner element, use only the part listed in PartsPro for the serial number of the vehicle.

4. If necessary, replace the air cleaner element. For air cleaner element replacement instructions, see **Group 09** of the *122SD and Coronado Workshop Manual*.

https://truckmanualshub.com/

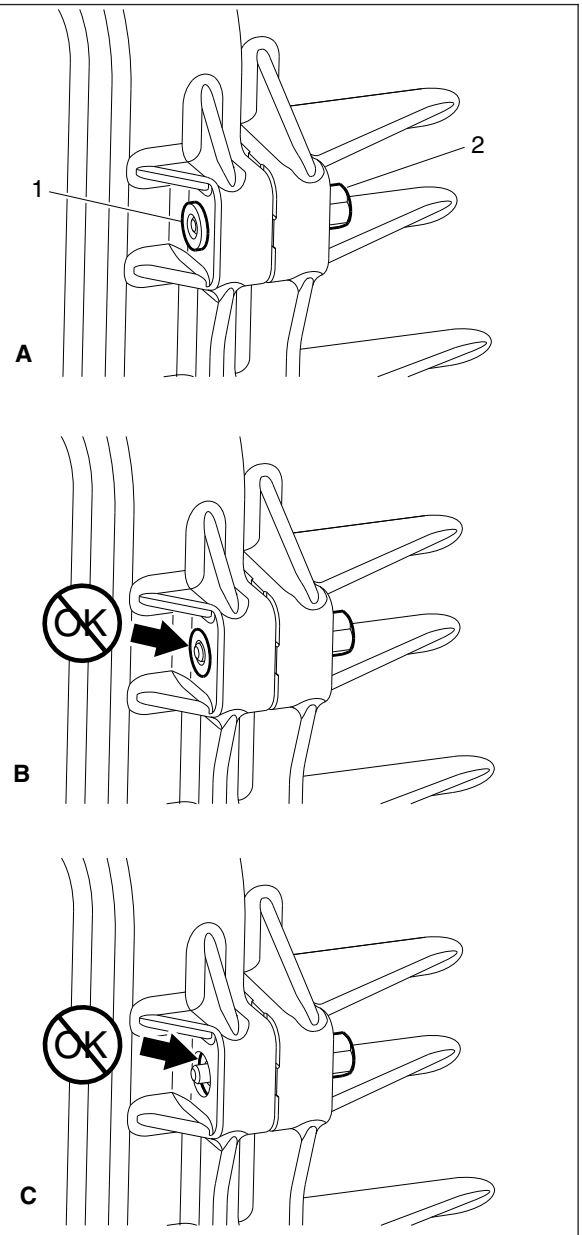

11/19/2014 f090513

NOTE: Each insert should protrude from the housing as shown in item A.

A. Proper Fastener Installation
B. Damaged Insert, Flush
C. Damaged Insert, Countersunk
1. Insert
2. Screw

Fig. 4, Air Cleaner-Housing Fasteners

5. Inspect the forward and rear mounting isolators for damage. See **Fig. 5**. Ensure the bonds between the rubber and the steel plates are completely intact. See **Fig. 6**.

   If a mounting isolator is damaged, replace it. For isolator replacement instructions, see **Section 09.01** of the *122SD and Coronado Workshop Manual*.

6. Remove the pre-cleaners (if so equipped) from the hood plenum, then clean them with compressed air.
7. Reset the air restriction indicator.
8. Each time the air cleaner housing is replaced, perform the procedures in **MOP 13–01**.

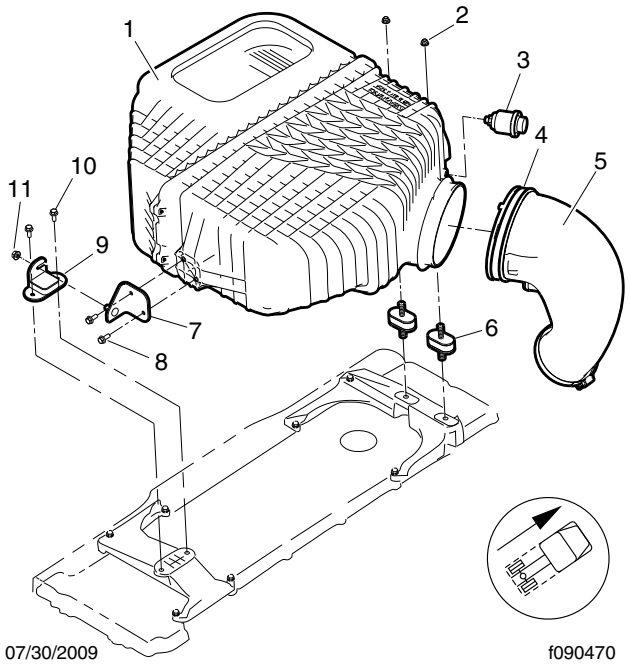

07/30/2009 f090470

1. Air Cleaner Housing and Cover
2. Front Isolator Top Nuts (2)
3. Air Restriction Indicator
4. Air Cleaner-to-Air Intake Duct Hose Clamp
5. Air Intake Duct
6. Front Isolators (2)
7. Rear Mounting Bracket
8. Rear Mounting Bracket Capscrews (2)
9. Rear Isolator
10. Rear Isolator Mounting Capscrews (2)
11. Rear Isolator Nut

Fig. 5, Air Cleaner Assembly

https://truckmanualshub.com/

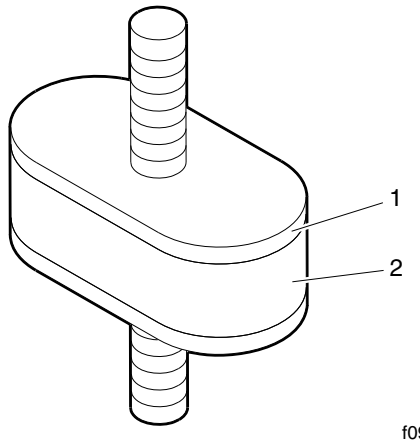

1. Steel Plate 2. Rubber

Fig. 6, Mounting Isolator

https://truckmanualshub.com/

https://truckmanualshub.com/

Index, Alphabetical

Title of Maintenance Operation (MOP)	MOP Number
Air Compressor Inspection	13–01
Safety Precautions	13–00

https://truckmanualshub.com/

https://truckmanualshub.com/

13–00 Safety Precautions

Safety Precautions in this section apply to all procedures within this group.

⚠ DANGER

When working on the vehicle, shut down the engine or motor, set the parking brake, and chock the tires. Before working under the vehicle, always place jack stands under the frame rails to ensure the vehicle cannot drop. Failure to follow these steps could result in serious personal injury or death.

13–01 Air Compressor Inspection

1. Inspect the air compressor intake hoses and connections at the air intake and air compressor for physical damage. If needed, change the hoses, and/or tighten or replace the connections.
2. Inspect the coolant supply and return lines for tight connections. Tighten the connections and replace the lines and fasteners if needed.
3. For the air governor, inspect the piping and connections for leaks. Replace gaskets and faulty components as needed.

https://truckmanualshub.com/

https://truckmanualshub.com/

Index, Alphabetical

Title of Maintenance Operation (MOP)	MOP Number
Alternator, Battery, and Starter Connections Check	15–01
Safety Precautions	15–00

https://truckmanualshub.com/

https://truckmanualshub.com/

15–00 Safety Precautions

Safety Precautions in this section apply to all procedures within this group.

⚠ DANGER

When working on the vehicle, shut down the engine or motor, set the parking brake, and chock the tires. Before working under the vehicle, always place jack stands under the frame rails to ensure the vehicle cannot drop. Failure to follow these steps could result in serious personal injury or death.

15–01 Alternator, Battery, and Starter Connections Check

⚠ WARNING

Batteries generate explosive gas as a by-product of their chemical process. Do not smoke when working around batteries. Put out all flames and remove any source of sparks or intense heat in the vicinity of the battery compartment. Make sure the battery compartment has been completely vented before disconnecting or connecting the battery cables.

Battery acid is extremely harmful if splashed in the eyes or on the skin. Always wear a face shield and protective clothing when working around batteries.

1. Disconnect the batteries.
2. Check the tightness of the alternator fasteners; tighten as needed. For torque values, see **Group 15** of the *122SD and Coronado Workshop Manual*.
3. Inspect the alternator drive belt for cracking, glazing, and wear; see **Group 01**. Replace the belt if it shows any of these symptoms.

NOTE: Engines equipped with a serpentine belt have automatic belt tensioners, and do not require belt tension adjustment.

4. Check the alternator wiring for missing insulation, kinks, and heat damage. Replace or repair as needed.
5. Check that all electrical connections at the alternator and starter are free of corrosion. Clean and tighten all charging system electrical connections, including the connections at the starter B terminal and ground terminal, the magnetic switch, and where the alternator charging cable terminates. Apply red dielectric enamel to all exposed connections.
6. Inspect the battery retainer assembly or hold-downs, and the battery box. Replace worn or damaged parts. Remove any corrosion with a wire brush, and wash with a weak solution of baking soda and water. Flush with clean water, and dry. Paint the retainer assembly if needed, to prevent rusting.
7. Check that foreign material, such as road debris, is removed from the battery box.
8. Inspect and clean the battery cables, terminals, and clamps as follows. See **Group 54** of the *122SD and Coronado Workshop Manual* for troubleshooting instructions, and for adjustment, repair, or replacement instructions.
   - 8.1 Inspect the battery cables, and replace any that are damaged.
   - 8.2 Clean and tighten the battery ground cables, terminals, and clamps. Clean the cable connector terminals with a wire brush.
   - 8.3 Connect the cables to the batteries and tighten them to the torque specifications listed on the battery, generally 10 to 15 lbf·ft (14 to 20 N·m).
   - 8.4 Coat the battery terminals with dielectric grease.
9. Check the connections at the power net distribution box. Clean and protect the power cables with dielectric enamel as necessary.

https://truckmanualshub.com/

https://truckmanualshub.com/

Index, Alphabetical

Title of Maintenance Operation (MOP)	MOP Number
Fan Clutch Check (Noise Emission Control)	20–03
Pressure Relief Cap Check	20–01
Radiator Pressure-Flushing and Coolant Change	20–02
Safety Precautions	20–00

https://truckmanualshub.com/

https://truckmanualshub.com/

20–00 Safety Precautions

Safety Precautions in this section apply to all procedures within this group.

⚠ DANGER

When working on the vehicle, shut down the engine or motor, set the parking brake, and chock the tires. Before working under the vehicle, always place jack stands under the frame rails to ensure the vehicle cannot drop. Failure to follow these steps could result in serious personal injury or death.

20–01 Pressure Relief Cap Check

⚠ WARNING

Do not remove or loosen the surge tank cap until the engine and cooling system have completely cooled. Use extreme care when removing the cap. A sudden release of pressure from removing the cap prior to the system cooling can result in a surge of scalding coolant that could cause serious personal injury.

1. Remove the fill cap first, to relieve the cooling system pressure, then remove the SAE cap; see **Fig. 1**.
2. Using a radiator-cap tester, check the pressure cap to see if it maintains pressure to within 10% of the pressure rating marked on the cap. If it does not, replace the cap. Make sure that the replacement radiator cap is correctly rated for the cooling system of the vehicle.
3. There is a second valve in the radiator cap that opens under vacuum. This prevents the collapse of hoses and other parts that are not internally supported when the system cools. Inspect the vacuum-relief valve to be sure it is not stuck.
4. Make sure that the cap seals properly on the coolant filler neck seat, and that the radiator cap gasket is not damaged. On vehicles with screw-on caps with O-rings, make sure that the O-ring is not cracked or deteriorated. Replace the cap if the gasket shows deterioration or damage.

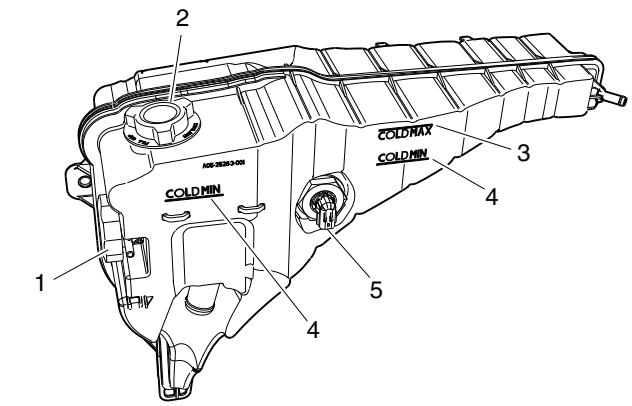

02/05/2013 f500390

1. SAE Cap (for coolant overflow pressure relief only)
2. Surge Tank Filler Cap
3. Cold Maximum Coolant Level
4. Cold Minimum Coolant Level

Fig. 1, Surge Tank

20–02 Radiator Pressure-Flushing and Coolant Change

NOTE: For additional instructions on cleaning and flushing the engine cooling system, see the applicable engine manufacturer's maintenance and operation manual.

1. Apply the vehicle parking brakes, then chock the tires. Tilt the hood.
2. Place a suitable container under the elbow of the radiator outlet pipe and the radiator. The container should hold at least 60 quarts (57 liters) of fluid.

⚠ WARNING

Do not remove or loosen the surge tank cap until the engine and cooling system have completely cooled. Use extreme care when removing the cap. A sudden release of pressure from removing the cap prior to the system cooling can result in a surge of scalding coolant that could cause serious personal injury.

3. Remove the surge tank cap.
4. Remove the drain plug at the radiator end tank; see **Fig. 2**. Allow the coolant to drain.

https://truckmanualshub.com/

5. If possible, drain the engine block of coolant.
6. Fill the cooling system with water.
7. Operate the engine until the water reaches operating temperature.
8. Drain the water and coolant mix from the cooling system.
9. Fill the cooling system with water again.
10. Drain the water from the cooling system.
11. Fill the cooling system with the appropriate coolant. Refer to the engine manufacturer's service literature for specific coolant information.

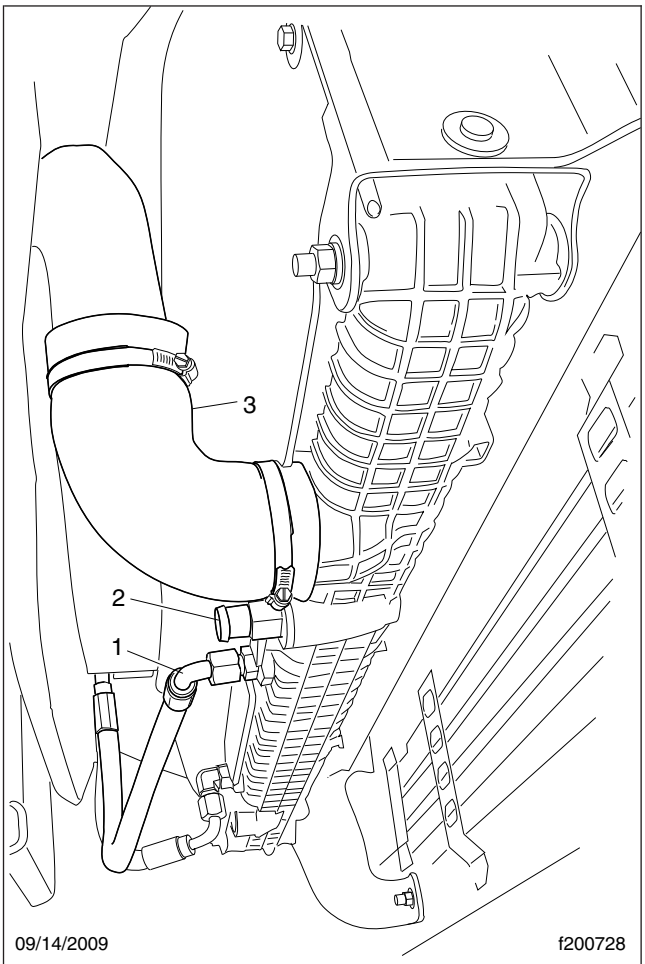

1. Transmission Coolant Hose
2. Drain Plug
3. Lower Radiator Hose

Fig. 2, Typical Coolant Drain Plug Location

20–03 Fan Clutch Check (Noise Emission Control)

Borg Warner (Kysor) K26RA Fan Clutch

1. Disconnect the batteries at the negative terminals. Drain all air from the air system.
2. Measure the distance from the back surface of the fan clutch retaining plate to the forward-most edge of the fan belt pulley. See **Fig. 3**, Ref. A.

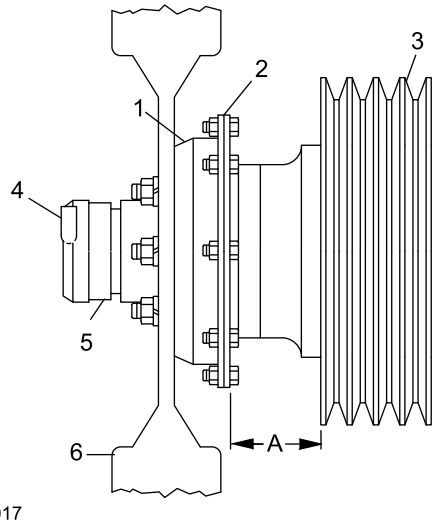

With the fan clutch engaged, measure the distance at *A*; measure it again with the fan clutch disengaged.

1. Bearing Housing
2. Retaining Plate
3. Fan Pulley
4. Air Inlet (from solenoid valve)
5. Air Cylinder
6. Fan

Fig. 3, Kysor K26RA Fan Clutch Lining Wear Check

3. Disconnect the line from the air inlet of the air cylinder. Connect a shop air hose to the inlet.
4. Apply a minimum of 100 psi (690 kPa) air pressure to the air cylinder—the bearing housing will move backwards, disengaging the clutch. Again, measure the distance from the back surface of the retaining plate to the forward-most edge of the fan belt pulley.
5. Compare the two measurements; if the difference between the two measurements exceeds 0.150

https://truckmanualshub.com/

inches (3.8 mm), the clutch lining is worn and must be replaced. See **Group 20** of the vehicle Workshop Manual for clutch lining replacement instructions.

6. Release the air pressure, then disconnect the shop hose from the air inlet of the air cylinder. Connect the vehicle air hose to the inlet.
7. Connect the battery cables. Start the engine.

Horton DriveMaster® Fan Clutch

NOTE: If any part of the fan clutch needs to be repaired or replaced after performing the checks below, see **Group 20** of the vehicle Workshop Manual.

1. Disconnect the batteries at the negative terminals.
2. Inspect the electrical connections and wires to the fan clutch solenoid; see **Fig. 4**. Secure the connection if loose; replace wires and connectors if damaged.
3. Clean the fan clutch air solenoid valve filter, if equipped, as follows.
   - 3.1 Unscrew the fan clutch solenoid valve air filter assembly and remove the filter element; see **Fig. 5**.
   - 3.2 Clean the filter element with cleaning solvent.
   - 3.3 Using a clean, lint-free cloth, wipe off any excess solvent.
   - 3.4 Reassemble the clutch valve solenoid air filter, then install it on the vehicle.
4. Check the fan for bent, cracked, or damaged blades. Replace if damaged. Check for adequate clearance between the fan and other components.
5. Check the fan belt for wear, tension, and alignment. Correct if necessary.
6. Check for wear on the friction facing. Replace the friction facing if it is worn to a 3/16-inch (4.8-mm) thickness or less. Also check the facing for signs of oil contamination or burn marks. If evidence of oil or burn marks are found, replace the friction facing.

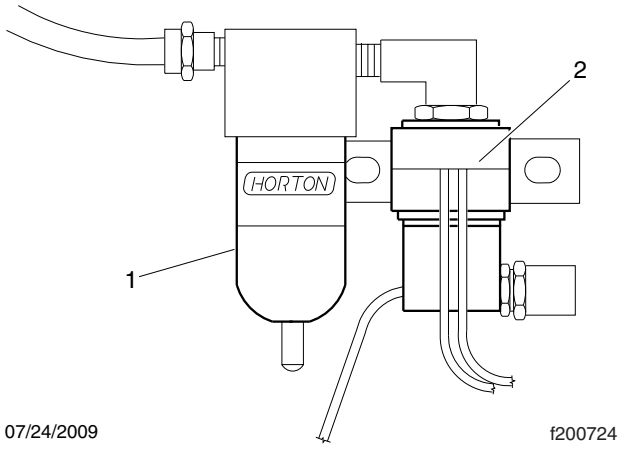

1. Air Filter Housing
2. Solenoid Valve

Fig. 4, Horton DriveMaster Air Solenoid Valve

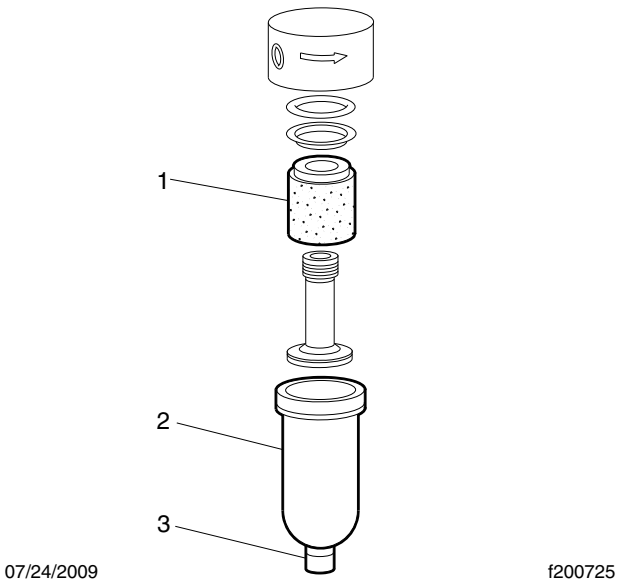

1. Filter Element
2. Filter Bowl
3. Bleed Valve

Fig. 5, Horton DriveMaster Solenoid Valve Air Filter

7. Connect the battery cables. Start the engine, and charge the air system to 120 psi (827 kPa). Manually engage and disengage the fan clutch.

   Check the fan and fan clutch from a distance. Look for vibration, fan blade contact, fan clutch slippage, and overall fan clutch operation.

https://truckmanualshub.com/

If the fan clutch does not operate correctly, see **Group 20** of the vehicle Workshop Manual for troubleshooting and repair procedures.

8. With the air system charged to 120 psi (827 kPa), check the fan clutch for audible air leaks, using a suitable listening device.

   Check at the solenoid valve, the air filter assembly, and the air hoses and fittings. See **Fig. 6**. Using a wet finger or a soapy water solution, check for a leak in the same areas.

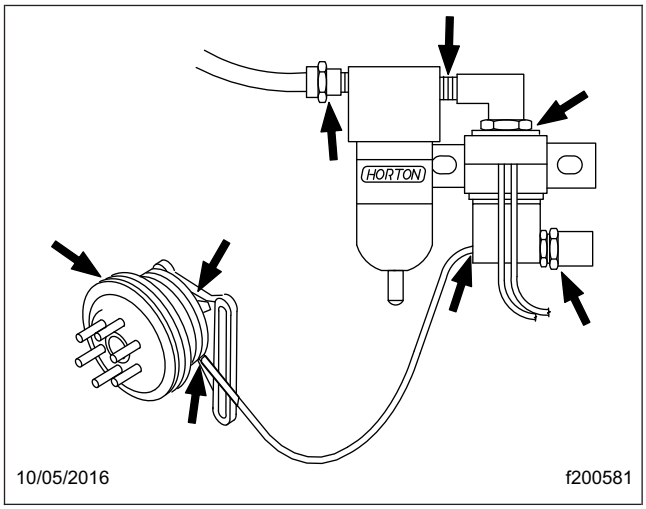

Fig. 6, Checking for Air Leaks (Horton DriveMaster)

9. If a leak is detected, remove the fan blade. Install a new seal kit. See **Group 20** of the vehicle Workshop Manual for repair procedures.
10. Check the fan drive for discoloration or any other signs of slipping or overheating.

NOTE: The fan clutch may slip if the air supply pressure is below 70 psi (483 kPa) or if there is a leak inside the fan clutch. Any leak must be remedied.

11. Check the fan clutch bearings as follows.
    - 11.1 Turn the fan in both directions and feel for worn hub bearings.
    - 11.2 If possible, remove the drive belt and check for worn sheave bearings by turning the sheave in both directions.
    - 11.3 If either the hub or sheave bearings are worn, replace them, using a Horton DriveMaster Super Kit; see **Group 20** of the vehicle Workshop Manual.

https://truckmanualshub.com/

Index, Alphabetical

Title of Maintenance Operation (MOP)	MOP Number
Clutch Release Cross-Shaft Lubrication	25–02
Eaton Fuller Heavy-Duty Clutch Release Bearing Lubrication	25–01
Meritor LitePedal™ Clutch Release Bearing Lubrication	25–03
Safety Precautions	25–00

https://truckmanualshub.com/

https://truckmanualshub.com/

25–00 Safety Precautions

Safety Precautions in this section apply to all procedures within this group.

DANGER

When working on the vehicle, shut down the engine or motor, set the parking brake, and chock the tires. Before working under the vehicle, always place jack stands under the frame rails to ensure the vehicle cannot drop. Failure to follow these steps could result in serious personal injury or death.

25–01 Eaton Fuller Heavy-Duty Clutch Release Bearing Lubrication

1. Park the vehicle on a level surface. Apply the parking brakes, and chock the rear tires.

NOTE: Some clutch release bearings are equipped with a lubrication extension, or lube tube, that extends outside of the clutch housing.

2. Remove the clutch inspection plate. See **Fig. 1**.

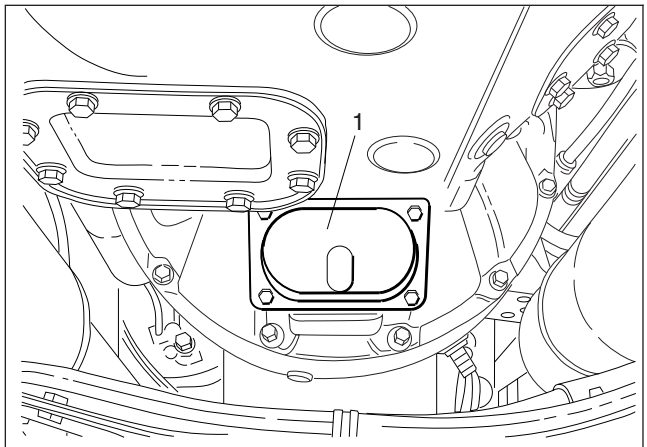

1. Clutch Inspection Plate

Fig. 1, Clutch Inspection Plate

NOTE: For lubrication of the release bearing, Eaton Fuller recommends NLGI Grade 2 or 3 EP lithium grease with a 325°F (163°C) operating temperature, or Roadranger Grease MP-2.

3. Wipe any dirt away from the grease fitting. See **Fig. 2**. Using a pressure-type grease gun equipped with the recommended grease, lubricate the bearing until excess grease purges from the rear of the release bearing (toward the transmission).

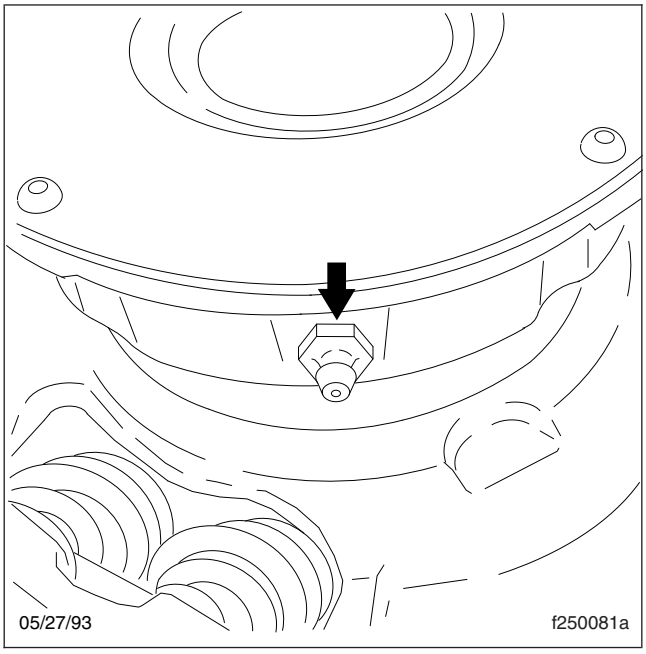

Fig. 2, Release Bearing Grease Fitting

NOTICE

Do not over-lubricate the clutch release bearing. Over-lubrication could contaminate the clutch internally, causing clutch slippage and premature failure. Do not use chassis grease or multipurpose lubricants.

4. Wipe off excess grease and apply to both the yoke finger and sleeve bushing contact points. See **Fig. 3**.
5. Install the clutch inspection plate, if removed.

https://truckmanualshub.com/

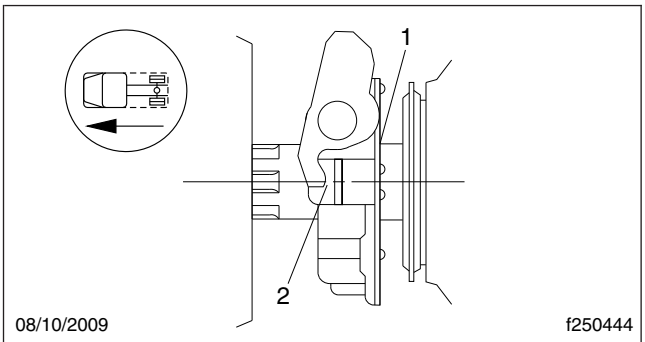

1. Sleeve Bushing Contact Point
2. Yoke Finger Contact Points

Fig. 3, Grease the Contact Points

25–02 Clutch Release Cross-Shaft Lubrication

The clutch release cross-shaft is equipped with two grease fittings on the transmission clutch housing. See **Fig. 4** and **Fig. 5**. Wipe any dirt from the grease fittings, and lubricate with NLGI Grade 2 or 3 EP lithium grease with a 325°F (163°C) operating temperature, or Roadranger Grease MP-2.

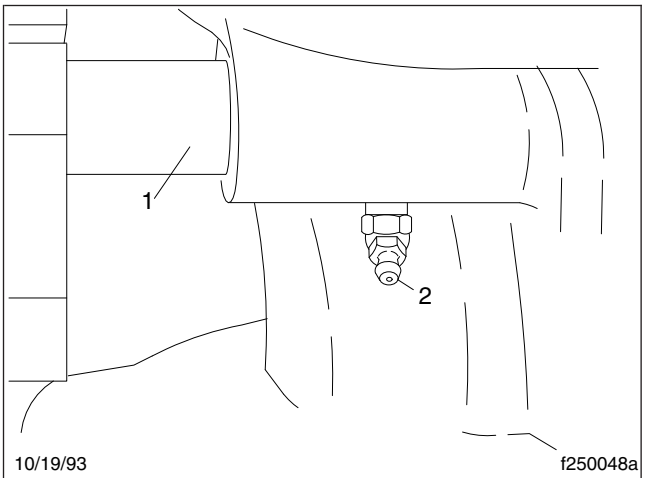

1. Clutch Release Cross-Shaft
2. Grease Fitting

Fig. 4, Cross-Shaft Grease Fitting, Left-Side

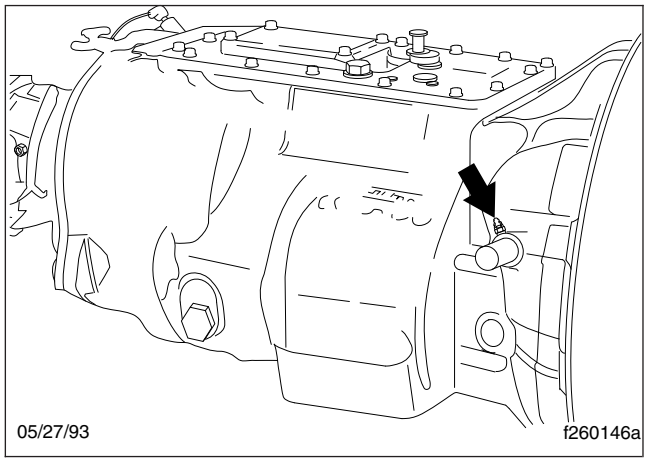

Fig. 5, Cross-Shaft Grease Fitting, Right-Side

25–03 Meritor LitePedal™ Clutch Release Bearing Lubrication

If the clutch is equipped with an optional sealed clutch release bearing, lubricate the bronze bushing located between the clutch bearing housing and the transmission input shaft. Use a pressure-type grease gun with Meritor Specification 0-661 Lithium Complex Grease, NLGI Grade 3, and lubricate until grease flows from the release bearing housing. Depress the clutch pedal a couple of times before starting the engine.

If the clutch is equipped with a standard non-sealed clutch release bearing with a grease fitting, lubricate the bearing as follows:

1. Park the vehicle on a level surface. Apply the parking brakes, and chock the rear tires.

NOTE: Some clutch release bearings are equipped with a lubrication extension that extends outside of the clutch housing. It is not necessary to remove the clutch inspection plate when the lubrication extension is used.

2. Remove the clutch inspection plate, if necessary. See **Fig. 1**.

NOTE: For lubrication of the release bearing, use Meritor Specification 0-661 Lithium Complex Grease, NLGI Grade 3.

3. Wipe any dirt from the grease fitting. See **Fig. 2**. Using a pressure-type grease gun equipped with

https://truckmanualshub.com/

recommended grease, lubricate the bearing until excess grease purges from the rear of the release bearing (toward the transmission).

NOTICE

Do not over-lubricate the clutch release bearing. Over-lubrication could contaminate the clutch internally, causing clutch slippage and premature failure. Do not use chassis grease or multipurpose lubricants.

4. Wipe off excess grease, and apply it to both the yoke finger and sleeve bushing contact points. See **Fig. 3**.
5. Install the clutch inspection plate, if removed.

https://truckmanualshub.com/

https://truckmanualshub.com/

Index, Alphabetical

Title of Maintenance Operation (MOP)	MOP Number
Allison Transmission Fluid and Filter Change	26–04
Eaton Fuller Transmission Fluid Change, and Magnetic Plug Cleaning	26–01
Manual Transmission Air Filter/Regulator Check, Cleaning, or Replacement	26–03
Safety Precautions	26–00
Transmission Fluid Level Inspection	26–02

https://truckmanualshub.com/

https://truckmanualshub.com/

26–00 Safety Precautions

Safety Precautions in this section apply to all procedures within this group.

⚠ DANGER

When working on the vehicle, shut down the engine or motor, set the parking brake, and chock the tires. Before working under the vehicle, always place jack stands under the frame rails to ensure the vehicle cannot drop. Failure to follow these steps could result in serious personal injury or death.

26–01 Eaton Fuller Transmission Fluid Change, and Magnetic Plug Cleaning

NOTICE

Operating a transmission with the fluid level higher or lower than recommended can result in transmission damage. Do not overfill the transmission. Overfilling will force fluid out of the case through the main shaft openings.

Do not mix types and brands of fluid, because of possible incompatibility. Do not use fluid additives, friction modifiers, extreme-pressure gear fluids, or multiviscosity lubricants.

NOTE: Fluid change intervals are extended to 500,000 miles (800 000 km) on any vehicles filled with synthetic transmission fluid.

1. If the transmission fluid is not at normal operating temperature, run the engine until the fluid reaches operating temperature.
2. Park the vehicle on level ground, apply the parking brakes, shift the transmission to neutral (N), shut down the engine, and chock the tires.
3. Place a large drain pan under the transmission.
4. Clean the area around the fill plug, and remove it from the side of the gear case. Remove each drain plug from the bottom of the case.
5. Clean the fill and drain plugs. For magnetic plugs, use a piece of key stock or any other convenient steel slug to short the two magnetic poles and divert the magnetic field.

   Install and tighten each drain plug 50 lbf·ft (68 N·m).

NOTE: The optional transmission fluid filter is a remote-mount, spin-on type, and is located between the transmission and the fluid cooler. The filter bracket is attached to the frame rail or some other nearby location. The filter is mounted in a vertical position, and should be filled with fluid before installation to assure the proper fluid level. For optimum transmission performance, change the filter each time that the fluid is changed.

6. For a transmission equipped with a transmission fluid filter(s), replace the fluid filter(s) as follows.

   6.1 Place a drain pan under the transmission fluid filter.

⚠ CAUTION

To prevent skin burns from hot transmission fluid, wear protective gloves when removing the filter.

   6.2 Place a strap or chain wrench around the filter canister, and rotate it in a counterclockwise motion to separate the filter from the mounting. Carefully spin the filter off the mount and remove it from the vehicle.

   6.3 Apply a light coat of transmission fluid to the O-ring gasket on the new filter. Fill the filter with specified transmission fluid, and spin the filter onto the mount.

   NOTE: The filter fills slowly, so be patient to ensure the proper fluid level has been reached.

   6.4 Once the filter makes contact with the mount, use a strap wrench to rotate the canister an additional 180 to 270 degrees to firmly tighten the filter. Wipe the filter clean of any fluid after it is tightened.

7. Add fluid until it is level with the lower edge of the fill opening. See **Fig. 1**. If the transmission has two fill openings, add fluid to the level of both openings. See **Table 1** for approved trans-

https://truckmanualshub.com/

mission lubricants. See **Table 2** for Eaton Fuller transmission lubricant capacities.

For more information and a complete listing of approved lubricants, refer to the Eaton website, **www.roadranger.com**.

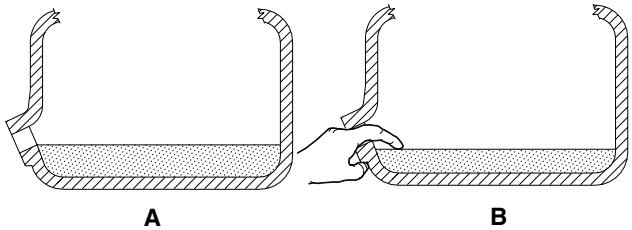

A. Full B. Low

Fig. 1, Checking Transmission Fluid Level

Eaton Approved Manual and Automated Transmission Lubricants		
Lubricant Type*	**Temperature**	**SAE Viscosity**
Synthetic transmission lubricant meeting Eaton PS-386 lubricant specification	All	—

* Do not mix types or brands of lubricant.

Table 1, Eaton Approved Manual and Automated Transmission Lubricants

Eaton Fuller Transmission Lubricant Capacities	
Transmission Model*	**Refill Capacity†: qt (L)**
9-Speed Series	
All Models	14 (13)
10-Speed Manual (except deep reduction)	
FR and FRO Series	11.75 (11)
10-Speed Deep Reduction	
RTO–14908LL	14.0 (13)
RTO–16908LL	
10-Speed Automatic	
RTO-16910C-AS Autoshift RTO-14910C-AS Autoshift RTO-16910B-DM2 Ultrashift	14 (13)
RTO-18910B-AS Autoshift RTO-16910B-AS Autoshift	13 (12)

Eaton Fuller Transmission Lubricant Capacities	
Transmission Model*	**Refill Capacity†: qt (L)**
13-Speed Series	
RTLO and RTLOM Series	14 (13)
15-Speed Series	
RT and RTO Series	14 (13)
18-Speed Series	
RTLO Series	14 (13)
18-Speed Autoshift AS	

* For models not listed in this table see the Eaton Fuller website, **www.roadranger.com**.

† Quantities listed are approximate. Fill transmission until lubricant is level with bottom of fill hole with vehicle in normal operating position.

Table 2, Eaton Fuller Transmission Lubricant Capacities

NOTE: In all cases, the correct fluid level is established by checking at the fill opening.

8. Operate the engine for five minutes after filling the transmission, then check the fluid level again.
9. Clean the fill plug, then install it in the transmission. Tighten the plug as follows:
   - 25 to 35 lbf·ft (34 to 48 N·m) for Eaton Fuller transmissions with 3/4-inch pipe threads.
   - 60 to 75 lbf·ft (81 to 102 N·m) for Eaton Fuller transmissions with 1-1/4-inch pipe threads.
10. Operate the vehicle to check for correct operation.

26–02 Transmission Fluid Level Inspection

NOTICE

Operating a transmission with the fluid level higher or lower than recommended can result in transmission damage. Do not overfill the transmission.

Do not mix types and brands of fluid, because of possible incompatibility. Do not use fluid additives, friction modifiers, extreme-pressure gear fluids, or multiviscosity lubricants.

https://truckmanualshub.com/

Eaton Fuller

NOTE: Check the transmission fluid level with the transmission at operating temperature.

1. Park the vehicle on a level surface, apply the parking brakes, and chock the tires.
2. Clean the area around the fill plug, then remove the plug from the side of the gear case.
3. Using your finger or a bent pipe cleaner, check if the fluid is level with the fill opening. See **Fig. 1**.
4. If the fluid level is low, check the transmission for leaks, and correct as needed.
5. If needed, add Eaton-approved fluid until it is level with the lower edge of the fill opening. See **Table 1** for approved transmission lubricants.

   For more information and a complete listing of approved lubricants, refer to the Eaton website, **www.roadranger.com**.
6. Clean the fill plug, then install it. Tighten the plug as follows:
   - 25 to 35 lbf·ft (34 to 48 N·m) for transmissions with 3/4-inch pipe threads.
   - 60 to 75 lbf·ft (81 to 102 N·m) for transmissions with 1-1/4-inch pipe threads.

Allison

Cold Check

Clean all dirt from around the end of the fluid fill tube before removing the dipstick. Do not allow foreign matter to enter the transmission. Dirt or foreign matter in the hydraulic system may cause undue wear of transmission parts, make valves stick, and clog passages.

It is important to check the fluid level cold to determine if the transmission has a sufficient amount of fluid to be safely operated until a hot check can be performed.

1. Park the vehicle on a level surface, apply the parking brakes, and chock the tires.
2. Run the engine for at least one minute.
3. Shift from DRIVE to NEUTRAL, and then shift to REVERSE to fill the hydraulic system.
4. Shift to NEUTRAL and allow the engine to idle at 500 to 800 rpm.
5. With the engine running at idle, remove the dipstick from the tube and wipe it clean.
6. Insert the dipstick into the tube, then remove it.
7. Check the fluid level reading, then repeat the check procedure to verify the reading.

   If the fluid level is within the COLD RUN band, the transmission may be operated until the fluid is hot enough to perform a hot check.

   If the fluid level is not within the COLD RUN band, add or drain fluid as needed to adjust the fluid level to the middle of the COLD RUN band. See **Fig. 2**.

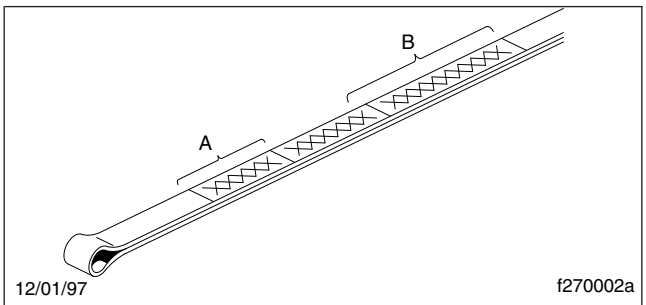

A. Cold Run Band B. Hot Run Band

Fig. 2, Dipstick Markings

NOTICE

As the fluid temperature increases, so does the fluid level. Do not fill above the COLD RUN band if the transmission fluid is below normal operating temperature.

NOTE: Perform a hot check at the first opportunity after the normal operating temperature, 160 to 200°F (71 to 93°C), has been reached.

Hot Check

1. Park the vehicle on a level surface, apply the parking brakes, and chock the tires.
2. Shift the transmission to NEUTRAL.
3. Operate the engine at idle (500 to 800 rpm) until normal operating temperature is reached. Check that the sump temperature is 160 to 200°F (71 to 93°C). Check that the converter-out temperature is 180 to 220°F (82 to 104°C).
4. With the engine idling, remove the dipstick from the tube and wipe it clean.

https://truckmanualshub.com/

5. Insert the dipstick into the tube, then remove it.
6. Check the fluid level reading, then repeat the check procedure to verify the reading. Safe operating level is within the HOT RUN band on the dipstick. The HOT RUN band is between the HOT FULL and HOT ADD marks.

   If the fluid level is not within the HOT RUN band, add or drain fluid as needed to bring the fluid level within the HOT RUN band. See **Fig. 2**.

26–03 Manual Transmission Air Filter/Regulator Check, Cleaning, or Replacement

Eaton Fuller

1. Apply the parking brakes and chock the tires. Drain the air reservoirs.

⚠ WARNING

Drain the air supply; if the air supply is not drained before the air filter/regulator is serviced, serious injury and component damage could result.

2. Clean the outside of the air filter/regulator with cleaning solvent. See **Fig. 3**.
3. Remove the end cap, large O-ring, and filter element from the filter housing. See **Fig. 4**. Remove the small O-ring from the end cap.

NOTE: Do not remove, disassemble, or adjust the air regulator. If the air regulator is not keeping air pressure between 58 and 63 psi (400 to 435 kPa), replace the air filter/regulator. It cannot be repaired.

⚠ WARNING

Wear safety goggles when using compressed air to clean parts, as permanent harm to eyes could result from flying debris.

4. Clean the filter element by dipping it in alcohol or other cleaning solvent. Blow compressed air through the element (inside to outside) to loosen surface dirt and to dry the element. If it is not damaged, the sintered metallic filter element will last the life of the vehicle.

   Wipe out the filter housing with a clean, dry, lint-free rag. Clean and inspect the O-rings and end cap. Replace any parts that are damaged.
5. Install the large O-ring, then the filter element (small end first) into the filter housing.

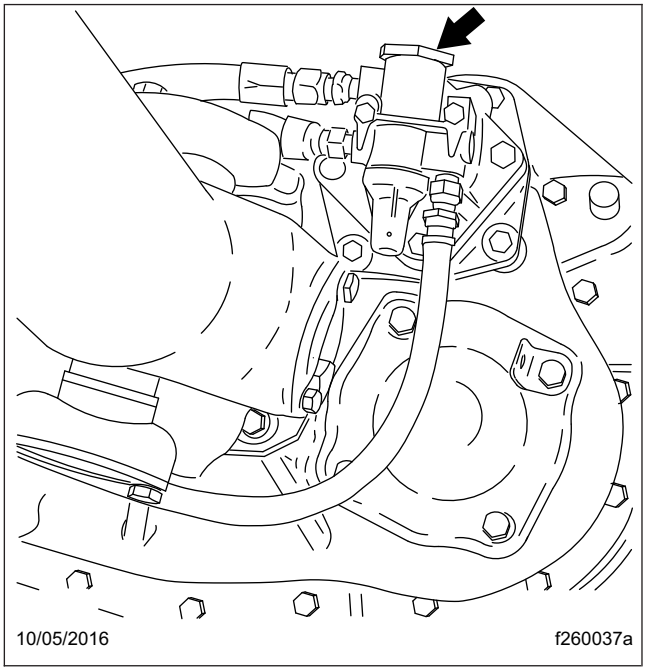

Fig. 3, Air Filter/Regulator Location (Eaton Fuller transmission shown)

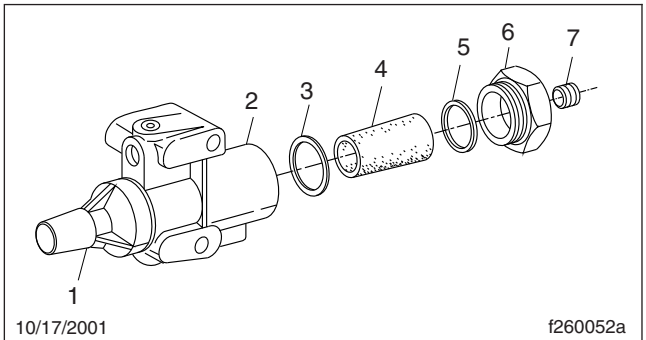

1. Air Regulator
2. Housing
3. Large O-Ring
4. Filter Element
5. Small O-Ring
6. End Cap
7. Plug

Fig. 4, Eaton Fuller Transmission Air Filter/Regulator Components

https://truckmanualshub.com/

6. Install the small O-ring in the end cap, then install the end cap and tighten it until firm.

NOTICE

A leaking air filter or air lines can cause slow or hard shifting of the transmission, and eventual transmission damage.

7. Start the engine, and build pressure in the air system. Check for air leaks at the filter housing and air line connections; repair any leaks.

26–04 Allison Transmission Fluid and Filter Change

When draining transmission fluid, check for evidence of dirt or water contamination. A small amount of condensation will appear in the fluid during operation.

Water contamination is normally characterized as a milky discoloration of the transmission fluid. Obvious contamination of the transmission fluid indicates a leak between the water and fluid areas of the transmission cooler. Inspect and pressure-test the cooler to confirm the leak; replace leaking transmission coolers.

1. If the transmission fluid is not at normal operating temperature, run the engine until the fluid reaches operating temperature: 160 to 200°F (71 to 93°C).
2. Park the vehicle on a level surface, apply the parking brakes, and chock the tires.
3. Clean the area around the drain plug and the transmission fluid pan. Place a drain pan under the transmission and remove the drain plug. Examine the fluid as it drains.
4. Remove the 12 mounting bolts (six each) from the two filter covers.

NOTE: A considerable amount of fluid will drain when the filter covers are removed.

5. Remove the filter covers, O-rings, and two square-cut seals from the transmission. See **Fig. 5**.
6. Remove the filters from the bottom of the control module.
7. Lubricate the new O-rings with transmission fluid, then install them on the cover assemblies.

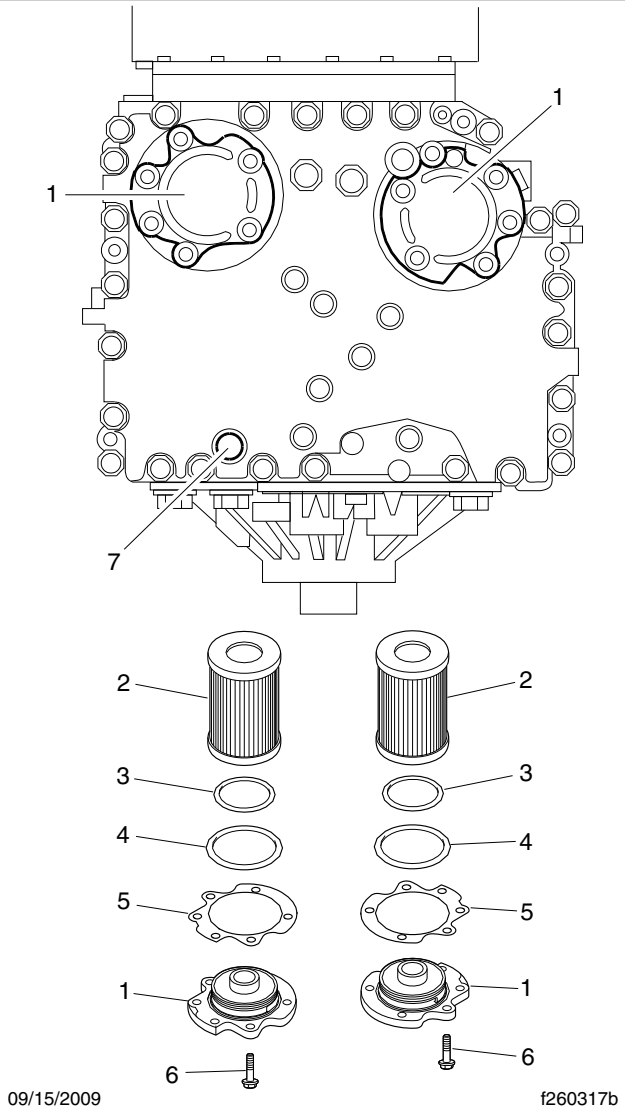

1. Filter Cover
2. Filter Element
3. Filter Element O-Ring
4. Square-Cut Seal
5. Gasket
6. Capscrew
7. Drain Plug

Fig. 5, Allison Transmission Filter Location and Components

8. Install a new square-cut seal on each cover assembly, then install the fluid filter elements on the cover assemblies.
9. Install the filter and cover assemblies into the filter compartment.

https://truckmanualshub.com/

10. Align each cover assembly with the holes in the channel plate sump, and push the cover assemblies in by hand to seat the seals.

NOTICE

Do not use the bolts to draw the filter covers to the sump. This can damage the covers, seals, or sump.

11. Install six bolts in each cover, and torque the bolts 38 to 44 lbf·ft (51 to 61 N·m).
12. Replace the drain plug O-ring, then install the drain plug. Tighten the drain plug 18 to 24 lbf·ft (25 to 32 N·m).
13. Refill the transmission with fresh automatic transmission fluid and check the fluid level. See **Table 3** for transmission lubricant capacities, and **Table 4** for approved transmission lubricants.

Allison 4000 Series Transmission Lubricant Capacities*	
Sump Size	**Refill Capacity : qt (L)**
4 Inch	39 (37)†
2 Inch	31 (30)†

* Quantities listed are approximate. Add listed amount of fluid, then perform a "hot check" and add fluid as needed. Do not overfill.

† Add 3 qt (2.8 L) for transmissions with PTO.

Table 3, Allison 4000 SeriesTransmission Lubricant Capacities

Allison Approved Automatic Transmission Lubricants	
Transmission	**Lubricant Type ***
Allison 4000 Series	Castrol TranSynd (synthetic) or other Allison Approved TES 295 Fluid
	Allison Approved TES 389 Fluid or Dexron®-VI† IMPORTANT: For TES 389 and Dexron-VI, use maintenance interval M1.

* Lubricants listed in order of preference. Do not mix fluid types. Call 1-800-252-5283, or see **www.AllisonTransmission.com** for a complete list of Allison approved lubricants.

† Dexron-VI may only be used in units beginning with S/N 6610220990.

Table 4, Allison Approved Automatic Transmission Lubricants

https://truckmanualshub.com/

Index, Alphabetical

Title of Maintenance Operation (MOP)	MOP Number
Fifth Wheel Inspection	31–01
Fifth Wheel Lubrication	31–02
Frame Fastener Torque Check	31–03
Premier 690 Coupling Inspection	31–05
Safety Precautions	31–00
Trailer Electrical Connector Lubricating	31–04

https://truckmanualshub.com/

https://truckmanualshub.com/

31–00 Safety Precautions

Safety Precautions in this section apply to all procedures within this group.

DANGER

When working on the vehicle, shut down the engine or motor, set the parking brake, and chock the tires. Before working under the vehicle, always place jack stands under the frame rails to ensure the vehicle cannot drop. Failure to follow these steps could result in serious personal injury or death.

31–01 Fifth Wheel Inspection

WARNING

All fifth wheel maintenance, adjustment, and rebuilding must be done only by a qualified mechanic. Improper or incomplete procedures could result in a possible disengagement of the trailer from the tractor, which could result in personal injury or property damage.

Parts are under spring compression. Wear safety goggles while servicing the fifth wheel. Failure to do so can result in personal injury, due to parts ejecting with force.

WARNING

All fifth wheel maintenance, adjustment, and rebuilding must be done only by a qualified mechanic. Improper or incomplete procedures could result in a possible disengagement of the trailer from the tractor, which could result in personal injury or property damage.

Parts are under spring compression. Wear safety goggles while servicing the fifth wheel. Failure to do so can result in personal injury, due to parts ejecting with force.

Holland FWS1

1. Disconnect the tractor from the trailer. For instructions, see the vehicle Driver's/Operator's Manual.
2. Thoroughly steam clean the fifth wheel.
3. Check the fifth wheel plate for cracks. Check for sharp edges on top; the chamfer should be 1/8 to 1/4 inch (3 to 6 mm).
4. When the wheel is locked, the safety latch must swing free and fall freely into position. See **Fig. 1**.

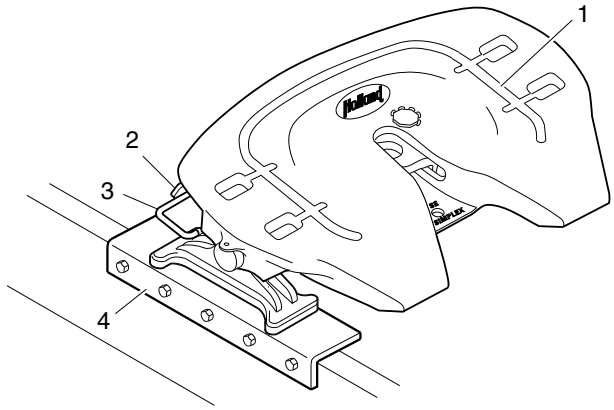

10/29/2007 f311052

1. Lubricant Grooves
2. Safety Latch
3. Release Handle
4. Mount

Fig. 1, Holland FWS1 Fifth Wheel

5. The lever bar and release handle must be in proper alignment. See **Fig. 2**. Compare the lever bar and release handle alignment to a new, or a properly operating lever bar and release handle. Replace any bent or misaligned lever bar or release handle.

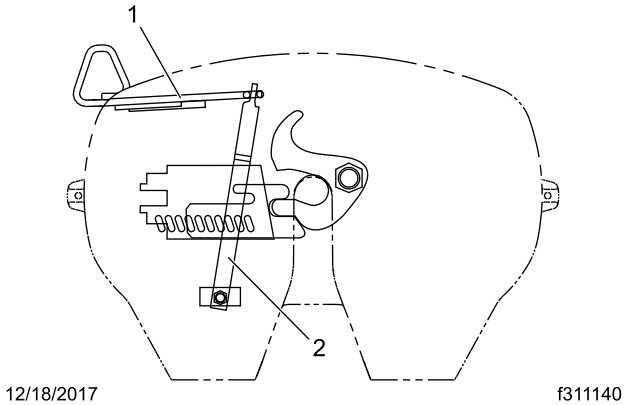

12/18/2017 f311140

1. Release Handle
2. Lever Bar

Fig. 2, Lever Bar and Release Handle Alignment

https://truckmanualshub.com/

6. Check all cotter pins for cracking or damage. Replace any cotter pin that shows any signs of damage.
7. Check all mounting bolts for signs of fatigue, and tighten them to the proper torque. For torque specifications, see **Group 00** of the vehicle Workshop Manual. Inspect all angles, plates, and brackets for cracks or other damage.
8. Replace cracked, worn, or damaged parts with new parts. Replace all loose mounting bolts with 5/8–11 SAE grade 8 bolts, grade C locknuts, and hardened washers. *Do not* re-use bolts, nuts, and washers on fifth wheel mountings.
9. After inspecting the fifth wheel, lubricate all moving parts with a chassis or multipurpose grease. See **MOP 31–02** for lubrication instructions.

Holland FW35

1. Disconnect the tractor from the trailer. For instructions, see the vehicle Driver's/Operator's Manual.
2. Thoroughly steam clean all fifth wheel components before inspection.
3. Check for cracks in the fifth wheel assembly, mounting brackets, and mounting parts.
4. Check the fastener torques on the fifth wheel assembly and fifth wheel mounting. Tighten bolts and nuts as needed. Replace missing or damaged bolts.
5. Inspect the fifth wheel for bent, worn, damaged, and missing parts; replace them as needed with genuine Holland parts.
6. Using a Holland Kingpin Lock Tester (Holland tool number TF-TLN-5001, available through the PDCs as HLD TFTLN5001), check the operation of the locking mechanism by opening and closing the locks. See **Fig. 3**.
7. After inspecting the fifth wheel, lubricate all moving parts with a chassis or multipurpose grease. See **MOP 31–02** in this manual for lubrication instructions.

Fontaine

1. Disconnect the tractor from the trailer. For instructions, see the vehicle Driver's/Operator's Manual.

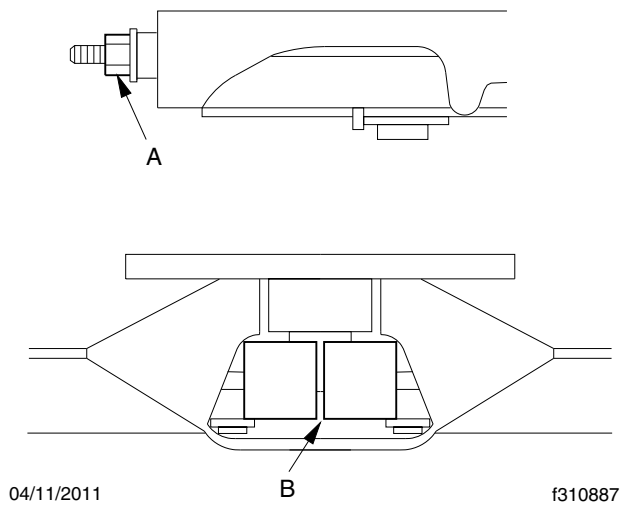

A. The nut and washer should be snug against the fifth wheel.
B. The locks should be completely closed around the kingpin.

Fig. 3, Holland Fifth Wheel Properly Closed

2. Thoroughly steam clean the fifth wheel.
3. Check for cracks in the fifth wheel assembly, mounting brackets, and mounting parts.
4. Ensure that both bracket pins are in place and secured by retainer pins and cotter pins. See **Fig. 4**.
5. For fifth wheels equipped with bracket liners, rock the fifth wheel. If it does not rock freely, remove the top plate and inspect the bracket liners. Replace liners that are broken or less than 0.125 inch (3 mm) thick at the top of the liners. For the liner replacement procedure, see the Fontaine website, **www.fifthwheel.com**.
6. Check the jaw and stationary jaw for mushrooming, and check that the serrations at the jaw and wedge are in good condition.
7. Test the secondary safety lock latch for ease of operation.
8. Check for loose nuts or bolts on the fifth wheel and the mounting. Set a torque wrench to the maximum torque value for the bolt being checked, and confirm that the torque is to specification. Do not loosen the bolt to check the torque. For torque specifications, see **Group 00** of the vehicle Workshop Manual.

https://truckmanualshub.com/

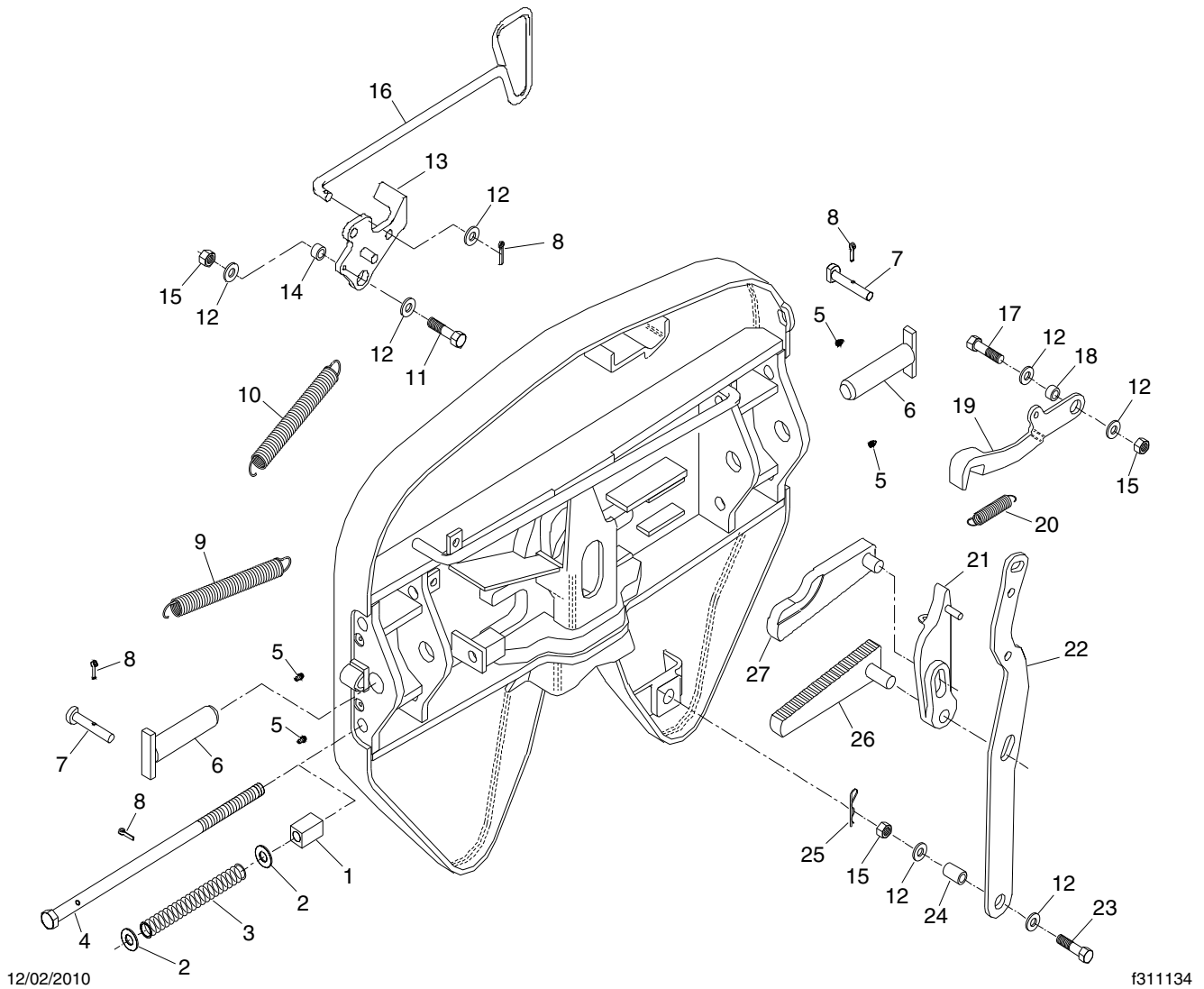

NOTE: 6000 Series shown; 7000 Series fifth wheels use similar parts.

1. Wedge Stop Rod Nut
2. Flat Washer, 5/8"
3. Wedge Stop Rod Spring
4. Wedge Stop Rod
5. Grease Fitting
6. Bracket Pin
7. Bracket Retainer Pin
8. Cotter Pin, 3/16" x 1"
9. Bumper Spring
10. Handle Spring
11. Bolt, Secondary Safety Lock
12. Flat Washer
13. Secondary Safety Lock
14. Bushing, Secondary Safety Lock
15. Hex Locknut
16. Pull Handle
17. Bolt, Bumper
18. Bushing
19. Bumper
20. Timer Spring
21. Timer
22. Operating Handle
23. Bolt, Operating Handle
24. Bushing, Operating Handle
25. Hair Pin Cotter
26. Wedge
27. Step Jaw

Fig. 4, Fontaine Fifth Wheel

https://truckmanualshub.com/

9. Check all springs to see if they are securely fastened, and are not deformed.

⚠ WARNING

Do not disassemble the fifth wheel to inspect the springs. The springs are under extreme pressure, and could cause serious injury.

10. Check the wedge adjustment.
    - 10.1 Close the fifth wheel on a standard 2-inch (50-mm) kingpin or similar 2-inch (50-mm) diameter shaft so that it locks.
    - 10.2 Push on the wedge stop rod with hand pressure. It should move in 1/4 inch (6 mm) and spring back out on release.

      If the free travel is not 1/4 inch (6 mm), adjust the distance to 1/4 inch (6 mm) by turning the wedge stop rod, on the right side of the top plate, clockwise to reduce the gap and counter-clockwise to increase it.
11. Replace cracked, worn, or damaged parts with new parts. Replace all loose mounting bolts with 5/8–11 SAE grade 8 bolts, grade C locknuts, and hardened washers. *Do not* re-use bolts, nuts, and washers on fifth wheel mountings.
12. After inspecting the fifth wheel, lubricate all moving parts with a chassis or multipurpose grease. Apply a generous coating of grease to the top plate to fill the grooves, or depressions, on the top plate. See **MOP 31–02** in this manual for lubrication instructions.

Jost

1. Disconnect the tractor from the trailer. For instructions, see the vehicle Driver's/Operator's Manual.
2. Thoroughly steam clean the fifth wheel.
3. Check the mounting for missing or damaged fasteners, and broken components. Replace or repair as needed.
4. Inspect the bracket pin bolts. Make sure the locking tabs are properly securing the bolts in place. See **Fig. 5**.
5. Check the fifth wheel for bent, worn, or broken parts. Replace as needed.

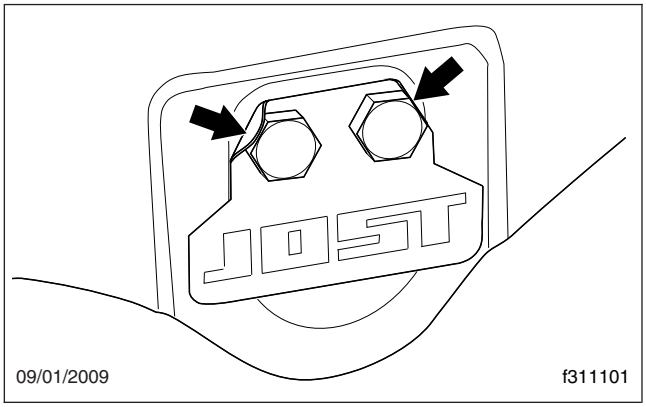

Fig. 5, Bracket Pin Bolt Locking Tabs

6. If the fifth wheel is equipped with low-lube plates, check the plates and replace if damaged or worn down to the securing bolts. It is normal for outside edges of the plate to pucker slightly; this does not affect performance.
7. Check the fifth wheel adjustment. Using a lock tester, lock and unlock the fifth wheel several times. Make sure that the locking mechanism works properly.

   The lock is properly adjusted if: the wheel locks and unlocks easily each time and the lock tester rotates freely.

   The lock is too loose if: you feel fore-aft play when pulling and pushing on the lock tester handle. See **Fig. 6**, Ref. A.

   The lock is too tight if: the lock tester does not rotate freely in the lock. See **Fig. 6**, Ref. B.
8. If the lock is improperly adjusted, correct as follows.

   If the lock is too tight, loosen the jam nut, turn the adjustment bolt *clockwise* one full turn, then reset the jam nut. Lock and unlock the mechanism several times to test. Repeat if necessary. See **Fig. 7**.

   If the lock is too loose, loosen the jam nut, turn the adjustment bolt *counterclockwise* one full turn, then reset the jam nut. Lock and unlock the mechanism several times to test. Repeat if necessary. See **Fig. 7**.
9. If the fifth wheel is equipped with a sliding mechanism, inspect and adjust it as follows.

https://truckmanualshub.com/

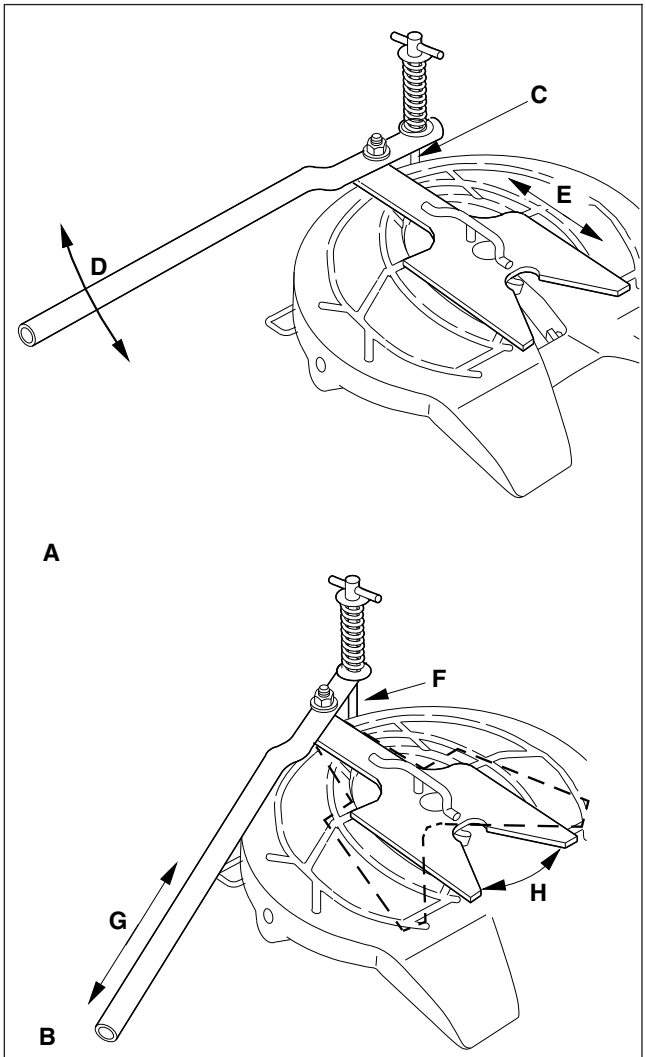

09/01/2009 f311099

A. Checking for fore/aft play.
B. Rotating tester in lock.
C. Engage hook.
D. Pull/push handle fore/aft.
E. Check for movement of kingpin in lock.
F. Disengage hook.
G. Push/pull handle inboard/outboard.
H. Rotate lock tester.

Fig. 6, Jost Fifth Wheel Adjustment

9.1 Check the bracket for any cracks or missing and damaged parts.

9.2 Inspect the locking plungers for full engagement.

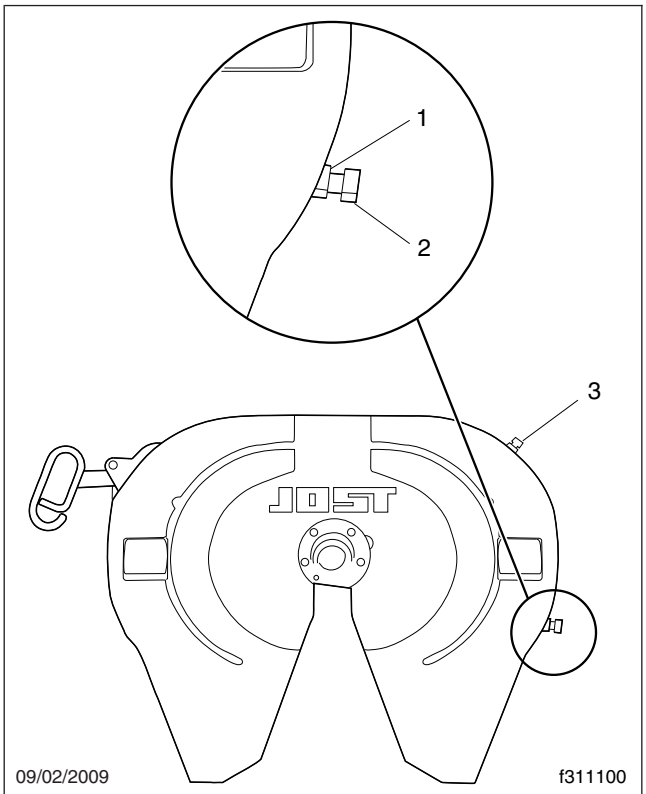

09/02/2009 f311100

1. Jam Nut
2. Adjustment Bolt
3. Grease Zerk

Fig. 7, Jost Fifth Wheel

9.3 Check the locking mechanism for proper operation.

If the plungers will not release, check the air cylinder or plunger adjustment.

If the plungers are loose, check the plunger adjustment and the plunger springs for proper compression. Replace if needed.

9.4 The outboard slider assembly requires no adjustment. If the plungers are loose, inspect and replace locking mechanism parts as needed.

9.5 The inboard slider is adjustable for frame width and plunger engagement. For adjustment, refer to the fifth wheel installation instructions.

10. Replace cracked, worn, or damaged parts with new parts. Replace all loose mounting bolts with 5/8–11 SAE grade 8 bolts, grade C locknuts, and

https://truckmanualshub.com/

hardened washers. *Do not* re-use bolts, nuts, and washers on fifth wheel mountings.

11. After inspecting the fifth wheel, lubricate all moving parts with a chassis or multipurpose grease. Apply a generous coating of grease to the top plate to fill the grooves, or depressions, on the top plate. See **MOP 31–02** in this manual for lubrication instructions.

31–02 Fifth Wheel Lubrication

To maintain proper fifth wheel operation, always lubricate the fifth wheel after an inspection has been performed.

IMPORTANT: Lubricate the fifth wheel:

- After power washing, or steam cleaning.
- If the vehicle operates in harsh conditions such as salt spray from road surfaces, or in extremely dusty environments.
- After any service that requires removal of lubricant from the fifth wheel head or components.

⚠ WARNING

Failure to properly lubricate the fifth wheel could result in a possible disengagement of the trailer from the tractor, which could result in personal injury or property damage.

Fontaine

1. Tilt the top plate forward (the front of the fifth wheel is down) and apply grease to each bearing area through the zerk fittings located on each side of the top plate just to the front of the bracket pins. Continue to apply grease until it is coming out of the back of the bearing. It may be necessary to raise the rear of the fifth wheel with a pry bar to open up the pocket slightly and allow the grease to flow through. A substantial amount of grease may be required initially to fill the reservoir.

   Tilt the fifth wheel ramps down (the rear of the fifth wheel is down) and repeat the greasing procedure. Rock the top plate back and forth several times to spread the grease over the bearing surface.

2. Inspect the trailer kingpin plate and top surface of the fifth wheel to make sure each is properly greased. A liberal coating of grease should be applied to the complete surfaces of both the trailer kingpin plate and the top surface of the fifth wheel.

NOTE: Do not use a lube plate (high density polyethylene) on top of the fifth wheel or on the kingpin instead of grease without prior approval by Fontaine Fifth Wheel. The additional thickness of this material can prevent the proper operation of the fifth wheel and may cause a dangerous condition.

NOTE: Fontaine suggests the use of a Moly based lubricant such as Mobilgrease XHP 320 or equivalent when applying lubricant to the locking jaw and wedge.

3. Lubricate the fifth wheel prior to opening and closing it. Separate the jaw and wedge with a screwdriver, and grease the full length of their mating surfaces. Lubricate the top and bottom contact surfaces of the jaw and wedge. See **Fig. 8**. Open and close the fifth wheel several times to further distribute the grease.

   Lightly oil other moving parts in the fifth wheel.

4. Apply grease to the top plate. Spread grease all over the mating surface of the top plate. Be sure the grease pockets built into the top plates are full of grease.

Holland FWS1

Apply a heavy coat of grease to the top plate, either through the grease fittings located on the underside of the top plate, or by direct application.

Holland FW35

1. Using a water-resistant lithium-base grease, grease the top plate.
2. Using a light oil (such as SAE 10W or 20W motor oil), lubricate the cam track and pivot. See **Fig. 9**.
3. Grease the yoke tips, locks, and the release handle and spring; see **Fig. 10**. Grease the mounting bracket supports through the grease fittings. A “low temp” grade grease rated for -30°F (-34°C) or lower such as Cato Oil and

https://truckmanualshub.com/

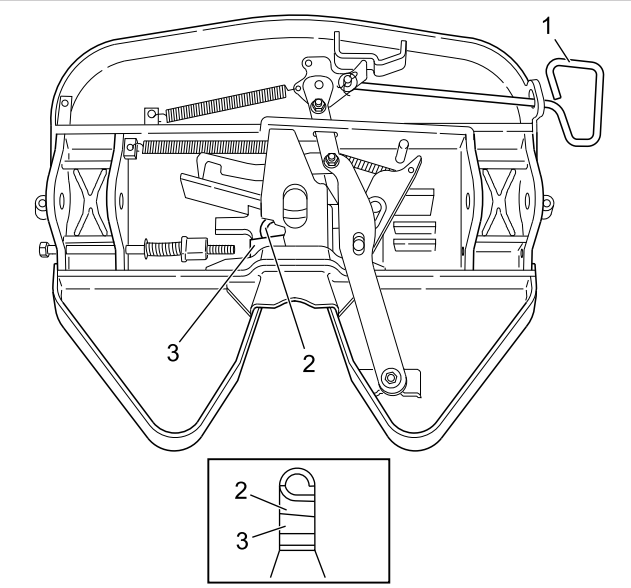

12/18/2017 f310884

1. Pull Handle
2. Jaw
3. Wedge

Fig. 8, Fontaine Fifth Wheel

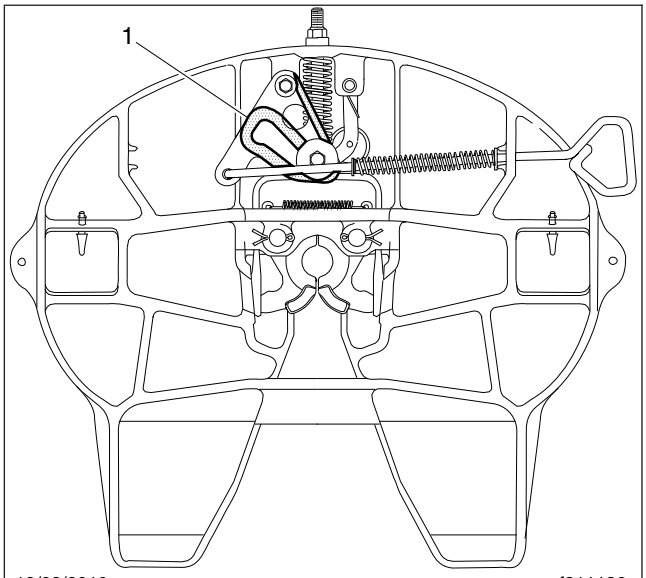

12/03/2010 f311136

Use a light oil (such as SAE 10W or 20W motor oil) to lubricate the cam track and pivot.

1. Cam Plate

Fig. 9, Holland FW35 Fifth Wheel, Oil Lubrication

Grease #5213, Craftsman Chemical Co. #LTF 2, Mystic LP-200, or equivalent is recommended.

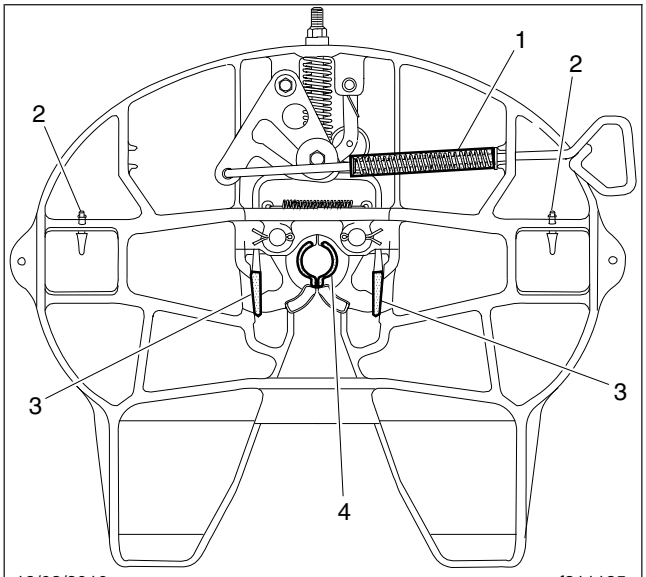

12/03/2010 f311135

1. Release Handle and Spring
2. Grease Fitting
3. Yoke Tip
4. Locks

Fig. 10, Holland FW35 Fifth Wheel, Grease Lubrication

Jost

Lubricate the kingpin lock using a hand pump grease gun through the grease zerk on the skirt of the fifth wheel; see **Fig. 7**. Apply a light oil to all moving parts. For sliding fifth wheels spray diesel fuel on the slide path of the base plate.

NOTICE

Do not use a power grease gun. The pressure will damage the lube line.

If the fifth wheel is not equipped with low-lube plates, apply a lithium-based grease with extreme pressure (EP) additive to the trailer contact surface of the fifth wheel.

NOTE: If the fifth wheel is equipped with low-lube plates, the top plate only requires lubrication at the new product break-in stage. The low-lube plates require no further lubrication.

https://truckmanualshub.com/

31–03 Frame Fastener Torque Check

Frame brackets and components secured with Huckbolt® fasteners do not require a torque check, however, they should be inspected for damage. Frame brackets and components secured with conventional bolts and nuts are to be checked at Initial Maintenance (IM). Check the torque of frame fasteners to offset the effects of "bedding in" (or seating). When checking torque, torque the nut, not the bolt head whenever possible. This will give a true torque reading by eliminating bolt-body friction. When checking the torque of frame fasteners, inspect the frame for cracks and other damage. Set a click-type torque wrench to the maximum torque of the fastener you are checking. Apply pressure until the torque wrench clicks. Do not loosen the bolt to check the torque. See **Group 00** in the vehicle workshop manual for torque specifications.

NOTICE

Make sure frame fasteners are properly tightened. Continued vehicle operation with loose fasteners could result in bracket or frame damage.

Check the fasteners at the following locations:

- axle stops
- deck plates
- equalizer brackets
- exhaust brackets
- fifth wheel legs
- fifth wheel mountings
- frame crossmembers and gussets
- front frame brackets
- front suspension spring brackets
- fuel tank brackets
- radius rods
- rear suspension spring brackets
- shock absorbers
- all other suspension fasteners
- all other axle fasteners
- all other frame fasteners

Any component that shows signs of cracking or other damage must be repaired or replaced. Refer to the vehicle workshop manual for repair or replacement information.

31–04 Trailer Electrical Connector Lubricating

In some cases, failure of trailer cables occurs due to intrusion of chloride-based road deicing chemicals into the trailer connector. Once inside the connector, the chloride-based chemicals corrode the brass terminals and create bridging between positive and ground terminals.

NOTE: The use of soap is not recommended for cleaning the electrical connector, as some soaps may increase the corrosion process.

1. Wash out any existing grease, dirt, and corrosion on the trailer connectors with electrical contact cleaner spray.
2. Grease the trailer connector with a lithium-based dielectric grease.

31–05 Premier 690 Coupling Inspection

IMPORTANT: Before servicing the Premier coupling, refer to the Premier web site at **www.premier-mfg.com** for complete safety, operation, and maintenance instructions.

⚠ WARNING

If at any time the 690 coupling is bound up (jackknifed), the 294 bolt MUST be replaced immediately! Do not use the coupling until the bolt has been replaced. In addition, carefully inspect the 690 coupling, drawbar, drawbar eye, front end assembly, and tail board for damage. Failure to do so may result in trailer separation from the truck while in use, resulting in serious personal injury or property damage.

The time-in-service of the 294 bolt located in the 690 coupling must be monitored, and maintenance performed as follows. See **Fig. 11**.

For a new or replaced 294 bolt:

https://truckmanualshub.com/

- Record the date of installation.

6 months after installation date:

- Remove the 294 bolt. Using dye penetrate or magnetic particle testing along the length of the bolt, inspect for fractures.
- If the 294 bolt has no damage, install it and continue to use for another 6 months.
- If the 294 bolt is fractured, DO NOT USE. Contact Premier Mfg. Co.

1 year after installation date:

- Regardless of service duty, replace the 294 bolt with a new one.

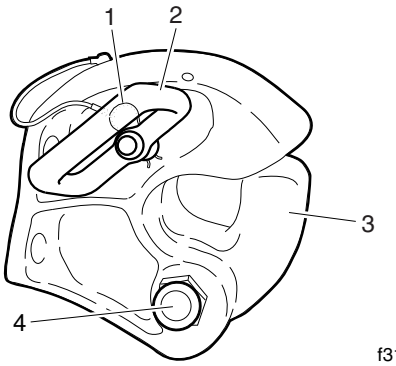

07/13/2010 f310313a

1. Linch Pin
2. Handle
3. Pintle Hook
4. 294 Bolt

Fig. 11, Premier 690 Trailer Coupling

https://truckmanualshub.com/

https://truckmanualshub.com/

Index, Alphabetical

Title of Maintenance Operation (MOP)	MOP Number
Safety Precautions	32–00
Suspension Inspection	32–01
Suspension Lubrication	32–02
Suspension U-Bolt Torque Check	32–03

https://truckmanualshub.com/

https://truckmanualshub.com/

32–00 Safety Precautions

Safety Precautions in this section apply to all procedures within this group.

DANGER

When working on the vehicle, shut down the engine or motor, set the parking brake, and chock the tires. Before working under the vehicle, always place jack stands under the frame rails to ensure the vehicle cannot drop. Failure to follow these steps could result in serious personal injury or death.

32–01 Suspension Inspection

Front Suspension Check

WARNING

Do not replace individual leaves of a damaged leaf spring assembly; replace the complete spring assembly. Visible damage (cracks or breaks) to one leaf causes hidden damage to other leaves. Replacement of only the visibly damaged part(s) is no assurance that the spring is safe. On front spring assemblies, if cracks or breaks exist in the two top leaves, a loss of vehicle control could occur. Failure to replace a damaged spring assembly could cause an accident resulting in property damage, serious personal injury, or death.

Inspect the front spring assemblies for cracked, broken, or abnormally bent leaves. If any of these conditions exist, replace the spring assembly. See **Group 32** of the *122SD and Coronado Workshop Manual* for instructions.

Composite Springs

The Commercial Vehicle Safety Alliance (CVSA) defines a crack that causes out-of-service conditions for composite spring assemblies, as a separation in any axis, which passes completely through the composite spring material.

For additional information on composite spring assemblies, refer to the CVSA, *Out of Service (OOS) Criteria*.

Inspect the Liteflex spring for cracks that result in an out-of-service condition as follows (see **Fig. 1**):

- a side to side crack extending beyond 3/4 of the length of the spring;
- a top to bottom crack extending beyond 3/4 of the length of the spring;
- intersecting cracks of any length.

The Liteflex composite spring should also be removed from service if splintering has occured to the point where noticeable vehicle ride height loss has occurred.

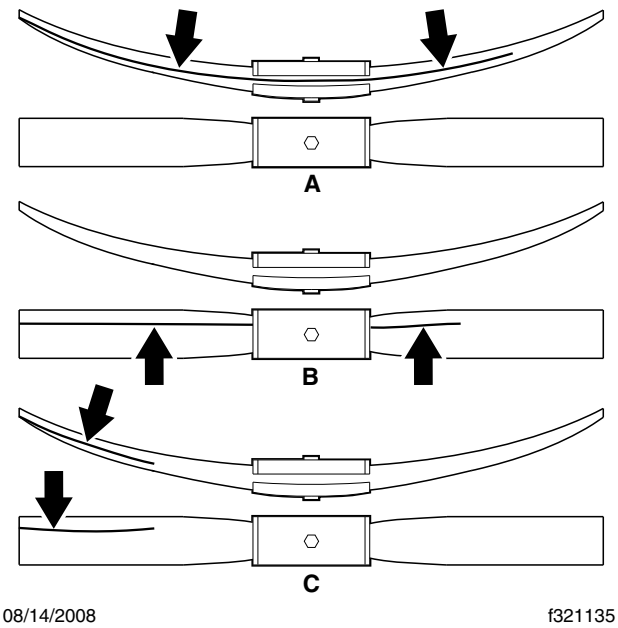

A. Side to side crack extending beyond 3/4 of the length of the spring
B. Top to bottom crack extending beyond 3/4 of the length of the spring
C. Intersecting cracks of any length

Fig. 1, Out-of-Service Conditions, Composite Spring

Shock Absorber Check, Front and Rear Suspensions

Make sure the shock absorber brackets are tight, and the shock absorber is not striking or rubbing the frame or some other part of the chassis. Striking or rubbing the frame is characterized by chafe marks on the shock absorber body and the frame rail. See **Fig. 2**. Check the rubber mounting bushings for cracks,

https://truckmanualshub.com/

cuts, swelling, and dry rot. Also, check the bushings for missing pieces. Replace the bushings as needed.

Inspect the shock absorber for oil leakage. If the shock absorber is damaged or leaking, replace it with a new one. See **Group 32** of the *122SD and Coronado Workshop Manual* for replacement instructions.

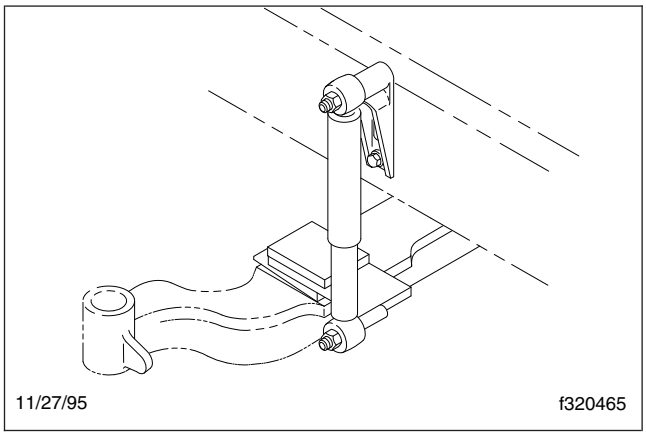

Fig. 2, Direct-Acting Shock Absorber (front suspension shown)

Rear Suspension Check

Freightliner Spring Suspension

⚠ WARNING

Do not replace individual leaves of a damaged leaf spring assembly; replace the complete spring assembly. Visible damage (cracks or breaks) to one leaf causes hidden damage to other leaves. Replacement of only visibly damaged parts is no assurance that the spring is safe. Failure to replace a damaged spring assembly could cause an accident, resulting in serious personal injury or property damage.

Replace worn, cracked, or damaged spring brackets. Failure to do so could result in bracket breakage, possibly leading to loss of vehicle control and resulting in personal injury or property damage.

1. Inspect the forward and rear spring brackets and equalizer brackets for wear, cracks, and other damage. If any of these conditions exist, replace the damaged bracket(s). See **Group 32** of the *122SD and Coronado Workshop Manual* for instructions.
2. Inspect the tandem-axle frame crossmember and gussets for wear, cracks, and other damage. If any of these conditions exist, replace the damaged parts. See **Group 32** of the *122SD and Coronado Workshop Manual* for instructions.

NOTICE

Failure to replace the suspension crossmember or gussets if they are cracked, worn, or otherwise damaged could result in damage to the vehicle chassis.

3. Without detaching the torque arms, attempt to move (by hand) each radius-rod end up, down, in, and out. If there is any movement, replace the torque arm. If a torque arm needs to be replaced, see **Group 32** of the *122SD and Coronado Workshop Manual* for instructions.
4. Inspect the weld seams between the torque arm tube and the shorter bushing tubes. If there are cracks, replace the torque arm. Do not weld the torque arm for any reason.
5. Inspect the rubber bushing ends. See **Fig. 3**. Replace the torque arm for any of the following reasons:
   - if there are gaps between the rubber bushing and the pin or outer steel sleeve;
   - if either bushing end contacts a torque arm pin mounting bolt;
   - if there are cracks in the bushing;
   - if part of the rubber bushing extends beyond the outer circumference of the outer bushing sleeve.
6. Block up the frame enough to take chassis weight off the springs. Attempt to move the equalizer up and down, using a pry bar between the top of the equalizer and top of the equalizer bracket; apply hand pressure only. See **Fig. 4**. If movement at the center of the equalizer exceeds 1/8 inch (3 mm), replace the equalizer bushings. See **Group 32** of the *122SD and Coronado Workshop Manual* for instructions.
7. With the vehicle unloaded, attempt to move the equalizer side to side, using a pry bar between the equalizer and frame rail. Apply hand pressure only. See **Fig. 5**. If clearance between the equalizer assembly and any frame component or fastener is less than 1/8 inch (3 mm), replace the

https://truckmanualshub.com/

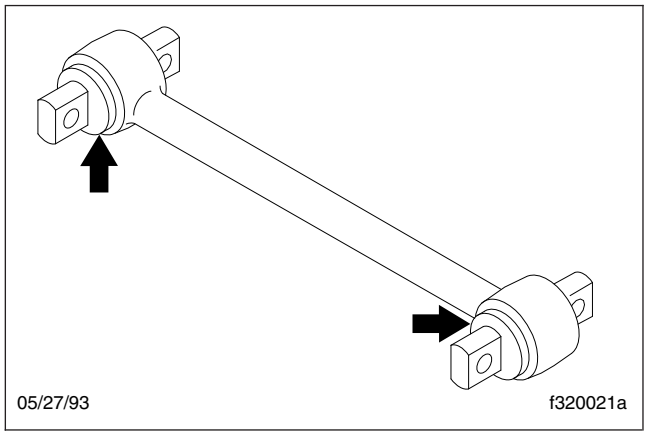

Fig. 3, Torque Arm Bushings

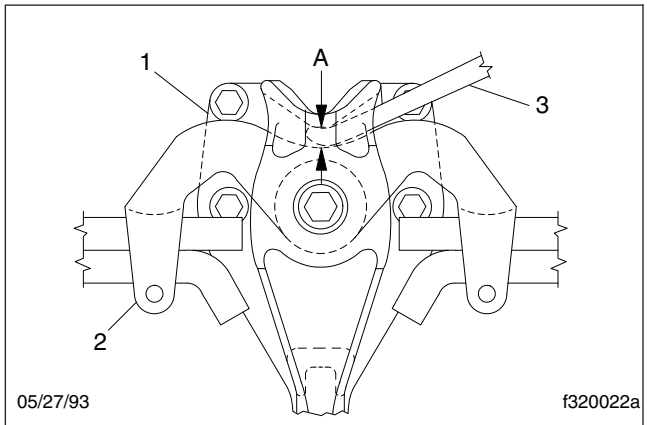

A. Measure the change in gap at this point.
1. Equalizer Bracket
2. Equalizer
3. Pry Bar

Fig. 4, Side View of the Equalizer

equalizer bushings. See **Group 32** of the *122SD and Coronado Workshop Manual* for instructions.

Freightliner AirLiner Suspension

⚠ WARNING

Do not replace individual leaves of a damaged leaf spring assembly; replace the complete spring assembly. Visible damage (cracks or breaks) to one leaf causes hidden damage to other leaves. Replacement of only the visibly damaged part(s) is no assurance that the spring is safe. On front spring assemblies, if cracks or breaks exist in the two top leaves, a loss of vehicle control could occur. Failure to replace a damaged spring assembly could cause an accident resulting in property damage, serious personal injury, or death.

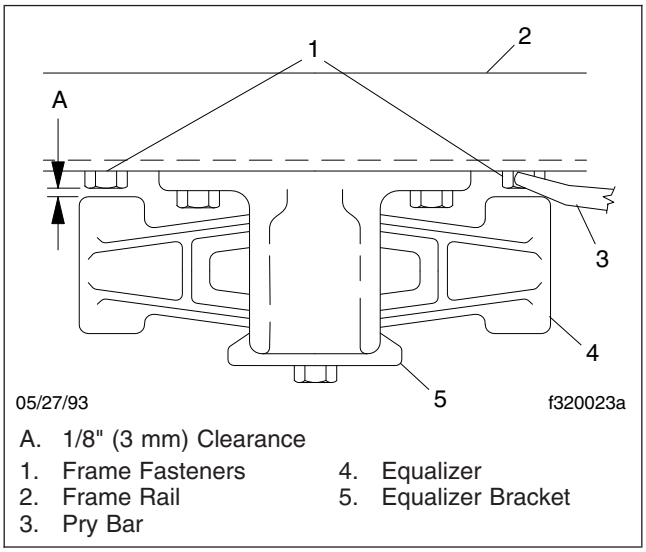

A. 1/8" (3 mm) Clearance
1. Frame Fasteners
2. Frame Rail
3. Pry Bar
4. Equalizer
5. Equalizer Bracket

Fig. 5, Top View of the Equalizer

Inspect the forward and rear spring brackets for wear, cracks, and other damage. If any of these conditions exist, replace the damaged bracket(s). See **Group 32** of the *122SD and Coronado Workshop Manual* for instructions.

⚠ WARNING

Replace worn, cracked, or damaged spring brackets. Failure to do so could result in bracket breakage, possibly leading to loss of vehicle control and resulting in personal injury or property damage.

Inspect the crossmember(s) and gussets for wear, cracks, and other damage. If any of these conditions exist, replace the damaged parts. See **Group 32** of the *122SD and Coronado Workshop Manual* for instructions.

Visually check the air spring piston for cracks, chips, and broken areas. Check the air bag for rips, tears, and holes. Verify that the air spring assembly does not leak. If any of these conditions exist, replace the damaged parts. See **Group 32** of the *122SD and Coronado Workshop Manual* for instructions.

IMPORTANT: Before checking the AirLiner suspension height, make sure there is no load on the chassis, and the trailer is unhitched.

https://truckmanualshub.com/

IMPORTANT: To prevent voiding the warranty on Barksdale height-control valves, note the following:

- Do not overtighten the bolts in the Barksdale height-control valve housing. The bolts should not be loose, and should not require tightening. Only if necessary, tighten the valve housing bolts 45 lbf·in (500 N·cm). Any damage to the valve housing will void the warranty.
- Do not attempt to disassemble the Barksdale valve body or the control lever. There are no serviceable parts in the valve, and any disassembly will void the warranty.

NOTICE

When removing or loosening a Barksdale height-control valve from a mounting bracket, always hold the valve-side mounting studs in place with an Allen wrench while loosening or tightening the nuts that attach the valve to the bracket. Because the mounting studs are threaded into the valve body, loosening the nuts without holding the studs can tighten the studs, which can crush the valve body and damage the valve. Conversely, tightening the nuts without holding the studs can back the studs out, causing a separation of the two halves of the valve body, and possibly a leak.

1. Park the vehicle on a level surface, using a light application of the brakes. Do not apply the parking brakes. Shift the transmission into neutral, and build the secondary air pressure to at least 100 psi (690 kPa). Shut down the engine.
2. Mark the location of the front and rear tires on the floor, and chock the tires on one axle only.
3. Check that the height-control valve vertical linkage is connected and oriented correctly.

NOTE: The stud bolt that fastens the height-control valve horizontal lever to the vertical linkage is oriented correctly when the linkage rod is vertical, as viewed from the side of the vehicle; see **Fig. 6**. The rod may be on the forward or aft side of the lever to get it to be vertical.

4. Measure the distance from the axle stop to the top of the axle U-bolt pad. The correct distance is determined by the axle and suspension configurations; refer to **Group 32** of the *122SD and Coronado Workshop Manual* for details.

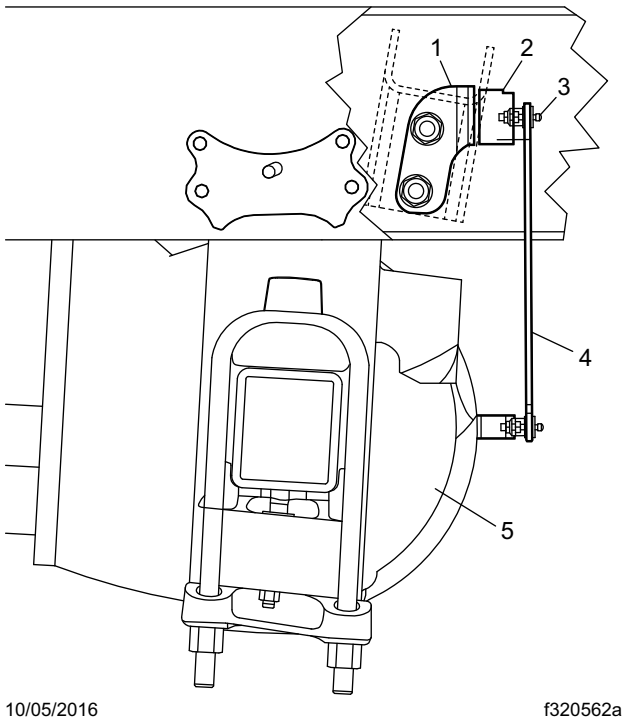

1. Valve Mounting Bracket
2. Height-Control Valve
3. Stud Bolt
4. Linkage Rod
5. Axle

Fig. 6, Typical Barksdale Height-Control Valve Installation (side view)

5. If the axle stop measurement is not correct, see **Group 32** of the *122SD and Coronado Workshop Manual* for adjustment procedures.
6. Apply the parking brakes, and remove the chocks.

Chalmers Suspension

1. Chock the front tires, place the transmission in neutral, and release the parking brakes.
2. Power wash the suspension, or clean it with a hard-bristle brush before performing a visual inspection.
3. Inspect the rubber bushings for cracks or other damage.

   Try to move the torque rod ends using your hands only, and check for any free-play. If free-play is felt, replace the torque rod end bushing.

https://truckmanualshub.com/

Do not use a pry bar to check for free-play. Use of a pry bar may lead to premature bushing replacement.

4. Lift the rear of the vehicle and support the frame on jack stands to unload the suspension components. The vehicle is lifted high enough when the beam ends are off of the saddles.

   Inspect the walking beam for cracks or other damage. If damage is found, replace the walking beam.

   Keep the vehicle supported by the jack stands for the next operation.

5. Manipulate the walking beam so that a micrometer, vernier, or dial caliper can be used to determine the wear area thickness on the bottom face. See **Fig. 7.** Measurements should be taken a minimum of 1/2 inch from the beam flange edges to eliminate any edge wear that may have occurred. Subtract the wear area thickness (see **Fig. 7**, Ref. B) from the thickness at the non-wear area (see **Fig. 7**, Ref. A) to determine the amount of wear.

   If the beams show any wear greater than 0.062 inch (1.5 mm), a Chalmers wear plate must be installed, or the walking beam must be replaced.

6. Rotate the restrictor cans 360 degrees and inspect the cans for cracks, severe corrosion, and distortion. If any of these conditions are present, or the restrictor can is missing, replace the restrictor can.

⚠ WARNING

Replace all cracked or missing restrictor cans. Failure to do so could lead to loss of vehicle control, which could result in property damage, serious personal injury, or death.

32–02 Suspension Lubrication

Front Suspension

Wipe all dirt away from the grease fittings (if equipped) on the spring-eye bushings. Apply multipurpose chassis grease with a pressurized grease gun until old grease is forced out.

NOTE: Service Schedule IV vehicles equipped with a 12,000 lb (5452 kg) front axle are fitted with maintenance-free rubber bushings, and do not require lubrication.

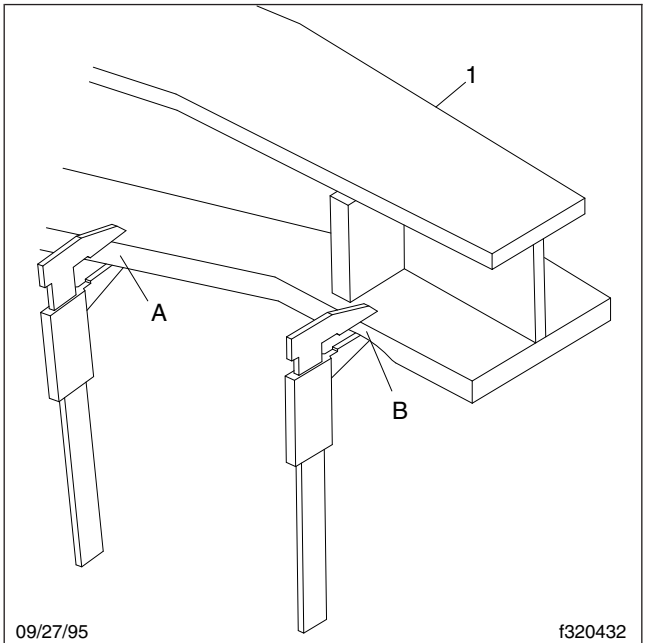

A. Non-Wear Area
B. Wear Area
1. Walking Beam

Fig. 7, Walking Beam End Wear Thickness

Rear Suspension

Chalmers

No lubrication is required on the Chalmers rear suspension.

Freightliner Spring

Single Axle

No lubrication is required on Freightliner single axle rear suspensions.

Tandem Axle

Lubricate the equalizer cap-and-tube assembly bushings by applying multipurpose chassis grease at the grease fitting until old grease is forced out from the cap-and-tube assembly; see **Fig. 8**.

Hendrickson

The Hendrickson RS Series suspension does not require lubrication.

https://truckmanualshub.com/

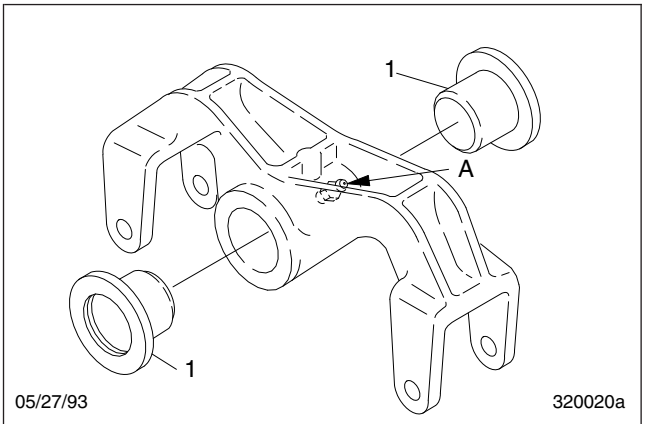

A. Lubricate here.
1. Cap-and-Tube Assembly Bushing

Fig. 8, Equalizer Assembly Lubrication

For Hendrickson RT2 and RTE2 Series, lubricate the bronze, ball-indented bushings in the spring eye, as follows:

1. Park the vehicle on a level surface, apply the parking brakes, and chock the front tires.
2. Raise the rear of the vehicle until the rear wheels are suspended in the air, then support the vehicle with safety stands. This relieves the load on the bushings and pins to allow the proper flow of lubricant around them.
3. Use a multipurpose chassis grease and lubricate the bronze, ball-indented bushings in the spring eyes at the grease fitting; see **Fig. 9**. Continue to lubricate until grease exits both ends of the bushing. If the pin will not accept lubricant, remove the pin and clean the lubrication channels where lubricant may have hardened. Lower the vehicle and remove the safety stands.

32–03 Suspension U-Bolt Torque Check

NOTICE

Failure to retorque the U-bolt nuts could result in spring breakage and abnormal tire wear.

1. Park the vehicle on a flat surface, apply the parking brakes, and chock the tires.

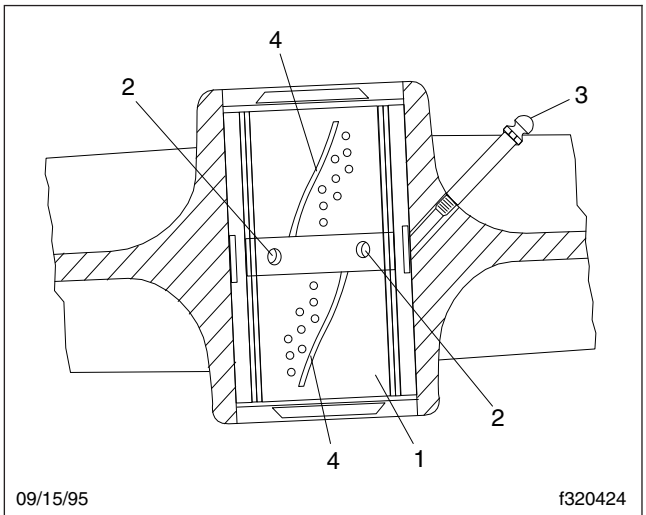

1. Bronze Bushing
2. Lubrication Hole
3. Grease Fitting
4. Lubrication Groove

Fig. 9, Hendrickson RT2 and RTE2 Series Bushing Lubrication

2. Check the U-bolt torque in a diagonal pattern. Set a click-type torque wrench to the highest torque value for the fastener being checked. See **Table 1** for U-bolt torque specifications. Turn the wrench in a clockwise motion (looking up) until the torque wrench clicks.

Spring Assembly U-Bolt High Nut Torque Values *	
Size	**Torque: lbf·ft (N·m)**
5/8–18	Stage 1: Hand Tighten Stage 2: 60 (81) Stage 3: 200 (271) Stage 4: 180 to 230 (245 to 313)
3/4–16	Stage 1: Hand Tighten Stage 2: 60 (81) Stage 3: 200 (271) Stage 4: 270 to 330 (367 to 449)
7/8–14	Stage 1: Hand Tighten Stage 2: 60 (81) Stage 3: 200 (271) Stage 4: 420 to 500 (571 to 680)
1–14	Stage 1: Hand tighten Stage 2: 60 (81) Stage 3: 200 (271) Stage 4: 520 to 600 (707 to 816)

* Tighten in a diagonal pattern as shown in **Fig. 10**.

Table 1, Spring Assembly U-Bolt High Nut Torque Values

https://truckmanualshub.com/

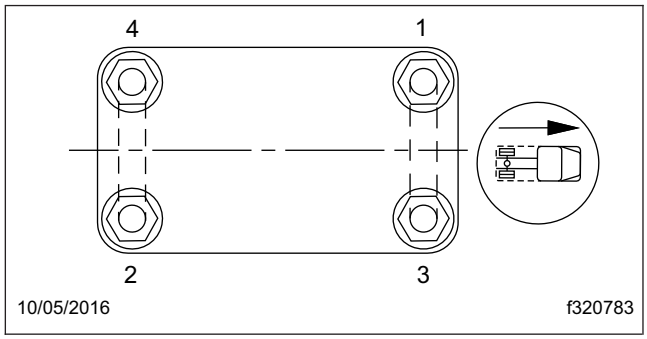

Fig. 10, Tightening Pattern for U-Bolt High Nuts

https://truckmanualshub.com/

https://truckmanualshub.com/

Index, Alphabetical

Title of Maintenance Operation (MOP)	MOP Number
All-Axle Alignment Check	33–06
Knuckle Pin Lubrication, Detroit™ and Dana Spicer® Axles	33–01
Knuckle Pin Lubrication, Meritor® Axles	33–02
Safety Precautions	33–00
Steer Axle Hub Cap Vent Plug Inspection	33–07
Tie Rod Inspection	33–03
Tie Rod Lubrication, Detroit and Dana Spicer Axles	33–04
Tie Rod Lubrication, Meritor Axles	33–05

https://truckmanualshub.com/

https://truckmanualshub.com/

33–00 Safety Precautions

Safety Precautions in this section apply to all procedures within this group.

DANGER

When working on the vehicle, shut down the engine or motor, set the parking brake, and chock the tires. Before working under the vehicle, always place jack stands under the frame rails to ensure the vehicle cannot drop. Failure to follow these steps could result in serious personal injury or death.

33–01 Knuckle Pin Lubrication, Detroit™ and Dana Spicer® Axles

NOTICE

Use regulated pressure when lubricating the knuckle assemblies, otherwise damage could result to the knuckle caps.

Detroit Axles

1. Park the vehicle on a level surface, shut down the engine, and set the parking brake. Chock the tires. When lubricating upper and lower knuckle assemblies, do not raise the front axle.
2. Wipe the fittings clean.
3. Apply multipurpose chassis grease, NLGI Grade 1 (6% 12-hydroxy lithium stearate grease) or NLGI Grade 2 (8% 12-hydroxy lithium stearate grease), until new grease is seen at the junctions of the axle beam and knuckles. For locations of grease fittings, see **Fig. 1**; for grease exit points, see **Fig. 2**.

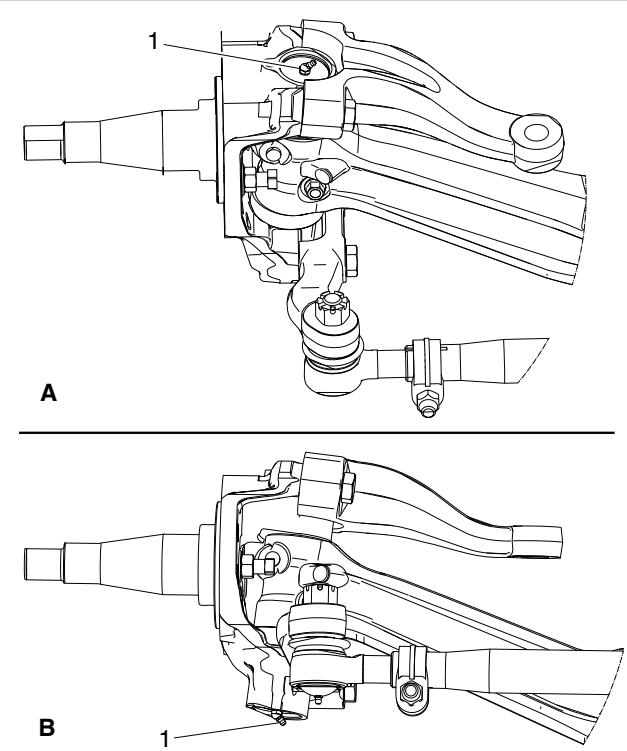

A Upper View, LH Side B Lower View, LH Side
1. Grease Fitting

Fig. 1, Grease Fittings, Detroit Axles

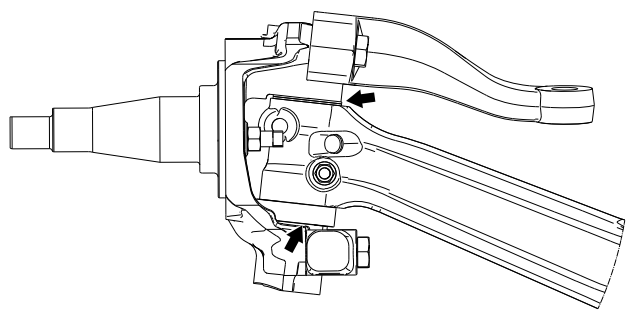

Fig. 2, Knuckle Pin Grease Exit Points, Detroit Axles

Dana Spicer

Park the vehicle on a level surface, apply the parking brakes, and chock the tires. When lubricating upper and lower knuckle assemblies, do not raise the front axle. Wipe the fittings clean, then apply multipurpose chassis grease, NLGI Grade 1 (6% 12-hydroxy lithium stearate grease) or NLGI Grade 2 (8% 12-hydroxy lithium stearate grease), until new grease is seen at the junctions of the axle beam and knuckles. See **Fig. 3**. Knuckle pins without grease fittings are permanently lubricated.

https://truckmanualshub.com/

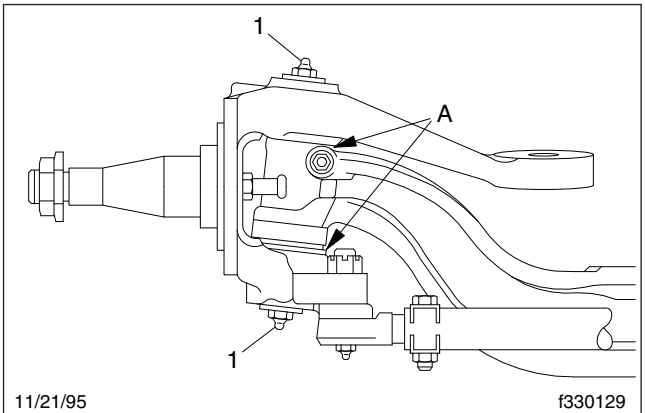

A. Grease Exit
1. Grease Fitting

Fig. 3, Dana Spicer Knuckle Pin Lubrication

33–02 Knuckle Pin Lubrication, Meritor® Axles

NOTICE

Use regulated pressure when lubricating the knuckle assemblies, otherwise damage could result to the knuckle caps.

Park the vehicle on a level surface, apply the parking brakes, and chock the tires. When lubricating knuckle pin bushings, do not raise the front axle. Wipe the lube fittings clean, and apply multipurpose chassis grease, NLGI Grade 2 (8% 12-hydroxy lithium stearate grease), until new grease is seen at the bushing grease seal opposite the fittings. The grease seal will accept grease pressure without damage, and is designed to have grease pumped out through it during lubrication. Even if grease leaks out around the top, or bottom-plate gasket, continue pumping until new grease is seen at the bushing seal opposite the grease fitting; see **Fig. 4**.

NOTE: For operation in very cold climates, use NLGI Grade 1 (6% 12-hydroxy lithium stearate grease).

33–03 Tie Rod Inspection

1. Park the vehicle on a level surface, apply the parking brakes, and chock the tires.

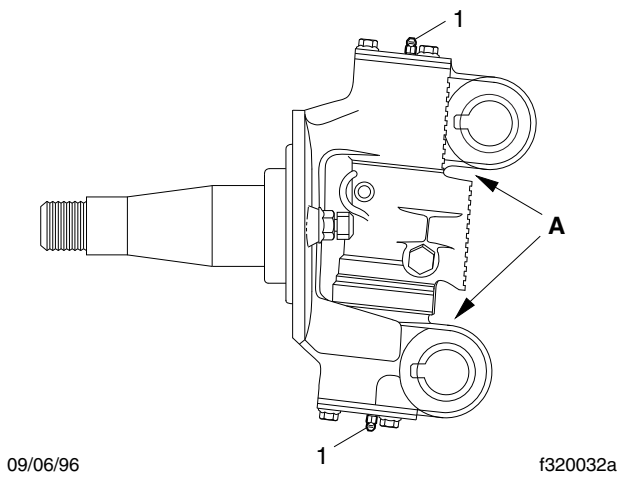

A. Grease Exit
1. Grease Fitting

Fig. 4, Meritor Knuckle Pin Lubrication

2. Check for a missing cotter pin or loose tie-rod end nut. Tighten as needed. Install a cotter pin if it is missing.
3. Shake the cross-tube. A loose fit, or movement between the tapered shaft of the ball and the cross-tube socket members indicates that the tie-rod end assembly must be replaced.
4. The threaded portion of the tie-rod end assembly must be inserted all the way into the cross-tube split for adequate clamping; see **Fig. 5**. Replace the components if this cannot be done; see **Group 33** of the *122SD and Coronado Workshop Manual*.

33–04 Tie Rod Lubrication, Detroit and Dana Spicer Axles

Detroit Axles

For any Detroit axle that requires lubrication of the tie-rod ends, wipe the grease fittings clean, then pump multipurpose chassis grease, NLGI Grade 1 (6% 12-hydroxy lithium stearate grease) or NLGI Grade 2 (8% 12-hydroxy lithium stearate grease), into the tie-rod ends until all used grease is forced out and fresh grease is seen at the ball stud neck. See **Fig. 6**.

https://truckmanualshub.com/

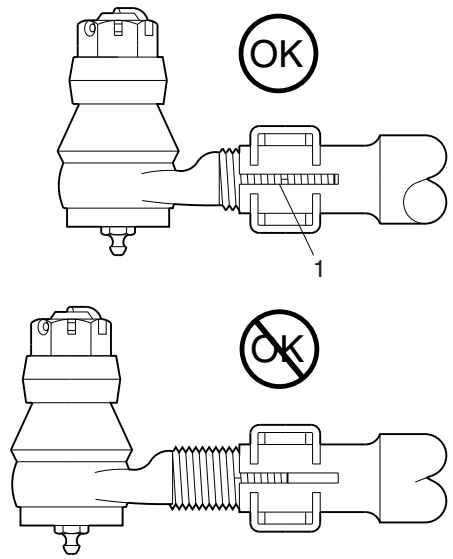

02/27/2007 f320033a

NOTE: Shown without pinch bolt to provide clarity.

1. Cross-Tube Split

Fig. 5, Tie-Rod End Adjustment

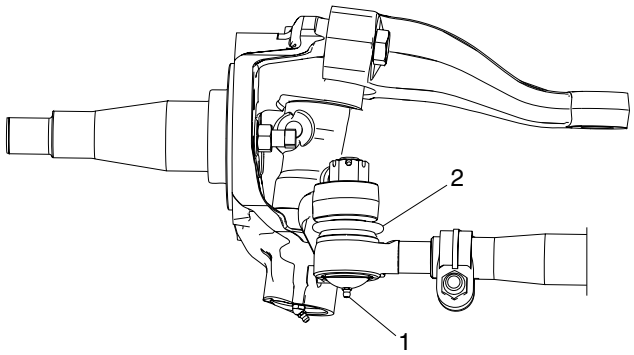

06/12/2012 f330273

NOTE: No grease should emit from the tie-rod boot. If grease emits from the tie-rod boot, the boot is damaged.

1. Grease Fitting 2. Boot

Fig. 6, Grease Fitting and Boot, Detroit Axle

Dana Spicer

For any Dana Spicer axle that requires lubrication of the tie-rod ends, wipe the grease fittings clean, then pump multipurpose chassis grease, NLGI Grade 2 (8% 12-hydroxy lithium stearate grease), into the tie-rod ends until all used grease is forced out and fresh grease is seen at the ball stud neck.

NOTE: For operation in very cold climates, use NLGI Grade 1 (6% 12-hydroxy lithium stearate grease).

33–05 Tie Rod Lubrication, Meritor Axles

For any Meritor axle that requires lubrication of the tie-rod ends, wipe the grease fittings clean, then pump multipurpose chassis grease, NLGI Grade 1 (6% 12-hydroxy lithium stearate grease) or NLGI Grade 2 (8% 12-hydroxy lithium stearate grease), into the tie-rod ends until all used grease is forced out and fresh grease is seen at the ball stud neck.

33–06 All-Axle Alignment Check

Drive Axle Alignment Checking

Check the axle alignment, parallelism, and thrust angle measurements for the rear drive axles. Use the applicable procedure and specifications in **Group 35** of the vehicle Workshop Manual.

Toe-In Inspection

For vehicle alignment to be accurate, the shop floor must be level in every direction. The turn plates for the front wheels must rotate freely without friction, and the alignment equipment must be calibrated every three months by a qualified technician from the equipment manufacturer. Freightliner dealers must have proof of this calibration history.

1. Apply the parking brakes and chock the rear tires.
2. Raise the front of the vehicle until the tires clear the ground. Place safety stands under the axle.
3. Using spray paint or a piece of chalk, mark the entire center rib of each front tire.
4. Place a scribe or pointed instrument against the marked center rib of each tire, and turn the tires. The scribe must be held firmly in place so that a single straight line is scribed all the way around each front tire.

https://truckmanualshub.com/

5. Place a turn-plate or turntable under both front tires. Remove the safety stands and lower the vehicle. Remove the lock-pins from the gauges; make sure the tires are exactly straight ahead.

NOTE: If turn-plates or turntables are not available, lower the vehicle. Remove the chocks from the rear tires and release the parking brakes. Move the vehicle backward, then forward about six feet (two meters).

6. Place a trammel bar at the rear of the front tires; locate the trammel pointers at spindle height, and adjust the pointers to line up with the scribe lines on the center ribs of the front tires. See **Fig. 7**. Lock in place. Check that the scale is set on zero.

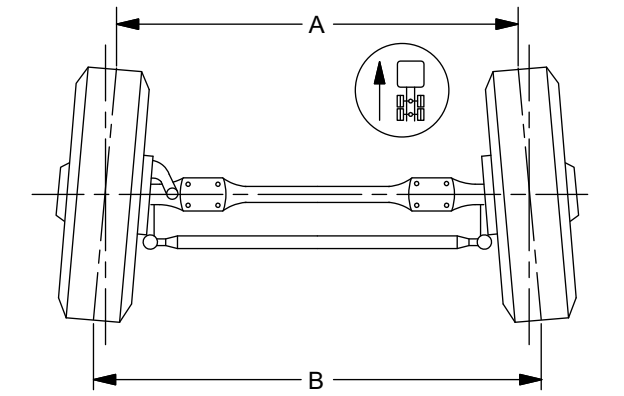

NOTE: B minus A equals toe-in.

Fig. 7, Wheel Toe-In (overhead view)

7. Place the trammel bar at the front of the tires (see **Fig. 8**) and adjust the scale end so that the pointers line up with the scribe lines. See **Fig. 9**.
8. Read the toe-in from the scale, and compare it to the toe-in specification in **Group 33** of the vehicle Workshop Manual. If corrections are needed, refer to **Group 33** of the vehicle Workshop Manual for instructions on adjusting the toe-in.

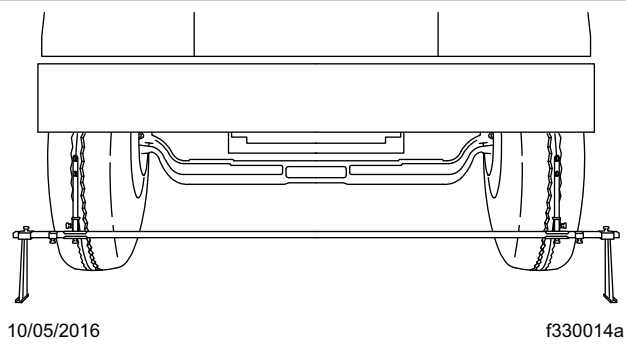

Fig. 8, Trammel Bar Positioning

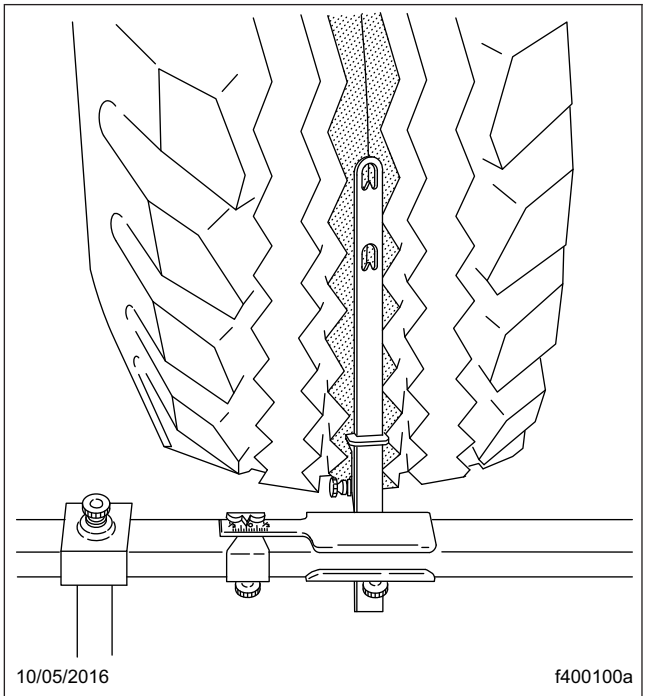

Fig. 9, Setting Trammel Bar Pointers

33–07 Steer Axle Hub Cap Vent Plug Inspection

General Information

As a function of their design, hubcap vent plugs will on occasion exhibit signs of hub oil on their exterior surface. Depending on environmental conditions and/or age of the plug, the amount of oil present can vary. This is a normal result of the venting process

https://truckmanualshub.com/

due to pressure increase within the hub cavity. For an example of normal vent plug appearance, see **Fig. 10**.

09/01/2016 f330298

Fig. 10, Normal Oil Venting

A vent plug can wear or be damaged and cause excessive leakage, or allow water to enter the hub and contaminate the oil. For examples of a leaking vent plug, see **Fig. 11** and **Fig. 12**. Evidence of a leaking vent plug may appear as;

- Oil splatter around the wheel
- Gooey/gummy oil around the vent plug purge point
- Hub/plug area is dirty, and water contaminated oil in the hub.
- Hub/plug area is clean, but there is water contaminated oil in the hub. (pressure washing is the most likely cause)

Inspection

NOTICE

Only remove vent plugs by hand. They can be damaged if a tool is used. Wipe the hub/plug area clean before checking the oil. Do not use a pressure washer to clean the hub/plug area. The plug has a vent and this can contaminate the oil with water.

09/01/2016 f330299

Fig. 11, Excessive Leakage

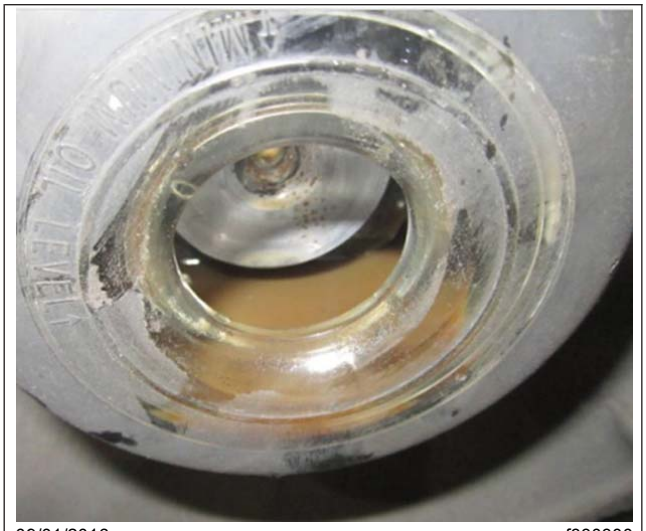

09/01/2016 f330300

Fig. 12, Water in Oil

1. Park the vehicle on a level surface, shut down the engine and set the parking brakes. Chock the tires.
2. Inspect the axle hub cap and vent plug for evidence of excessive leakage.
3. Wipe the hub cap and vent plug clean with a rag.

https://truckmanualshub.com/

4. Remove the vent plug and check the oil for evidence of water contamination.

   If there is evidence of water contaminated oil in the hub, disassemble the effected axle end, clean, inspect, and reassemble the axle end. For instructions, refer to **Group 33** of the vehicle's Workshop Manual.

   If there is evidence of excessive leakage, remove the damaged part and replace it with a new part.

5. Check the oil level in the hub, and fill the hub with new approved oil as needed.

https://truckmanualshub.com/

Index, Alphabetical

Title of Maintenance Operation (MOP)	MOP Number
Axle Breather and Axle Lubricant Level Inspection	35–02
Axle Lubricant and Filter Change, and Magnetic Strainer Cleaning (Synthetic Lubricant)	35–01
Safety Precautions	35–00

https://truckmanualshub.com/

https://truckmanualshub.com/

35–00 Safety Precautions

Safety Precautions in this section apply to all procedures within this group.

DANGER

When working on the vehicle, shut down the engine or motor, set the parking brake, and chock the tires. Before working under the vehicle, always place jack stands under the frame rails to ensure the vehicle cannot drop. Failure to follow these steps could result in serious personal injury or death.

35–01 Axle Lubricant and Filter Change, and Magnetic Strainer Cleaning (Synthetic Lubricant)

NOTICE

When operating under adverse conditions, it may be necessary to change the axle lubricant at more frequent intervals than listed in the scheduled maintenance tables. Failure to do so could result in axle damage.

IMPORTANT: For all axles, including tandem-drive axles and two-speed axles, do the procedures under the heading, "All Axle Models." For a two-speed axle with a shift unit, also change the shift unit lubricant. See under the heading, "Two-Speed Axles With Shift Unit."

All Axle Models

Detroit™

IMPORTANT: On Detroit axles, the oil change interval for long haul vehicles can be extended to 500,000 miles (800 000 km) for axles with weight ratings of 34,000 to 40,000 lb (15 000 to 18 000 kg) using synthetic lubricant if a lubricant analysis shows adequate quality. Oil must be changed at least every four years, and more often if the axle is exposed to high temperatures and steep grades.

1. Park the vehicle on a level surface, shut down the engine, and set the parking brake. Chock the tires.
2. Clean the fill plug and the area around it. In the axle housing rear cover, remove the plug from the oil fill hole. See **Fig. 1**.

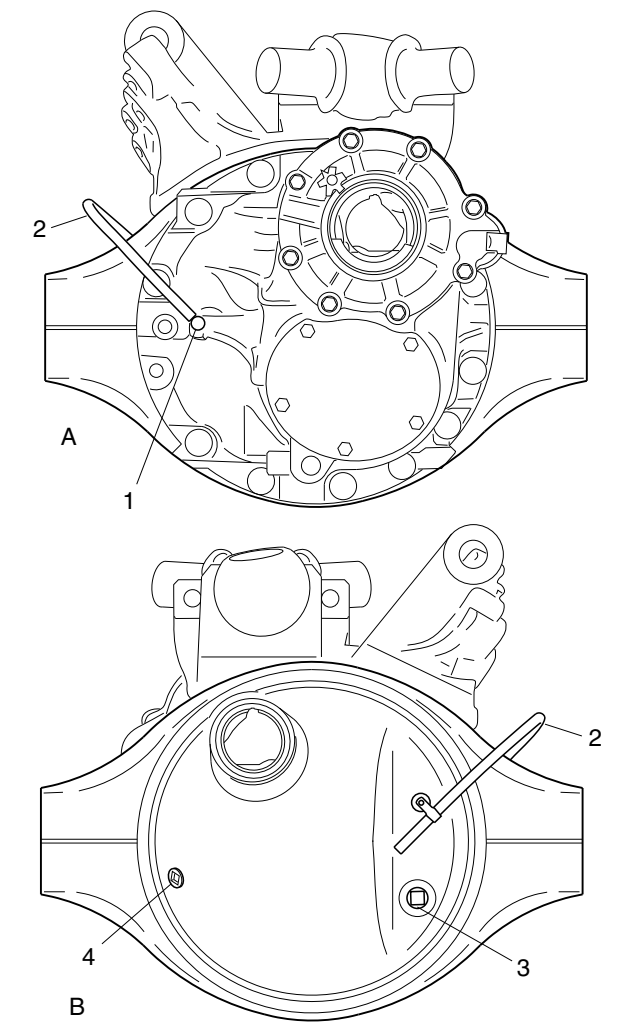

A. Front View
B. Rear View
1. Axle Breather
2. Breather Hose
3. Temperature Sensor Port
4. Oil Fill Plug

Fig. 1, Detroit Tandem Axle (forward axle shown)

https://truckmanualshub.com/

CAUTION

Be careful when draining the axle oil. It may be very hot, and could cause personal injury if it contacts the skin.

3. Place a drain pan under the rear axle drain plug. Drain the oil when it is warm. At this temperature, the oil will run more freely and ensure that the axle is flushed.
4. Clean the fill and drain plugs. Change them if necessary.
   - 4.1 For magnetic plugs, use a piece of key stock or any other convenient steel slug to short the two magnetic poles and divert the magnetic field.
   - 4.2 Clean away the collected material deposited on each pole. Magnets will rapidly lose their effectiveness as collected material bridges the gap between the two poles.
   - 4.3 After the first oil is changed, inspect the drain plug each time for large quantities of metal particles.
   - 4.4 After cleaning, install the drain plug(s) and tighten to 30 lbf·ft (41 N·m).
5. Fill the axle with the recommended lubricant. See **Table 1** for recommended drive axle lubricants and **Table 2** for lubricant capacities.

Detroit Drive Axle Lubricants*		
IMPORTANT: Lubricant used in Detroit rear axles must meet Mercedes-Benz specification 235.20 (mineral) or 235.8 (synthetic). Mobil Delvac™ Gear Oil A 80W-90 and Mobilube™ HD-A Plus 80W-90 meet specification 235.20. Mobil Delvac 1 Gear Oil 75W-90 and Mobilube 1 SHC 75W-90 meet specification 235.8. For more product information, see http://bevo.mercedes-benz.com.		
Type	**Ambient Temperature**	**SAE Viscosity Grade**
Mineral Oil	–15°F (–26.1°C) and up†	80W–90
Synthetic Oil	–40°F (–40°C) and up†	75W–90

* Detroit rear axles do not require the use of friction modifiers.

† There is no upper limit on the ambient temperature, but axle sump temperature must never exceed 250°F (121°C).

Table 1, Detroit Drive Axle Lubricants

NOTE: Some Detroit axles have a small tapped and plugged hole near and below the housing oil fill hole. This smaller hole is for a lubricant temperature indicator only, and should not be used as a fill or level hole.

- 5.1 Fill the axle through the oil fill hole. Lubricant should be level with the bottom of the oil fill hole. To check fluid level, see **Fig. 2**.
- 5.2 Install and tighten the fill plug 30 lbf·ft (41 N·m).

Detroit Rear Axle Lubricant Capacity (Hubs Full)	
Axle	**Oil Capacity: Quarts (liters)**
Forward-Rear, Model 4	14.3 (13.5)*
Single and Rearmost Tandem, Model 4	10.6 (10.0)*
Single, Model 2	5.8 (5.5)*

* These values assume the wheel ends are properly lubricated. Actual oil capacity might vary slightly depending on gear ratio.

Table 2, Detroit Rear Axle Lubricant Capacity

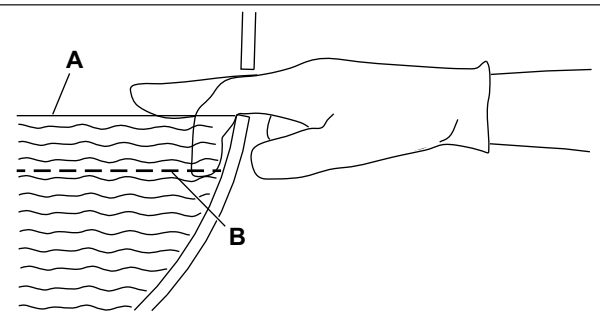

10/05/2016 f350061a

A. Correct (lube level at bottom of fill hole)
B. Incorrect (lube level below fill hole)

Fig. 2, Axle Lubricant Level Inspection

Meritor®

IMPORTANT: If using synthetic lubricant in an axle equipped with a pump and filter system, the lubricant change interval is extended to 500,000 miles (800 000 km).

IMPORTANT: Meritor rear axles do not require the use of friction modifiers.

https://truckmanualshub.com/

1. Park the vehicle on level ground, apply the parking brakes, and chock the front tires.
2. Remove the axle carrier fill plug. Then remove the drain plug from the bottom of the housing. Completely drain the lubricant while the unit is warm, to allow the lubricant to drain faster.

   On tandem-drive axles, it is also necessary to remove the plug at the bottom of the interaxle differential housing to drain that lubricant.
3. If equipped with an oil pump, remove the axle oil filter. Use a suitable filter strap wrench; see **Fig. 3**. Discard the old filter.

NOTE: There may be about one pint (0.5 L) of lubricant remaining in the filter. Be careful not to spill it when removing the filter.

4. Using the recommended drive axle lubricant, coat the face of the gasket on the new oil filter, if one was removed. Install the filter over the adapter, and tighten the filter one full turn after the gasket contacts the base; do not overtighten. See **Table 3** for recommended lubricants.
5. Clean the fill and drain plugs as follows. Change them if necessary.

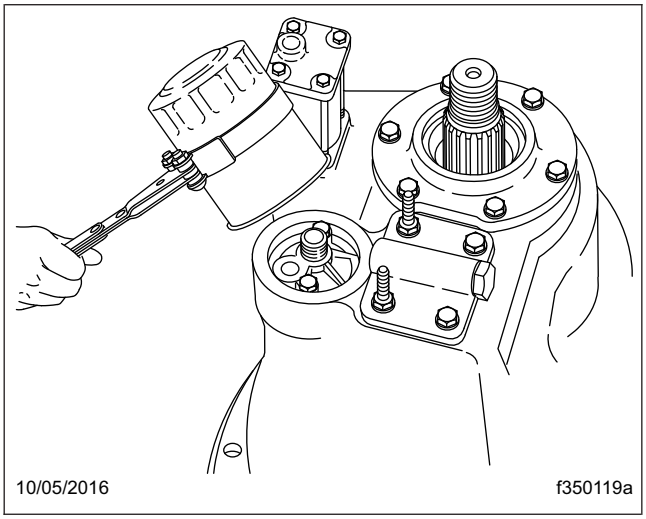

Fig. 3, Meritor Axle Oil Filter Removal

Meritor Drive Axle Recommended Lubricant			
Recommended Lubricant Type	**Ambient Temperature**	**Lubricant SAE Viscosity Grade**	**Meritor Specification**
Synthetic Gear Oil	–40°F (–40°C) and Up*	75W–90	0–76–N
	–40°F (–40°C) and Up*	75W–140	0–76–M

* There is no upper limit on these outside temperatures, but axle sump temperature must never exceed 250°F (121°C).

Table 3, Meritor Drive Axle Recommended Lubricant

5.1 For magnetic plugs, use a piece of key stock or any other convenient steel slug to short the two magnetic poles and divert the magnetic field.

5.2 Check the drain plug for metal particles every 100,000 miles (160 000 km). Clean away the collected material deposited on each pole. Magnets will rapidly lose their effectiveness as collected material bridges the gap between the two poles.

5.3 Each time the oil is changed, replace any magnetic drain plug that does not meet the minimum pickup capacity.

NOTE: Meritor recommends plugs with elements having a minimum pickup capacity of 1.5 pounds (0.7 kg) of low-carbon steel.

5.4 After cleaning, install the drain plug(s) and tighten to 35 lbf·ft (47 N·m).

6. Fill the axle with recommended lubricant as follows. See **Table 4** for drive axle lubricant capacities.

NOTE: Some Meritor axles have a small tapped and plugged hole near and below the housing lubricant fill hole. This smaller hole is for a lubricant temperature indicator only, and should not be used as a fill or level hole.

6.1 With the vehicle on a level surface, fill the axle through the oil fill hole. Allow a few minutes for the oil to flow into the axle.

https://truckmanualshub.com/

Lubricant should be level with the bottom of the oil fill hole. To check fluid level, see **Fig. 2**.

6.2 Install and tighten the fill plug 35 lbf·ft (47 N·m).

7. Whenever the interaxle differential housing has been drained, add an additional 2 pints (0.9 L) of the recommended lubricant directly into the interaxle differential housing.
8. Remove the chocks, then drive the vehicle, unloaded, for 1 or 2 miles (2 or 3 km) at speeds not to exceed 25 mph (40 km/h), to thoroughly circulate lubricant throughout the carrier and housing assemblies.

Meritor Drive Axle Lubricant Capacities		
Axle Model		**Capacity*: pt (L)**
Single-Drive, Single Reduction		
RS–21–160		39.5 (18.7)
RS–23–160		39.5 (18.7)
RS–23–161		37.2 (17.6)
RS–23–185		47.3 (22.4)
RS–23-186		47.3 (22.4)
RS–26-185		46.0 (22.0)
Tandem-Drive, Single Reduction		
MT–40–143MA–N	Forward	30.2 (14.3)
	Rear	25.8 (12.2)
RT–40–145, RT–40–145A, RT–40–145P	Forward	30.2 (14.3)
	Rear	25.8 (12.2)
RT–40–160	Forward	39.1 (18.5)
	Rear	39.4 (16.3)
RT–44–145, RT–44–145P	Forward	29.3 (13.9)
	Rear	25.1 (11.9)
RT–46–160, RT–46–160P	Forward	39.1 (18.5)
	Rear	34.4 (16.3)
RT–46–164EH/P	Forward	38.0 (18.0)
	Rear	33.0 (15.0)
RT–50–160	Forward	38.0 (18.0)
	Rear	33.0 (15.0)
RT–52–185	Forward	56.1 (26.5)
	Rear	36.1 (17.1)

Meritor Drive Axle Lubricant Capacities		
Axle Model		**Capacity*: pt (L)**
RT–58–185	Forward	56.1 (26.5)
	Rear	36.1 (17.1)
RT–70–380	Forward	54.4 (25.7)
	Rear	53.1 (25.1)

* Quantities listed are approximate. Fill axle until lubricant is level with bottom of fill hole with vehicle on level ground.

Table 4, Meritor Drive Axle Lubricant Capacities

Dana® Spicer®

IMPORTANT: The use of friction modifiers is not approved in Dana drive axles.

1. Park the vehicle on level ground, set the parking brakes, and chock the tires.
2. Clean the fill plug and the area around it. In the axle housing rear cover, remove the plug from the oil fill hole (or standpipe, if installed in the oil fill hole); see **Fig. 4**.

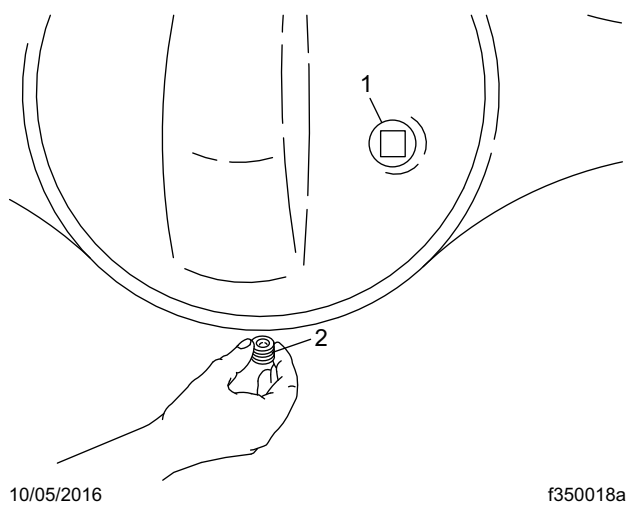

1. Oil Fill Plug 2. Oil Drain Plug

Fig. 4, Dana Spicer Axle Housing Drain and Fill Plugs

3. Place a drain pan under the rear axle drain plug; see **Fig. 4**. Drain the oil at normal operating temperature, 150°F to 200°F (65°C to 93°C). At this temperature, the oil will run more freely and ensure that the axle is flushed.

https://truckmanualshub.com/

NOTE: Some tandem-drive axles are equipped with a cylindrical magnetic strainer, located below the lube pump on the front of the power divider cover. All rear axles are fitted with magnetic drain and fill plugs.

4. At each axle oil change, remove and clean the magnetic strainer, if equipped, as follows; see **Fig. 5**.

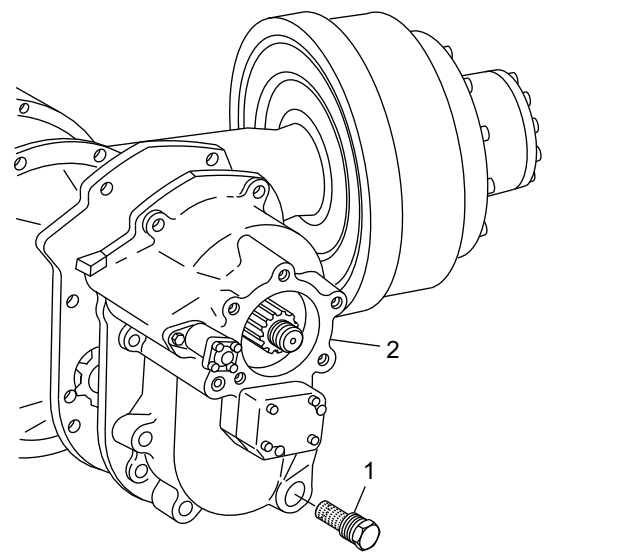

1. Magnetic Strainer 2. Power Divider

Fig. 5, Dana Spicer Tandem-Drive Axle Magnetic Strainer

4.1 Remove the magnetic strainer from the power divider cover.

⚠ WARNING

Always wear eye protection when using compressed air to clean parts, as flying debris could cause permanent damage to unprotected eyes. Do not point the air stream in the direction of other persons.

4.2 Wash the strainer in solvent, and blow it dry with compressed air to remove oil and metal particles.

4.3 Install and tighten the magnetic strainer 40 to 60 lbf·ft (54 to 81 N·m).

5. Clean the fill and drain plugs as follows. Change them if necessary.

5.1 For magnetic plugs, use a piece of key stock or any other convenient steel slug to short the two magnetic poles and divert the magnetic field.

5.2 Clean away the collected material deposited on each pole. Magnets will rapidly lose their effectiveness as collected material bridges the gap between the two poles.

5.3 After the first oil is changed, inspect the drain plug each time for large quantities of metal particles.

5.4 After cleaning, install the drain plug(s) and tighten to 40 to 60 lbf·ft (54 to 81 N·m).

6. Fill the axle with the recommended lubricant as follows. See **Table 5** for recommended drive axle lubricants, and **Table 6** for drive axle lubricant capacities.

NOTE: Some Dana Spicer axles have a small tapped and plugged hole near and below the housing oil fill hole. This smaller hole is for a lubricant temperature indicator only, and should not be used as a fill or level hole.

6.1 With the vehicle on a level surface, fill the axle through the oil fill hole or standpipe opening. Lubricant should be level with the bottom of the oil fill hole, or the top of the standpipe opening. To check fluid level, see **Fig. 2**.

6.2 Install and tighten the fill plug 40 to 60 lbf·ft (54 to 81 N·m).

https://truckmanualshub.com/

Dana Spicer Drive Axle Recommended Lubricant		
Lubricant Type	**Condition**	**Lubricant SAE Viscosity Grade**
Dana Spicer Roadranger® Synthetic Drive Axle Lubricants, or Equivalent with Military Specification MIL–L–2105D	Over-the-Road Service	75W–90
	Off-Highway Equipment, or Under Extra Heavy Loads	80W–140

Table 5, Dana Spicer Drive Axle Recommended Lubricant

Dana Spicer Drive Axle Lubricant Capacities		
Axle Type	**Axle Model**	**Capacity*: Pints (liters)**
Tandem-Drive Axle Installation		
Single Reduction	DD404, DD404P	31 (14.7)†
	DD405	31 (14.7)†
	DS404, DS404P	31 (14.7)†
	DS405, DS405P	31 (14.7)†
	DDH40, DDH40P, DSH40	31 (14.7)†
	D40-170P, D46-170P	39 (18.5)†
2-Speed (dual-range)	DT463P	40 (18.9)†
Double Reduction	DP463P	40 (18.9)†

* Quantities listed are approximate. Fill axle until lubricant is level with bottom of fill hole with vehicle on level ground.

† Add 2 pints (1 L) of additional lubricant to the power divider.

Table 6, Dana Spicer Drive Axle Lubricant Capacities

Two-Speed Axles With Shift Unit

IMPORTANT: Also do the appropriate procedure under the heading "All Axle Models."

Dana Spicer and Meritor

1. Remove the shift unit housing cover; see **Fig. 6**. Drain and discard the old lubricant. Discard the housing cover gasket.
2. Thoroughly wash the axle shift parts and housing cover, and allow them to air dry.

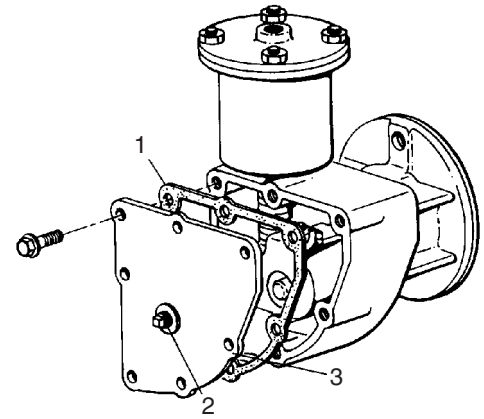

08/06/93 f350021a

1. Housing Cover Gasket
2. Oil Fill Plug
3. Shift Unit Housing Cover

Fig. 6, Two-Speed-Axle Shift Unit

3. Install the housing cover and a new cover gasket. Tighten the housing cover capscrews 90 to 110 lbf·in (1020 to 1240 N·cm), then remove the oil fill plug from the cover.

IMPORTANT: When the ambient temperature is above 0°F (–18°C), use SAE 10 heavy-duty engine oil, API service classification SD (sulfated ash content must not exceed 1.85%). When the ambient temperature is below 0°F (–18°C), use one part kerosene to three parts SAE 10 heavy-duty engine oil, API service classification SD (sulfated ash content must not exceed 1.85%). This cold-weather mixture can be safely used up to 32°F (0°C).

Commercially available automatic transmission fluid may be used in place of SAE 10 engine oil. Automatic transmission fluid can be used for all temperatures; do not mix it with kerosene. To prevent component damage, do not mix engine oil and automatic transmission fluid.

4. Using the recommended lubricant, fill the shift unit housing through the oil fill hole until the lubricant is level with the bottom of the opening.
5. Coat the threads of the fill plug with a small amount of Loctite® 242, or equivalent sealant. Install the fill plug finger-tight in the rear axle shift

https://truckmanualshub.com/

unit housing. Using a wrench, tighten it an additional 1-1/2 turns.

35–02 Axle Breather and Axle Lubricant Level Inspection

For all axles, including tandem drive axles and two-speed axles, perform the applicable procedures under the heading, "All Axle Models." For a two-speed axle with a shift unit, also check the shift unit lubricant; see under the heading, "Two-Speed Axles With Shift Unit."

All Axle Models

Detroit™

NOTICE

Failure to keep the rear axle filled to the proper level with the recommended lubricant can result in rear axle damage.

1. Park the vehicle on a level surface, shut down the engine, and set the parking brake. Chock the tires.
2. If the vehicle has just been driven, allow a few minutes for the lubricant to settle.

IMPORTANT: On Detroit axles, the oil change interval for long haul vehicles can be extended to 500,000 miles (800 000 km) for axles with weight ratings of 34,000 to 40,000 lb (15 000 to 18 000 kg) using synthetic lubricant if a lubricant analysis shows adequate quality. Oil must be changed at least every four years, and more often if the axle is exposed to high temperatures and steep grades.

3. Clean the fill plug and the area surrounding the fill plug on the side of the axle carrier. Remove the plug. Check lubricant level when the axle is cold, or near room temperature.

NOTE: Some Detroit axles have a small tapped and plugged hole near and below the housing oil fill hole. This smaller hole is for a lubricant temperature indicator only, and should not be used as a fill or level hole.

4. Check that the lubricant is level with the bottom of the fill hole. See **Fig. 2**. If low, check for oil leaks, and correct as needed. Add oil to the level of the fill plug, using the lubricant recommended in **Table 1**.

IMPORTANT: A lubricant level close enough to be seen or touched is not sufficient. It must be level with the bottom of the fill hole.

5. Install and tighten the fill plug 30 lbf·ft (41 N·m).

IMPORTANT: Always check the axle breather whenever checking the lubricant level. Check the breather more frequently under adverse operating conditions.

6. Check the axle housing breather (see **Fig. 1**). Make sure that it is open and unclogged. If the breather is plugged or damaged, clean or replace it as needed.

Meritor®

NOTICE

Failure to keep the rear axle filled to the proper level with the recommended lubricant can result in rear axle damage.

NOTICE

When operating under adverse conditions, it may be necessary to change the axle lubricant at more frequent intervals than listed in the scheduled maintenance tables. Failure to do so could result in axle damage.

1. Park the vehicle on a level surface, shut down the engine, and set the parking brake. Chock the tires.

IMPORTANT: Oil level must be checked at each M1 interval on Meritor axles.

2. Clean the fill plug and the area surrounding the fill plug on the side of the axle carrier. Remove the plug. Check the lubricant level when the axle is cold, or near room temperature.

NOTE: Some Meritor axles have a small tapped and plugged hole near and below the housing oil fill hole. This smaller hole is for a lubricant temperature indicator only, and should not be used as a fill or level hole.

https://truckmanualshub.com/

3. Check that the lubricant is level with the bottom of the fill hole. See **Fig. 2**. If low, check for oil leaks, and correct as needed. Add oil to the level of the fill plug, using the lubricant recommended in **Table 3**.
4. Install and tighten the fill plug 35 lbf·ft (47 N·m).

IMPORTANT: Always check the axle breather whenever checking the lubricant level. Check the breather more frequently under adverse operating conditions.

5. Check the axle housing breather. Make sure that it is open and unclogged. See **Fig. 7**. If the breather is plugged or damaged, clean or replace it as needed.

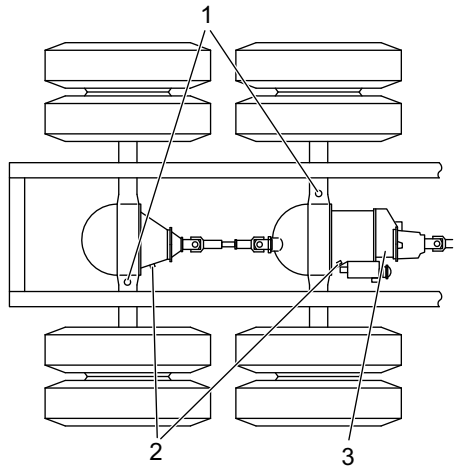

10/05/2016 f350062a

1. Axle Housing Breathers
2. Carrier Oil Fill Plugs
3. Interaxle Differential

Fig. 7, Meritor Axle Housing Breathers

6. On non-drive axles using oil-lubricated wheel bearings, check the oil level at the wheels, and add oil if low. Use the same lubricant recommended for the drive axle.

NOTE: When adding to or checking the oil level, make certain the hub cap and plug are clean before removing the plug; this will minimize the possibility of dirt and road grime entering the assembly.

Dana® Spicer®

NOTICE

Failure to keep the rear axle filled to the proper level with the recommended lubricant can result in rear axle damage.

1. Park the vehicle on a level surface, shut down the engine, and set the parking brake. Chock the tires.
2. If the vehicle has just been driven, allow a few minutes for the lubricant to settle.
3. Clean the oil fill plug and the area surrounding it; see **Fig. 8**. Remove the plug from the fill hole (or standpipe, if installed in the oil fill hole).

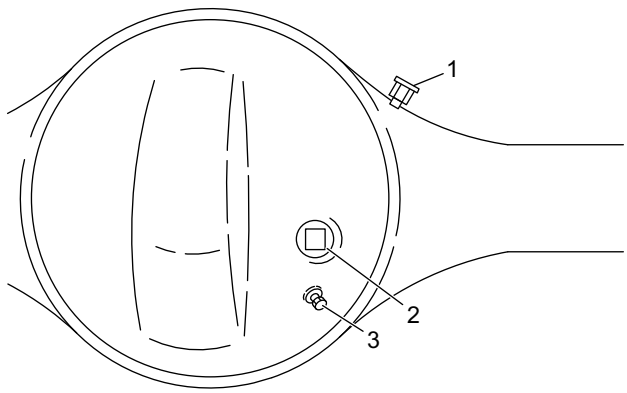

10/06/2016 f350002a

1. Axle Housing Breather
2. Fill Plug
3. Temperature Indicator Plug

Fig. 8, Dana Spicer Axle Housing Breather

IMPORTANT: A lubricant level close enough to be seen or touched is not sufficient. It must be level with the bottom of the fill hole, or the top of the standpipe opening.

4. Check that the lubricant is level with the bottom of the fill hole, or with the top of the standpipe opening. See **Fig. 2**. If low, check for oil leaks, and correct as needed. Add oil to the level of the fill plug, using the lubricant recommended in **Table 5**.
5. Install and tighten the fill plug 40 to 60 lbf·ft (54 to 81 N·m).

https://truckmanualshub.com/

IMPORTANT: Always check the axle breather whenever checking the lubricant level. Check the breather more frequently under adverse operating conditions.

6. Check the axle housing breather. Make sure that it is unclogged and free from corrosion. See **Fig. 8**. If the breather is plugged or damaged, clean or replace it as needed.

Two-Speed Axles With Shift Unit

Dana Spicer and Meritor

IMPORTANT: Also do the appropriate procedure under the heading "All Axle Models."

NOTICE

Failure to keep lubricant at the specified level could cause damage to the axle shift unit.

1. Clean the shift unit oil fill plug, and the area surrounding the plug. See **Fig. 6**. Turn the fill plug counterclockwise to remove it.
2. Insert a finger or pipe cleaner into the fill plug hole and check the fluid level. The lubricant should be level with the bottom of the fill hole. If low, add the recommended lubricant.

NOTICE

Before adding additional lubricant, make sure of the type currently in the shift unit. To prevent component damage, do not mix engine oil with automatic transmission fluid.

IMPORTANT: When the ambient temperature is above 0°F (–18°C), use SAE 10 heavy-duty engine oil, API service classification SD (sulfated ash content must not exceed 1.85%). When the ambient temperature is below 0°F (–18°C), use one part kerosene to three parts SAE 10 heavy-duty engine oil, API service classification SD (sulfated ash content must not exceed 1.85%). This cold-weather mixture can be safely used up to 32°F (0°C).

Commercially available automatic transmission fluid may be used in place of SAE 10 engine oil. Automatic transmission fluid can be used for all temperatures; do not mix it with kerosene.

3. Coat the threads of the fill plug with a small amount of Loctite® 242, or equivalent sealant. Install the fill plug finger-tight in the rear axle shift unit housing. Using a wrench, tighten it an additional 1-1/2 turns.

https://truckmanualshub.com/

https://truckmanualshub.com/

Index, Alphabetical

Title of Maintenance Operation (MOP)	MOP Number
Tire Check	40–02
Wheel Nut Check	40–01

https://truckmanualshub.com/

https://truckmanualshub.com/

40–01 Wheel Nut Check

IMPORTANT: After a wheel has been installed, the wheel nut torque must be rechecked after 50 to 100 miles (80 to 160 km) of operation.

See **Table 1** for disc wheel nut torque specifications, and see **Fig. 1** for the wheel nut tightening sequence.

NOTICE

Insufficient wheel nut (rim nut) torque can cause wheel shimmy, resulting in wheel damage, stud breakage, and extreme tire tread wear. Excessive wheel nut torque can break studs, damage threads, and crack discs in the stud hole area. Use the recommended torque values, and follow the tightening sequence shown in Fig. 1.

When checking stud-piloted rear dual disc wheels with inner and outer nuts, remove one outer nut at a time, tighten the inner nut, then reinstall and tighten the outer nut. Repeat this procedure for all wheel nuts, using the tightening sequence shown in **Fig. 1**.

Disc Wheel Fastener Torques			
Description	**Nut Size**	**Wheel Manufacturer**	**Torque: lbf·ft (N·m)**
*10-Hole and 8-Hole Hub-Piloted Disc Wheel With Two-Piece Flange Nuts **			
Front and Rear Wheel Nut	M22 x 1.5	All	450–500 (610–678)
10-Hole Stud-Piloted Disc Wheel With Inner and Outer Nuts †			
Front Wheel Nut	1-1/8–16	All	450–500 (610–678)
Rear Wheel Inner Nut	3/4–16	All	450–500 (610–678)
Rear Wheel Outer Nut	1-1/8–16	All	450–500 (610–678)

* Torque values for hub-piloted wheels are given for lubricated threads. Lubricate threads with SAE 30W engine oil. Do not apply thread lubricant to ball seats of the nuts and wheels. Wipe it off if it is applied accidentally.

† Torque values for stud-piloted wheels are given for clean, dry threads.

Table 1, Disc Wheel Fastener Torques

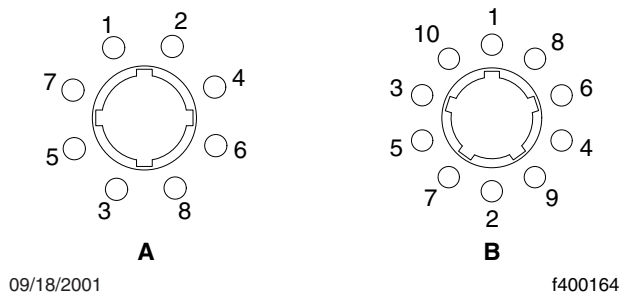

A. 8-Stud Disc Wheel B. 10-Stud Disc Wheel

Fig. 1, Wheel Nut Tightening Sequence

40–02 Tire Check

Tires should be inspected closely during the first 3000 to 10,000 miles (5000 to 16 000 km) for abnormal wear.

Maintain the proper pressures for carried loads, per the tire manufacturers' recommendations, or the tire pressure label on the driver's door.

Have the wheel alignment checked after the first 10,000 miles (16 000 km), then every 40,000 miles (60 000 km) thereafter.

Do not continue to drive the vehicle if tires develop any of the following:

- blisters;
- cuts or punctures that reach to the cord;
- a nail, screw, rock, or other puncturing object;
- flat spots or irregular wear;
- tread worn to a minimum depth;
- inability to maintain proper tire pressure.

https://truckmanualshub.com/

https://truckmanualshub.com/

Index, Alphabetical

Title of Maintenance Operation (MOP)	MOP Number
Driveline Inspection	41–01
Driveline Lubrication	41–02
Safety Precautions	41–00

https://truckmanualshub.com/

https://truckmanualshub.com/

41–00 Safety Precautions

Safety Precautions in this section apply to all procedures within this group.

DANGER

When working on the vehicle, shut down the engine or motor, set the parking brake, and chock the tires. Before working under the vehicle, always place jack stands under the frame rails to ensure the vehicle cannot drop. Failure to follow these steps could result in serious personal injury or death.

41–01 Driveline Inspection

1. Park the vehicle on a flat, level surface, apply the parking brakes, and chock the tires.

WARNING

Self-locking bearing-cup or bearing-strap capscrews must not be reused; replace the capscrews with new ones. Also, do not undertighten or overtighten any bearing-cup or bearing-strap capscrews. A loose or broken fastener at any point in the driveline weakens the driveline connection, which could cause serious vehicle damage, or could result in a driveshaft separating from the vehicle, possibly causing loss of vehicle control that could result in serious personal injury or death.

2. Check the torque of the bearing-cup or bearing-strap capscrews; see **Table 1** for installed torque values.

   Remove and discard any loose capscrews. Do not reuse any loosened self-locking capscrews; they are designed for one-time installation only. Replace all loosened and removed capscrews with new ones. Tighten the new capscrews as specified in **Table 1**.

   For half-round yokes with bearing straps , tighten the bearing-strap capscrews following the tightening sequence shown in **Fig. 1**, in increments of 20 lbf·ft (25 N·m) to the torque specifications listed in **Table 1**.

Bearing Cap or Bearing Strap Capscrew Torque Specifications	
U-Joint Type	**Torque: lbf·ft (N·m)**
Half-Round Yokes with Bearing Straps and 3/8-inch Capscrews (see **Fig. 2**, Ref. 8)	45–60 (60–80)
Half-Round Yokes with Bearing Straps and 1/2-inch Capscrews (**Fig. 2**, Ref. 8)	130–135 (175–185)
Full-Round Yokes with Bearing Cups (**Fig. 3**)	43 (58)
RPL Series U-Joints with Bearing Cups (**Fig. 4**)	125 (169)

Table 1, Bearing Cap or Bearing Strap Capscrew Torque Specifications

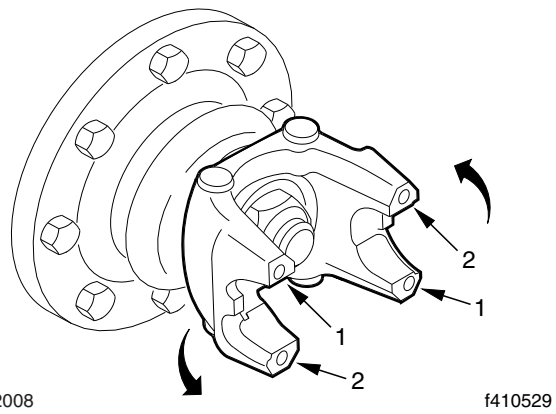

Tighten the capscrews in a counterclockwise sequence, starting with either number 1 position.

Fig. 1, Tightening Sequence, Half-Round Yoke Bearing Strap Capscrews

3. Check the driveline yokes for cracks, and check end-yokes for looseness; see **Fig. 2**.

   Replace cracked yokes.

   If any end-yoke can be moved in or out on its shaft, or can be rocked on its shaft, disconnect the driveshaft and U-joint from the yoke, then check the drive component's shaft seal for leakage or other visible damage that may have been caused by the loose yoke. Replace the seal if needed, then tighten the yoke nut. Refer to **Section 41.00, Specifications 400**of the *122SD and Coronado Workshop Manual* for torque specifica-

https://truckmanualshub.com/

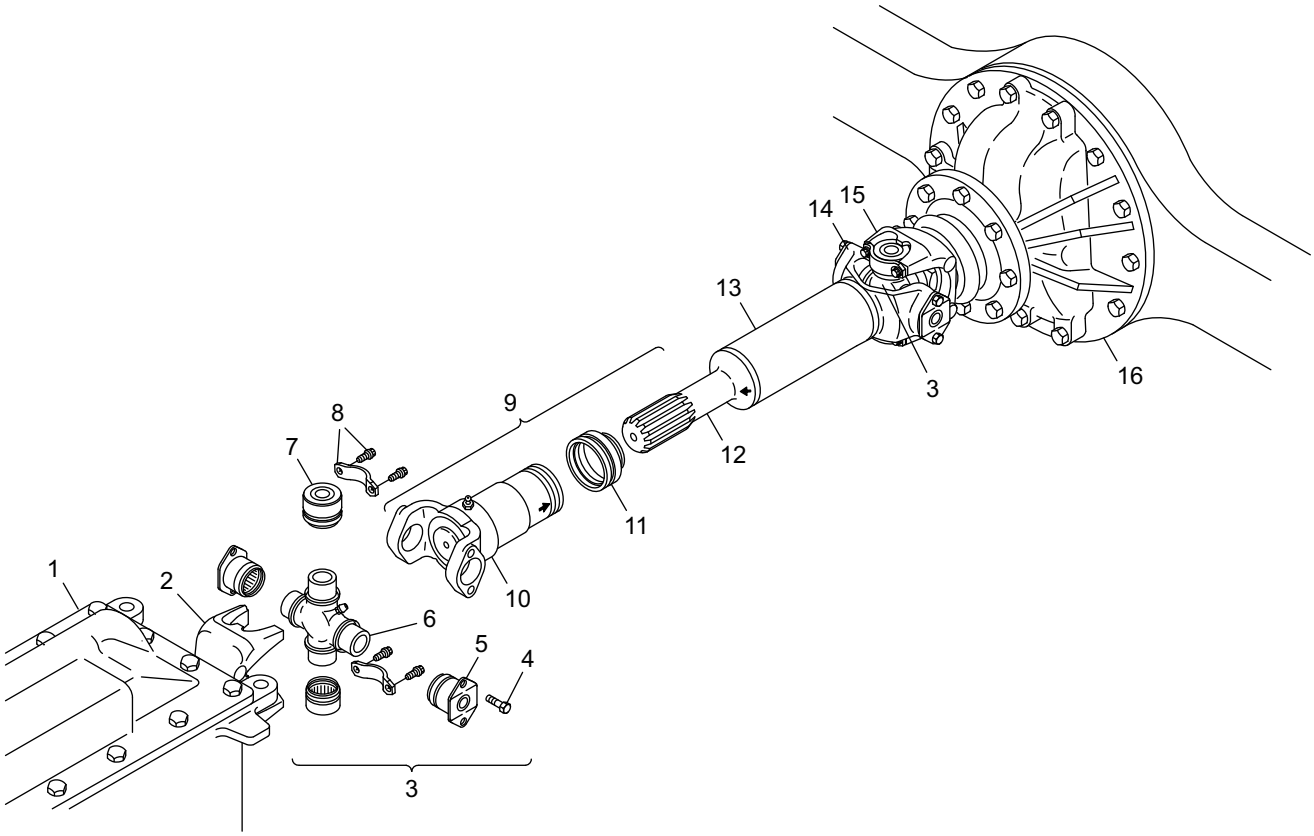

NOTE: Not all fasteners are shown.

1. Transmission
2. Transmission Output-Shaft End-Yoke (half-round)
3. U-Joint Assembly
4. Bearing Plate Self-Locking Capscrew
5. Bearing Cup (for full-round yoke)
6. U-Joint Cross
7. Bearing Cup (for half-round yoke)
8. Bearing Strap and Bearing-Strap Capscrew
9. Slip-Joint Assembly
10. Sleeve-Yoke (full-round)
11. Dust Cap
12. Splined Stub Shaft
13. Driveshaft Tube
14. Tube-Yoke (full-round)
15. Axle Input-Shaft End-Yoke (half-round)
16. Rear Axle

Fig. 2, Components of a Basic Driveline

tions. If the yoke is still loose after tightening the yoke nut, replace the end-yoke and yoke nut.

Replace the prevailing torque locknut (end-yoke nut) if it was removed for yoke replacement, seal replacement, or any other reason.

4. Check U-joint assemblies for wear by moving the driveshaft up and down, and from side to side. If any movement of the U-joint cross in the bearings can be felt or seen, replace the U-joint assembly.

5. Check if the midship bearing and mounting are loose or have deteriorated, by attempting to move the driveshaft up and down, and from side to side. If the bearing is loose on its shaft, or rattles, replace it. If the bearing mount is loose on the frame, tighten the mounting fasteners to the proper torque value. See **Section 41.00, Specifications 400** of the *122SD and Coronado Workshop Manual* for torque specifications. Replace the midship bearing assembly if the rubber cushion is deteriorated or oil-soaked.

https://truckmanualshub.com/

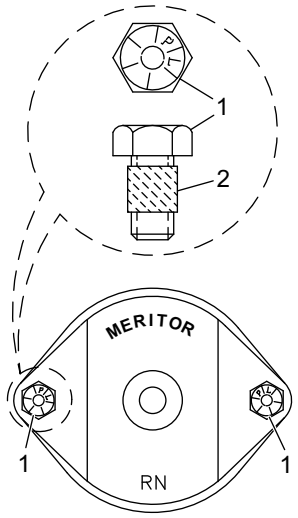

10/06/2016 f410155a

1. Self-Locking Capscrew
2. Adhesive Band

Fig. 3, Meritor U-Joint Fasteners for Full-Round Yokes

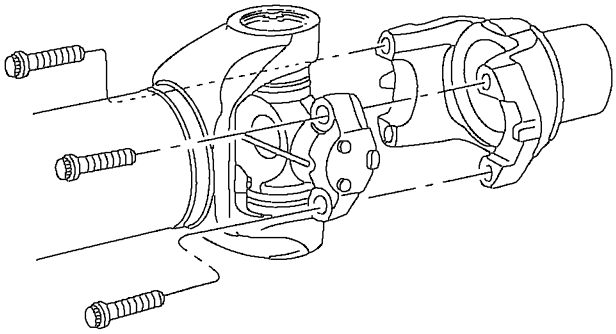

10/06/2016 f410182

Fig. 4, Meritor RPL Series U-Joint

6. Check slip joints for spline wear by moving the sleeve-yoke and splined shaft back and forth; see **Fig. 5**. If the slip joint can be twisted in a clockwise, or counterclockwise movement greater than 0.007 inch (0.18 mm), replace both the sleeve-yoke and the splined shaft.
7. Examine the driveshaft tubes for dents, bends, twists, or other damage. If any tube appears to be damaged, refer to **Section 41.00** of the *122SD and Coronado Workshop Manual* for repair and replacement instructions.

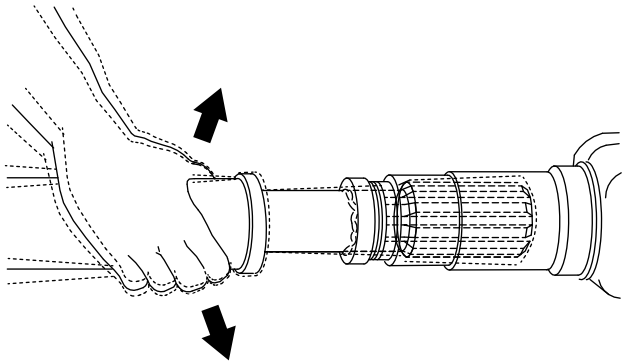

10/06/2016 f410012a

Attempt to move the sleeve-yoke and splined shaft back and forth.

Fig. 5, Slip Joint Spline Wear Checking

8. Examine the driveshaft for evidence of missing balance weights, and for build-up of foreign material. Remove any foreign material. If there is any evidence that balance weights are missing, remove the driveshaft and have it balanced.
9. For driveshafts with slip joints, check to be sure the yoke plug is not loose or missing; see **Fig. 6**, Ref. 2. Repair or replace the yoke plug as needed. If the yoke plug is missing, the splined shaft may be hitting the plug and knocking it out; contact your Regional Service Office for assistance in determining the correct driveshaft length.

41–02 Driveline Lubrication

Universal Joint Lubrication

NOTE: Vehicles equipped with Meritor RPL Series drivelines do not require periodic lubrication.

1. Park the vehicle on a level surface, apply the parking brakes, and chock the tires.
2. Wipe all old grease and dirt from each U-joint grease fitting. See **Fig. 6**.
3. Use a hand-type grease gun, or a high-pressure gun with a low-pressure adapter, to lubricate U-joints. If a low-pressure adapter is not used, U-joints may not receive enough grease.

   Using lithium 12-Hydroxy stearate grease (NLGI Grade 2, with EP additives), lubricate until *new* grease can be seen at *all four* U-joint seals.

https://truckmanualshub.com/

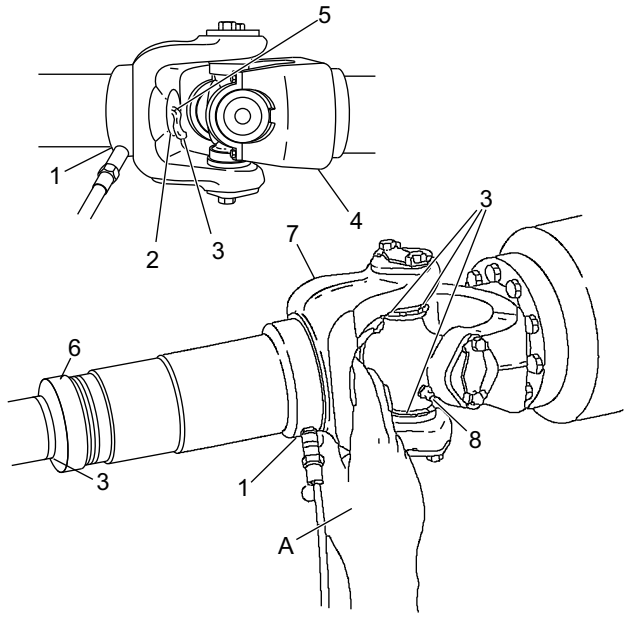

A. After grease appears, cover the pressure-relief hole while continuing to lubricate.
1. Slip Joint Grease Fitting (with grease gun attached)
2. Yoke Plug
3. Grease
4. Half-Round Yoke
5. Yoke Plug Pressure-Relief Hole
6. Slip Joint Seal
7. Full-Round Yoke
8. U-Joint Grease Fitting

Fig. 6, Slip Joint and U-Joint Lubrication

Fresh grease must be seen escaping from *all four* bearing-cap seals of each U-joint. On full-round yokes equipped with a bearing cup, if most of the grease being added to a U-joint can be seen escaping from just one of the U-joint seals, check the torque on the capscrews at that seal.

4. Tighten the bearing-cup capscrews 43 lbf·ft (58 N·m). If the capscrews were already tight, or all of the U-joint seals still do not purge, remove the bearing cup at that seal, and examine the seal for damage. If the seal is damaged, replace the complete U-joint.
5. If grease does not appear at one seal, use a prying tool to pry the U-joint trunnion away from the non-purging seal, or tap the driveshaft or yoke with a plastic or rawhide mallet on the side opposite the dry seal, while continuing to lubricate. If grease still does not appear, loosen the capscrews at the bearing with the dry seal, to relieve seal tension. Lubricate the U-joint until new grease is seen at the seal, then tighten the capscrews to the correct torque specifications. If the bearing will not take grease, replace the U-joint. Refer to **Group 41** of the vehicle Workshop Manual for replacement instructions.
6. Check the purged grease. If it appears rusty, gritty, or burned, replace the U-joint.
7. Wipe the purged grease from the seals, and any excess grease from the grease fitting.

Slip Joint Spline Lubrication

NOTE: Vehicles equipped with Meritor RPL Series drivelines do not require periodic lubrication.

1. If equipped with a grease fitting, wipe all old grease and dirt from the slip joint grease fitting. See **Fig. 6**.
2. Use a hand-type grease gun or a high-pressure gun with a low-pressure adapter, to lubricate the slip joint. Add multipurpose chassis grease (lithium 12-hydroxy stearate, NLGI Grade 2, with EP additives) until it appears at the pressure-relief hole in the yoke plug. Then cover the relief hole with your finger, while continuing to apply gun pressure until new grease appears at the slip joint seal. See **Fig. 6**. This ensures complete lubrication of the splines.
3. Wipe the purged grease from the pressure-relief hole and slip joint seal, and any excess grease from the grease fitting.

https://truckmanualshub.com/

Index, Alphabetical

Title of Maintenance Operation (MOP)	MOP Number
Air Brake System Valve Inspection	42–01
Air Dryer Inspection	42–03
Alcohol Evaporator Cleaning and Inspection	42–04
Bendix Air Dryer Desiccant Replacement	42–02
Bendix Automatic Drain Valve Operating and Leakage Tests	42–13
Bendix E-6 Foot Control Valve Inspection and Lubrication	42–10
Brake Inspection	42–05
Dana Spicer Camshaft Bracket Lubrication	42–08
Dana Spicer, Haldex, and Gunite Slack Adjuster Lubrication	42–09
Meritor Camshaft Bracket Lubrication	42–06
Meritor Slack Adjuster Lubrication	42–07
Safety Precautions	42–00
Versajust Slack Adjuster Inspection and Lubrication	42–12
WABCO System Saver Air Dryer Desiccant Cartridge Replacement	42–11

https://truckmanualshub.com/

https://truckmanualshub.com/

42–00 Safety Precautions

Safety Precautions in this section apply to all procedures within this group.

⚠ DANGER

When working on the vehicle, shut down the engine or motor, set the parking brake, and chock the tires. Before working under the vehicle, always place jack stands under the frame rails to ensure the vehicle cannot drop. Failure to follow these steps could result in serious personal injury or death.

42–01 Air Brake System Valve Inspection

NOTE: There is no scheduled air valve maintenance on vehicles equipped with Bendix air valves and a Bendix air dryer if the air dryer desiccant is replaced at 350,000 miles (563 000 km). If the desiccant is not changed at 350,000 miles (563 000 km), or if the vehicle is equipped with another air dryer, maintenance will have to be performed to the air brake valves. See **Group 42** of the vehicle Workshop Manual for procedures.

IMPORTANT: For vehicles equipped with an oil-coalescing air dryer desiccant cartridge, replace the cartridge once a year, regardless of mileage.

42–02 Bendix Air Dryer Desiccant Replacement

IMPORTANT: For vehicles equipped with an oil-coalescing air dryer desiccant cartridge, replace the cartridge once a year, regardless of mileage.

AD–9

1. Park the vehicle on a level surface, apply the parking brakes, and chock the tires.
2. Completely drain all air reservoirs. Air pressure gauges should read 0 psi (0 kPa).

NOTE: The compressor discharge line may still contain residual air pressure, open the line slowly.

3. Identify, tag, and disconnect the three air lines from the end cover.
4. Disconnect the harness connector from the heater and thermostat assembly.
5. Loosen the bolt that secures the upper mounting bracket strap.
6. Remove the two bolts and Nylok® nuts that secure the air dryer to the lower mounting bracket. Mark the position of the mounting bracket to the end cover and mark the bolts to ease installation.
7. Remove the upper mounting bracket strap fasteners, then remove the strap and the air dryer.
8. Place the air dryer on a bench and remove the remaining 6 bolts, 12 washers, 6 Nylok nuts, and the air dryer housing. See **Fig. 1**. Discard the Nylok nuts. Remove the end-cover-to-housing O-ring.
9. Clamp the desiccant cartridge in a vise.

⚠ WARNING

Clamping the end cover or housing in a vise could seriously compromise the air dryer's ability to hold air pressure, which could cause a failure in the brake system, resulting in property damage, personal injury, or death.

10. Twist the end cover counterclockwise to release the cartridge from the end cover. Rotate the end cover until it completely separates from the desiccant cartridge.

NOTE: A substantial torque, up to 50 lbf·ft (68 N·m), may be necessary to remove the desiccant cartridge.

NOTICE

Dirt or obstructions in the O-ring grooves can cause an O-ring failure that will result in an air leak.

11. Inspect the condition of the O-ring seals. If they are cracked, crimped, or otherwise damaged, replace them to ensure an airtight seal. Clean the O-ring grooves of any dirt or obstruction.

https://truckmanualshub.com/

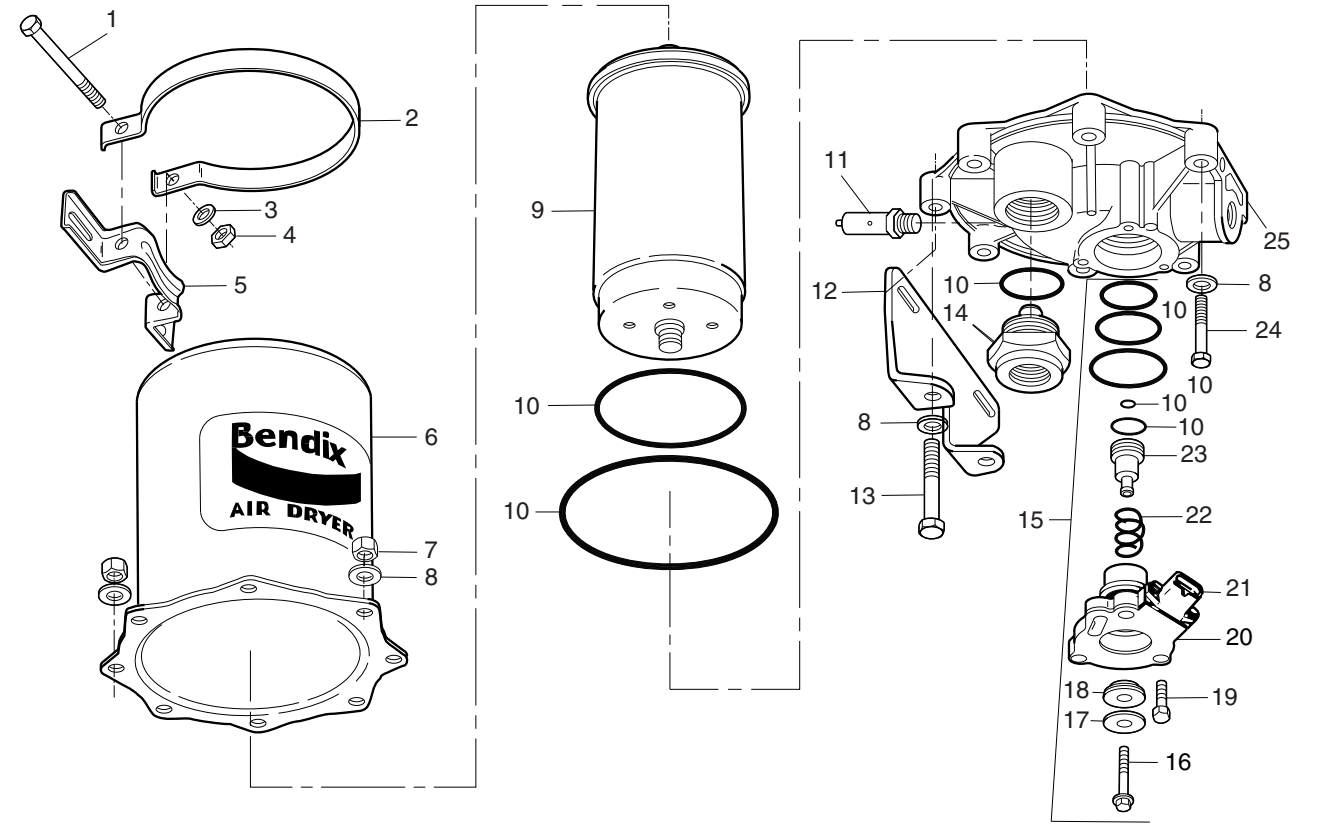

1. 5/16 x 4-1/2 Upper Mounting Bracket Bolt
2. Upper Mounting Bracket Strap
3. Lockwasher
4. 5/16-Inch Nylok Nut
5. Upper Mounting Bracket
6. Housing
7. Nylok Nut
8. 3/8-Inch Special Washer
9. Desiccant Cartridge
10. O-Ring
11. Safety Valve
12. Lower Mounting Bracket
13. 3/8-Inch Bolt (long)
14. Check Valve Assembly
15. Purge Valve Assembly
16. Purge Valve Capscrew
17. Exhaust Diaphragm
18. Purge Valve
19. 1/4-Inch Tapping Screw
20. Purge Valve Housing
21. Heater and Thermostat Housing
22. Return Spring
23. Purge Piston
24. 3/8-Inch Bolt
25. End Cover

Fig. 1, AD–9 Air Dryer (exploded view)

12. Lubricate the O-rings with silicone or lithium grease and install them in the end cover.
13. Install the desiccant cartridge on the end cover. Turn the cartridge clockwise until the desiccant cartridge makes contact with the end cover.
14. Place the desiccant cartridge in a vise, and turn the end cover clockwise an additional 180 to 225 degrees to fully tighten the desiccant cartridge to the end cover.

NOTE: Desiccant cartridge torque should not exceed 50 lbf·ft (68 N·m).

15. Place the housing over the desiccant cartridge and align the mounting holes with the end cover.

IMPORTANT: Replace, do not reuse the Nylok nuts on the air dryer cover.

16. Install the 6 bolts, 12 washers, and 6 new Nylok nuts. Torque the Nylok nuts in a star pattern 17 to 24 lbf·ft (23 to 33 N·m). See **Fig. 2**.

https://truckmanualshub.com/

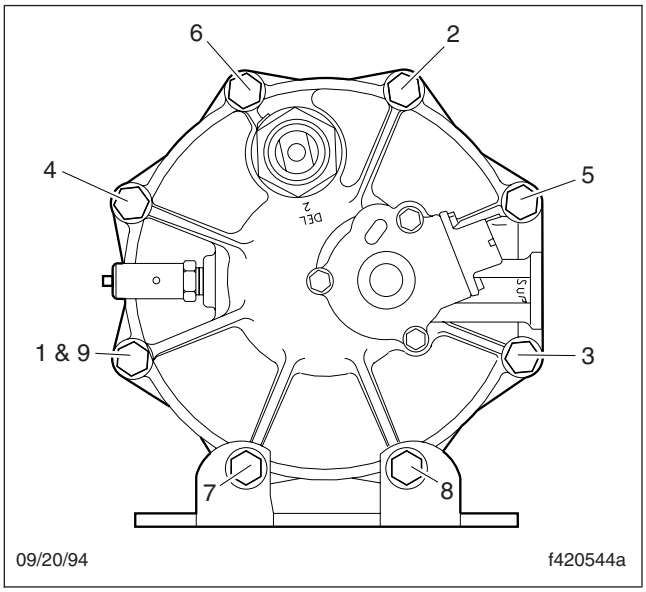

Fig. 2, AD–9 End Cover to Housing Torque Pattern

17. Install the air dryer on the lower mounting bracket. Install the two previously marked bolts, four washers, and two new Nylok nuts. Torque the two remaining Nylok nuts 17 to 24 lbf·ft (23 to 33 N·m). Install the bolt, two washers, and a new Nylok nut in the upper mounting bracket strap. Torque the upper mounting bracket strap Nylok nut 80 to 120 lbf·in (900 to 1360 N·cm).
18. Connect and tighten the three air lines. Connect the harness connector to the heater and thermostat assembly until the lock tab snaps in place.
19. Start the engine, build the air pressure, and check the air brake system for leaks. If any air leaks are present, see **Group 42** of the vehicle Workshop Manual for diagnosis and repair information.

AD–IP

1. Park the vehicle on a level surface, apply the parking brakes, and chock the tires.
2. Using a wrench or a socket, loosen the desiccant cartridge bolt. Then separate the desiccant cartridge from the end cover.
3. Pull the cartridge bolt out of the cover and remove the cartridge.

⚠ WARNING

Do not attempt to disassemble the desiccant cartridge assembly. Parts for the assembly are not available and the cartridge contains a 150 lb spring that cannot be mechanically caged. Disassembly could release the spring, resulting in personal injury.

4. Remove and discard both O-rings from the cartridge bolt.
5. Using a clean rag, wipe clean the inside of the end cover. Clean the cartridge bolt bore in the end cover, and the sealing surfaces for the large- and small-diameter desiccant cartridge sealing rings.
6. Inspect the end cover for physical damage, then inspect all air line fittings for corrosion; replace as necessary.
7. Clean and inspect the bolt, paying attention to the threads and O-ring grooves.

IMPORTANT: Use only the grease supplied with Bendix replacement kits.

8. Lubricate the O-rings, bolt O-ring grooves, sealing rings, and cartridge grooves. Lubricate the end cover bore for the bolt.
9. Install both O-rings on the cartridge bolt, then, using a twisting motion, insert the assembled desiccant cartridge bolt in the end cover.
10. Install the desiccant cartridge on the end cover, making sure the cartridge is properly seated and flush on the end cover.

NOTE: It may be necessary to rotate the cartridge slightly until the anti-rotation lugs are properly aligned and allow the cartridge to rest flush against the end cover.

11. Using a wrench or socket, tighten the desiccant cartridge bolt 70 lbf·ft (95 N·m). **Do not** overtorque.
12. Before placing the vehicle in service, perform the test below.
    - 12.1 Close all reservoir drain cocks.
    - 12.2 Build system pressure to governor cutout, and note that the AD-IP air dryer purges with an audible escape of air.

https://truckmanualshub.com/

12.3 Fan the service brakes to reduce system air pressure to governor cut-in. Note that the system once again builds to full pressure and is followed by a purge at the AD-IP air dryer exhaust.

12.4 Check for excessive leakage around the head of the desiccant cartridge where it contacts the end cover. With the compressor in loaded mode (compressing air), apply a soapy solution to these areas, and observe that any leakage does not exceed a 1-inch bubble in 1 second. If leakage exceeds this measure, remove and re-install the desiccant cartridge.

AD-9si and AD–IS

1. Park the vehicle on a level surface, apply the parking brakes, and chock the tires.
2. Drain the air reservoirs.
3. Using a strap wrench or equivalent, loosen the desiccant cartridge. Spin the cartridge off by hand and discard it. See **Fig. 3**.

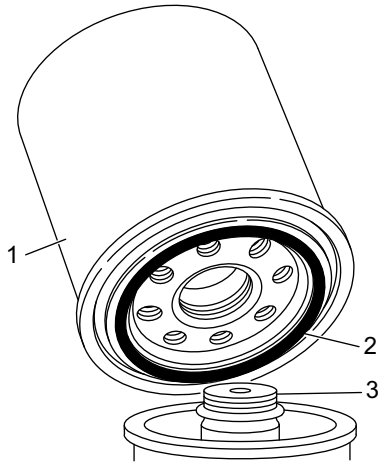

10/07/2016 f421910

1. Desiccant Cartridge
2. Cartridge Sealing Ring
3. Threaded Base Post

Fig. 3, Desiccant Cartridge Replacement

4. On the new desiccant cartridge, lubricate the sealing rings with silicone grease.

IMPORTANT: Only use the silicone grease supplied with Bendix replacement kits.

5. Screw the desiccant cartridge onto the body by hand until the seal makes contact with the body. Rotate the cartridge clockwise about one full turn. Tighten the cartridge firmly.

42–03 Air Dryer Inspection

1. Park the vehicle on a level surface and apply the parking brakes. Shut down the engine. Chock the tires.
2. Check for moisture in the air brake system by opening the reservoir drain cocks. Examine the discharge. Some trace of water in the discharge is normal. A discharge of a milky gray liquid indicates excessive moisture is present in the air system and the desiccant cartridge needs to be replaced. See **Group 42** of the vehicle Workshop Manual for troubleshooting procedures. The following conditions could cause small amounts of moisture to be found in the air system:
   - An outside air source has been used to charge the air brake system. This air did not pass through the drying bed.
   - Air usage is unusually high and not normal. This may be due to accessory air demands or some unusual air requirement that does not allow the compressor to load and unload in a normal fashion. Check for air system leaks.
   - The air dryer has been installed on a system that had previously been operated without an air dryer. This type of system will be saturated with moisture, and several weeks of operation may be needed to fully dry the system.
   - The temperature range in your area fluctuates more than 30 degrees in one day. Small amounts of water can accumulate in the air brake system due to condensation. Under these conditions, the presence of moisture is normal and should not be considered an indication of poor air dryer performance.
3. Inspect the air dryer for external damage, and check that the unit is tightly mounted on the frame. If the air dryer mounting is loose, See

https://truckmanualshub.com/

Group 42 of the vehicle Workshop Manual for mounting instructions.

4. Turn on the ignition switch, but do not start the engine.
5. Disconnect the harness connector from the air dryer.
6. Connect a voltmeter to circuit 94 on the air dryer's harness connector and to a body ground point. Check for battery voltage. If voltage is not found, check and repair the open or short to ground in wire 94.
7. Connect a voltmeter between the two terminals on the air dryer's harness connector. If voltage is not found, repair the open in the ground circuit wiring.
8. Use an ohmmeter to check resistance between the terminals on the end cover. See **Fig. 4**. The end cover contains the heater/thermostat. If the heater/thermostat is between 40 and 90°F (5 and 32°C), the heater/thermostat measured resistance will be infinite ohms. If the measured resistance is less than infinity, replace the heater/thermostat.

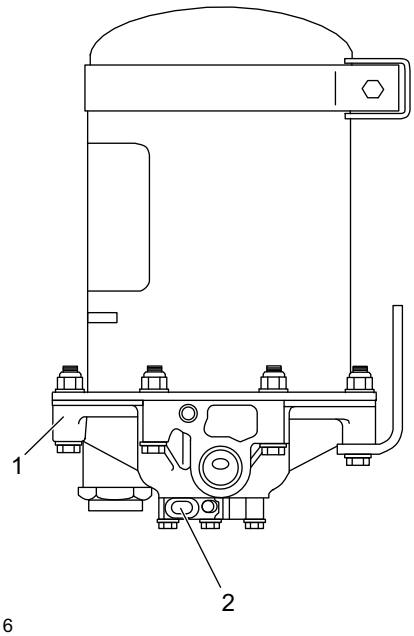

10/07/2016 f421384

1. End Cover Assembly
2. Heater/Thermostat Terminals

Fig. 4, End Cover Terminals Location

9. Remove the heater/thermostat assembly and place it in a freezer for about five minutes to cool it below 40°F (5°C). Remove the cold heater/thermostat assembly and check resistance between the heater/thermostat terminals. Resistance should be 1.5 to 3.0 ohms. As the temperature of the heater/thermostat assembly increases, the ohm reading will increase. When the temperature goes above 45°F (7°C) measured resistance should be infinite ohms. If the heater/thermostat does not operate as outlined, replace it. If it does operate as outlined, install it.

42–04 Alcohol Evaporator Cleaning and Inspection

Maintenance is required during both the freeze season and the off season to keep the alcohol evaporator in good working order.

Off Season

During the off season, drain the unit of alcohol. At regular engine service intervals, open the drain cock to remove moisture from the alcohol evaporator. Before reactivating the evaporator for the next freeze season, drain, disassemble, inspect, and steam-clean the unit of any sludge that may have accumulated. It is advisable to replace any rubber parts when assembling the alcohol evaporator. Perform this service just before the freeze season.

Freeze Season Reactivation

1. Park the vehicle on a level surface and apply the parking brakes. Shut down the engine. Chock the tires.
2. Remove the filler cap, and check the cap tetraseal.
3. Remove the capscrews and reservoir from the cover.
4. Remove the cover tetraseal.
5. Drain the air tank, and disconnect the line from the evaporator outlet. Remove the check-valve retainer, spring, and disc.
6. Install the disc, spring, and check-valve retainer, and connect the line to the evaporator outlet.
7. Install the cover tetraseal.

https://truckmanualshub.com/

8. Install the reservoir on the cover and tighten the capscrews.
9. Fill the reservoir with 40 ounces (1183 mL) of methyl alcohol, then install the filler cap.

42–05 Brake Inspection

Parking Brake Operational Check

IMPORTANT: This procedure should be performed prior to lubrication of the brake components.

CAUTION

Perform the following check in a clear safe area. If the parking brakes fail to hold the vehicle, personal injury or property damage may result.

1. With the engine running, and air pressure at cut-out pressure, set the parking brake.
2. Put the vehicle in the lowest gear and gently attempt to move it forward. The vehicle should not move. If the vehicle moves, the parking brakes are not operating correctly and must be repaired before the vehicle is returned to service. See **Group 42** of the vehicle Workshop Manual for repair procedures.

Brake Component Inspection

Air Disc Brakes

IMPORTANT: The following step to inspect the caliper mounting bolts should only be performed at the initial maintenance (IM) interval.

Vehicles may have both **axial and radial** mounted calipers. Follow the instructions based on the type of calipers installed on the vehicle.

Axial Mounted Brakes

IMPORTANT: The following information applies to all types of axial mounted brake applications.

1. Park the vehicle on a level surface, shut down the engine, and set the parking brake. Chock the tires.
2. Raise the vehicle and support it on jack stands.
3. Remove all of the wheel assemblies. For instructions, see **Group 40** of the vehicle workshop manual for repair procedures.

NOTE: In all steps that require a torque wrench, use a Snap On torque wrench ATECH4RS600, or an equivalent, with a center to handle length of 47 inches (119 cm).

4. Set a torque wrench to 350 lbf·ft (475 N·m) and tighten the caliper mounting bolts following the tightening pattern shown in **Fig. 5**. If they do not turn, no further work is needed. If they turn, take the vehicle to an authorized Freightliner dealer to have all of the caliper bolts on that wheel end replaced. Due to limited caliper bolt access, it may be necessary to use tool DDC DSN-CHA018005 referenced in tool letter 18TL18. If the tool is needed, use tool DDC DSN-CHA018005 only and no other tools. See **Fig. 6**. If the tool is needed, see **Table 3** for torque specifications for a 47 in (119 cm) long wrench.

Fig. 5, Axial Bolt Tightening Pattern

Fig. 6, DDC DSNCHA018005 30mm Air Disc Brake Caliper Brake Bolt Torque Adaptor

https://truckmanualshub.com/

Torque Check with 47 Inch (119 cm) Torque Wrench and Tool DDC DSNCHA018005			
Angle View	**Extension Angle (degrees)**	**Target Torque [lbf·ft (N·m)]**	**Tool Setting [lbf·ft (N·m)]**
11/28/2016 f422613	0	350 (475)	296 (401)
11/28/2016 f422614	45		310 (420)
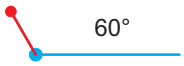 11/06/2018 f422668	60		320 (434)
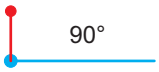 11/28/2016 f422615	90		350 (475)
11/06/2018 f422669	120		386 (523)
11/28/2016 f422616	135		402 (545)

Table 1, Torque Check with 47 Inch (119 cm) Torque Wrench and Tool DDC DSNCHA018005

5. Install the wheel assemblies. For instructions, see **Group 40** of the vehicle workshop manual for repair procedures.
6. Remove the jack stands and lower the vehicle.

Radial Mounted Brakes

Bendix Calipers

1. Park the vehicle on a level surface, shut down the engine, and set the parking brake. Chock the tires.
2. Raise the vehicle and support it on jack stands.
3. Remove all of the wheel assemblies. For instructions, see **Group 40** of the vehicle workshop manual for repair procedures.
4. Set a torque wrench to 200 lbf·ft (271 N·m) and tighten the caliper mounting bolts following the tightening pattern shown in **Fig. 7**. If they do not turn, no further work is needed. If they turn, take the vehicle to an authorized Freightliner dealer to have all of the caliper bolts on that wheel end replaced.

https://truckmanualshub.com/

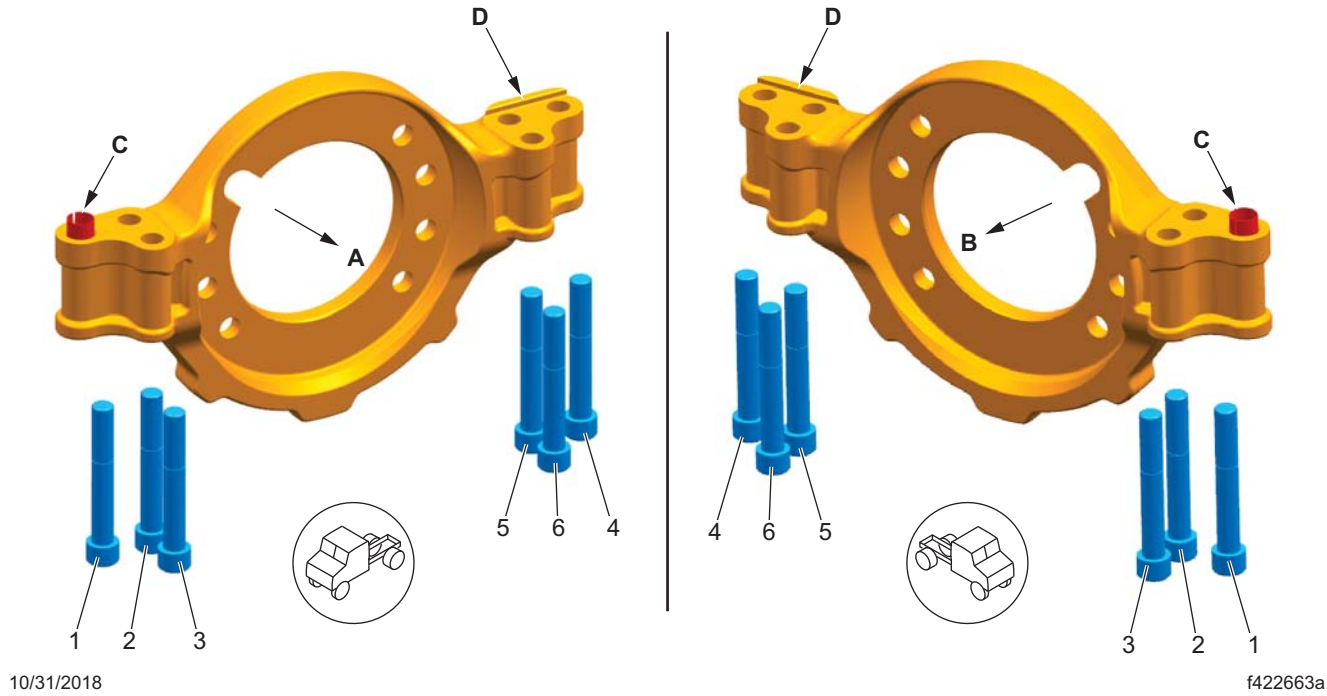

A. Right-hand brake **(viewed from below)**.
B. Left-hand brake **(viewed from below)**.
C. Sheer sleeve above in this location.
D. Shelf above in this location.

Fig. 7, Bendix Radial Mounted Caliper Tightening Pattern (viewed from below)

5. Install the wheel assemblies. For instructions, see **Group 40** of the vehicle workshop manual for repair procedures.
6. Remove the jack stands and lower the vehicle.

Meritor Calipers

1. Park the vehicle on a level surface, shut down the engine, and set the parking brake. Chock the tires.
2. Raise the vehicle and support it on jack stands.
3. Remove all of the wheel assemblies. For instructions, see **Group 40** of the vehicle workshop manual for repair procedures.
4. Set a torque wrench to 350 lbf·ft (475 N·m) and tighten the caliper mounting bolts following the tightening pattern shown in **Fig. 8**. If they do not turn, no further work is needed. If they turn, take the vehicle to an authorized Freightliner dealer to have all of the caliper bolts on that wheel end replaced.

5. Install the wheel assemblies. For instructions, see **Group 40** of the vehicle workshop manual for repair procedures.
6. Remove the jack stands and lower the vehicle.

WABCO Maxxus Calipers

1. Park the vehicle on a level surface, shut down the engine, and set the parking brake. Chock the tires.
2. Raise the vehicle and support it on jack stands.
3. Remove all of the wheel assemblies. For instructions, see **Group 40** of the vehicle workshop manual for repair procedures.
4. Set a torque wrench to 273 lbf·ft (370 N·m) and tighten the caliper mounting bolts following the tightening pattern shown in **Fig. 9**. If they do not turn, no further work is needed. If they turn, take the vehicle to an authorized Freightliner dealer to have all of the caliper bolts on that wheel end replaced.

https://truckmanualshub.com/

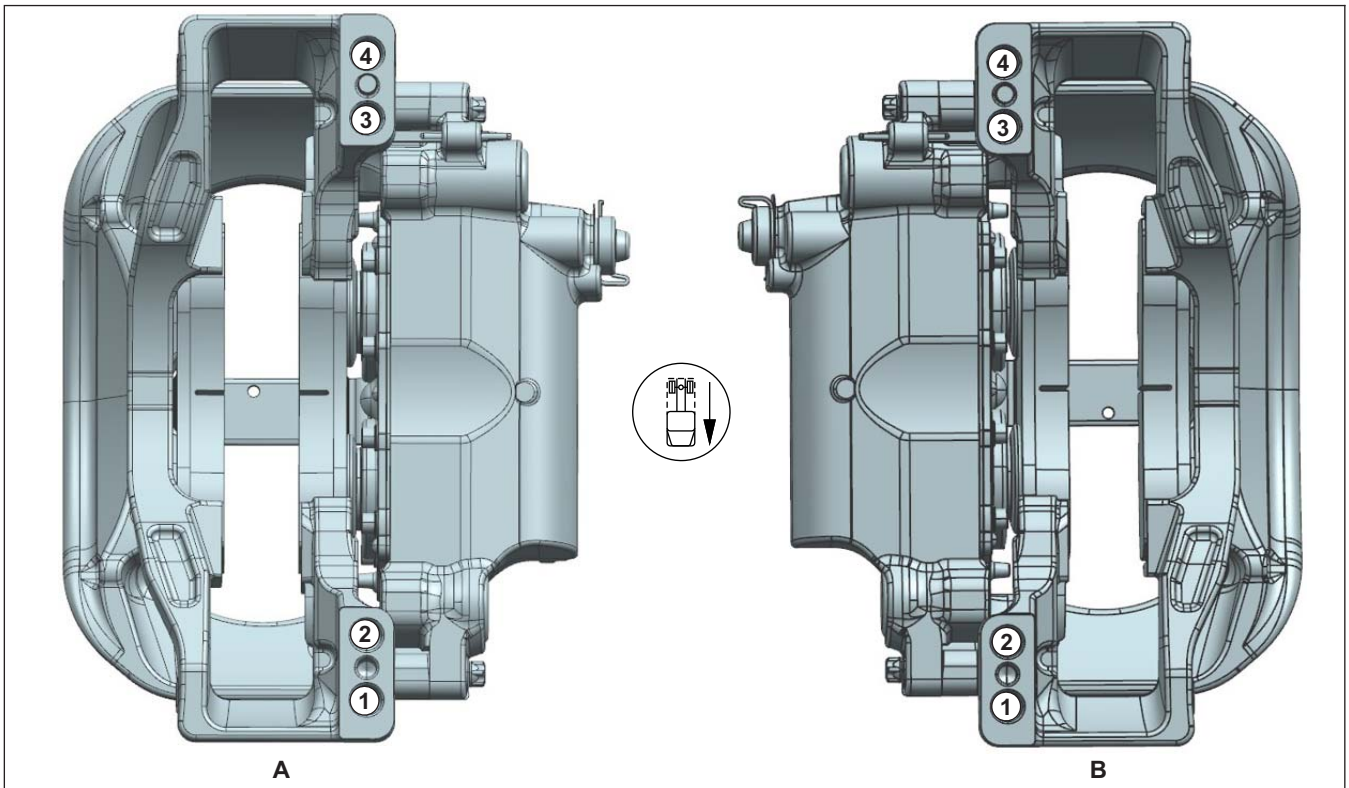

07/30/2018 f422655

Tighten the fasteners in the order indicated.

A. Left Hand, Bottom View

B. Right Hand, Bottom View

Fig. 8, Meritor Radial Mounted Caliper Tightening Pattern

5. Install the wheel assemblies. For instructions, see **Group 40** of the vehicle workshop manual for repair procedures.
6. Remove the jack stands and lower the vehicle.

Drum Brakes

1. Park the vehicle on a level surface, shut down the engine, and set the parking brake. Chock the tires. Once the tires are chocked, release the parking brake.

⚠ WARNING

Manually adjusting an automatic slack adjuster to bring the pushrod stroke within legal limits is likely masking a mechanical problem. Adjustment is not repairing. Before adjusting an automatic slack adjuster, troubleshoot the foundation brake system and inspect it for worn or damaged components. Improperly maintaining the vehicle braking system may lead to brake failure, resulting in property damage, personal injury, or death.

2. With the engine off, and 100 psi (690 kPa) of air tank pressure, have an assistant apply and hold an 80 to 90 psi (552 to 621 kPa) brake application.
3. Check to see if the colored over-stroke band on each brake chamber pushrod is exposed.

   If a band shows, the stroke is too long. Check the foundation brake components for wear or damage, and repair as needed. See **Group 42** of the vehicle workshop manual for inspection, troubleshooting, and repair procedures.
4. Measure the applied chamber stroke. See **Table 4** for the proper stroke for the type of chamber being used. If the stroke is too short, the brakes may drag or will not fully apply. Check

https://truckmanualshub.com/

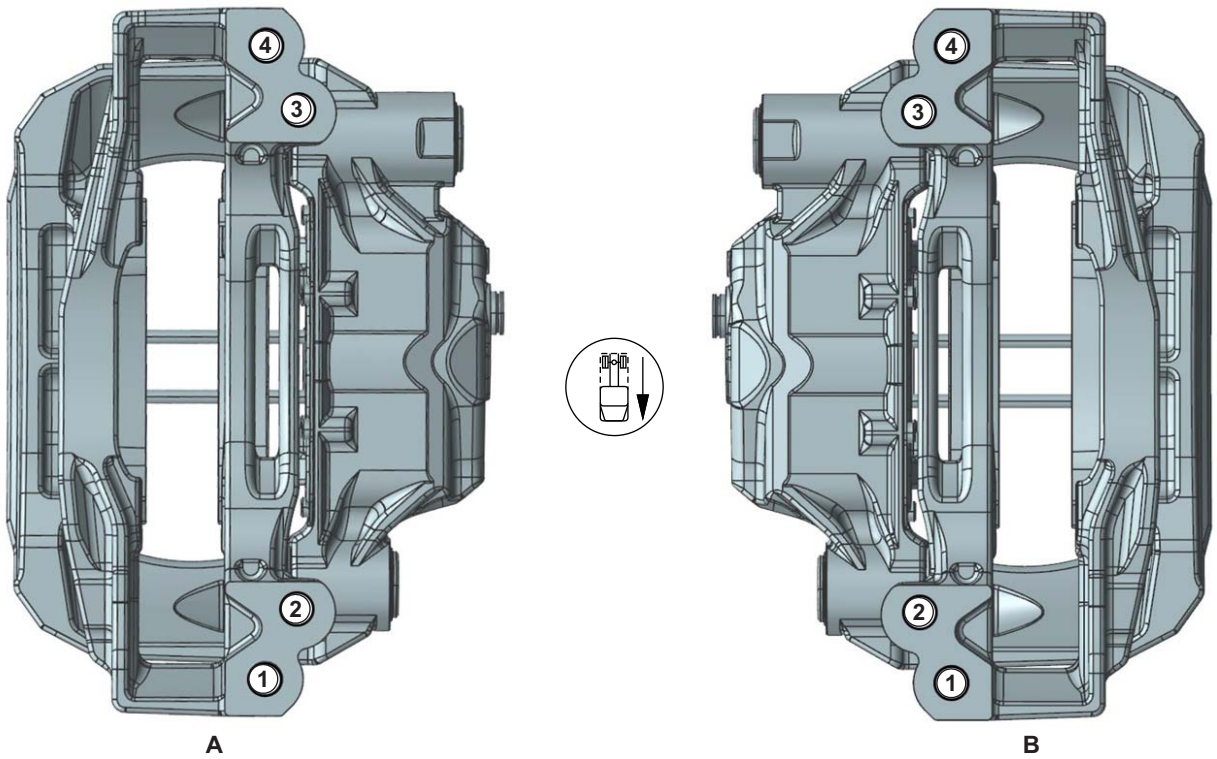

07/30/2018 f422657

Tighten the fasteners in the order indicated.

A. Left Hand, Bottom View

B. Right Hand, Bottom View

Fig. 9, Wabco Maxxus Radial Mounted Caliper Tightening Pattern

for improper operation or adjustment of the automatic slack adjuster. See **Group 42** of the vehicle workshop manual for inspection and troubleshooting procedures.

5. Check all of the foundation brake components for damage, wear, and loose or missing parts. Repair as needed. See **Group 42** of the vehicle workshop manual for repair procedures.

https://truckmanualshub.com/

Brake Chamber Stroke Specifications			
Chamber			Max Applied Stroke: inch (mm)
Manufacturer	Type*	Size†	
Gunite	Standard Stroke	9	1-3/8 (35)
		12	
		16	1-3/4 (45)
		20	
		24	
		30	2 (51)
		36‡	2-1/4 (57)
	Long Stroke	16	2 (51)
		20	
		24	
		24	2-1/2 (64)
		30	
Haldex	Standard Stroke	12	1-3/8 (35)
		16	1-3/4 (44)
		20	
		24	
	2-1/2-Inch Extended Stroke	24	2 (51)
	3-Inch Extended Stroke	24	2-1/2 (64)
	Standard Stroke	30	2 (51)
	Long Stroke	30	2-1/2 (64)
Meritor	Standard Stroke	9	Less than 1-1/2 (38)
		12	
		16	Less than 1-3/4 (44)
		20	
		24	Less than 1-7/8 (48)
	Long Stroke	24	Less than 2 (51)
	Standard Stroke	30	

* Long stroke design is indicated by a tag, or embossing, on the brake chamber.

† Specifications are relative to a brake application with 80 to 90 psi (550 to 620 kPa) air pressure in the brake chambers.

‡ If type 36 chamber is used, slack length should be less than 6 inches.

Table 2, Brake Chamber Stroke Specifications

https://truckmanualshub.com/

42–06 Meritor Camshaft Bracket Lubrication

IMPORTANT: Perform a brake inspection before lubricating the camshaft bracket.

NOTE: If equipped with an extended-maintenance Q Plus™ brake system, the camshaft bracket will not have a grease fitting. These camshafts use a special NLGI Grade synthetic polyurea grease and do not require lubrication for 3 years or 500,000 miles (800 000 km), whichever comes first. The extended-maintenance camshaft bushings are lubricated during the brake reline service interval. For service and lubrication instructions, see **Group 42** of the vehicle Workshop Manual.

For camshaft brackets with grease fittings, use an NLGI Grade 1 or Grade 2 multipurpose chassis grease. Lubricate the camshaft bushings through the grease fitting on the camshaft bracket or the spider until new grease flows from the inboard seal. See **Fig. 10**.

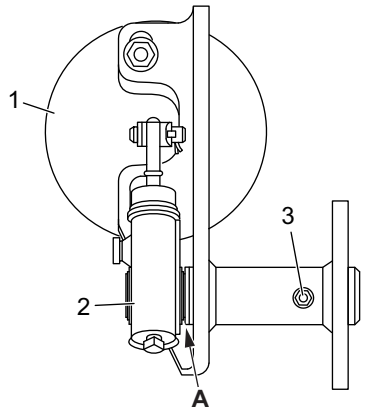

10/07/2016 f420011a

A. Grease Exit
1. Brake Chamber
2. Slack Adjuster
3. Non-Pressure-Relief Grease Fitting

Fig. 10, Camshaft Bracket Lubrication

⚠ WARNING

If grease leaks out under the camhead, the camshaft bracket grease seal is worn or damaged. See Group 42 in the vehicle workshop manual for grease seal replacement instructions. If this seal is not replaced, the brake linings could become contaminated with grease. The stopping distance of the vehicle will be increased, which could result in personal injury or property damage.

42–07 Meritor Slack Adjuster Lubrication

IMPORTANT: Perform a brake inspection following the instructions in this group before lubricating the slack adjusters.

⚠ WARNING

Failure to lubricate slack adjusters could lead to dragging brakes or a brake failure, resulting in property damage, personal injury, or death.

NOTE: If equipped with an extended-maintenance Q Plus™ brake system, the slack adjuster will not have a grease fitting. These slack adjusters use a special NLGI Grade synthetic polyurea grease and do not require lubrication for 3 years or 500,000 miles (800 000 km), whichever comes first. The extended-maintenance slack adjusters are lubricated during the brake reline service interval. For service and lubrication instructions, see **Group 42** of the vehicle Workshop Manual.

For slack adjusters with grease fittings and for operating temperatures above –40°F (–40°C), use an NLGI Grade 1 clay-base grease, or an NLGI Grade 1 or 2 lithium-base grease.

For slack adjusters with grease fittings and for operating temperatures below –40°F (–40°C) and above –65°F (–54°C), use an NLGI Grade 2 synthetic oil, clay-base grease.

Lubricate the slack adjuster at the grease fitting until grease is forced past the pressure-relief capscrew or past the gear splines around the inboard snap ring. See **Fig. 11**.

https://truckmanualshub.com/

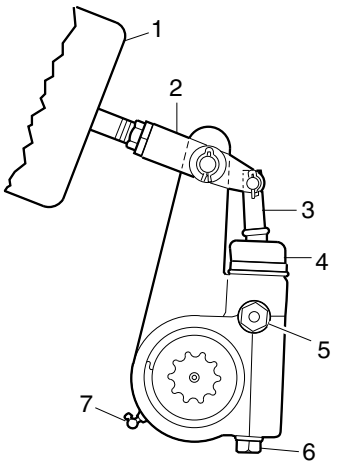

10/20/93 f420012a

1. Brake Chamber
2. Clevis
3. Actuator Rod
4. Boot
5. Pressure-Relief Capscrew, Gasket, Pawl Spring, and Pawl
6. Manual Adjusting Nut
7. Grease Fitting (or plug)

Fig. 11, Meritor Automatic Slack Adjuster

42–08 Dana Spicer Camshaft Bracket Lubrication

IMPORTANT: Perform a brake inspection before lubricating the camshaft bracket.

Pump grease into the camshaft bracket until it appears at the slack adjuster end of the bracket. See **Fig. 10**.

Use an NLGI Grade 1 or Grade 2 multipurpose chassis grease. If grease leaks out under the camhead, the camshaft bracket grease seal is worn or damaged; replace it. See **Group 42** of the *122SD and Coronado Workshop Manual* for grease seal replacement instructions.

42–09 Dana Spicer, Haldex, and Gunite Slack Adjuster Lubrication

IMPORTANT: Perform a brake inspection before lubricating the camshaft bracket.

Automatic slack adjusters that have a grease fitting must be lubricated periodically to ensure proper brake operation.

⚠ WARNING

Failure to lubricate slack adjusters could lead to dragging brakes or a brake failure, resulting in property damage, personal injury, or death.

Dana Spicer and Haldex

⚠ WARNING

Do not use moly-disulfide-loaded grease or oil. Both the life and reliability of the slack adjuster will be reduced if this type of grease is used, which could lead to brake failure, resulting in property damage, personal injury, or death.

Lubricate the automatic slack adjuster at the grease fitting. See **Fig. 12** for a Dana Spicer slack adjuster. Dana Spicer Low Lube slack adjusters should be lubricated with SHC 460 synthetic lubricant. See **Fig. 13** for a Haldex slack adjuster. Use standard chassis lubricant for Haldex slack adjusters.

Gunite

For operating temperatures of –20°F (–29°C) and higher, use Texaco Multifak EP-2 or Mobil Grease No. 77.

For operating temperatures between –20°F (–29°C) and –40°F (–40°C), use Lubriplate Aero grease.

Lubricate a Gunite automatic slack adjuster at the grease fitting until grease appears on the camshaft, or flows from the grease relief. See **Fig. 14**.

The newest Gunite automatic slack adjusters are produced without a grease relief. During lubrication with a grease gun, lubricant is forced through the drilled worm wheel onto the camshaft. Lubricate the automatic slack adjuster at the grease fitting until grease appears on the camshaft.

https://truckmanualshub.com/

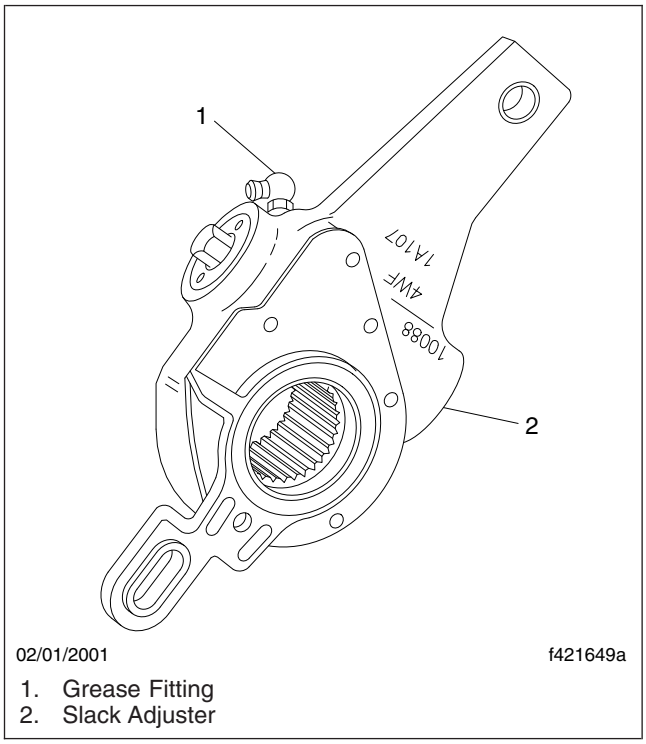

1. Grease Fitting
2. Slack Adjuster

Fig. 12, Dana Spicer Automatic Slack Adjuster

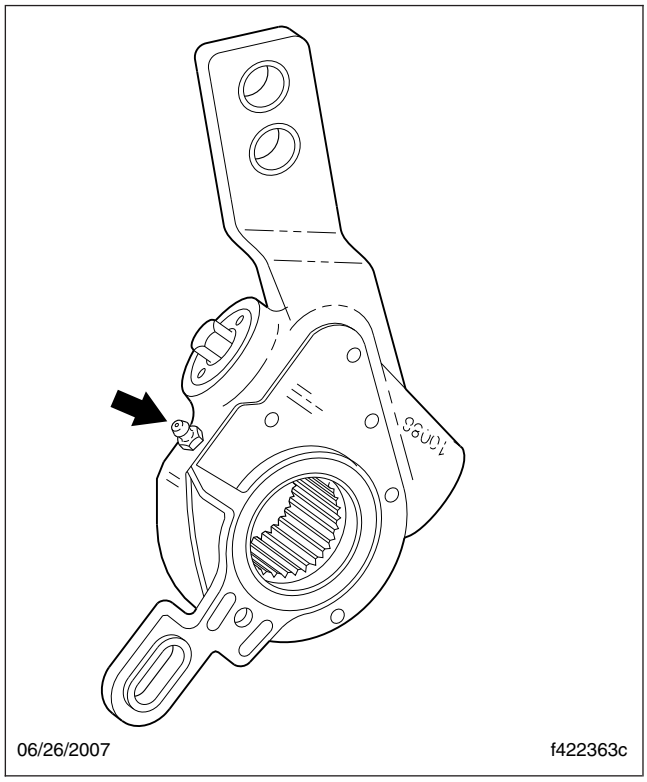

Fig. 13, Haldex Automatic Slack Adjuster Grease Fitting

42–10 Bendix E-6 Foot Control Valve Inspection and Lubrication

1. Remove the brake valve from the vehicle; see **Group 42**, of the vehicle Workshop Manual.
2. Remove the roll pin from the brake pedal pivot pin. See **Fig. 15**.
3. Remove the brake pedal pivot pin.
4. Remove the brake pedal.
5. Check the brake pedal mounting plate adapter for signs of wear or cracks at the bosses (the area from which the pivot pin was removed). Replace it if necessary.
6. Check the brake pedal rollers for signs of wear or cracks. Replace the rollers as needed.
7. If the rollers are replaced, replace the roller pin, install a new cotter pin, bend it to 90 degrees and apply Torque Seal (OPG F900 White) to the cotter pin.
8. Remove the plunger from the valve. Using alcohol, clean the existing grease from the plunger. Check the plunger for signs of wear or cracks. Replace it if necessary.
9. Lubricate the plunger with barium grease (BW 246671).
10. Insert the plunger in the valve.
11. Install the brake pedal with the pivot pin.
12. Install a new roll pin and apply Torque Seal (OPG F900 White) to the roll pin.
13. Install the brake valve assembly; see **Group 42**, of the vehicle Workshop Manual.
14. Test the brakes before returning the vehicle to service.

https://truckmanualshub.com/

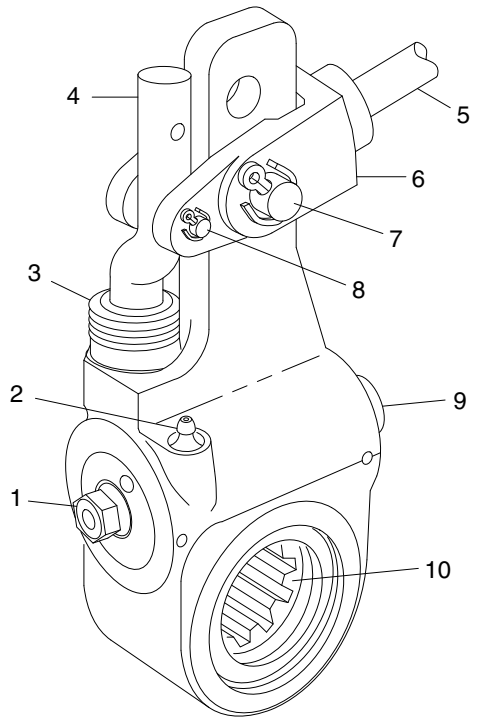

10/27/93 f420653a

1. 7/16-Inch Adjusting Nut
2. Grease Fitting
3. Boot
4. Link
5. Brake Chamber Piston Rod
6. Clevis
7. 1/2-Inch Clevis Pin
8. 1/4-Inch Clevis Pin
9. Grease Relief Opening
10. Slack Adjuster Spline

Fig. 14, Gunite Automatic Slack Adjuster

42–11 WABCO System Saver Air Dryer Desiccant Cartridge Replacement

NOTE: The following instructions apply to the System Saver 1200, 1200 Plus, and Twin air dryers.

NOTICE

The WABCO System Saver air dryers can use either a standard or oil coalescing desiccant cartridge. When replacing the desiccant cartridge, it is very important to use the same type of cartridge that was originally installed on the dryer. Oil coalescing cartridges can be used in any application, but require more frequent service intervals. Do not replace an oil coalescing cartridge with a standard cartridge, as this may result in contamination and malfunctioning of downstream air system components.

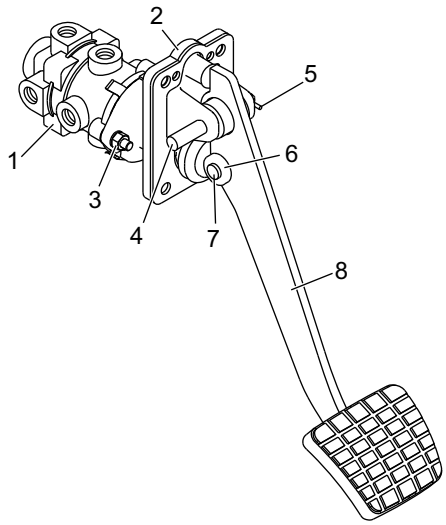

11/01/2016 f430405

1. E-6 Foot Control Valve
2. Mounting Plate
3. Nut and Washer
4. Pivot Pin
5. Roll Pin
6. Roller
7. Roller Pin
8. Pedal

Fig. 15, Brake Pedal and Valve Assembly

Refer to **Fig. 16** for cartridge replacement.

1. Drain the air system.
2. Using a strap wrench, turn the desiccant cartridge counterclockwise and remove it.
3. Remove and discard the O-ring.
4. Clean the top surface of the dryer base with a commercial cleaning solvent.

IMPORTANT: If the air dryer base is damaged, preventing a tight seal, replace the air dryer.

5. Using a multipurpose, high-temperature grease that resists water, steam, and alkali, lightly coat the surfaces of the new O-ring and the dryer base. Install the O-ring.
6. Thread the desiccant cartridge onto the dryer base (turn clockwise). When the seal contacts the base, tighten the cartridge one complete turn more. Do not overtighten.

https://truckmanualshub.com/

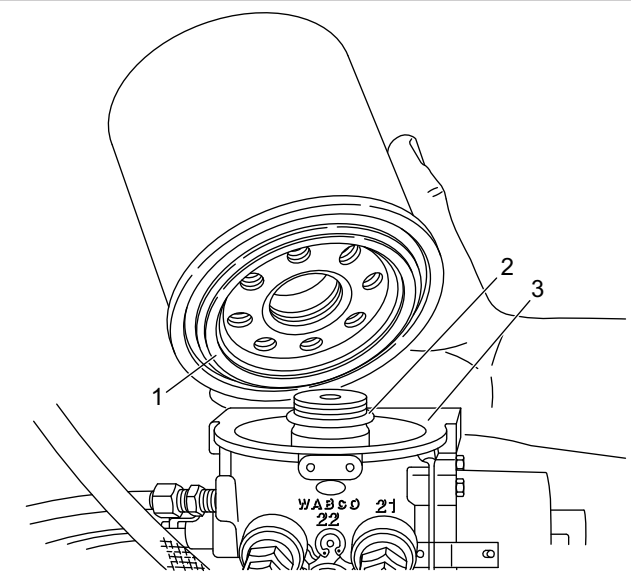

1. Seal
2. O-Ring
3. Air Dryer Base

Fig. 16, Desiccant Cartridge Replacement

42–12 Versajust Slack Adjuster Inspection and Lubrication

IMPORTANT: Perform the **Brake Inspection** maintenance operation before lubricating the slack adjusters.

1. Visually check for physical damage, such as broken air lines and broken or missing parts.
2. Using a quality multipurpose chassis lubricant, NLGI Grade 2, lubricate the slack adjuster through the grease fitting until clean lubricant flows from the grease relief opening in the boot.
3. Perform the "In Service Inspection."

In Service Inspection

1. Apply and release the brakes several times while observing the slack adjuster. The slack adjuster and brake actuator should move freely, without binding or interference, and should return to the full released position. Observe the looseness that exists between the clevis and adapter bushing and the yoke and link pins and their mating parts (clevis, body, link). Replace these parts if looseness appears excessive. Make certain the brake actuator pushrod jam nut is tightened securely.
2. Inspect the slack adjuster for physical damage, paying attention to the link, boot, and clevis. If any components are damaged, repair or replace them as necessary.
3. Measure the brake actuator pushrod stroke while making an 80 to 90 psi (552 to 621 kPa) brake application. Actuator pushrod strokes should not exceed the values shown in **Table 3** and **Table 4**. To achieve the correct pressure for this test, build the system pressure up to a 100 psi (690 kPa). Shut down the engine. Fan the brakes to attain a 90 to 95 psi (621 to 655 kPa) reading. Make and hold a full brake application while the strokes are checked.

Actuator Stroke–Standard Stroke	
Brake Actuator Size	**Recommended Maximum Operating Stroke (Inches)**
30	2
24	1-3/4
20	1-3/4
16	1-3/4
12	1-3/8

Table 3, Actuator Stroke–Standard Stroke

Actuator Stroke–Long Stroke	
Brake Actuator Size	**Recommended Maximum Operating Stroke (Inches)**
30 Long Stroke	2-1/2
24 Long	2
24 Long Stroke	2-1/2
20 Long	2
16 Long	2

Table 4, Actuator Stroke–Long Stroke

https://truckmanualshub.com/

42–13 Bendix Automatic Drain Valve Operating and Leakage Tests

Operating Test

Perform the following test after repairing or replacing the DV-2 valve, to ensure that the valve is functioning properly.

With the system charged, apply the brakes several times. Each time the brakes are applied, an exhaust of air should occur from the exhaust port of the drain valve. If no air comes out, push the wire stem located inside the exhaust port. If no air comes out after pushing the wire stem, there may be a plugged filter in the adapter which should be replaced.

If the drain valve does not function properly, repair or replace it. See **Section 42.14** of the *122SD and Coronado Workshop Manual*.

Leakage Test

Perform the following test after repairing or replacing the DV-2 valve, to ensure that the valve is functioning properly.

With the system charged and pressure stabilized in the system, there should be no leaks at the drain valve exhaust port. A constant slight exhaust of air at the drain valve exhaust port could be caused by excessive leakage in the air brake system.

If the drain valve is leaking excessively, repair or replace it. See **Section 42.14** of the *122SD and Coronado Workshop Manual*.

https://truckmanualshub.com/

https://truckmanualshub.com/

Index, Alphabetical

Title of Maintenance Operation (MOP)	MOP Number
Drag Link Inspection	46–01
Drag Link Lubrication	46–05
Power Steering Fluid Level Inspection	46–03
Power Steering Fluid and Filter Changing	46–02
Power Steering Gear Lubrication	46–04
Safety Precautions	46–00

https://truckmanualshub.com/

https://truckmanualshub.com/

46–00 Safety Precautions

Safety Precautions in this section apply to all procedures within this group.

DANGER

When working on the vehicle, shut down the engine or motor, set the parking brake, and chock the tires. Before working under the vehicle, always place jack stands under the frame rails to ensure the vehicle cannot drop. Failure to follow these steps could result in serious personal injury or death.

46–01 Drag Link Inspection

WARNING

All steering system components are critical for safe operation of the vehicle. Failure to maintain the steering system as specified may result in loss of steering control, which could lead to personal injury and property damage.

WARNING

All steering system components are critical for safe operation of the vehicle. Failure to maintain the steering system as specified may result in loss of steering control, which could lead to personal injury and property damage.

Have someone turn the steering wheel from left to right. Check for movement between the ball stud end at both the pitman arm and the steering arm. Also check if the ball stud nut is loose.

If the ball stud end is loose, replace the drag link. If the ball stud nut is loose, replace the nut and cotter key. See **Group 46** of the vehicle Workshop Manual for drag link removal and installation instructions. See **Group 00** in this manual for torque specifications.

Inspect the boot of the drag link at both the pitman arm and the steering arm end for cracks, splits, or other damage. Replace the boot as needed.

Grasp the drag link near the pitman arm end, then push and pull laterally to check for axial movement in the ball stud end. If it is loose, replace the drag link.

If there is 1/8-inch (3-mm) movement or more, do not drive the vehicle until the drag link is replaced.

46–02 Power Steering Fluid and Filter Changing

WARNING

Fill only with approved clean fluid. Failure to use the proper fluid could cause seal deterioration and leaks. Fluid leaks could eventually cause loss of power steering assist. This could lead to an accident resulting in personal injury or property damage. Wear eye protection when changing the fluid and filter.

1. Park the vehicle on a level surface, shut down the engine, apply the parking brakes, and chock the rear tires.
2. Place a drain pan under the power steering reservoir.
3. Remove the retaining ring from the reservoir. See **Fig. 1**.

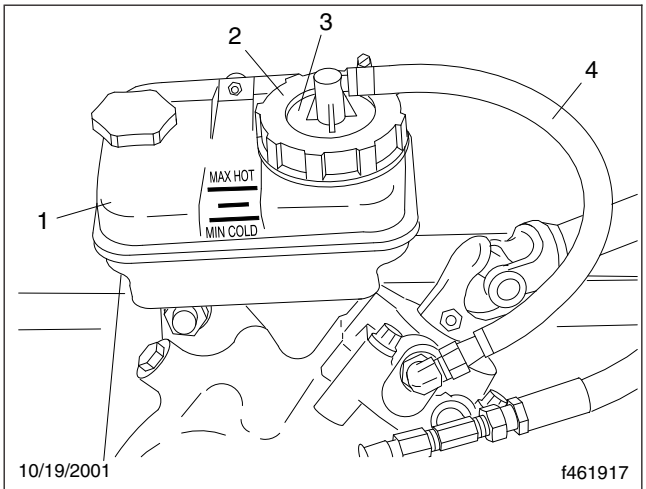

1. Power Steering Reservoir
2. Retaining Ring
3. Filter Cover
4. Return Hose

Fig. 1, Power Steering Reservoir

4. Remove the filter, filter cover, and gasket from the reservoir. Drain the fluid from the filter into

https://truckmanualshub.com/

the drain pan. Leave the filter hanging over the drain pan.

5. Remove the nuts, bolts, and washers that attach the power steering reservoir to the mounting bracket, but do not remove the supply line to the reservoir. Drain the power steering fluid from the reservoir.
6. Using bolts, nuts, and washers, attach the reservoir to the mounting bracket.
7. Fill the reservoir with an approved power steering fluid to the line between the MIN COLD and MAX HOT lines. See **Fig. 1**. See **Table 1** for approved power steering fluids.

Approved Power Steering Fluids	
Fluid Type	**Approved Fluid**
Automatic Transmission Fluid	Dexron® III
	Super ATF
	TES-389

Table 1, Approved Power Steering Fluids

8. Raise the front of the vehicle and support it with jack stands.
9. Start the engine and operate it at idle. Turn the steering wheel from full left to full right several times until clean fluid starts flowing from the power steering filter. Add fluid to the reservoir to maintain the fluid level between the MIN COLD and MAX HOT lines.
10. Shut down the engine.

NOTE: Always install a new power steering reservoir filter when changing the fluid.

11. Disconnect the filter from the filter cover, and discard the filter.
12. Apply a thin film of power steering fluid on the gasket of the new filter. Then attach the filter to the filter cover. Hand-tighten the filter, then turn it an additional 1/4 turn.
13. Install the filter and filter cover in the reservoir. Make sure that the gasket under the filter cover is not damaged. If the gasket is damaged, replace it. Install the gasket on the reservoir.
14. Attach the retaining ring to the reservoir to secure the filter and filter cover.
15. Start the engine and check that the power steering fluid level is between the MIN COLD and MAX HOT lines. Add more power steering fluid if needed.
16. Raise the vehicle, remove the jack stands, and lower the vehicle.

46–03 Power Steering Fluid Level Inspection

1. Apply the parking brakes and chock the tires.
2. With the engine cool, use a shop towel or a clean rag to clean the area around the power steering reservoir fill cap. Twist the cap counterclockwise to remove it. Check the cold power steering fluid level. The level should be between ADD COLD and FULL COLD with the engine off.
3. Start the engine and run it at idle until it reaches operating temperature. See **Table 1** for recommended power steering fluids.

   Remove the dipstick, and check that power steering fluid is between ADD HOT and FULL HOT. If the fluid level is low, add enough fluid to bring the level up to the FULL HOT mark on the dipstick.

46–04 Power Steering Gear Lubrication

NOTICE

Apply grease to the sector shaft with a hand-type grease gun only. Use of a high-pressure power grease gun will supply grease too quickly and could affect the high pressure seal, contaminating the hydraulic fluid.

Using a hand-type grease gun, apply NLGI Grade 2 or 3 multipurpose chassis grease until it starts to come out past the sector shaft seal. See **Fig. 2**.

46–05 Drag Link Lubrication

1. Park the vehicle on a level surface, shut down the engine, and set the parking brake. Chock the tires.

https://truckmanualshub.com/

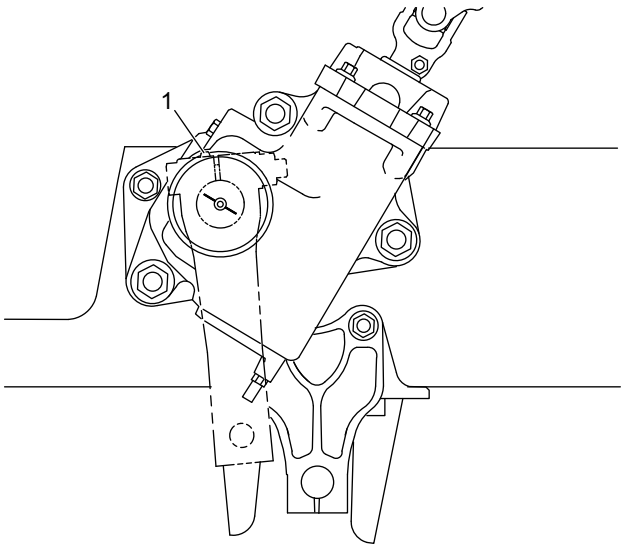

10/07/2016 f461071

1. Sector Shaft Grease Fitting

Fig. 2, Steering Gear Lubrication

2. Using a clean rag, wipe all dirt from the drag link grease fittings. See **Fig. 3**.
3. Using a pressure gun and NLGI Grade 2 (8% 12-hydroxy lithium stearate grease) or NLGI Grade 1 (6% 12-hydroxy lithium stearate grease) chassis grease, apply clean grease at the grease fittings until old grease is forced out of the socket.

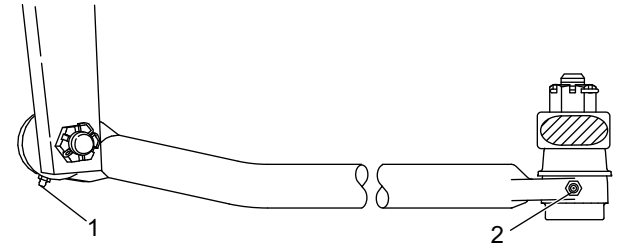

10/07/2016 f461072

1. Grease Fitting at Pitman Arm
2. Grease Fitting at Axle Steering Arm

Fig. 3, Drag Link

https://truckmanualshub.com/

https://truckmanualshub.com/

Index, Alphabetical

Title of Maintenance Operation (MOP)	MOP Number
Fuel Filter Replacement	47–01
Fuel Tank Band-Nut Tightening	47–03
Fuel/Water Separator Element Checking and Replacement	47–02
Safety Precautions	47–00

https://truckmanualshub.com/

https://truckmanualshub.com/

47–00 Safety Precautions

Safety Precautions in this section apply to all procedures within this group.

DANGER

When working on the vehicle, shut down the engine or motor, set the parking brake, and chock the tires. Before working under the vehicle, always place jack stands under the frame rails to ensure the vehicle cannot drop. Failure to follow these steps could result in serious personal injury or death.

47–01 Fuel Filter Replacement

For engine-mounted fuel filter replacement, refer to the engine manufacturer's service manual for removal and installation procedures.

47–02 Fuel/Water Separator Element Checking and Replacement

Alliance/Racor

The only maintenance necessary on an Alliance or Racor fuel/water separator is to replace the filter element.

WARNING

Fluid circulated through the fuel/water separator to heat the fuel may be diesel fuel returned from the engine, or engine coolant. Drain the fuel/water separator only when the engine and fluids have cooled. Draining it when the engine is hot could cause severe personal injury due to scalding.

If returning fuel is released into the atmosphere, its vapors can ignite in the presence of any ignition source. Do not expose the fuel to, or work with the fuel system near, open flame or intense heat. To do so could cause fire, possibly resulting in serious personal injury or property damage.

1. Drain off some fuel by loosening the vent plug and opening the drain valve.
2. Disconnect the water sensor and heater connections if equipped.
3. Remove the element and bowl together, by turning counterclockwise.
4. Remove the bowl from the element and clean the O-ring land.
5. Apply a coating of clean fuel or motor oil to the new O-ring and element seal.
6. Spin the bowl onto the new element, then spin them both onto the filter head, snugly, by hand only.

IMPORTANT: Do not use tools to tighten the bowl and element.

7. Connect the water sensor and heater connectors if equipped.
8. If equipped with a primer pump, prime the fuel/water separator as follows.
   - 8.1 Loosen the vent plug. Then operate the primer pump until the fuel purges at the vent plug. See **Fig. 1**.
   - 8.2 Close the vent plug.
9. Start the engine and check for fuel leaks.
10. Shut down the engine and correct any fuel leaks.

Davco Fuel Pro® 382 and 482

WARNING

Fluid circulated through the fuel/water separator to heat the fuel may be diesel fuel returned from the engine, or engine coolant. Drain the fuel/water separator only when the engine and fluids have cooled. Draining it when the engine is hot could cause severe personal injury due to scalding.

If returning fuel is released into the atmosphere, its vapors can ignite in the presence of any ignition source. Do not expose the fuel to, or work with the fuel system near, open flame or intense heat. To do so could cause fire, possibly resulting in serious personal injury or property damage.

The filter element should be changed only when the fuel level has reached the top of the filter element. There is no significant restriction to fuel flow until the element is completely clogged.

https://truckmanualshub.com/

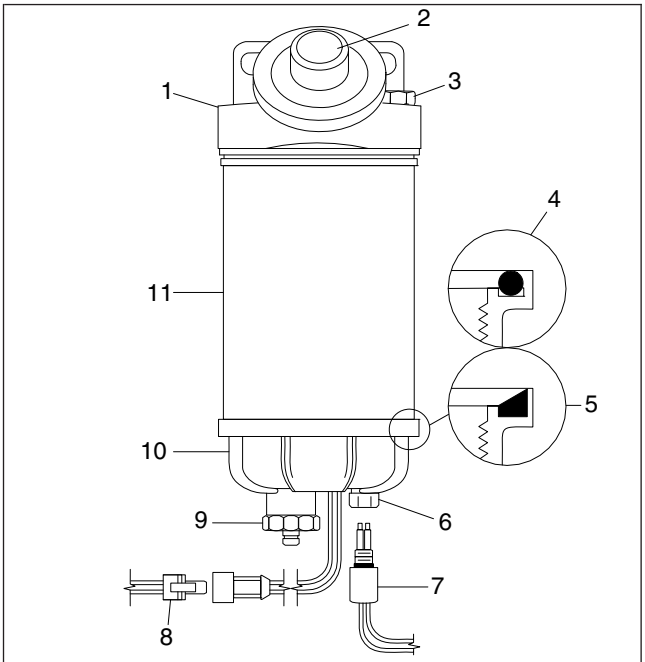

1. Mounting Head
2. Fuel Primer Pump
3. Vent Plug
4. Bowl O-Ring
5. Bowl Gasket
6. Bowl Probe Plug
7. Water Sensor Probe
8. Heater Connector
9. Drain Plug
10. Sight Bowl
11. Filter Element

Fig. 1, Alliance Fuel/Water Separator

1. Shut down the engine, apply the parking brake, and chock the tires.
2. Check the fuel level in the fuel filter. Replace the fuel/water separator element **only** when the filter element is completely covered. If the fuel level has reached the top of the filter element, follow the procedure below to replace the element.

NOTE: In the event of an emergency, when the filter needs replacement but a Davco filter is not available for the Fuel Pro 382, a temporary filter can be used; see the procedure under the heading "Emergency Temporary Filter Replacement, Fuel Pro 382."

3. Put a clean receptacle under the fuel/water separator and attach a piece of hose to the drain valve, to direct fuel into the receptacle.

   The drain valve has a 1/2-inch (12.7-mm) pipe; use a hose with a 1/2-inch pipe thread to fit correctly.
4. Remove the vent cap (**Fig. 2**, Item 4) and open the drain valve (**Fig. 2**, Item 1) to drain the fuel completely, then close the drain valve.

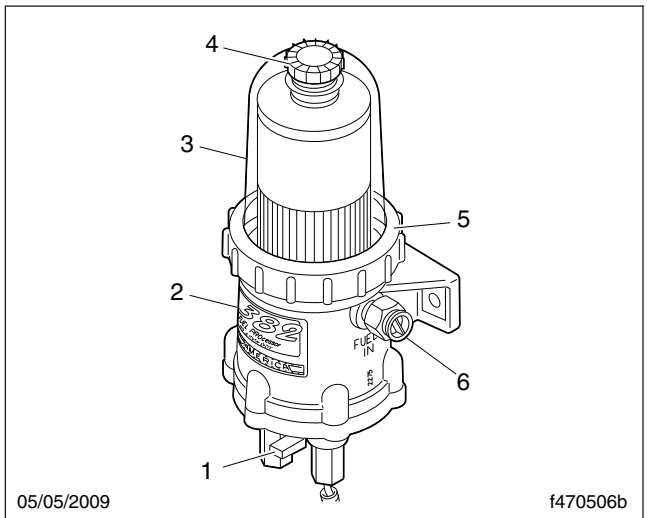

1. Drain Valve
2. Lower Housing
3. Clear Cover
4. Vent Cap
5. Collar
6. Inlet Port/Check Valve

Fig. 2, DAVCO Fuel/Water Separator (Fuel Pro 382 Shown)

5. Using a DAVCO Collar Wrench, shown in **Fig. 3**, remove the clear cover and collar.

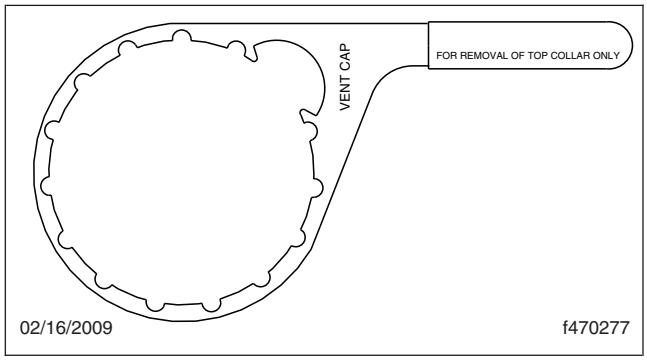

Fig. 3, DAVCO Collar Wrench

NOTE: Broken vent cap and collar warranty claims will not be accepted if any tool other than a DAVCO Collar Wrench is used for removal. During installation, the vent cap is to be **hand-**

https://truckmanualshub.com/

tightened only, not tightened with a wrench. Use part number 482017 on Fuel Pro 482 units; part number 380134 on Fuel Pro 382 units.

6. Remove the filter, cover O-ring, and vent cap O-ring. Dispose of them in an environmentally acceptable manner. See **Fig. 4** or **Fig. 5.**
7. Clean all threads and sealing surfaces very thoroughly. Even a small amount of dirt will prevent the fuel/water separator from sealing, and an air leak may result.
8. On Fuel Pro 382 units, install the grommet on the bottom of the new filter.
9. Install the new filter and grommet assembly and cover O-ring on the housing.
10. Install the clear cover and the collar. Simultaneously apply downward pressure to the top of the clear cover until it is seated on the body of the lower housing and hand tighten the collar until it no longer spins freely. Using the collar wrench, tighten the cover 18 lbf·ft (24 N·m). This is equivalent to rotating the collar clockwise two or three additional ribs, depending on the specific filter model.
11. Prime the system
    - 11.1 Ensure that the drain valve is closed.
    - 11.2 Fill the housing to the top of the filter element with clean diesel fuel.
    - 11.3 Install and hand-tighten the vent cap O-ring and vent cap.
    - 11.4 Start the engine. When the lubricating oil reaches its normal operating pressure, increase engine speed to high idle for one to two minutes to purge air from the system.
    - 11.5 While the engine is running, and after the air is purged from the system, loosen the vent cap until the fuel level falls to just above the collar, then hand-tighten the vent cap.
    - 11.6 Check for leaks and shut down the engine.

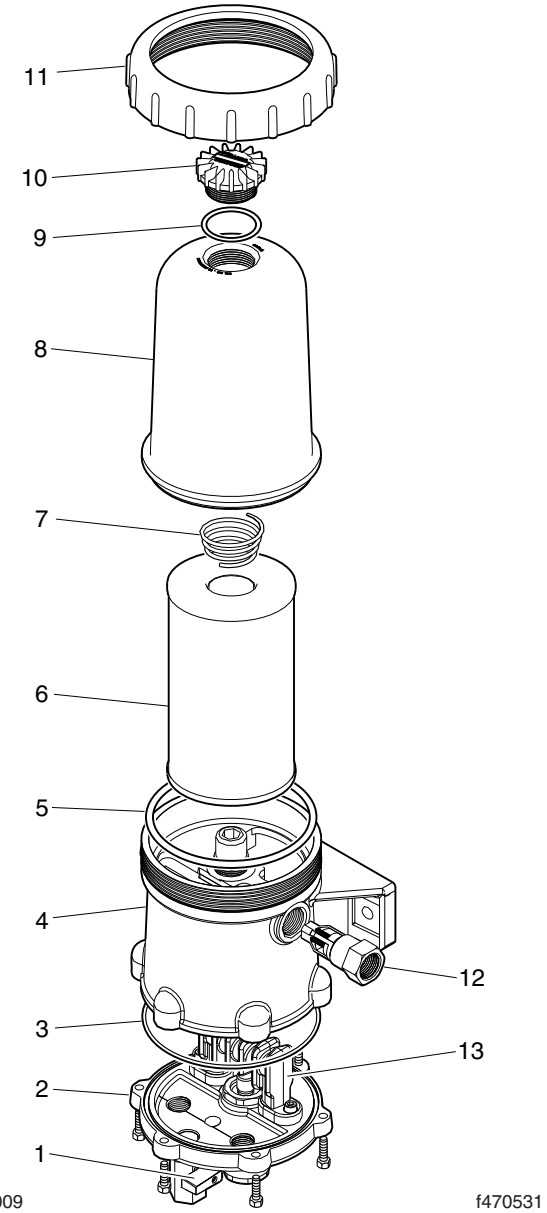

1. Drain Valve
2. Bottom Plate Assembly
3. Bottom Plate O-Ring
4. Lower Housing
5. Cover O-Ring
6. Filter Element
7. Spring
8. Clear Cover
9. Vent Cap O-Ring
10. Vent Cap
11. Collar
12. Inlet Port/Check Valve
13. Heat Exchanger

Fig. 4, DAVCO Fuel Pro 382

https://truckmanualshub.com/

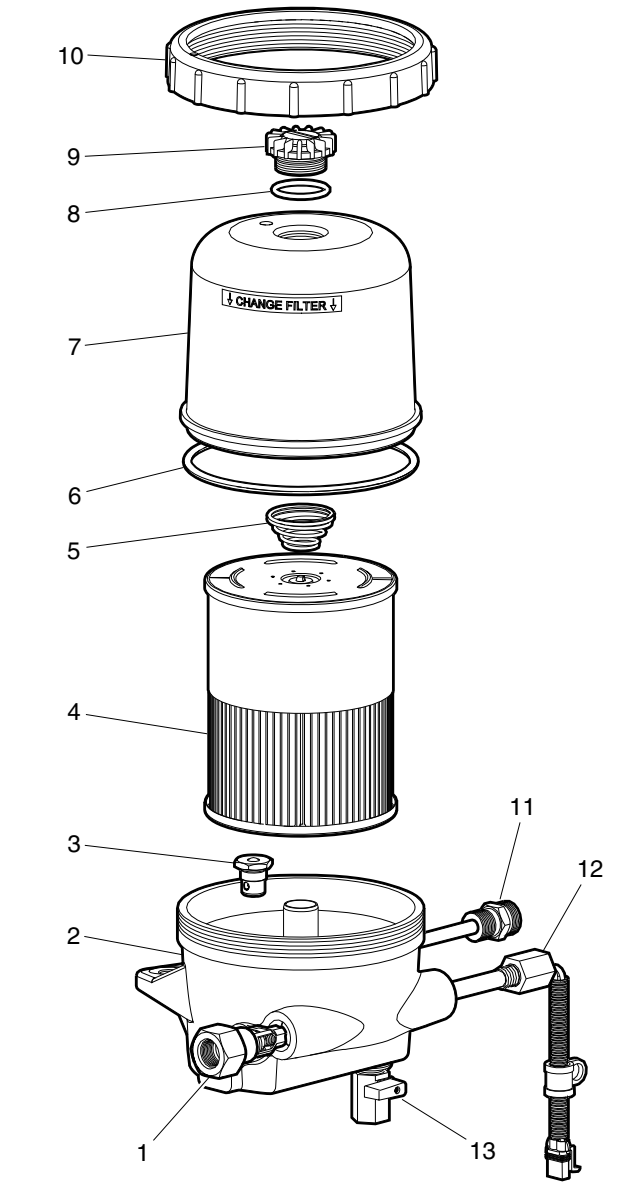

05/05/2009 f470530

1. Inlet Port/Check Valve
2. Lower Housing
3. Bypass Valve
4. Filter Element
5. Spring
6. Cover O-Ring
7. Clear Cover
8. Vent Cap O-Ring
9. Vent Cap
10. Collar
11. 120VAC Pre-Heater
12. 12VDC Pre-Heater
13. Drain Valve

Fig. 5, DAVCO Fuel Pro 482

Emergency Temporary Filter Replacement, Fuel Pro 382

⚠ WARNING

Fluid circulated through the fuel/water separator to heat the fuel may be diesel fuel returned from the engine, or engine coolant. Drain the fuel/water separator only when the engine and fluids have cooled. Draining it when the engine is hot could cause severe personal injury due to scalding.

If returning fuel is released into the atmosphere, its vapors can ignite in the presence of any ignition source. Do not expose the fuel to, or work with the fuel system near, open flame or intense heat. To do so could cause fire, possibly resulting in serious personal injury or property damage.

1. Shut down the engine, apply the parking brake, and chock the tires.
2. Put a clean receptacle under the fuel/water separator and attach a piece of hose to the drain valve, to direct fuel into the receptacle.

   The drain valve has a 1/2-inch (12.7-mm) pipe; use a hose with a 1/2-inch pipe thread to fit correctly.
3. Remove the vent cap (**Fig. 2**, Item 4) and open the drain valve (**Fig. 2**, Item 1) to drain the fuel completely, then close the drain valve.
4. Using a DAVCO Collar Wrench, shown in **Fig. 3**, remove the clear cover and collar.

NOTE: Broken vent cap and collar warranty claims will not be accepted if any tool other than a DAVCO Collar Wrench, part number 380134, is used for removal. During installation, the vent cap is to be **hand-tightened only**, not tightened with a wrench.

5. Remove the filter and dispose of it in an environmentally acceptable manner.
6. Clean all threads and sealing surfaces very thoroughly. Even a small amount of dirt will prevent the fuel/water separator from sealing, and an air leak may result.
7. Ensure that the drain valve is closed.
8. Remove the filter grommet from the filter stud, if equipped.

https://truckmanualshub.com/

9. Fill the housing to the top of the filter element with clean diesel fuel.
10. Install a standard engine spin-on filter (part number FF105 or equivalent) on the filter stud.
11. Install the cover O-ring, clear cover, and the collar. Hand-tighten the collar.
12. Install and hand-tighten the vent cap O-ring and vent cap.
13. Start the engine. When the lubricating oil reaches its normal operating pressure, increase engine speed to high idle for one to two minutes to purge air from the system.
14. Check for leaks and shut down the engine.

DAVCO Fuel Pro® 487

WARNING

Fluid circulated through the fuel/water separator to heat the fuel may be diesel fuel returned from the engine, or engine coolant. Drain the fuel/water separator only when the engine and fluids have cooled. Draining it when the engine is hot could cause severe personal injury due to scalding.

If returning fuel is released into the atmosphere, its vapors can ignite in the presence of any ignition source. Do not expose the fuel to, or work with the fuel system near, open flame or intense heat. To do so could cause fire, possibly resulting in serious personal injury or property damage.

1. Shut down the engine, apply the parking brake, and chock the tires.
2. Check the fuel level in the fuel filter. Replace the fuel/water separator element **only** when the filter element is completely covered. If the fuel level has reached the top of the filter element, follow the procedure below to replace the element.
3. Put a clean receptacle under the fuel/water separator and attach a piece of hose to the drain valve, to direct fuel into the receptacle.

   On older models, the drain valve has a 1/2-inch (12.7-mm) pipe with threads. Use a hose with a 1/2-inch pipe thread to fit correctly and open the drain valve by turning it one-quarter revolution.

   On new models, the drain valve has a 3/4-inch (19-mm) slip-on hose connection; pipe threads are no longer used. Open the drain valve by turning it one to one-and-a-half revolutions.
4. Remove the vent cap, shown in **Fig. 6**, to drain the fuel completely, then close the drain valve.
5. Using a DAVCO Collar Wrench, shown in **Fig. 3**, remove the clear cover and collar.

NOTE: Broken vent cap and collar warranty claims will not be accepted if any tool other than a DAVCO Collar Wrench (part number 482017) is used for removal. During installation, the vent cap is to be **hand-tightened only**, not tightened with a wrench.

6. Remove the filter, cover O-ring, and vent cap O-ring. Dispose of them in an environmentally acceptable manner. See **Fig. 6.**
7. Clean all threads and sealing surfaces very thoroughly. Even a small amount of dirt will prevent the fuel/water separator from sealing, and an air leak may result.
8. Install the new filter and grommet assembly and cover O-ring on the housing.

   Position the filter element so the key is lined up with the keyway on the separator plate of the housing. Use the arrow on the top of the endplate to align the filter. See **Fig. 7**. Ensure the filter element is fully seated by firmly pushing on the endplate. The filter should not rotate freely.
9. Install the clear cover and the collar. Simultaneously apply downward pressure to the top of the clear cover until it is seated on the body of the lower housing and hand tighten the collar until it no longer spins freely. Using the collar wrench, tighten the cover 18 lbf·ft (24 N·m). This is equivalent to rotating the collar clockwise two or three additional ribs, depending on the specific filter model.
10. Prime the system

    10.1 Ensure that the drain valve is closed.

    10.2 Fill the housing to the top of the filter element with clean diesel fuel.

    10.3 Install and hand-tighten the vent cap O-ring and vent cap.

    10.4 Start the engine. When the lubricating oil reaches its normal operating pressure,

https://truckmanualshub.com/

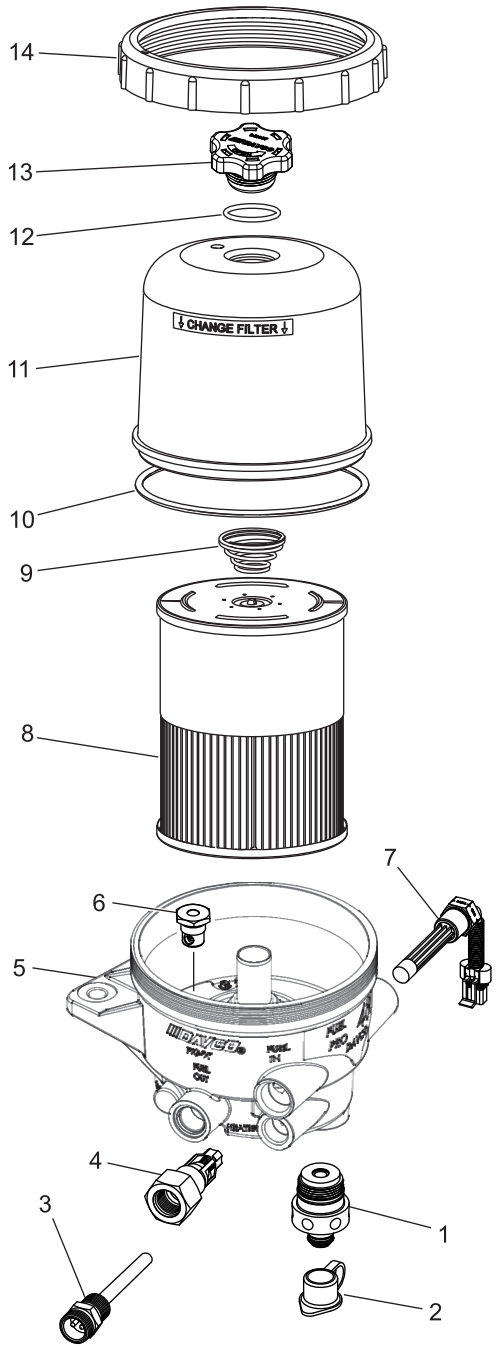

10/31/2017 f470707

1. Drain Valve
2. Drain Valve Cap
3. 120VAC Pre-Heater
4. Inlet Port/Check Valve
5. Lower Housing
6. Bypass Valve
7. 12VDC Pre-Heater
8. Filter Element
9. Spring
10. Cover O-Ring
11. Clear Cover
12. Vent Cap O-Ring
13. Vent Cap
14. Collar

Fig. 6, DAVCO Fuel Pro 487

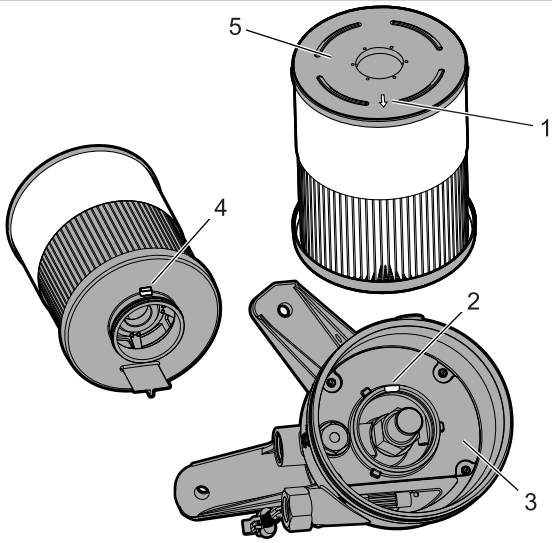

10/03/2017 f470706

1. Arrow (on the endplate)
2. Keyway
3. Separator Plate
4. Key
5. Endplate

Fig. 7, Positioning the Filter Element

increase engine speed to high idle for one to two minutes to purge air from the system.

10.5 While the engine is running, and after the air is purged from the system, loosen the vent cap until the fuel level falls to just above the collar, then hand-tighten the vent cap.

10.6 Check for leaks and shut down the engine.

Detroit

The only maintenance necessary on an Detroit fuel/water separator is to replace the filter element. See **Fig. 8**.

⚠ WARNING

Fluid circulated through the fuel/water separator to heat the fuel may be diesel fuel returned from the engine, or engine coolant. Drain the fuel/water separator only when the engine and fluids have cooled. Draining it when the engine is hot could cause severe personal injury due to scalding.

https://truckmanualshub.com/

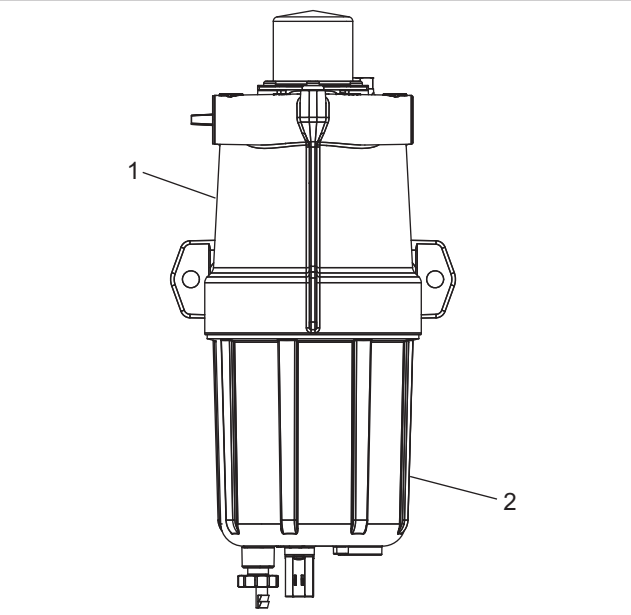

1. Mounting Head 2. Sight Bowl

Fig. 8, Detroit Fuel/Water Separator

If returning fuel is released into the atmosphere, its vapors can ignite in the presence of any ignition source. Do not expose the fuel to, or work with the fuel system near, open flame or intense heat. To do so could cause fire, possibly resulting in serious personal injury or property damage.

1. Drain off some fuel by loosening the vent plug and opening the drain valve.
2. Disconnect the water sensor and heater connections if equipped.
3. Remove the bowl by turning counterclockwise.
4. Remove the element, bowl O-ring, and element o-ring. Dispose of them in an environmentally acceptable manner.
5. Thoroughly clean all of the threads and sealing surfaces. Even a small amount of dirt will prevent the fuel/water separator from sealing, and an air leak may result.
6. Apply a coating of clean fuel or motor oil to the new O-ring and to the new element o-ring.
7. Insert the new element into the upper housing.

IMPORTANT: Do not use tools to tighten the bowl and element.

8. Spin the bowl onto the onto the upper housing by hand only.
9. Connect the water sensor and heater connectors if equipped.
10. If equipped with a primer pump, prime the fuel/water separator as follows.
    - 10.1 Loosen the vent plug. Then operate the primer pump until the fuel purges at the vent plug.
    - 10.2 Close the vent plug.
11. Start the engine and check for fuel leaks.
12. Shut down the engine and correct any fuel leaks.

47–03 Fuel Tank Band-Nut Tightening

Hold each fuel tank band retention nut with a wrench while backing off its jam nut, then tighten the retention nuts 30 to 35 lbf·ft (41 to 46 N·m). After the retention nuts have been tightened, hold each retention nut with a wrench while tightening its jam nut 30 lbf·ft (41 N·m).

IMPORTANT: Do not overtighten.

https://truckmanualshub.com/

https://truckmanualshub.com/

Index, Alphabetical

Title of Maintenance Operation (MOP)	MOP Number
Exhaust System Inspection (Noise Emission Control)	49–01
Safety Precautions	49–00

https://truckmanualshub.com/

https://truckmanualshub.com/

49–00 Safety Precautions

Safety Precautions in this section apply to all procedures within this group.

⚠ DANGER

When working on the vehicle, shut down the engine or motor, set the parking brake, and chock the tires. Before working under the vehicle, always place jack stands under the frame rails to ensure the vehicle cannot drop. Failure to follow these steps could result in serious personal injury or death.

49–01 Exhaust System Inspection (Noise Emission Control)

In addition to inspecting the exhaust system at the scheduled maintenance interval, inspect the exhaust system if the noise level of the vehicle has increased. Freightliner Trucks recommends replacing parts that show leakage, wear, or damage, with genuine Freightliner parts.

It is a violation of US federal law to alter exhaust plumbing or aftertreatment in any way that would bring the engine out of compliance with certification requirements. (Ref: 42 U.S.C. S7522(a) (3).) It is the owner's responsibility to maintain the vehicle so that it conforms to EPA regulations.

Definitions of ATS Terms

Refer to the following list of definitions of ATS terms and components.

- Aftertreatment System (ATS)—the entire exhaust system from the turbocharger to the exhaust stack or tail pipe.
- Aftertreatment Device (ATD)—a housing that contains the DOC and DPF (also the SCR and the mixing tube in one-box systems).
- BlueTec®—Daimler's proprietary SCR technology.
- Diesel Oxidation Catalyst (DOC)—a flow-through device that oxidizes soot in the ATD.
- Diesel Particulate Filter (DPF)—a component in the ATD that traps soot from the exhaust gas.
- Diesel Exhaust Fluid (DEF)—the chemical agent that reacts with the exhaust gases in the SCR to reduce NOx.
- DEF Pump—filters and supplies DEF to the DEF metering unit.
- DEF Tank—holds DEF and regulates its temperature.
- DEF Metering Unit—mixes DEF with compressed air, and meters this mixture into the exhaust flow via an injection nozzle.
- SCR Catalyst—the housing containing a treated ceramic flow-through block where the DEF and exhaust gases undergo selective catalytic reduction (SCR).
- Selective Catalytic Reduction (SCR)—a process used to reduce NOx emissions.

EPA10 and Newer Exhaust System Inspection

IMPORTANT: Depending upon local jurisdictional emissions guidelines, vehicles that are domiciled outside of the U.S. and Canada may not have engines and/or emissions aftertreatment systems that are compliant with EPA10 or GHG21 regulations.

IMPORTANT: The aftertreatment device (ATD), which is part of the aftertreatment system (ATS), requires special attention during regularly scheduled maintenance inspections. No leaks are allowed anywhere in the system. If any discrepancies are discovered, refer to the engine manufacturer's service literature for repair instructions.

1. Check for leakage at the clamp that attaches the exhaust pipe to the turbocharger exhaust outlet. If leakage exists, tighten the nut on the clamp to the required torque. If leakage persists, install a new clamp.
2. Check the exhaust pipe, bellows, and each exhaust seal clamp for leakage, wear, cracks, or damage. Replace damaged components as needed. If leakage exists at a clamp, tighten the nuts to the required torque. If leakage persists, install a new exhaust seal clamp. Do not reuse

https://truckmanualshub.com/

seal clamps. Once a seal clamp is loosened or removed, it must be replaced.

3. If present, check the condition of the insulation material around the exhaust pipe between the turbocharger and the ATD.
4. Check the ATD mounting bands for tightness. Tighten to 30 lbf·ft (41 N·m) if needed. Do not overtighten.
5. Check for leaks around the clamps that attach the ATD in the ATS, and around the clamps that retain the DPF in the ATD.
6. Check all sensors attached to the ATS for leaks or damaged wires. No leaks are allowed. See **Fig. 1**, **Fig. 2**, or **Fig. 3** for Detroit Diesel ATS sensor locations.
7. Check the DPF exterior surface for dents or other damage. A dent over 3 inches (76 mm) in diameter and 1/4-inch (6-mm) deep could cause internal damage to the DPF, causing it to malfunction.
8. Check the SCR catalyst for dents and other damage.
9. Check for heat discoloration on the surface of the ATD. Heat discoloration may indicate internal damage; especially around the DPF.

NOTE: Diesel exhaust fluid creeps, causing white crystals to form around the line fittings. The presence of crystals does not mean the system has a leak. Replacing fittings or troubleshooting components is not necessary unless there is a system failure or a fault code.

10. Check the DEF tank, pump, metering unit, and lines for leaks. See **Section 49.01** of the *122SD and Coronado Workshop Manual* for repair procedures.
11. Check any wires, lines, or hoses within 4 inches (10 cm) of the exhaust system for heat damage. Repair or reroute as needed.

Diesel Exhaust Fluid (DEF) Filter Replacement

The Environmental Protection Agency's 2010 regulations require lower nitrogen oxide (NOx) exhaust emissions. Selective catalytic reduction (SCR) uses diesel exhaust fluid (DEF) to lower NOx emissions in the vehicle exhaust. A filter in the DEF pump prevents clogging of the DEF metering unit injection nozzle.

See the engine manufacturer's maintenance manual for filter replacement instructions and maintenance intervals.

ADR2011 Exhaust System Inspection

IMPORTANT: The Australian Department of Infrastructure and Transportation regulations for 2011 (ADR2011) require lower exhaust emissions, thus requiring new exhaust system components. See **Fig. 4**. In particular the aftertreatment device (ATD), which is part of the aftertreatment system (ATS), requires special attention during regularly scheduled maintenance inspections. If any discrepancies are discovered, refer to the engine manufacturer's service literature for repair instructions.

Inspection

1. Check for leakage at the clamp that attaches the exhaust pipe to the turbocharger exhaust outlet. If leakage exists, tighten the nut on the clamp to the required torque. If leakage persists, install a new clamp.

https://truckmanualshub.com/

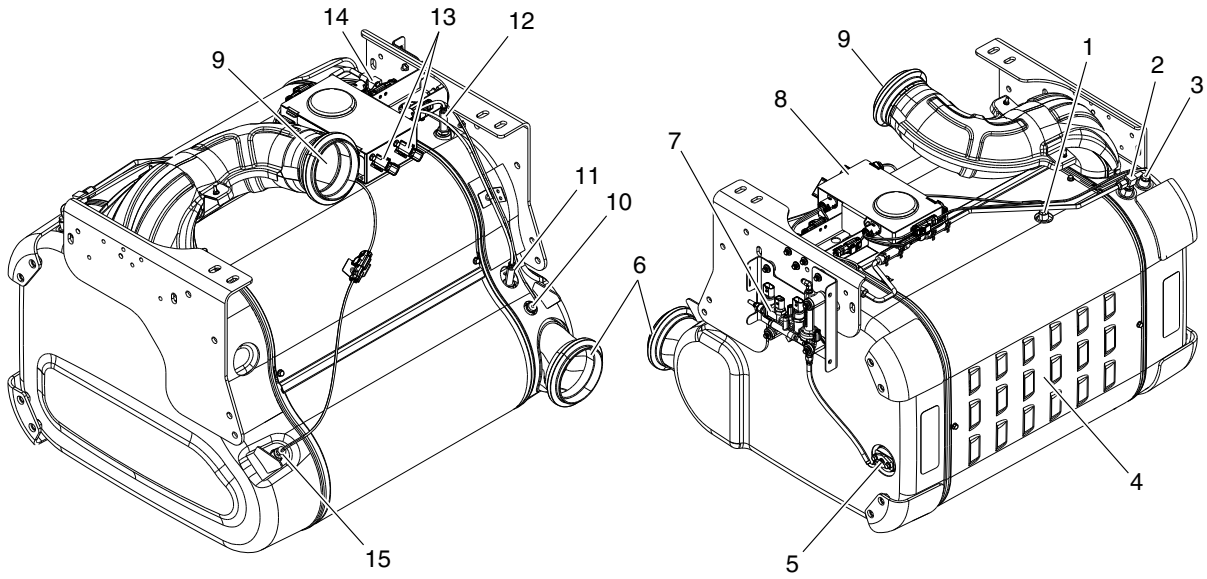

08/20/2009 f490355

NOTE: The sensor box (item 8) contains the SCR inlet and outlet NOx sensors, DPF outlet pressure sensor, and the DOC inlet pressure sensor.

1. DOC Outlet Temperature Sensor
2. DOC Inlet Pressure Sensor Port
3. DOC Inlet Temperature Sensor
4. Front Heat Shield
5. DEF Nozzle
6. Exhaust Outlet
7. DEF Metering Unit
8. Sensor Box (see note above)
9. Exhaust Inlet
10. SCR Outlet Temperature Sensor
11. SCR Outlet NOx Sensor Port
12. SCR Inlet NOx Sensor Port
13. 14-Pin Connectors
14. DPF Outlet Pressure Sensor Port
15. SCR Inlet Temperature Sensor

Fig. 1, One-Box ATS Sensor Locations (EPA10)

2. Check the exhaust pipe, bellows, and each exhaust seal clamp for leakage, wear, cracks, or damage. Replace damaged components as needed. If leakage exists at a clamp, tighten the nuts to the required torque. If leakage persists, install a new exhaust seal clamp. Do not reuse seal clamps. Once a seal clamp is loosened or removed, it must be replaced.
3. If present, check the condition of the insulation material around the exhaust pipe between the turbocharger and the ATD.
4. Check the ATD mounting bands for tightness. Tighten to 30 lbf·ft (41 N·m) if needed. Do not overtighten.
5. Check for leaks around the clamps that attach the ATD in the ATS, and around the clamps that retain the DPF in the ATD. No leaks are allowed anywhere in the system.
6. Check all sensors attached to the ATD for leaks or damaged wires. No leaks are allowed.
7. Check the DPF exterior surface for dents or other damage. See Item A of **Fig. 4**. A dent over 3 inches (76 mm) in diameter and 1/4-inch (6-mm) deep could cause internal damage to the DPF, causing it to malfunction.
8. Check for heat discoloration on the surface of the ATD. Heat discoloration may indicate internal damage; especially around the DPF.
9. Check any wires, lines, or hoses within 4 inches (10 cm) of the exhaust system for heat damage. Repair or reroute as needed.

https://truckmanualshub.com/

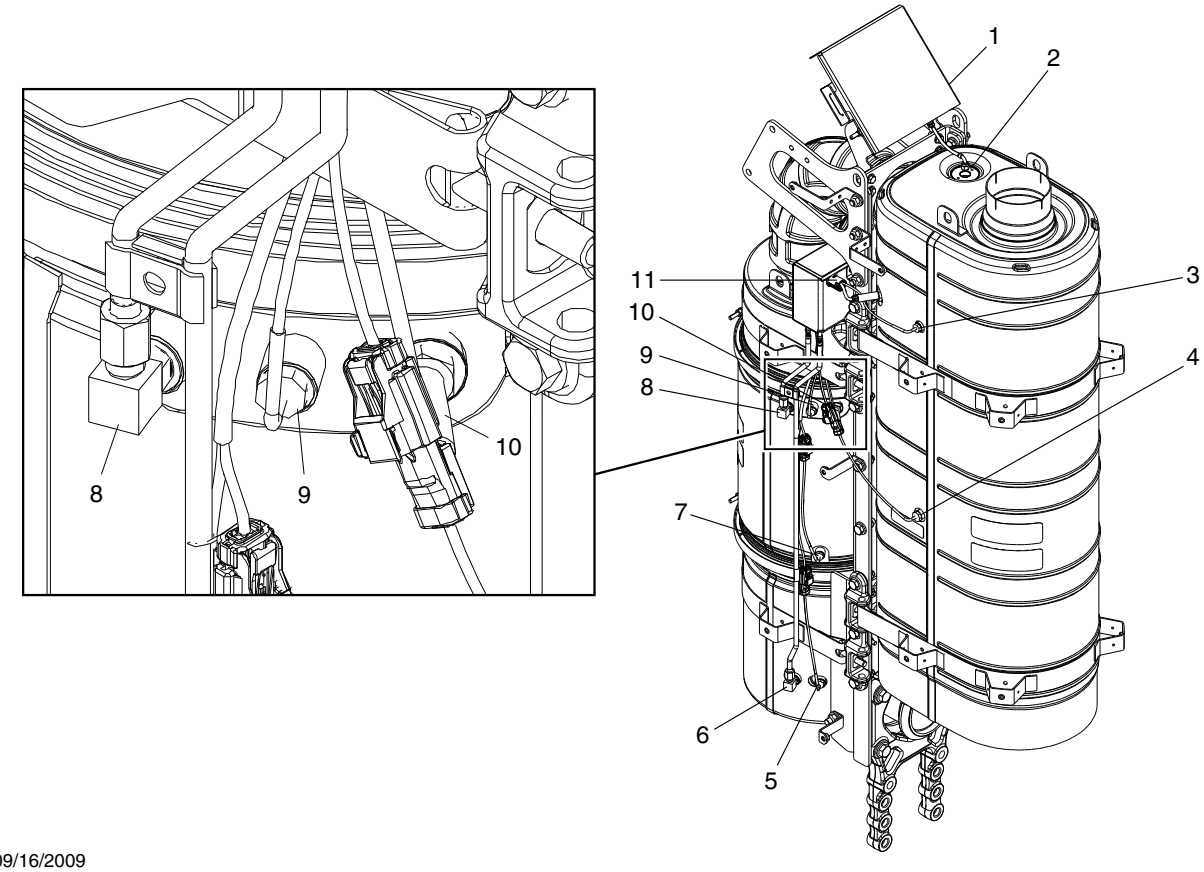

1. DEF Metering Unit
2. DEF Nozzle
3. SCR Outlet Temperature Sensor
4. SCR Inlet Temperature Sensor
5. DOC Inlet Temperature Sensor
6. DOC Inlet Pressure Sensor
7. DPF Inlet Temperature Sensor
8. DPF Outlet Pressure Sensor
9. DPF Outlet Temperature Sensor
10. DPF Outlet NOx Sensor
11. SCR Outlet NOx Sensor

Fig. 2, 2V2 Two-Box ATS Sensor Locations (EPA10)

https://truckmanualshub.com/

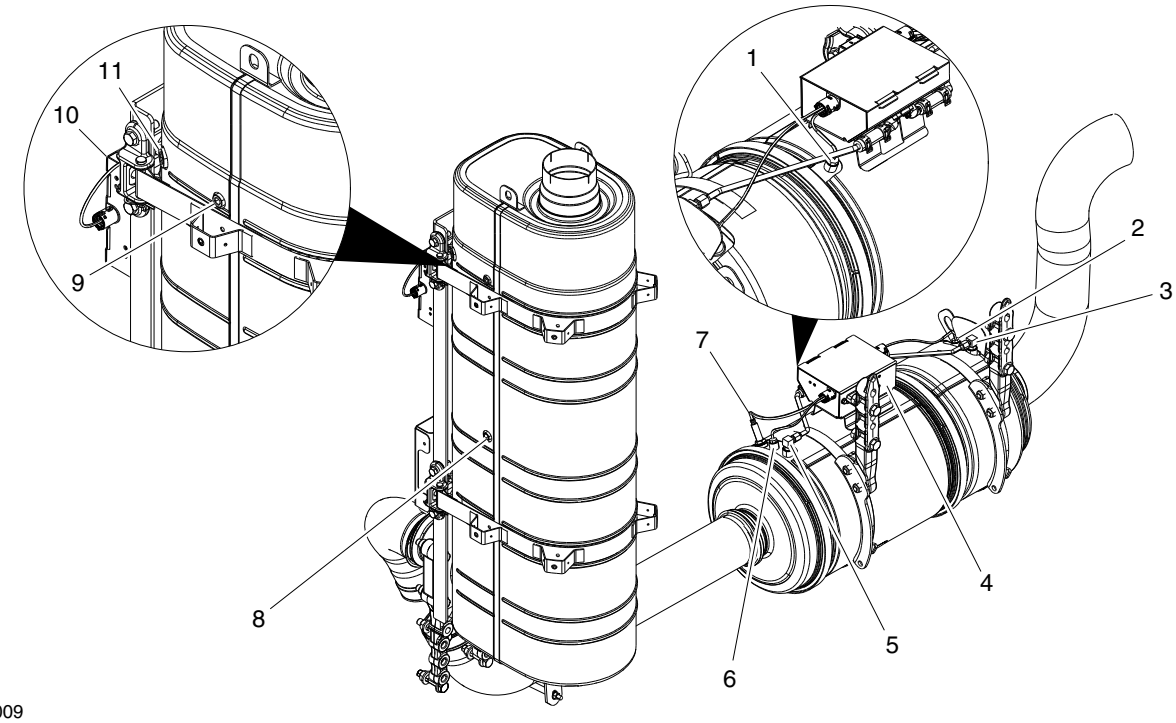

09/16/2009 f490354

1. DPF Inlet Temperature Sensor
2. DOC Inlet Temperature Sensor
3. DOC Inlet Pressure Sensor
4. DPF Sensor Box
5. DPF Outlet Pressure Sensor
6. DPF Outlet Temperature Sensor
7. DPF Outlet NOx Sensor
8. SCR Inlet Temperature Sensor
9. SCR Outlet Temperature Sensor
10. SCR Sensor Box
11. SCR Outlet NOx Sensor

Fig. 3, 2HV Two-Box ATS Sensor Locations (EPA10)

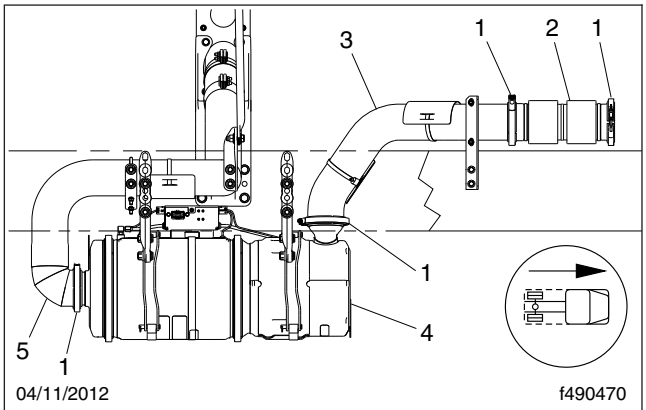

04/11/2012 f490470

A. Inspect the canister for dents.

1. Clamp
2. Bellows
3. ATD Intake Pipe
4. ATD
5. ATD Outlet Pipe

Fig. 4, Typical Aftertreatment Device (ADR2011)

https://truckmanualshub.com/

https://truckmanualshub.com/

Index, Alphabetical

Title of Maintenance Operation (MOP)	MOP Number
Aerodynamic Component Inspection	60–02
Mirror Folding Check	60–01

https://truckmanualshub.com/

https://truckmanualshub.com/

60–01 Mirror Folding Check

For vehicles with folding main mirrors, make sure that the mirrors fold freely on the pivot points. Pivot each mirror fully forward and backward two times to break loose any debris that may affect the fold-away feature of the mirror.

60–02 Aerodynamic Component Inspection

Inspect aerodynamic components, if equipped, for structural damage, cracks, or wear. These may include:

- Chassis fairings
- Battery access kickplate
- Side skirts
- Cab side extenders
- Roof fairing/deflector
- Bumper
- Hood

Replace or repair damaged or missing components as needed.

https://truckmanualshub.com/

https://truckmanualshub.com/

Index, Alphabetical

Title of Maintenance Operation (MOP) **MOP Number**

Door Seal, Door Latch, and Door Check Lubrication 72–01

https://truckmanualshub.com/

https://truckmanualshub.com/

72–01 Door Seal, Door Latch, and Door Check Lubrication

NOTICE

Do not lubricate the door hinges. Lubrication could adversely affect the performance of the hinge bushings.

NOTE: Light penetrating oils, such as WD–40, should not be used because they wash out beneficial factory-installed grease, and they evaporate.

Door Seals

Lightly coat the door seals with a lubricant that is safe for rubber.

Door Latches

Wipe old grease and dirt from all door latch assemblies, then apply liberal amounts of an approved grease to each moving joint; see **Table 1**. Use an appropriate applicator that will not leave material behind.

Door Checks

Wipe old grease and dirt from door checks. Lubricate each moving joint of the door checks at installation and every six months thereafter, with an approved grease; see **Table 1**. Use an appropriate applicator that will not leave material behind.

Approved Grease		
Application	**Lubricant**	**NLGI Grade**
Door Latches	ConocoPhillips Triton® 460	1.5
Door Checks	ConocoPhillips Megaplex® XD3	2

Table 1, Approved Grease

https://truckmanualshub.com/

https://truckmanualshub.com/

Index, Alphabetical

Title of Maintenance Operation (MOP)	MOP Number
Air Conditioner Inspection	83–01
Air Filter Replacement	83–02
Safety Precautions	83–00

https://truckmanualshub.com/

https://truckmanualshub.com/

83–00 Safety Precautions

Safety Precautions in this section apply to all procedures within this group.

DANGER

When working on the vehicle, shut down the engine or motor, set the parking brake, and chock the tires. Before working under the vehicle, always place jack stands under the frame rails to ensure the vehicle cannot drop. Failure to follow these steps could result in serious personal injury or death.

83–01 Air Conditioner Inspection

NOTE: The following procedure applies to an air conditioner system with a Denso compressor.

WARNING

Wear eye protection, gloves, and protective clothing when working on the air conditioning system. Leaking refrigerant from a damaged hose or line could cause blindness or serious skin burns.

1. Park the vehicle on a level surface, apply the parking brakes, and chock the tires.
2. Inspect the A/C compressor hub. A torn or melted rubber dampener (center section) indicates internal damage has occurred within the compressor. Inspect friction surfaces for wear, oil-soaked condtions, or discoloration due to excessive heat.
3. With the belt removed, check to make sure that the rotor (pulley) spins freely. It should not wobble or make contact with the hub when it is spinning. The average air gap between the hub and rotor should be 0.014 to 0.024 inch (0.35 to 0.6 mm). Check the gap at several locations and average the results. See **Fig. 1.**
4. Check the overall condition of the air conditioning hoses. Look for cracks, cuts, and abrasions on the hoses. Replace damaged hoses. For replacement instructions, see **Group 83** of the *122SD and Coronado Workshop Manual*. Also check for signs of loose fittings on all of the air conditioning components.

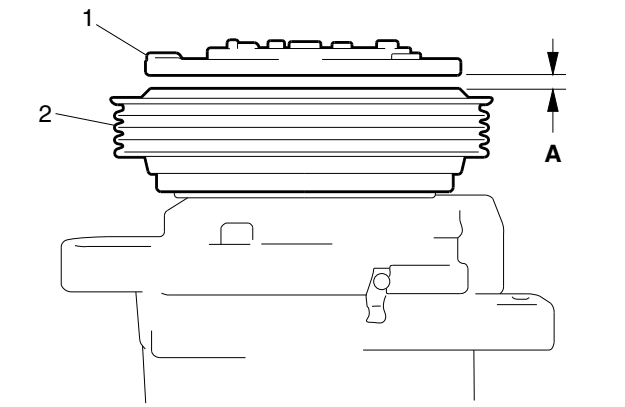

A. Gap Dimension: 0.014 to 0.024 inch (0.35 to 0.60 mm)
1. Hub
2. Rotor Magnetic Clutch

Fig. 1, Hub/Rotor Gap

83–02 Air Filter Replacement

The HVAC system has three filters that must be replaced periodically to maintain proper system operation. The cabin fresh-air-intake filter is accessed from under the hood, and the recirculation filter is accessed from inside the cab. The sleeper air filter is located under the bunk.

Cab Fresh Air Filter Replacement

NOTICE

If equipped with a fresh air filter, it should be replaced every six months, more often if the vehicle is operated under extreme conditions. If the fresh air filter is not replaced at proper intervals, damage to the heater and air conditioner components could occur.

IMPORTANT: When replacing the air filter, use only a Freightliner-approved air filter.

1. Apply the parking brakes and chock the tires.
2. Lift the wire retainer on the air filter cover up and over the upper edge of the cover and pull the wire retainer down; see **Fig. 2**.

https://truckmanualshub.com/

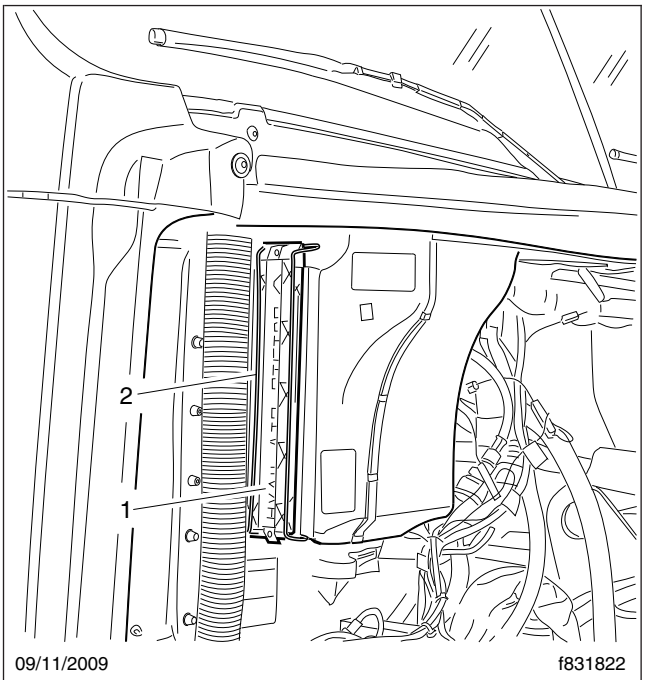

1. Air Filter Cover 2. Wire Retainer

Fig. 2, HVAC Air Intake Plenum

3. Note the direction of the arrow on the air filter cover, then remove the cover and the attached filter.
4. Remove the air filter from the air filter cover. Discard the air filter.
5. Attach a new air filter to the air filter cover. Make sure the arrow on the filter is pointing in the same direction as the arrow on the cover.
6. Install the air filter and air filter cover in the HVAC air intake plenum.
7. Pull the wire retainer up and over the upper edge of the air filter cover.

Cab Recirculation Air Filter Replacement

The cab recirculation air filter must be replaced every six months, regardless of mileage, to permit proper operation of the HVAC system. The filter can be accessed by removing the dash lower console. See **Fig. 3**.

NOTICE

If the recirculation air filter is not replaced every six months, damage to the heater and air conditioner components could occur. The HVAC system should not be operated without the recirculation air filter installed.

IMPORTANT: When replacing the air filter, use only a Freightliner-approved air filter.

1. Park the vehicle on a level surface. Apply the parking brakes and chock the rear tires.
2. Remove the dash lower console. The lower console is secured by nine Torx screws; see **Fig. 3**.
3. Remove the retainer that holds the recirculation air filter in place; see **Fig. 4**.
4. Remove and discard the recirculation air filter.
5. Install a new recirculation air filter in the retainer.
6. Install the retainer in the HVAC assembly; see **Fig. 4**.
7. Install the dash lower console. Tighten the Torx screws 24 to 30 lbf·in (270 to 340 N·cm). See **Fig. 3**.

Sleeper Air Filter Replacement

Replace the air filter in the sleeper HVAC unit every six months, regardless of mileage. The filter should not be cleaned.

NOTICE

If the sleeper air filter is not replaced every six months, damage to the heater and air conditioner components could occur. The HVAC system should not be operated without the recirculation air filter installed.

1. Turn off the engine, apply the brakes, and chock the tires.
2. Access the sleeper HVAC assembly by raising the mattress and bunk panel to the locked position. If there is a baggage compartment, the sleeper HVAC assembly may be accessed through the baggage door on the right side of the vehicle.
3. Slide the air filter out of the sleeper HVAC assembly; see **Fig. 5**.

https://truckmanualshub.com/

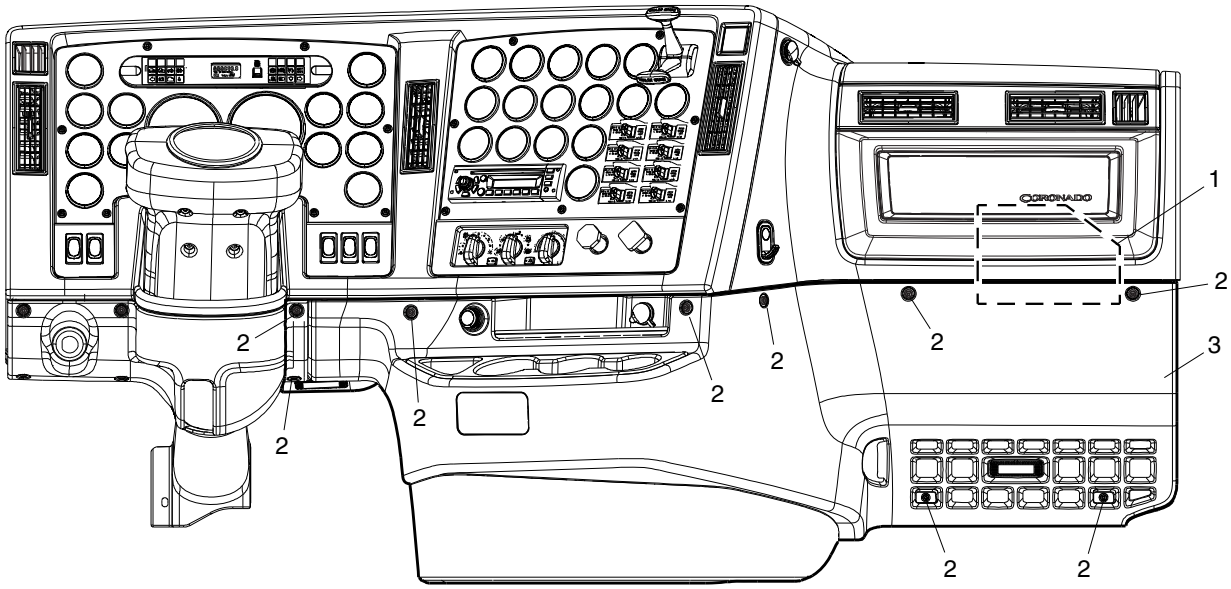

09/22/2009 f611065

1. Cab Recirculation Air Filter
2. Torx Screw
3. Dash Lower Console

Fig. 3, Cab Recirculation Air Filter Location

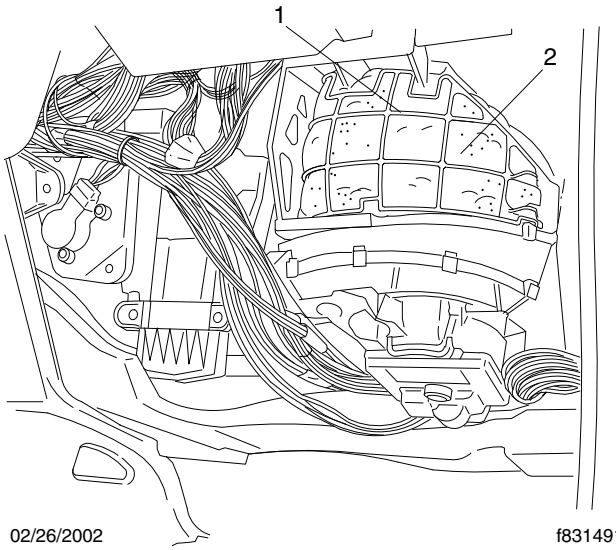

02/26/2002 f831491

1. Retainer
2. Recirculation Air Filter

Fig. 4, Cab Recirculation Air Filter

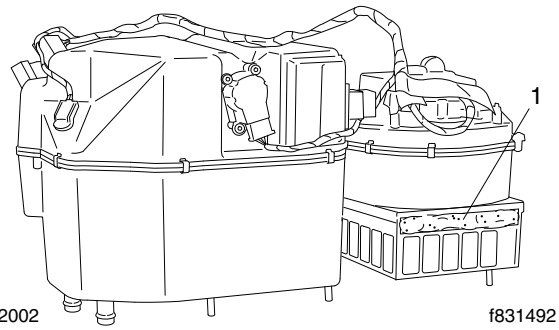

02/26/2002 f831492

1. Air Filter

Fig. 5, Sleeper HVAC Assembly

4. Place a new air filter in the sleeper HVAC assembly. The edge of the filter should be flush with the HVAC assembly.

https://truckmanualshub.com/

https://truckmanualshub.com/

Index, Alphabetical

Title of Maintenance Operation (MOP) **MOP Number**

Hood Rear Support Lubrication 88–01

https://truckmanualshub.com/

https://truckmanualshub.com/

88–01 Hood Rear Support Lubrication

1. Park the vehicle on a level surface, shut down the engine, and set the parking brake. Chock the tires.
2. Open the hood.
3. Clean both the hood- and cab-mounted hood rear support components with a soapy water solution.
4. Cover all contact surfaces of the hood rear support brackets and isolators with an approved multi-purpose, lithium-complex, soap-based grease; see **Table 1**.
5. Close the hood.

Approved Suppliers of Multi-Purpose Lithium Grease	
Supplier	**Grease**
Chevron	Delo Heavy Duty EP
Exxon	Unirex EP2
Mobil	Mobil Grease XHP 222
Shell	Retinax LC Grease
Texaco	Starplex 2

Table 1, Approved Suppliers of Multi-Purpose Lithium Grease

https://truckmanualshub.com/