https://truckmanualshub.com/

FREIGHTLINER®

Run Smart℠

COLUMBIA®

Maintenance Manual

Part Number A24-01033-000
Publication Number STI-409-2

https://truckmanualshub.com/

FREIGHTLINER®
Run Smart™

COLUMBIA MAINTENANCE MANUAL

Models: CL112
CL120

STI-409-2 (7/17)

Published by
Daimler Trucks North America LLC
4747 N. Channel Ave.
Portland, OR 97217
Printed in U.S.A.

https://truckmanualshub.com/

https://truckmanualshub.com/

Foreword

Scheduled maintenance provides a key element for the safe operation of your vehicle. A proper maintenance program also helps to minimize downtime and to safeguard warranties. This maintenance manual provides information necessary for years of safe, reliable, and cost-efficient vehicle operation.

IMPORTANT: The maintenance operations in this manual are **not all-inclusive**. Also refer to other component and body manufacturers' instructions for specific inspection and maintenance instructions.

Perform the operations in this maintenance manual at scheduled intervals. Perform the pretrip and post-trip inspections, and daily/weekly/monthly maintenance, as outlined in the vehicle driver's manual. Major components, such as engines, transmissions, and rear axles, are covered in their own maintenance and operation manuals, that are provided with the vehicle. Perform any maintenance operations listed at the intervals scheduled in those manuals. Your Freightliner Dealership has the qualified technicians and equipment to perform this maintenance for you. They can also set up a scheduled maintenance program tailored specifically to your needs. Optionally, they can assist you in learning how to perform these maintenance procedures.

IMPORTANT: Descriptions and specifications in this manual were in effect at the time of printing. Freightliner Trucks reserves the right to discontinue models and to change specifications or design at any time without notice and without incurring obligation. Descriptions and specifications contained in this publication provide no warranty, expressed or implied, and are subject to revision and editions without notice.

Refer to www.Daimler-TrucksNorthAmerica.com and www.FreightlinerTrucks.com for more information, or contact Daimler Trucks North America LLC at the address below.

Environmental Concerns and Recommendations

Whenever you see instructions in this manual to discard materials, you should attempt to reclaim and recycle them. To preserve our environment, follow appropriate environmental rules and regulations when disposing of materials.

NOTICE: Parts Replacement Considerations

Do not replace suspension, axle, or steering parts (such as springs, wheels, hubs, and steering gears) with used parts. Used parts may have been subjected to collisions or improper use and have undetected structural damage.

© 2001–2017 Daimler Trucks North America LLC

All rights reserved. No part of this publication, in whole or in part, may be translated, reproduced, stored in a retrieval system, or transmitted in any form by any means, electronic, mechanical, photocopying, recording, or otherwise, without the prior written permission of Daimler Trucks North America LLC. Daimler Trucks North America LLC is a Daimler company.

Daimler Trucks North America LLC
Service Systems and Documentation (POC-SSD)
P.O. Box 3849
Portland, OR 97208–3849

https://truckmanualshub.com/

https://truckmanualshub.com/

Descriptions of Service Publications

Daimler Trucks North America LLC distributes the following major service publications in paper and electronic (via ServicePro®) formats.

Workshop/Service Manual

Workshop/service manuals contain service and repair information for all vehicle systems and components, except for major components such as engines, transmissions, and rear axles. Each workshop/service manual section is divided into subjects that can include general information, principles of operation, removal, disassembly, assembly, installation, and specifications.

Maintenance Manual

Maintenance manuals contain routine maintenance procedures and intervals for vehicle components and systems. They have information such as lubrication procedures and tables, fluid replacement procedures, fluid capacities, specifications, and procedures for adjustments and for checking the tightness of fasteners. Maintenance manuals do not contain detailed repair or service information.

Driver's/Operator's Manual

Driver's/operator's manuals contain information needed to enhance the driver's understanding of how to operate and care for the vehicle and its components. Each manual contains a chapter that covers pretrip and post-trip inspections, and daily, weekly, and monthly maintenance of vehicle components. Driver's/operator's manuals do not contain detailed repair or service information.

Service Bulletins

Service bulletins provide the latest service tips, field repairs, product improvements, and related information. Some service bulletins are updates to information in the workshop/service manual. These bulletins take precedence over workshop/service manual information, until the latter is updated; at that time, the bulletin is usually canceled. The service bulletins manual is available only to dealers. When doing service work on a vehicle system or part, check for a valid service bulletin for the latest information on the subject.

IMPORTANT: Before using a particular service bulletin, check the current service bulletin validity list to be sure the bulletin is valid.

Parts Technical Bulletins

Parts technical bulletins provide information on parts. These bulletins contain lists of parts and BOMs needed to do replacement and upgrade procedures.

Web-based repair, service, and parts documentation can be accessed using the following applications on the AccessFreightliner.com website.

ServicePro

ServicePro® provides Web-based access to the most up-to-date versions of the publications listed above. In addition, the Service Solutions feature provides diagnostic assistance with Symptoms Search, by connecting to a large knowledge base gathered from technicians and service personnel. Search results for both documents and service solutions can be narrowed by initially entering vehicle identification data.

PartsPro

PartsPro® is an electronic parts catalog system, showing the specified vehicle's build record.

EZWiring

EZWiring™ makes Freightliner, Sterling, Western Star, Thomas Built Buses, and Freightliner Custom Chassis Corporation products' wiring drawings and floating pin lists available online for viewing and printing. EZWiring can also be accessed from within PartsPro.

https://truckmanualshub.com/

Descriptions of Service Publications

Warranty-related service information available on the AccessFreightliner.com website includes the following documentation.

Recall Campaigns Recall campaigns cover situations that involve service work or replacement of parts in connection with a recall notice. These campaigns pertain to matters of vehicle safety. All recall campaigns are distributed to dealers; customers receive notices that apply to their vehicles.

Field Service Campaigns Field service campaigns are concerned with non-safety-related service work or replacement of parts. All field service campaigns are distributed to dealers; customers receive notices that apply to their vehicles.

https://truckmanualshub.com/

Page Description

For an example of a *Columbia Maintenance Manual* page, see **Fig. 1**.

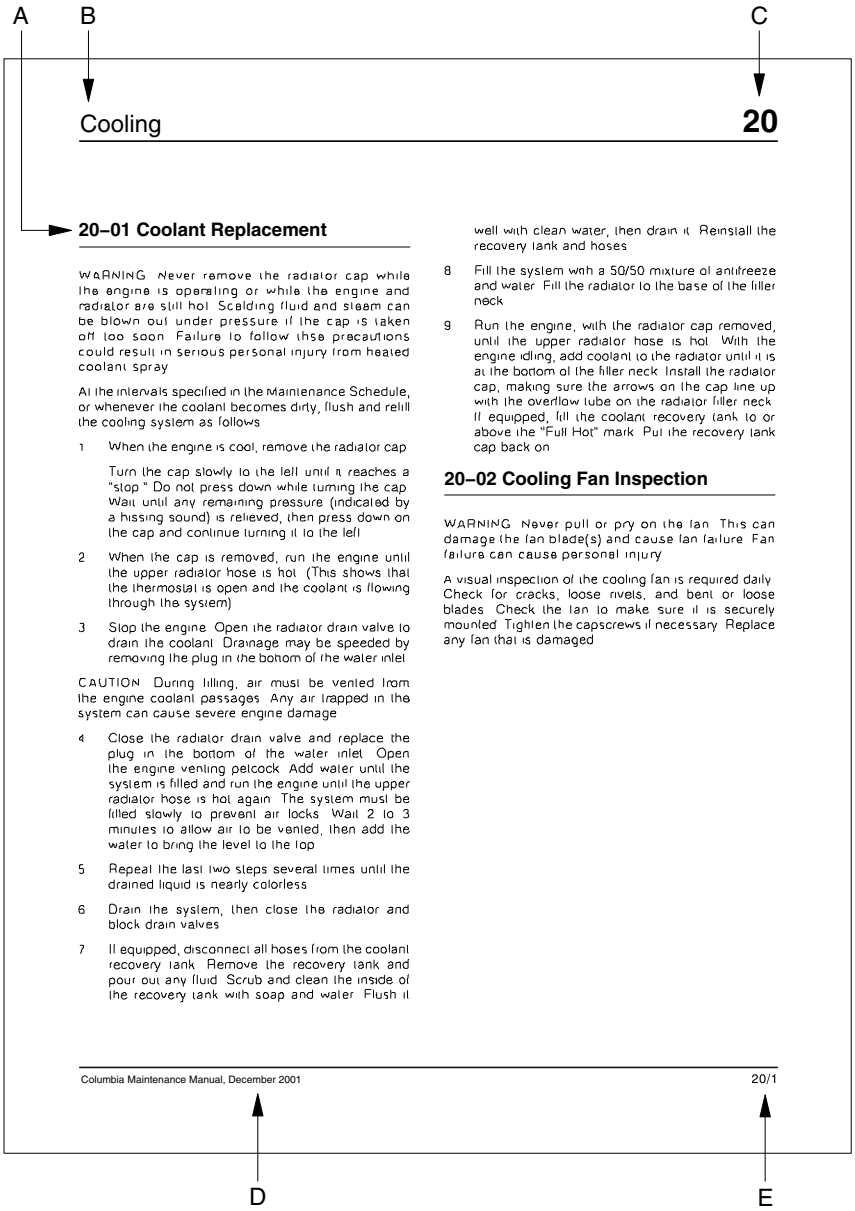

11/28/2001 f020127

A. Maintenance Operation Number consists of the Group Number followed by the Sequence Number
B. Group Title
C. Group Number
D. Release Date
E. Group Number/Page Number

Fig. 1, Example of a Columbia Maintenance Manual Page

https://truckmanualshub.com/

Maintenance Manual Contents

Group No.	Group Title
00	General Information
01	Engine
09	Air Intake
13	Air Compressor
15	Alternators and Starters
20	Engine Cooling/Radiator
25	Clutch
26	Transmission
31	Frame and Frame Components
32	Suspension
33	Front Axle
35	Rear Axle
40	Wheels and Tires
41	Driveline
42	Brakes
46	Steering
47	Fuel
49	Exhaust
60	Cab
72	Doors
83	Heater and Air Conditioner
88	Hood, Grille, and Cab Fenders

https://truckmanualshub.com/

Index, Alphabetical

Title of Maintenance Operation (MOP)	MOP Number
Determining Scheduled Maintenance Intervals	00–01
Initial Maintenance (IM) Operations	00–05
Lubrication and Fluid Level Check	00–04
M1 Maintenance Interval Operations	00–06
M2 Maintenance Interval Operations	00–07
M3 Maintenance Interval Operations	00–08
Maintenance Operation Sets Table	00–09
Noise Emission Controls Maintenance	00–10
Service Schedule Table	00–02
Vehicle Maintenance Schedule Tables	00–03
Verification of Inspections Log	00–11

https://truckmanualshub.com/

https://truckmanualshub.com/

Determining Scheduled Maintenance Intervals

Performing regular maintenance on your Freightliner will help ensure that your Freightliner delivers safe reliable service and optimum performance for years to come. Failure to follow a regular maintenance program can result in inefficient operation and unscheduled down time.

To determine the correct maintenance intervals for your vehicle you must first determine the type of service or conditions the vehicle will be operating in. Generally, most vehicles operate under conditions that fall within one of the four types of service described. Before placing your new vehicle in service, determine the type of service (Service Schedule I, II, III, or IV) that applies to the intended use of the vehicle. After determining the vehicle's type of service, refer to the service schedule table or the vehicle maintenance schedule table, to determine how often maintenance should be performed.

When the vehicle reaches the distance given for a maintenance interval, see the Maintenance Interval Operation Table for a list of the maintenance operations to be performed at that maintenance interval. Use the maintenance operation reference numbers to find detailed instructions in the manual on each operation.

Types of Service

Service Schedule I (severe service) applies to vehicles that annually travel less than 6000 miles (10 000 kilometers) *or* that operate under severe conditions. Examples of severe service, Schedule I usage include: operation on extremely poor roads or where there is heavy dust accumulation; constant exposure to extreme hot, cold, salt-air, or other extreme climates; frequent short-distance travel; construction-site operation; city operation (fire truck); or farm operation.

Service Schedule II (short-haul transport) applies to vehicles that annually travel less than 60,000 miles (100 000 kilometers) and operate under normal conditions. Examples of Schedule II usage are: operation primarily in cities and densely populated areas; local transport with infrequent freeway travel; or high percentage of stop-and-go travel.

Service Schedule III (long-haul transport) is for vehicles that annually travel *more than* 60,000 miles (100 000 kilometers) with minimal city or stop-and-go operation. Examples of Schedule III usage are: regional delivery that is mostly freeway miles; interstate transport; or any road operation with high annual mileage.

Service Schedule IV (long haul transport for Optimized Vehicle Configuration) is for vehicles that annually travel **over** 60,000 miles (100 000 km) **and** meet the following qualifications:

- Meritor 15-1/2 inch dampened/ceramic Lite Pedal LTD clutch with sealed release bearing.
- Synthetic transmission fluid used in transmission.
- Meritor FF–961 or FF–981 front axle (12,000 lb. capacity) with synthetic lubricant.
- Front suspension with maintenance-free rubber bushings for 12,000 lb. capacity suspension.
- Meritor RPL series, or Dana Spicer SPL series driveline U-joints.
- Synthetic lubricant used in rear axle.
- Equipped with any Freightliner AirLiner suspension.
- Equipped with Meritor Q-Plus extended-lube cam brakes and automatic slack adjusters, front and rear.
- Standard brake system package including Bendix AD-9 air dryer—mounted on the right-hand frame rail, located directly behind the front bumper—with heater, and a Bendix air compressor.
- TRW TAS65 power steering.

NOTE: Maintenance instructions in this manual are based on average vehicle use and normal operating conditions. Unusual vehicle operating conditions may require service at more frequent intervals.

https://truckmanualshub.com/

Service Schedule Table: 00–02

Service Schedule	Maintenance Interval Operation	Maintenance Interval			
		Frequency	Miles	km	Hours
Schedule I* (Severe Service) vehicles that annually travel less than 6000 miles (10 000 km)	Initial Maintenance (IM)	first	1000	1600	50
	Maintenance 1 (M1)	every	1000	1600	50
	Maintenance 2 (M2)	every	5000	8000	500
	Maintenance 3 (M3)	every	15,000	24 000	1500
Schedule II† (Short-Haul Transport) vehicles that annually travel less than 60,000 miles (100 000 km)	Initial Maintenance (IM)	first	10,000	16 000	—
	Maintenance 1 (M1)	every	10,000	16 000	
	Maintenance 2 (M2)	every	50,000	80 000	
	Maintenance 3 (M3)	every	150,000	240 000	
Schedule III† (Long-Haul Transport) vehicles that annually travel over 60,000 miles (100 000 km)	Initial Maintenance (IM)	first	25,000	40 000	—
	Maintenance 1 (M1)	every	25,000	40 000	
	Maintenance 2 (M2)	every	100,000	161 000	
	Maintenance 3 (M3)	every	300,000	483 000	
Schedule IV† (Long-Haul Transport for Optimized Vehicle Configuration) vehicles that annually travel over 60,000 miles (100 000 km)	Initial Maintenance (IM)	first	25,000	40 000	—
	Maintenance 1 (M1)	every	25,000	40 000	
	Maintenance 2 (M2)	every	100,000	161 000	
	Maintenance 3 (M3)	every	300,000	483 000	

* For Schedule I (severe service) vehicles equipped with an hourmeter, use maintenance intervals based on hours of operation rather than distance traveled.

† Use Schedule I (severe service) maintenance intervals for vehicles that operate under severe conditions, such as extremely poor roads, heavy dust accumulation, extreme climate, frequent short distance travel, construction-site operation, city operation (garbage truck), or farm operation.

Table 1, Service Schedule

https://truckmanualshub.com/

Vehicle Maintenance Schedule Tables: 00–03

1st through 30th Maintenance for Service Schedules I and II							
Maint. No.	Maintenance Interval	Service Date	Service Schedule I			Service Schedule II	
			Miles	km	Hours	Miles	km
1st	IM and M1		1000	1600	100	10,000	16 000
2nd	M1		2000	3200	200	20,000	32 000
3rd	M1		3000	4800	300	30,000	48 000
4th	M1		4000	6400	400	40,000	64 000
5th	M1 and M2		5000	8000	500	50,000	80 000
6th	M1		6000	9600	600	60,000	96 000
7th	M1		7000	11 200	700	70,000	112 000
8th	M1		8000	12 800	800	80,000	128 000
9th	M1		9000	14 400	900	90,000	144 000
10th	M1 and M2		10,000	16 000	1000	100,000	160 000
11th	M1		11,000	17 600	1100	110,000	176 000
12th	M1		12,000	19 200	1200	120,000	192 000
13th	M1		13,000	20 800	1300	130,000	208 000
14th	M1		14,000	22 400	1400	140,000	224 000
15th	M1, M2, and M3		15,000	24 000	1500	150,000	240 000
16th	M1		16,000	25 600	1600	160,000	256 000
17th	M1		17,000	27 200	1700	170,000	272 000
18th	M1		18,000	28 800	1800	180,000	288 000
19th	M1		19,000	30 400	1900	190,000	304 000
20th	M1 and M2		20,000	32 000	2000	200,000	320 000
21st	M1		21,000	33 600	2100	210,000	336 000
22nd	M1		22,000	35 200	2200	220,000	352 000
23rd	M1		23,000	36 800	2300	230,000	368 000
24th	M1		24,000	38 400	2400	240,000	384 000
25th	M1 and M2		25,000	40 000	2500	250,000	400 000
26th	M1		26,000	41 600	2600	260,000	416 000
27th	M1		27,000	43 200	2700	270,000	432 000
28th	M1		28,000	44 800	2800	280,000	448 000
29th	M1		29,000	46 400	2900	290,000	464 000
30th	M1, M2, and M3		30,000	48 000	3000	300,000	480 000

Table 2, 1st through 30th Maintenance for Service Schedules I and II

https://truckmanualshub.com/

Vehicle Maintenance Schedule Tables: 00–03

31st through 60th Maintenance for Service Schedules I and II							
Maint. No.	Maintenance Interval	Service Date	Service Schedule I			Service Schedule II	
			Miles	km	Hours	Miles	km
31st	M1		31,000	49 600	3100	310,000	496 000
32nd	M1		32,000	51 200	3200	320,000	512 000
33rd	M1		33,000	52 800	3300	330,000	528 000
34th	M1		34,000	54 400	3400	340,000	544 000
35th	M1 and M2		35,000	56 000	3500	350,000	560 000
36th	M1		36,000	57 600	3600	360,000	576 000
37th	M1		37,000	59 200	3700	370,000	592 000
38th	M1		38,000	60 800	3800	380,000	608 000
39th	M1		39,000	62 400	3900	390,000	624 000
40th	M1 and M2		40,000	64 000	4000	400,000	640 000
41st	M1		41,000	65 600	4100	410,000	656 000
42nd	M1		42,000	67 200	4200	420,000	672 000
43rd	M1		43,000	68 800	4300	430,000	688 000
44th	M1		44,000	70 400	4400	440,000	704 000
45th	M1, M2, and M3		45,000	72 000	4500	450,000	720 000
46th	M1		46,000	73 600	4600	460,000	736 000
47th	M1		47,000	75 200	4700	470,000	752 000
48th	M1		48,000	76 800	4800	480,000	768 000
49th	M1		49,000	78 400	4900	490,000	784 000
50th	M1 and M2		50,000	80 000	5000	500,000	800 000
51st	M1		51,000	82 000	5100	510,000	820 000
52nd	M1		52,000	83 700	5200	520,000	837 000
53rd	M1		53,000	85 300	5300	530,000	853 000
54th	M1		54,000	86 900	5400	540,000	869 000
55th	M1 and M2		55,000	88 500	5500	550,000	885 000
56th	M1		56,000	90 100	5600	560,000	901 000
57th	M1		57,000	91 700	5700	570,000	917 000
58th	M1		58,000	93 300	5800	580,000	933 000
59th	M1		59,000	94 900	5900	590,000	949 000
60th	M1, M2, and M3		60,000	96 500	6000	600,000	965 000

Table 3, 31st through 60th Maintenance for Service Schedules I and II

https://truckmanualshub.com/

61st through 90th Maintenance for Service Schedules I and II							
Maint. No.	Maintenance Interval	Service Date	Service Schedule I			Service Schedule II	
			Miles	km	Hours	Miles	km
61st	M1		61,000	98 200	6100	610,000	982 000
62nd	M1		62,000	99 800	6200	620,000	998 000
63rd	M1		63,000	101 400	6300	630,000	1 014 000
64th	M1		64,000	103 000	6400	640,000	1 030 000
65th	M1 and M2		65,000	104 600	6500	650,000	1 046 000
66th	M1		66,000	106 200	6600	660,000	1 062 000
67th	M1		67,000	107 800	6700	670,000	1 078 000
68th	M1		68,000	109 400	6800	680,000	1 094 000
69th	M1		69,000	111 000	6900	690,000	1 110 000
70th	M1 and M2		70,000	112 700	7000	700,000	1 127 000
71st	M1		71,000	114 300	7100	710,000	1 143 000
72nd	M1		72,000	115 900	7200	720,000	1 159 000
73rd	M1		73,000	117 500	7300	730,000	1 175 000
74th	M1		74,000	119 100	7400	740,000	1 191 000
75th	M1, M2, and M3		75,000	120 700	7500	750,000	1 207 000
76th	M1		76,000	122 300	7600	760,000	1 223 000
77th	M1		77,000	123 900	7700	770,000	1 239 000
78th	M1		78,000	125 500	7800	780,000	1 255 000
79th	M1		79,000	127 100	7900	790,000	1 271 000
80th	M1 and M2		80,000	128 700	8000	800,000	1 287 000
81st	M1		81,000	130 400	8100	810,000	1 304 000
82nd	M1		82,000	132 000	8200	820,000	1 320 000
83rd	M1		83,000	134 000	8300	830,000	1 340 000
84th	M1		84,000	135 200	8400	840,000	1 352 000
85th	M1 and M2		85,000	137 000	8500	850,000	1 370 000
86th	M1		86,000	138 400	8600	860,000	1 384 000
87th	M1		87,000	140 000	8700	870,000	1 400 000
88th	M1		88,000	141 600	8800	880,000	1 416 000
89th	M1		89,000	143 200	8900	890,000	1 432 000
90th	M1, M2, and M3		90,000	144 800	9000	900,000	1 448 000

Table 4, 61st through 90th Maintenance for Service Schedules I and II

https://truckmanualshub.com/

Vehicle Maintenance Schedule Tables: 00–03

91st through 100th Maintenance for Service Schedules I and II							
Maint. No.	Maintenance Interval	Service Date	Service Schedule I			Service Schedule II	
			Miles	km	Hours	Miles	km
91st	M1		91,000	146 500	9100	910,000	1 465 000
92nd	M1		92,000	148 100	9200	920,000	1 481 000
93rd	M1		93,000	150 000	9300	930,000	1 500 000
94th	M1		94,000	151 300	9400	940,000	1 513 000
95th	M1 and M2		95,000	153 000	9500	950,000	1 530 000
96th	M1		96,000	155 000	9600	960,000	1 550 000
97th	M1		97,000	156 100	9700	970,000	1 561 000
98th	M1		98,000	157 700	9800	980,000	1 577 000
99th	M1		99,000	159 300	9900	990,000	1 593 000
100th	M1 and M2		100,000	160 900	10,000	1,000,000	1 609 000

Table 5, 91st through 100th Maintenance for Service Schedules I and II

1st through 20th Maintenance for Service Schedules III and IV				
Maint. No.	Maintenance Interval	Service Date	Service Schedules III and IV	
			Miles	km
1	IM and M1		25,000	40 000
2	M1		50,000	80 000
3	M1		75,000	121 000
4	M1 and M2		100,000	161 000
5	M1		125,000	201 000
6	M1		150,000	241 000
7	M1		175,000	281 000
8	M1 and M2		200,000	322 000
9	M1		225,000	362 000
10	M1		250,000	402 000
11	M1		275,000	443 000
12	M1, M2, and M3		300,000	483 000
13	M1		325,000	523 000
14	M1		350,000	563 000
15	M1		375,000	604 000
16	M1 and M2		400,000	644 000
17	M1		425,000	684 000
18	M1		450,000	724 000
19	M1		475,000	764 000

https://truckmanualshub.com/

1st through 20th Maintenance for Service Schedules III and IV				
Maint. No.	Maintenance Interval	Service Date	Service Schedules III and IV	
			Miles	km
20	M1 and M2		500,000	805 000

Table 6, 1st through 20th Maintenance for Service Schedules III and IV

21st through 40th Maintenance for Service Schedules III and IV				
Maint. No.	Maintenance Interval	Service Date	Service Schedules III and IV	
			Miles	km
21	M1		525,000	845 000
22	M1		550,000	885 000
23	M1		575,000	925 000
24	M1, M2, and M3		600,000	966 000
25	M1		625,000	1 005 800
26	M1		650,000	1 046 000
27	M1		675,000	1 086 000
28	M1 and M2		700,000	1 127 000
29	M1		725,000	1 167 000
30	M1		750,000	1 207 000
31	M1		775,000	1 248 000
32	M1 and M2		800,000	1 287 000
33	M1		825,000	1 328 000
34	M1		850,000	1 368 000
35	M1		875,000	1 408 000
36	M1, M2, and M3		900,000	1 448 000
37	M1		925,000	1 490 000
38	M1		950,000	1 529 000
39	M1		975,000	1 569 000
40	M1 and M2		1,000,000	1 609 000

Table 7, 21st through 40th Maintenance for Service Schedules III and IV

https://truckmanualshub.com/

Lubrication and Fluid Level Check: 00–04

Maintenance Operation 00–04, Lubrication and Fluid Level Check Operation **Table 8** summarizes all operations that must be performed to complete the Lubrication and Fluid Level Check operation 00–04 called for as an M1 maintenance interval for Service Schedule I, II, and III vehicles, and as an M2 maintenance interval for Service Schedule IV vehicles.

Maintenance operation numbers given in the table are reference numbers used to help you find detailed instructions in the manual on the lubrication or fluid check.

Maintenance Operation 00–04 Lubrication and Fluid Level Check for Service Schedules I, II, III, and IV				
Maint. Operation Number	**Operation Description**	**Service Schedules I, II, and III (at M1)**	**Service Schedule IV (at M2)**	**Check**
25–01	Eaton Fuller Clutch Release Bearing Lubrication	•		
25–02	Clutch Release Cross-Shaft Lubrication		•	
25–03	Sleeve Assembly Bronze Bushing Lubrication		•	
26–02	Transmission Fluid Level Inspection		•	
31–02	Fifth Wheel Lubrication	•		
31–04	Trailer Electrical Connector Lubrication	•		
32–02	Suspension Lubrication	•		
33–01	Knuckle Pin Lubrication, Meritor Axles		•	
33–03	Tie Rod Lubrication, Meritor Axles		•	
33–05	Knuckle Pin Lubrication, Dana Spicer Axles	•		
33–06	Tie Rod Lubrication, Dana Spicer Axles	•		
33–09	Kingpin Lubrication, Detroit™ Axles*		•	
33–10	Tie Rod Lubrication, Detroit™ Axles*		•	
35–02	Axle Breather and Axle Lubricant Level Inspection		•	
41–02	Driveline Lubrication	•	•	
42–05	Dana Spicer Camshaft Bracket Lubrication	•		
42–06	Dana Spicer, Haldex, and Gunite Slack Adjuster Lubrication	•		
42–07	Meritor Camshaft Bracket Lubrication	•	•	
46–03	Power Steering Fluid Level Inspection		•	
46–04	Power Steering Gear Lubrication		•	
46–05	Drag Link Lubrication		•	
46–06	Rack and Pinion Inspection		•	
72–01	Door Seal, Door Latch, and Door Hinge Lubrication	•		
88–01	Hood Rear Support Lubrication	•		

* For Schedule II vehicles with Detroit axles, complete this procedure once a year or every 25,000 miles (40 000 km), whichever comes first.

Table 8, Maintenance Operation 00-04, Lubrication and Fluid Level Check for Service Schedules I, II, III, and IV

https://truckmanualshub.com/

Initial Maintenance (IM) Operations: 00–05

The Initial Maintenance table lists all maintenance operations that are to be performed at the initial maintenance (IM) interval. Maintenance operation numbers are reference numbers used to help you find detailed instructions in this manual on the maintenance operations to be performed. All operations listed in the table, along with the operations listed in the applicable M1 maintenance interval table, must be performed to complete the initial maintenance (IM).

Maintenance Operation Number	Initial Maintenance (IM) Operations for Service Schedules I, II, III, and IV	Check
00–06	Perform all M1 Operations	
31–03	Frame Fastener Torque Check	
31–05	Premier 690 Coupling Inspection	
32–03	Suspension U-Bolt Torque Check	
33–04	All-Axle Alignment Check	
40–01	Wheel Nut Check	
47–03	Fuel Tank Band-Nut Tightening	

Table 9, Initial Maintenance (IM) Operations for Service Schedules I, II, III, and IV

https://truckmanualshub.com/

M1 Maintenance Interval Operations: 00–06

The M1 Maintenance Interval Operations tables list all maintenance operations that are to be performed at the M1 maintenance interval. Maintenance operation numbers are reference numbers used to help you find detailed instructions in this manual on the maintenance operations to be performed.

IMPORTANT: After performing all operations listed in this table, perform all daily, weekly, and monthly maintenance operations listed in the "Pretrip and Post-Trip Inspections and Maintenance" chapter of the *Columbia® Driver's Manual*.

Maintenance Operation Number	M1 Maintenance Interval Operations for Service Schedules I, II, and III	Check
00–04	Lubrication and Fluid Level Check (includes the following) • Eaton Fuller Clutch Release Bearing Lubrication • Fifth Wheel Lubrication • Trailer Electrical Connector Lubrication • Suspension Lubrication • Knuckle Pin Lubrication, Dana Spicer Axles • Tie Rod Lubrication, Dana Spicer Axles • Driveline Lubrication • Dana Spicer Camshaft Bracket Lubrication • Dana Spicer, Haldex, and Gunite Slack Adjuster Lubrication • Door Seal, Door Latch, and Door Hinge Lubrication • Hood Rear Support Lubrication	
13–01	Air Compressor Inspection	
20–03	Fan Clutch Check (noise emission control)	
31–01	Fifth Wheel Inspection	
31–05	Premier 690 Coupling Inspection	
33–11	Steer Axle Hub Cap Vent Plug Inspection	
40–02	Tire Check	
41–01	Driveline Inspection	
42–07	Meritor Camshaft Bracket Lubrication	
42–10	Brake Inspection	
49–01	Exhaust System Inspection (noise emission control)	

Table 10, M1 Maintenance Interval Operations for Service Schedules I, II, and III

Maintenance Operation Number	M1 Maintenance Interval Operations for Service Schedule IV	Check
13–01	Air Compressor Inspection	
20–03	Fan Clutch Check (noise emission control)	
31–01	Fifth Wheel Inspection	
31–02	Fifth Wheel Lubrication	
31–04	Trailer Electrical Connector Lubrication	
31–05	Premier 690 Coupling Inspection	

https://truckmanualshub.com/

Maintenance Operation Number	M1 Maintenance Interval Operations for Service Schedule IV	Check
33–11	Steer Axle Hub Cap Vent Plug Inspection	
40–02	Tire Check	
42–07	Meritor Camshaft Bracket Lubrication	
42–10	Brake Inspection	
49–01	Exhaust System Inspection (noise emission control)	
72–01	Door Seal, Door Latch, and Door Hinge Lubrication	
88–01	Hood Rear Support Lubrication	

Table 11, M1 Maintenance Interval Operations for Service Schedule IV

https://truckmanualshub.com/

M2 Maintenance Interval Operations: 00–07

The M2 Maintenance Interval Operations tables list all maintenance operations that are to be performed at the M2 maintenance interval. Maintenance operation numbers are reference numbers used to help you find detailed instructions in this manual on the maintenance operations to be performed. Perform all M1 maintenance interval operations at the M2 maintenance interval.

Maintenance Operation Number	M2 Maintenance Interval Operations for Service Schedules I, II, and III	Check
00–06	Perform All M1 Operations	
01–01	Engine Support Fasteners Check (noise emission control)	
01–02	Engine Drive Belt Inspection	
15–01	Alternator, Battery, and Starter Check	
20–01	Pressure Relief Cap Check	
25–02	Clutch Release Cross-Shaft Lubrication	
25–03	Sleeve Assembly Bronze Bushing Lubrication	
25–04	Meritor Clutch Release Bearing Lubrication	
26–02	Transmission Fluid Level Inspection	
26–03	Manual Transmission Air Filter/Regulator Check, Cleaning, or Replacement	
32–01	Suspension Inspection	
32–03	Suspension U-Bolt Torque Check	
33–01	Knuckle Pin Lubrication, Meritor Axles	
33–02	Tie Rod Inspection	
33–03	Tie Rod Lubrication, Meritor Axles	
33–07	Basic Inspection, Meritor Unitized Wheel Ends	
33–08	End-Play Check, Meritor Unitized Wheel Ends	
33–09	Kingpin Lubrication, Detroit™ Axles*	
33–10	Tie Rod Lubrication, Detroit™ Axles*	
35–02	Axle Breather and Axle Lubricant Level Inspection	
40–01	Wheel Nut Check	
42–01	Air Brake System Valve Inspection	
42–03	Air Dryer Inspection	
42–04	Alcohol Evaporator Cleaning and Inspection	
42–08	Meritor Slack Adjuster Lubrication	
46–01	Drag Link Inspection	
46–03	Power Steering Fluid Level Inspection	
46–04	Power Steering Gear Lubrication	
46–05	Drag Link Lubrication	
46–06	Rack and Pinion Steering Gear Inspection	
47–01	Fuel Filter Replacement	
47–02	Fuel Separator Sight Bowl Cleaning and Element Replacement	
60–01	Mirror Folding Check	

https://truckmanualshub.com/

Maintenance Operation Number	M2 Maintenance Interval Operations for Service Schedules I, II, and III	Check
83–01	Air Conditioner Inspection	
83–02	Air Filter Replacement†	

* For Schedule II vehicles with Detroit axles, complete this procedure once a year or every 25,000 miles (40 000 km), whichever comes first.

† Replace the HVAC filters every 6 months regardless of mileage.

Table 12, M2 Maintenance Interval Operations for Service Schedules I, II, and III

Maintenance Operation Number	M2 Maintenance Interval Operations for Service Schedule IV	Check
00–04	Lubrication and Fluid Level Check (includes the following) • Clutch Release Cross-Shaft Lubrication • Sleeve Assembly Bronze Bushing Lubrication • Transmission Fluid Level Inspection • Knuckle Pin Lubrication, Meritor Axles • Tie Rod Lubrication, Meritor Axles • Kingpin Lubrication, Detroit™ Axles • Tie Rod Lubrication, Detroit™ Axles • Axle Breather and Axle Lubricant Level Inspection • Driveline Lubrication • Power Steering Fluid Level Inspection • Power Steering Gear Lubrication • Drag Link Lubrication	
00–06	Perform All M1 Operations	
01–01	Engine Support Fasteners Check (noise emission control)	
01–02	Engine Drive Belt Inspection	
15–01	Alternator, Battery, and Starter Check	
20–01	Pressure Relief Cap Check	
26–03	Manual Transmission Air Filter/Regulator Check, Cleaning, or Replacement	
32–01	Suspension Inspection	
32–03	Suspension U-Bolt Torque Check	
33–02	Tie Rod Inspection	
33–07	Basic Inspection, Meritor Unitized Wheel Ends	
33–08	End-Play Check, Meritor Unitized Wheel Ends	
40–01	Wheel Nut Check	
41–01	Driveline Inspection	
42–01	Air Brake System Valve Inspection	
42–03	Air Dryer Inspection	
42–04	Alcohol Evaporator Cleaning and Inspection	

https://truckmanualshub.com/

M2 Maintenance Interval Operations: 00–07

Maintenance Operation Number	M2 Maintenance Interval Operations for Service Schedule IV	Check
46–01	Drag Link Inspection	
46–06	Rack and Pinion Steering Inspection	
47–01	Fuel Filter Replacement	
47–02	Fuel Separator Sight Bowl Cleaning and Element Replacement	
60–01	Mirror Folding Check	
83–01	Air Conditioner Inspection	
83–02	Air Filter Replacement*	

* Replace the HVAC filters every 6 months regardless of mileage.

Table 13, M2 Maintenance Interval Operations for Service Schedule IV

https://truckmanualshub.com/

M3 Maintenance Interval Operations: 00–08

The M3 Maintenance Interval Operations table lists all maintenance operations that are to be performed at the M3 maintenance interval. Maintenance operation numbers are reference numbers used to help you find detailed instructions in this manual on the maintenance operations to be performed. Perform all M1 and M2 maintenance interval operations at the M3 maintenance interval.

Maintenance Operation Number	M3 Maintenance Interval Operations for Service Schedules I, II, III, and IV	Check
00–06	Perform All M1 Operations	
00–07	Perform All M2 Operations	
09–01	Air Cleaner Element Inspection and Replacement	
20–02	Radiator Pressure-Flushing and Coolant Change	
26–01	Manual Transmission Fluid Change, and Magnetic Plug Cleaning (synthetic lubricant)	
35–01	Axle Lubricant and Filter Change, and Magnetic Strainer Cleaning (synthetic lubricant)	
42–02	Air Dryer Desiccant Replacement	
42–09	Bendix E–6 Foot Control Valve Inspection and Lubrication	
46–02	Power Steering Fluid and Filter Change	
46–07	Bellows Replacement, Rack and Pinion Steering Gear	
49–02	CAT CGI Bellows Replacement	

Table 14, M3 Maintenance Interval Operations for Service Schedules I, II, III, and IV

https://truckmanualshub.com/

Maintenance Operation Sets Table: 00–09

Maintenance Operation Sets for Groups 00 through 83									
Maint. No.	Operation Description	Service Schedules I, II, and III				Service Schedule IV			
		IM	M1	M2	M3	IM	M1	M2	M3
00–04	Lubrication and Fluid Level Check	•	•	•	•			•	•
01–01	Engine Support Fasteners Check (noise emission control)			•	•			•	•
01–02	Engine Drive Belt Inspection			•	•			•	•
01–03	Pacbrake Inspection and Lubrication*								
09–01	Air Cleaner Element Inspection and Replacement				•				•
13–01	Air Compressor Inspection	•	•	•	•	•	•	•	•
15–01	Alternator, Battery, and Starter Check			•	•			•	•
20–01	Pressure Relief Cap Check			•	•			•	•
20–02	Radiator Pressure-Flushing and Coolant Change				•				•
20–03	Fan Clutch Check (noise emission control)	•	•	•	•	•	•	•	•
25–01	Eaton Fuller Clutch Release Bearing Lubrication	•	•	•	•				
25–02	Clutch Release Cross-Shaft Lubrication			•	•			•	•
25–03	Sleeve Assembly Bronze Bushing Lubrication			•	•			•	•
25–04	Meritor Clutch Release Bearing Lubrication			•	•				
26–01	Manual Transmission Fluid Change, and Magnetic Plug Cleaning (Synthetic Lubricant)				•				•
26–02	Transmission Fluid Level Inspection			•	•			•	•
26–03	Manual Transmission Air Filter/Regulator Check, Cleaning, or Replacement			•	•			•	•
31–01	Fifth Wheel Inspection	•	•	•	•	•	•	•	•
31–02	Fifth Wheel Lubrication	•	•	•	•	•	•	•	•
31–03	Frame Fastener Torque Check	•				•			
31–04	Trailer Electrical Connector Lubrication	•	•	•	•	•	•	•	•
31–05	Premier 690 Coupling Inspection	•	•						
32–01	Suspension Inspection			•	•			•	•
32–02	Suspension Lubrication	•	•	•	•				
32–03	Suspension U-Bolt Torque Check	•		•	•	•		•	•
33–01	Knuckle Pin Lubrication, Meritor Axles			•	•			•	•
33–02	Tie Rod Inspection			•	•			•	•
33–03	Tie Rod Lubrication, Meritor Axles			•	•			•	•
33–04	All-Axle Alignment Check	•				•			
33–05	Knuckle Pin Lubrication, Dana Spicer Axles	•	•	•	•				
33–06	Tie Rod Lubrication, Dana Spicer Axles	•	•	•	•				
33–07	Basic Inspection, Meritor Unitized Wheel Ends†			•	•			•	•
33–08	End-Play Check, Meritor Unitized Wheel Ends‡			•	•			•	•

https://truckmanualshub.com/

Maintenance Operation Sets Table: 00–09

Maintenance Operation Sets for Groups 00 through 83									
Maint. No.	Operation Description	Service Schedules I, II, and III				Service Schedule IV			
		IM	M1	M2	M3	IM	M1	M2	M3
33–09	Kingpin Lubrication, Detroit™ Axles§			•	•			•	•
33–10	Tie Rod Lubrication, Detroit™ Axles§			•	•			•	•
33–11	Steer Axle Hub Cap Vent Plug Inspection		•	•	•		•	•	•
35–01	Axle Lubricant and Filter Change, and Magnetic Strainer Cleaning (synthetic lubricant)				•				•
35–02	Axle Breather and Axle Lubricant Level Inspection			•	•			•	•
40–01	Wheel Nut Check	•		•	•	•		•	•
40–02	Tire Check	•	•	•	•	•	•	•	•
41–02	Driveline Lubrication	•	•	•	•			•	•
42–01	Air Brake System Valve Inspection			•	•			•	•
42–02	Air Dryer Desiccant Replacement				•				•
42–03	Air Dryer Inspection			•	•			•	•
42–04	Alcohol Evaporator Cleaning and Inspection			•	•			•	•
42–05	Dana Spicer Camshaft Bracket Lubrication	•	•	•	•				
42–06	Dana Spicer, Haldex, and Gunite Slack Adjuster Lubrication	•	•	•	•				
42–07	Meritor Camshaft Bracket Lubrication	•	•	•	•	•	•	•	•
42–08	Meritor Slack Adjuster Lubrication			•	•				
42–09	Bendix E–6 Foot Control Valve Inspection and Lubrication				•				•
42–10	Brake Inspection	•	•	•	•	•	•	•	•
46–01	Drag Link Inspection			•	•			•	•
46–02	Power Steering Fluid and Filter Change				•				•
46–03	Power Steering Fluid Level Inspection			•	•			•	•
46–04	Power Steering Gear Lubrication			•	•			•	•
46–05	Drag Link Lubrication			•	•			•	•
46–06	Rack and Pinion Steering Gear Inspection			•	•			•	•
46–07	Bellows Replacement, Rack and Pinion Steering Gear				•				•
47–01	Fuel Filter Replacement			•	•			•	•
47–02	Fuel Separator Sight Bowl Cleaning and Element Replacement			•	•			•	•
47–03	Fuel Tank Band-Nut Tightening	•				•			
49–01	Exhaust System Inspection (noise emission control)	•	•	•	•	•	•	•	•
49–02	CAT CGI Bellows Replacement				•				•
60–01	Mirror Folding Check			•	•			•	•
72–01	Door Seal, Door Latch, and Door Hinge Lubrication	•	•	•	•	•	•	•	•
83–01	Air Conditioner Inspection			•	•			•	•
83–02	Air Filter Replacement¶								

https://truckmanualshub.com/

Maintenance Operation Sets Table: 00–09

Maintenance Operation Sets for Groups 00 through 83									
Maint. No.	Operation Description	Service Schedules I, II, and III				Service Schedule IV			
		IM	M1	M2	M3	IM	M1	M2	M3
88–01	Hood Rear Support Lubrication	•	•	•	•	•	•	•	•

* No specific lubrication interval. See MOP 01–03 for more information.

† Inspect Meritor Unitized Wheel Ends at 200,000 miles (321 869 km), and then every 50,000 miles (80 467 km).

‡ Check the end play at 200,000 miles (321 869 km), and then every subsequent 200,000 miles (321 869 km).

§ For Schedule II vehicles with Detroit axles, complete this procedure once a year or every 25,000 miles (40 000 km), whichever comes first.

¶ Replace the HVAC filters every 6 months regardless of mileage.

Table 15, Maintenance Operation Sets for Groups 00 through 83

https://truckmanualshub.com/

Noise Emission Control Maintenance

Federal Law, Part 205: Transportation Equipment Noise Emission Controls

Part 205, Transportation Equipment Noise Emission Controls, requires the vehicle manufacturer to furnish, with each new vehicle, such written instructions for the proper maintenance, use, and repair of the vehicle by the ultimate purchaser to provide reasonable assurance of the elimination or minimization of noise-emission-control degradation throughout the life of the vehicle. In compliance with the law, the noise emission controls maintenance information in each applicable group of this manual, in conjunction with the vehicle workshop manual, provides these instructions to owners.

Recommendations for Replacement Parts

Replacement parts used for maintenance or repair of noise emission controls should be genuine Freightliner parts. If other than genuine Freightliner parts are used for replacement or repair of components affecting noise emission control, the owner should be sure that such parts are warranted by their manufacturer to be equivalent to genuine Freightliner parts in performance and durability.

Freightliner Noise Emission Controls Warranty

Refer to the vehicle owner's warranty information book for warranty information concerning noise emission controls.

Tampering with Noise Controls is Prohibited

Federal law prohibits the following acts or the causing thereof:

1. The removal or rendering inoperative by any person (other than for purposes of maintenance, repair, or replacement) of any device or element of design incorporated into any new vehicle for the purpose of noise control, prior to its sale or delivery to the ultimate purchaser, or while it is in use.
2. The use of the vehicle after such device or element of design has been removed or rendered inoperative by any person.

   Among those acts presumed to constitute tampering are the acts listed below:

   A. Removal of engine noise-deadening panels.

   B. Removal of cab-tunnel or hood noise-deadening panels.

   C. Removal of, or rendering inoperative, the engine speed governor so as to allow engine speed to exceed manufacturer's specifications.

   D. Removal of, or rendering inoperative, the fan clutch, including bypassing the control on any thermostatic fan drive to cause it to operate continuously.

   E. Removal of the fan shroud.

   F. Removal of, or rendering inoperative, exhaust components, including exhaust pipe clamping.

   G. Removal of air intake components.

Maintenance Instructions

Scheduled intervals are in the maintenance tables in this group. A "Verification of Inspections Log (Groups 01, 20, and 49)" follows, and should be filled in each time noise emission controls on the vehicle are maintained or repaired.

https://truckmanualshub.com/

Verification of Inspections Log

Verification of Inspections Log, Group 01

Verification of Inspections Log — Group 01 — Engine Mounts				
Date	Mileage	Item	Cost	Maintenance Facility

Verification of Inspections Log, Group 20

Verification of Inspections Log — Group 20 — Fan Clutch				
Date	Mileage	Item	Cost	Maintenance Facility

https://truckmanualshub.com/

Verification of Inspections Log, Group 49

Verification of Inspections Log — Group 49 — Exhaust System Components				
Date	**Mileage**	**Item**	**Cost**	**Maintenance Facility**

https://truckmanualshub.com/

https://truckmanualshub.com/

Index, Alphabetical

Title of Maintenance Operation (MOP)	MOP Number
Engine Drive Belt Inspection	01–02
Engine Support Fasteners Check	01–01
Pacbrake Inspection and Lubrication	01–03
Safety Precautions	01–00

https://truckmanualshub.com/

https://truckmanualshub.com/

01–00 Safety Precautions

Safety Precautions in this section apply to all procedures within this group.

⚠ DANGER

When working on the vehicle, shut down the engine, set the parking brake, and chock the tires. Before working under the vehicle, always place jack stands under the frame rails to ensure the vehicle cannot drop. Failure to follow these steps could result in serious personal injury or death.

01–01 Engine Support Fasteners Check

Front and rear engine supports for vehicles built from January 2007 require no periodic maintenance. Mounts should be inspected when the engine is removed for service. For vehicles manufactured prior to January 2007, perform the following check.

Check the rear engine support fasteners (see **Fig. 1**, Ref. 4) for tightness. Tighten the 3/4-inch fasteners 215 to 265 lbf·ft (292 to 359 N·m).

Check the front engine support fasteners for tightness. Tighten the 5/8-inch fasteners 125 lbf·ft (170 N·m).

NOTE: At engine overhaul, and whenever the engine has been removed, inspect the lower and upper isolators (Refs. 1 and 6), and replace them if they are worn. See **Group 01** of the *Columbia® Workshop Manual* for procedures.

01–02 Engine Drive Belt Inspection

Worn or loose drive belts may cause premature bearing failure or engine overheating. Excessive tension, or too little tension on the belt may result in excessive and premature belt wear. Poly-V belts, or serpentine belts, are retained by a belt tensioner that requires no tension adjustment. Replace the drive belt if any conditions described in "Visual Inspection" are found. V-belts are installed as individual belts, and as matched sets. When replacing matched sets of belts, always replace both belts at the same time.

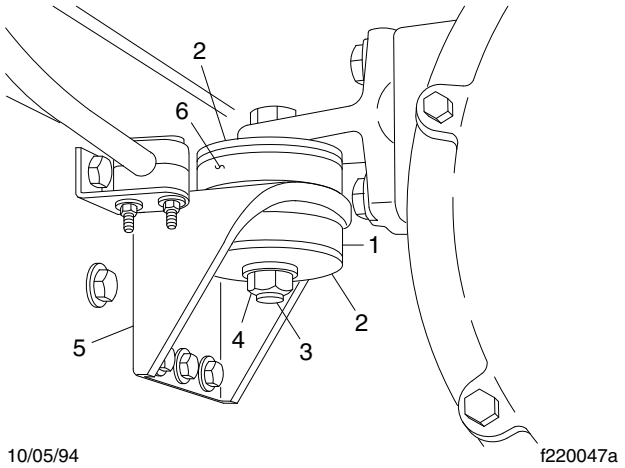

1. Lower Isolator
2. Engine Support Washer
3. 3/4–10 Capscrew
4. 3/4–10 Hexnut
5. Engine Mount
6. Upper Isolator

Fig. 1, Engine Rear Mount

Matched belts must be from the same manufacturer. To inspect a belt, gently twist it to view the belt sidewalls and bottom. Inspect all belts for the following conditions, then perform the "Belt Tension Inspection."

Visual Inspection

1. Inspect the belt for glazing. See **Fig. 2** , Ref. A. Glazing is represented by shiny sidewalls, and is caused by friction created when a loose belt slips in the pulleys. It can also be caused by oil or grease on the pulleys.
2. Check the belt for ply separation. See **Fig. 2**, Ref. B. Oil, grease, or belt dressing can cause the belt to fall apart in layers. Repair any oil or coolant leaks that are affecting the belts before replacing the drive belts. Do not use belt dressing on any belt.
3. Check the belt for a jagged or streaked sidewall. See **Fig. 2**, Ref. C. Jagged or streaked sidewalls are the result of foreign objects, such as sand or gravel in the pulley, or a rough pulley surface.
4. Check for tensile breaks (breaks in the cord body). See **Fig. 2**, Ref. D. Cuts in a belt are usu-

https://truckmanualshub.com/

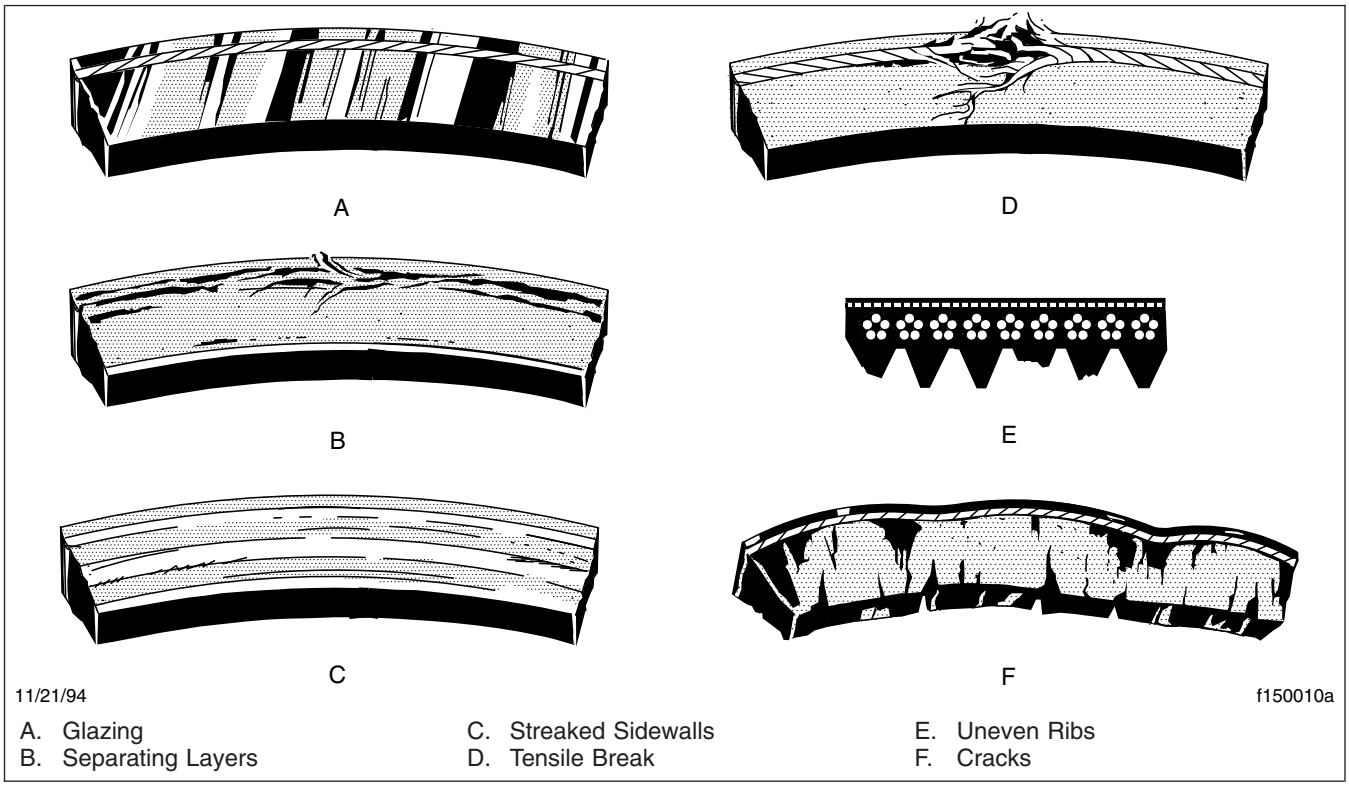

Fig. 2, Drive Belt Replacement Conditions

ally caused by foreign objects in the pulley, or by prying or forcing the belt during removal or installation.

5. Check for uneven ribs on serpentine (poly-V) belts. See **Fig. 2**, Ref. E. Foreign objects in the pulley will erode the undercord ribs, causing the belt to lose its gripping power.
6. Check the drive belts for cracks. See **Fig. 2**, Ref. F. Small irregular cracks are usually signs of an old belt.
7. Inspect the pulleys for excessive play or wobble. Excessive play or wobble indicates a failure of the pulley bearing. Check for belt squealing or squeaking. Replace the bearings as necessary.

NOTE: If it is difficult to distinguish the location of a supposed bearing noise, place a stethoscope on the component being checked, not the pulley, to isolate the area from outside interference.

8. Inspect all pulleys for foreign objects, oil, or grease in the grooves.

Belt Tension Inspection

Threaded-Adjustment Type

1. Apply the parking brakes and chock the tires.
2. Install a belt tension gauge at the center of the belt's longest free-span. Check belt tension. See **Table 1** for belt tension specifications.
3. If belt tension is not correct, see **Group 01** of the *Columbia® Workshop Manual* to adjust belt tension.

https://truckmanualshub.com/

Drive Belt Tensions		
Engine	**Component**	**Belt Tension: lbf (kg)**
Cummins ISB, ISC, ISM	Refrigerant Compressor	100 (45)
Mercedes-Benz MBE900	Fan and Alternator	29.5 (27.9)
	Refrigerant Compressor	30.0 (28.4)

Table 1, Drive Belt Tensions

Spring-Tension Type

On belts equipped with a spring tensioner, belt tension is automatically adjusted. Check that the tensioner is holding tension on the belt by inserting the end of a breaker bar in the 1/2-inch square hole on the forward face of the tensioner, and rotating the tensioner away from the belt. When the breaker bar is slowly released, the tensioner should return to its original position. The tensioner should rotate smoothly with no binding. If not, see **Group 01** of the *Columbia® Workshop Manual* for replacement instructions.

NOTE: The following engines, which appear in **Table 1**, are provided with automatic tensioners for the fan and alternator belts.

01–03 Pacbrake Inspection and Lubrication

With frequent use, the Pacbrake Exhaust Brake will operate maintenance-free. If the vehicle is used inconsistently or seasonally, it will be necessary to perform preventative maintenance. If the vehicle is exposed to excess moisture, or is used only for periodic or seasonal use, perform the following steps:

1. With the engine off, use any oil-free or non-petroleum-based high-heat lubricant, and spray or coat a sufficient amount on the restrictor valve shaft and the attaching locations at each end of the actuation cylinder.
2. With your hands or a pair of pliers, motion the valve several times to distribute the lubricant down the shaft and the attaching locations.

NOTE: Operation of the Pacbrake could be affected by starting the engine and idling for short periods of time. During a cold engine start-up, moisture occurs in the engine and the exhaust system that creates a corrosion hazard. The brake housing may trap water in the valve shaft bore causing corrosion, resulting in an improperly functioning or non-functioning brake. If it is necessary to periodically start the engine, attain normal operating temperatures before shutting down the engine.

https://truckmanualshub.com/

https://truckmanualshub.com/

Index, Alphabetical

Title of Maintenance Operation (MOP) **MOP Number**

Air Cleaner Element Inspection and Replacement 09–01

https://truckmanualshub.com/

https://truckmanualshub.com/

09–01 Air Cleaner Element Inspection and Replacement

Restriction of air flow through the air cleaner element is measured at the tap in the air cleaner outlet. Check the restriction indicator at the air cleaner or in the cab if the vehicle is equipped with a dash-mounted restriction gauge.

Vehicles may be equipped with either a manual-reset restriction indicator with graduations (**Fig. 1**), or a go/no-go restriction indicator without graduations (**Fig. 2**).

1. Inspect the air restriction indicator to see if air restriction equals or exceeds the maximum allowable restriction. For instructions, see the vehicle Driver's Manual.

NOTICE

Do not use aftermarket air-cleaner elements. Aftermarket air-cleaner elements may not seal the housing correctly, which can lead to engine damage and potentially the loss of warranty. When replacing an air-cleaner element, use only the part listed in PartsPro for the serial number of the vehicle.

2. If necessary, replace the air cleaner element. For air cleaner element replacement instructions, see **Group 09** of the vehicle Workshop Manual.
3. Inspect the air cleaner housing for cracks, leaks, or any other damage. If the air cleaner housing or element is damaged, replace it.
4. Reset the air restriction indicator.
5. Each time the air cleaner housing is replaced, perform the procedures in **MOP 13–01**.

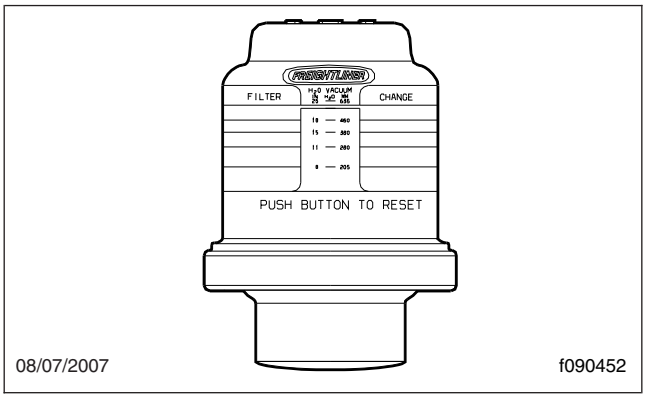

Fig. 1, Manual-Reset Air Restriction Indicator, Graduated

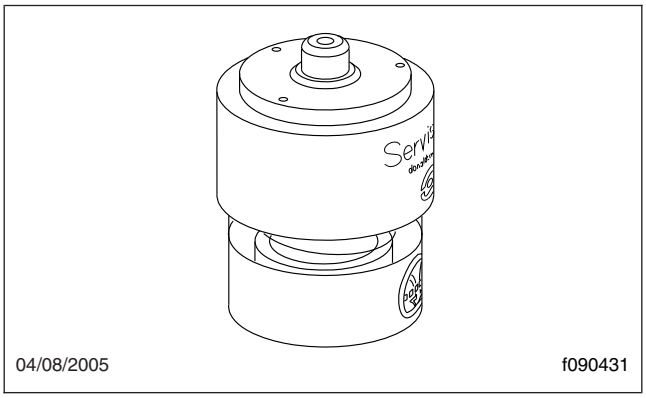

Fig. 2, Manual-Reset Air Restriction Indicator, Go/No-Go

https://truckmanualshub.com/

https://truckmanualshub.com/

Index, Alphabetical

Title of Maintenance Operation (MOP)	MOP Number
Air Compressor Inspection	13–01
Safety Precautions	13–00

https://truckmanualshub.com/

https://truckmanualshub.com/

13–00 Safety Precautions

Safety Precautions in this section apply to all procedures within this group.

⚠ DANGER

When working on the vehicle, shut down the engine, set the parking brake, and chock the tires. Before working under the vehicle, always place jack stands under the frame rails to ensure the vehicle cannot drop. Failure to follow these steps could result in serious personal injury or death.

13–01 Air Compressor Inspection

1. Inspect the air compressor intake hoses and connections at the air intake and air compressor for physical damage. If needed, change the hoses, and/or tighten or replace the connections.
2. Inspect the coolant supply and return lines for tight connections. Tighten the connections and replace the lines and fasteners if needed.
3. For the air governor, inspect the piping and connections for leaks. Replace gaskets and faulty components as needed.

https://truckmanualshub.com/

https://truckmanualshub.com/

Index, Alphabetical

Title of Maintenance Operation (MOP)	MOP Number
Alternator, Battery, and Starter Connections Check	15–01
Safety Precautions	15–00

https://truckmanualshub.com/

https://truckmanualshub.com/

15–00 Safety Precautions

Safety Precautions in this section apply to all procedures within this group.

⚠ DANGER

When working on the vehicle, shut down the engine, set the parking brake, and chock the tires. Before working under the vehicle, always place jack stands under the frame rails to ensure the vehicle cannot drop. Failure to follow these steps could result in serious personal injury or death.

15–01 Alternator, Battery, and Starter Connections Check

⚠ WARNING

Batteries generate explosive gas as a by-product of their chemical process. Do not smoke when working around batteries. Put out all flames and remove any source of sparks or intense heat in the vicinity of the battery compartment. Make sure the battery compartment has been completely vented before disconnecting or connecting the battery cables.

Battery acid is extremely harmful if splashed in the eyes or on the skin. Always wear a face shield and protective clothing when working around batteries.

1. Disconnect the batteries.
2. Check the tightness of the alternator bracket fasteners; tighten the fasteners as needed. For torque values, see **Group 15** of the *Columbia® Workshop Manual*.
3. Check the belt tension of the alternator drive belt. Place a tension gauge at the belt's widest span, and adjust the belt tension to specification.

   See **Group 01** for belt tension specifications.

   Some engines are equipped with dual alternator belts; always check both belts for correct tension. Check that the tensioner operates smoothly without binding. Engines equipped with a serpentine, or poly-V belt have automatic belt tensioners and do not require belt tension inspection.
4. Check that all electrical connections at the alternator and starter are clean. Clean and tighten all charging system electrical connections, including the connections at the starter B terminal and ground terminal, and where the alternator charging cable terminates.
5. Inspect the battery cables for wear, and replace them if they are damaged. Clean the cable connector terminals with a wire brush. See **Group 54** of the *Columbia® Workshop Manual* for troubleshooting instructions, and for adjustment, repair, or replacement instructions.

   5.1 Clean and tighten the battery ground cable, terminal, and clamps.

   5.2 Inspect the retainer assembly or battery hold-downs, and the battery box. Replace worn or damaged parts. Remove any corrosion with a wire brush, and wash with a weak solution of baking soda and water. Flush with clean water, and dry. Paint the retainer assembly if needed, to prevent rusting.

   5.3 Check that foreign objects such as stones, bolts, and nuts are removed from the battery box.

   5.4 After cleaning, connect the cables to the batteries and tighten them to the torque specifications listed on the battery, generally 10 to 15 lbf·ft (14 to 20 N·m).

   5.5 Coat the battery terminals with dielectric grease.
6. Check the alternator wiring for missing insulation, kinks, and heat damage. Replace or repair as needed.
7. Check the terminals on the battery shut-off switch and the magnetic switch. Make sure the terminal connections are clean and tight. Coat the terminal connections with dielectric red enamel after cleaning.

https://truckmanualshub.com/

https://truckmanualshub.com/

Index, Alphabetical

Title of Maintenance Operation (MOP)	MOP Number
Fan Clutch Check (Noise Emission Control)	20–03
Pressure Relief Cap Check	20–01
Radiator Pressure-Flushing and Coolant Change	20–02
Safety Precautions	20–00

https://truckmanualshub.com/

https://truckmanualshub.com/

20–00 Safety Precautions

Safety Precautions in this section apply to all procedures within this group.

DANGER

When working on the vehicle, shut down the engine, set the parking brake, and chock the tires. Before working under the vehicle, always place jack stands under the frame rails to ensure the vehicle cannot drop. Failure to follow these steps could result in serious personal injury or death.

20–01 Pressure Relief Cap Check

WARNING

Do not remove or loosen the surge tank cap until the engine and cooling system have completely cooled. Use extreme care when removing the cap. A sudden release of pressure from removing the cap prior to the system cooling can result in a surge of scalding coolant that could cause serious personal injury.

1. Remove the fill cap, first, to relieve the cooling system pressure, then remove the SAE cap.
2. Using a radiator-cap tester, check the pressure cap to see if it maintains pressure to within 10% of the pressure rating marked on the cap. If it doesn't, replace the cap. See **Fig. 1**. Make sure that the replacement radiator cap is correctly rated for the cooling system of the vehicle.
3. There is a second valve in the radiator cap that opens under vacuum. This prevents the collapse of hoses and other parts that are not internally supported when the system cools. Inspect the vacuum-relief valve to be sure it is not stuck.
4. Make sure that the cap seals properly on the coolant filler neck seat, and that the radiator cap gasket is not damaged. On vehicles with screw-on caps with O-rings, make sure that the O-ring is not cracked or deteriorated. Replace the cap if the gasket shows deterioration or damage.

20–02 Radiator Pressure-Flushing and Coolant Change

NOTE: For additional instructions on cleaning and flushing the engine cooling system, see the applicable engine manufacturer's maintenance and operation manual.

1. Park the vehicle and apply the parking brakes. Tilt the hood.
2. Place a suitable container under the elbow of the radiator outlet pipe and the radiator. The container should hold at least 60 quarts (59 liters) of fluid.

WARNING

Do not remove or loosen the surge tank cap until the engine and cooling system have completely cooled. Use extreme care when removing the cap. A sudden release of pressure from removing the cap prior to the system cooling can result in a surge of scalding coolant that could cause serious personal injury.

3. Remove the surge tank cap.

WARNING

Do not attempt to drain the cooling system until the coolant and engine are cool. Draining the cooling system prior to the system cooling could cause severe personal injury due to scalding.

4. Remove the drain plugs at the radiator side tank and at the lower radiator outlet pipe elbow. See **Fig. 2**. Allow the coolant to drain.
5. Disconnect the radiator upper and lower hoses, and install the surge tank cap. Attach the flushing gun nozzle to the radiator at the lower radiator hose opening. Run the water until the radiator is full.

CAUTION

When flushing the radiator, do not apply more than 15 psi (100 kPa) air pressure. Excessive pressure can damage the radiator.

https://truckmanualshub.com/

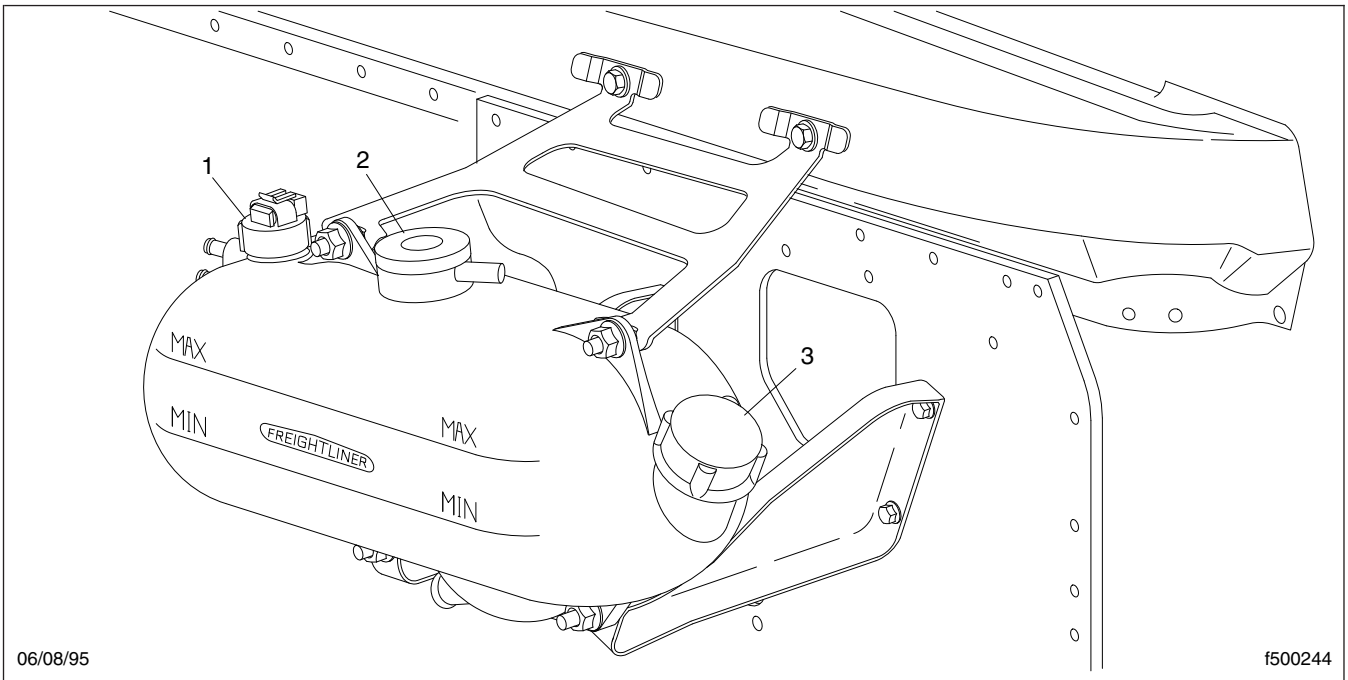

1. Low-Coolant-Level Sensor
2. SAE Cap (for coolant overflow pressure relief only)
3. Fill Cap

Fig. 1, Surge Tank

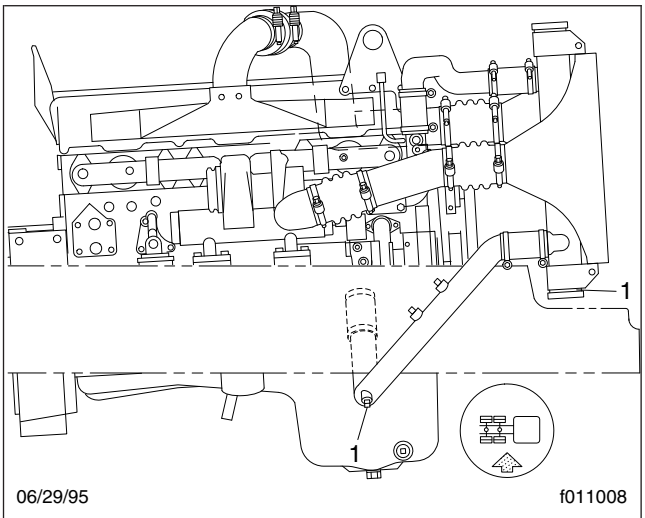

NOTE: Cummins engine shown.

1. Coolant Drain Plug

Fig. 2, Coolant Drain Plug Location

6. Gradually, apply air pressure to help dislodge sediment built up in the radiator core. Do not apply more than 15 psi (100 kPa) air pressure to the radiator. Pressures exceeding 15 psi (100 kPa) could damage the radiator core.
7. Shut off the air at the pressure gun nozzle and allow the radiator to refill with water.
8. Repeat the previous two steps until clean water flows from the radiator.
9. Remove the radiator side-tank drain plug and allow the radiator to drain. Install and tighten the side-tank drain plug and the radiator outlet pipe drain plug after the radiator has been drained. Do not overtighten the plugs.
10. Connect the hoses. Your hose clamps can be either T-bolt clamps (see **Fig. 3**) or Breeze Constant-Torque clamps (see **Fig. 4**).

    When working with T-bolt hose clamps, tighten the clamps 55 lbf·in (620 N·cm). These clamps are now standard on hoses with an inside diameter greater than 2 inches (51 mm).

https://truckmanualshub.com/

When installing Breeze Constant-Torque hose clamps, the clamps must be tightened to the correct torque. The screw tip of the clamp must extend about 1/4 inch (6 mm) from the clamp housing, and the Belleville washer stacks must be collapsed almost flat. Use a torque wrench to install these clamps correctly. The correct installation torque is as follows:

For Breeze Constant-Torque clamps with a 5/16-inch tightening screw hex: 55 lbf·in (620 N·cm).

For Breeze Constant-Torque clamps with a 3/8-inch tightening screw hex: 90 lbf·in (1020 N·cm).

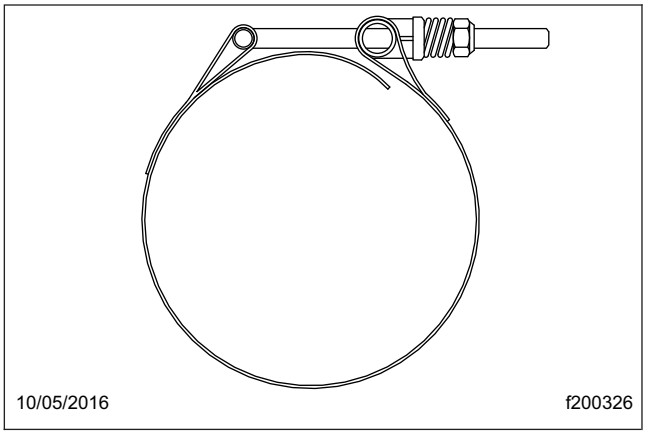

Fig. 3, T-Bolt Type Hose Clamp

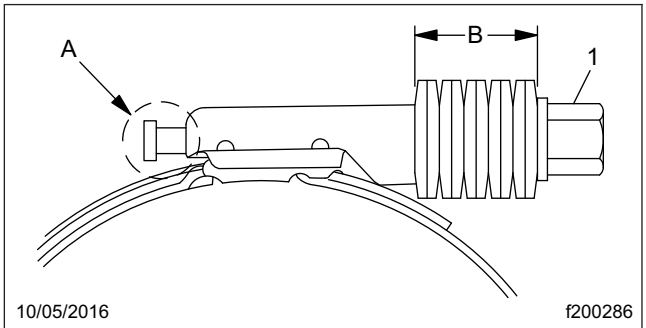

A. The screw tip must extend about 1/4 inch (6 mm).
B. Belleville washers must collapse almost flat.
1. Tightening Screw Hex

Fig. 4, Breeze Constant-Torque Hose Clamp Installation

NOTE: All hose clamps will lose torque after installation due to "compression set." However, when correctly installed, Breeze Constant-Torque clamps will hold enough torque to automatically adjust and keep consistent sealing pressure. During vehicle operation and shutdown, the screw tip may adjust according to temperature and pressure changes. The torque may need to be adjusted for individual applications.

11. Place a pan under the coolant filter to catch engine coolant.
12. Remove the coolant filter with a strap or chain wrench. Install a new coolant filter and tighten.

IMPORTANT: On vehicles with EPA07 compliant engines, the coolant capacity varies depending on the engine and accessory installation. After servicing the cooling system, always verify that the coolant level is between the MIN and MAX lines on the surge tank.

13. Fill the cooling system with new coolant. Refer to the engine manufacturer's service literature for specific coolant information.
14. Replace the surge tank cap(s).
15. Return the hood to the operating position.
16. Start the engine and turn on the cab heater. Allow the engine to warm up to normal operating temperature. Check the radiator and hoses for leaks. Repair as needed.
17. Shut off the engine, then check the coolant level in the surge tank. Add coolant if the level isn't between MIN and MAX lines on the surge tank.

20–03 Fan Clutch Check (Noise Emission Control)

Horton Advantage® Fan Clutch

NOTE: If any part of the fan clutch needs to be repaired or replaced, after performing the checks below, see **Group 20** of the *Columbia® Workshop Manual*.

1. Disconnect the batteries at the negative terminals. Drain all air from the air system. If equipped with an air starter, drain the air starter reservoir.

https://truckmanualshub.com/

⚠ WARNING

If the engine starts during this procedure, the fan could cause personal injury. If the vehicle is equipped with an air starter, be sure that the air starter reservoir is drained.

2. Inspect the electrical connections and wires to the fan clutch solenoid. Secure the connection if loose; replace wires and connectors if damaged.
3. Clean the fan clutch air solenoid valve filter, if equipped.
   - 3.1 Unscrew the fan clutch solenoid valve air filter and remove its element.
   - 3.2 Clean the filter element with cleaning solvent.
   - 3.3 Reassemble the clutch valve solenoid air filter, then install it.
4. Check the fan for bent, cracked, or damaged blades. Replace if damaged. Check for adequate clearance between the fan and other components.
5. Check the fan belt for wear, tension, and alignment. Correct as needed.
6. Check for wear on the friction facing. See **Fig. 5**. Replace the friction facing if it is worn to a 1/16-inch (1.6-mm) thickness or less. Also check the facing for signs of oil contamination or burn marks. If evidence of oil or burn marks are found, replace the friction facing.

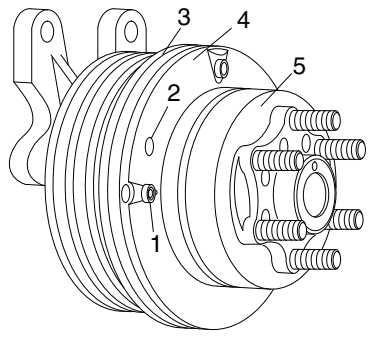

08/08/94 f200290

1. System Sentry® Fuse
2. Safeguard Hole
3. Friction Facing
4. Piston Friction Disc
5. Air Chamber

Fig. 5, Horton Advantage Fan Clutch

7. Connect the battery cables. Start the engine, and charge the air system to 120 psi (827 kPa). Shut down the engine. Separate the halves of the fan solenoid connector. The fan clutch should engage.

   If the fan does not operate correctly, see **Group 20** of the *Columbia® Workshop Manual* for troubleshooting and repair procedures.
8. With the air system charged to 120 psi (827 kPa), and with the fan solenoid connector halves separated, check the fan clutch for audible air leaks, using a suitable listening device.
9. If a leak is detected, remove the fan blade. Using a soapy water solution, check the fan clutch at the following locations to find the source of the leak. Install a new seal kit. See **Group 20** of the *Columbia® Workshop Manual* for repair procedures.
   - 9.1 Check for a leak at the bleed hole on the fan pilot. Air leakage means the cartridge assembly (**Fig. 6**, Ref. 16) or face seal (Ref. 17) is damaged.
   - 9.2 Check for air leaks between the air chamber and the piston friction disc. Air leakage means the large O-ring (Ref. 14) is damaged.
   - 9.3 Check for air leaks around the safeguard hole on the piston friction disc. Air leakage means the small O-ring (Ref. 18) is damaged.
   - 9.4 Check for air leaking from the System Sentry® fuse. Leaking air means the clutch has gotten so hot the lead alloy in the fuse melted. This released the clutch before the heat could damage the clutch bearings. Before replacing the fuse, find and repair the source of the heat.
10. If equipped with an override toggle switch on the dash, check fan clutch operation as follows:
    - 10.1 Connect the halves of the fan solenoid connector.
    - 10.2 Turn off the air conditioner.
    - 10.3 Start the engine and charge the air system to 120 psi (827 kPa). Tests must be performed with the engine temperature below 205°F (96°C) for Caterpillar en-

https://truckmanualshub.com/

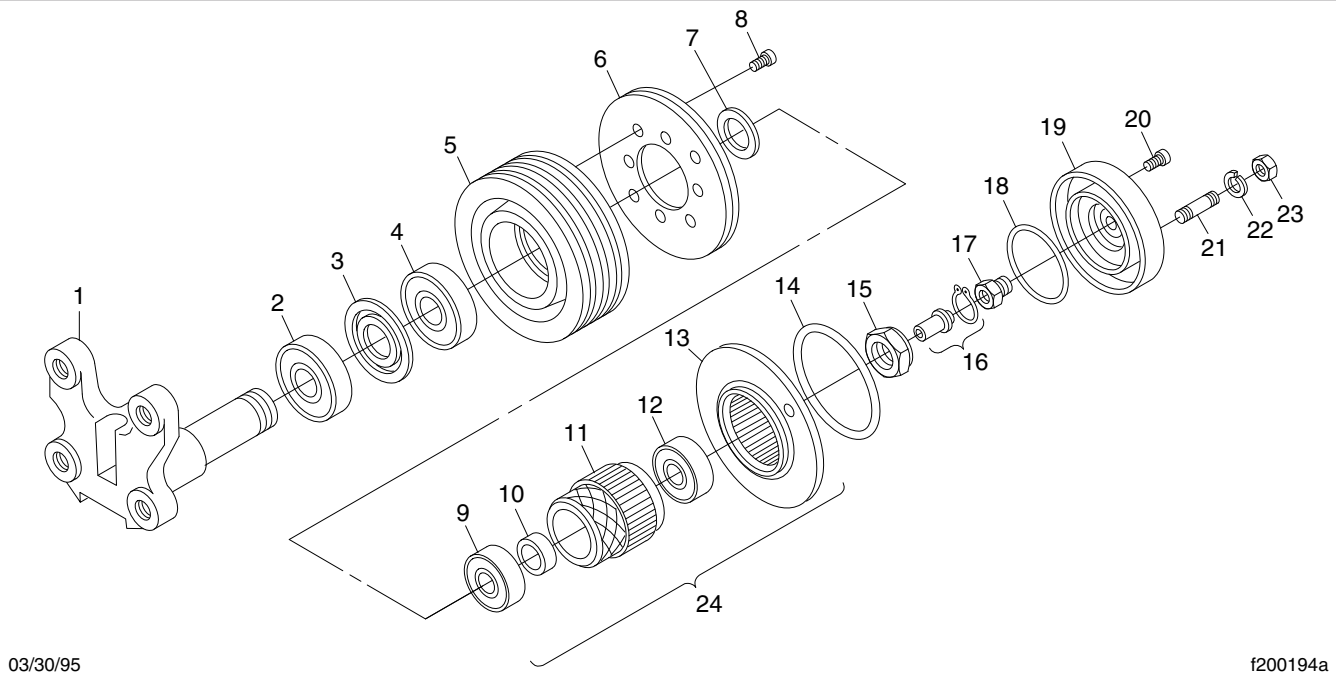

1. Mounting Bracket
2. Rear Sheave Bearing
3. Inner and Outer Bearing Spacers
4. Forward Sheave Bearing
5. Sheave
6. Friction Facing
7. Journal Spacer
8. Socket-Head Capscrew
9. Rear Hub Bearing
10. Bearing Spacer
11. Splined Hub
12. Forward Hub Bearing
13. Piston Friction Disc
14. Large O-Ring
15. Locknut
16. Cartridge Assembly
17. Face Seal
18. Small O-Ring
19. Air Chamber
20. Socket-Head Capscrew
21. Stud Bolt
22. Lockwasher
23. Hexnut
24. Piston Assembly

Fig. 6, Horton Advantage Fan Clutch Components

gines, and below 200°F (93°C) for Cummins and Detroit Diesel engines.

10.4 Set the toggle switch to ON; the fan clutch should engage.

10.5 Apply the foot brake, and release the parking brakes.

10.6 Set the toggle switch to AUTO or OFF; air should exhaust and the fan clutch should disengage. Replace the switch if necessary.

11. If the fan stays engaged at all times on a Detroit Diesel engine, check the circuit breaker labeled "engine fan."

Kysor K22RA Fan Clutch

1. Disconnect the batteries at the negative terminals. Drain all air from the air system. If equipped with an air starter, drain the air starter reservoir.

⚠ WARNING

If the engine starts during this procedure, the fan could cause personal injury. If the vehicle is equipped with an air starter, be sure that the air starter reservoir is drained.

2. Measure the distance from the back surface of the fan clutch retaining plate to the forward-most edge of the fan belt pulley. See **Fig. 7**, Ref. A.

https://truckmanualshub.com/

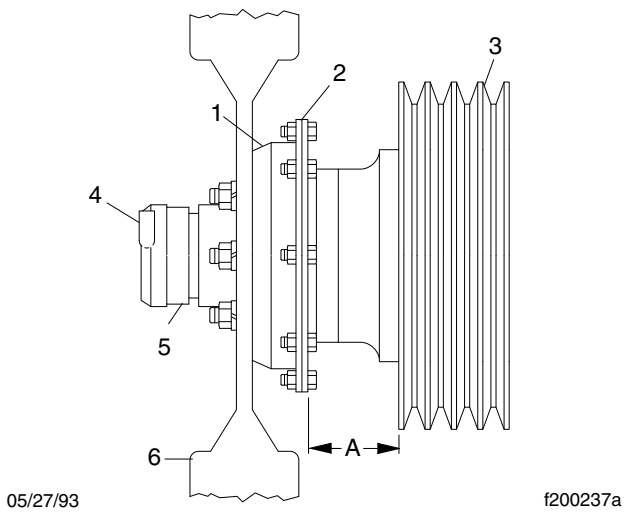

With the fan clutch engaged, measure the distance at *A*; measure it again with the fan clutch disengaged.

1. Bearing Housing
2. Retaining Plate
3. Fan Pulley
4. Air Inlet (from solenoid valve)
5. Air Cylinder
6. Fan

Fig. 7, Kysor K22RA Fan Clutch Lining Wear Check

3. Disconnect the line from the air inlet of the air cylinder. Connect a shop air hose to the inlet.
4. Apply a minimum of 100 psi (690 kPa) air pressure to the air cylinder—the bearing housing will move backwards, disengaging the clutch. Again, measure the distance from the back surface of the retaining plate to the forward-most edge of the fan belt pulley.
5. Compare the two measurements; if the difference between the two measurements exceeds 0.150 inches (3.8 mm), the clutch lining is worn and must be replaced. See **Group 20** of the *Columbia® Workshop Manual* for clutch lining replacement instructions.
6. Release the air pressure, then disconnect the shop hose from the air inlet of the air cylinder. Connect the vehicle air hose to the inlet.
7. Connect the battery cables. Start the engine.

Horton DriveMaster® Fan Clutch

NOTE: If any part of the fan clutch needs to be repaired or replaced after performing the checks below, see **Group 20** of the *Columbia® Workshop Manual*.

1. Disconnect the batteries at the negative terminals. Drain all air from the air system. If equipped with an air starter, drain the air starter reservoir.

⚠ WARNING

Make sure the batteries are disconnected before checking the fan clutch. If the engine starts during this procedure, the fan could engage, which could result in serious personal injury.

2. Inspect the electrical connections and wires to the fan clutch solenoid. Secure the connection if loose; replace wires and connectors if damaged.
3. Clean the fan clutch air solenoid valve filter, if equipped.
   - 3.1 Unscrew the fan clutch solenoid valve air filter assembly and remove the filter element.
   - 3.2 Clean the filter element with cleaning solvent.
   - 3.3 Using a clean, lint-free cloth, wipe off any excess solvent.
   - 3.4 Reassemble the clutch valve solenoid air filter, then install it on the vehicle.
4. Check the fan for bent, cracked, or damaged blades. Replace if damaged. Check for adequate clearance between the fan and other components.
5. Check the fan belt for wear, tension, and alignment. Correct if necessary.
6. Check for wear on the friction facing. Replace the friction facing if it is worn to a 3/16-inch (4.8-mm) thickness or less. Also check the facing for signs of oil contamination or burn marks. If evidence of oil or burn marks are found, replace the friction facing.
7. Connect the battery cables. Start the engine, and charge the air system to 120 psi (827 kPa). Manually engage and disengage the fan clutch.

   Check the fan and fan clutch from a distance. Look for vibration, fan blade contact, fan clutch slippage, and overall fan clutch operation.

https://truckmanualshub.com/

If the fan clutch does not operate correctly, see **Group 20** of the *Columbia® Workshop Manual* for troubleshooting and repair procedures.

8. With the air system charged to 120 psi (827 kPa), check the fan clutch for audible air leaks, using a suitable listening device.

   Check at the solenoid valve, the air filter assembly, and the air hoses and fittings. See **Fig. 8**. Using a wet finger or a soapy water solution, check for a leak in the same areas.

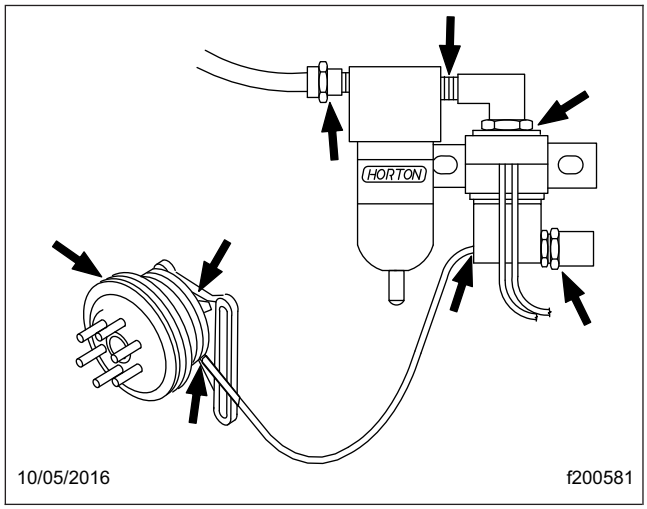

Fig. 8, Checking for Air Leaks (Horton DriveMaster)

9. If a leak is detected, remove the fan blade. Install a new seal kit. See **Group 20** of the *Columbia® Workshop Manual* for repair procedures.
10. Check the fan drive for discoloration or any other signs of slipping or overheating.

NOTE: The fan clutch may slip if the air supply pressure is below 70 psi (483 kPa) or if there is a leak inside the fan clutch. Any leak must be remedied.

11. Check the fan clutch bearings.

    11.1 Turn the fan in both directions and feel for worn hub bearings.

    11.2 If possible, remove the drive belt and check for worn sheave bearings by turning the sheave in both directions.

    11.3 If either the hub or sheave bearings are worn, replace them, using a Horton DriveMaster Super Kit.

    For instructions and kit part number, see **Group 20** of the *Columbia® Workshop Manual*.

https://truckmanualshub.com/

https://truckmanualshub.com/

Index, Alphabetical

Title of Maintenance Operation (MOP)	MOP Number
Clutch Release Cross-Shaft Lubrication	25–02
Eaton Fuller Clutch Release Bearing Lubrication	25–01
Meritor Clutch Release Bearing Lubrication	25–04
Safety Precautions	25–00
Sleeve Assembly Bronze Bushing Lubrication	25–03

https://truckmanualshub.com/

https://truckmanualshub.com/

25–00 Safety Precautions

Safety Precautions in this section apply to all procedures within this group.

⚠ DANGER

When working on the vehicle, shut down the engine, set the parking brake, and chock the tires. Before working under the vehicle, always place jack stands under the frame rails to ensure the vehicle cannot drop. Failure to follow these steps could result in serious personal injury or death.

25–01 Eaton Fuller Clutch Release Bearing Lubrication

The standard clutch release bearing is not sealed, and requires lubrication. If the vehicle is not equipped with an optional sealed clutch release bearing, lubricate the bearing as follows:

1. Park the vehicle on a level surface. Apply the parking brakes, and chock the rear tires.
2. Remove the clutch inspection plate.

NOTE: Some clutch release bearings are equipped with a lubrication extension that extends outside of the clutch housing. It is not necessary to remove the clutch inspection plate when the lubrication extension is used.

NOTE: For lubrication of the release bearing, Eaton Fuller recommends a lithium-base high-temperature grease that meets the NLGI grade one or two specification.

3. Wipe any dirt away from the grease fitting. See **Fig. 1**. Using a pressure-type grease gun equipped with the recommended grease, lubricate the bearing until excess grease purges from the rear of the release bearing (toward the transmission).

⚠ CAUTION

Do not over-lubricate the clutch release bearing. Over-lubrication could contaminate the clutch internally, causing clutch slippage and premature failure. Do not use chassis grease or multipurpose lubricants.

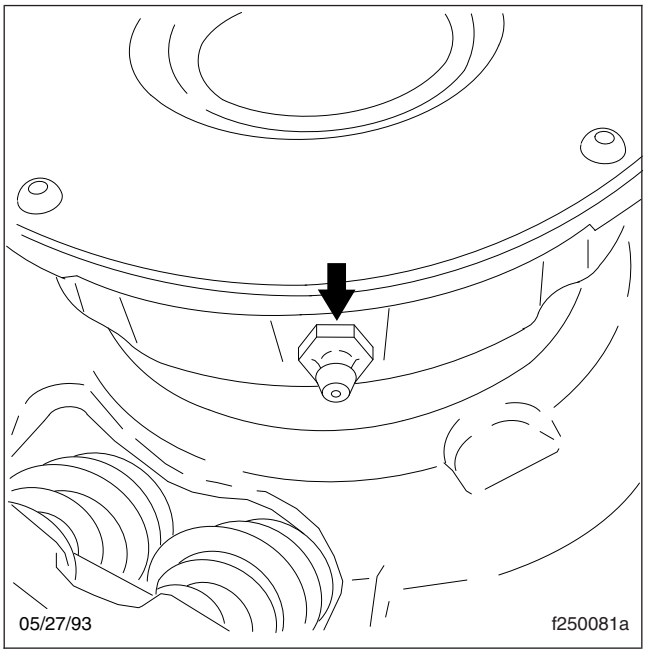

Fig. 1, Release Bearing Grease Fitting

4. Wipe off excess grease and apply to both the yoke finger and sleeve bushing contact points. See **Fig. 2**.

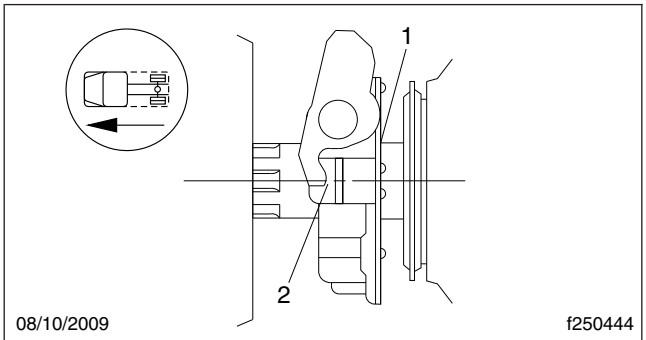

1. Sleeve Bushing Contact Point
2. Yoke Finger Contact Points

Fig. 2, Grease the Contact Points

5. Install the clutch inspection plate, then remove the chocks.

https://truckmanualshub.com/

25–02 Clutch Release Cross-Shaft Lubrication

The clutch release cross-shaft is equipped with two grease fittings in the transmission clutch housing. See **Fig. 3** and **Fig. 4**. Wipe any dirt from the grease fittings, and lubricate with multipurpose chassis grease.

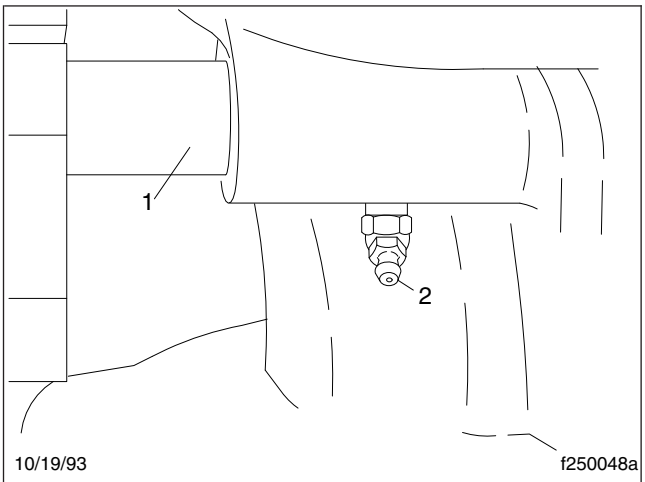

1. Clutch Release Cross-Shaft
2. Grease Fitting

Fig. 3, Cross-Shaft Grease Fitting, Left-Side

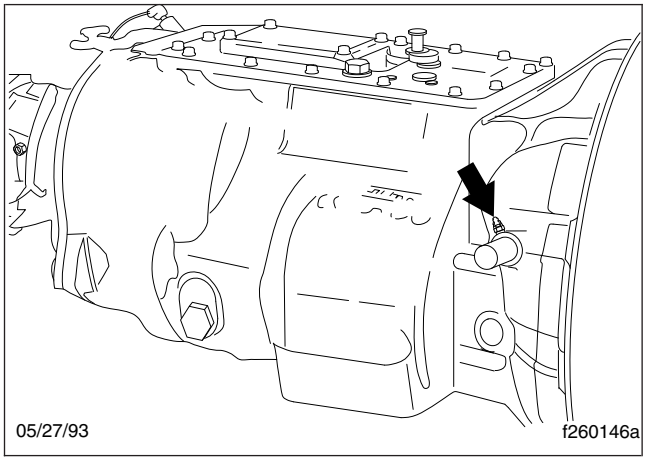

Fig. 4, Cross-Shaft Grease Fitting, Right-Side

25–03 Sleeve Assembly Bronze Bushing Lubrication

Vehicles equipped with the sealed clutch release bearing require lubrication of the bronze bushing located between the clutch bearing housing and the transmission input shaft. Use a pressure-type grease gun equipped with high-temperature grease only, and lubricate until grease flows from the release bearing housing. Depress the clutch pedal a couple of times before starting the engine.

25–04 Meritor Clutch Release Bearing Lubrication

The standard clutch release bearing is not sealed, and requires lubrication. If the vehicle is not equipped with an optional sealed clutch release bearing with a grease fitting, lubricate the bearing as follows:

1. Park the vehicle on a level surface. Apply the parking brakes, and chock the rear tires.
2. Remove the clutch inspection plate.

NOTE: Some clutch release bearings are equipped with a lubrication extension that extends outside of the clutch housing. It is not necessary to remove the clutch inspection plate when the lubrication extension is used.

NOTE: For lubrication of the release bearing, Meritor recommends a lithium-base high-temperature grease that meets the NLGI grade three specification.

3. Wipe any dirt from the grease fitting. See **Fig. 1**. Using a pressure-type grease gun equipped with recommended grease, lubricate the bearing until excess grease purges from the rear of the release bearing (toward the transmission).

CAUTION

Do not over-lubricate the clutch release bearing. Over-lubrication could contaminate the clutch internally, causing clutch slippage and premature failure. Do not use chassis grease or multipurpose lubricants.

https://truckmanualshub.com/

4. Wipe off excess grease, and apply it to both the yoke finger and sleeve bushing contact points. See **Fig. 2**.
5. Install the clutch inspection plate, then remove the chocks.

https://truckmanualshub.com/

https://truckmanualshub.com/

Index, Alphabetical

Title of Maintenance Operation (MOP)	MOP Number
Manual Transmission Air Filter/Regulator Check, Cleaning, or Replacement	26–03
Manual and Automated Transmission Fluid Change, and Magnetic Plug Cleaning (Synthetic Lubricant)	26–01
Safety Precautions	26–00
Transmission Fluid Level Inspection	26–02

https://truckmanualshub.com/

https://truckmanualshub.com/

26–00 Safety Precautions

Safety Precautions in this section apply to all procedures within this group.

⚠ DANGER

When working on the vehicle, shut down the engine, set the parking brake, and chock the tires. Before working under the vehicle, always place jack stands under the frame rails to ensure the vehicle cannot drop. Failure to follow these steps could result in serious personal injury or death.

26–01 Manual and Automated Transmission Fluid Change, and Magnetic Plug Cleaning (Synthetic Lubricant)

NOTICE

Operating a transmission with the fluid level higher or lower than recommended can result in transmission damage. Do not overfill the transmission. Overfilling will force fluid out of the case through the main shaft openings.

Do not mix types and brands of fluid, because of possible incompatibility. Do not use fluid additives, friction modifiers, extreme-pressure gear fluids, or multiviscosity lubricants.

NOTE: Fluid change intervals are extended to 500,000 miles (800 000 km) on any vehicles filled with synthetic transmission fluid.

1. Drain the transmission when the fluid is warm. If not already warm, run the engine until the transmission fluid reaches operating temperature. Shift the transmission to neutral (N) and shut down the engine.
2. Park the vehicle on level ground, apply the parking brakes, and chock the rear tires. Place a large drain pan under the transmission.
3. Clean the area around the fill plug, and remove it from the side of the gear case. Remove each drain plug from the bottom of the case.
4. Clean the fill and drain plugs. For magnetic plugs, use a piece of key stock or any other convenient steel slug to short the two magnetic poles and divert the magnetic field.

   Install and tighten each drain plug 50 lbf·ft (68 N·m).

NOTE: The optional transmission fluid filter is a remote-mount, spin-on type, and is located between the transmission and the fluid cooler. The filter bracket is attached to the frame rail or some other near-by location. The filter is mounted in a vertical position, and should be filled with fluid before installation to assure the proper fluid level. For optimum transmission performance, change the filter each time that the fluid is changed.

5. For a transmission equipped with a transmission fluid filter(s), replace the fluid filter(s).

   5.1 Place a drain pan under the transmission fluid filter.

⚠ CAUTION

To prevent skin burns from hot transmission fluid, wear protective gloves when removing the filter.

   5.2 Place a strap or chain wrench around the filter canister, and rotate it in a counterclockwise motion to separate the filter from the mounting. Carefully spin the filter off the mount and remove it from the vehicle.

   5.3 Apply a light coat of transmission fluid to the O-ring gasket on the new filter. Fill the filter with specified transmission fluid, and spin the filter onto the mount.

   NOTE: The filter fills slowly, so be patient to ensure the proper fluid level has been set.

   5.4 Once the filter makes contact with the mount, use a strap wrench to rotate the canister an additional 180 to 270 degrees to firmly tighten the filter. Wipe the filter clean of any fluid after it is tightened.

6. Add fluid until it is level with the lower edge of the fill opening. See **Fig. 1**. If the transmission has two fill openings, add fluid to the level of both openings. See **Table 1** for approved transmission lubricants. See **Table 2** for Eaton Fuller

https://truckmanualshub.com/

transmission lubricant capacities and **Table 3** for Meritor transmission lubricant capacities.

For more information and a complete listing of Eaton approved lubricants, refer to the Eaton website, **www.roadranger.com**. For more information and a complete listing of Meritor approved lubricants, refer to the ZF Meritor website, **www.zf.com**.

NOTE: In all cases, the correct fluid level is established by checking at the fill opening.

7. Operate the engine for five minutes after filling the transmission, then check the fluid level again.

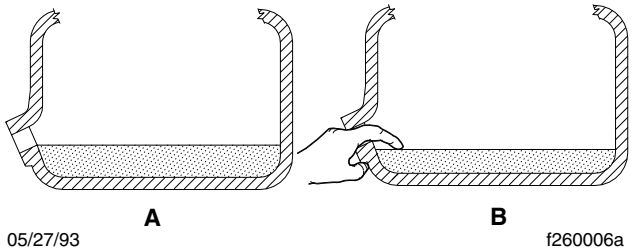

A. Full B. Low

Fig. 1, Checking Transmission Fluid Level

Eaton and Meritor Approved Transmission Lubricants			
Transmission Model	**Lubricant Type***	**Temp. Range**	**SAE Viscosity**
Eaton Fuller Transmissions			
All Eaton Fuller	Synthetic transmission lubricant meeting Eaton PS-386 lubricant specification	All	—
Meritor Transmissions			
FreedomLine	Mobil Delvac Synthetic Transmission Fluid 50	All	50W
All other Meritor	Synthetic engine oil meeting Meritor spec 0–81, or MIL–L–2104D or E	All	50W

* Do not mix types or brands of fluid. Multiweight and extreme-pressure gear fluids are not recommended.

Table 1, Eaton and Meritor Approved Transmission Lubricants

Eaton Fuller Transmission Lubricant Capacities	
Transmission Model*	**Refill Capacity:† qt (L)**
7-Speed T Series	
All Models	18.0 (17.0)
All 9-Speed Series	
All Models	13.5 (12.8)
All 10-Speed Manual (except deep reduction)	
FR and FRO Series	11.75 (11.0)
RT and RTX Series	13.0 (12.3)
RTLO Series	14.0 (13.2)
10-Speed Deep Reduction	
RTO–14908LL	14.0 (13.2)
RTO–16908LL	
10-Speed Automated	
Lightning Top 2 (all)	13.5 (12.8)
10-Speed Autoshift AS2 (all)	13.0 (12.3)
13-Speed RTLO Series	
All Models	14.0 (13.2)
15-Speed RTO Series	
All Models	14.0 (13.2)
All 18-Speed Series	
RTLO Series	14.0 (13.2)
18-Speed Autoshift AS2 (all)	

* For models not listed in this table see the Eaton Fuller website, **www.roadranger.com**.

† Quantities listed are approximate. Fill transmission until lubricant is level with bottom of fill hole with vehicle in normal operating position.

Table 2, Eaton Fuller Transmission Lubricant Capacities

Meritor Transmission Lubricant Capacities	
Transmission Model	**Refill Capacity:* qt (L)**
Meritor M/MO Series	
M/MO (all)	10.25 (9.7)
ZF Meritor FreedomLine	
All 12-Speed Models	11.6 (11.0)
All 16-Speed Models	12.5 (11.8)

* Quantities listed are approximate. Fill transmission until lubricant is level with bottom of fill hole with vehicle in normal operating position.

Table 3, Meritor Transmission Lubricant Capacities

https://truckmanualshub.com/

8. Clean the fill plug, then install it in the transmission. Tighten the plug as follows:
   - 25 to 35 lbf·ft (34 to 48 N·m) for Eaton Fuller transmissions with 3/4-inch pipe threads.
   - 60 to 75 lbf·ft (81 to 102 N·m) for Eaton Fuller transmissions with 1-1/4-inch pipe threads.
   - 44 lbf·ft (60 N·m) for all ZF Meritor FreedomLine automated transmissions.
   - 35 to 50 lbf·ft (48 to 67 N·m) for all other Meritor transmissions.
9. Operate the vehicle to check for correct operation.

26–02 Transmission Fluid Level Inspection

NOTICE

Operating a transmission with the fluid level higher or lower than recommended can result in transmission damage. Do not overfill the transmission. Overfilling will force fluid out of the case through the main shaft openings.

Do not mix types and brands of fluid, because of possible incompatibility. Do not use fluid additives, friction modifiers, extreme-pressure gear fluids, or multiviscosity lubricants.

With the transmission at operating temperature, and the vehicle on a level surface, check the fluid level in the transmission.

1. Clean the area around the fill plug, and remove it from the side of the gear case.
2. Using your finger or a bent pipe cleaner, see if the fluid is level with the fill opening. See **Fig. 1**.
3. If the fluid level is low, check the transmission for leaks, and correct as needed.
4. If needed, add the recommended fluid, until it is level with the lower edge of the fill opening. See **Table 1** for approved transmission lubricants.

   For more information and a complete listing of Eaton approved lubricants, refer to the Eaton website, **www.roadranger.com**. For more information and a complete listing of Meritor approved lubricants, refer to the ZF Meritor website, **www.zf.com**.
5. Clean the fill plug, then install it. Tighten the plug as follows:
   - 25 to 35 lbf·ft (34 to 48 N·m) for transmissions with 3/4-inch pipe threads.
   - 60 to 75 lbf·ft (81 to 102 N·m) for transmissions with 1-1/4-inch pipe threads.
   - 44 lbf·ft (60 N·m) for all ZF Meritor FreedomLine automated transmissions.
   - 35 to 50 lbf·ft (48 to 67 N·m) for all other Meritor transmissions.

26–03 Manual Transmission Air Filter/Regulator Check, Cleaning, or Replacement

Eaton Fuller

1. Apply the parking brakes, and chock the rear tires. Drain the air reservoirs.

⚠ WARNING

Drain the air supply; if the air supply is not drained before the air filter/regulator is serviced, serious injury and component damage could result.

2. Clean the outside of the air filter/regulator with cleaning solvent. See **Fig. 2**.
3. Remove the end cap, large O-ring, and filter element from the filter housing. See **Fig. 3**. Remove the small O-ring from the end cap.

NOTE: Do not remove, disassemble, or adjust the air regulator. If the air regulator is not keeping air pressure between 58 and 63 psi (400 to 435 kPa), replace the air filter/regulator. It cannot be repaired.

⚠ WARNING

Wear safety goggles when using compressed air to clean parts, as permanent harm to eyes could result from flying debris.

https://truckmanualshub.com/

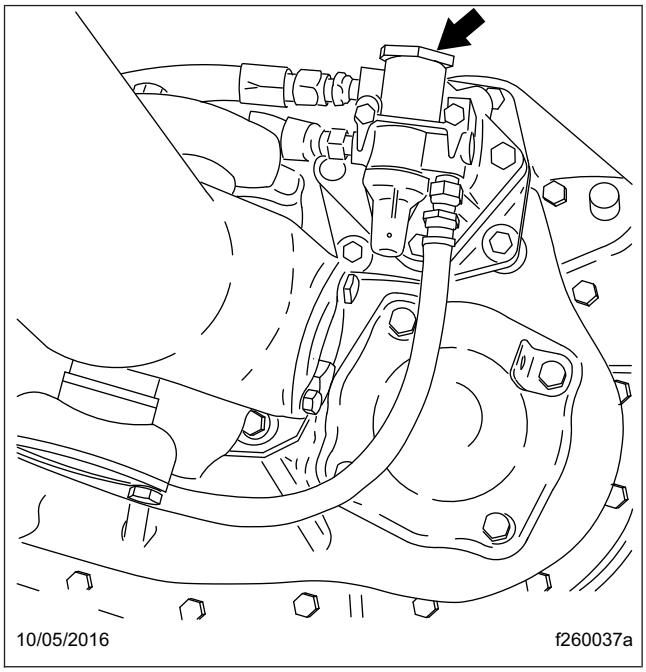

Fig. 2, Air Filter/Regulator Location (Eaton Fuller transmission shown)

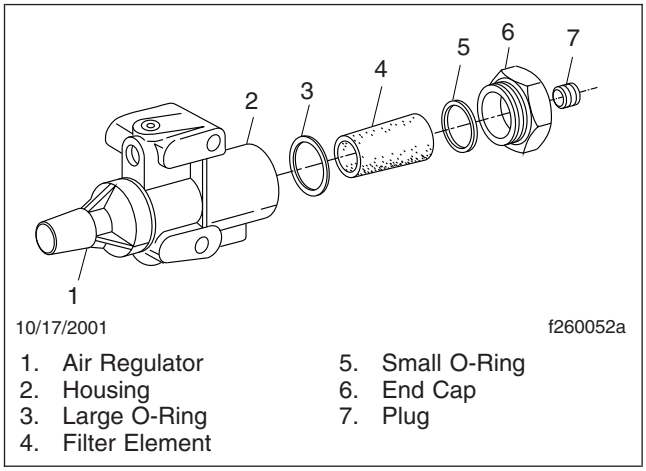

1. Air Regulator
2. Housing
3. Large O-Ring
4. Filter Element
5. Small O-Ring
6. End Cap
7. Plug

Fig. 3, Eaton Fuller Transmission Air Filter/Regulator Components

4. Clean the filter element by dipping it in alcohol or other cleaning solvent. Blow compressed air through the element (inside to outside) to loosen surface dirt and to dry the element. If it is not damaged, the sintered metallic filter element will last the life of the vehicle.

   Wipe out the filter housing with a clean, dry, lint-free rag. Clean and inspect the O-rings and end cap. Replace any parts that are damaged.
5. Install the large O-ring, then the filter element (small end first) into the filter housing.
6. Install the small O-ring in the end cap, then install the end cap and tighten it until firm.

NOTICE

A leaking air filter or air lines can cause slow or hard shifting of the transmission, and eventual transmission damage.

7. Start the engine, and build pressure in the air system. Check for air leaks at the filter housing and air line connections; repair any leaks.

Meritor

NOTE: This procedure does not apply to FreedomLine transmissions.

1. Park the vehicle on a level surface. Apply the parking brakes, and chock the rear tires.
2. Remove the element from the air filter/regulator assembly. Inspect the O-rings in the end cap; replace worn or damaged O-rings. Inspect the element for fluid contamination. If fluid is present, replace the element. Inspect the air supply system for the source of the fluid, and service it as needed.
3. Install the element in the filter/regulator assembly.
4. Apply a light coat of silicone grease, or an equivalent grease to the O-rings in the end cap. Install and tighten the end cap 10 to 15 lbf·ft (14 to 20 N·m).
5. Build air pressure in the system, check for leaks, and make any needed repairs.

https://truckmanualshub.com/

Index, Alphabetical

Title of Maintenance Operation (MOP)	MOP Number
Fifth Wheel Inspection	31–01
Fifth Wheel Lubrication	31–02
Frame Fastener Torque Check	31–03
Premier 690 Coupling Inspection	31–05
Safety Precautions	31–00
Trailer Electrical Connector Lubrication	31–04

https://truckmanualshub.com/

https://truckmanualshub.com/

31–00 Safety Precautions

Safety Precautions in this section apply to all procedures within this group.

DANGER

When working on the vehicle, shut down the engine, set the parking brake, and chock the tires. Before working under the vehicle, always place jack stands under the frame rails to ensure the vehicle cannot drop. Failure to follow these steps could result in serious personal injury or death.

31–01 Fifth Wheel Inspection

WARNING

All fifth wheel maintenance, adjustment, and rebuilding must be done only by a qualified mechanic. Improper or incomplete procedures could result in a possible disengagement of the trailer from the tractor, which could result in personal injury or property damage.

Parts are under spring compression. Wear safety goggles while servicing the fifth wheel. Failure to do so can result in personal injury, due to parts ejecting with force.

Fontaine

1. Disconnect the tractor from the trailer. For instructions, see the *Columbia Driver's Manual*.
2. Thoroughly steam clean the fifth wheel.
3. Check for cracks in the fifth wheel assembly, mounting brackets, and mounting parts.
4. Ensure that both bracket pins are in place and secured by retainer pins and cotter pins. See **Fig. 1**.
5. For fifth wheels equipped with bracket liners, rock the fifth wheel. If it does not rock freely, remove the top plate and inspect the bracket liners. Replace liners that are broken or less than 0.125 inch (3 mm) thick at the top of the liners. For the liner replacement procedure, see the Fontaine website, **www.fifthwheel.com**.
6. Check the jaw and stationary jaw for mushrooming, and check that the serrations at the jaw and wedge are in good condition.
7. Test the secondary safety lock latch for ease of operation.
8. Check for loose nuts or bolts on the fifth wheel and the mounting. Set a torque wrench to the maximum torque value for the bolt being checked, and confirm that the torque is to specification. Do not loosen the bolt to check the torque. See **Group 00** for bolt torque specifications.
9. Check all springs to see if they are securely fastened, and are not deformed.

WARNING

Do not disassemble the fifth wheel to inspect the springs. The springs are under extreme pressure, and could cause serious injury.

10. Check the wedge adjustment.
    - 10.1 Close the fifth wheel on a standard 2-inch (50-mm) kingpin or similar 2-inch (50-mm) diameter shaft so that it locks.
    - 10.2 Push on the wedge stop rod with hand pressure. It should move in 1/4 inch (6 mm) and spring back out on release.

      If the free travel is not 1/4 inch (6 mm), adjust the distance to 1/4 inch (6 mm) by turning the wedge stop rod, on the right side of the top plate, clockwise to reduce the gap and counter-clockwise to increase it.
11. Replace cracked, worn, or damaged parts with new parts. Replace all loose mounting bolts with 5/8–11 SAE grade 8 bolts, grade C locknuts, and hardened washers. *Do not* re-use bolts, nuts, and washers on fifth wheel mountings.
12. After inspecting the fifth wheel, lubricate all moving parts with a chassis or multipurpose grease. Apply a generous coating of grease to the top plate to fill the grooves, or depressions, on the top plate. See **MOP 31–02** for lubrication instructions.

https://truckmanualshub.com/

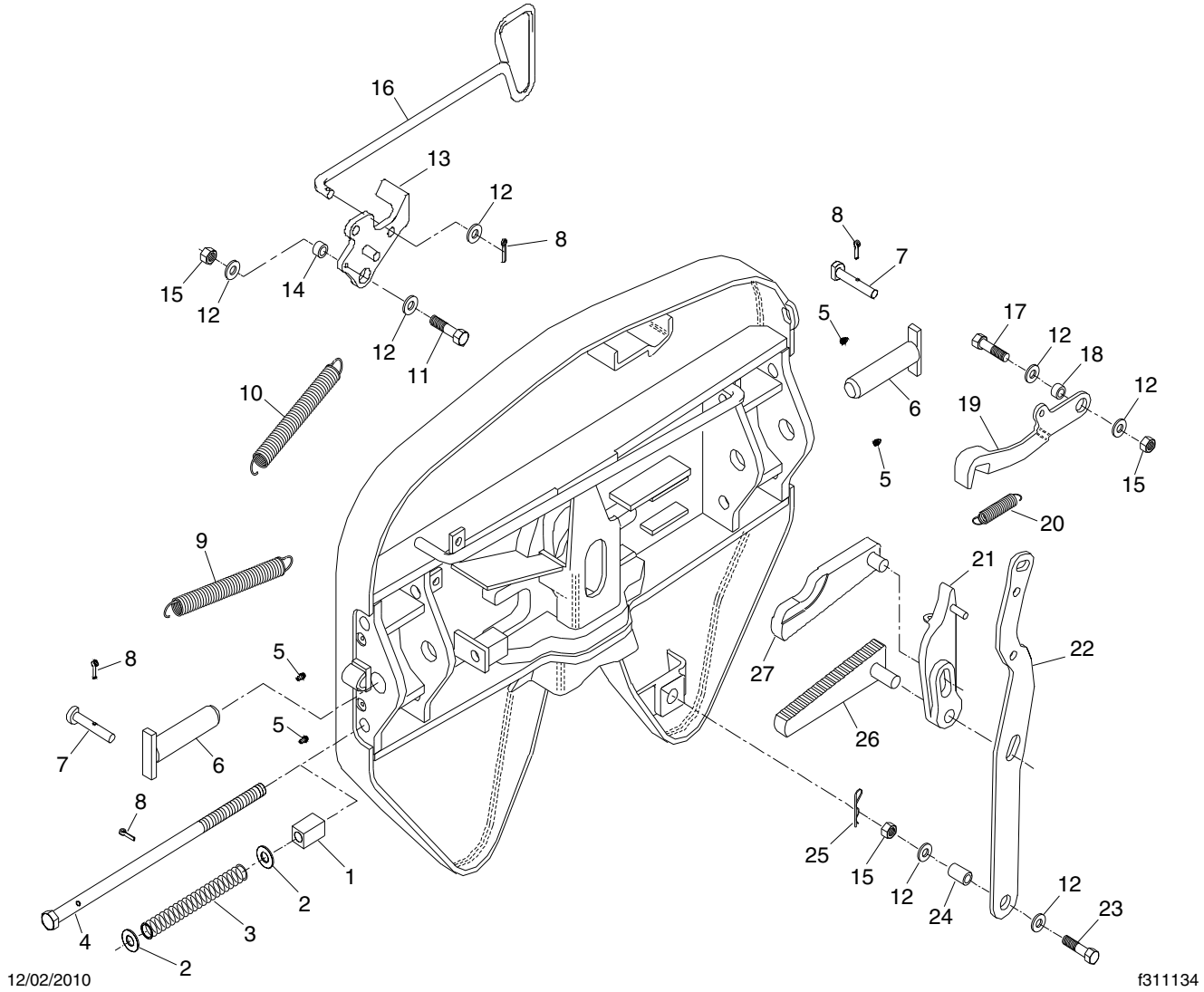

NOTE: 6000 Series shown; 7000 Series fifth wheels use similar parts.

1. Wedge Stop Rod Nut
2. Flat Washer, 5/8"
3. Wedge Stop Rod Spring
4. Wedge Stop Rod
5. Grease Fitting
6. Bracket Pin
7. Bracket Retainer Pin
8. Cotter Pin, 3/16" x 1"
9. Bumper Spring
10. Handle Spring
11. Bolt, Secondary Safety Lock
12. Flat Washer
13. Secondary Safety Lock
14. Bushing, Secondary Safety Lock
15. Hex Locknut
16. Pull Handle
17. Bolt, Bumper
18. Bushing
19. Bumper
20. Timer Spring
21. Timer
22. Operating Handle
23. Bolt, Operating Handle
24. Bushing, Operating Handle
25. Hair Pin Cotter
26. Wedge
27. Step Jaw

Fig. 1, Fontaine Fifth Wheel

https://truckmanualshub.com/

Holland FWS1

1. Disconnect the tractor from the trailer. For instructions, see the *Columbia Driver's Manual*.
2. Thoroughly steam clean the fifth wheel.
3. Check the fifth wheel plate for cracks. Check for sharp edges on top; the chamfer should be 1/8 to 1/4 inch (3 to 6 mm).
4. When the wheel is locked, the safety latch must swing free and fall freely into position. See **Fig. 2**.

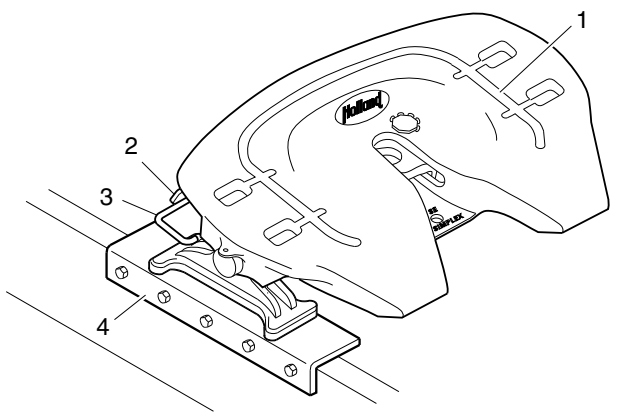

10/29/2007 f311052

1. Lubricant Grooves
2. Safety Latch
3. Release Handle
4. Mount

Fig. 2, Holland FWS1 Fifth Wheel

5. The lever bar and release handle must be in proper alignment. See **Fig. 3**. Compare the lever bar and release handle alignment to a new, or a properly operating lever bar and release handle. Replace any bent or misaligned lever bar or release handle.
6. Check all cotter pins for cracking or damage. Replace any cotter pin that shows any signs of damage.
7. Check all mounting bolts for signs of fatigue, and tighten them to the proper torque. For torque specifications, see **Group 00**. Inspect all angles, plates, and brackets for cracks or other damage.
8. Replace cracked, worn, or damaged parts with new parts. Replace all loose mounting bolts with 5/8–11 SAE grade 8 bolts, grade C locknuts, and hardened washers. *Do not* re-use bolts, nuts, and washers on fifth wheel mountings.

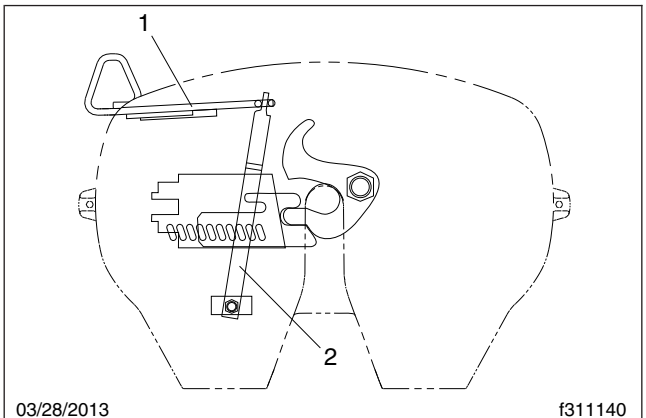

03/28/2013 f311140

1. Release Handle
2. Lever Bar

Fig. 3, Lever Bar and Release Handle Alignment

9. After inspecting the fifth wheel, lubricate all moving parts with a chassis or multipurpose grease. See **MOP 31–02** for lubrication instructions.

Holland FW35

1. Disconnect the tractor from the trailer. For instructions, see the *Columbia Driver's Manual*.
2. Thoroughly steam clean all fifth wheel components before inspection.
3. Check for cracks in the fifth wheel assembly, mounting brackets, and mounting parts.
4. Check the fastener torques on the fifth wheel assembly and fifth wheel mounting. Tighten bolts and nuts as needed. Replace missing or damaged bolts.
5. Inspect the fifth wheel for bent, worn, damaged, and missing parts; replace them as needed with genuine Holland parts.
6. Using a Holland Kingpin Lock Tester (Holland tool number TF-TLN-5001, available through the PDCs as HLD TFTLN5001), check the operation of the locking mechanism by opening and closing the locks. See **Fig. 4**.
7. After inspecting the fifth wheel, lubricate all moving parts with a chassis or multipurpose grease. See **MOP 31–02** for lubrication instructions.

Castloc II and Simplex Series

1. Disconnect the tractor from the trailer. For instructions, see the *Columbia® Driver's Manual*.

https://truckmanualshub.com/

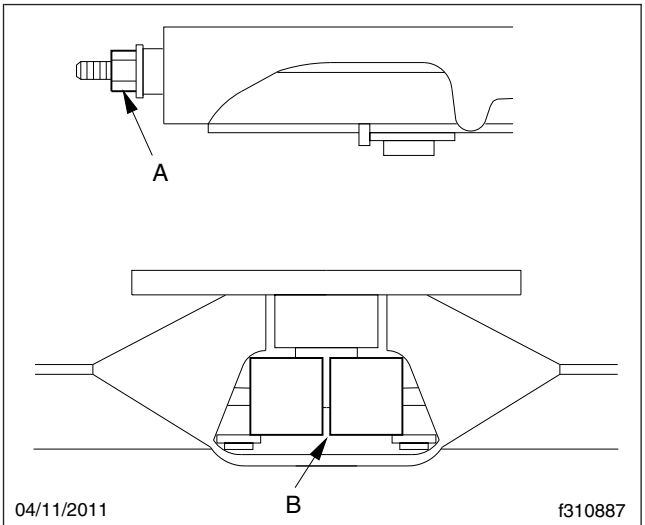

A. The nut and washer should be snug against the fifth wheel.
B. The locks should be completely closed around the kingpin.

Fig. 4, Holland Fifth Wheel Properly Closed

2. Thoroughly steam clean the fifth wheel.
3. Check the fifth wheel plate for cracks. Check for sharp edges on top; the chamfer should be 1/8 to 1/4 inch (3 to 6 mm).
4. When the wheel is locked, the safety latch must swing free and fall freely into position. See **Fig. 5**.

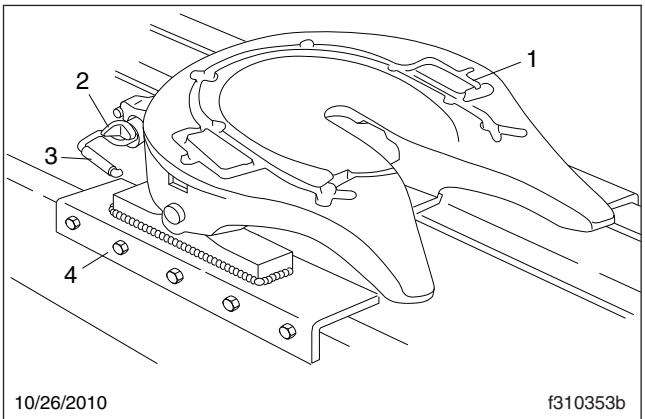

1. Lubricant Grooves
2. Safety Latch
3. Lock Control Handle
4. Mount

Fig. 5, Simplex Series Fifth Wheel

5. The lever bar and operating handle must be in proper alignment. See **Fig. 6**. Compare the lever bar and operating handle alignment to a new, or a properly operating lever bar and operating handle. Replace any bent or misaligned lever bar or operating rod.

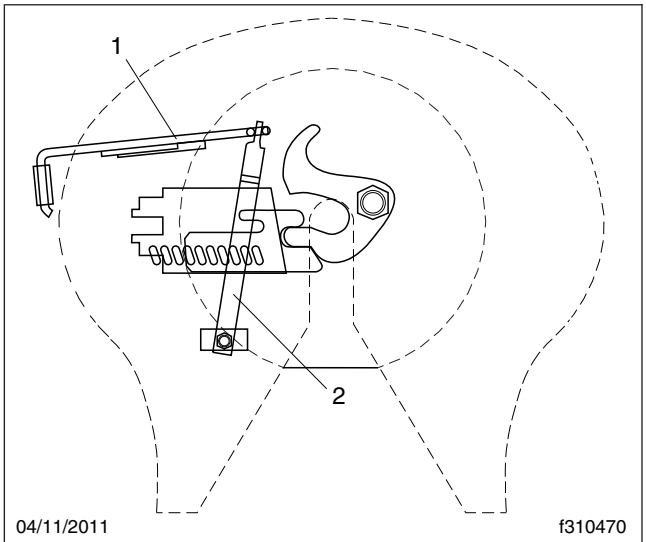

1. Operating Handle
2. Lever Bar

Fig. 6, Lever Bar and Operating Handle Alignment

6. Check all cotter pins for cracking or damage. Replace any cotter pin that shows any signs of damage.
7. Level the fifth wheel plate to a horizontal position. Measure the height from a stationary mounting point (see **Fig. 7**, Ref. 3), such as the frame rail to the top of the fifth wheel plate (Ref. 1). Pry up on the fifth wheel plate (Ref. 4) below the pin boss, and measure the vertical movement (Ref. 5). The bracket connection provides a 9/32-inch (7-mm) vertical clearance to provide cushioning and to avoid downward pin-loading while retaining minimum plate lift. If the plate lift (Ref. A) exceeds 5/16 inch (8 mm) as a result of wear or rubber deterioration, install new, standard or oversized bracket-shoe rubber pads; see **Group 31** of the *Columbia® Workshop Manual* for replacement instructions.

NOTE: Do not measure plate lift immediately after a trailer has been uncoupled from the fifth wheel. The rubber may have taken a temporary

https://truckmanualshub.com/

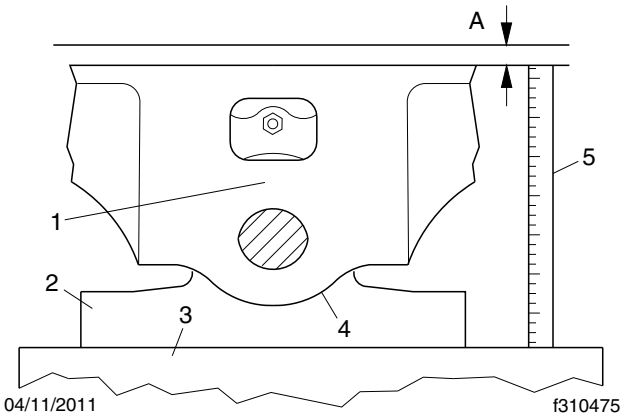

A. Extended Top Plate Lift Height
1. Fifth Wheel Top Plate
2. Fifth Wheel Frame Mount
3. Frame Rail
4. Lifting Point
5. Static Top Plate Height

Fig. 7, Measuring Fifth Wheel Top Plate Lift

set, which will normally recover after being uncoupled for a short period of time.

8. Check all mounting bolts for signs of fatigue, and tighten them to the proper torque. For torque specifications, see **Group 00**. Inspect all angles, plates, and brackets for cracks or other damage.
9. Replace cracked, worn, or damaged parts with new parts. Replace all loose mounting bolts with 5/8–11 SAE grade 8 bolts, grade C locknuts, and hardened washers. *Do not* re-use bolts, nuts, and washers on fifth wheel mountings.
10. After inspecting the fifth wheel, lubricate all moving parts with a chassis or multipurpose grease. See **MOP 31–02** for lubrication instructions.

Jost

1. Disconnect the tractor from the trailer. For instructions, see the *Columbia Driver's Manual*.
2. Thoroughly steam clean the fifth wheel.
3. Check the mounting for missing or damaged fasteners, and broken components. Replace or repair as needed.
4. Inspect the bracket pin bolts. Make sure the locking tabs are properly securing the bolts in place. See **Fig. 8**.

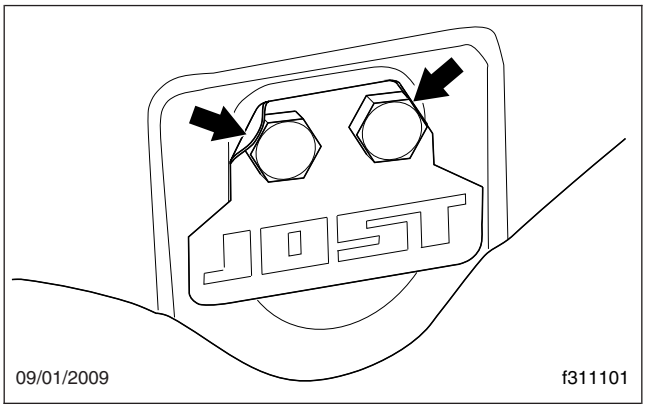

Fig. 8, Bracket Pin Bolt Locking Tabs

5. Check the fifth wheel for bent, worn, or broken parts. Replace as needed.
6. If the fifth wheel is equipped with low-lube plates, check the plates and replace if damaged or worn down to the securing bolts. It is normal for outside edges of the plate to pucker slightly; this does not affect performance.
7. Check the fifth wheel adjustment. Using a lock tester, lock and unlock the fifth wheel several times. Make sure that the locking mechanism works properly.

   The lock is properly adjusted if: the wheel locks and unlocks easily each time and the lock tester rotates freely.

   The lock is too loose if: you feel fore-aft play when pulling and pushing on the lock tester handle. See **Fig. 9**, Ref. A.

   The lock is too tight if: the lock tester does not rotate freely in the lock. See **Fig. 9**, Ref. B.
8. If the lock is improperly adjusted, correct as follows.

   If the lock is too tight, loosen the jam nut, turn the adjustment bolt *clockwise* one full turn, then reset the jam nut. Lock and unlock the mechanism several times to test. Repeat if necessary. See **Fig. 10**.

   If the lock is too loose, loosen the jam nut, turn the adjustment bolt *counterclockwise* one full turn, then reset the jam nut. Lock and unlock the mechanism several times to test. Repeat if necessary. See **Fig. 10**.

https://truckmanualshub.com/

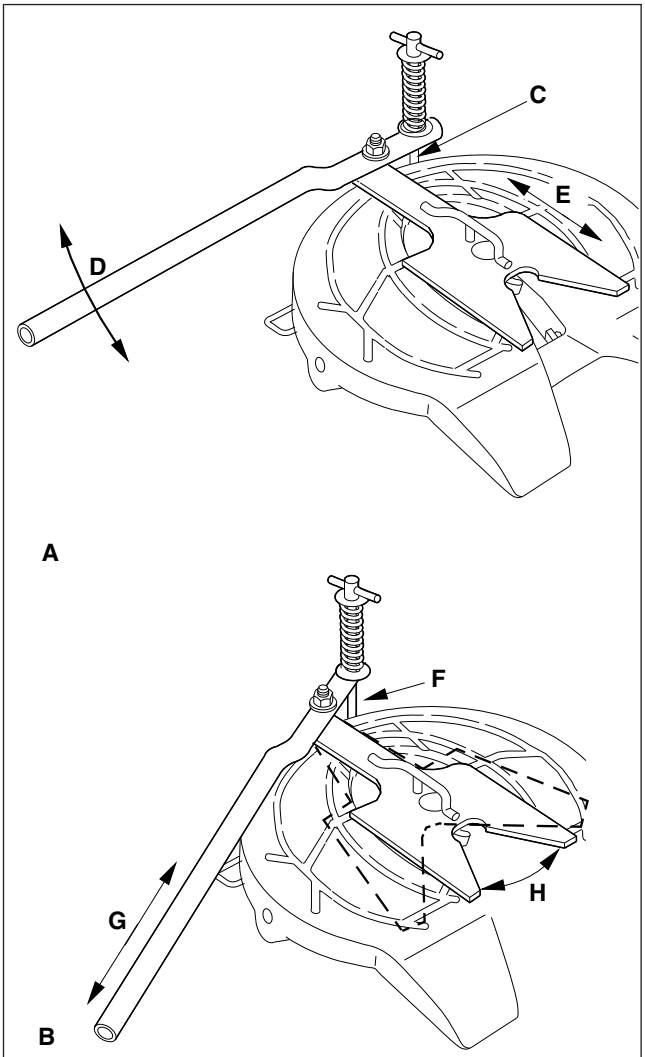

09/01/2009 f311099

A. Checking for fore/aft play.
B. Rotating tester in lock.
C. Engage hook.
D. Pull/push handle fore/aft.
E. Check for movement of kingpin in lock.
F. Disengage hook.
G. Push/pull handle inboard/outboard.
H. Rotate lock tester.

Fig. 9, Jost Fifth Wheel Adjustment

9. If the fifth wheel is equipped with a sliding mechanism, inspect and adjust it as follows.

   9.1 Check the bracket for any cracks or missing and damaged parts.

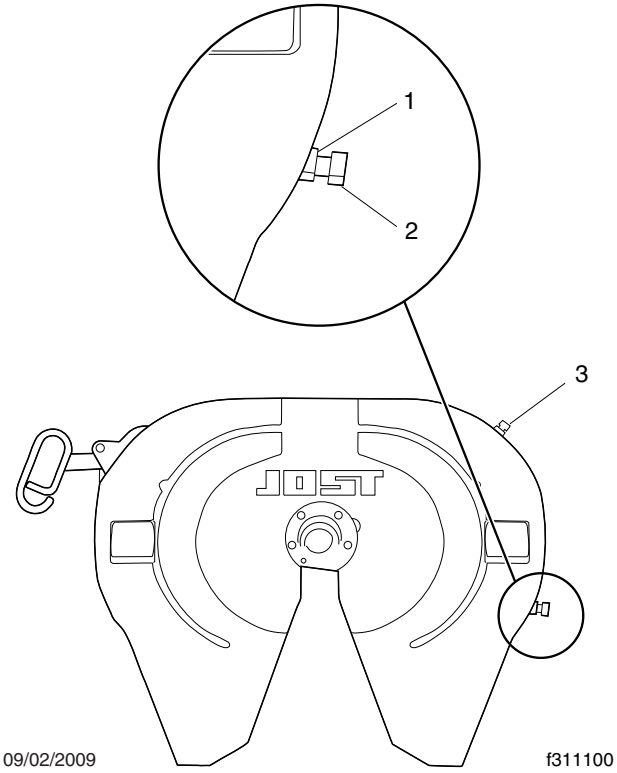

09/02/2009 f311100

1. Jam Nut
2. Adjustment Bolt
3. Grease Zerk

Fig. 10, Jost Fifth Wheel

   9.2 Inspect the locking plungers for full engagement.

   9.3 Check the locking mechanism for proper operation.

   If the plungers will not release, check the air cylinder or plunger adjustment.

   If the plungers are loose, check the plunger adjustment and the plunger springs for proper compression. Replace if needed.

   9.4 The outboard slider assembly requires no adjustment. If the plungers are loose, inspect and replace locking mechanism parts as needed.

   9.5 The inboard slider is adjustable for frame width and plunger engagement. For adjustment, refer to the fifth wheel installation instructions.

https://truckmanualshub.com/

10. Replace cracked, worn, or damaged parts with new parts. Replace all loose mounting bolts with 5/8–11 SAE grade 8 bolts, grade C locknuts, and hardened washers. *Do not* re-use bolts, nuts, and washers on fifth wheel mountings.
11. After inspecting the fifth wheel, lubricate all moving parts with a chassis or multipurpose grease. Apply a generous coating of grease to the top plate to fill the grooves, or depressions, on the top plate. See **MOP 31–02** for lubrication instructions.

31–02 Fifth Wheel Lubrication

To maintain proper fifth wheel operation, always lubricate the fifth wheel after an inspection has been performed.

IMPORTANT: Lubricate the fifth wheel:

- After power washing, or steam cleaning.
- If the vehicle operates in harsh conditions such as salt spray from road surfaces, or in extremely dusty environments.
- After any service that requires removal of lubrication from the fifth wheel head or components.

⚠ WARNING

Failure to properly lubricate the fifth wheel could result in a possible disengagement of the trailer from the tractor, which could result in personal injury or property damage.

Fontaine

1. Tilt the top plate forward (the front of the fifth wheel is down) and apply grease to each bearing area through the zerk fittings located on each side of the top plate just to the front of the bracket pins. Continue to apply grease until it is coming out of the back of the bearing. It may be necessary to raise the rear of the fifth wheel with a pry bar to open up the pocket slightly and allow the grease to flow through. A substantial amount of grease may be required initially to fill the reservoir.

   Tilt the fifth wheel ramps down (the rear of the fifth wheel is down) and repeat the greasing procedure. Rock the top plate back and forth several times to spread the grease over the bearing surface.
2. Inspect the trailer kingpin plate and top surface of the fifth wheel to make sure each is properly greased. A liberal coating of grease should be applied to the complete surfaces of both the trailer kingpin plate and the top surface of the fifth wheel.

NOTE: Do not use a lube plate (high density polyethylene) on top of the fifth wheel or on the kingpin instead of grease without prior approval by Fontaine Fifth Wheel. The additional thickness of this material can prevent the proper operation of the fifth wheel and may cause a dangerous condition.

NOTE: Fontaine suggests the use of a Moly based lubricant such as Mobilgrease XHP 320 or equivalent when applying lubricant to the locking jaw and wedge.

3. Lubricate the fifth wheel prior to opening and closing it. Separate the jaw and wedge with a screwdriver, and grease the full length of their mating surfaces. Lubricate the top and bottom contact surfaces of the jaw and wedge. Open and close the fifth wheel several times to further distribute the grease.

   Lightly oil other moving parts in the fifth wheel.
4. Apply grease to the top plate. Spread grease all over the mating surface of the top plate. Be sure the grease pockets built into the top plates are full of grease.

Holland FWS1

Apply a heavy coat of grease to the top plate, either through the grease fittings located on the underside of the top plate, or by direct application.

Holland FW35

1. Using a water-resistant lithium-base grease, grease the top plate.
2. Using a light oil (such as SAE 10W or 20W motor oil), lubricate the cam track and pivot. See **Fig. 11**.
3. Grease the yoke tips, locks, and the release handle and spring; see **Fig. 12**. Grease the

https://truckmanualshub.com/

mounting bracket supports through the grease fittings. A “low temp” grade grease rated for -30°F (-34°C) or lower such as Cato Oil and Grease #5213, Craftsman Chemical Co. #LTF 2, Mystic LP-200, or equivalent is recommended.

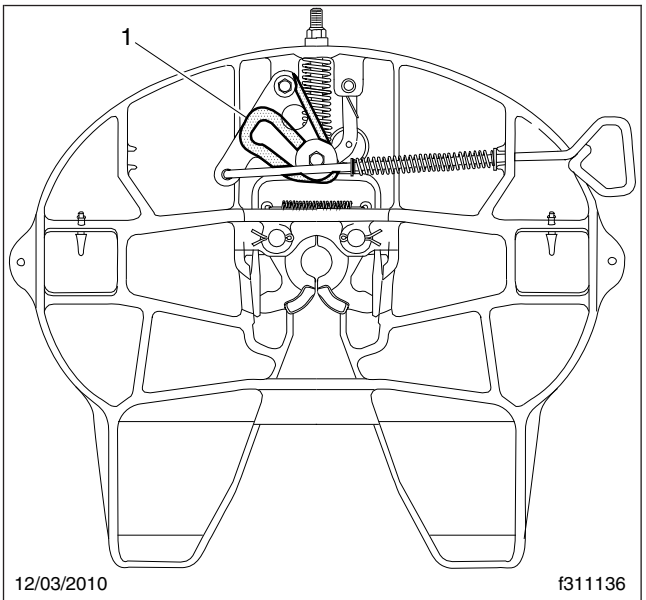

Use a light oil (such as SAE 10W or 20W motor oil) to lubricate the cam track and pivot.

1. Cam Plate

Fig. 11, Holland FW35 Fifth Wheel, Oil Lubrication

Castloc II and Simplex Series

Use a chassis or multipurpose grease to lubricate the two grease fittings located on either side of the fifth wheel top plate. Lubricate the two grease fittings located in the grease grooves on the fifth wheel top plate. Lubricate the two grease fittings located below the top plate mounting pins. Lubricate the lock mechanism.

Once the fifth wheel’s moving parts are lubricated, apply a heavy coat of grease to the top plate, either through the grease fittings located on the underside of the top plate, or by direct application. On slide-mount applications, lubricate the slider lock pockets and the slider bracket.

Jost

Lubricate the kingpin lock using a hand pump grease gun through the grease zerk on the skirt of the fifth

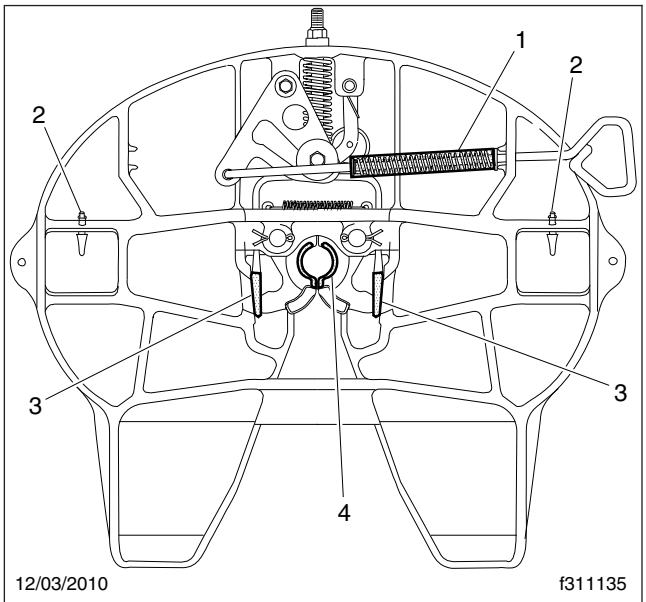

1. Release Handle and Spring
2. Grease Fitting
3. Yoke Tip
4. Locks

Fig. 12, Holland FW35 Fifth Wheel, Grease Lubrication

wheel; see **MOP 31–01**. Apply a light oil to all moving parts. For sliding fifth wheels spray diesel fuel on the slide path of the base plate.

NOTICE

Do not use a power grease gun. The pressure will damage the lube line.

If the fifth wheel is not equipped with low-lube plates, apply a lithium-based grease with extreme pressure (EP) additive to the trailer contact surface of the fifth wheel.

NOTE: If the fifth wheel is equipped with low-lube plates, the top plate only requires lubrication at the new product break-in stage. The low-lube plates require no further lubrication.

31–03 Frame Fastener Torque Check

Frame brackets and components secured with Huck-bolt® fasteners do not require a torque check, however, they should be inspected for damage. Frame brackets and components secured with conventional

https://truckmanualshub.com/

bolts and nuts are to be checked at Initial Maintenance (IM). See **Fig. 13** for pre-EPA2007 engine mounts. Check the torque of frame fasteners to offset the effects of "bedding in" (or seating). When checking torque, torque the nut, not the bolt head whenever possible. This will give a true torque reading by eliminating bolt-body friction. When checking the torque of frame fasteners, inspect the frame for cracks and other damage. Set a click-type torque wrench to the maximum torque of the fastener you are checking. Apply pressure until the torque wrench clicks. Do not loosen the bolt to check the torque. See the applicable torque table in **Group 00** for torque specifications.

NOTICE

Make sure frame fasteners are properly tightened. Continued vehicle operation with loose fasteners could result in bracket or frame damage.

NOTE: Engine supports on vehicles built from January 2007 do not require checking.

Check the fasteners at the following locations:

- Axle Stops
- Deck Plates
- Engine Trunnion Supports
- Equalizer Brackets
- Exhaust Brackets
- Fifth Wheel Legs
- Fifth Wheel Mountings
- Frame Crossmembers and Gussets
- Front Frame Brackets
- Front Suspension Spring Brackets
- Fuel Tank Brackets
- Radius Rods
- Rear Engine Supports
- Rear Suspension Spring Brackets
- Shock Absorbers
- All Other Frame Fasteners

Any component that shows signs of cracking or other damage must be repaired or replaced. Refer to the *Columbia® Workshop Manual* for repair or replacement information in the respective section for the component in question.

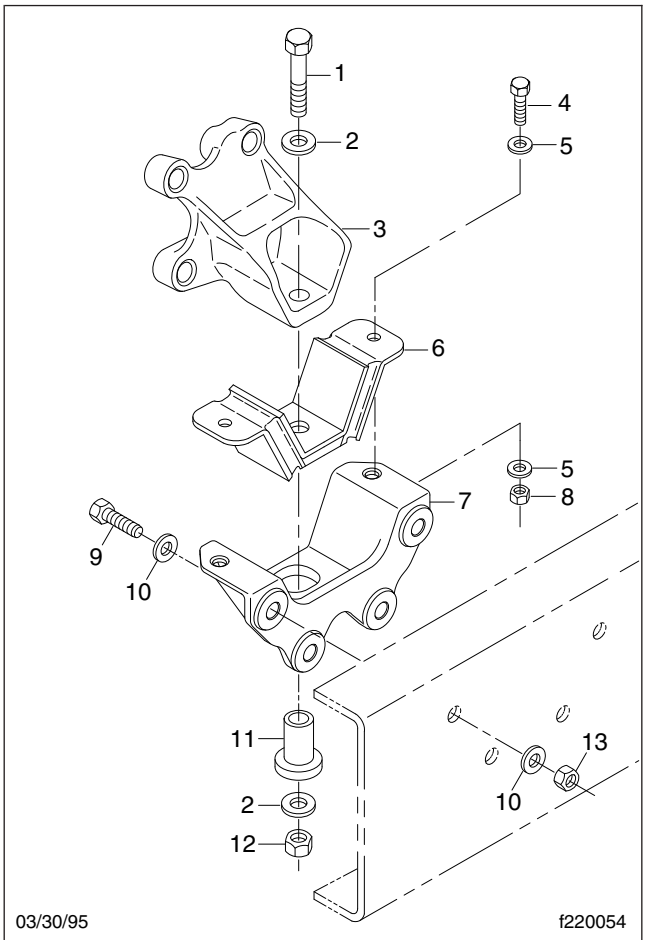

1. Capscrew, 3/4– x 4.5 Inch, Grade 8
2. Washer, 3/4 Inch
3. Engine Leg
4. Capscrew, 1/2–13 x 1.5 Inch, Grade 8
5. Washer, 1/2 Inch
6. Upper Isolator
7. Rear Engine Mount
8. Nut, 5/16–18
9. Capscrew, 5/8–11 x 2.5 Inch, Grade 8
10. Washer, 5/8 Inch
11. Lower Isolator
12. Nut, 3/4–10
13. Nut, 5/8–11

Fig. 13, Rear Engine Mount Assembly (pre-EPA07 engines)

31–04 Trailer Electrical Connector Lubrication

In some cases, failure of trailer cables occurs due to intrusion of chloride-based road deicing chemicals

https://truckmanualshub.com/

into the trailer connector. Once inside the connector, the chloride-based chemicals corrode the brass terminals and create bridging between positive and ground terminals.

NOTE: The use of soap is not recommended for cleaning the electrical connector, as some soaps may increase the corrosion process.

1. Wash out any existing grease, dirt, and corrosion on the trailer connectors with electrical contact cleaner spray.
2. Grease the trailer connector with a lithium-based dielectric grease.

31–05 Premier 690 Coupling Inspection

IMPORTANT: Before servicing the Premier coupling, refer to the Premier web site at **www.premier-mfg.com**for complete safety, operation, and maintenance instructions.

⚠ WARNING

If at any time the 690 coupling is bound up (jackknifed), the 294 bolt MUST be replaced immediately! Do not use the coupling until the bolt has been replaced. In addition, carefully inspect the 690 coupling, drawbar, drawbar eye, front end assembly, and tail board for damage. Failure to do so may result in trailer separation from the truck while in use, resulting in serious personal injury or property damage.

The time-in-service of the 294 bolt located in the 690 coupling must be monitored, and maintenance performed as follows. See **Fig. 14**.

For a new or replaced 294 bolt:

- Record the date of installation.

6 months after installation date:

- Remove the 294 bolt. Using dye penetrate or magnetic particle testing along the length of the bolt, inspect for fractures.
- If the 294 bolt has no damage, install it and continue to use for another 6 months.
- If the 294 bolt is fractured, DO NOT USE. Contact Premier Mfg. Co.

1 year after installation date:

- Regardless of service duty, replace the 294 bolt with a new one.

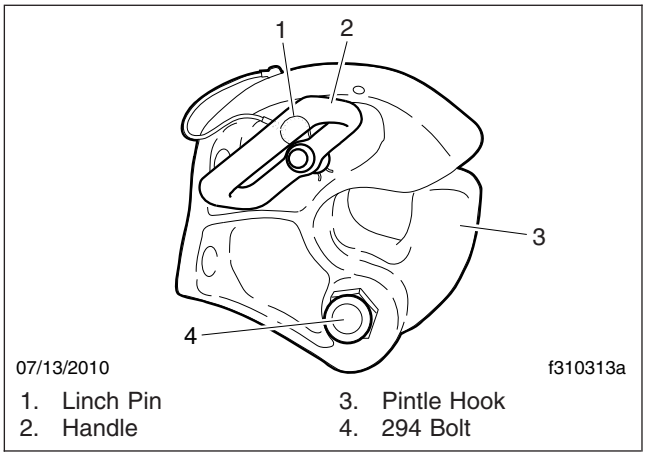

Fig. 14, Premier 690 Trailer Coupling

https://truckmanualshub.com/

Index, Alphabetical

Title of Maintenance Operation (MOP)	MOP Number
Safety Precautions	32–00
Suspension Inspection	32–01
Suspension Lubrication	32–02
Suspension U-Bolt Torque Check	32–03

https://truckmanualshub.com/

https://truckmanualshub.com/

32–00 Safety Precautions

Safety Precautions in this section apply to all procedures within this group.

⚠ DANGER

When working on the vehicle, shut down the engine, set the parking brake, and chock the tires. Before working under the vehicle, always place jack stands under the frame rails to ensure the vehicle cannot drop. Failure to follow these steps could result in serious personal injury or death.

32–01 Suspension Inspection

Front Suspension Check

⚠ WARNING

Do not replace individual leaves of a damaged leaf spring assembly; replace the complete spring assembly. Visible damage (cracks or breaks) to one leaf causes hidden damage to other leaves. Replacement of only the visibly damaged part(s) is no assurance that the spring is safe. On front spring assemblies, if cracks or breaks exist in the two top leaves, a loss of vehicle control could occur. Failure to replace a damaged spring assembly could cause an accident resulting in property damage, serious personal injury, or death.

Inspect the front spring assemblies for cracked, broken, or abnormally bent leaves. If any of these conditions exist, replace the spring assembly. See **Group 32** of the *Columbia® Workshop Manual* for instructions.

Composite Springs

The Commercial Vehicle Safety Alliance (CVSA) defines a crack that causes out-of-service conditions for composite spring assemblies, as a separation in any axis, which passes completely through the composite spring material.

For additional information, refer to the CVSA, *Out of Service (OOS) Criteria*, for composite spring assemblies, Section 9, Suspension, Pages 44 to 45.

Inspect the Liteflex spring for cracks that result in an out-of-service condition as follows (see **Fig. 1**):

- a side to side crack extending beyond 3/4 of the length of the spring;
- a top to bottom crack extending beyond 3/4 of the length of the spring;
- intersecting cracks of any length.

The Liteflex composite spring should also be removed from service if splintering has occured to the point where noticeable vehicle ride height loss has occurred.

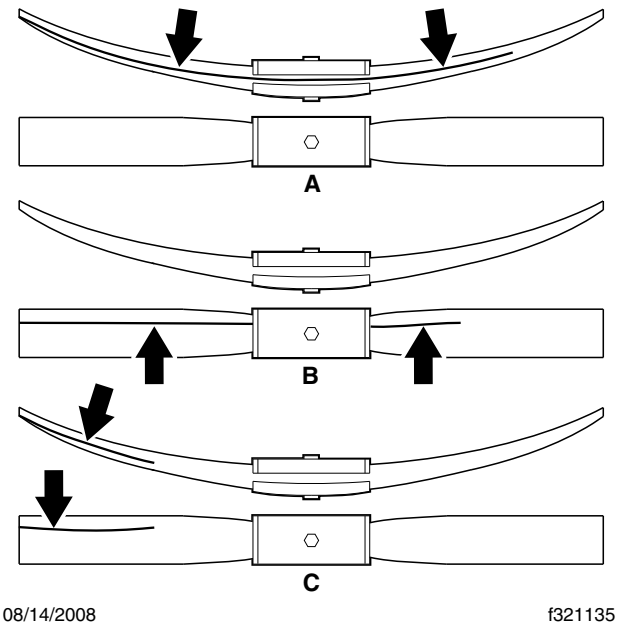

A. Side to side crack extending beyond 3/4 of the length of the spring
B. Top to bottom crack extending beyond 3/4 of the length of the spring
C. Intersecting cracks of any length

Fig. 1, Out-of-Service Conditions, Composite Spring

Shock Absorber Check, Front and Rear Suspensions

Make sure the shock absorber brackets are tight, and the shock absorber is not striking or rubbing the frame or some other part of the chassis. Striking or rubbing the frame is characterized by chafe marks on the shock absorber body and the frame rail. See **Fig. 2**. Check the rubber mounting bushings for cracks, cuts, swelling, and dry rot. Also, check the bushings for missing pieces. Replace the bushings as needed.

https://truckmanualshub.com/

Inspect the shock absorber for oil leakage. If the shock absorber is damaged or leaking, replace it with a new one. See **Group 32** of the *Columbia® Workshop Manual* for replacement instructions.

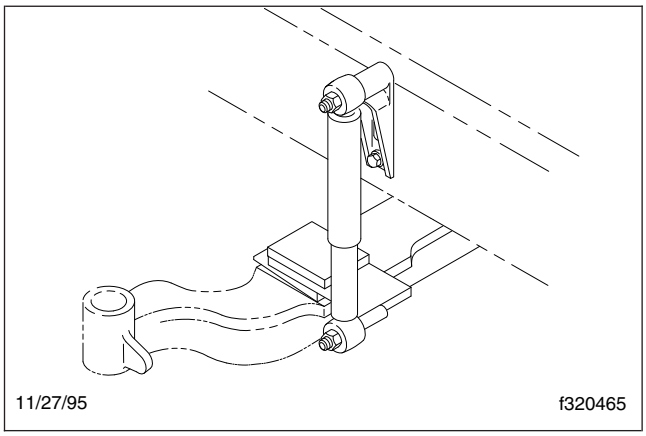

Fig. 2, Direct-Acting Shock Absorber (front suspension shown)

Rear Suspension Check

Freightliner Spring Suspension

⚠ WARNING

Do not replace individual leaves of a damaged leaf spring assembly; replace the complete spring assembly. Visible damage (cracks or breaks) to one leaf causes hidden damage to other leaves. Replacement of only visibly damaged parts is no assurance that the spring is safe. Failure to replace a damaged spring assembly could cause an accident, resulting in serious personal injury or property damage.

Replace worn, cracked, or damaged spring brackets. Failure to do so could result in bracket breakage, possibly leading to loss of vehicle control and resulting in personal injury or property damage.

1. Inspect the forward and rear spring brackets and equalizer brackets for wear, cracks, and other damage. If any of these conditions exist, replace the damaged bracket(s). See **Group 32** of the *Columbia® Workshop Manual* for instructions.
2. Inspect the tandem-axle frame crossmember and gussets for wear, cracks, and other damage. If any of these conditions exist, replace the damaged parts. See **Group 32** of the *Columbia® Workshop Manual* for instructions.

NOTICE

Failure to replace the suspension crossmember or gussets if they are cracked, worn, or otherwise damaged could result in damage to the vehicle chassis.

3. Without detaching the torque arms, attempt to move (by hand) each radius-rod end up, down, in, and out. If there is any movement, replace the torque arm. If a torque arm needs to be replaced, see **Group 32** of the *Columbia® Workshop Manual* for instructions.
4. Inspect the weld seams between the torque arm tube and the shorter bushing tubes. If there are cracks, replace the torque arm. Do not weld the torque arm for any reason.
5. Inspect the rubber bushing ends. See **Fig. 3**. Replace the torque arm for any of the following reasons:
   - if there are gaps between the rubber bushing and the pin or outer steel sleeve;
   - if either bushing end contacts a torque arm pin mounting bolt;
   - if there are cracks in the bushing;
   - if part of the rubber bushing extends beyond the outer circumference of the outer bushing sleeve.

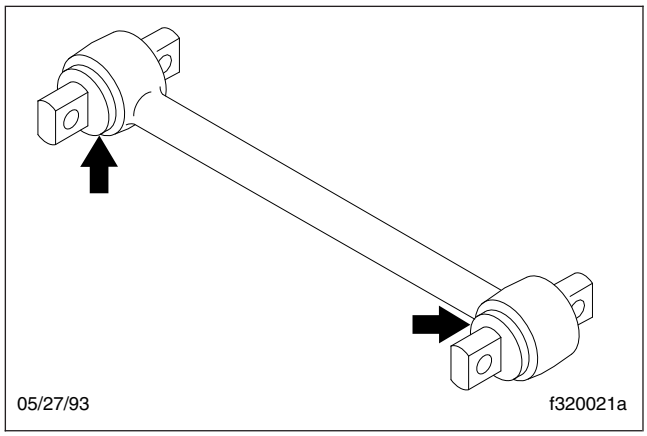

Fig. 3, Torque Arm Bushings

https://truckmanualshub.com/

6. Block up the frame enough to take chassis weight off the springs. Attempt to move the equalizer up and down, using a pry bar between the top of the equalizer and top of the equalizer bracket; apply hand pressure only. See **Fig. 4**. If movement at the center of the equalizer exceeds 1/8 inch (3 mm), replace the equalizer bushings. See **Group 32** of the *Columbia® Workshop Manual* for instructions.

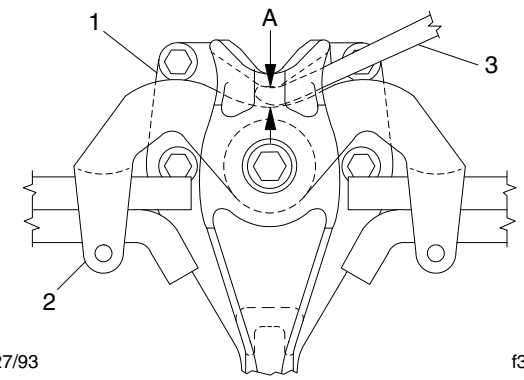

A. Measure the change in gap at this point.
1. Equalizer Bracket
2. Equalizer
3. Pry Bar

Fig. 4, Side View of the Equalizer

7. With the vehicle unloaded, attempt to move the equalizer side to side, using a pry bar between the equalizer and frame rail. Apply hand pressure only. See **Fig. 5**. If clearance between the equalizer assembly and any frame component or fastener is less than 1/8 inch (3 mm), replace the equalizer bushings. See **Group 32** of the *Columbia® Workshop Manual* for instructions.

Freightliner AirLiner Suspension

⚠ WARNING

Do not replace individual leaves of a damaged leaf spring assembly; replace the complete spring assembly. Visible damage (cracks or breaks) to one leaf causes hidden damage to other leaves. Replacement of only the visibly damaged part(s) is no assurance that the spring is safe. On front spring assemblies, if cracks or breaks exist in the two top leaves, a loss of vehicle control could occur. Failure to replace a damaged spring assembly could cause an accident resulting in property damage, serious personal injury, or death.

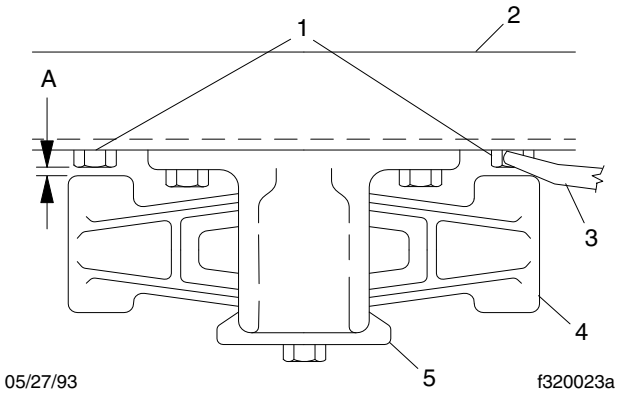

A. 1/8" (3 mm) Clearance
1. Frame Fasteners
2. Frame Rail
3. Pry Bar
4. Equalizer
5. Equalizer Bracket

Fig. 5, Top View of the Equalizer

Inspect the forward and rear spring brackets for wear, cracks, and other damage. If any of these conditions exist, replace the damaged bracket(s). See **Group 32** of the *Columbia® Workshop Manual* for instructions.

⚠ WARNING

Replace worn, cracked, or damaged spring brackets. Failure to do so could result in bracket breakage, possibly leading to loss of vehicle control and resulting in personal injury or property damage.

Inspect the crossmember(s) and gussets for wear, cracks, and other damage. If any of these conditions exist, replace the damaged parts. See **Group 32** of the *Columbia® Workshop Manual* for instructions.

IMPORTANT: Before checking the AirLiner suspension height, make sure there is no load on the chassis, and the trailer is unhitched.

IMPORTANT: To prevent voiding the warranty on Barksdale height-control valves, note the following:

- Do not overtighten the bolts in the Barksdale height-control valve housing. The bolts should not be loose, and should not require tightening.

https://truckmanualshub.com/

Only if necessary, tighten the valve housing bolts 45 lbf·in (500 N·cm). Any damage to the valve housing will void the warranty.

- Do not attempt to disassemble the Barksdale valve body or the control lever. There are no serviceable parts in the valve, and any disassembly will void the warranty.

NOTICE

When removing or loosening a Barksdale height-control valve from a mounting bracket, always hold the valve-side mounting studs in place with an Allen wrench while loosening or tightening the nuts that attach the valve to the bracket. Because the mounting studs are threaded into the valve body, loosening the nuts without holding the studs can tighten the studs, which can crush the valve body and damage the valve. Conversely, tightening the nuts without holding the studs can back the studs out, causing a separation of the two halves of the valve body, and possibly a leak.

1. Park the vehicle on a level surface, using a light application of the brakes. Do not apply the parking brakes. Shift the transmission into neutral, and build the secondary air pressure to at least 100 psi (690 kPa). Shut down the engine.
2. Mark the location of the front and rear tires on the floor, and chock the tires on one axle only.
3. Check the length of the overtravel lever between its pivot points. See **Fig. 6**, Ref. A.
   - 3.1 If the vehicle is equipped with an adjustable leveling valve, the length should be 8 inches (200 mm). If the length is incorrect, see **Group 32** of the *Columbia® Workshop Manual* for adjustment procedures.
   - 3.2 If the vehicle is equipped with a fixed leveling valve, see **Group 32** of the *Columbia® Workshop Manual* for the overtravel lever length for the rear axle installed in your vehicle.
4. On single-drive rear axle configurations, measure the distance from the bottom of the left axle stop to the top of the U-bolt pad. On tandem (dual-drive) rear axle configurations, measure the distance from the bottom of the forwardmost left axle stop to the top of the axle U-bolt pad. See **Fig. 7**, Ref. A. The correct distance for single and dual-drive rear axles is between 2-3/8 inches and 2-7/8 inches (60 to 73 mm).

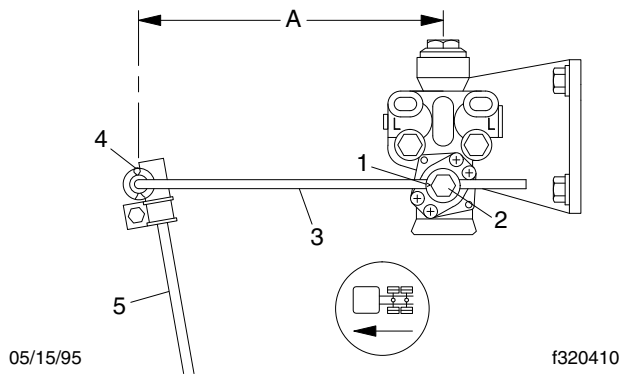

A. Measure the length of the overtravel lever between these two points.

1. V-Shaped Mark
2. Adjustment Locknut
3. Overtravel Lever
4. Cotter Pin
5. Linkage Rod

Fig. 6, AirLiner Overtravel Lever and Linkage Rod Measurement

5. If the axle stop measurement is not correct, see **Group 32** of the *Columbia® Workshop Manual* for adjustment procedures.
6. Apply the parking brakes, and remove the chocks.

Chalmers Suspension

1. Chock the front tires, place the transmission in neutral, and release the parking brakes.
2. Power wash the suspension, or clean it with a hard-bristle brush before performing a visual inspection.
3. Inspect the rubber bushings for cracks or other damage.

   Try to move the torque rod ends using your hands only, and check for any free-play. If free-play is felt, replace the torque rod end bushing. Do not use a pry bar to check for free-play. Use of a pry bar may lead to premature bushing replacement.
4. Lift the rear of the vehicle and support the frame on jack stands to unload the suspension components. The vehicle is lifted high enough when the beam ends are off of the saddles.

https://truckmanualshub.com/

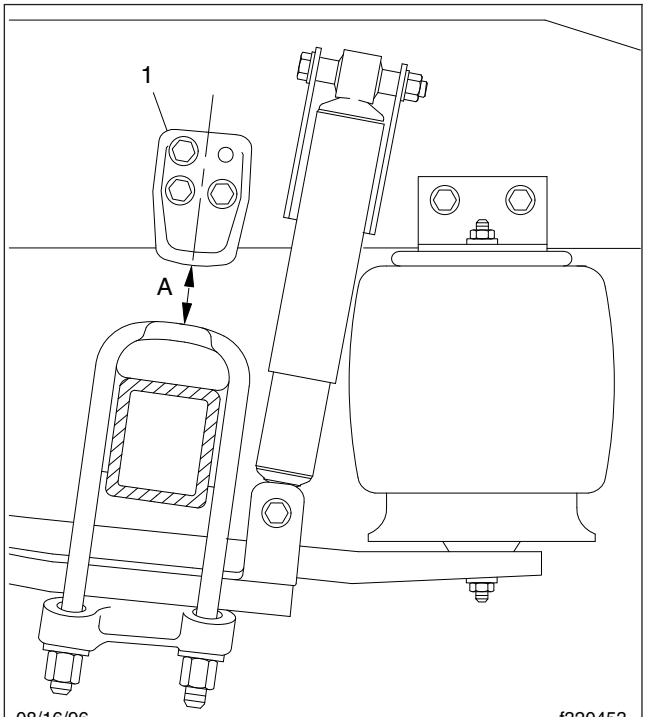

A. Measure height here.
1. Left Forwardmost Axle Stop

Fig. 7, AirLiner Axle Stop Measurement

Inspect the walking beam for cracks or other damage. If damage is found, replace the walking beam.

Keep the vehicle supported by the jack stands for the next operation.

5. Manipulate the walking beam so that a micrometer, vernier, or dial caliper can be used to determine the wear area thickness on the bottom face. See **Fig. 8.** Measurements should be taken a minimum of 1/2 inch from the beam flange edges to eliminate any edge wear that may have occurred. Subtract the wear area thickness (see **Fig. 8**, Ref. B) from the thickness at the non-wear area (see **Fig. 8**, Ref. A) to determine the amount of wear.

   If the beams show any wear greater than 0.062 inch (1.5 mm), a Chalmers wear plate must be installed, or the walking beam must be replaced.

6. Rotate the restrictor cans 360 degrees and inspect the cans for cracks, severe corrosion, and distortion. If any of these conditions are present, or the restrictor can is missing, replace the restrictor can.

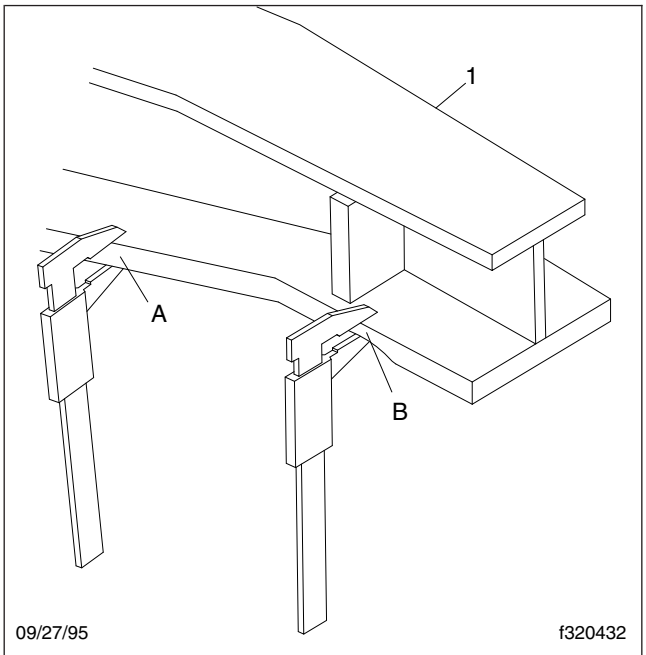

A. Non-Wear Area
B. Wear Area
1. Walking Beam

Fig. 8, Walking Beam End Wear Thickness

⚠ WARNING

Replace all cracked or missing restrictor cans. Failure to do so could lead to loss of vehicle control, which could result in property damage, serious personal injury, or death.

32–02 Suspension Lubrication

Front Suspension

Wipe all dirt away from the grease fittings (if equipped) on the spring-eye bushings. Apply multipurpose chassis grease with a pressurized grease gun until old grease is forced out.

NOTE: Service Schedule IV vehicles equipped with a 12,000 lb (5452 kg) front axle are fitted with maintenance-free rubber bushings, and do not require lubrication.

https://truckmanualshub.com/

Rear Suspension

Chalmers

No lubrication is required on the Chalmers rear suspension.

Freightliner Spring

Single Axle

No lubrication is required on Freightliner single axle rear suspensions.

Tandem Axle

Lubricate the equalizer cap-and-tube assembly bushings by applying multipurpose chassis grease at the grease fitting until old grease is forced out from the cap-and-tube assembly. See **Fig. 9**.

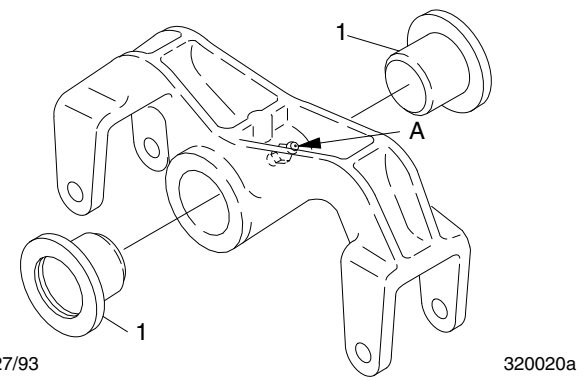

A. Lubricate here.
1. Cap-and-Tube Assembly Bushing

Fig. 9, Equalizer Assembly Lubrication

Hendrickson

The Hendrickson RS Series suspension does not require lubrication.

For Hendrickson RT2 and RTE2 Series, lubricate the bronze, ball-indented bushings in the spring eye, as follows:

1. Park the vehicle on a level surface, apply the parking brakes, and chock the front tires.
2. Raise the rear of the vehicle until the rear wheels are suspended in the air, then support the vehicle with safety stands. This relieves the load on the bushings and pins to allow the proper flow of lubricant around them.
3. Use a multipurpose chassis grease and lubricate the bronze, ball-indented bushings in the spring eyes at the grease fitting. See **Fig. 10**. Continue to lubricate until grease exits both ends of the bushing. If the pin will not accept lubricant, remove the pin and clean the lubrication channels where lubricant may have hardened. Remove the safety stands.

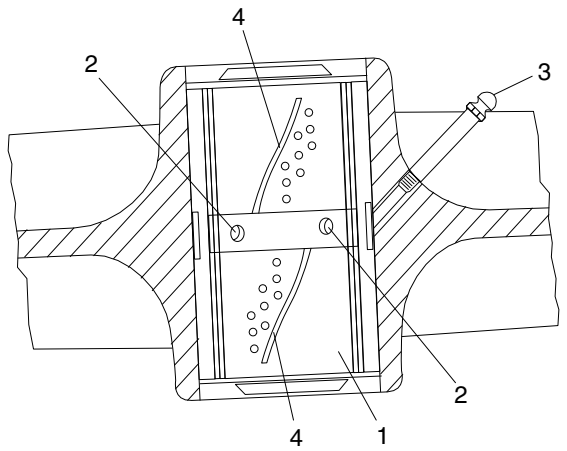

1. Bronze Bushing
2. Lubrication Hole
3. Grease Fitting
4. Lubrication Groove

Fig. 10, Hendrickson RT2 and RTE2 Series Bushing Lubrication

Neway

No lubrication is required on Neway rear suspensions.

Reyco

No lubrication is required on Reyco rear suspensions.

32–03 Suspension U-Bolt Torque Check

CAUTION

Failure to retorque the U-bolt nuts could result in spring breakage and abnormal tire wear.

https://truckmanualshub.com/

1. Park the vehicle on a flat surface and apply the parking brakes. Chock the tires.
2. Check the U-bolt torque in a diagonal pattern. Set a click-type torque wrench to the highest torque value for the fastener being checked. See **Table 1** for U-bolt torque specifications. Turn the wrench in a clockwise motion (looking up) until the torque wrench clicks.
3. Remove the chocks.

Spring Assembly U-Bolt High Nut Torque Values*	
Size	**Torque: lbf·ft (N·m)**
5/8–18	Stage 1: Hand Tighten Stage 2: 60 (81) Stage 3: 200 (271) Stage 4: 180 to 230 (245 to 313)
3/4–16	Stage 1: Hand Tighten Stage 2: 60 (81) Stage 3: 200 (271) Stage 4: 270 to 330 (367 to 449)
7/8–14	Stage 1: Hand Tighten Stage 2: 60 (81) Stage 3: 200 (271) Stage 4: 420 to 500 (571 to 680)
1–14	Stage 1: Hand tighten Stage 2: 60 (81) Stage 3: 200 (271) Stage 4: 520 to 600 (707 to 816)

* Tighten in a diagonal pattern as shown in **Fig. 11**.

Table 1, Spring Assembly U-Bolt High Nut Torque Values

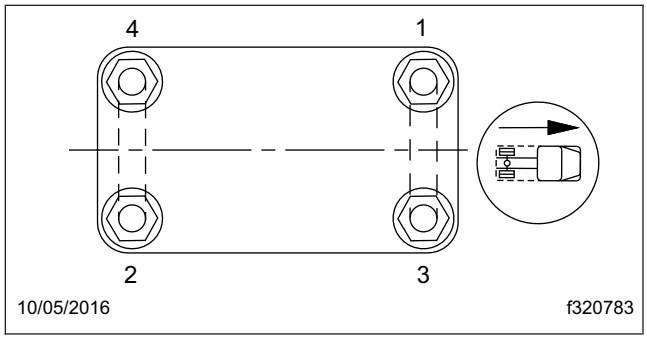

Fig. 11, Tightening Pattern for U-Bolt High Nuts

https://truckmanualshub.com/

https://truckmanualshub.com/

Index, Alphabetical

Title of Maintenance Operation (MOP)	MOP Number
All-Axle Alignment Check	33–04
Basic Inspection, Meritor Unitized Wheel Ends	33–07
End-Play Check, Meritor Unitized Wheel Ends	33–08
Kingpin Lubrication, Detroit™ Axles	33–09
Knuckle Pin Lubrication, Dana Spicer Axles	33–05
Knuckle Pin Lubrication, Meritor Axles	33–01
Safety Precautions	33–00
Steer Axle Hub Cap Vent Plug Inspection	33–11
Tie Rod Inspection	33–02
Tie Rod Lubrication, Dana Spicer Axles	33–06
Tie Rod Lubrication, Detroit™ Axles	33–10
Tie Rod Lubrication, Meritor Axles	33–03

https://truckmanualshub.com/

https://truckmanualshub.com/

33–00 Safety Precautions

Safety Precautions in this section apply to all procedures within this group.

DANGER

When working on the vehicle, shut down the engine, set the parking brake, and chock the tires. Before working under the vehicle, always place jack stands under the frame rails to ensure the vehicle cannot drop. Failure to follow these steps could result in serious personal injury or death.

33–01 Knuckle Pin Lubrication, Meritor Axles

CAUTION

Use regulated pressure when lubricating the knuckle assemblies, otherwise damage could result to the knuckle caps.

When lubricating knuckle pin bushings, do not raise the front axle. Wipe the lube fittings clean, and apply multipurpose chassis grease, NLGI Grade 1 (6% 12-hydroxy lithium stearate grease) or NLGI Grade 2 (8% 12-hydroxy lithium stearate grease) until new grease is seen at the bushing grease seal opposite the fittings. The grease seal will accept grease pressure without damage, and is designed to have grease pumped out through it during lubrication. Even if grease leaks out around the top, or bottom-plate gasket, continue pumping until new grease is seen at the bushing seal opposite the grease fitting. See **Fig. 1**.

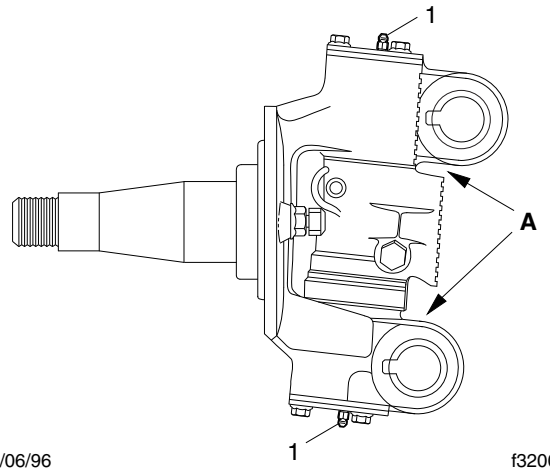

09/06/96 f320032a

A. Grease Exit
1. Grease Fitting

Fig. 1, Meritor Knuckle Pin Lubrication

33–02 Tie Rod Inspection

Inspect the tie-rod ends as follows:

1. Shake the cross-tube. A loose fit, or movement between the tapered shaft of the ball and the cross-tube socket members indicates that the tie-rod end assembly must be replaced.
2. The threaded portion of the tie-rod end assembly must be inserted all the way into the cross-tube split for adequate clamping. See **Fig. 2**. Replace the components if this cannot be done. For instructions, refer to **Group 33** of the *Columbia® Workshop Manual*.

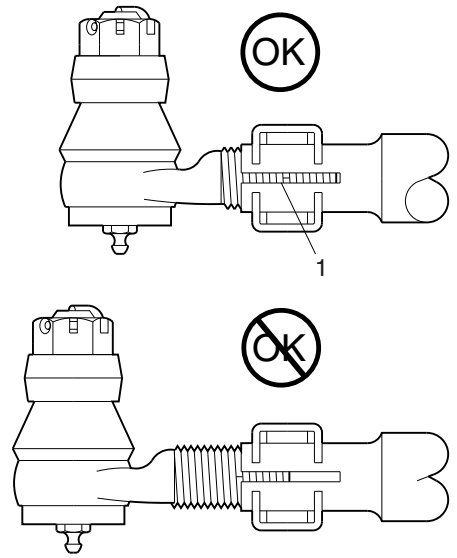

02/27/2007 f320033a

NOTE: Shown without pinch bolt to provide clarity.

1. Cross-Tube Split

Fig. 2, Tie-Rod End Adjustment

https://truckmanualshub.com/

33–03 Tie Rod Lubrication, Meritor Axles

For any Meritor axle that requires lubrication of the tie-rod ends, wipe the grease fittings clean, then pump multipurpose chassis grease, NLGI Grade 1 (6% 12-hydroxy lithium stearate grease) or NLGI Grade 2 (8% 12-hydroxy lithium stearate grease), into the tie-rod ends until all used grease is forced out and fresh grease is seen at the ball stud neck.

33–04 All-Axle Alignment Check

Drive Axle Alignment Checking

Check the axle alignment, parallelism, and thrust angle measurements for the rear drive axles. Use the applicable procedure and specifications in **Group 35** of the *Columbia® Workshop Manual*.

Toe-In Inspection

For vehicle alignment to be accurate, the shop floor must be level in every direction. The turn plates for the front wheels must rotate freely without friction, and the alignment equipment must be calibrated every three months by a qualified technician from the equipment manufacturer. Freightliner dealers must have proof of this calibration history.

1. Apply the parking brakes and chock the rear tires.
2. Raise the front of the vehicle until the tires clear the ground. Place safety stands under the axle.
3. Using spray paint or a piece of chalk, mark the entire center rib of each front tire.
4. Place a scribe or pointed instrument against the marked center rib of each tire, and turn the tires. The scribe must be held firmly in place so that a single straight line is scribed all the way around each front tire.
5. Place a turn-plate or turntable under both front tires. Remove the safety stands and lower the vehicle. Remove the lock-pins from the gauges; make sure the tires are exactly straight ahead.

NOTE: If turn-plates or turntables are not available, lower the vehicle. Remove the chocks from the rear tires and release the parking brakes. Move the vehicle backward, then forward about six feet (two meters).

6. Place a trammel bar at the rear of the front tires; locate the trammel pointers at spindle height, and adjust the pointers to line up with the scribe lines on the center ribs of the front tires. See **Fig. 3**. Lock in place. Check that the scale is set on zero.

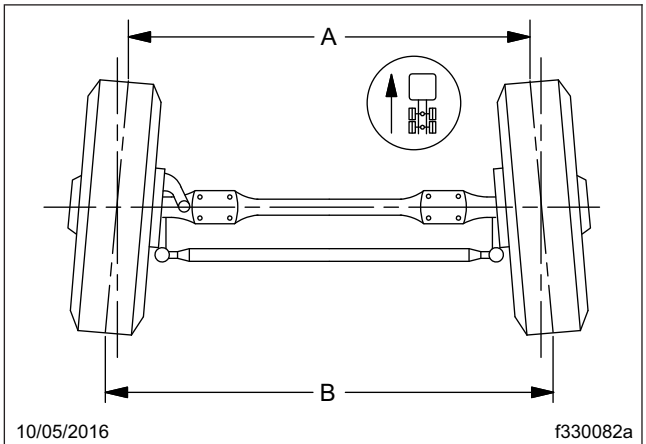

NOTE: B minus A equals toe-in.

Fig. 3, Wheel Toe-In (overhead view)

7. Place the trammel bar at the front of the tires (see **Fig. 4**) and adjust the scale end so that the pointers line up with the scribe lines. See **Fig. 5**.

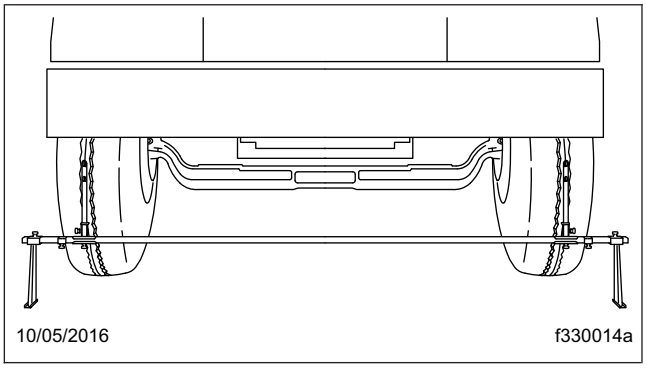

Fig. 4, Trammel Bar Positioning

8. Read the toe-in from the scale, and compare it to the toe-in specification in **Group 33** of the *Columbia® Workshop Manual*. If corrections are needed, refer to **Group 33** of the *Columbia®*

https://truckmanualshub.com/

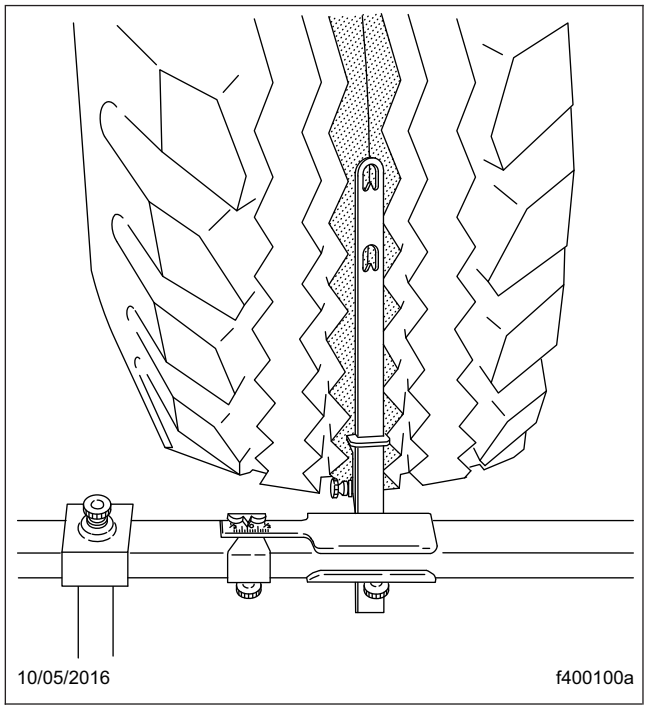

Fig. 5, Setting Trammel Bar Pointers

Workshop Manual for instructions on adjusting the toe-in.

33–05 Knuckle Pin Lubrication, Dana Spicer Axles

CAUTION

Use regulated pressure when lubricating the knuckle assemblies, otherwise damage could result to the knuckle caps.

Park the vehicle on a level surface, apply the parking brakes, and chock the tires. When lubricating upper and lower knuckle assemblies, do not raise the front axle. Wipe the fittings clean, then apply multipurpose chassis grease, NLGI Grade 1 (6% 12-hydroxy lithium stearate grease) or NLGI Grade 2 (8% 12-hydroxy lithium stearate grease), until new grease is seen at the junctions of the axle beam and knuckles. See **Fig. 6**. Knuckle pins without grease fittings are permanently lubricated.

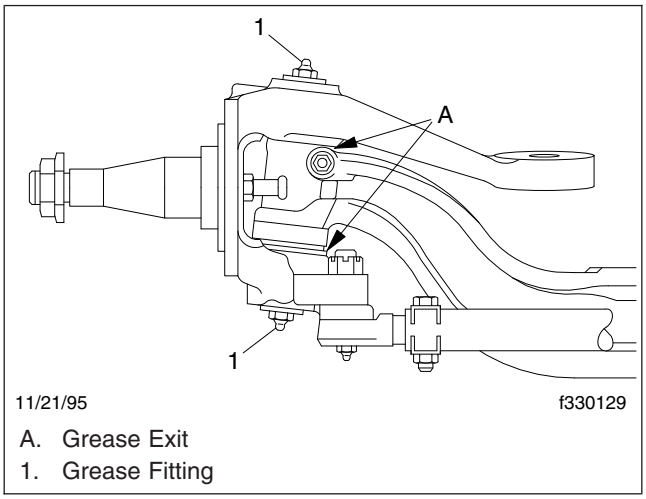

Fig. 6, Dana Spicer Knuckle Pin Lubrication

33–06 Tie Rod Lubrication, Dana Spicer Axles

For any Dana Spicer axle that requires lubrication of the tie-rod ends, wipe the grease fittings clean, then pump multipurpose chassis grease, NLGI Grade 1 (6% 12-hydroxy lithium stearate grease) or NLGI Grade 2 (8% 12-hydroxy lithium stearate grease), into the tie-rod ends until all used grease is forced out and fresh grease is seen at the ball stud neck.

33–07 Basic Inspection, Meritor Unitized Wheel Ends

1. Park the vehicle on a level surface, set the parking brakes, shut down the engine, and chock the rear tires.
2. Raise the vehicle until the front tires are clear of the ground. Support the vehicle with safety stands.

WARNING

Never work under a vehicle that is supported only by a jack. Jacks can slip, causing the vehicle to fall. This could result in serious injury or death.

IMPORTANT: A clicking sound while rotating the wheel end (hub) is normal and does not indicate a problem.

https://truckmanualshub.com/

3. Rotate the tire and hub assembly. They should rotate smoothly and without noise. Grasp the brake chamber while rotating the hub to detect any hub vibration.

   If the hub rotates smoothly, go to the next step.

   If the tire and hub assembly do not rotate smoothly, or you hear noise during rotation, go to "End-Play Check, Meritor Unitized Wheel Ends."
4. Grasp the tire and hub assembly at the 3 o'clock and 9 o'clock positions. Using about 50 pounds (23 kg) of force, check for vertical and horizontal movement.
5. If no movement or looseness is detected, raise the vehicle to remove the safety stands, lower the vehicle, and remove the chocks from the tires.

   If any movement or looseness is detected, go to the next step.
6. Check the wheel-to-hub mounting. Make sure the wheel and tire assembly is mounted correctly and that all hardware is secure.
7. Apply the service brakes to lock the hub and axle spindle together. Check again for movement and looseness.

   If movement is detected, the king pin or king pin bushings are probably worn.

   If applying the service brake eliminates the movement, the problem is probably caused by incorrect wheel bearing end-play. Go to "End-Play Check, Meritor Unitized Wheel Ends."

33–08 End-Play Check, Meritor Unitized Wheel Ends

1. Park the vehicle on a level surface, set the parking brakes, shut down the engine, and chock the rear tires.
2. Remove the hub cap.
3. Raise the vehicle until the front tires clear the ground. Support the vehicle with safety stands.

⚠ WARNING

Never work under a vehicle that is supported only by a jack. Jacks can slip, causing the vehicle to fall. This could result in serious injury or death.

4. Remove the tire and wheel assembly.

NOTE: It is normal for small amounts of grease to be visible around the inner and outer wheel bearings.

5. Remove the brake drum. If needed, back off the slack adjuster.
6. Attach the magnetic base of a dial indicator to the end of the axle spindle.
7. Touch the dial indicator stem to the surface of the hub, making sure the stem is perpendicular to the surface of the hub.
8. Set the dial indicator to zero.
9. Without rotating the hub, grasp it at the 3 and 9 o'clock positions, and push it straight in. Note the reading on the dial indicator.

   Pull the hub straight out. Note the reading on the dial indicator.

   The difference between the two measurements is the end-play.
10. If the end-play is less than 0.003 inch (0.08 mm), go to the step for installing the hub cap.

    If the end-play is 0.003 inch (0.08 mm) or greater, go to the next step.
11. Remove the outer locknut and tabbed washer from the axle spindle.
12. Loosen, but don't remove, the inner locknut.
13. While rotating the hub a minimum of five rotations, tighten the inner locknut 600 lbf·ft (813 N·m).
14. Install the tabbed washer and outer locknut. Tighten 250 lbf·ft (339 N·m).
15. Repeat the procedure for checking end-play.
16. If end-play is greater than 0.003 inch (0.08 mm) but less than 0.006 inch (0.15 mm), record it in the vehicle maintenance log. Go to the next step.

    If end-play is 0.006 inch (0.15 mm) or greater, replace the entire wheel end assembly. For instructions, see **Group 33** of the *Columbia® Workshop Manual*.
17. Check the rotation of the hub. If it doesn't rotate smoothly and without noise, replace the entire wheel end assembly. For instructions, see **Group 33** of the *Columbia® Workshop Manual*.

https://truckmanualshub.com/

If the hub rotates smoothly and without noise, go to the next step.

18. Bend an opposing tab of the tabbed washer over a flat of the outer locknut.
19. Install the wheel and tire assembly. Hand-tighten the wheel nuts.
20. Raise the vehicle, remove the jackstands, then lower the vehicle.
21. Tighten the wheel nuts 500 lbf·ft (678 N·m).
22. Install the hub cap.

    If installing a metal hub cap, go to the next step.

    If installing a plastic hub cap, do the following:

    22.1 Apply a continuous 1/8-inch (3-mm) bead of RTV silicone sealant to the outside first thread of the hub cap. Apply the sealant around the entire circumference.

    IMPORTANT: Use only the following RTV sealants on the hub cap:

    - Meritor part number 2297-Z-7098
    - Three Bond®
    - Loctite® Ultra Grey Adhesive Sealant 18581

    22.2 Install the hub cap by hand until it is seated.

    NOTE: Disregard the torque value embossed on the hub cap.

    22.3 Using a torque wrench, tighten the hub cap 75 lbf·ft (102 N·m).

    If you cannot tighten the hub cap to the correct torque value, or if it makes a popping sound while being tightened, replace it with a new one.
23. If installing a metal hub cap, do the following:

    23.1 Using a wire brush, clean the unitized wheel-end inner threads and the hub cap external threads.

    23.2 Apply Loctite 17430 gasket sealant to the external hub cap threads.

    23.3 Install the hub cap by hand until it is seated.

    23.4 Using a torque wrench, tighten the hub cap 350 lbf·ft (475 N·m).

    NOTE: If you cannot tighten the hub cap to the correct torque value, or if it makes a popping sound while being tightened, replace it with a new one.
24. Remove the chocks from the tires.

33–09 Kingpin Lubrication, Detroit™ Axles

1. Park the vehicle on a level surface, shut down the engine, and set the parking brake. Chock the tires. When lubricating the kingpin, do not raise the front axle.
2. Wipe the fittings clean.
3. Apply multipurpose chassis grease, NLGI Grade 1 (6% 12-hydroxy lithium stearate grease) or NLGI Grade 2 (8% 12-hydroxy lithium stearate grease), until new grease is seen at the junctions of the axle beam and knuckles. For locations of grease fittings, see **Fig. 7**; for grease exit points, see **Fig. 8**.

33–10 Tie Rod Lubrication, Detroit™ Axles

For any Detroit axle that requires lubrication of the tie-rod ends, wipe the grease fittings clean, then pump multipurpose chassis grease, NLGI Grade 1 (6% 12-hydroxy lithium stearate grease) or NLGI Grade 2 (8% 12-hydroxy lithium stearate grease), into the tie-rod ends until all used grease is forced out and fresh grease is seen at the ball stud neck. See **Fig. 9**.

33–11 Steer Axle Hub Cap Vent Plug Inspection

General Information

As a function of their design, hubcap vent plugs will on occasion exhibit signs of hub oil on their exterior surface. Depending on environmental conditions and/or age of the plug, the amount of oil present can vary. This is a normal result of the venting process due to pressure increase within the hub cavity. For an example of normal vent plug appearance, see **Fig. 10**.

https://truckmanualshub.com/

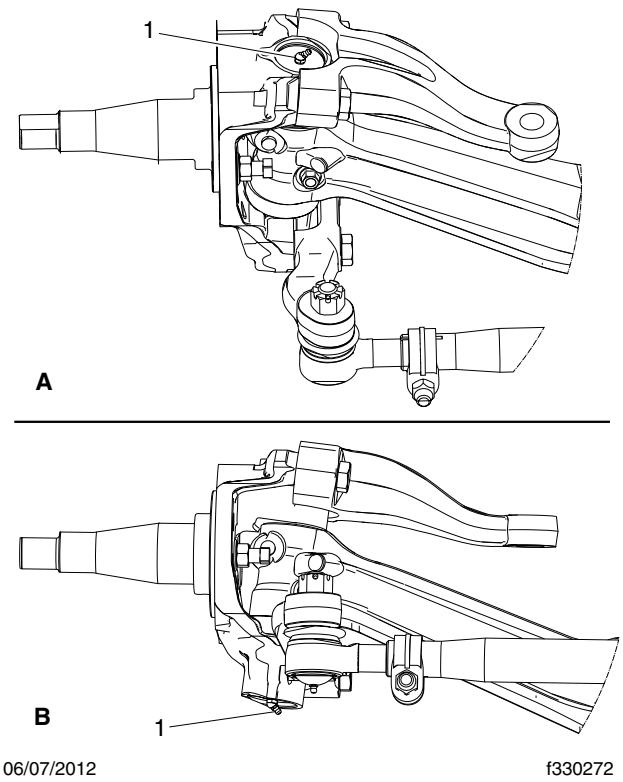

06/07/2012 f330272

A Upper View, LH Side B Lower View, LH Side
1. Grease Fitting

Fig. 7, Kingpin Grease Fittings, Detroit Axles

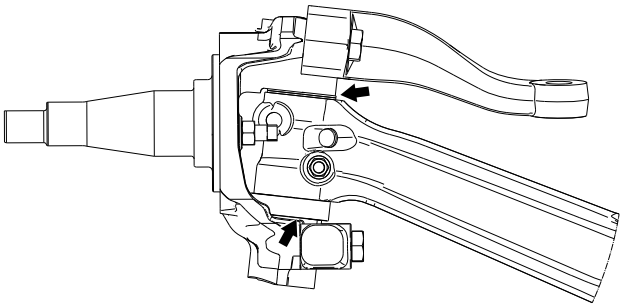

09/13/2012 f330275

Fig. 8, Kingpin Grease Exit Points, Detroit Axles

A vent plug can wear or be damaged and cause excessive leakage, or allow water to enter the hub and contaminate the oil. For examples of a leaking vent plug, see **Fig. 11** and **Fig. 12**. Evidence of a leaking vent plug may appear as;

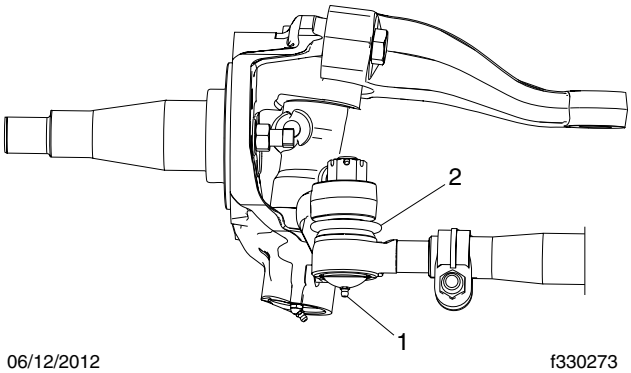

06/12/2012 f330273

NOTE: No grease should emit from the tie-rod boot. If grease emits from the tie-rod boot, the boot is damaged.

1. Grease Fitting 2. Boot

Fig. 9, Tie Rod Grease Fitting and Boot, Detroit Axles

09/01/2016 f330298

Fig. 10, Normal Oil Venting

- Oil splatter around the wheel
- Gooey/gummy oil around the vent plug purge point
- Hub/plug area is dirty, and water contaminated oil in the hub.
- Hub/plug area is clean, but there is water contaminated oil in the hub. (pressure washing is the most likely cause)

https://truckmanualshub.com/

09/01/2016 f330299

Fig. 11, Excessive Leakage

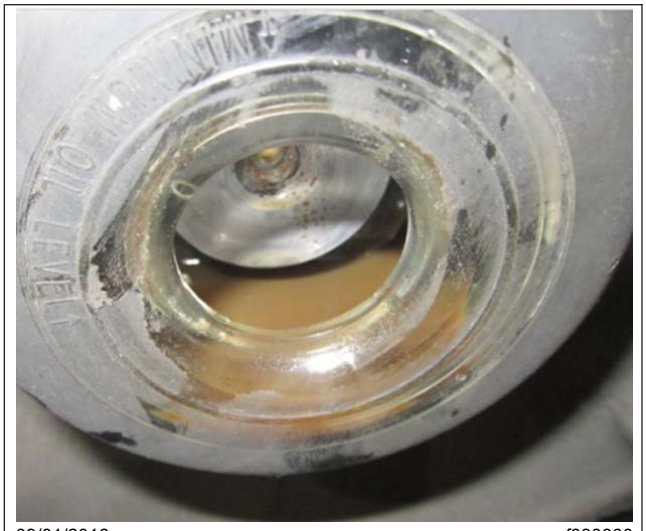

09/01/2016 f330300

Fig. 12, Water in Oil

Inspection

NOTICE

Only remove vent plugs by hand. They can be damaged if a tool is used. Wipe the hub/plug area clean before checking the oil. Do not use a pressure washer to clean the hub/plug area. The plug has a vent and this can contaminate the oil with water.

1. Park the vehicle on a level surface, shut down the engine and set the parking brakes. Chock the tires.
2. Inspect the axle hub cap and vent plug for evidence of excessive leakage.
3. Wipe the hub cap and vent plug clean with a rag.
4. Remove the vent plug and check the oil for evidence of water contamination.

   If there is evidence of water contaminated oil in the hub, disassemble the effected axle end, clean, inspect, and reassemble the axle end. For instructions, refer to **Group 33** of the vehicle's Workshop Manual.

   If there is evidence of excessive leakage, remove the damaged part and replace it with a new part.
5. Check the oil level in the hub, and fill the hub with new approved oil as needed.

https://truckmanualshub.com/

https://truckmanualshub.com/

Index, Alphabetical

Title of Maintenance Operation (MOP)	MOP Number
Axle Breather and Axle Lubricant Level Inspection	35–02
Axle Lubricant and Filter Change, and Magnetic Strainer Cleaning (Synthetic Lubricant)	35–01
Safety Precautions	35–00

https://truckmanualshub.com/

https://truckmanualshub.com/

35–00 Safety Precautions

Safety Precautions in this section apply to all procedures within this group.

⚠ DANGER

When working on the vehicle, shut down the engine, set the parking brake, and chock the tires. Before working under the vehicle, always place jack stands under the frame rails to ensure the vehicle cannot drop. Failure to follow these steps could result in serious personal injury or death.

35–01 Axle Lubricant and Filter Change, and Magnetic Strainer Cleaning (Synthetic Lubricant)

NOTICE

Failure to change the axle lubricant at more frequent intervals, when adverse operating conditions require, could result in axle damage.

For all axles, including tandem-drive axles and two-speed axles, do the procedures under the heading, "All Axle Models." For a two-speed axle with a shift unit, also change the shift unit lubricant. See under the heading, "Two-Speed Axles With Shift Unit."

All Axle Models

Detroit™

IMPORTANT: On Detroit axles, the oil change interval for long haul vehicles can be extended to 500,000 miles (800 000 km) for axles with weight ratings of 34,000 to 40,000 lb (15 000 to 18 000 kg) using synthetic lubricant if a lubricant analysis shows adequate quality. Oil must be changed at least every four years, and more often if the axle is exposed to high temperatures and steep grades.

1. Park the vehicle on a level surface, shut down the engine, and set the parking brake. Chock the tires.
2. Clean the fill plug and the area around it. In the axle housing rear cover, remove the plug from the oil fill hole. See **Fig. 1**.

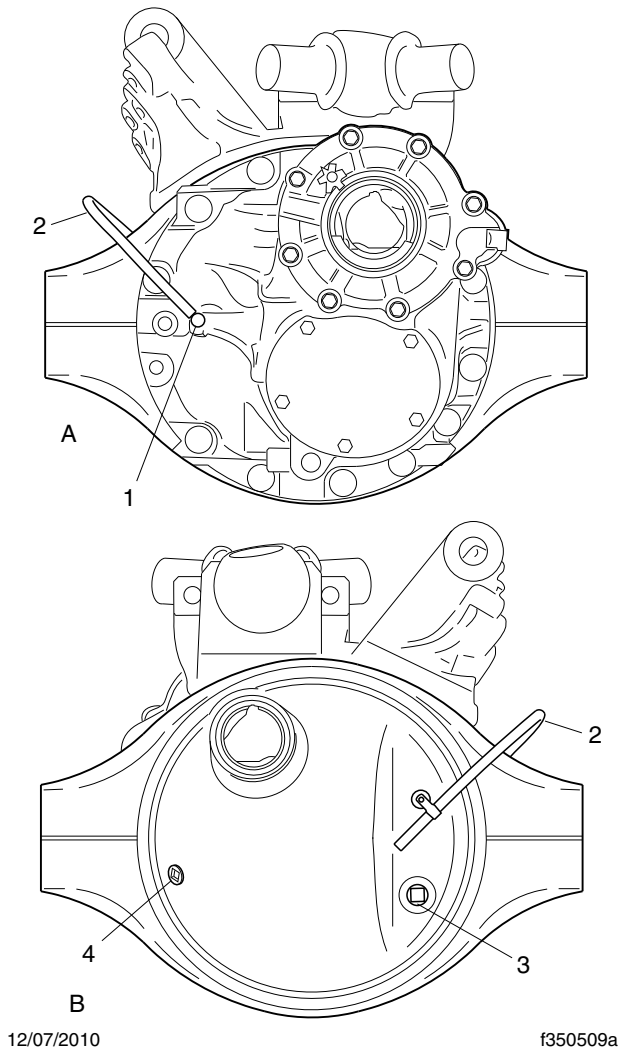

A. Front View
B. Rear View
1. Axle Breather
2. Breather Hose
3. Temperature Sensor Port
4. Oil Fill Plug

Fig. 1, Detroit Tandem Axle (forward axle shown)

https://truckmanualshub.com/

CAUTION

Be careful when draining the axle oil. It may be very hot, and could cause personal injury if it contacts the skin.

3. Place a drain pan under the rear axle drain plug. Drain the oil when it is warm. At this temperature, the oil will run more freely and ensure that the axle is flushed.
4. Clean the fill and drain plugs. Change them if necessary.
   - 4.1 For magnetic plugs, use a piece of key stock or any other convenient steel slug to short the two magnetic poles and divert the magnetic field.
   - 4.2 Clean away the collected material deposited on each pole. Magnets will rapidly lose their effectiveness as collected material bridges the gap between the two poles.
   - 4.3 After the first oil is changed, inspect the drain plug each time for large quantities of metal particles.
   - 4.4 After cleaning, install the drain plug(s) and tighten to 30 lbf·ft (41 N·m).
5. Fill the axle with the recommended lubricant. See **Table 1** for recommended drive axle lubricants and **Table 2** lubricant capacities.

   NOTE: Some Detroit axles have a small tapped and plugged hole near and below the housing oil fill hole. This smaller hole is for a lubricant temperature indicator only, and should not be used as a fill or level hole.

   - 5.1 Fill the axle through the oil fill hole. Lubricant should be level with the bottom of the oil fill hole. To check fluid level, see **Fig. 2**.
   - 5.2 Install and tighten the fill plug 30 lbf·ft (41 N·m).

Detroit Drive Axle Lubricants*		
IMPORTANT: Lubricant used in Detroit rear axles must meet Mercedes-Benz specification 235.20 (mineral) or 235.8 (synthetic). Mobil Delvac™ Gear Oil A 80W-90 and Mobilube™ HD-A Plus 80W-90 meet specification 235.20. Mobil Delvac 1 Gear Oil 75W-90 and Mobilube 1 SHC 75W-90 meet specification 235.8. For more product information, see http://bevo.mercedes-benz.com.		
Type	**Ambient Temperature**	**SAE Viscosity Grade**
Mineral Oil	–15°F (–26.1°C) and up†	80W–90
Synthetic Oil	–40°F (–40°C) and up†	75W–90

* Detroit rear axles do not require the use of friction modifiers.

† There is no upper limit on the ambient temperature, but axle sump temperature must never exceed 250°F (121°C).

Table 1, Detroit Drive Axle Lubricants

Detroit Rear Axle Lubricant Capacity (Hubs Full)	
Axle	**Oil Capacity: Quarts (liters)**
Forward-Rear, Model 4	14.3 (13.5)*
Single and Rearmost Tandem, Model 4	10.6 (10.0)*
Single, Model 2	5.8 (5.5)*

* These values assume the wheel ends are properly lubricated. Actual oil capacity might vary slightly depending on gear ratio.

Table 2, Detroit Rear Axle Lubricant Capacity

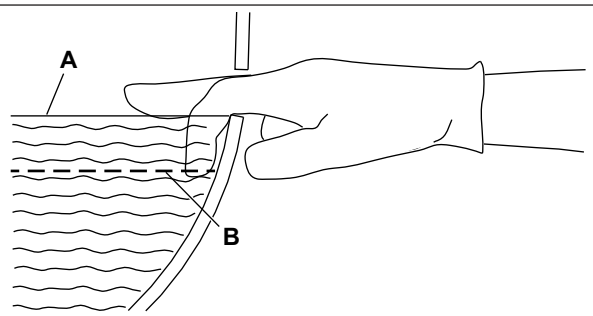

10/05/2016 f350061a

A. Correct (lube level at bottom of fill hole)
B. Incorrect (lube level below fill hole)

Fig. 2, Axle Lubricant Level Inspection

https://truckmanualshub.com/

Meritor®

IMPORTANT: On Meritor axles, the oil change interval for Schedule III and IV vehicles is extended to 500,000 miles (800 000 km) for axles using synthetic lubricant with a pump and filter system.

On single-drive axles so equipped, the traction equalizer may slip or stick. When this happens, you will hear intervals of shrill noises when the vehicle operates at low speed, or when the vehicle makes sharp turns. Use a "limited-slip friction modifier" to correct this slip/stick condition. Add 1.6 ounces (35 mL) of additive for each pint (0.5 L) of lube capacity.

For all GL-5 oils, add one of the following limited-slip friction modifiers:

- Lubrizol No. 6178 (Lubrizol Corporation)
- DSL-178 (Guardsman Products)
- Equa-Torque No. 2411 (Sta-Lube Corporation)
- Equa-Torque No. 2414 (Sta-Lube Corporation)

IMPORTANT: These friction modifiers generally deteriorate faster than conventional extreme-pressure additives, so the lubricant change schedule must be shortened when using these additives. The traction equalizer additive (and recommended drive axle lubricant) must be changed at the Maintenance 2 (M2) interval, instead of the Maintenance 3 (M3) interval recommended in the Maintenance Operation Chart for axles that require only those lubricants recommended in **Table 3**.

1. Park the vehicle on level ground, set the parking brakes, and chock the front tires.
2. Remove the axle carrier fill plug. Then remove the drain plug from the bottom of the housing. Completely drain the lubricant while the unit is warm, to allow the lubricant to drain faster.

   On tandem-drive axles, it is also necessary to remove the plug at the bottom of the interaxle differential housing to drain that lubricant.
3. If equipped with an oil pump, remove the axle oil filter. Use a suitable filter strap wrench. See **Fig. 3**. Discard the old filter.

   NOTE: There may be about one pint (0.5 L) of lubricant remaining in the filter. Be careful not to spill it when removing the filter.
4. Using the recommended drive axle lubricant, coat the face of the gasket on the new oil filter, if one was removed. Install the filter over the adapter, and tighten the filter one full turn after the gasket contacts the base; do not overtighten. See **Table 3** for recommended lubricants.
5. Clean the fill and drain plugs. Change them if necessary.

   5.1 For magnetic plugs, use a piece of key stock or any other convenient steel slug to short the two magnetic poles and divert the magnetic field.

   5.2 Check the drain plug for metal particles every 100,000 miles (160 000 km). Clean away the collected material deposited on each pole. Magnets will rapidly lose their effectiveness as collected material bridges the gap between the two poles.

   5.3 Each time the oil is changed, replace any magnetic drain plug that does not meet the minimum pickup capacity.

   NOTE: Meritor recommends plugs with elements having a minimum pickup capacity of 1.5 pounds (0.7 kg) of low-carbon steel.

   5.4 After cleaning, install the drain plug(s) and tighten to 35 lbf·ft (47 N·m).
6. Fill the axle with recommended lubricant. See **Table 4** for drive axle lubricant capacities.

   NOTE: Some Meritor axles have a small tapped and plugged hole near and below the housing lubricant fill hole. This smaller hole is for a lubricant temperature indicator only, and should not be used as a fill or level hole.

   6.1 With the vehicle on a level surface, fill the axle through the oil fill hole. Lubricant should be level with the bottom of the oil fill hole. To check fluid level, see **Fig. 2**.

https://truckmanualshub.com/

Meritor Drive Axle Recommended Lubricant			
Recommended Lubricant Type	**Ambient Temperature**	**Lubricant SAE Viscosity Grade**	**Meritor Specification**
Synthetic Gear Oil	–40°F (–40°C) and Up*	75W–90	0–76–N
	–40°F (–40°C) and Up*	75W–140	0–76–M

* There is no upper limit on these outside temperatures, but axle sump temperature must never exceed 250°F (121°C).

Table 3, Meritor Drive Axle Recommended Lubricant

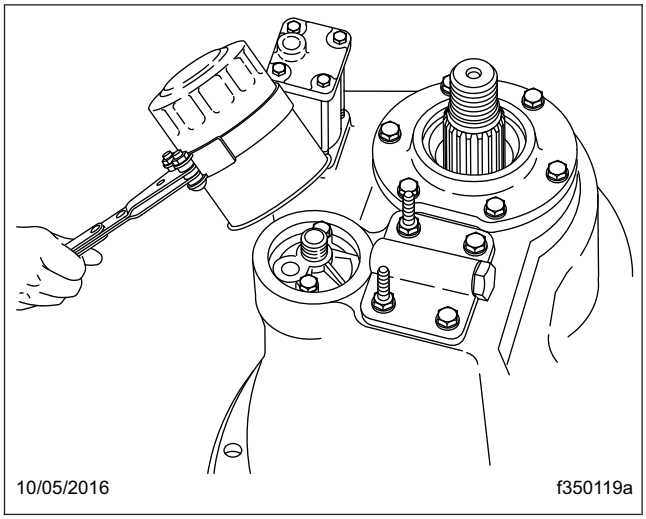

Fig. 3, Meritor Axle Oil Filter Removal

Meritor Drive Axle Lubricant Capacities		
Axle Model		**Capacity:* pt (L)**
Single-Drive, Single Reduction†		
RS–21–160		39.5 (18.7)
RS–23–160		39.5 (18.7)
RS–23–161		37.2 (17.6)
RS–23–185		47.3 (22.4)
RS–25–160		37.2 (17.6)
Tandem-Drive, Single Reduction		
RT–40–145, RT–40–145A, RT–40–145P	Forward	30.2 (14.3)
	Rear	25.8 (12.2)
RT–44–145, RT–44–145P	Forward	29.3 (13.9)
	Rear	25.1 (11.9)
RT–46–160, RT–46–160P	Forward	39.1 (18.5)
	Rear	34.4 (16.3)

* Quantities listed are approximate. Fill axle until lubricant is level with bottom of fill hole with vehicle on level ground.

† See "Traction Equalizer Additives" in the text.

Table 4, Meritor Drive Axle Lubricant Capacities

6.2 Install and tighten the fill plug 35 lbf·ft (47 N·m).

7. Whenever the interaxle differential housing has been drained, add an additional 2 pints (0.9 L) of the recommended lubricant directly into the interaxle differential housing.
8. Remove the chocks, then drive the vehicle, unloaded, for 1 or 2 miles (2 or 3 km) at speeds not to exceed 25 mph (40 km/h), to thoroughly circulate lubricant throughout the carrier and housing assemblies.

https://truckmanualshub.com/

Dana® Spicer®

IMPORTANT: The use of friction modifiers is not approved in Dana drive axles.

1. Park the vehicle on level ground, set the parking brakes, and chock the tires.
2. Clean the fill plug and the area around it. In the axle housing rear cover, remove the plug from the oil fill hole (or standpipe, if installed in the oil fill hole). See **Fig. 4**.

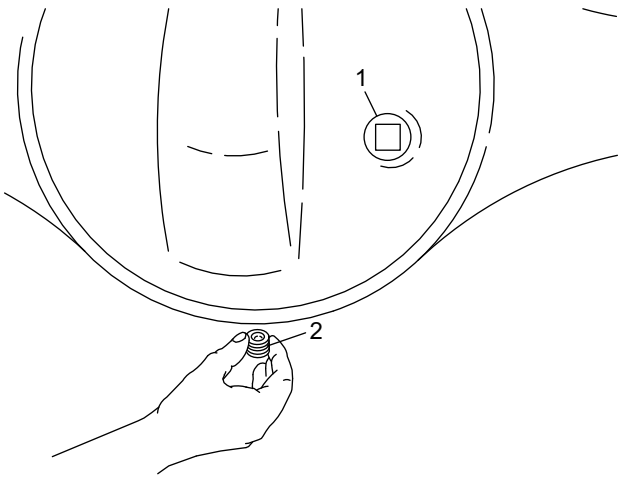

10/05/2016 f350018a

1. Oil Fill Plug 2. Oil Drain Plug

Fig. 4, Axle Housing Drain and Fill Plugs

3. Place a drain pan under the rear axle drain plug. See **Fig. 4**. Drain the oil at normal operating temperature, 150°F to 200°F (65°C to 93°C). At this temperature, the oil will run more freely and ensure that the axle is flushed.

NOTE: Some tandem-drive axles are equipped with a cylindrical magnetic strainer, located below the lube pump on the front of the power divider cover. All rear axles are fitted with magnetic drain and fill plugs.

4. At each axle oil change, remove and clean the magnetic strainer, if equipped. See **Fig. 5**.
   - 4.1 Remove the magnetic strainer from the power divider cover.

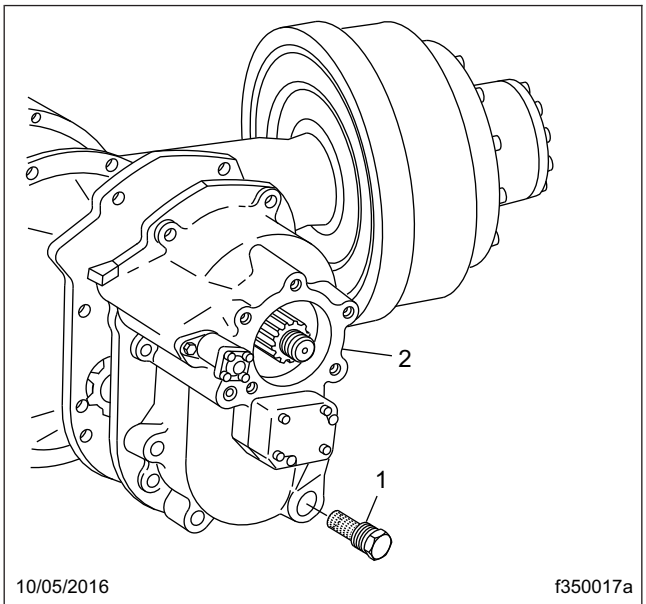

10/05/2016 f350017a

1. Magnetic Strainer 2. Power Divider

Fig. 5, Dana Spicer Tandem-Drive Axle Magnetic Strainer

⚠ WARNING

Always wear eye protection when using compressed air to clean parts, as flying debris could cause permanent damage to unprotected eyes. Do not point the air stream in the direction of other persons.

   - 4.2 Wash the strainer in solvent, and blow it dry with compressed air to remove oil and metal particles.
   - 4.3 Install and tighten the magnetic strainer 40 to 60 lbf·ft (54 to 81 N·m).
5. Clean the fill and drain plugs. Change them if necessary.
   - 5.1 For magnetic plugs, use a piece of key stock or any other convenient steel slug to short the two magnetic poles and divert the magnetic field.
   - 5.2 Clean away the collected material deposited on each pole. Magnets will rapidly lose their effectiveness as collected material bridges the gap between the two poles.

https://truckmanualshub.com/

5.3 After the first oil is changed, inspect the drain plug each time for large quantities of metal particles.

5.4 After cleaning, install the drain plug(s) and tighten to 40 to 60 lbf·ft (54 to 81 N·m).

6. Fill the axle with the recommended lubricant. See **Table 5** for recommended drive axle lubricants, and **Table 6** for drive axle lubricant capacities.

Dana Spicer Drive Axle Recommended Lubricant		
Lubricant Type	**Condition**	**Lubricant SAE Viscosity Grade**
Dana Spicer Roadranger® Synthetic Drive Axle Lubricants, or Equivalent with Military Specification MIL–L–2105D	Over-the-Road Service	75W–90
	Off-Highway Equipment, or Under Extra Heavy Loads	80W–140

Table 5, Dana Spicer Drive Axle Recommended Lubricant

Dana Spicer Drive Axle Lubricant Capacities		
Axle Type	**Axle Model**	**Capacity:* Pints (liters)**
Single-Drive Axle Installation		
Single Reduction	23080S, 23080D	40 (18.9)
	23105S, 23105D	48 (22.7)
Tandem-Drive Axle Installation		
Single Reduction	DD404, DD404–P	31 (14.7)†
	DS404, DS404–P	39 (18.5)†
	DS461–P	43 (20.3)†
2-Speed (dual-range)	DT402, 402–P	34 (16.1)†
	DT451–P	39 (18.5)†
	DT461–P	43 (20.3)†
Double Reduction	DP451–P	34 (16.1)†
	DP461–P	43 (20.3)†

* Quantities listed are approximate. Fill axle until lubricant is level with bottom of fill hole with vehicle on level ground.

† Add 2 pints (1 L) of additional lubricant to the power divider.

Table 6, Dana Spicer Drive Axle Lubricant Capacities

NOTE: Some Dana Spicer axles have a small tapped and plugged hole near and below the housing oil fill hole. This smaller hole is for a lubricant temperature indicator only, and should not be used as a fill or level hole.

6.1 With the vehicle on a level surface, fill the axle through the oil fill hole or standpipe opening. Lubricant should be level with the bottom of the oil fill hole, or the top of the standpipe opening. To check fluid level, see **Fig. 2**.

6.2 Install and tighten the fill plug 40 to 60 lbf·ft (54 to 81 N·m).

Two-Speed Axles With Shift Unit

Dana Spicer and Meritor

1. Remove the shift unit housing cover. See **Fig. 6**. Drain and discard the old lubricant. Discard the housing cover gasket.

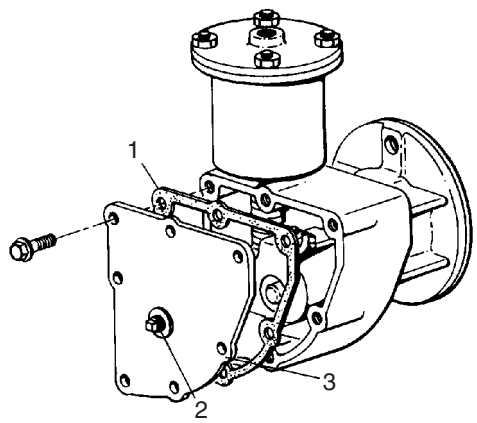

08/06/93 f350021a

1. Housing Cover Gasket
2. Oil Fill Plug
3. Shift Unit Housing Cover

Fig. 6, Two-Speed-Axle Shift Unit

2. Thoroughly wash the axle shift parts and housing cover, and allow them to air dry.

3. Install the housing cover and a new cover gasket. Tighten the housing cover capscrews 90 to 110 lbf·in (1020 to 1240 N·cm), then remove the oil fill plug from the cover.

https://truckmanualshub.com/

IMPORTANT: When the ambient temperature is above 0°F (–18°C), use SAE 10 heavy-duty engine oil, API service classification SD (sulfated ash content must not exceed 1.85%). When the ambient temperature is below 0°F (–18°C), use one part kerosene to three parts SAE 10 heavy-duty engine oil, API service classification SD (sulfated ash content must not exceed 1.85%). This cold-weather mixture can be safely used up to 32°F (0°C).

Commercially available automatic transmission fluid may be used in place of SAE 10 engine oil. Automatic transmission fluid can be used for all temperatures; do not mix it with kerosene. To prevent component damage, do not mix engine oil and automatic transmission fluid.

4. Using the recommended lubricant, fill the shift unit housing through the oil fill hole until the lubricant is level with the bottom of the opening.
5. Coat the threads of the fill plug with a small amount of Loctite® 242, or equivalent sealant. Install the fill plug finger-tight in the rear axle shift unit housing. Using a wrench, tighten it an additional 1-1/2 turns.

35–02 Axle Breather and Axle Lubricant Level Inspection

For all axles, including tandem-drive axles and two-speed axles, do the procedures under the heading, "All Axle Models." For a two-speed axle with a shift unit, also change the shift unit lubricant. See under the heading, "Two-Speed Axles With Shift Unit."

All Axle Models

Detroit™

NOTICE

Failure to keep the rear axle filled to the proper level with the recommended lubricant can result in rear axle damage.

1. Park the vehicle on a level surface, shut down the engine, and set the parking brake. Chock the tires.
2. If the vehicle has just been driven, allow a few minutes for the lubricant to settle.

IMPORTANT: On Detroit axles, the oil change interval for long haul vehicles can be extended to 500,000 miles (800 000 km) for axles with weight ratings of 34,000 to 40,000 lb (15 000 to 18 000 kg) using synthetic lubricant if a lubricant analysis shows adequate quality. Oil must be changed at least every four years, and more often if the axle is exposed to high temperatures and steep grades.

3. Clean the fill plug and the area surrounding the fill plug on the side of the axle carrier. Remove the plug. Check lubricant level when the axle is cold, or near room temperature.

NOTE: Some Detroit axles have a small tapped and plugged hole near and below the housing oil fill hole. This smaller hole is for a lubricant temperature indicator only, and should not be used as a fill or level hole.

4. Check that the lubricant is level with the bottom of the fill hole. See **Fig. 2**. If low, check for oil leaks, and correct as needed. Add oil to the level of the fill plug, using the lubricant recommended in **Table 1**.

IMPORTANT: A lubricant level close enough to be seen or touched is not sufficient. It must be level with the bottom of the fill hole.

5. Install and tighten the fill plug 30 lbf·ft (41 N·m).

IMPORTANT: Always check the axle breather whenever checking the lubricant level. Check the breather more frequently under adverse operating conditions.

6. Check the axle housing breather. Make sure that it is open and unclogged. If the breather is plugged or damaged, clean or replace it as needed.

Meritor®

NOTICE

Failure to keep the rear axle filled to the proper level with the recommended lubricant can result in rear axle damage.

https://truckmanualshub.com/

1. Park the vehicle on level ground, set the parking brakes, and chock the tires.

IMPORTANT: Oil level must be checked at each M1 interval on Meritor axles.

2. Clean the fill plug and the area surrounding the fill plug on the side of the axle carrier. Remove the plug. Check lubricant level when the axle is cold, or near room temperature.

NOTE: Some Meritor axles have a small tapped and plugged hole near and below the housing oil fill hole. This smaller hole is for a lubricant temperature indicator only, and should not be used as a fill or level hole.

3. Check that the lubricant is level with the bottom of the fill hole. See **Fig. 2**. If low, check for oil leaks, and correct as needed.
4. Install and tighten the fill plug 35 lbf·ft (47 N·m).

IMPORTANT: Always check the axle breather whenever checking lubricant level. Check the breather more frequently under adverse operating conditions.

5. Check the axle housing breather. Make sure that it is open and unclogged. See **Fig. 7**. If the breather is plugged or damaged, clean or replace it as needed.

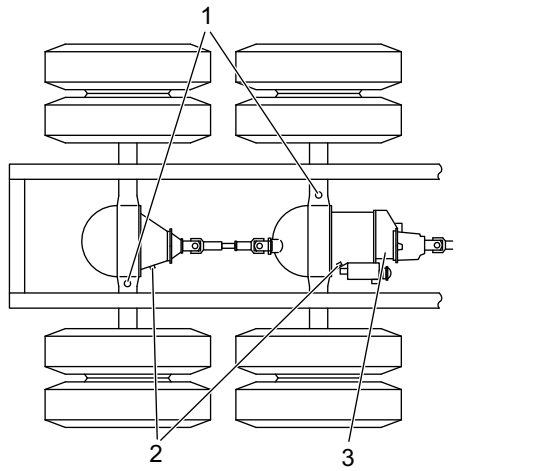

10/05/2016 f350062a

1. Axle Housing Breathers
2. Carrier Oil Fill Plugs
3. Interaxle Differential

Fig. 7, Meritor Axle Housing Breathers

6. On non-drive axles using oil-lubricated wheel bearings, check the oil level at the wheels, and add oil if low. Use the same lubricant recommended for the drive axle.

NOTE: When adding to or checking the oil level, make certain the hub cap and plug are clean before removing the plug; this will minimize the possibility of dirt and road grime entering the assembly.

Dana® Spicer®

NOTICE

Failure to keep the rear axle filled to the proper level with the recommended lubricant can result in rear axle damage.

1. Park the vehicle on level ground, set the parking brakes, and chock the tires.
2. If the vehicle has just been driven, allow a few minutes for the lubricant to settle.
3. Clean the oil fill plug and the area surrounding it. See **Fig. 8**. Remove the plug from the fill hole (or standpipe, if installed in the oil fill hole).

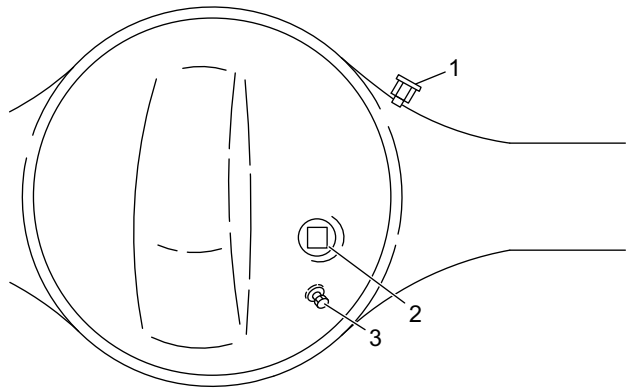

10/06/2016 f350002a

1. Axle Housing Breather
2. Fill Plug
3. Temperature Indicator Plug

Fig. 8, Dana Spicer Axle Housing Breather

IMPORTANT: A lubricant level close enough to be seen or touched is not sufficient. It must be level with the bottom of the fill hole, or the top of the standpipe opening.

https://truckmanualshub.com/

4. Check that the lubricant is level with the bottom of the fill hole, or with the top of the standpipe opening. See **Fig. 2**. If low, check for oil leaks, and correct as needed.
5. Install and tighten the fill plug 40 to 60 lbf·ft (54 to 81 N·m).

IMPORTANT: Always check the axle breather whenever checking lubricant level. Check the breather more frequently under adverse operating conditions.

6. Check the axle housing breather. Make sure that it is unclogged and free from corrosion. See **Fig. 8**. If the breather is plugged or damaged, clean or replace it as needed.
7. Remove the chocks from the tires.

Two-Speed Axles With Shift Unit

Dana Spicer and Meritor

NOTICE

Failure to keep lubricant at the specified level could cause damage to the axle shift unit.

1. Clean the shift unit oil fill plug, and the area surrounding the plug. See **Fig. 6**. Turn the fill plug counterclockwise to remove it.
2. Insert a finger or pipe cleaner into the fill plug hole and check the fluid level. The lubricant should be level with the bottom of the fill hole. If low, add the recommended lubricant.

NOTICE

Before adding additional lubricant, make sure of the type currently in the shift unit. To prevent component damage, do not mix engine oil with automatic transmission fluid.

IMPORTANT: When the ambient temperature is above 0°F (–18°C), use SAE 10 heavy-duty engine oil, API service classification SD (sulfated ash content must not exceed 1.85%). When the ambient temperature is below 0°F (–18°C), use one part kerosene to three parts SAE 10 heavy-duty engine oil, API service classification SD (sulfated ash content must not exceed 1.85%).

This cold-weather mixture can be safely used up to 32°F (0°C).

Commercially available automatic transmission fluid may be used in place of SAE 10 engine oil. Automatic transmission fluid can be used for all temperatures; do not mix it with kerosene.

3. Coat the threads of the fill plug with a small amount of Loctite® 242, or equivalent sealant. Install the fill plug finger-tight in the rear axle shift unit housing. Using a wrench, tighten it an additional 1-1/2 turns.

https://truckmanualshub.com/

https://truckmanualshub.com/

Index, Alphabetical

Title of Maintenance Operation (MOP)	MOP Number
Tire Check	40–02
Wheel Nut Check	40–01

https://truckmanualshub.com/

https://truckmanualshub.com/

40–01 Wheel Nut Check

IMPORTANT: After a wheel has been installed, the wheel nut torque must be rechecked after 50 to 100 miles (80 to 160 km) of operation.

See **Table 1** for disc wheel nut torque specifications, and see **Fig. 1** for the wheel nut tightening sequence.

CAUTION

Insufficient wheel nut (rim nut) torque can cause wheel shimmy, resulting in wheel damage, stud breakage, and extreme tire tread wear. Excessive wheel nut torque can break studs, damage threads, and crack discs in the stud hole area. Use the recommended torque values, and follow the tightening sequence shown in Fig. 1.

When checking wheel nuts on a dual disc assembly, remove one outer nut at a time, tighten the inner nut, then reinstall and tighten the outer nut. Repeat this procedure for all wheel nuts, using the tightening sequence shown in **Fig. 1**.

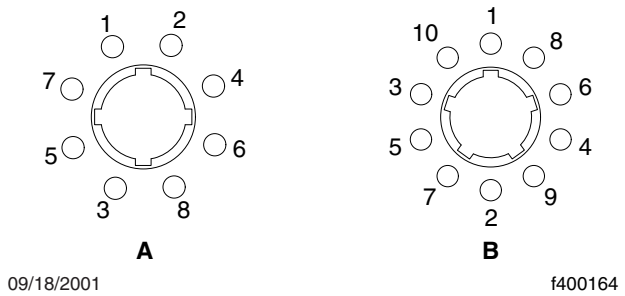

A. 8-Stud Disc Wheel B. 10-Stud Disc Wheel

Fig. 1, Wheel Nut Tightening Sequence

Disc Wheel Fastener Torques			
Description	**Nut Size**	**Wheel Manufacturer**	**Torque: lbf·ft (N·m)**
*10-Hole and 8-Hole Hub-Piloted Disc Wheel With Two-Piece Flange Nuts**			
Front and Rear Wheel Nut	M22 x 1.5	All	450–500 (610–678)
Nuts on Double-Threaded Wheel Studs	M22 x 1.5	All	390–450 (529–610)
Double-Threaded Wheel Stud Retainer Nut	3/4–16	All	175–200 (235–270)
10-Hole Stud-Piloted Disc Wheel With Inner and Outer Nuts†			
Front Wheel Nut	1-1/8–16	All	450–500 (610–678)
Rear Wheel Inner Nut	3/4–16	All	450–500 (610–678)
Rear Wheel Outer Nut	1-1/8–16	All	450–500 (610–678)

* Torque values for hub-piloted wheels are given for lubricated threads. Lubricate threads with SAE 30W engine oil. Do not apply thread lubricant to ball seats of the nuts and wheels. Wipe it off if it is applied accidentally.

† Torque values for stud-piloted wheels are given for clean, dry threads.

Table 1, Disc Wheel Fastener Torques

40–02 Tire Check

Tires should be inspected closely during the first 3000 to 10,000 miles (5000 to 16 000 km) for abnormal wear.

Maintain the proper pressures for carried loads, per the tire manufacturers' recommendations, or the tire pressure label on the driver's door.

Have the wheel alignment checked after the first 10,000 miles (16 000 km), then every 40,000 miles (60 000 km) thereafter.

Do not continue to drive the vehicle if tires develop any of the following:

- blisters;
- cuts or punctures that reach to the cord;
- a nail, screw, rock, or other puncturing object;
- flat spots or irregular wear;
- tread worn to a minimum depth;
- inability to maintain proper tire pressure.

https://truckmanualshub.com/

https://truckmanualshub.com/

Index, Alphabetical

Title of Maintenance Operation (MOP)	MOP Number
Driveline Inspection	41–01
Driveline Lubrication	41–02
Safety Precautions	41–00

https://truckmanualshub.com/

https://truckmanualshub.com/

41–00 Safety Precautions

Safety Precautions in this section apply to all procedures within this group.

DANGER

When working on the vehicle, shut down the engine, set the parking brake, and chock the tires. Before working under the vehicle, always place jack stands under the frame rails to ensure the vehicle cannot drop. Failure to follow these steps could result in serious personal injury or death.

41–01 Driveline Inspection

1. Park the vehicle on a flat, level surface, apply the parking brakes, and chock the tires.

CAUTION

Due to the extreme load occurring at high-speed rotation, a loose or broken capscrew at any point in the driveline will weaken the driveline connection, which could eventually result in serious vehicle damage. Do not over-tighten bearing-cap capscrews or yoke-strap capscrews.

2. *For driveline universal joints with bearing caps,* tighten bearing-cap capscrews 43 lbf·ft (49 N·m). See **Fig. 1**, Ref. 1.

   For RPL series universal joints, tighten bearing-cap capscrews 125 lbf·ft (169 N·m). See **Fig. 2**.

   For driveline universal joints with yoke straps, tighten yoke-strap capscrews 125 lbf·ft (169 N·m). See **Fig. 3**.

3. Check the driveline yokes for cracks, and check end-yokes for looseness. See **Fig. 3**.

   Replace cracked yokes.

   If any end-yoke can be moved in or out on its shaft, or can be rocked on its shaft, disconnect the driveshaft and U-joint from the yoke, then check the drive component's shaft seal for leakage or other visible damage that may have been caused by the loose yoke. Replace the seal if needed, then tighten the yoke nut. Refer to **Group 41** of the *Columbia® Workshop Manual* for torque specifications. If the yoke is still loose after tightening the yoke nut, replace the end-yoke and yoke nut.

   Replace the prevailing torque locknut (end-yoke nut) if it was removed for yoke replacement, seal replacement, or any other reason.

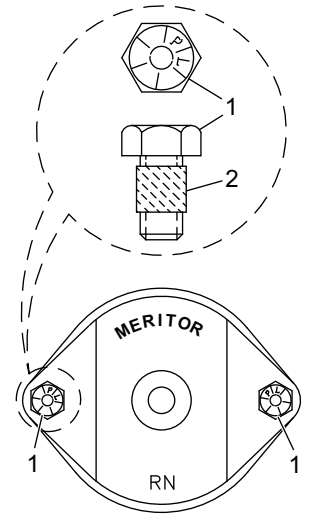

1. Self-Locking Capscrew
2. Adhesive Band

Fig. 1, Meritor U-Joint Fasteners for Bearing Caps

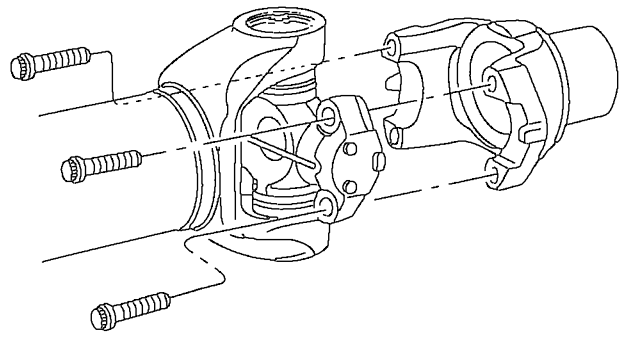

Fig. 2, Meritor RPL Series U-Joint

4. Check U-joint assemblies for wear by moving the driveshaft up and down, and from side to side. If any movement of the U-joint cross in the bearings can be felt or seen, replace the U-joint assembly.
5. Check if the midship bearing and mounting are loose or have deteriorated, by attempting to

https://truckmanualshub.com/

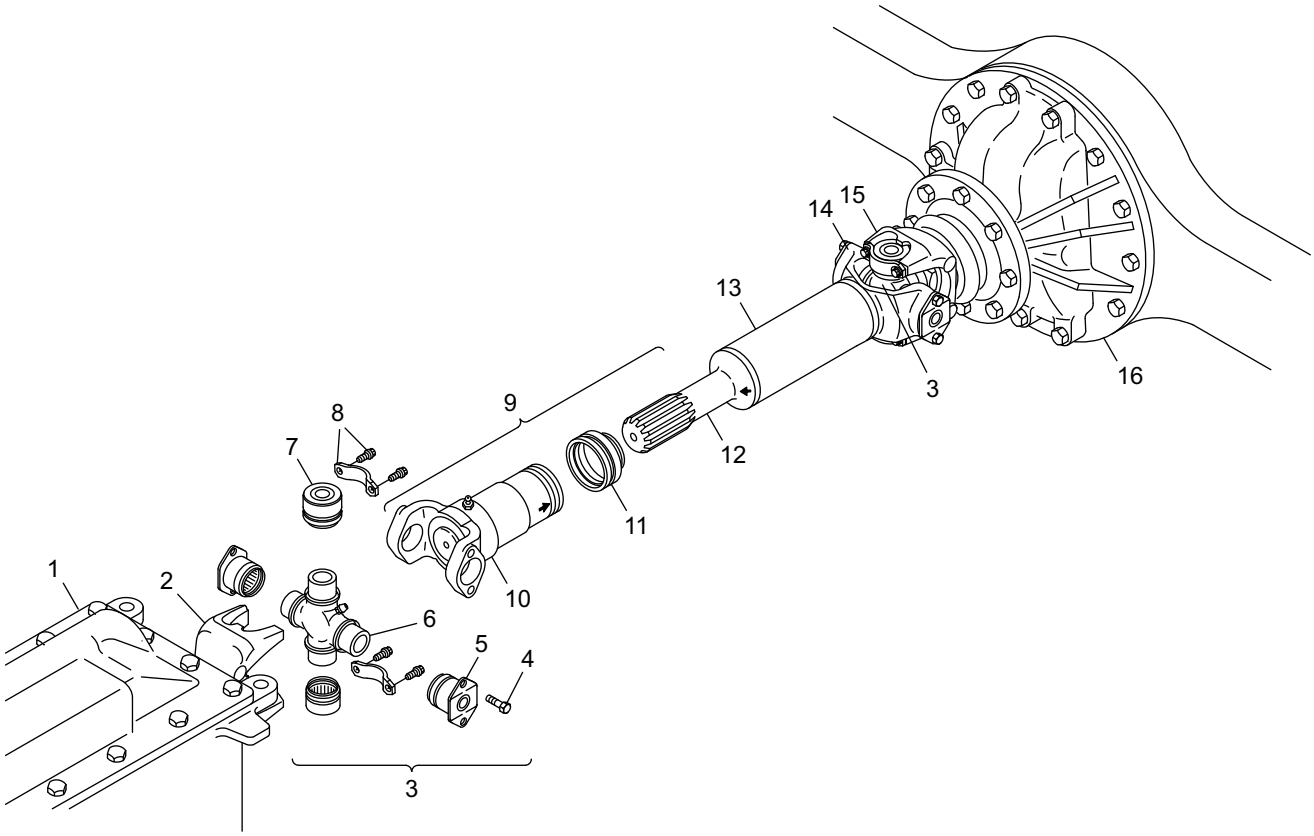

NOTE: Not all fasteners are shown.

1. Transmission
2. Transmission Output-Shaft End-Yoke (yoke-strap type)
3. U-Joint Assembly
4. Bearing Cap Self-Locking Capscrew
5. Bearing Cap
6. U-Joint Cross
7. Bearing Cup (for yoke strap)
8. Yoke Strap and Capscrew
9. Slip-Joint Assembly
10. Sleeve-Yoke (bearing-cap type)
11. Dust Cap
12. Splined Stub Shaft
13. Driveshaft Tube
14. Tube-Yoke (bearing-cap type)
15. Axle Input-Shaft End-Yoke (yoke-strap type)
16. Rear Axle

Fig. 3, Components of a Basic Driveline

move the driveshaft up and down, and from side to side. If the bearing is loose on its shaft, or rattles, replace it. If the bearing mount is loose on the frame, tighten the mounting fasteners to the proper torque value. See **Group 41** of the *Columbia® Workshop Manual* for torque specifications. Replace the midship bearing assembly if the rubber cushion is deteriorated or oil-soaked.

6. Check slip joints for spline wear by moving the sleeve-yoke and splined shaft back and forth. See **Fig. 4**. If the slip joint can be twisted in a clockwise, or counterclockwise movement greater than 0.007 inch (0.18 mm), replace both the sleeve-yoke and the splined shaft.
7. Visually examine the driveshaft tubes for dents, bends, twists, or other damage. If any tube appears to be damaged, refer to **Group 41** of the *Columbia® Workshop Manual* for repair and replacement instructions.
8. Examine the driveshaft for evidence of missing balance weights, and for build-up of foreign material. Remove any foreign material. If there is

https://truckmanualshub.com/

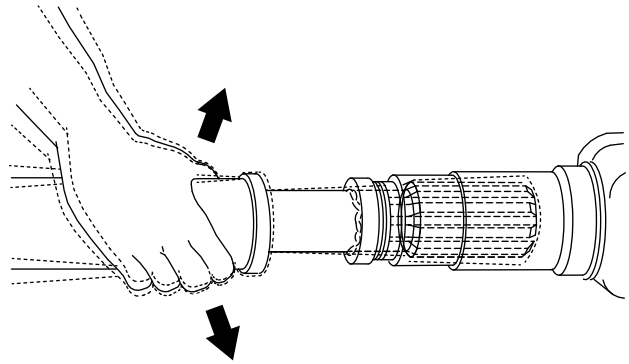

10/06/2016 f410012a

Attempt to move the sleeve-yoke and splined shaft back and forth.

Fig. 4, Slip Joint Spline Wear Checking

any evidence that balance weights are missing, remove the driveshaft and have it balanced.

9. For driveshafts with slip joints, check to be sure the yoke plug is not loose or missing. See **Fig. 5**, Ref. 2. Repair or replace the yoke plug as needed. If the yoke plug is missing, the splined shaft may be hitting the plug and knocking it out; contact your Regional Service Office for assistance in determining the correct driveshaft length.

41–02 Driveline Lubrication

Universal Joint Lubrication

NOTE: Vehicles equipped with Meritor RPL Series drivelines do not require periodic lubrication.

1. Park the vehicle on a flat surface, apply the parking brakes, and chock the tires.
2. Wipe all old grease and dirt from each U-joint grease fitting. See **Fig. 5**, Ref. 8.
3. Use a hand-type grease gun, or a high-pressure gun with a low-pressure adapter, to lubricate U-joints. If a low-pressure adapter is not used, U-joints may not receive enough grease.

   Using lithium 12-Hydroxy stearate grease (NLGI Grade 1 or Grade 2, with EP additives), lubricate until *new* grease can be seen at *all four* U-joint seals. Fresh grease must be seen escaping from *all four* bearing-cap seals of each U-joint. On yokes equipped with a yoke-bearing cap, if most

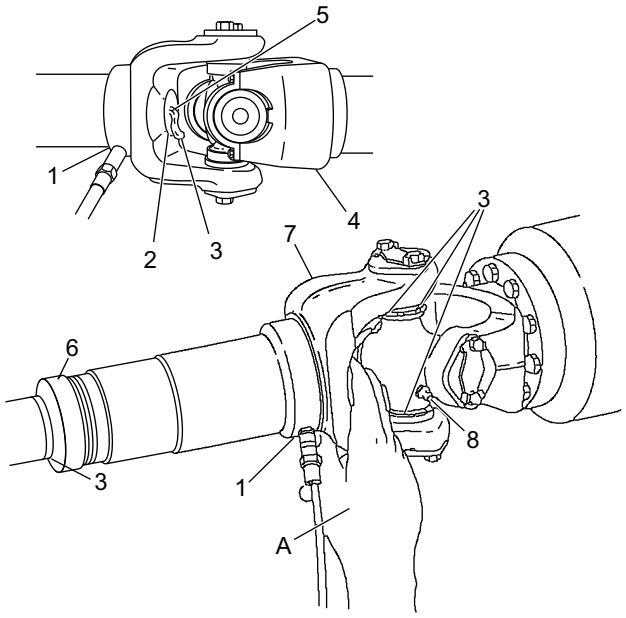

10/07/2016 f410050a

A. After grease appears, cover the pressure-relief hole while continuing to lubricate.
1. Slip Joint Grease Fitting (with grease gun attached)
2. Yoke Plug
3. Grease
4. Half-Round Yoke
5. Yoke Plug Pressure-Relief Hole
6. Slip Joint Seal
7. Full-Round Yoke
8. U-Joint Grease Fitting

Fig. 5, Slip Joint and U-Joint Lubrication

of the grease being added to a U-joint can be seen escaping from just one of the U-joint seals, check the torque on the capscrews at that seal.

4. Tighten the bearing-cap capscrews 43 lbf·ft (49 N·m). If the capscrews were already tight, or all of the U-joint seals still do not purge, remove the bearing cap at that seal, and examine the seal for damage. If the seal is damaged, replace the complete U-joint.
5. If grease does not appear at one seal, use a prying tool to pry the U-joint trunnion away from the non-purging seal, or tap the driveshaft or yoke with a plastic or rawhide mallet on the side opposite the dry seal, while continuing to lubricate. If grease still does not appear, loosen the capscrews at the bearing with the dry seal, to relieve seal tension. Lubricate the U-joint until new

https://truckmanualshub.com/

grease is seen at the seal, then tighten the capscrews to the correct torque specifications. If the bearing will not take grease, replace the U-joint. Refer to **Group 41** of the *Columbia® Workshop Manual* for replacement instructions.

6. Check the purged grease. If it appears rusty, gritty, or burned, replace the U-joint.
7. Wipe the purged grease from the seals, and any excess grease from the grease fitting.

Slip Joint Spline Lubrication

NOTE: Vehicles equipped with Meritor RPL Series drivelines do not require periodic lubrication.

1. If equipped with a grease fitting, wipe all old grease and dirt from the slip joint grease fitting. See **Fig. 5**, Ref. 1.
2. Use a hand-type grease gun or a high-pressure gun with a low-pressure adapter, to lubricate the slip joint. Add multipurpose chassis grease (lithium 12-hydroxy stearate, NLGI Grade 1 or Grade 2, with EP additives) until it appears at the pressure-relief hole in the yoke plug. Then cover the relief hole with your finger, while continuing to apply gun pressure until new grease appears at the slip joint seal. See **Fig. 5**. This ensures complete lubrication of the splines.
3. Wipe the purged grease from the pressure-relief hole and slip joint seal, and any excess grease from the grease fitting.

https://truckmanualshub.com/

Index, Alphabetical

Title of Maintenance Operation (MOP)	MOP Number
Air Brake System Valve Inspection	42–01
Air Dryer Desiccant Replacement	42–02
Air Dryer Inspection	42–03
Alcohol Evaporator Cleaning and Inspection	42–04
Bendix E-6 Foot Control Valve Inspection and Lubrication	42–09
Brake Inspection	42–10
Dana Spicer Camshaft Bracket Lubrication	42–05
Dana Spicer, Haldex, and Gunite Slack Adjuster Lubrication	42–06
Meritor Camshaft Bracket Lubrication	42–07
Meritor Slack Adjuster Lubrication	42–08
Safety Precautions	42–00

https://truckmanualshub.com/

https://truckmanualshub.com/

42–00 Safety Precautions

Safety Precautions in this section apply to all procedures within this group.

DANGER

When working on the vehicle, shut down the engine, set the parking brake, and chock the tires. Before working under the vehicle, always place jack stands under the frame rails to ensure the vehicle cannot drop. Failure to follow these steps could result in serious personal injury or death.

42–01 Air Brake System Valve Inspection

NOTE: There is no scheduled air valve maintenance on vehicles equipped with Bendix air valves and a Bendix air dryer if the air dryer desiccant is replaced at 350,000 miles (563 000 km). If the desiccant is not changed at 350,000 miles (563 000 km), or if the vehicle is equipped with another air dryer, maintenance will have to be performed to the air brake valves. See **Group 42** of the *Columbia® Workshop Manual* for procedures.

42–02 Air Dryer Desiccant Replacement

Bendix AD-9 Air Dryers

1. Park the vehicle on a level surface, shut down the engine, and set the parking brake. Chock the tires.
2. Completely drain all air reservoirs. Air pressure gauges should read 0 psi (0 kPa).

CAUTION

The compressor discharge line may still contain residual air pressure.

3. Identify, tag, and disconnect the three air lines from the end cover.
4. Disconnect the harness connector from the heater and thermostat assembly.
5. Loosen the capscrew securing the upper mounting bracket strap.
6. Remove the two capscrews that secure the air dryer to the lower mounting bracket. Mark the position of the mounting bracket to the end cover, and mark the capscrews to ease installation.
7. Remove the upper mounting bracket strap capscrew, and remove the air dryer from the vehicle.
8. Place the air dryer on a bench and remove the remaining 6 capscrews, 12 washers, 6 Nylok®nuts, and the air dryer housing. See **Fig. 1**. Discard the Nylok nuts. Remove the end-cover-to-housing O-ring.
9. Clamp the desiccant cartridge in a vise.

CAUTION

Clamping the end cover or housing in a vise could seriously compromise the air dryer's ability to hold air pressure, which could cause a failure in the brake system.

10. Twist the end cover counterclockwise to release the cartridge from the end cover. Rotate the end cover until it completely separates from the desiccant cartridge.

NOTE: A substantial torque, up to 50 lbf·ft (68 N·m), may be necessary to remove the desiccant cartridge.

11. Inspect the condition of the O-ring seals. If they are cracked, crimped, or otherwise damaged, replace them to ensure an airtight seal. Clean the O-ring grooves of any dirt or obstruction.

CAUTION

Dirt or obstructions in the O-ring grooves can cause an O-ring failure that will result in an air leak.

12. Lubricate the O-rings with silicone or lithium grease and install them in the end cover.
13. Install the desiccant cartridge on the end cover. Turn the cartridge clockwise until the desiccant cartridge makes contact with the end cover.

https://truckmanualshub.com/

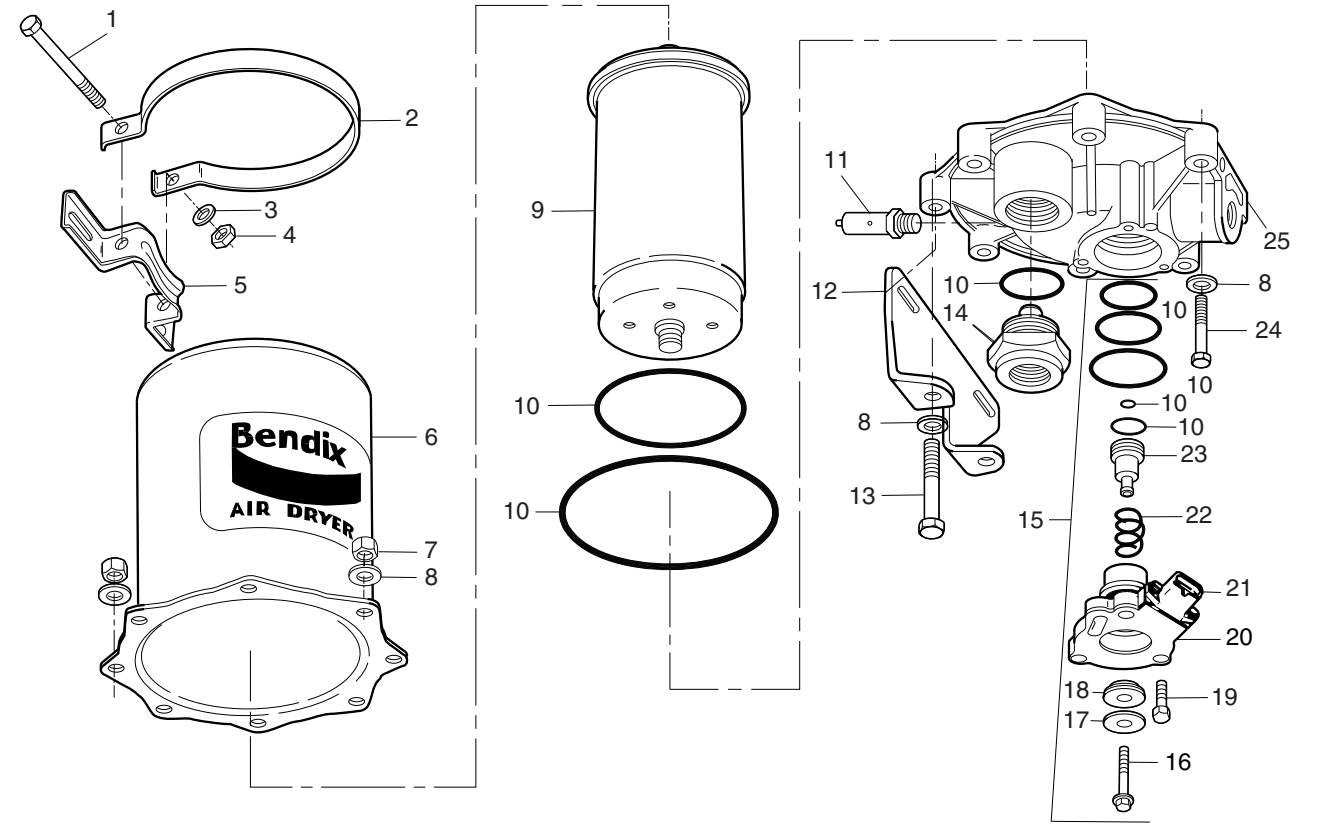

08/09/95 f421383

1. 5/16" x 4-1/2" Upper Mounting Bracket Capscrew
2. Upper Mounting Bracket Strap
3. 5/16" Lockwasher
4. 5/16" Nylok® Nut
5. Upper Mounting Bracket
6. Housing
7. Nylok® Nut
8. 3/8" Special Washer
9. Desiccant Cartridge
10. O-Ring
11. Safety Valve
12. Lower Mounting Bracket
13. 3/8" Capscrew (long)
14. Check Valve Assembly
15. Purge Valve Assembly
16. Purge Valve Bolt
17. Exhaust Diaphragm
18. Purge Valve
19. 1/4" Tapping Screw
20. Purge Valve Housing
21. Heater and Thermostat Housing
22. Return Spring
23. Purge Piston
24. 3/8" Capscrew
25. End Cover

Fig. 1, AD-9 Air Dryer (exploded view)

14. Place the desiccant cartridge in a vise, and turn the end cover clockwise an additional 180 to 225 degrees to fully tighten the desiccant cartridge to the end cover.

NOTE: Desiccant cartridge torque should not exceed 50 lbf·ft (68 N·m).

15. Place the housing over the desiccant cartridge and align the mounting holes with the end cover.

IMPORTANT: Replace, do not reuse the Nylok nuts on the air dryer cover.

16. Install the 6 capscrews, 12 washers, and 6 new Nylok nuts. Tighten the capscrews in a star pattern 270 to 385 lbf·in (3050 to 4350 N·cm). See **Fig. 2**.
17. Install the air dryer on the lower mounting bracket. Install the two previously marked capscrews, four washers, and two new Nylok nuts.

https://truckmanualshub.com/

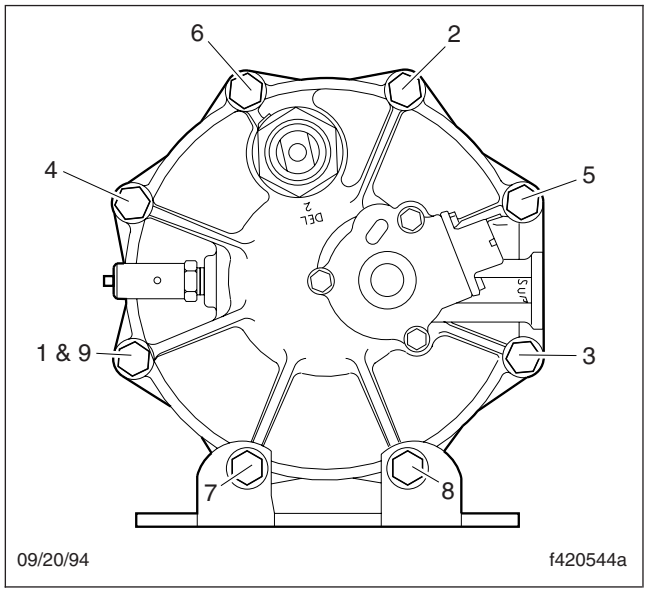

Fig. 2, End Cover to Housing Torque Pattern

Torque the two remaining capscrews 270 to 385 lbf·in (3050 to 4350 N·cm). Install the capscrew, two washers, and a new Nylok nut in the upper mounting bracket strap. Torque the upper mounting bracket strap capscrew 80 to 120 lbf·in (904 to 1356 N·cm).

18. Connect and tighten the three air lines. Connect the harness connector to the heater and thermostat assembly until the lock tab snaps in place.
19. Start the engine, build the air pressure, and check the air brake system for leaks. If any air leaks are present, see **Group 42** of the *Century Class Trucks Workshop Manual* for diagnosis and repair information.

Bendix AD–IP Air Dryers

1. Park the vehicle on a level surface, apply the parking brakes, and chock the tires.
2. Using a wrench or a socket, loosen the desiccant cartridge bolt. Then separate the desiccant cartridge from the end cover.
3. Pull the cartridge bolt out of the cover and remove the cartridge.

⚠ WARNING

Do not attempt to disassemble the desiccant cartridge assembly. Parts for the assembly are not available and the cartridge contains a 150 lb spring that cannot be mechanically caged. Disassembly could release the spring, resulting in personal injury.

4. Remove and discard both O-rings from the cartridge bolt.
5. Using a clean rag, wipe clean the inside of the end cover. Clean the cartridge bolt bore in the end cover, and the sealing surfaces for the large- and small-diameter desiccant cartridge sealing rings.
6. Inspect the end cover for physical damage, then inspect all air line fittings for corrosion; replace as necessary.
7. Clean and inspect the bolt, paying attention to the threads and O-ring grooves.

IMPORTANT: Use only the grease supplied with Bendix replacement kits.

8. Lubricate the O-rings, bolt O-ring grooves, sealing rings, and cartridge grooves. Lubricate the end cover bore for the bolt.
9. Install both O-rings on the cartridge bolt, then, using a twisting motion, insert the assembled desiccant cartridge bolt in the end cover.
10. Install the desiccant cartridge on the end cover, making sure the cartridge is properly seated and flush on the end cover.

NOTE: It may be necessary to rotate the cartridge slightly until the anti-rotation lugs are properly aligned and allow the cartridge to rest flush against the end cover.

11. Using a wrench or socket, tighten the desiccant cartridge bolt 70 lbf·ft (95 N·m). **Do not** overtighten.
12. Before placing the vehicle in service, perform the test below.
    - 12.1 Close all reservoir drain cocks.
    - 12.2 Build system pressure to governor cutout, and note that the AD-IP air dryer purges with an audible escape of air.

https://truckmanualshub.com/

12.3 Fan the service brakes to reduce system air pressure to governor cut-in. Note that the system once again builds to full pressure and is followed by a purge at the AD-IP air dryer exhaust.

12.4 Check for excessive leakage around the head of the desiccant cartridge where it contacts the end cover. With the compressor in loaded mode (compressing air), apply a soapy solution to these areas, and observe that any leakage does not exceed a 1-inch bubble in 1 second. If leakage exceeds this measure, remove and re-install the desiccant cartridge.

Bendix AD-9si and AD–IS Air Dryers

1. Park the vehicle on a level surface, shut down the engine, and set the parking brake. Chock the tires.
2. Drain the air reservoirs.
3. Using a strap wrench or equivalent, loosen the desiccant cartridge. See **Fig. 3**. Spin the cartridge off by hand and discard it.

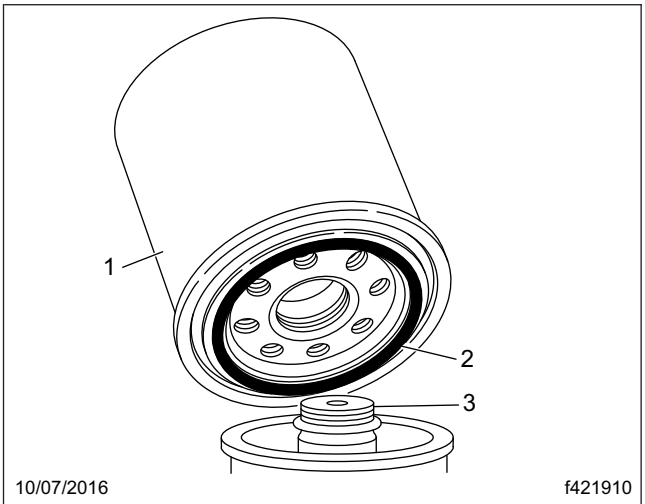

1. Desiccant Cartridge
2. Cartridge Sealing Ring
3. Threaded Base Post

Fig. 3, Desiccant Cartridge Replacement

4. On the new desiccant cartridge, lubricate the sealing rings with silicone grease.

IMPORTANT: Only use the silicone grease supplied with Bendix replacement kits.

5. Screw the desiccant cartridge onto the body, by hand, until the seal makes contact with the body. Rotate the cartridge clockwise about one full turn. Firmly tighten the cartridge.

WABCO System Saver Air Dryers

NOTE: The following instructions apply to the System Saver 1200, 1200 Plus, and Twin air dryers.

NOTICE

The WABCO System Saver air dryers can use either a standard or oil coalescing desiccant cartridge. When replacing the desiccant cartridge, it is very important to use the same type of cartridge that was originally installed on the dryer. Oil coalescing cartridges can be used in any application, but require more frequent service intervals (every 1 to 2 years instead of every 2 to 3 years for a standard cartridge). Do not replace an oil coalescing cartridge with a standard cartridge, as this may result in contamination and malfunctioning of downstream air system components.

Refer to **Fig. 4** for cartridge replacement.

1. Drain the air system.
2. Using a strap wrench, turn the desiccant cartridge counterclockwise and remove it.
3. Remove and discard the O-ring.
4. Clean the top surface of the dryer base with a commercial cleaning solvent.

IMPORTANT: If the air dryer base is damaged, preventing a tight seal, replace the air dryer.

5. Using a multipurpose, high-temperature grease that resists water, steam, and alkali, lightly coat the surfaces of the new O-ring and the dryer base. Install the O-ring.
6. Thread the desiccant cartridge onto the dryer base (turn clockwise). When the seal contacts the base, tighten the cartridge one complete turn more. Do not overtighten.

https://truckmanualshub.com/

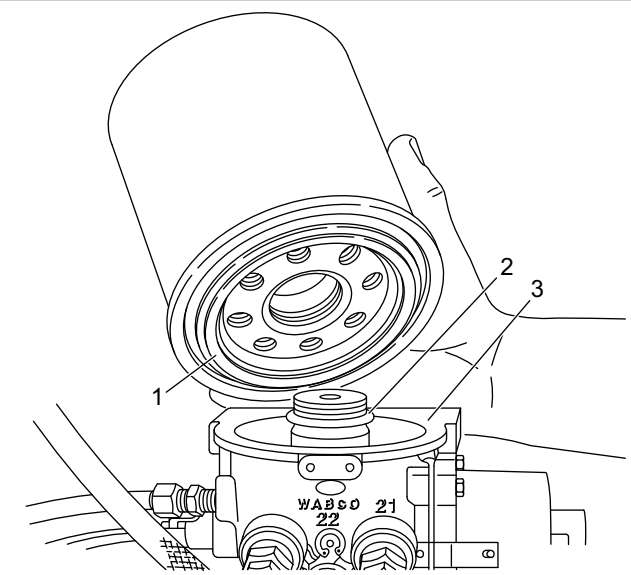

1. Seal
2. O-Ring
3. Air Dryer Base

Fig. 4, Desiccant Cartridge Replacement

42–03 Air Dryer Inspection

1. Park the vehicle on a level surface and apply the parking brakes. Shut down the engine. Chock the tires.
2. Check for moisture in the air brake system by opening the reservoir drain cocks. Examine the discharge. Some trace of water in the discharge is normal. A discharge of a milky gray liquid indicates excessive moisture is present in the air system and the desiccant cartridge needs to be replaced. See **Group 42** of the *Columbia® Workshop Manual* for troubleshooting procedures. The following conditions could cause small amounts of moisture to be found in the air system:
   - An outside air source has been used to charge the air brake system. This air did not pass through the drying bed.
   - Air usage is unusually high and not normal. This may be due to accessory air demands or some unusual air requirement that does not allow the compressor to load and unload in a normal fashion. Check for air system leaks.
   - The air dryer has been installed on a system that had previously been operated without an air dryer. This type of system will be saturated with moisture, and several weeks of operation may be needed to fully dry the system.
   - The temperature range in your area fluctuates more than 30 degrees in one day. Small amounts of water can accumulate in the air brake system due to condensation. Under these conditions, the presence of moisture is normal and should not be considered an indication of poor air dryer performance.
3. Inspect the air dryer for external damage, and check that the unit is tightly mounted on the frame. If the air dryer mounting is loose, See **Group 42** of the *Columbia® Workshop Manual* for mounting instructions.
4. Turn on the ignition switch, but do not start the engine.
5. Disconnect the harness connector from the air dryer.
6. Connect a voltmeter to circuit 94 on the air dryer's harness connector and to a body ground point. Check for battery voltage. If voltage is not found, check and repair the open or short to ground in wire 94.
7. Connect a voltmeter between the two terminals on the air dryer's harness connector. If voltage is not found, repair the open in the ground circuit wiring.
8. Use an ohmmeter to check resistance between the terminals on the end cover. See **Fig. 5**. The end cover contains the heater/thermostat. If the heater/thermostat is between 40 and 90°F (5 and 32°C), the heater/thermostat measured resistance will be infinite ohms. If the measured resistance is less than infinity, replace the heater/thermostat.
9. Remove the heater/thermostat assembly and place it in a freezer for about five minutes to cool it below 40°F (5°C). Remove the cold heater/thermostat assembly and check resistance between the heater/thermostat terminals. Resistance should be 1.5 to 3.0 ohms. As the temperature of the heater/thermostat assembly increases, the ohm reading will increase. When the temperature goes above 45°F (7°C) mea-

https://truckmanualshub.com/

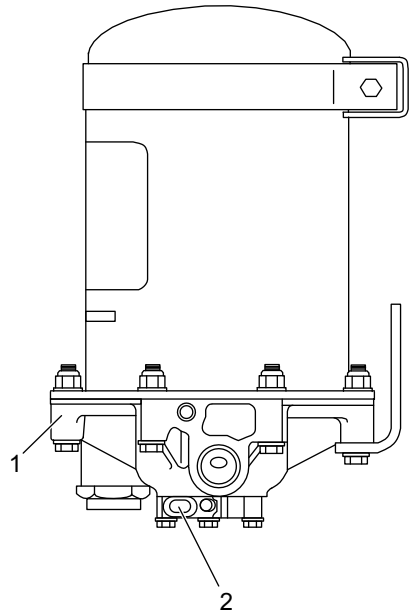

10/07/2016 f421384

1. End Cover Assembly
2. Heater/Thermostat Terminals

Fig. 5, End Cover Terminals Location

sured resistance should be infinite ohms. If the heater/thermostat does not operate as outlined, replace it. If it does operate as outlined, install it, then remove the chocks from the tires.

42–04 Alcohol Evaporator Cleaning and Inspection

Midland

Maintenance is required during both the freeze season and the off season to keep the alcohol evaporator in good working order.

Off Season

During the off season, drain the unit of alcohol. At regular engine service intervals, open the drain cock to remove moisture from the alcohol evaporator. Before reactivating the evaporator for the next freeze season, drain, disassemble, inspect, and steam-clean the unit of any sludge that may have accumulated. It is advisable to replace any rubber parts when assembling the alcohol evaporator. Perform this service just before the freeze season.

Freeze Season Reactivation

1. Park the vehicle on a level surface and apply the parking brakes. Shut down the engine. Chock the tires.
2. Remove the filler cap, and check the cap tetraseal.
3. Remove the capscrews and reservoir from the cover.
4. Remove the cover tetraseal.
5. Drain the air tank, and disconnect the line from the evaporator outlet. Remove the check-valve retainer, spring, and disc.
6. Install the disc, spring, and check-valve retainer, and connect the line to the evaporator outlet.
7. Install the cover tetraseal.
8. Install the reservoir on the cover and tighten the capscrews.
9. Fill the reservoir with 40 ounces (1183 mL) of methyl alcohol, then install the filler cap.
10. Remove the chocks from the tires.

42–05 Dana Spicer Camshaft Bracket Lubrication

IMPORTANT: Perform **MOP 42–10** before lubricating the camshaft bracket.

Pump grease into the camshaft bracket until it appears at the slack adjuster end of the bracket. See **Fig. 6**.

Use an NLGI Grade 1 or Grade 2 multipurpose chassis grease. If grease leaks out under the camhead, the camshaft bracket grease seal is worn or damaged; replace it. See **Group 42** of the *Columbia® Workshop Manual* for grease seal replacement instructions.

42–06 Dana Spicer, Haldex, and Gunite Slack Adjuster Lubrication

IMPORTANT: Perform **MOP 42–10** before lubricating the slack adjusters.

https://truckmanualshub.com/

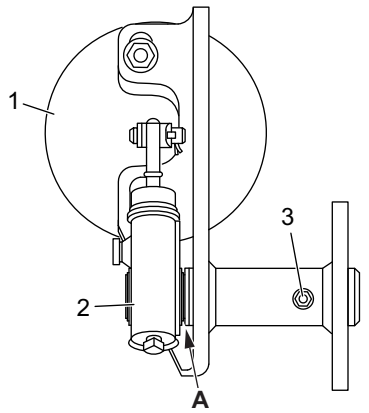

10/07/2016 f420011a

A. Grease Exit
1. Brake Chamber
2. Slack Adjuster
3. Non-Pressure-Relief Grease Fitting

Fig. 6, Camshaft Bracket Lubrication

Automatic slack adjusters that have a grease fitting must be lubricated periodically to ensure proper brake operation.

⚠ WARNING

Failure to lubricate slack adjusters could lead to dragging brakes or a brake failure, resulting in property damage, personal injury, or death.

Dana Spicer and Haldex

NOTICE

Do not use moly-disulfide-loaded grease or oil. Both the life and reliability of the slack adjuster will be reduced if this type of grease is used.

Lubricate the automatic slack adjuster at the grease fitting. See **Fig. 7**. Use standard chassis lubricant for Haldex slack adjusters. Dana Spicer Low Lube slack adjusters should be lubricated with SHC 460 synthetic lubricant.

Gunite

For operating temperatures of –20°F (–29°C) and higher, use Texaco Multifak EP-2 or Mobil Grease No. 77.

For operating temperatures between –20°F (–29°C) and –40°F (–40°C), use Lubriplate Aero grease.

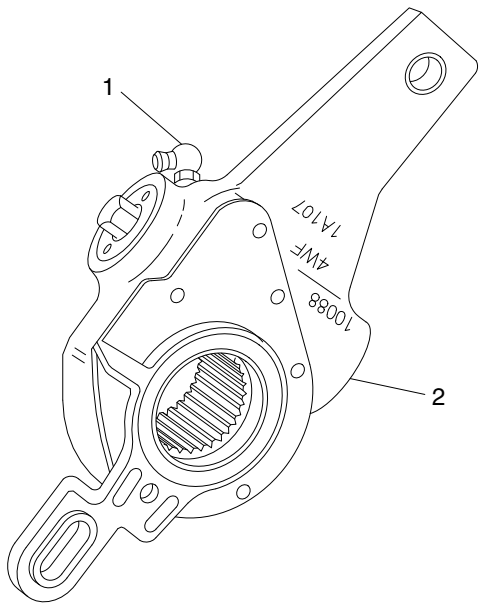

02/01/2001 f421649a

1. Grease Fitting
2. Slack Adjuster

Fig. 7, Dana Spicer Automatic Slack Adjuster

Lubricate a Gunite automatic slack adjuster at the grease fitting until grease appears on the camshaft, or flows from the grease relief. See **Fig. 8**.

The newest Gunite automatic slack adjusters are produced without a grease relief. During lubrication with a grease gun, lubricant is forced through the drilled worm wheel onto the camshaft. Lubricate the automatic slack adjuster at the grease fitting until grease appears on the camshaft. See **Fig. 8**.

42–07 Meritor Camshaft Bracket Lubrication

IMPORTANT: Perform **MOP 42–10** before lubricating the camshaft bracket.

NOTE: If equipped with an extended-maintenance Q Plus™ brake system, the camshaft bracket will not have a grease fitting. These camshafts use a special NLGI grade synthetic polyurea grease and do not require lubrication for 3 years or 500,000 miles (804 500 km), whichever comes first. The extended-maintenance camshaft bushings are lubricated

https://truckmanualshub.com/

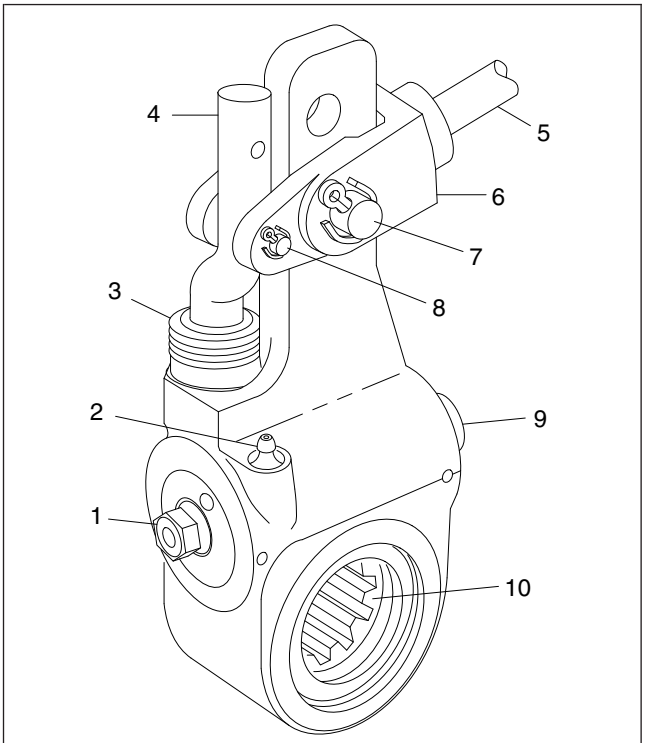

10/27/93 f420653a

1. 7/16-Inch Adjusting Nut
2. Grease Fitting
3. Boot
4. Link
5. Brake Chamber Piston Rod
6. Clevis
7. 1/2-Inch Clevis Pin
8. 1/4-Inch Clevis Pin
9. Grease Relief Opening
10. Slack Adjuster Spline

Fig. 8, Gunite Automatic Slack Adjuster

during the brake reline service interval. For service and lubrication instructions, see **Group 42** of the *Columbia® Workshop Manual*.

For camshaft brackets with grease fittings, use an NLGI Grade 1 or Grade 2 multipurpose chassis grease.

Lubricate the camshaft bushings through the grease fitting on the camshaft bracket or the spider until new grease flows from the inboard seal. See **Fig. 6**.

⚠ WARNING

If grease leaks out under the camhead, the camshaft bracket grease seal is worn or damaged. See Group 42 in the *Columbia® Workshop Manual* for grease seal replacement instructions. If this seal is not replaced, the brake linings could become contaminated with grease. The stopping distance of the vehicle will be increased, which could result in personal injury or property damage.

42–08 Meritor Slack Adjuster Lubrication

IMPORTANT: Perform **MOP 42–10** before lubricating the slack adjusters.

NOTE: If equipped with an extended-maintenance Q Plus™ brake system, the slack adjuster will not have a grease fitting. These slack adjusters use a special NLGI grade synthetic polyurea grease and do not require lubrication for 3 years or 500,000 miles (804 500 km), whichever comes first. The extended-maintenance slack adjusters are lubricated during the brake reline service interval. For service and lubrication instructions, see **Group 42** of the *Columbia® Workshop Manual*.

For slack adjusters with grease fittings and for operating temperatures above –40°F (–40°C), use a NLGI Grade 1 clay-base grease, or a NLGI Grade 1 or 2 lithium-base grease.

For slack adjusters with grease fittings and for operating temperatures below –40°F (–40°C) and above –65°F (–54°C), use a NLGI Grade 2 synthetic oil, clay-base grease.

Lubricate the slack adjuster at the grease fitting until grease is forced past the pressure-relief capscrew or past the gear splines around the inboard snap ring. See **Fig. 9**.

42–09 Bendix E-6 Foot Control Valve Inspection and Lubrication

1. Remove the brake valve from the vehicle. See **Section 42.10, Subject 110**, of the *Columbia® Workshop Manual* for instructions.
2. Remove the roll pin from the brake pedal pivot pin. See **Fig. 10**.
3. Remove the brake pedal pivot pin.
4. Remove the brake pedal.

https://truckmanualshub.com/

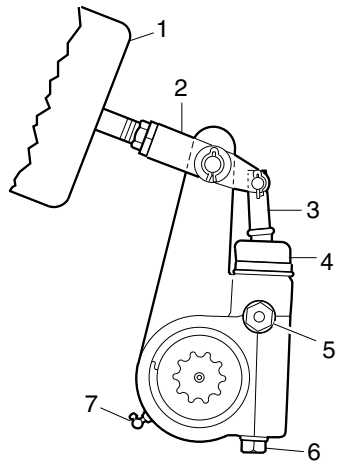

10/20/93 f420012a

1. Brake Chamber
2. Clevis
3. Actuator Rod
4. Boot
5. Pressure-Relief Capscrew, Gasket, Pawl Spring, and Pawl
6. Manual Adjusting Nut
7. Grease Fitting (or plug)

Fig. 9, Meritor Automatic Slack Adjuster

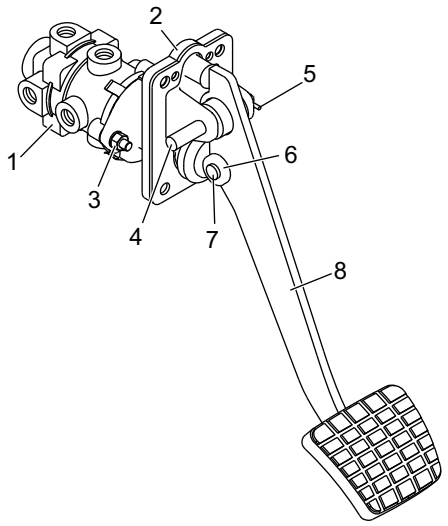

11/01/2016 f430405

1. E-6 Foot Control Valve
2. Mounting Plate
3. Nut and Washer
4. Pivot Pin
5. Roll Pin
6. Roller
7. Roller Pin
8. Pedal

Fig. 10, Brake Pedal and Valve Assembly

5. Check the brake pedal mounting plate adapter for signs of wear or cracks at the bosses (the area from which the pivot pin was removed). Replace it if necessary.
6. Check the brake pedal rollers for signs of wear or cracks. Replace it if necessary.
7. If the rollers are replaced, replace the roller pin, install a new cotter pin, bend it to 90 degrees and apply Torque Seal (OPG F900 White) to the cotter pin.
8. Remove the plunger from the valve. Using alcohol, clean the existing grease from the plunger. Check the plunger for signs of wear or cracks. Replace it if necessary.
9. Lubricate the plunger with barium grease (BW 246671).
10. Insert the plunger in the valve.
11. Install the brake pedal with the pivot pin.
12. Install a new roll pin and apply Torque Seal (OPG F900 White) to the roll pin.
13. Install the brake valve assembly. See **Section 42.10, Subject 110**, of the *Columbia® Workshop Manual* for instructions.
14. Test the brakes before returning the vehicle to service.

42–10 Brake Inspection

IMPORTANT: This procedure should be performed prior to lubrication of the brake components.

Parking Brake Operational Check

CAUTION

Perform the following check in a clear safe area. If the parking brakes fail to hold the vehicle, personal injury or property damage may result.

1. With the engine running, and air pressure at cut-out pressure, set the parking brake.
2. Put the vehicle in the lowest gear and gently attempt to move it forward. The vehicle should not move. If the vehicle moves, the parking brakes are not operating correctly and must be repaired before the vehicle is returned to service. See

https://truckmanualshub.com/

Group 42 of the *Columbia® Workshop Manual* for repair procedures.

Brake Component Inspection

1. Park the vehicle on a level surface, set the parking brake, and chock the tires. Once the tires are chocked, release the parking brake.

⚠ WARNING

Manually adjusting an automatic slack adjuster to bring the pushrod stroke within legal limits is likely masking a mechanical problem. Adjustment is not repairing. Before adjusting an automatic slack adjuster, troubleshoot the foundation brake system and inspect it for worn or damaged components. Improperly maintaining the vehicle braking system may lead to brake failure, resulting in property damage, personal injury, or death.

2. With the engine off, and 100 psi (689 kPa) of air tank pressure, have an assistant apply and hold an 80 to 90 psi (550 to 620 kPa) brake application.
3. Check to see if the colored over-stroke band on each brake chamber pushrod is exposed.

   If a band shows, the stroke is too long. Check the foundation brake components for wear or damage, and repair as needed. See **Group 42** of the *Columbia® Workshop Manual* for inspection, troubleshooting, and repair procedures.
4. Measure the applied chamber stroke. See **Table 1** for the proper stroke for the type of chamber being used. If the stroke is too short, the brakes may drag or will not fully apply. Check for improper operation or adjustment of the automatic slack adjuster. See **Group 42** of the *Columbia® Workshop Manual* for inspection and troubleshooting procedures.
5. Start the engine and build air pressure to at least 100 psi (689 kPa). Shut down the engine.
6. Check all of the foundation brake components for damage, wear, and loose or missing parts. Repair as needed. See **Group 42** of the *Columbia® Workshop Manual* for repair procedures.

Brake Chamber Stroke Specifications			
Chamber			Max Applied Stroke: inch (mm)
Manufacturer	Type*	Size†	
Gunite	Standard Stroke	9	1-3/8 (35)
		12	
		16	1-3/4 (44)
		20	
		24	
		30	2 (51)
		36‡	2-1/4 (57)
	Long Stroke	16	2 (51)
		20	
		24 (2-1/2 inch rated stroke)	
		24 (3 inch rated stroke)	2-1/2 (64)
		30	

https://truckmanualshub.com/

Brake Chamber Stroke Specifications			
Chamber			Max Applied Stroke: inch (mm)
Manufacturer	Type*	Size†	
Haldex	Standard Stroke	12	1-3/8 (35)
		16	1-3/4 (44)
		20	
		24	
	2-1/2-Inch Extended Stroke	24	2 (51)
	3-Inch Extended Stroke	24	2-1/2 (64)
	Standard Stroke	30	2 (51)
	Long Stroke	30	2-1/2 (64)
Meritor	Standard Stroke	9	Less than 1-1/2 (38)
		12	
		16	Less than 1-3/4 (44)
		20	
		24	Less than 1-7/8 (48)
	Long Stroke	24	Less than 2 (51)
	Standard Stroke	30	
Dana Spicer	Long Stroke	16L	2 (51)
		20L	
		24L	
		24LS	2-1/2 (64)
		30LS	

* Long stroke design is indicated by a tag, or embossing, on the brake chamber.

† Specifications are relative to a brake application with 80 to 90 psi (550 to 620 kPa) air pressure in the brake chambers.

‡ If type 36 chamber is used, slack length should be less than 6 inches.

Table 1, Brake Chamber Stroke Specifications

https://truckmanualshub.com/

https://truckmanualshub.com/

Index, Alphabetical

Title of Maintenance Operation (MOP)	MOP Number
Bellows Replacement, Rack and Pinion Steering Gear	46–07
Drag Link Inspection	46–01
Drag Link Lubrication	46–05
Power Steering Fluid Level Inspection	46–03
Power Steering Fluid and Filter Changing	46–02
Power Steering Gear Lubrication	46–04
Rack and Pinion Steering Gear Inspection	46–06
Safety Precautions	46–00

https://truckmanualshub.com/

https://truckmanualshub.com/

46–00 Safety Precautions

Safety Precautions in this section apply to all procedures within this group.

⚠ DANGER

When working on the vehicle, shut down the engine, set the parking brake, and chock the tires. Before working under the vehicle, always place jack stands under the frame rails to ensure the vehicle cannot drop. Failure to follow these steps could result in serious personal injury or death.

46–01 Drag Link Inspection

⚠ WARNING

All steering system components are critical for safe operation of the vehicle. Failure to maintain the steering system as specified may result in loss of steering control, which could lead to personal injury and property damage.

1. Park the vehicle on a level surface, shut down the engine, and set the parking brake. Chock the tires.
2. Have someone turn the steering wheel from left to right. Check for movement between the ball stud end and the pitman arm, and between the ball stud end and the steering arm.

   If the ball stud end is loose, replace the drag link.
3. Check the ball stud castle nut for looseness.

   If the castle nut is loose, replace it and the cotter pin. See **Group 00** for torque specifications.
4. Inspect the boot of the drag link at both the pitman arm and the steering arm end for cracks, splits, or other damage. Replace the boot if needed.
5. Grasp the drag link near the pitman arm end, then push and pull laterally to check for axial movement in the ball stud end. If it is loose, replace the drag link. See **Group 46** of the *Columbia Workshop Manual* for replacement instructions. If there is 1/8-inch (3-mm) movement or more, do not drive the vehicle until the drag link is replaced.

46–02 Power Steering Fluid and Filter Changing

⚠ WARNING

Fill only with approved clean fluid. Failure to use the proper fluid could cause seal deterioration and leaks. Fluid leaks could eventually cause loss of power steering assist. This could lead to an accident resulting in personal injury or property damage. Wear eye protection when changing the fluid and filter.

1. Park the vehicle on a level surface, shut down the engine, and set the parking brake. Chock the tires.
2. Place a drain pan under the power steering reservoir, and remove the steering gear-to-reservoir return hose at the reservoir. Drain the power steering fluid into the drain pan and dispose of the fluid properly. Plug the return line fitting on the reservoir.
3. Loosen the clamp and remove the cover along with the filter spring and the filter top plate.

NOTE: Always replace the power steering reservoir filter when changing the fluid.

4. Remove the filter. It may be necessary to wiggle the filter to remove it from its base. Do not use pliers to aid in removal of the filter; pliers could cause metal chips to enter the steering system. Clean the inside of the reservoir, using a lint-free cloth.

IMPORTANT: Do not start the engine while draining the system.

5. Place the disconnected end of the steering gear-to-reservoir hose in the drain pan. Raise the front of the vehicle with a floor jack and support it with jack stands. Have someone turn the steering wheel to full lock left and right. Capture the fluid flowing from the hose in the drain pan. Add fluid to the reservoir as needed. When clean power steering fluid flows from the hose, remove the plug from the reservoir and reconnect the hose to the reservoir. Remove the jack stands and lower the vehicle.
6. With the larger opening at the top, install a new filter in the reservoir.

https://truckmanualshub.com/

7. Clean the reservoir cover and gasket. Inspect the O-ring and the cover for cracks, deformities, or damage. Replace the gasket seal or cover as needed.
8. Install the reservoir cover along with the spring and the top plate. Make sure the center of the top plate fits into the opening at the top of the filter.
9. Place the clamp over the flanges of the cover and shell assembly, then tighten 25 to 30 lbf·ft (35 to 40 N·m).
10. Using ATF fluid that meets Dexron III or TES-389 specifications,, fill the power steering reservoir to the FULL COLD mark.
11. Start the engine and operate it at idle. Turn the steering wheel to full lock left and right to adjust the fluid level and remove any existing air from the power steering pump and gear. Recheck the fluid level. Add fluid as needed. The system is properly bled when the steering pump does not labor when turning the wheel.
12. Check for leaks in the power steering system and repair as needed. Top off the power steering fluid level as needed.

46–03 Power Steering Fluid Level Inspection

1. Park the vehicle on a level surface, shut down the engine, and set the parking brake. Chock the tires.
2. With the engine cool, use a shop towel or a clean rag to clean the area around the power steering reservoir fill cap. Twist the cap counter-clockwise to remove it. Check the cold power steering fluid level. The level should be between ADD COLD and FULL COLD with the engine off.
3. Start the engine and run it at idle until it reaches operating temperature.

   Remove the dipstick, and check that power steering fluid is between ADD HOT and FULL HOT. If necessary, add enough ATF fluid that meets Dexron III or TES-389 specifications to bring the level up to the FULL HOT mark on the dipstick.

46–04 Power Steering Gear Lubrication

Sheppard Steering Gears

Sheppard power steering gears manufactured without grease fittings are maintenance-free. If the power steering gear has no grease fitting, then it requires no periodic lubrication.

Sheppard power steering gears with grease fittings must be lubricated periodically.

1. Wipe off debris from the bearing cap grease fitting. See **Fig. 1**.

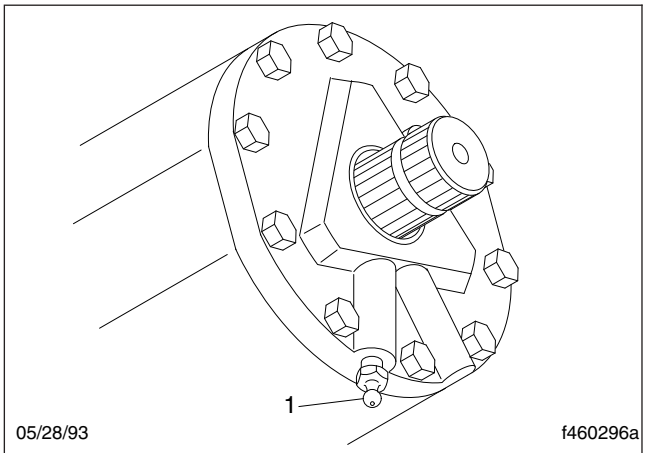

1. Bearing Cap Grease Fitting

Fig. 1, Sheppard Bearing Cap Lubrication

2. Using a hand-type grease gun, apply multipurpose chassis grease until grease starts coming out of the bearing cap dirt-and-water seal.

TRW Steering Gears

NOTICE

Apply grease to the sector shaft with a hand-type grease gun only. Use of a high-pressure power grease gun will supply grease too quickly and could affect the high pressure seal, contaminating the hydraulic fluid.

Using a hand-type grease gun, apply NLGI Grade 2 or 3 multipurpose chassis grease until it starts to come out past the sector shaft seal. See **Fig. 2**.

https://truckmanualshub.com/

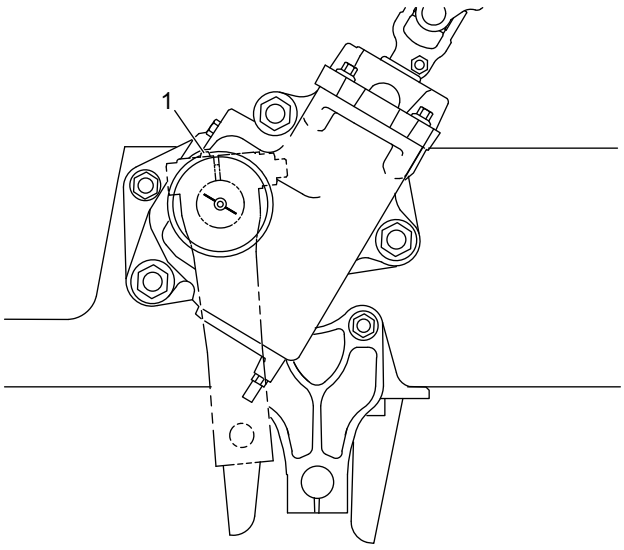

10/07/2016 f461071

1. Sector Shaft Grease Fitting

Fig. 2, TRW Steering Gear Lubrication

46–05 Drag Link Lubrication

1. Park the vehicle on a level surface, shut down the engine, and set the parking brake. Chock the tires.

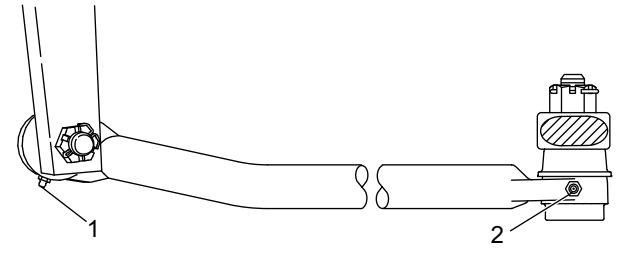

10/07/2016 f461072

1. Grease Fitting at Pitman Arm
2. Grease Fitting at Axle Steering Arm

Fig. 3, Drag Link

2. Using a clean rag, wipe all dirt from both drag link grease fittings. See **Fig. 3**.
3. Using a pressure gun and NLGI Grade 2 (8% 12-hydroxy lithium stearate grease) or NLGI Grade 1 (6% 12-hydroxy lithium stearate grease) chassis grease, apply clean grease at the grease fittings until old grease is forced out of the socket.

46–06 Rack and Pinion Steering Gear Inspection

WARNING

All steering system components are critical for safe operation of the vehicle. Failure to maintain the steering system as specified may result in loss of steering control, which could lead to personal injury and property damage.

Inspect the rack and pinion steering system as described below, and repair or replace any components that are worn or damaged. **Figure 4** shows the components of the rack and pinion steering system.

1. Park the vehicle on a level surface, shut down the engine, and set the parking brake. Chock the tires.
2. Check the steering I-shaft U-joints for evidence of looseness or binding. If any is found, replace the I-shaft.
3. Check the steering I-shaft slip joint for evidence of lateral movement, looseness, or binding. If any is found, replace the I-shaft.
4. Jack up one axle end at a time, and move the tire in and out by hand to check the tie rod ends for free play. No free play is allowed. If the outer tie rod ends are damaged or worn, replace them. See **Group 46** of the *Columbia Workshop Manual* for replacement instructions.
5. Check the steering gear mounting bolts for security.
6. Check that the outer tie rod castle nuts are tight, and the cotter pins are properly installed.

IMPORTANT: Do not remove the bellows unless they are damaged and require replacement, or there is evidence of a loose inner tie rod or there is hydraulic fluid leak.

7. Use a clean rag to remove all dirt and debris from the bellows. Check the bellows for holes or tears. If any are found, replace the bellows.
8. Check for evidence of hydraulic fluid leakage from the bellows. If hydraulic fluid is found to be leaking from within the bellows, replace the steering gear.

https://truckmanualshub.com/

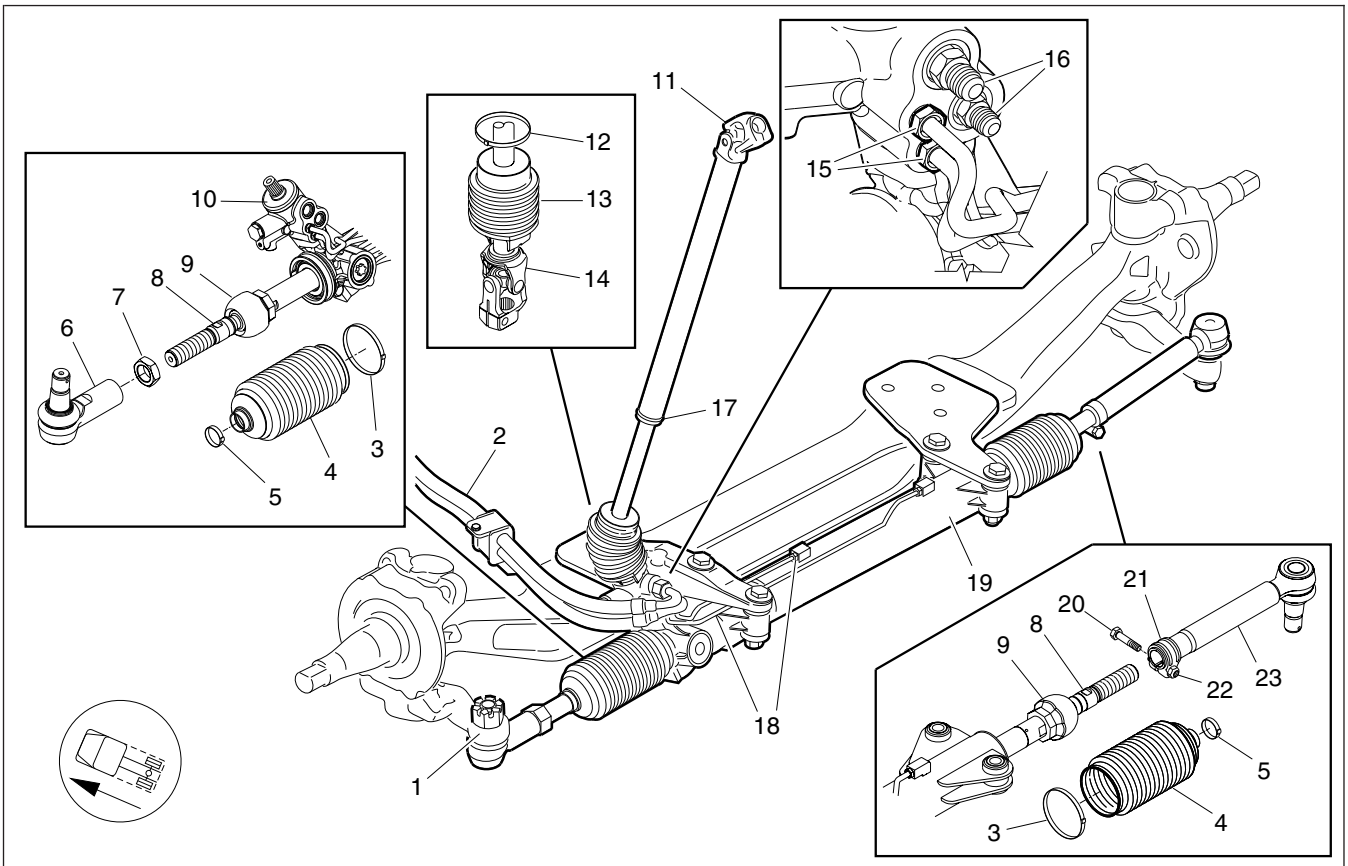

1. Steering Tie Rod Arm
2. Power Steering Fluid Lines
3. Large Bellows Clamp
4. Bellows
5. Small Bellows Clamp
6. Driver-Side Outer Tie Rod
7. Tie Rod Jam Nut
8. Inner Tie Rod Flat
9. Inner Tie Rod Ball Joint
10. Input Shaft Seal Cover
11. I-shaft Upper Yoke
12. I-shaft Lower Yoke Boot Clamp
13. I-shaft Lower Yoke Boot
14. I-shaft Lower End Yoke
15. Transfer Line Tube Fittings
16. Power Steering Fluid Line Fittings
17. I-shaft Slip Joint
18. Transfer Lines
19. Rack and Pinion Gear
20. Pinch Bolt
21. Tie Rod Clamp
22. Tie Rod Clamp Nut
23. Passenger-Side Outer Tie Rod

Fig. 4, Rack and Pinion Steering System

9. Check the input shaft for any leakage around the input shaft seal cover. If there is evidence of leakage from inside the cover, remove it and replace the input shaft seal. See **Group 46** of the *Columbia Workshop Manual* for instructions.

   Check the steering system pressure and return lines and fittings for leaks and damaged lines or hoses. Repair or replace lines, hoses, and fittings as necessary.

NOTICE

Do not tighten the tube fittings on the hard transfer lines. Tightening the tube fittings can cause tearing of the O-ring seal and increased fluid leakage.

https://truckmanualshub.com/

10. Check the tube fittings on the hard transfer lines of the gear, see **Fig. 4**, Item 15. If there is leakage from either of the fittings, replace the steering gear.

46–07 Bellows Replacement, Rack and Pinion Steering Gear

1. Park the vehicle on a level surface, shut down the engine, and set the parking brake. Chock the tires.
2. Raise the front wheels off the ground and support the vehicle with jack stands.
3. Remove both wheels from the steer axle.

NOTE: A Tiger Tool Slack Adjuster Puller, part number 10406, may be used to assist with removal of the outer tie rods.

4. Disconnect the outer tie rods from the steering arms, as follows.
   - 4.1 Remove the cotter pins and castellated nuts.
   - 4.2 On the driver's side, loosen the jam nut. See **Fig. 4**. Note the number of exposed threads and the position of the outer tie rod to ease installation.
   - 4.3 Disconnect the outer tie rods from the steering arms.
5. Use brake cleaner to remove dirt and debris from both bellows and surrounding areas.
6. Remove the small and large Oetiker clamps from both bellows. Discard the clamps.
7. Disconnect the outer tie rods from the inner tie rods. If necessary, use a backup wrench on the inner tie rod flat to turn the inner tie rod. See **Fig. 4**.
8. Remove the bellows from both sides of the gear.

NOTE: A thin film of leftover Terostat MS 939 on the rack housing is acceptable when installing the new bellows.

9. If the housing has Terostat MS 939 on it from a previous replacement of the bellows, remove as much of the leftover Terostat from the housing sealing surface as possible. Wipe down the housing with brake cleaner to remove all remaining dirt and debris.

IMPORTANT: Only apply grease to the rack shaft on the driver side. Do not apply grease to the teeth of the rack shaft. Do not apply grease to the shaft on the passenger side.

10. Turn the wheels all the way to the right to fully expose the driver-side rack. Without applying grease to the teeth of the rack shaft, evenly apply a light film of Renolit CX-FO 20 grease to the metal surfaces covered by the driver-side bellows.

NOTICE

Two syringes of the Terostat MS 939 are included in the Bellows Service Kit. Ensure only Terostat, which is white in color, is applied to the rack housing.

Do not allow Terostat MS 939 sealant to come into contact with the inner tie rods. Mistakenly applying sealant to the inner tie rods may cause damage to the bellows and the gear. See Fig. 5.

IMPORTANT: Terostat MS 939 sealant must be applied at a temperature between 41 and 104°F (5 and 40°C) to effectively seal steering gear components. Because Terostat sealant sets within ten minutes of application, the bellows must be installed within ten minutes of sealant application to ensure a good seal.

11. Evenly apply Terostat MS 939 sealant to the outer diameter of the rack housing where the large ends of the bellows seat on the gear housing. See **Fig. 6**.

NOTICE

Improper installation may cause moisture and contaminants to enter the gear, which may result in severe damage.

12. Install the new bellows on the gear. Ensure the bellows are seated properly on the gear housing and inner tie rods.
13. Rotate the bellows back and forth approximately 15 degrees to evenly disperse the sealant between the bellows and the gear housing.

https://truckmanualshub.com/

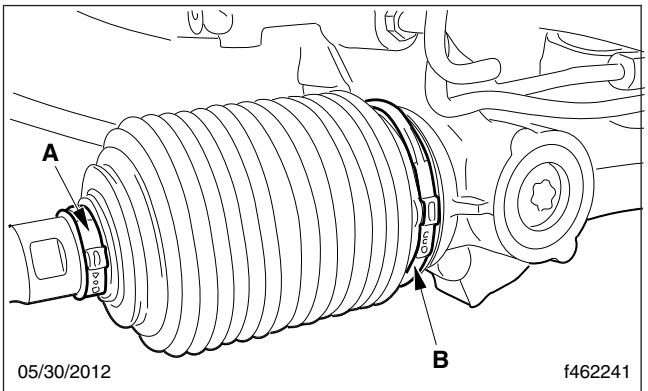

A. Do **not** apply Terostat near the small end of the bellows.
B. **Only** apply Terostat to the gear where the large end of the bellows seats.

Fig. 5, Apply Terostat To Large End of Bellows

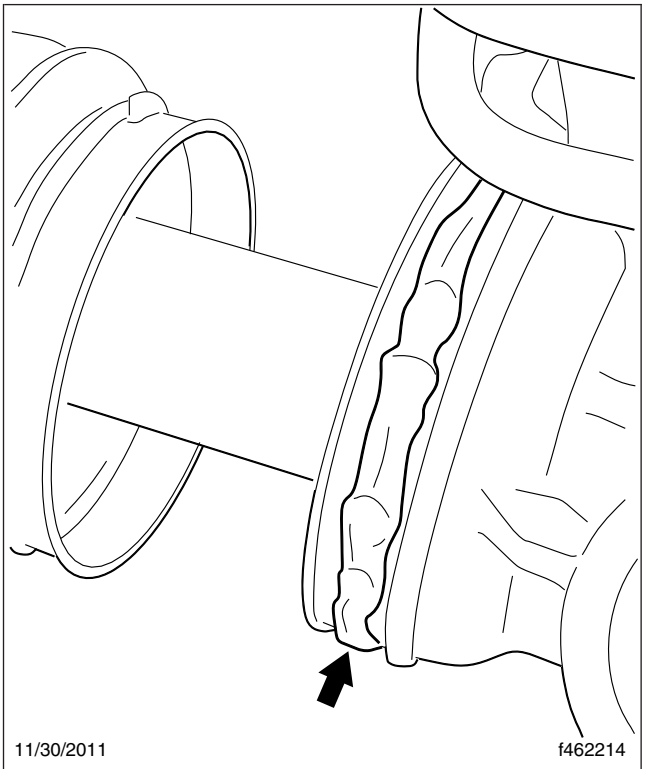

Evenly apply a bead of Terostat MS 939 sealant where the large ends of the bellows seat on the gear housing.

Fig. 6, Terostat MS 939 Sealant Application

14. Install new Oetiker clamps on each of the bellows as follows.

NOTICE

Fully opening an Oetiker clamp may cause permanent damage and render it ineffective.

14.1 Rotate the ears of the large Oetiker clamp forward on the bellows to avoid pinching the clamp in the next step.

14.2 Ensure the large Oetiker clamp is properly seated in the clamp groove on the bellows. Align the large Oetiker clamp ear with the small clamp ear. Both clamp ears should be aligned with the rack housing casting rib. See **Fig. 7**.

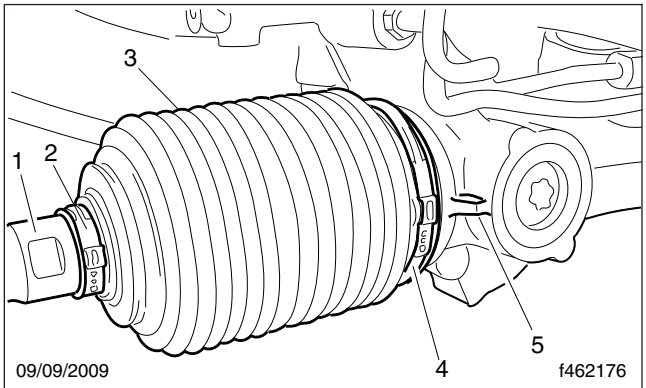

1. Inner Tie Rod
2. Small Oetiker Clamp
3. Bellows
4. Large Oetiker Clamp
5. Housing Casting Rib

Fig. 7, Oetiker Clamp Alignment

NOTICE

Do not over-tighten the Oetiker clamps. Over-tightening may lead to stretching of the clamp, which could allow moisture intrusion and corrosion. If an Oetiker clamp stretches, remove and discard the clamp and install a new clamp.

All three barbs on the clamp must be engaged. If all three barbs are not engaged after crimping, remove and discard the clamp and install a new clamp. Oetiker clamps must be adequately crimped and the bellows must be tightly secured to the gear housing to prevent moisture intrusion and corrosion.

14.3 Using an Oetiker clamp tool like the one shown in **Fig. 8**, crimp the small and large Oetiker bellows clamp ears until the

https://truckmanualshub.com/

ear width is 0.08 to 0.16 in (2 to 4 mm). See **Fig. 9** and **Fig. 10**.

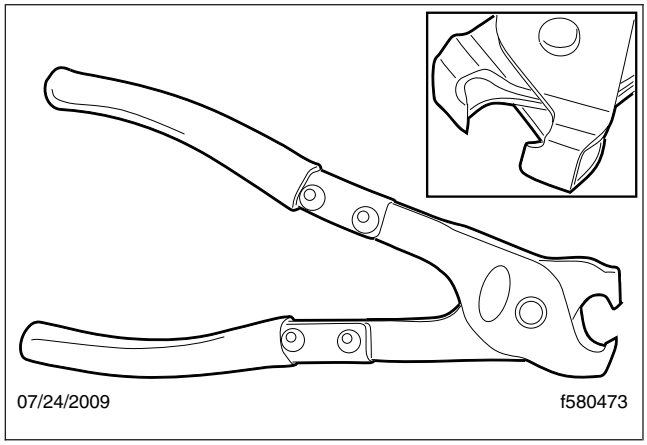

Fig. 8, Oetiker Clamp Tool, P/N 14100037 or 14100082

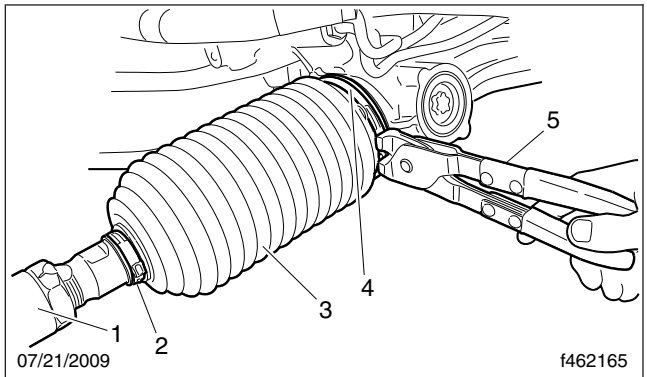

1. Outer Tie Rod
2. Small Oetiker Clamp
3. Bellows
4. Large Oetiker Clamp
5. Oetiker Clamp Tool

Fig. 9, Oetiker Clamp Installation

15. Remove excess grease from the bellows and the gear housing.
16. Install the jam nut on the driver-side inner tie rod, and the tie rod clamp on the passenger-side inner tie rod.
17. Thread the inner tie rods into the outer tie rods.
18. Attach the outer tie rods of the rack and pinion gear to the tie rod steering arms. Tighten the castellated nuts 240 lbf·ft (325 N·m). Continue to tighten until the next castellated nut slot aligns with the hole in the ball stud and insert the new cotter pin.

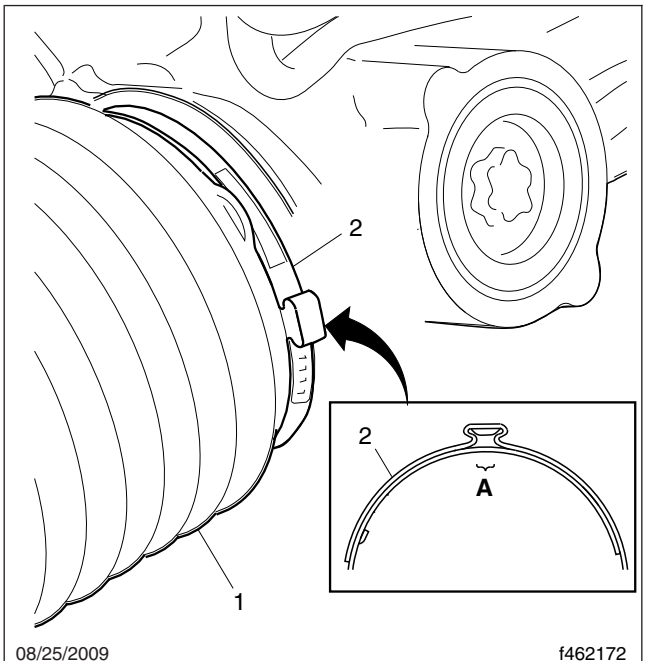

A. Crimp the clamp ears until the ear width is 0.08 to 0.16 inch (2 to 4 mm).
1. Bellows
2. Large Oetiker Clamp

Fig. 10, Oetiker Clamp Ear Width

19. Tighten the jam nut on the driver side, and the tie rod clamp nut on the passenger side.
20. Align the steering gear.

    NOTE: Use a calibrated, computerized, multi-wheel alignment tool, operated by a certified service technician to complete the following steps. If this type of tool is not accessible, the alignment procedure must be done by a facility that has the appropriate tool.

    When the alignment process requires that the steering wheel be pointed straight ahead, align the steering rack on-center pointers instead. See **Fig. 11**.

    20.1 Loosen the driver-side tie rod jam nut. If necessary, hold the inner tie rod in place with a backup wrench on the inner tie rod flat. See **Fig. 4**.

    20.2 Align the steering rack on-center pointers.

https://truckmanualshub.com/

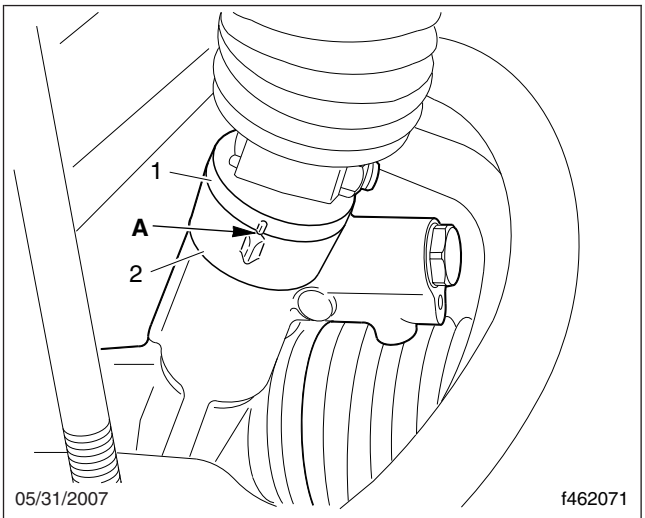

A. Align the pointers.
1. Input Shaft Seal Cover
2. Input Shaft Housing

Fig. 11, Rack and Pinion Pointer Alignment

20.3 Place a wrench on the driver-side inner tie rod flat and align the left tire by rotating the inner tie rod.

20.4 Tighten the tie rod jam nut 285 to 305 lbf·ft (386 to 414 N·m).

20.5 Loosen the passenger-side tie rod clamp nut.

20.6 With the gear on center, place a wrench on the passenger-side inner tie rod flat and align the right tire by rotating the inner tie rod.

20.7 Tighten the tie rod clamp nut 30 to 36 lbf·ft (41 to 49 N·m).

IMPORTANT: Total toe-in should be between 0 and 1/8 inch (3.2 mm), and the target is 1/16 inch (1.6 mm).

20.8 Check the clearance of the front wheels. With the tires on turnplates, and the wheels turned all the way to the right and left, there must be at least 1/2-inch (13 mm) clearance between the wheels and stationary components, and at least 3/4-inch (19 mm) clearance between the wheels/tires and moving components. If this is not the case, back out the stop bolts and adjust the jam nuts to limit the turning angles and to prevent possible contact with components.

20.9 Tighten the stop-bolt jam nuts 80 to 120 lbf·ft (108 to 163 N·m).

NOTICE

Maximum wheel cut is not to exceed 46 degrees. Excessive wheel cut may damage the inner tie rod.

20.10 Verify that wheel cut does not exceed 46 degrees. Adjust wheel cut if needed.

21. Install both wheels on the steer axle.

22. Remove the jack stands and lower the vehicle.

https://truckmanualshub.com/

Index, Alphabetical

Title of Maintenance Operation (MOP)	MOP Number
Fuel Filter Replacement	47–01
Fuel Separator Sight Bowl Cleaning and Element Replacement	47–02
Fuel Tank Band-Nut Tightening	47–03
Safety Precautions	47–00

https://truckmanualshub.com/

https://truckmanualshub.com/

47–00 Safety Precautions

Safety Precautions in this section apply to all procedures within this group.

⚠ DANGER

When working on the vehicle, shut down the engine, set the parking brake, and chock the tires. Before working under the vehicle, always place jack stands under the frame rails to ensure the vehicle cannot drop. Failure to follow these steps could result in serious personal injury or death.

47–01 Fuel Filter Replacement

Refer to the engine manufacturer's service manual for removal and installation procedures.

47–02 Fuel Separator Sight Bowl Cleaning and Element Replacement

ConMet Fuel Separator Sight Bowl Cleaning

The only maintenance necessary on ConMet fuel separators is to clean the sight bowl, if equipped. See **Fig. 1**.

⚠ WARNING

Diesel fuel is flammable and can ignite if exposed to an open flame, intense heat, or other ignition source. Do not drain fuel near, or expose fuel vapor to open flame or intense heat. Exposure to open flame or intense heat could start a fire, possibly resulting in personal injury or property damage. When working on a fuel system, have a fire extinguisher within easy reach.

1. Drain the fuel separator.
2. Unscrew the sight bowl from the fuel separator.
3. Wipe the sight bowl clean, using a soft cloth.
4. Lubricate the gasket with a film of oil, and reinstall it on the sight bowl. If the gasket appears dry-rotted or damaged, replace the gasket.
5. Lightly lubricate the threads on the sight bowl with oil, then thread the sight bowl into the bottom of the fuel separator.
6. Hand-tighten until the gasket is in full contact with the fuel separator, then tighten an additional 1/4 to 1/3 turn.
7. Check that the drain valve is tightened and closed.
8. Prime the fuel separator.
   - 8.1 Remove the vacuum breaker fitting and fill the unit with diesel fuel.
   - 8.2 Install and close the vacuum breaker fitting when the unit is full of fuel.

   IMPORTANT: The fitting must be air-tight and the valve closed.

47–03 Fuel Tank Band-Nut Tightening

Hold each fuel tank band retention nut with a wrench while backing off its jam nut. Then tighten the retention nuts 30 to 35 lbf·ft (41 to 46 N·m). After the retention nuts have been tightened, hold each retention nut with a wrench while tightening its jam nut 30 lbf·ft (41 N·m).

IMPORTANT: Do not overtighten.

https://truckmanualshub.com/

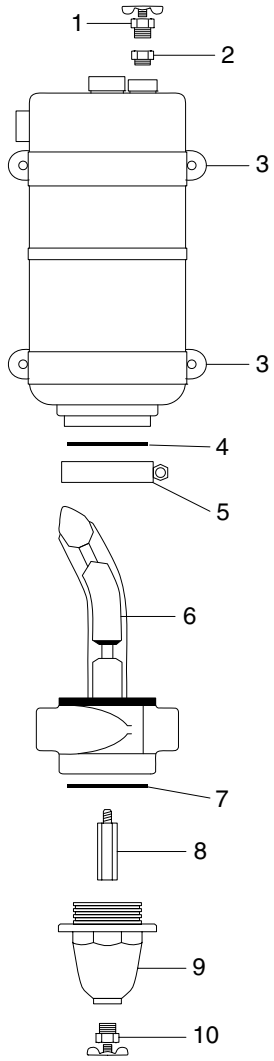

08/25/95 f470146

1. Vacuum Breaker/Drain Valve
2. Reducer Bushing
3. Mounting Brackets
4. O-Ring (when equipped with heater)
5. Stainless Steel V-Clamp (when equipped with heater)
6. Heater Assembly
7. Gasket
8. Sight Bowl Heater Rod
9. Sight Bowl Assembly
10. Vacuum Breaker/Drain Valve

Fig. 1, ConMet Fuel Separator

https://truckmanualshub.com/

Index, Alphabetical

Title of Maintenance Operation (MOP)	MOP Number
CAT CGI Bellows Replacement	49–02
Exhaust System Inspection (Noise Emission Control)	49–01
Safety Precautions	49–00

https://truckmanualshub.com/

https://truckmanualshub.com/

49–00 Safety Precautions

Safety Precautions in this section apply to all procedures within this group.

⚠ DANGER

When working on the vehicle, shut down the engine, set the parking brake, and chock the tires. Before working under the vehicle, always place jack stands under the frame rails to ensure the vehicle cannot drop. Failure to follow these steps could result in serious personal injury or death.

49–01 Exhaust System Inspection (Noise Emission Control)

In addition to inspecting the exhaust system at the scheduled maintenance interval, inspect the exhaust system if the noise level of the vehicle has increased. Replace parts that show leakage, wear, or damage, with genuine Freightliner parts.

Pre-EPA07 Exhaust System Inspecting

1. On all vehicles, check the condition of the muffler body and the top stack. Check the inlet/outlet tubes for leakage, dents, and corrosion, and check for holes in the muffler. Replace parts as required. Use new parts, equivalent to parts originally installed on the vehicle. See **Group 49** of the *Columbia® Workshop Manual* for replacement procedures.
2. Inspect the exhaust flex hose (see **Fig. 1**) for leakage, wear, or damage. Replace with new parts if replacement is needed.
3. Check for leakage at the V-band coupling, which attaches the exhaust pipe to the turbocharger exhaust outlet. See **Fig. 2**.
4. If leakage exists, tighten the nut on the V-band coupling 85 lbf·in (940 N·cm). If leakage persists, install a new V-band coupling.
5. Inspect the turbo outlet pipe, and replace it as needed.

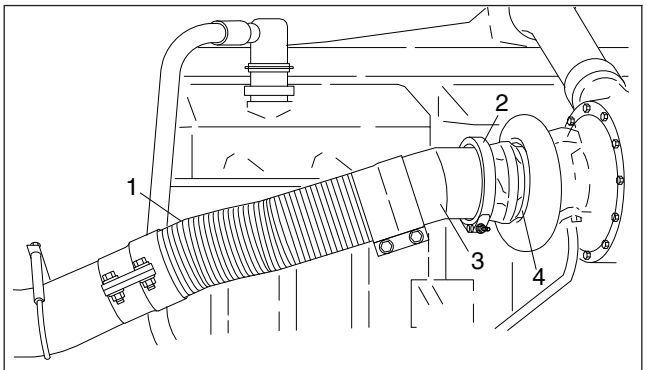

06/01/93 f490024a

1. Flex Hose
2. V-Band Coupling
3. Exhaust Pipe
4. Turbocharger Exhaust Outlet

Fig. 1, V-Band Coupling and Flex Hose

6. Check the U-bolt clamps for tightness, and tighten as needed.
7. Check the isolator at the base of the exhaust stack elbow(s) (see **Fig. 2**), for cracking, damage, and dry rot. Replace as needed.

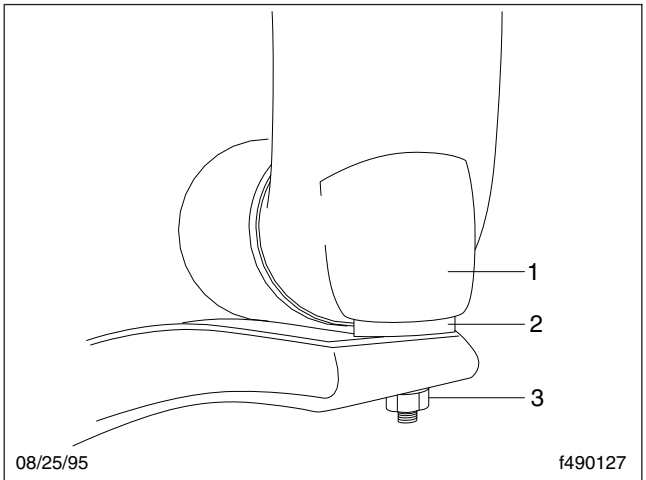

08/25/95 f490127

1. Exhaust Pipe
2. Exhaust Elbow Isolator
3. Mounting Nut

Fig. 2, Exhaust Elbow Isolator

8. Check for leakage at all wide-band exhaust clamps. See **Fig. 3**.

   If leakage exists, tighten the nuts 40 to 60 lbf·ft (54 to 81 N·m). If leakage persists, inspect the

https://truckmanualshub.com/

sealclamps. If necessary, install a new wide-band exhaust clamp.

EPA07 Exhaust System Inspecting

IMPORTANT: The Environmental Protection Agency's 2007 regulations require lower exhaust emissions, thus requiring new exhaust system components. See **Fig. 4**. In particular the after-treatment device (ATD), which is part of the after-treatment system (ATS), requires special attention during regularly scheduled maintenance inspections. If any discrepancies are discovered, refer to the engine manufacturer's service literature for repair instructions.

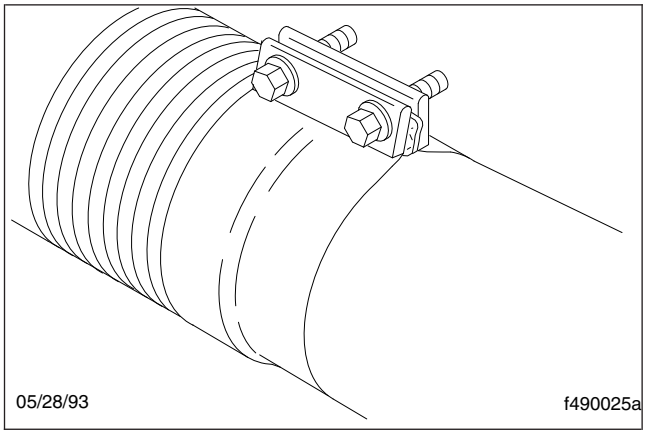

Fig. 3, Donaldson Sealclamp Wide-Band Exhaust Clamp

Definitions of ATS Components

Refer to the following list of definitions of ATS components.

- After-Treatment System (ATS)—the entire exhaust system from the turbocharger to the exhaust stack or tail pipe.
- After-Treatment Device (ATD)—a muffler-like canister that houses a DPF, DOC, and sensors.
- Diesel Particulate Filter (DPF)—a filter that collects and holds particulate matter (soot and ash).
- Diesel Oxidation Catalyst (DOC)—oxidizes hydrocarbons and reduces NOx.
- Sensors—detect temperatures and pressures in the ATS.

Inspection

1. Check for leakage at the clamp that attaches the exhaust pipe to the turbocharger exhaust outlet. If leakage exists, tighten the nut on the clamp to the required torque. If leakage persists, install a new clamp.
2. Check the exhaust pipe, bellows, and each exhaust seal clamp for leakage, wear, cracks, or damage. Replace damaged components as needed. If leakage exists at a clamp, tighten the nuts to the required torque. If leakage persists, install a new exhaust seal clamp. Do not reuse seal clamps. Once a seal clamp is loosened or removed, it must be replaced.

NOTICE

A leak in the CGI piping, including the bellows, will allow unfiltered air and contaminants into the engine intake, and can cause serious engine damage.

NOTE: Because the CGI bellows is covered with a metal mesh, it is difficult to see cracks or damage that may cause a leak.

3. On vehicles with CAT engines, inspect the CGI bellows and piping for evidence of damage or leakage. See **Fig. 5**. If the bellows is damaged or leaking, replace it. See **49–02** for the replacement procedure.

https://truckmanualshub.com/

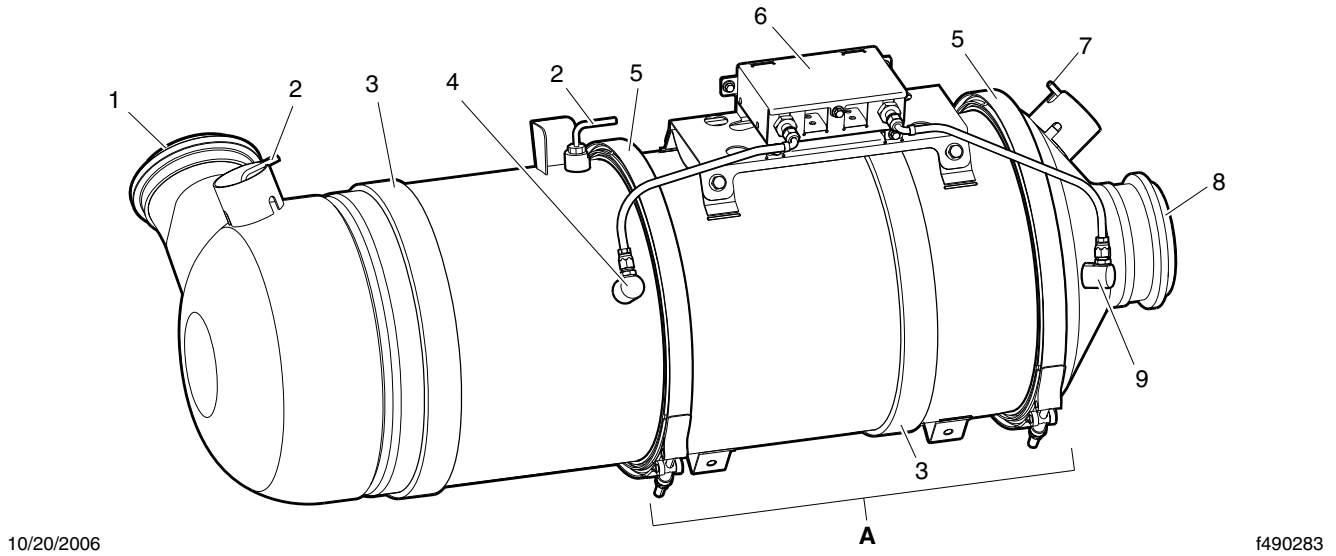

A. Inspect this area of the canister for dents.
1. Marmon Fitting at Inlet from Turbocharger
2. DOC Temperature Sensor
3. ATD Mounting Band
4. DPF Intake Pressure Sensor
5. DPF V-Band Mounting Clamps
6. Sensor Housing
7. DPF Outlet Temperature Sensor
8. Exhaust Outlet Marmon Fitting
9. DPF Outlet Pressure Sensor

Fig. 4, Typical After-Treatment Device

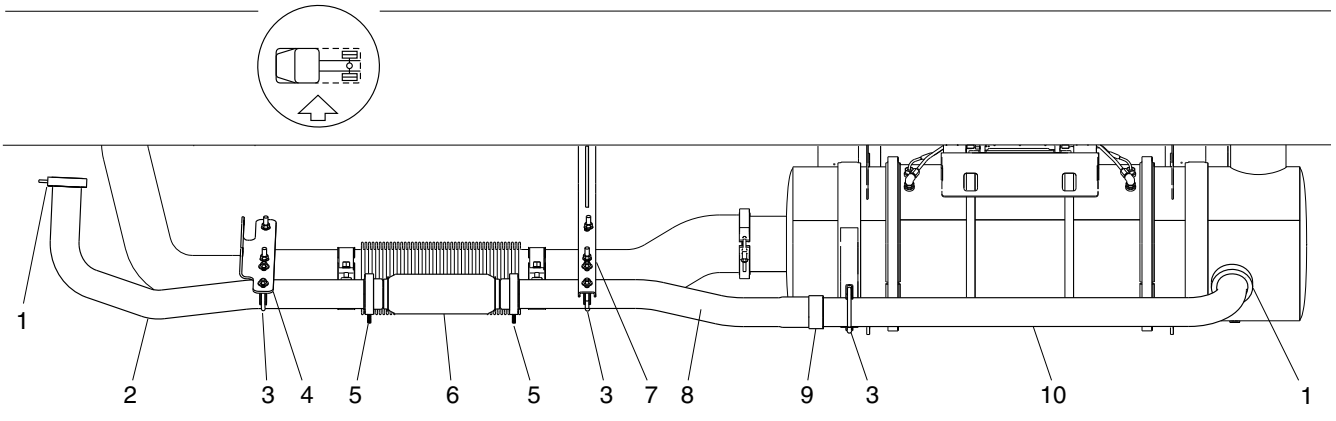

1. Clamp
2. Inlet Pipe
3. U-Clamp
4. Forward Pipe-Support Brace
5. Slip Clamp
6. CGI Bellows
7. Center Pipe-Support Brace
8. Center Pipe
9. Clamp
10. Outlet Pipe

Fig. 5, CAT EPA07 Exhaust Installation with CGI Bellows

https://truckmanualshub.com/

4. If present, check the condition of the insulation material around the exhaust pipe between the turbocharger and the ATD.
5. Check the ATD mounting bands for tightness. Tighten to 30 lbf·ft (41 N·m) if needed. Do not overtighten.
6. Check for leaks around the clamps that attach the ATD in the ATS, and around the clamps that retain the DPF in the ATD. No leaks are allowed anywhere in the system.
7. Check all sensors attached to the ATD for leaks or damaged wires. No leaks are allowed.
8. Check the DPF exterior surface for dents or other damage. See Item A of **Fig. 4**. A dent over 3 inches (76 mm) in diameter and 1/4-inch (6-mm) deep could cause internal damage to the DPF, causing it to malfunction.
9. Check for heat discoloration on the surface of the ATD. Heat discoloration may indicate internal damage; especially around the DPF.
10. Check any wires, lines, or hoses within 4 inches (10 cm) of the exhaust system for heat damage. Repair or reroute as needed.

49–02 CAT CGI Bellows Replacement

On vehicles with CAT EPA07 compliant engines, replace the CGI bellows at the M3 maintenance interval to prevent a later failure.

NOTICE

A leak in the CGI piping, including the bellows, will allow unfiltered air and contaminants into the engine intake, and can cause serious engine damage.

1. Park the vehicle, set the parking brake, chock the wheels.
2. Open the hood.
3. Remove the right side inner fender/splash shield as needed.
4. Remove the CGI piping between the engine and aftertreatment device (ATD).

   See **Fig. 6**.
5. On the workbench, remove the CGI bellows from the exhaust piping. Do not damage the piping.

NOTE: The following step, and its substeps, is to be done without the bellows installed. This will align the pipes so that the bellows can be installed correctly.

6. Install the CGI piping (without CGI bellows) and align piping.

   6.1 Attach the aft CGI pipe to the ATD.

   6.2 Attach the forward CGI pipe to the engine.

NOTICE

When the CGI pipes and bellows are installed, there should be approximately 3/4 inch (19 mm) clearance from the main bellows. Contact between the bellows could result in an exhaust leak, which in this case may allow ingestion of contaminants into the engine causing engine damage.

   6.3 Use a straightedge to align the pipes so that the pipe ends that attach to the bellows are parallel and concentric.

NOTICE

When shortening the CGI pipe(s), it is critical to leave a minimum of 1 inch (25.4 mm) of straight pipe on the end of each CGI pipe to allow for pipe insertion and clamp clearance. Failure to do this could result in an exhaust leak, which in this case may allow ingestion of contaminants into the engine causing engine damage.

7. Once the pipes are aligned, measure the pipe gap between the CGI pipes and record the distance. See **Fig. 7**, Ref. A.

   The existing pipe gap is designed at 10 inches (254 mm). A 10.75 inches (273 mm) pipe gap is required for the replacement CGI bellows and clamps. This requires one or both of the CGI pipes to be shortened.
8. Using a yellow paint pen, mark the pipes 1.5 inches (38 mm) in from the end of each pipe. These two marks will be used to center the bellows between the two pipes.

https://truckmanualshub.com/

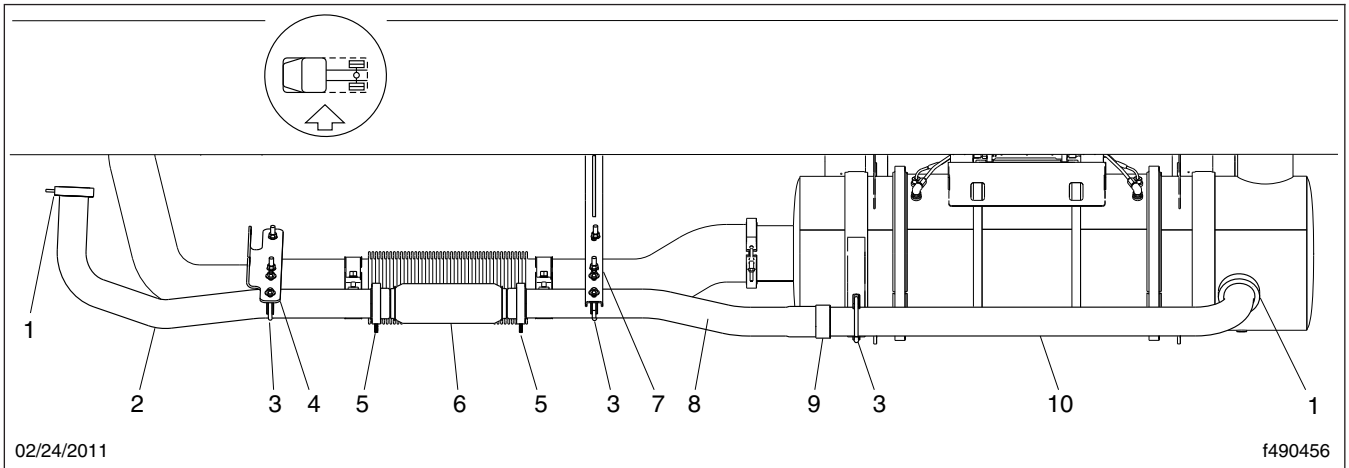

02/24/2011 f490456

1. Clamp
2. Inlet Pipe
3. U-Clamp
4. Forward Pipe-Support Brace
5. Slip Clamp
6. CGI Bellows
7. Center Pipe-Support Brace
8. Center Pipe
9. Clamp
10. Outlet Pipe

Fig. 6, CAT EPA07 Exhaust Installation with CGI Bellows

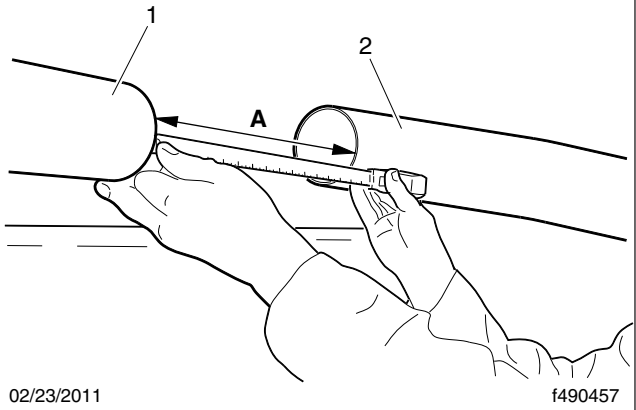

02/23/2011 f490457

A. Measure the pipe gap.
1. CGI Aft Pipe
2. CGI Forward Pipe

Fig. 7, Measuring the Pipe Gap (typical)

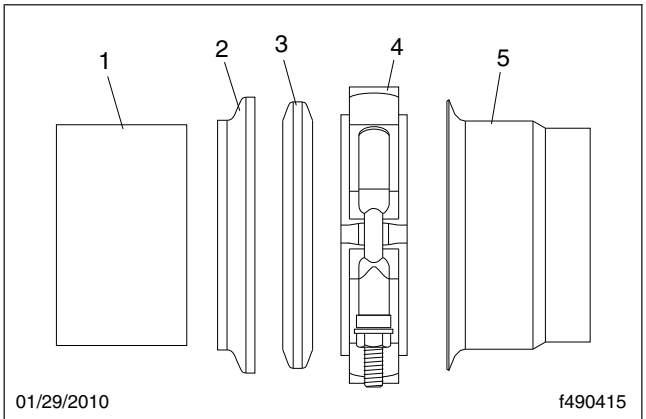

01/29/2010 f490415

1. Aft CGI Pipe
2. Retaining Ring
3. Graphite Gasket
4. Slip Clamp
5. CGI Bellows

Fig. 8, Aft Facing Slip Clamp Installation

9. Once the pipes are correctly aligned and separated at the correct distance, secure the aft CGI pipe to the ATD and to any CGI pipe support brackets.
10. Remove the forward CGI pipe from the truck.
11. Slide the slip clamp, with the retaining ring and graphite gasket ring, on the aft CGI pipe. See **Fig. 8** for proper installation.
12. Slide the new bellows onto the aft CGI pipe as far as it will go. See **Fig. 9**, Ref. A. Measurement A should be at least 7/16 inch (10 mm) past the face of the flange.
13. Install the slip clamp with the retaining ring and graphite gasket ring onto the forward CGI pipe. See **Fig. 10** for proper installation.
14. Slide the end of the forward CGI pipe into the bellows, and properly align the pipe.
15. Secure the forward CGI pipe to the engine and any CGI pipe support brackets.

https://truckmanualshub.com/

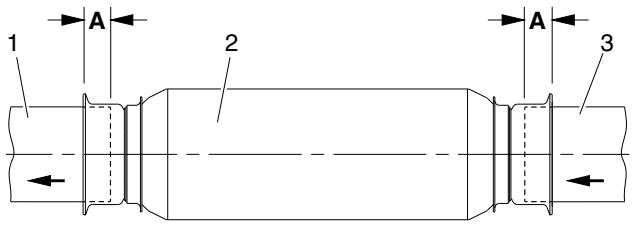

02/23/2011 f490458

A. At least 7/16 inch (10 mm)
1. Forward CGI Pipe
2. CGI Bellows
3. Aft CGI Pipe

Fig. 9, CGI Bellows Installation

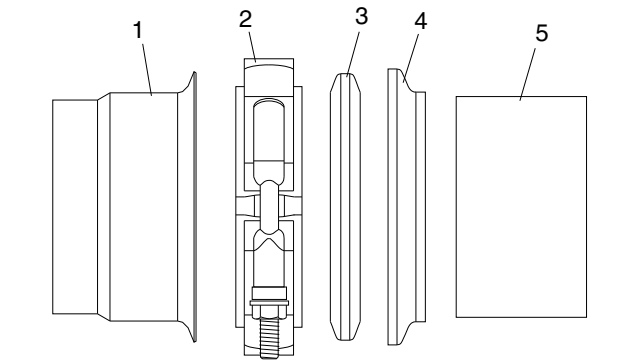

02/08/2010 f490417

1. CGI Bellows
2. Slip Clamp
3. Retaining Ring
4. Graphite Gasket
5. Forward CGI Pipe

Fig. 10, Forward Facing Slip Clamp Installation

16. Using the yellow marks, center the bellows between the exhaust pipes. Verify that the pipe is inserted at least 7/16 inch (10 mm) past the face of the flange. See **Fig. 9**, Ref. A.
17. Install the slip clamps on the bellows. Tighten the slip clamps 11 lbf·ft (15 N·m).
18. Start the engine and check for exhaust leaks. Tighten any clamps as needed.

https://truckmanualshub.com/

Index, Alphabetical

Title of Maintenance Operation (MOP) **MOP Number**

Mirror Folding Check 60–01

https://truckmanualshub.com/

https://truckmanualshub.com/

60–01 Mirror Folding Check

For vehicles with folding main mirrors, make sure that the mirrors fold freely on the pivot points. Pivot each mirror fully forward and backward two times to break loose any debris that may affect the fold-away feature of the mirror.

https://truckmanualshub.com/

https://truckmanualshub.com/

Index, Alphabetical

Title of Maintenance Operation (MOP) **MOP Number**

Door Seal, Door Latch, Door Hinge, and Door Check Lubrication. 72–01

https://truckmanualshub.com/

https://truckmanualshub.com/

72–01 Door Seal, Door Latch, Door Hinge, and Door Check Lubrication

NOTE: Light penetrating oils, such as WD–40, should not be used because they wash out beneficial factory-installed grease, and they evaporate.

Door Seals

Lightly coat the door seals with a lubricant that's safe for rubber.

Door Latches

Wipe old grease and dirt from all door latch assemblies, then apply liberal amounts of an approved grease to each moving joint; see **Table 1**. Use an appropriate applicator that will not leave material behind.

Door Hinges

The door hinges on vehicles built before and after 8/1/2005 have different lubrication requirements. The hinges on vehicles built **before** 8/1/2005 should be lubricated, while those on vehicles built **on or after** 8/1/2005 should not be lubricated.

CAUTION

Do not lubricate the door hinges on vehicles built on or after 8/1/2005. Lubrication of these hinges could adversely affect the performance of the bushings.

To determine if the door hinges need to be lubricated, first identify the hinge by checking the top loop of the hinge bracket. See **Fig. 1**.

Door Hinges on Vehicles Built on or After 8/1/2005

On vehicles built **on or after** 8/1/2005, the door hinge center pin is recessed in the top loop of the hinge bracket. There is a dimple in the top and bottom loop of the hinge bracket. See Ref. A of **Fig. 1**.

Do not lubricate this type of hinge. Lubrication could adversely affect the performance of the bushings. In addition, some lubricants may not be compatible with the hinge bushings.

Door Hinges on Vehicles Built Before 8/1/2005

On vehicles built **before** 8/1/2005, the door hinge center pin is flush with the top of the top loop of the hinge bracket. There is no dimple in the top or bottom loop of the hinge bracket. See Ref. B of **Fig. 1**.

Lubricate this type of hinge every six months. Wipe old grease and dirt from the hinge, then force an approved grease into the hinge components; see **Table 1**. Use an appropriate applicator that will not leave material behind. Wipe off any excess grease.

Door Checks

Wipe old grease and dirt from door checks. Lubricate each moving joint of the door checks at installation and every six months thereafter, with an approved grease; see **Table 1**. Use an appropriate applicator that will not leave material behind.

Approved Grease		
Application	**Lubricant**	**NLGI Grade**
Door Latches	ConocoPhillips Triton® 460	1.5
Door Checks	ConocoPhillips Megaplex® XD3	2

Table 1, Approved Grease

https://truckmanualshub.com/

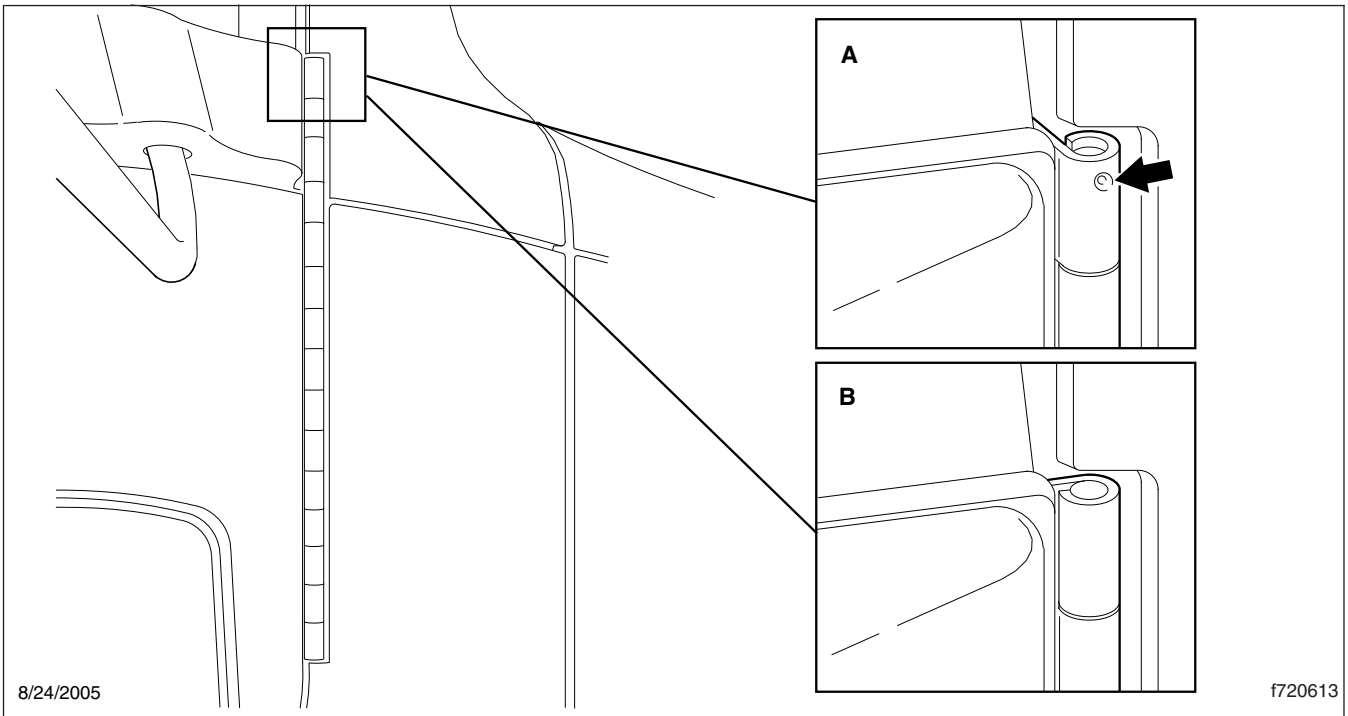

A. Hinge installed on or after 8/1/2005, with dimple in the top loop of the hinge bracket. **Do not lubricate**.
B. Hinge installed before 8/1/2005. **Lubricate** according to recommendations.

Fig. 1, Door Hinge Identification

https://truckmanualshub.com/

Index, Alphabetical

Title of Maintenance Operation (MOP)	MOP Number
Air Conditioner Inspection	83–01
Air Filter Replacement	83–02
Safety Precautions	83–00

https://truckmanualshub.com/

https://truckmanualshub.com/

83–00 Safety Precautions

Safety Precautions in this section apply to all procedures within this group.

DANGER

When working on the vehicle, shut down the engine, set the parking brake, and chock the tires. Before working under the vehicle, always place jack stands under the frame rails to ensure the vehicle cannot drop. Failure to follow these steps could result in serious personal injury or death.

83–01 Air Conditioner Inspection

WARNING

Wear eye protection, gloves, and protective clothing when working on the air conditioning system. Leaking refrigerant from a damaged hose or line could cause blindness or serious skin burns.

Preliminary Checks

1. Park the vehicle on a level surface, apply the parking brakes, and chock the tires.
2. Check the appearance of the air conditioner compressor pulley assembly. If the friction surface of the pulley shows signs of excessive grooving due to belt slippage, replace both the pulley and the drive plate. Inspect the refrigerant compressor drive belt for damage and check that the belt is set at the proper tension. Also check the tightness of the compressor mounting fasteners. For instructions and torque values, see **Group 01** of the *Columbia® Workshop Manual*.
3. Inspect the drive plate. If the friction surface of the drive plate shows visible signs of damage due to excessive heat, replace the drive plate and pulley assembly. For removal and installation procedures, see **Group 83** of the *Columbia® Workshop Manual*.
4. On a Sanden A/C compressor, use a feeler gauge to check that the drive plate clutch clearance is 0.016 to 0.030 inch (0.4 to 0.8 mm). See **Fig. 1**. If the drive plate clutch requires adjustment, see **Group 83** of the *Columbia® Workshop Manual*.

   On a Climate Control A/C compressor, place a feeler gauge between the air conditioner compressor clutch and the pulley to check the compressor clutch clearance. Drive plate to pulley clearance is 0.020 to 0.030 inch (0.6 to 0.8 mm). If the clearance is not correct, see **Group 83** of the *Columbia® Workshop Manual*.

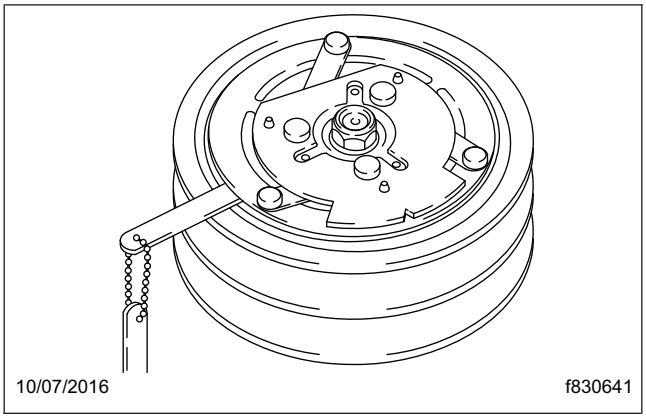

Fig. 1, Drive Plate Clearance Inspection

5. Inspect the compressor clutch coil wire. Check that the connector is not damaged or loose. Replace the wire if it is damaged.
6. Check the overall condition of the air conditioning hoses. Look for cracks, cuts, and abrasions on the hoses. Replace damaged hoses. For replacement instructions, see **Group 83** of the *Columbia® Workshop Manual*. Also check for loose fittings on all of the air conditioning components.
7. Check for a buildup of road debris on the condenser fins. For cleaning instructions, see **Group 83** of the *Columbia® Workshop Manual*.

Refrigerant Checking

Check the color of the moisture indicator on the receiver-drier. See **Fig. 2**.

If the indicator is blue, the refrigerant charge is dry.

If the indicator is not blue, the system is contaminated with water. If the system is contaminated, the refrigerant must be recovered and the receiver-drier must be replaced. For instructions, see **Group 83** of the *Columbia® Workshop Manual*.

https://truckmanualshub.com/

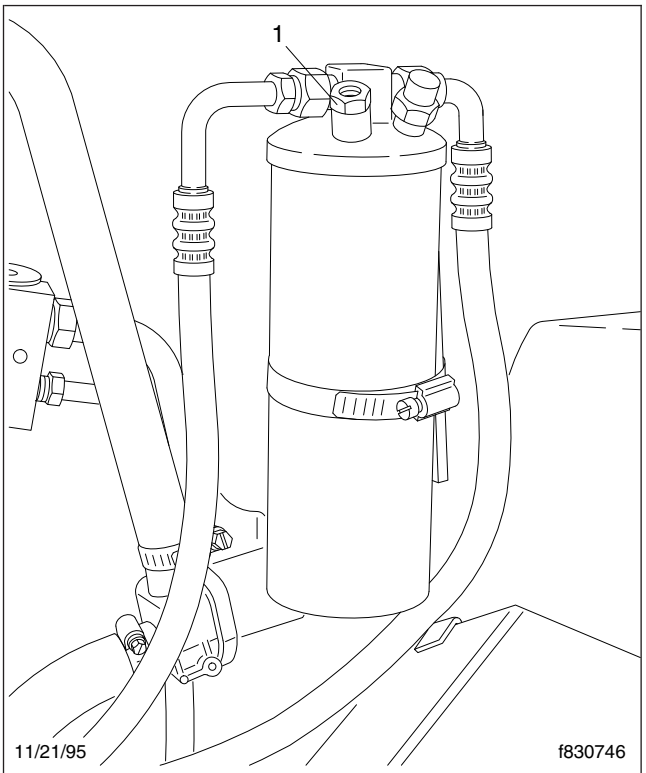

1. Moisture Indicator

Fig. 2, Receiver-Drier

83–02 Air Filter Replacement

Cab Fresh Air Filter Replacement, Blend Air

If the vehicle is equipped with a cab fresh air filter, it must be replaced every six months regardless of mileage to permit proper operation of the HVAC system.

CAUTION

If equipped with a fresh air filter, it should be replaced every six months. If the fresh air filter is not replaced every six months, damage to the heater and air conditioner components could occur.

IMPORTANT: When replacing the air filter, use only a Freightliner-approved air filter.

1. Park the vehicle on a level surface. Apply the parking brakes and chock the rear tires.
2. Lift the wire retainer on the air filter cover up and over the upper edge of the cover and pull the wire retainer down. See **Fig. 3**.

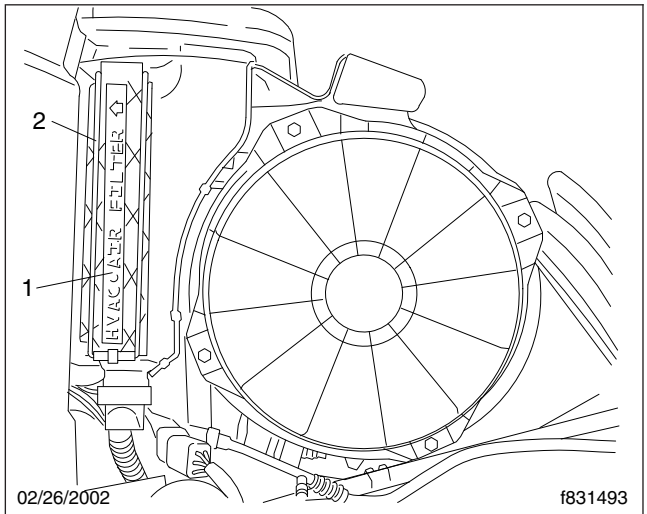

1. Air Filter Cover 2. Wire Retainer

Fig. 3, HVAC Air Intake Plenum

3. Note the direction of the arrow on the air filter cover, then remove the cover and the attached filter.
4. Remove the air filter from the air filter cover. Discard the air filter.
5. Attach a new air filter to the air filter cover. Make sure the arrow on the filter is pointing in the same direction as the arrow on the cover.
6. Install the air filter and air filter cover in the HVAC air intake plenum.
7. Pull the wire retainer up and over the upper edge of the air filter cover.
8. Remove the chocks from the tires.

Cab Recirculation Air Filter Replacement, Blend Air

The cab recirculation air filter must be replaced every six months, regardless of mileage, to permit proper operation of the HVAC system.

https://truckmanualshub.com/

CAUTION

If the recirculation air filter is not replaced every six months, damage to the heater and air conditioner components could occur. The HVAC system should not be operated without the recirculation air filter installed.

IMPORTANT: When replacing the air filter, use only a Freightliner-approved air filter.

1. Park the vehicle on a level surface. Apply the parking brakes and chock the rear tires.
2. Remove the heater and air conditioner cover and the upper dash cover. For instructions, see **Section 60.08** of the *Columbia® Workshop Manual*.
3. Remove the retainer that holds the recirculation air filter in place. See **Fig. 4**.

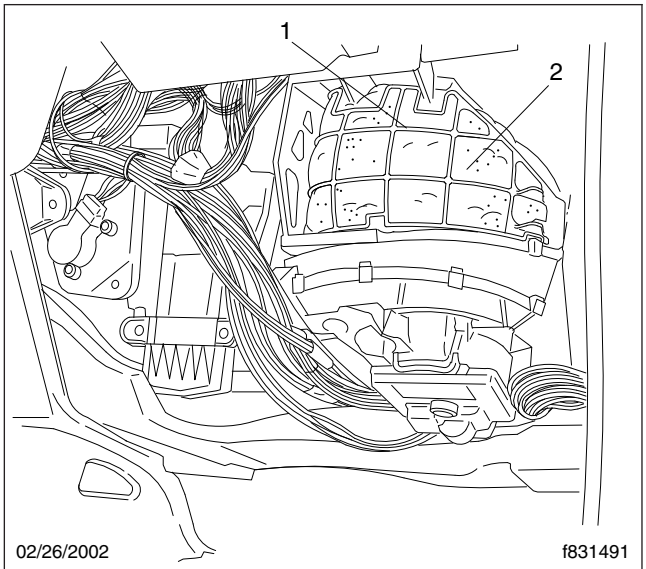

1. Retainer
2. Recirculation Air Filter

Fig. 4, Cab Recirculation Air Filter

4. Remove and discard the recirculation air filter.
5. Install a new recirculation air filter in the HVAC assembly.
6. Install the retainer to hold the recirculation air filter in place.
7. Install the heater and air conditioner cover and the upper dash cover. For instructions, see **Section 60.08** of the *Columbia® Workshop Manual*.

Sleeper Air Filter Replacement, Blend Air

Replace the air filter in the sleeper HVAC unit every six months, regardless of mileage. The filter should not be cleaned.

CAUTION

If the sleeper air filter is not replaced every six months, damage to the heater and air conditioner components could occur. The HVAC system should not be operated without the recirculation air filter installed.

1. Turn off the engine, apply the brakes, and chock the tires.
2. Access the sleeper HVAC assembly by raising the mattress and bunk panel to the locked position. If there is a baggage compartment, the sleeper HVAC assembly may be accessed through the baggage door on the right side of the vehicle.
3. Slide the air filter out of the sleeper HVAC assembly. See **Fig. 5**.

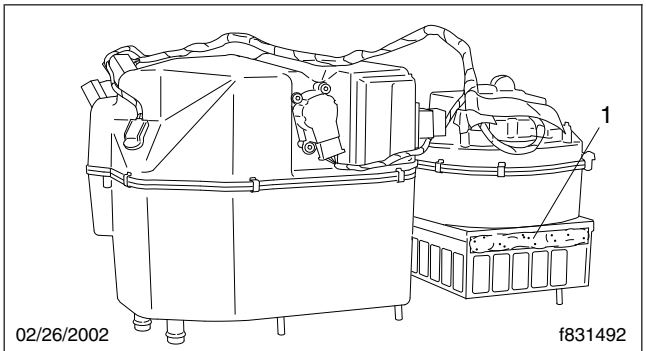

1. Air Filter

Fig. 5, Sleeper HVAC Assembly

4. Discard the air filter.
5. Place a new air filter in the sleeper HVAC assembly. The edge of the filter should be flush with the HVAC assembly.
6. Lower the bunk panel and mattress.
7. Remove the chocks from the tires.

https://truckmanualshub.com/

https://truckmanualshub.com/

Index, Alphabetical

Title of Maintenance Operation (MOP) **MOP Number**

Hood Rear Support Lubrication 88–01

https://truckmanualshub.com/

https://truckmanualshub.com/

88–01 Hood Rear Support Lubrication

1. Apply the parking brakes and chock the tires.
2. Open the hood.
3. Clean both the hood- and cab-mounted hood rear support components with a soapy water solution.
4. Cover all contact surfaces of the hood rear support brackets and isolators with an approved multi-purpose, lithium-complex, soap-based grease; see **Table 1**.
5. Close the hood.

Approved Suppliers of Multi-Purpose Lithium Grease	
Supplier	**Grease**
Chevron	Delo Heavy Duty EP
Exxon	Unirex EP2
Mobil	Mobil Grease XHP 222
Shell	Retinax LC Grease
Texaco	Starplex 2

Table 1, Approved Suppliers of Multi-Purpose Lithium Grease

https://truckmanualshub.com/