https://truckmanualshub.com/

FOREWORD

This workshop manual has been prepared to provide information on electrical circuits for the following Hino Vehicles.

Applicable for FR1E, FS1E, FY1E, SH1E, SR1E and SS1E series, equipped with E13C engine

As for maintenance items, refer to the Owner's Manual.
All information and specifications in this manual are based upon the latest product information available at the time of printing.
Hino Motors reserves the right to make changes at any time without prior notice.

Please note that the publications below have also been prepared as relevant service manuals for the components and systems in this vehicles.

Manual Name	Pub. No.
Chassis Workshop Manual	S1-YFSE17C 1/2 S1-YFSE17C 2/2
E13C Engine Workshop Manual	S5-YE13E02C

Hino Motors, Ltd.

https://truckmanualshub.com/

https://truckmanualshub.com/

HINO

INDEX: CHASSIS GROUP

ELECTRIC WIRE

WORKSHOP MANUAL

Hino Motors, Ltd.

All rights reserved. This manual may not be reproduced or copied in whole in part, without the written consent of Hino Motors, Ltd.

https://truckmanualshub.com/

https://truckmanualshub.com/

ELECTRIC WIRE

EL02-001

DIAGRAM EL02-2
HOW TO USE THIS CHAPTER..... EL02-2
CONTENTS OF DIAGRAMS EL02-7
WIRING DIAGRAM..... EL02-11
DIAGRAM EL02-12
WIRE TO WIRE CONNECTOR EL02-142
JUNCITON CONNECTOR..... EL02-161
CONNECTOR LOCATION..... EL02-167
RELAY LOCATION EL02-240
FUSE AND RELAY BLOCK EL02-242
JUNCTION BLOCK EL02-254
WIRE TO WIRE BOX..... EL02-258
ELECTRICAL EQUIPMENT BOX EL02-260
CONNECTOR INDEX..... EL02-261

https://truckmanualshub.com/

DIAGRAM

HOW TO USE THIS CHAPTER

EN12Z1602J100001

1. WIRING DIAGRAM

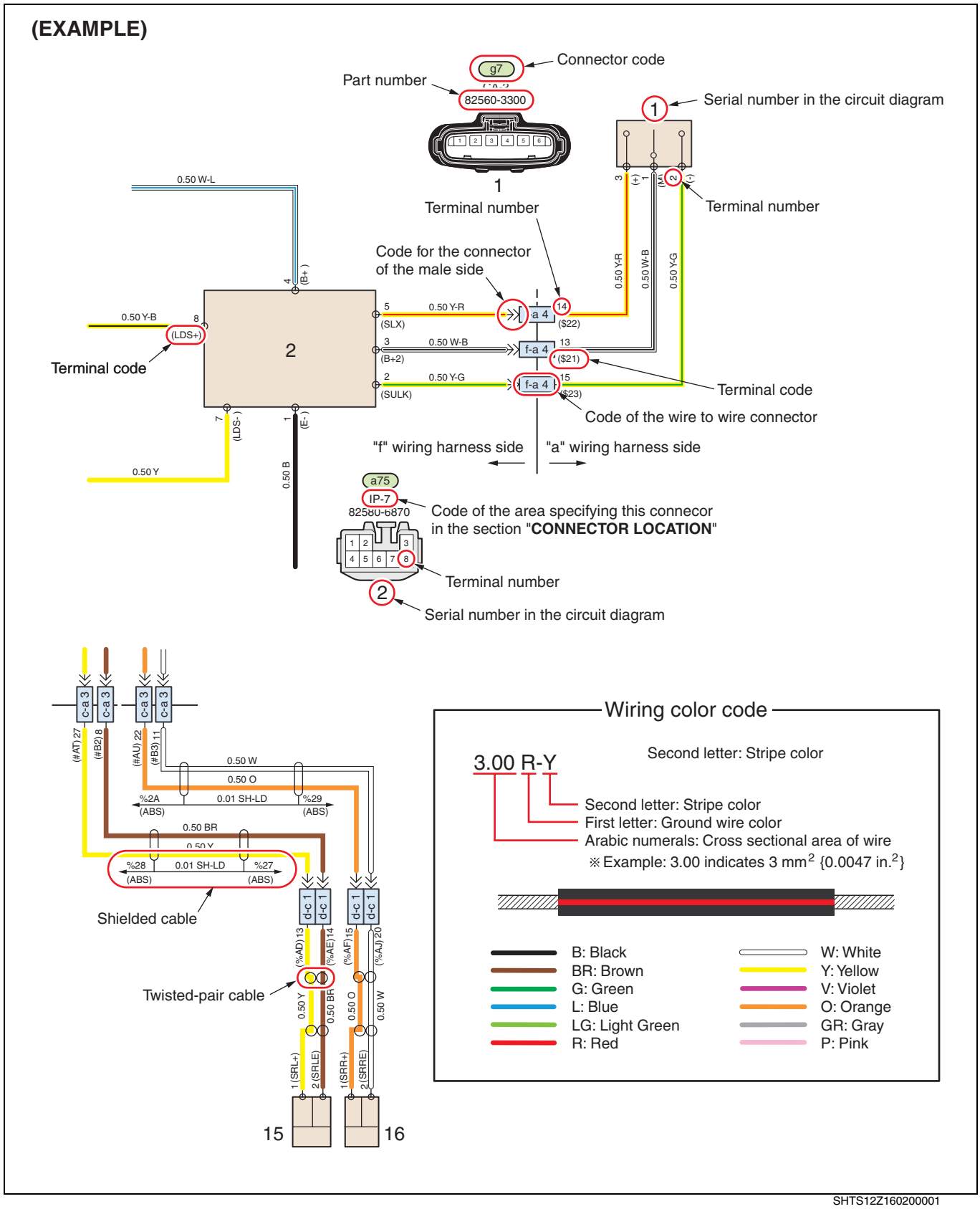

SHTS12Z160200001

https://truckmanualshub.com/

2. WIRE TO WIRE CONNECTOR

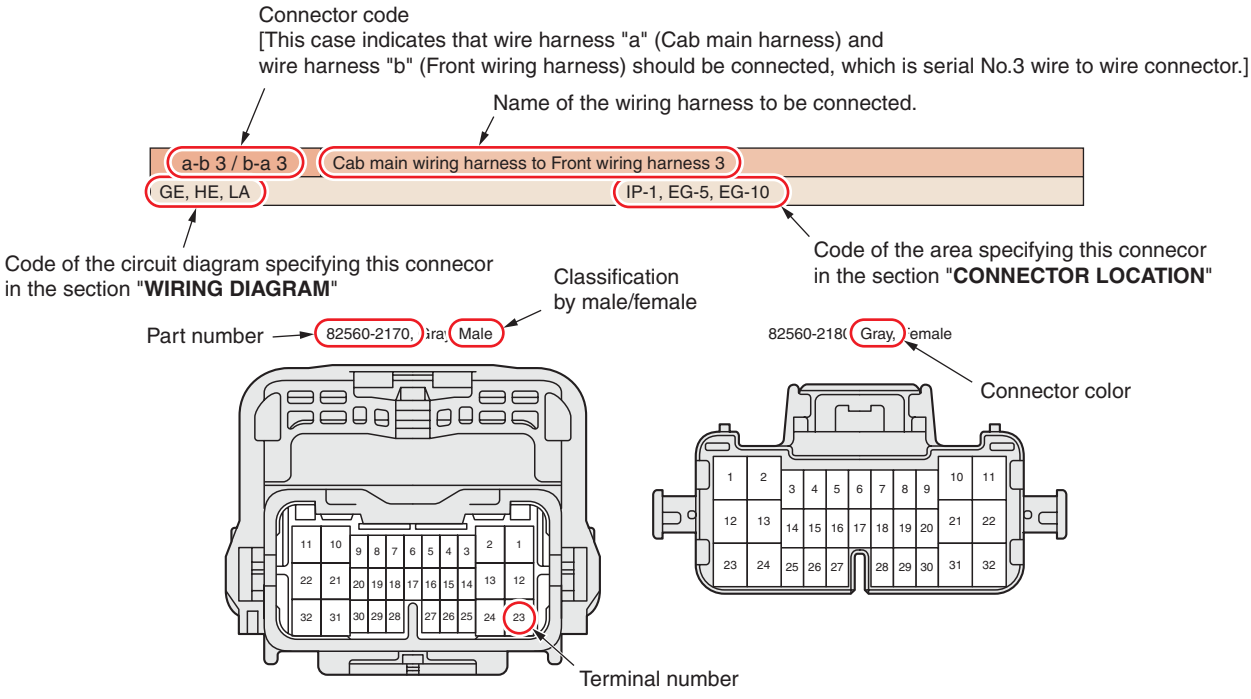

LH side: Male connector or the wiring harness "a" (Cab main wiring harness)
RH side: Female connector or the wiring harness "b" (Front wiring harness)

SHTS12Z160200002

https://truckmanualshub.com/

3. JUNCTION CONNECTOR

(EXAMPLE)

Code of the area

ELECTRIC WIRE EL02–205

EG-26 ENGINE (3 of 3)] (Model: FM8J for Chile)

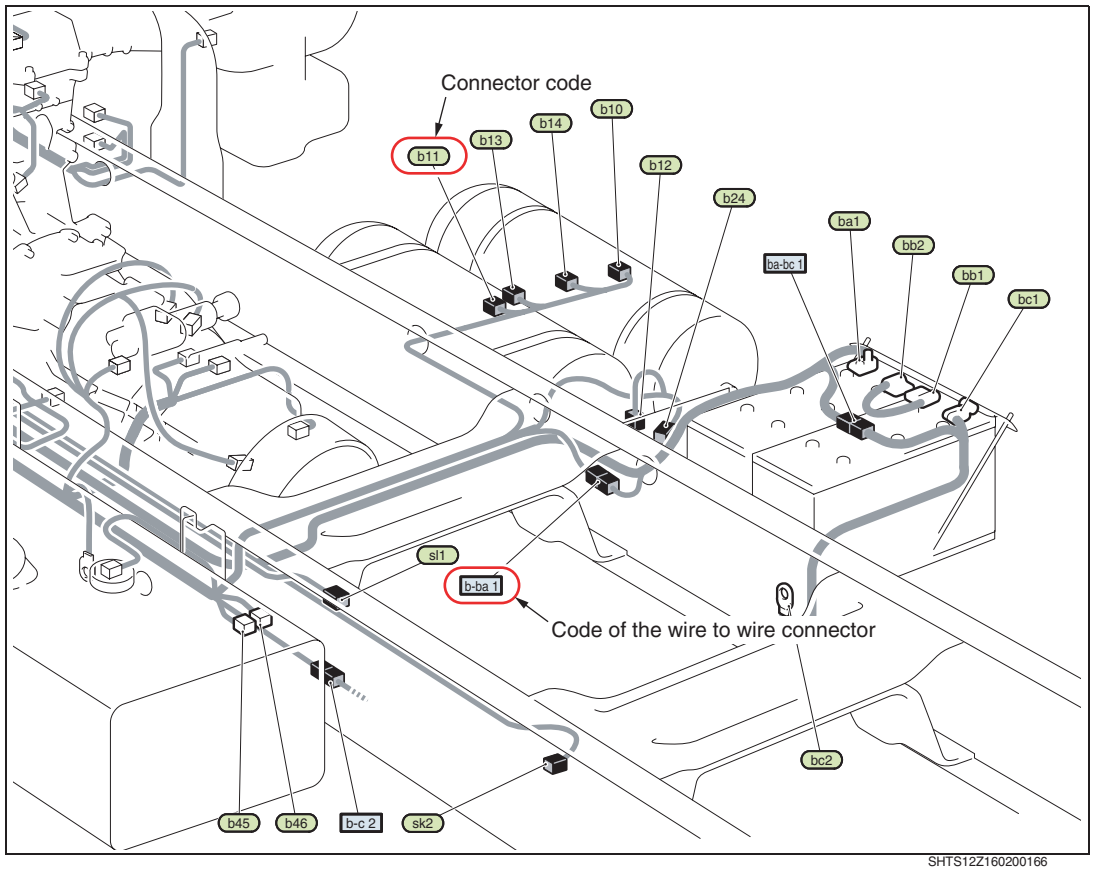

SHTS12Z160200166

ELECTRICAL EQUIPMENT CONNECTOR AND JUNCTION CONNECTOR

No.	Name	Circuit	No.	Name	Circuit
b10	Low pressure switch 1	BB	ba1	Battery (+) terminal (Battery 2)	AA
b11	Low pressure switch 2	BB	bb1	Battery (+) terminal (Battery 1)	AA
b12	Low pressure switch 3	BB	bb2	Battery (-) terminal (Battery 2)	AA
b13	Air gauge sensor (Front)	BB	bc1	Battery (-) terminal (Battery 1)	AA
b14	Air gauge sensor (Rear)	BB	bc2	Battery ground	AA, BA, MA
b24	Exhaust brake magnetic valve	GE	sk2	P.T.O. magnetic valve	KB
b45	Dump up switch	KB	sl1	P.T.O. accelerator sensor	GK
b46	Service power (Tail)	AB			

WIRE TO WIRE CONNECTOR

No.	Name	No.	Name
b-c 2	Front wiring harness to Intermediate wiring harness 2	ba-bc 1	Battery cable-1 to Battery cable-3_1
b-ba 1	Front wiring harness to Battery cable-1_1		

SHTS12Z160200003

https://truckmanualshub.com/

4. JUNCTION CONNECTOR

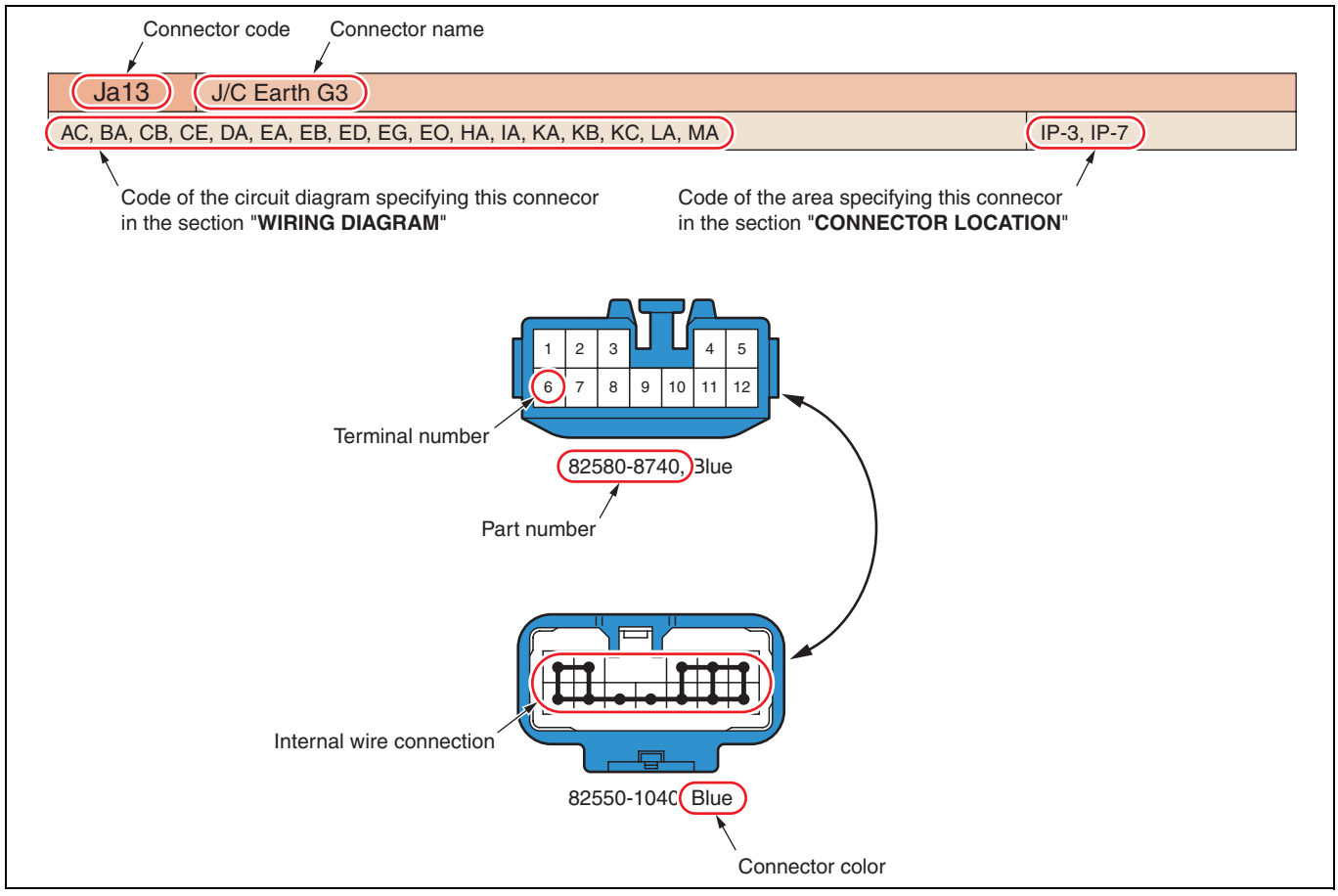

SHTS12Z160200004

5. FUSE AND RELAY BLOCK

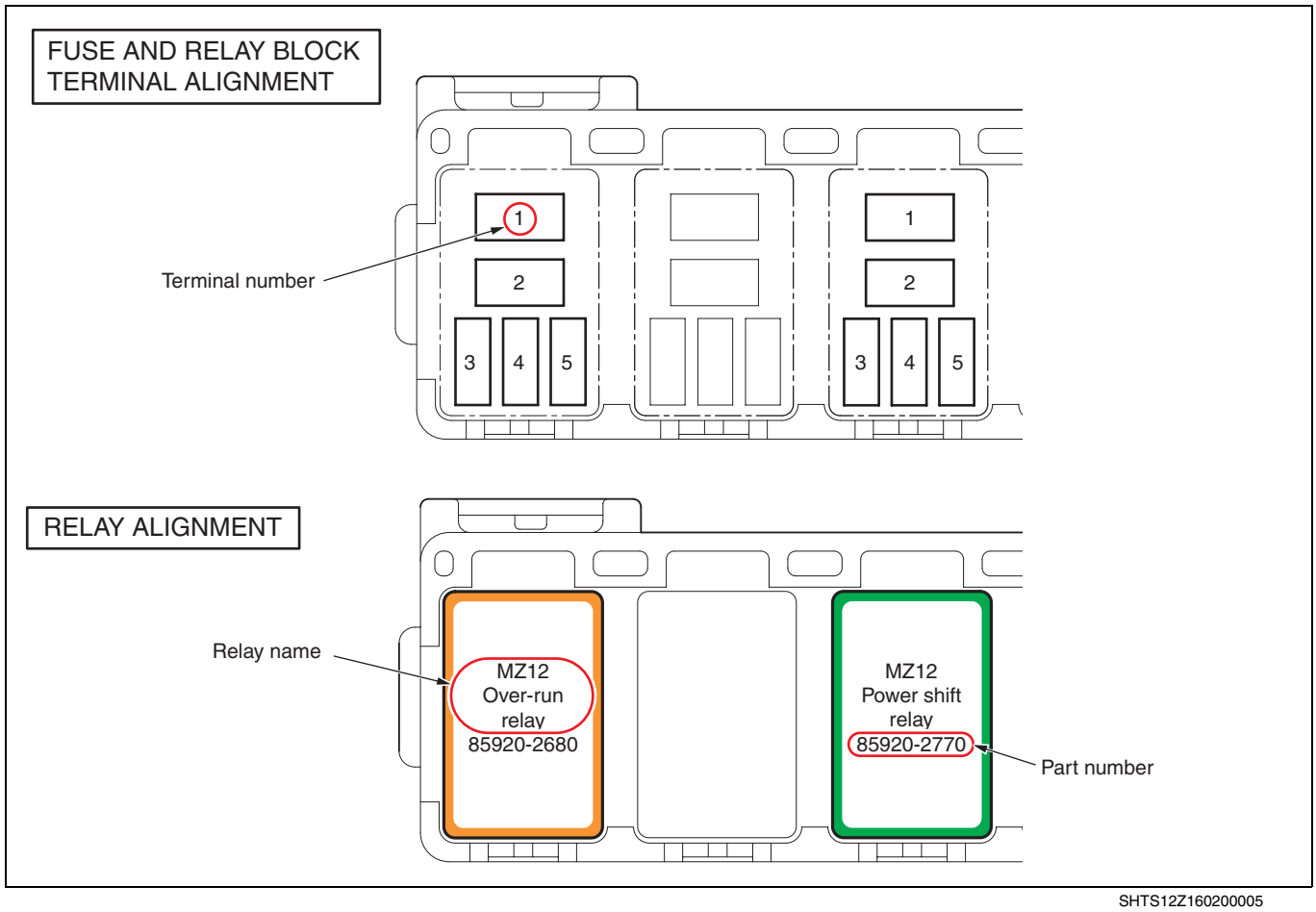

SHTS12Z160200005

https://truckmanualshub.com/

6. CONNECTOR INDEX

(EXAMPLE)

EL02–192 ELECTRIC WIRE

CONNECTOR INDEX

Code of the circuit diagram specifying this connecor in the section "**WIRING DIAGRAM**"

ELECTRICAL EQUIPMENT CONNECTOR

NAME		CONNECTOR No.	PART No.	CIRCUIT OR AREA
A	ABS diagnosis switch	a100	82560-4100	HB
				IP-4, 8

WIRE TO WIRE CONNECTOR

CONNECTOR No.	NAME	PART No.		CIRCUIT OR AREA
		MALE	FEMALE	
a-b 1	Cab main wiring harness to Front wiring harness 1	82560-2110	82560-2120	AA, AB, AD, AG, BA, BG, BH, CA, CB, CE, CH, CI, GA, GB, GC, GE, HA, HB, HC, HE, IA, LA, LE, MA
				IP-1, 5, EG-1, 2, 3, 5, 6, 10, 11, 16, 17

JUNCTION CONNECTOR

CONNECTOR No.	NAME	PART No.	CIRCUIT OR AREA
a606	J/C ETC 14P	82560-3790 25880-1170	FA, IE
			IP-2

Code of the area specifying this connecor in the section "**CONNECTOR LOCATION**"

SHTS12Z160200006

https://truckmanualshub.com/

CONTENTS OF DIAGRAMS

EN12Z1602J100002

CIRCUIT			PAGE
A	A	POWER SUPPLY CIRCUIT (CONTINUOUS POWER SOURCE)	EL02-12
	B	POWER SUPPLY CIRCUIT (STARTER SWITCH "ON")	EL02-14
	C	BATTERY CUT SWITCH CIRCUIT (FOR TAIWAN EXPLOSION-PROOF MODEL)	EL02-16
	D	GROUND CIRCUIT	EL02-18
	E	EARTH SYSTEM (G2) (CAB SIDE)	EL02-20
	F	EARTH SYSTEM (G2) (CHASSIS)	EL02-22
	G	EARTH SYSTEM (G4-C AND G4-P)	EL02-24
	H	ENGINE STARTING CIRCUIT (MODELS WITH MZ AND HX TRANSMISSION)	EL02-26
	I	ENGINE STARTING CIRCUIT (MODELS WITH ZF AND EATON TRANSMISSION)	EL02-27
	J	ENGINE STARTING ASSIST CIRCUIT	EL02-28
	K	CHARGING CIRCUIT	EL02-29
	L	SPARE POWER SOURCE CIRCUIT	EL02-30
	M	ETC. SPARE POWER SOURCE CIRCUIT (DOUBLE AS 12V SPARE POWER SOURCE)	EL02-31
	N	12V SPARE POWER SOURCE CIRCUIT	EL02-32
B	A	METER CIRCUIT (EXCEPT SEMI-TRACTOR) (CAB SIDE)	EL02-34
	B	METER CIRCUIT (EXCEPT SEMI-TRACTOR) (CHASSIS SIDE)	EL02-36
	C	METER CIRCUIT (FOR SEMI-TRACTOR) (CAB SIDE)	EL02-38
	D	METER CIRCUIT (FOR SEMI-TRACTOR) (CHASSIS SIDE)	EL02-40
	E	TACHOGRAPH CIRCUIT	EL02-42
	F	KIENZLE TACHOGRAPH CIRCUIT	EL02-43
	G	FUEL FILTER WARNING CIRCUIT	EL02-44
	H	OIL FILTER WARNING CIRCUIT	EL02-45
C	A	HEADLIGHT CIRCUIT	EL02-46
	B	HEADLIGHT BEAM CONTROL CIRCUIT	EL02-48
	C	TURN, STOP AND TAIL LIGHT CIRCUIT (EXCEPT SEMI-TRACTOR) (CAB SIDE)	EL02-50
	D	TURN, STOP AND TAIL LIGHT CIRCUIT (EXCEPT SEMI-TRACTOR) (CHASSIS SIDE)	EL02-54
	E	TURN, STOP AND TAIL LIGHT CIRCUIT (FOR SEMI-TRACTOR)	EL02-56
	F	FOG LIGHT CIRCUIT	EL02-60
	G	MARKER LIGHT CIRCUIT	EL02-61
	H	BACK-UP LIGHT CIRCUIT (EXCEPT SEMI-TRACTOR) (INT-W/H AND Rr-W/H INTEGRATED TYPE)	EL02-62
	I	BACK-UP LIGHT CIRCUIT (EXCEPT SEMI-TRACTOR) (INT-W/H AND Rr-W/H DIVIDED TYPE)	EL02-63
	J	BACK-UP LIGHT CIRCUIT (FOR SEMI-TRACTOR) (WITH HX, MZ TRANSMISSION)	EL02-64
	K	BACK-UP LIGHT CIRCUIT (FOR SEMI-TRACTOR) (WITH ZF TRANSMISSION)	EL02-65
	L	ROOM LIGHT CIRCUIT	EL02-66
	M	WORKING LIGHT CIRCUIT	EL02-67
	N	HEADLIGHT WASHER CIRCUIT	EL02-68
	O	HEADLIGHT AUTOLEVELING CIRCUIT	EL02-70

https://truckmanualshub.com/

CIRCUIT			PAGE
D	A	MIRROR HEATER CIRCUIT	EL02-72
	B	REMOTE CONTROL MIRROR CIRCUIT	EL02-73
	C	HORN CIRCUIT	EL02-74
	D	CIGARETTE LIGHTER CIRCUIT (FOR RIGHT-HAND DRIVE MODEL)	EL02-75
	E	CIGARETTE LIGHTER CIRCUIT (FOR LEFT-HAND DRIVE MODEL)	EL02-75
	F	KEYLESS ENTRY CIRCUIT	EL02-76
	G	POWER WINDOW CIRCUIT (FOR RIGHT-HAND DRIVE MODEL)	EL02-78
	H	POWER WINDOW CIRCUIT (FOR LEFT-HAND DRIVE MODEL)	EL02-80
	I	RADIO/AUDIO CIRCUIT	EL02-82
	J	DIAGNOSIS CONNECTOR (16P) CIRCUIT	EL02-84
	K	DIAGNOSIS MONITOR CIRCUIT	EL02-85
	L	WIPER AND WASHER CIRCUIT	EL02-86
	M	POWER DOOR LOCK CIRCUIT	EL02-88
	N	POWER MIRROR CIRCUIT	EL02-89
E	A	AIR CONDITIONER CIRCUIT	EL02-90
F	A	COMMON RAIL CIRCUIT No.1 (CAB SIDE)	EL02-92
	B	COMMON RAIL CIRCUIT No.1 (CHASSIS SIDE)	EL02-96
	C	COMMON RAIL CIRCUIT No.2 (EGR AND VGT)	EL02-98
	D	COMMON RAIL CIRCUIT No.3 (ABS)	EL02-100
	E	COMMON RAIL CIRCUIT No.9 (ENGINE RETARDER)	EL02-102
	F	COMMON RAIL CIRCUIT No.11 (SPEED LIMITER)	EL02-104
	G	COMMON RAIL CIRCUIT No.13 (AUTO CRUISE)	EL02-105
	H	COMMON RAIL CIRCUIT No.14 (STARTING IDLE UP CONTROL)	EL02-106
	I	COMMON RAIL CIRCUIT No.15 (P.T.O.)	EL02-108
	J	COMMON RAIL CIRCUIT No.17 (ETC.)	EL02-110
G	A	ABS CIRCUIT (EXCEPT SEMI-TRACTOR) (EXCEPT AUSTRALIA AND NEW ZEALAND MODELS)	EL02-112
	B	ABS CIRCUIT (EXCEPT SEMI-TRACTOR) (FOR AUSTRALIA AND NEW ZEALAND MODELS)	EL02-114
	C	ABS CIRCUIT (FOR SEMI-TRACTOR)	EL02-116
	D	ES START CIRCUIT	EL02-118
H	A	ZF TRANSMISSION CIRCUIT	EL02-120
	B	MZ TRANSMISSION CIRCUIT	EL02-122
I	A	CAB TILT WARNING CIRCUIT (MODELS WITH HX AND MZ TRANSMISSION)	EL02-124
	B	CAB TILT WARNING CIRCUIT (MODELS WITH ZF AND EATON TRANSMISSION)	EL02-125
	C	CAB TILT CIRCUIT (MODELS WITH HX AND MZ TRANSMISSION)	EL02-126
	D	CAB TILT CIRCUIT (MODELS WITH ZF AND EATON TRANSMISSION)	EL02-128
	E	P.T.O. (POWER TAKE-OFF) CONTROL CIRCUIT	EL02-130
	F	AIR SUSPENSION CIRCUIT (FOR SEMI-TRACTOR)	EL02-132
	G	AIR SUSPENSION CIRCUIT (FOR TAIWAN FR MODEL)	EL02-134
	H	CAB SUSPENSION CIRCUIT	EL02-136
	J	COUPLER LOCK CIRCUIT	EL02-137
	K	INTER-AXLE DIFFERENTIAL LOCK CIRCUIT	EL02-138
	L	REAR-REAR AXLE DIFFERENTIAL LOCK CIRCUIT	EL02-140
	M	AIR DRYER CIRCUIT	EL02-141

https://truckmanualshub.com/

CONNECTOR LOCATION

- **CONTENTS**

CODE	AREA		SPECIFICATION	PAGE
IP-1	INSTRUMENT PANEL	1 of 4	Models: Right-hand drive	EL02-167
IP-2	INSTRUMENT PANEL	2 of 4	Models: Right-hand drive	EL02-170
IP-3	INSTRUMENT PANEL	3 of 4	Models: Right-hand drive	EL02-172
IP-4	INSTRUMENT PANEL	4 of 4	Models: Right-hand drive	EL02-173
IP-5	INSTRUMENT PANEL	1 of 4	Models: Left-hand drive	EL02-174
IP-6	INSTRUMENT PANEL	2 of 4	Models: Left-hand drive	EL02-178
IP-7	INSTRUMENT PANEL	3 of 4	Models: Left-hand drive	EL02-180
IP-8	INSTRUMENT PANEL	4 of 4	Models: Left-hand drive	EL02-181
CA-1	CAB	1 of 2	Models: Right-hand drive	EL02-182
CA-2	CAB	2 of 2	Models: Right-hand drive	EL02-184
CA-3	CAB	1 of 2	Models: Left-hand drive	EL02-186
CA-4	CAB	2 of 2	Models: Left-hand drive	EL02-188
EG-1	ENGINE	1 of 3	Models: FS for Australia, Hong Kong, Ireland, New Zealand	EL02-190
EG-2	ENGINE	2 of 3	Models: FS for Australia, New Zealand	EL02-192
EG-3	ENGINE	2 of 3	Model: FS for Hong Kong	EL02-194
EG-4	ENGINE	2 of 3	Model: FS for Ireland	EL02-196
EG-5	ENGINE	3 of 3	Models: FS for Australia, Hong Kong, Ireland, New Zealand	EL02-198
EG-6	ENGINE	1 of 3	Models: FR, FS for Taiwan	EL02-200
EG-7	ENGINE	2 of 3	Models: FR, FS for Taiwan	EL02-202
EG-8	ENGINE	3 of 3	Models: FR, FS for Taiwan	EL02-204
EG-9	ENGINE	1 of 3	Models: FY for Hong Kong, Ireland, New Zealand	EL02-206
EG-10	ENGINE	2 of 3	Model: FY for Hong Kong	EL02-208
EG-11	ENGINE	2 of 3	Model: FY for Ireland	EL02-210
EG-12	ENGINE	2 of 3	Model: FY for New Zealand	EL02-212
EG-13	ENGINE	3 of 3	Models: FY for Hong Kong, Ireland, New Zealand	EL02-214
EG-14	ENGINE	1 of 3	Models: SH, SS for Hong Kong, Ireland	EL02-216
EG-15	ENGINE	2 of 3	Models: SH, SS for Hong Kong	EL02-218
EG-16	ENGINE	2 of 3	Model: SH for Ireland	EL02-220
EG-17	ENGINE	3 of 3	Models: SH, SS for Hong Kong, Ireland	EL02-222
EG-18	ENGINE	1 of 3	Models: SH, SR for Taiwan	EL02-224
EG-19	ENGINE	2 of 3	Models: SH, SR for Taiwan	EL02-226
EG-20	ENGINE	3 of 3	Models: SH, SR for Taiwan	EL02-228
RR-1	REAR	—	Model: FR with Leaf suspension	EL02-230
RR-2	REAR	—	Model: FR with Air suspension	EL02-231
RR-3	REAR	—	Model: FS except full-tractor	EL02-232
RR-4	REAR	—	Model: FS full-tractor	EL02-234
RR-5	REAR	—	Model: FY	EL02-236
RR-6	REAR	—	Model: SH	EL02-238
RR-7	REAR	—	Models: SR, SS	EL02-239

https://truckmanualshub.com/

- **QUICK REFERENCE**

STEERING POSITION	DESTINATION	MODEL	SPECIFICATION	INSTRUMENT PANEL	CAB	ENGINE	REAR
Right	Australia	FS	—	IP-1, 2, 3, 4	CA-1, 2	EG-1, 2, 5	RR-4
	Hong Kong	FS	—	IP-1, 2, 3, 4	CA-1, 2	EG-1, 3, 5	RR-3
		FY	—	IP-1, 2, 3, 4	CA-1, 2	EG-9, 10, 13	RR-5
		SH	—	IP-1, 2, 3, 4	CA-1, 2	EG-14, 15, 17	RR-6
		SS	—	IP-1, 2, 3, 4	CA-1, 2	EG-14, 15, 17	RR-7
	Ireland	FS	—	IP-1, 2, 3, 4	CA-1, 2	EG-1, 4, 5	RR-3
		FY	—	IP-1, 2, 3, 4	CA-1, 2	EG-9, 11, 13	RR-5
		SH	—	IP-1, 2, 3, 4	CA-1, 2	EG-14, 16, 17	RR-6
	New Zealand	FS	—	IP-1, 2, 3, 4	CA-1, 2	EG-1, 2, 5	RR-4
		FY	—	IP-1, 2, 3, 4	CA-1, 2	EG-9, 12, 13	RR-5
Left	Taiwan	FR	Leaf suspension	IP-5, 6, 7, 8	CA-3, 4	EG-6, 7, 8	RR-1
			Air suspension	IP-5, 6, 7, 8	CA-3, 4	EG-6, 7, 8	RR-2
		FS	—	IP-5, 6, 7, 8	CA-3, 4	EG-6, 7, 8	RR-3
		SH	—	IP-5, 6, 7, 8	CA-3, 4	EG-18, 19, 20	RR-6
		SR	—	IP-5, 6, 7, 8	CA-3, 4	EG-18, 19, 20	RR-7

https://truckmanualshub.com/

WIRING DIAGRAM

EN12Z1602J100003

NOTICE
There is a case that the circuit diagrams in this section are different from that for your vehicle due to the model or specification.

WIRING HARNESS CODE		
CODE	**NAME**	
a	Cab main wiring harness	CAB MAIN W/H
b	Front RH wiring harness	Fr-RH W/H
c	Front LH wiring harness	Fr-LH W/H
d	Intermediate wiring harness	INT W/H
e	Rear wiring harness	Rr W/H
f	Instrument panel wiring harness	INST W/H
g	Instrument panel switch wiring harness	INST SW W/H
h	Dash panel wiring harness	DASH W/H
i	Roof wiring harness	ROOF W/H
j	Door LH wiring harness	DOOR LH W/H
k	Door RH wiring harness	DOOR RH W/H
m	Floor wiring harness	FLOOR W/H
n	Headlight short circuit connector	—
o	12V spare power source wiring harness	12V W/H
p	Bonding earth cable	—
ba	Battery cable 1 (Starter to Battery relay)	—
bb	Battery cable 2 (Battery relay to Battery)	—
bc	Battery cable 3 (Battery to Battery)	—
bd	Battery cable 4 (Battery to Ground)	—
ea	Engine wiring harness	ENGINE W/H
ia	Injector sub wiring harness	—
ib	Link-up connector	—
sa	ZF transmission sub wiring harness	T/M W/H
sb	ZF transmission P.T.O. sub wiring harness	P.T.O. W/H
sc	Intake air heater sub wiring harness	I/A HEATER W/H
sd	Headlight sub wiring harness	H/LIGHT W/H
se	Cab tilt sub wiring harness	TILT W/H
sf	Air suspension valve box sub wiring harness	A/S W/H
sg	Brake valve box sub wiring harness	B/C W/H
sh	Side turn signal sub wiring harness	SIDE/F W/H

https://truckmanualshub.com/

DIAGRAM

EN12Z1602J100004

NOTICE

Diagram may differ from the actual wiring according to the vehicle specification.

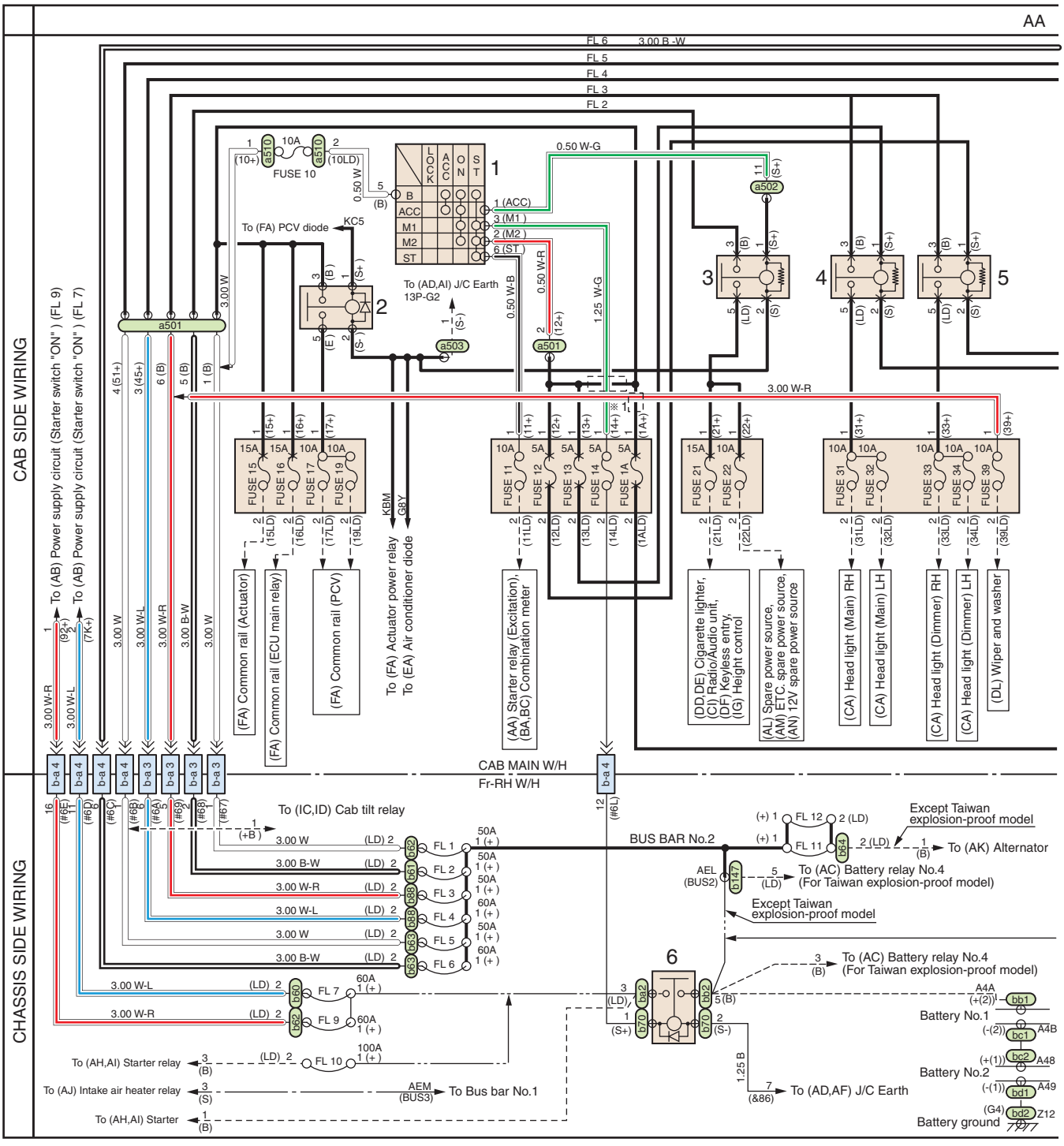

SHTS12Z160200007

AA. POWER SUPPLY CIRCUIT (CONTINUOUS POWER SOURCE)

1. Starter switch
2. PCV relay
3. Power accessory relay
4. Headlight relay (Main)
5. Headlight relay (Dimmer)
6. Battery relay
7. Tail light relay No.1
8. Tail light relay No.2
9. Trailer tail light relay (For tractor model)

https://truckmanualshub.com/

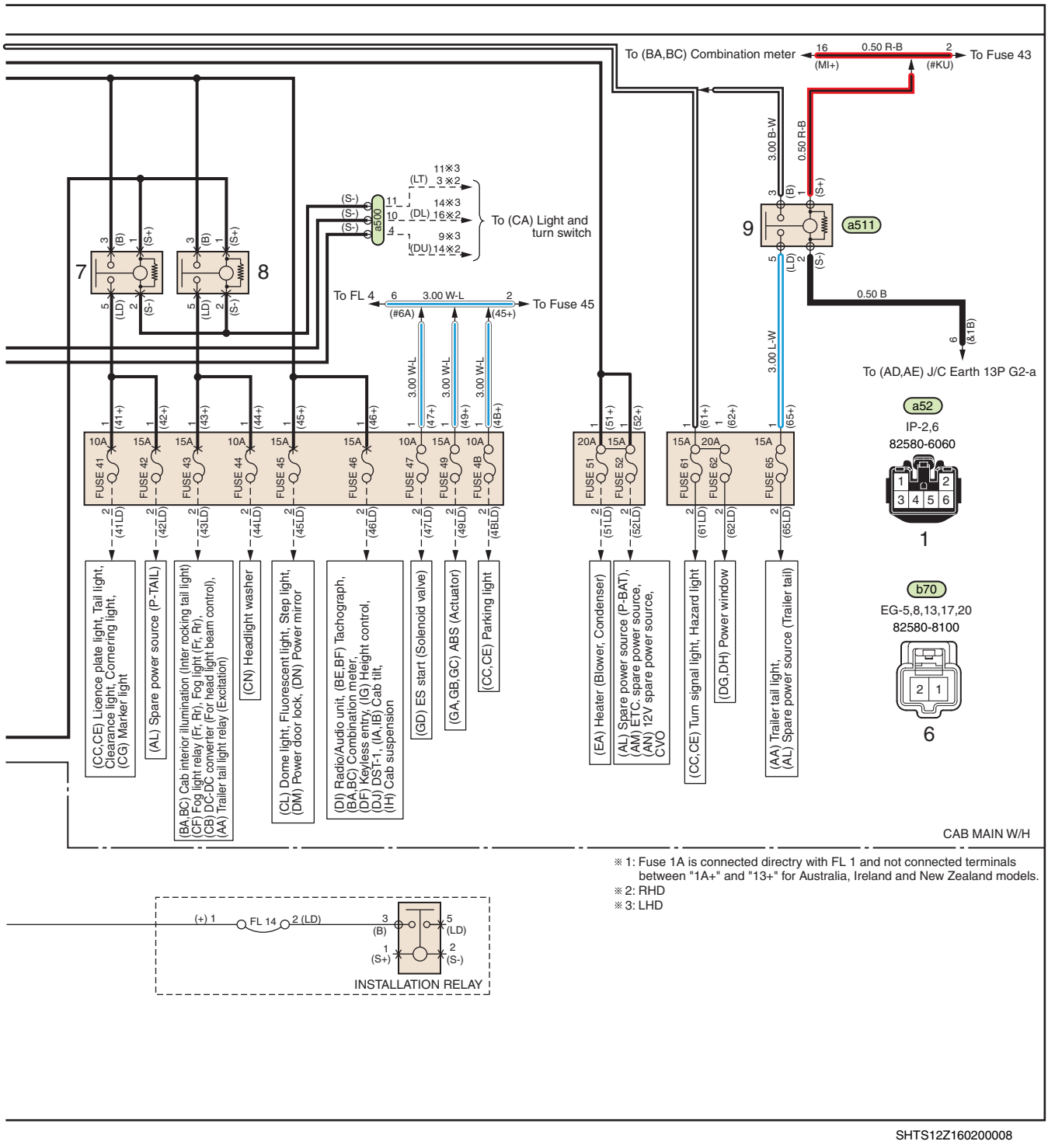

SHTS12Z160200008

https://truckmanualshub.com/

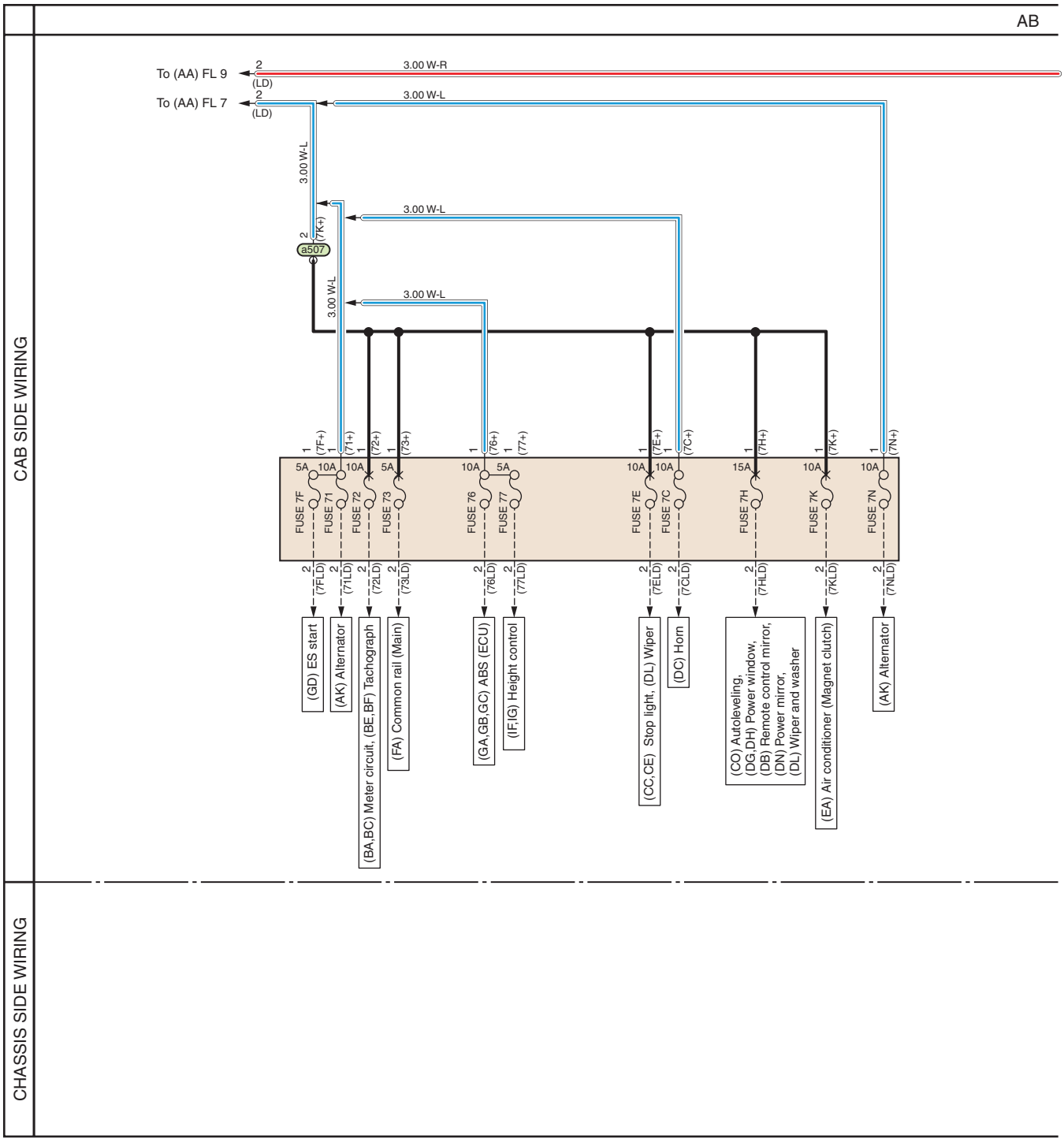

SHTS12Z160200009

AB. POWER SUPPLY CIRCUIT (STARTER SWITCH "ON")

https://truckmanualshub.com/

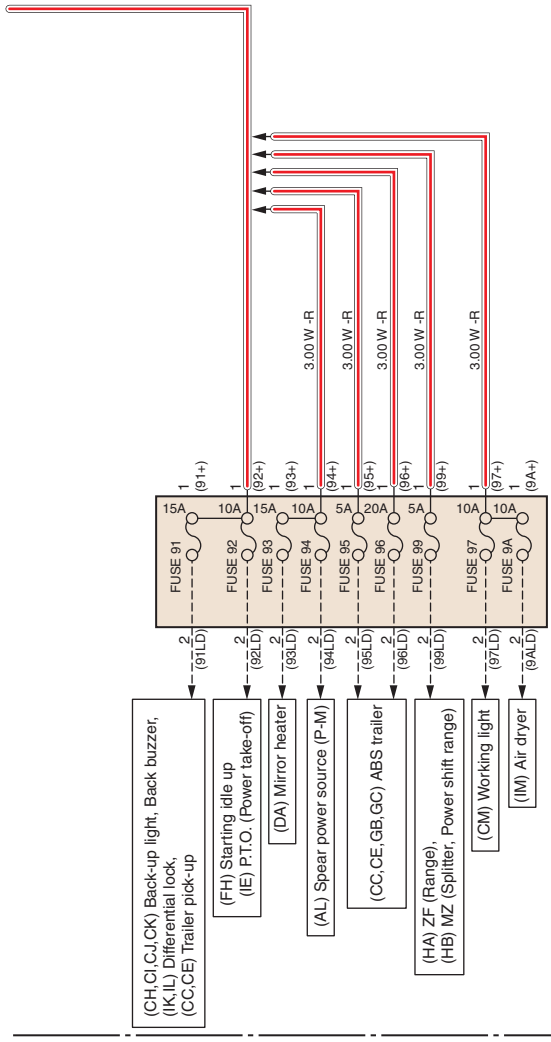

SHTS12Z160200010

https://truckmanualshub.com/

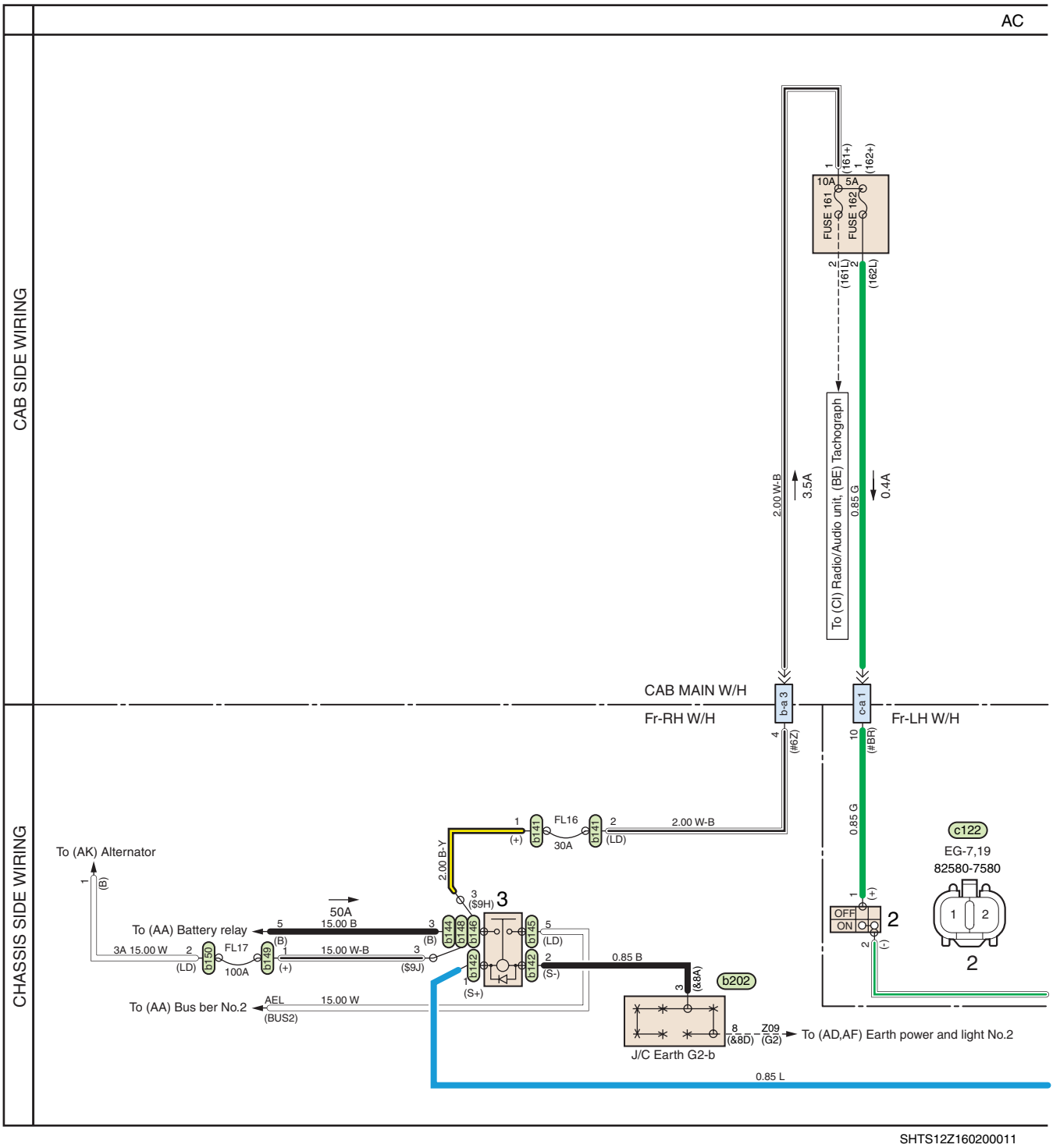

SHTS12Z160200011

AC. BATTERY CUT SWITCH CIRCUIT (FOR TAIWAN EXPLOSION-PROOF MODEL)

1. Battery cut switch (Front)
2. Battery cut switch (Rear)
3. Battery relay (For battery cut)

https://truckmanualshub.com/

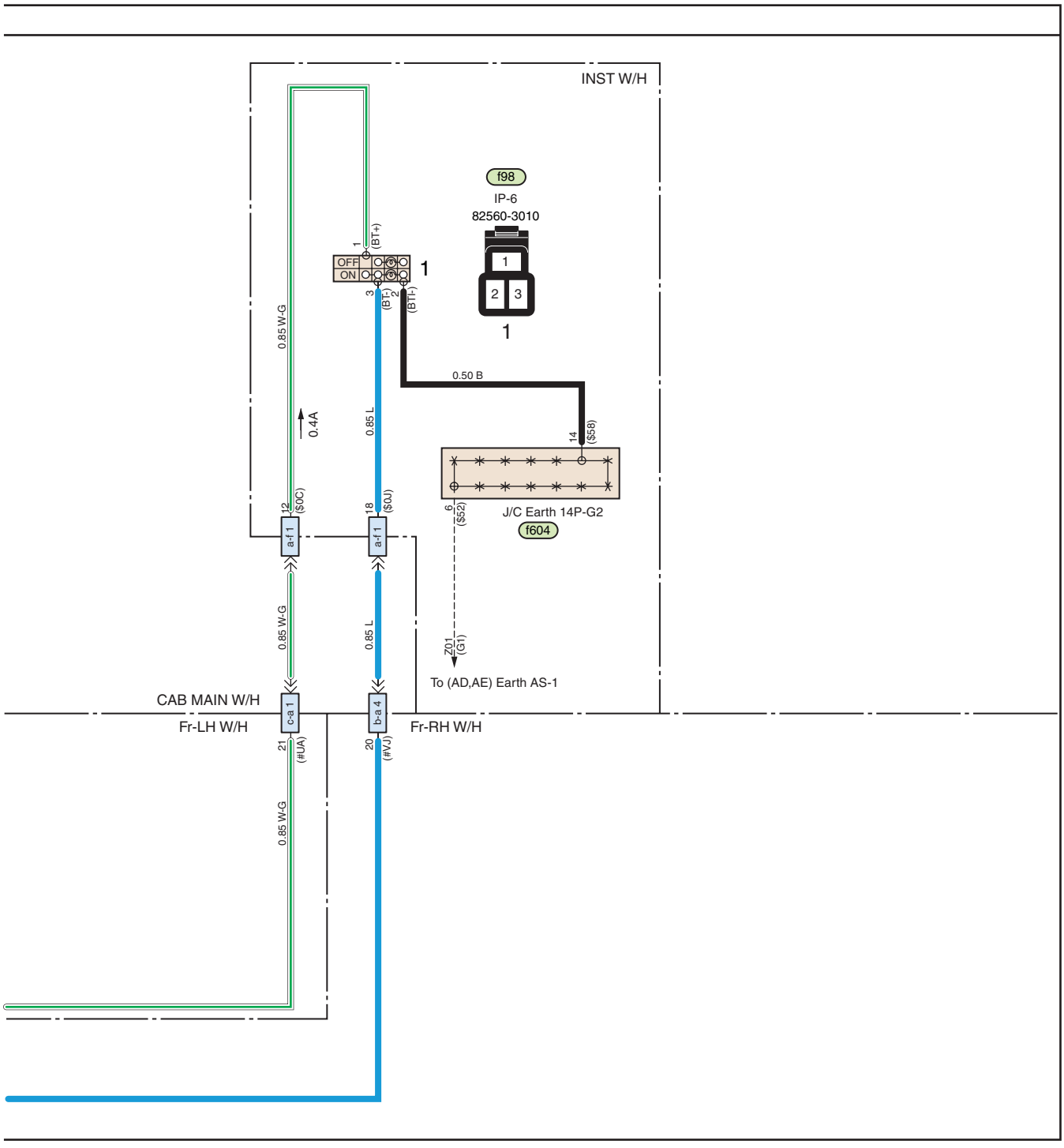

SHTS12Z160200012

https://truckmanualshub.com/

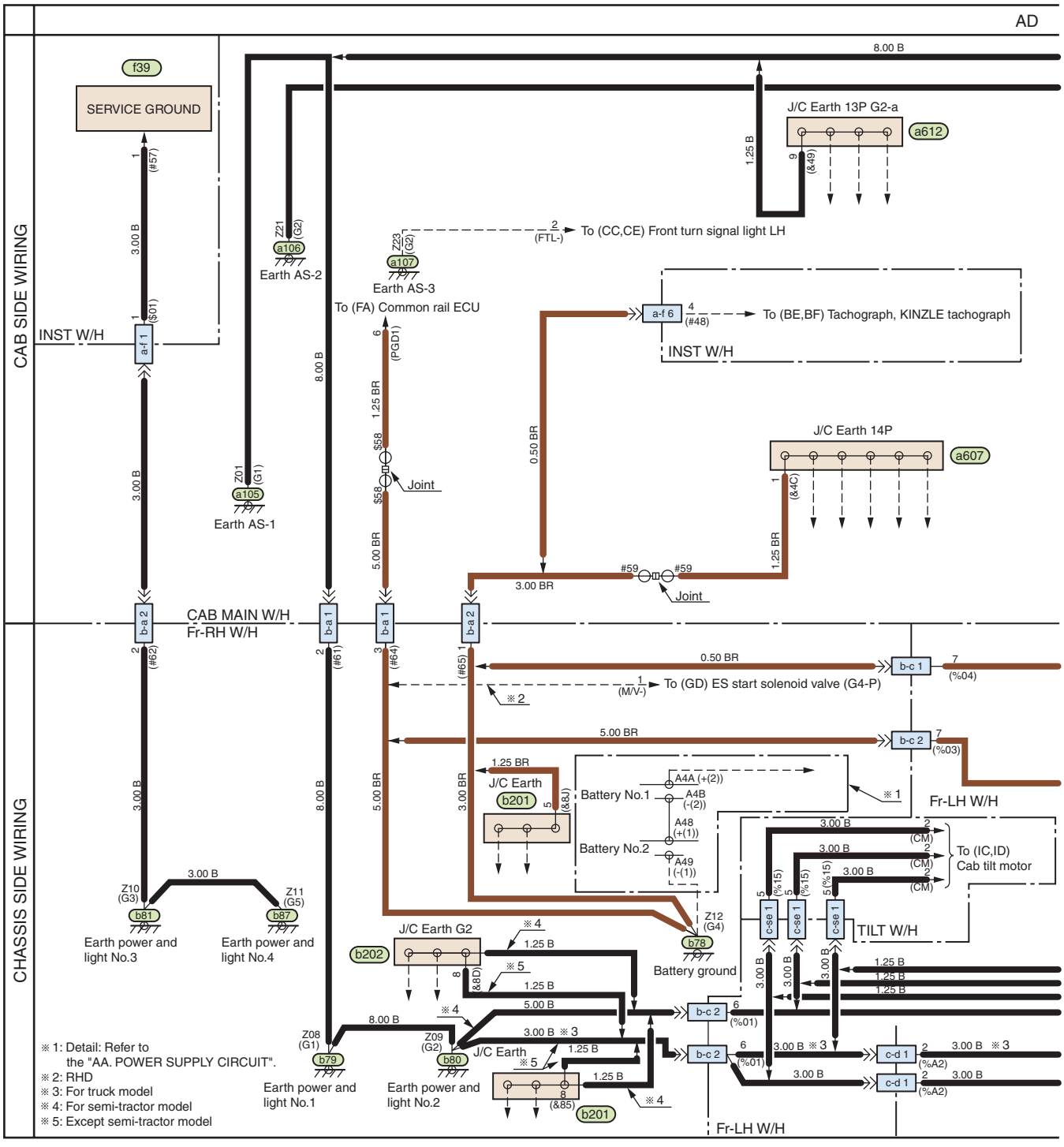

AD. GROUND CIRCUIT

https://truckmanualshub.com/

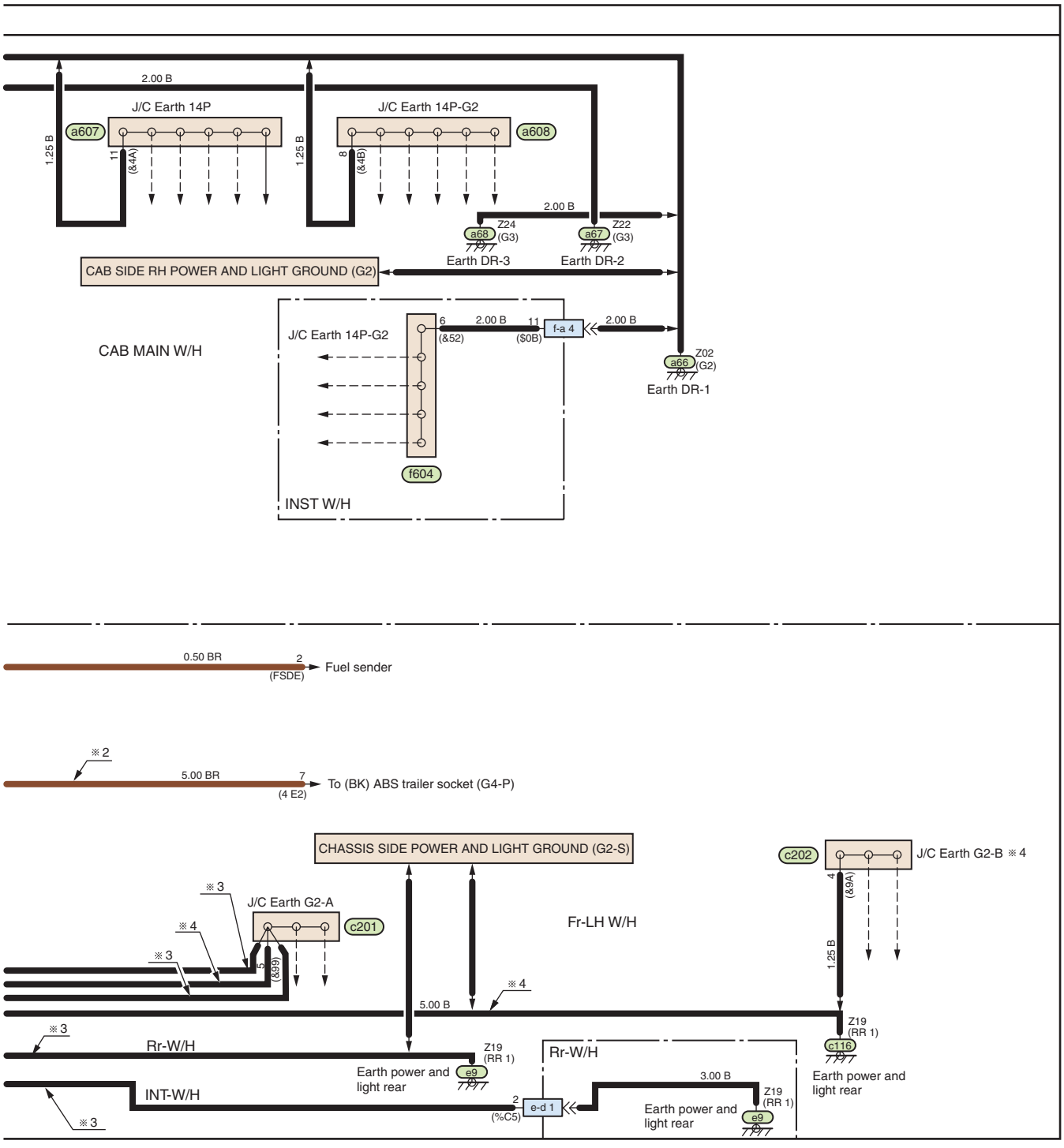

SHTS12Z160200014

https://truckmanualshub.com/

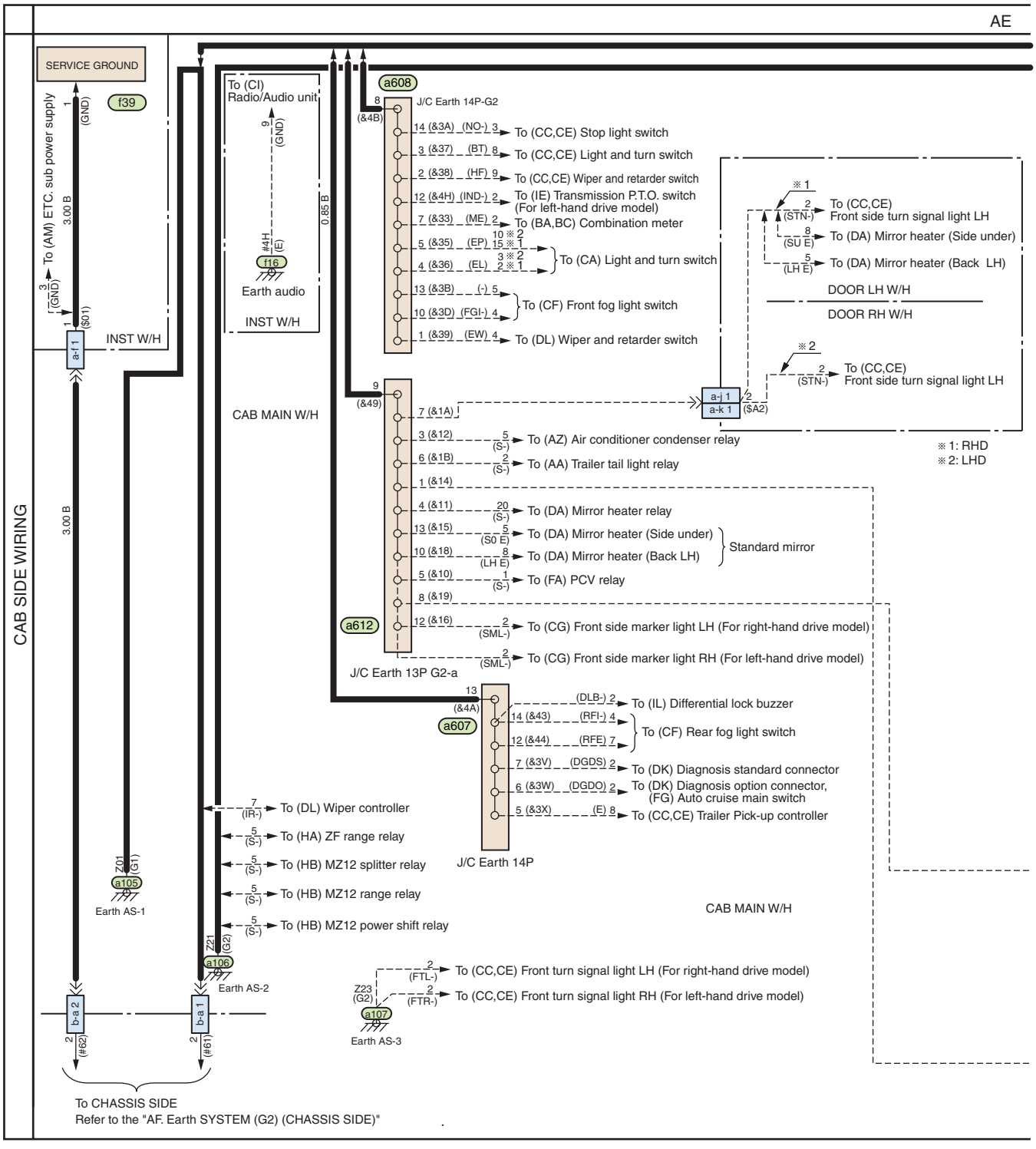

SHTS12Z160200015

AE. EARTH SYSTEM (G2) (CAB SIDE)

https://truckmanualshub.com/

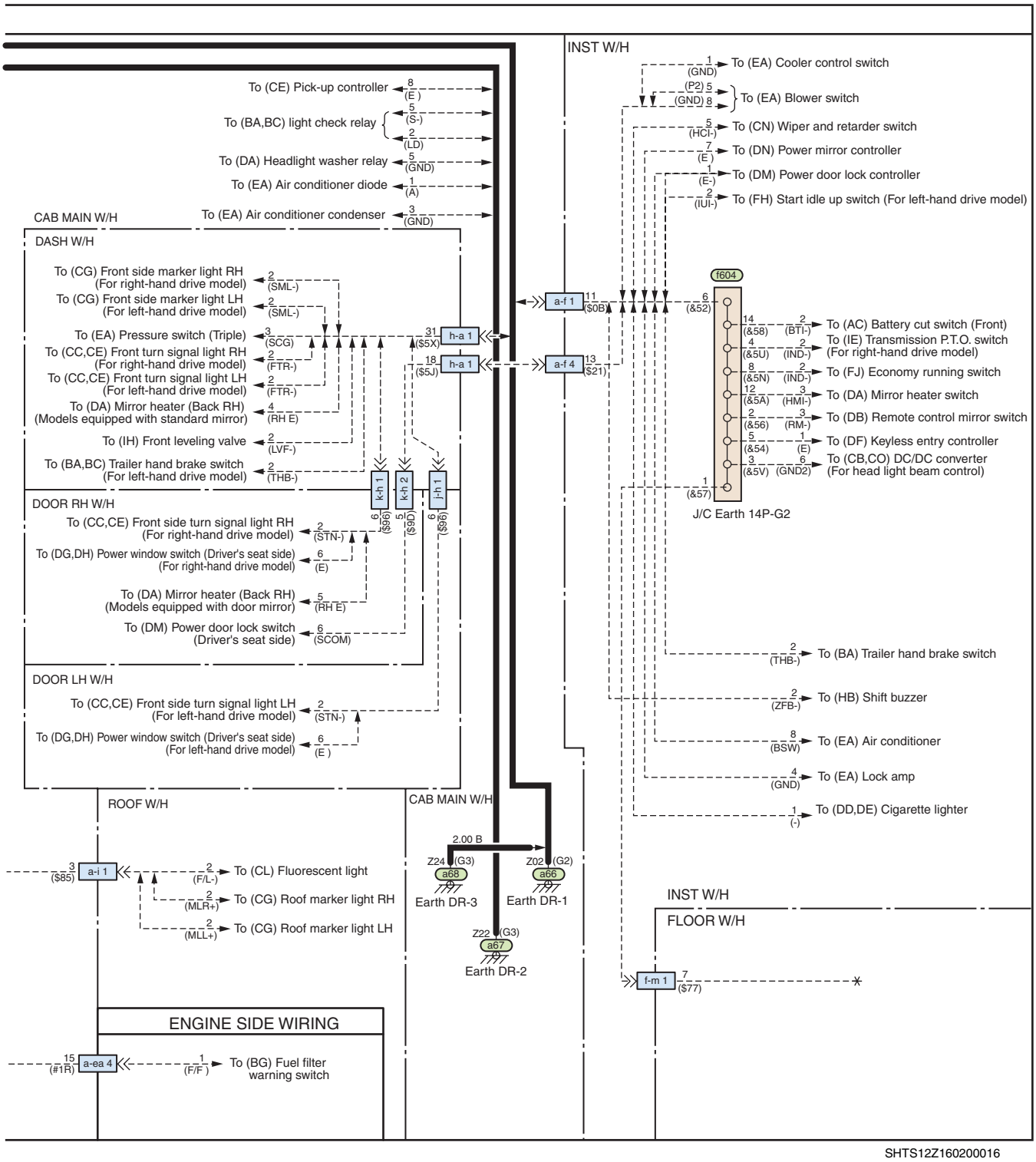

SHTS12Z160200016

https://truckmanualshub.com/

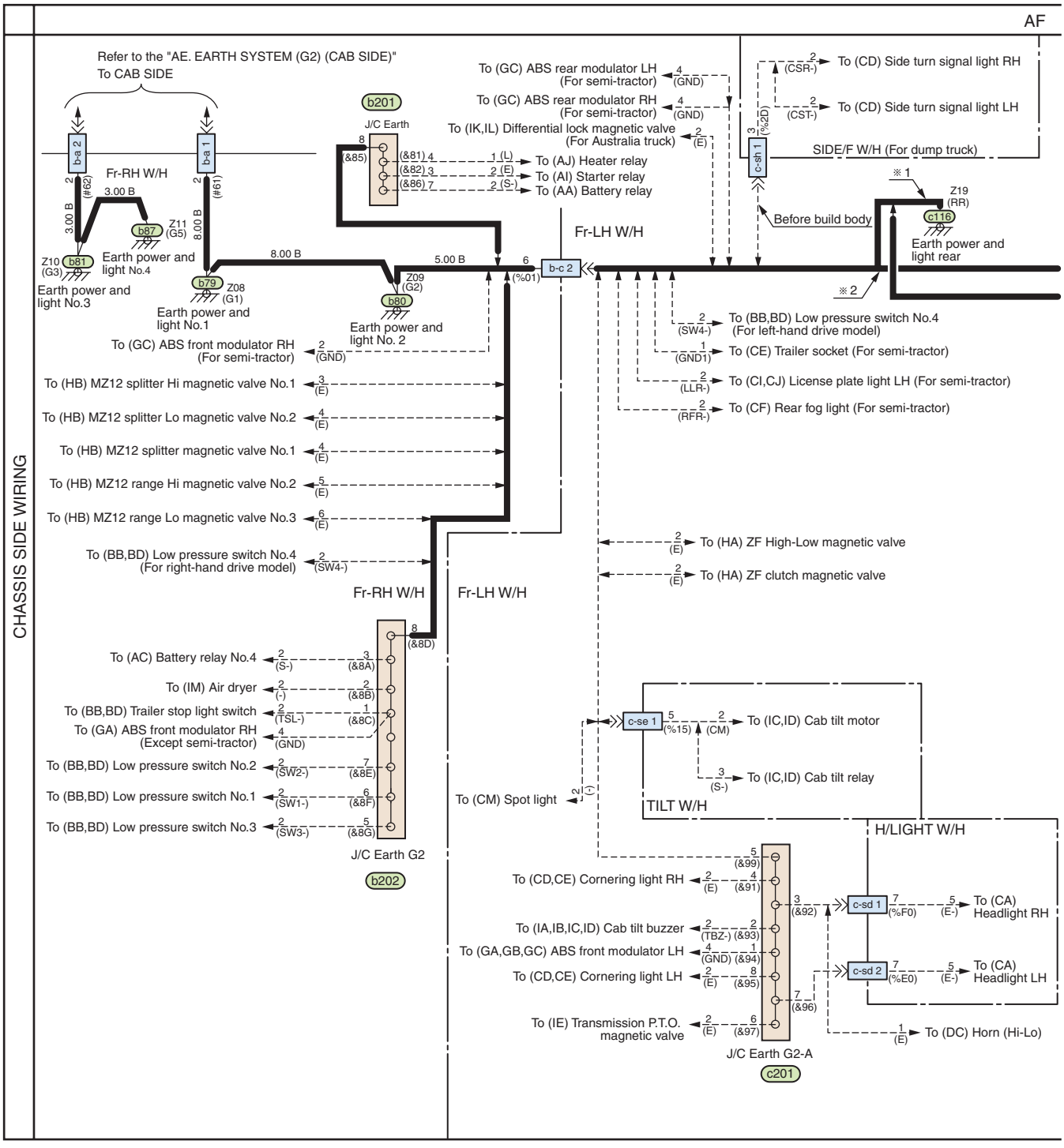

SHTS12Z160200017

AF. EARTH SYSTEM (G2) (CHASSIS)

https://truckmanualshub.com/

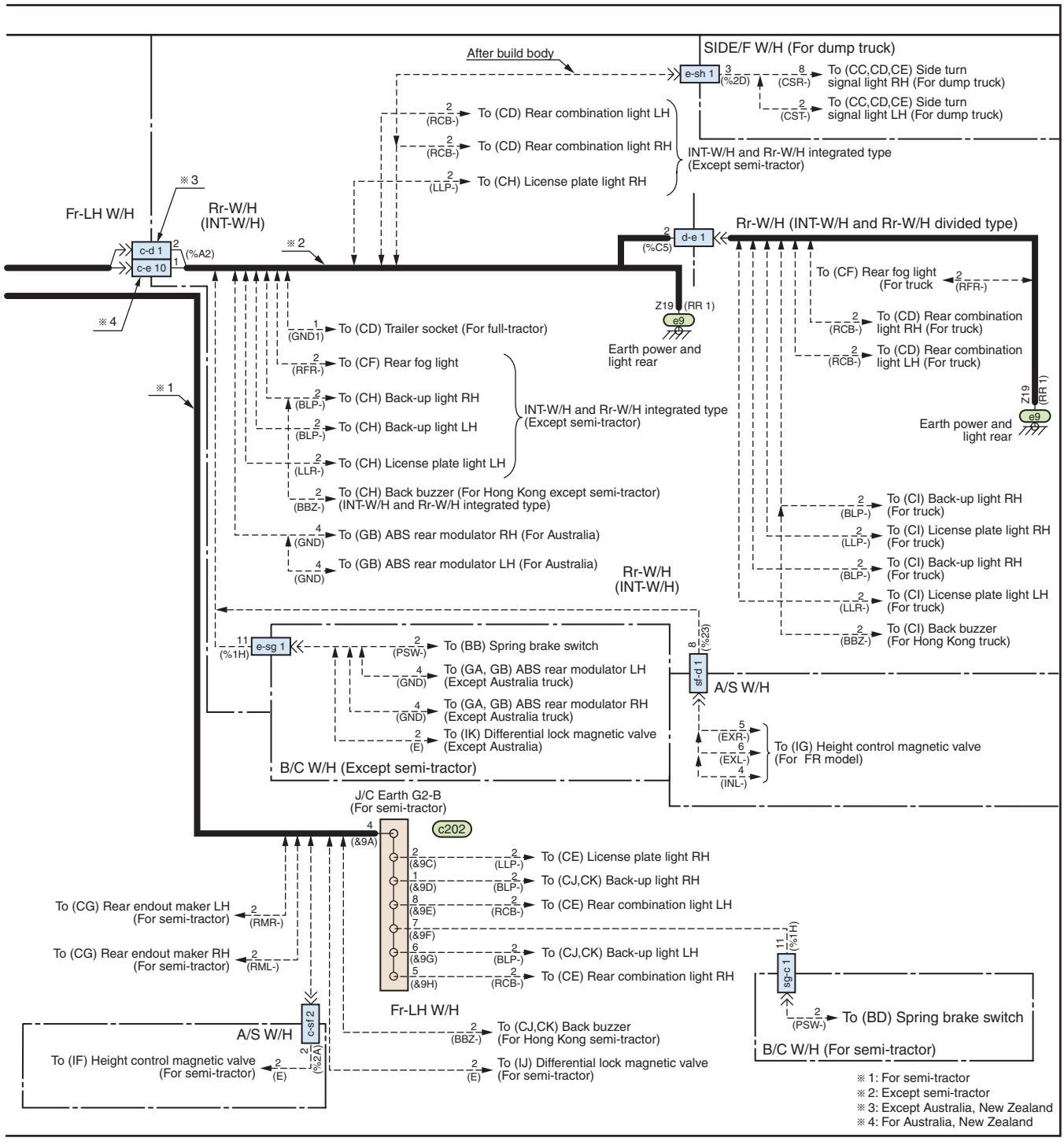

SHTS12Z160200018

https://truckmanualshub.com/

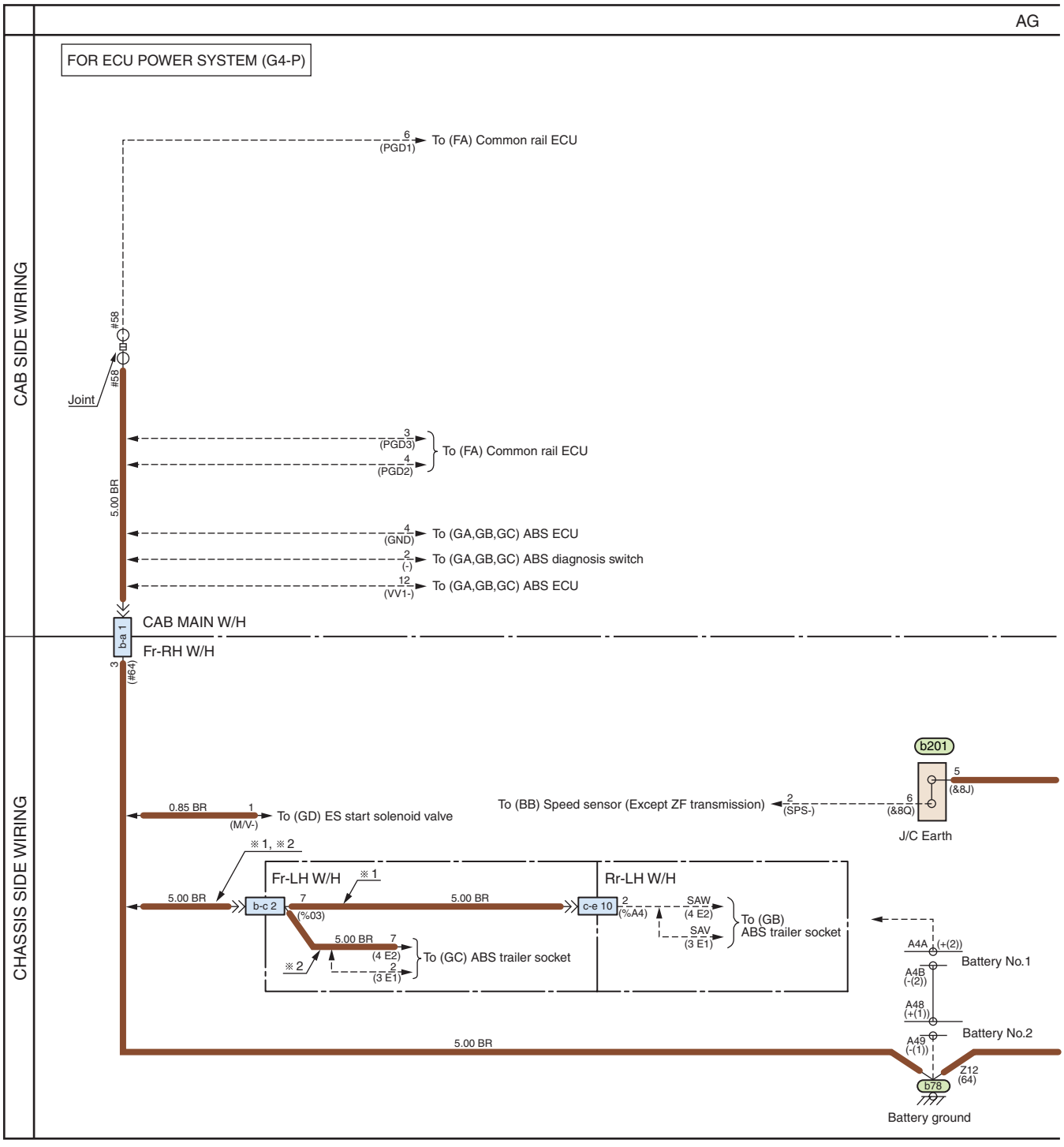

SHTS12Z160200019

AG. EARTH SYSTEM (G4-C AND G4-P)

https://truckmanualshub.com/

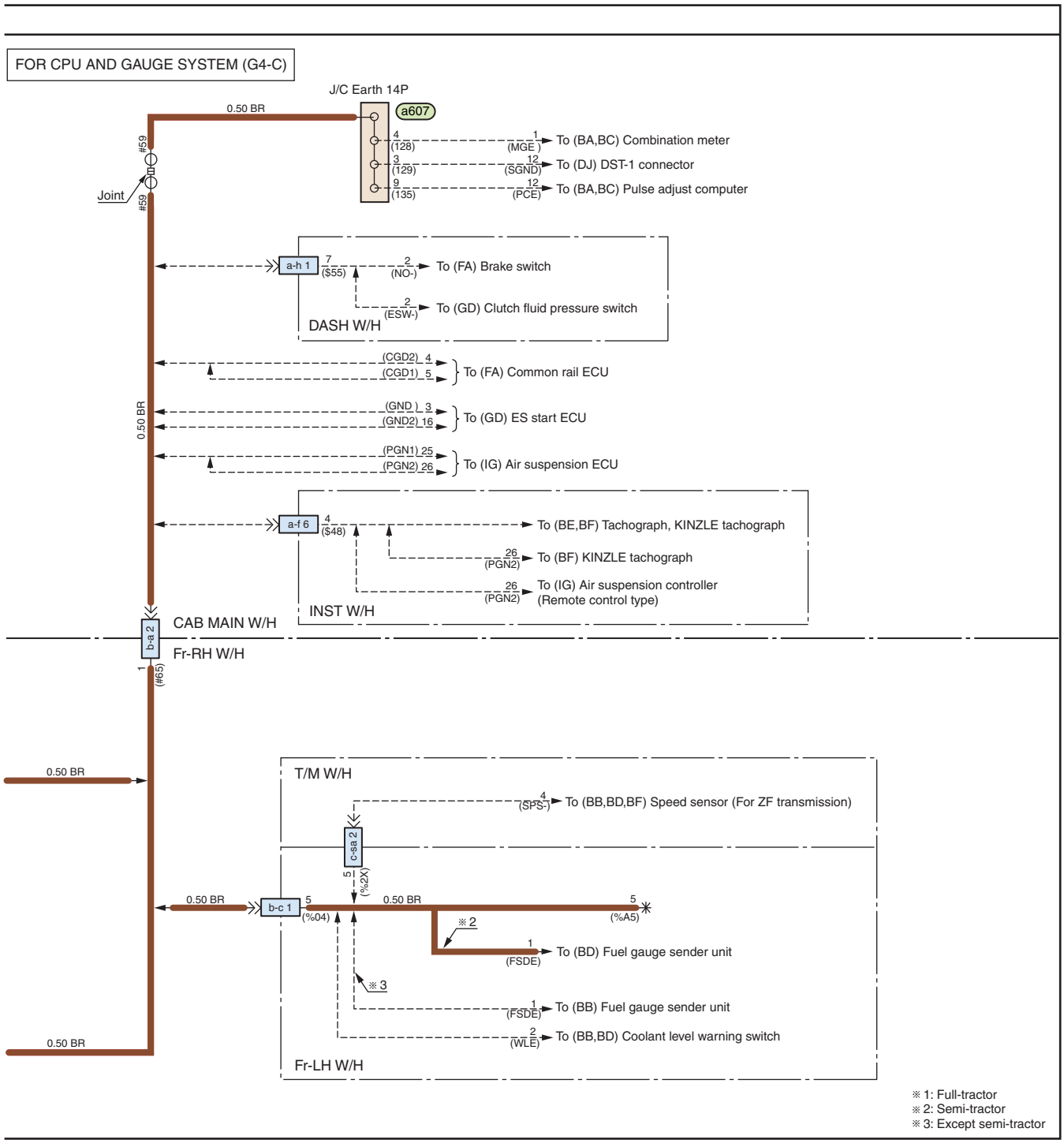

SHTS12Z160200020

https://truckmanualshub.com/

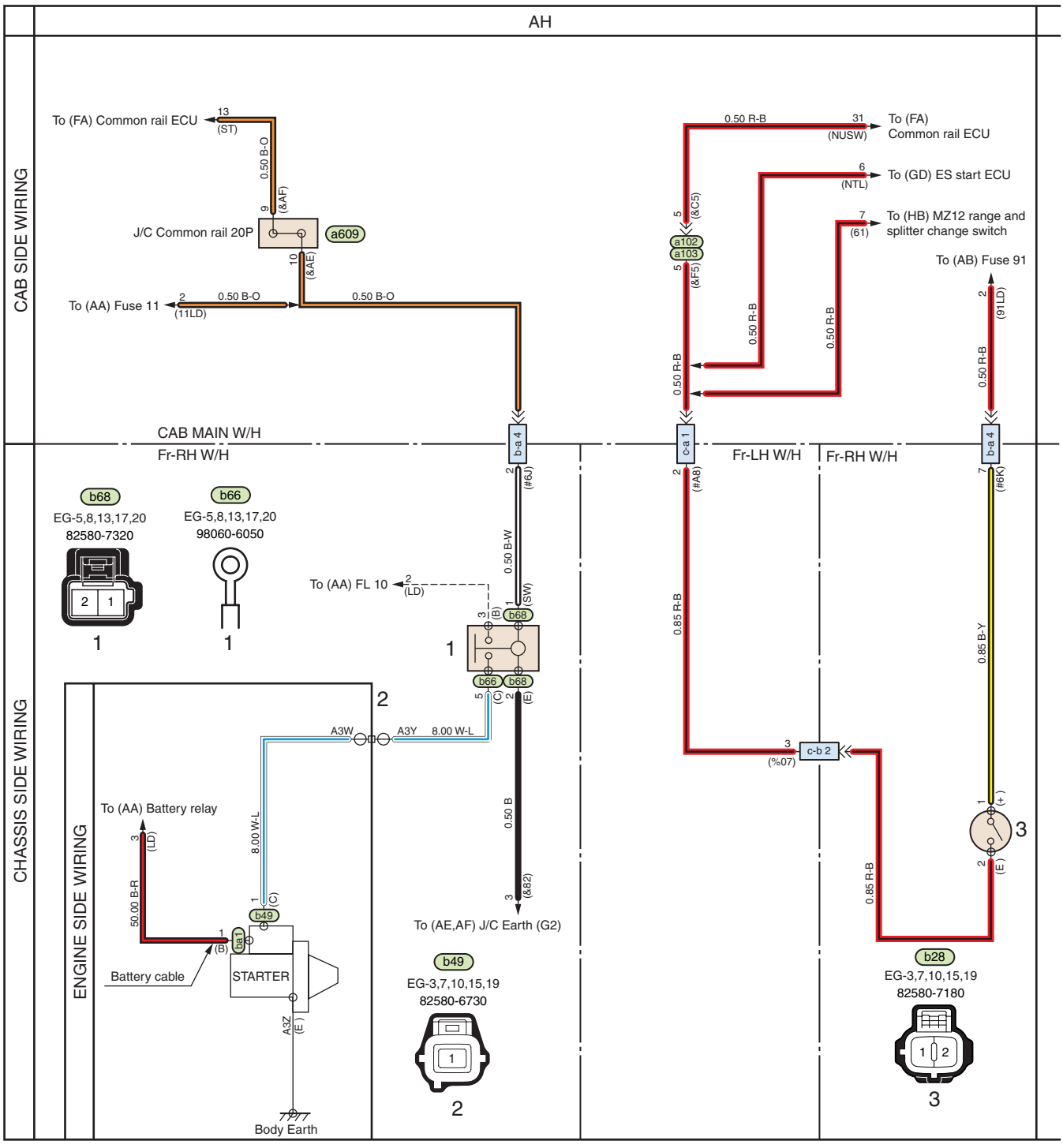

SHTS12Z160200021

AH. ENGINE STARTING CIRCUIT (MODELS WITH MZ AND HX TRANSMISSION)

1. Starter relay
2. Starter
3. Neutral switch

https://truckmanualshub.com/

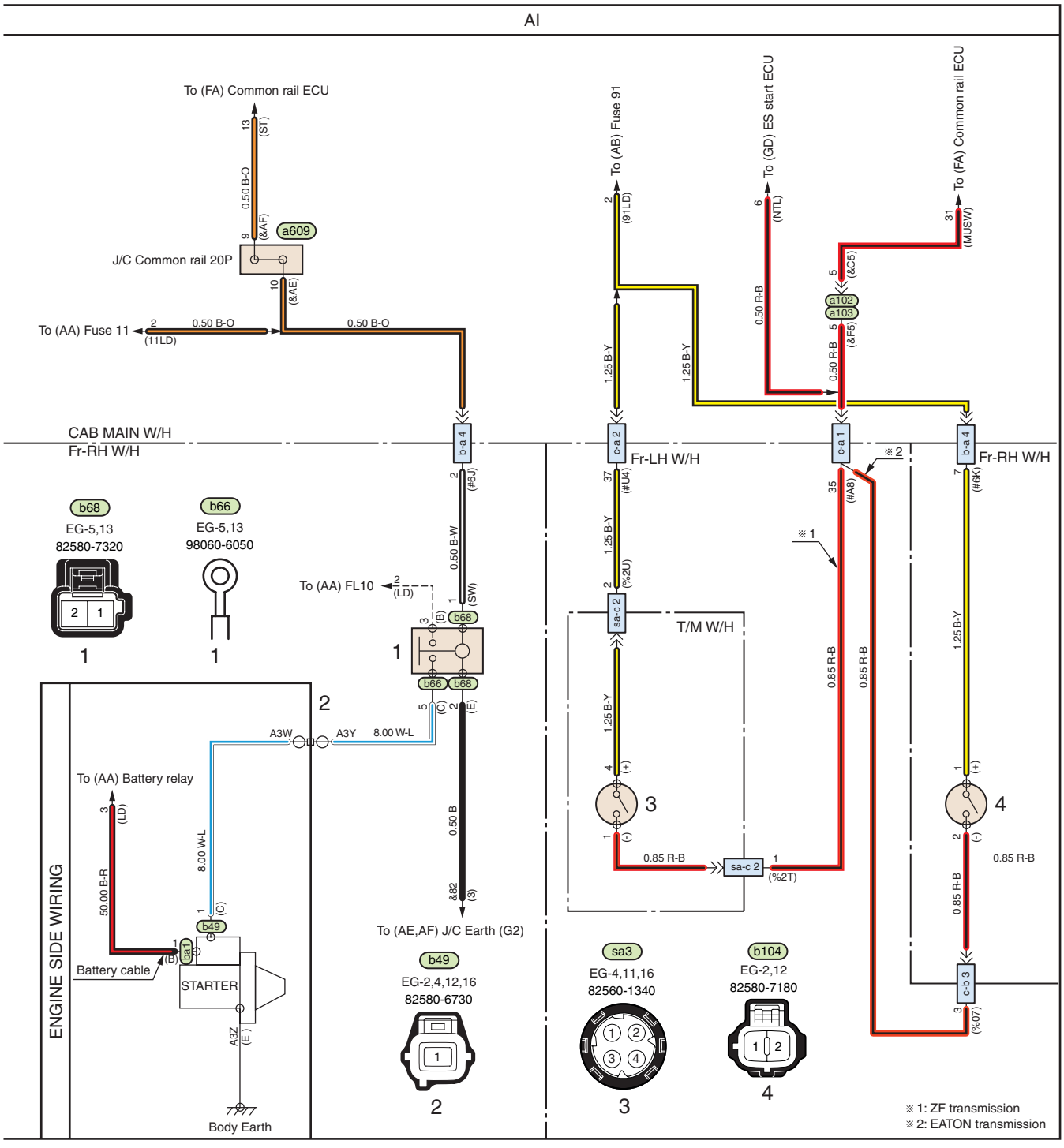

SHTS12Z160200022

AI. ENGINE STARTING CIRCUIT (MODELS WITH ZF AND EATON TRANSMISSION)

1. Starter relay
2. Starter
3. Neutral switch (ZF transmission)
4. Neutral switch (EATON transmission)

https://truckmanualshub.com/

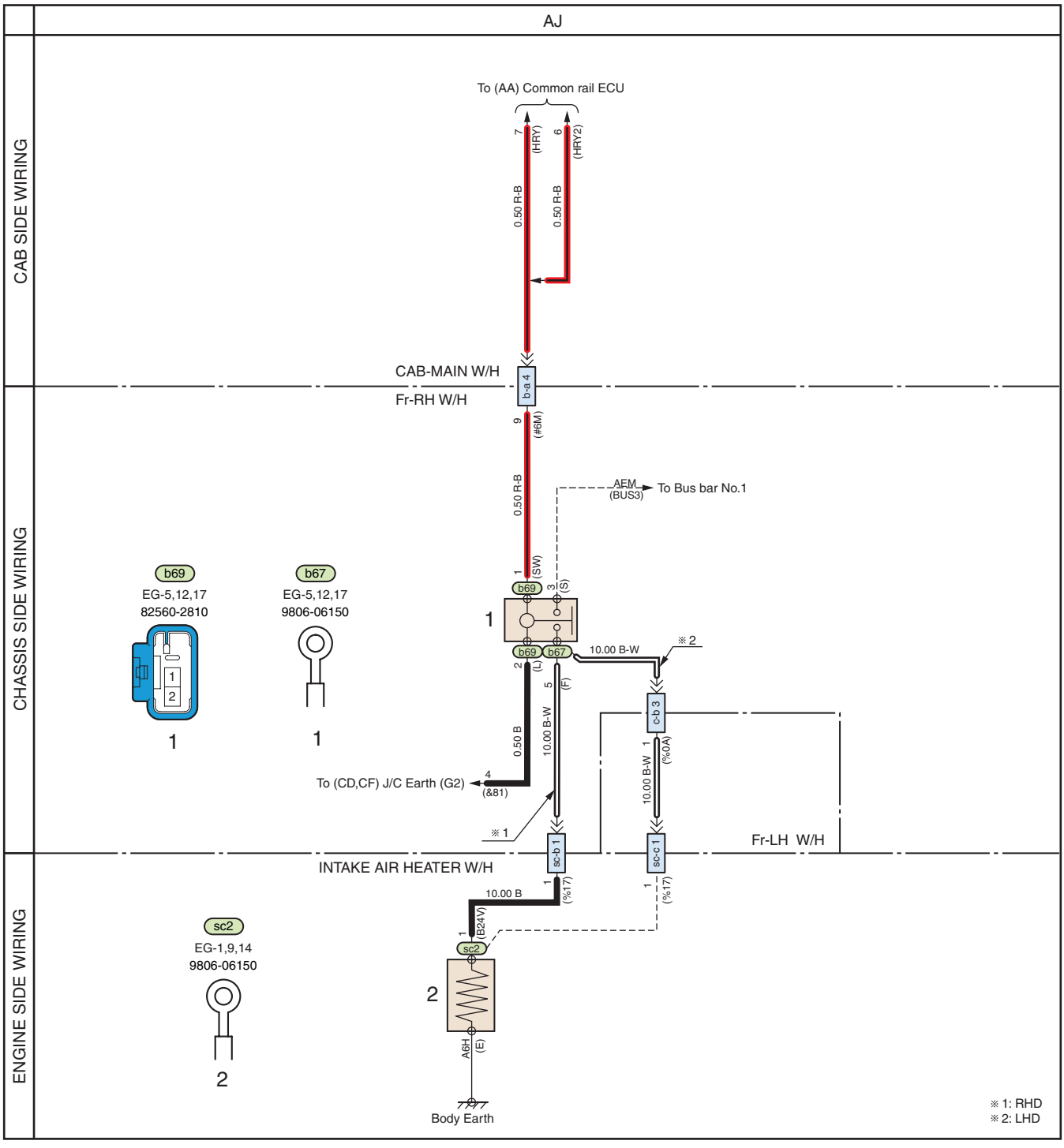

SHTS12Z160200023

AJ. ENGINE STARTING ASSIST CIRCUIT

1. Intake air heater relay
2. Intake air heater

https://truckmanualshub.com/

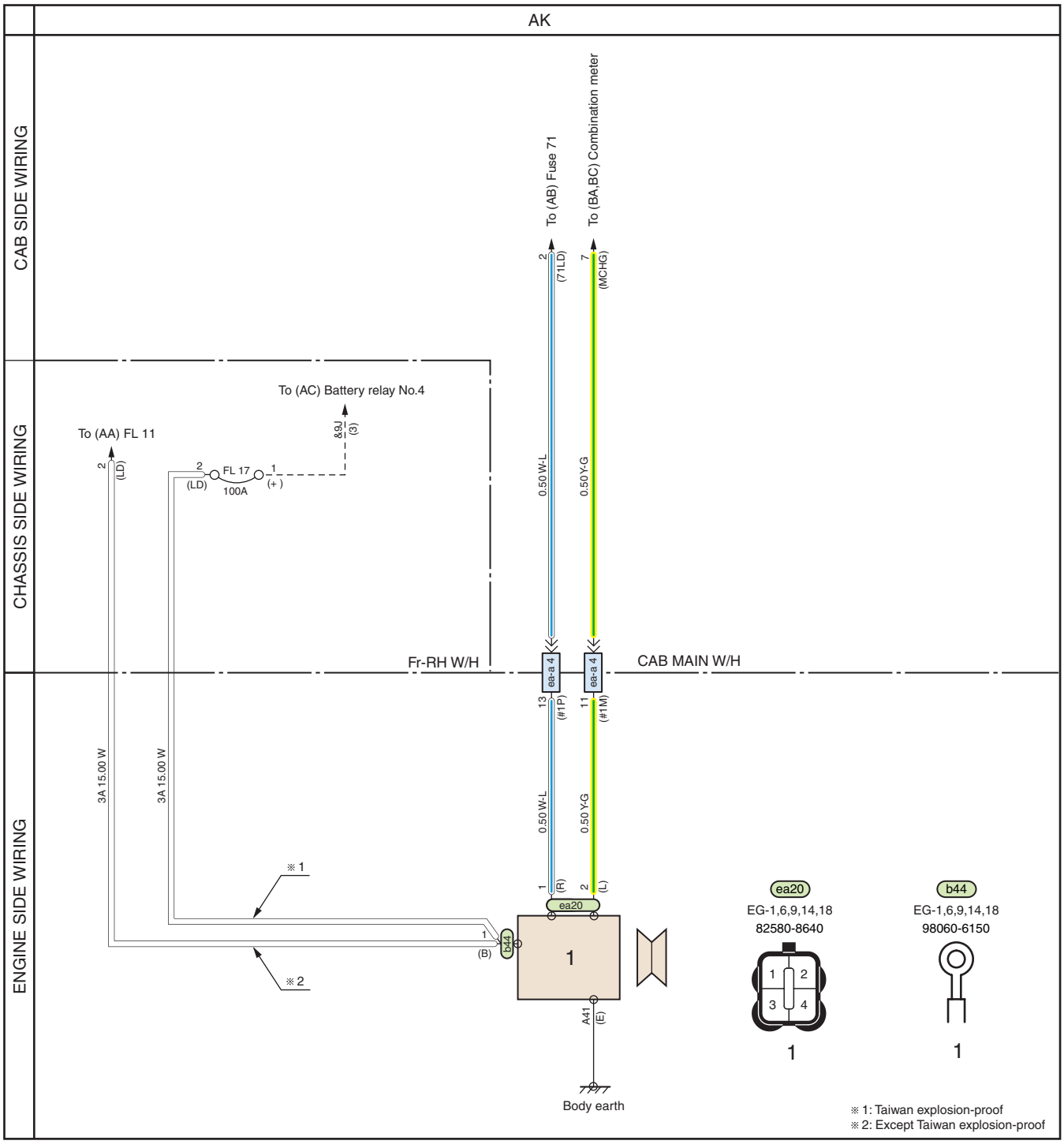

SHTS12Z160200024

AK. CHARGING CIRCUIT

1. Alternator

https://truckmanualshub.com/

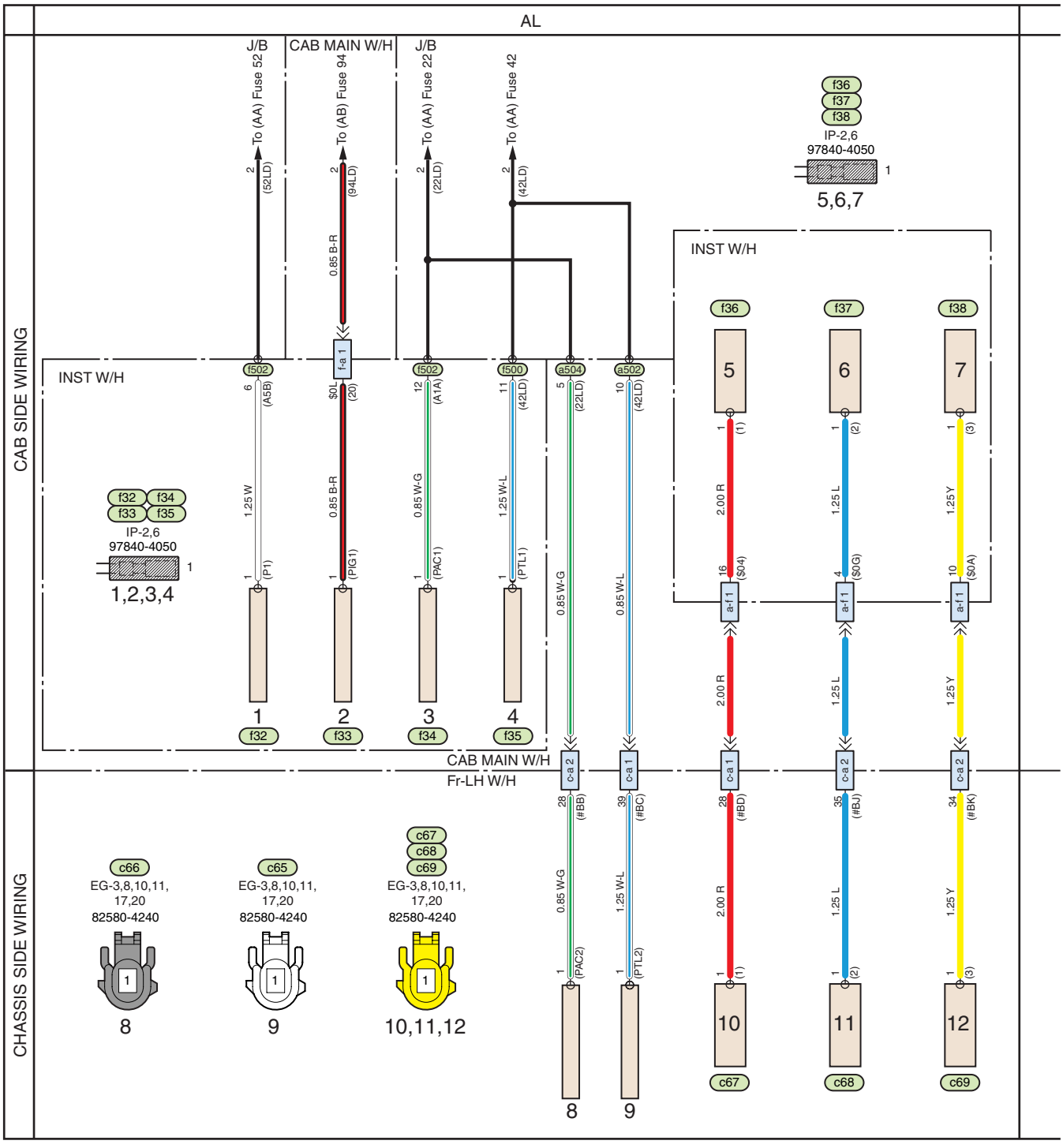

SHTS12Z160200025

AL. SPARE POWER SOURCE CIRCUIT

1. P/BAT
2. P/M
3. P/ACC CAB
4. P/TAIL CAB
5. SERVICE CAB 1
6. SERVICE CAB 2
7. SERVICE CAB 3
8. P/ACC CHASSIS
9. P/TAIL CHASSIS
10. SERVICE CHASSIS No.1
11. SERVICE CHASSIS No.2
12. SERVICE CHASSIS No.3

https://truckmanualshub.com/

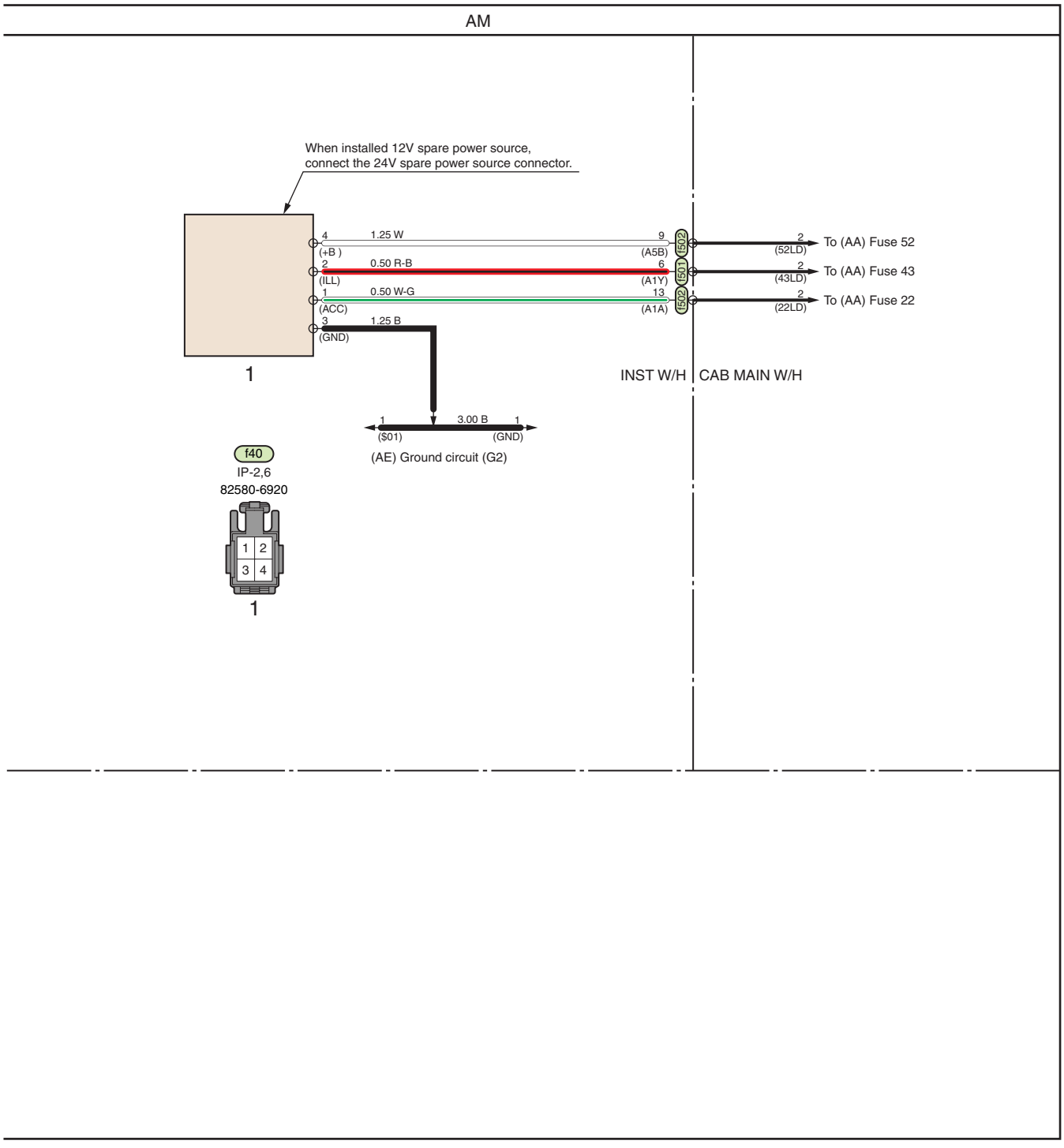

SHTS12Z160200026

AM. ETC. SPARE POWER SOURCE CIRCUIT (DOUBLE AS 12V SPARE POWER SOURCE)

1. ETC. sub power supply connector

https://truckmanualshub.com/

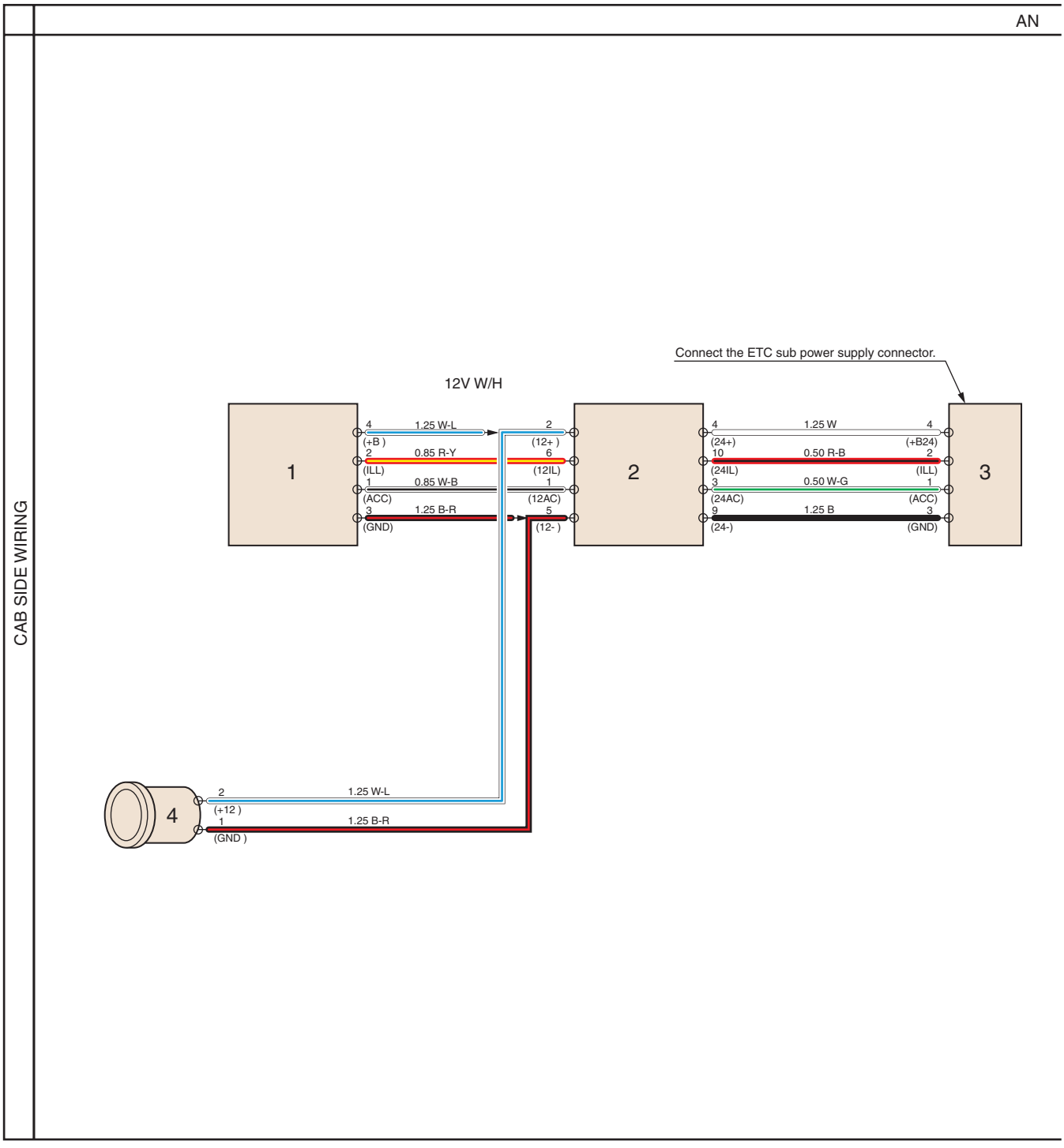

SHTS12Z160200027

AN. 12V SPARE POWER SOURCE CIRCUIT

1. P12V connector
2. DC/DC converter
3. P24V connector
4. 12V socket

https://truckmanualshub.com/

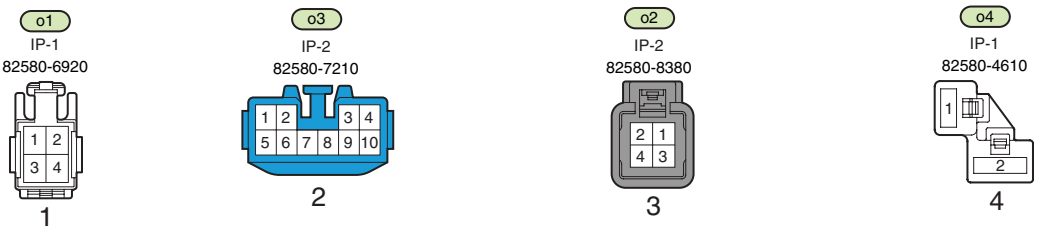

SHTS12Z160200028

https://truckmanualshub.com/

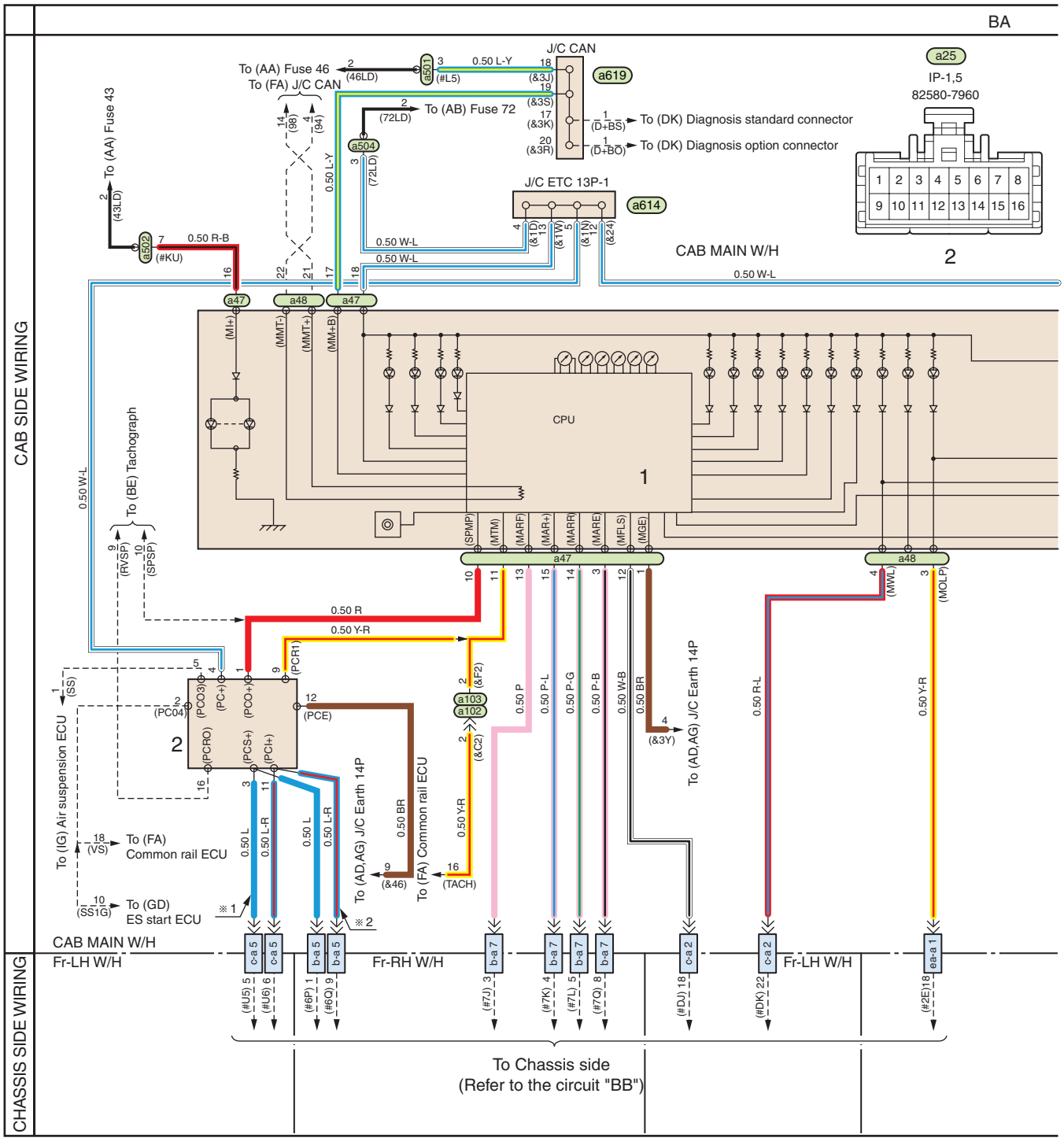

SHTS12Z160200029

BA. METER CIRCUIT (EXCEPT SEMI-TRACTOR) (CAB SIDE)

1. Combination meter
2. Pulse adjust computer
3. Light check relay
4. Trailer hand brake switch
5. Warning buzzer

https://truckmanualshub.com/

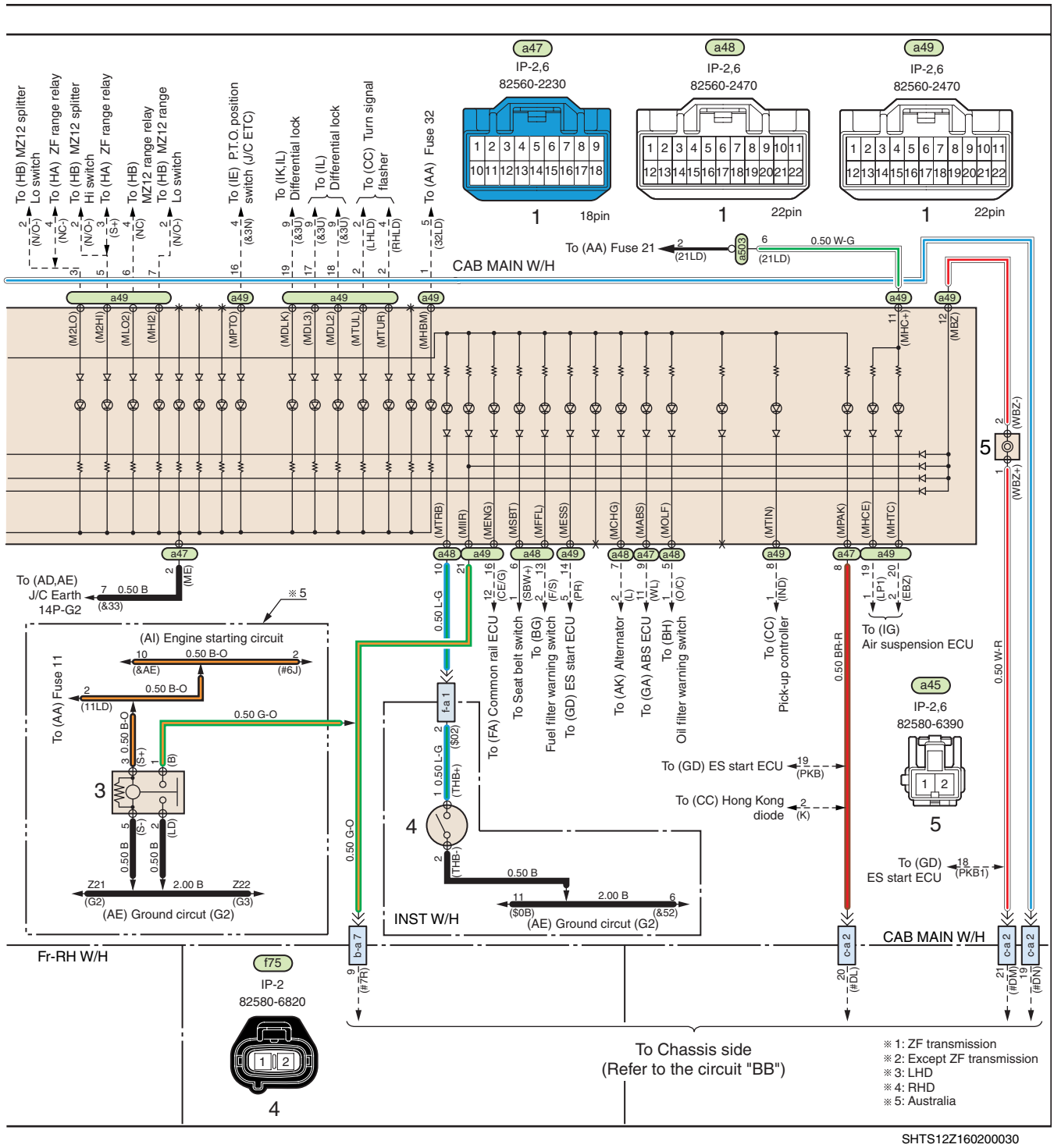

SHTS12Z160200030

https://truckmanualshub.com/

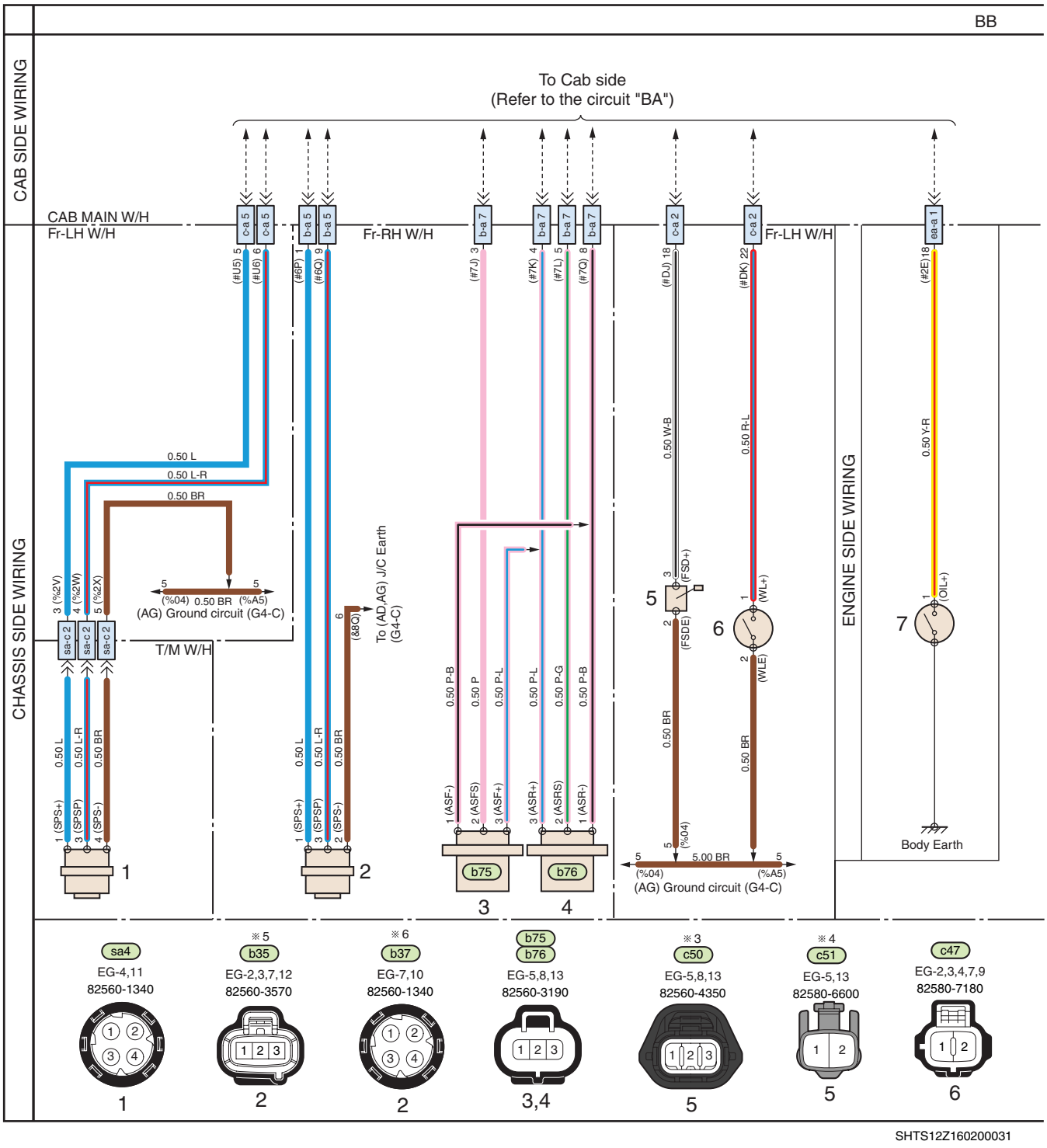

BB. METER CIRCUIT (EXCEPT SEMI-TRACTOR) (CHASSIS SIDE)

1. Speed sensor (For ZF transmission)
2. Speed sensor (Except ZF transmission)
3. Front air gauge sender unit
4. Rear air gauge sender unit
5. Fuel gauge sender unit
6. Coolant level warning switch
7. Oil pressure warning switch
8. Low pressure switch No.4
9. Low pressure switch No.2
10. Low pressure switch No.3
11. Low pressure switch No.1
12. Spring brake switch
13. Buzzer cancel switch

https://truckmanualshub.com/

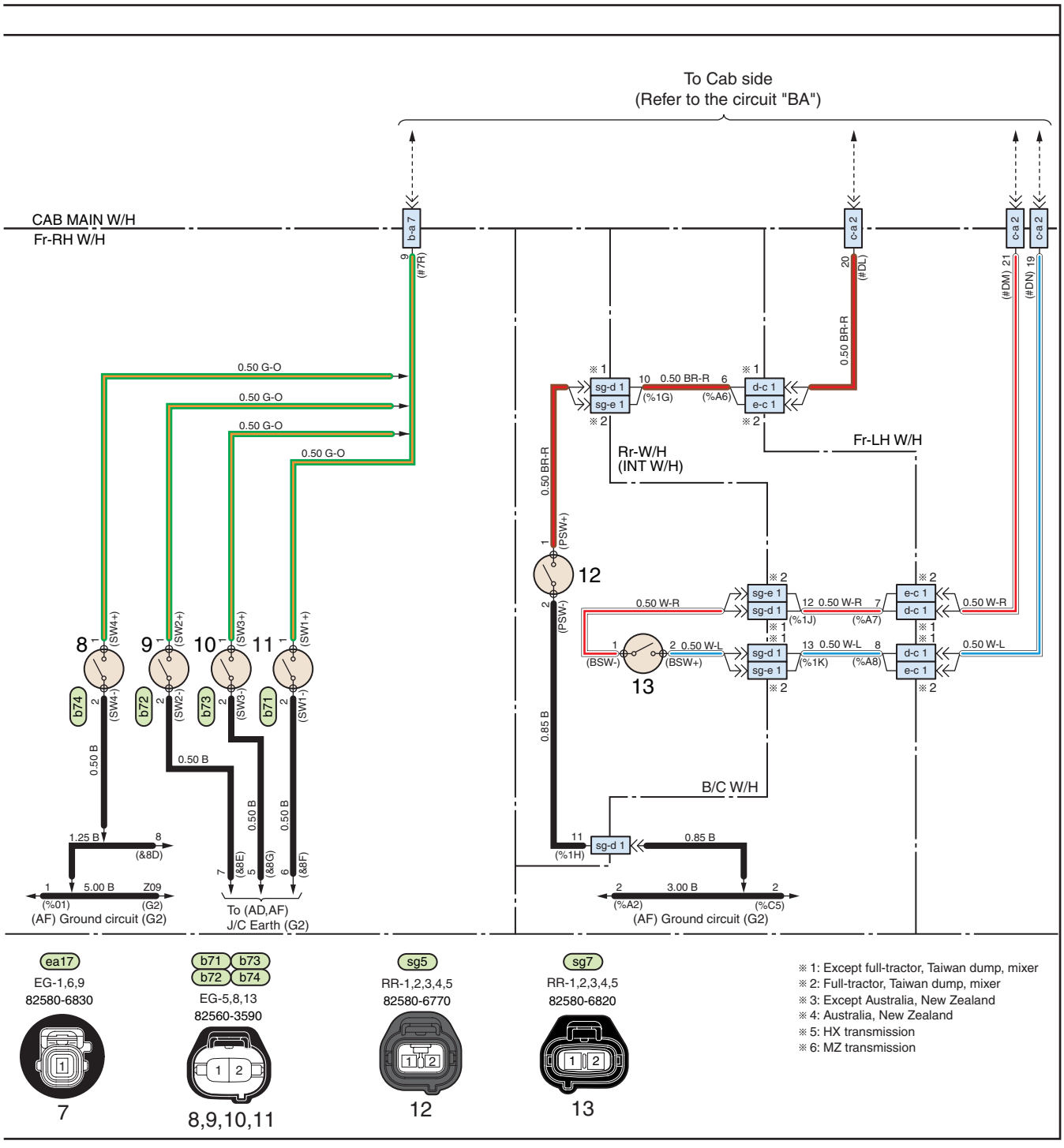

SHTS12Z160200032

https://truckmanualshub.com/

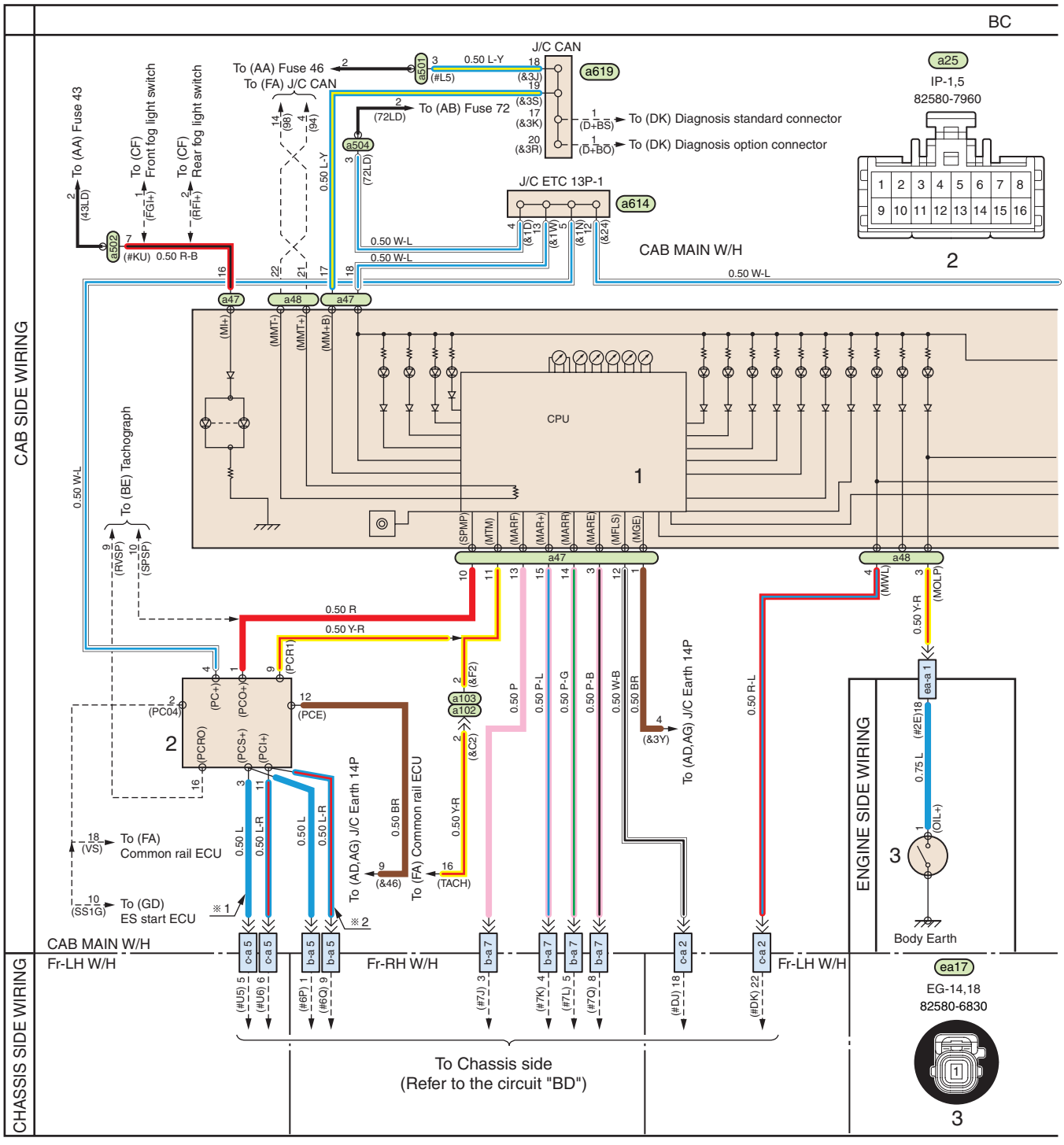

SHTS12Z160200033

BC. METER CIRCUIT (FOR SEMI-TRACTOR) (CAB SIDE)

1. Combination meter
2. Pulse adjust computer
3. Oil pressure warning switch
4. Trailer hand brake switch
5. Warning buzzer

https://truckmanualshub.com/

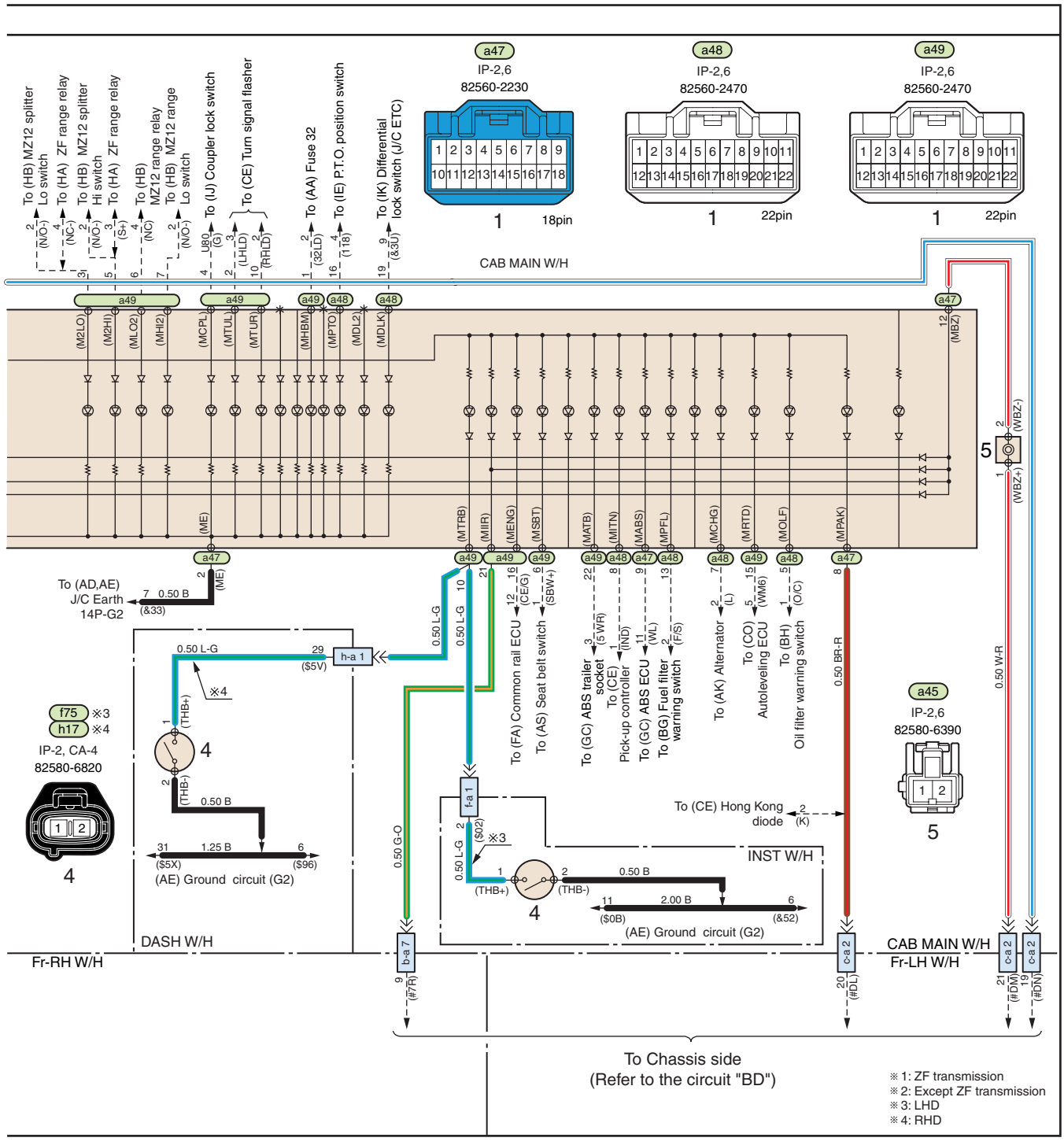

SHTS12Z160200034

https://truckmanualshub.com/

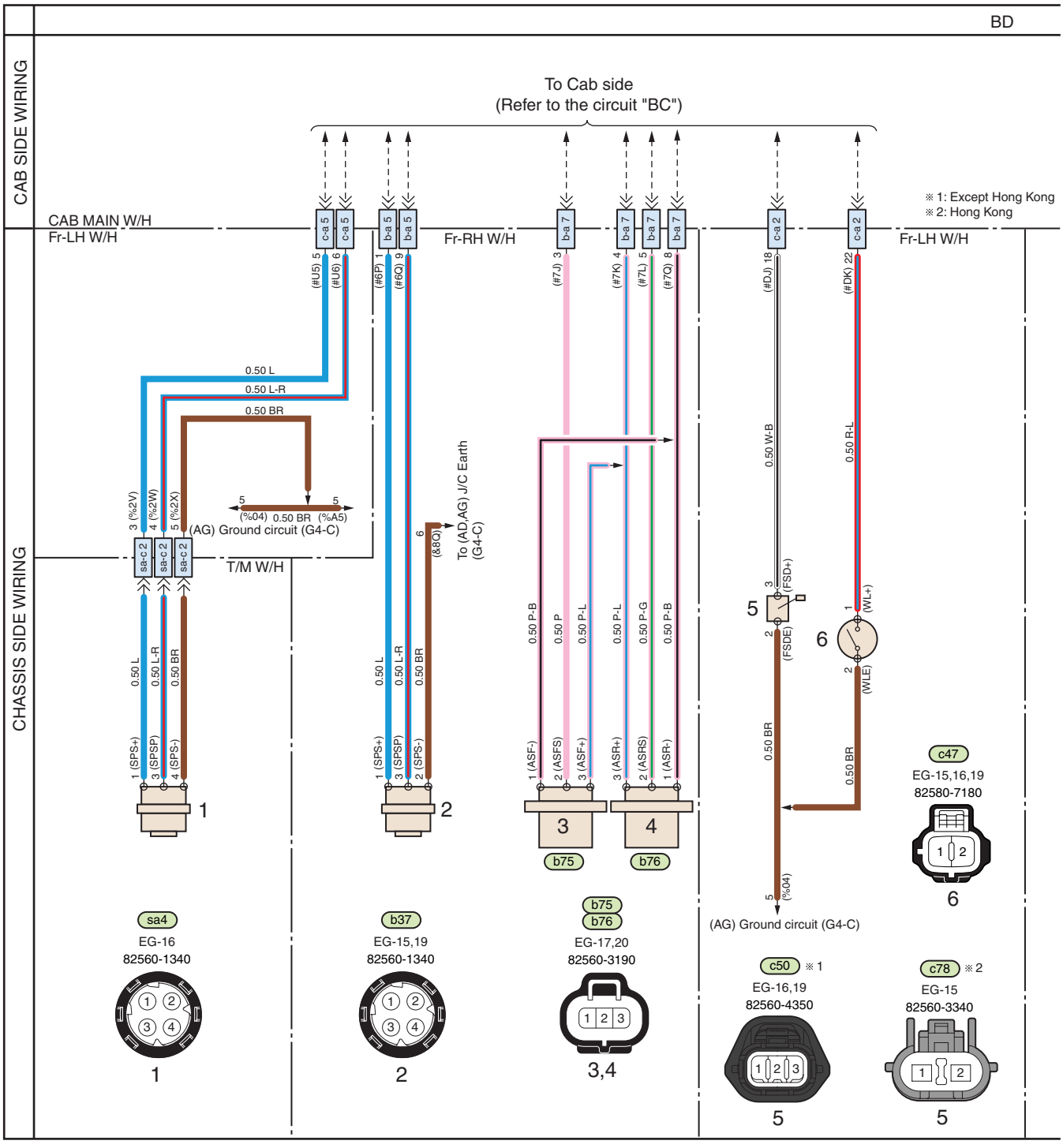

SHTS12Z160200035

BD. METER CIRCUIT (FOR SEMI-TRACTOR) (CHASSIS SIDE)

1. Speed sensor (For ZF transmission)
2. Speed sensor (Except ZF transmission)
3. Front air gauge sender unit
4. Rear air gauge sender unit
5. Fuel gauge sender unit
6. Coolant level warning switch
7. Low pressure switch No.4
8. Low pressure switch No.2
9. Low pressure switch No.3
10. Low pressure switch No.1
11. Spring brake switch
12. Buzzer cancel switch

https://truckmanualshub.com/

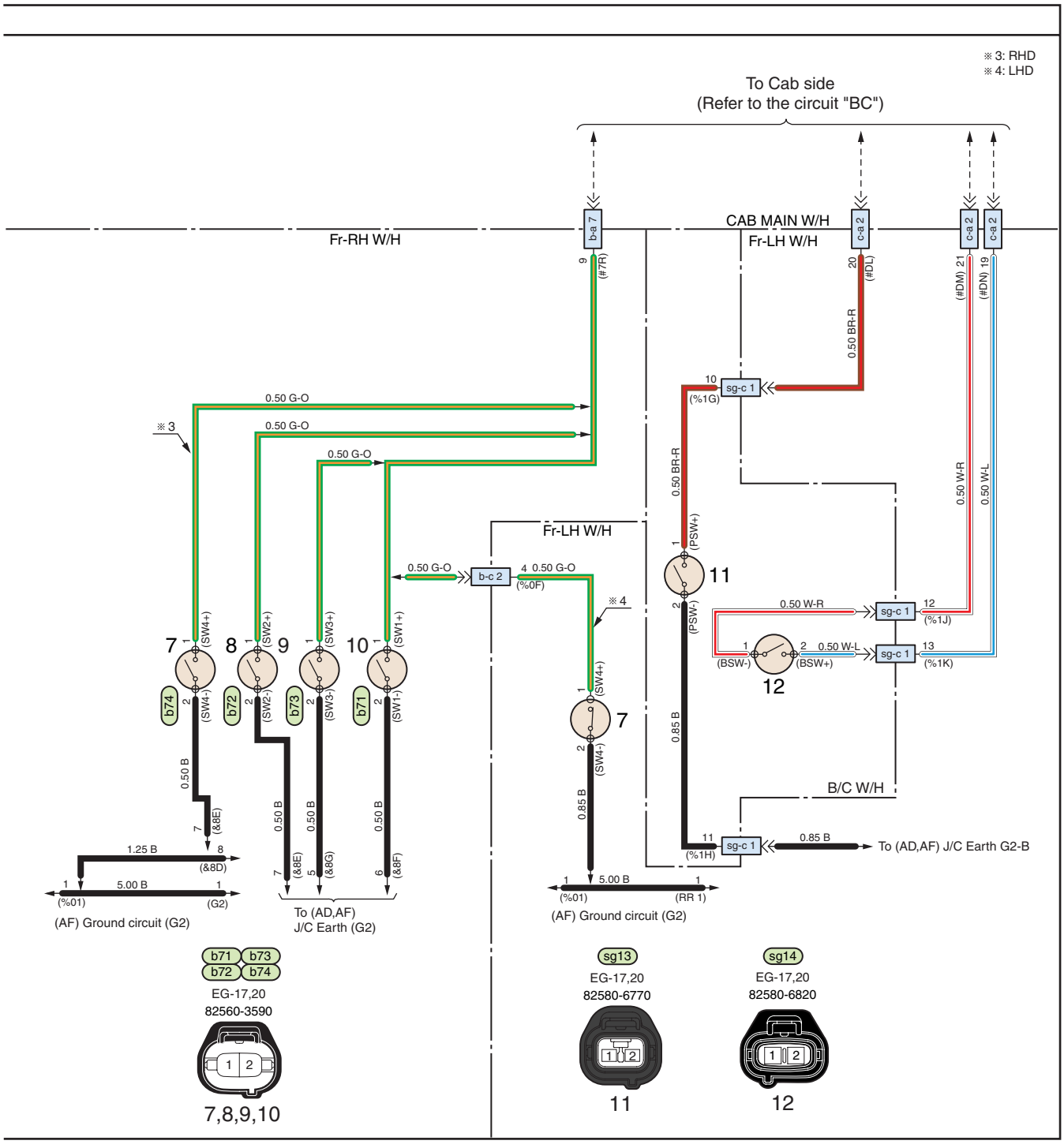

SHTS12Z160200036

https://truckmanualshub.com/

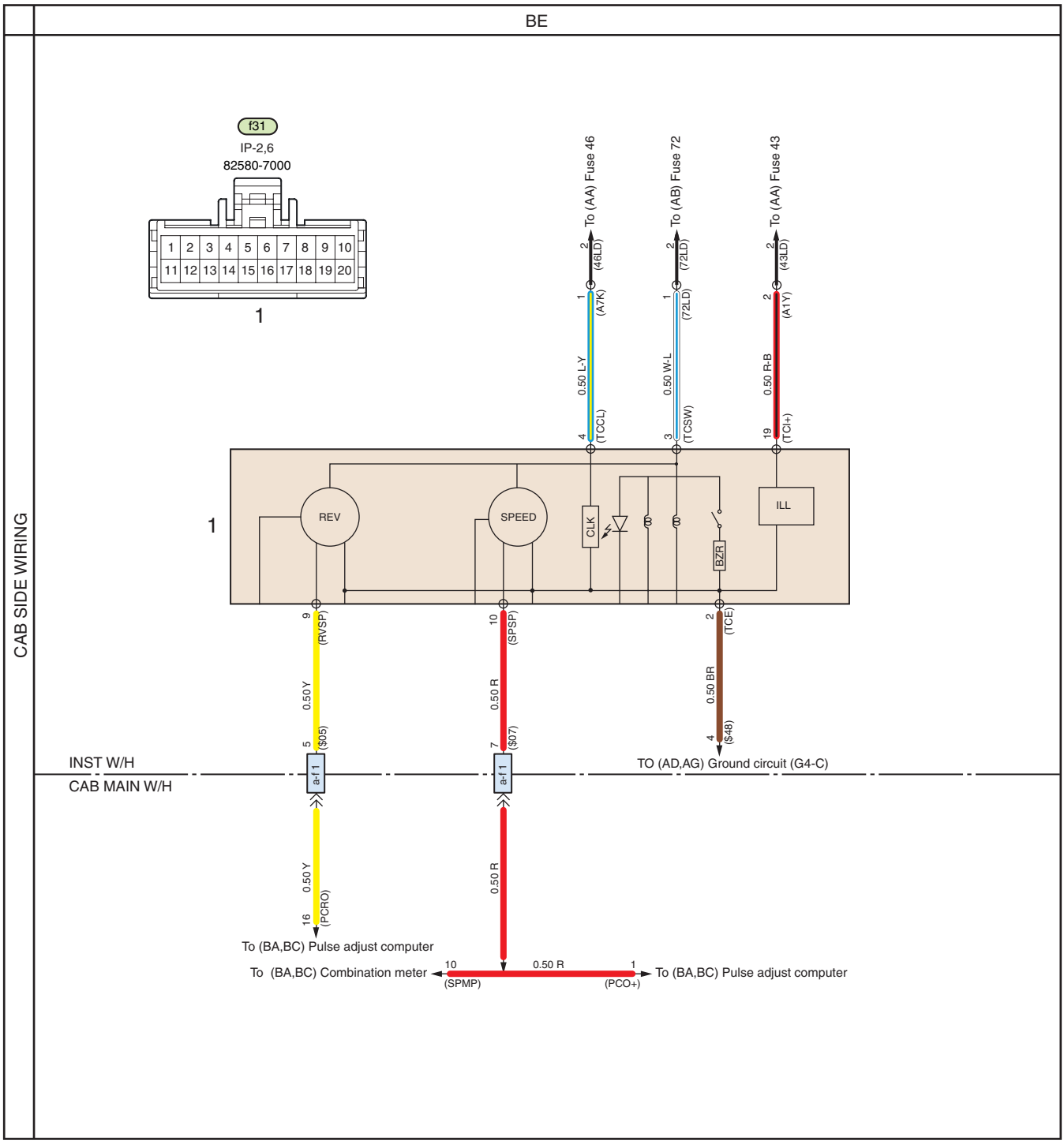

SHTS12Z160200037

BE. TACHOGRAPH CIRCUIT

1. Tachograph

https://truckmanualshub.com/

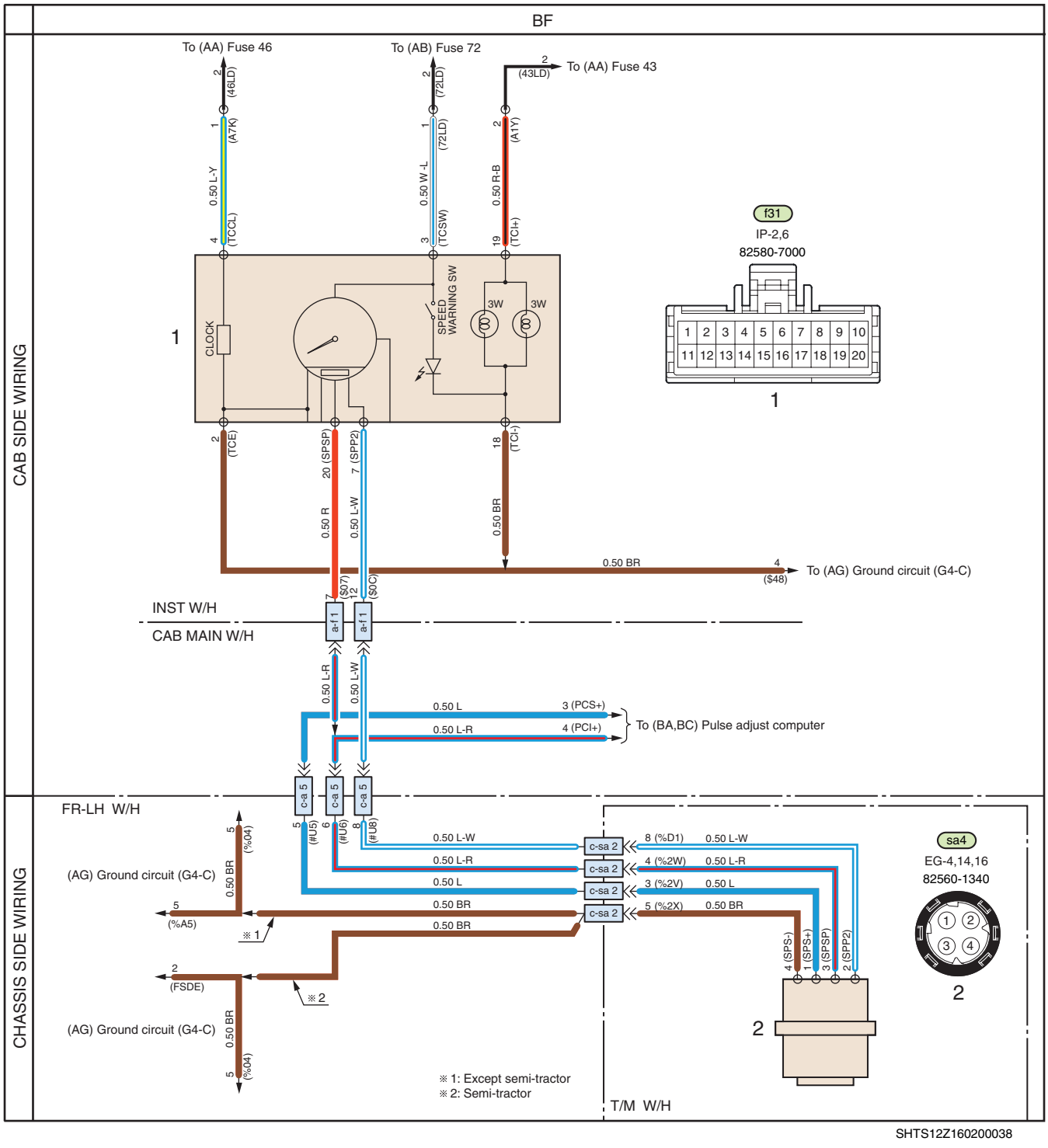

BF. KIENZLE TACHOGRAPH CIRCUIT

1. KIENZLE Tachograph
2. Speed sensor

https://truckmanualshub.com/

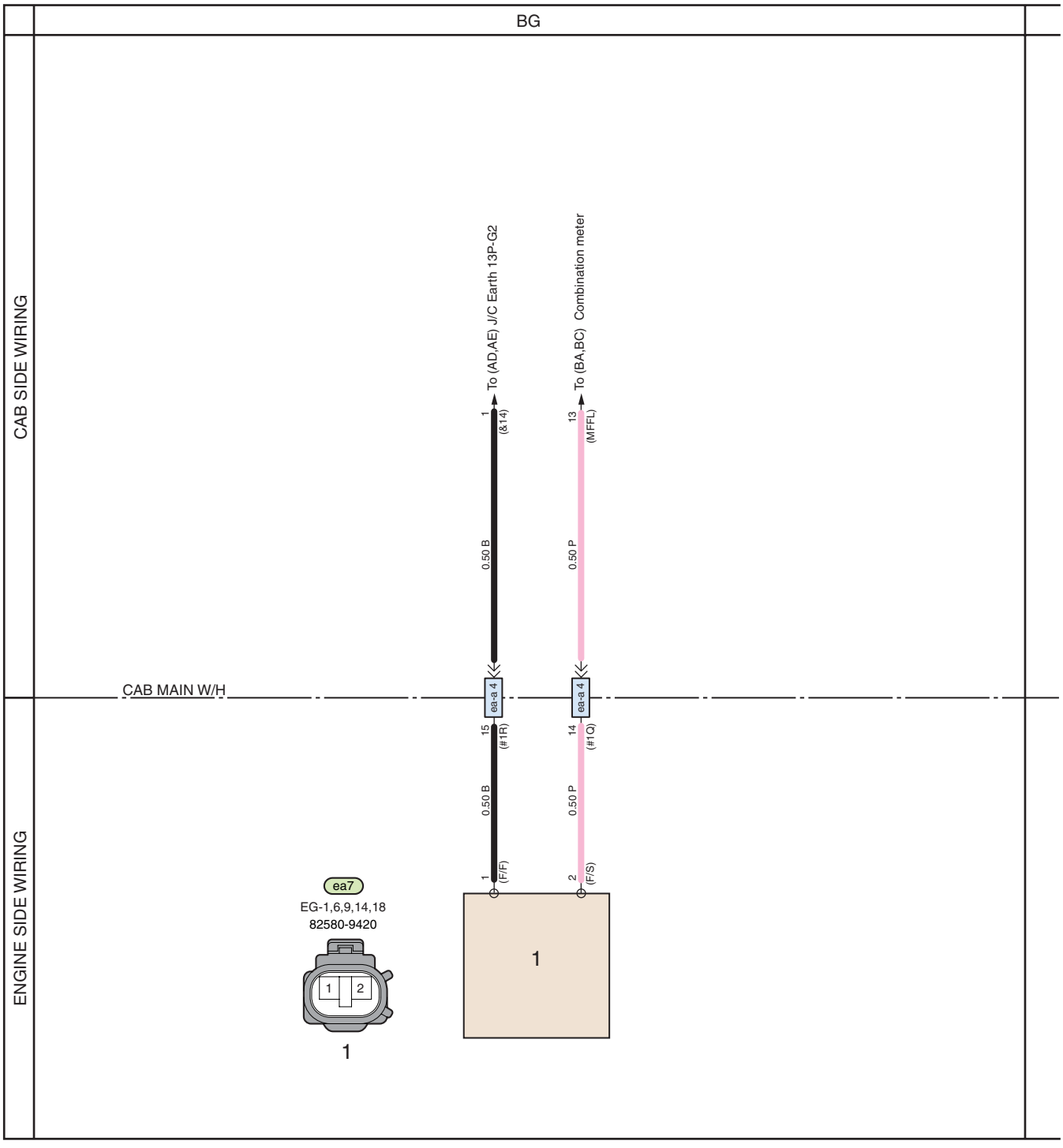

SHTS12Z160200039

BG. FUEL FILTER WARNING CIRCUIT

1. Fuel filter warning switch

https://truckmanualshub.com/

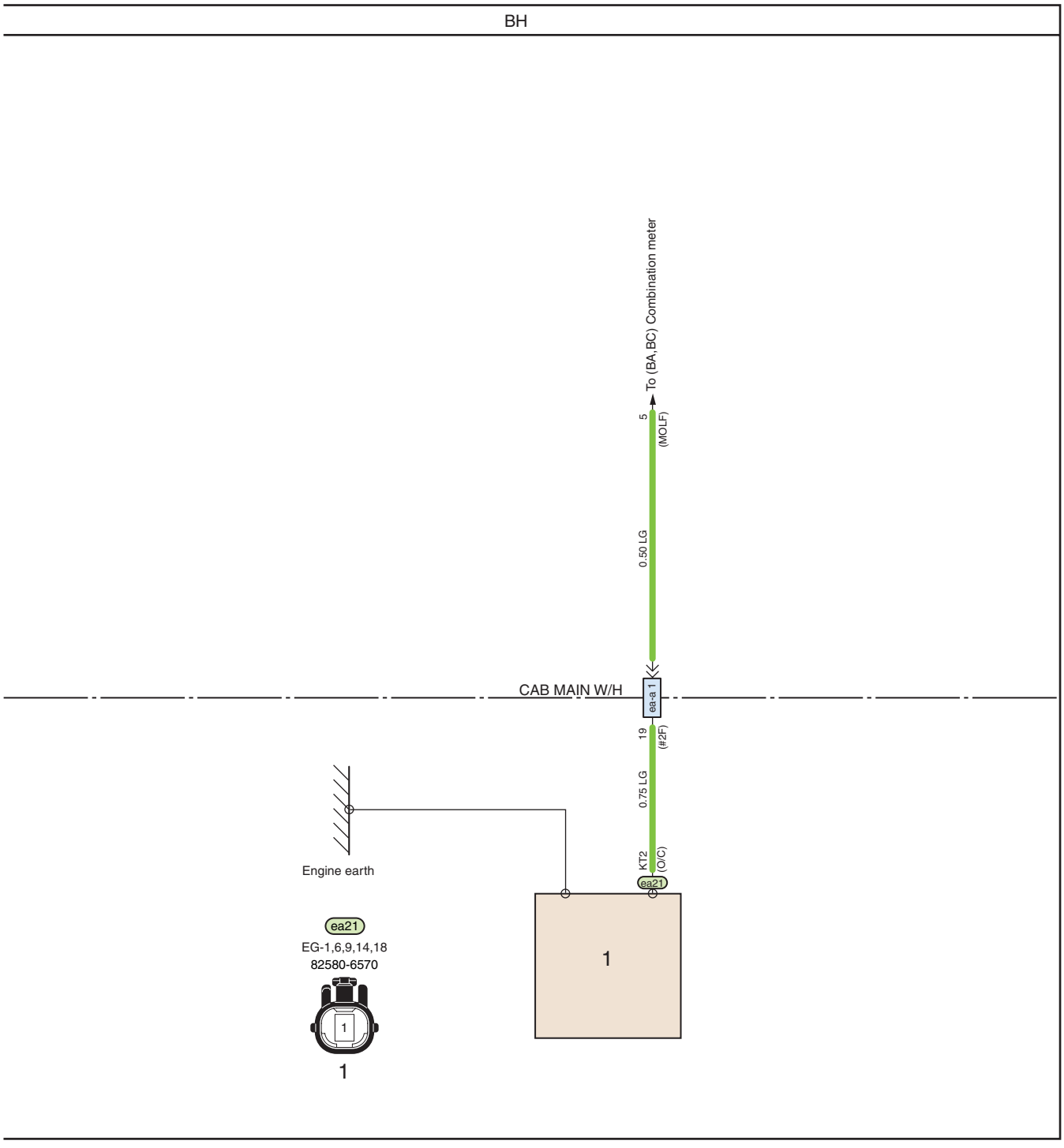

SHTS12Z160200040

BH. OIL FILTER WARNING CIRCUIT

1. Oil filter warning switch

https://truckmanualshub.com/

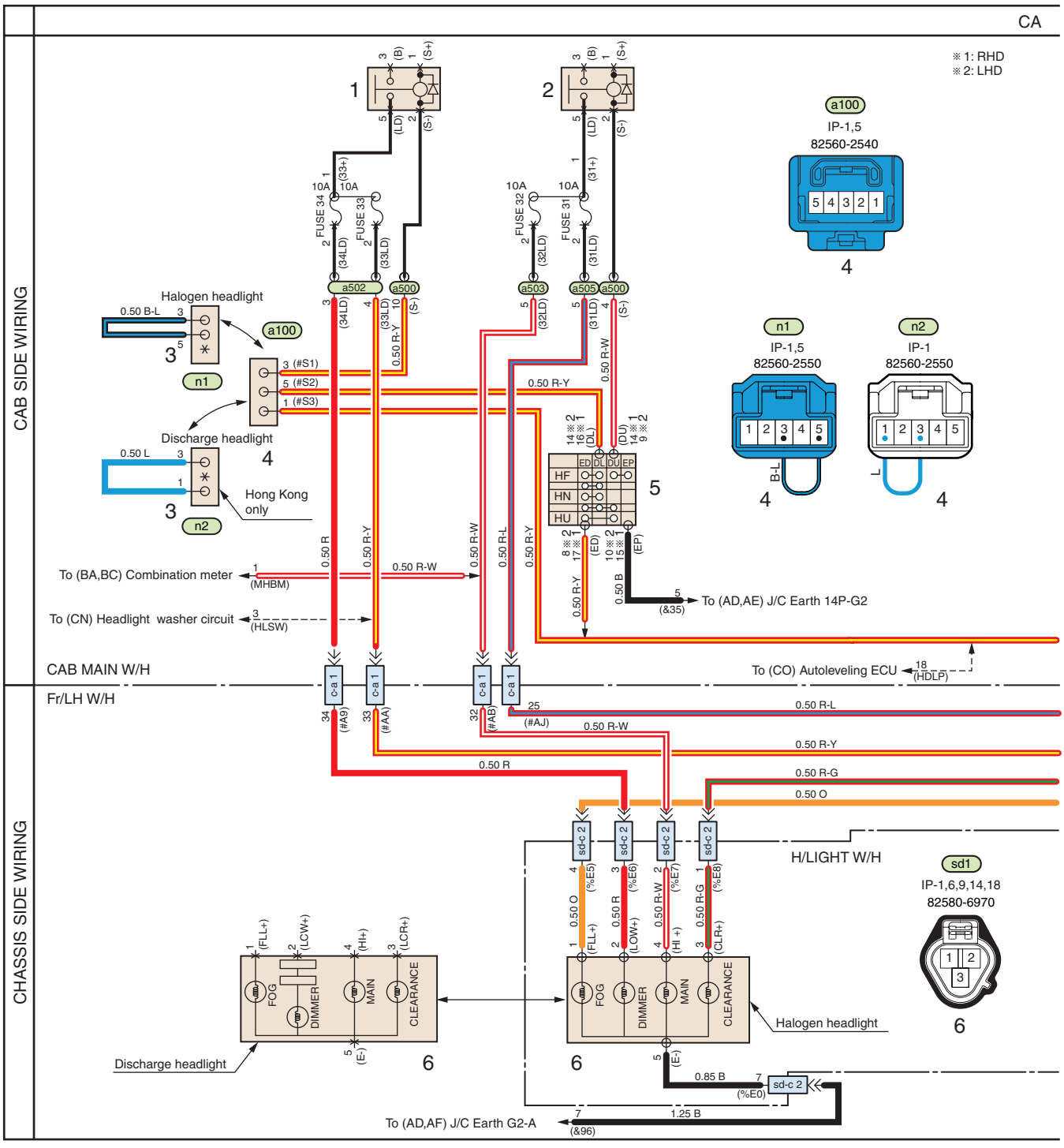

SHTS12Z160200041

CA. HEADLIGHT CIRCUIT

1. Headlight relay (Dimmer)
2. Headlight relay (Main)
3. Headlight short circuit connector
4. Headlight short circuit connector (Cab side)
5. Light and turn switch
6. Headlight LH
7. Tail light relay No.1
8. Tail light relay No.2
9. Cornering light diode
10. Headlight RH

https://truckmanualshub.com/

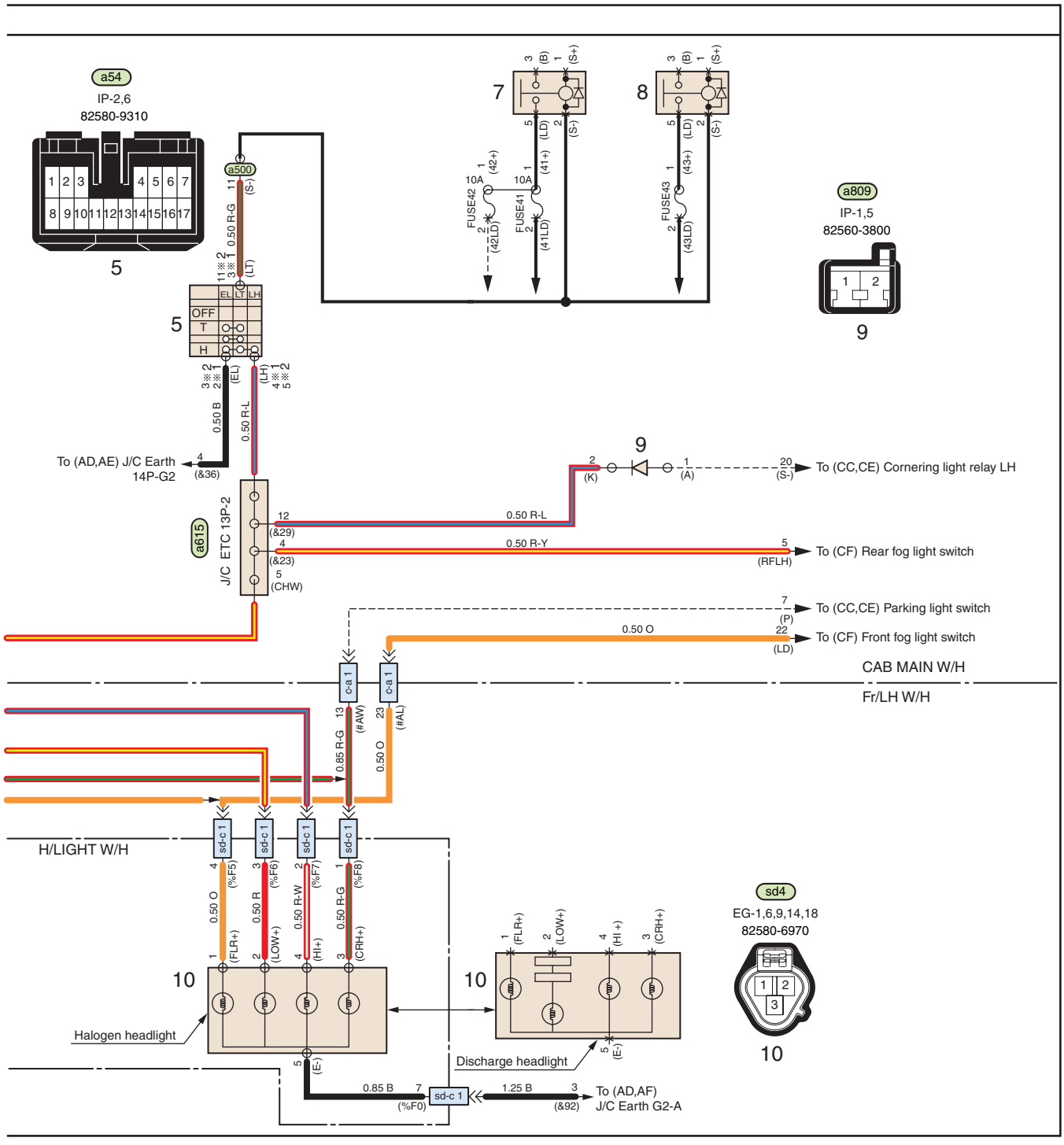

SHTS12Z160200042

https://truckmanualshub.com/

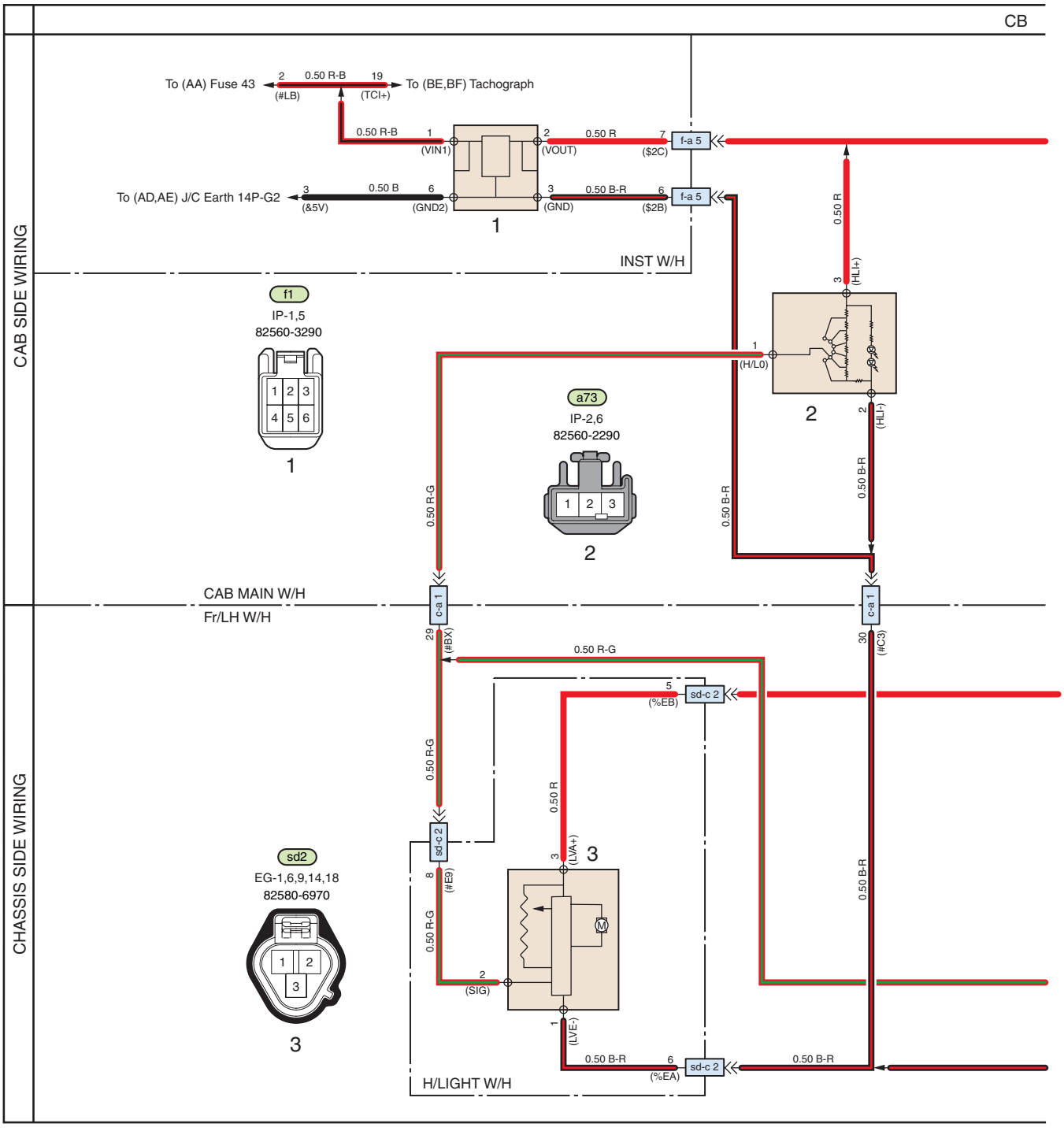

SHTS12Z160200043

CB. HEADLIGHT BEAM CONTROL CIRCUIT

1. DC/DC converter (Leveling)
2. Headlight leveling switch
3. Headlight leveling actuator LH
4. Headlight leveling actuator RH

https://truckmanualshub.com/

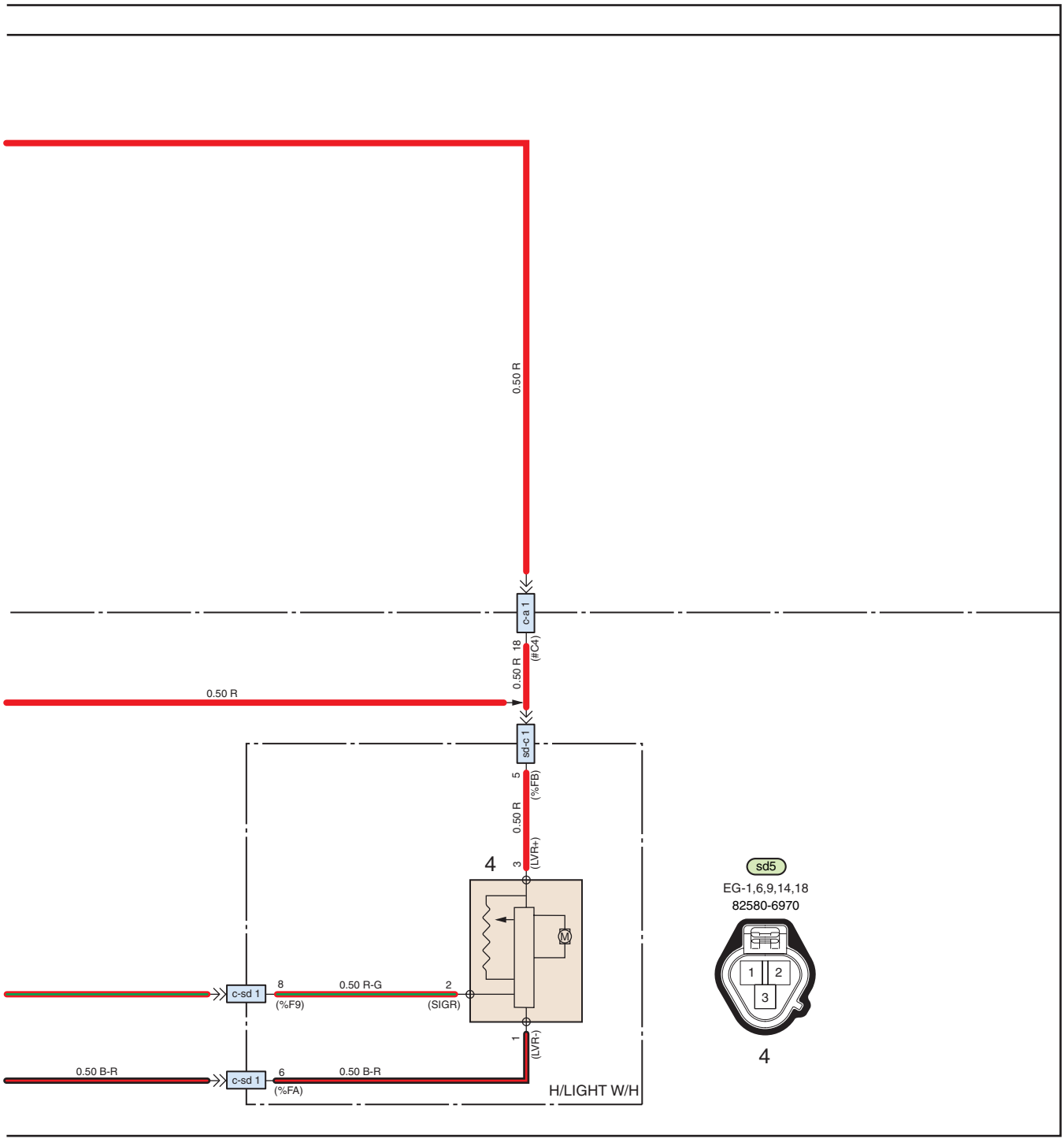

SHTS12Z160200044

https://truckmanualshub.com/

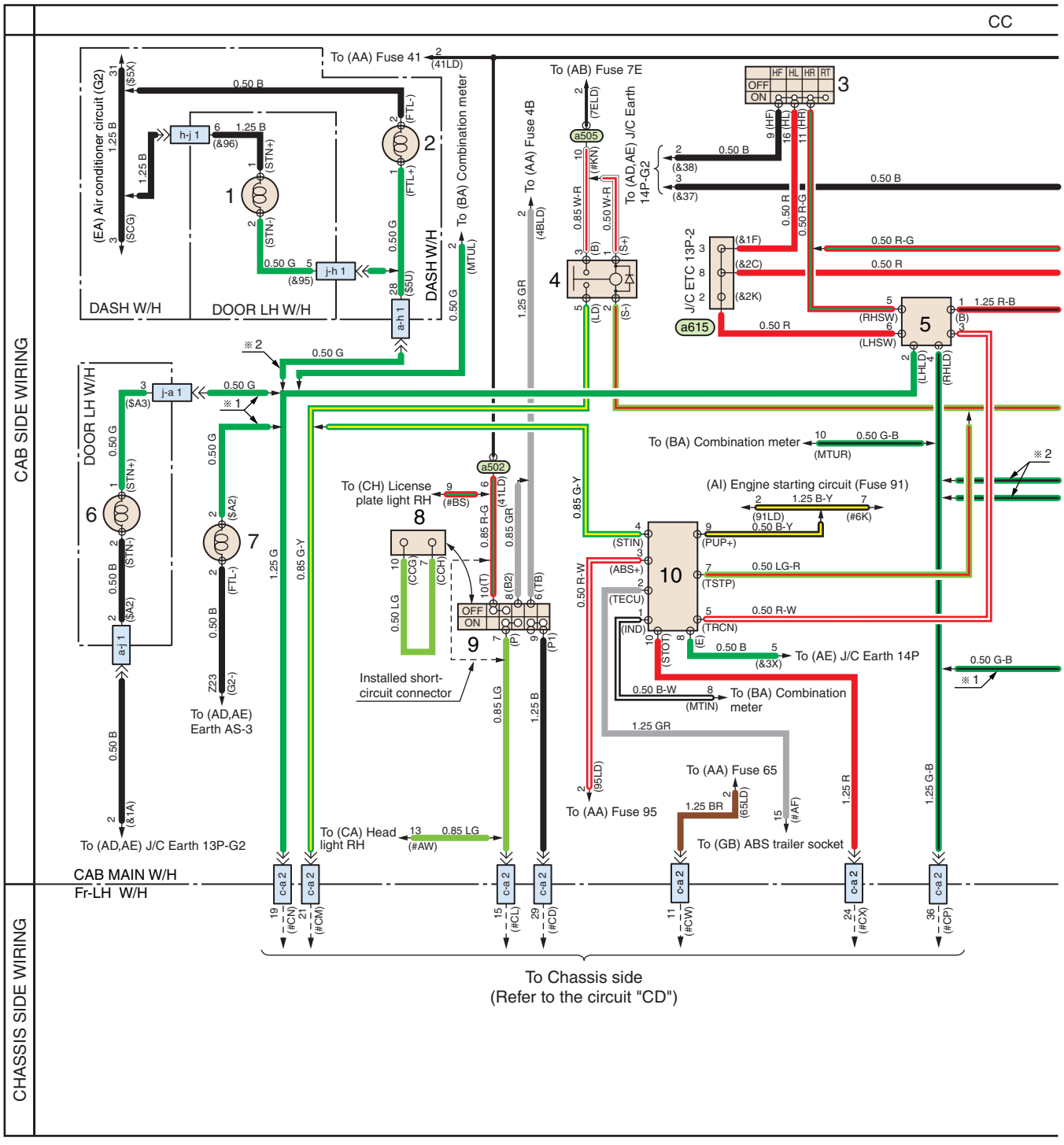

SHTS12Z160200045

CC. TURN, STOP AND TAIL LIGHT CIRCUIT (EXCEPT SEMI-TRACTOR) (CAB SIDE)

1. Front side turn signal light LH (For left-hand drive model)
2. Front turn signal light LH (For left-hand drive model)
3. Wiper and retarder switch
4. Stop light relay
5. Turn signal flasher
6. Front side turn signal light LH (For right-hand drive model)
7. Front turn signal light LH (For right-hand drive model)
8. Parking light short circuit connector
9. Parking light switch
10. Trailer pick-up controller
11. Light and turn switch
12. Cornering light relay RH
13. Cornering light relay LH
14. Hong Kong diode (For Hong Kong model)

https://truckmanualshub.com/

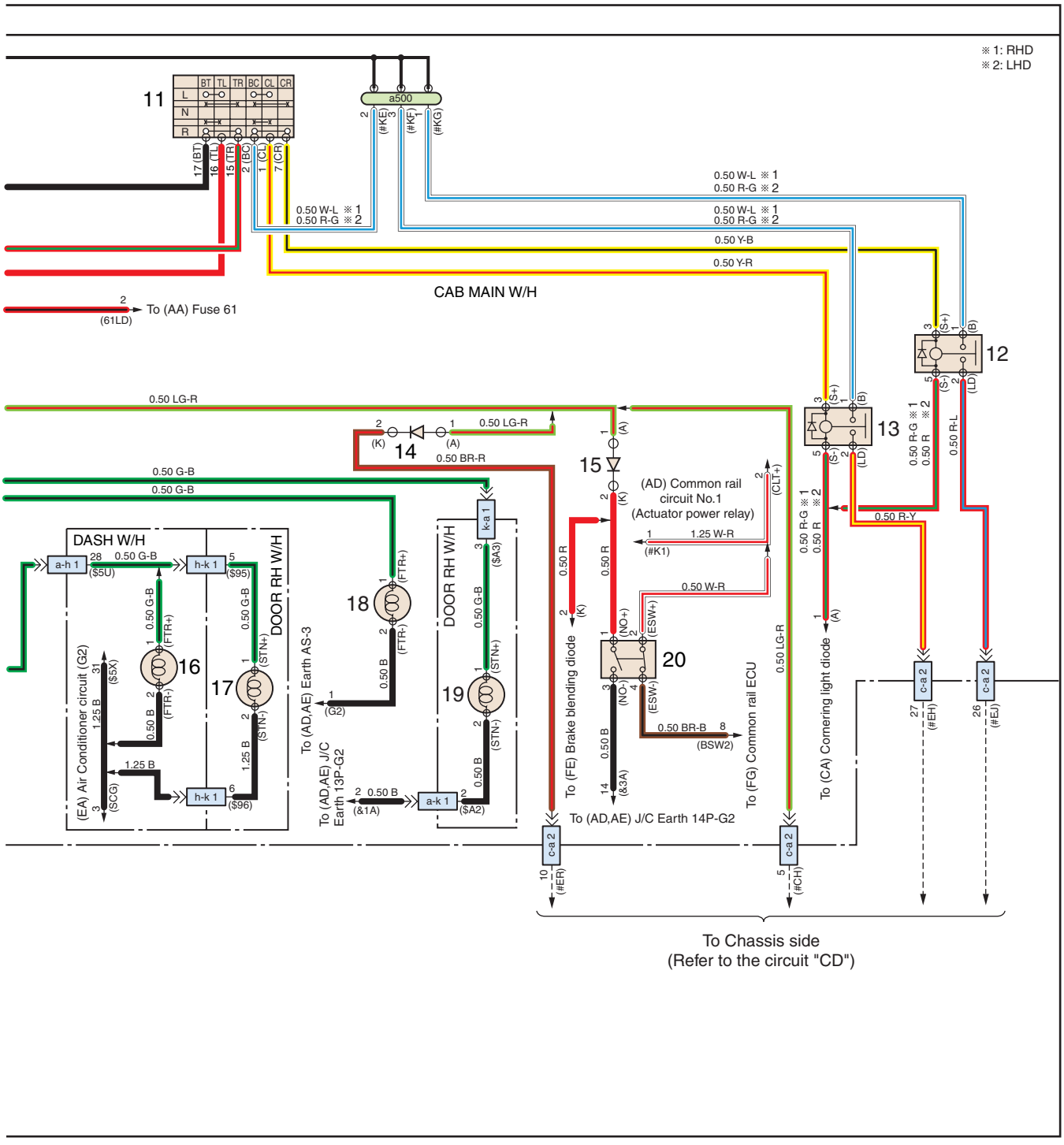

SHTS12Z160200046

15. Brake blending stop diode
16. Front turn signal light RH
(For right-hand drive model)
17. Front side turn signal light RH
(For right-hand drive model)
18. Front turn signal light RH
(For left-hand drive model)
19. Front side turn signal light RH
(For left-hand drive model)
20. Stop light switch

https://truckmanualshub.com/

CONNECTORS FOR CIRCUIT "CC"

j2
CA-4
82580-7580

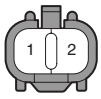

1

h14
CA-4
82580-7660

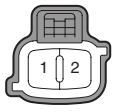

2

a53
IP-2,6
82580-9320

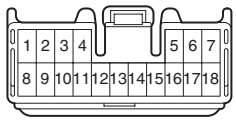

3

a120
IP-1,5
82580-6060

5

j15
CA-1
82580-7660

6

a1
CA-1
82580-7660

7

a123
IP-2,6
82560-2890

8

a122
IP-2,6
82560-2900

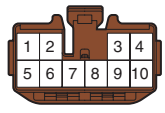

9

SHTS12Z160200047

https://truckmanualshub.com/

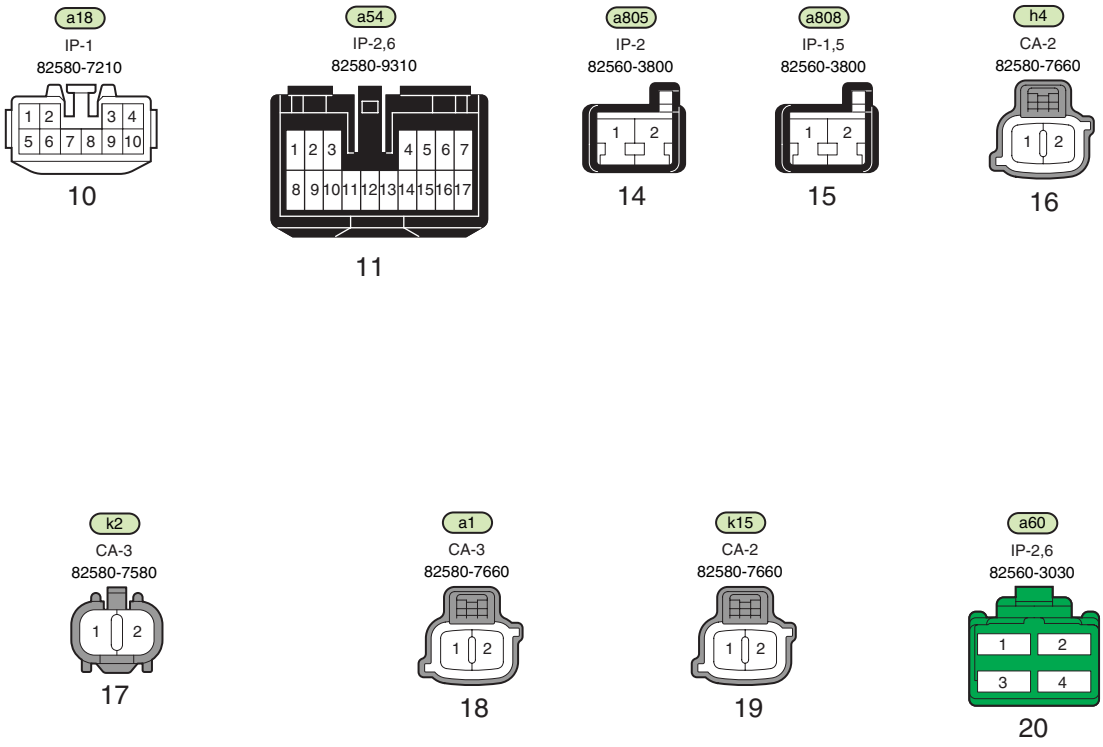

SHTS12Z160200048

https://truckmanualshub.com/

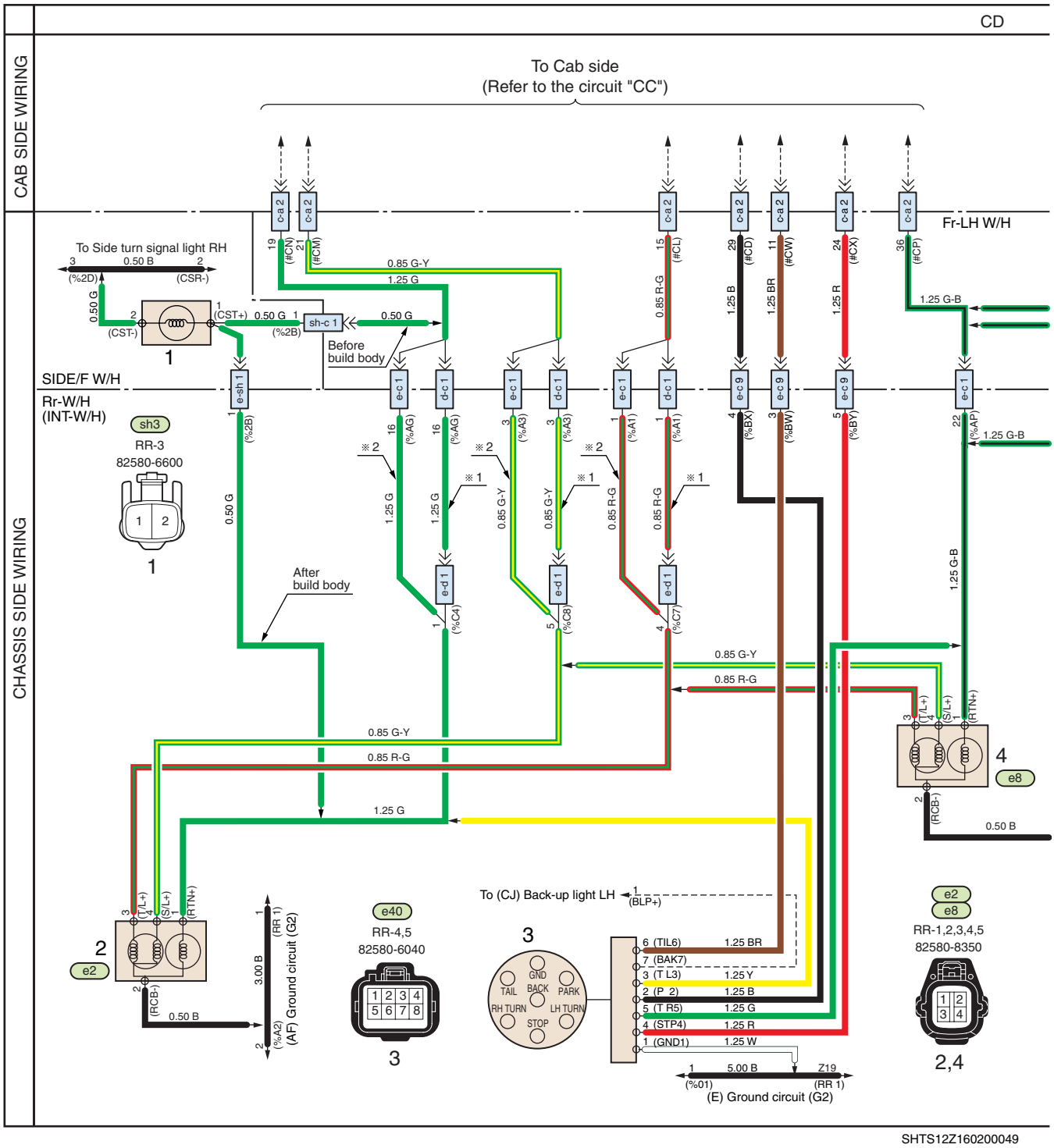

SHTS12Z160200049

CD. TURN, STOP AND TAIL LIGHT CIRCUIT (EXCEPT SEMI-TRACTOR) (CHASSIS SIDE)

1. Side turn signal light LH (For Taiwan dump truck)
2. Rear combination light LH
3. Trailer socket
4. Rear combination light LH
5. Cornering light relay LH
6. Cornering light relay RH
7. Side turn signal light RH (For Taiwan dump truck)
8. Left turn buzzer (For Taiwan dump truck)
9. Right turn buzzer (For Taiwan dump truck)
10. Trailer stop light switch

https://truckmanualshub.com/

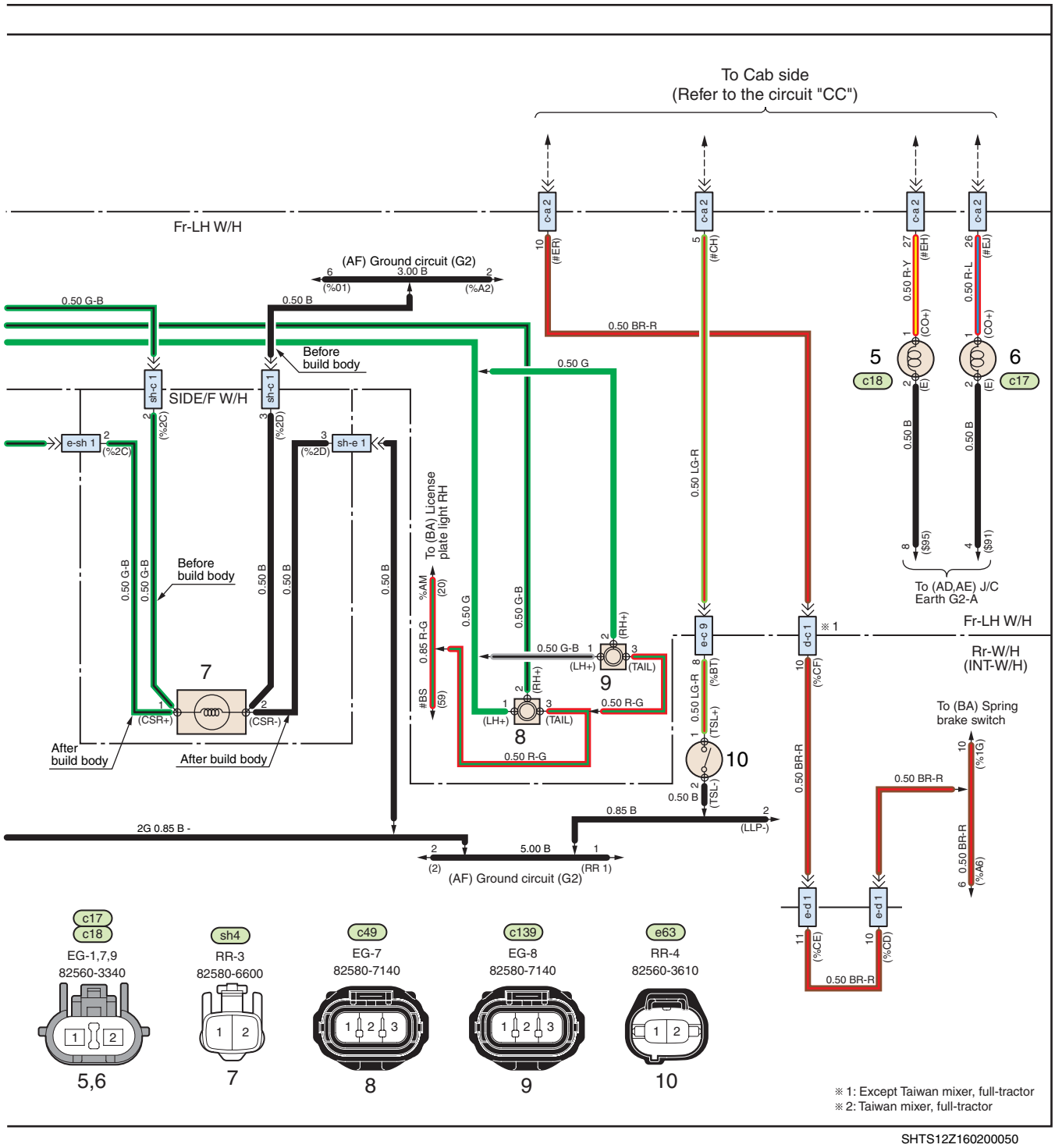

SHTS12Z160200050

https://truckmanualshub.com/

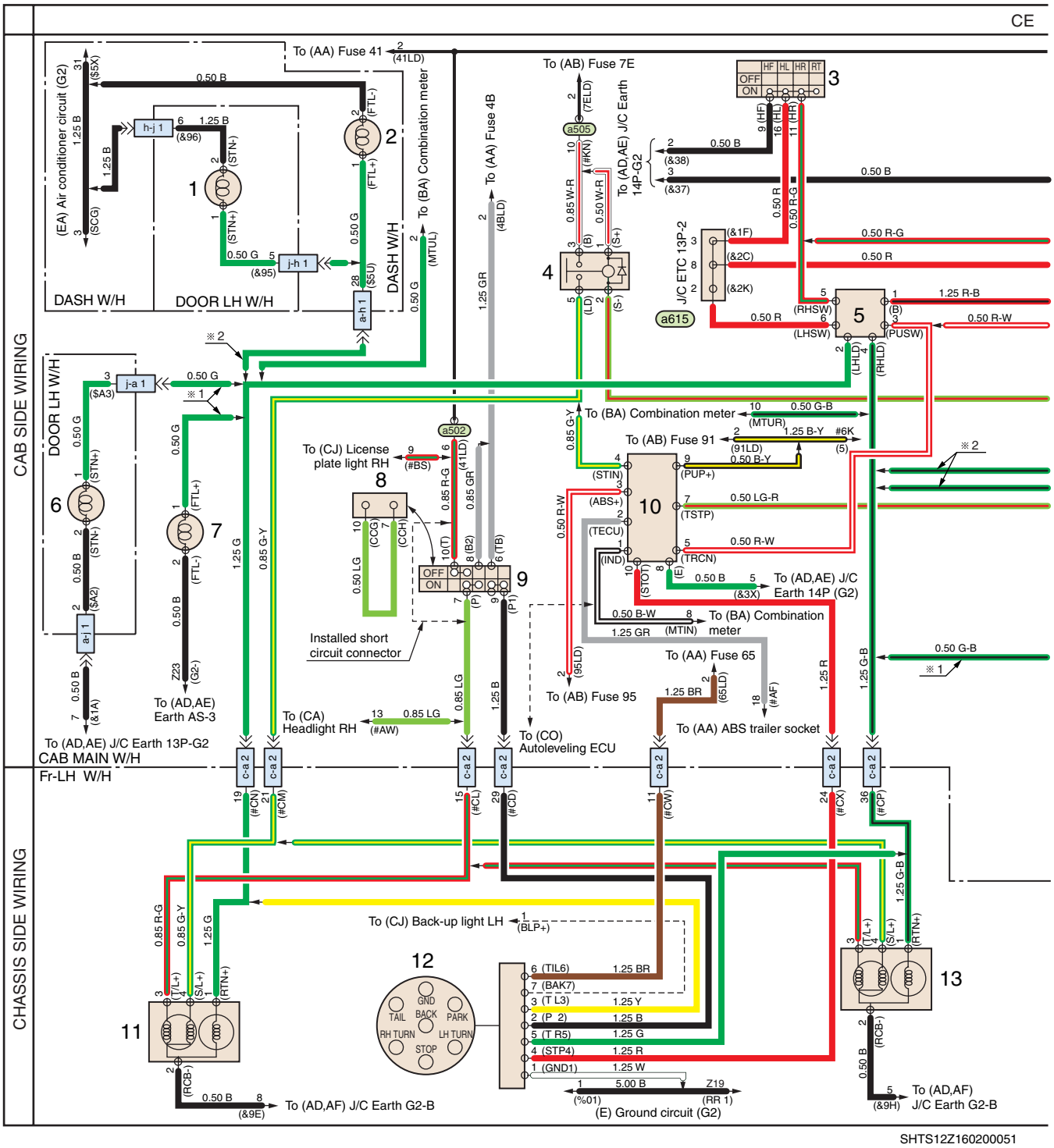

SHTS12Z160200051

CE. TURN, STOP AND TAIL LIGHT CIRCUIT (FOR SEMI-TRACTOR)

1. Front side turn signal light LH (For left-hand drive model)
2. Front turn signal light LH (For left-hand drive model)
3. Wiper and retarder switch
4. Stop light relay
5. Turn signal flasher
6. Front side turn signal light LH (For right-hand drive model)
7. Front turn signal light LH (For right-hand drive model)
8. Parking light switch short circuit connector
9. Parking light switch
10. Pick-up controller
11. Rear combination light LH
12. Trailer socket
13. Rear combination light RH
14. Light and turn switch
15. Cornering light relay RH
16. Cornering light relay LH
17. Hong Kong diode (For Hong Kong model)
18. Brake blending stop diode

https://truckmanualshub.com/

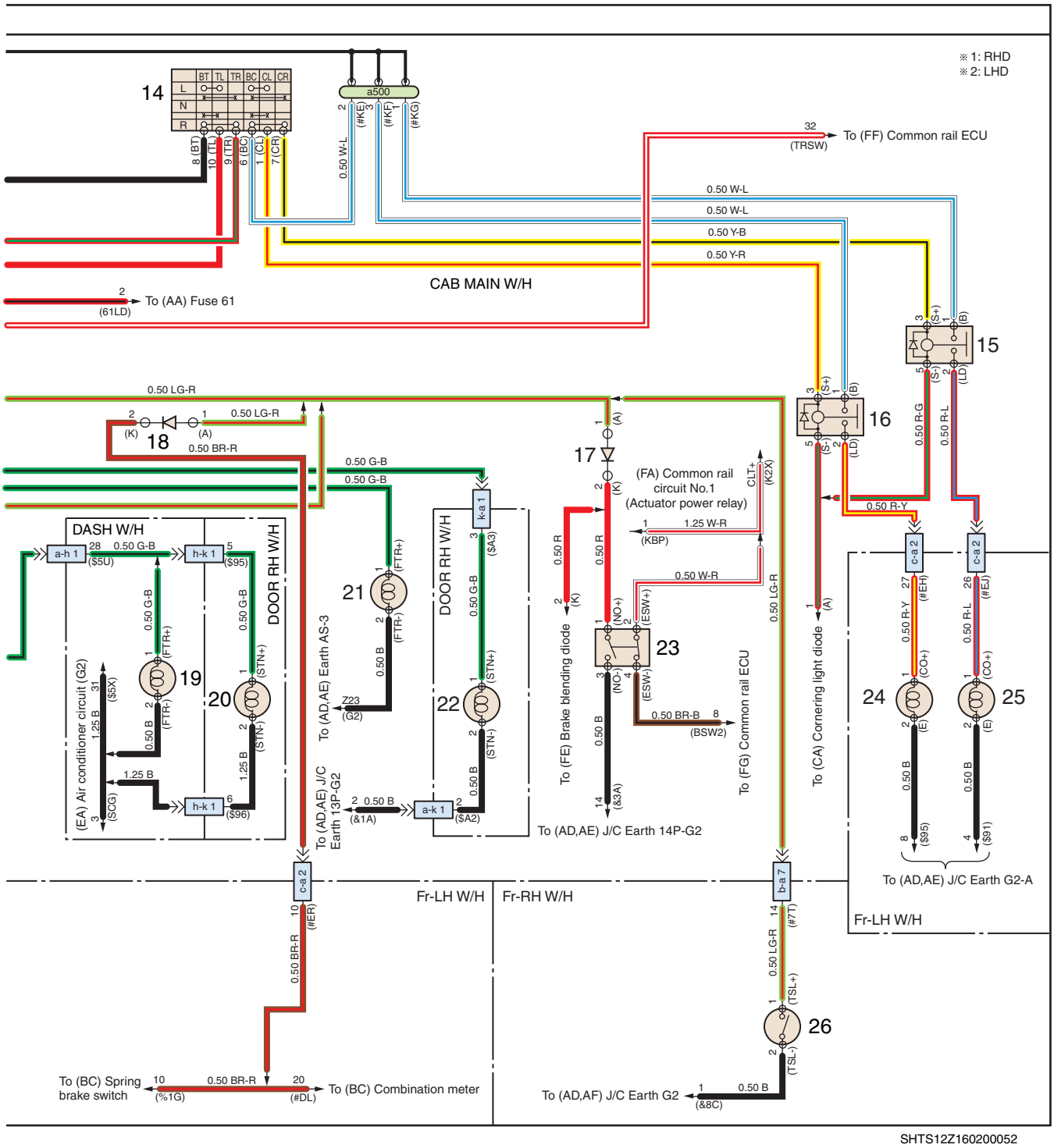

SHTS12Z160200052

19. Front turn signal light RH (For right-hand drive model)
20. Front side turn signal light RH (For right-hand drive model)
21. Front side turn signal light RH (For right-hand drive model)
22. Front side turn signal light RH (For left-hand drive model)
23. Stop light switch
24. Cornering light LH
25. Cornering light RH
26. Trailer stop light switch

https://truckmanualshub.com/

CONNECTORS FOR CIRCUIT "CE"

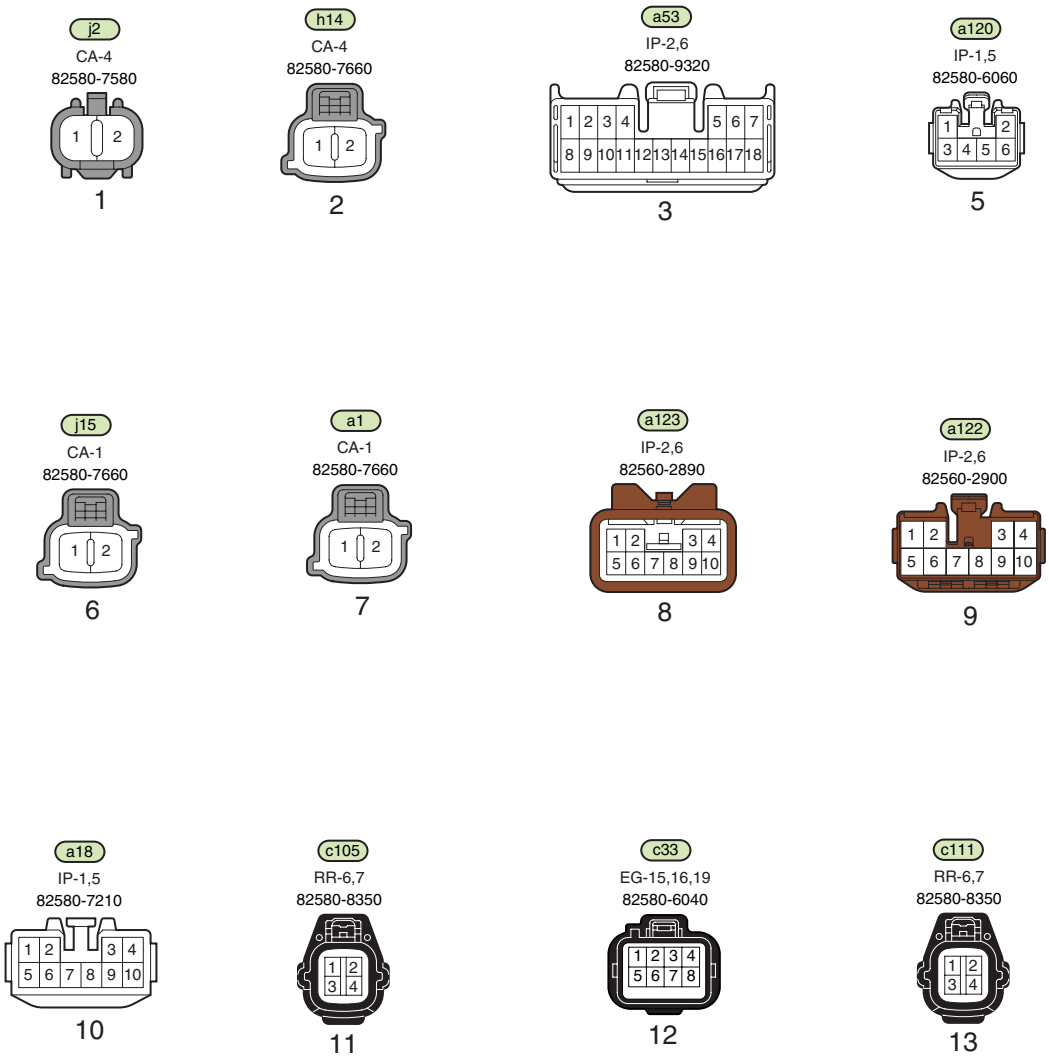

SHTS12Z160200053

https://truckmanualshub.com/

a54
IP-2,6
82580-9310

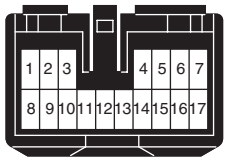

14

a805
IP-2
82560-3800

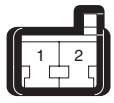

17

a808
IP-1,5
82560-3800

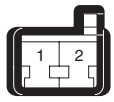

18

h4
CA-2
82580-7660

19

k2
CA-3
82580-7580

20

a1
CA-3
82580-7660

21

k15
CA-2
82580-7660

22

a60
IP-2,6
82560-3030

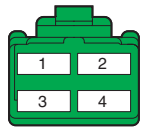

23

c18
EG-14,18
82560-3340

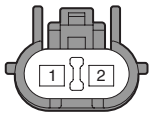

24

c17
EG-14,18
82560-3340

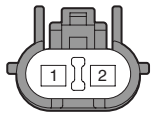

25

b90
EG-17,20
82560-3610

26

SHTS12Z160200054

https://truckmanualshub.com/

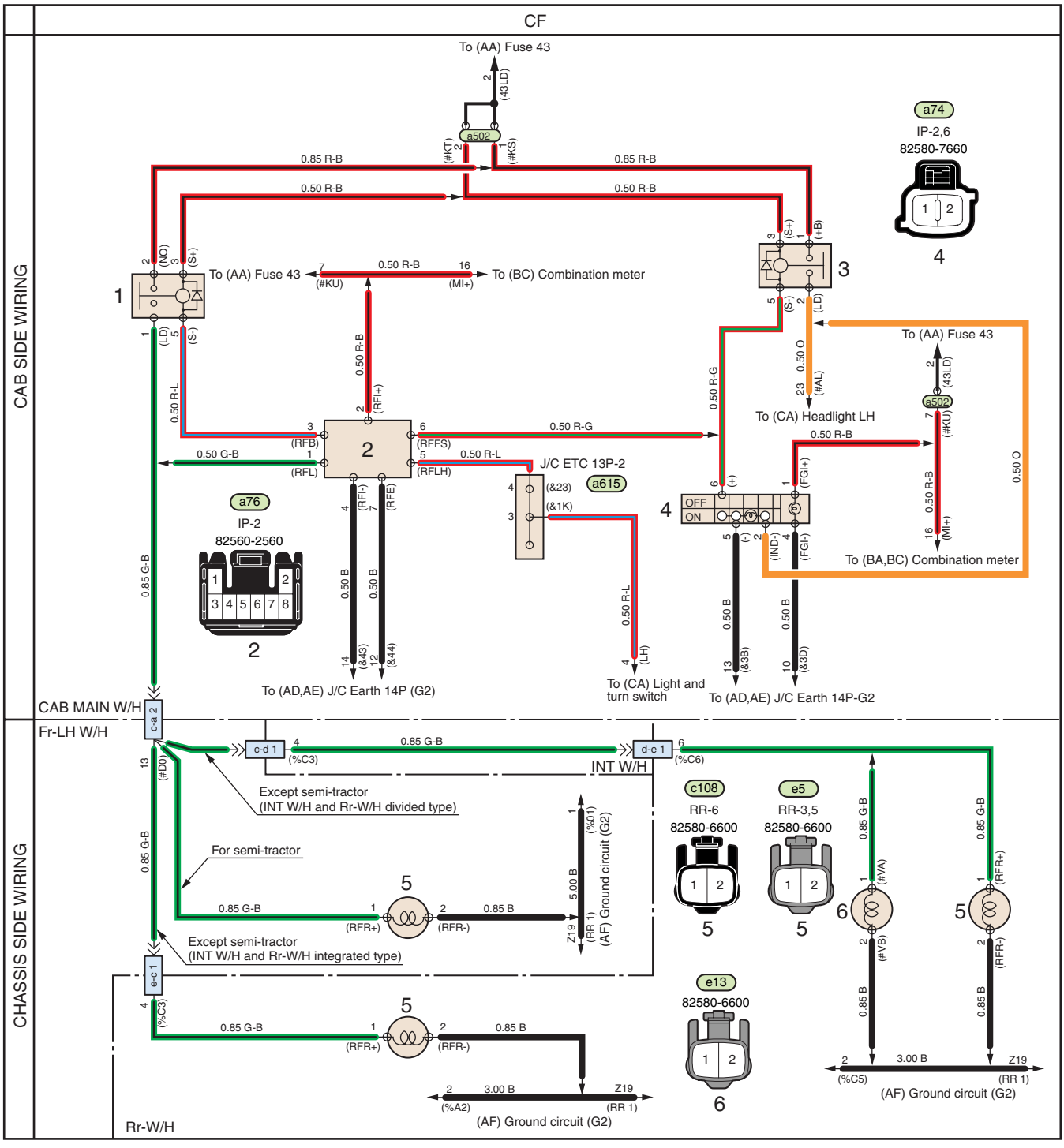

SHTS12Z160200055

CF. FOG LIGHT CIRCUIT

1. Rear fog light relay
2. Rear fog light switch
3. Front fog light relay
4. Front fog light switch
5. Rear fog light
6. Rear fog light LH (In case of with 2 pieces)

https://truckmanualshub.com/

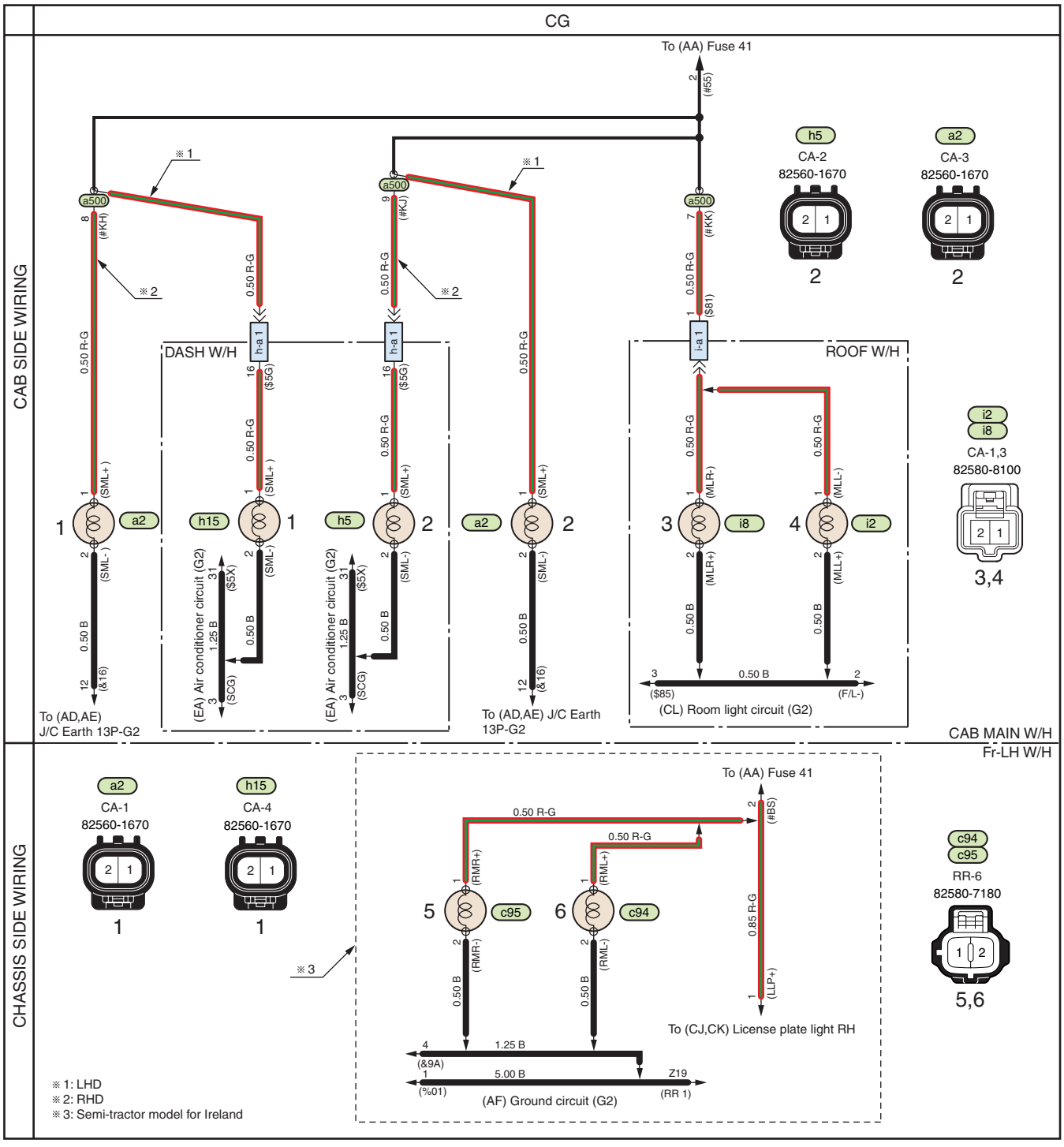

SHTS12Z160200056

CG. MARKER LIGHT CIRCUIT

1. Front side marker light LH
2. Front side marker light RH
3. Roof marker light RH
4. Roof marker light LH
5. Rear endout marker light LH (Semi-tractor for Ireland)
6. Rear endout marker light RH (Semi-tractor for Ireland)

https://truckmanualshub.com/

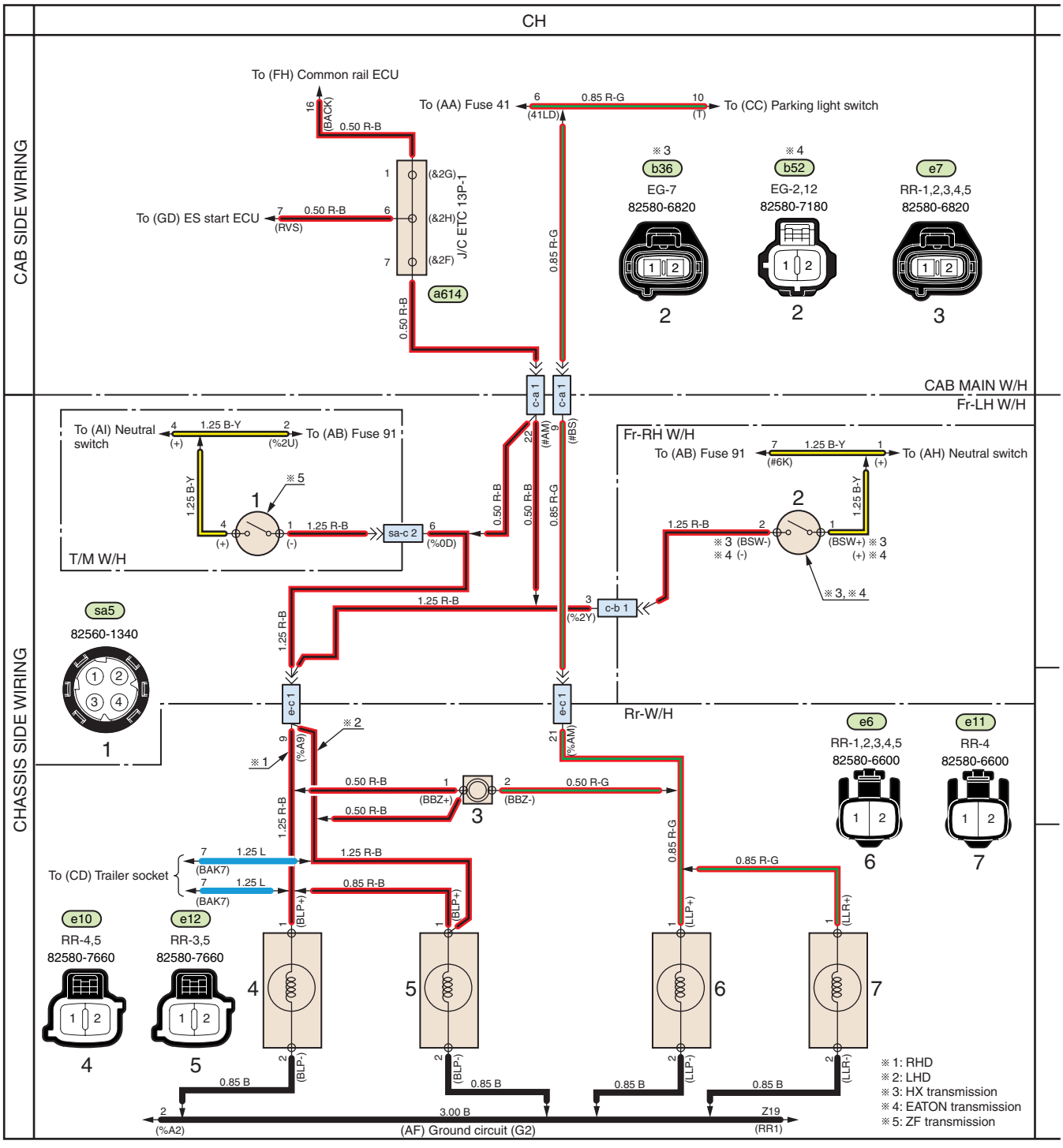

SHTS12Z160200057

CH. BACK-UP LIGHT CIRCUIT (EXCEPT SEMI-TRACTOR) (INT-W/H AND Rr-W/H INTEGRATED TYPE)

1. Back-up light switch (Models with ZF transmission)
2. Back-up light switch (Models with HX and EATON transmission)
3. Back buzzer
4. Back-up light RH
5. Back-up light LH
6. License plate light RH
7. License plate light LH

https://truckmanualshub.com/

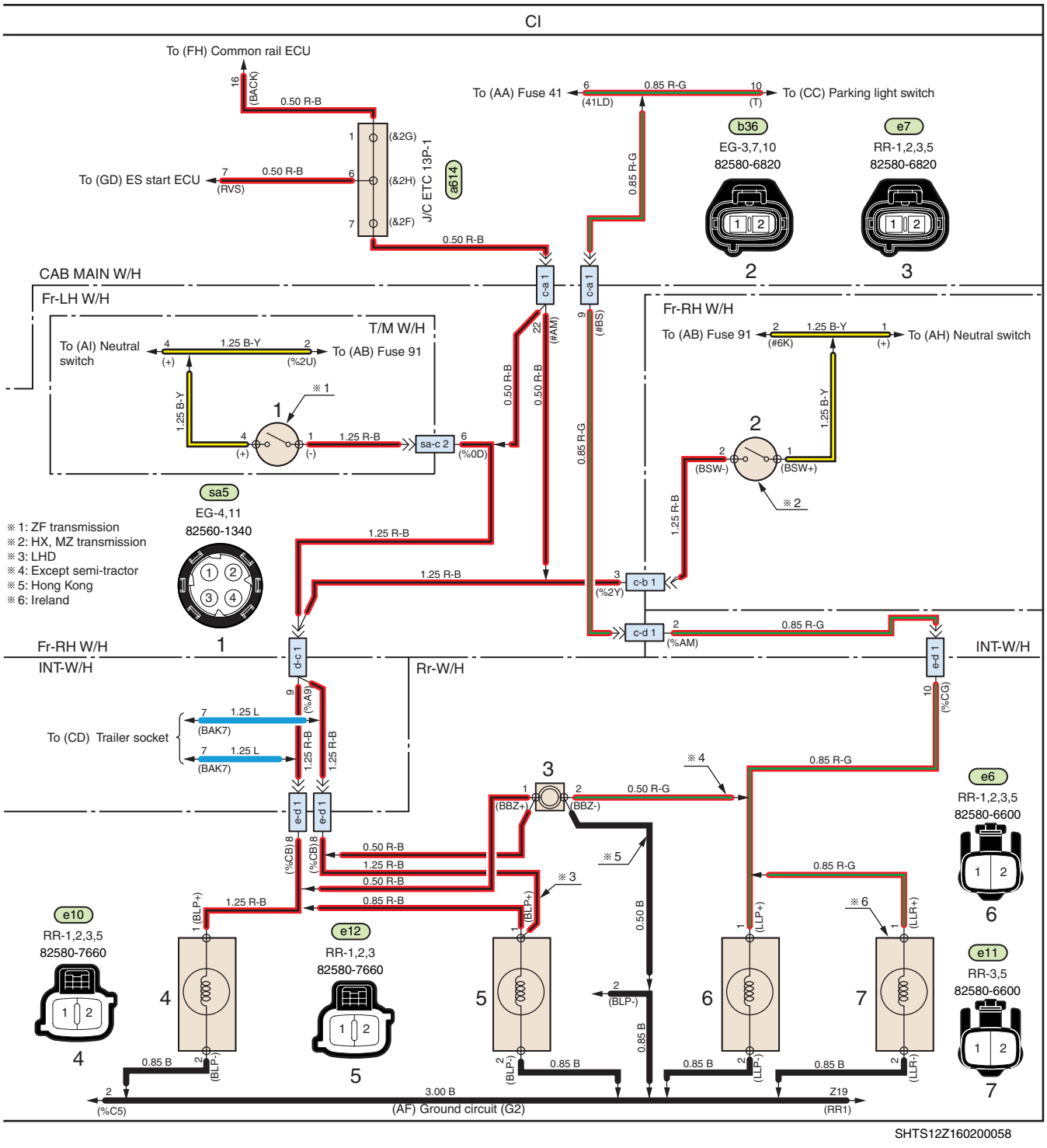

CI. BACK-UP LIGHT CIRCUIT (EXCEPT SEMI-TRACTOR) (INT-W/H AND Rr-W/H DIVIDED TYPE)

1. Back-up light switch (Models with ZF transmission)
2. Back-up light switch (Models with HX and MZ transmission)
3. Back buzzer
4. Back-up light RH (For right-hand drive model)
5. Back-up light LH (For left-hand drive model)
6. License plate light RH
7. License plate light LH (For Ireland model)

https://truckmanualshub.com/

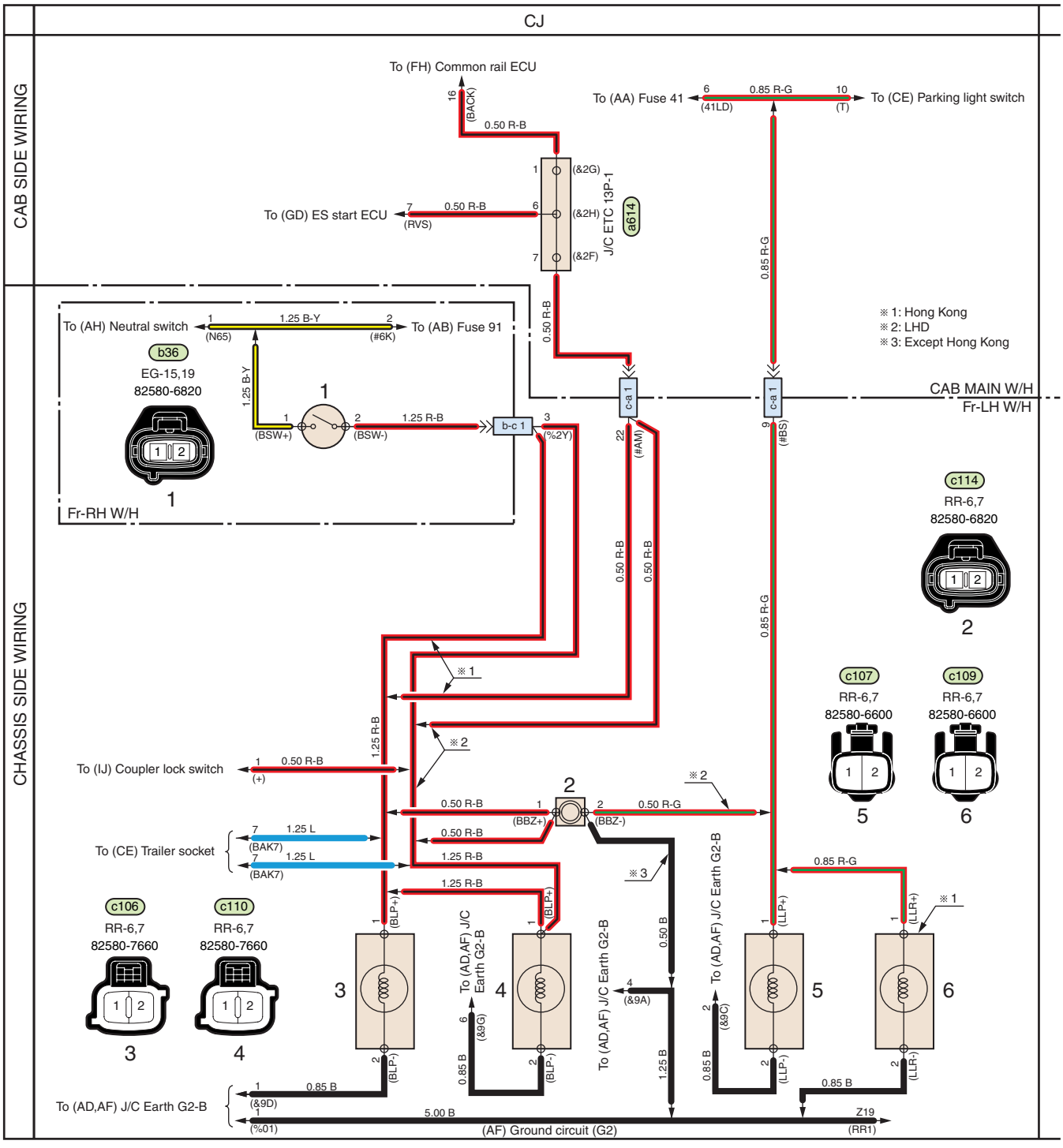

SHTS12Z160200059

CJ. BACK-UP LIGHT CIRCUIT (FOR SEMI-TRACTOR) (WITH HX, MZ TRANSMISSION)

1. Back-up light switch
2. Back buzzer
3. Back-up light RH (For right-hand drive model)
4. Back-up light LH (For left-hand drive model)
5. License plate light RH
6. License plate light LH

https://truckmanualshub.com/

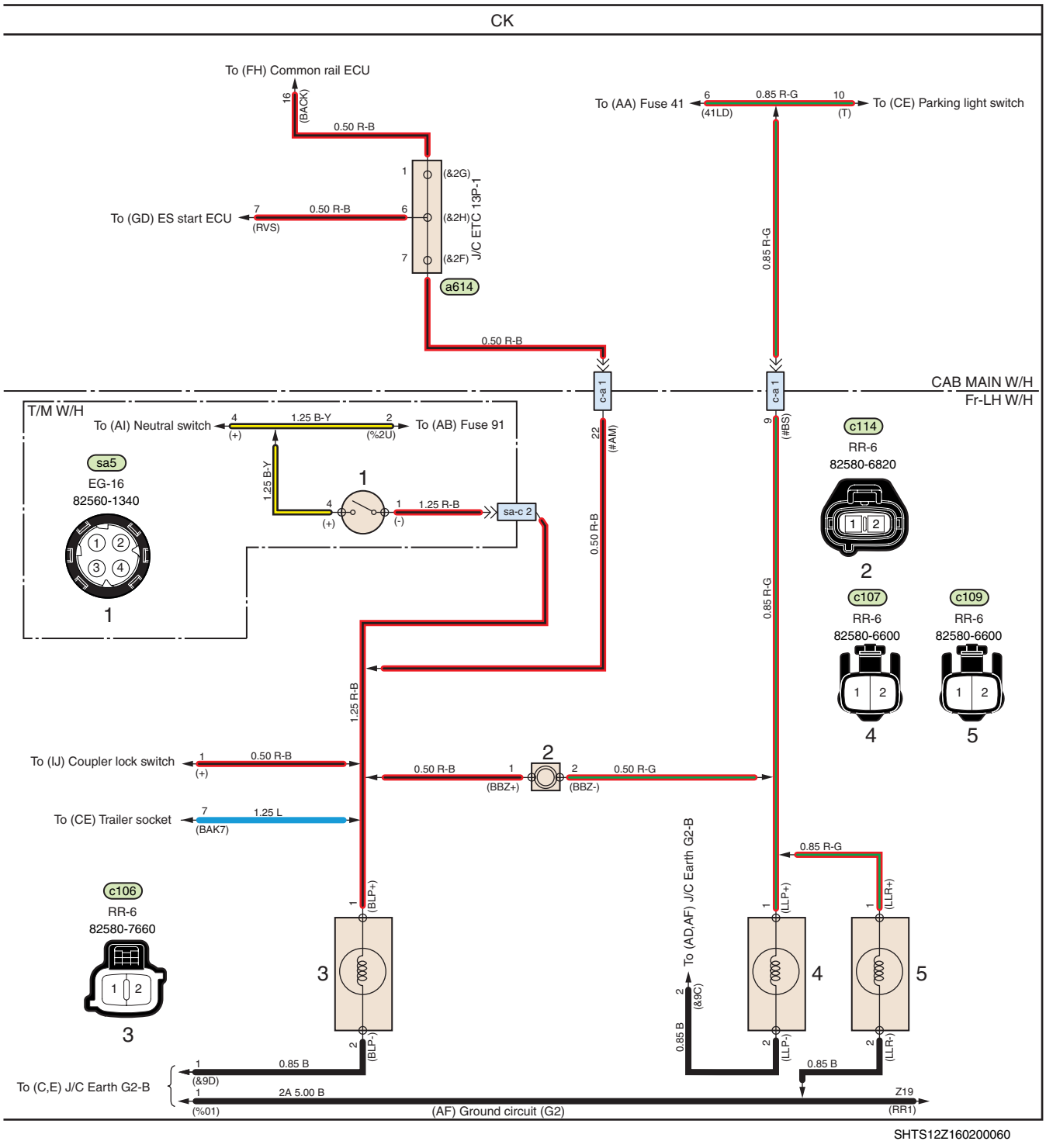

SHTS12Z160200060

CK. BACK-UP LIGHT CIRCUIT (FOR SEMI-TRACTOR) (WITH ZF TRANSMISSION)

1. Back-up light switch
2. Back buzzer
3. Back-up light RH
4. License plate light RH
5. License plate light LH

https://truckmanualshub.com/

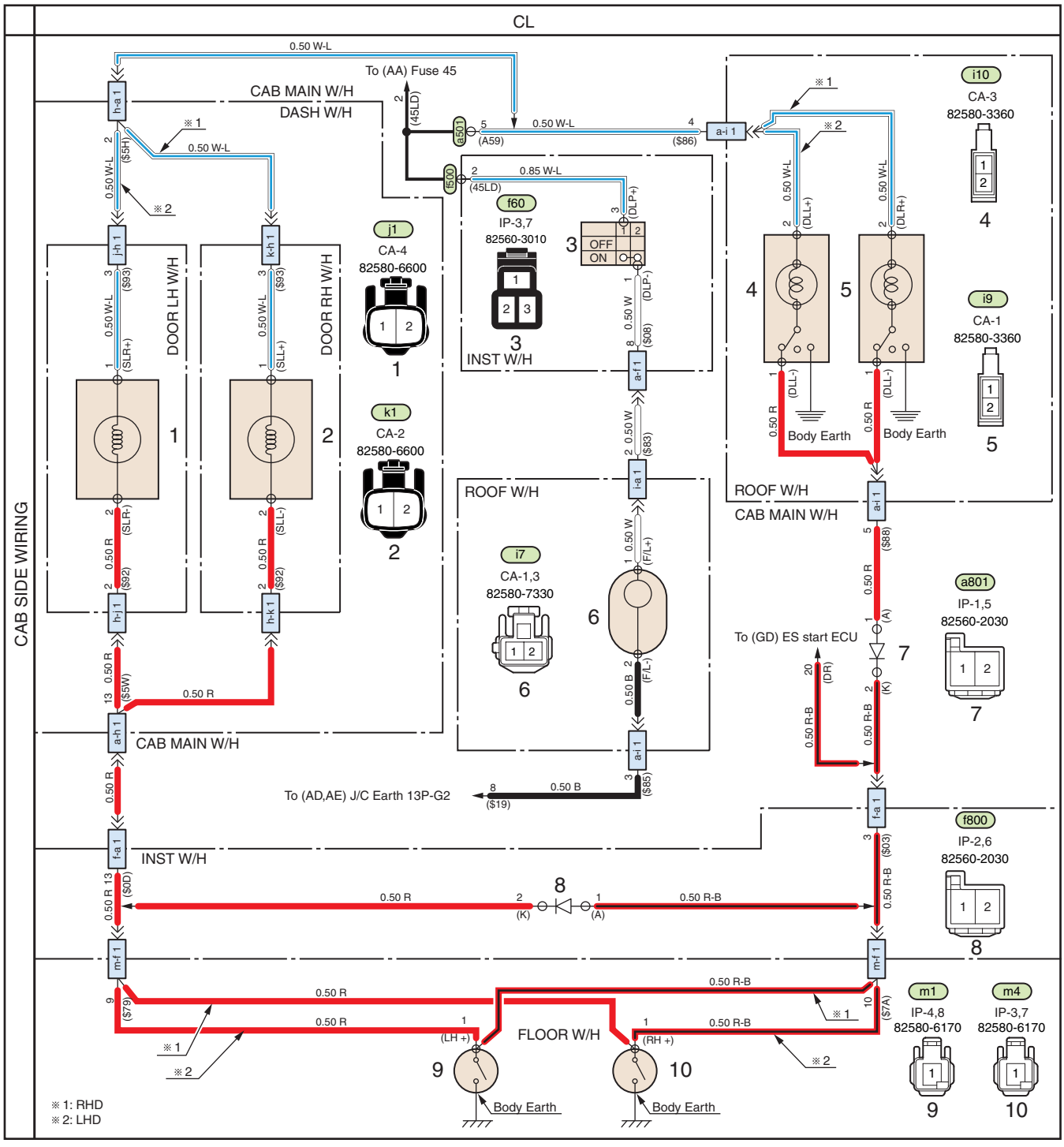

SHTS12Z160200061

CL. ROOM LIGHT CIRCUIT

1. Step light LH (Left-hand drive)
2. Step light RH (Right-hand drive)
3. Fluorescent light switch
4. Dome light LH (Left-hand drive)
5. Dome light RH (Right-hand drive)
6. Fluorescent light
7. Room light diode No.2
8. Room light diode No.1
9. Courtesy switch LH
10. Courtesy switch RH

https://truckmanualshub.com/

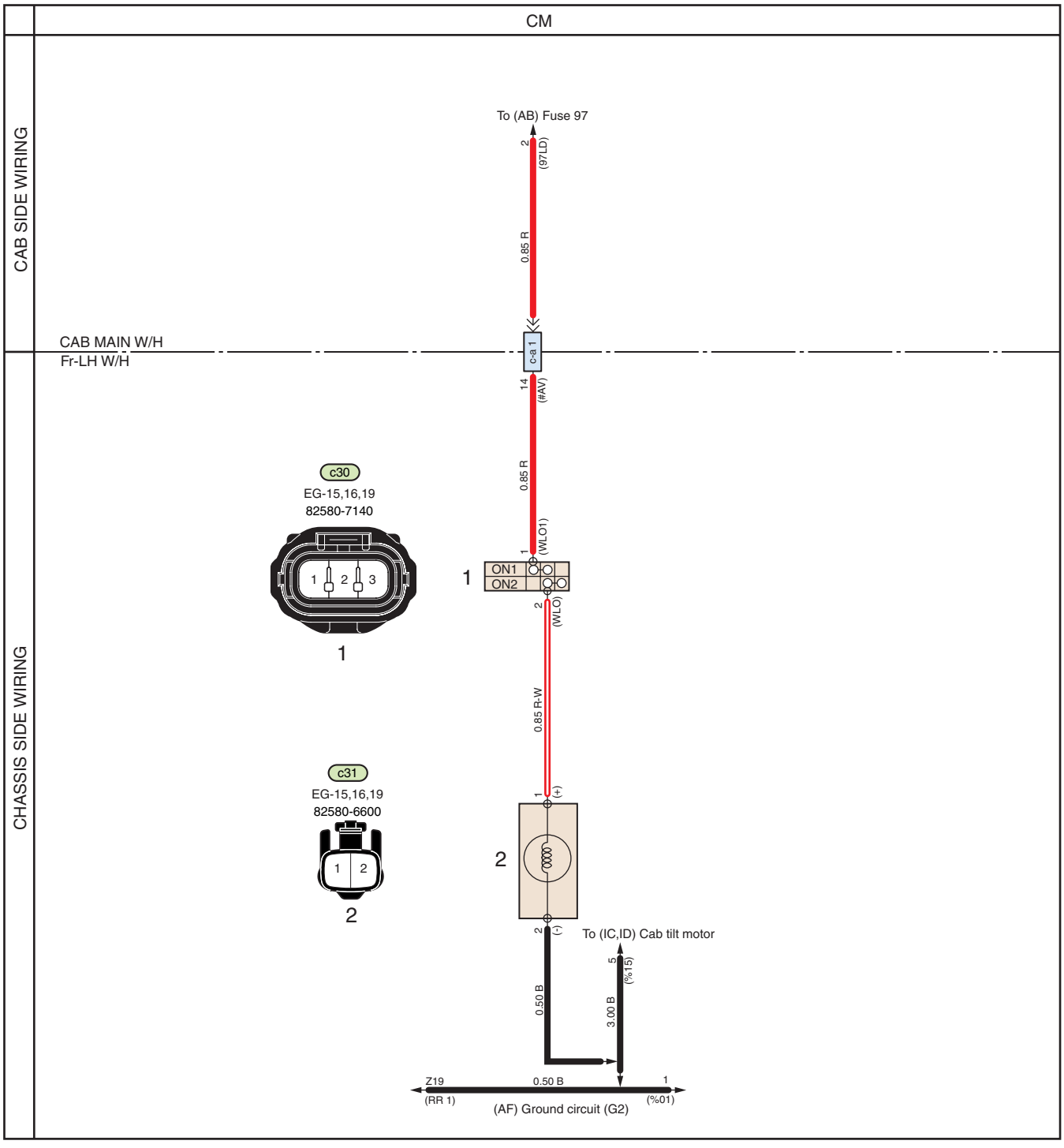

SHTS12Z160200062

CM. WORKING LIGHT CIRCUIT

1. Spot light switch
2. Spot light

https://truckmanualshub.com/

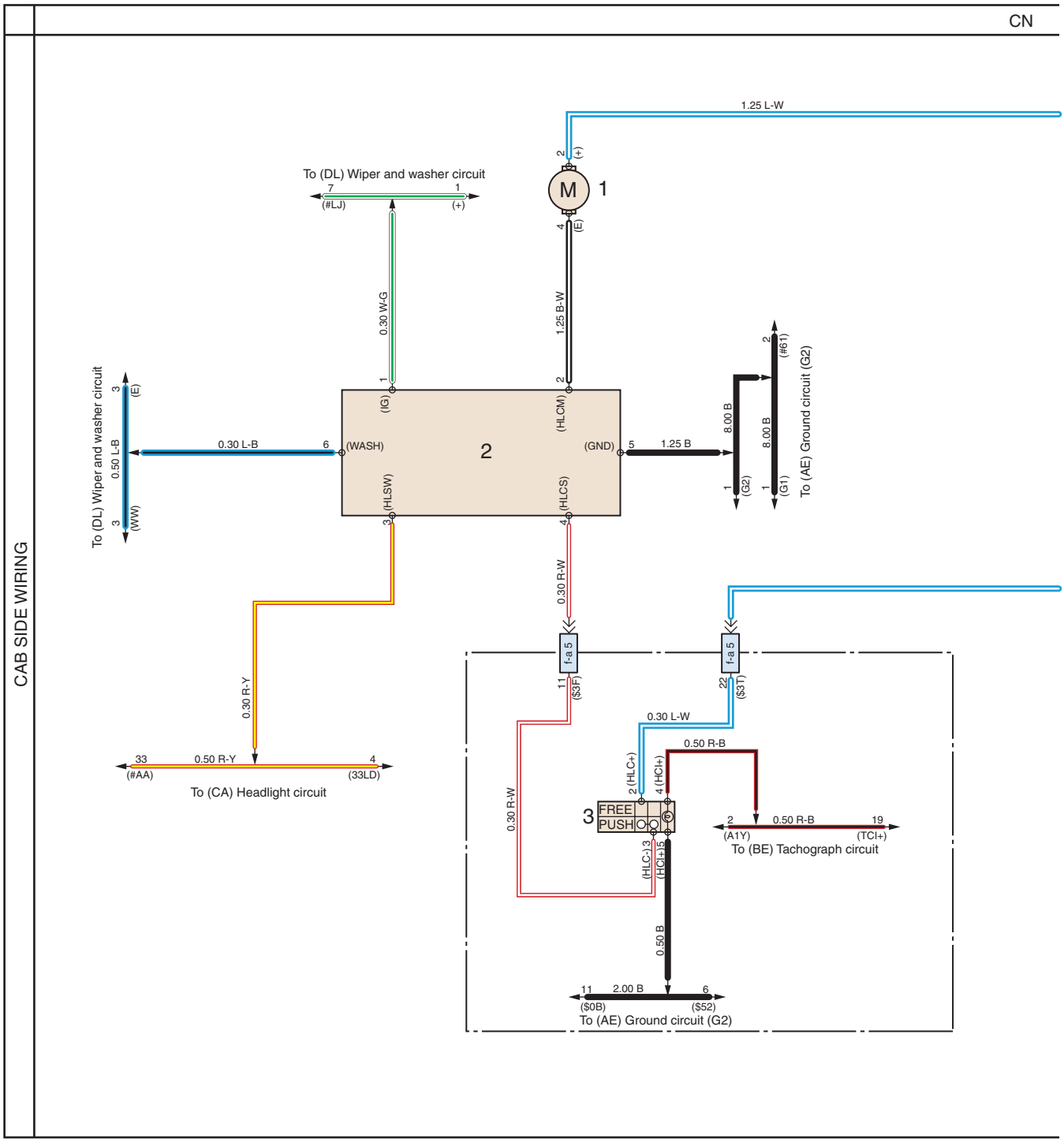

SHTS12Z160200063

CN. HEADLIGHT WASHER CIRCUIT

1. Washer pump motor
2. Headlight washer relay
3. Wiper and retarder switch

https://truckmanualshub.com/

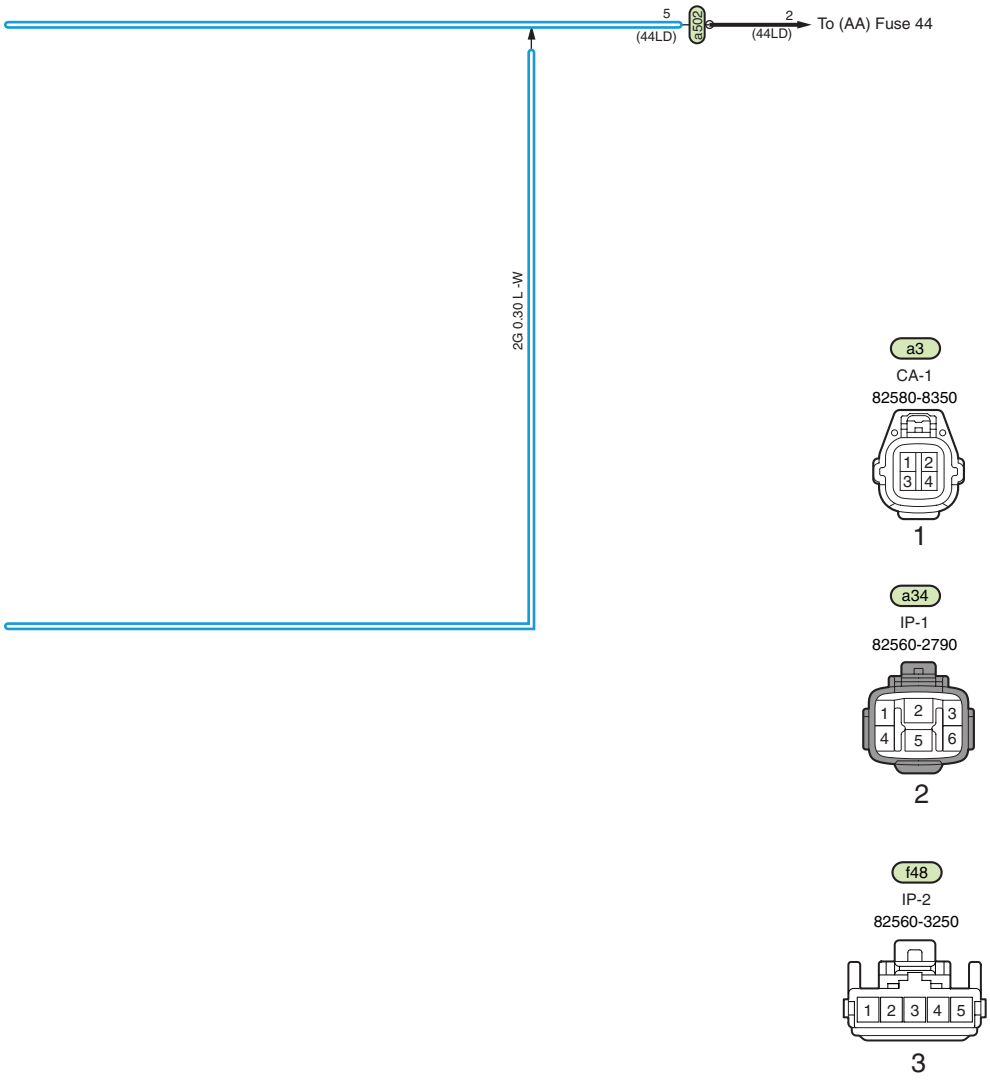

SHTS12Z160200064

https://truckmanualshub.com/

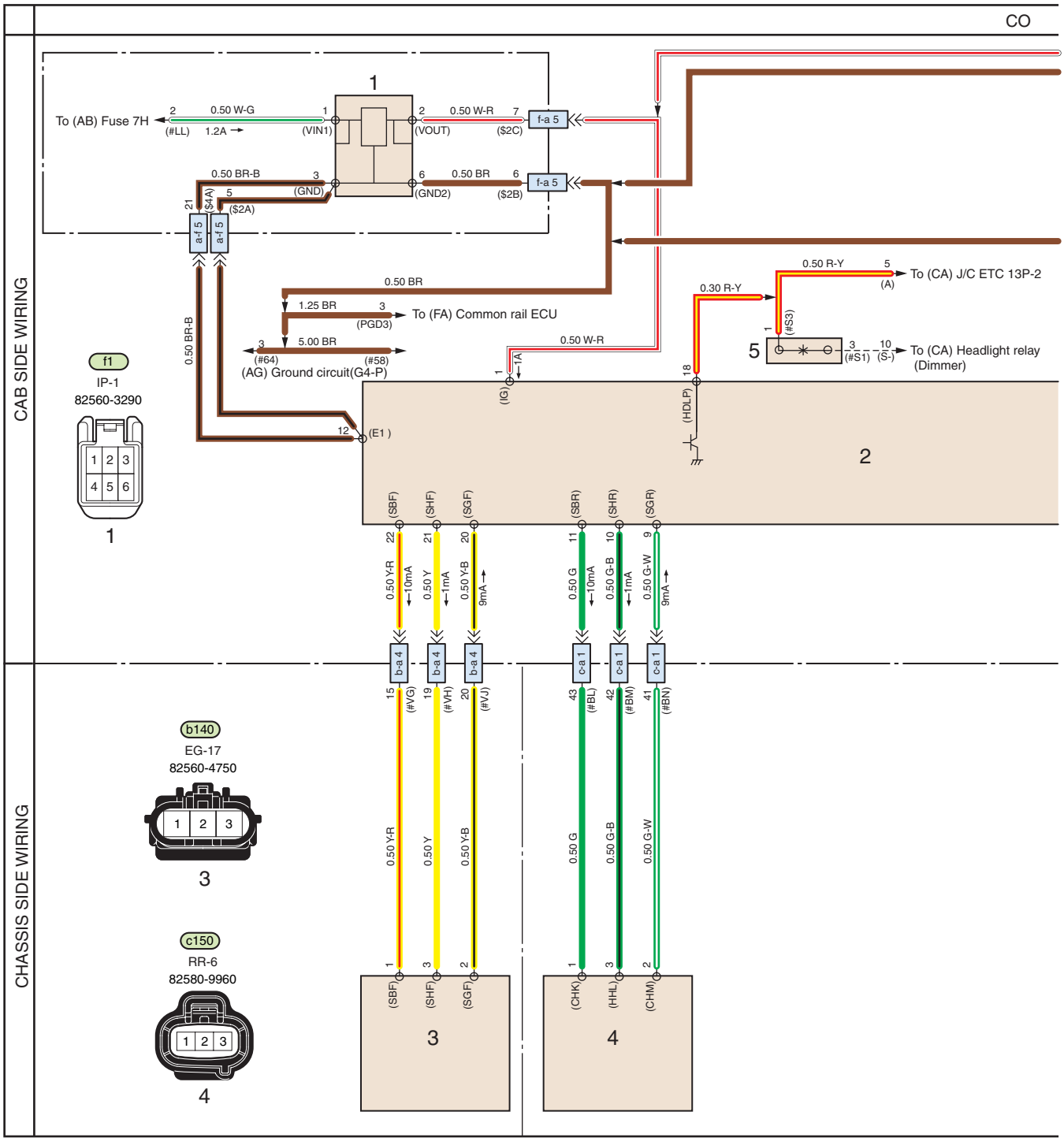

SHTS12Z160200065

CO. HEADLIGHT AUTOLEVELING CIRCUIT

1. DC/DC converter (Leveling)
2. Autoleveling ECU
3. Vehicle height sensor (Front)
4. Vehicle height sensor (Rear)
5. Headlight short circuit connector
6. Interface ECU
7. Headlight leveling actuator LH
8. Headlight leveling actuator RH

https://truckmanualshub.com/

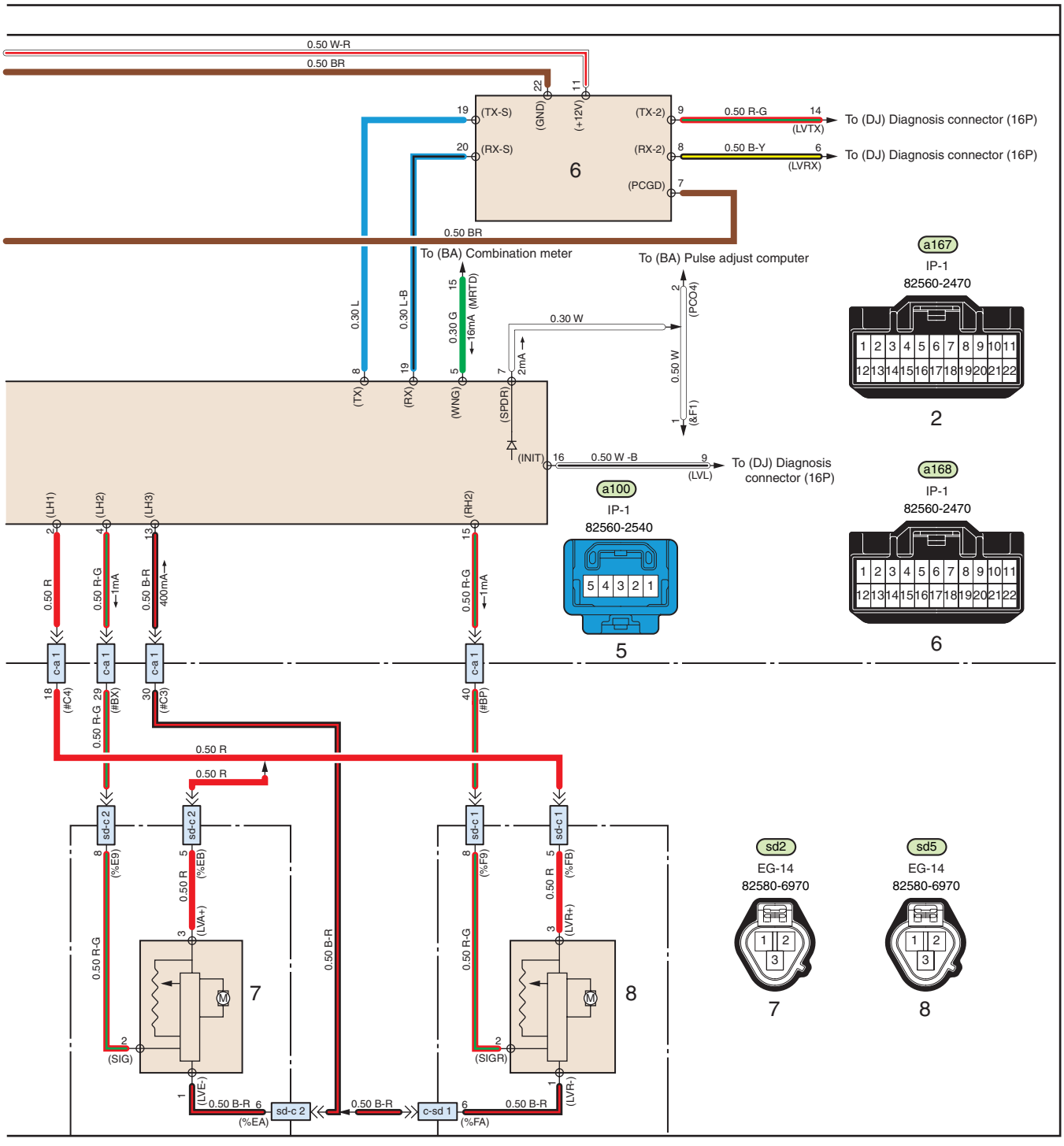

SHTS12Z160200066

https://truckmanualshub.com/

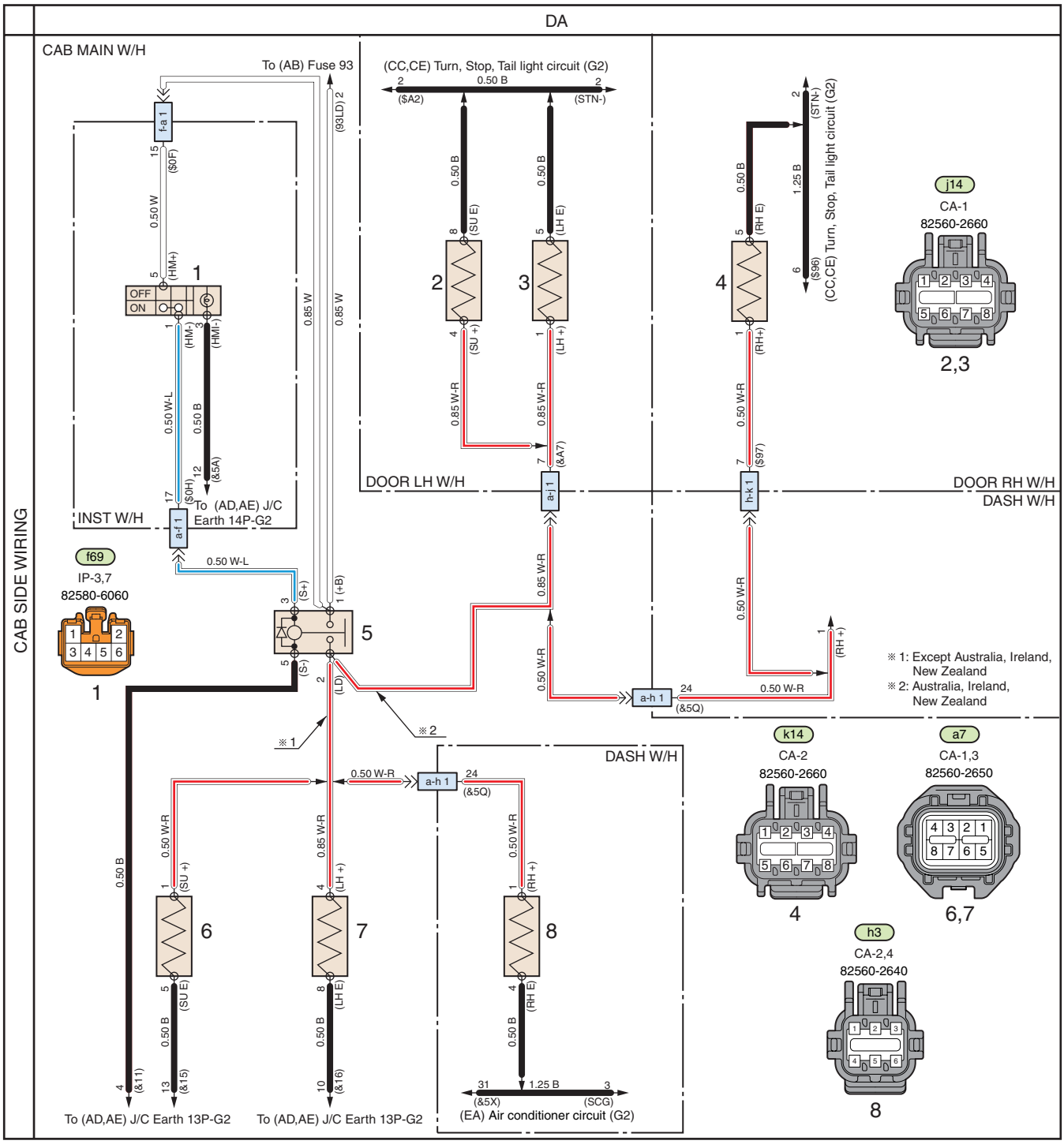

SHTS12Z160200067

DA. MIRROR HEATER CIRCUIT

1. Mirror heater switch
2. Mirror heater (Side under) (For Australia, Ireland, New Zealand models)
3. Mirror heater (Back LH) (For Australia, Ireland, New Zealand models)
4. Mirror heater (Back RH) (For Australia, Ireland, New Zealand models)
5. Mirror heater relay
6. Mirror heater (Side under) (Except Australia, Ireland, New Zealand models)
7. Mirror heater (Back LH) (Except Australia, Ireland, New Zealand models)
8. Mirror heater (Back RH) (Except Australia, Ireland, New Zealand models)

https://truckmanualshub.com/

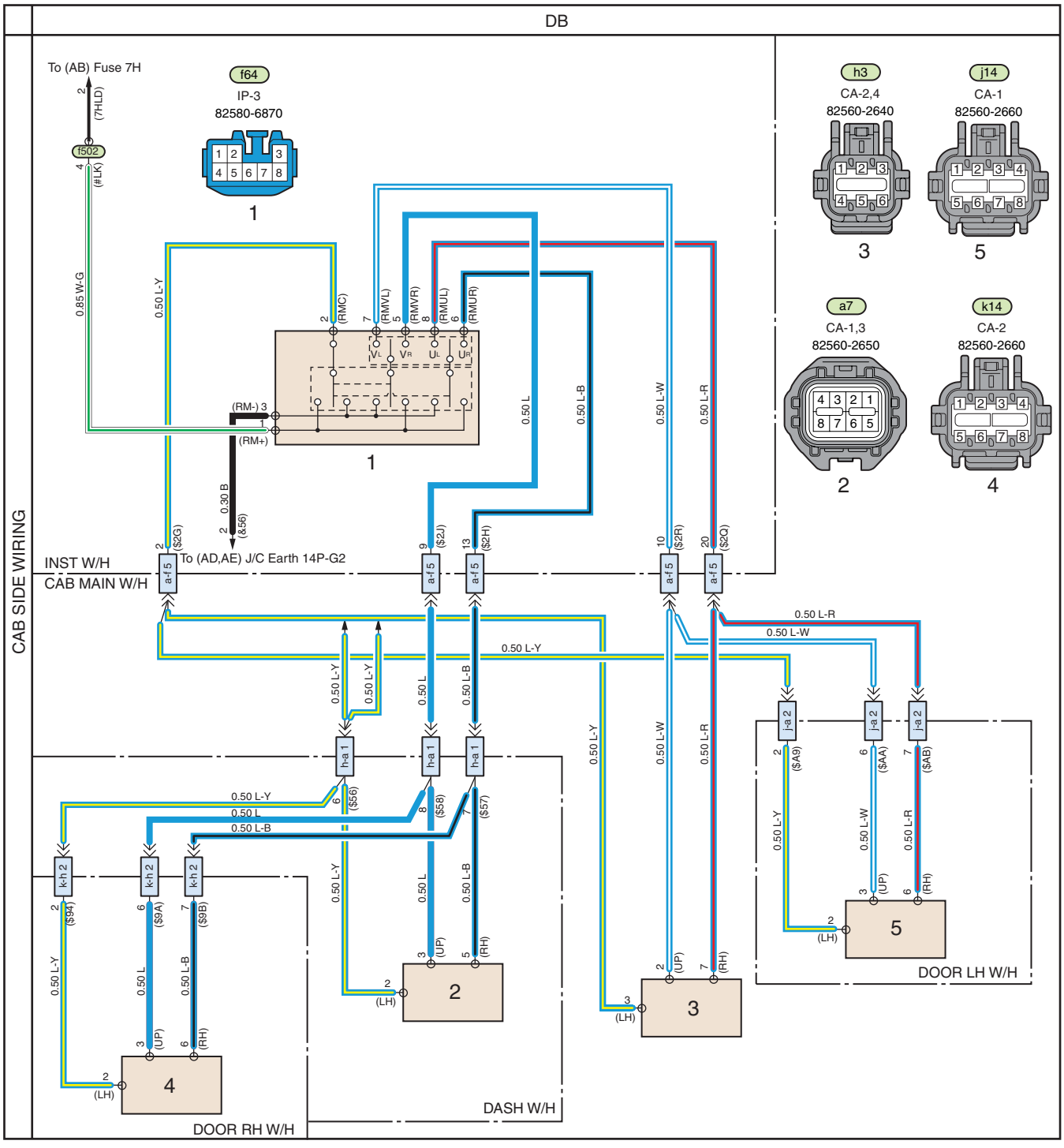

SHTS12Z160200068

DB. REMOTE CONTROL MIRROR CIRCUIT

1. Remote control mirror switch
2. Remote control mirror RH
3. Remote control mirror LH
4. Remote control mirror RH (For Ireland model)
5. Remote control mirror LH (For Ireland model)

https://truckmanualshub.com/

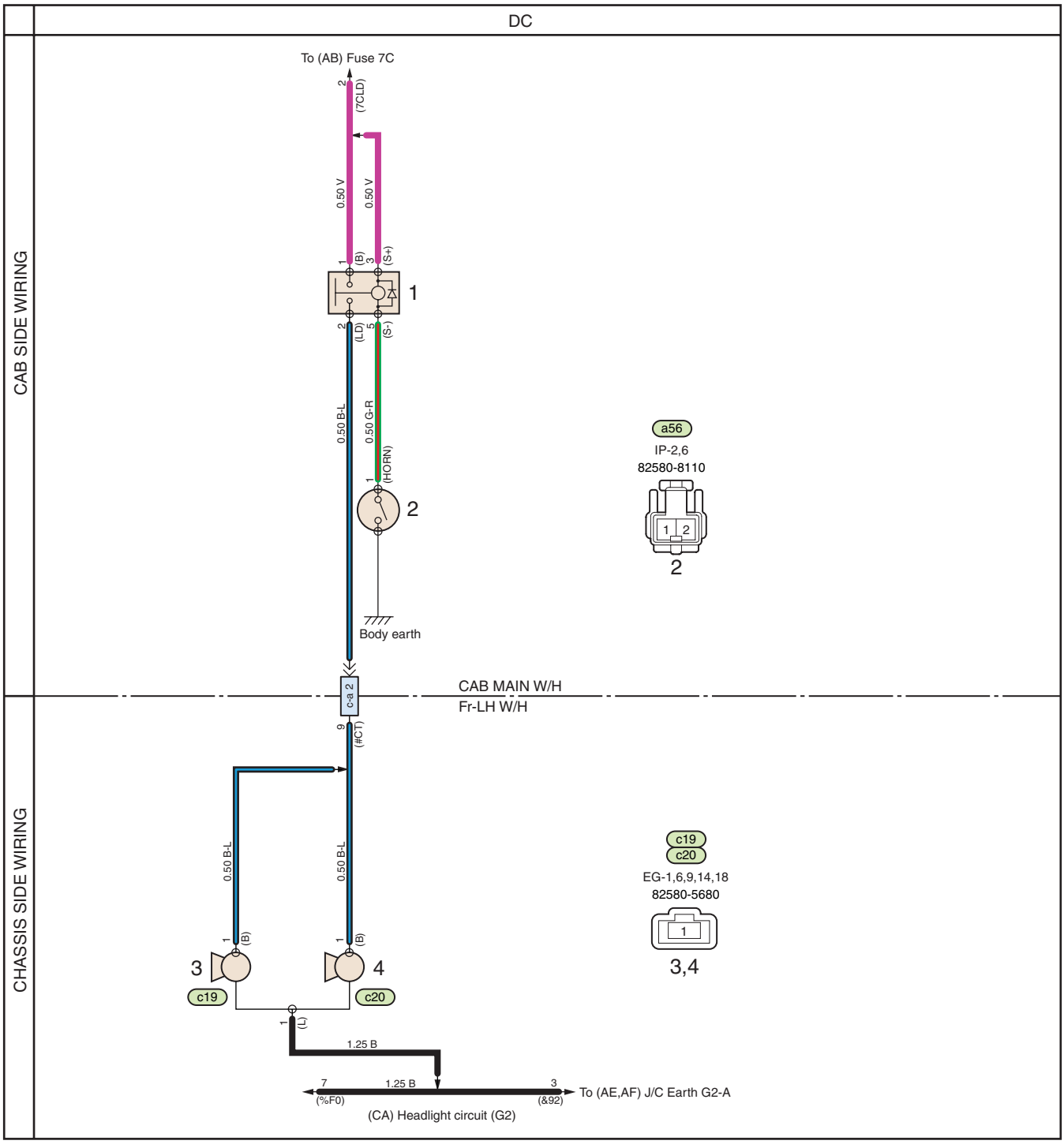

SHTS12Z160200069

DC. HORN CIRCUIT

1. Horn relay
2. Horn switch
3. Horn (Hi)
4. Horn (Lo)

https://truckmanualshub.com/

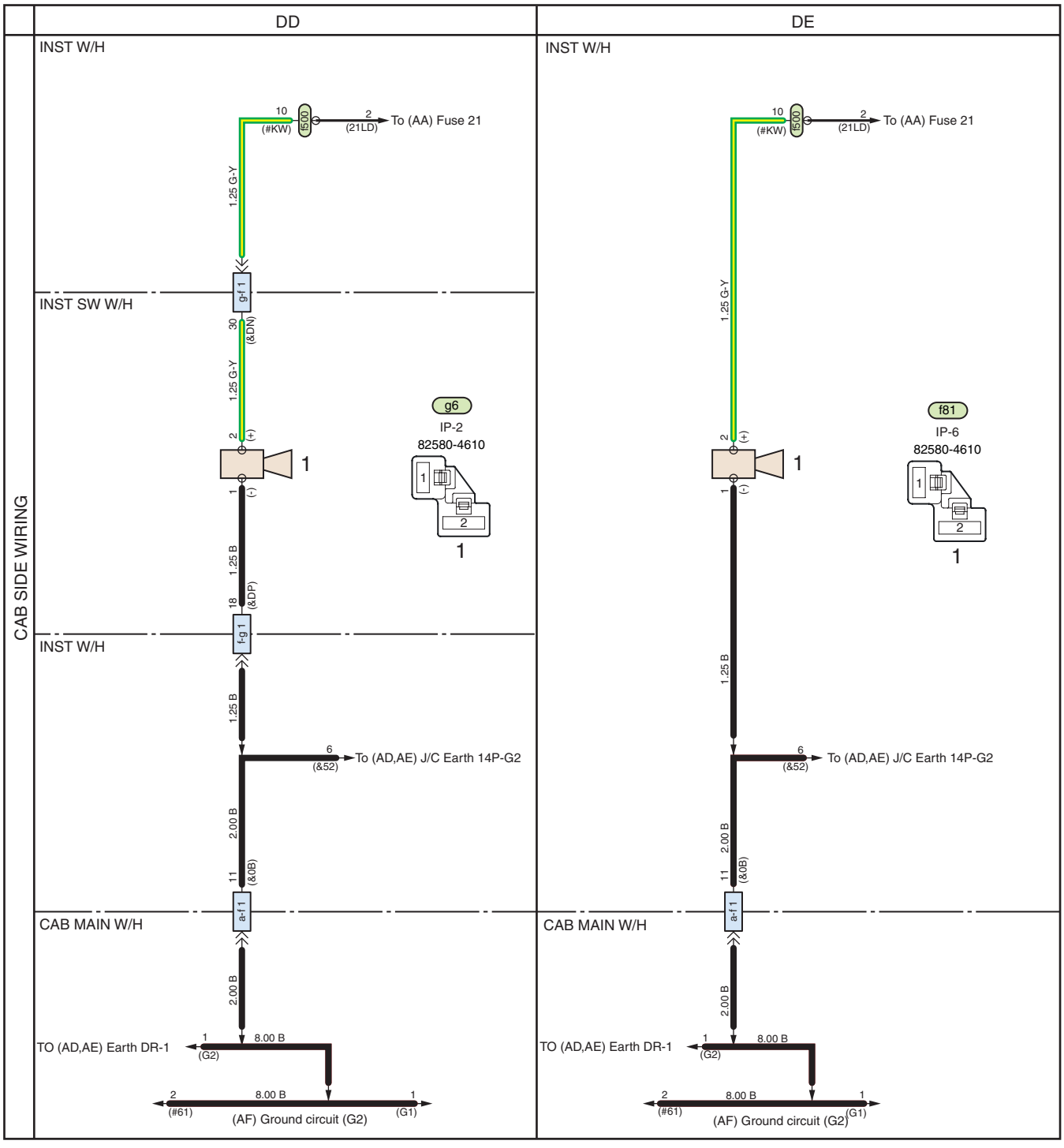

SHTS12Z160200070

DD. CIGARETTE LIGHTER CIRCUIT (FOR RIGHT-HAND DRIVE MODEL)

1. Cigarette lighter

DE. CIGARETTE LIGHTER CIRCUIT (FOR LEFT-HAND DRIVE MODEL)

1. Cigarette lighter

https://truckmanualshub.com/

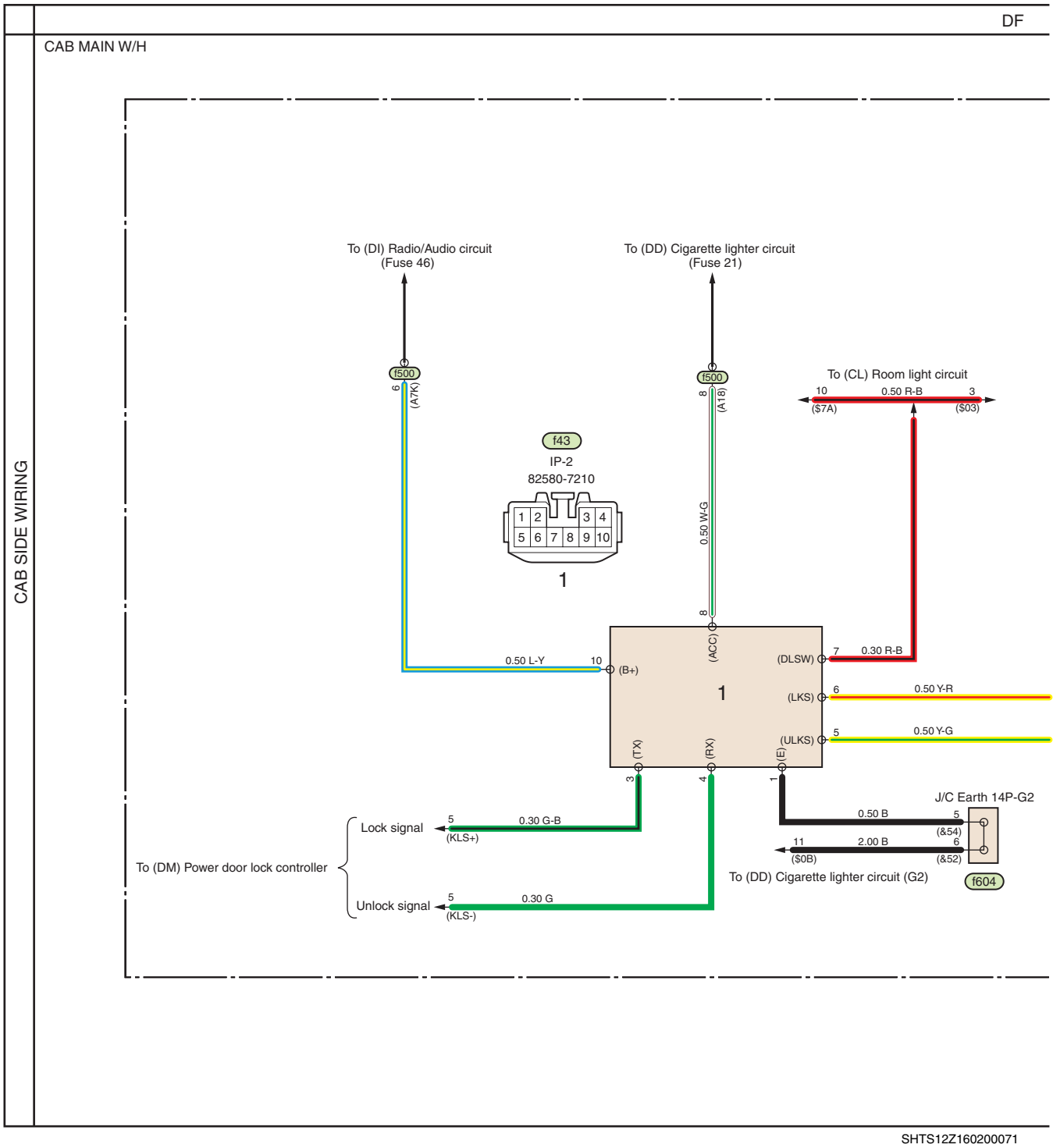

SHTS12Z160200071

DF. KEYLESS ENTRY CIRCUIT

1. Keyless entry controller
2. Power door lock switch (Driver's side)

https://truckmanualshub.com/

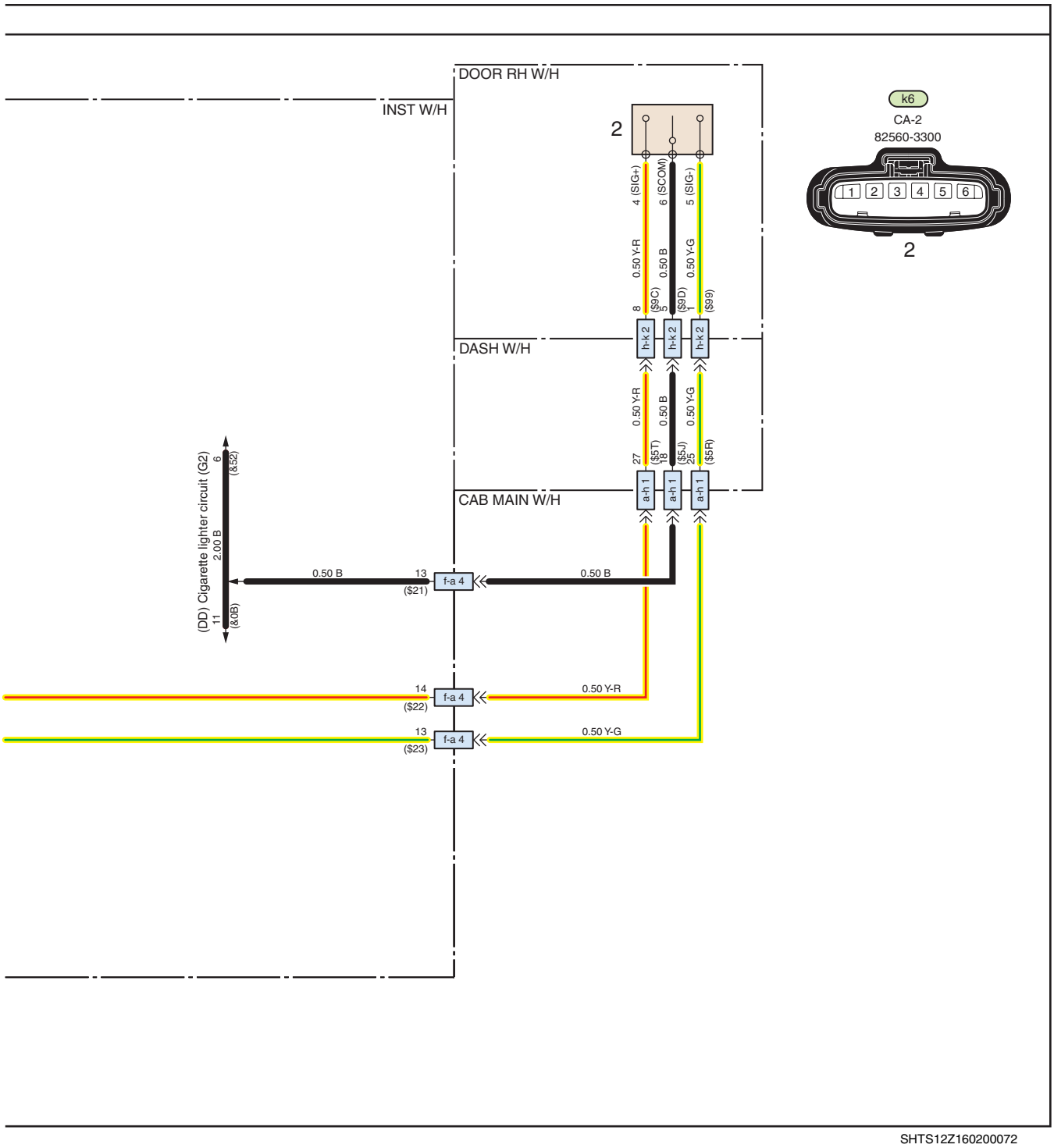

SHTS12Z160200072

https://truckmanualshub.com/

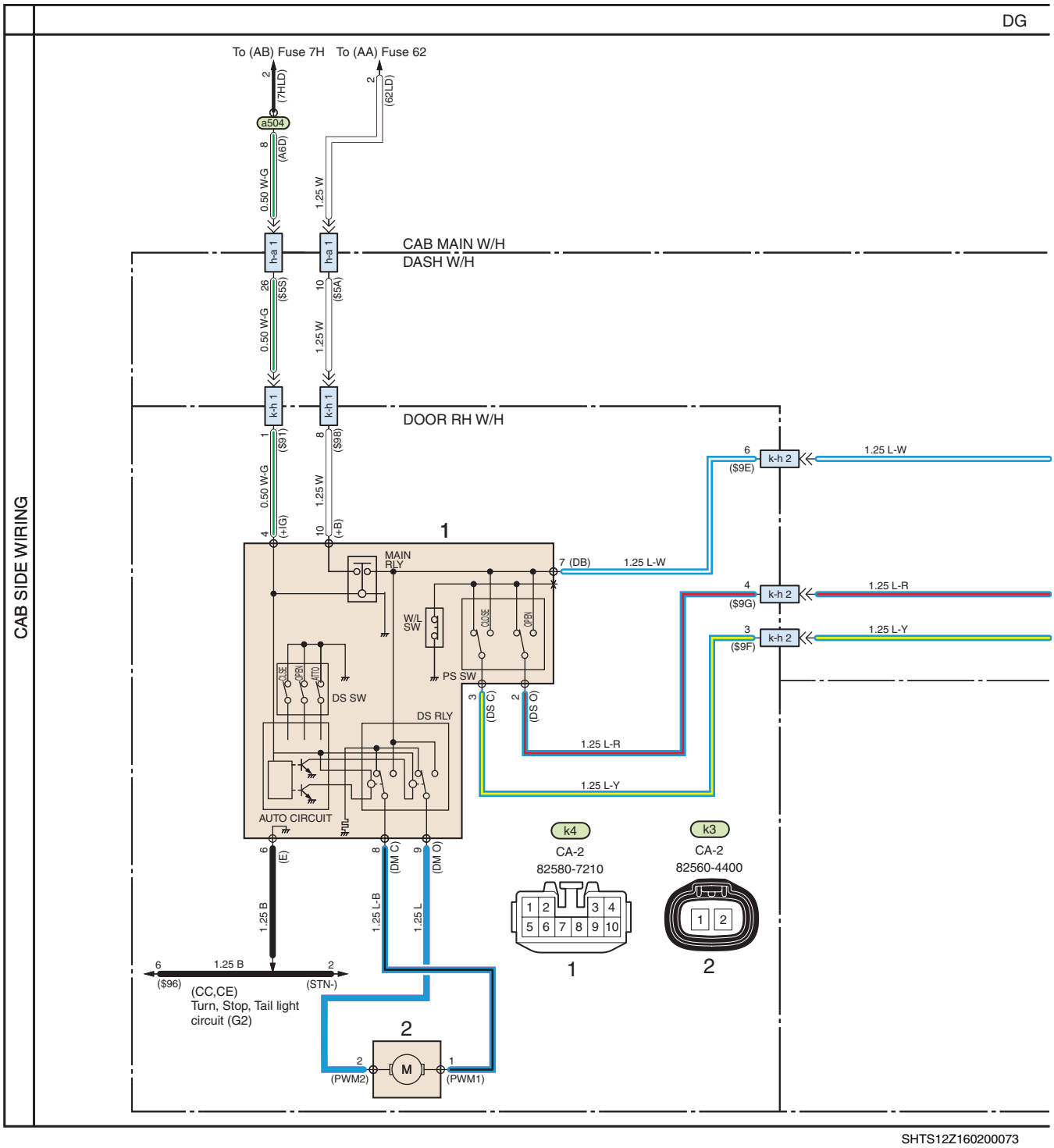

SHTS12Z160200073

DG. POWER WINDOW CIRCUIT (FOR RIGHT-HAND DRIVE MODEL)

1. Power window switch (Driver's side)
2. Power window motor (Driver's side)
3. Power window switch (Assistant's side)
4. Power window motor (Assistant's side)

https://truckmanualshub.com/

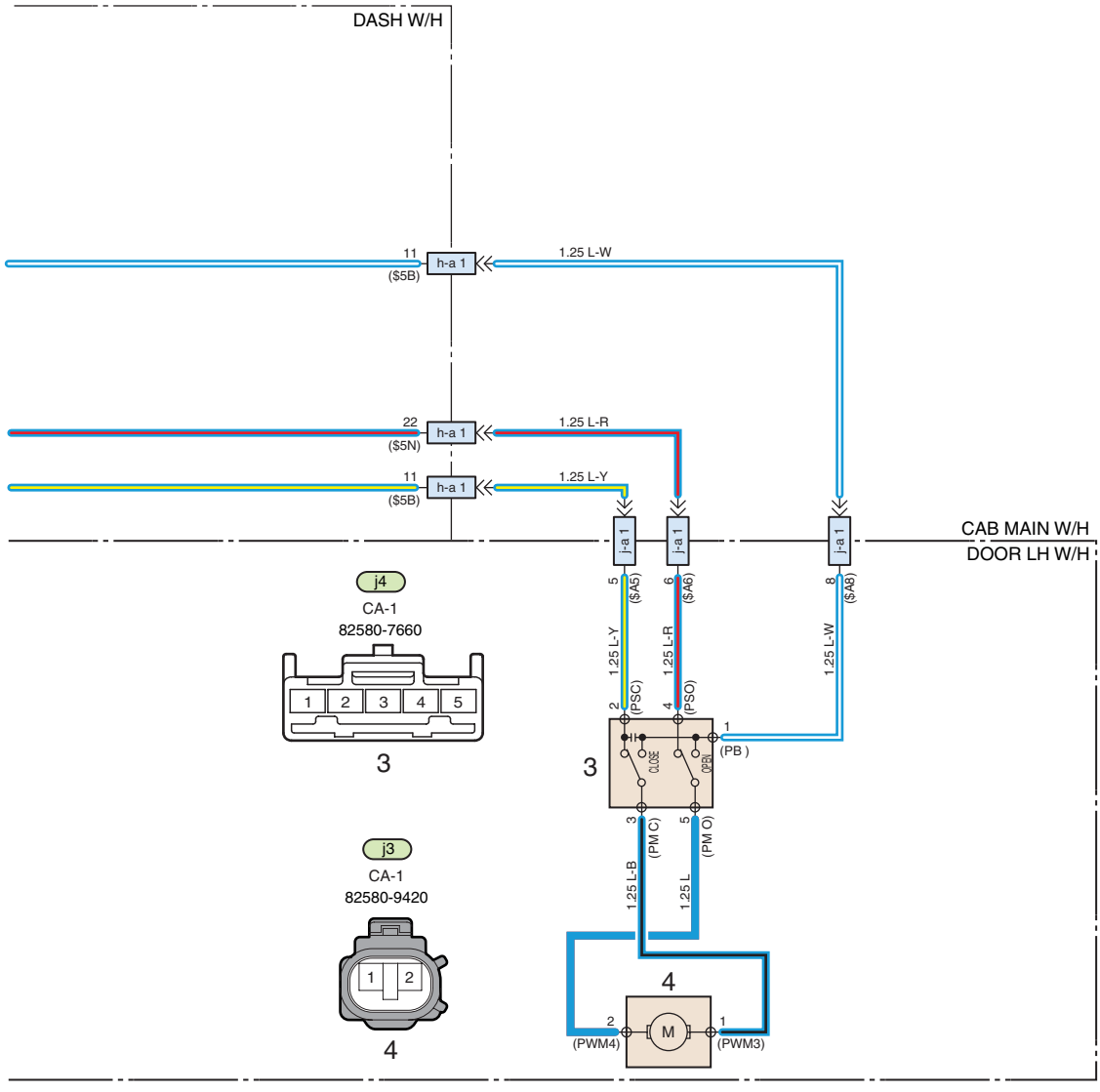

SHTS12Z160200074

https://truckmanualshub.com/

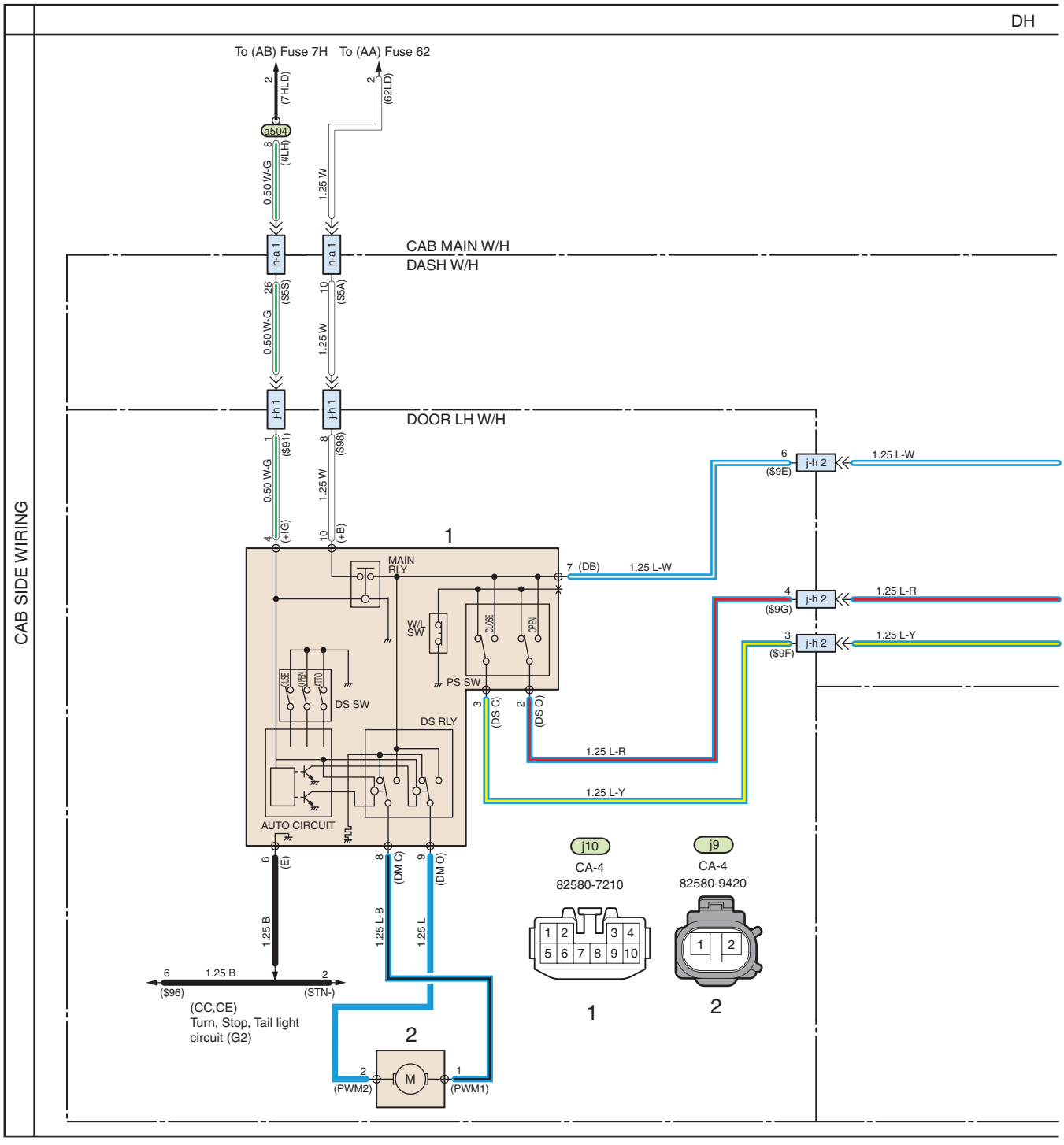

SHTS12Z160200075

DH. POWER WINDOW CIRCUIT (FOR LEFT-HAND DRIVE MODEL)

1. Power window switch (Driver's side)
2. Power window motor (Driver's side)
3. Power window switch (Assistant's side)
4. Power window motor (Assistant's side)

https://truckmanualshub.com/

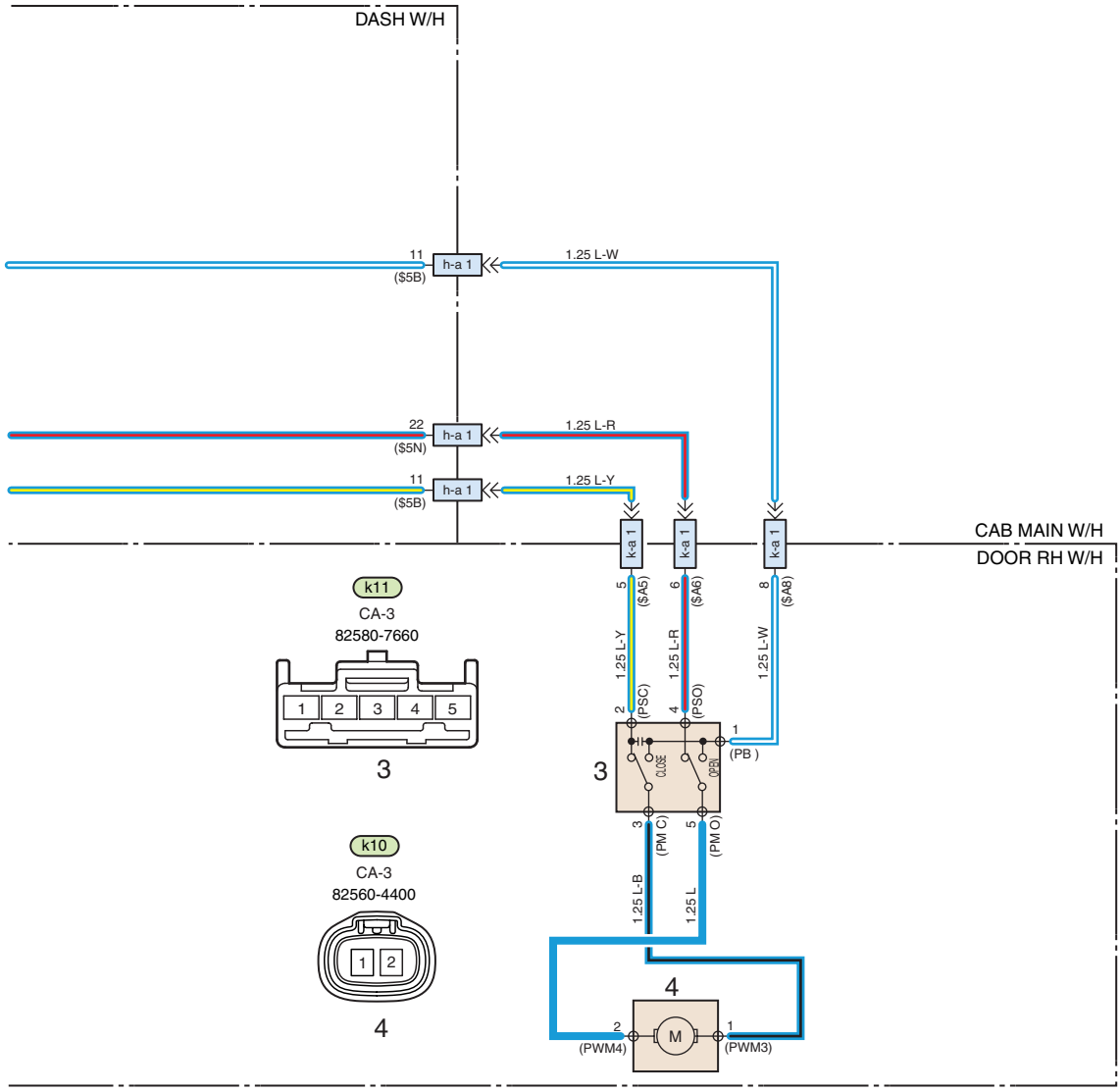

SHTS12Z160200076

https://truckmanualshub.com/

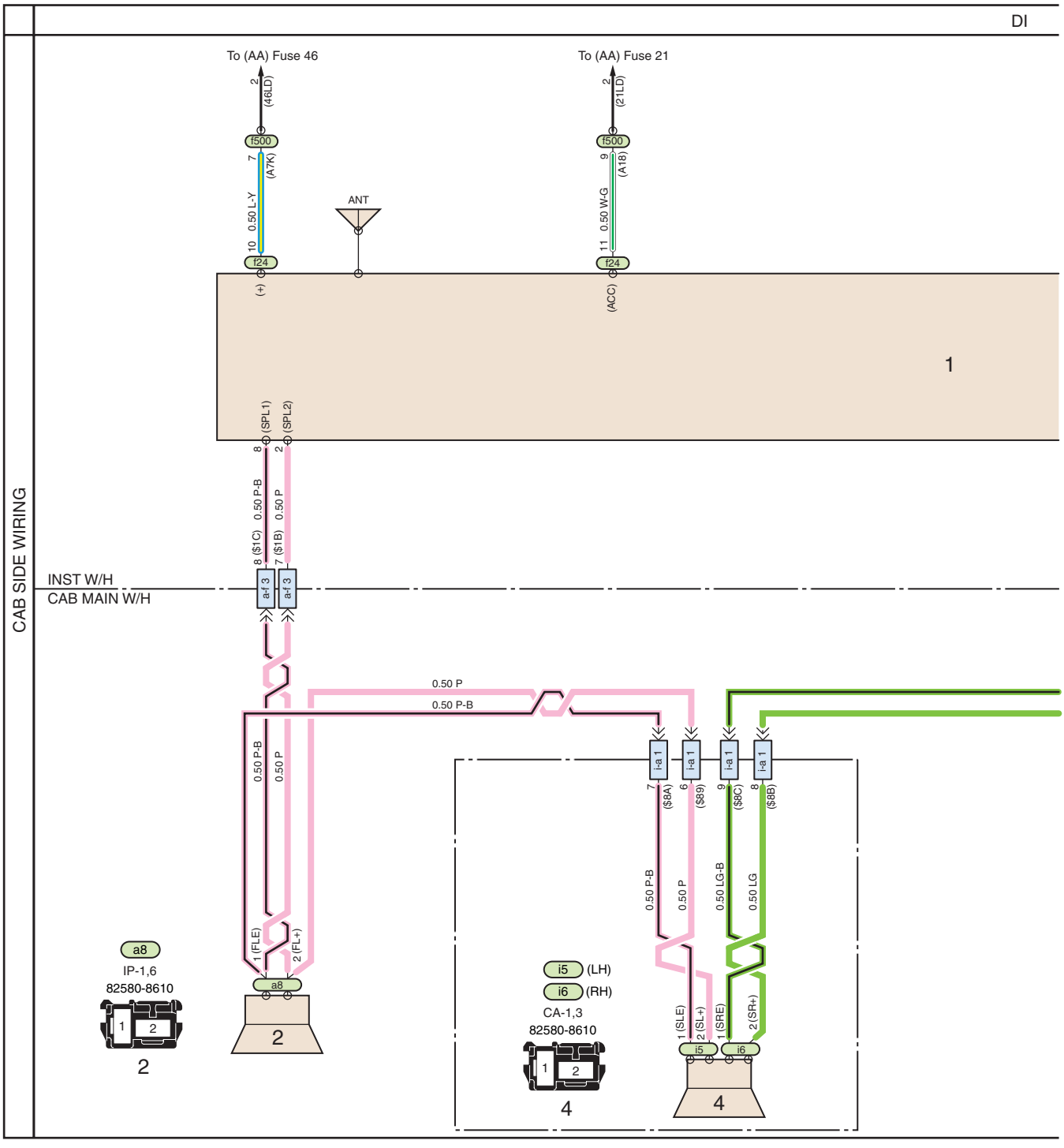

SHTS12Z160200077

DI. RADIO/AUDIO CIRCUIT

1. Radio/Audio unit
2. Front speaker (LH)
3. Front speaker (RH)
4. Center speaker

https://truckmanualshub.com/

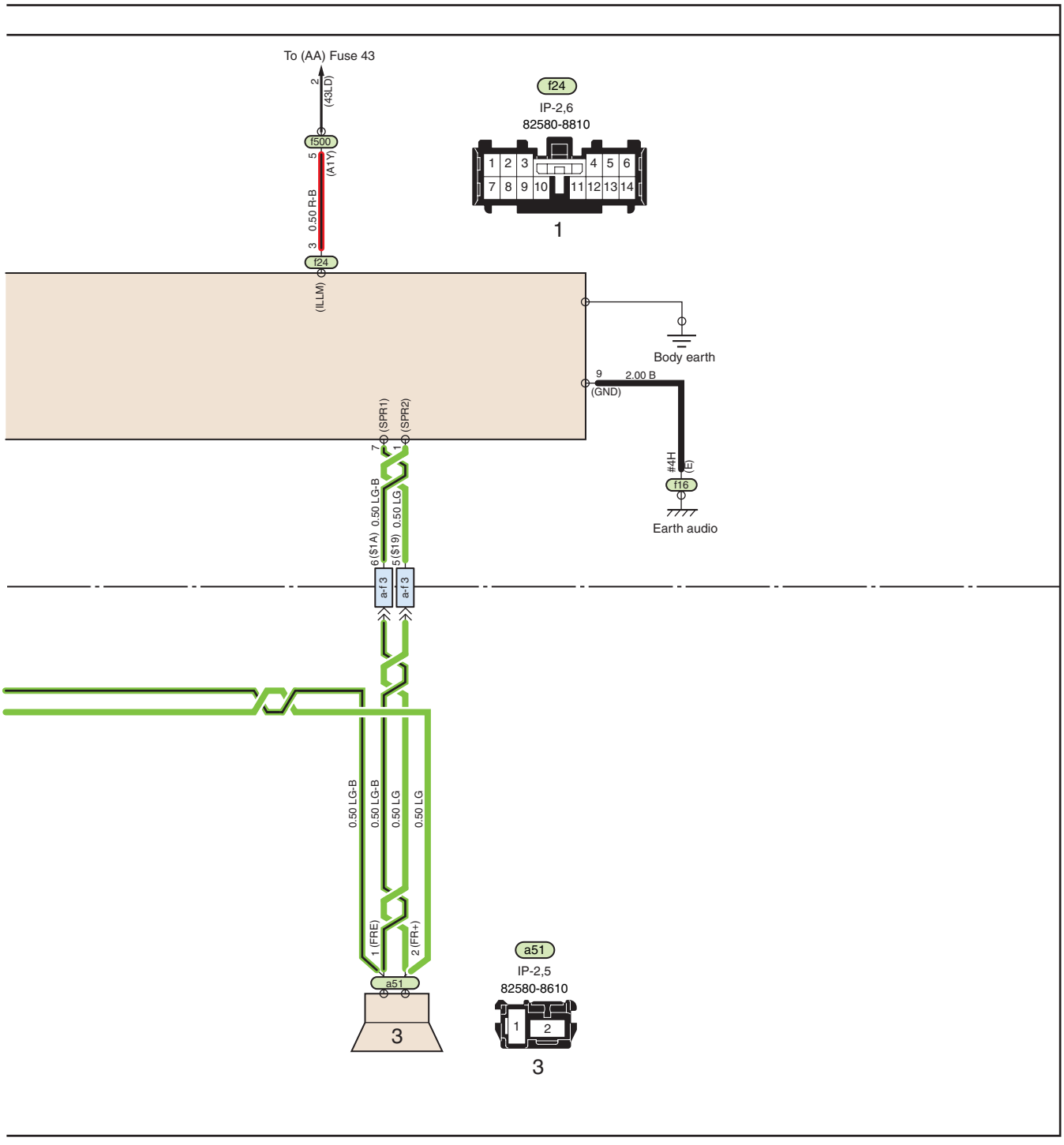

SHTS12Z160200078

https://truckmanualshub.com/

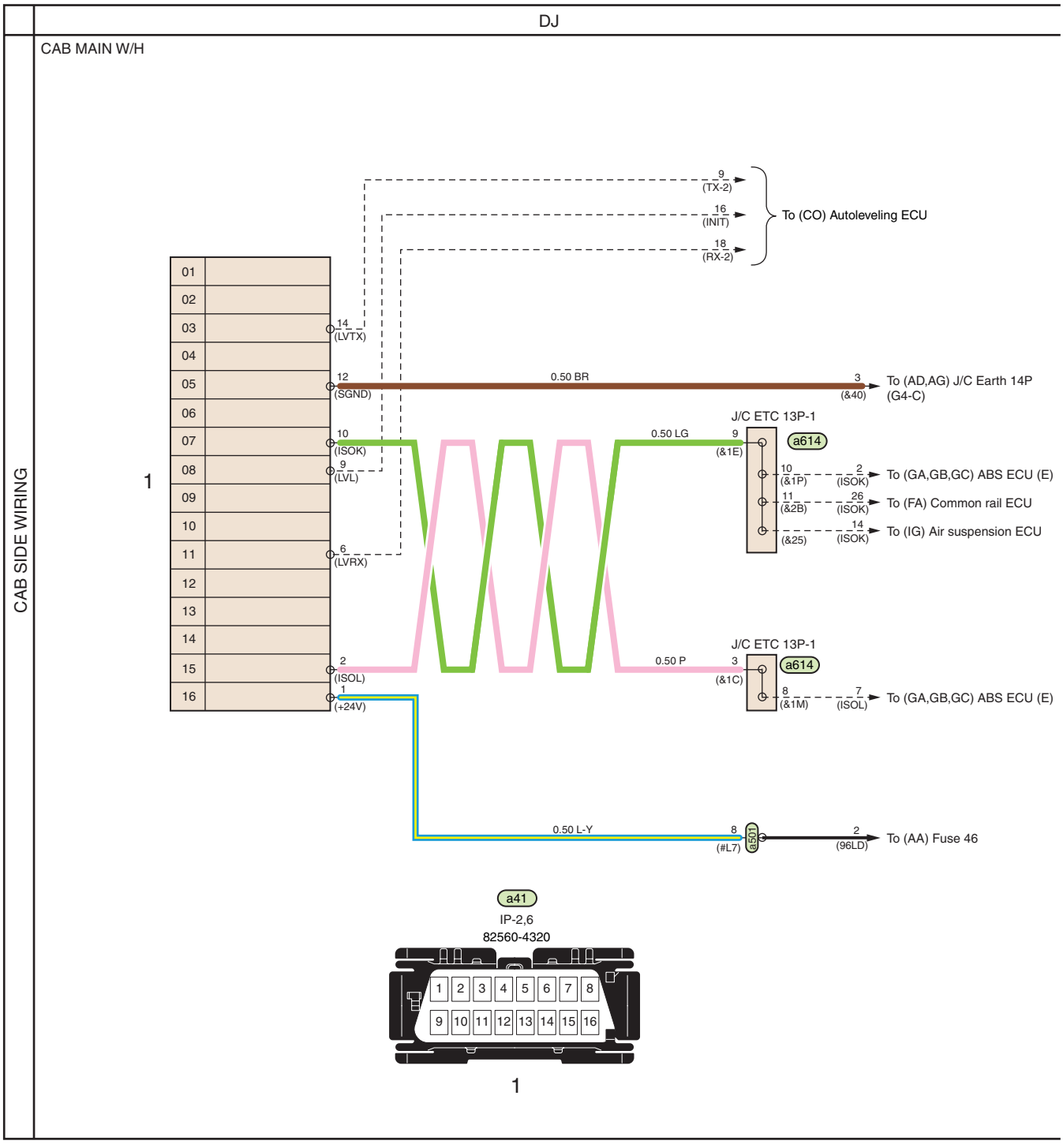

SHTS12Z160200079

DJ. DIAGNOSIS CONNECTOR (16P) CIRCUIT

1. Diagnosis connector (16P)

https://truckmanualshub.com/

DK

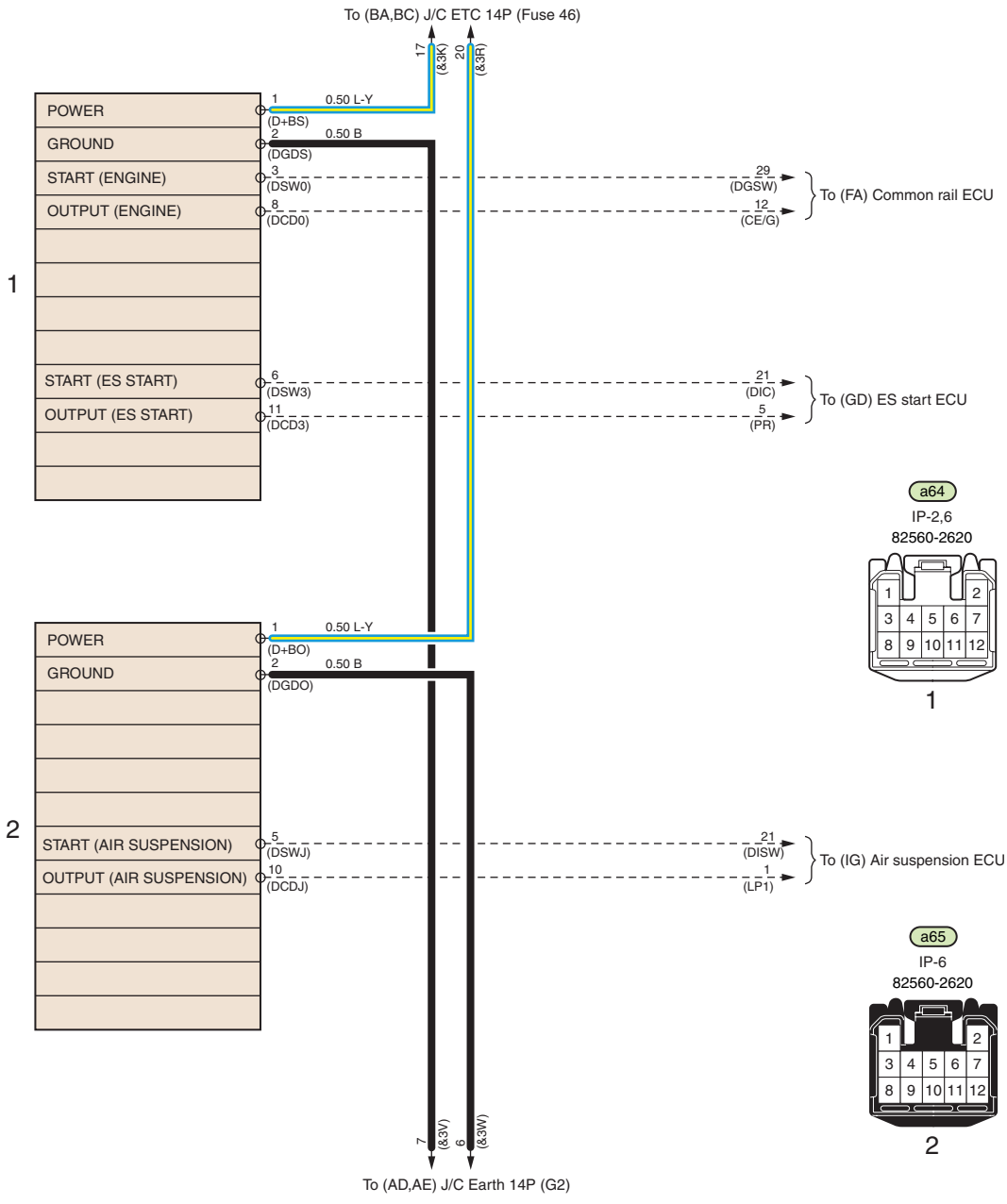

SHTS12Z160200080

DK. DIAGNOSIS MONITOR CIRCUIT

1. Diagnosis standard connector
2. Diagnosis option connector

https://truckmanualshub.com/

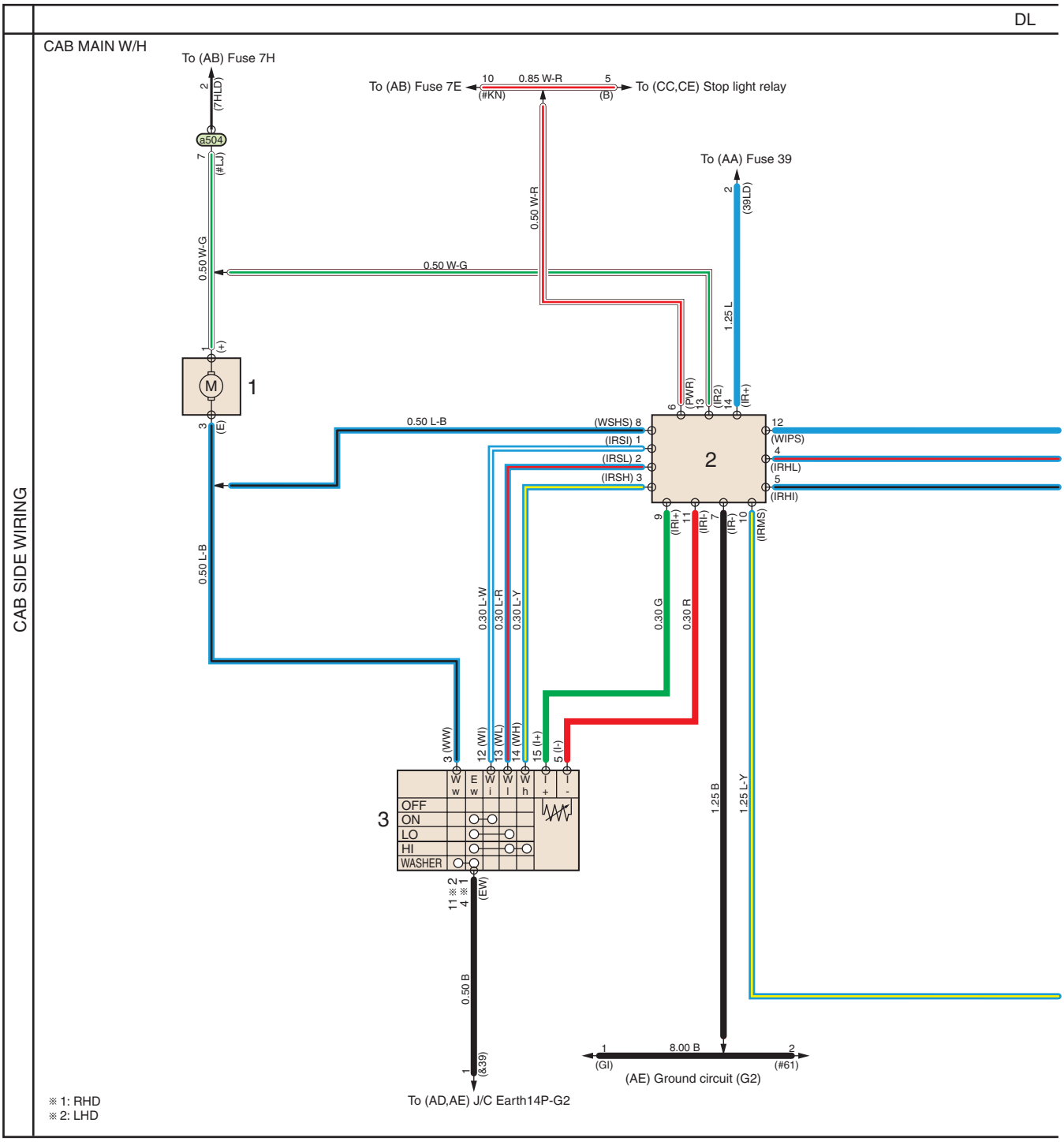

SHTS12Z160200081

DL. WIPER AND WASHER CIRCUIT

1. Washer pump
2. Wiper relay
3. Wiper and retarder switch
4. Wiper motor

https://truckmanualshub.com/

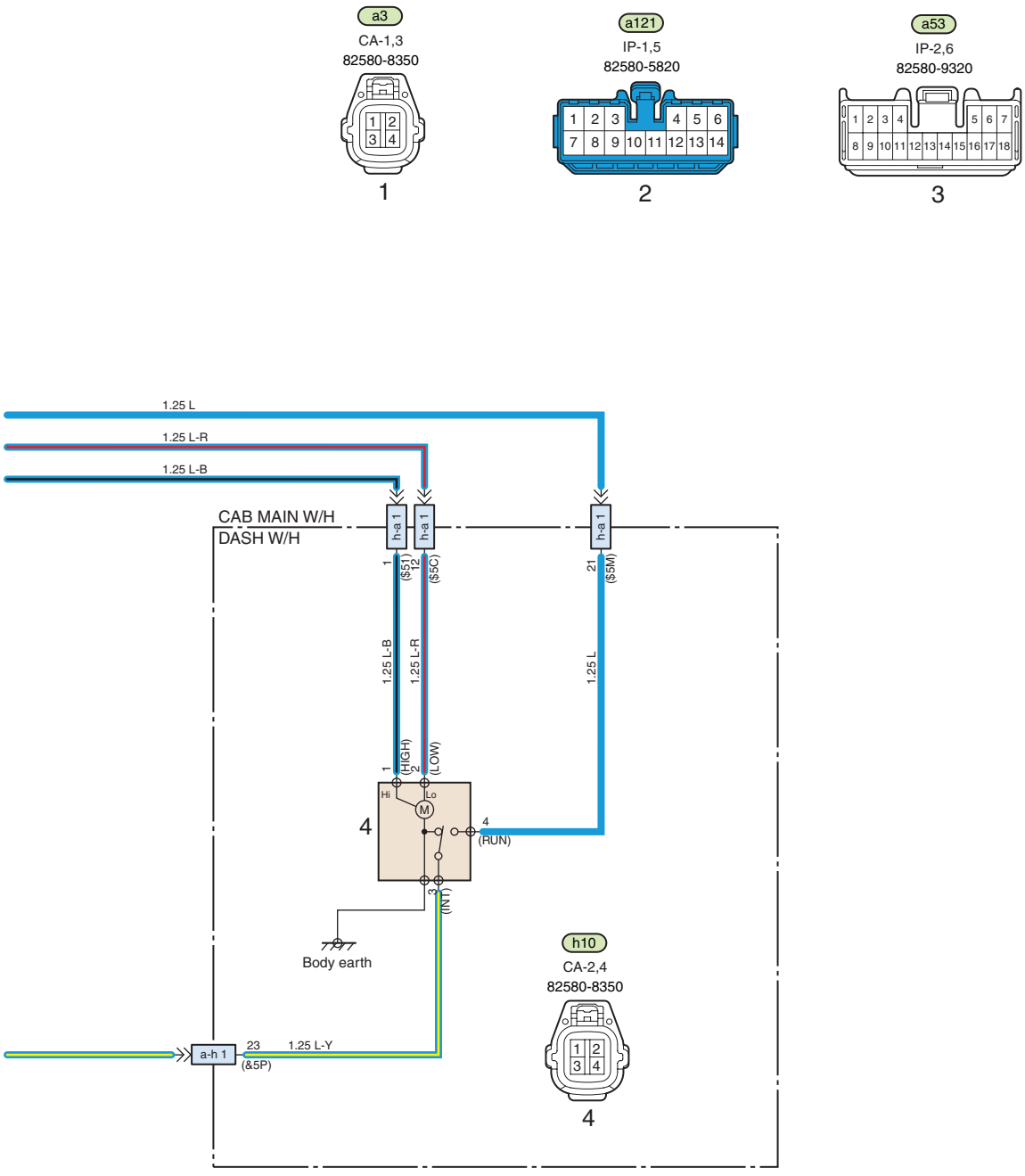

SHTS12Z160200082

https://truckmanualshub.com/

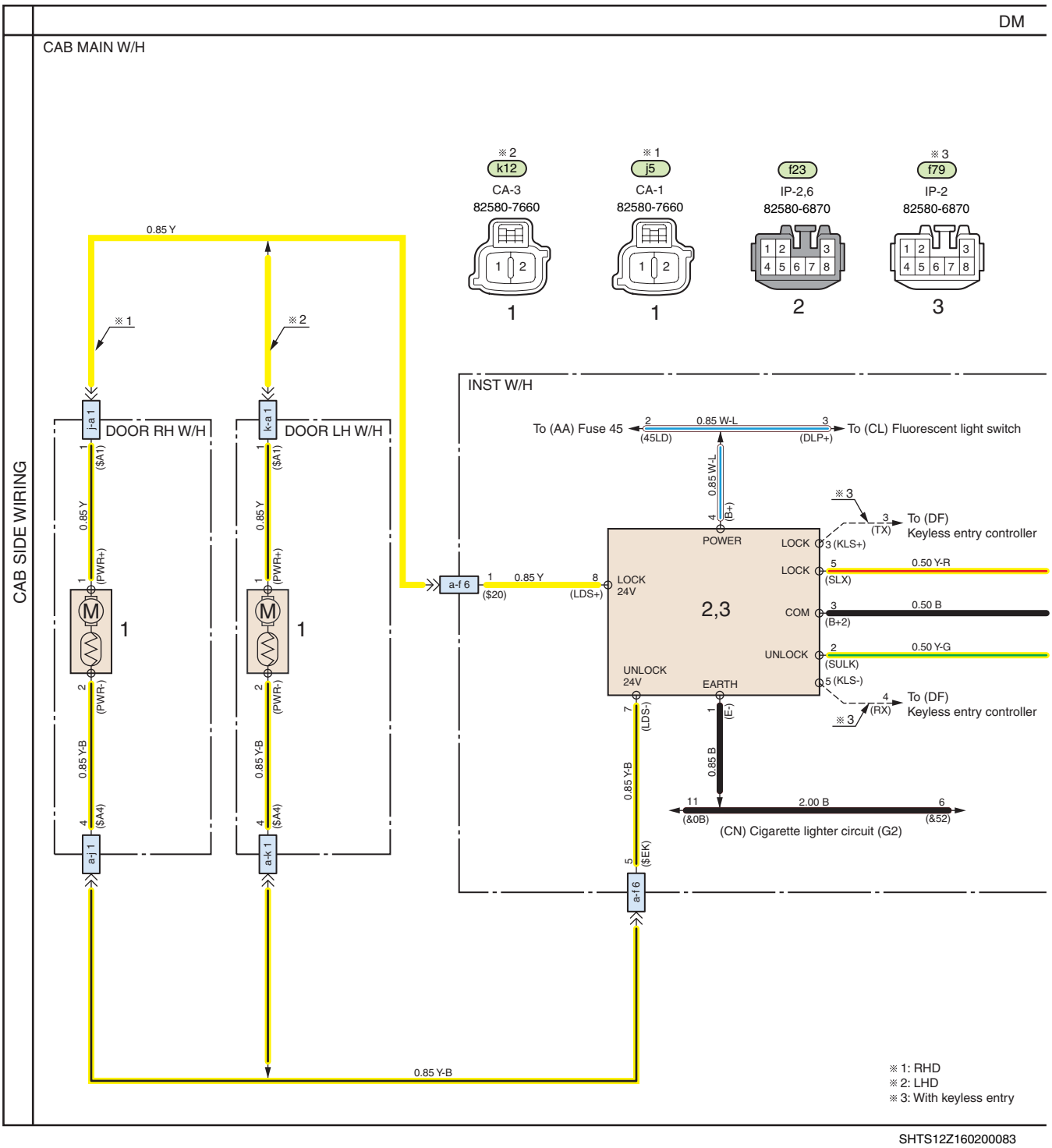

SHTS12Z160200083

DM. POWER DOOR LOCK CIRCUIT

1. Power door lock actuator (Assistant's side)
2. Power door lock controller
3. Keyless entry door lock controller
4. Power door lock switch (Driver's side)

https://truckmanualshub.com/

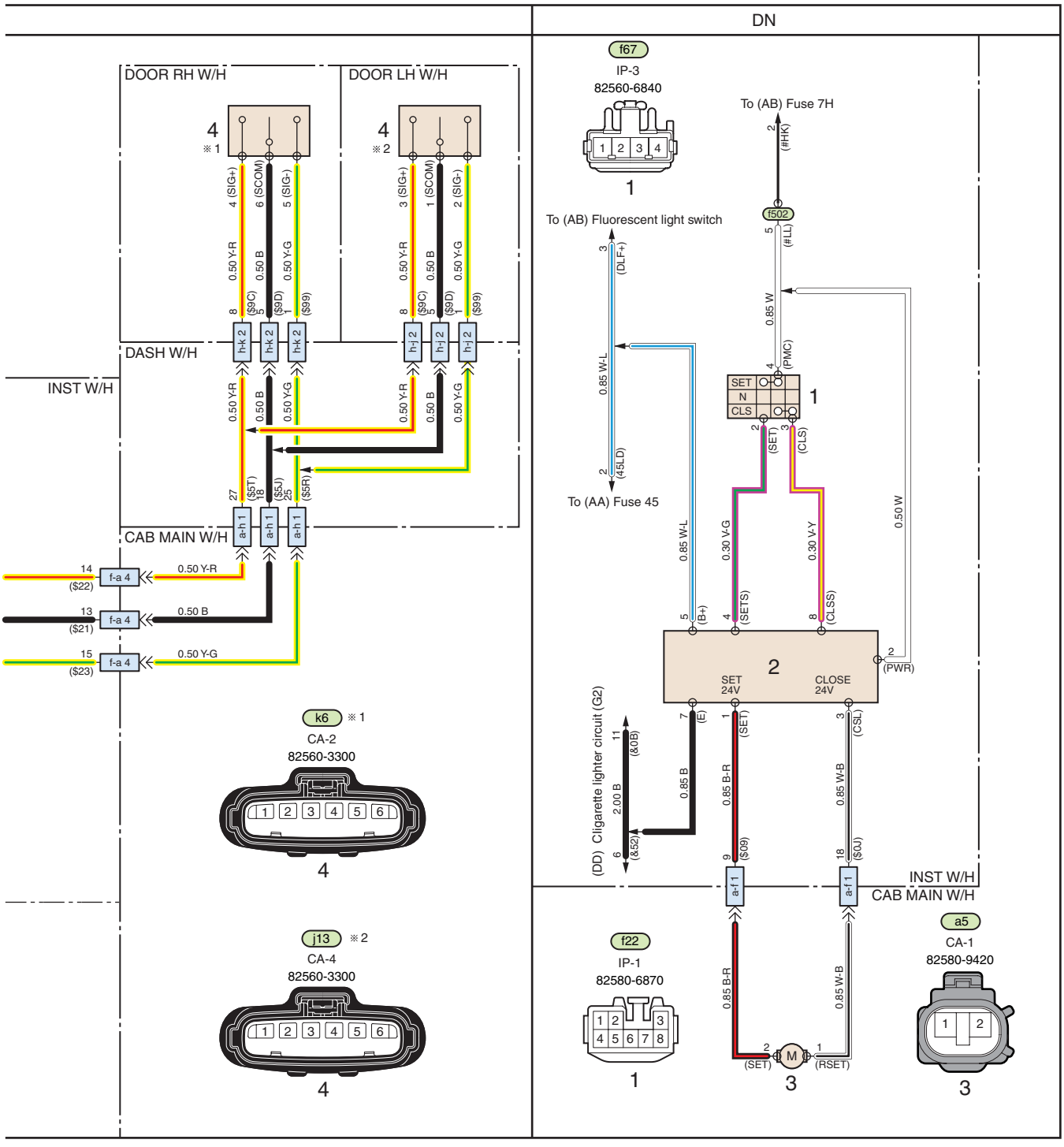

SHTS12Z160200084

DN. POWER MIRROR CIRCUIT

1. Power mirror switch
2. Power mirror controller
3. Power mirror motor

https://truckmanualshub.com/

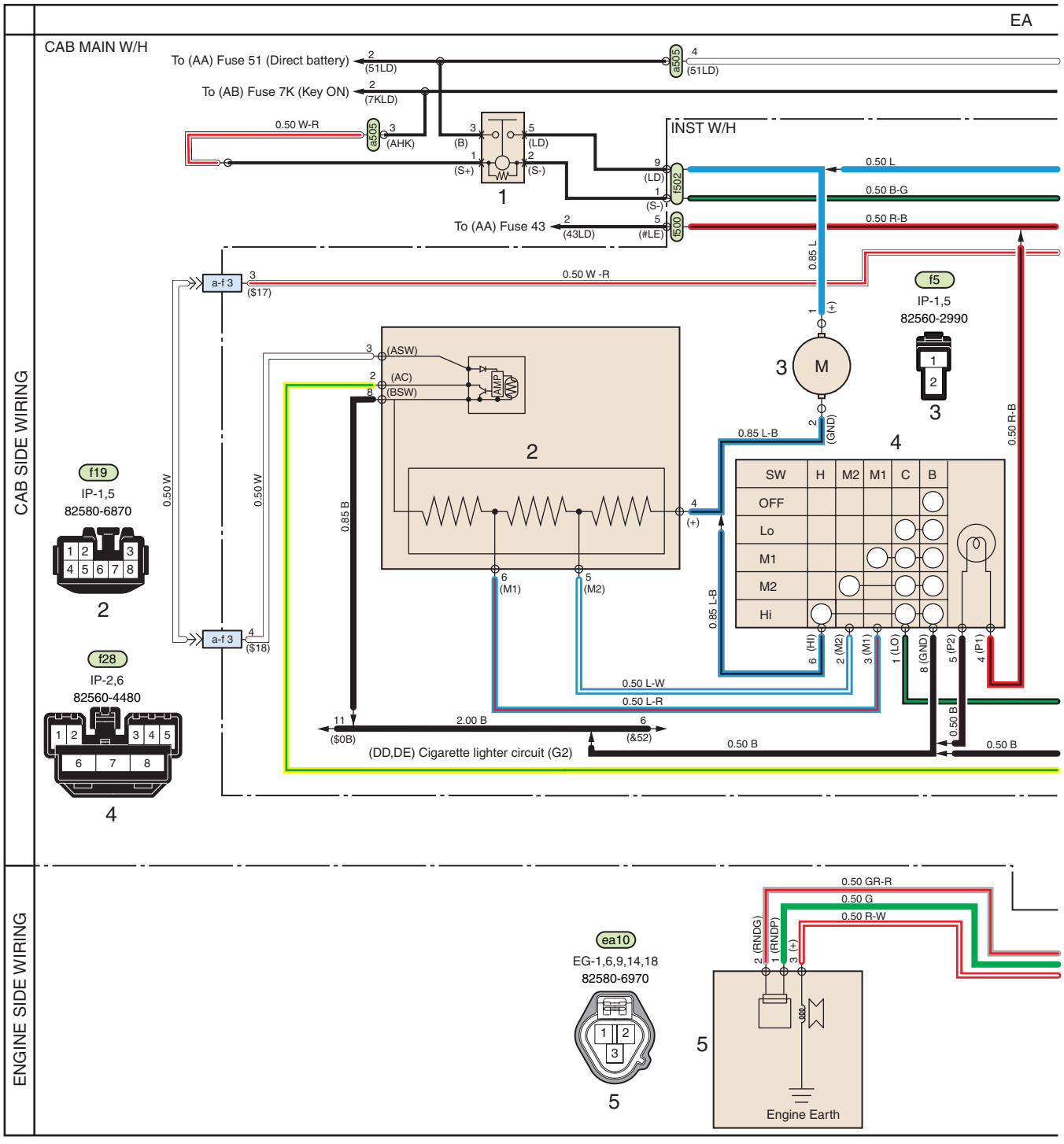

SHTS12Z160200085

EA. AIR CONDITIONER CIRCUIT

1. Heater relay
2. Air conditioner unit
3. Blower motor
4. Blower switch
5. Air conditioner compressor
6. Air conditioner switch
7. Air conditioner relay
8. Lock amp
9. Air conditioner diode
10. Air conditioner condenser relay
11. Pressure switch (Triple)
12. Air conditioner condenser

https://truckmanualshub.com/

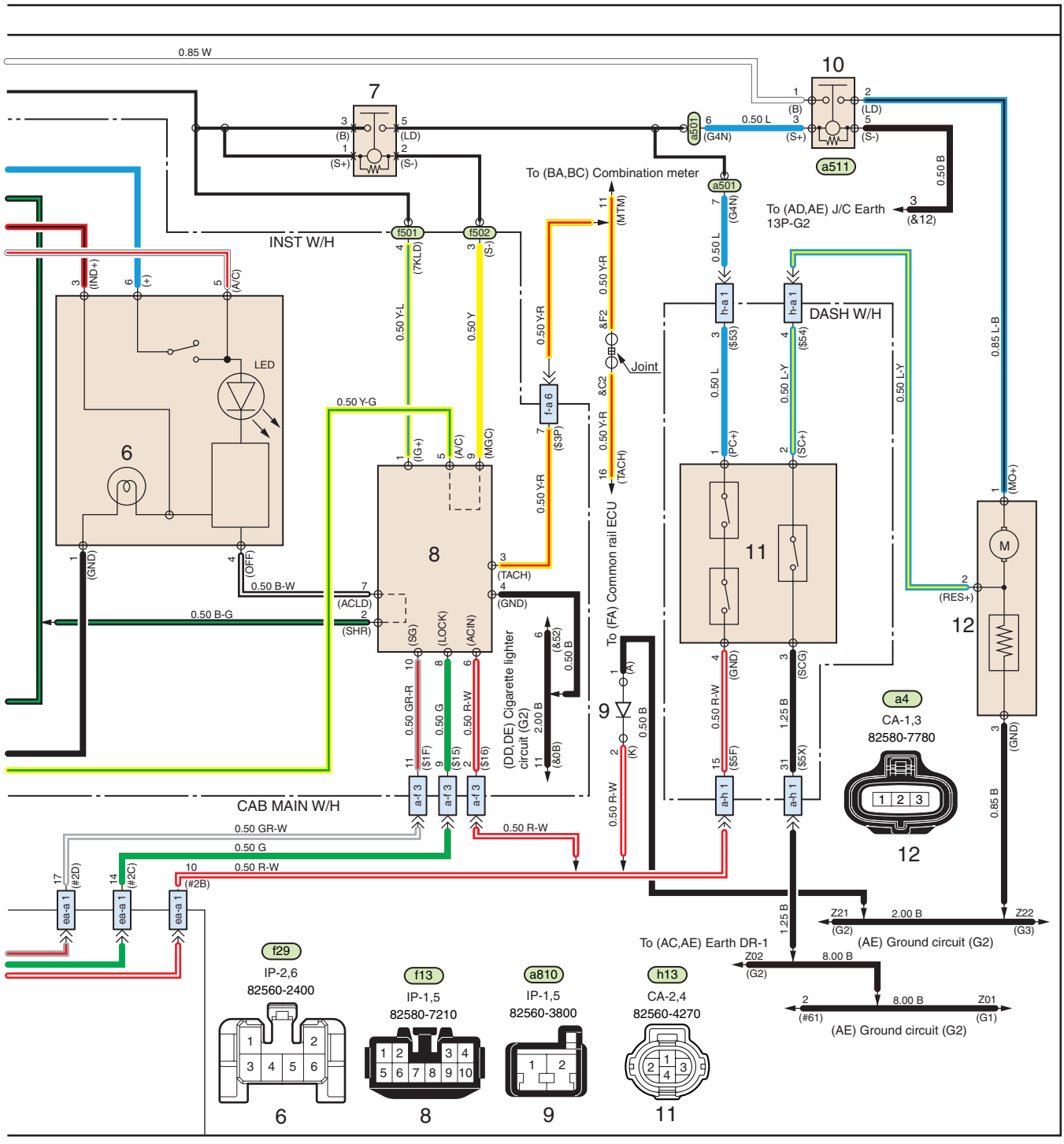

SHTS12Z160200086

https://truckmanualshub.com/

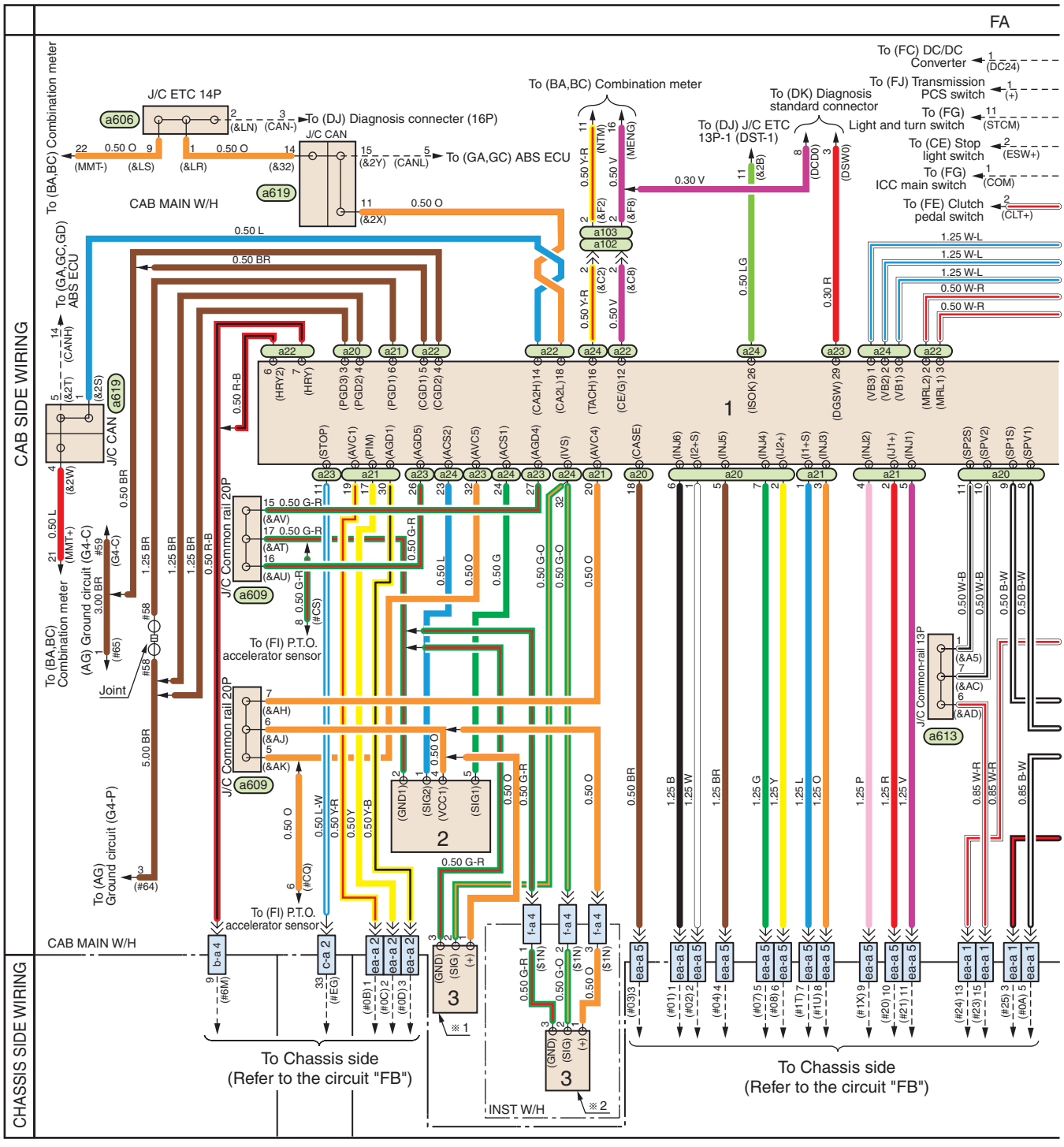

SHTS12Z160200087

FA. COMMON RAIL CIRCUIT No.1 (CAB SIDE)

1. Common rail ECU
2. Accelerator sensor
3. Idol volume
4. ECU main relay
5. Actuator power relay
6. Brake blending resistor (Models with auto cruise)
7. PCV relay
8. Brake switch
9. PCV diode

https://truckmanualshub.com/

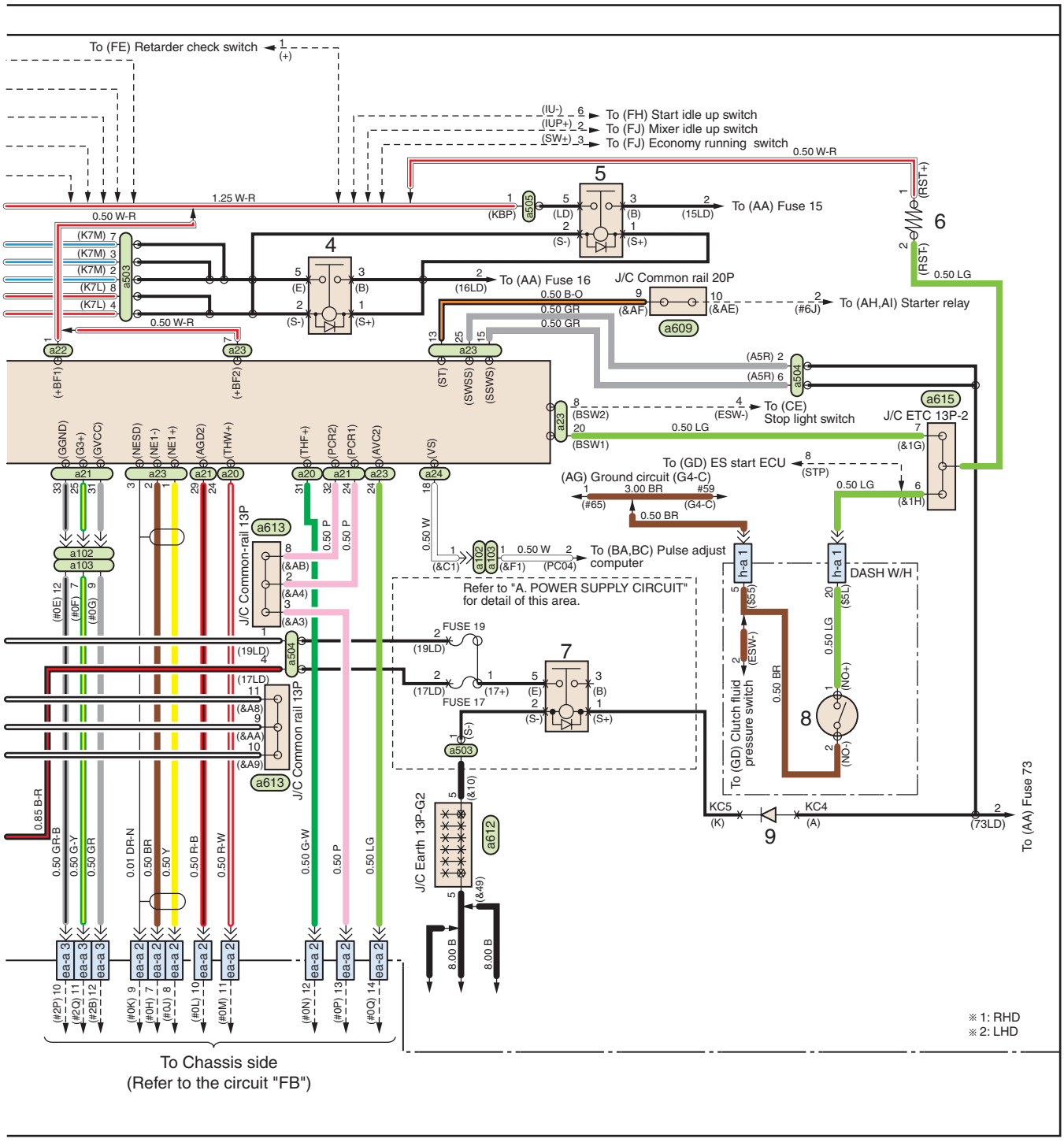

SHTS12Z160200088

https://truckmanualshub.com/

CONNECTORS FOR CIRCUIT "FA"

a24
IP-1,5
82580-4430

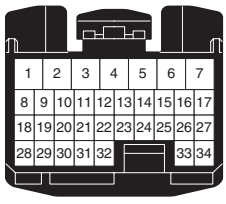

1 34pin

a23
IP-1,5
82560-4440

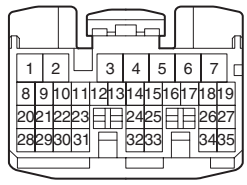

1 35pin-1

a22
IP-1,5
82560-4420

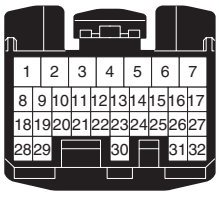

1 32pin

a21
IP-1,5
82560-4450

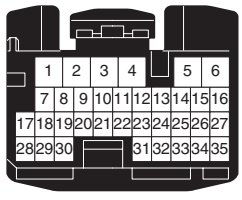

1 35pin-2

SHTS12Z160200089

https://truckmanualshub.com/

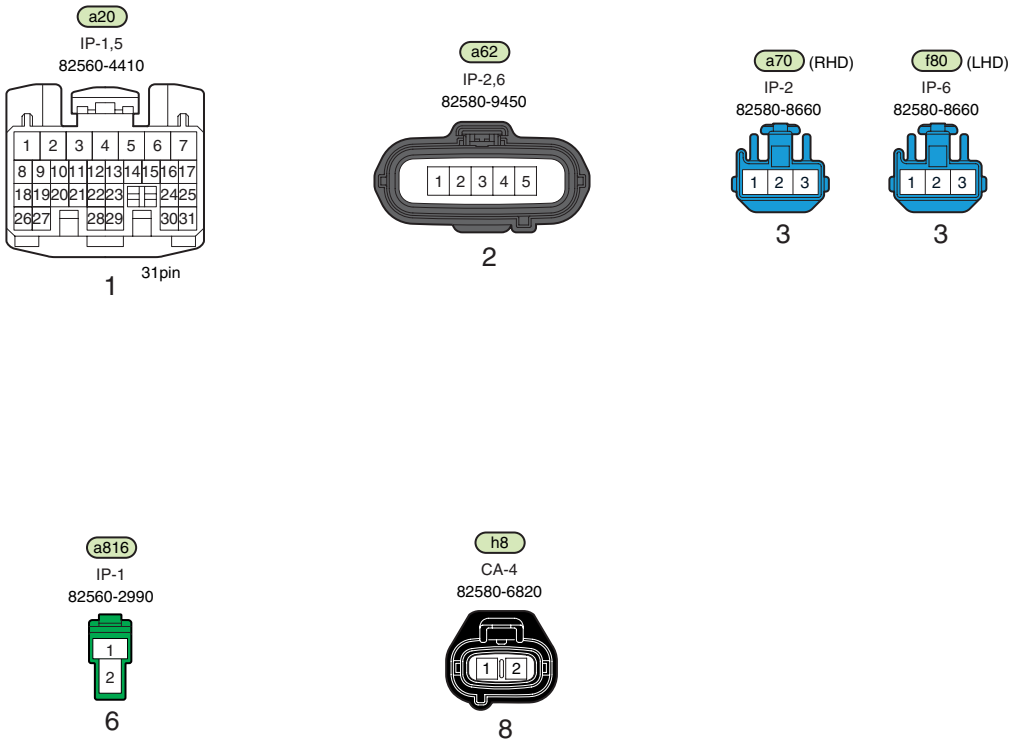

SHTS12Z160200090

https://truckmanualshub.com/

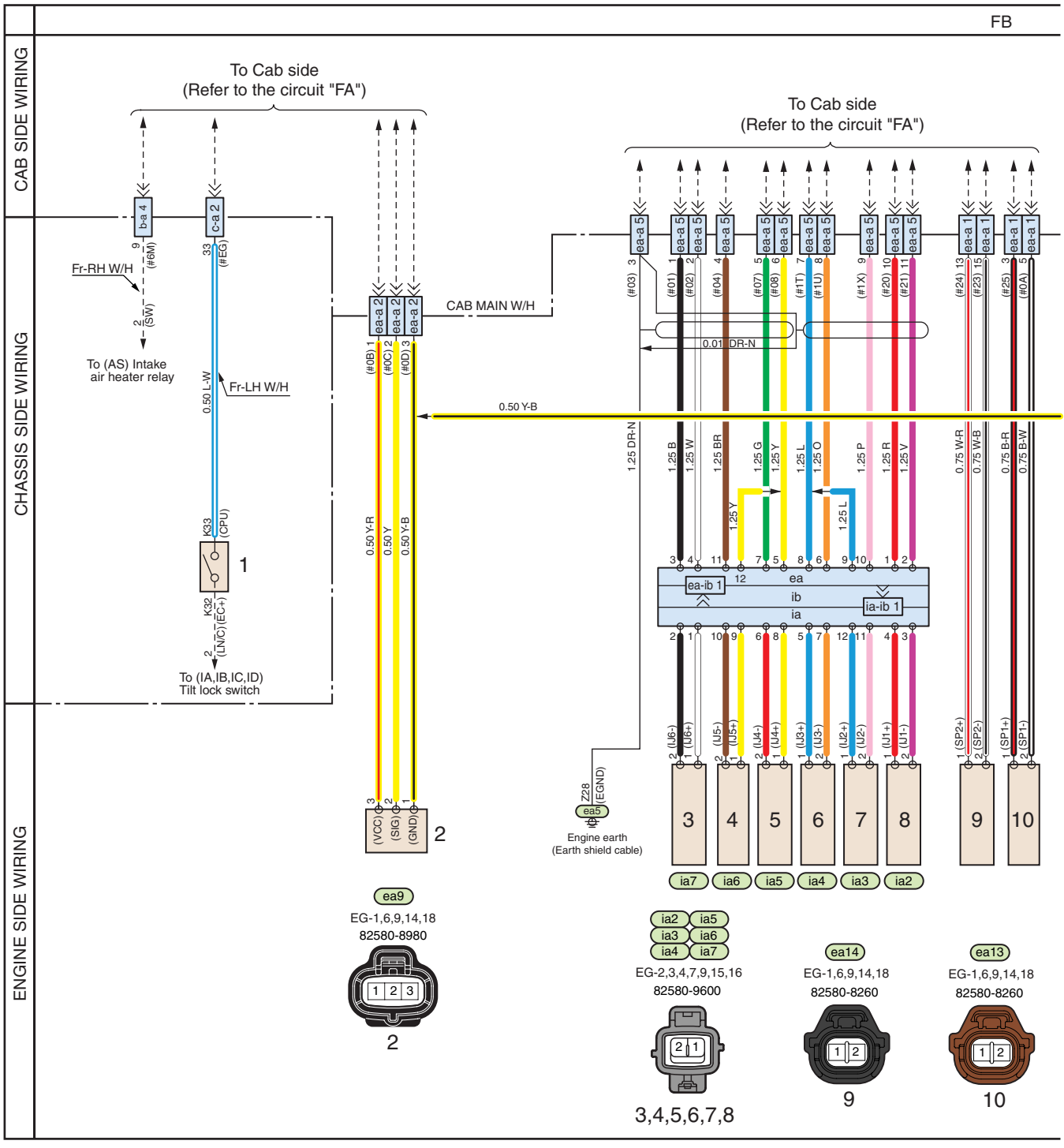

SHTS12Z160200091

FB. COMMON RAIL CIRCUIT No.1 (CHASSIS SIDE)

1. Engine stop switch
2. Boost pressure sensor
3. Fuel injector No.6
4. Fuel injector No.5
5. Fuel injector No.4
6. Fuel injector No.3
7. Fuel injector No.2
8. Fuel injector No.1
9. PCV (Pump control valve) No.2
10. PCV (Pump control valve) No.1
11. Engine speed sub sensor
12. Engine speed main sensor
13. Coolant temperature sensor
14. Fuel temperature sensor
15. Common rail pressure sensor

https://truckmanualshub.com/

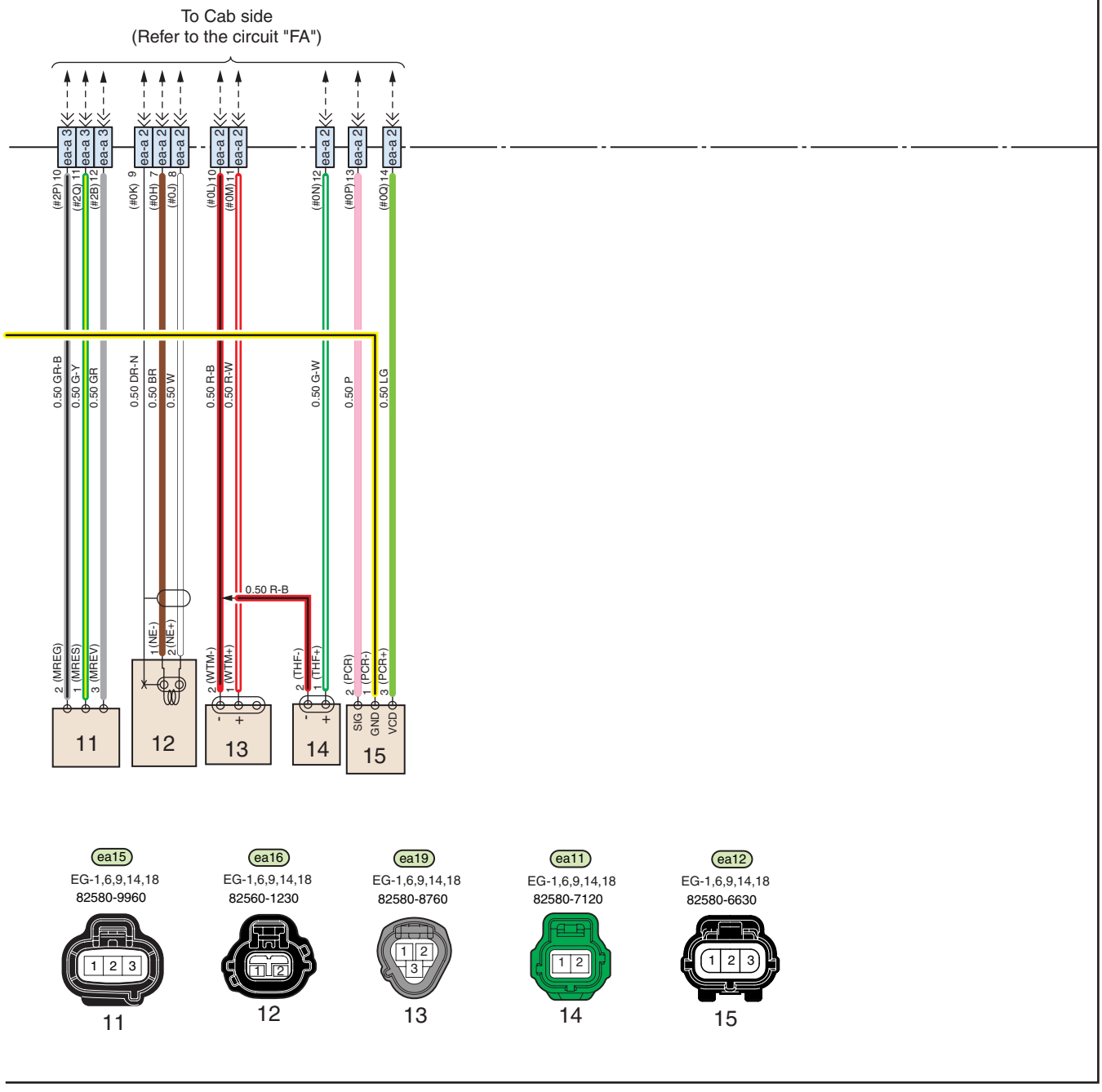

SHTS12Z160200092

https://truckmanualshub.com/

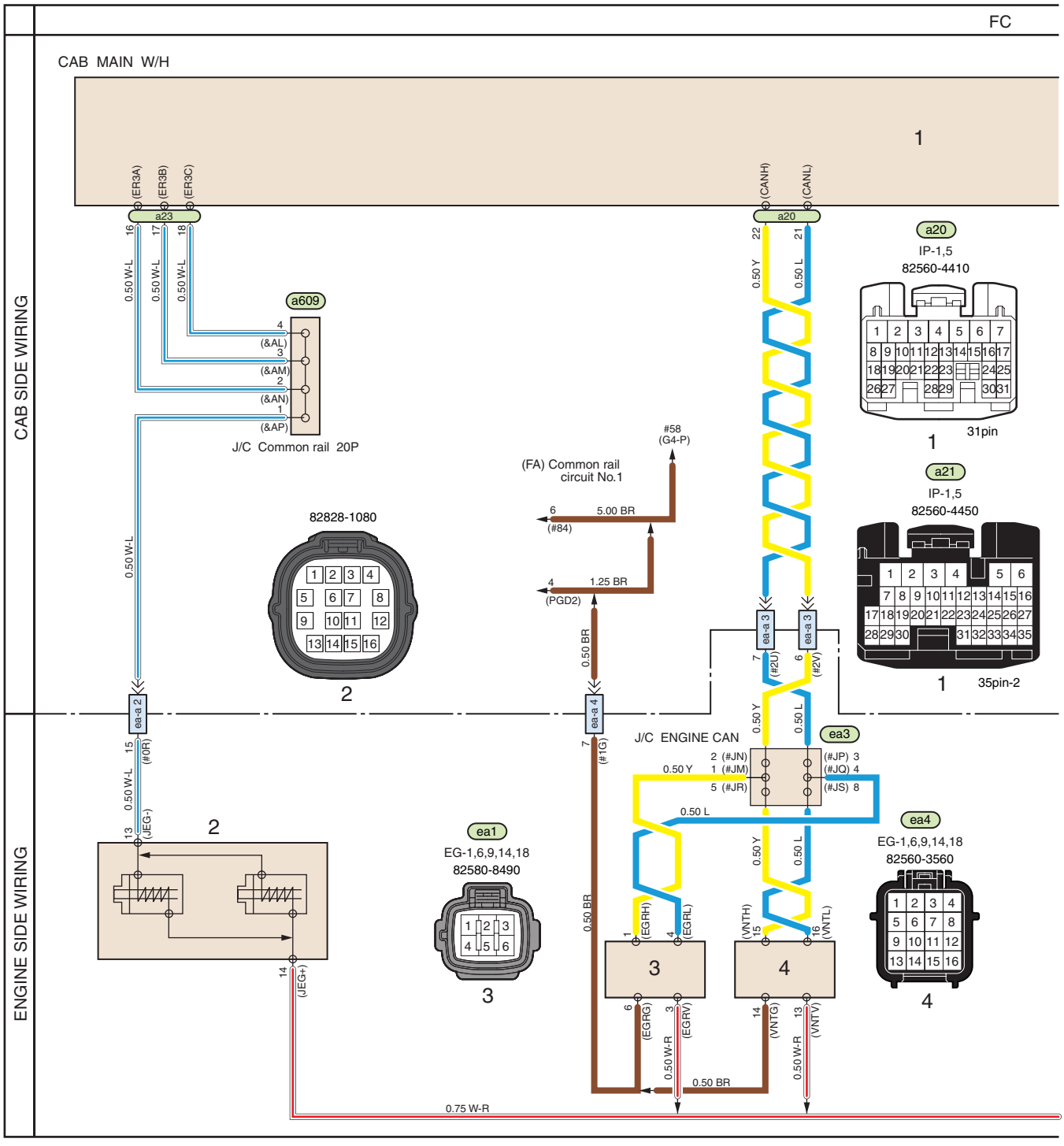

SHTS12Z160200093

FC. COMMON RAIL CIRCUIT No.2 (EGR AND VGT)

1. Common rail ECU
2. JAKE EGR (Solenoid valve)
3. EGR control
4. VNT control
5. Turbocharger revolution sensor
6. EGR coolant temperature sensor
7. Air flow sensor
8. DC/DC converter (Common rail)

https://truckmanualshub.com/

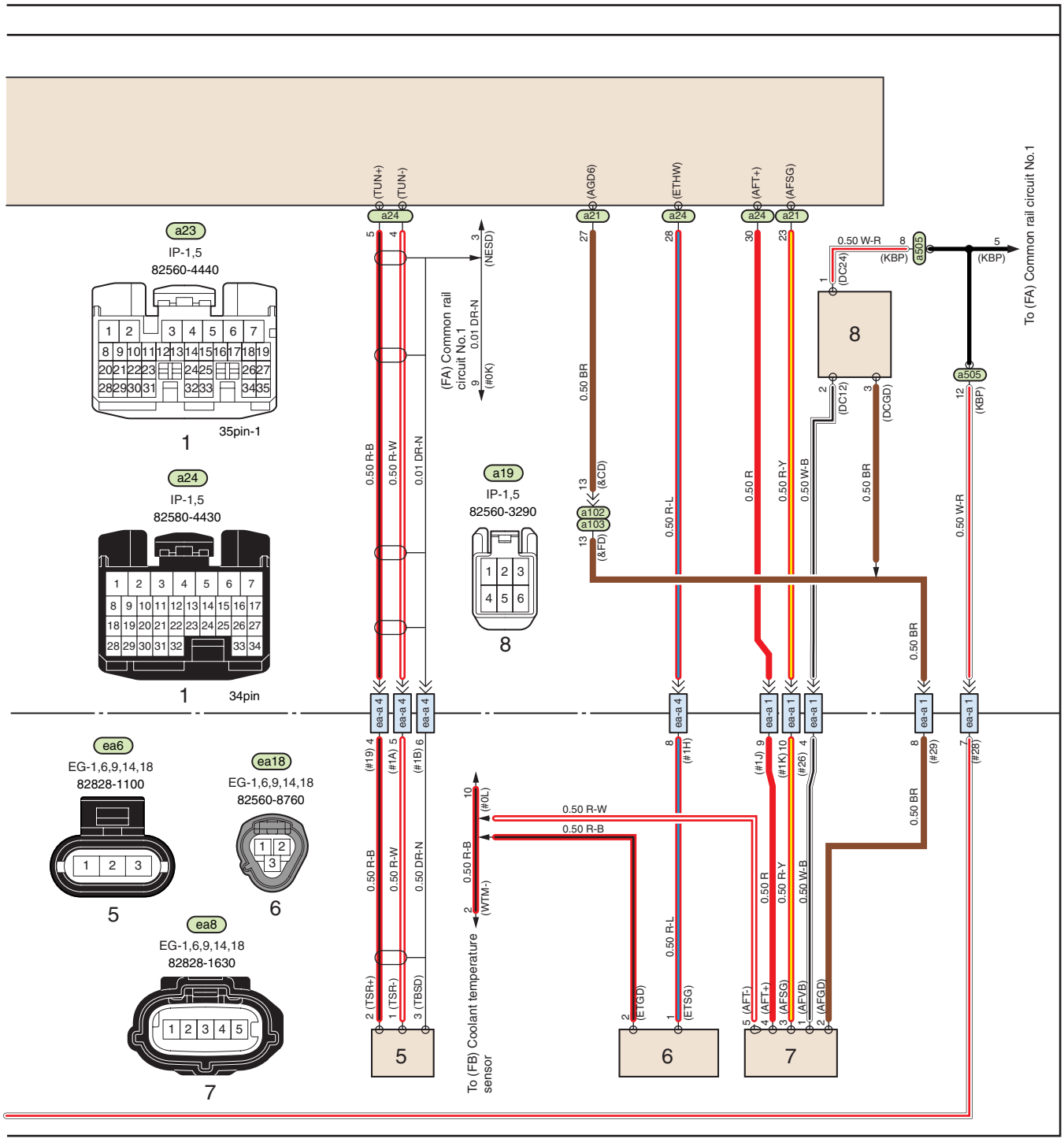

SHTS12Z160200094

https://truckmanualshub.com/

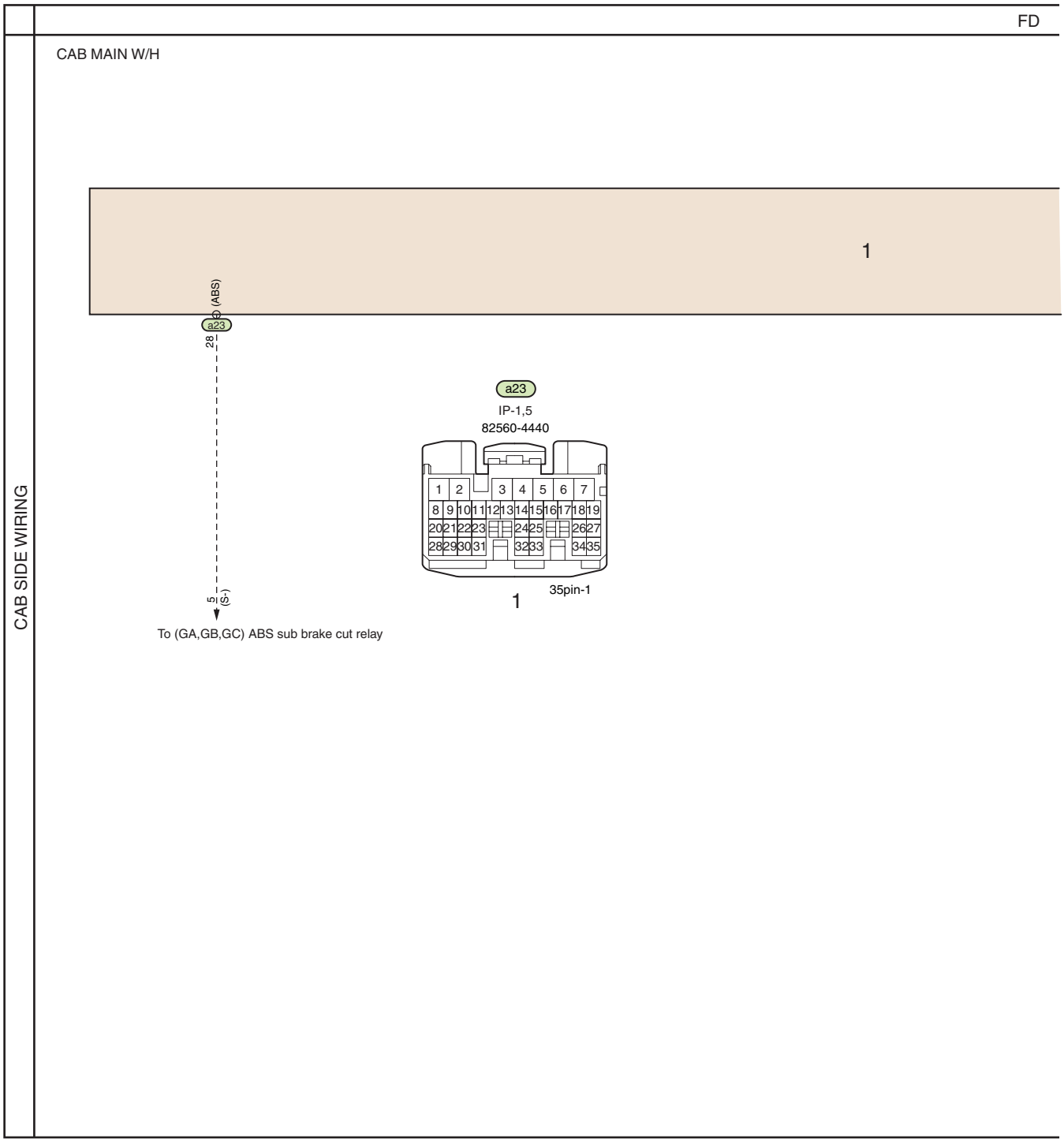

SHTS12Z160200095

FD. COMMON RAIL CIRCUIT No.3 (ABS)

1. Common rail ECU

https://truckmanualshub.com/

SHTS12Z160200096

https://truckmanualshub.com/

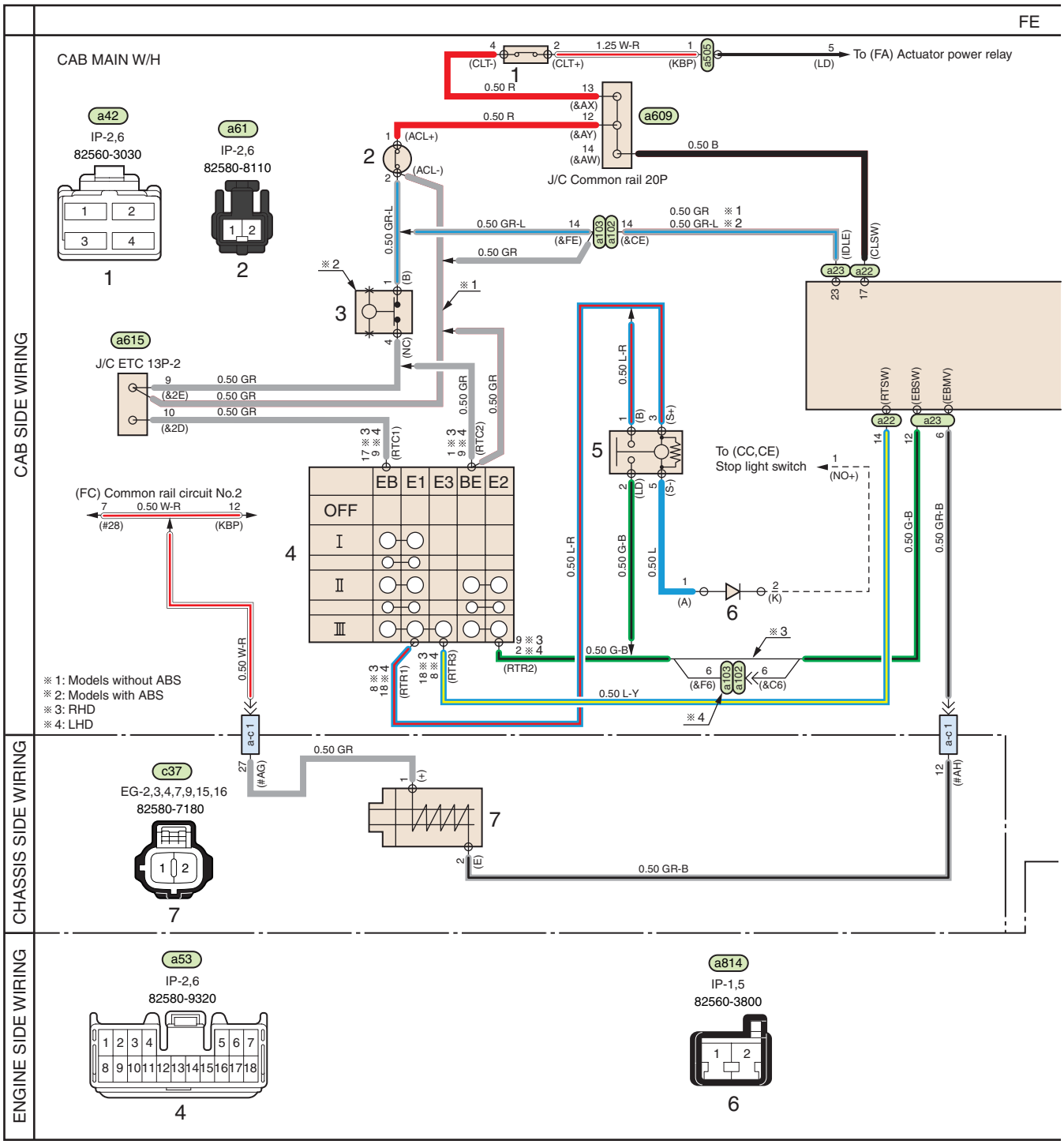

SHTS12Z160200097

FE. COMMON RAIL CIRCUIT No.9 (ENGINE RETARDER)

1. Clutch switch
2. Accelerator switch
3. ABS sub brake cut relay
4. Wiper and retarder switch
5. Brake blending relay
6. Brake blending diode
7. Exhaust brake magnetic valve
8. Exhaust brake check switch
9. Common rail ECU
10. JAKE retarder (Solenoid valve)

https://truckmanualshub.com/

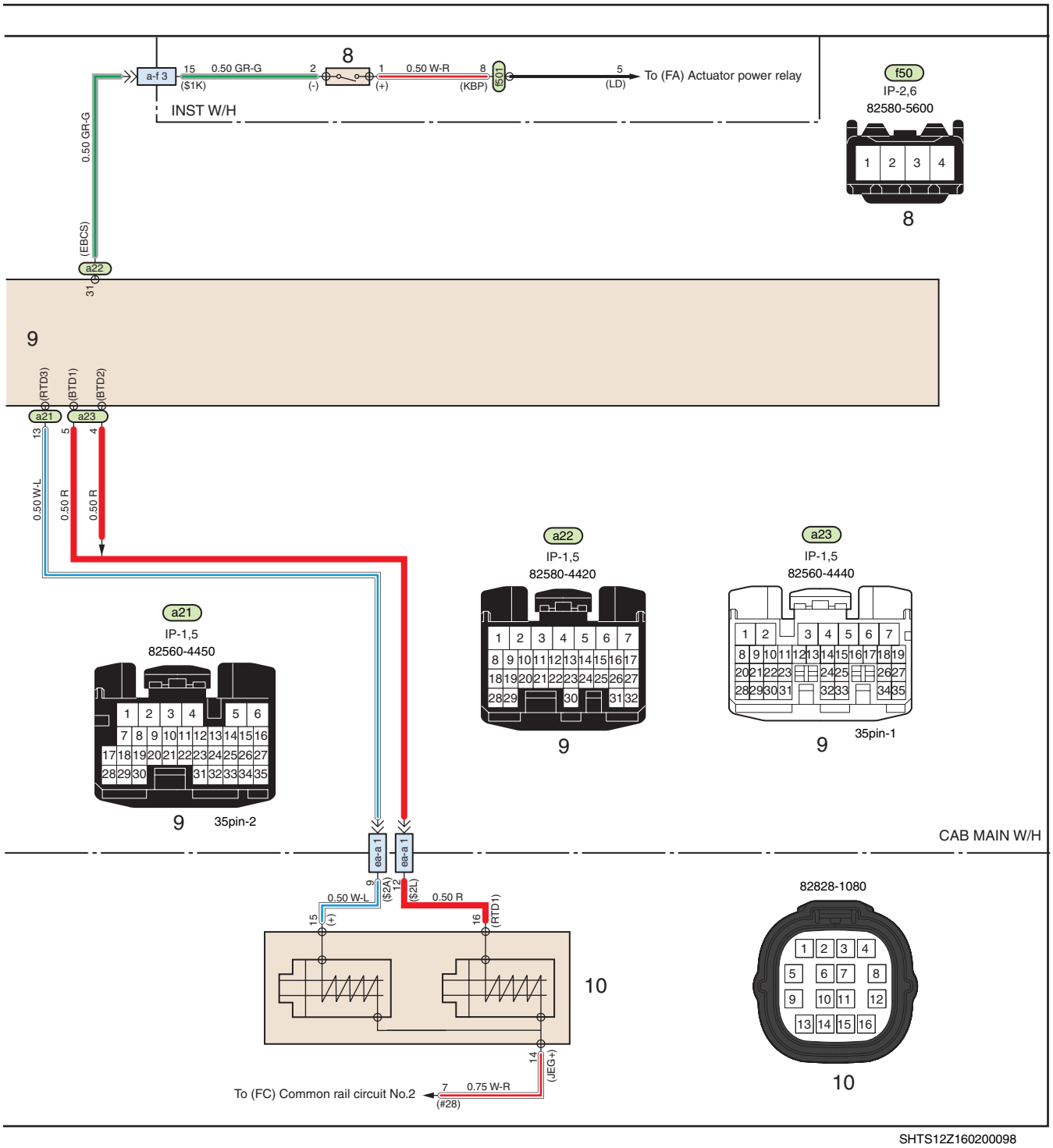

SHTS12Z160200098

https://truckmanualshub.com/

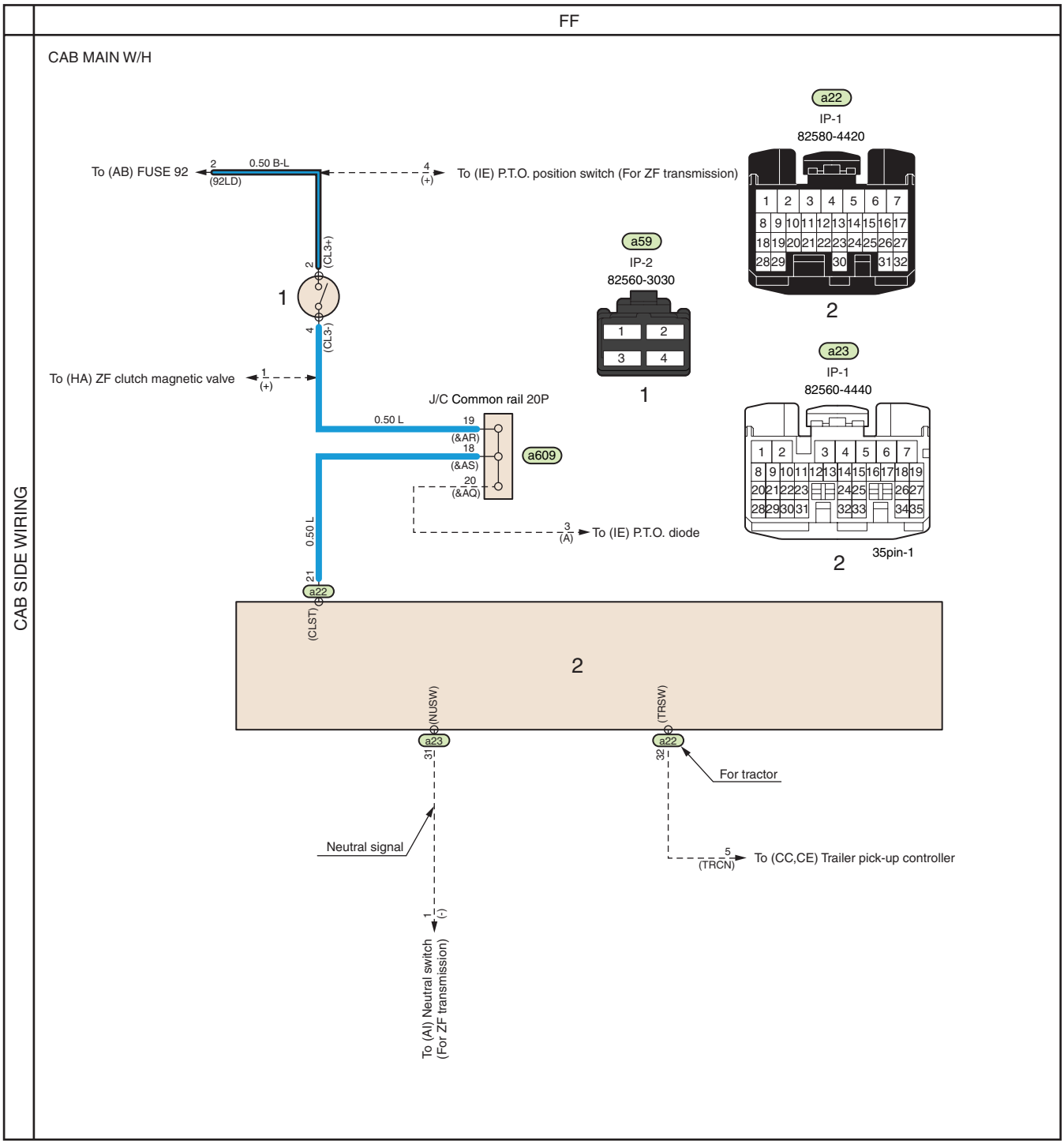

SHTS12Z160200099

FF. COMMON RAIL CIRCUIT No.11 (SPEED LIMITER)

1. Clutch stroke switch
2. Common rail ECU

https://truckmanualshub.com/

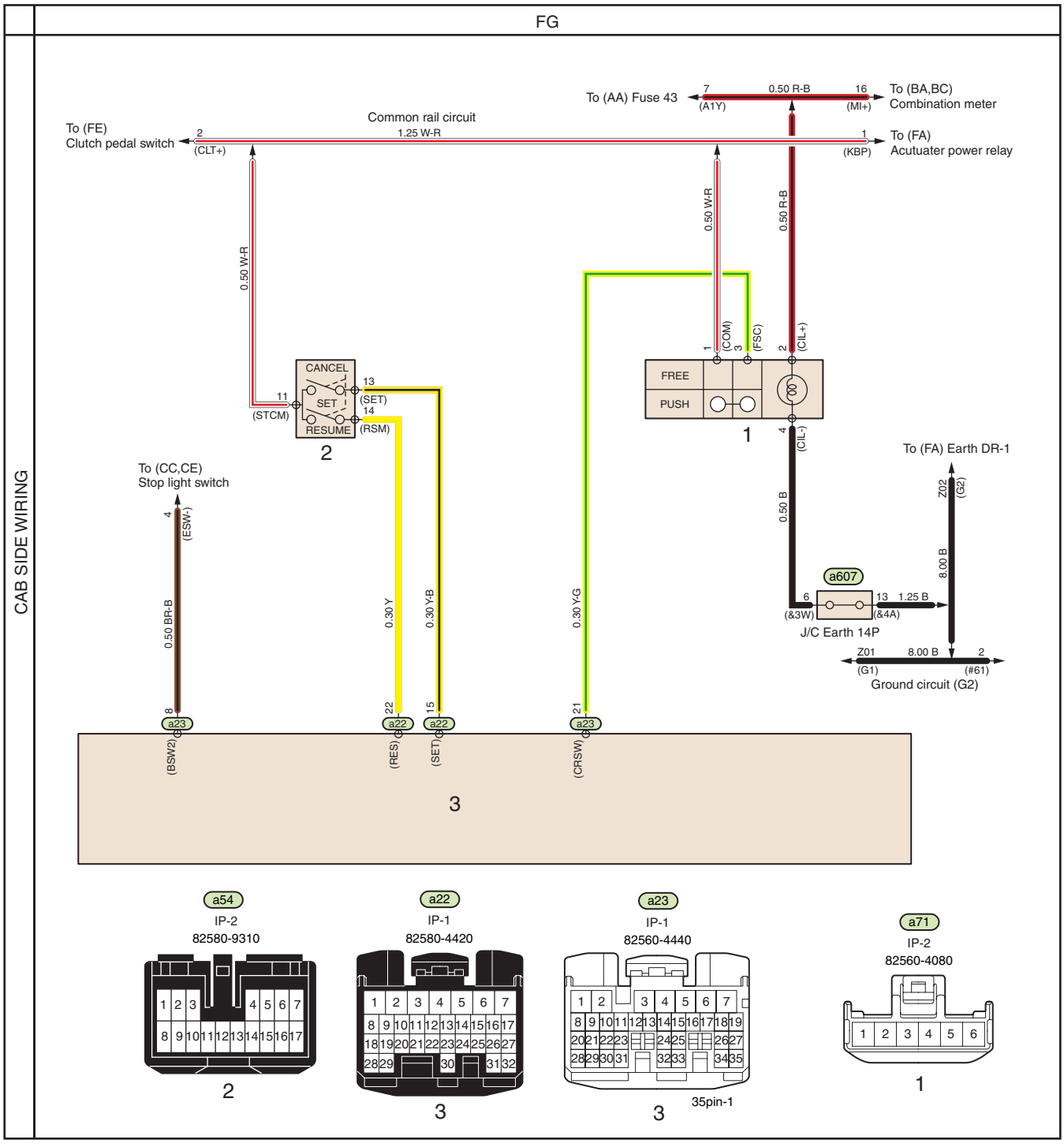

SHTS12Z160200100

FG. COMMON RAIL CIRCUIT No.13 (AUTO CRUISE)

1. Auto cruise main switch
2. Light and turn switch
3. Common rail ECU

https://truckmanualshub.com/

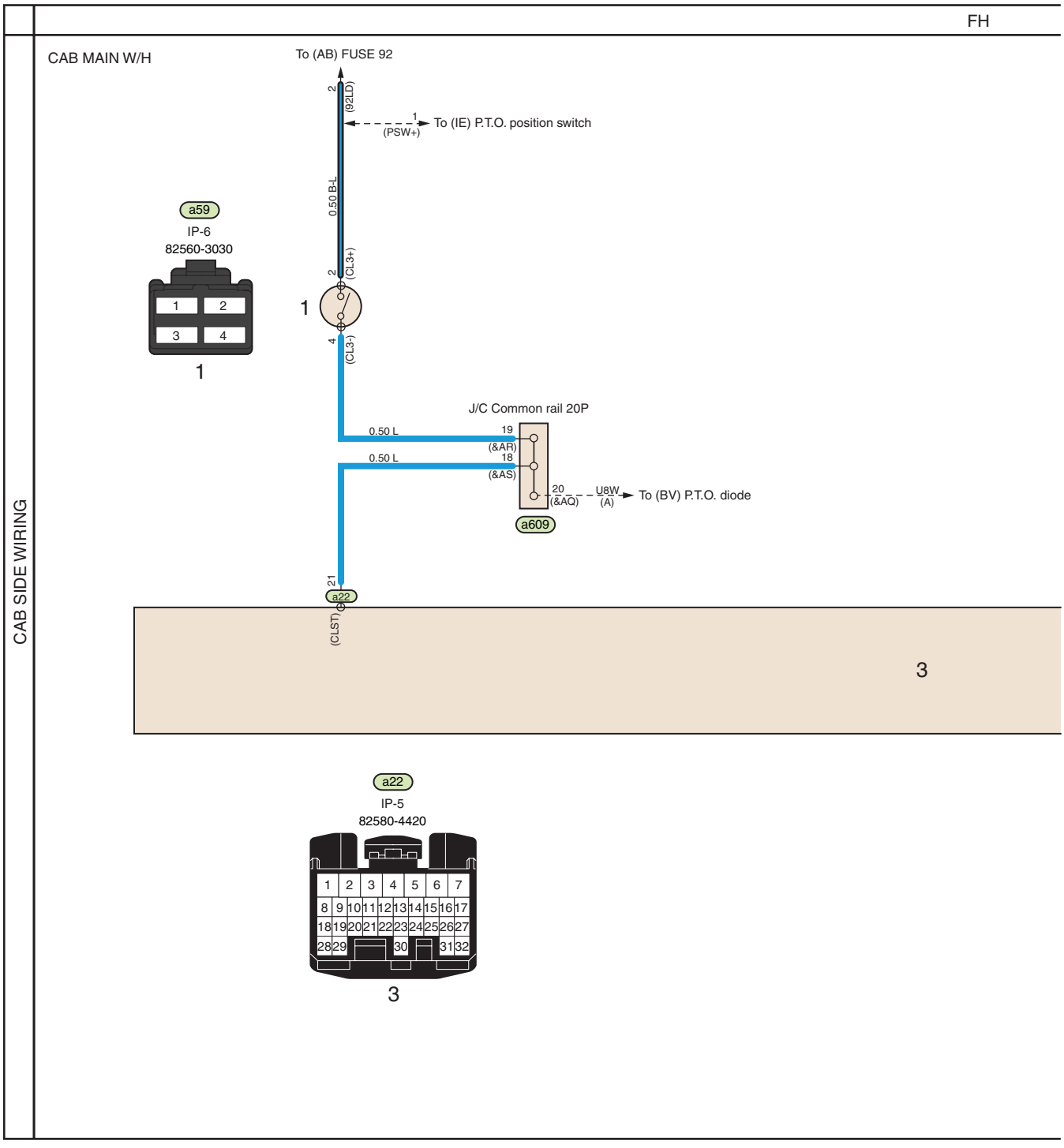

SHTS12Z160200101

FH. COMMON RAIL CIRCUIT No.14 (STARTING IDLE UP CONTROL)

1. Clutch stroke switch
2. Starting idle up switch
3. Common rail ECU

https://truckmanualshub.com/

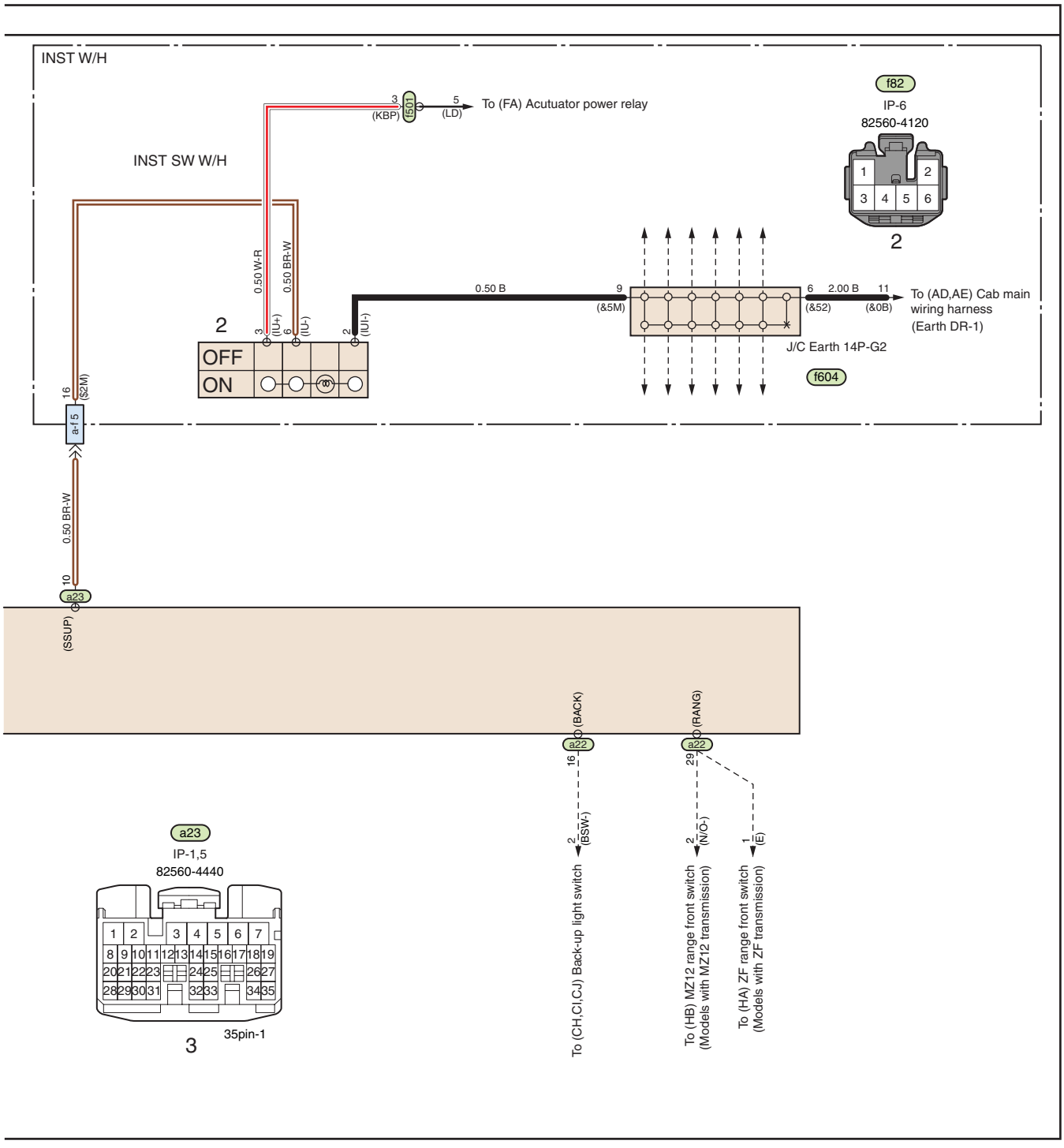

SHTS12Z160200102

https://truckmanualshub.com/

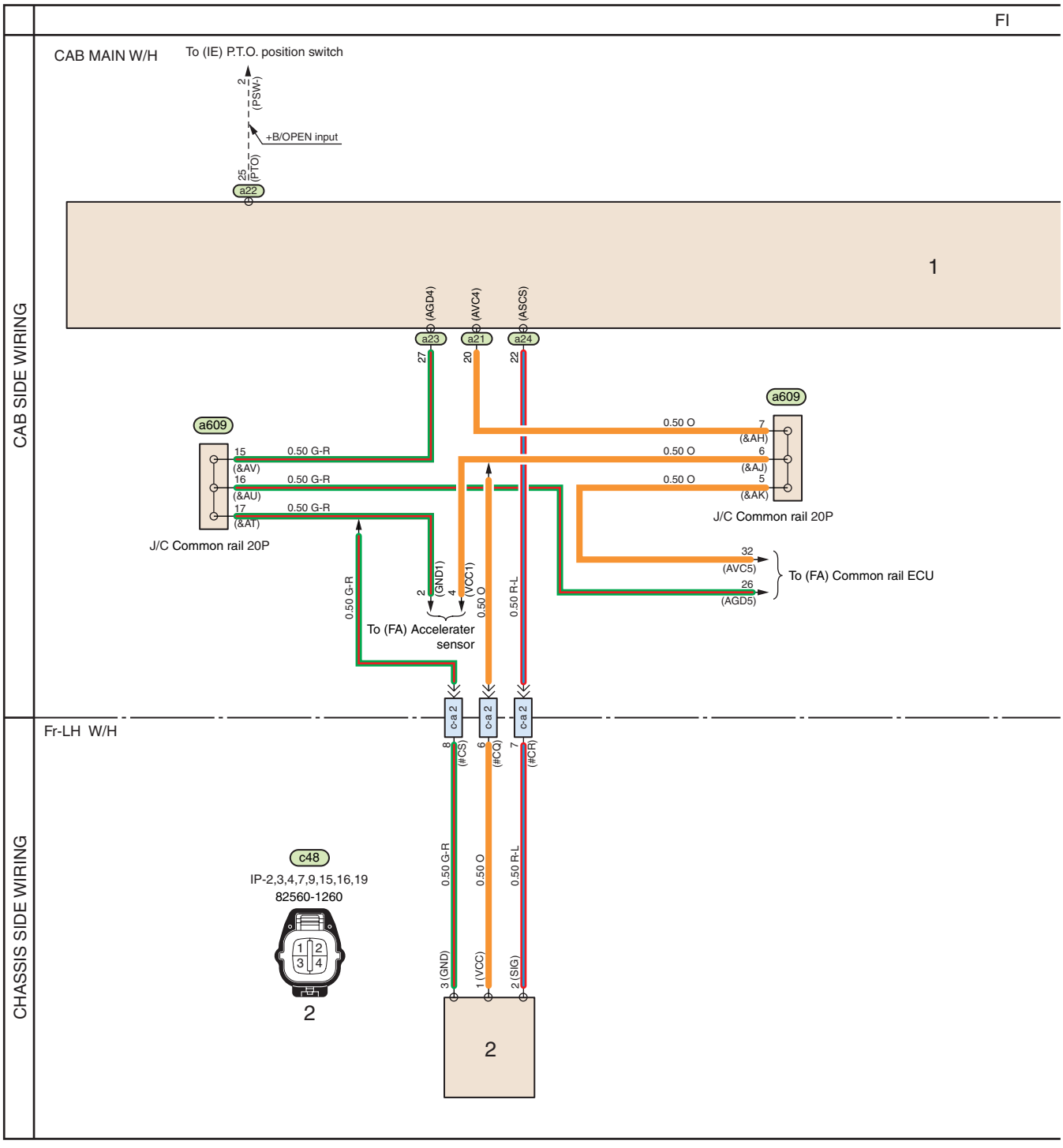

SHTS12Z160200103

FI. COMMON RAIL CIRCUIT No.15 (P.T.O.)

1. Common rail ECU
2. P.T.O. accelerator sensor
3. Engine stop switch

https://truckmanualshub.com/

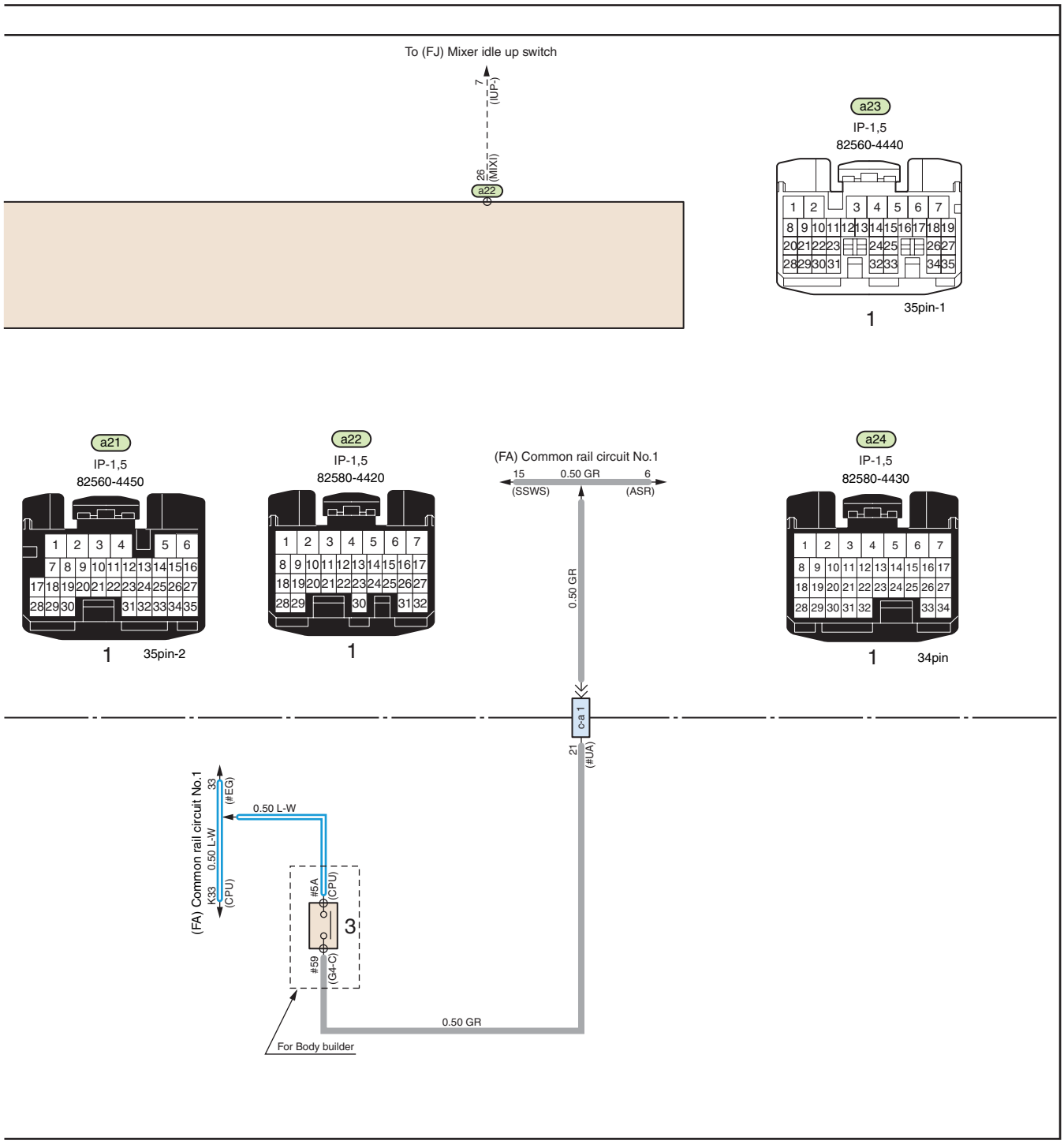

SHTS12Z160200104

https://truckmanualshub.com/

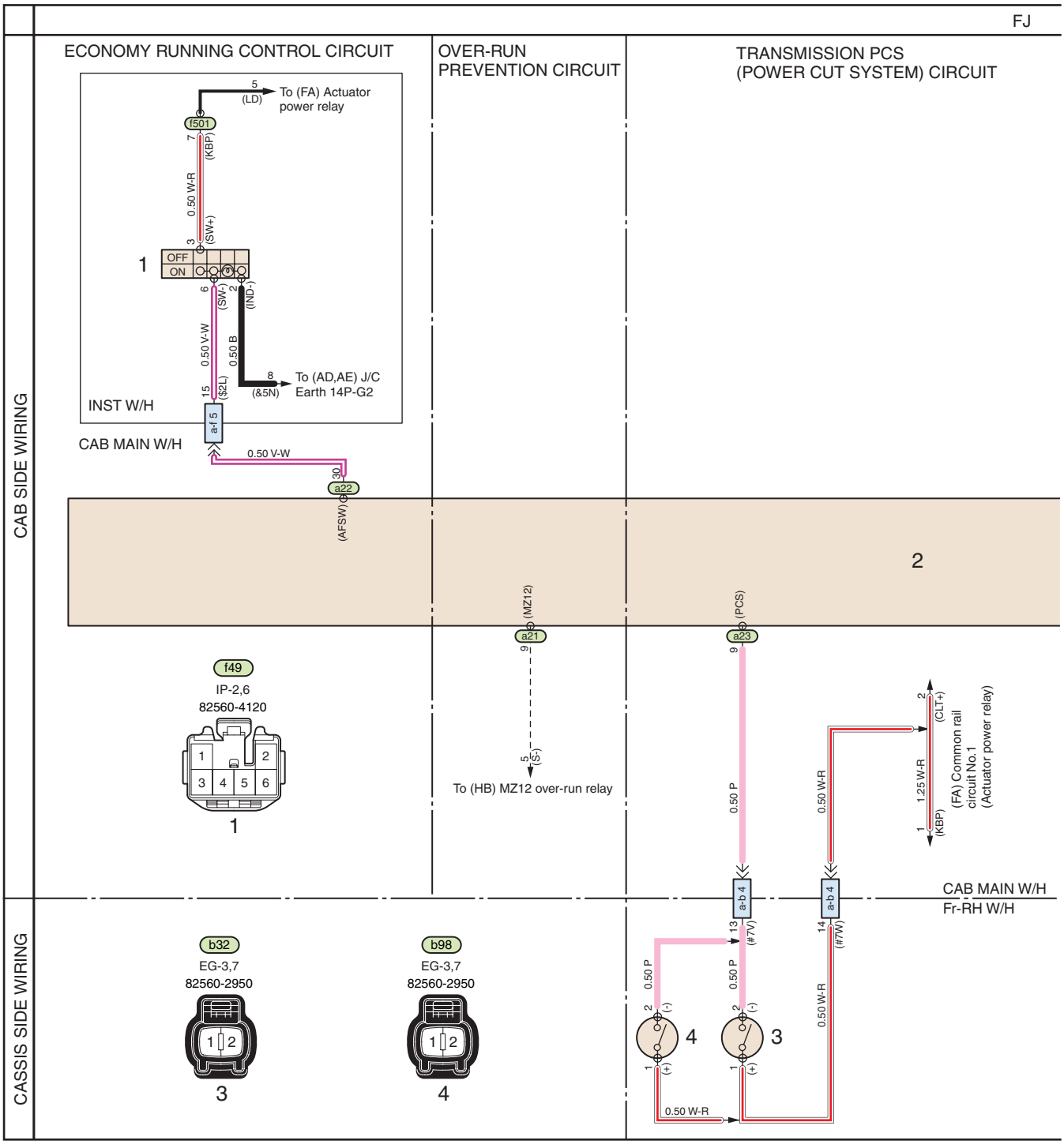

SHTS12Z160200105

FJ. COMMON RAIL CIRCUIT No.17 (ETC.)

1. Economy running switch
2. Common rail ECU
3. Transmission PCS (Power cut system) switch No.1
4. Transmission PCS (Power cut system) switch No.2
5. Mixer idle up switch
6. Chill car idle up

https://truckmanualshub.com/

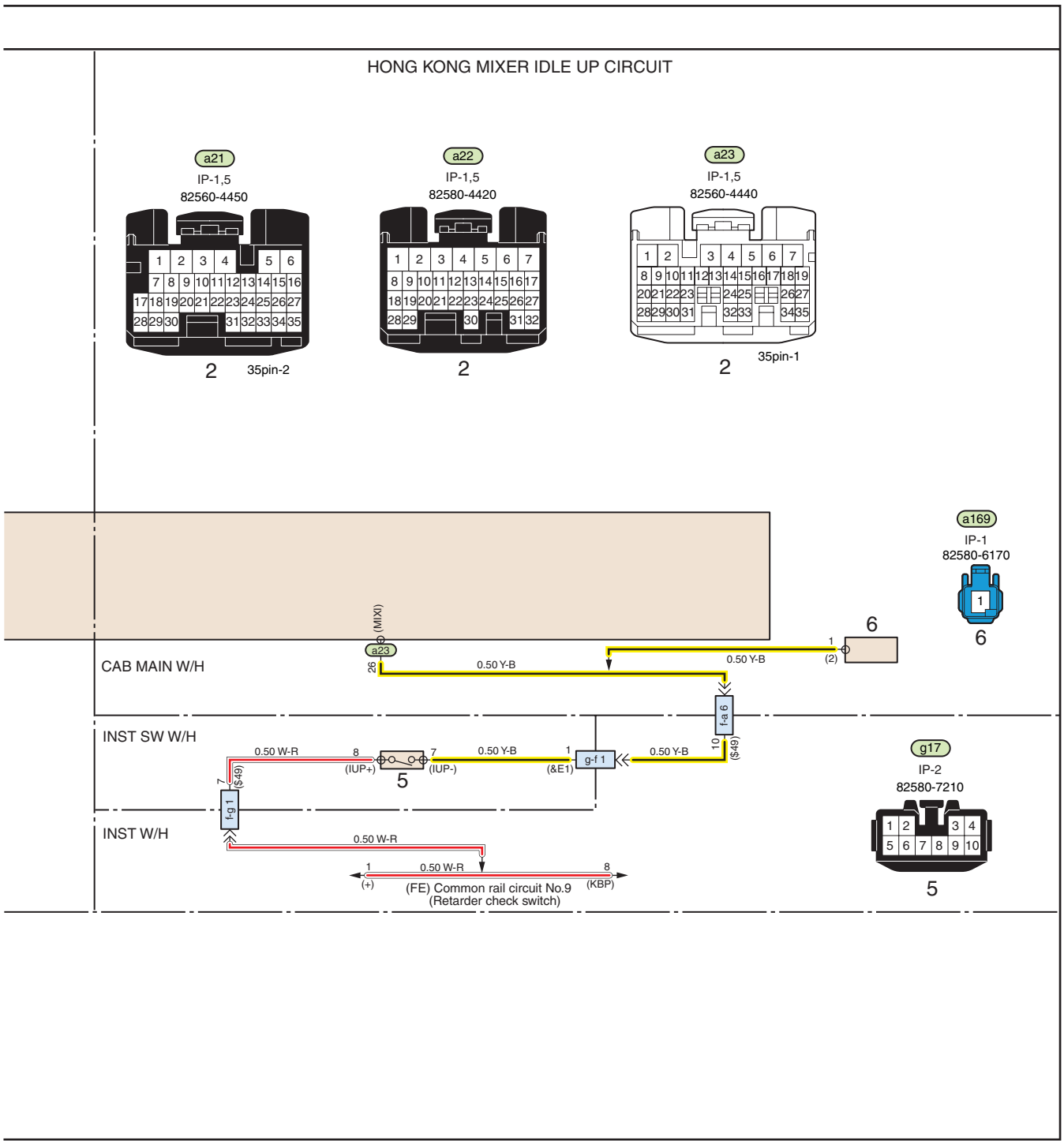

SHTS12Z160200106

https://truckmanualshub.com/

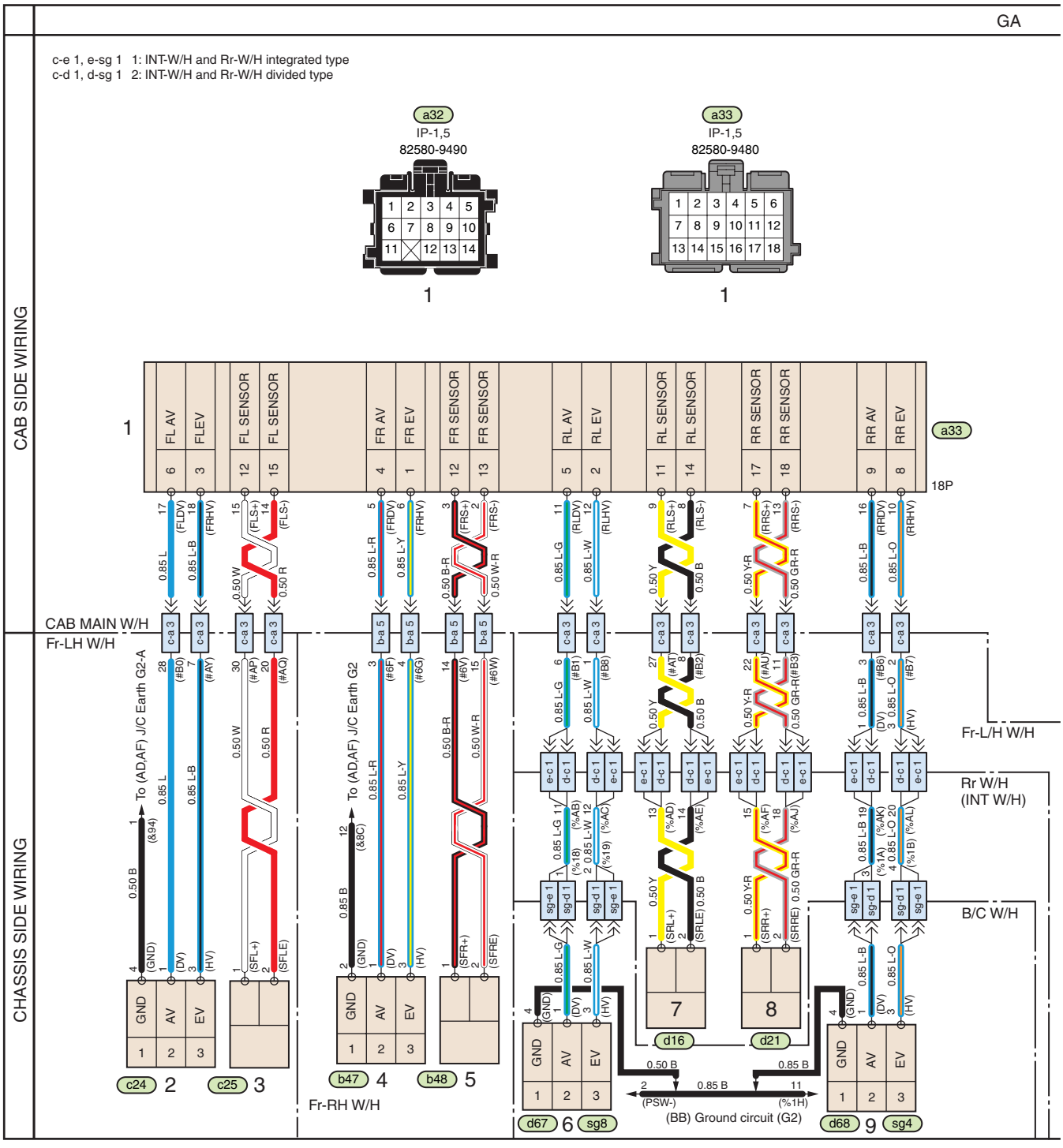

SHTS12Z160200107

GA. ABS CIRCUIT (EXCEPT SEMI-TRACTOR) (EXCEPT AUSTRALIA AND NEW ZEALAND MODELS)

1. ABS ECU
2. ABS front modulator LH
3. ABS front wheel sensor LH
4. ABS front modulator RH
5. ABS front wheel sensor RH
6. ABS rear modulator LH
7. ABS rear wheel sensor LH
8. ABS rear wheel sensor RH
9. ABS rear modulator RH
10. ABS sub brake cut relay
11. ABS diagnosis switch

https://truckmanualshub.com/

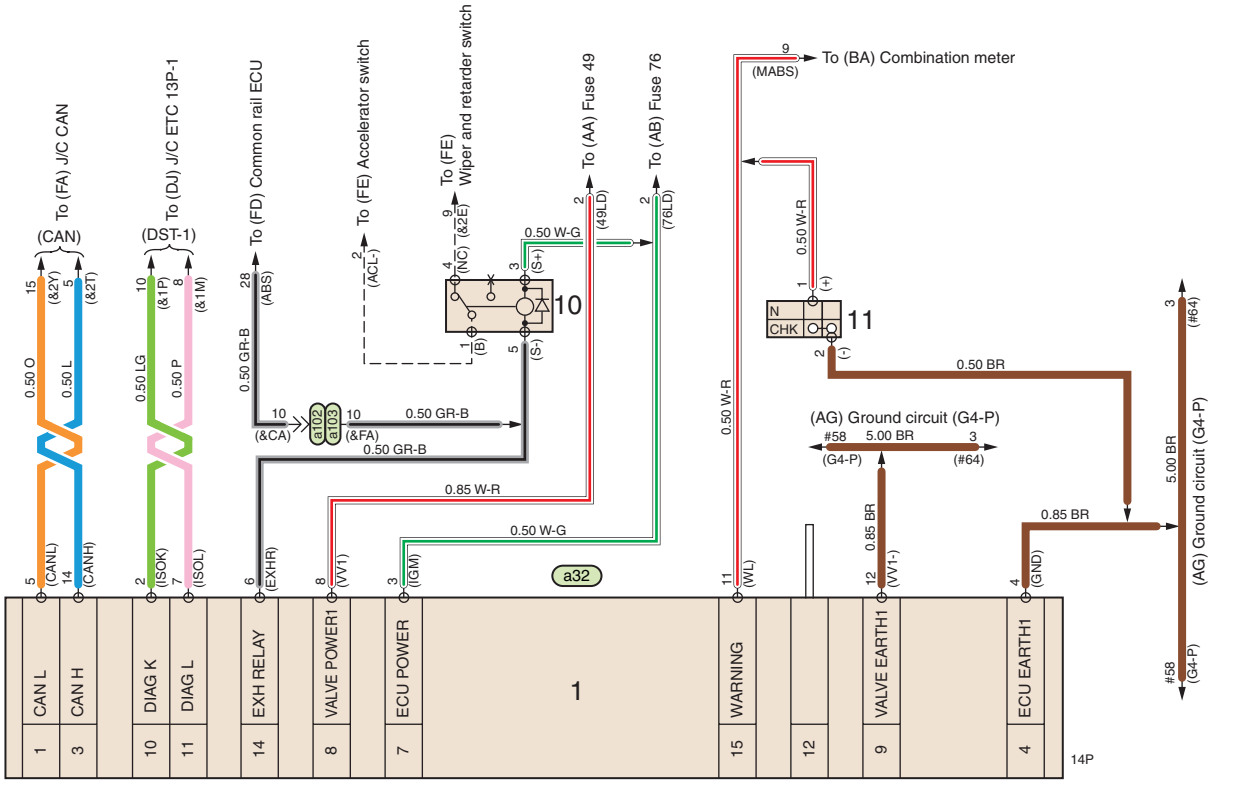

※1: Ireland
※2: Hong Kong, Taiwan

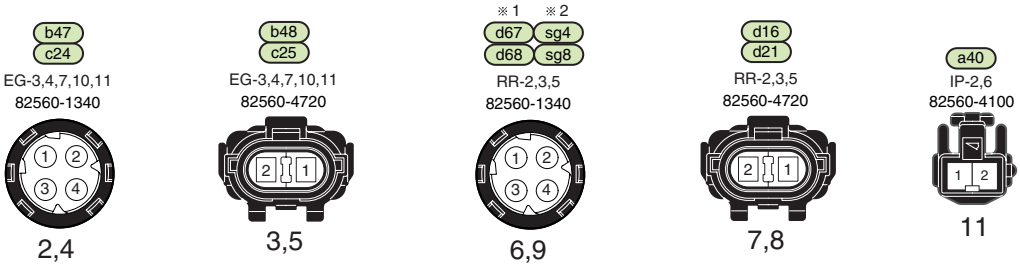

SHTS12Z160200108

https://truckmanualshub.com/

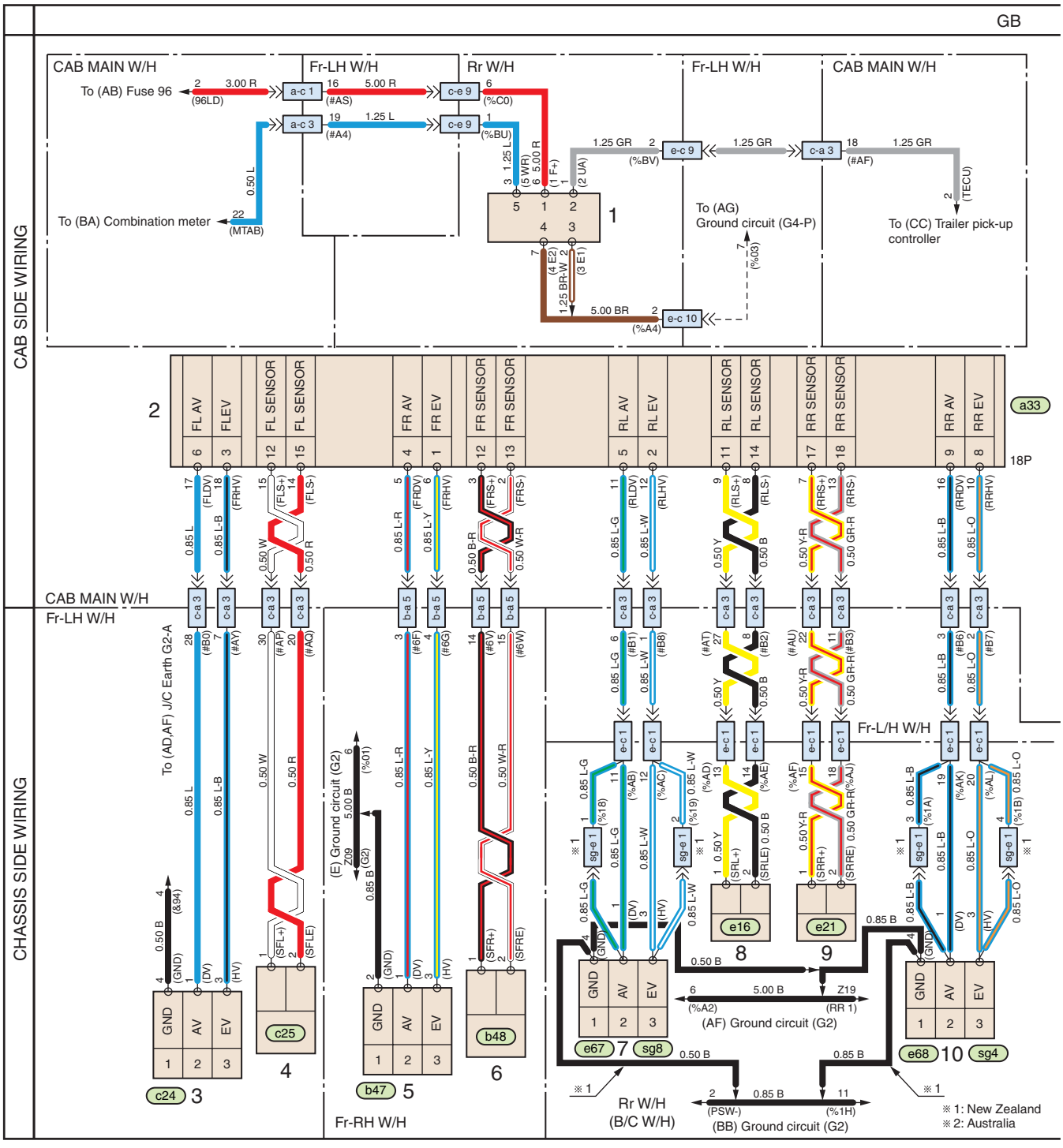

SHTS12Z160200109

GB. ABS CIRCUIT (EXCEPT SEMI-TRACTOR) (FOR AUSTRALIA AND NEW ZEALAND MODELS)

1. ABS trailer socket
2. ABS ECU
3. ABS front modulator LH
4. ABS front wheel sensor LH
5. ABS front modulator RH
6. ABS front wheel sensor RH
7. ABS rear modulator LH
8. ABS rear wheel sensor LH
9. ABS rear wheel sensor RH
10. ABS rear modulator RH
11. ABS sub brake cut relay
12. ABS diagnosis switch

https://truckmanualshub.com/

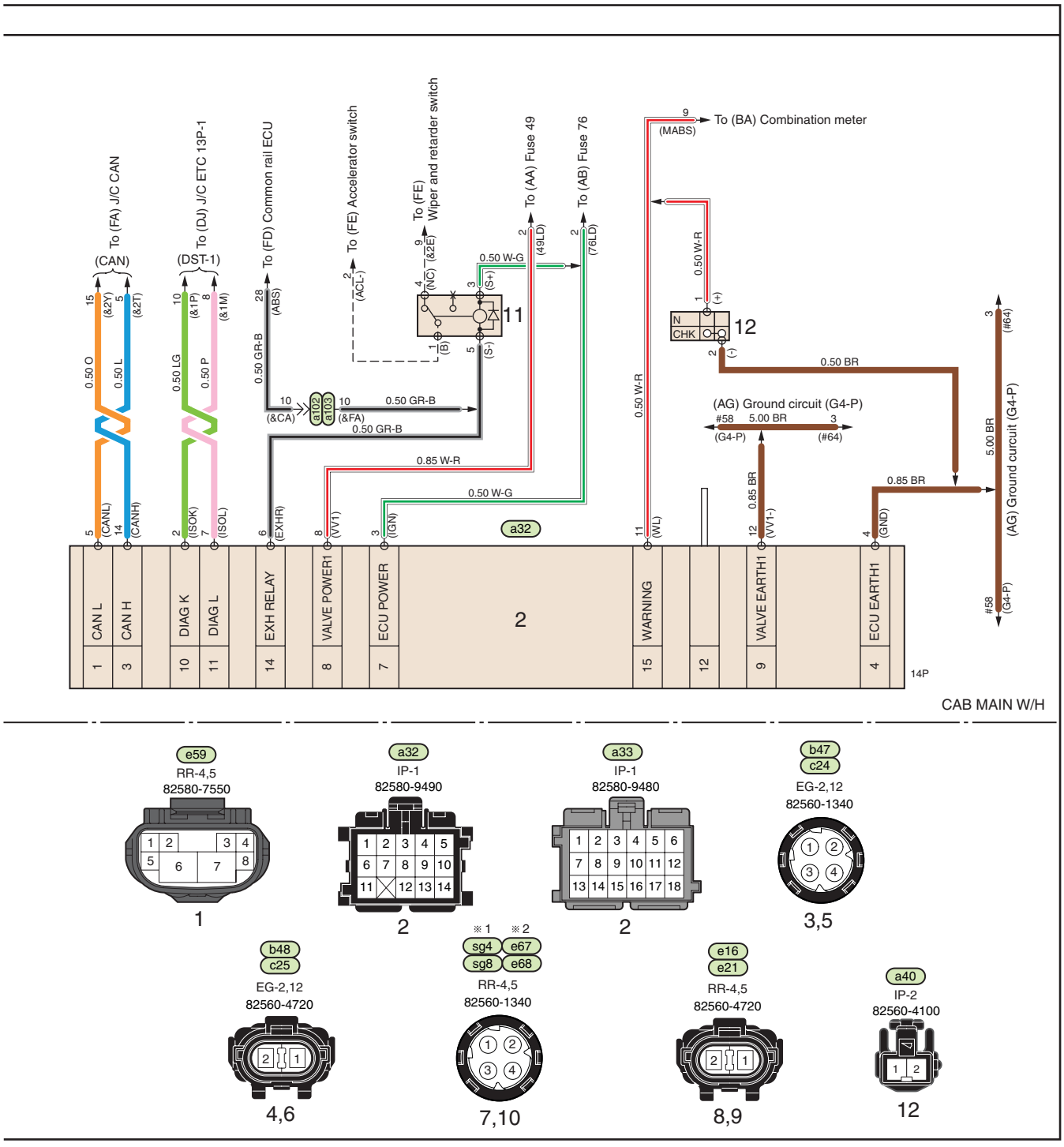

SHTS12Z160200110

https://truckmanualshub.com/

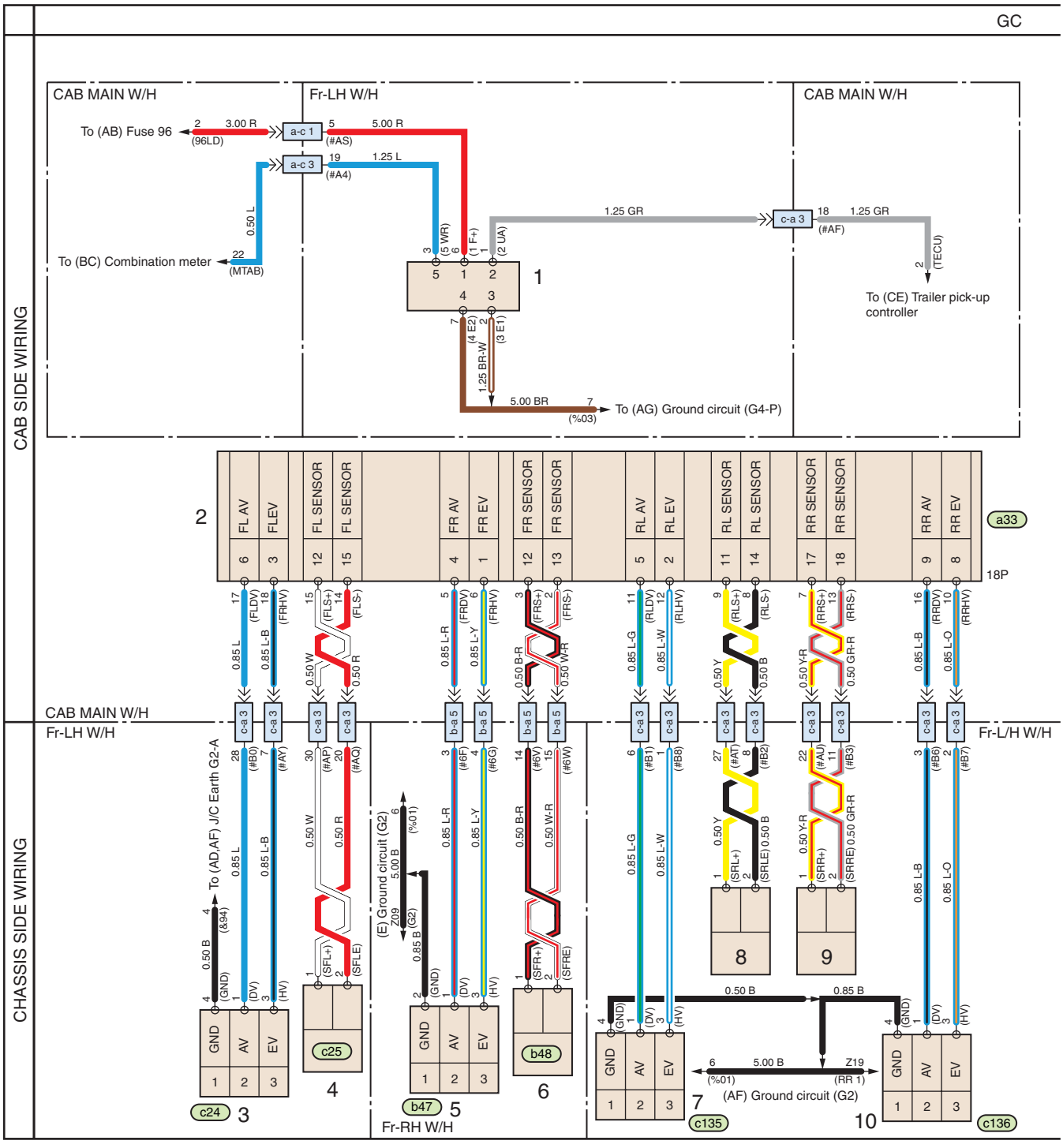

SHTS12Z160200111

GC. ABS CIRCUIT (FOR SEMI-TRACTOR)

1. ABS trailer socket
2. ABS ECU
3. ABS front modulator LH
4. ABS front wheel sensor LH
5. ABS front modulator RH
6. ABS front wheel sensor RH
7. ABS rear modulator LH
8. ABS rear wheel sensor LH
9. ABS rear wheel sensor RH
10. ABS rear modulator RH
11. ABS sub brake cut relay
12. ABS diagnosis switch

https://truckmanualshub.com/

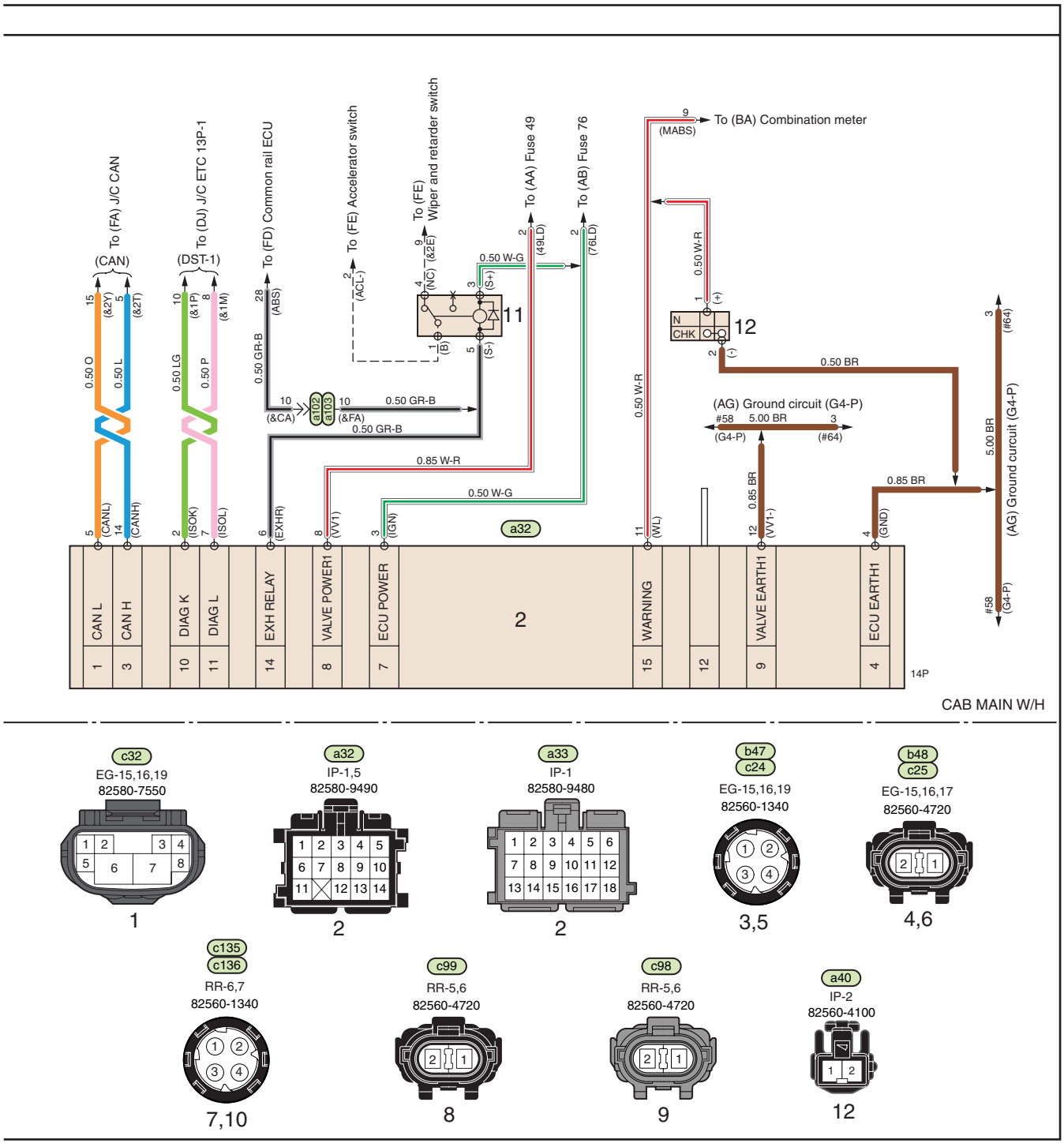

SHTS12Z160200112

https://truckmanualshub.com/

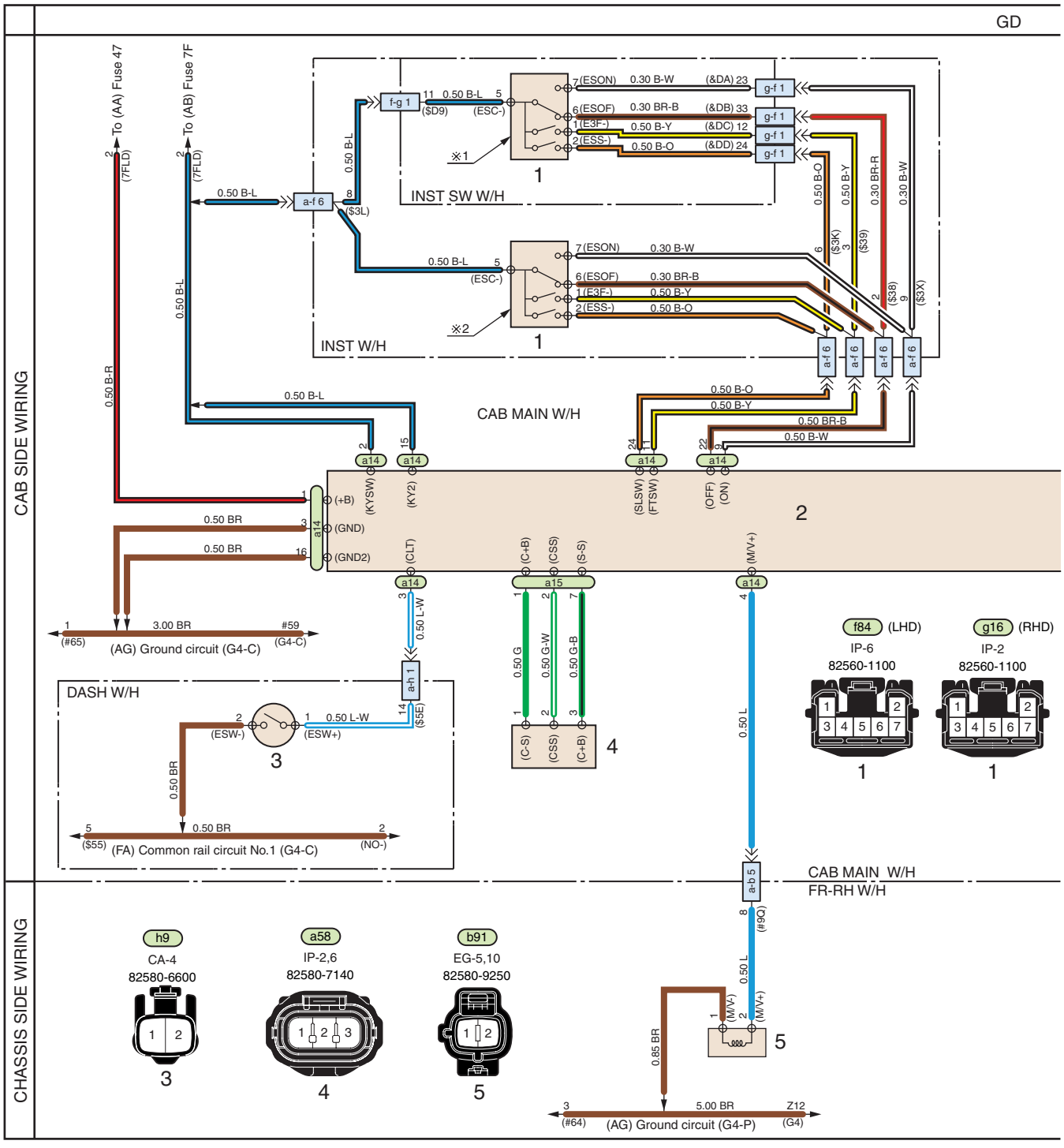

SHTS12Z160200113

GD. ES START CIRCUIT

1. ES start main switch
2. ES start ECU
3. Clutch fluid pressure switch
4. Clutch stroke sensor
5. ES start control valve

https://truckmanualshub.com/

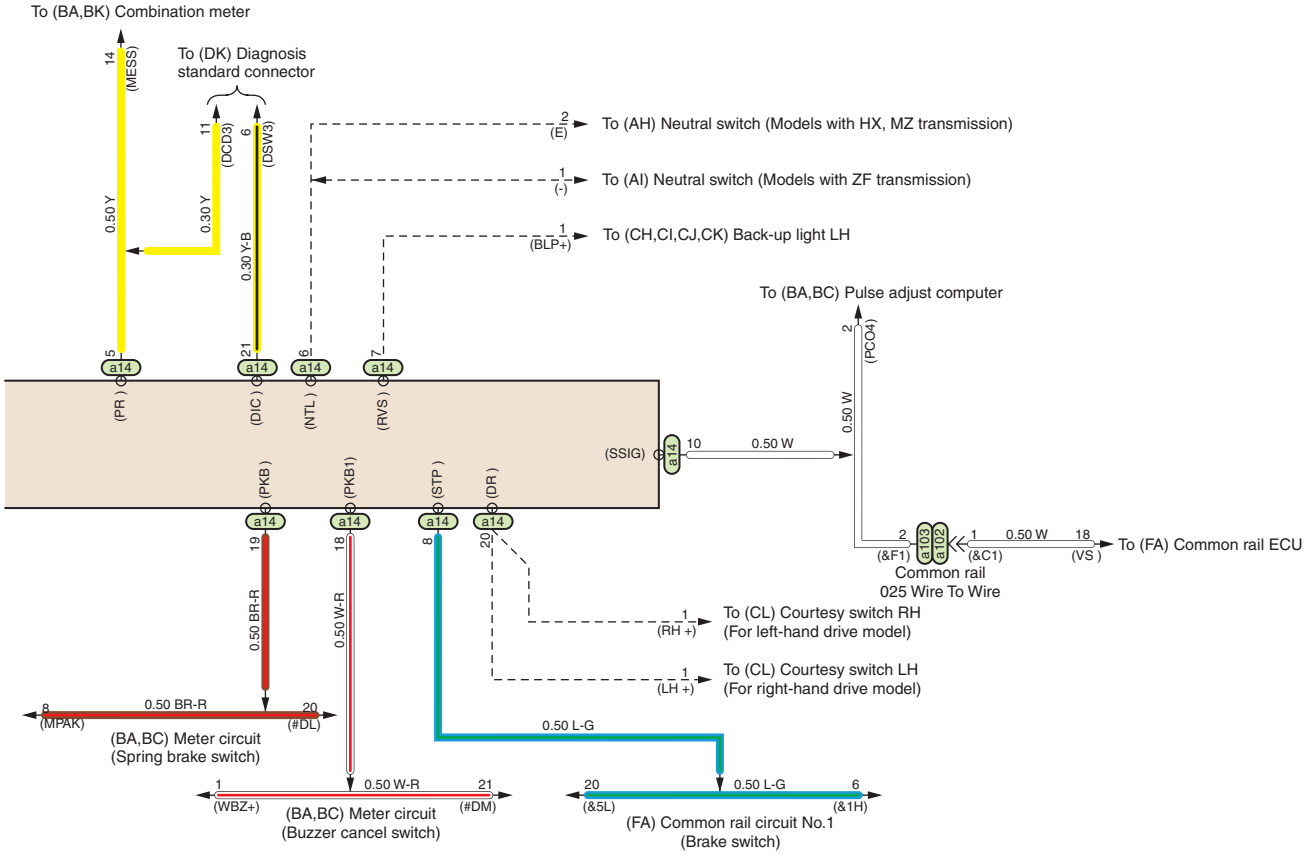

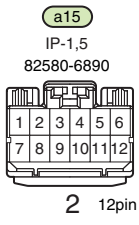

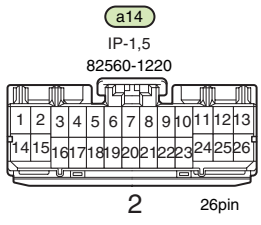

SHTS12Z160200114

https://truckmanualshub.com/

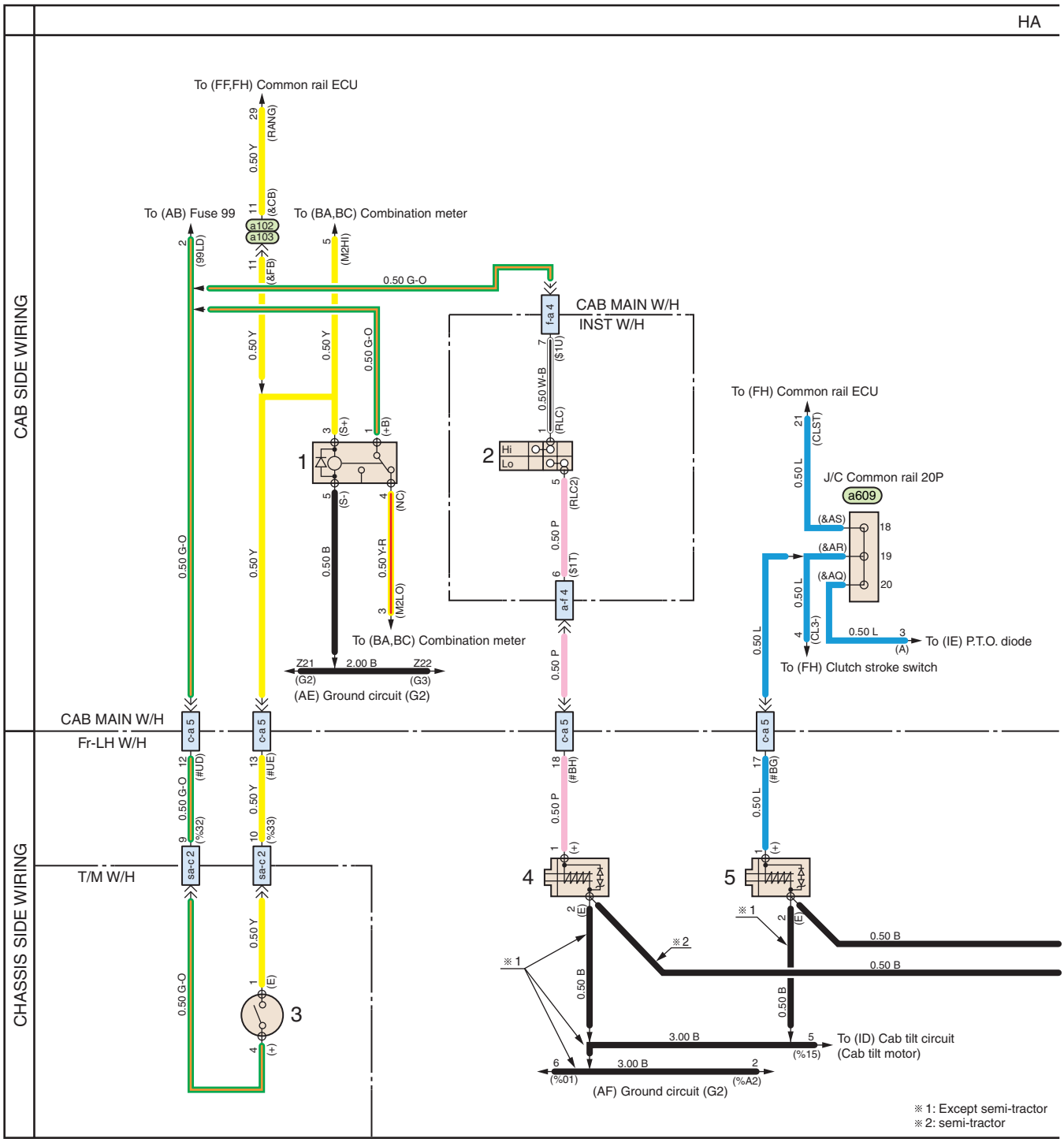

HA. ZF TRANSMISSION CIRCUIT

1. ZF range relay
2. ZF splitter change switch
3. ZF range Hi switch
4. ZF Hi-Lo magnetic valve
5. ZF Clutch magnetic valve

https://truckmanualshub.com/

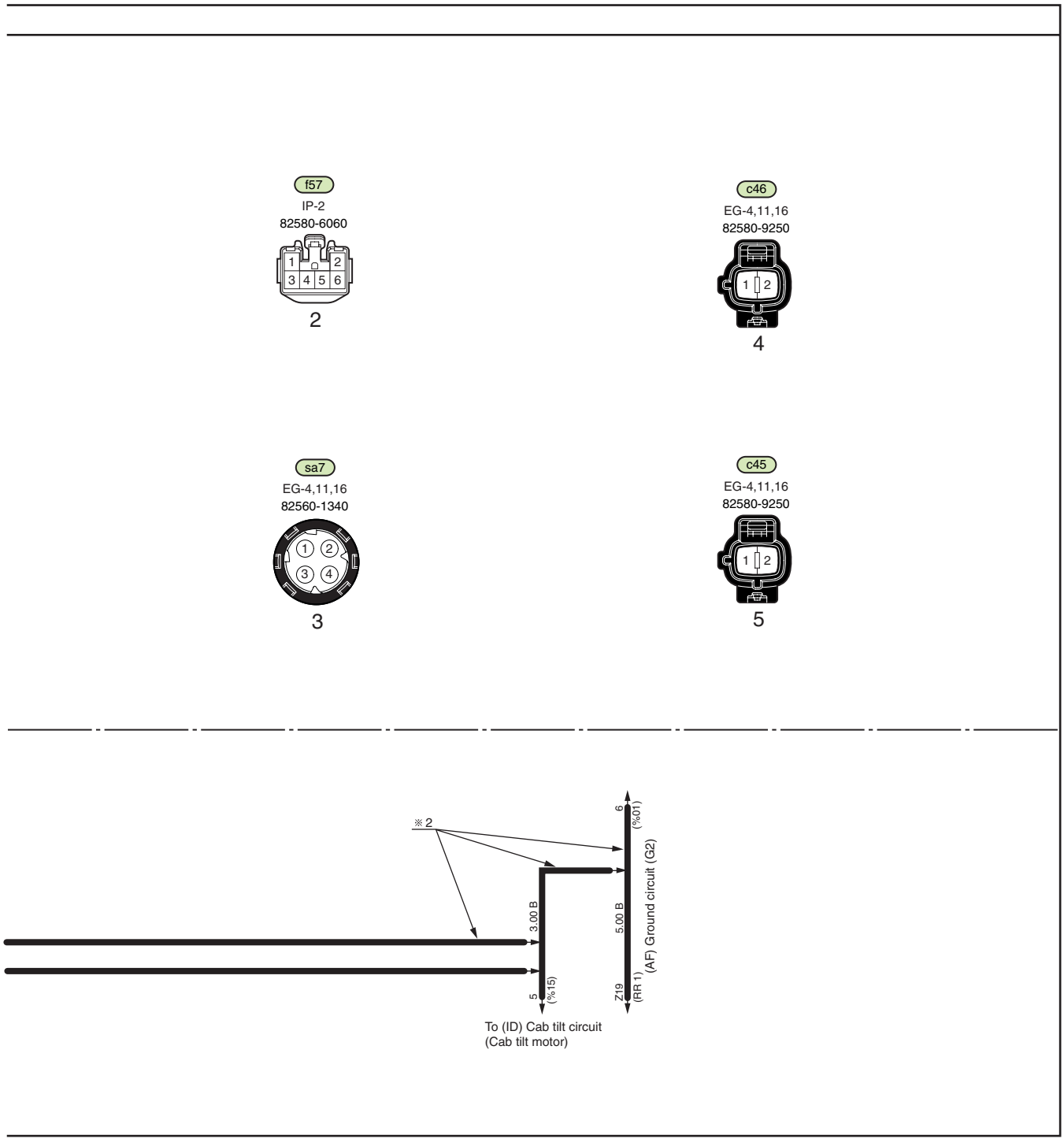

SHTS12Z160200116

https://truckmanualshub.com/

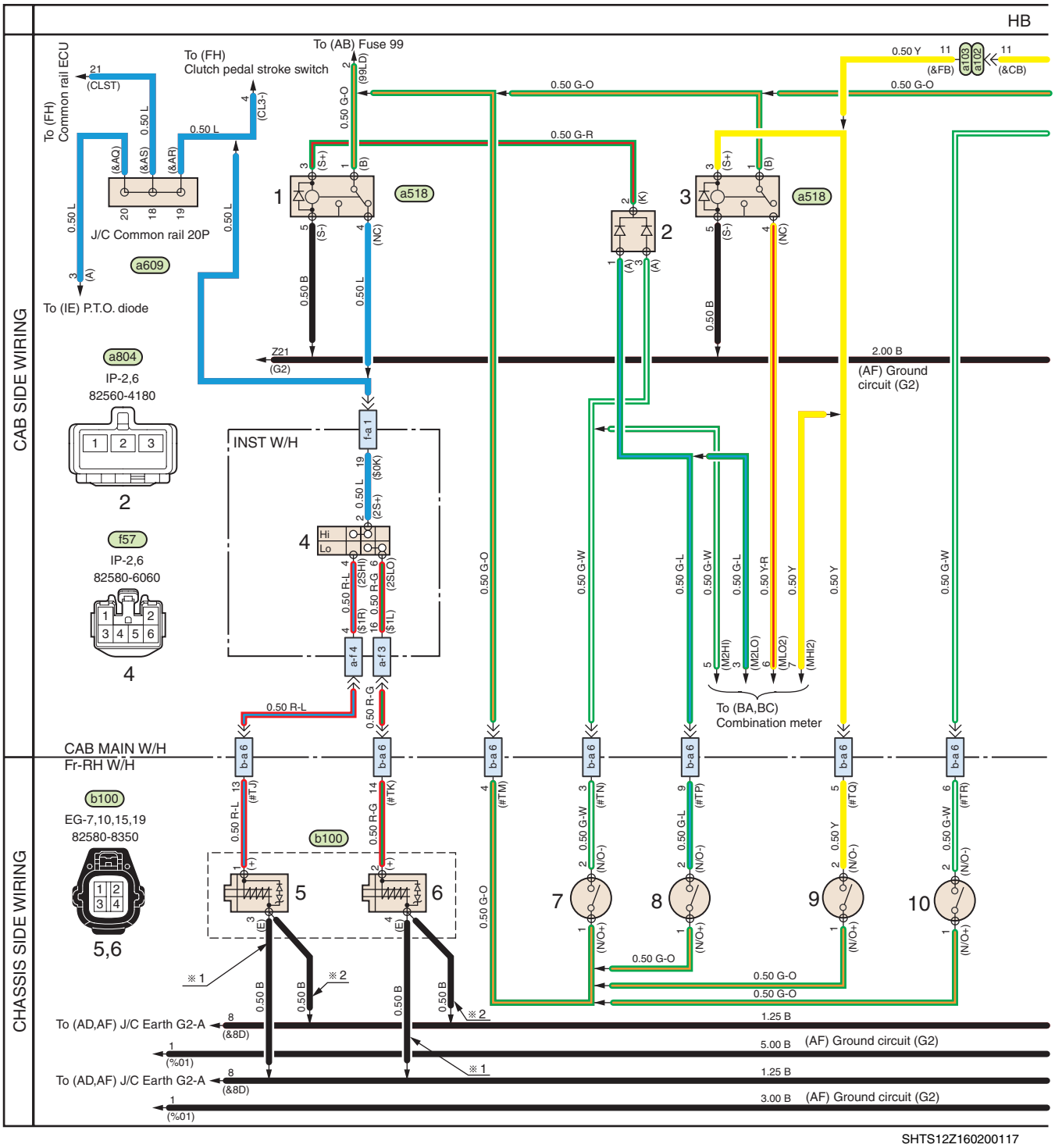

SHTS12Z160200117

HB. MZ TRANSMISSION CIRCUIT

1. MZ12 splitter relay
2. MZ12 transmission diode
3. MZ12 range relay
4. MZ12 range and splitter change switch
5. MZ12 splitter Hi magnetic valve No.1
6. MZ12 splitter Lo magnetic valve No.2
7. MZ12 splitter front switch
8. MZ12 splitter rear switch
9. MZ12 range rear switch
10. MZ12 range front switch
11. MZ12 power shift relay
12. Shift buzzer
13. MZ12 over-run relay
14. MZ12 power shift magnetic valve
15. MZ12 range Hi magnetic valve No.2
16. MZ12 range Lo magnetic valve No.3

https://truckmanualshub.com/

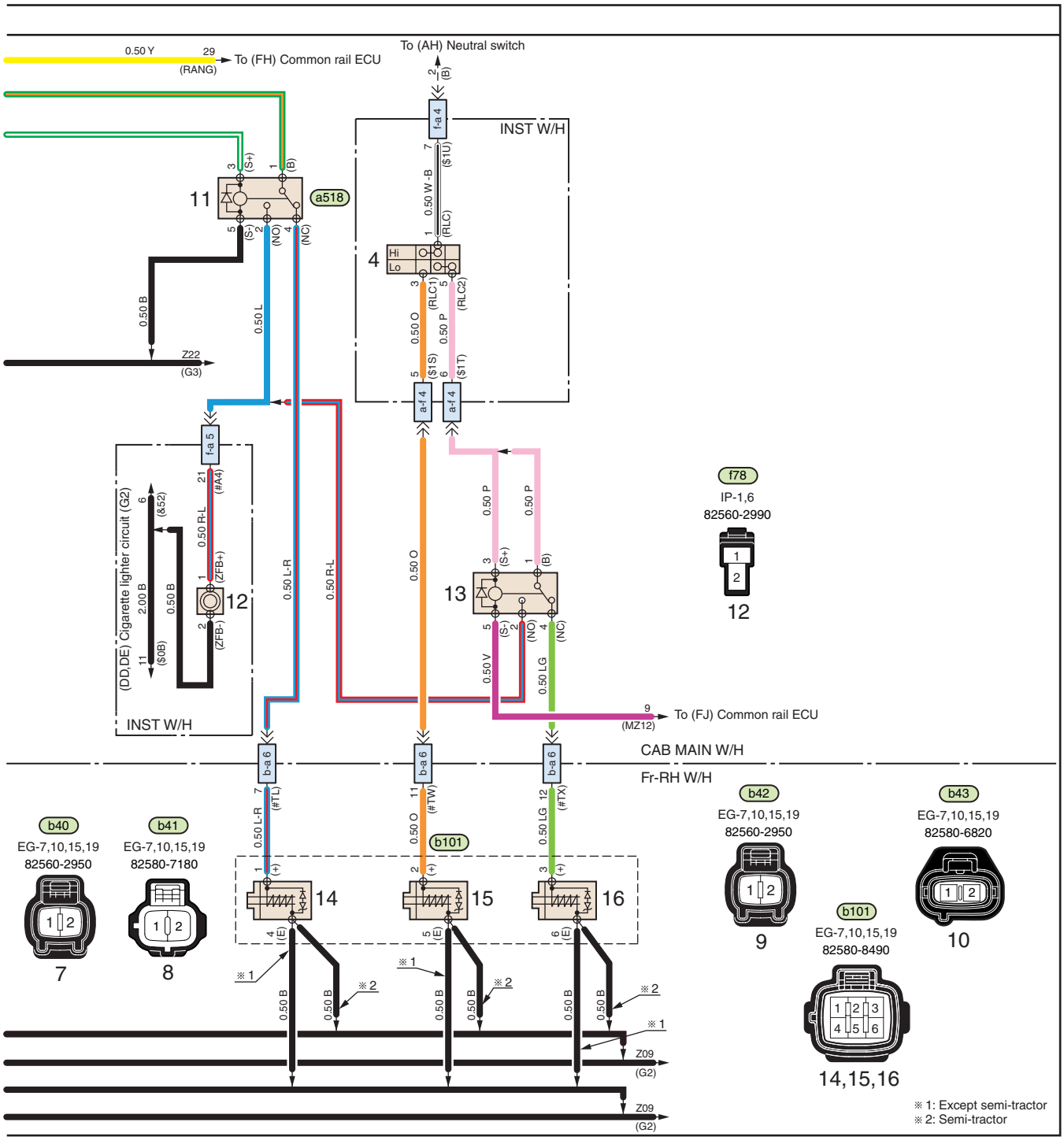

SHTS12Z160200118

https://truckmanualshub.com/

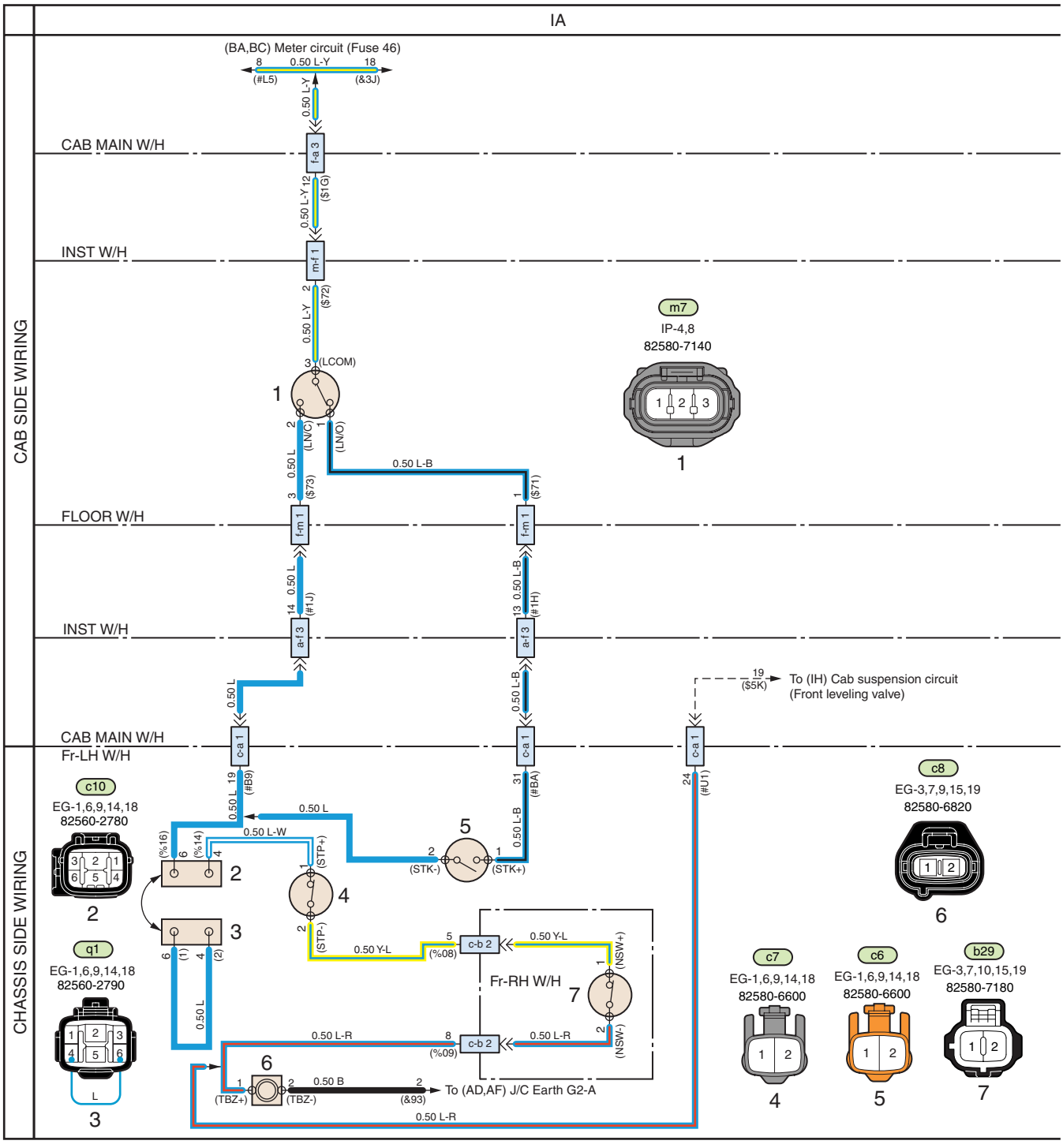

SHTS12Z160200119

IA. CAB TILT WARNING CIRCUIT (MODELS WITH HX AND MZ TRANSMISSION)

1. Cab tilt lock switch
2. Cab tilt short circuit connector (Front LH wiring harness side)
3. Cab tilt short circuit connector
4. Cab tilt stop switch
5. Cab tilt stroke switch
6. Cab tilt buzzer
7. Cab tilt neutral switch

https://truckmanualshub.com/

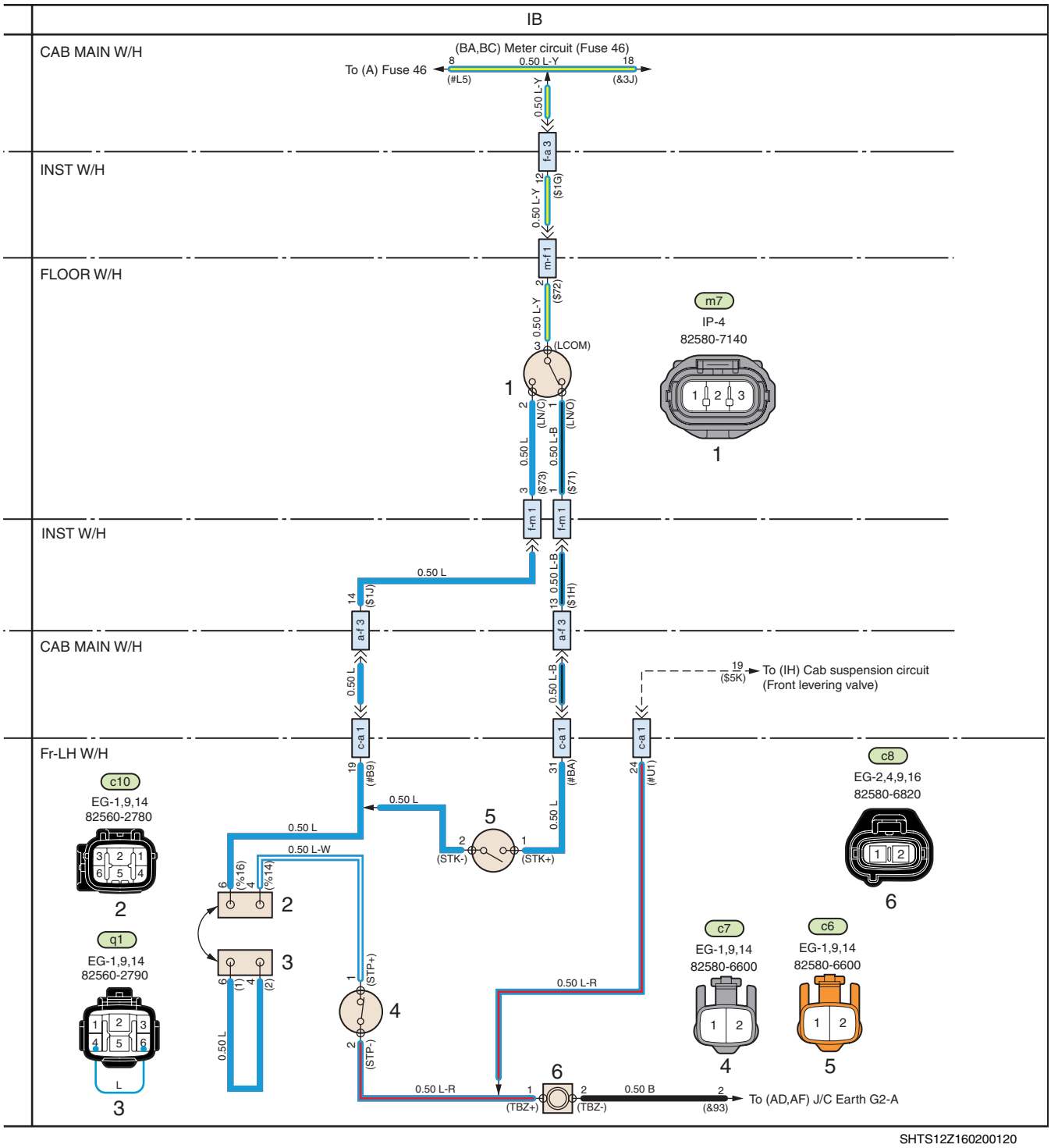

SHTS12Z160200120

IB. CAB TILT WARNING CIRCUIT (MODELS WITH ZF AND EATON TRANSMISSION)

1. Cab tilt lock switch
2. Cab tilt short-circuit connector (Front LH wiring harness side)
3. Cab tilt short-circuit connector
4. Cab tilt stop switch
5. Cab tilt stroke switch
6. Cab tilt buzzer

https://truckmanualshub.com/

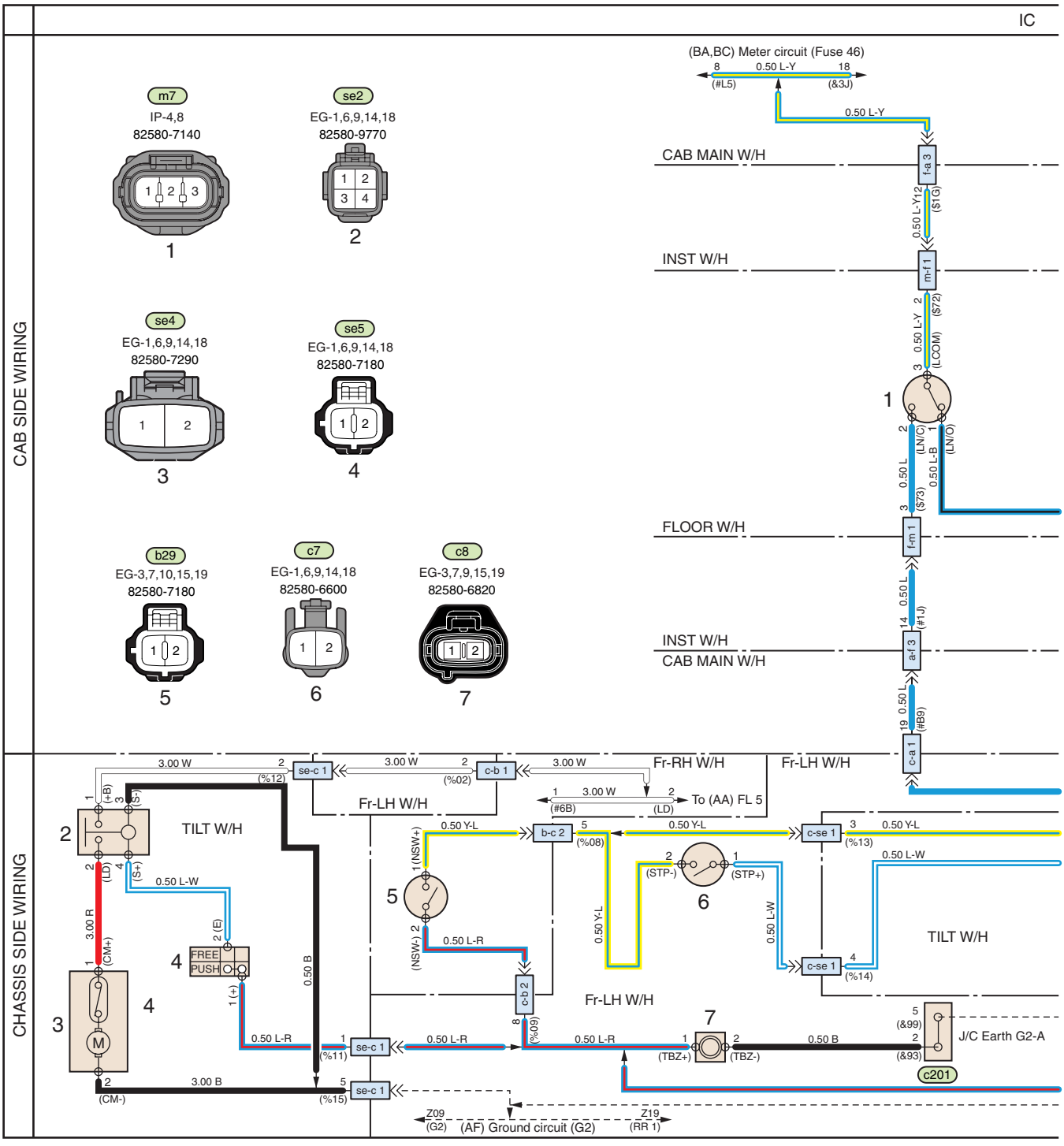

SHTS12Z160200121

IC. CAB TILT CIRCUIT (MODELS WITH HX AND MZ TRANSMISSION)

1. Cab tilt lock switch
2. Cab tilt relay
3. Cab tilt motor
4. Cab tilt switch
5. Cab tilt neutral switch
6. Cab tilt stop switch
7. Cab tilt buzzer
8. Cab tilt position switch
9. Cab tilt stroke switch

https://truckmanualshub.com/

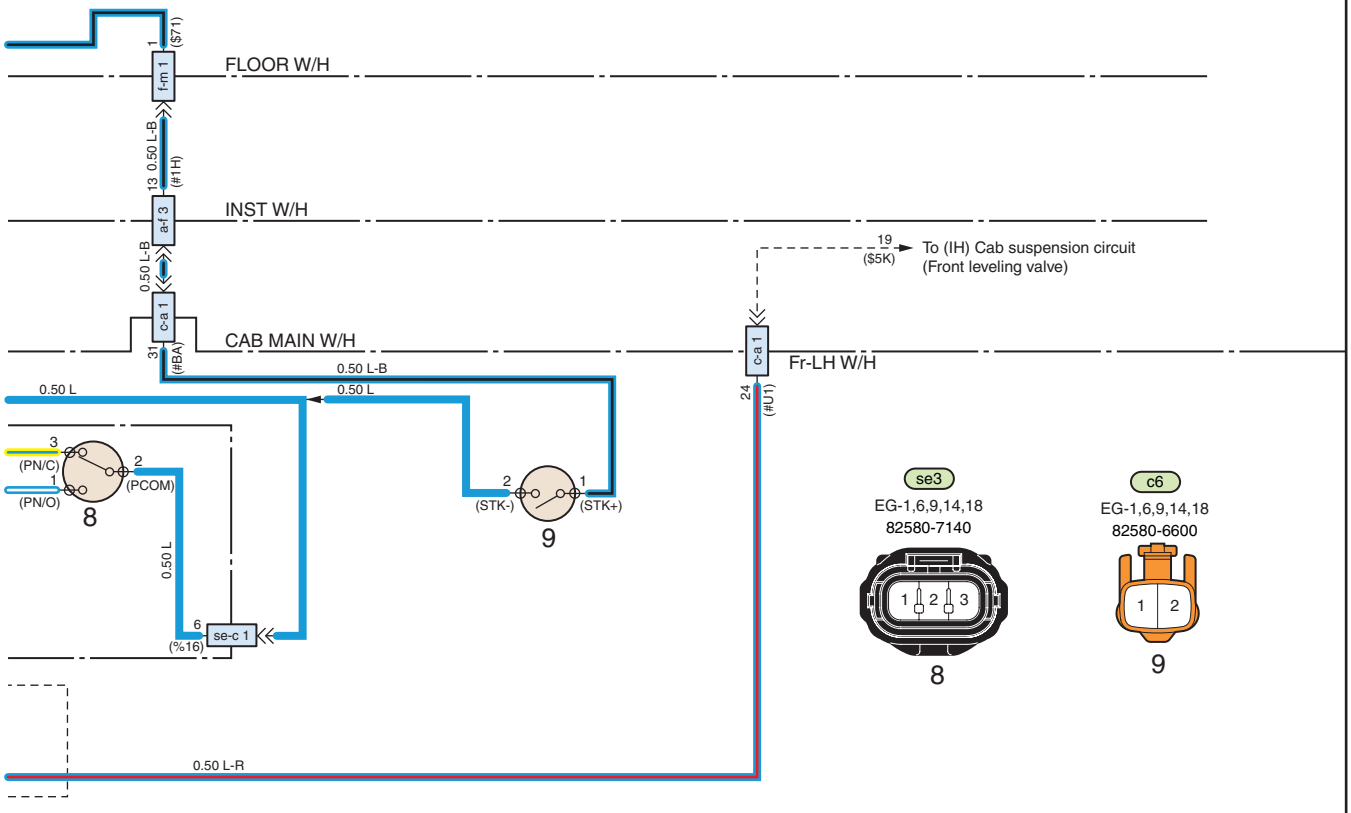

SHTS12Z160200122

https://truckmanualshub.com/

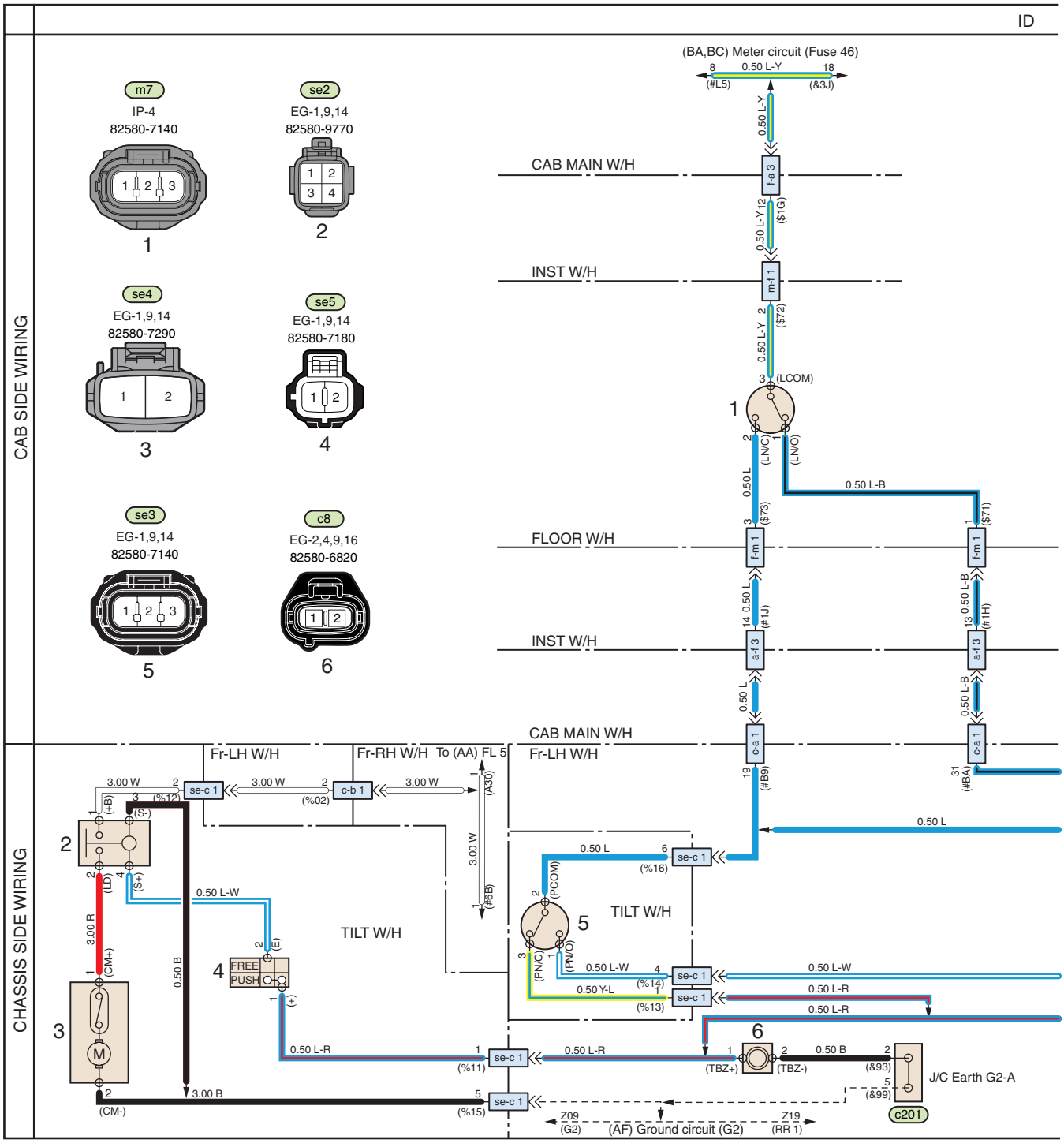

SHTS12Z160200123

ID. CAB TILT CIRCUIT (MODELS WITH ZF AND EATON TRANSMISSION)

1. Cab tilt lock switch
2. Cab tilt relay
3. Cab tilt motor
4. Cab tilt switch
5. Cab tilt position switch
6. Cab tilt buzzer
7. Cab tilt stroke switch
8. Cab tilt stop switch

https://truckmanualshub.com/

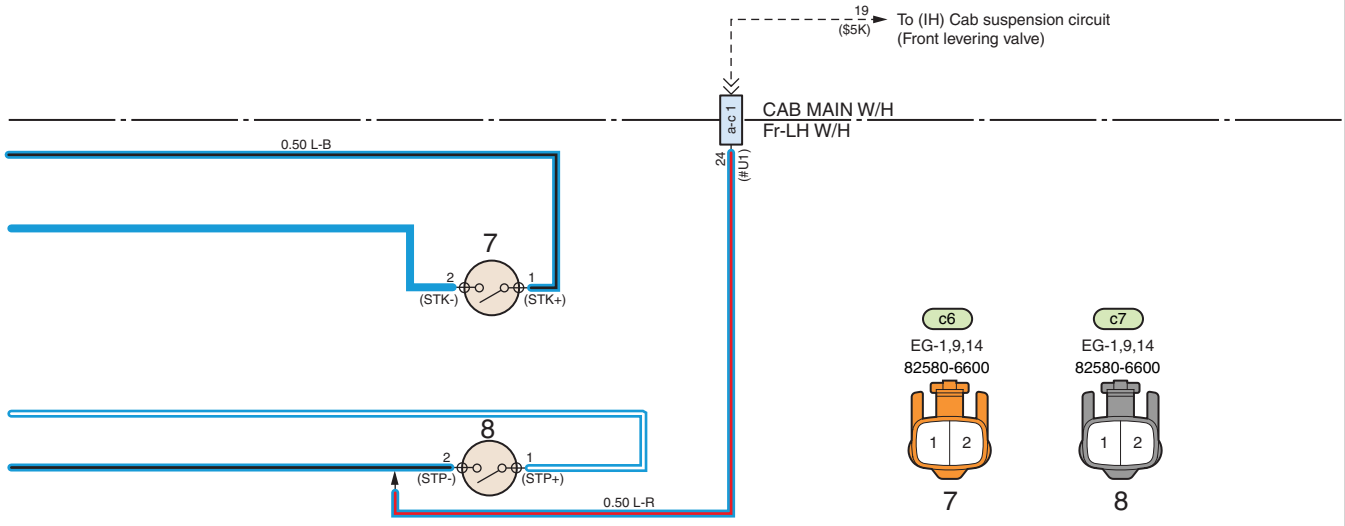

SHTS12Z160200124

https://truckmanualshub.com/

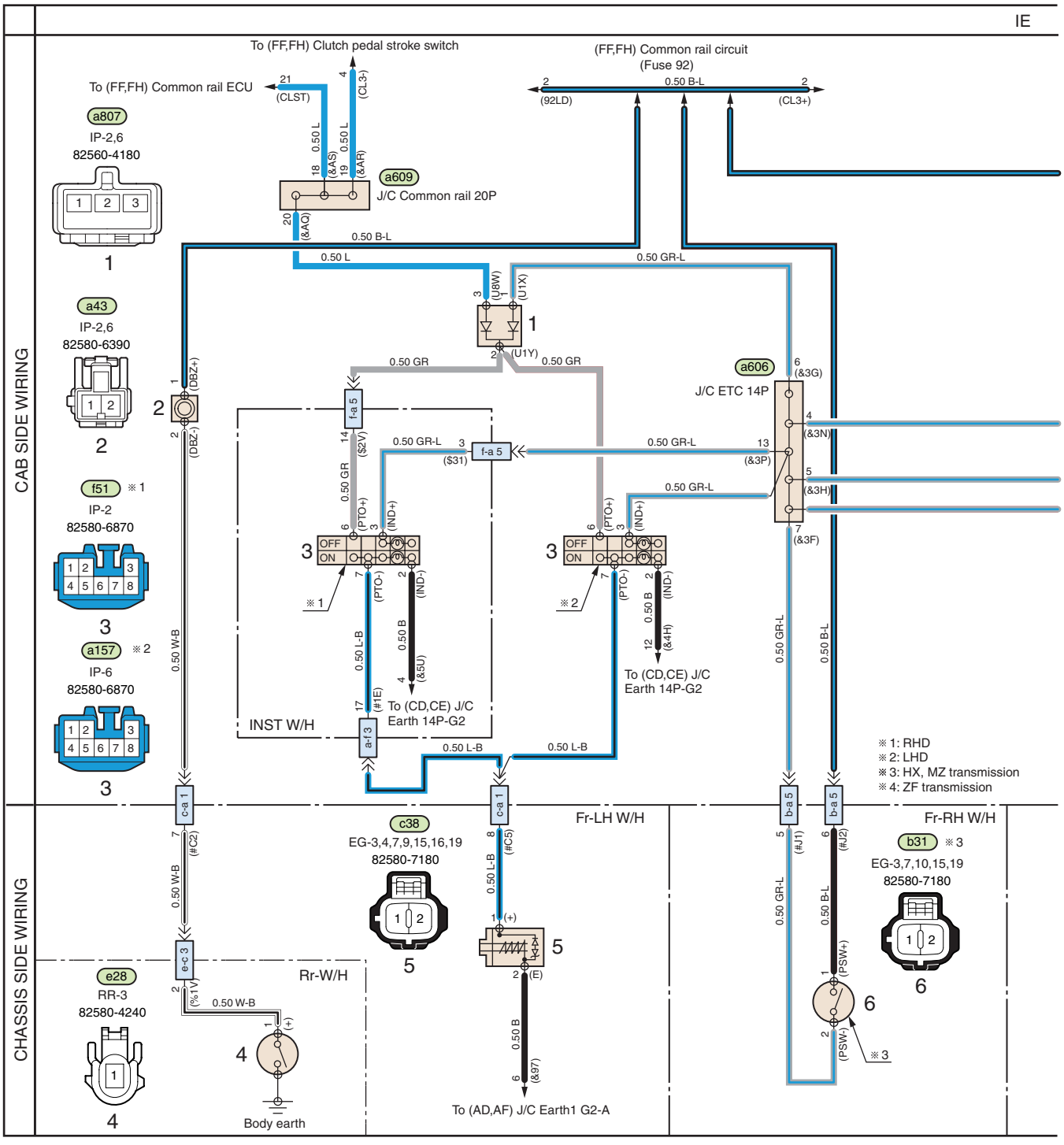

SHTS12Z160200125

IE. P.T.O. (POWER TAKE-OFF) CONTROL CIRCUIT

1. P.T.O. diode
2. Dump warning buzzer
3. Transmission P.T.O. switch
4. Dump up switch
5. P.T.O. magnetic valve
6. P.T.O. position switch (Models with HX and MZ transmission)
7. P.T.O. position switch (Models with ZF transmission)

https://truckmanualshub.com/

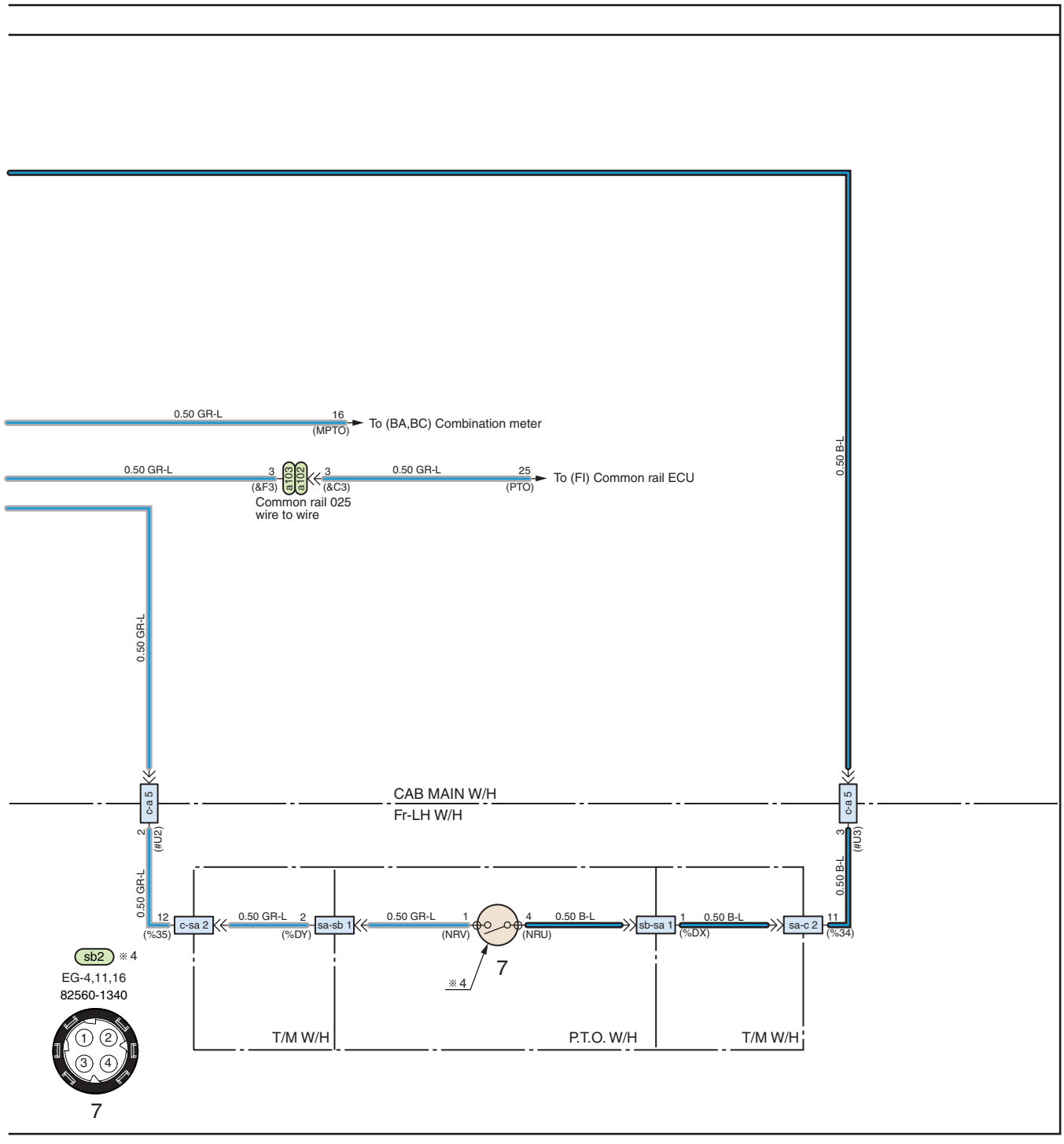

SHTS12Z160200126

https://truckmanualshub.com/

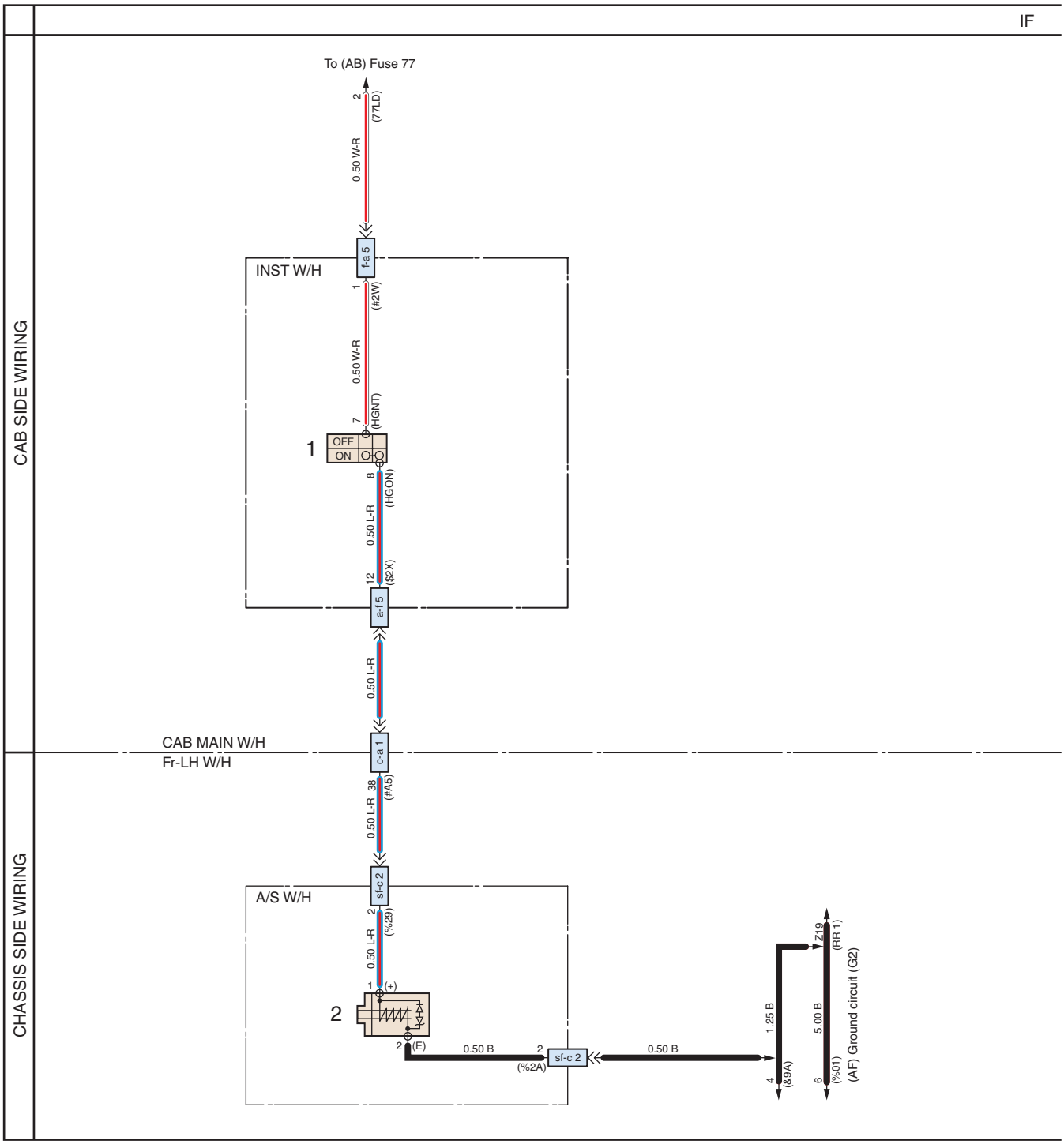

SHTS12Z160200127

IF. AIR SUSPENSION CIRCUIT (FOR SEMI-TRACTOR)

1. Air suspension switch (Dump control)
2. Air suspension height control magnetic valve

https://truckmanualshub.com/

f65

IP-3,7

82560-2900

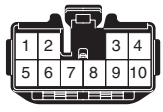

1

sf5

RR-6

82580-7180

2

SHTS12Z160200128

https://truckmanualshub.com/

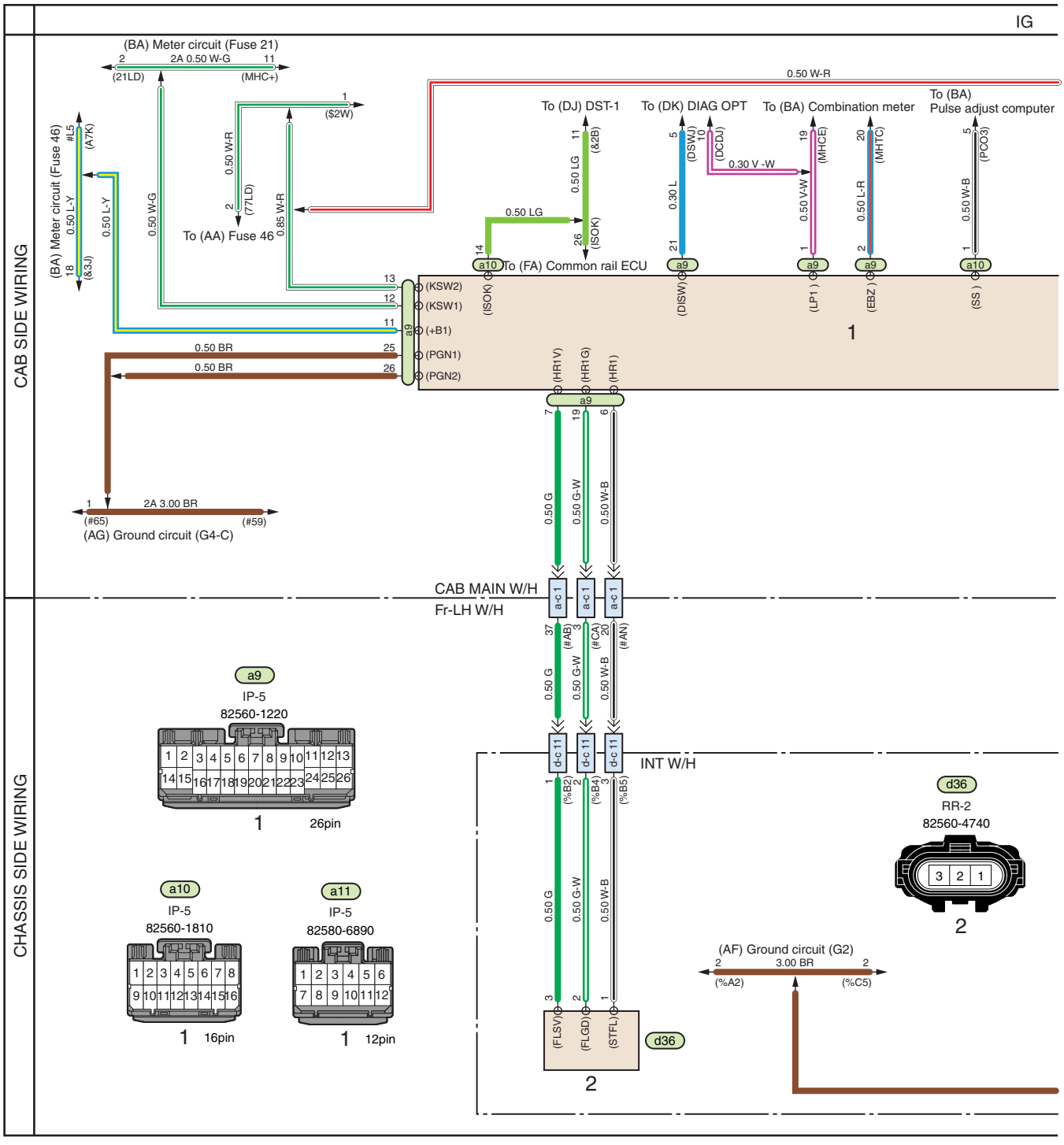

SHTS12Z160200129

IG. AIR SUSPENSION CIRCUIT (FOR TAIWAN FR MODEL)

1. Air suspension ECU
2. Height sensor
3. Air suspension remote control release switch
4. Air suspension controller (Remote control type)
5. Height control magnetic valve

https://truckmanualshub.com/

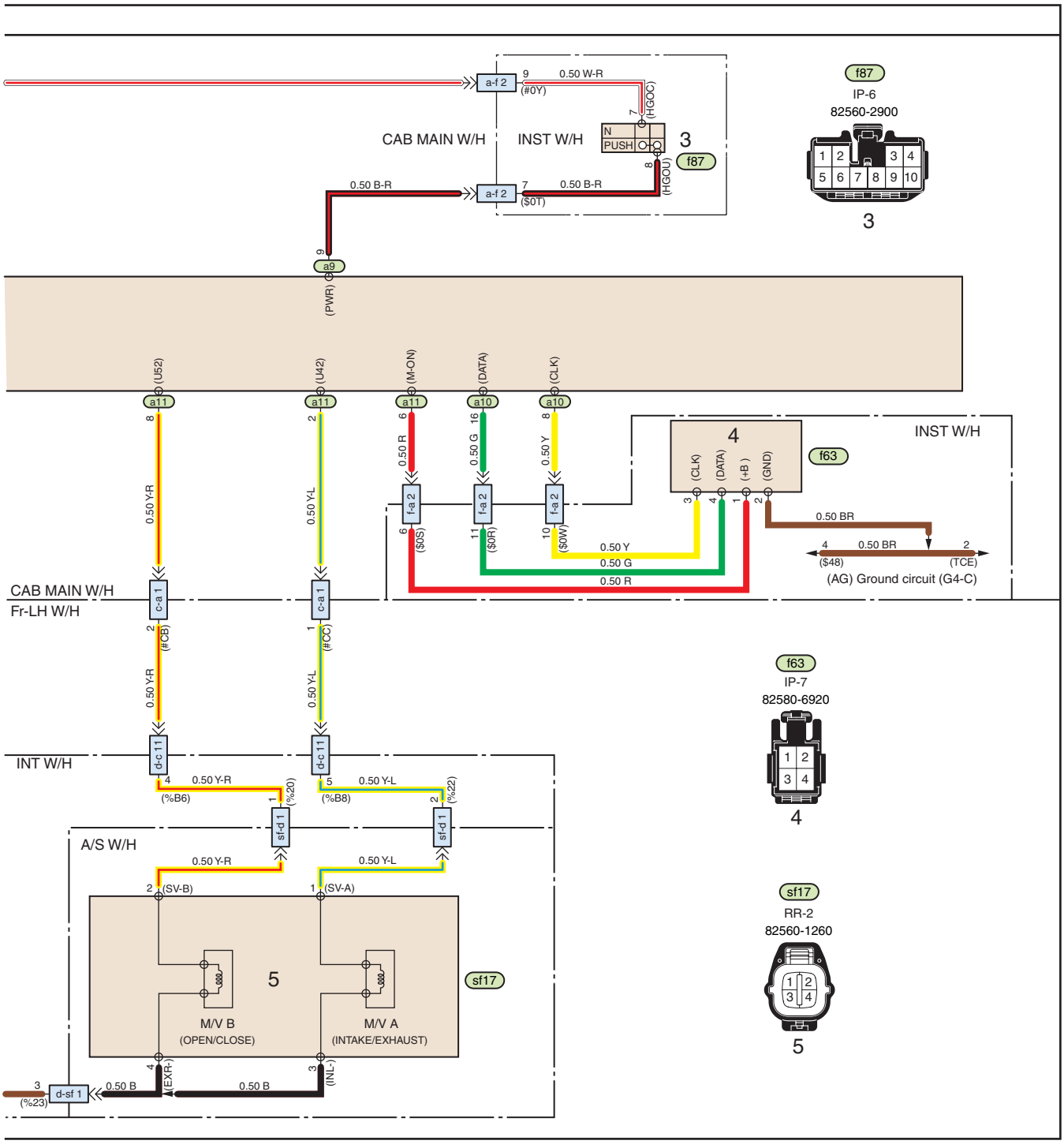

SHTS12Z160200130

https://truckmanualshub.com/

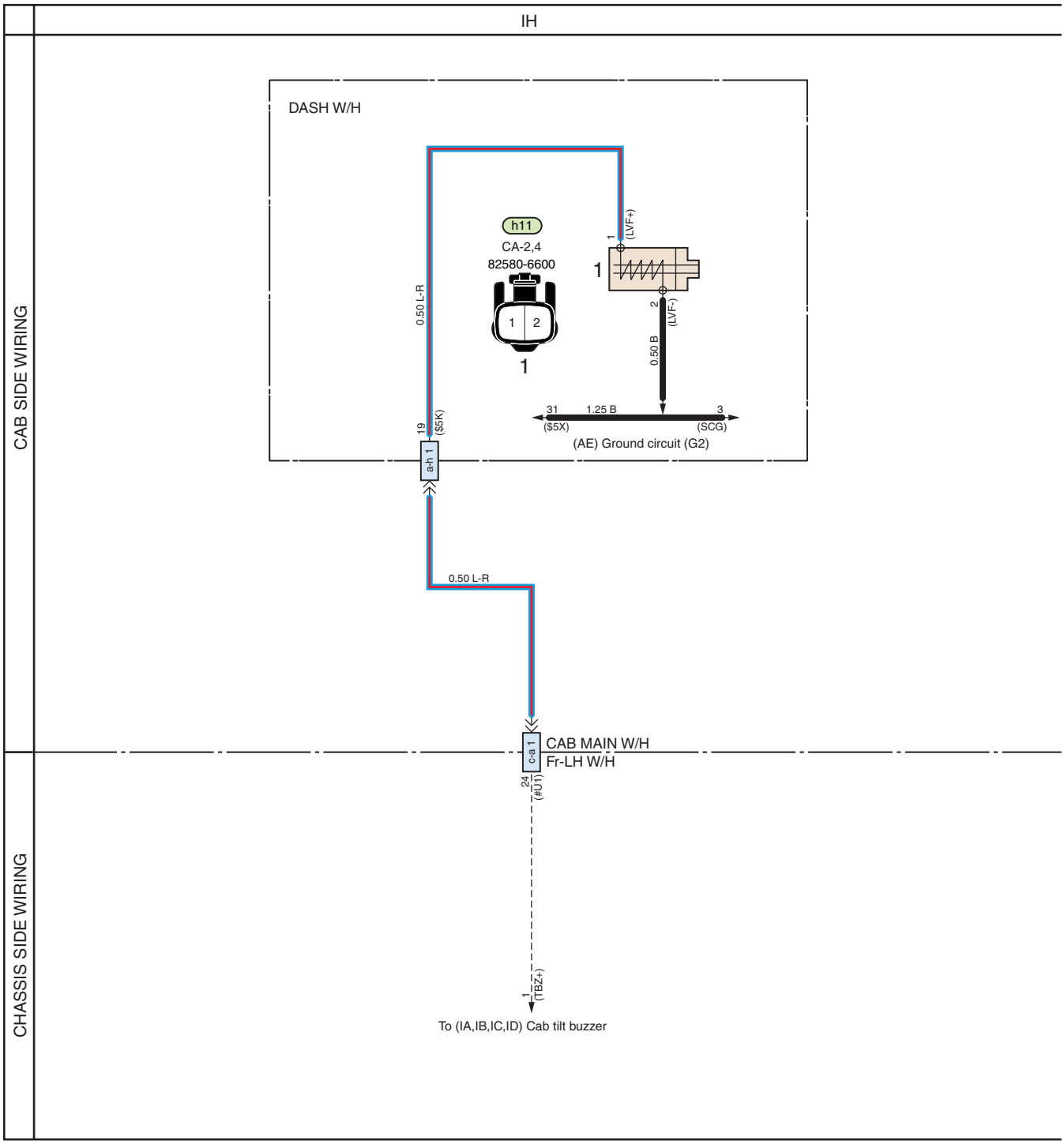

SHTS12Z160200131

IH. CAB SUSPENSION CIRCUIT

1. Leveling valve

https://truckmanualshub.com/

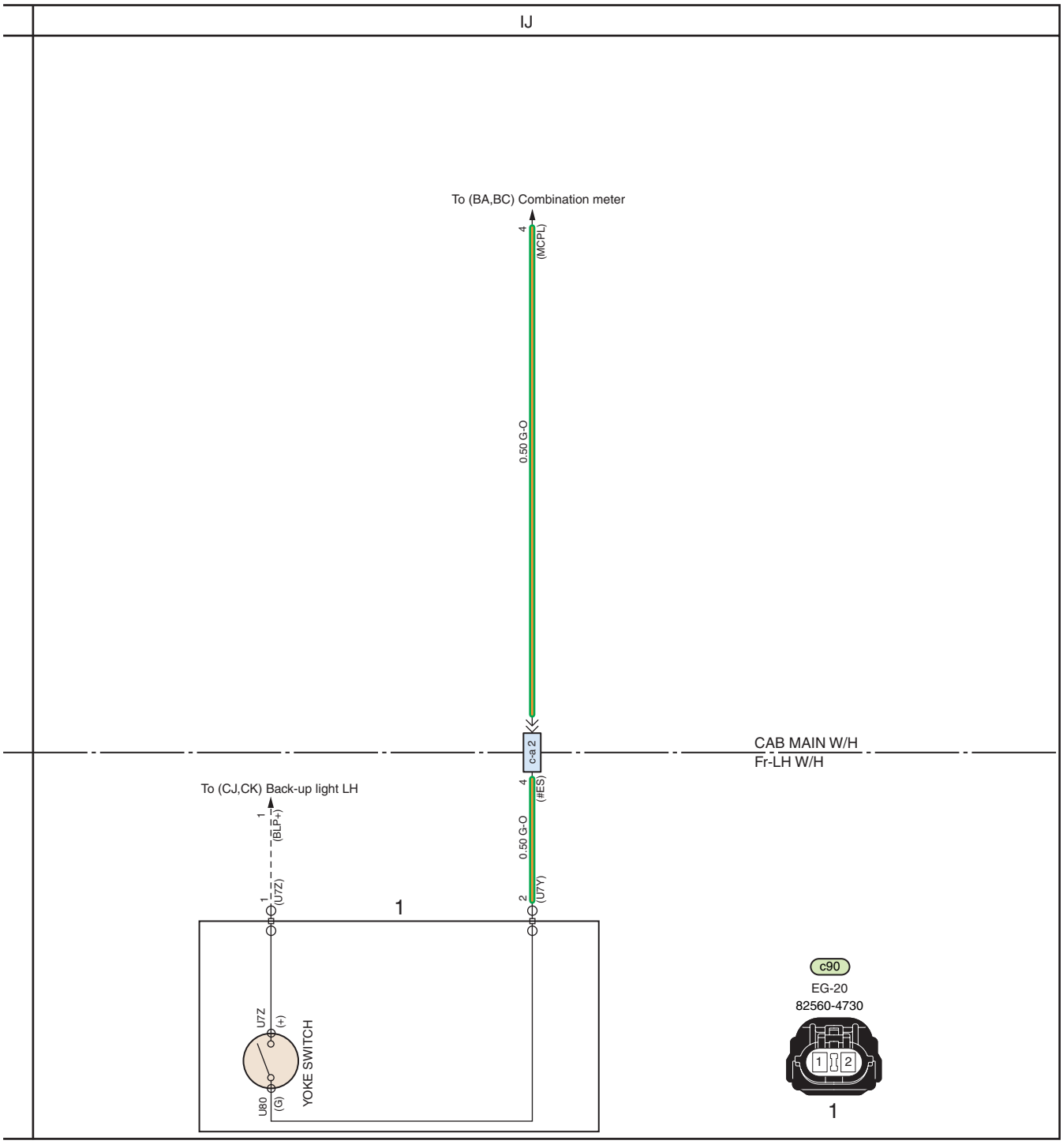

SHTS12Z160200132

IJ. COUPLER LOCK CIRCUIT

1. Coupler lock switch

https://truckmanualshub.com/

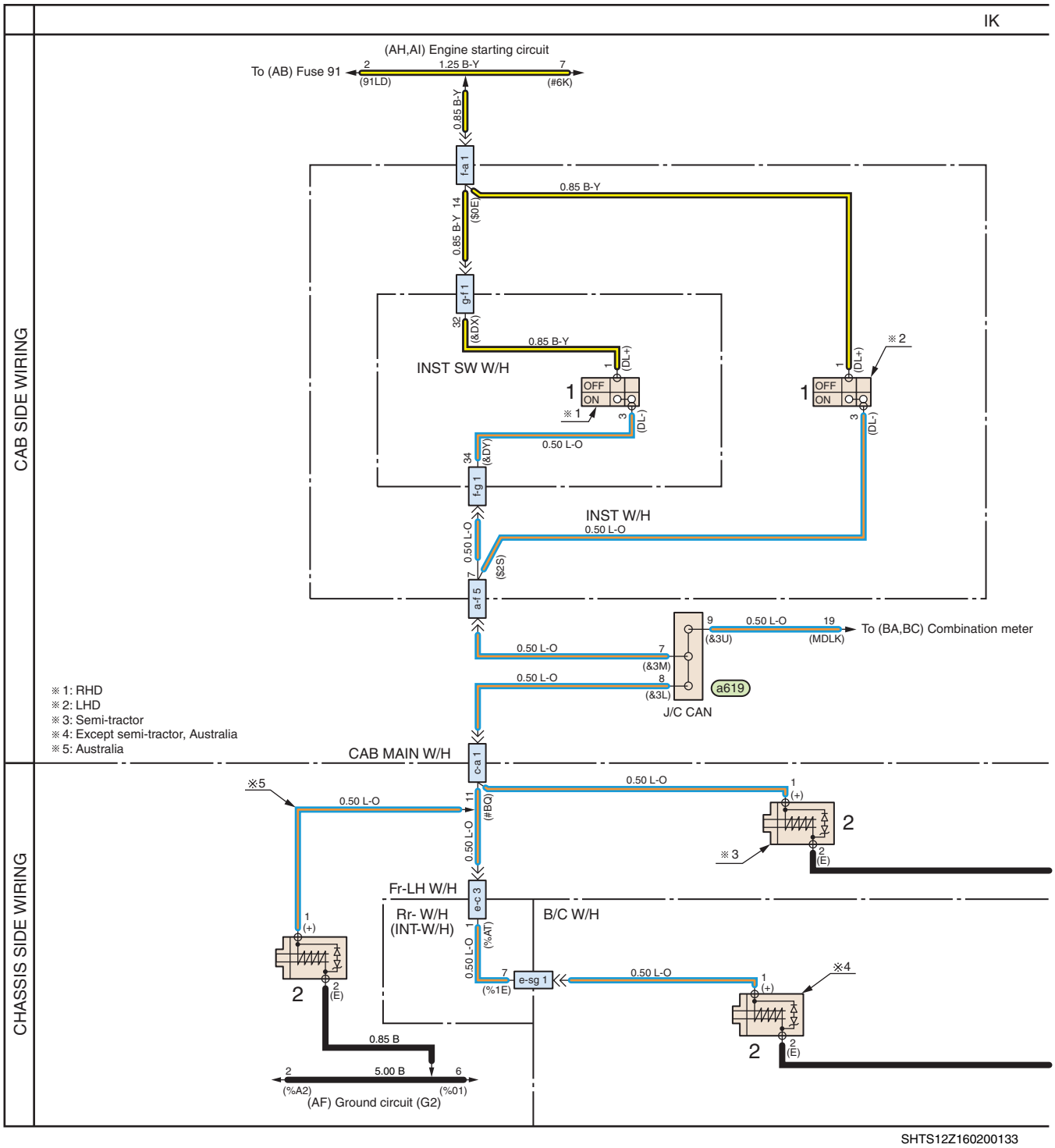

SHTS12Z160200133

IK. INTER-AXLE DIFFERENTIAL LOCK CIRCUIT

1. Differential lock switch
2. Differential lock magnetic valve

https://truckmanualshub.com/

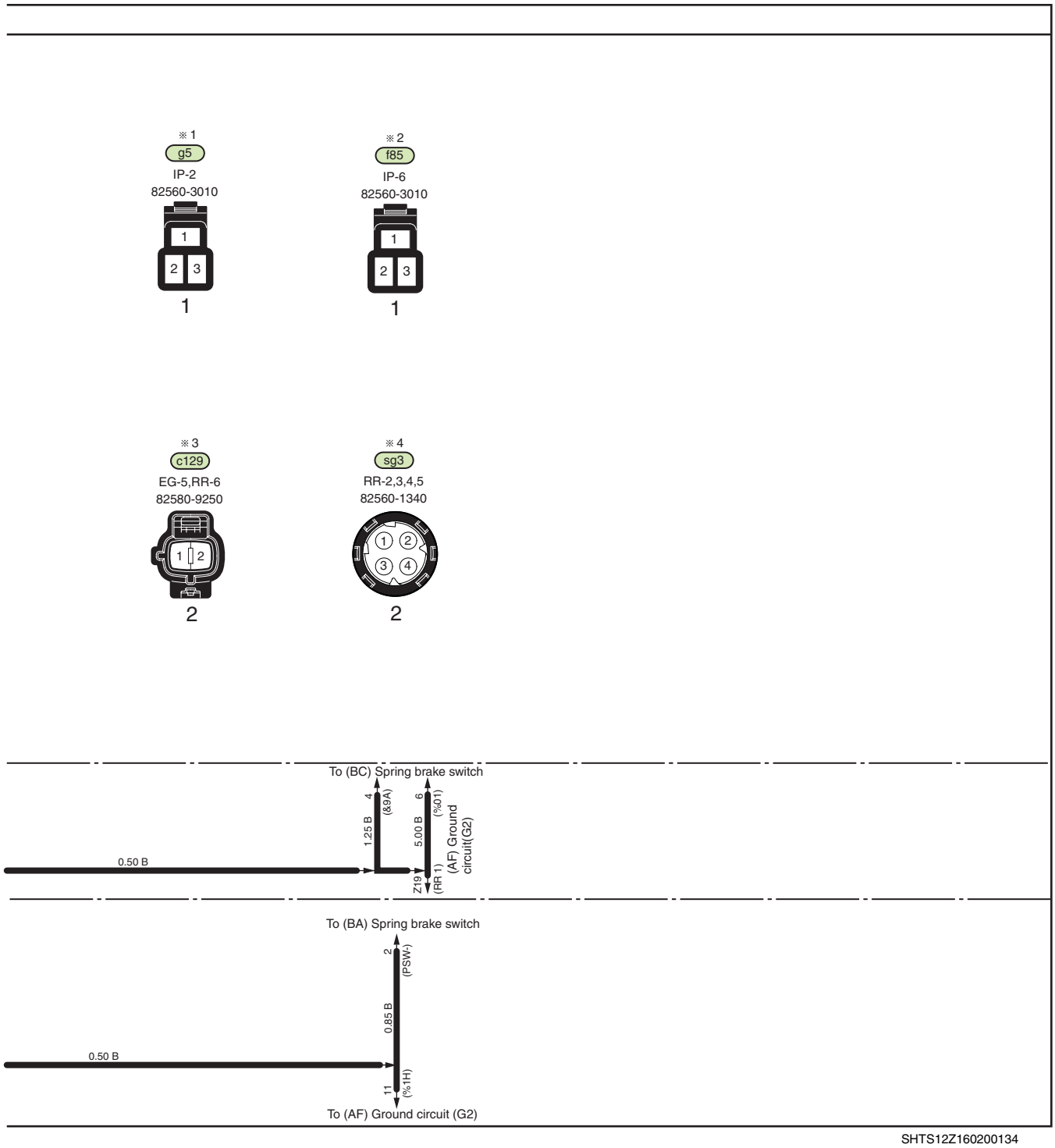

SHTS12Z160200134

https://truckmanualshub.com/

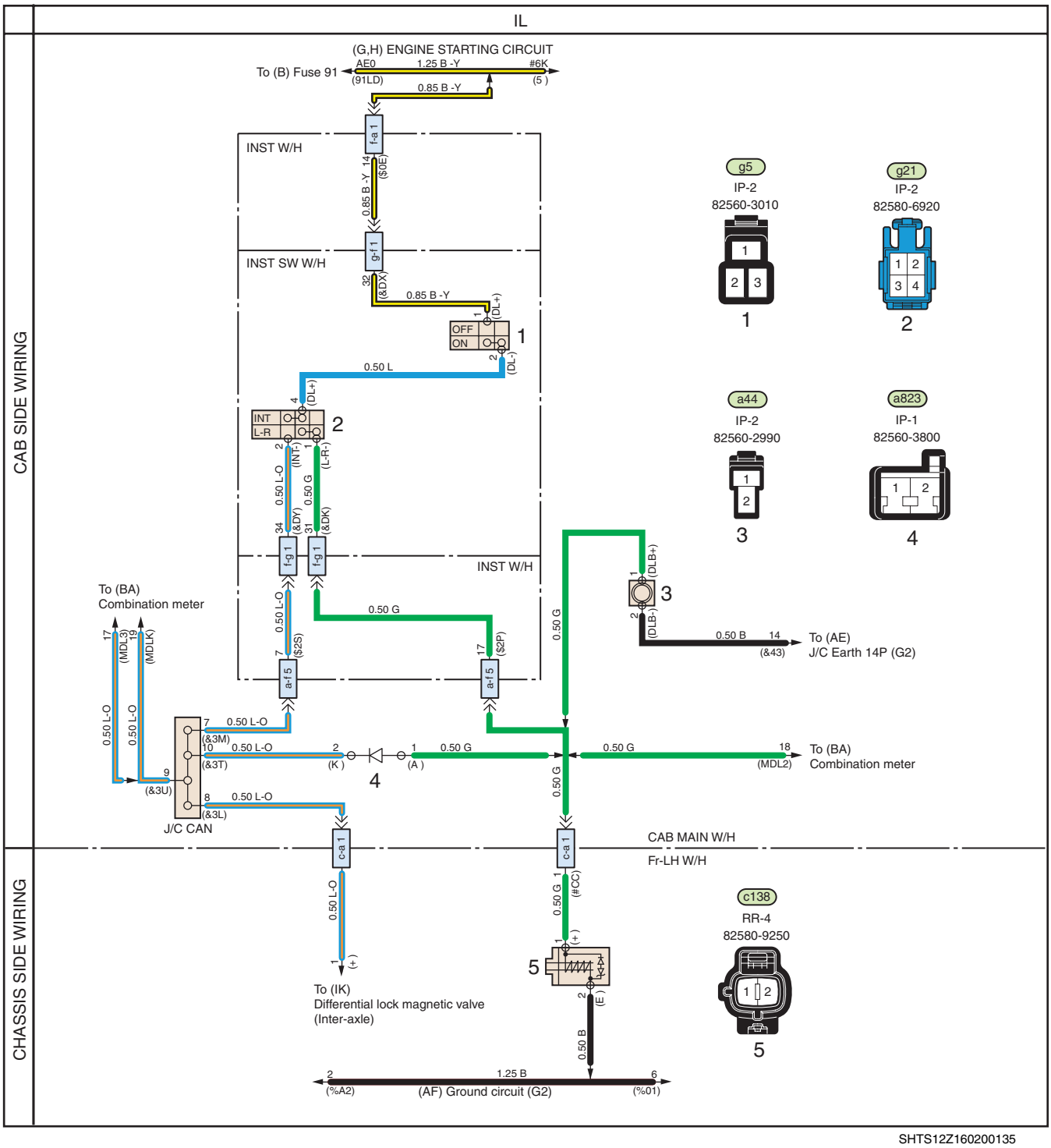

SHTS12Z160200135

IL. REAR-REAR AXLE DIFFERENTIAL LOCK CIRCUIT

1. Differential lock switch
2. Differential lock change switch
3. Differential lock buzzer
4. Differential lock diode
5. Differential lock magnetic valve (Rear-rear axle)

https://truckmanualshub.com/

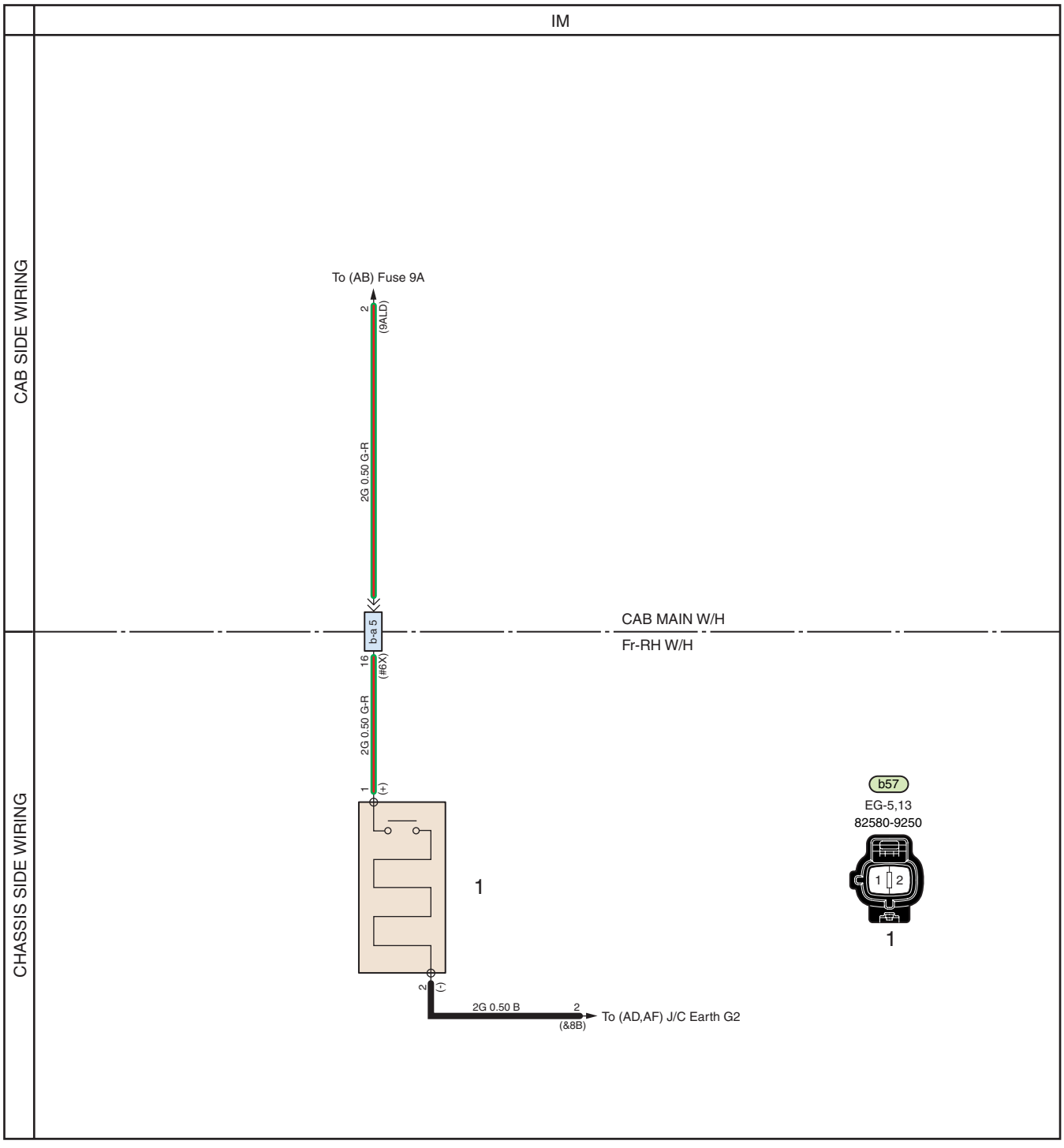

SHTS12Z160200136

IM. AIR DRYER CIRCUIT

1. Air dryer

https://truckmanualshub.com/

WIRE TO WIRE CONNECTOR

EN12Z1602J100005

NOTICE
Drawings may show the terminals that are not mounted on the vehicle according to the vehicle specification.

a-b 1 / b-a 1	Cab main wiring harness to Front RH wiring harness 1
AD, AE, AF, AG	IP-1, 5, EG-6, 9, 14, 18

82560-3640, White, Male

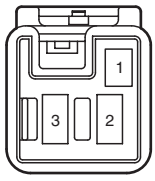

82560-3650, White, Female

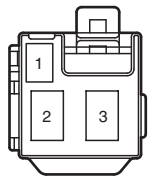

a-b 2 / b-a 2	Cab main wiring harness to Front RH wiring harness 2
AD, AE, AF, AG	IP-1, 5, EG-1, 6, 9, 14, 18

82560-2870, Black, Male

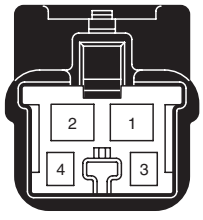

82560-3670, White, Female

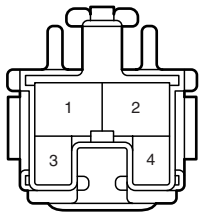

a-b 3 / b-a 3	Cab main wiring harness to Front RH wiring harness 3
AA, AC	IP-1, 5, EG-1, 6, 9, 14, 18

82560-3620, White, Male

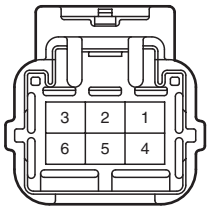

82560-3630, White, Female

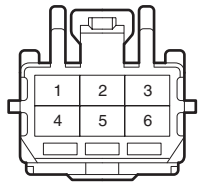

SHTS12Z160200137

https://truckmanualshub.com/

a-b 4 / b-a 4	Cab main wiring harness to Front RH wiring harness 4
AA, AC, AH, AI, AJ, CO, FA, FB, FJ	IP-1, 5, EG-1, 6, 9, 14, 18

82560-4500, White, Male

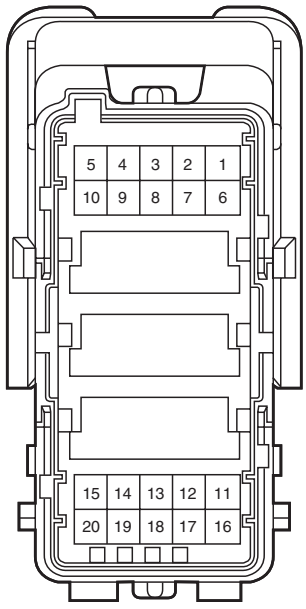

82560-4510, White, Female

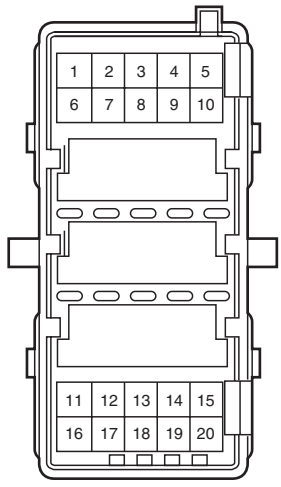

a-b 5 / b-a 5	Cab main wiring harness to Front RH wiring harness 5
BA, BB, BC, BD, GA, GB, GC, GD, IE, IM	IP-1, 5, EG-1, 6, 9, 14, 18

82560-4540, Blue, Male

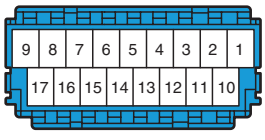

82560-4550, Blue, Female

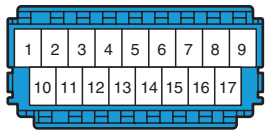

a-b 6 / b-a 6	Cab main wiring harness to Front RH wiring harness 6
HB	IP-1, 5, EG-6, 9, 14, 18

82560-4540, Green, Male

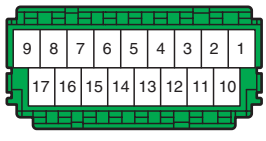

82560-4550, Green, Female

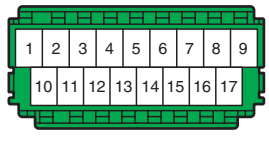

https://truckmanualshub.com/

a-b 7 / b-a 7	Cab main wiring harness to Front RH wiring harness 7
BA, BB, BC, BD, CE	IP-1, 5, EG-1, 6, 9, 14, 18

82560-4560, White, Male

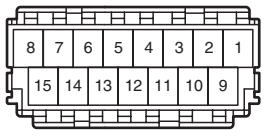

82560-4570, White, Female

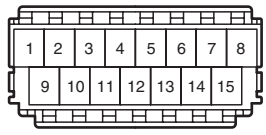

a-c 1 / c-a 1	Cab main wiring harness to Front LH wiring harness 1
AC, AH, AI, AL, CA, CB, CH, CI, CJ, CK, CM, CO, FE, FI, GB, GC, IA, IB, IC, ID, IE, IF, IG, IH, IK, IL	IP-1, 5, EG-1, 6, 9, 14, 18

82560-2110, White, Male

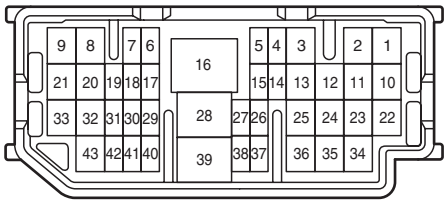

82560-2120, White, Female

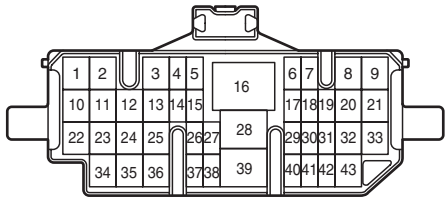

a-c 2 / c-a 2	Cab main wiring harness to Front LH wiring harness 2
AI, AL, BA, BB, BC, BD, CC, CD, CF, DC, FA, FB, FI, IJ	IP-1, 5, EG-1, 6, 9, 14, 18

82560-2130, Gray, Male

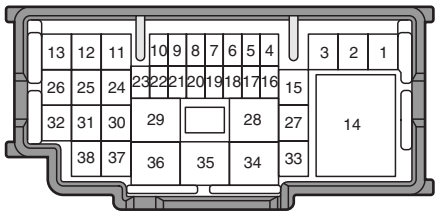

82560-2140, Gray, Female

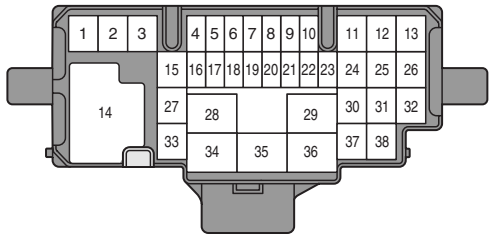

SHTS12Z160200139

https://truckmanualshub.com/

a-c 3 / c-a 3	Cab main wiring harness to Front LH wiring harness 3
GA, GB, GC	IP-1, 5, EG-1, 6, 9, 14, 18

82560-2150, White, Male

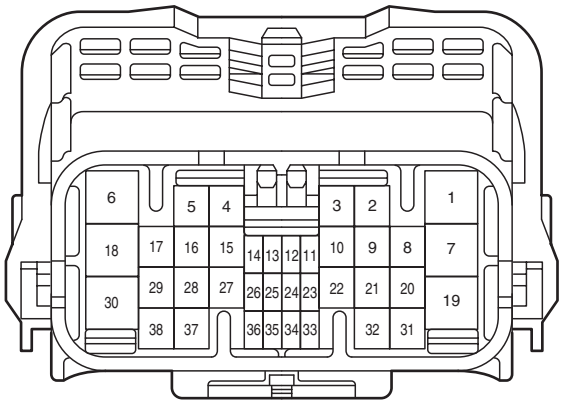

82560-2160, White, Female

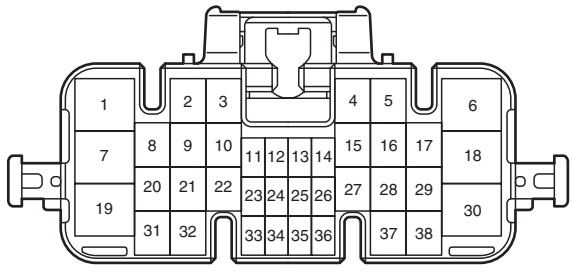

a-c 5 / c-a 5	Cab main wiring harness to Front LH wiring harness 5
BA, BB, BC, BD, BF, HA, IE	IP-1, EG-1, 9, 14

82560-2220, Gray, Male

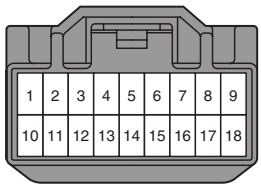

82560-2230, Gray, Female

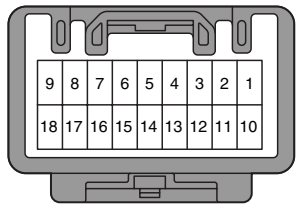

a-f 1 / f-a 1	Cab main wiring harness to Instrument panel wiring harness 1
AC, AD, AE, AL, BA, BC, BE, BF, CL, DA, DD, DE, DN, HB, IK, IL	IP-1, 5

82560-4500, White, Male

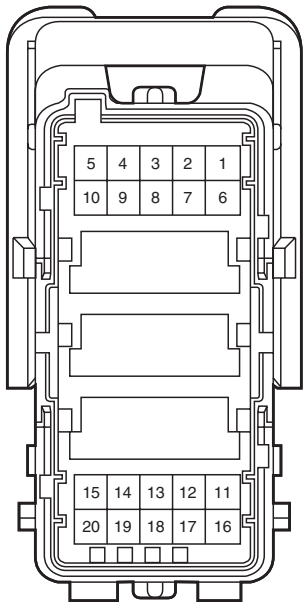

82560-4510, White, Female

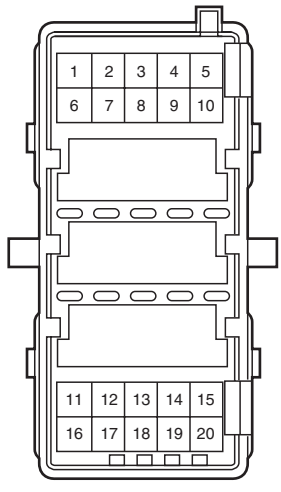

SHTS12Z160200140

https://truckmanualshub.com/

a-f 2 / f-a 2	Cab main wiring harness to Instrument panel wiring harness 2
IG	IP-5

82560-4540, Blue, Male

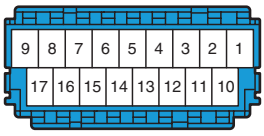

82560-4550, Blue, Female

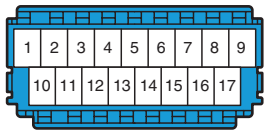

a-f 3 / f-a 3	Cab main wiring harness to Instrument panel wiring harness 3
DI, EA, FE, HB, IA, IB, IC, ID, IE	IP-1, 5

82560-4540, Green, Male

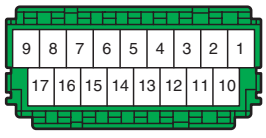

82560-4550, Green, Female

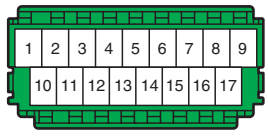

a-f 4 / f-a 4	Cab main wiring harness to Instrument panel wiring harness 4
AD, AE, DF, DM, FA, HA, HB	IP-1, 5

82560-4560, White, Male

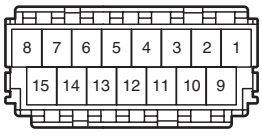

82560-4570, White, Female

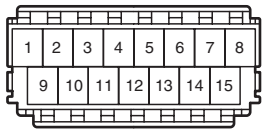

SHTS12Z160200141

https://truckmanualshub.com/

a-f 5 / f-a 5	Cab main wiring harness to Instrument panel wiring harness 5
CB, CN, CO, DB, FH, FJ, HB, IE, IF, IK, IL	IP-2, 6

82560-2460, White, Male

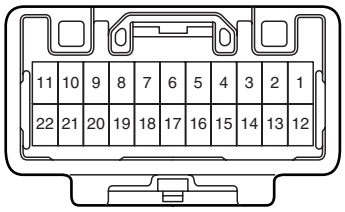

82560-2470, White, Female

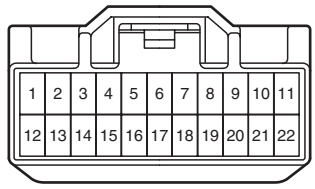

a-f 6 / f-a 6	Cab main wiring harness to Instrument panel wiring harness 6
AD, AG, DM, EA, FJ, GD	IP-1, 5

82580-7340,White, Male

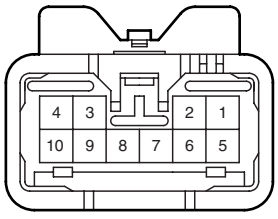

82580-7210, White, Female

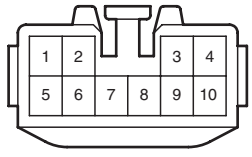

a-h 1 / h-a 1	Cab main wiring harness to Dash panel wiring harness 1
AE, AG, BC, CC, CE, CG, CL, DA, DB, DF, DG, DH, DL, DM, EA, FA, GD, IH	IP-1, 5, CA-2, 4

82560-2170, Glay, Male

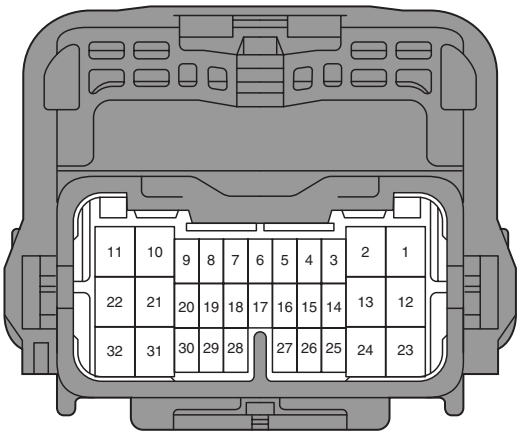

82560-2180, Glay, Female

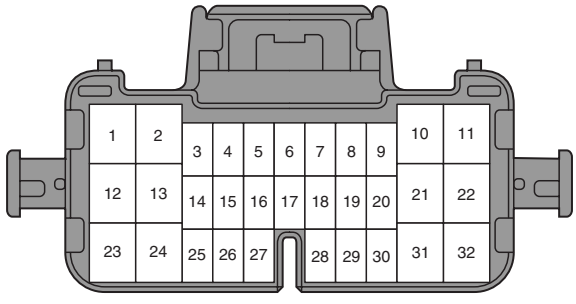

SHTS12Z160200142

https://truckmanualshub.com/

a-i 1 / i-a 1	Cab main wiring harness to Roof wiring harness 1
AE, CG, CL, DI	IP-1, 5, CA-1, 3

82580-7210, Glay, Female

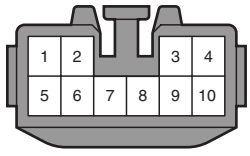

82580-7340, Glay, Male

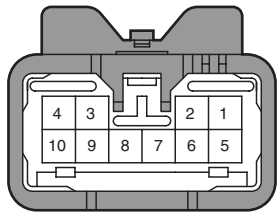

a-j 1 / j-a 1	Cab main wiring harness to Door LH wiring harness 1
AE, CC, CE, DA, DG, DM	CA-1

82560-2670, Black, Male

82560-2680, Black, Female

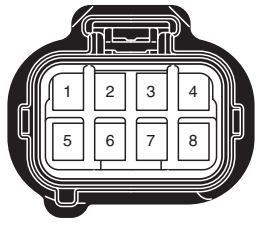

a-j 2 / j-a 2	Cab main wiring harness to Door LH wiring harness 2
DB	CA-1

82580-6030, Gray, Male

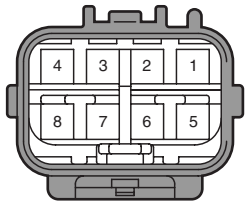

82580-6040, Gray, Female

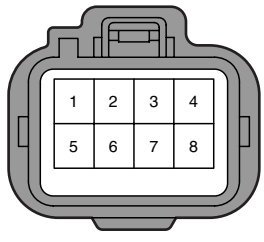

SHTS12Z160200143

https://truckmanualshub.com/

a-k 1 / k-a 1	Cab main wiring harness to Door RH wiring harness 1
AE, CC, CE, DH, DM	CA-3

82560-2670, Black, Male

82560-2680, Black, Female

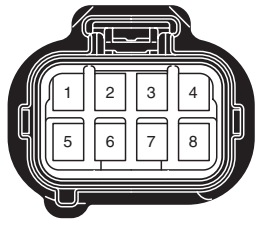

a-ea 1 / ea-a 1	Cab main wiring harness to Engine wiring harness 1
BA, BB, BC, BH, EA, FA, FB, FC, FE	IP-1, 5, EG-1, 6, 9, 14, 18

82560-4520, Black, Male

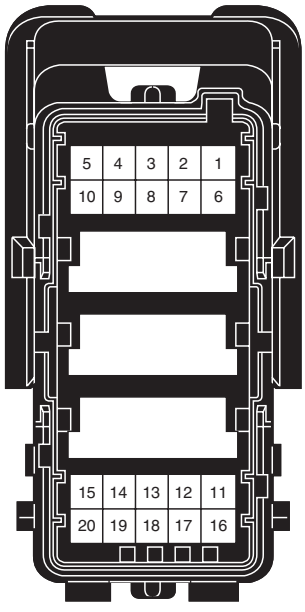

82560-4530, Black, Male

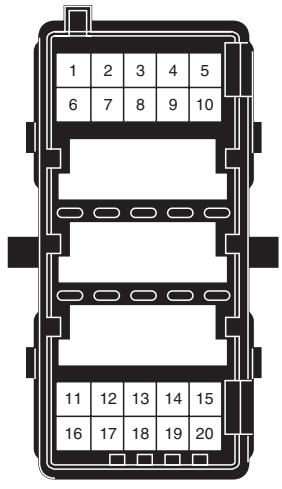

a-ea 2 / ea-a 2	Cab main wiring harness to Engine wiring harness 2
FA, FB, FC	IP-1, 5, EG-1, 6, 9, 14, 18

82560-4540, Blue, Male

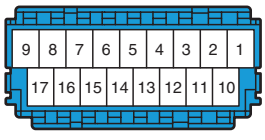

82560-4550, Blue, Female

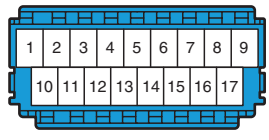

SHTS12Z160200144

https://truckmanualshub.com/

a-ea 3 / ea-a 3	Cab main wiring harness to Engine wiring harness 3
FA, FB, FC	IP-1, 5, EG-1, 6, 9, 14, 18

82560-4540, Blue, Male

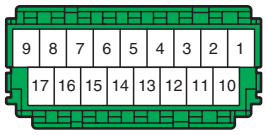

82560-4550, Blue, Female

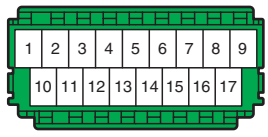

a-ea 4 / ea-a 4	Cab main wiring harness to Engine wiring harness 4
AE, AK, BG, FC	IP-1, 5, EG-1, 6, 9, 14, 18

82560-4560, White, Male

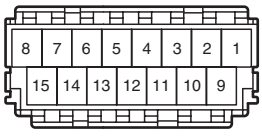

82560-4570, White, Female

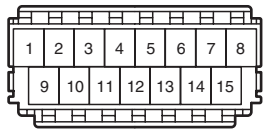

a-ea 5 / ea-a 5	Cab main wiring harness to Engine wiring harness 5
FA, FB	IP-1, 5, EG-1, 6, 9, 14, 18

82560-3720, Dark gray, Male

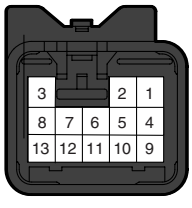

82560-3730, Dark gray, Female

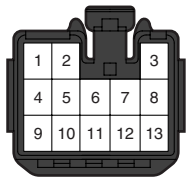

SHTS12Z160200145

https://truckmanualshub.com/

b-c 1/ c-b 1	Front RH wiring harness to Front LH wiring harness 1
AD, AG, CH, CI, CJ, IC, ID	EG-2, 3, 4, 8, 10, 11, 12, 17, 20

82560-1640, Black, Male

82560-1650, Black, Female

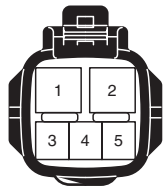

b-c 2/ c-b 2	Front RH wiring harness to Front LH wiring harness 2
AD, AF, AG, AH, BD, IA, IC	EG-2, 3, 4, 8, 10, 11, 12, 17, 20

82580-7540, Dark gray, Male

82580-7550, Dark gray, Female

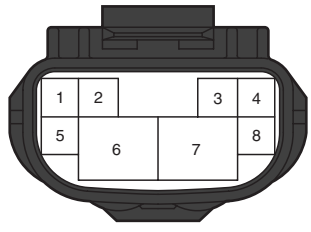

b-c 3/ c-b 3	Front RH wiring harness to Front LH wiring harness 3
AH	EG-7, 19

82560-1780, Black, Male

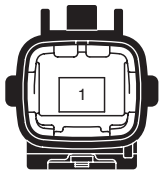

82560-1790, Black, Female

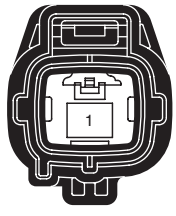

SHTS12Z160200146

https://truckmanualshub.com/

b-sc 1/ sc-b 1	Front RH wiring harness to Intake air heater sub wiring harness 1
AJ	EG-1, 9, 14

82560-1780, Black, Male

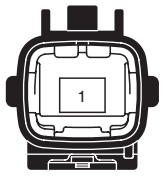

82560-1790, Black, Female

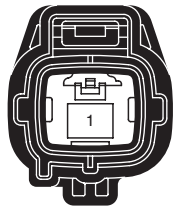

c-d 1 / d-c 1	Front LH wiring harness to Intermediate wiring harness 1
AD, AF, BB, CD, CF, CI, GA	EG-5, 8, 13, RR-3

82560-1320, Gray, Male

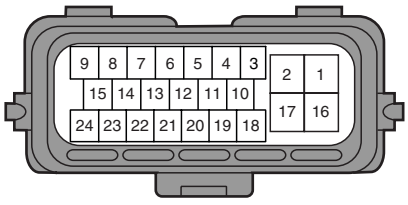

82560-1330, Gray, Female

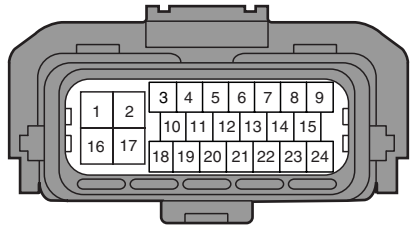

c-d 11 / d-c 11	Front LH wiring harness to Intermediate wiring harness 11
IG	EG-8

82580-8480,Black, Male

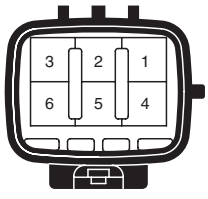

82580-8490, Black, Female

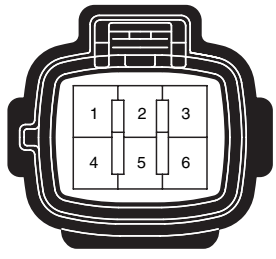

SHTS12Z160200147

https://truckmanualshub.com/

c-e 1 / e-c 1	Front LH wiring harness to Rear wiring harness 1
BB, CD, CF, CH, GA, GB	EG-5, 8, 13, RR-3, 4

82560-1320, Gray, Male

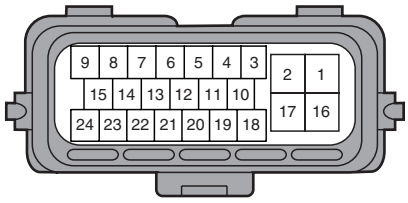

82560-1330, Gray, Female

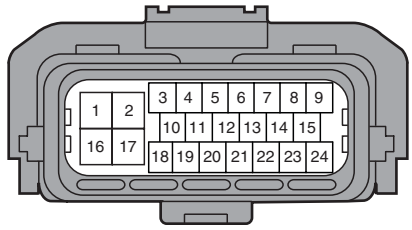

c-e 3 / e-c 3	Front LH wiring harness to Rear wiring harness 3
IE, IK, IL	EG-5, 8, 13, RR-3, 4

82560-2940, Black, Male

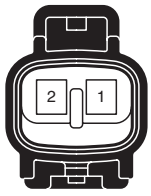

82560-2950, Black, Female

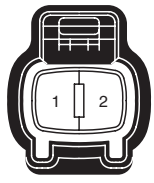

c-e 9 / e-c 9	Front LH wiring harness to Rear wiring harness 9
CD, GB	EG-5, 13 , RR-4

82580-7540, Dark gray, Male

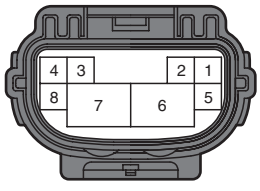

82580-7550, Dark gray, Female

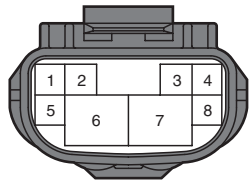

https://truckmanualshub.com/

c-e 10 / c-e 10	Front LH wiring harness to Rear wiring harness 9
GB	EG-5, 13, RR-4

82580-6980, Black, Male

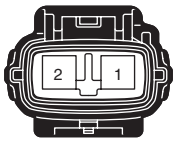

82580-6990, Black, Female

c-sa 2 / sa-c 2	Front LH wiring harness to ZF transmission sub wiring harness 2
AG, AI, BB, BD, BF, CH, CI, CK, HA, IE	EG-4, 11, 16

82580-9040, Gray, Female

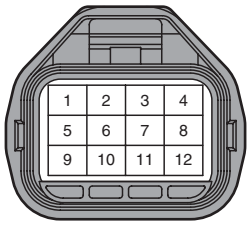

82580-9030, Gray, Male

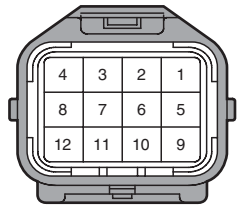

c-sc 1 / sc-c 1	Front LH wiring harness to Intake air heater sub wiring harness 1
AJ	—

82560-1780, Black, Male

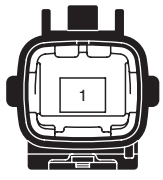

82560-1790, Black, Female

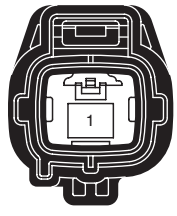

SHTS12Z160200149

https://truckmanualshub.com/

c-sd 1/ sd-c 1	Front LH wiring harness to Headlight sub wiring harness 1
AF, CA, CO	EG-1, 6, 9, 14, 18

82580-6030, Black, Male

82580-6040, Black, Female

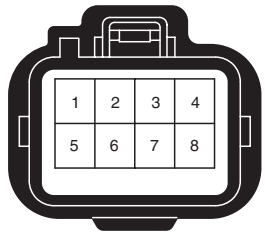

c-sd 2/ sd-c 2	Front LH wiring harness to Cab tilt sub wiring harness 1
AF, CA, CB, CD	EG-1, 6, 9, 14, 18

82580-6030, Black, Male

82580-6040, Black, Female

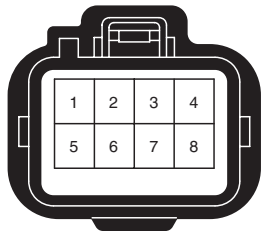

c-se 1 / se-c 1	Front LH wiring harness to Cab tilt sub wiring harness 1
AD, AF, IC, ID	EG-1, 9, 14, 18

82560-2780, Black, Male

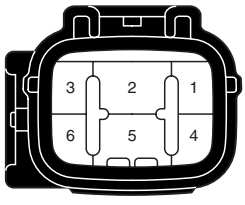

82560-2790, Black, Female

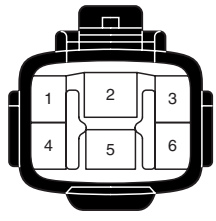

SHTS12Z160200150

https://truckmanualshub.com/

c-sf 2 / sf-c 2	Front LH wiring harness to Air suspension valve box sub wiring harness 2
AF, IF	RR-6

82560-1250, Dark gray, Male

82560-1260, Dark gray, Female

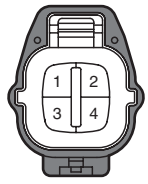

c-sg 1 / sg-c 1	Front LH wiring harness to Brake valve box sub wiring harness 1
BD	EG-17, 20, RR-6

82560-3540, Black, Female

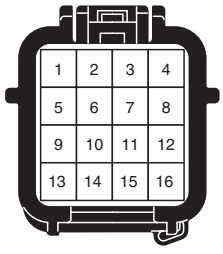

82560-3530, Black, Male

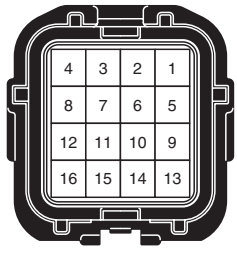

c-sh 1 / sh-c 1	Front LH wiring harness to Side turn signal sub wiring harness 1
AF, CD	EG-8

82580-8340, Black, Male

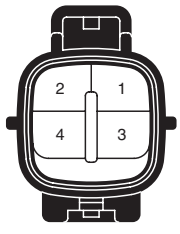

82560-8350, Black, Female

SHTS12Z160200151

https://truckmanualshub.com/

d-e 1 / e-d 1	Intermediate wiring harness to Rear wiring harness 1
AD, AF, CD, CF, CI	RR-1, 2, 3, 5

82560-4380, Black, Male

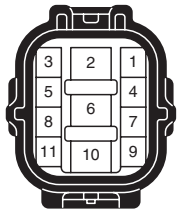

82560-4390, Black, Female

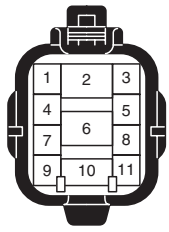

d-sf 1 / sf-d 1	Intermediate wiring harness to Air suspension valve box sub wiring harness 1
AF, IG	RR-2

82560-4750, Black, Female

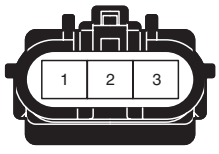

82560-3350, Black, Male

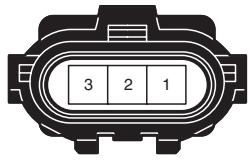

d-sg 1 / sg-d 1	Intermediate wiring harness to Brake valve box sub wiring harness 1
BB, GA	RR-1, 2, 3, 5

82560-3540, Black, Female

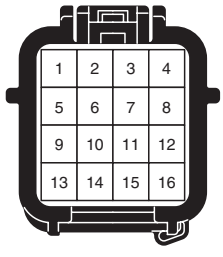

82560-3530, Black, Male

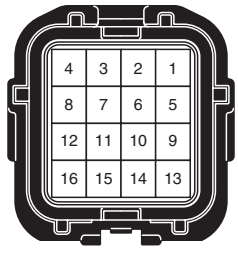

SHTS12Z160200152

https://truckmanualshub.com/

e-sg 1 / sg-e 1	Rear wiring harness to Side turn signal sub wiring harness 1
BB, IK, IL	RR-3, 4, 5

82560-3540, Black, Female

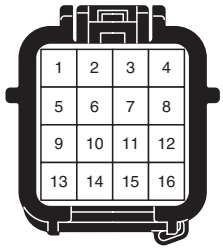

82560-3530, Black, Male

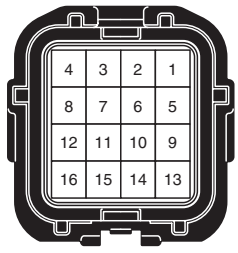

e-sh 1 / sh-e 1	Rear wiring harness to Side turn signal wiring harness 1
AF, CD	RR-3

82580-8340, Black, Male

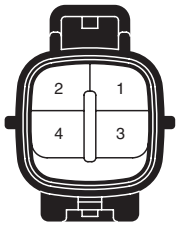

82560-8350, Black, Female

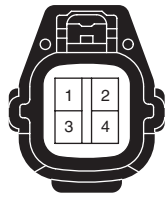

f-g 1 / g-f 1	Instrument panel wiring harness to Instrument panel switch wiring harness 1
DD, FH, FJ, GD, IK, IL	IP-2

82560-2150, White, Male

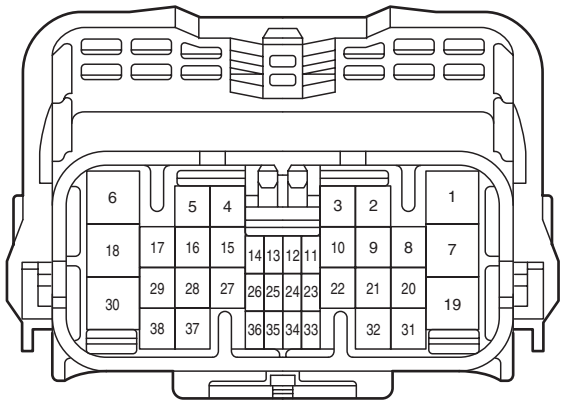

82560-2160, White, Female

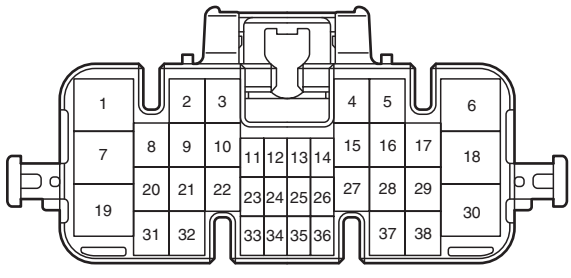

SHTS12Z160200153

https://truckmanualshub.com/

f-m 1 / m-f 1	Instrument panel wiring harness to Floor wiring harness 1
AE, CL, IA, IB, IC, ID	IP-3, 7

82580-8730, White, Male

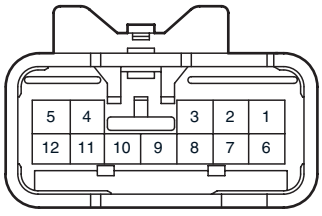

82580-8740, White, Female

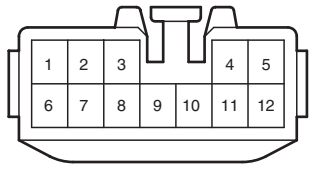

h-j 1 / j-h 1	Dash panel wiring harness to Door LH wiring harness 1
AE, CC, CE, CL, DH	CA-4

82560-2670, Black, Male

82560-2680, Black, Female

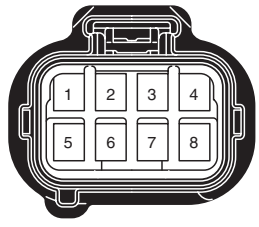

h-j 2 / j-h 2	Dash panel wiring harness to Door LH wiring harness 2
DH, DM	CA-4

82580-6030, Gray, Male

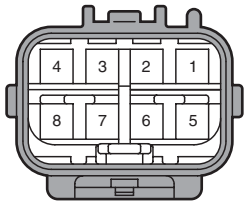

82580-6040, Gray, Female

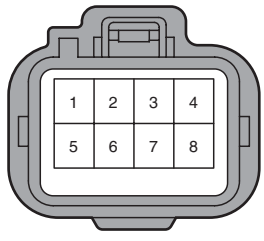

SHTS12Z160200154

https://truckmanualshub.com/

h-k 1 / k-h 1	Dush panel wiring harness to Door RH wiring harness 1
AE, CC, CE, CL, DA, DF, DG	CA-2

82560-2670, Black, Male

82560-2680, Black, Female

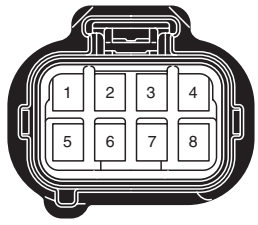

h-k 2 / k-h 2	Dush panel wiring harness to Door RH wiring harness 2
AE, DB, DG, DM	CA-2

82580-6030, Gray, Male

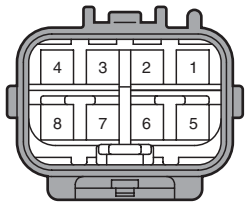

82580-6040, Gray, Female

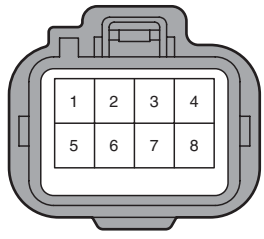

sa-sb 1 / sb-sa 1	ZF transmission sub wiring harness to ZF transmission P.T.O. sub wiring harness 1
IE	EG-4, 11, 16

82580-7180, Black, Female

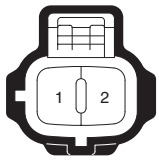

82580-7170, Black, Male

SHTS12Z160200155

https://truckmanualshub.com/

JUNCITON CONNECTOR

EN12Z1602J100006

NOTICE
Drawings may show the terminals that are not mounted on the vehicle according to the vehicle specification.

a606	J/C ETC 14P
FA, IE	IP-2, 6

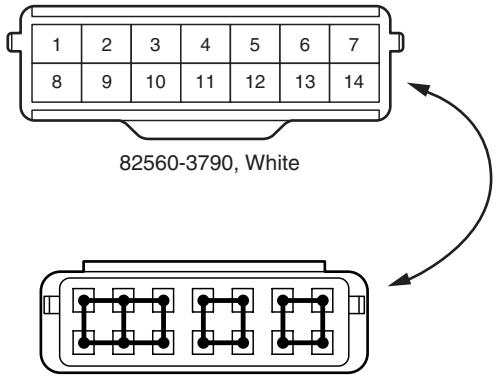

a607	J/C Earth 14P
AD, AE, AG, FG	IP-2, 6

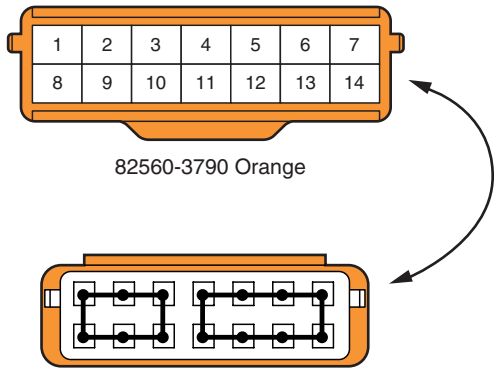

a608	J/C Earth 14P-G2
AD, AE	IP-2, 6

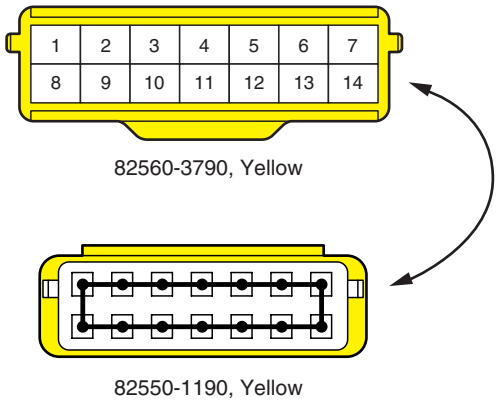

SHTS12Z160200156

https://truckmanualshub.com/

a609	J/C Common rail 20P
AH, AI, FA, FC, FE, FF, FH, FI, HA, HB, IE	IP-1, 5

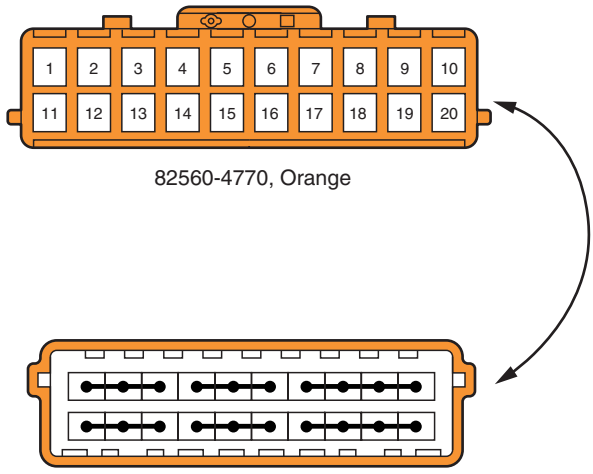

a612	J/C Earth G2-a
AD, AE	IP-1, 5

a613	J/C Common rail 13P
FA	IP-1, 5

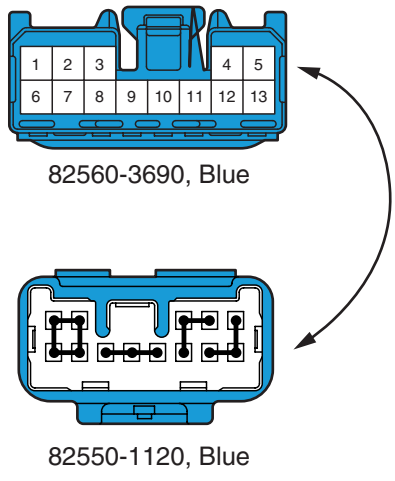

SHTS12Z160200157

https://truckmanualshub.com/

a614	J/C ETC 13P-1
BA, BC, CH, CI, CJ, CK ,DJ	IP-1, 5

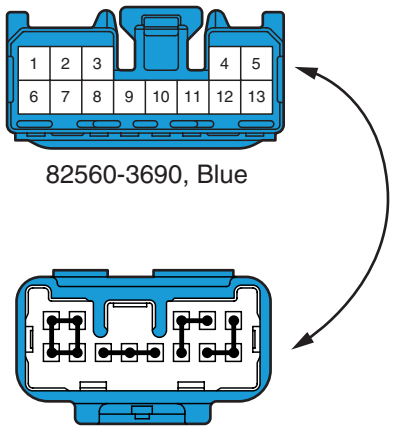

a615	J/C ETC 13P-2
CA, CC, CE, CF, FA, FE	IP-1, 5

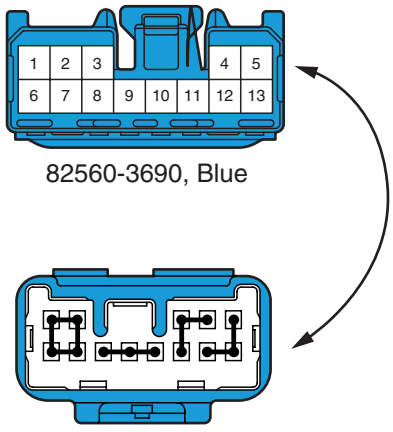

a619	J/C CAN
BA, BC, FA, IK, IL	IP-1, 5

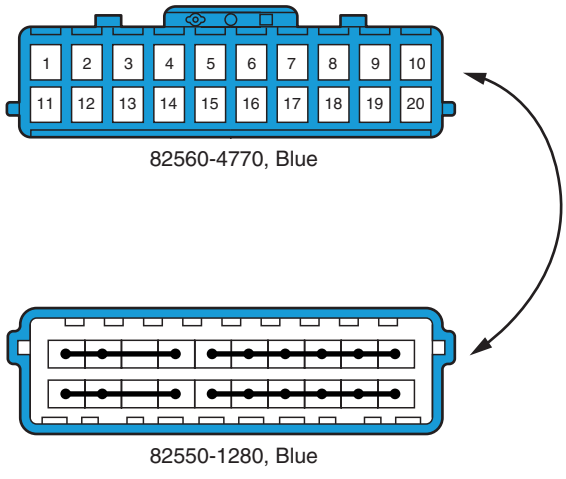

SHTS12Z160200158

https://truckmanualshub.com/

b201	J/C Earth
AD, AF, AG	EG-3, 8, 10, 11, 12, 17, 20

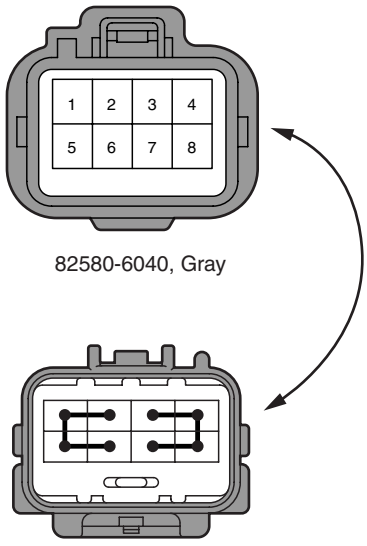

b202	J/C Earth G2
AD, AF	EG-3, 8, 10, 11, 12, 17, 20

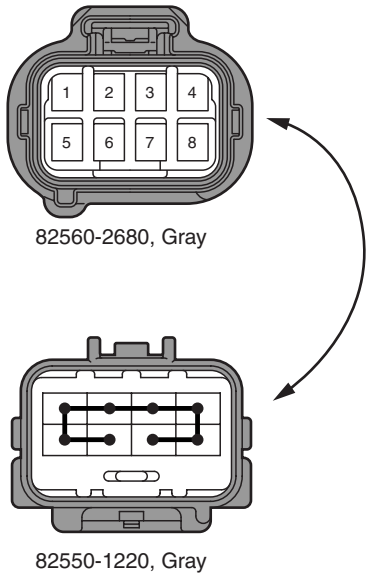

SHTS12Z160200159

https://truckmanualshub.com/

c201	J/C Earth G2-a
AD, AF, IC, ID	EG-2, 3, 4, 9, 15, 16, 19, RR-16

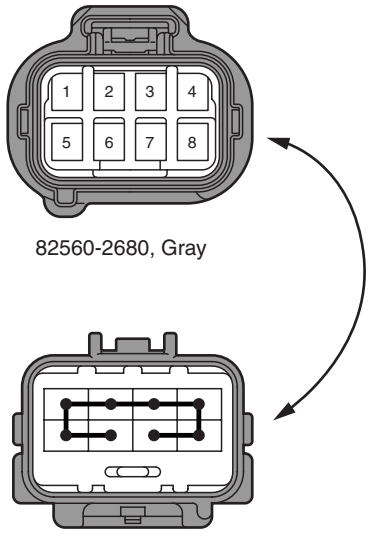

c202	J/C Earth G2-b
AD, AF	RR-6, 7

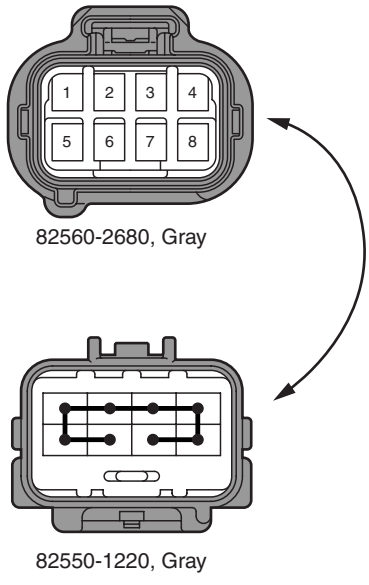

https://truckmanualshub.com/

f604	J/C Earth 14P-G2
AC, AD, AE, DF, FH	IP-2, 6

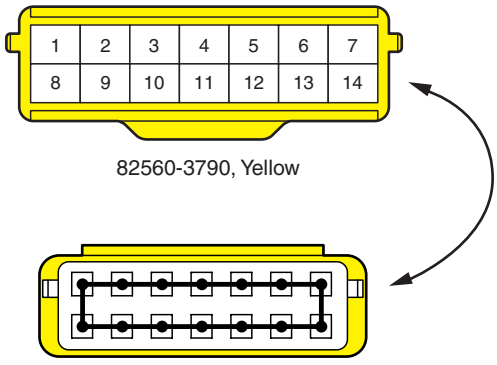

ea3	J/C Engine CAN
FC	EG-1, 6, 9, 14, 18

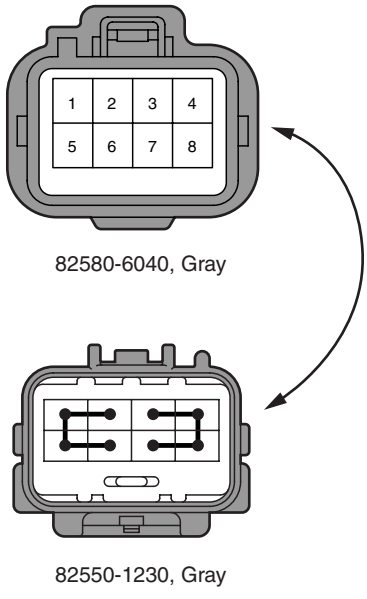

https://truckmanualshub.com/

CONNECTOR LOCATION

EN12Z1602J100007

NOTICE

There is a case that the following figures are different from that for your vehicle in the devices locations due to the model or specification.

IP-1 [INSTRUMENT PANEL (1 of 4)] (Models: Right-hand drive)

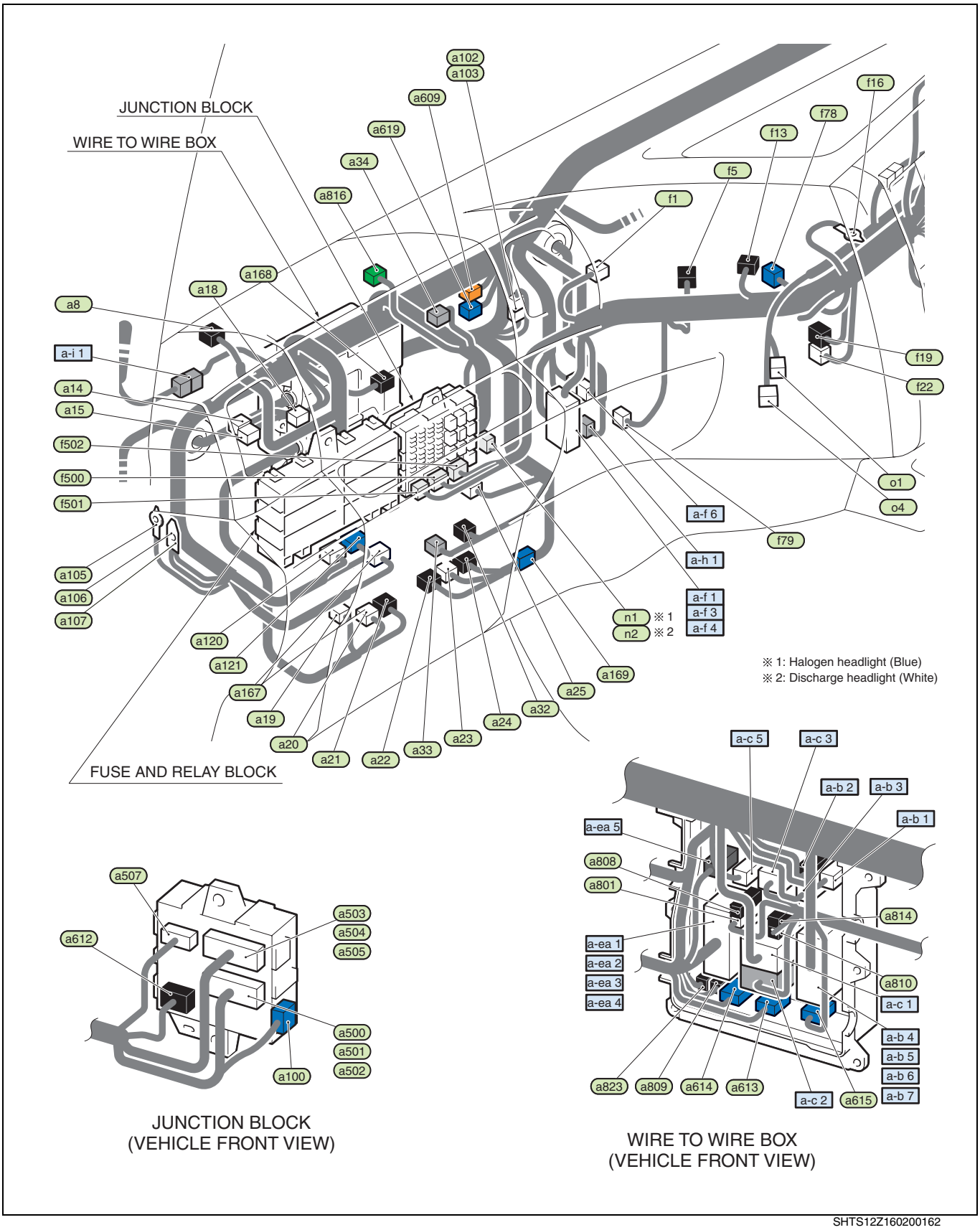

SHTS12Z160200162

https://truckmanualshub.com/

ELECTRICAL EQUIPMENT CONNECTOR AND JUNCTION CONNECTOR

No.	Name	Circuit	No.	Name	Circuit
a8	Front speaker (LH)	DI	a505	Junction block 28P-c	CA, CC, CE, EA, FA, FC
a14	ES start ECU (26 pin)	GD	a507	Junction block 6P	AB
a15	ES start ECU (12 pin)	GD	a609	J/C Common rail 20P	AH, AI, FA, FC, FE, FF, FI, HA, HB, IE
a18	Trailer pick-up controller	CC, CE	a612	J/C Earth 13P G2-a	AD, AE
a19	DC/DC converter (Common rail)	FC	a613	J/C Common rail 13P	FA
a20	Common rail ECU (31 pin)	FA, FC	a614	J/C ETC 13P-1	BA, BC, CH, CI, CJ, CK, DJ
a21	Common rail ECU (35 pin-2)	FA, FC, FE, FI, FJ	a615	J/C ETC 13P-2	CA, CC, CE, CF, FA, FE
a22	Common rail ECU (32 pin)	FA, FE, FF, FG, FI, FJ	a619	J/C CAN	BA, BC, FA, IK, IL
a23	Common rail ECU (35 pin-1)	FA, FC, FD, FE, FF, FG, FI, FJ	a801	Room light diode No.2	CL
a24	Common rail ECU (34 pin)	FA, FC, FI	a808	Brake blending stop diode	CC, CE
a25	Pulse adjust computer	BA, BC	a809	Cornering light diode	CA
a32	ABS ECU (14 pin)	GA, GB, GC	a810	Air conditioner diode	EA
a33	ABS ECU (18 pin)	GA, GB, GC	a814	Brake blending diode	FE
a34	Headlight washer relay	CN	a816	Brake blending resistor	FA
a100	Headlight short circuit connector (Cab side)	CA, CO	a823	Differential lock diode	IL
a102	Common rail 025 wire to wire (Male connector)	AH, AI, BA, BC, FA, FC, FE, GA, GB, GC, GD, HA, HB, IE	f1	DC/DC converter (Leveling)	CB, CO
a103	Common rail 025 wire to wire (Female connector)	AH, AI, BA, BC, FA, FC, FE, GA, GB, GC, GD, HA, HB, IE	f5	Blower motor	EA
a105	Earth AS-1	AD, AE	f13	Lock amp	EA
a106	Earth AS-2	AD, AE	f16	Earth audio	AE, DI
a107	Earth AS-3	AD, AE	f19	Air conditioner unit	EA
a120	Turn signal flasher	CC, CE	f22	Power mirror controller	DN
a121	Wiper relay	DL	f78	Shift buzzer	HB
a167	Autoleveling ECU	CO	f79	Keyless entry door lock controller	DM
a168	Interface ECU	CO	f500	Junction block 1	AL, CL, DD, DF, DI, EA
a169	Chill car idle up	FJ	f501	Junction block 2	AL, AM, EA, FJ
a500	Junction block 32P-a	AA, CA, CC, CE, CG	f502	Junction block 3	AL, AM, DB, DN, EA
a501	Junction block 32P-b	AA, BA, BC, CL, DJ, EA	n1	Headlight short circuit connector (Halogen headlight)	CA
a502	Junction block 32P-c	AA, AL, BA, BC, CA, CC, CE, CF, CN	n2	Headlight short circuit connector (Discharge headlight)	CA
a503	Junction block 28P-a	AA, BA, CA, FA	o1	P12V connector	AN
a504	Junction block 28P-b	AL, BA, BC DG, DL, FA	o4	12V socket	AN

https://truckmanualshub.com/

WIRE TO WIRE CONNECTOR

No.	Name	No.	Name
a-b 1	Cab main wiring harness to Front RH wiring harness 1	a-ea 1	Cab main wiring harness to Engine wiring harness 1
a-b 2	Cab main wiring harness to Front RH wiring harness 2	a-ea 2	Cab main wiring harness to Engine wiring harness 2
a-b 3	Cab main wiring harness to Front RH wiring harness 3	a-ea 3	Cab main wiring harness to Engine wiring harness 3
a-b 4	Cab main wiring harness to Front RH wiring harness 4	a-ea 4	Cab main wiring harness to Engine wiring harness 4
a-b 5	Cab main wiring harness to Front RH wiring harness 5	a-ea 5	Cab main wiring harness to Engine wiring harness 5
a-b 6	Cab main wiring harness to Front RH wiring harness 6	a-f 1	Cab main wiring harness to Instrument panel wiring harness 1
a-b 7	Cab main wiring harness to Front RH wiring harness 7	a-f 3	Cab main wiring harness to Instrument panel wiring harness 3
a-c 1	Cab main wiring harness to Front LH wiring harness 1	a-f 4	Cab main wiring harness to Instrument panel wiring harness 4
a-c 2	Cab main wiring harness to Front LH wiring harness 2	a-f 6	Cab main wiring harness to Instrument panel wiring harness 6
a-c 3	Cab main wiring harness to Front LH wiring harness 3	a-h 1	Cab main wiring harness to Dash panel wiring harness 1
a-c 5	Cab main wiring harness to Front LH wiring harness 5	a-i 1	Cab main wiring harness to Roof wiring harness 1

https://truckmanualshub.com/

IP-2 [INSTRUMENT PANEL (2 of 4)] (Models: Right-hand drive)

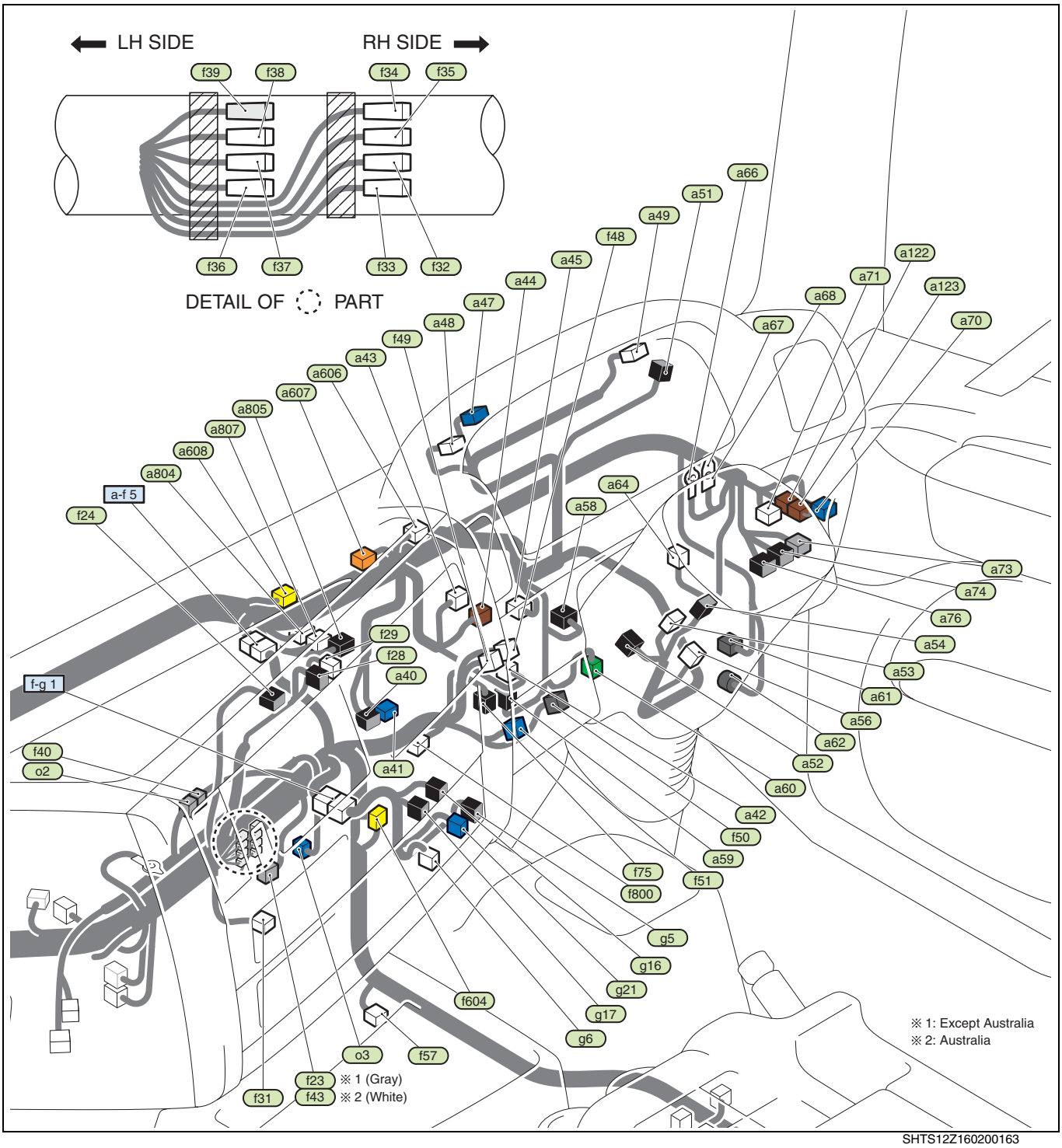

SHTS12Z160200163

https://truckmanualshub.com/

ELECTRICAL EQUIPMENT CONNECTOR AND JUNCTION CONNECTOR

No.	Name	Circuit	No.	Name	Circuit
a40	ABS diagnosis switch	GA, GB, GC	a805	Hong Kong diode (For Hong Kong model)	CC, CE
a41	Diagnosis connector (16P)	DJ	a807	P.T.O. diode	IE
a42	Clutch switch	FE	f23	Power door lock controller	DM
a43	Dump warning buzzer	IE	f24	Radio/Audio unit	DI
a44	Differential lock buzzer	IL	f28	Blower switch	EA
a45	Warning buzzer	BA, BC	f29	Air conditioner switch	EA
a47	Combination meter (18 pin)	BA, BC	f31	Tachograph/ KIENZLE Tachograph	BE, BF
a48	Combination meter (22 pin)	BA, BC	f32	P/BAT	AL
a49	Combination meter (22 pin)	BA, BC	f33	P/M	AL
a51	Front speaker (RH)	DI	f34	P/ACC CAB	AL
a52	Starter switch	AA	f35	P/TAIL CAB	AL
a53	Wiper and retarder switch	CC, CE, DL, FE	f36	SERVICE CAB 1	AL
a54	Light and turn switch	CA, CC, CE, FG	f37	SERVICE CAB 2	AL
a56	Horn switch	DC	f38	SERVICE CAB 3	AL
a58	Clutch stroke sensor	GD	f39	SERVICE GROUND	AD, AE
a59	Clutch stroke switch	FF	f40	ETC. sub power supply connector	AM
a60	Stop light switch	CC, CE	f43	Keyless entry controller	DF
a61	Accelerator switch	FE	f48	Wiper and retarder switch	CN
a62	Accelerator sensor	FA	f49	Economy running switch	FJ
a64	Diagnosis standard connector	DK	f50	Exhaust brake check switch	FE
a66	Earth DR-1	AD, AE	f51	Transmission P.T.O. switch	IE
a67	Earth DR-2	AD, AE	f57	MZ12 range and splitter change switch	HB
a68	Earth DR-3	AD, AE	f57	ZF splitter change switch	HA
a70	Idle volume	FA	f75	Trailer hand brake switch	BA, BC
a71	Auto cruise main switch	FG	f604	J/C Earth 14P-G2	AD, AE, DF
a73	Headlight leveling switch	CB	f800	Room light diode No.1	CL
a74	Front fog light switch	CF	g5	Differential lock switch	IK, IL
a76	Rear fog light switch	CF	g6	Cigarette lighter	DD
a122	Parking light switch	CC, CE	g16	ES start main switch	GD
a123	Parking light short circuit connector	CC, CE	g17	Mixer idle up switch	FJ
a606	J/C ETC 14P	FA, IE	g21	Differential lock change switch	IL
a607	J/C Earth 14P	AD, AE, AG, FG	o2	DC/DC converter (12V)	AN
a608	J/C Earth 14P-G2	AD, AE	o3	P24V connector	AN
a804	MZ12 transmission diode	HB			

WIRE TO WIRE CONNECTOR

No.	Name	No.	Name
a-f 5	Cab main wiring harness to Instrument panel wiring harness 5	f-g 1	Instrument panel wiring harness to Instrument panel switch wiring harness 1

https://truckmanualshub.com/

IP-3 [INSTRUMENT PANEL (3 of 4)] (Models: Right-hand drive)

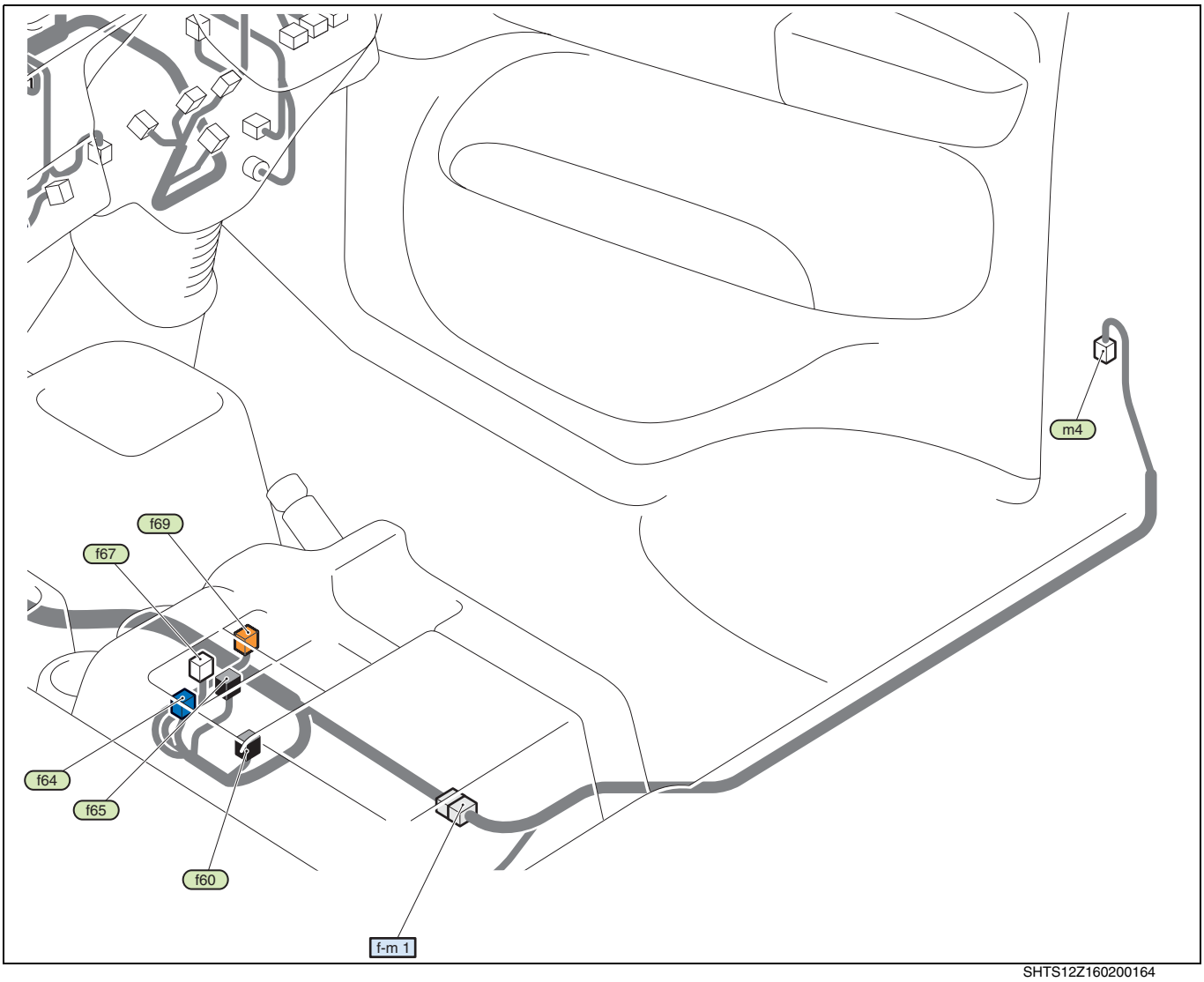

SHTS12Z160200164

ELECTRICAL EQUIPMENT CONNECTOR AND JUNCTION CONNECTOR

No.	Name	Circuit	No.	Name	Circuit
f60	Fluorescent light switch	CL	f67	Power mirror switch	DN
f64	Remote control mirror switch	DB	f69	Mirror heater switch	DA
f65	Air suspension switch	IF	m4	Courtesy switch RH	CL

WIRE TO WIRE CONNECTOR

No.	Name	No.	Name
f-m 1	Instrument panel wiring harness to Floor wiring harness 1		

https://truckmanualshub.com/

IP-4 [INSTRUMENT PANEL (4 of 4)] (Models: Right-hand drive)

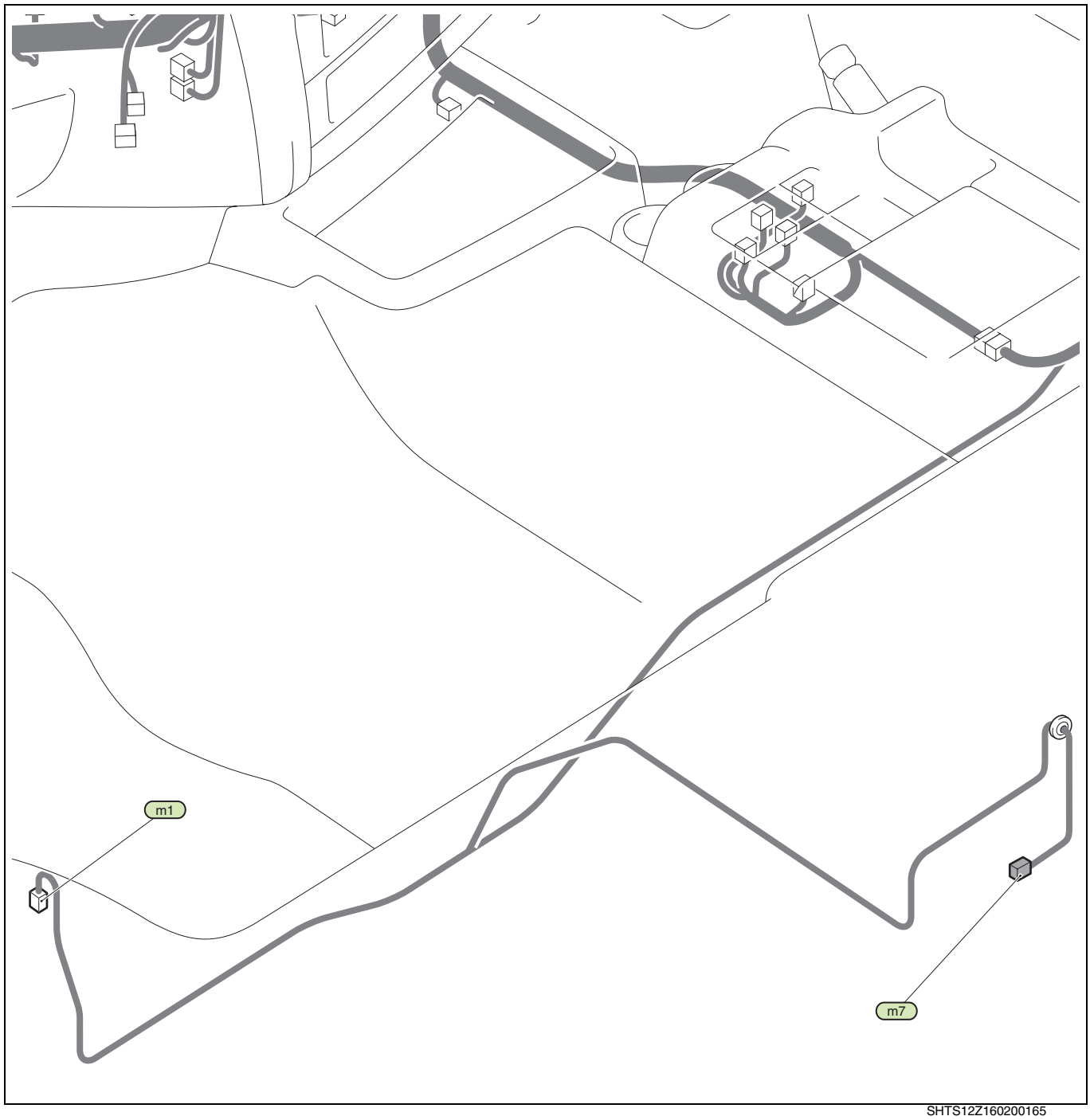

SHTS12Z160200165

ELECTRICAL EQUIPMENT CONNECTOR AND JUNCTION CONNECTOR

No.	Name	Circuit	No.	Name	Circuit
m1	Courtesy switch LH	CL	m7	Cab tilt lock switch	IA, IB, IC, ID

https://truckmanualshub.com/

IP-5 [INSTRUMENT PANEL (1 of 4)] (Models: Left-hand drive)

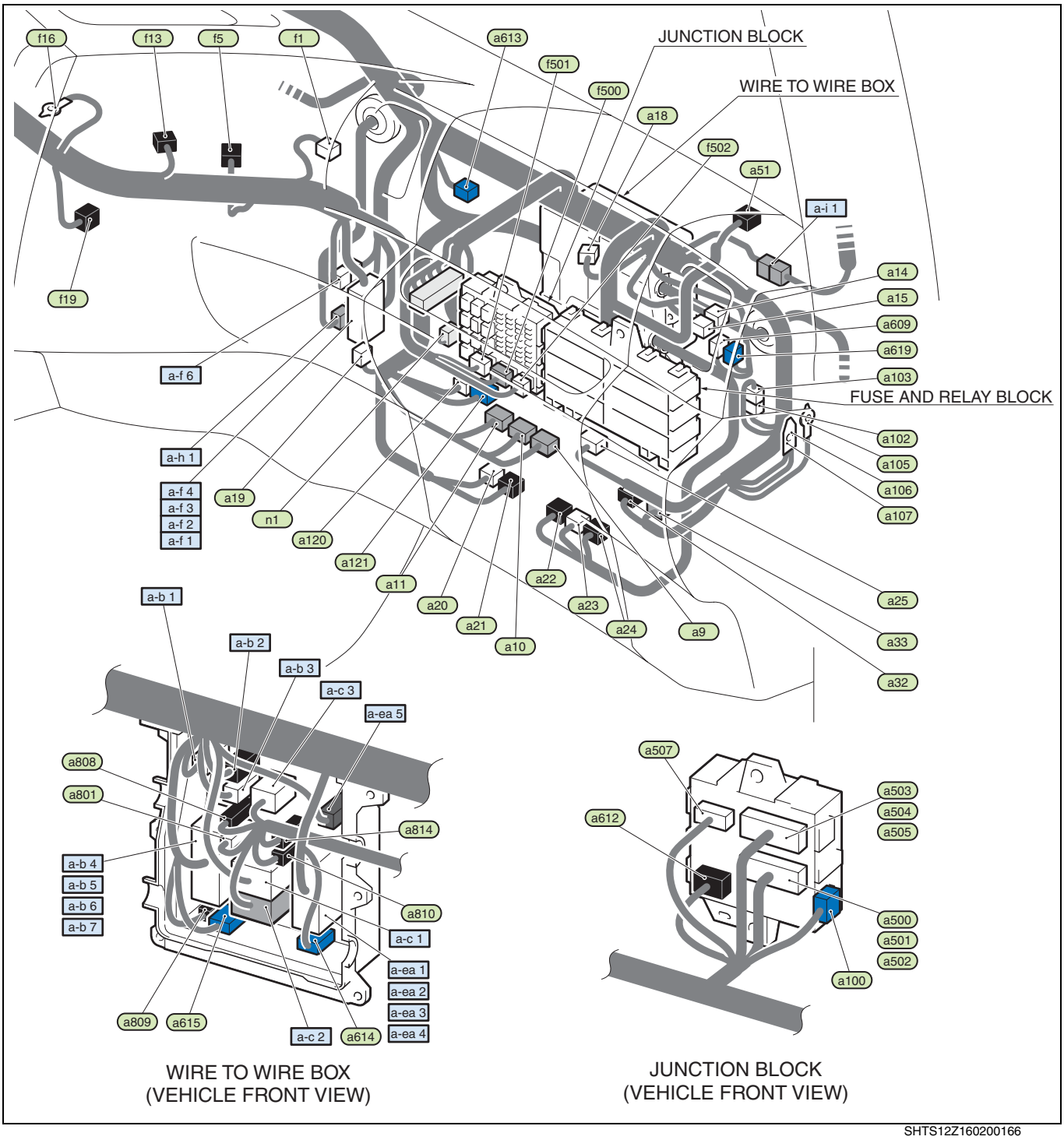

SHTS12Z160200166

https://truckmanualshub.com/

ELECTRICAL EQUIPMENT CONNECTOR AND JUNCTION CONNECTOR

No.	Name	Circuit	No.	Name	Circuit
a9	Air suspension ECU (26 pin)	IG	a502	Junction block 32P-c	AA, AL, BA, BC, CA, CC, CE, CF
a10	Air suspension ECU (16 pin)	IG	a503	Junction block 28P-a	AA, BA, CA, FA
a11	Air suspension ECU (12 pin)	IG	a504	Junction block 28P-b	AL, BA, BC, FA, DH, DL
a14	ES start ECU (26 pin)	GD	a505	Junction block 28P-c	CA, CC, CE, EA, FA, FC
a15	ES start ECU (12 pin)	GD	a507	Junction block 6P	AB
a18	Pick-up controller	CE	a609	J/C Common rail 20P	AH, FA, FC, FE, FH, FI, HB, IE
a19	DC/DC converter (Common rail)	FC	a612	J/C Earth 13P G2-a	AD, AE
a20	Common rail ECU (31 pin)	FA, FC	a613	J/C Common rail 13P	FA
a21	Common rail ECU (35 pin-2)	FA, FC, FE, FI, FJ	a614	J/C ETC 13P-1	BA, BC, CH, CI, CJ, DJ
a22	Common rail ECU (32 pin)	FA, FE, FH, FI, FJ	a615	J/C ETC 13P-2	CA, CC, CE, FA, FE
a23	Common rail ECU (35 pin-1)	FA, FC, FD, FE, FH, FI, FJ	a619	J/C CAN	BA, BC, FA, IK
a24	Common rail ECU (34 pin)	FA, FC, FI	a801	Room light diode No.2	CL
a25	Pulse adjust computer	BA, BC	a808	Brake blending stop diode	CC, CE
a32	ABS ECU (14 pin)	GA, GC	a809	Cornering light diode No.2	CA
a33	ABS ECU (18 pin)	GA, GC	a810	Air conditioner diode	EA
a51	Front speaker (RH)	DI	a814	Brake blending diode	FE
a100	Headlight short circuit connector (Cab side)	CA	f1	DC/DC converter (Leveling)	CB
a102	Common rail 025 wire to wire (Male connector)	AH, BA, BC, FA, FC, FE, GA, GC, GD, HB, IE	f5	Blower motor	EA
a103	Common rail 025 wire to wire (Female connector)	AH, BA, BC, FA, FC, FE, GA, GC, GD, HB, IE	f13	Lock amp	EA
a105	Earth AS-1	AD, AE	f16	Earth audio No.1	AE, DI
a106	Earth AS-2	AD, AE	f19	Air conditioner unit	EA
a107	Earth AS-3	AD, AE	f500	Junction block 1	AL, CL, DI, EA
a120	Turn signal flasher	CC, CE	f501	Junction block 2	AL, AM, EA, FE, FH
a121	Wiper relay	DL	f502	Junction block 3	AL, AM, EA
a500	Junction block 32P-a	AA, CA, CC, CE, CG	n1	Headlight short circuit connector (Halogen headlight)	CA
a501	Junction block 32P-b	AA, BA, BC, CL, DJ, EA			

https://truckmanualshub.com/

WIRE TO WIRE CONNECTOR

No.	Name	No.	Name
a-b 1	Cab main wiring harness to Front RH wiring harness 1	a-f 2	Cab main wiring harness to Instrument panel wiring harness 2
a-b 2	Cab main wiring harness to Front RH wiring harness 2	a-f 3	Cab main wiring harness to Instrument panel wiring harness 3
a-b 3	Cab main wiring harness to Front RH wiring harness 3	a-f 4	Cab main wiring harness to Instrument panel wiring harness 4
a-b 4	Cab main wiring harness to Front RH wiring harness 4	a-f 6	Cab main wiring harness to Instrument panel wiring harness 6
a-b 5	Cab main wiring harness to Front RH wiring harness 5	a-h 1	Cab main wiring harness to Dash panel wiring harness 1
a-b 6	Cab main wiring harness to Front RH wiring harness 6	a-i 1	Cab main wiring harness to Roof wiring harness 1
a-b 7	Cab main wiring harness to Front RH wiring harness 7	a-ea 1	Cab main wiring harness to Engine wiring harness 1
a-c 1	Cab main wiring harness to Front LH wiring harness 1	a-ea 2	Cab main wiring harness to Engine wiring harness 2
a-c 2	Cab main wiring harness to Front LH wiring harness 2	a-ea 3	Cab main wiring harness to Engine wiring harness 3
a-c 3	Cab main wiring harness to Front LH wiring harness 3	a-ea 4	Cab main wiring harness to Engine wiring harness 4
a-f 1	Cab main wiring harness to Instrument panel wiring harness 1	a-ea 5	Cab main wiring harness to Engine wiring harness 5

https://truckmanualshub.com/

https://truckmanualshub.com/

IP-6 [INSTRUMENT PANEL (2 of 4)] (Models: Left-hand drive)

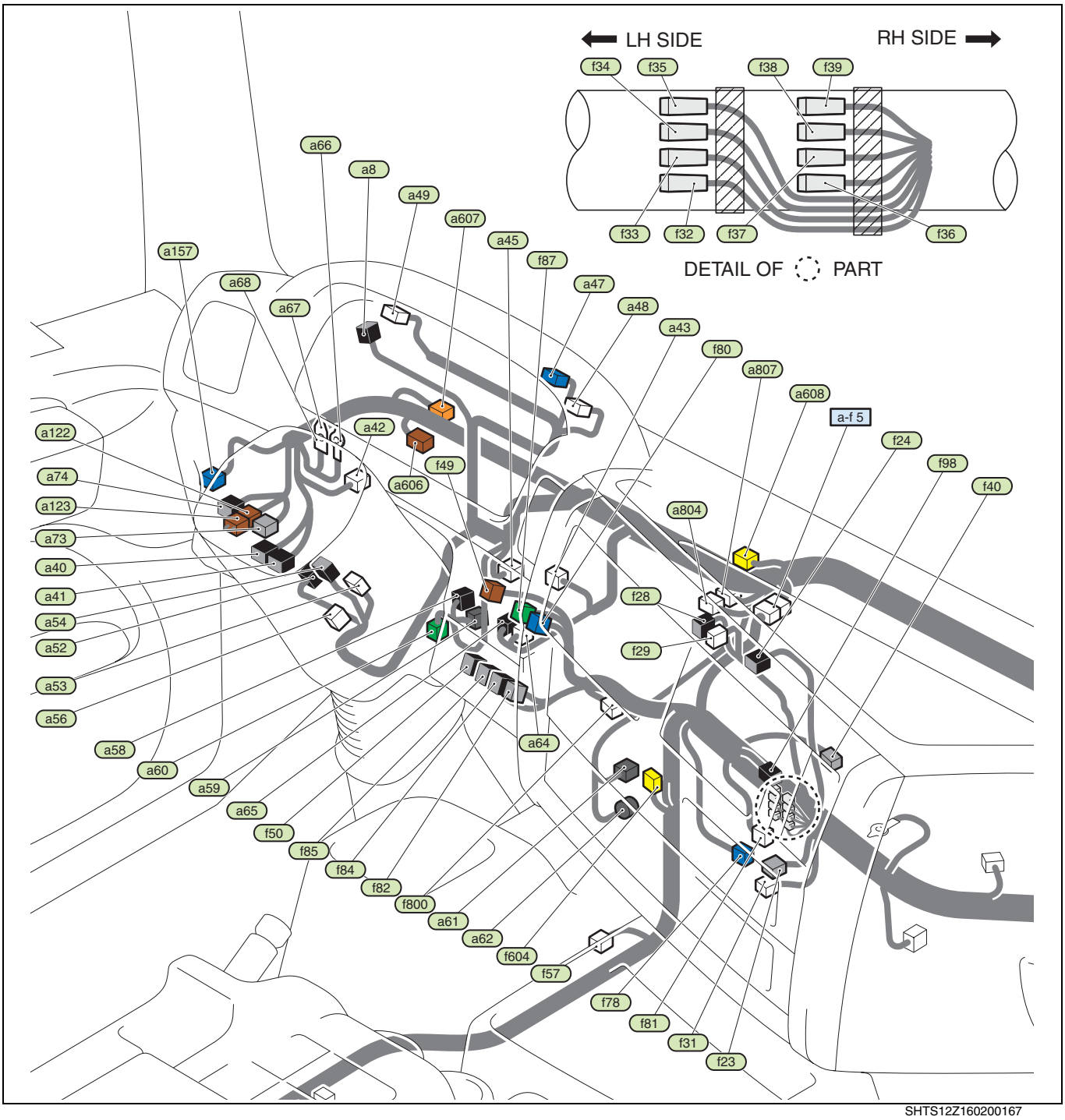

SHTS12Z160200167

https://truckmanualshub.com/

ELECTRICAL EQUIPMENT CONNECTOR AND JUNCTION CONNECTOR

No.	Name	Circuit	No.	Name	Circuit
a8	Front speaker (LH)	DI	a608	J/C Earth 14P-G2	AD, AE
a40	ABS diagnosis switch	GA, GC	a804	MZ12 transmission diode	HB
a41	Diagnosis connector (16P)	DJ	a807	P.T.O. diode	IE
a42	Clutch switch	FE	f23	Power door lock controller	DM
a43	Dump warning buzzer	IE	f24	Radio/Audio unit	DI
a45	Warning buzzer	BA, BC	f28	Blower switch	EA
a47	Combination meter (18 pin)	BA, BC	f29	Air conditioner switch	EA
a48	Combination meter (22 pin)	BA, BC	f31	Tachograph	BE, BF
a49	Combination meter (22 pin)	BA, BC	f32	P/BAT	AL
a52	Starter switch	AA	f33	P/M	AL
a53	Wiper and retarder switch	CC, CE, DL, FE	f34	P/ACC CAB	AL
a54	Light and turn switch	CA, CC, CE	f35	P/TAIL CAB	AL
a56	Horn switch	DC	f36	SERVICE CAB 1	AL
a58	Clutch stroke sensor	GD	f37	SERVICE CAB 2	AL
a59	Clutch stroke switch	FH	f38	SERVICE CAB 3	AL
a60	Stop light switch	CC, CE	f39	SERVICE GROUND	AD, AE
a61	Accelerator switch	FE	f40	ETC. sub power supply connector	AM
a62	Accelerator sensor	FA	f49	Economy running switch	FJ
a64	Diagnosis standard connector	DK	f50	Exhaust brake check switch	FE
a65	Diagnosis option connector	DK	f57	MZ12 range and splitter change switch	HB
a66	Earth DR-1	AD, AE	f78	Shift buzzer	HB
a67	Earth DR-2	AD, AE	f80	Idle volume	FA
a68	Earth DR-3	AD, AE	f81	Cigarette lighter	DE
a73	Headlight leveling switch	CB	f82	Starting idle up switch	FH
a74	Front fog light switch	CF	f84	ES start main switch	GD
a122	Parking light switch	CC, CE	f85	Differential lock switch	IK
a123	Parking light short circuit connector	CC, CE	f87	Air suspension remote control release switch	IG
a157	Transmission P.T.O. switch	IE	f98	Battery cut switch (Front)	AC
a606	J/C ETC 14P	FA, IE	f604	J/C Earth 14P-G2	AC, AD, AE, FH
a607	J/C Earth 14P	AD, AE, AG	f800	Room light diode No.1	CL

WIRE TO WIRE CONNECTOR

No.	Name	No.	Name
a-f 5	Cab main wiring harness to Instrument panel wiring harness 5		

https://truckmanualshub.com/

IP-7 [INSTRUMENT PANEL (3 of 4)] (Models: Left-hand drive)

SHTS12Z160200168

ELECTRICAL EQUIPMENT CONNECTOR AND JUNCTION CONNECTOR

No.	Name	Circuit	No.	Name	Circuit
f60	Fluorescent light switch	CL	f69	Mirror heater switch	DA
f63	Air suspension controller (Remote control type)	IG	m4	Courtesy switch RH	CL
f65	Air suspension switch (Dump control)	IF			

WIRE TO WIRE CONNECTOR

No.	Name	No.	Name
f-m 1	Instrument panel wiring harness to Floor wiring harness 1		

https://truckmanualshub.com/

IP-8 [INSTRUMENT PANEL 4 of 4)] (Models: Left-hand drive)

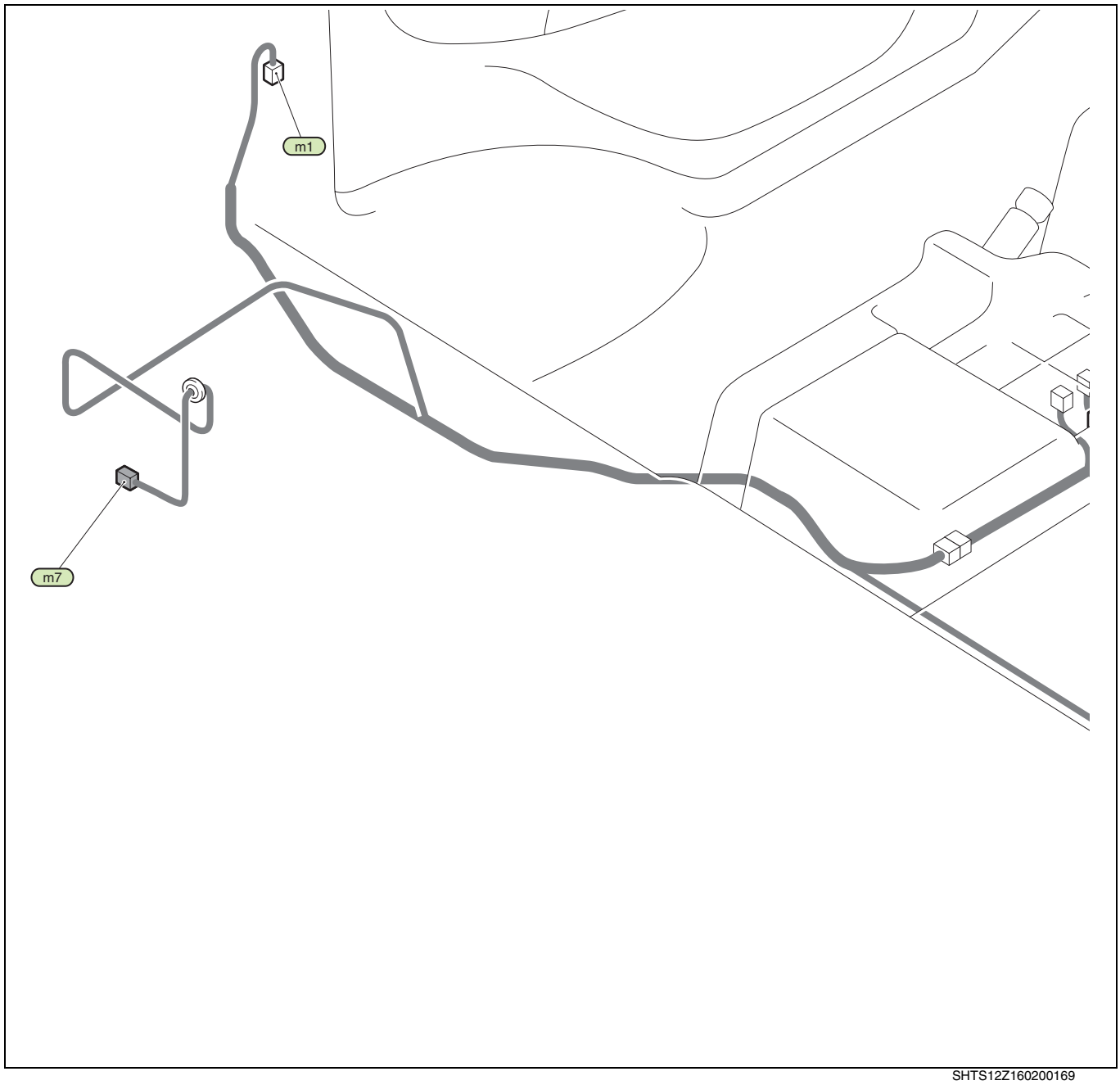

SHTS12Z160200169

ELECTRICAL EQUIPMENT CONNECTOR AND JUNCTION CONNECTOR

No.	Name	Circuit	No.	Name	Circuit
m1	Courtesy switch LH	CL	m7	Cab tilt lock switch	IA, IC

https://truckmanualshub.com/

CA-1 [CAB (1 of 2)] (Models: Right-hand drive)

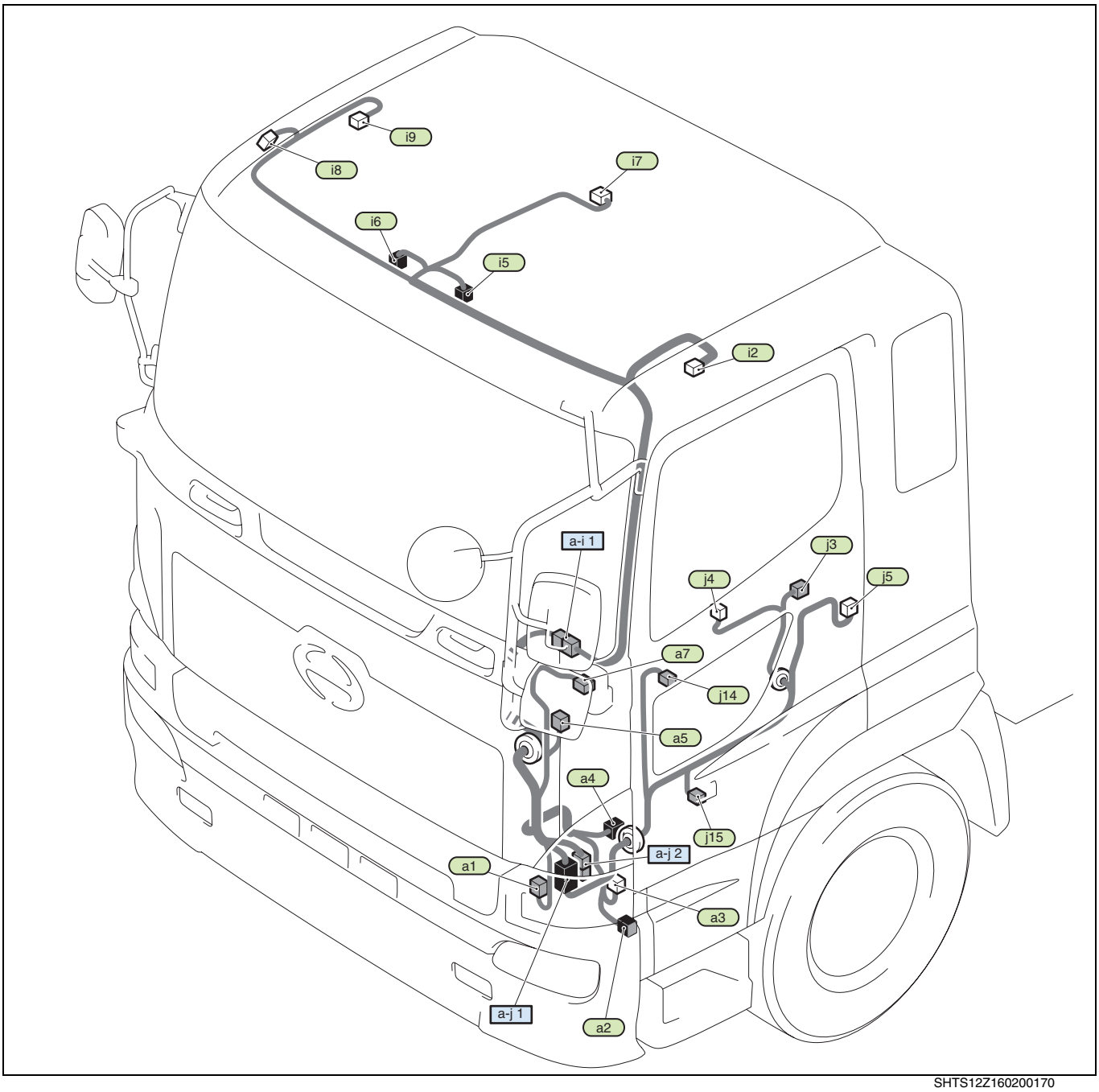

SHTS12Z160200170

https://truckmanualshub.com/

ELECTRICAL EQUIPMENT CONNECTOR AND JUNCTION CONNECTOR

No.	Name	Circuit	No.	Name	Circuit
a1	Front turn signal light LH	CC, CE	i7	Fluorescent light	CL
a2	Front side marker light LH	CG	i8	Roof marker light RH	CG
a3	Washer pump motor	CN, DL	i9	Dome light RH	CL
a4	Air conditioner condenser	EA	j3	Power window motor (Assistant's side)	DG
a5	Power mirror motor	DN	j4	Power window switch (Assistant's side)	DG
a7	Mirror heater (Side under) (Except Ireland model)	DA, DB	j5	Power door lock actuator (Assistant's side)	DM
i2	Roof marker light LH	CG	j14	Mirror heater (Side under) (For Ireland model)	DA
i5	Center speaker LH	DI	j15	Front side turn signal light LH	CC, CE
i6	Center speaker RH	DI			

WIRE TO WIRE CONNECTOR

No.	Name	No.	Name
a-i 1	Cab main wiring harness to Roof wiring harness 1	a-j 2	Cab main wiring harness to Door LH wiring harness 2
a-j 1	Cab main wiring harness to Door LH wiring harness 1		

https://truckmanualshub.com/

CA-2 [CAB (2 of 2)] (Models: Right-hand drive)

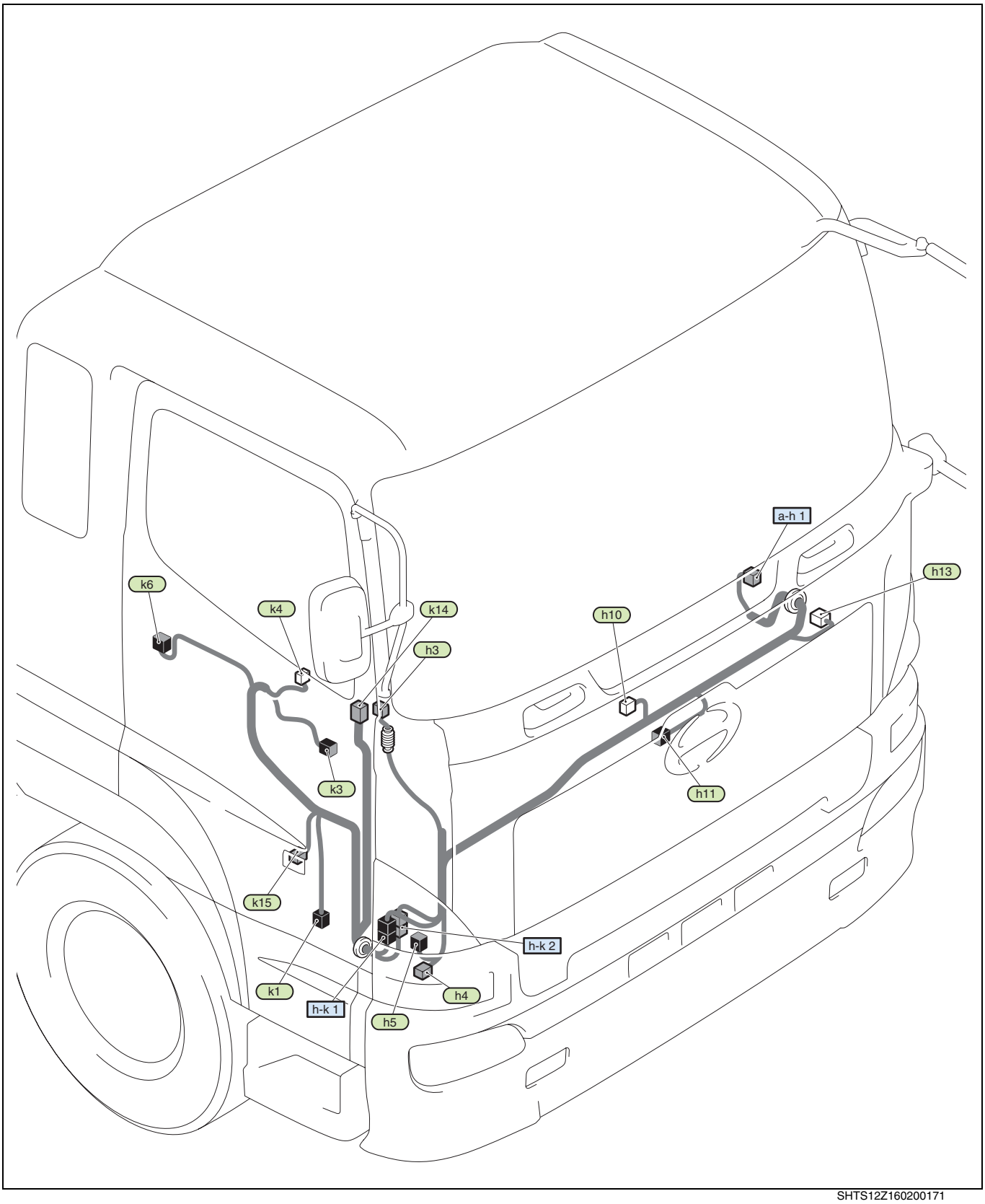

SHTS12Z160200171

https://truckmanualshub.com/

ELECTRICAL EQUIPMENT CONNECTOR AND JUNCTION CONNECTOR

No.	Name	Circuit	No.	Name	Circuit
h3	Mirror heater (Back RH) (Except Ireland model)	DA, DB	k1	Step light RH	CL
h4	Front turn signal light RH	CC, CE	k3	Power window motor (Driver's side)	DG
h5	Front side marker light RH	CG	k4	Power window switch (Driver's side)	DG
h10	Wiper motor	DL	k6	Power door lock switch (Driver's side)	DF, DM
h11	Leveling valve	IH	k14	Mirror heater (Back RH) (For Ireland model)	DA, DB
h13	Pressure switch (Triple)	EA	k15	Front side turn signal light RH	CC, CE

WIRE TO WIRE CONNECTOR

No.	Name	No.	Name
a-h 1	Cab main wiring harness to Dash panel wiring harness 1	h-k 2	Dash panel wiring harness to Door RH wiring harness 2
h-k 1	Dash panel wiring harness to Door RH wiring harness 1		

https://truckmanualshub.com/

CA-3 [CAB (1 of 2)] (Models: Left-hand drive)

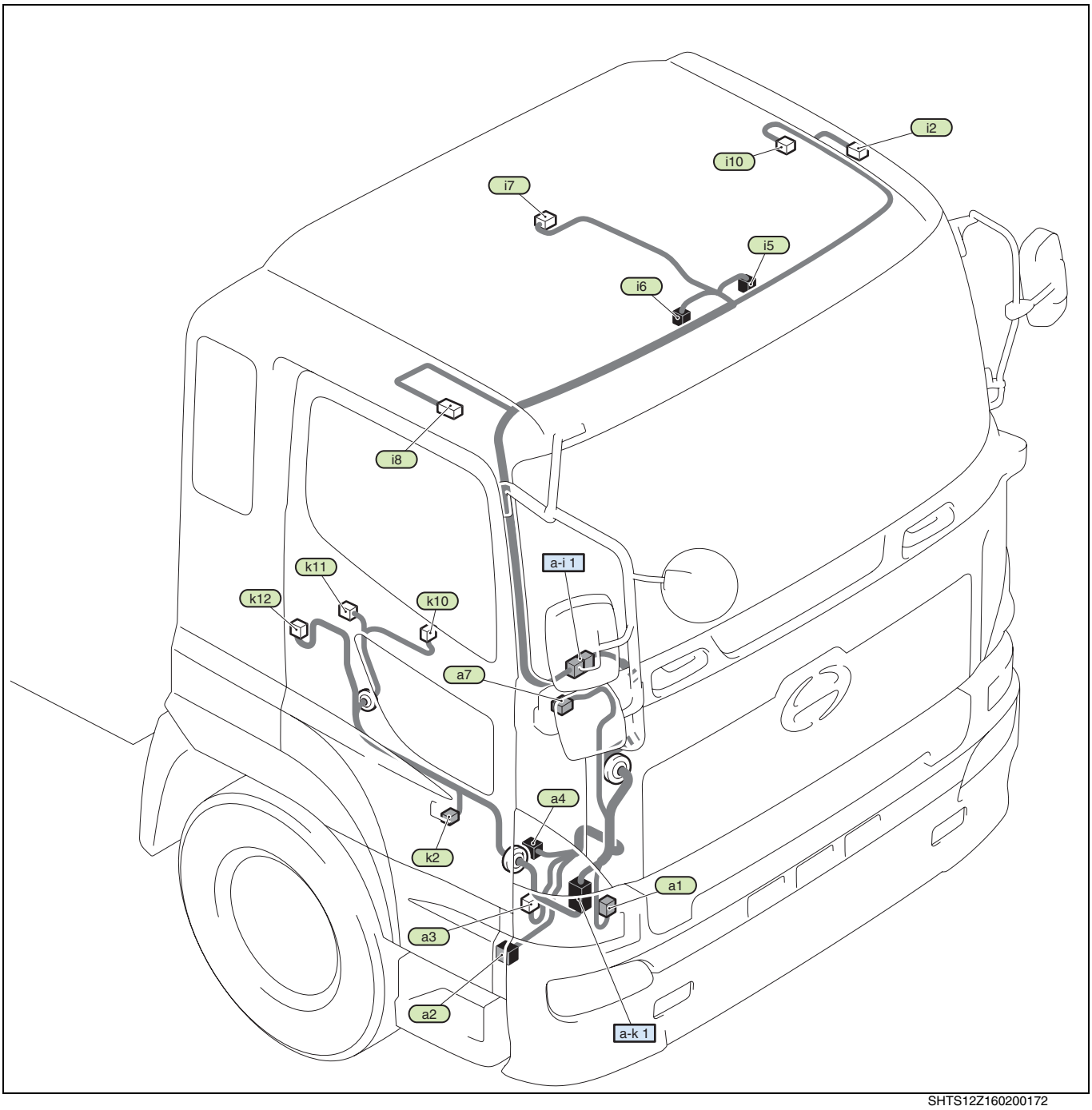

SHTS12Z160200172

https://truckmanualshub.com/

ELECTRICAL EQUIPMENT CONNECTOR AND JUNCTION CONNECTOR

No.	Name	Circuit	No.	Name	Circuit
a1	Front turn signal light RH	CC, CE	i7	Fluorescent light	CL
a2	Front side marker light RH	CG	i8	Roof marker light RH	CG
a3	Washer pump motor	DL	i10	Dome light RH	CL
a4	Air conditioner condenser	EA	k2	Front side turn signal light RH	CC, CE
a7	Mirror heater (Side under)	DA	k10	Power window motor (Assistant's side)	DH
i2	Roof marker light LH	CG	k11	Power window switch (Assistant's side)	DH
i5	Center speaker LH	DI	k12	Power door lock actuator (Assistant's side)	DM
i6	Center speaker RH	DI			

WIRE TO WIRE CONNECTOR

No.	Name	No.	Name
a-i 1	Cab main wiring harness to Roof wiring harness 1	a-k 1	Cab main wiring harness to Door RH wiring harness 1

https://truckmanualshub.com/

CA-4 [CAB (2 of 2)] (Models: Left-hand drive)

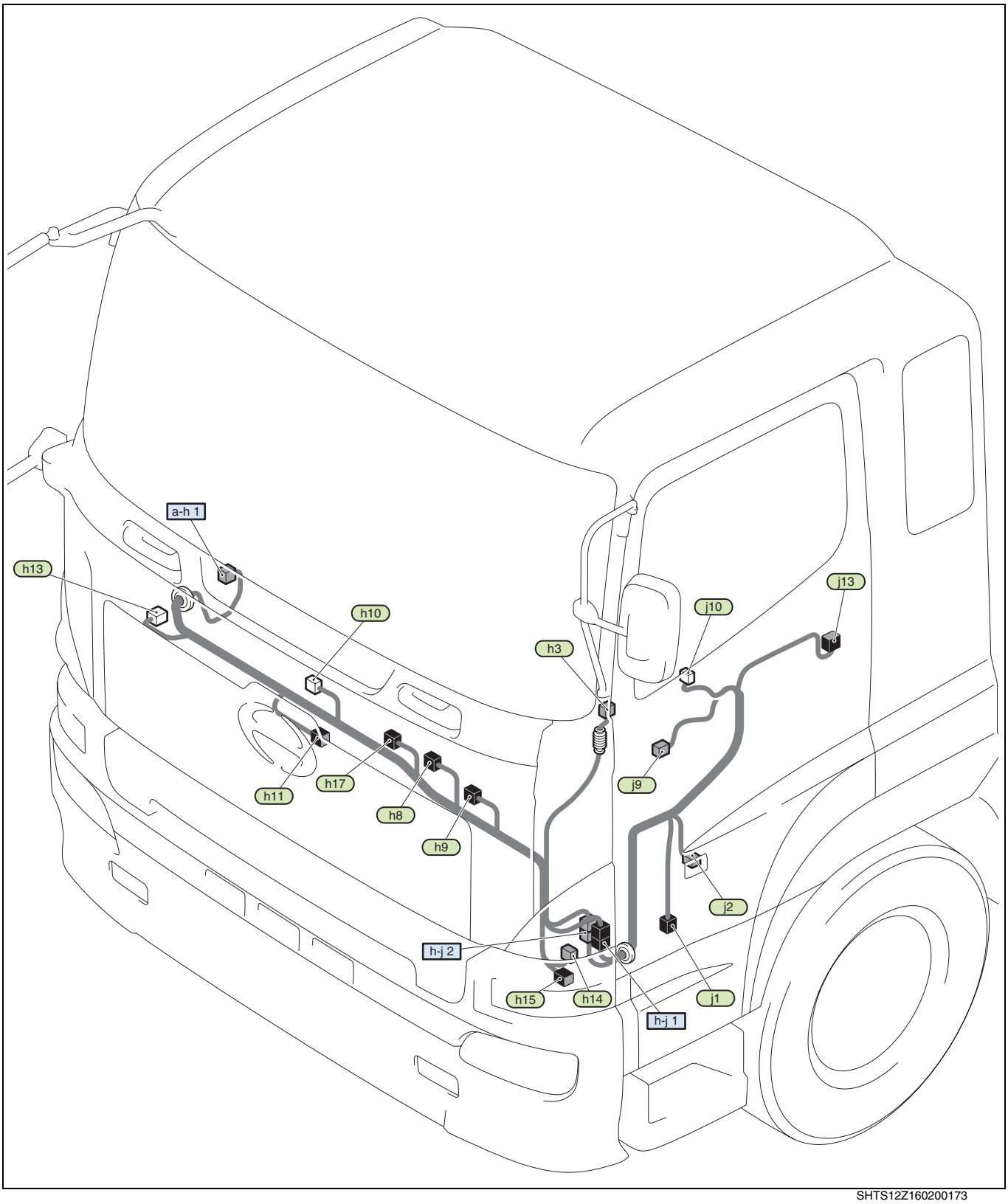

SHTS12Z160200173

https://truckmanualshub.com/

ELECTRICAL EQUIPMENT CONNECTOR AND JUNCTION CONNECTOR

No.	Name	Circuit	No.	Name	Circuit
h3	Mirror heater (Back RH)	DA	h15	Front side marker light LH	CG
h8	Brake switch	FA	h17	Trailer hand brake switch	BC
h9	Clutch fluid pressure switch	GD	j1	Step light LH	CL
h10	Wiper motor	DL	j2	Front side turn signal light LH	CC, CE
h11	Leveling valve	IH	j9	Power window motor (Driver's side)	DH
h13	Pressure switch (Triple)	EA	j10	Power window switch (Driver's side)	DH
h14	Front turn signal light LH	CC, CE	j13	Power door lock switch (Driver's side)	DM

WIRE TO WIRE CONNECTOR

No.	Name	No.	Name
a-h 1	Cab main wiring harness to Dash panel wiring harness 1	h-j 2	Dash panel wiring harness to Door LH wiring harness 2
h-j 1	Dash panel wiring harness to Door LH wiring harness 1		

https://truckmanualshub.com/

EG-1 [ENGINE (1 of 3)] (Models: FS for Australia, Hong Kong, Ireland, New Zealand)

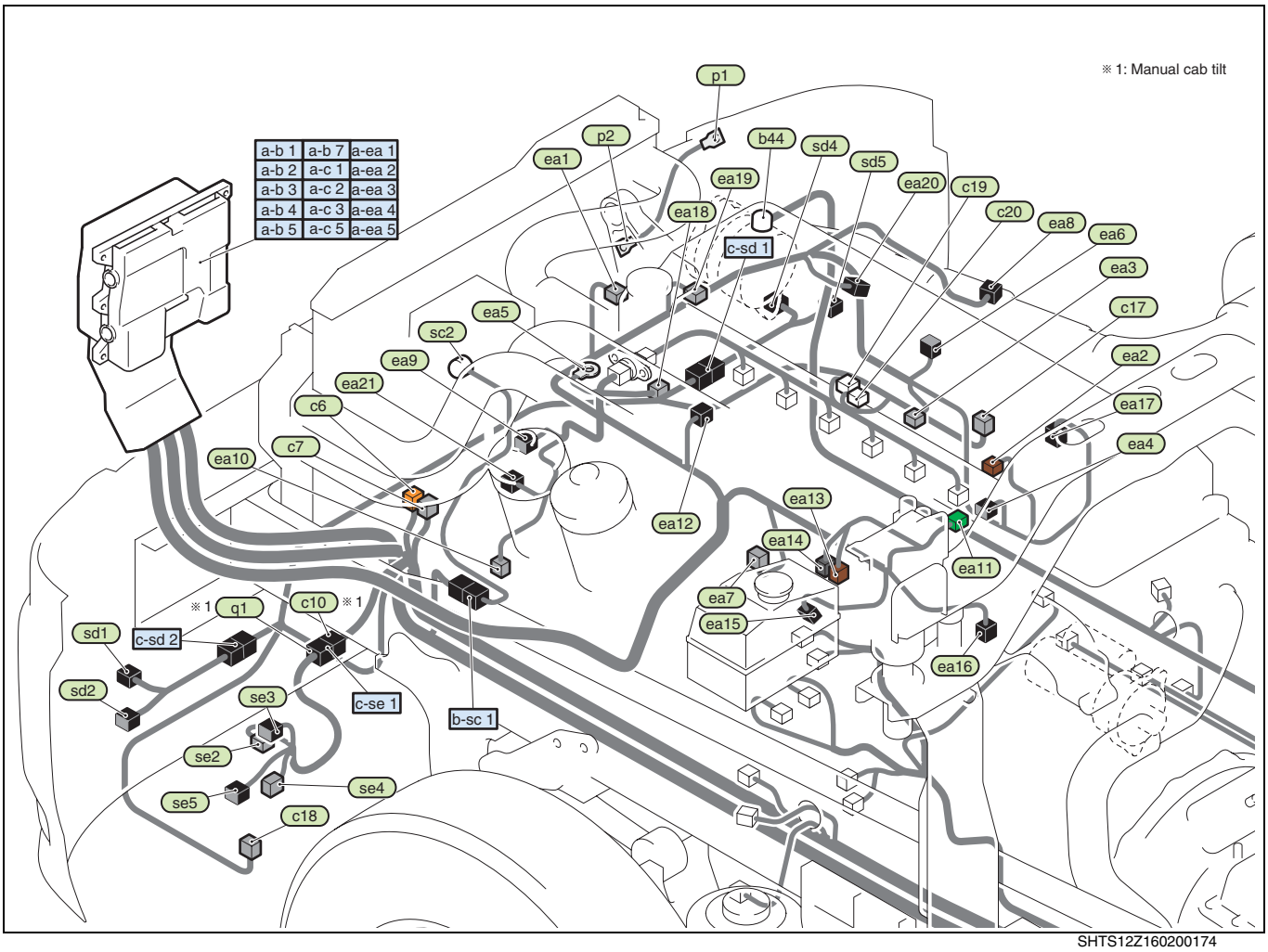

SHTS12Z160200174

https://truckmanualshub.com/

ELECTRICAL EQUIPMENT CONNECTOR AND JUNCTION CONNECTOR

No.	Name	Circuit	No.	Name	Circuit
b44	Alternator (Terminal B)	AK	ea11	Fuel temperature sensor	FB
c6	Cab tilt stroke switch	IA, IB, IC, ID	ea12	Common rail pressure sensor	FB
c7	Cab tilt stop switch	IA, IB, IC, ID	ea13	PCV (Pump Control Valve) No.1	FB
c10	Cab tilt short circuit connector (Front LH wiring harness side)	IA, IB	ea14	PCV (Pump Control Valve) No.2	FB
c17	Cornering light RH	CD	ea15	Engine speed sub sensor	FB
c18	Cornering light LH	CD	ea16	Engine speed main sensor	FB
c19	Horn (Hi)	DC	ea17	Oil pressure warning switch	BB
c20	Horn (Lo)	DC	ea18	EGR coolant temperature sensor	FC
p1	Bonding earth (Cab)	—	ea19	Coolant temperature sensor	FB
p2	Bonding earth (Chassis)	—	ea20	Alternator (Terminal L, R)	AK
q1	Cab tilt short circuit connector	IA, IB	ea21	Oil filter warning switch	BH
ea1	EGR control	FC	sc2	Intake air heater	AJ
ea2	VNT ECU	—	sd1	Headlight LH	CA
ea3	J/C Engine CAN	FC	sd2	Headlight leveling actuator LH	CB
ea4	VNT control	FC	sd4	Headlight RH	CA
ea5	Earth shield cable	FB	sd5	Headlight leveling actuator RH	CB
ea6	Turbocharger revolution sensor	FC	se2	Cab tilt relay	IC, ID
ea7	Fuel filter warning switch	BG	se3	Cab tilt position switch	IC, ID
ea8	Air flow sensor	FC	se4	Cab tilt motor	IC, ID
ea9	Boost pressure sensor	FB	se5	Cab tilt switch	IC, ID
ea10	Air conditioner compressor	EA			

WIRE TO WIRE CONNECTOR

No.	Name	No.	Name
a-b 1	Cab main wiring harness to Front RH wiring harness 1	a-ea 1	Cab main wiring harness to Engine wiring harness 1
a-b 2	Cab main wiring harness to Front RH wiring harness 2	a-ea 2	Cab main wiring harness to Engine wiring harness 2
a-b 3	Cab main wiring harness to Front RH wiring harness 3	a-ea 3	Cab main wiring harness to Engine wiring harness 3
a-b 4	Cab main wiring harness to Front RH wiring harness 4	a-ea 4	Cab main wiring harness to Engine wiring harness 4
a-b 5	Cab main wiring harness to Front RH wiring harness 5	a-ea 5	Cab main wiring harness to Engine wiring harness 5
a-b 7	Cab main wiring harness to Front RH wiring harness 7	b-sc 1	Front RH wiring harness to Intake air heater sub wiring harness 1
a-c 1	Cab main wiring harness to Front LH wiring harness 1	c-sd 1	Front LH wiring harness to Headlight sub wiring harness 1
a-c 2	Cab main wiring harness to Front LH wiring harness 2	c-sd 2	Front LH wiring harness to Headlight sub wiring harness 2
a-c 3	Cab main wiring harness to Front LH wiring harness 3	c-se 1	Front LH wiring harness to Cab tilt sub wiring harness 1
a-c 5	Cab main wiring harness to Front LH wiring harness 5		

https://truckmanualshub.com/

EG-2 [ENGINE (2 of 3)] (Models: FS for Australia, New Zealand)

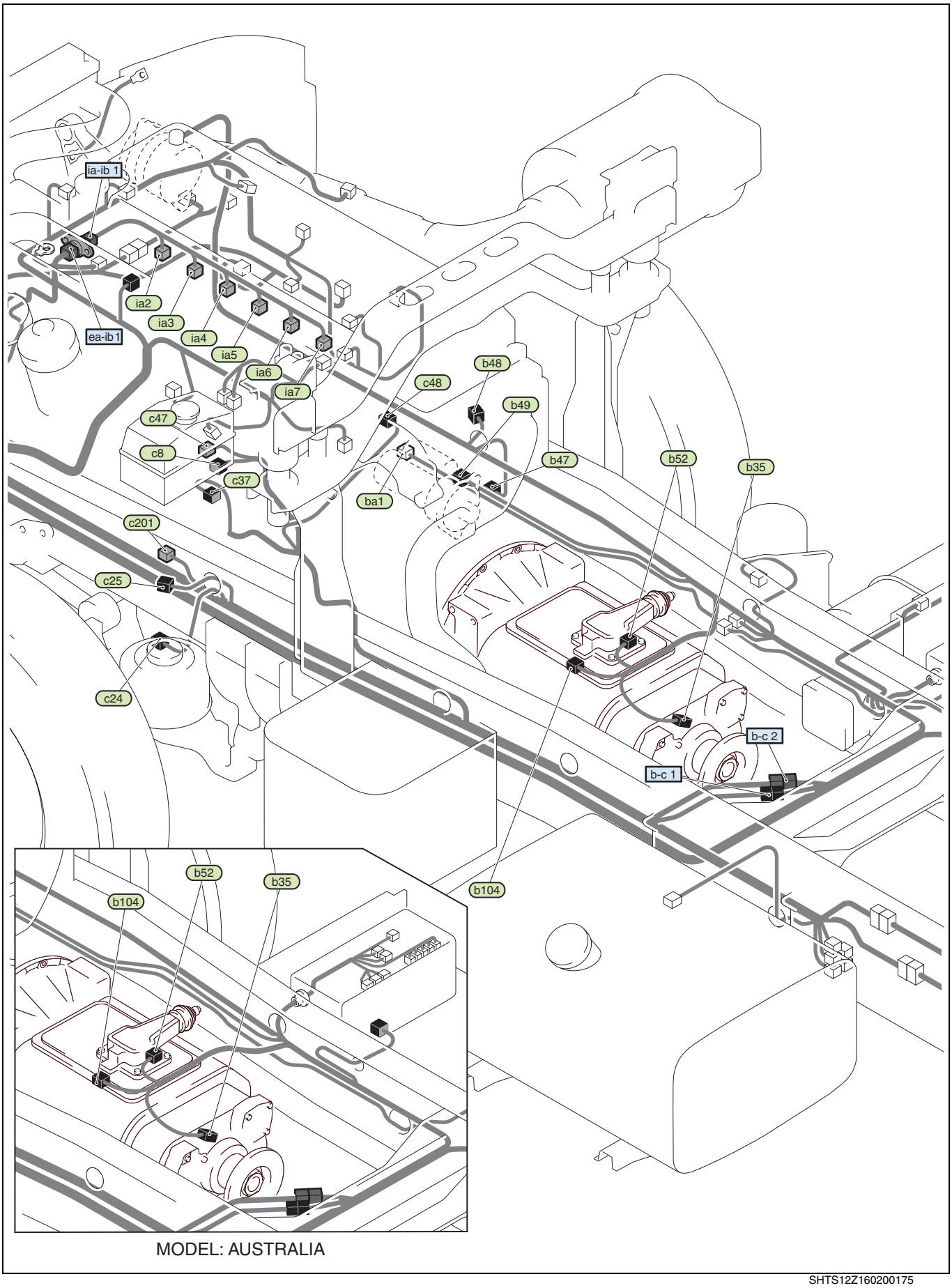

SHTS12Z160200175

https://truckmanualshub.com/

ELECTRICAL EQUIPMENT CONNECTOR AND JUNCTION CONNECTOR

No.	Name	Circuit	No.	Name	Circuit
b35	Speed sensor	BB	c47	Coolant level warning switch	BB
b47	ABS front modulator RH	GB	c48	P.T.O. accelerator sensor	FI
b48	ABS front wheel sensor RH	GB	c201	J/C Earth G2-a	AD, AF, ID
b49	Starter (Terminal C)	AI	ba1	Starter (Terminal B)	AI
b52	Back-up light switch	CH	ia2	Fuel injector No.1	FB
b104	Neural switch	AI	ia3	Fuel injector No.2	FB
c8	Cab tilt buzzer	IB, ID	ia4	Fuel injector No.3	FB
c24	ABS front modulator LH	GB	ia5	Fuel injector No.4	FB
c25	ABS front wheel sensor LH	GB	ia6	Fuel injector No.5	FB
c37	Exhaust brake magnetic valve	FE	ia7	Fuel injector No.6	FB

WIRE TO WIRE CONNECTOR

No.	Name	No.	Name
b-c 1	Front RH wiring harness to Front LH wiring harness 1	ea-ib 1	Engine wiring harness to Link-up connector 1
b-c 2	Front RH wiring harness to Front LH wiring harness 2	ia-ib 1	Injector sub wiring harness to Link-up connector 1

https://truckmanualshub.com/

EG-3 [ENGINE (2 of 3)] (Model: FS for Hong Kong)

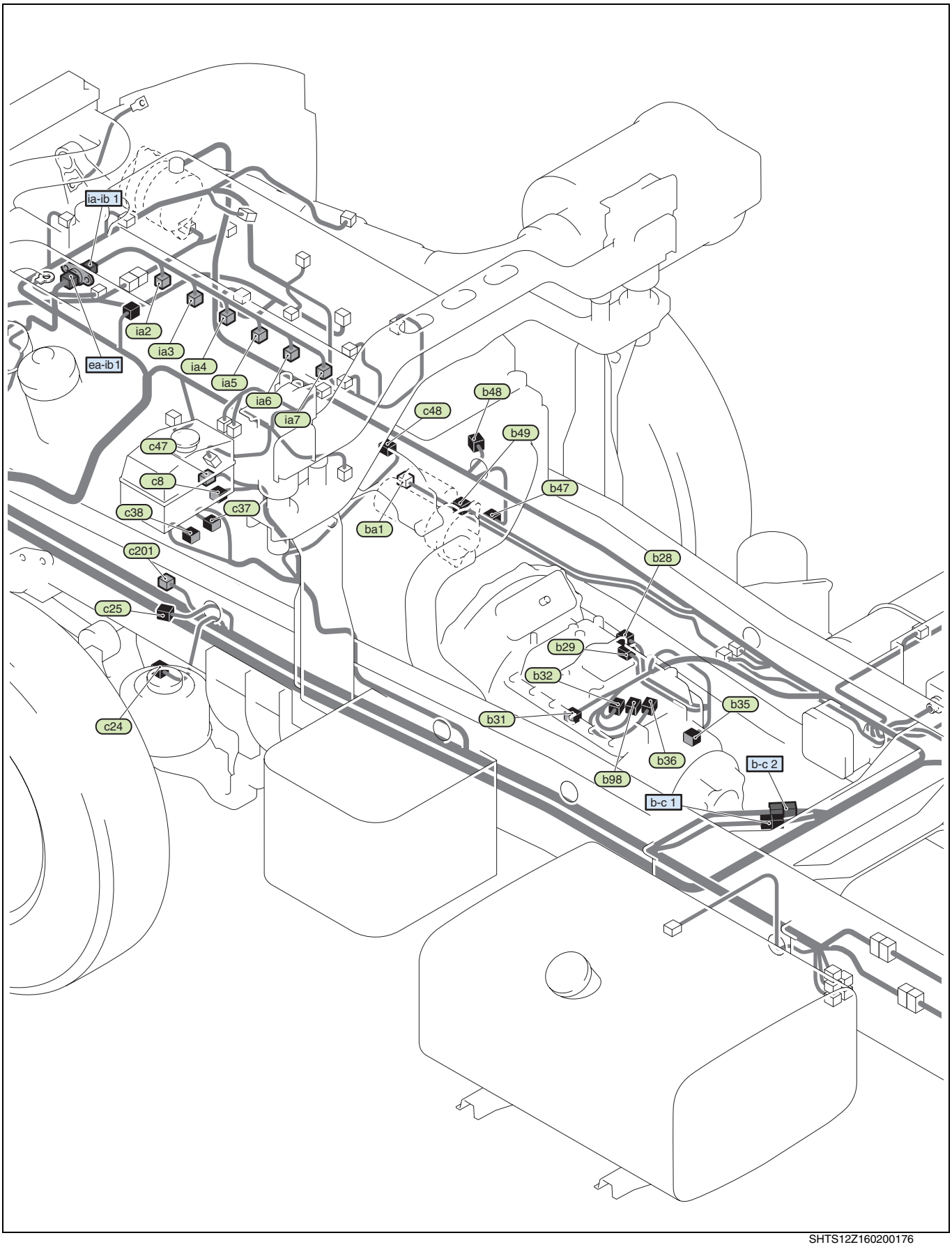

SHTS12Z160200176

https://truckmanualshub.com/

ELECTRICAL EQUIPMENT CONNECTOR AND JUNCTION CONNECTOR

No.	Name	Circuit	No.	Name	Circuit
b28	Neutral switch	AH	c37	Exhaust brake magnetic valve	FE
b29	Cab tilt neutral switch	IA, IC	c38	P.T.O. magnetic valve	IE
b31	P.T.O. position switch	IE	c47	Coolant level warning switch	BB
b32	Transmission PCS (Power cut system) switch No.1	FJ	c48	P.T.O. accelerator sensor	FI
b35	Speed sensor	BB	c201	J/C Earth G2-a	AC, AF, IC
b36	Back-up light switch	CI	ba1	Starter (Terminal B)	AH
b47	ABS front modulator RH	GA	ia2	Fuel injector No.1	FB
b48	ABS front wheel sensor RH	GA	ia3	Fuel injector No.2	FB
b49	Starter (Terminal C)	AH	ia4	Fuel injector No.3	FB
b98	Transmission PCS (Power cut system) switch No.2	FJ	ia5	Fuel injector No.4	FB
c8	Cab tilt buzzer	IA, IC	ia6	Fuel injector No.5	FB
c24	ABS front modulator LH	GA	ia7	Fuel injector No.6	FB
c25	ABS front wheel sensor LH	GA			

WIRE TO WIRE CONNECTOR

No.	Name	No.	Name
b-c 1	Front RH wiring harness to Front LH wiring harness 1	ea-ib 1	Engine wiring harness to Link-up connector 1
b-c 2	Front RH wiring harness to Front LH wiring harness 2	ia-ib 1	Injector sub wiring harness to Link-up connector 1

https://truckmanualshub.com/

EG-4 [ENGINE (2 of 3)] (Model: FS for Ireland)

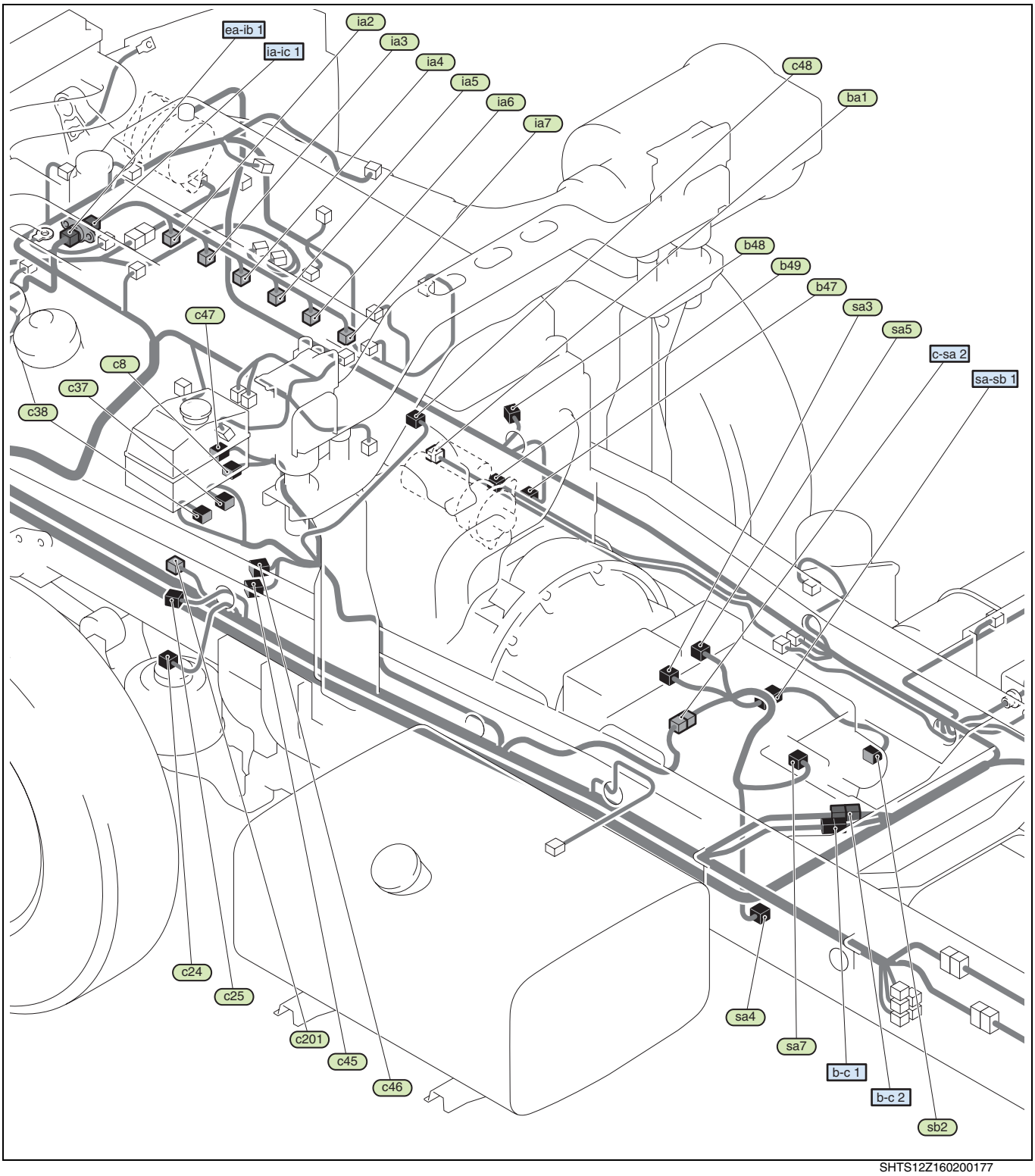

SHTS12Z160200177

https://truckmanualshub.com/

ELECTRICAL EQUIPMENT CONNECTOR AND JUNCTION CONNECTOR

No.	Name	Circuit	No.	Name	Circuit
b47	ABS front modulator RH	GA	ba1	Starter (Terminal B)	AI
b48	ABS front wheel sensor RH	GA	ia2	Fuel injector No.1	FB
b49	Starter (Terminal C)	AI	ia3	Fuel injector No.2	FB
c8	Cab tilt buzzer	IB, ID	ia4	Fuel injector No.3	FB
c24	ABS front modulator LH	GA	ia5	Fuel injector No.4	FB
c25	ABS front wheel sensor LH	GA	ia6	Fuel injector No.5	FB
c37	Exhaust brake magnetic valve	FE	ia7	Fuel injector No.6	FB
c38	P.T.O. magnetic valve	IE	sa3	Neutral switch	AI
c45	ZF clutch magnetic valve	HA	sa4	Speed sensor	BB, BF
c46	ZF Hi-Lo magnetic valve	HA	sa5	Back-up light switch	CI
c47	Coolant level warning switch	BB	sa7	ZF range Hi switch	HA
c48	P.T.O. accelerator sensor	FI	sb2	P.T.O. position switch	IE
c201	J/C Earth G2-a	AD, AF, ID			

WIRE TO WIRE CONNECTOR

No.	Name	No.	Name
b-c 1	Front RH wiring harness to Front LH wiring harness 1	c-sa 2	Front LH wiring harness to ZF transmission sub wiring harness 2
b-c 2	Front RH wiring harness to Front LH wiring harness 2	ea-ib 1	Engine wiring harness to Link-up connector 1
ia-ic 1	Injector LH wiring harness to Cab tilt short circuit connector 1	sa-sb 1	ZF transmission sub wiring harness to ZF transmission P.T.O. sub wiring harness 1

https://truckmanualshub.com/

EG-5 [ENGINE (3 of 3)] (Models: FS for Australia, Hong Kong, Ireland, New Zealand)

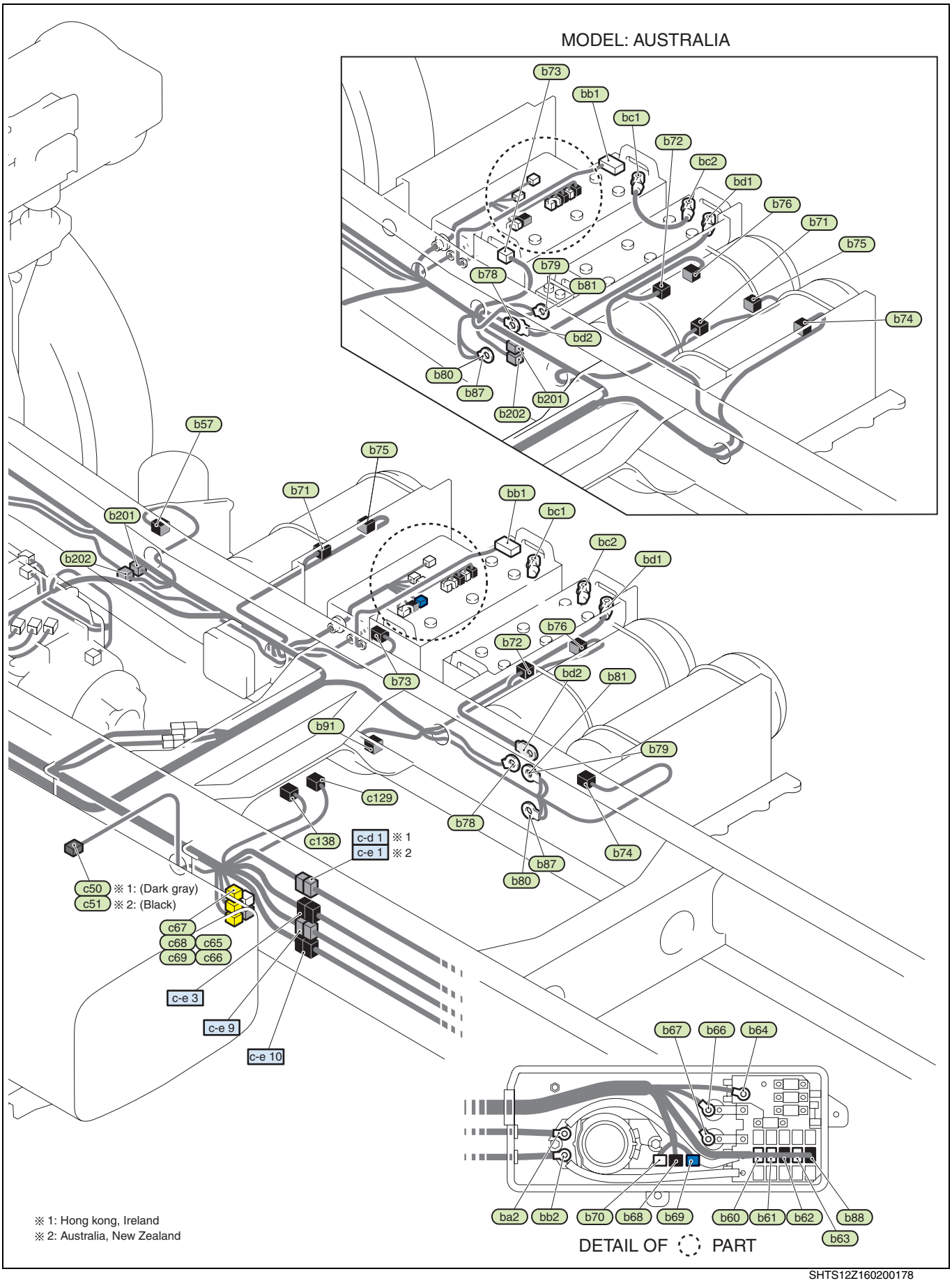

SHTS12Z160200178

https://truckmanualshub.com/

ELECTRICAL EQUIPMENT CONNECTOR AND JUNCTION CONNECTOR

No.	Name	Circuit	No.	Name	Circuit
b57	Air dryer	IM	b87	Earth power and light No.4	AD, AF
b60	FL block 1	AA	b88	FL block 5	AA
b61	FL block 2	AA	b91	ES start control valve	GD
b62	FL block 3	AA	b201	J/C Earth	AD, AF, AG
b63	FL block 4	AA	b202	J/C Earth G2	AD, AF
b64	FL 11	AA	c50	Fuel gauge sender unit (Hong Kong, Ireland)	BB
b66	Starter relay (Terminal C)	AH, AI	c51	Fuel gauge sender unit (Australia, New Zealand)	BB
b67	Intake air heater relay (Terminal F)	AJ	c65	P/TAIL CHASSIS	AL
b68	Starter relay (Coil)	AH, AI	c66	P/ACC CHASSIS	AL
b69	Intake air heater relay (Coil)	AJ	c67	SERVICE CHASSIS No.1	AL
b70	Battery relay (Coil)	AA	c68	SERVICE CHASSIS No.2	AL
b71	Low pressure switch No.1	BB	c69	SERVICE CHASSIS No.3	AL
b72	Low pressure switch No.2	BB	c129	Differential lock magnetic valve (Inter-axle)	IK
b73	Low pressure switch No.3	BB	c138	Differential lock magnetic valve (Rear-rear axle)	IL
b74	Low pressure switch No.4	BB	ba2	Battery relay (Terminal LD)	AA
b75	Front air gauge sender unit	BB	bb1	Battery (+) terminal (Battery 1)	AA
b76	Rear air gauge sender unit	BB	bb2	Battery relay (Terminal B)	AA
b78	Battery ground (Wiring harness)	AG	bc1	Battery (-) terminal (Battery 1)	AA
b79	Earth power and light No.1	AD, AF	bc2	Battery (+) terminal (Battery 2)	AA
b80	Earth power and light No.2	AD, AF	bd1	Battery (-) terminal (Battery 2)	AA
b81	Earth power and light No.3	AD, AF	bd2	Battery ground (Battery cable)	AA

WIRE TO WIRE CONNECTOR

No.	Name	No.	Name
c-d 1	Front LH wiring harness to Intermediate wiring harness 1	c-e 9	Front LH wiring harness to Rear wiring harness 9
c-e 1	Front LH wiring harness to Rear wiring harness 1	c-e 10	Front LH wiring harness to Rear wiring harness 10
c-e 3	Front LH wiring harness to Rear wiring harness 3		

https://truckmanualshub.com/

EG-6 [ENGINE (1 of 3)] (Models: FR, FS for Taiwan)

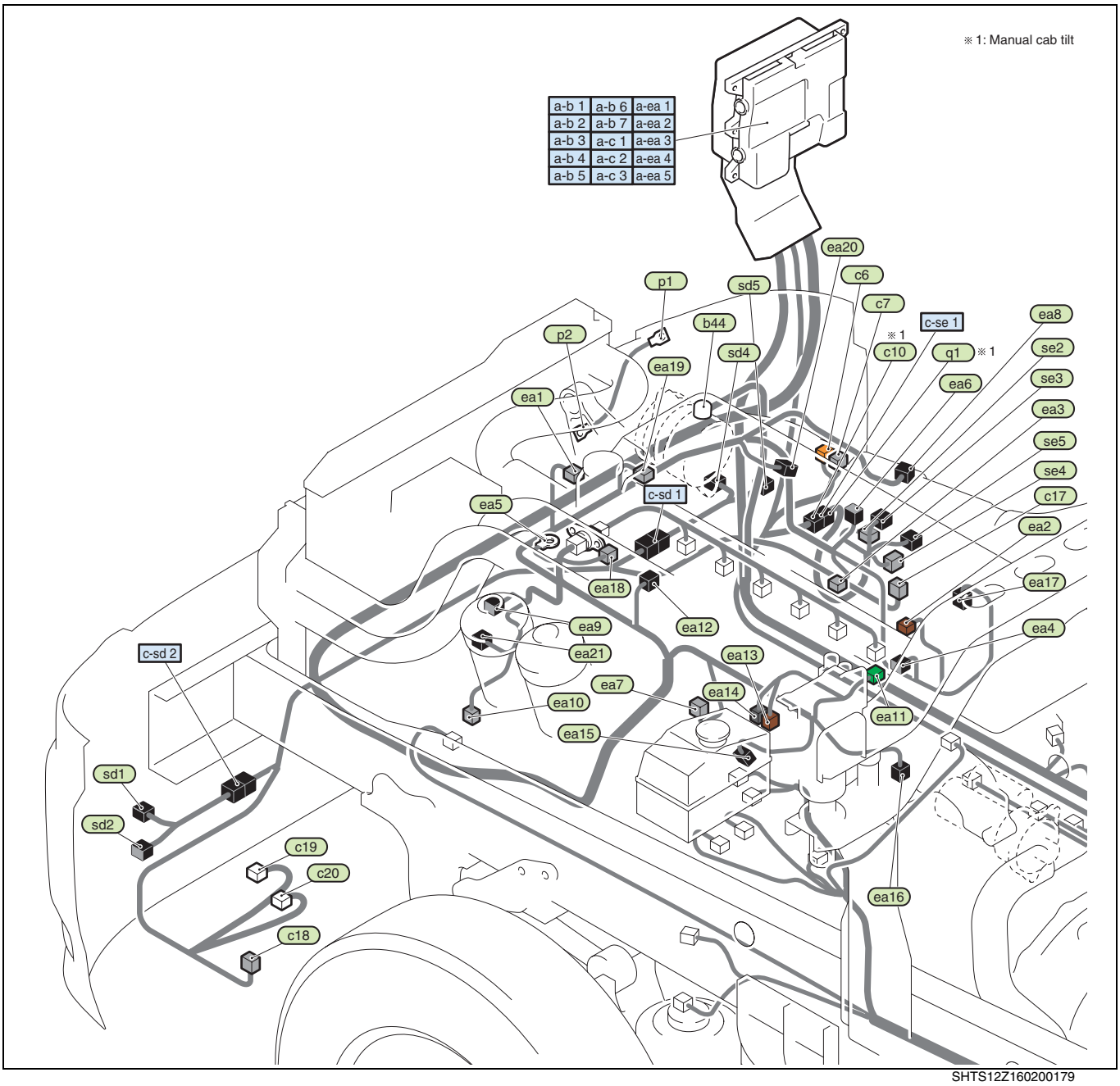

SHTS12Z160200179

https://truckmanualshub.com/

ELECTRICAL EQUIPMENT CONNECTOR AND JUNCTION CONNECTOR

No.	Name	Circuit	No.	Name	Circuit
b44	Alternator (Terminal B)	AK	ea10	Air conditioner compressor	EA
c6	Cab tilt stroke switch	IA, IC	ea11	Fuel temperature sensor	FB
c7	Cab tilt stop switch	IA, IC	ea12	Common rail pressure sensor	FB
c10	Cab tilt short circuit connector (Front LH wiring harness side)	IA	ea13	PCV (Pump Control Valve) No.1	FB
c17	Cornering light RH	CD, CE	ea14	PCV (Pump Control Valve) No.2	FB
c18	Cornering light LH	CD, CE	ea15	Engine speed sub sensor	FB
c19	Horn (Hi)	DC	ea16	Engine speed main sensor	FB
c20	Horn (Lo)	DC	ea17	Oil pressure warning switch	BB
p1	Bonding earth (Cab)	—	ea18	EGR coolant temperature sensor	FC
p2	Bonding earth (Chassis)	—	ea19	Coolant temperature sensor	FB
q1	Cab tilt short circuit connector	IA	ea20	Alternator (Terminal L, R)	AK
ea1	EGR control	FC	ea21	Oil filter warning switch	BH
ea2	VNT ECU	—	sd1	Headlight LH	CA
ea3	J/C Engine CAN	FC	sd2	Headlight leveling actuator LH	CB
ea4	VNT control	FC	sd4	Headlight RH	CA
ea5	Earth shield cable	FB	sd5	Headlight leveling actuator RH	CB
ea6	Turbocharger revolution sensor	FC	se2	Cab tilt relay	IC
ea7	Fuel filter warning switch	BG	se3	Cab tilt position switch	IC
ea8	Air flow sensor	FC	se4	Cab tilt motor	IC
ea9	Boost pressure sensor	FB	se5	Cab tilt switch	IC

WIRE TO WIRE CONNECTOR

No.	Name	No.	Name
a-b 1	Cab main wiring harness to Front RH wiring harness 1	a-c 3	Cab main wiring harness to Front LH wiring harness 3
a-b 2	Cab main wiring harness to Front RH wiring harness 2	a-ea 1	Cab main wiring harness to Engine wiring harness 1
a-b 3	Cab main wiring harness to Front RH wiring harness 3	a-ea 2	Cab main wiring harness to Engine wiring harness 2
a-b 4	Cab main wiring harness to Front RH wiring harness 4	a-ea 3	Cab main wiring harness to Engine wiring harness 3
a-b 5	Cab main wiring harness to Front RH wiring harness 5	a-ea 4	Cab main wiring harness to Engine wiring harness 4
a-b 6	Cab main wiring harness to Front RH wiring harness 6	a-ea 5	Cab main wiring harness to Engine wiring harness 5
a-b 7	Cab main wiring harness to Front RH wiring harness 7	c-sd 1	Front LH wiring harness to Headlight sub wiring harness 1
a-c 1	Cab main wiring harness to Front LH wiring harness 1	c-sd 2	Front LH wiring harness to Headlight sub wiring harness 2
a-c 2	Cab main wiring harness to Front LH wiring harness 2	c-se 1	Front LH wiring harness to Cab tilt sub wiring harness 1

https://truckmanualshub.com/

EG-7 [ENGINE (2 of 3)] (Models: FR, FS for Taiwan)

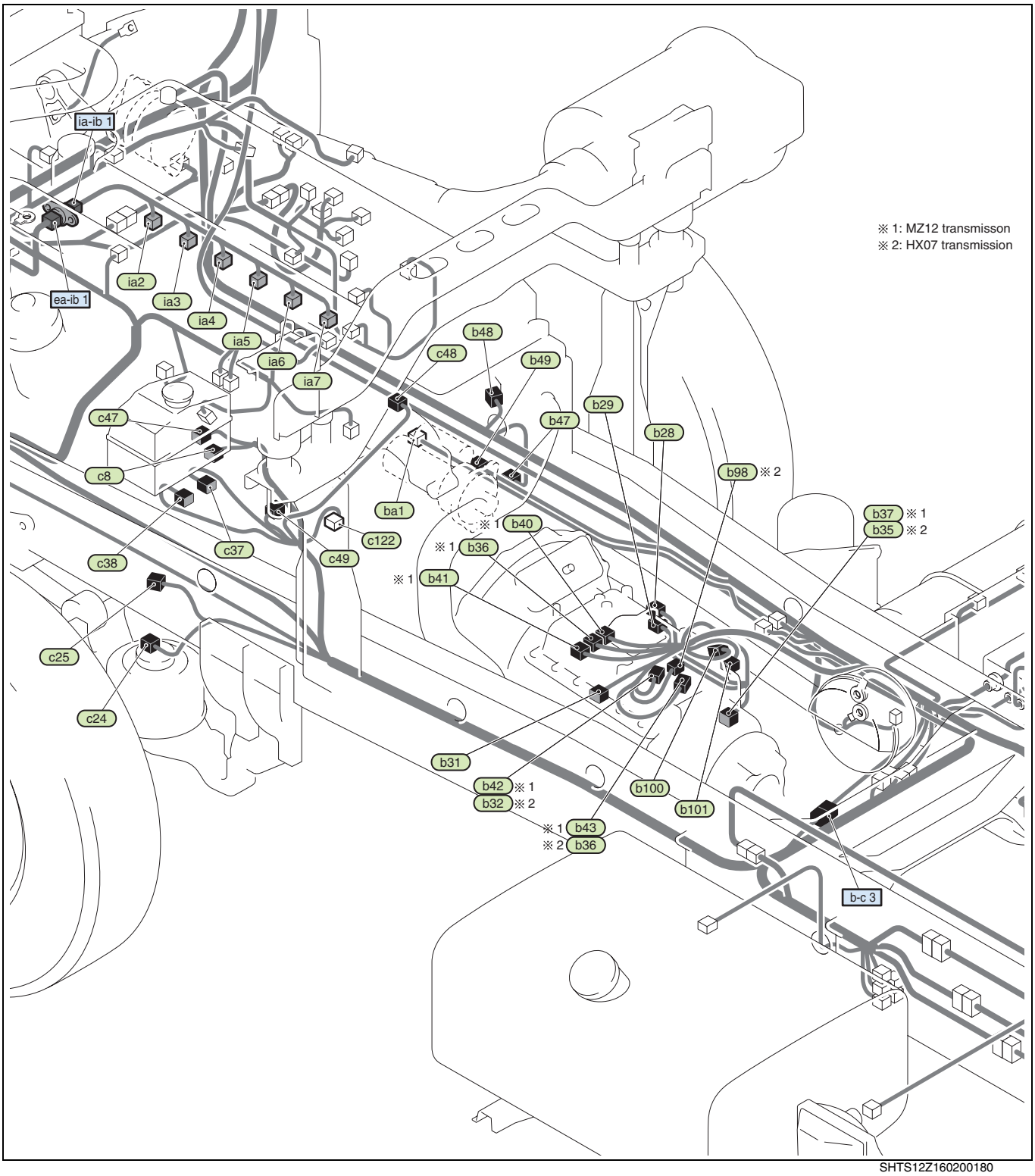

SHTS12Z160200180

https://truckmanualshub.com/

ELECTRICAL EQUIPMENT CONNECTOR AND JUNCTION CONNECTOR

No.	Name	Circuit	No.	Name	Circuit
b28	Neutral switch	AH	c8	Cab tilt buzzer	IA, IC
b29	Cab tilt neutral switch	IA, IC	c24	ABS front modulator LH	GA
b31	P.T.O. position switch	IE	c25	ABS front wheel sensor LH	GA
b32	Transmission PCS (Power cut system) switch No.1	FJ	c37	Exhaust brake magnetic valve	FE
b35	Speed sensor (HX07 transmission)	BB	c38	P.T.O. magnetic valve	IE
b36	Back-up light switch	CH, CI	c47	Coolant level warning switch	BB
b37	Speed sensor (MZ12 transmission)	BB	c48	P.T.O. accelerator sensor	FI
b40	MZ12 splitter front switch	HB	c49	Left turn buzzer (For Dump model)	CD
b41	MZ12 splitter rear switch	HB	c122	Battery cut switch (Rear)	AC
b42	MZ12 range rear switch	HB	ba1	Starter (Terminal B)	AH
b43	MZ12 range front switch	HB	ia2	Fuel injector No.1	FB
b47	ABS front modulator RH	GA	ia3	Fuel injector No.2	FB
b48	ABS front wheel sensor RH	GA	ia4	Fuel injector No.3	FB
b49	Starter (Terminal C)	AH	ia5	Fuel injector No.4	FB
b98	Transmission PCS (Power cut system) switch No.2	FJ	ia6	Fuel injector No.5	FB
b100	MZ12 splitter magnetic valve	HB	ia7	Fuel injector No.6	FB
b101	MZ12 power shift magnetic valve	HB			

WIRE TO WIRE CONNECTOR

No.	Name	No.	Name
b-c 3	Front RH wiring harness to Front LH wiring harness 3	ia-ib 1	Injector sub wiring harness to Link-up connector 1
ea-ib 1	Engine wiring harness to Link-up connector 1		

https://truckmanualshub.com/

EG-8 [ENGINE (3 of 3)] (Models: FR, FS for Taiwan)

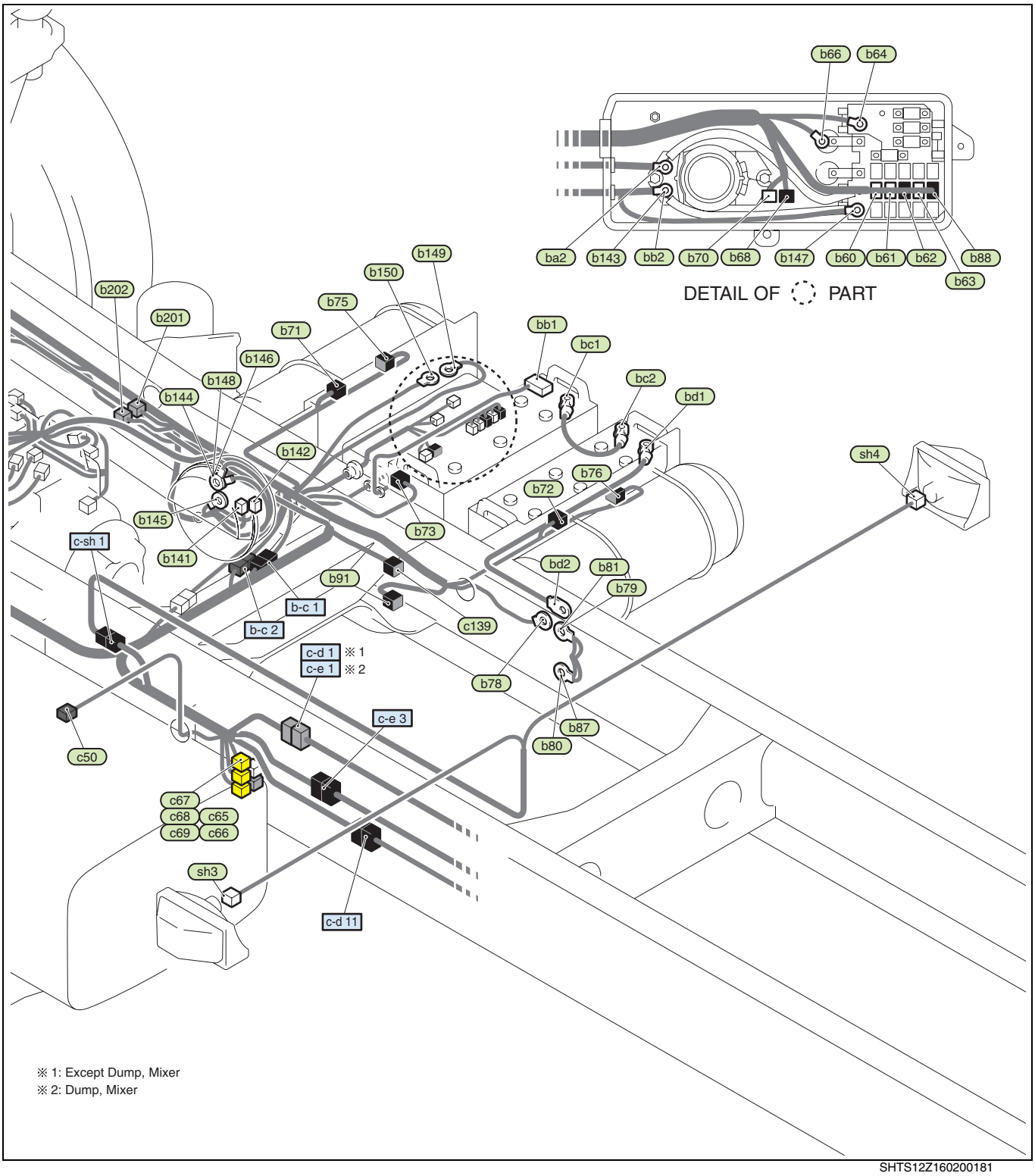

SHTS12Z160200181

https://truckmanualshub.com/

ELECTRICAL EQUIPMENT CONNECTOR AND JUNCTION CONNECTOR

No.	Name	Circuit	No.	Name	Circuit
b60	FL block 1	AA	b145	Battery cut relay (Terminal LD)	AC
b61	FL block 2	AA	b146	Battery cut relay [Terminal B (2.00 B-Y)]	AC
b62	FL block 3	AA	b147	FL bus bar No.2	AA
b63	FL block 4	AA	b148	Battery cut relay [Terminal B (15.00 W-B)]	AC
b64	FL block 5	AA	b149	FL 17 (15.00 W-B)	AC
b66	Starter relay (Terminal C)	AH	b150	FL 17 (15.00 W)	AC
b68	Starter relay (Coil)	AH	b201	J/C Earth	AD, AF, AG
b70	Battery relay (Coil)	AA	b202	J/C Earth G2	AC, AD, AF
b71	Low pressure switch No.1	BB	c50	Fuel gauge sender unit	BB
b72	Low pressure switch No.2	BB	c65	P/TAIL CHASSIS	AL
b73	Low pressure switch No.3	BB	c66	P/ACC CHASSIS	AL
b75	Front air gauge sender unit	BB	c67	SERVICE CHASSIS No.1	AL
b76	Rear air gauge sender unit	BB	c68	SERVICE CHASSIS No.2	AL
b78	Battery ground (Wiring harness)	AG	c69	SERVICE CHASSIS No.3	AL
b79	Earth power and light No.1	AD, AF	c139	Right turn buzzer (For Dump model)	CD
b80	Earth power and light No.2	AD, AF	ba2	Battery relay (Terminal LD)	AA
b81	Earth power and light No.3	AD, AF	bb1	Battery (+) terminal (Battery 1)	AA
b87	Earth power and light No.4	AD, AF	bb2	Battery relay (Terminal B) (Battery cable)	AA
b88	FL block 5	AA	bc1	Battery (-) terminal (Battery 1)	AA
b91	ES start control valve	GD	bc2	Battery (+) terminal (Battery 2)	AA
b141	FL 16	AC	bd1	Battery (-) terminal (Battery 2)	AA
b142	Battery cut relay (Coil)	AC	bd2	Battery ground (Battery cable)	AA
b143	Battery relay (Terminal B) (Wiring harness)	AC	sh3	Side turn signal light LH (For Dump model)	CD
b144	Battery cut relay [Terminal B (15.00 B)]	AC	sh4	Side turn signal light RH (For Dump model)	CD

WIRE TO WIRE CONNECTOR

No.	Name	No.	Name
b-c 1	Front RH wiring harness to Front LH wiring harness 1	c-e 1	Front LH wiring harness to Rear wiring harness 1
b-c 2	Front RH wiring harness to Front LH wiring harness 2	c-e 3	Front LH wiring harness to Rear wiring harness 3
c-d 1	Front LH wiring harness to Intermediate wiring harness 1	c-sh 1	Front LH wiring harness to Side turn signal wiring harness 1
c-d 11	Front LH wiring harness to Intermediate wiring harness 11		

https://truckmanualshub.com/

EG-9 [ENGINE (1 of 3)] (Models: FY for Hong Kong, Ireland, New Zealand)

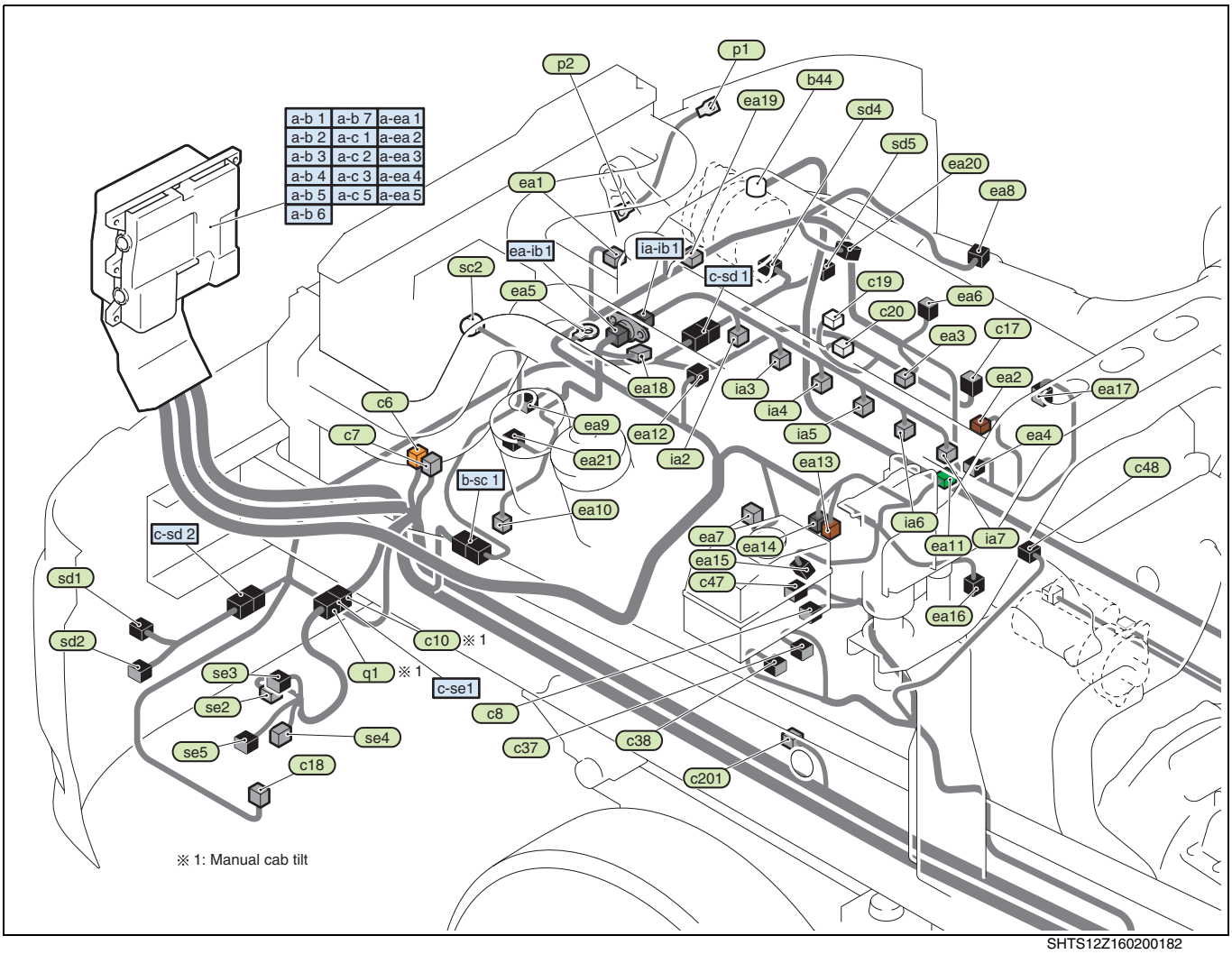

SHTS12Z160200182

ELECTRICAL EQUIPMENT CONNECTOR AND JUNCTION CONNECTOR

No.	Name	Circuit	No.	Name	Circuit
b44	Alternator (Terminal B)	AK	ea11	Fuel temperature sensor	FB
c6	Cab tilt stroke switch	IA, IB, IC, ID	ea12	Common rail pressure sensor	FB
c7	Cab tilt stop switch	IA, IB, IC, ID	ea13	PCV (Pump Control Valve) No.1	FB
c8	Cab tilt buzzer	IA, IB, IC, ID	ea14	PCV (Pump Control Valve) No.2	FB
c10	Cab tilt short circuit connector (Front LH wiring harness side)	IA, IB	ea15	Engine speed sub sensor	FB
c17	Cornering light RH	CD	ea16	Engine speed main sensor	FB
c18	Cornering light LH	CD	ea17	Oil pressure warning switch	BB
c19	Horn (Hi)	DC	ea18	EGR coolant temperature sensor	FC
c20	Horn (Lo)	DC	ea19	Coolant temperature sensor	FB
c37	Exhaust brake magnetic valve	FE	ea20	Alternator (Terminal L, R)	AK
c38	P.T.O. magnetic valve	IE	ea21	Oil filter warning switch	BH
c47	Coolant level warning switch	BB	ia2	Fuel injector No.1	FB
c48	P.T.O. accelerator sensor	FI	ia3	Fuel injector No.2	FB
c201	J/C Earth G2-a	AD, AF, IC, ID	ia4	Fuel injector No.3	FB
p1	Bonding earth (Cab)	—	ia5	Fuel injector No.4	FB
p2	Bonding earth (Chassis)	—	ia6	Fuel injector No.5	FB

https://truckmanualshub.com/

No.	Name	Circuit	No.	Name	Circuit
q1	Cab tilt short circuit connector	IA, IB	ia7	Fuel injector No.6	FB
ea1	EGR control	FC	sc2	Intake air heater	AJ
ea2	VNT ECU	—	sd1	Headlight LH	CA
ea3	J/C Engine CAN	FC	sd2	Headlight leveling actuator LH	CB
ea4	VNT control	FC	sd4	Headlight RH	CA
ea5	Earth shield cable	FB	sd5	Headlight leveling actuator RH	CB
ea6	Turbocharger revolution sensor	FC	se2	Cab tilt relay	IC, ID
ea7	Fuel filter warning switch	BG	se3	Cab tilt position switch	IC, ID
ea8	Air flow sensor	FC	se4	Cab tilt motor	IC, ID
ea9	Boost pressure sensor	FB	se5	Cab tilt switch	IC, ID
ea10	Air conditioner compressor	EA			

WIRE TO WIRE CONNECTOR

No.	Name	No.	Name
a-b 1	Cab main wiring harness to Front RH wiring harness 1	a-ea 1	Cab main wiring harness to Engine wiring harness 1
a-b 2	Cab main wiring harness to Front RH wiring harness 2	a-ea 2	Cab main wiring harness to Engine wiring harness 2
a-b 3	Cab main wiring harness to Front RH wiring harness 3	a-ea 3	Cab main wiring harness to Engine wiring harness 3
a-b 4	Cab main wiring harness to Front RH wiring harness 4	a-ea 4	Cab main wiring harness to Engine wiring harness 4
a-b 5	Cab main wiring harness to Front RH wiring harness 5	a-ea 5	Cab main wiring harness to Engine wiring harness 5
a-b 6	Cab main wiring harness to Front RH wiring harness 6	b-sc 1	Front RH wiring harness to Intake air heater sub wiring harness 1
a-b 7	Cab main wiring harness to Front RH wiring harness 7	c-sd 1	Front LH wiring harness to Headlight sub wiring harness 1
a-c 1	Cab main wiring harness to Front LH wiring harness 1	c-sd 2	Front LH wiring harness to Headlight sub wiring harness 2
a-c 2	Cab main wiring harness to Front LH wiring harness 2	c-se 1	Front LH wiring harness to Cab tilt sub wiring harness 1
a-c 3	Cab main wiring harness to Front LH wiring harness 3	ea-ib 1	Engine wiring harness to Link-up connector
a-c 5	Cab main wiring harness to Front LH wiring harness 5	ia-ib 1	Injector sub wiring harness to Link-up connector

https://truckmanualshub.com/

EG-10 [ENGINE (2 of 3)] (Model: FY for Hong Kong)

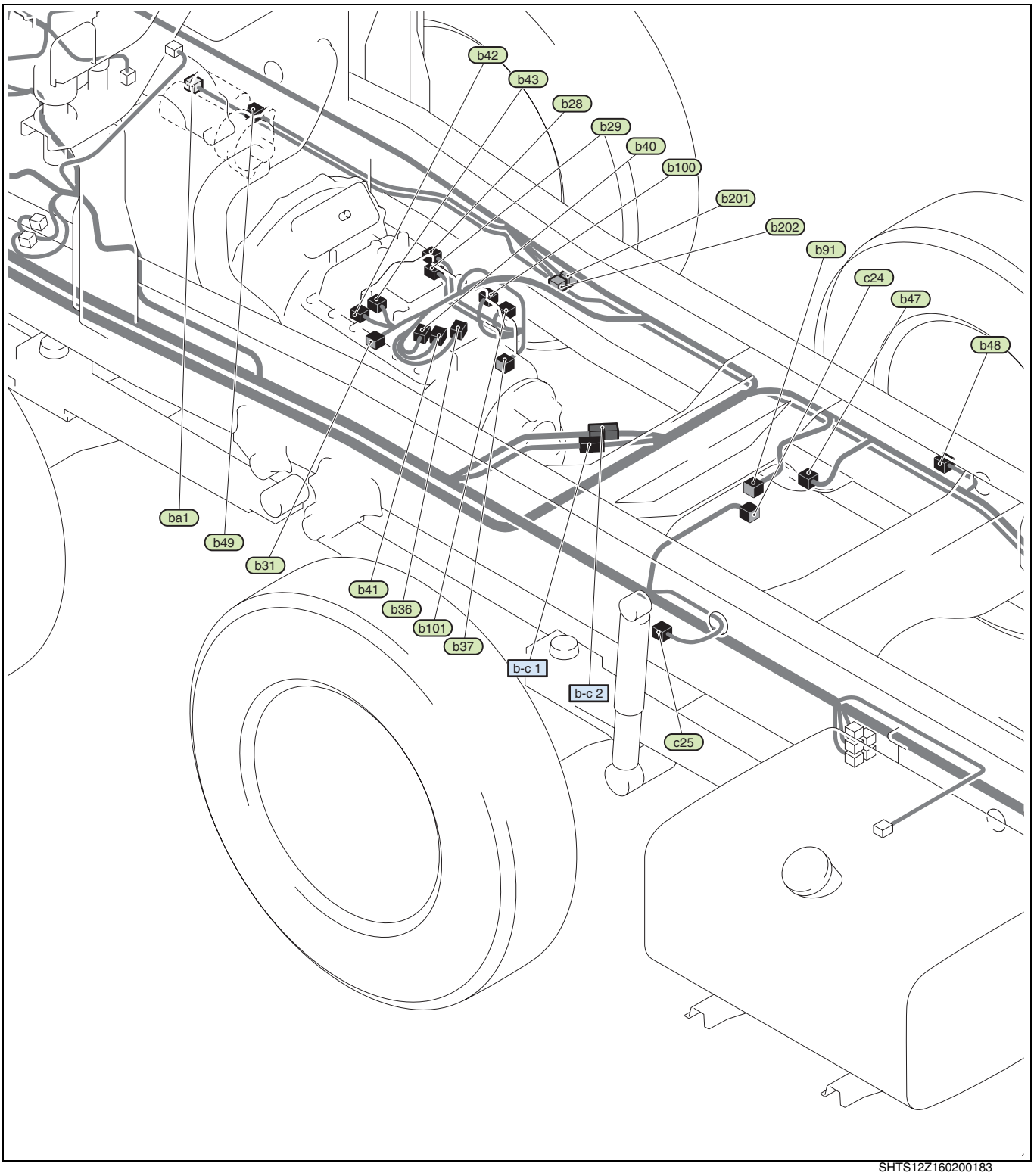

SHTS12Z160200183

https://truckmanualshub.com/

ELECTRICAL EQUIPMENT CONNECTOR AND JUNCTION CONNECTOR

No.	Name	Circuit	No.	Name	Circuit
b28	Neutral switch	AH	b48	ABS front wheel sensor RH	GA
b29	Cab tilt neutral switch	IA, IC	b49	Starter (Terminal C)	AH
b31	P.T.O. position switch	IE	b91	ES start control valve	GD
b36	Back-up light switch	CI	b100	MZ12 splitter magnetic valve	HB
b37	Speed sensor	BB	b101	MZ12 power shift magnetic valve	HB
b40	MZ12 splitter front switch	HB	b201	J/C Earth	AD, AF, AG
b41	MZ12 splitter rear switch	HB	b202	J/C Earth G2	AD, AF
b42	MZ12 range rear switch	HB	ba1	Starter (Terminal B)	AH
b43	MZ12 range front switch	HB	c24	ABS front modulator LH	GA
b47	ABS front modulator RH	GA	c25	ABS front wheel sensor LH	GA

WIRE TO WIRE CONNECTOR

No.	Name	No.	Name
b-c 1	Front RH wiring harness to Front LH wiring harness 1	b-c 2	Front RH wiring harness to Front LH wiring harness 2

https://truckmanualshub.com/

EG-11 [ENGINE (2 of 3)] (Model: FY for Ireland)

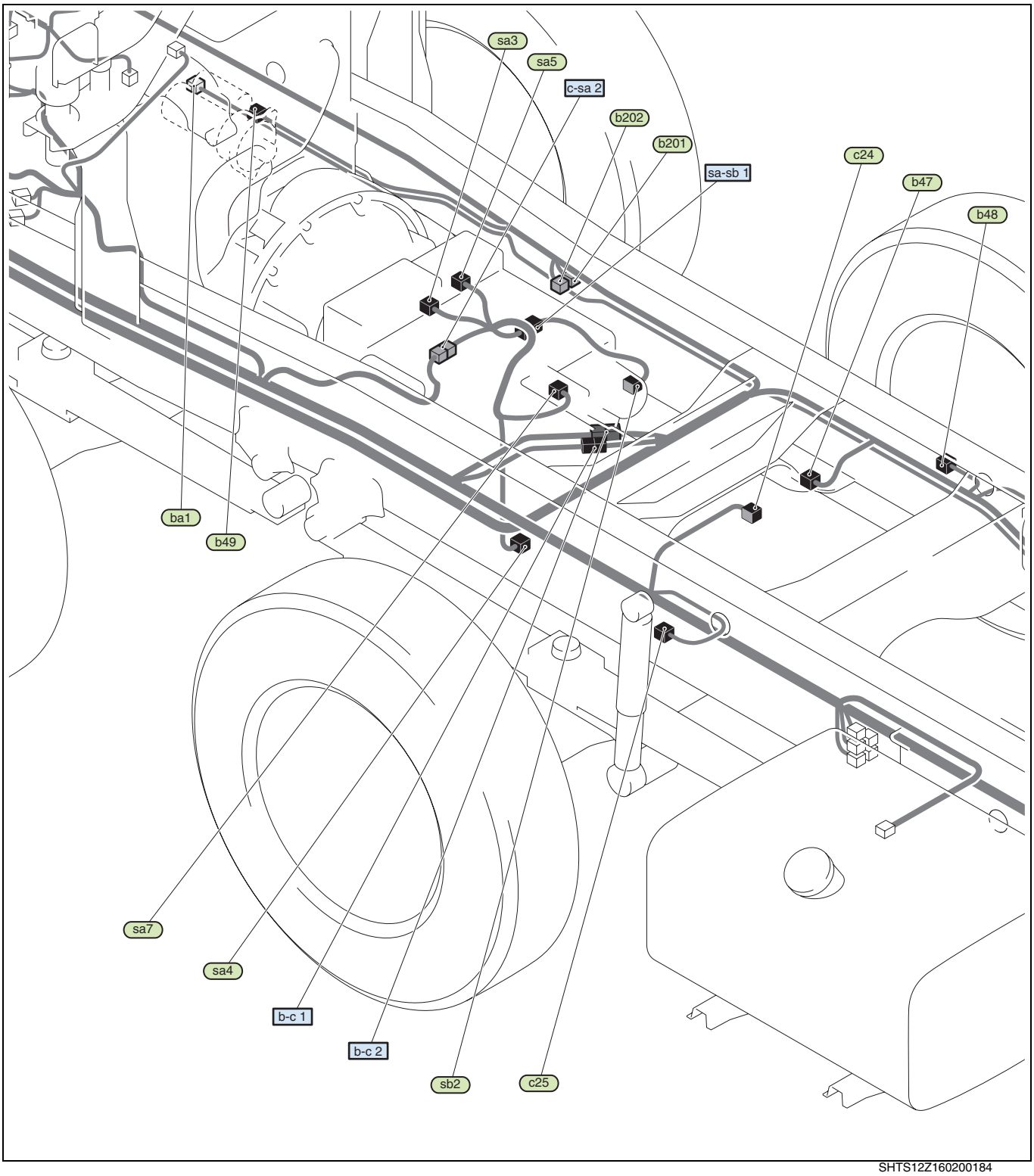

SHTS12Z160200184

https://truckmanualshub.com/

ELECTRICAL EQUIPMENT CONNECTOR AND JUNCTION CONNECTOR

No.	Name	Circuit	No.	Name	Circuit
b47	ABS front modulator RH	GA	c25	ABS front wheel sensor LH	GA
b48	ABS front wheel sensor RH	GA	sa3	Neutral switch	AI
b49	Starter (Terminal C)	AI	sa4	Speed sensor	BB, BF
b201	J/C Earth	AD, AF, AG	sa5	Back-up light switch	CI
b202	J/C Earth G2	AD, AF	sa7	ZF range Hi switch	HA
ba1	Starter (Terminal B)	AI	sb2	P.T.O. position switch	IE
c24	ABS front modulator LH	GA			

WIRE TO WIRE CONNECTOR

No.	Name	No.	Name
b-c 1	Front RH wiring harness to Front LH wiring harness 1	c-sa 2	Front LH wiring harness to ZF transmission sub wiring harness 1
b-c 2	Front RH wiring harness to Front LH wiring harness 2	sa-sb 1	ZF transmission sub wiring harness to ZF transmission P.T.O. sub wiring harness 1

https://truckmanualshub.com/

EG-12 [ENGINE (2 of 3)] (Model: FY for New Zealand)

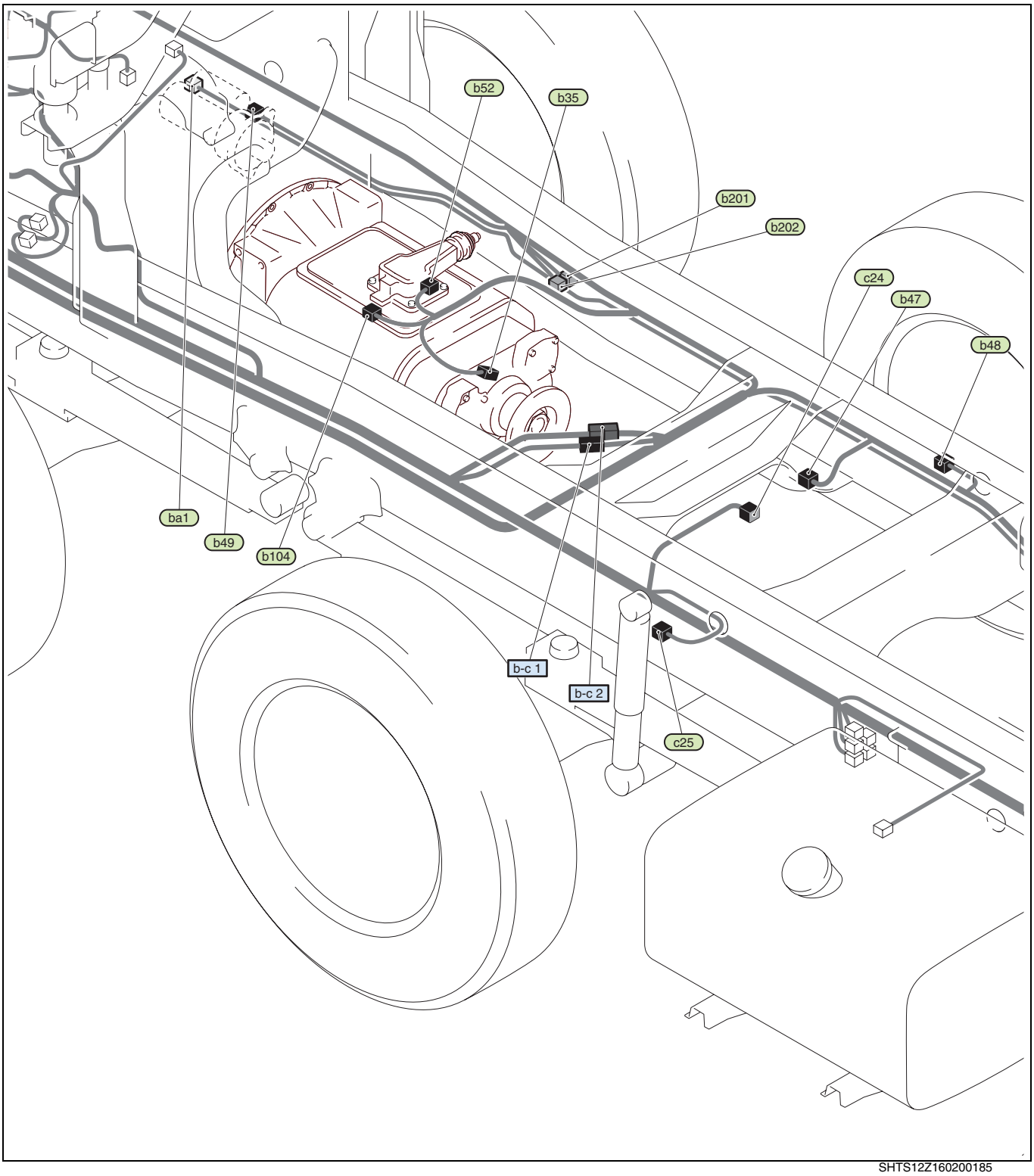

SHTS12Z160200185

https://truckmanualshub.com/

ELECTRICAL EQUIPMENT CONNECTOR AND JUNCTION CONNECTOR

No.	Name	Circuit	No.	Name	Circuit
b35	Speed sensor	BB	b201	J/C Earth	AD, AF, AG
b47	ABS front modulator RH	GB	b202	J/C Earth G2	AD, AF
b48	ABS front wheel sensor RH	GB	ba1	Starter (Terminal B)	AI
b49	Starter (Terminal C)	AI	c24	ABS front modulator LH	GB
b52	Back-up light switch	CH	c25	ABS front wheel sensor LH	GB
b104	Neutral switch	AI			

WIRE TO WIRE CONNECTOR

No.	Name	No.	Name
b-c 1	Front RH wiring harness to Front LH wiring harness 1	b-c 2	Front RH wiring harness to Front LH wiring harness 2

https://truckmanualshub.com/

EG-13 [ENGINE (3 of 3)] (Models: FY for Hong Kong, Ireland, New Zealand)

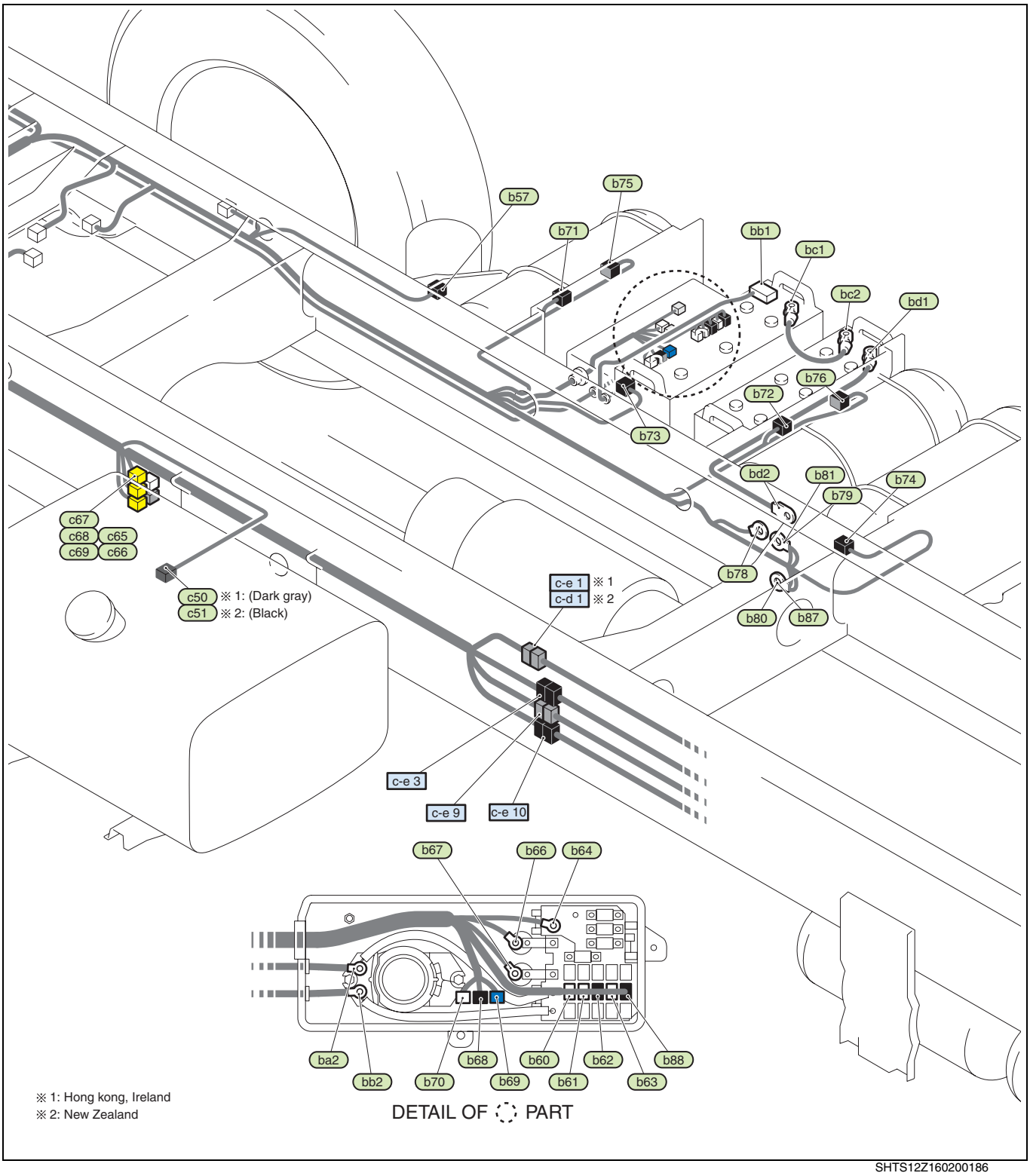

SHTS12Z160200186

https://truckmanualshub.com/

ELECTRICAL EQUIPMENT CONNECTOR AND JUNCTION CONNECTOR

No.	Name	Circuit	No.	Name	Circuit
b57	Air dryer	IM	b80	Earth power and light No.2	AD, AF
b60	FL block 1	AA	b81	Earth power and light No.3	AD, AF
b61	FL block 2	AA	b87	Earth power and light No.4	AD, AF
b62	FL block 3	AA	b88	FL block 5	AA
b63	FL block 4	AA	c50	Fuel gauge sender unit (Hong Kong, Ireland)	BB
b64	FL 11	AA	c51	Fuel gauge sender unit (New Zealand)	BB
b66	Starter relay (Terminal C)	AH, AI	c65	P/TAIL CHASSIS	AL
b67	Intake air heater relay (Terminal F)	AJ	c66	P/ACC CHASSIS	AL
b68	Starter relay (Coil)	AH, AI	c67	SERVICE CHASSIS No.1	AL
b69	Intake air heater relay (Coil)	AJ	c68	SERVICE CHASSIS No.2	AL
b70	Battery relay (Coil)	AA	c69	SERVICE CHASSIS No.3	AL
b71	Low pressure switch No.1	BB	ba2	Battery relay (Terminal LD)	AA
b72	Low pressure switch No.2	BB	bb1	Battery (+) terminal (Battery 1)	AA
b73	Low pressure switch No.3	BB	bb2	Battery relay (Terminal B)	AA
b74	Low pressure switch No.4	BB	bc1	Battery (-) terminal (Battery 1)	AA
b75	Front air gauge sender unit	BB	bc2	Battery (+) terminal (Battery 2)	AA
b76	Rear air gauge sender unit	BB	bd1	Battery (-) terminal (Battery 2)	AA
b78	Battery ground (Wiring harness)	AG	bd2	Battery ground (Battery cable)	AA
b79	Earth power and light No.1	AD, AF			

WIRE TO WIRE CONNECTOR

No.	Name	No.	Name
c-d 1	Front LH wiring harness to Intermediate wiring harness 1	c-e 9	Front LH wiring harness to rear wiring harness 9
c-e 1	Front LH wiring harness to rear wiring harness 1	c-e 10	Front LH wiring harness to rear wiring harness 10
c-e 3	Front LH wiring harness to rear wiring harness 3		

https://truckmanualshub.com/

EG-14 [ENGINE (1 of 3)] (Models: SH, SS for Hong Kong, Ireland)

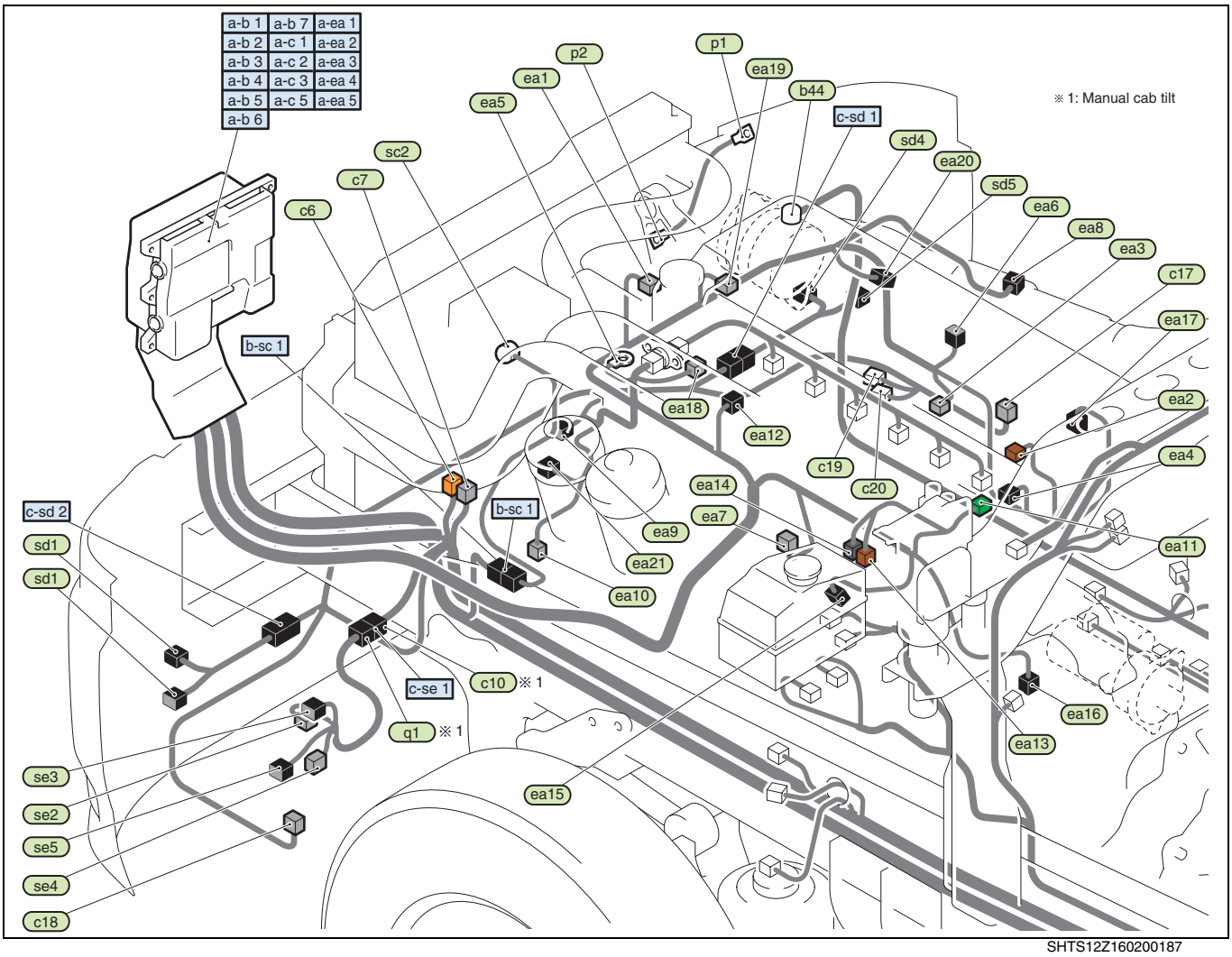

SHTS12Z160200187

https://truckmanualshub.com/

ELECTRICAL EQUIPMENT CONNECTOR AND JUNCTION CONNECTOR

No.	Name	Circuit	No.	Name	Circuit
b44	Alternator (Terminal B)	AK	ea11	Fuel temperature sensor	FB
c6	Cab tilt stroke switch	IA, IB, IC, ID	ea12	Common rail pressure sensor	FB
c7	Cab tilt stop switch	IA, IB, IC, ID	ea13	PCV (Pump Control Valve) No.1	FB
c10	Cab tilt short circuit connector (Front LH wiring harness side)	IA, IB	ea14	PCV (Pump Control Valve) No.2	FB
c17	Cornering light RH	CE	ea15	Engine speed sub sensor	FB
c18	Cornering light LH	CE	ea16	Engine speed main sensor	FB
c19	Horn (Hi)	DC	ea17	Oil pressure warning switch	BC
c20	Horn (Lo)	DC	ea18	EGR coolant temperature sensor	FC
p1	Bonding earth (Cab)	—	ea19	Coolant temperature sensor	FB
p2	Bonding earth (Chassis)	—	ea20	Alternator (Terminal L, R)	AK
q1	Cab tilt short circuit connector	IA, IB	ea21	Oil filter warning switch	BH
ea1	EGR control	FC	sc2	Intake air heater	AJ
ea2	VNT ECU	—	sd1	Headlight LH	CA
ea3	J/C Engine CAN	FC	sd2	Headlight leveling actuator LH	CB, CO
ea4	VNT control	FC	sd4	Headlight RH	CA
ea5	Earth shield cable	FB	sd5	Headlight leveling actuator RH	CB, CO
ea6	Turbocharger revolution sensor	FC	se2	Cab tilt relay	IC, ID
ea7	Fuel filter warning switch	BG	se3	Cab tilt position switch	IC, ID
ea8	Air flow sensor	FC	se4	Cab tilt motor	IC, ID
ea9	Boost pressure sensor	FB	se5	Cab tilt switch	IC, ID
ea10	Air conditioner compressor	EA			

WIRE TO WIRE CONNECTOR

No.	Name	No.	Name
a-b 1	Cab main wiring harness to Front RH wiring harness 1	a-c 5	Cab main wiring harness to Front LH wiring harness 5
a-b 2	Cab main wiring harness to Front RH wiring harness 2	a-ea 1	Cab main wiring harness to Engine wiring harness 1
a-b 3	Cab main wiring harness to Front RH wiring harness 3	a-ea 2	Cab main wiring harness to Engine wiring harness 2
a-b 4	Cab main wiring harness to Front RH wiring harness 4	a-ea 3	Cab main wiring harness to Engine wiring harness 3
a-b 5	Cab main wiring harness to Front RH wiring harness 5	a-ea 4	Cab main wiring harness to Engine wiring harness 4
a-b 6	Cab main wiring harness to Front RH wiring harness 6	a-ea 5	Cab main wiring harness to Engine wiring harness 5
a-b 7	Cab main wiring harness to Front RH wiring harness 7	b-sc 1	Front RH wiring harness to Intake air heater sub wiring harness 1
a-c 1	Cab main wiring harness to Front LH wiring harness 1	c-sd 1	Front LH wiring harness to Headlight sub wiring harness 1
a-c 2	Cab main wiring harness to Front LH wiring harness 2	c-sd 2	Front LH wiring harness to Headlight sub wiring harness 2
a-c 3	Cab main wiring harness to Front LH wiring harness 3	c-se 1	Front LH wiring harness to Cab tilt sub wiring harness 1

https://truckmanualshub.com/

EG-15 [ENGINE (2 of 3)] (Models: SH, SS for Hong Kong)

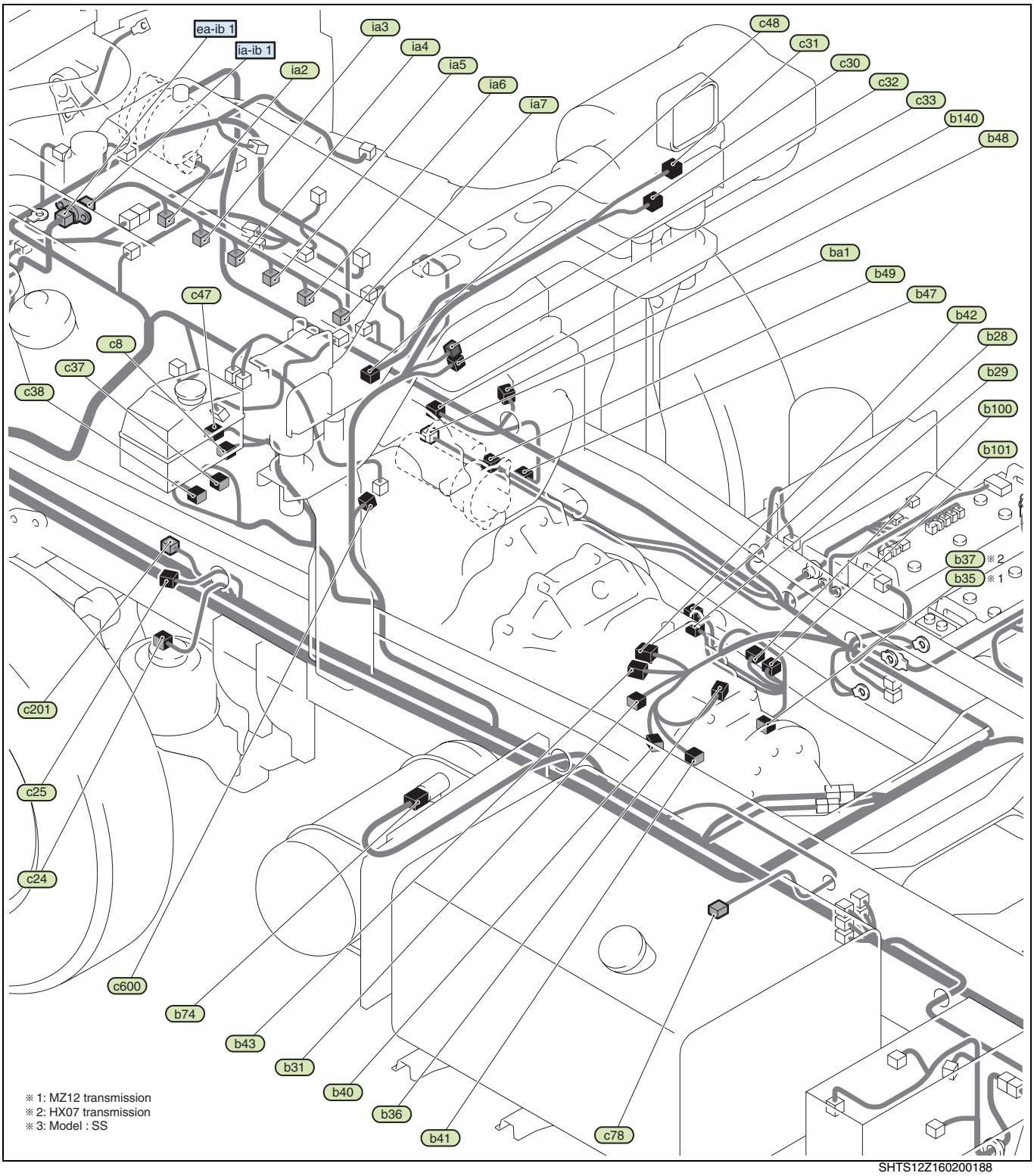

SHTS12Z160200188

https://truckmanualshub.com/

ELECTRICAL EQUIPMENT CONNECTOR AND JUNCTION CONNECTOR

No.	Name	Circuit	No.	Name	Circuit
b28	Neutral switch	AH	c25	ABS front wheel sensor LH	GC
b29	Cab tilt neutral switch	IA, IC	c30	Spot light switch	CM
b31	P.T.O. position switch	IE	c31	Spot light	CM
b35	Speed sensor (HX07 transmission)	BB	c32	ABS trailer socket	GC
b36	Back-up light switch	CJ	c33	Trailer socket	GC
b37	Speed sensor (MZ12 transmission)	BD	c37	Exhaust brake magnetic valve	FE
b40	MZ12 splitter front switch	HB	c38	P.T.O. magnetic valve	IE
b41	MZ12 splitter rear switch	HB	c47	Coolant level warning switch	BD
b42	MZ12 range rear switch	HB	c48	P.T.O. accelerator sensor	FI
b43	MZ12 range front switch	HB	c78	Fuel gauge sender unit	BD
b47	ABS front modulator RH	GC	c201	J/C Earth G2-a	AD, AF, IC
b48	ABS front wheel sensor RH	GC	c600	Trailer fuse	GC
b49	Starter (Terminal C)	AH	ba1	Starter (Terminal B)	AH
b74	Low pressure switch No.4 (Model: SS)	BD	ia2	Fuel injector No.1	FB
b100	MZ12 splitter magnetic valve	HB	ia3	Fuel injector No.2	FB
b101	MZ12 power shift magnetic valve	HB	ia4	Fuel injector No.3	FB
b140	Vehicle height sensor (Front)	CO	ia5	Fuel injector No.4	FB
c8	Cab tilt buzzer	IA, IC	ia6	Fuel injector No.5	FB
c24	ABS front modulator LH	GC	ia7	Fuel injector No.6	FB

WIRE TO WIRE CONNECTOR

No.	Name	No.	Name
ea-ib 1	Engine wiring harness to Link-up connector 1	ia-ib 1	Injector wiring harness to Link-up connector 1

https://truckmanualshub.com/

EG-16 [ENGINE (2 of 3)] (Model: SH for Ireland)

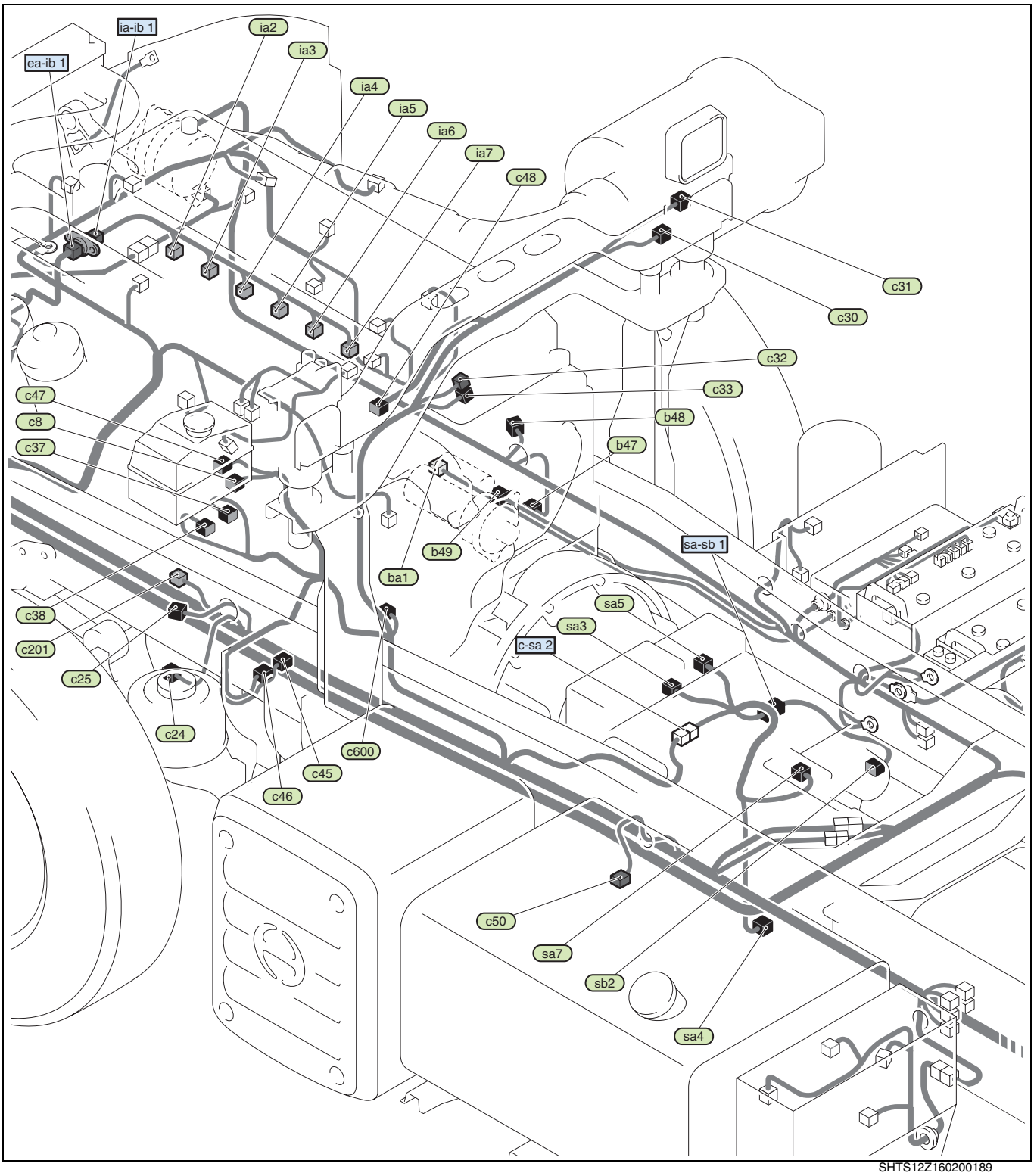

SHTS12Z160200189

https://truckmanualshub.com/

ELECTRICAL EQUIPMENT CONNECTOR AND JUNCTION CONNECTOR

No.	Name	Circuit	No.	Name	Circuit
b47	ABS front modulator RH	GC	c50	Fuel gauge sender unit	BD
b48	ABS front wheel sensor RH	GC	c201	J/C Earth G2-a	AD, AF, ID
b49	Starter (Terminal C)	AI	c600	Trailer fuse	GC
c8	Cab tilt buzzer	IB, ID	ba1	Starter (Terminal B)	AI
c24	ABS front modulator LH	GC	ia2	Fuel injector No.1	FB
c25	ABS front wheel sensor LH	GC	ia3	Fuel injector No.2	FB
c30	Spot light switch	CM	ia4	Fuel injector No.3	FB
c31	Spot light	CM	ia5	Fuel injector No.4	FB
c32	ABS trailer socket	GC	ia6	Fuel injector No.5	FB
c33	Trailer socket	CE	ia7	Fuel injector No.6	FB
c37	Exhaust brake magnetic valve	FE	sa3	Neutral switch	AI
c38	P.T.O. magnetic valve	IE	sa4	Speed sensor	BD, BF
c45	ZF clutch magnetic valve	HA	sa5	Back-up light switch	CK
c46	ZF Hi-Lo magnetic valve	HA	sa7	ZF range Hi switch	HA
c47	Coolant level warning switch	BD	sb2	P.T.O. position switch	IE
c48	P.T.O. accelerator sensor	FI			

WIRE TO WIRE CONNECTOR

No.	Name	No.	Name
c-sa 2	Front LH wiring harness to ZF transmission sub wiring harness 2	ia-ib 1	Injector wiring harness to Link-up connector 1
ea-ib 1	Engine wiring harness to Link-up connector 1	sa-sb 1	ZF transmission sub wiring harness to ZF transmission P.T.O. sub wiring harness 1

https://truckmanualshub.com/

EG-17 [ENGINE (3 of 3)] (Models: SH, SS for Hong Kong, Ireland)

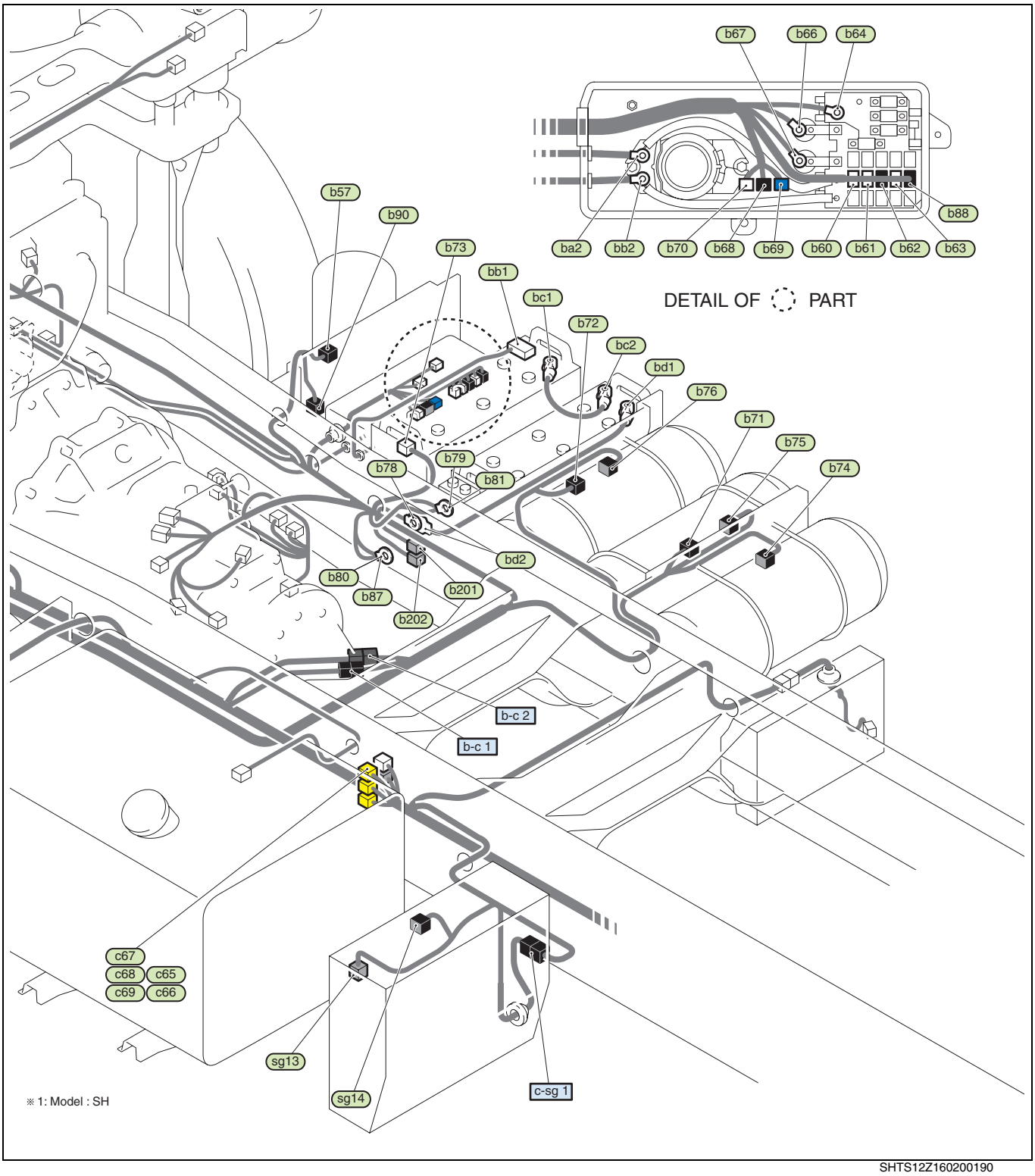

SHTS12Z160200190

https://truckmanualshub.com/

ELECTRICAL EQUIPMENT CONNECTOR AND JUNCTION CONNECTOR

No.	Name	Circuit	No.	Name	Circuit
b57	Air dryer	IM	b87	Earth Power and light No.4	AD, AF
b60	FL block 1	AA	b88	FL block 5	AA
b61	FL block 2	AA	b90	Trailer stop light switch	CE
b62	FL block 3	AA	b201	J/C Earth	AD, AF, AG
b63	FL block 4	AA	b202	J/C Earth G2	AD, AF
b64	FL 11	AA	c65	P/TAIL CHASSIS	AL
b66	Starter relay (Terminal C)	AH	c66	P/ACC CHASSIS	AL
b67	Intake air heater relay (Terminal F)	AJ	c67	SERVICE CHASSIS No.1	AL
b68	Starter relay (Coil)	AH	c68	SERVICE CHASSIS No.2	AL
b69	Intake air heater relay (Coil)	AJ	c69	SERVICE CHASSIS No.3	AL
b70	Battery relay (Coil)	AA	c78	Fuel gauge sender unit	BD
b71	Low pressure switch No.1	BD	ba2	Battery relay (Terminal LD)	AA
b72	Low pressure switch No.2	BD	bb1	Battery (+) terminal (Battery 1)	AA
b73	Low pressure switch No.3	BD	bb2	Battery relay (Terminal B)	AA
b74	Low pressure switch No.4 (Model: SH)	BD	bc1	Battery (-) terminal (Battery 1)	AA
b75	Front air gauge sender unit	BD	bc2	Battery (+) terminal (Battery 2)	AA
b76	Rear air gauge sender unit	BD	bd1	Battery (-) terminal (Battery 2)	AA
b78	Battery ground (Wiring harness)	AG	bd2	Battery ground (Battery cable)	AA
b79	Earth Power and light No.1	AD, AF	sg13	Spring brake switch	BD
b80	Earth Power and light No.2	AD, AF	sg14	Buzzer cancel switch	BD
b81	Earth Power and light No.3	AD, AF			

WIRE TO WIRE CONNECTOR

No.	Name	No.	Name
b-c 1	Front RH wiring harness to Front LH wiring harness 1	c-sg 1	Front LH wiring harness to Brake valve box sub wiring harness 1
b-c 2	Front RH wiring harness to Front LH wiring harness 2		

https://truckmanualshub.com/

EG-18 [ENGINE (1 of 3)] (Models: SH, SR for Taiwan)

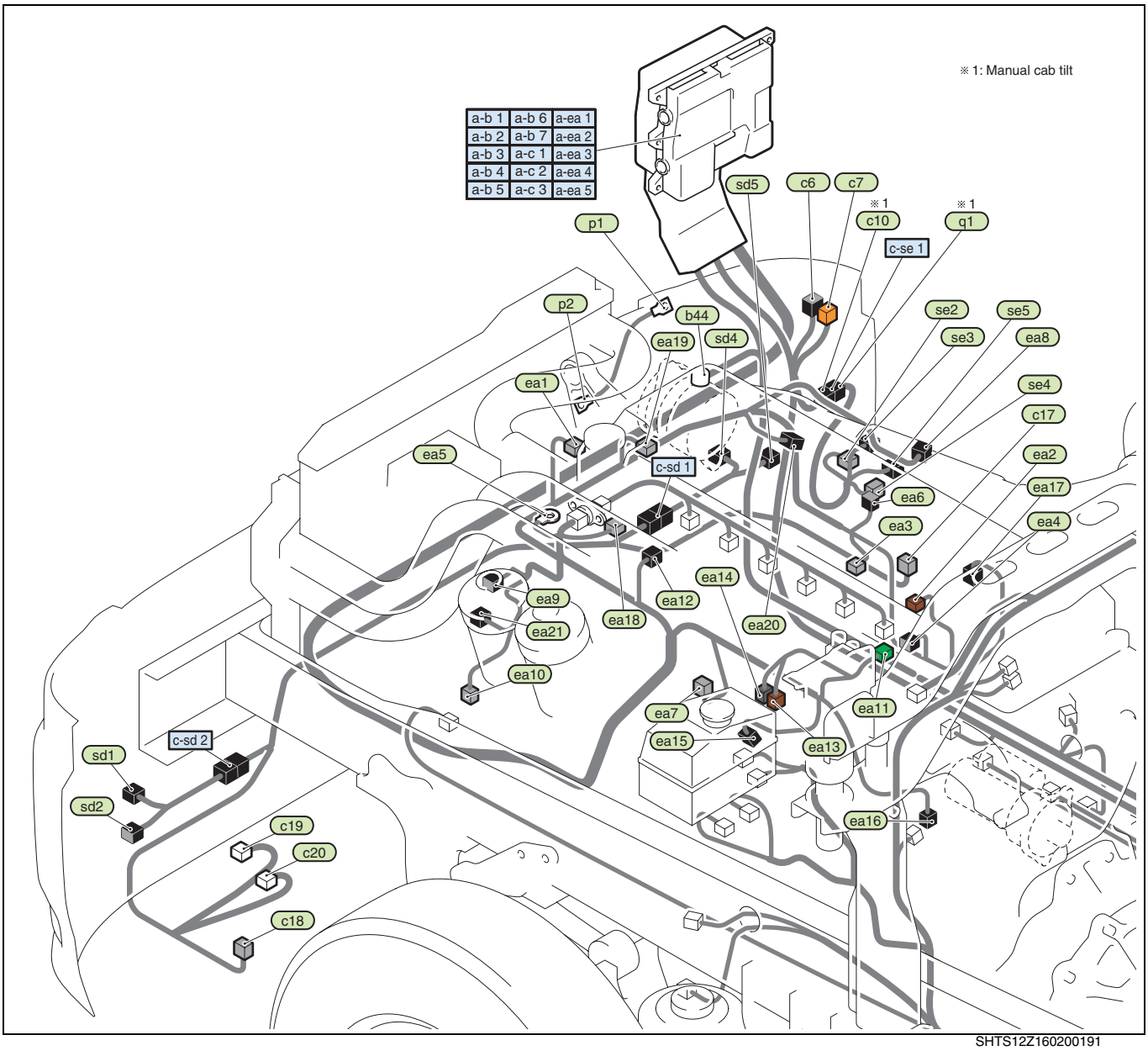

SHTS12Z160200191

https://truckmanualshub.com/

ELECTRICAL EQUIPMENT CONNECTOR AND JUNCTION CONNECTOR

No.	Name	Circuit	No.	Name	Circuit
b44	Alternator (Terminal B)	AK	ea10	Air conditioner compressor	EA
c6	Cab tilt stroke switch	IA, IC	ea11	Fuel temperature sensor	FB
c7	Cab tilt stop switch	IA, IC	ea12	Common rail pressure sensor	FB
c10	Cab tilt short circuit connector (Front LH wiring harness side)	IA	ea13	PCV (Pump Control Valve) No.1	FB
c17	Cornering light RH	CE	ea14	PCV (Pump Control Valve) No.2	FB
c18	Cornering light LH	CE	ea15	Engine speed sub sensor	FB
c19	Horn (Hi)	DC	ea16	Engine speed main sensor	FB
c20	Horn (Lo)	DC	ea17	Oil pressure warning switch	BC
p1	Bonding earth (Cab)	—	ea18	EGR coolant temperature sensor	FC
p2	Bonding earth (Chassis)	—	ea19	Coolant temperature sensor	FB
q1	Cab tilt short circuit connector	IA	ea20	Alternator (Terminal L, R)	AK
ea1	EGR control	FC	ea21	Oil filter warning switch	BH
ea2	VNT ECU	—	sd1	Headlight LH	CA
ea3	J/C Engine CAN	FC	sd2	Headlight leveling actuator LH	CB
ea4	VNT control	FC	sd4	Headlight RH	CA
ea5	Earth shield cable	FB	sd5	Headlight leveling actuator RH	CB
ea6	Turbocharger revolution sensor	FC	se2	Cab tilt relay	IC
ea7	Fuel filter warning switch	BG	se3	Cab tilt position switch	IC
ea8	Air flow sensor	FC	se4	Cab tilt motor	IC
ea9	Boost pressure sensor	FB	se5	Cab tilt switch	IC

WIRE TO WIRE CONNECTOR

No.	Name	No.	Name
a-b 1	Cab main wiring harness to Front RH wiring harness 1	a-c 3	Cab main wiring harness to Front LH wiring harness 3
a-b 2	Cab main wiring harness to Front RH wiring harness 2	a-ea 1	Cab main wiring harness to Engine wiring harness 1
a-b 3	Cab main wiring harness to Front RH wiring harness 3	a-ea 2	Cab main wiring harness to Engine wiring harness 2
a-b 4	Cab main wiring harness to Front RH wiring harness 4	a-ea 3	Cab main wiring harness to Engine wiring harness 3
a-b 5	Cab main wiring harness to Front RH wiring harness 5	a-ea 4	Cab main wiring harness to Engine wiring harness 4
a-b 6	Cab main wiring harness to Front RH wiring harness 6	a-ea 5	Cab main wiring harness to Engine wiring harness 5
a-b 7	Cab main wiring harness to Front RH wiring harness 7	c-sd 1	Front LH wiring harness to Headlight sub wiring harness 1
a-c 1	Cab main wiring harness to Front LH wiring harness 1	c-sd 2	Front LH wiring harness to Headlight sub wiring harness 2
a-c 2	Cab main wiring harness to Front LH wiring harness 2	c-se 1	Front LH wiring harness to Cab tilt sub wiring harness 1

https://truckmanualshub.com/

EG-19 [ENGINE (2 of 3)] (Models: SH, SR for Taiwan)

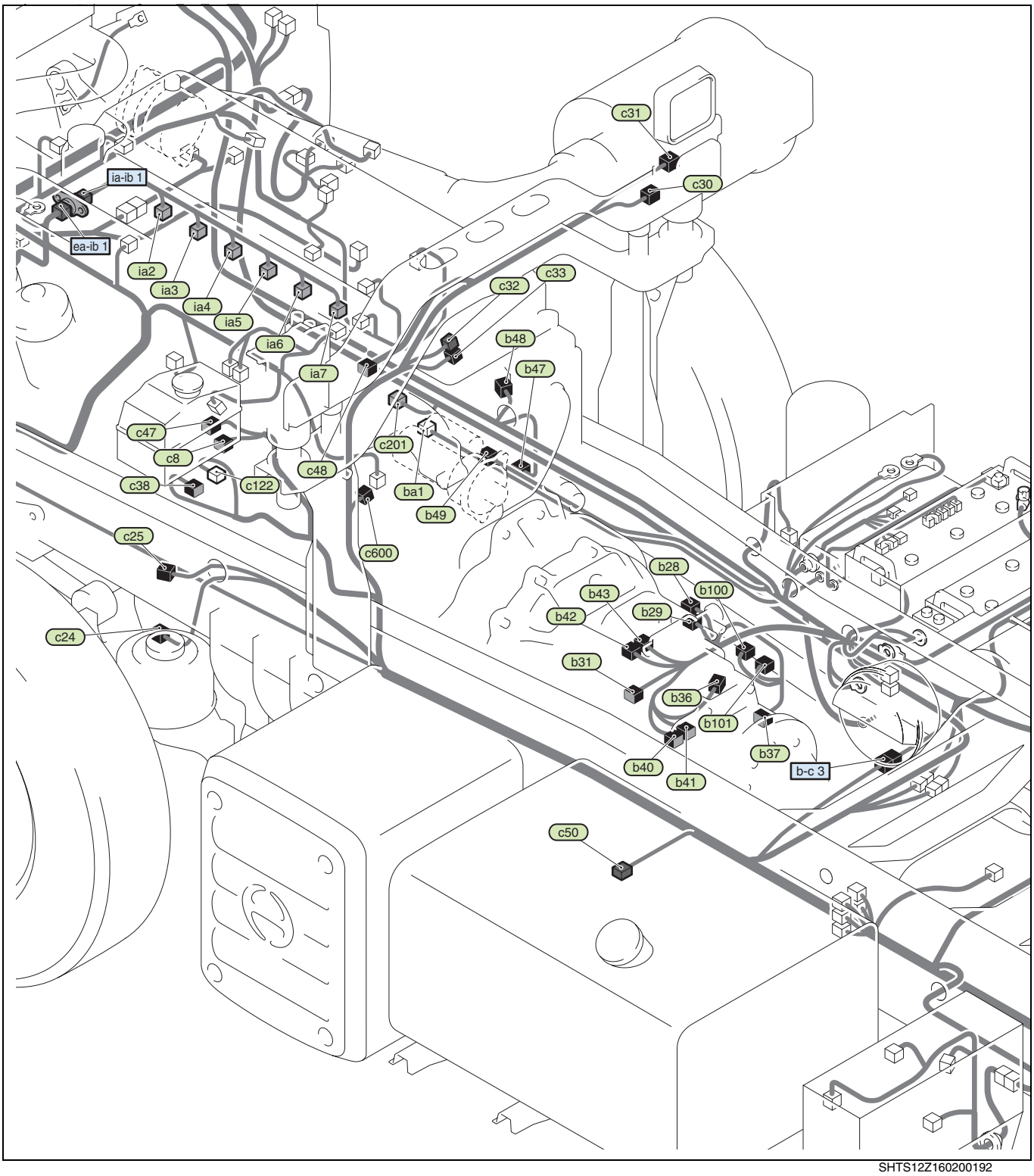

SHTS12Z160200192

https://truckmanualshub.com/

ELECTRICAL EQUIPMENT CONNECTOR AND JUNCTION CONNECTOR

No.	Name	Circuit	No.	Name	Circuit
b28	Neutral switch	AH	c31	Spot light	CM
b29	Cab tilt neutral switch	IA, IC	c32	ABS trailer socket	GC
b31	P.T.O. position switch	IE	c33	Trailer socket	CE
b36	Back-up light switch	CJ	c38	P.T.O. magnetic valve	IE
b37	Speed sensor	BD	c47	Coolant level warning switch	BD
b40	MZ12 splitter front switch	HB	c48	P.T.O. accelerator sensor	FI
b41	MZ12 splitter rear switch	HB	c50	Fuel gauge sender unit	BD
b42	MZ12 range rear switch	HB	c122	Battery cut switch (Rear)	AC
b43	MZ12 range front switch	HB	c201	J/C Earth G2-a	AD, AF, IC
b47	ABS front modulator RH	GC	c600	Trailer fuse	GC
b48	ABS front wheel sensor RH	GC	ba1	Starter (Terminal B)	AH
b49	Starter (Terminal C)	AH	ia2	Fuel injector No.1	FB
b100	MZ12 splitter magnetic valve	HB	ia3	Fuel injector No.2	FB
b101	MZ12 power shift magnetic valve	HB	ia4	Fuel injector No.3	FB
c8	Cab tilt buzzer	IA, IC	ia5	Fuel injector No.4	FB
c24	ABS front modulator LH	GC	ia6	Fuel injector No.5	FB
c25	ABS front wheel sensor LH	GC	ia7	Fuel injector No.6	FB
c30	Spot light switch	CM			

WIRE TO WIRE CONNECTOR

No.	Name	No.	Name
b-c 3	Front RH wiring harness to Front LH wiring harness 3	ia-ib 1	Injector sub wiring harness to Link-up connector 1
ea-ib 1	Engine wiring harness to Link-up connector 1		

https://truckmanualshub.com/

EG-20 [ENGINE (3 of 3)] (Models: SH, SR for Taiwan)

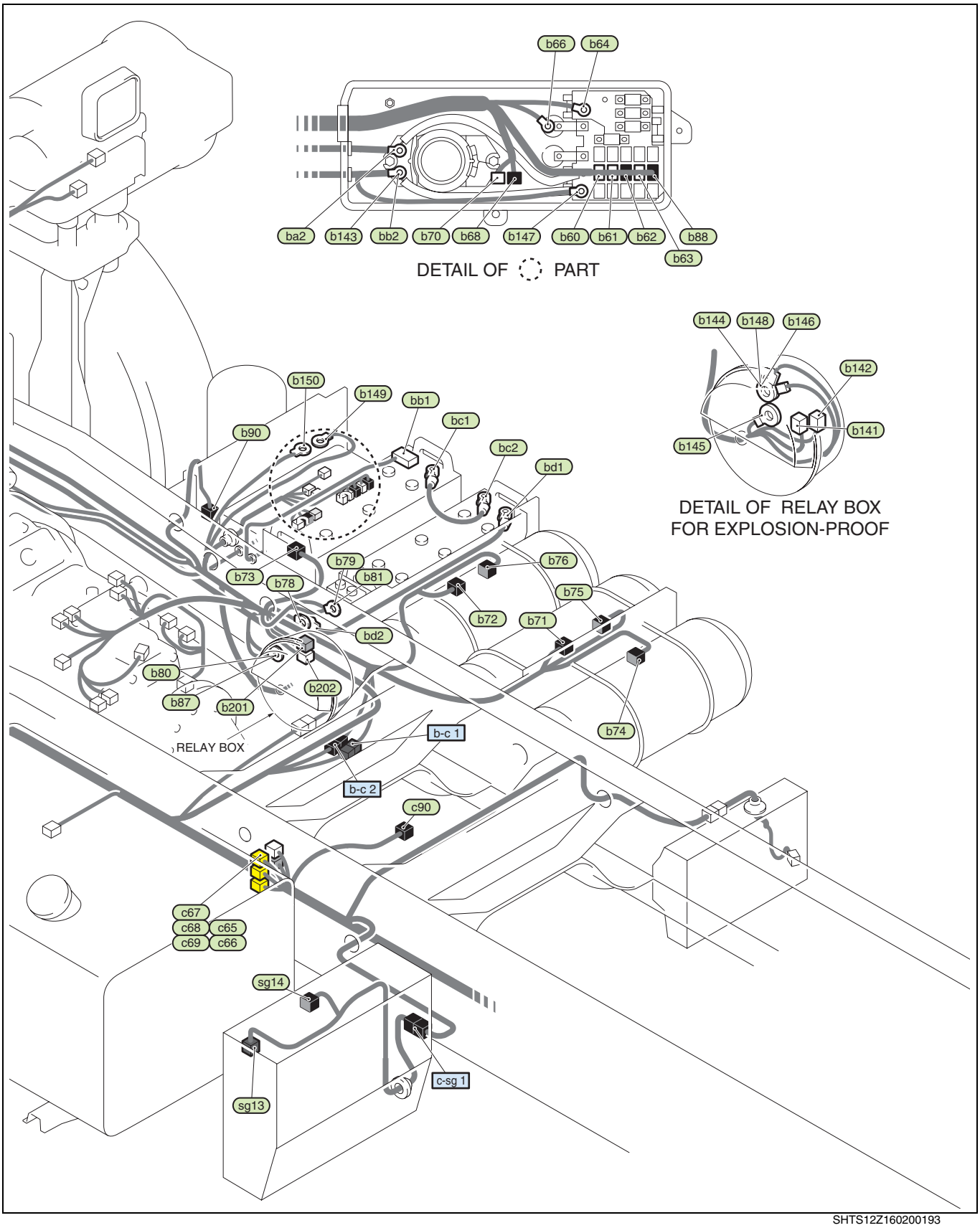

SHTS12Z160200193

https://truckmanualshub.com/

ELECTRICAL EQUIPMENT CONNECTOR AND JUNCTION CONNECTOR

No.	Name	Circuit	No.	Name	Circuit
b60	FL block 1	AA	b144	Battery cut relay [Terminal B (15.00 B)]	AC
b61	FL block 2	AA	b145	Battery cut relay (Terminal LD)	AC
b62	FL block 3	AA	b146	Battery cut relay [Terminal B (2.00 B-Y)]	AC
b63	FL block 4	AA	b147	FL bus bar No.2	AA
b64	FL 11	AA	b148	Battery cut relay [Terminal B (15.00 W-B)]	AC
b66	Starter relay (Terminal C)	AH	b149	FL 17 (15.00 W-B)	AC
b68	Starter relay (Coil)	AH	b150	FL 17 (15.00 W)	AC
b70	Battery relay (Coil)	AA	b201	J/C Earth	AD, AF, AG
b71	Low pressure switch No.1	BD	b202	J/C Earth G2	AC, AD, AF
b72	Low pressure switch No.2	BD	c65	P/TAIL CHASSIS	AL
b73	Low pressure switch No.3	BD	c66	P/ACC CHASSIS	AL
b74	Low pressure switch No.4	BD	c67	SERVICE CHASSIS No.1	AL
b75	Front air gauge sender unit	BD	c68	SERVICE CHASSIS No.2	AL
b76	Rear air gauge sender unit	BD	c69	SERVICE CHASSIS No.3	AL
b78	Battery ground (Wiring harness)	AG	c90	Coupler lock switch	IJ
b79	Earth power and light No.1	AD, AF	ba2	Battery relay (Terminal LD)	AA
b80	Earth power and light No.2	AD, AF	bb1	Battery (+) terminal (Battery 1)	AA
b81	Earth power and light No.3	AD, AF	bb2	Battery relay (Terminal B)	AA
b87	Earth power and light No.4	AD, AF	bc1	Battery (-) terminal (Battery 1)	AA
b88	FL block 5	AA	bc2	Battery (+) terminal (Battery 2)	AA
b90	Trailer stop light switch	CE	bd1	Battery (-) terminal (Battery 2)	AA
b141	FL 16	AC	bd2	Battery ground (Battery cable)	AA
b142	Battery cut relay (Coil)	AC	sg13	Spring brake switch	BD
b143	Battery relay (Terminal B) (Wiring harness)	AC	sg14	Buzzer cancel switch	BD

WIRE TO WIRE CONNECTOR

No.	Name	No.	Name
b-c 1	Front RH wiring harness to Front LH wiring harness 1	c-sg 1	Front LH wiring harness to Brake valve box sub wiring harness 1
b-c 2	Front RH wiring harness to Front LH wiring harness 2		

https://truckmanualshub.com/

RR-1 (REAR) (Model: FR with leaf suspension)

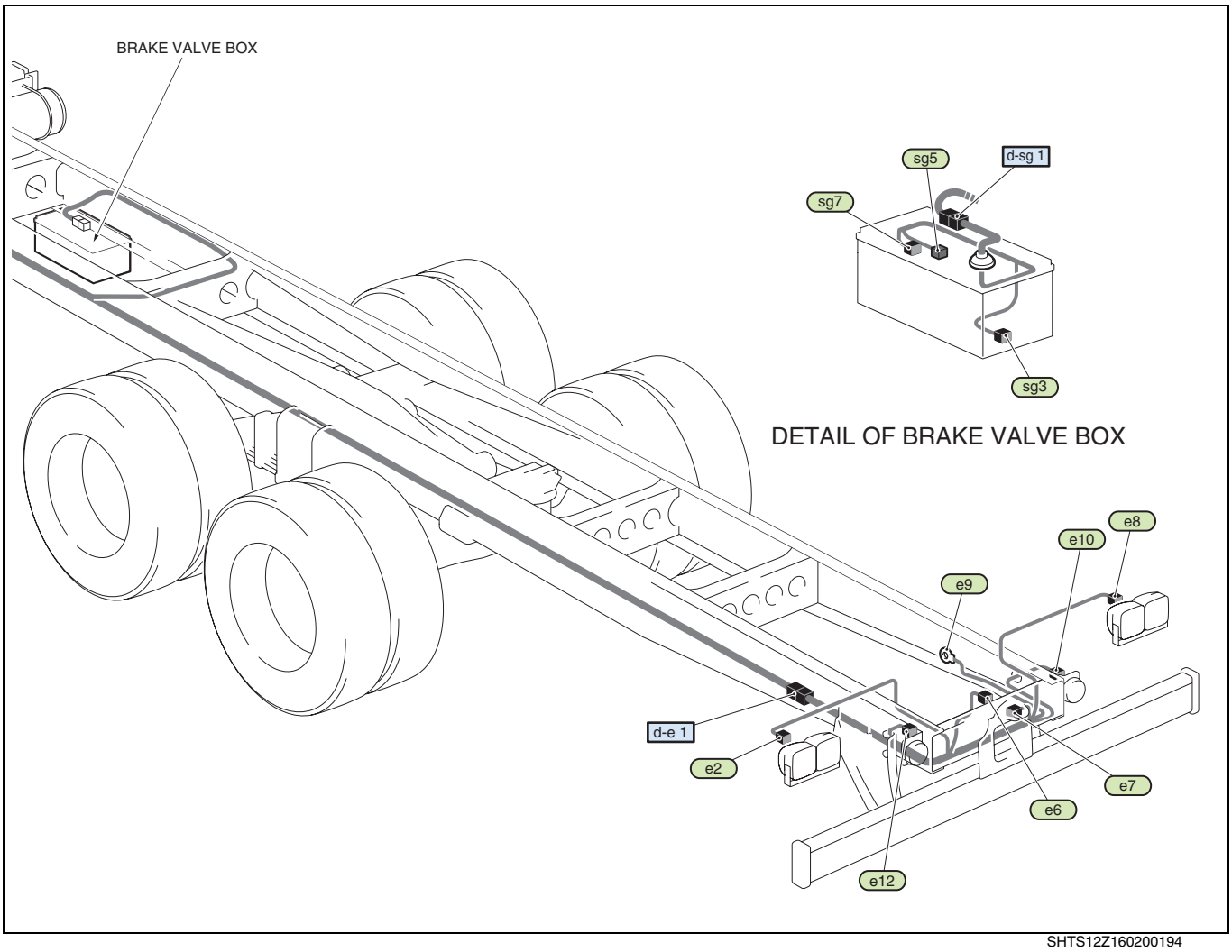

SHTS12Z160200194

ELECTRICAL EQUIPMENT CONNECTOR AND JUNCTION CONNECTOR

No.	Name	Circuit	No.	Name	Circuit
e2	Rear combination light LH	CD	e10	Back-up light RH	CI
e6	License plate light RH	CI	e12	Back-up light LH	CI
e7	Back buzzer	CI	sg3	Differential lock magnetic valve	IK
e8	Rear combination light RH	CD	sg5	Spring brake switch	BB
e9	Earth power and light rear	AD	sg7	Buzzer cancel switch	BB

WIRE TO WIRE CONNECTOR

No.	Name	No.	Name
d-e 1	Intermediate wiring harness to Rear wiring harness 1	d-sg 1	Intermediate wiring harness to Brake valve box sub wiring harness 1

https://truckmanualshub.com/

RR-2 (REAR) (Model: FR with air suspension)

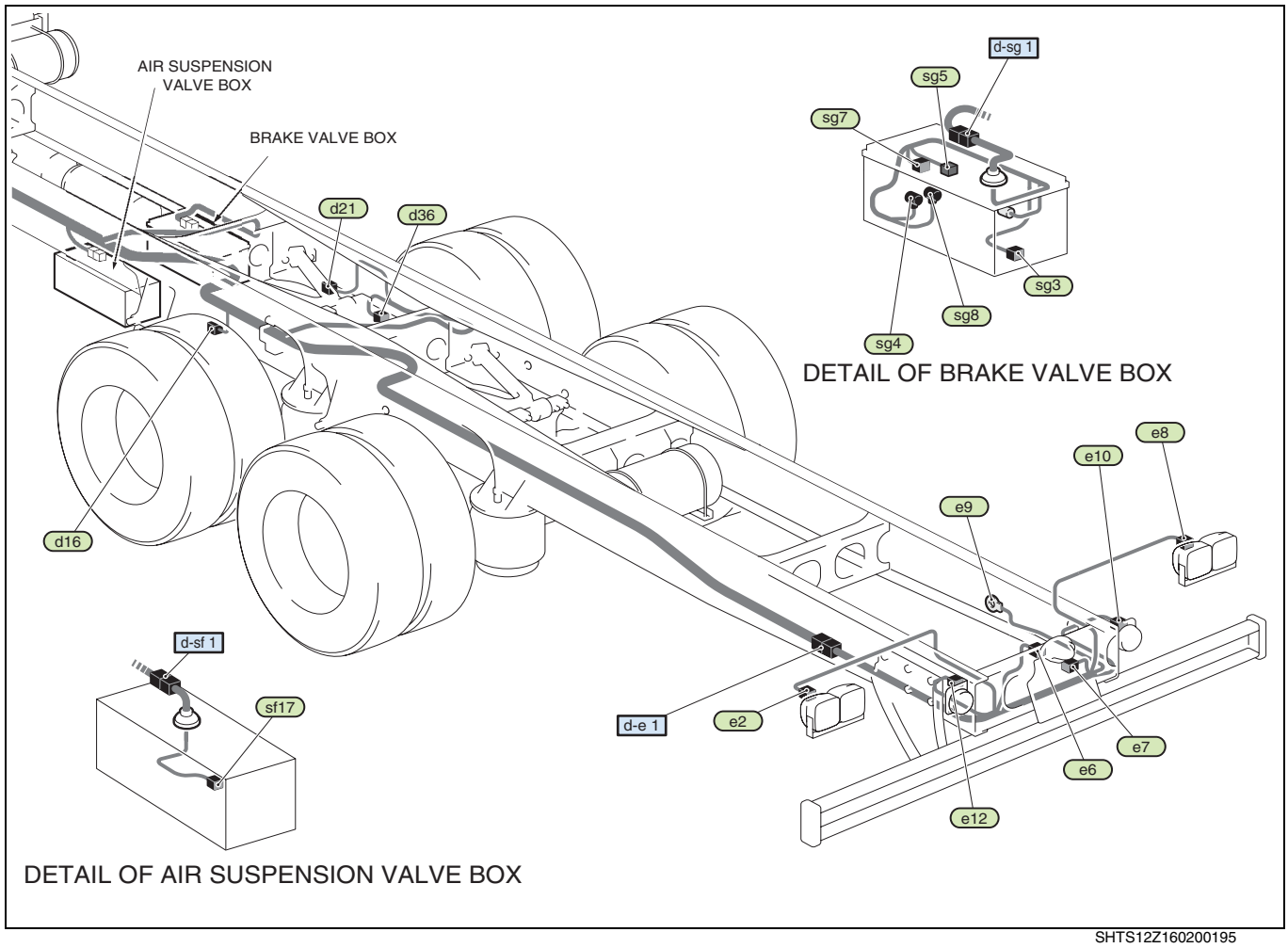

SHTS12Z160200195

ELECTRICAL EQUIPMENT CONNECTOR AND JUNCTION CONNECTOR

No.	Name	Circuit	No.	Name	Circuit
d16	ABS rear wheel sensor RH	GA	e10	Back-up light RH	CI
d21	ABS rear wheel sensor LH	GA	e12	Back-up light LH	CI
d36	Height sensor	IG	sf17	Height control magnetic valve	IG
e2	Rear combination light LH	CD	sg3	Differential lock magnetic valve	IK
e6	License plate light RH	CI	sg4	ABS rear modulator RH	GA
e7	Back buzzer	CI	sg5	Spring brake switch	BB
e8	Rear combination light RH	CD	sg7	Buzzer cancel switch	BB
e9	Earth power and light rear	AD	sg8	ABS rear modulator LH	GA

WIRE TO WIRE CONNECTOR

No.	Name	No.	Name
d-e 1	Intermediate wiring harness to Rear wiring harness 1	d-sg 1	Intermediate wiring harness to Brake valve box sub wiring harness 1
d-sf 1	Intermediate wiring harness to Air suspension valve box sub wiring harness 1		

https://truckmanualshub.com/

RR-3 (REAR) (Model: FS except full-tractor)

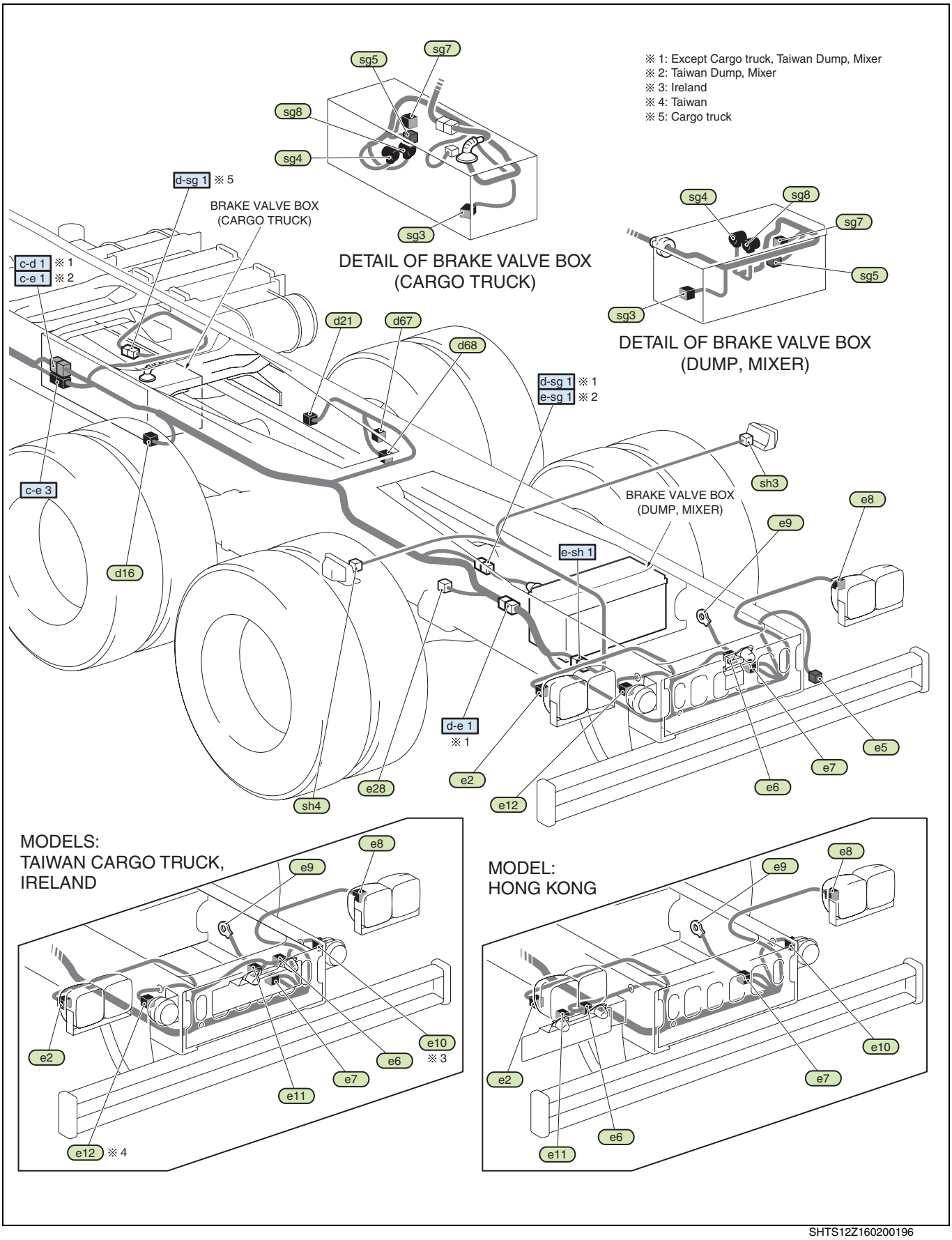

SHTS12Z160200196

https://truckmanualshub.com/

ELECTRICAL EQUIPMENT CONNECTOR AND JUNCTION CONNECTOR

No.	Name	Circuit	No.	Name	Circuit
d16	ABS rear wheel sensor LH	GA	e11	License plate light LH	CH, CI
d21	ABS rear wheel sensor RH	GA	e12	Back-up light LH	CH, CI
d67	ABS rear modulator LH (For Ireland model)	GA	e28	Dump up switch	IE
d68	ABS rear modulator RH (For Ireland model)	GA	sg3	Differential lock magnetic valve	IK
e2	Rear combination light LH	CD	sg4	ABS rear modulator RH (For Hong Kong model)	GA
e5	Rear fog light	CF	sg5	Spring brake switch	BB
e6	License plate light RH	CH, CI	sg7	Buzzer cancel switch	BB
e7	Back buzzer	CH, CI	sg8	ABS rear modulator LH (For Hong Kong model)	GA
e8	Rear combination light RH	CD	sh3	Side turn signal light LH	CD
e9	Earth power and light rear	AD	sh4	Side turn signal light RH	CD
e10	Back-up light RH	CI			

WIRE TO WIRE CONNECTOR

No.	Name	No.	Name
c-d 1	Front LH wiring harness to Intermediate wiring harness 1	d-sg 1	Intermediate wiring harness to Brake valve box sub wiring harness 1
c-e 1	Front LH wiring harness to Rear wiring harness 1	e-sg 1	Intermediate wiring harness to Brake valve box sub wiring harness 1
c-e 3	Front LH wiring harness to Rear wiring harness 3	e-sh 1	Rear wiring harness to Side turn signal sub wiring harness 1
d-e 1	Intermediate wiring harness to Rear wiring harness 1		

https://truckmanualshub.com/

RR-4 (REAR) (Model: FS full-tractor)

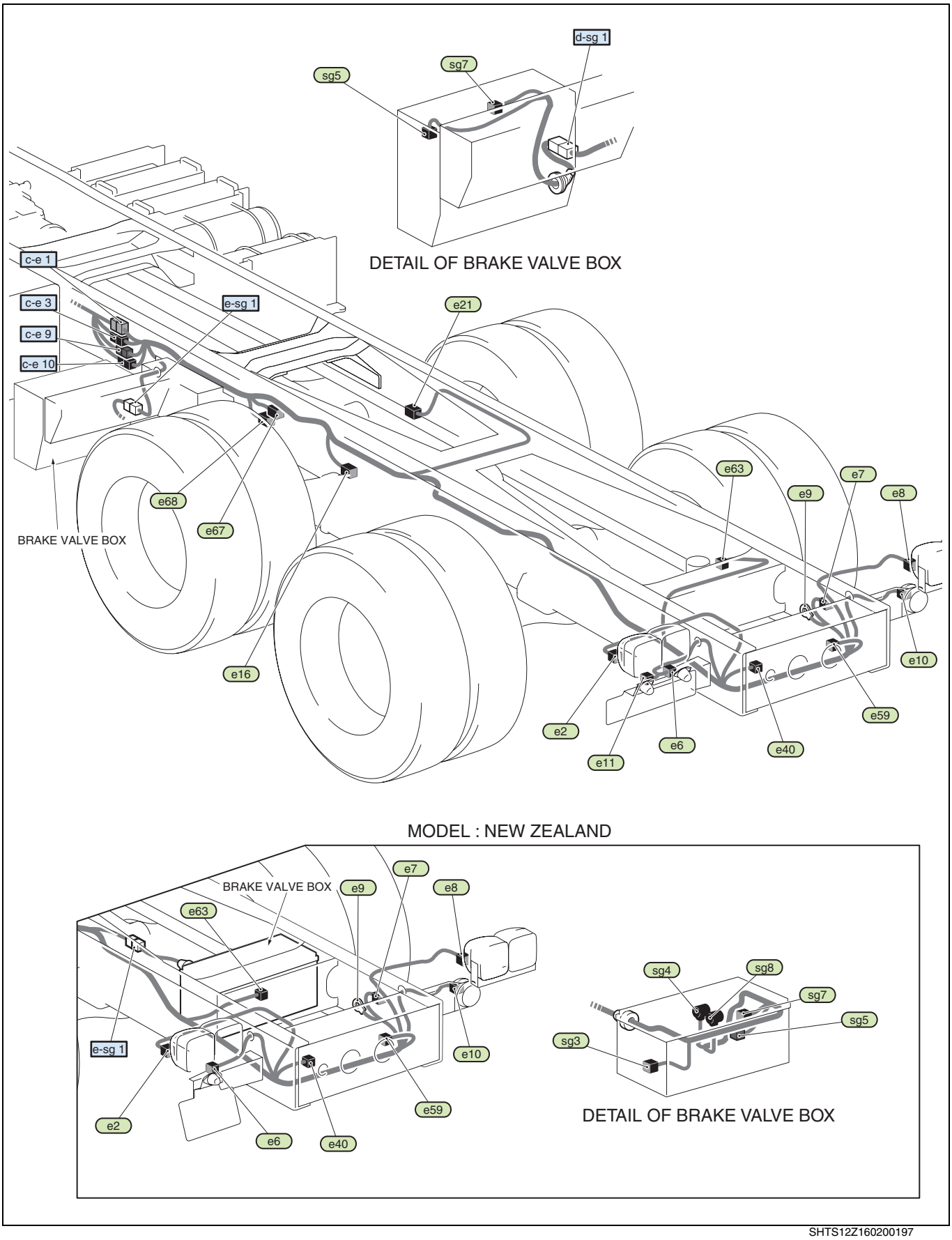

SHTS12Z160200197

https://truckmanualshub.com/

ELECTRICAL EQUIPMENT CONNECTOR AND JUNCTION CONNECTOR

No.	Name	Circuit	No.	Name	Circuit
e2	Rear combination light LH	CD	e59	ABS trailer socket	GB
e6	License plate light RH	CH	e63	Trailer stop light switch	CD
e7	Back buzzer	CH	e67	ABS rear modulator LH (For Australia model)	GB
e8	Rear combination light RH	CD	e68	ABS rear modulator RH (For Australia model)	GB
e9	Earth power and light rear	AD	sg3	Differential lock magnetic valve	IK
e10	Back-up light RH	CH	sg4	ABS rear modulator RH (For New Zealand model)	GB
e11	License plate light LH	CH	sg5	Spring brake switch	BB
e16	ABS rear wheel sensor LH (For Australia model)	GB	sg7	Buzzer cancel switch	BB
e21	ABS rear wheel sensor RH (For Australia model)	GB	sg8	ABS rear modulator LH (For New Zealand model)	GB
e40	Trailer socket	CD			

WIRE TO WIRE CONNECTOR

No.	Name	No.	Name
c-e 1	Front LH wiring harness to Rear wiring harness 1	c-e 10	Front LH wiring harness to Rear wiring harness 10
c-e 3	Front LH wiring harness to Rear wiring harness 3	e-sg 1	Intermediate wiring harness to Brake valve box sub wiring harness 1
c-e 9	Front LH wiring harness to Rear wiring harness 9		

https://truckmanualshub.com/

RR-5 (REAR) (Model: FY)

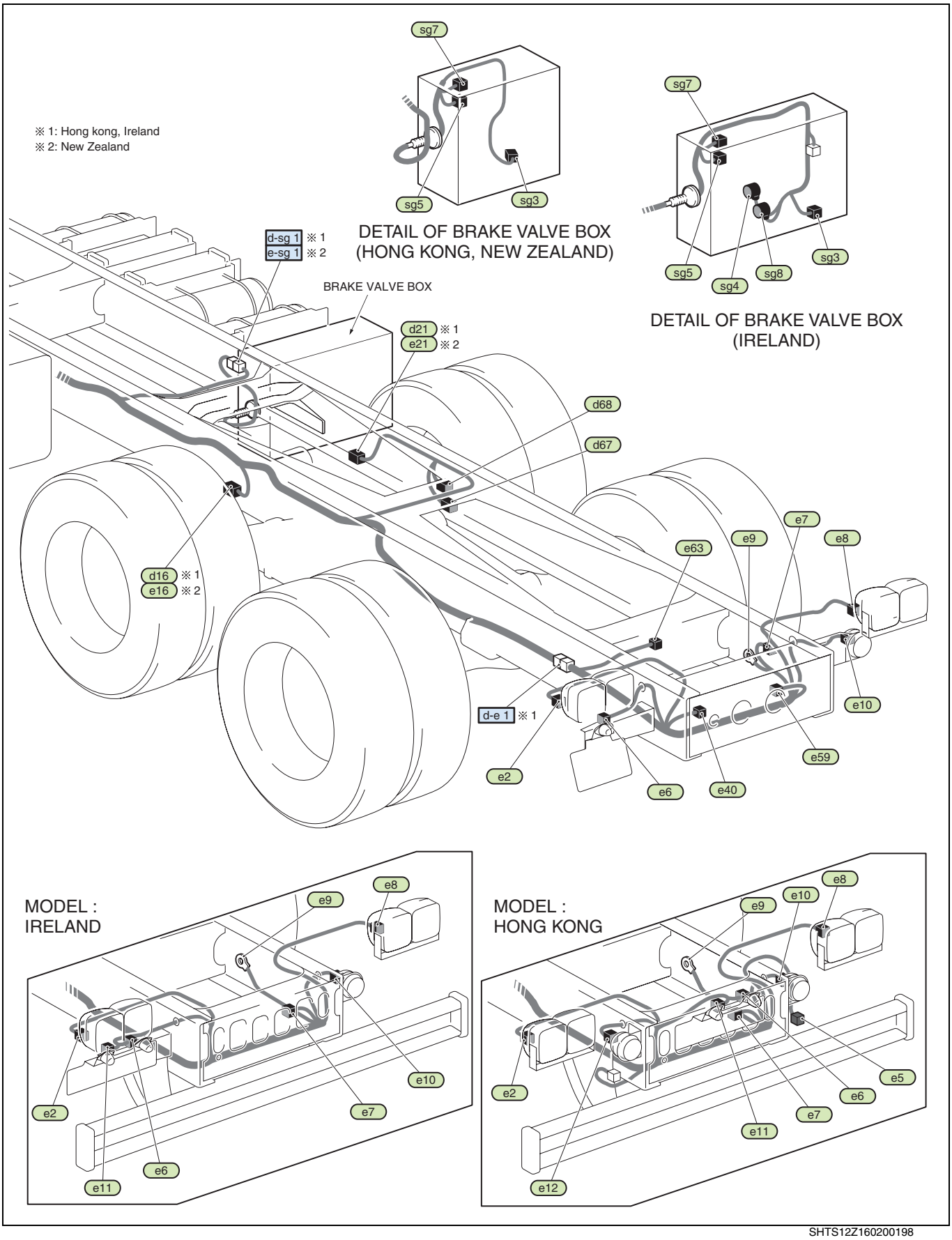

SHTS12Z160200198

https://truckmanualshub.com/

ELECTRICAL EQUIPMENT CONNECTOR AND JUNCTION CONNECTOR

No.	Name	Circuit	No.	Name	Circuit
d16	ABS rear wheel sensor LH (For Hong Kong, Ireland models)	GA	e12	Back-up light LH	CH
d21	ABS rear wheel sensor RH (For Hong Kong, Ireland models)	GA	e16	ABS rear wheel sensor LH (For New Zealand model)	GB
d67	ABS rear modulator LH (For Ireland model)	GA	e21	ABS rear wheel sensor RH (For New Zealand model)	GB
d68	ABS rear modulator RH (For Ireland model)	GA	e40	Trailer socket	CD
e2	Rear combination light LH	CD	e59	ABS trailer socket	GB
e5	Rear fog light	CF	e63	Trailer stop light switch	CD
e6	License plate light RH	CH, CI	sg3	Differential lock magnetic valve	IK
e7	Back buzzer	CH, CI	sg4	ABS rear modulator RH (For Hong Kong model)	GA, GB
e8	Rear combination light RH	CD	sg5	Spring brake switch	BB
e9	Earth power and light rear	AD	sg7	Buzzer cancel switch	BB
e10	Back-up light RH	CH, CI	sg8	ABS rear modulator LH (For Hong Kong model)	GA, GB
e11	License plate light LH	CI			

WIRE TO WIRE CONNECTOR

No.	Name	No.	Name
d-e 1	Intermediate wiring harness to Rear wiring harness 1	e-sg 1	Rear wiring harness to Brake valve box sub wiring harness 1
d-sg 1	Intermediate wiring harness to Brake valve box sub wiring harness 1		

https://truckmanualshub.com/

RR-6 (REAR) (Model: SH)

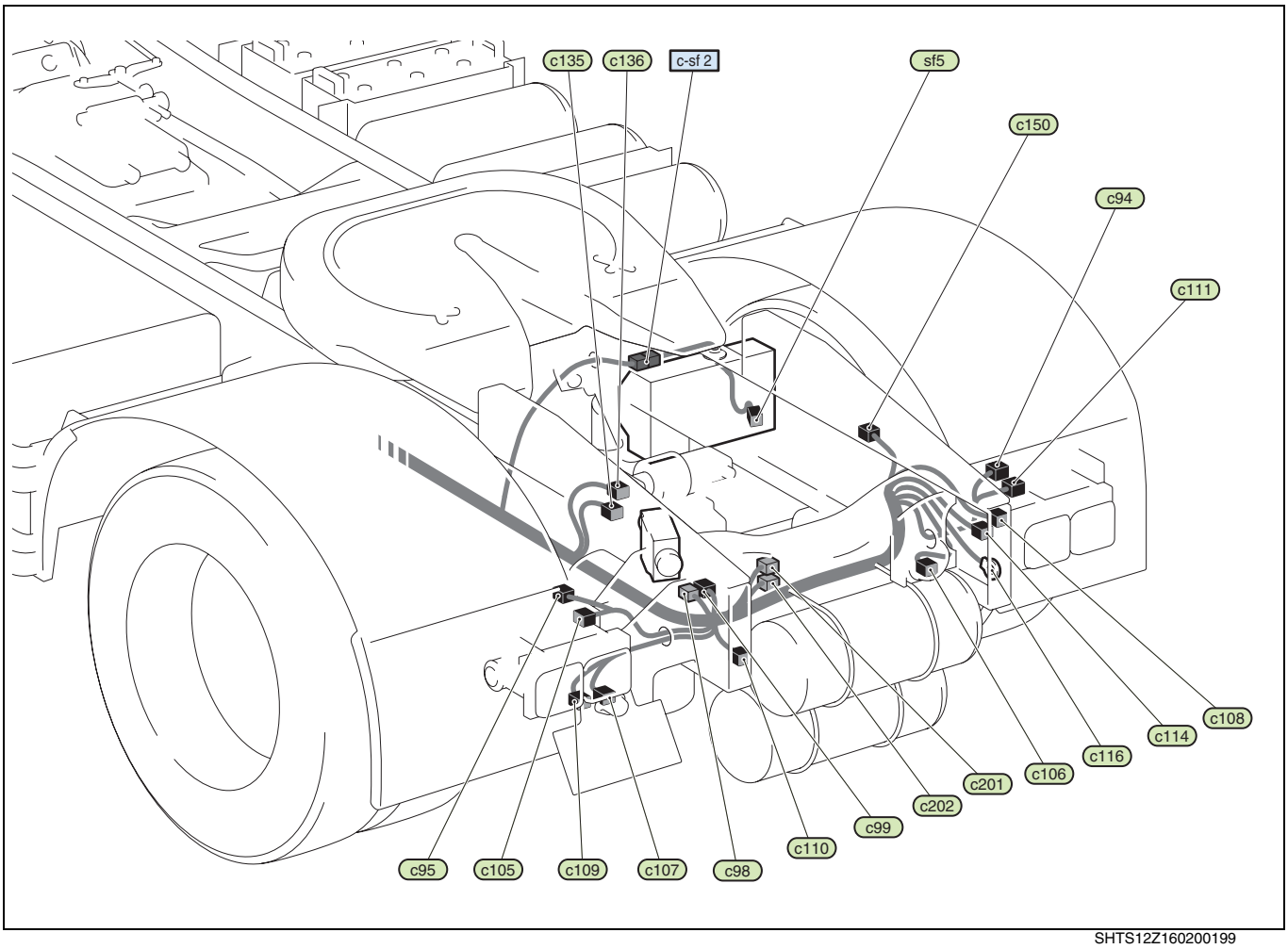

SHTS12Z160200199

ELECTRICAL EQUIPMENT CONNECTOR AND JUNCTION CONNECTOR

No.	Name	Circuit	No.	Name	Circuit
c94	Rear endout marker light RH (For Ireland model)	CG	c111	Rear combination light RH	CE
c95	Rear endout marker light LH (For Ireland model)	CG	c114	Back buzzer	CJ, CK
c98	ABS rear wheel sensor RH	GC	c116	Earth power and light rear	AD, AF
c99	ABS rear wheel sensor LH	GC	c135	ABS rear modulator LH	GC
c105	Rear combination light LH	CE	c136	ABS rear modulator RH	GC
c106	Back-up light RH (For Hong Kong, Ireland models)	CJ, CK	c150	Vehicle height sensor (Rear)	CO
c107	License plate light RH	CJ, CK	c201	J/C Earth G2-a	AD, AF, IC, ID
c108	Rear fog light	CF	c202	J/C Earth G2-b	AD, AF
c109	License plate light LH	CJ, CK	sf5	Height control magnetic valve	IF
c110	Back-up light LH (For Taiwan model)	CJ			

WIRE TO WIRE CONNECTOR

No.	Name	No.	Name
c-sf 2	Front LH wiring harness to Air suspension valve box sub wiring harness 2		

https://truckmanualshub.com/

RR-7 (REAR) (Models: SR, SS)

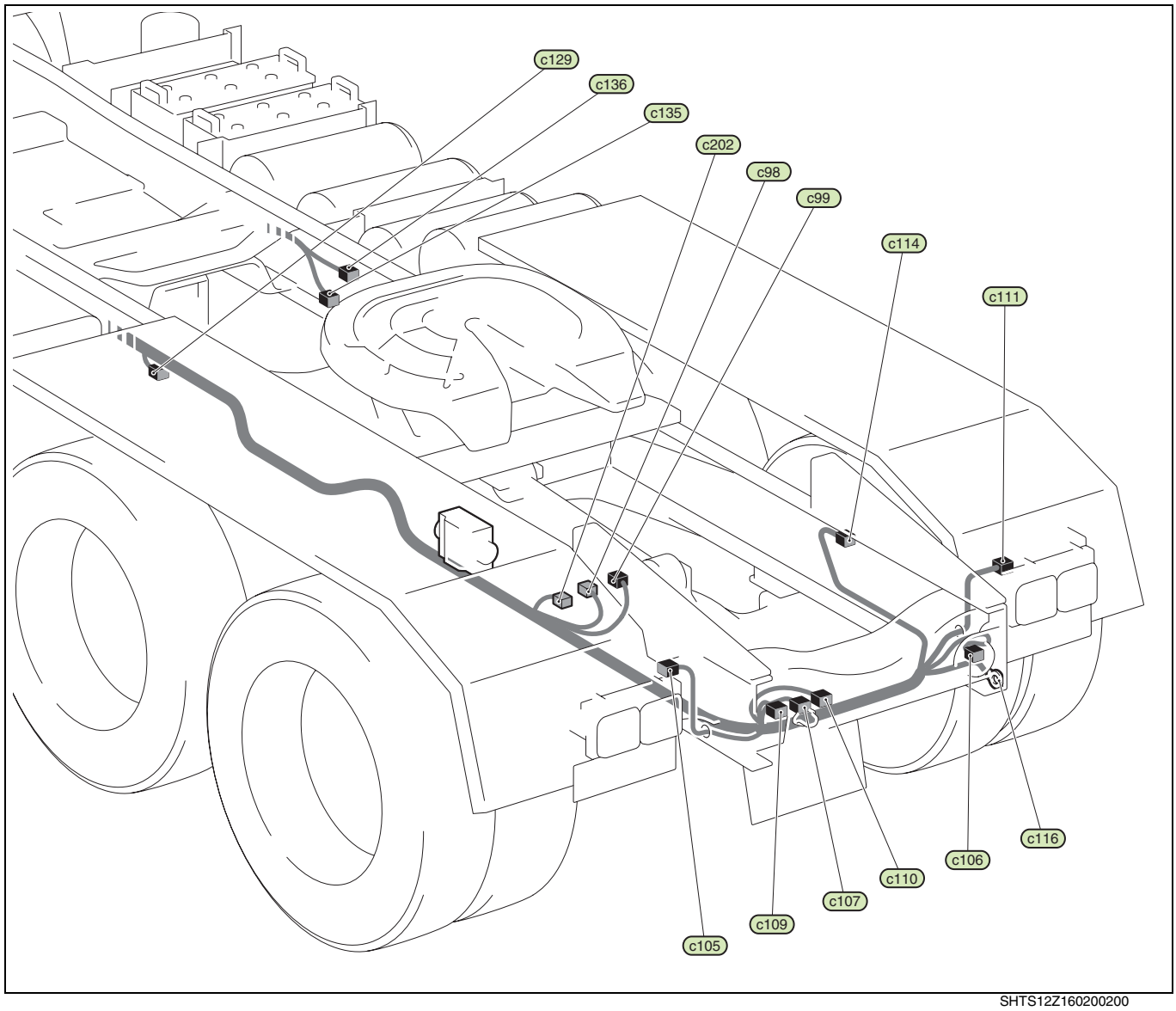

SHTS12Z160200200

ELECTRICAL EQUIPMENT CONNECTOR AND JUNCTION CONNECTOR

No.	Name	Circuit	No.	Name	Circuit
c98	ABS rear wheel sensor RH	GC	c111	Rear combination light RH	CE
c99	ABS rear wheel sensor LH	GC	c114	Back buzzer	CJ
c105	Rear combination light LH	CE	c116	Earth power and light rear	AD, AF
c106	Back-up light RH (For Hong Kong model)	CJ	c129	Differential lock magnetic valve	IK
c107	License plate light RH	CJ	c135	ABS rear modulator LH	GC
c109	License plate light LH	CJ	c136	ABS rear modulator RH	GC
c110	Back-up light LH (For Taiwan model)	CJ	c202	J/C Earth G2-b	AD, AF

https://truckmanualshub.com/

RELAY LOCATION

EN12Z1602J100008

NOTICE
There is a case that the following figures are different from that for your vehicle in the devices locations due to the model or specification.

RIGHT-HAND DRIVE MODEL

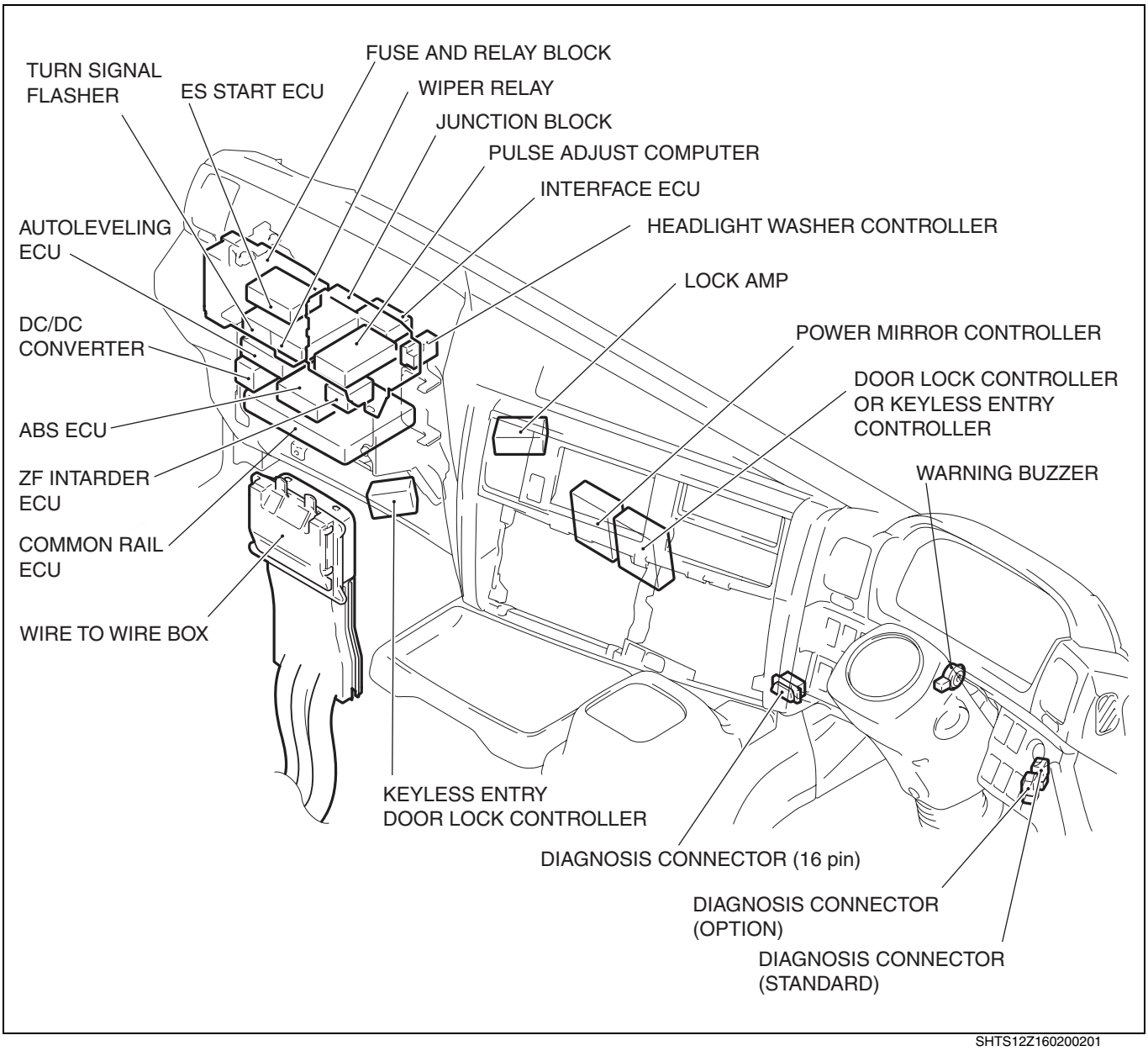

SHTS12Z160200201

https://truckmanualshub.com/

LEFT-HAND DRIVE MODEL

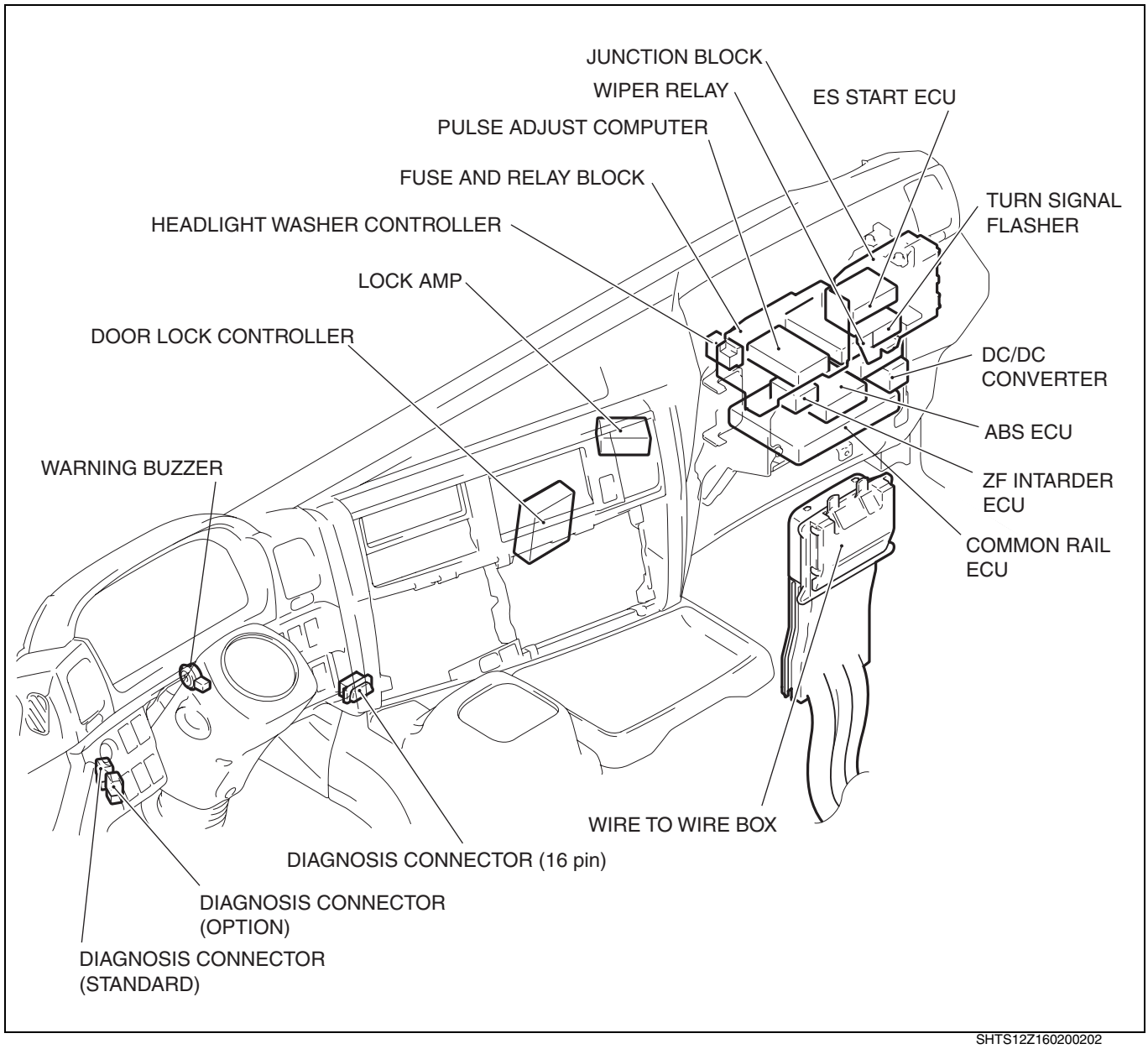

SHTS12Z160200202

https://truckmanualshub.com/

FUSE AND RELAY BLOCK

EN12Z1602J100009

NOTICE
There is a case that the following figures are different from that for your vehicle due to the model or specification.

RIGHT-HAND DRIVE MODEL

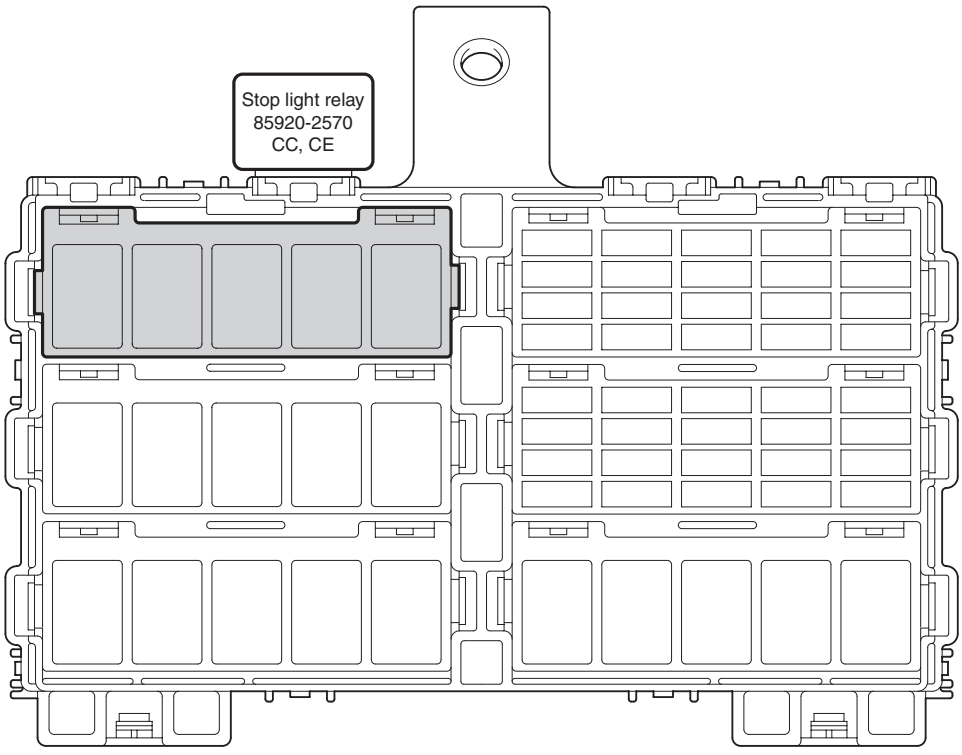

RELAY ALIGNMENT

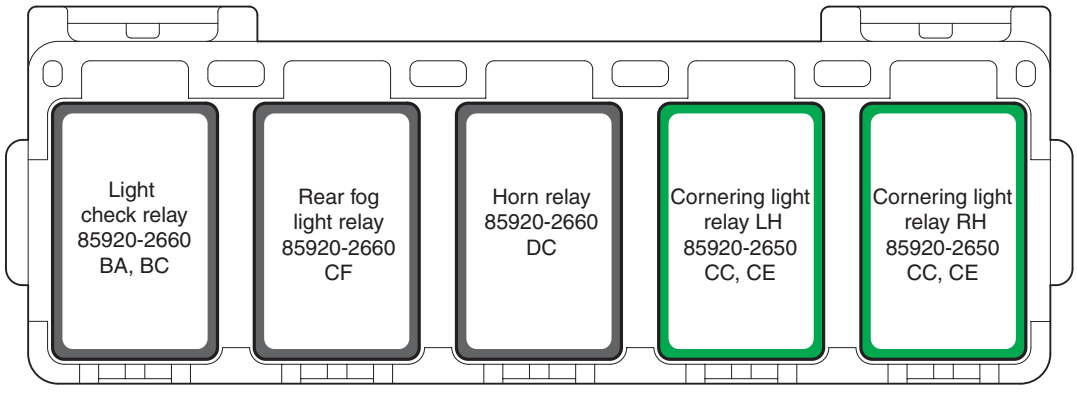

RELAY BLOCK TERMINAL ALIGNMENT

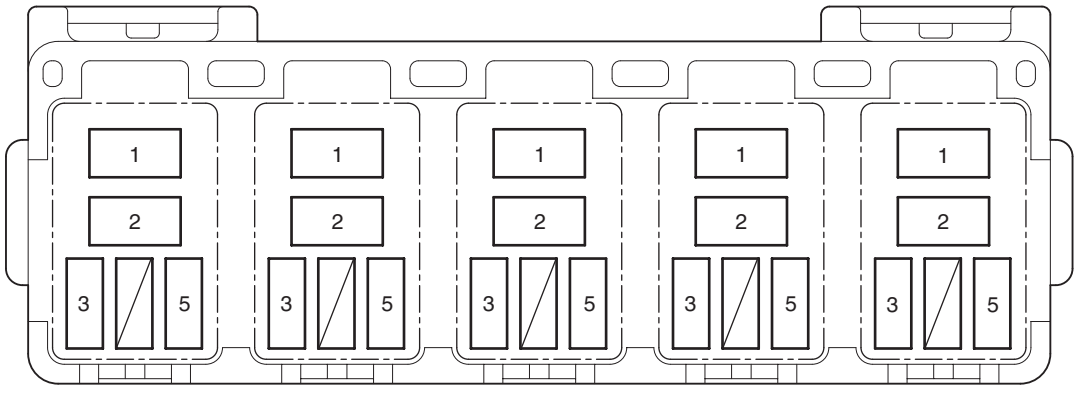

SHTS12Z160200203

https://truckmanualshub.com/

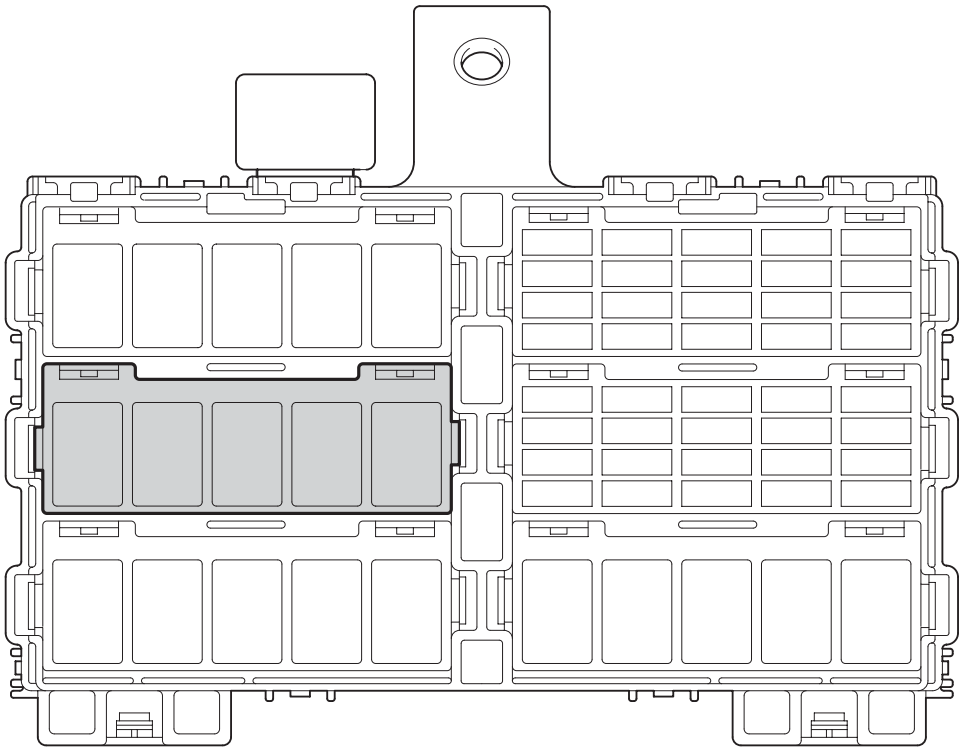

RELAY ALIGNMENT

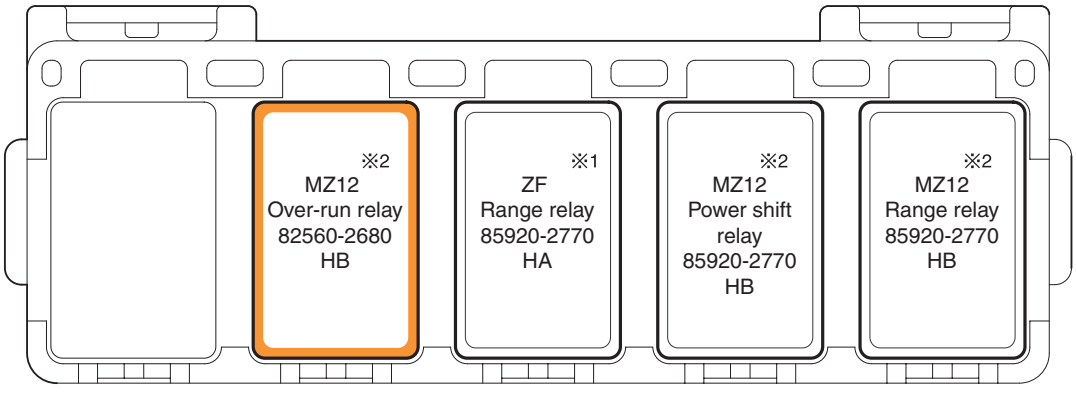

※ 1: Ireland
※ 2: Hong Kong

RELAY BLOCK TERMINAL ALIGNMENT

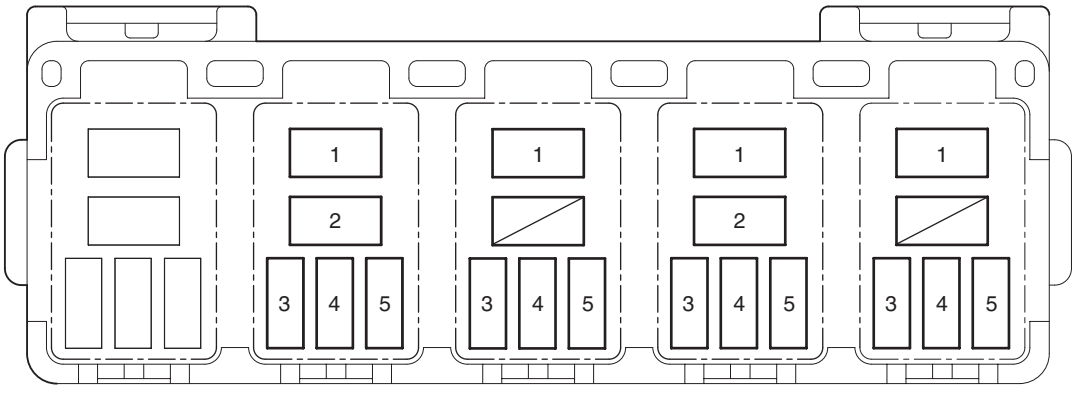

SHTS12Z160200204

https://truckmanualshub.com/

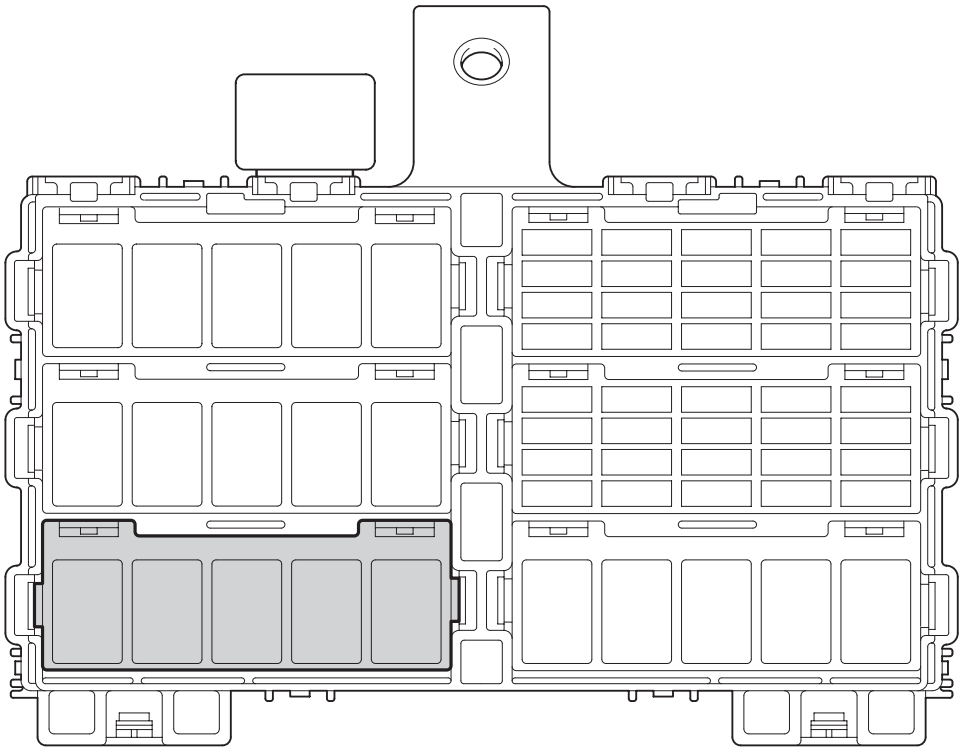

RELAY ALIGNMENT

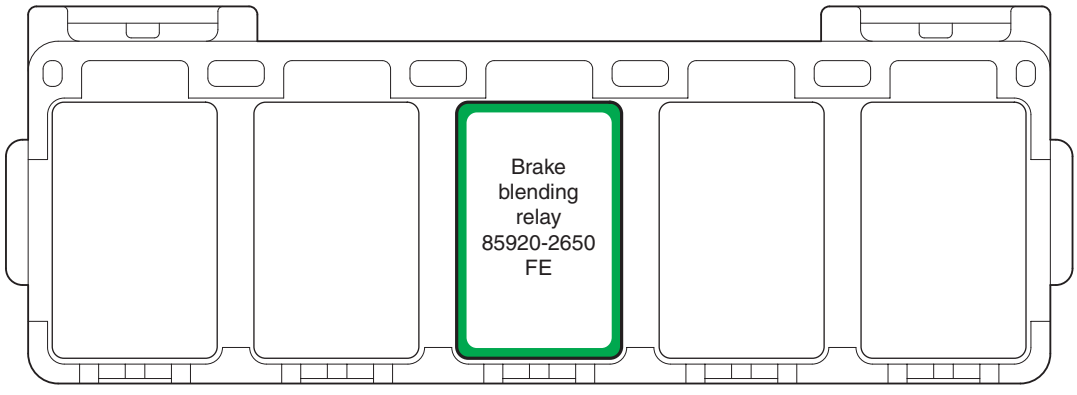

RELAY BLOCK TERMINAL ALIGNMENT

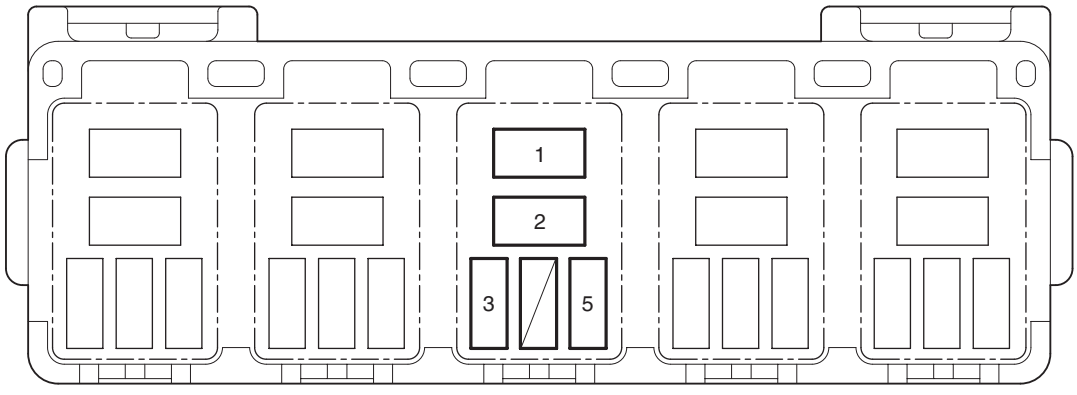

SHTS12Z160200205

https://truckmanualshub.com/

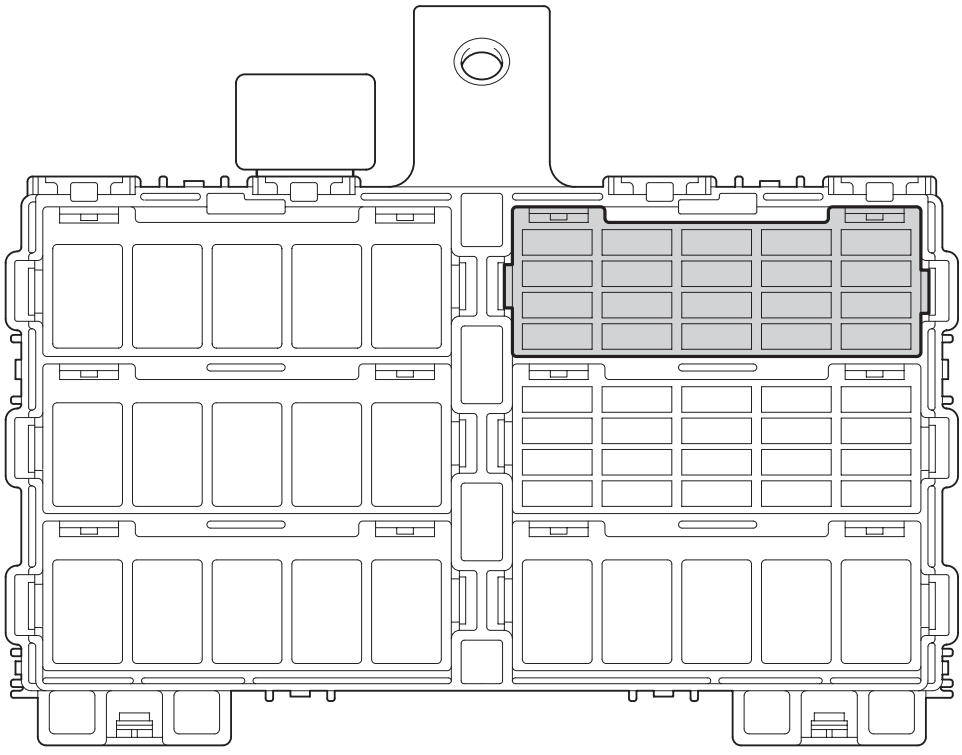

FUSE ALIGNMENT

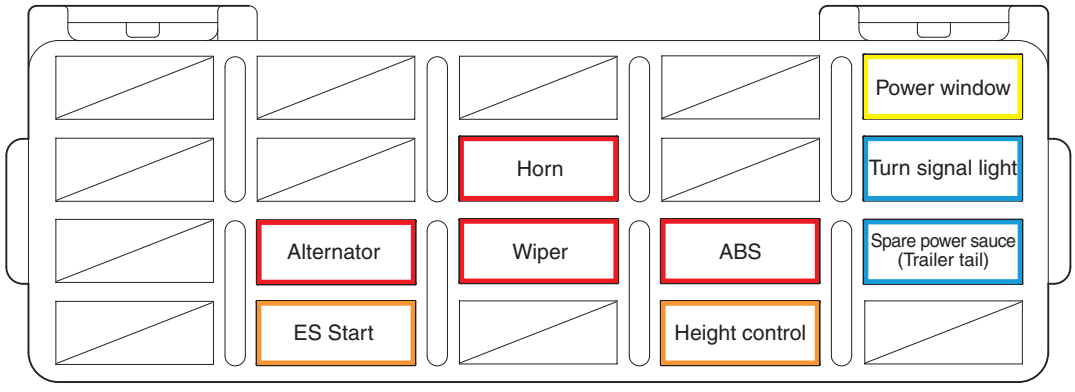

FUSE BLOCK TERMINAL ALIGNMENT

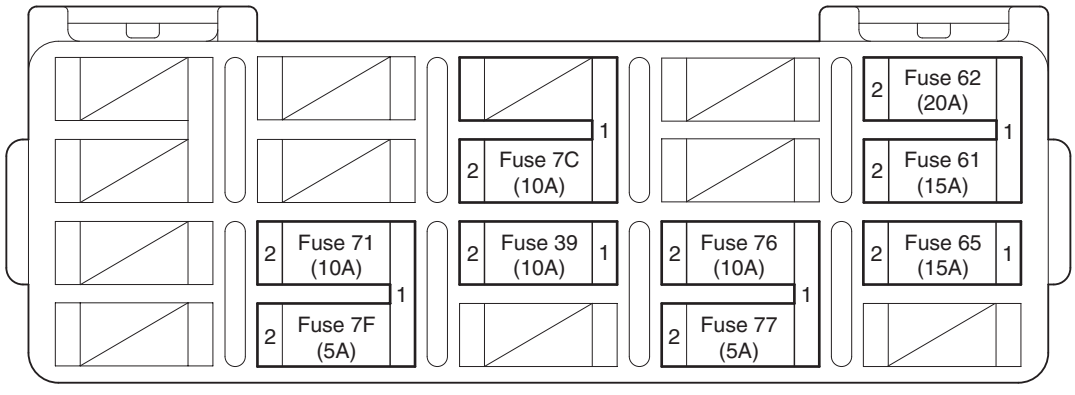

SHTS12Z160200206

https://truckmanualshub.com/

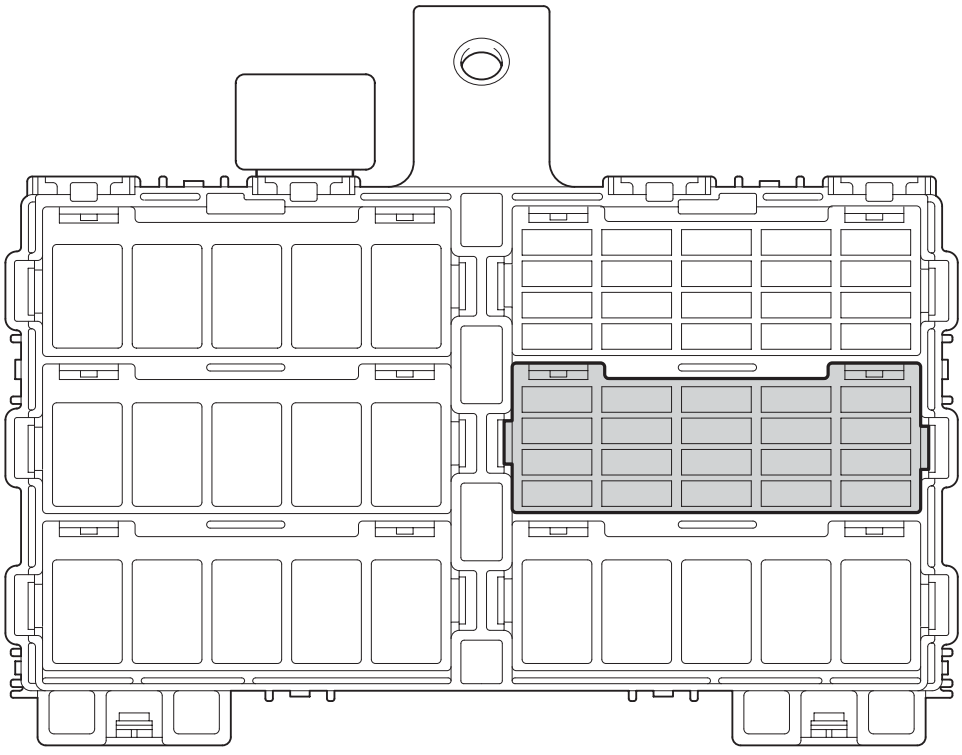

FUSE ALIGNMENT

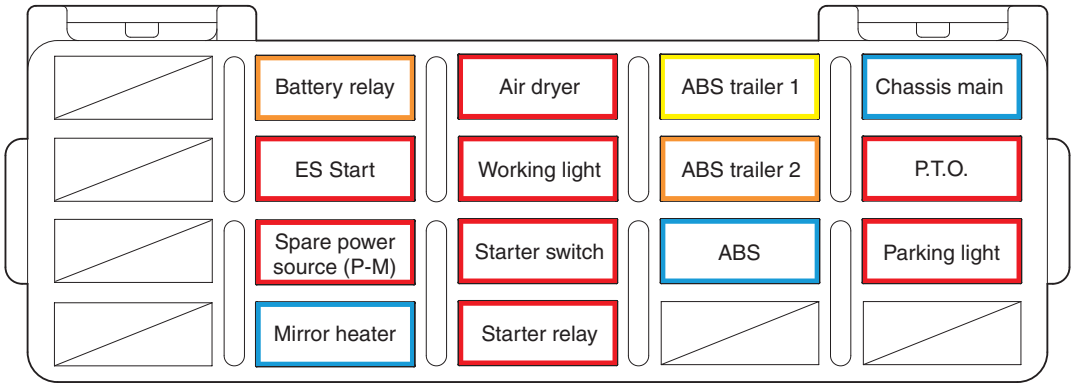

FUSE BLOCK TERMINAL ALIGNMENT

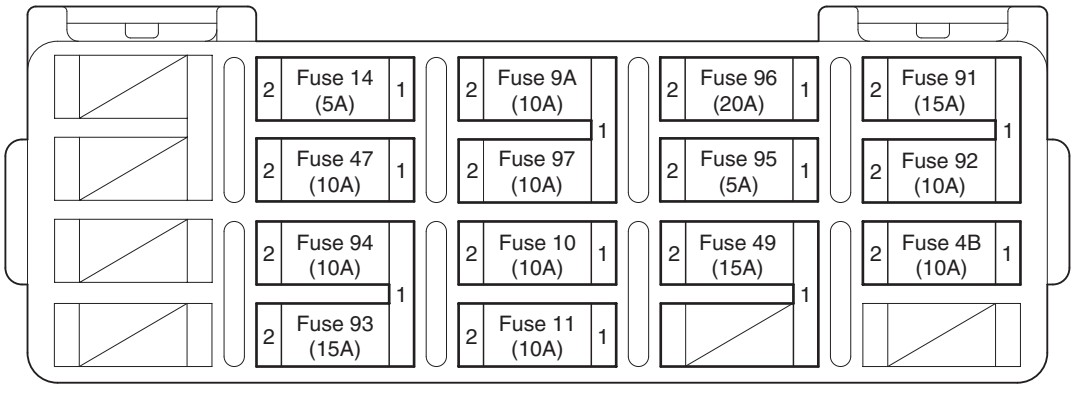

SHTS12Z160200207

https://truckmanualshub.com/

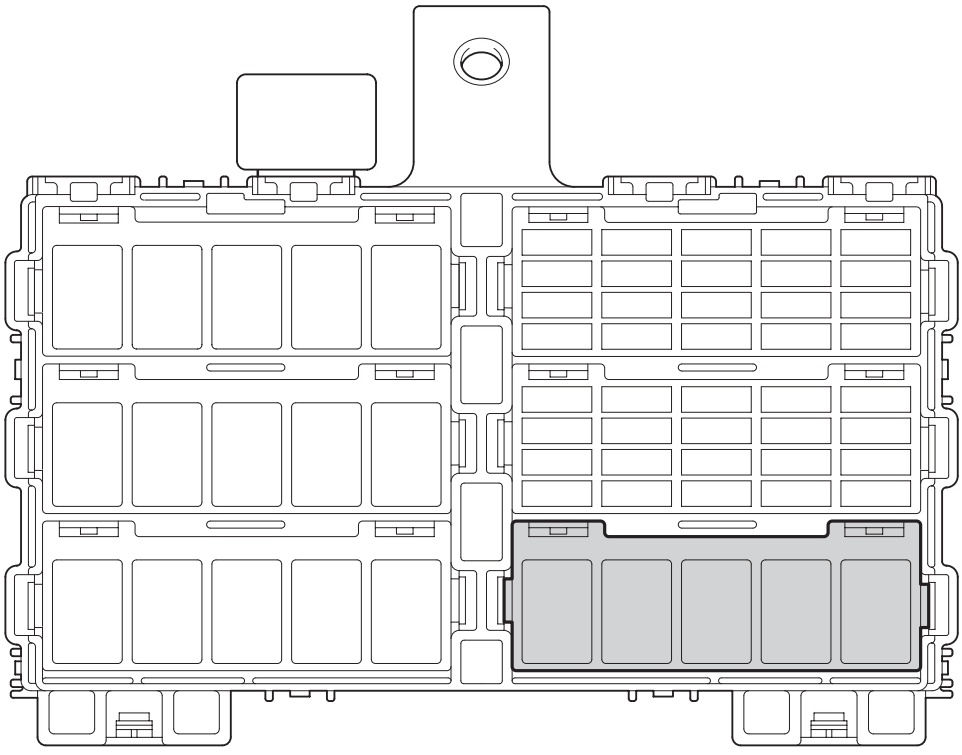

RELAY ALIGNMENT

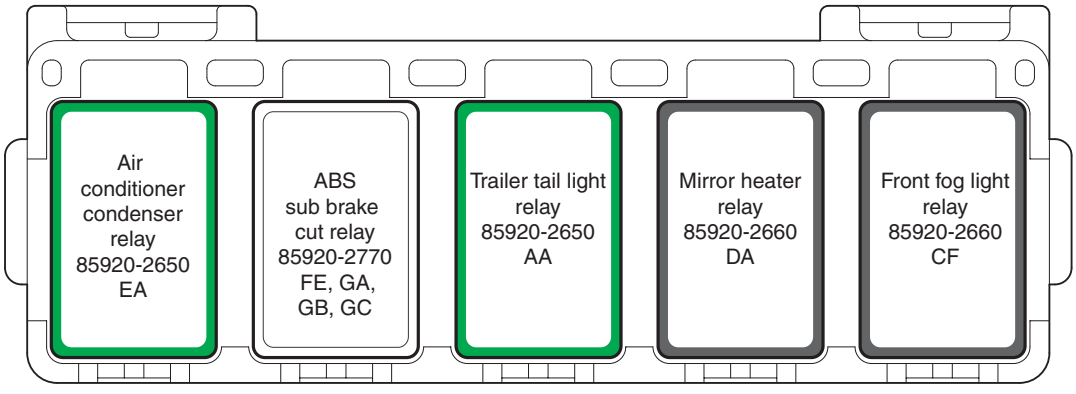

RELAY BLOCK TERMINAL ALIGNMENT

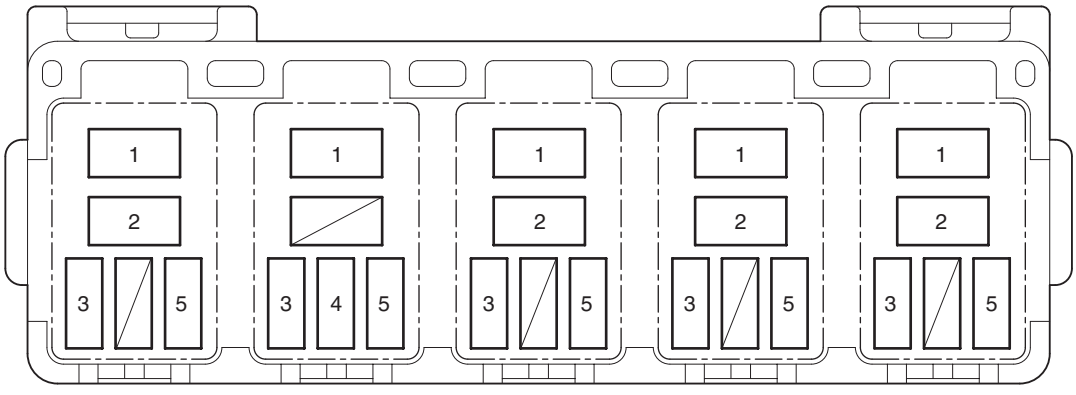

SHTS12Z160200208

https://truckmanualshub.com/

LEFT-HAND DRIVE MODEL

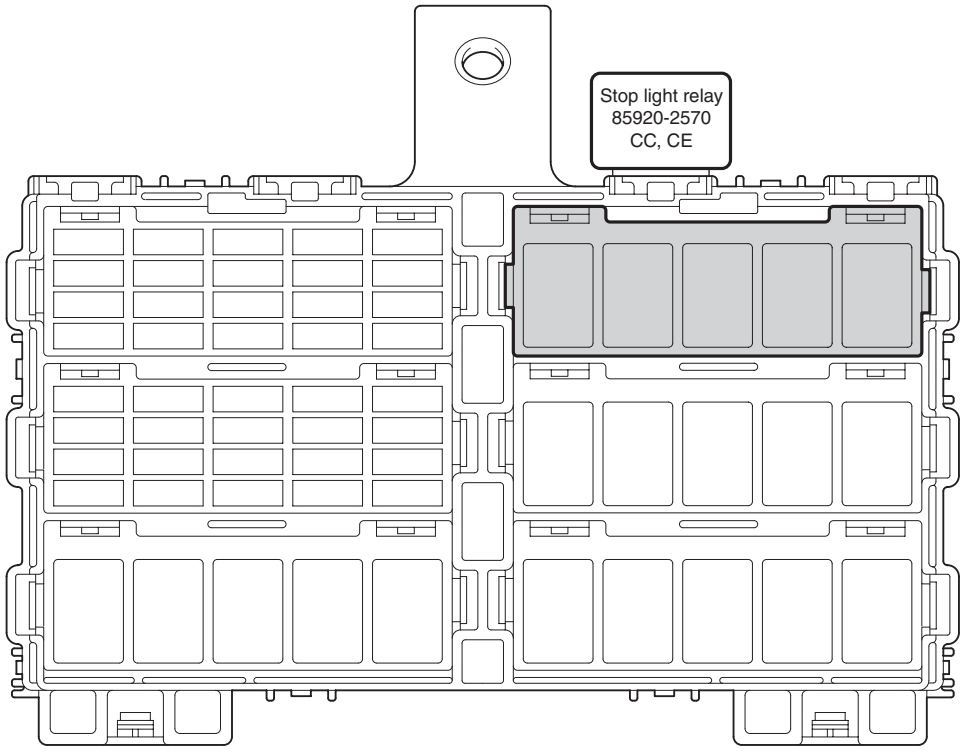

RELAY ALIGNMENT

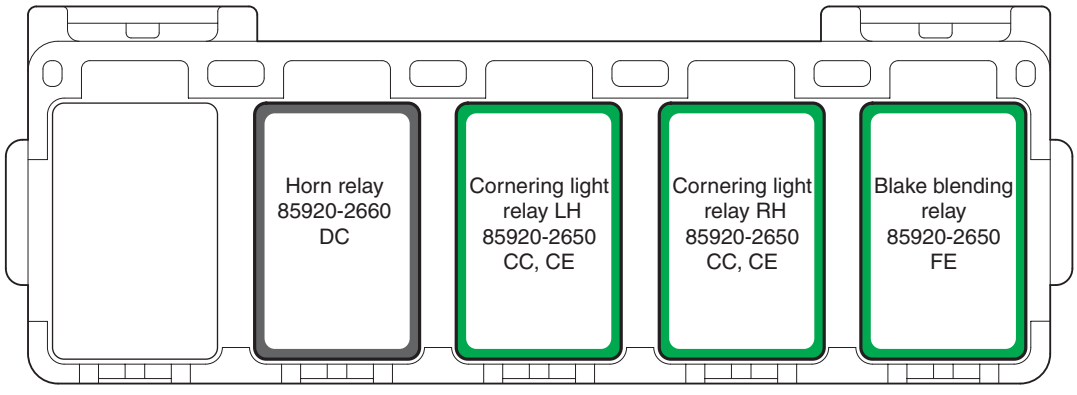

RELAY BLOCK TERMINAL ALIGNMENT

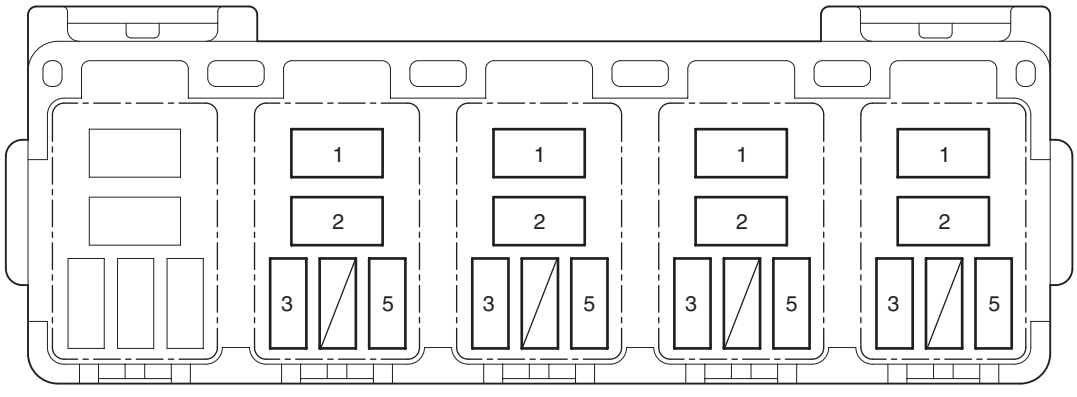

SHTS12Z160200209

https://truckmanualshub.com/

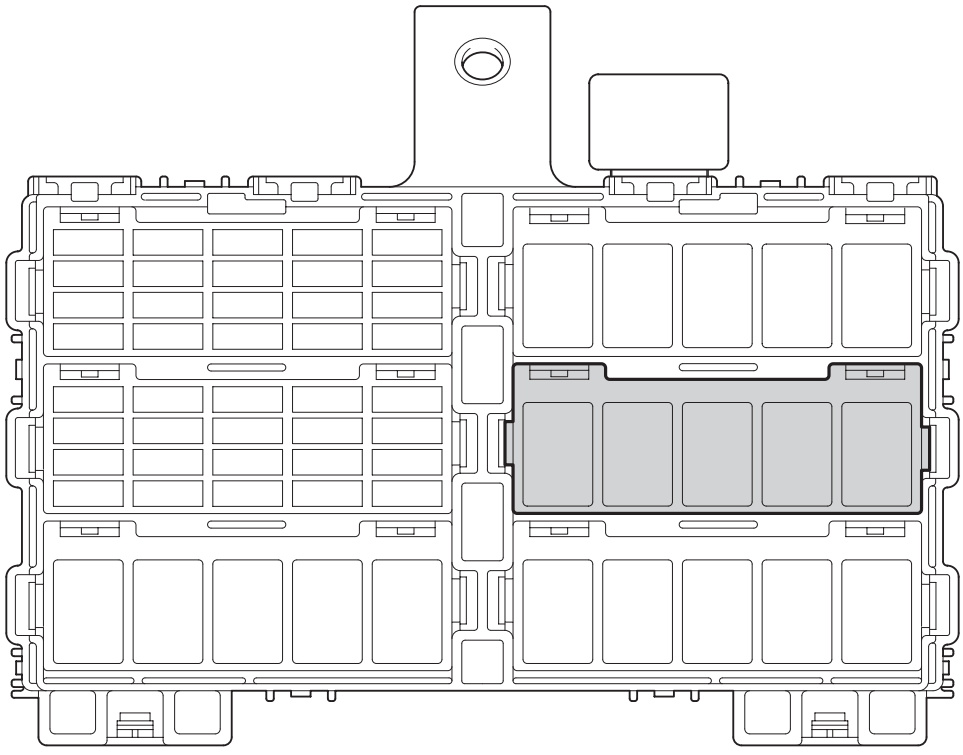

RELAY ALIGNMENT

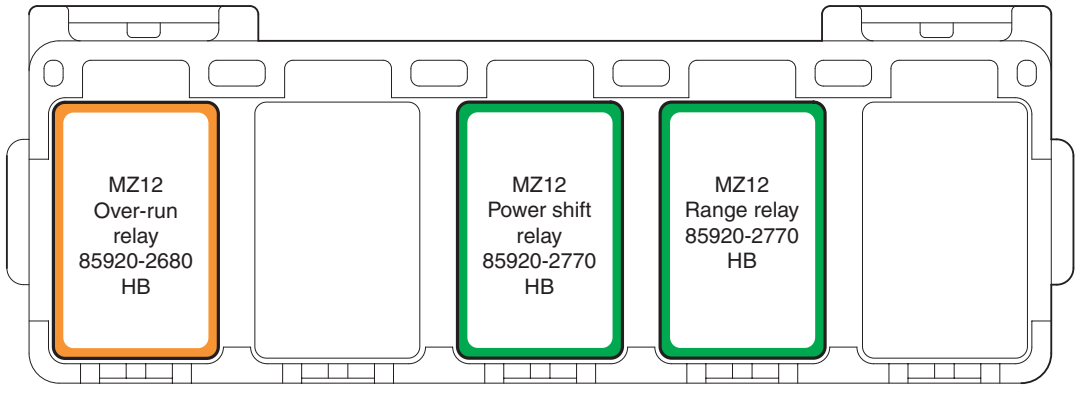

RELAY BLOCK TERMINAL ALIGNMENT

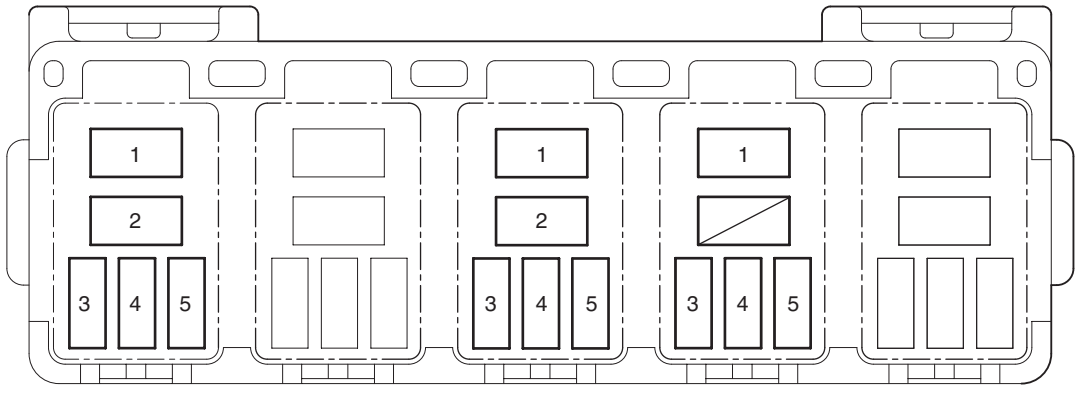

SHTS12Z160200210

https://truckmanualshub.com/

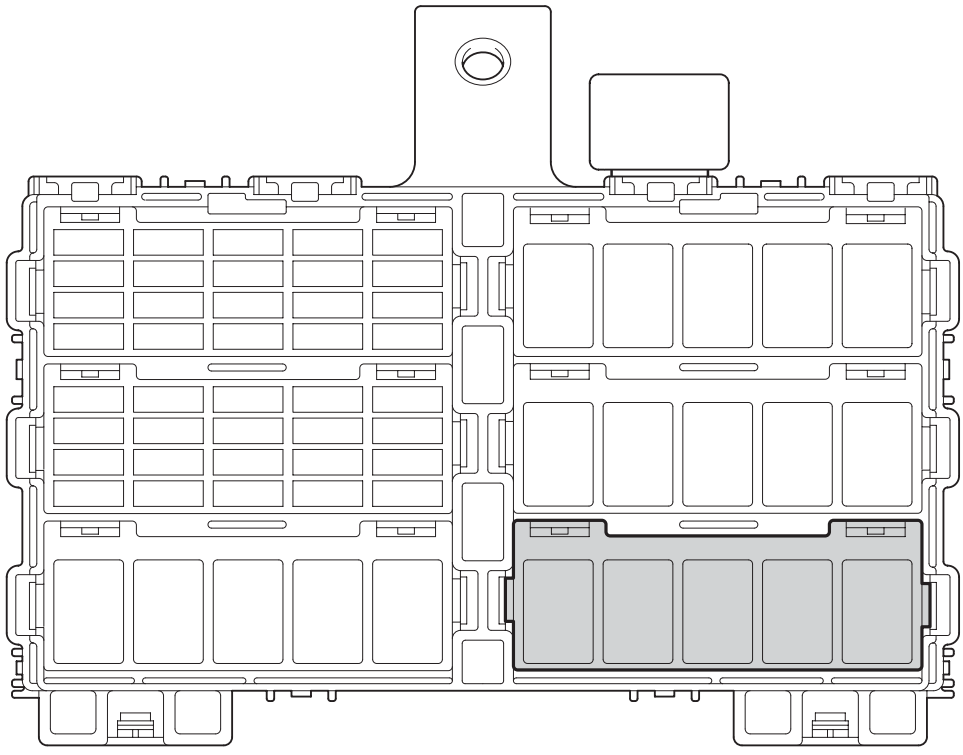

RELAY ALIGNMENT

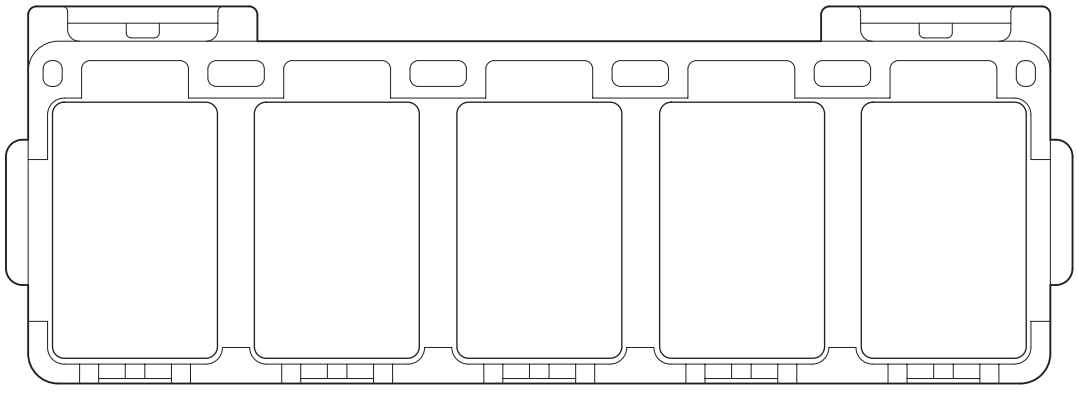

RELAY BLOCK TERMINAL ALIGNMENT

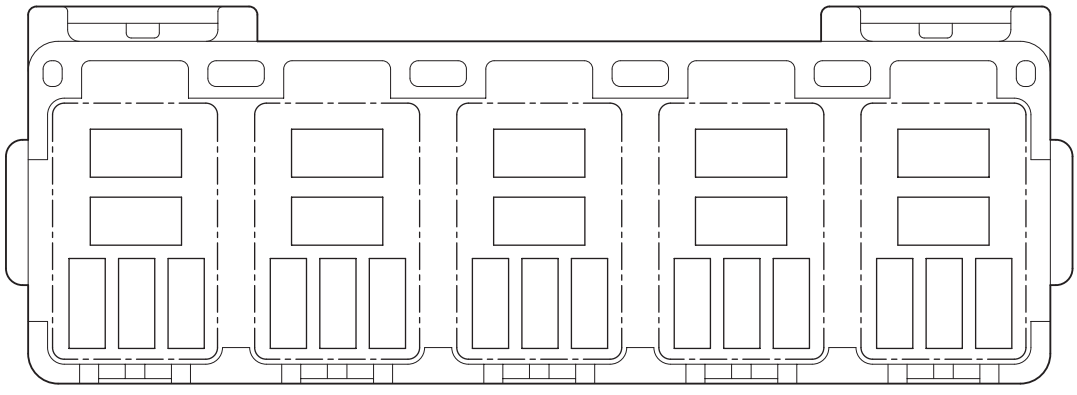

SHTS12Z160200211

https://truckmanualshub.com/

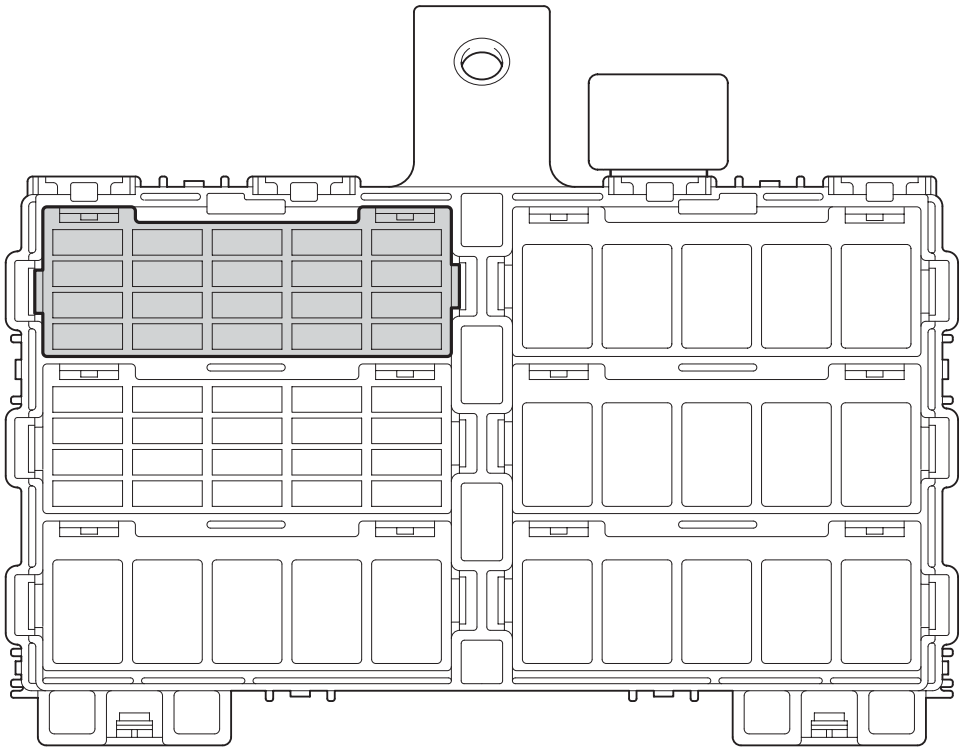

FUSE ALIGNMENT

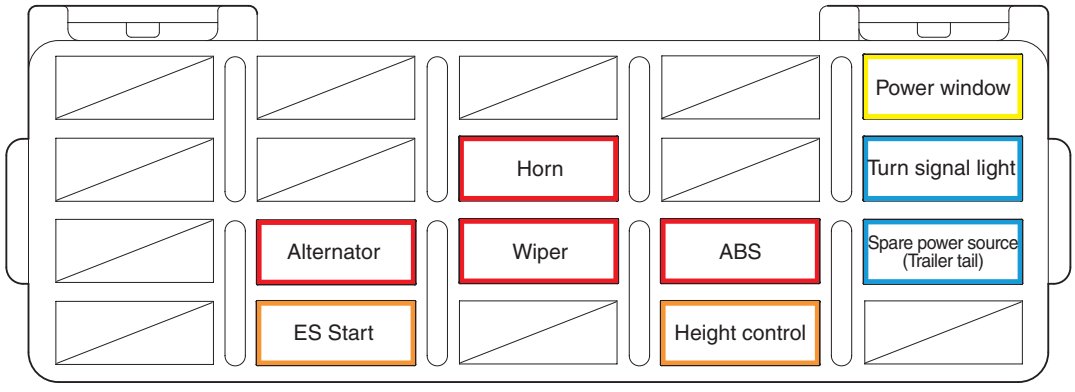

FUSE BLOCK TERMINAL ALIGNMENT

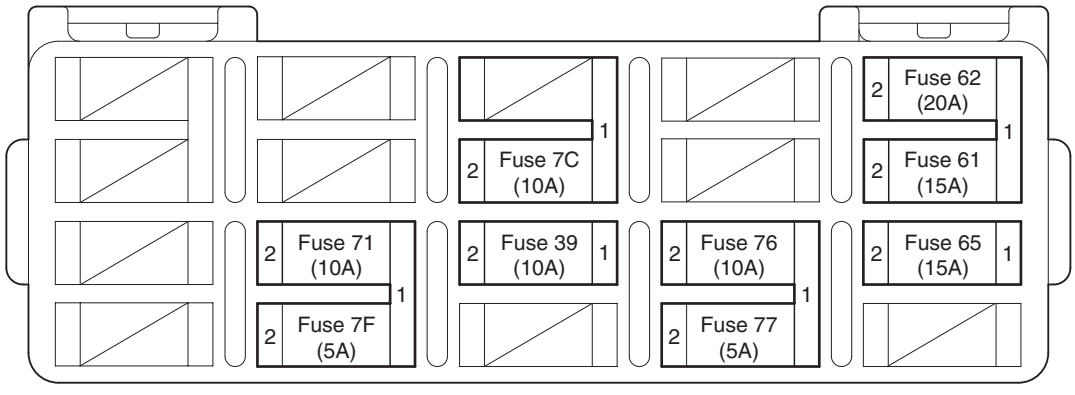

SHTS12Z160200212

https://truckmanualshub.com/

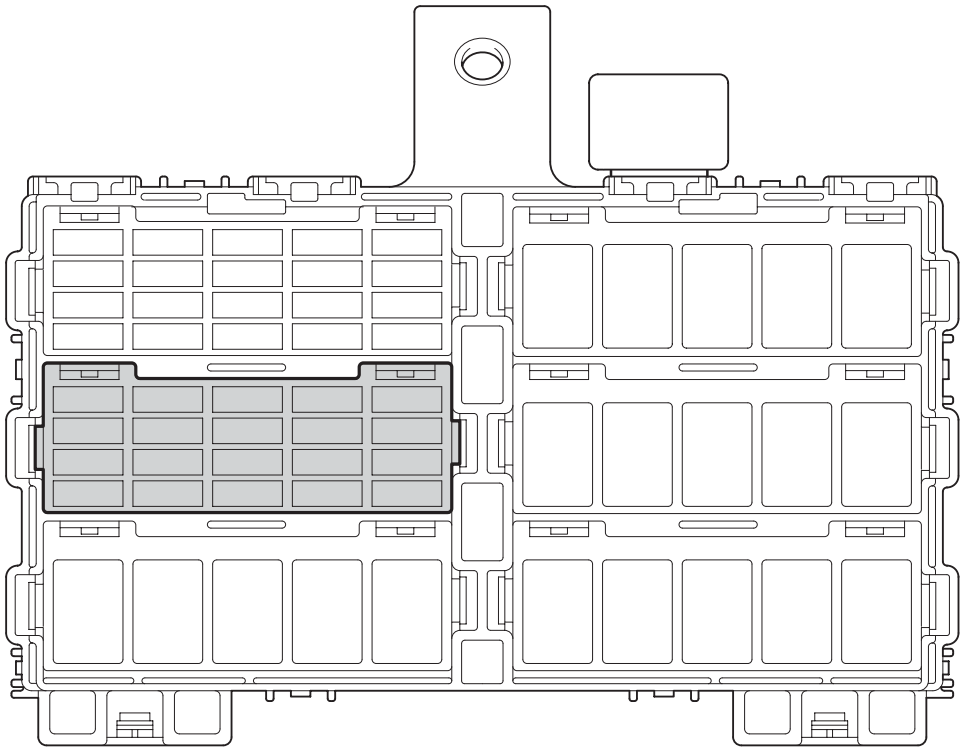

FUSE ALIGNMENT

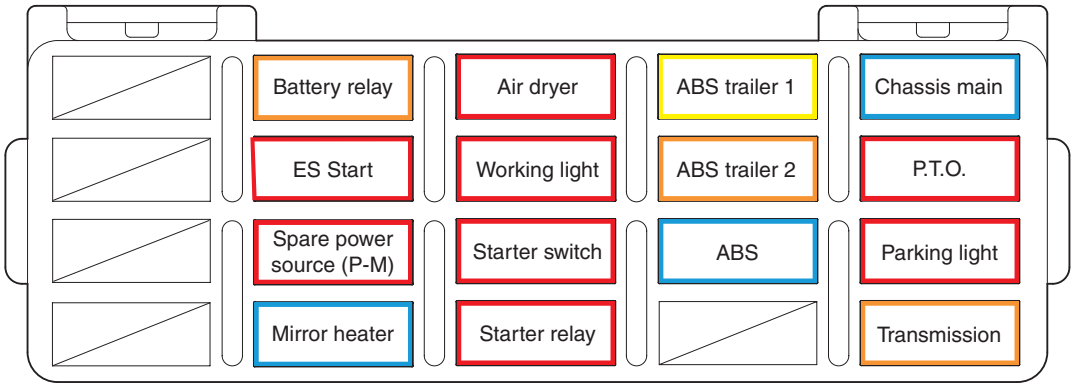

FUSE BLOCK TERMINAL ALIGNMENT

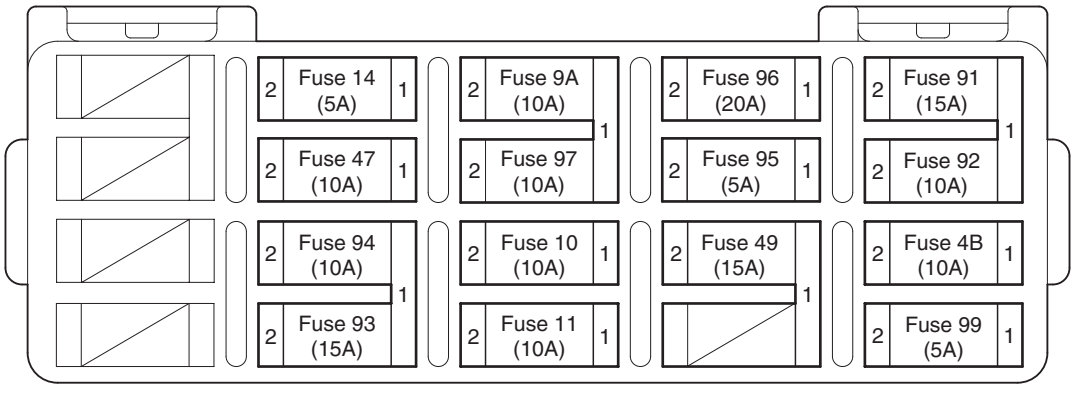

SHTS12Z160200213

https://truckmanualshub.com/

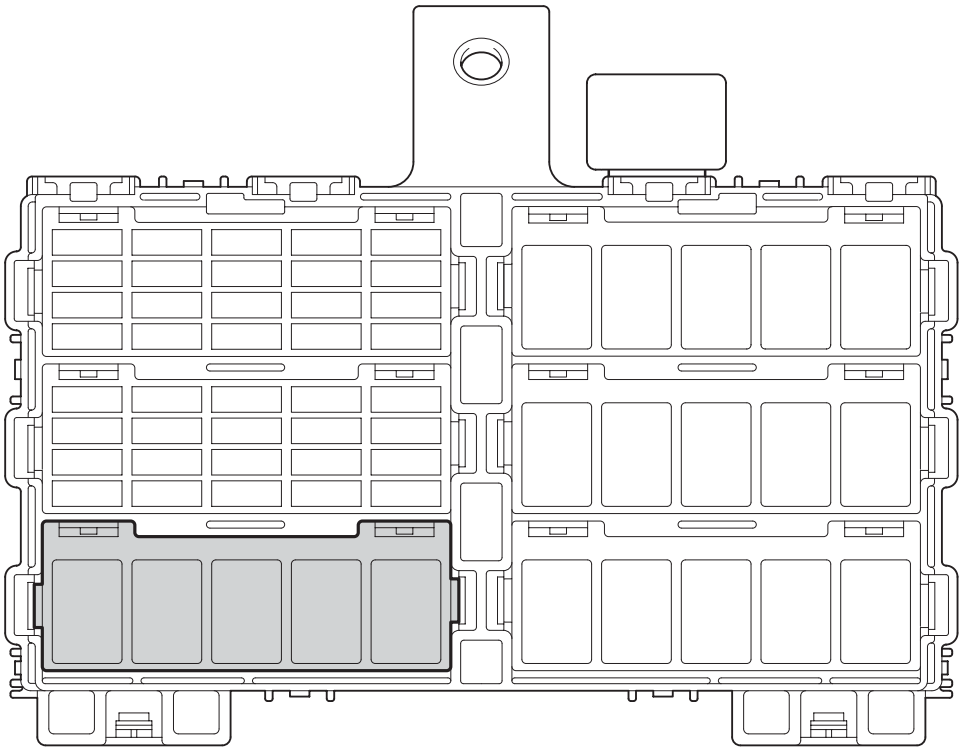

RELAY ALIGNMENT

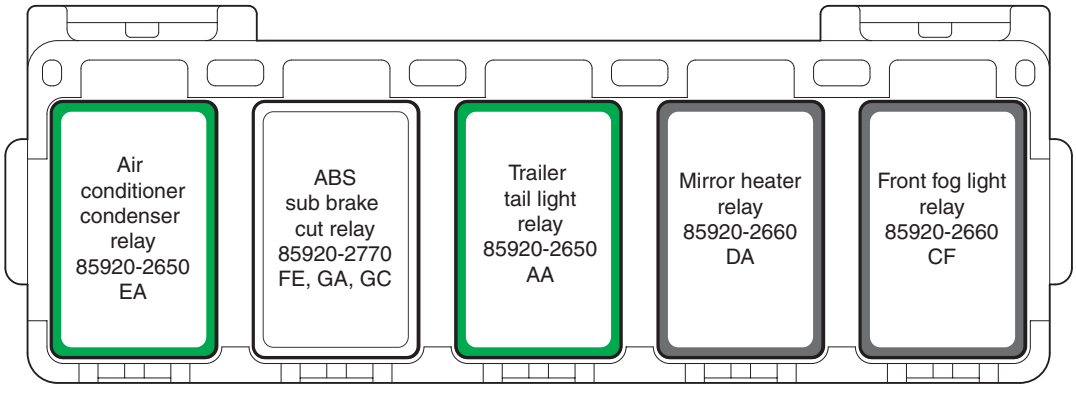

RELAY BLOCK TERMINAL ALIGNMENT

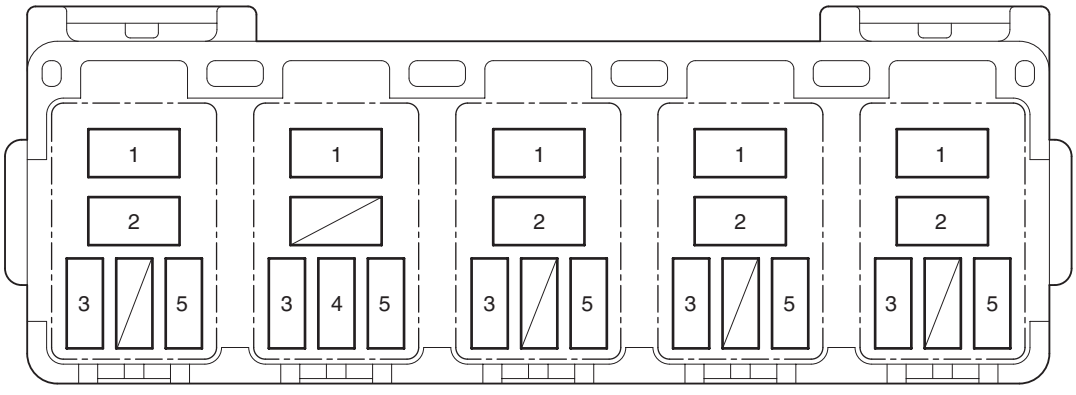

SHTS12Z160200214

https://truckmanualshub.com/

JUNCTION BLOCK

EN12Z1602J100010

NOTICE

There is a case that the following figures are different from that for your vehicle due to the model or specification.

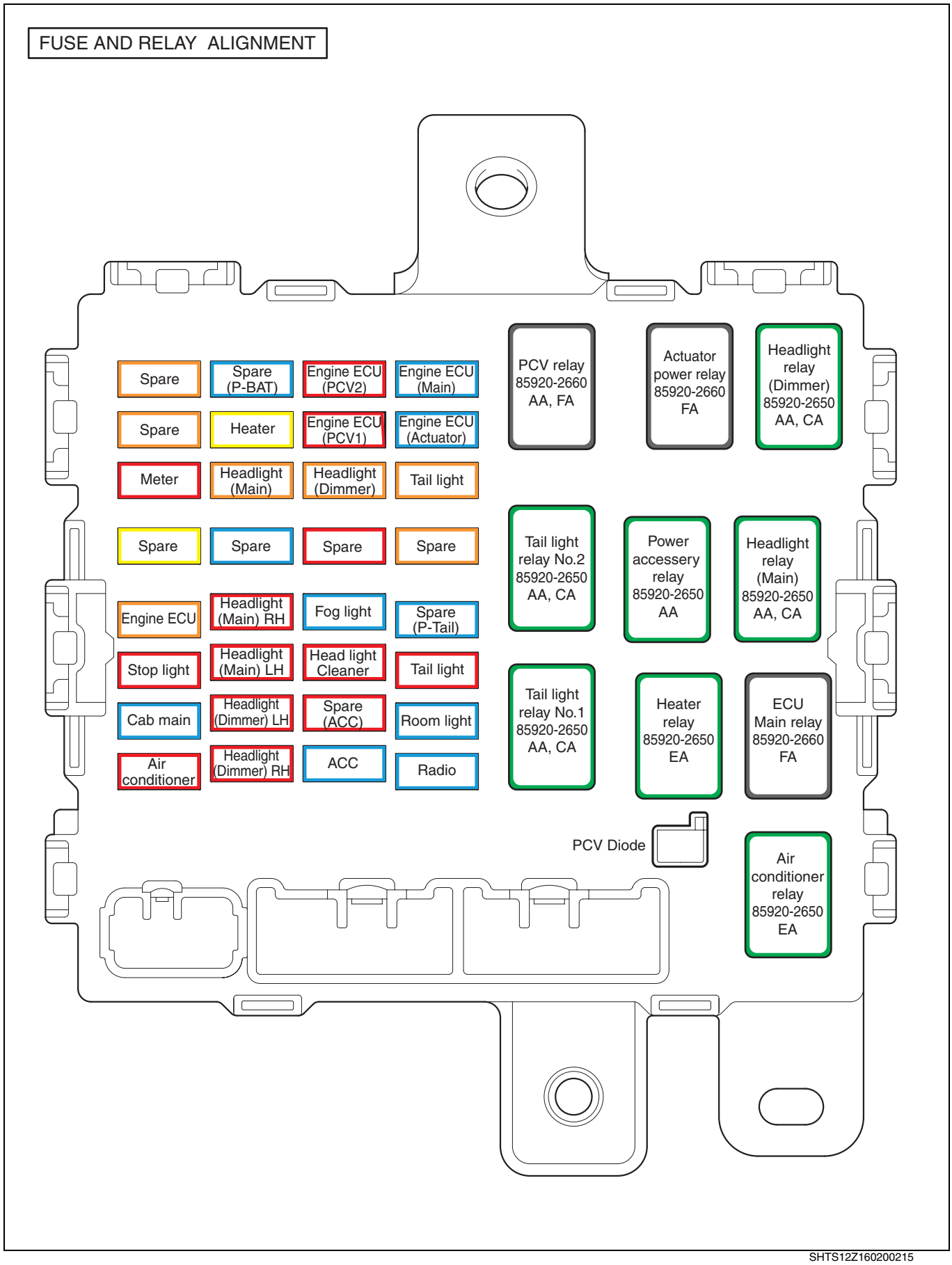

SHTS12Z160200215

https://truckmanualshub.com/

FUSE AND RELAY BLOCK
TERMINAL ALIGNMENT

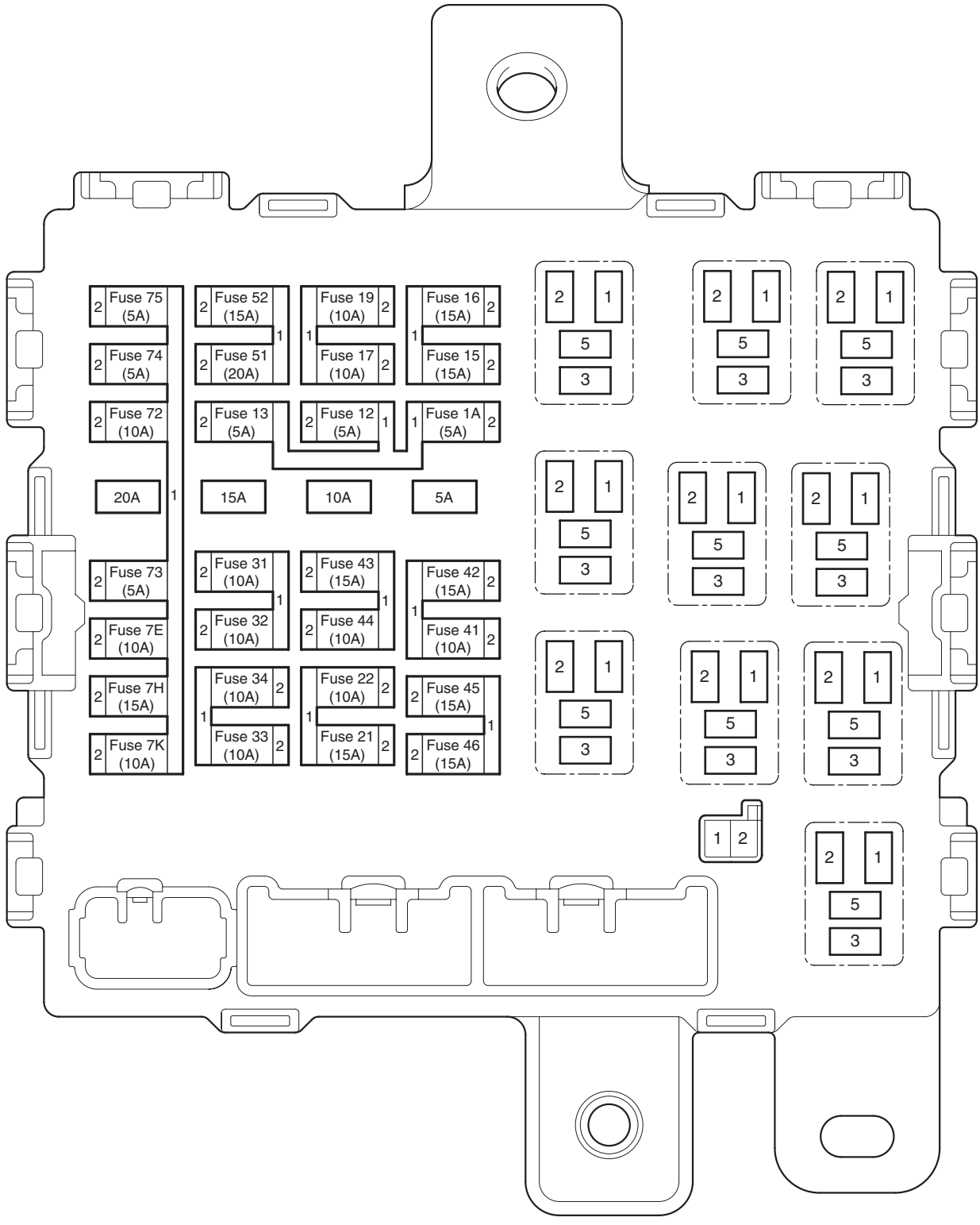

SHTS12Z160200216

https://truckmanualshub.com/

CONNECTOR ALIGNMENT

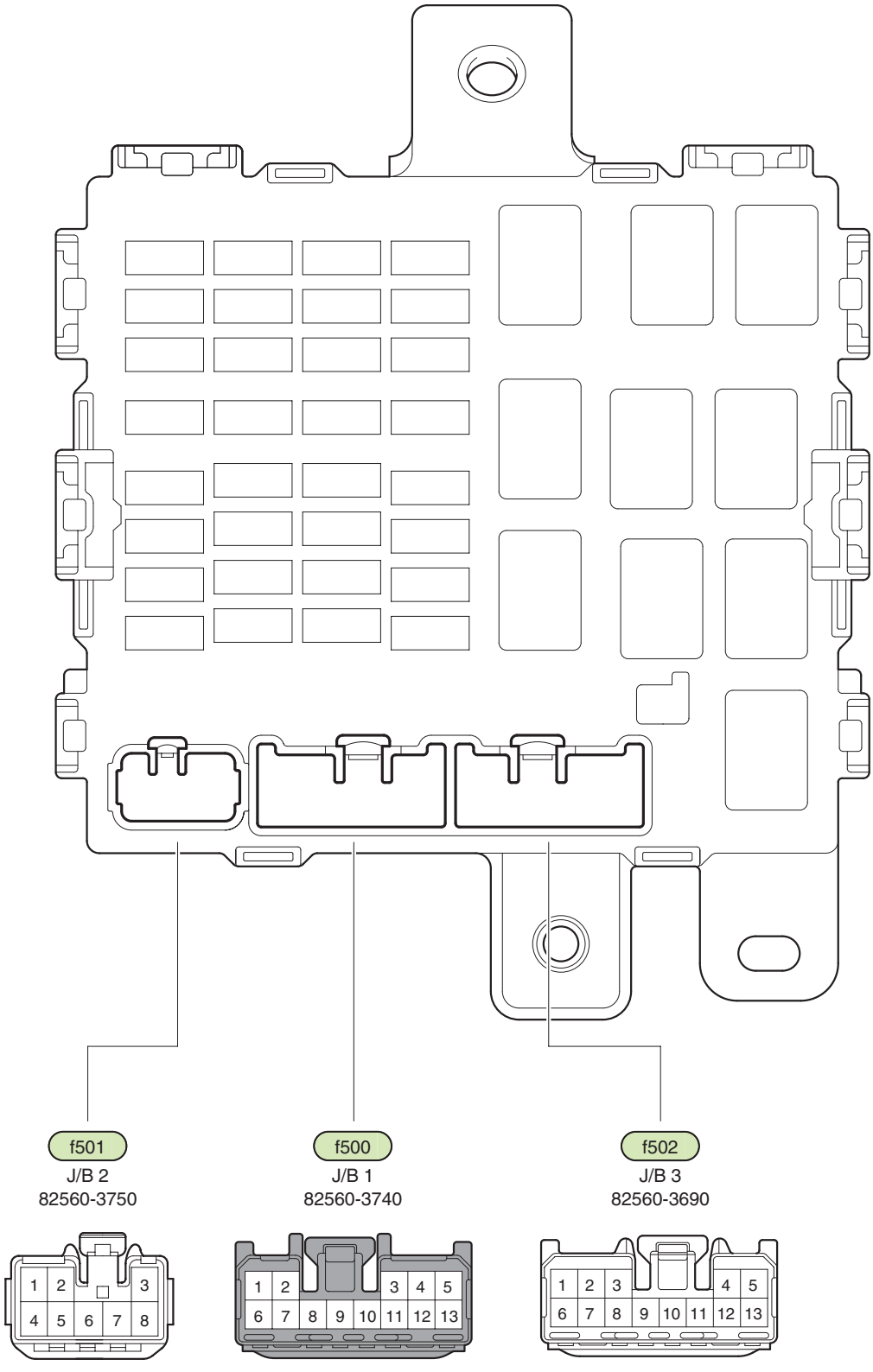

SHTS12Z160200217

https://truckmanualshub.com/

CONNECTOR ALIGNMENT

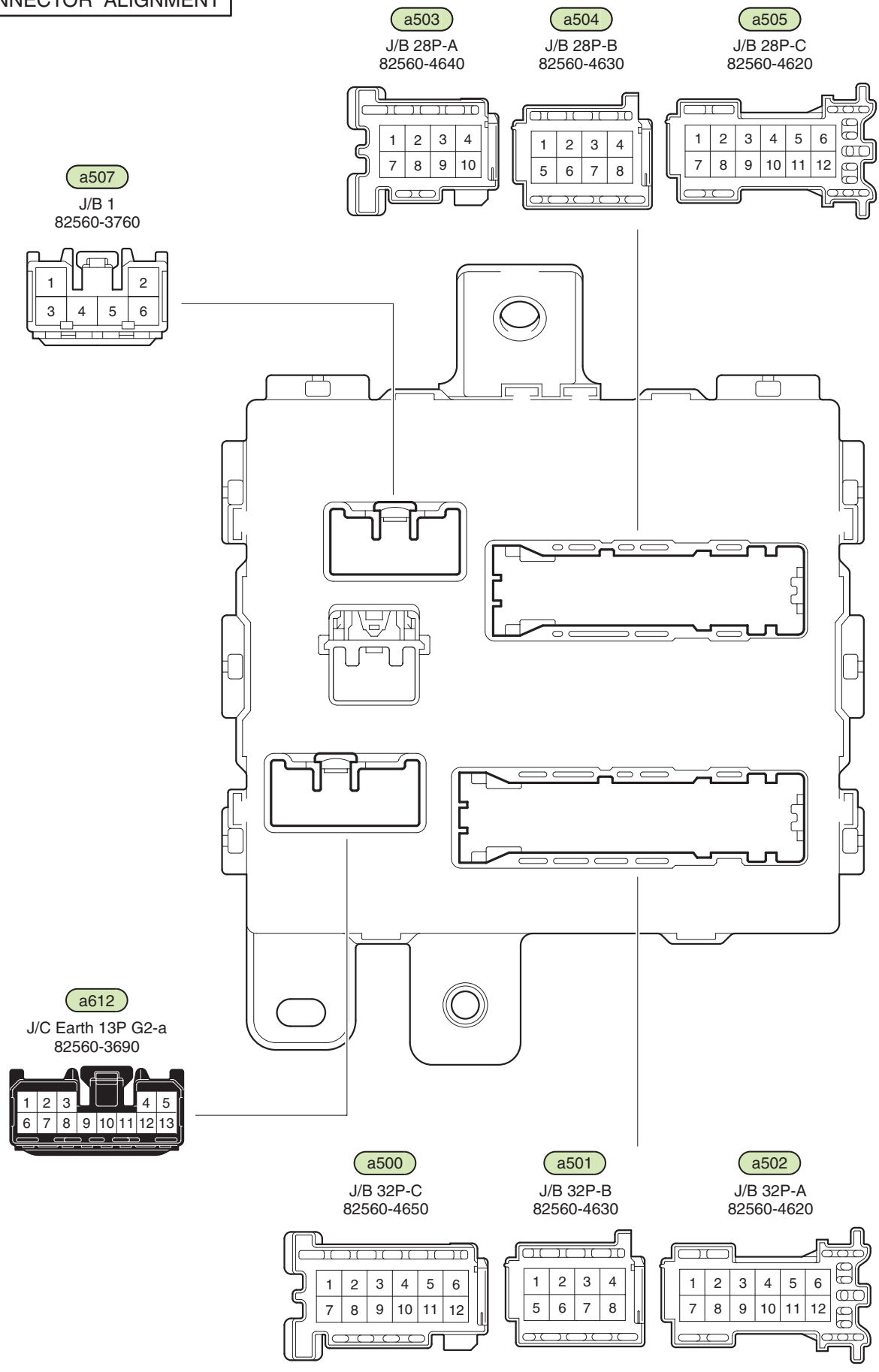

SHTS12Z160200218

https://truckmanualshub.com/

WIRE TO WIRE BOX

EN12Z1602J100011

NOTICE

There is a case that the following figures are different from that for your vehicle due to the model or specification.

RIGHT-HAND DRIVE MODEL

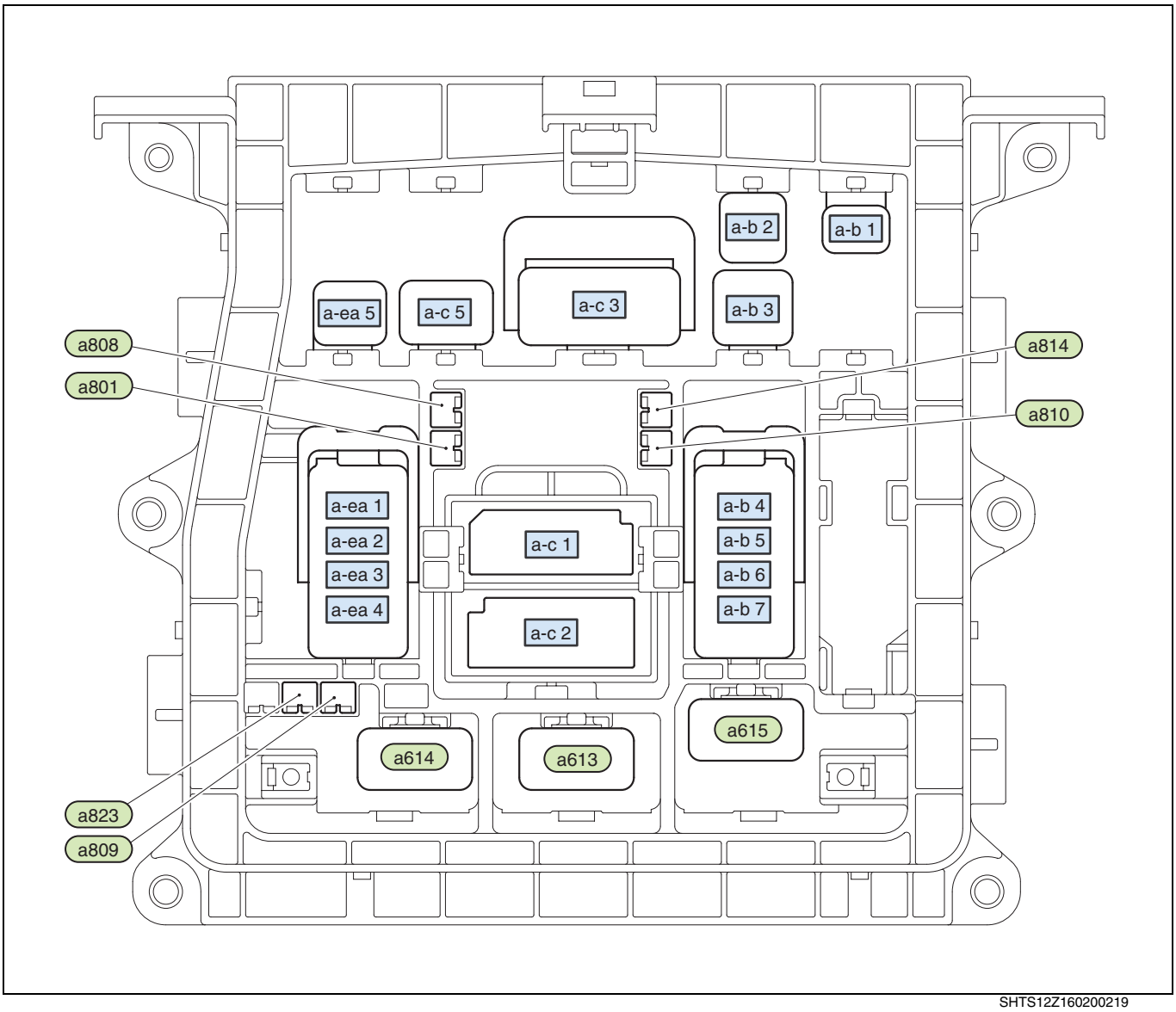

SHTS12Z160200219

https://truckmanualshub.com/

LEFT-HAND DRIVE MODEL

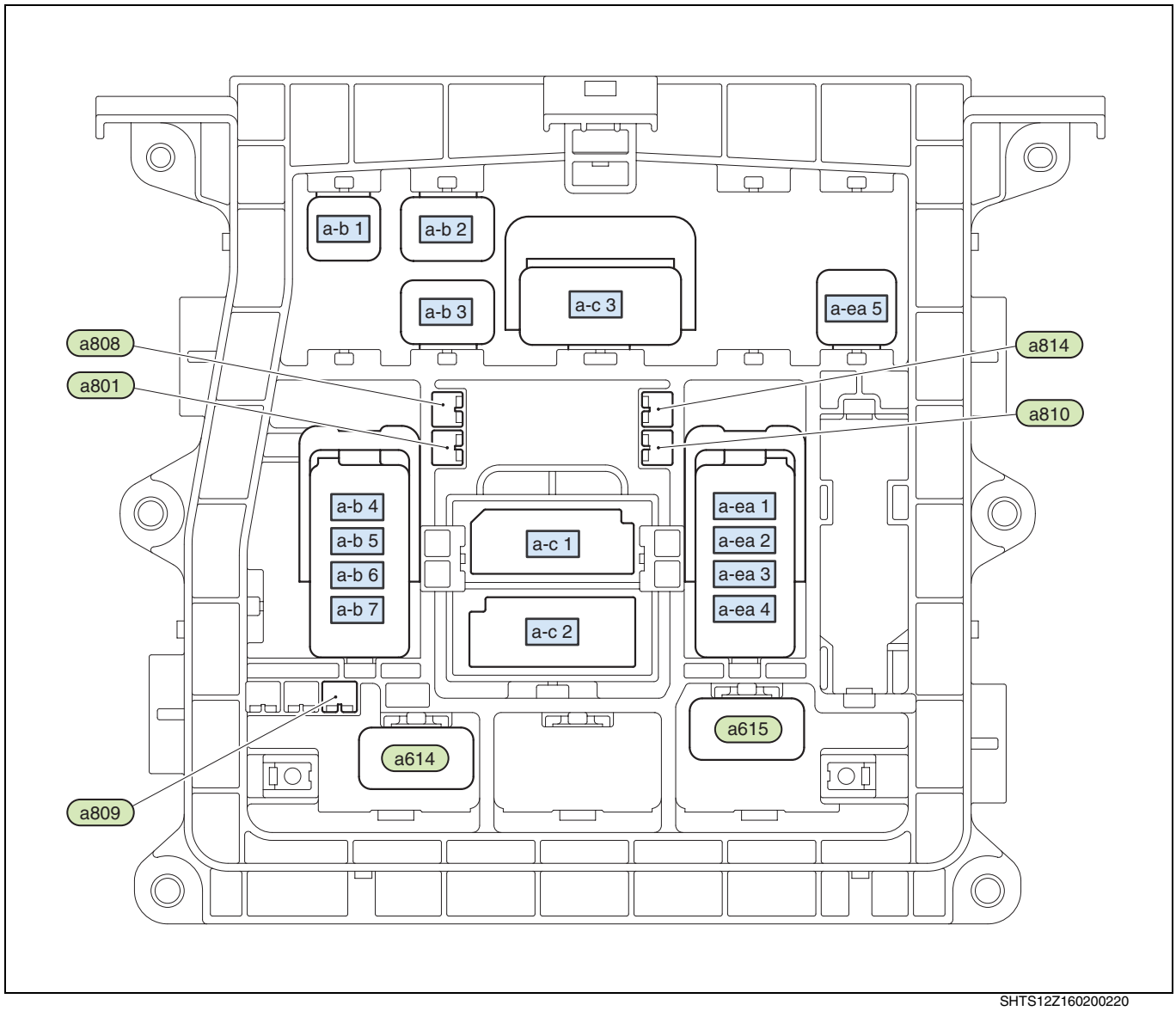

SHTS12Z160200220

https://truckmanualshub.com/

ELECTRICAL EQUIPMENT BOX

EN12Z1602J100012

NOTICE
There is a case that this figure is different from that for your vehicle due to the model or specification.

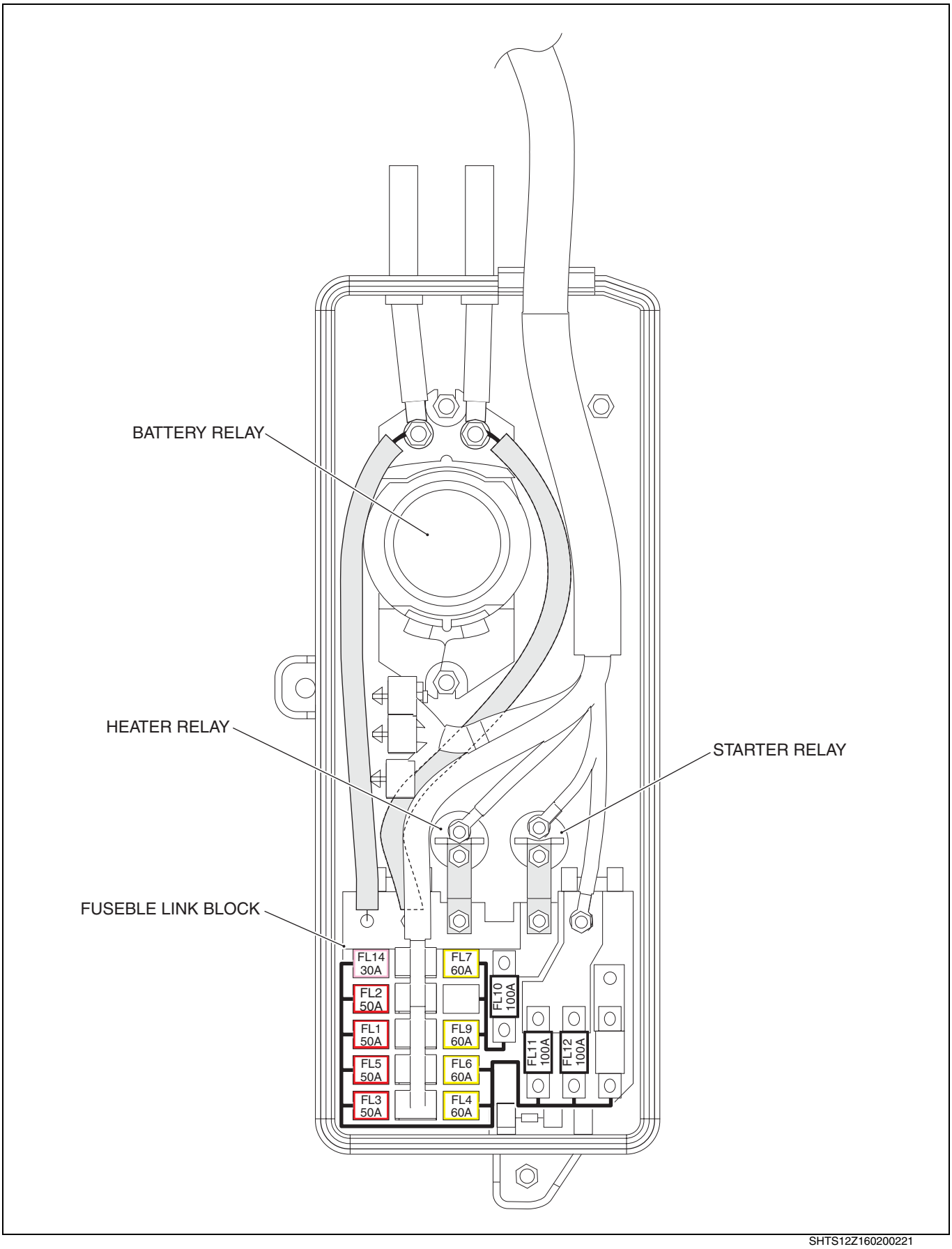

SHTS12Z160200221

https://truckmanualshub.com/

CONNECTOR INDEX

EN12Z1602J100013

ELECTRICAL EQUIPMENT CONNECTOR

	NAME	CONNECTOR No.	PART No. (COLOR)	CIRCUIT OR AREA
A	ABS diagnosis switch	a40	82560-4100	GA, GB, GC IP-2, 6
	ABS ECU (14 pin)	a32	82580-9490	GA, GB, GC IP-1, 5
	ABS ECU (18 pin)	a33	82580-9480	GA, GB, GC IP-1, 5
	ABS front modulator LH	c24	82560-1340	GA, GB, GC EG-2, 3, 4, 7, 10, 11, 12, 15, 16, 19
	ABS front modulator RH	b47	82560-1340	GA, GB, GC EG-2, 3, 4, 7, 10, 11, 12, 15, 16, 19
	ABS front wheel sensor LH	c25	82560-4720	GA, GB, GC EG-2, 3, 4, 7, 10, 11, 12, 15, 16, 19
	ABS front wheel sensor RH	b48	82560-4720	GA, GB, GC EG-2, 3, 4, 7, 10, 11, 12, 15, 16, 19
	ABS rear modulator LH (Semi-tractor)	c135	82560-1340	GC RR-6, 7
	ABS rear modulator LH (For Ireland model)	d67	82560-1340	GA RR-3, 5
	ABS rear modulator LH (For Australia model)	e67	82560-1340	GB RR-4
	ABS rear modulator LH (For Hong Kong, Taiwan models) (Except semi-tractor)	sg8	82560-1340	GA, GB RR-2, 3, 4, 5
	ABS rear modulator RH (Except semi-tractor)	c136	82560-1340	GC RR-6, 7
	ABS rear modulator RH (For Ireland model)	d68	82560-1340	GA RR-3, 5
	ABS rear modulator RH (For Australia model)	e68	82560-1340	GB RR-4
	ABS rear modulator RH (For Hong Kong, Taiwan models) (Except semi-tractor)	sg4	82560-1340	GA RR-2, 3, 4, 5
	ABS rear wheel sensor LH (Semi-tractor)	c99	82560-4720	GC RR-6, 7
	ABS rear wheel sensor LH (Semi-tractor)	d16	82560-4720	GA RR-2, 3, 5
	ABS rear wheel sensor LH (For Australia, New Zealand models)	e16	82560-4720	GA RR-4, 5
	ABS rear wheel sensor RH (Semi-tractor)	c98	82560-4720	GC RR-6, 7

https://truckmanualshub.com/

	NAME	CONNECTOR No.	PART No. (COLOR)	CIRCUIT OR AREA
A	ABS rear wheel sensor RH (Except semi-tractor)	d21	82560-4720	GA RR-2, 3, 5
	ABS rear wheel sensor RH (For Australia, New Zealand) (Except semi-tractor)	e21	82560-4720	GB RR-4, 5
	ABS sub brake cut relay	—	—	FE, GA, GB, GC —
	ABS trailer socket (Semi-tractor)	c32	82580-7550	GC EG-15, 16, 19
	ABS trailer socket (Full-tractor)	e59	82580-7550	GB RR-4, 5
	Accelerator sensor	a62	82580-9450	FA IP-2, 6
	Accelerator switch	a61	82580-8110	FE IP-2, 6
	Actuator power relay	—	—	FA —
	Air conditioner compressor	ea10	825680-6970	EA EG-1, 6, 9, 14, 18
	Air conditioner condenser	a4	82580-7780	EA CA-1, 3
	Air conditioner condenser relay	—	—	EA —
	Air conditioner diode	a810	—	EA IP-1, 5
	Air conditioner relay	—	—	EA —
	Air conditioner switch	f29	82560-2400	EA IP-2, 6
	Air conditioner unit	f19	82580-6870	EA IP-1, 5
	Air dryer	b57	82580-9250	IM EG- 5, 13, 17
	Air flow sensor	ea8	82828-1630	FC EG-1, 6, 9, 14, 18
	Air suspension controller (Remote control type)	f63	82580-6920	IG IP-7
	Air suspension ECU (12 pin)	a11	82580-6890	IG IP-5
	Air suspension ECU (16 pin)	a10	82560-1810	IG IP-5
	Air suspension ECU (26 pin)	a9	82560-1220	IG IP-5
	Air suspension height control magnetic valve	sf5	82580-7180	IF RR-6

https://truckmanualshub.com/

	NAME	CONNECTOR No.	PART No. (COLOR)	CIRCUIT OR AREA
A	Air suspension remote control release switch	f87	82560-2900	IG
				IP-6
	Air suspension switch (Dump control)	f65	82560-2900	IF
				IP-3, 7
	Alternator (Terminal B)	b44	9806-06150	AK
				EG-1, 6, 9, 14, 18
	Alternator (Terminal L, R)	ea20	82580-8640	AK
				EG-1, 6, 9, 14, 18
	Auto cruise main switch	a71	82560-4080	FG
				IP-2
	Autoleveling ECU	a167	82560-2470	CO
				IP-1
B	Back buzzer (Semi-tractor)	c114	82580-6820	CJ, CK
				RR-6, 7
	Back buzzer (Except semi-tractor)	e7	82580-6820	CH, CI
				RR-1, 2, 3, 4, 5
	Back-up light LH	e12	82580-7660	CH
				RR-3, 5, 6
	Back-up light LH (For left-hand drive model) (Semi-tractor)	c110	82580-7660	CI, CJ
				RR-1, 2, 3, 6, 7
	Back-up light RH	e10	82580-7660	CI
				RR-1, 2, 3, 5
	Back-up light RH (For right-hand drive model) (Semi-tractor)	c106	82580-7660	CJ, CK
				RR-6, 7
	Back-up light switch (Models with HX and MZ transmission)	b36	82580-6820	CH, CI, CJ
				EG-3, 7, 10, 15, 19
	Back-up light switch (Models with EATON transmission)	b52	82580-7180	CH
				EG-2, 12
	Back-up light switch (Models with ZF transmission)	sa5	82580-1340	CH, CI, CK
				EG-4, 11, 16
	Battery (-) terminal (Battery 1)	bc1	9008-56107	AA
				EG-5, 8, 13, 17, 20
	Battery (-) terminal (Battery 2)	bd1	9008-56107	AA
				EG-5, 8, 13, 17, 20
	Battery (+) terminal (Battery 1)	bb1	82583-1730	AA
				EG-5, 8, 13, 17, 20
	Battery (+) terminal (Battery 2)	bc2	9008-55112	AA
				EG-5, 8, 13, 17, 20
	Battery cut relay (Coil)	b142	82580-8100	AC
				EG-8, 20
	Battery cut relay (Terminal LD)	b145	9806-08150	AC
				EG-8, 20
	Battery cut relay [Terminal B (15.00 B)]	b144	9806-08150	AC
				EG-8, 20

https://truckmanualshub.com/

NAME		CONNECTOR No.	PART No. (COLOR)	CIRCUIT OR AREA
B	Battery cut relay [Terminal B (15.00 W-B)]	b148	9806-08150	AC EG-8, 20
	Battery cut relay [Terminal B (2.00 B-Y)]	b146	9806-08020	AC EG-8, 20
	Battery cut switch (Front)	f98	82560-3010	AC IP-6
	Battery cut switch (Rear)	c122	82580-7580	AC EG-7, 19
	Battery ground (Battery cable)	bd2	82583-1100	AA, AG EG-5, 8, 13, 17, 20
	Battery ground (Wiring harness)	b78	9806-08150	AD, AG EG-5, 8, 13, 17, 20
	Battery relay (Coil)	b70	82580-8100	AA EG-5, 8, 13, 17, 20
	Battery relay (Terminal B) (Battery cable)	bb2	82583-1730	AA EG-5, 8, 13, 17, 20
	Battery relay (Terminal B) (Wiring harness)	b143	9806-08150	AA EG-8, 20
	Battery relay (Terminal LD)	ba2	82583-1730	AA EG-5, 8, 13, 17, 20
	Blower motor	f5	82560-2990	EA IP-1, 5
	Blower switch	f28	82560-4480	EA IP-2, 6
	Boost pressure sensor	ea9	82580-8980	FB EG-1, 6, 9, 14, 18
	Brake blending diode	a814	82560-3800	FE IP-1, 5
	Brake blending relay	—	—	FE —
	Brake blending resistor	a816	82560-2990	FA IP-1
	Brake blending stop diode	a808	82560-3800	CC, CE IP-1, 5
	Brake switch	h8	82580-6820	FA CA-4
	Buzzer cancel switch	sg7	82580-6820	BB RR-1, 2, 3, 4, 5
	Buzzer cancel switch (Semi-tractor)	sg14	82580-6820	BD EG-17, 20
C	Cab tilt buzzer	c8	82580-6820	IA, IB, IC, ID EG-2, 3, 4, 7, 9, 15, 16, 19
	Cab tilt lock switch	m7	82580-7140	IA, IB, IC, ID IP-4, 8

https://truckmanualshub.com/

	NAME	CONNECTOR No.	PART No. (COLOR)	CIRCUIT OR AREA
C	Cab tilt motor	se4	82580-7290	IC, ID
				EG-1, 6, 9, 14, 18
	Cab tilt neutral switch	b29	82580-7180	IA, IC
				EG-3, 7, 10, 15, 19
	Cab tilt position switch	se3	82580-7140	IC, ID
				EG-1, 6, 9, 14, 18
	Cab tilt relay	se2	82580-9770	IC, ID
				EG-1, 6, 9, 14, 18
	Cab tilt short circuit connector	q1	82560-2790	IA, IB
				EG-1, 6, 9, 14, 18
	Cab tilt short circuit connector (Front LH wiring harness side)	c10	82560-2780	IA, IB
				EG-1, 6, 9, 14, 18
	Cab tilt stop switch	c7	82580-6600	IA,IB,IC,ID
				EG-1, 6, 9, 14, 18
	Cab tilt stroke switch	c6	82580-6600	IA, IB, IC, ID
				EG-1, 6, 9, 14, 18
	Cab tilt switch	se5	82580-7180	IC, ID
				EG-1, 6, 9, 14, 18
	Center speaker LH	i5	82580-8610	DI
				CA-1, 3
	Center speaker RH	i6	82580-8610	DI
				CA-1, 3
	Chill car idle up	a169	82580-6170	FJ
				IP-1
	Cigarette lighter (For right-hand drive model)	g6	82580-4610	DD
				IP-2
	Cigarette lighter (For left-hand drive model)	f81	82580-4610	DE
				IP-6
	Clutch fluid pressure switch	h9	82580-6600	GD
				CA-4
	Clutch stroke sensor	a58	82580-7140	GD
				IP-2, 6
	Clutch stroke switch	a59	82560-3030	FF, FH
				IP-2, 6
	Clutch switch	a42	82560-3030	FE
				IP-2, 6
	Combination meter (18 pin-L)	a47	82560-2230	BA, BC
				IP-2, 6
	Combination meter (22 pin-L)	a48	82560-2470	BA, BC
				IP-2, 6
	Combination meter (22 pin-R)	a49	82560-2470	BA, BC
				IP-2, 6

https://truckmanualshub.com/

NAME		CONNECTOR No.	PART No. (COLOR)	CIRCUIT OR AREA
C	Common rail 025 wire to wire (Female)	a103	82560-2100	AH, AI, BA, BC, FA, FC, FE, GA, GB, GC, GD, HA, HB, IE
				IP-2, 6
	Common rail 025 wire to wire (Male)	a102	82560-2100	AH, AI, BA, BC, FA, FC, FE, GA, GB, GC, GD, HA, HB, IE
				IP-2, 6
	Common rail ECU (31 pin)	a20	82560-4410	FA, FC
				IP-1, 5
	Common rail ECU (32 pin)	a22	82560-4420	FA, FE, FF, FG, FH, FI, FJ
				IP-1, 5
	Common rail ECU (34 pin)	a24	82580-4430	FA, FC, FI
				IP-1, 5
	Common rail ECU (35 pin-1)	a23	82560-4440	FA, FC, FD, FE, FF, FG, FH, FI, FJ
				IP-1, 5
	Common rail ECU (35 pin-2)	a21	82560-4450	FA, FC, FE, FI, FJ
				IP-1, 5
	Common rail pressure sensor	ea12	82580-6630	FB
				EG-1, 6, 9, 14, 18
	Coolant level warning switch	c47	82580-7180	BB, BD
				EG-2, 5, 8, 10, 13, 17, 19, 20, 23
	Coolant temperature sensor	ea19	82580-8760	FB
				EG-1, 6, 9, 14, 18
	Cornering light diode	a809	82560-3800	CA
				IP-1, 5
	Cornering light LH	c18	82560-3340	CD, CE
				EG-1, 6, 9, 14, 18
	Cornering light relay LH	a514	82660-1120	CC, CE
				—
	Cornering light relay RH	a514	82660-1120	CC, CE
				—
	Cornering light RH	c17	82560-3340	CD, CE
				EG-1, 6, 9, 14, 18
	Coupler lock switch	c90	82560-4730	IJ
				EG-20
	Courtesy switch LH	m1	82580-6170	CL
				IP-4, 8
	Courtesy switch RH	m4	82580-6170	CL
				IP-3, 7
D	DC/DC converter (12V)	o2	82580-8380	AN
				IP-2
	DC/DC converter (Common rail)	a19	82560-3290	FC
				IP-1, 5

https://truckmanualshub.com/

	NAME	CONNECTOR No.	PART No. (COLOR)	CIRCUIT OR AREA
D	DC/DC converter (Leveling)	f1	82560-3290	CB, CO
				IP-1, 5
	Diagnosis connector (16P)	a41	82560-4320	DJ
				IP-2, 6
	Diagnosis option connector	a65	82560-2620	DK
				IP-6
	Diagnosis standard connector	a64	82560-2620	DK
				IP-2, 6
	Differential lock buzzer	a44	82560-2990	IL
				IP-2
	Differential lock change switch	g21	82580-6920	IL
				IP-2
	Differential lock diode	a823	82560-3800	IL
				IP-1
	Differential lock magnetic valve (Inter-axle) (Semi-tractor SS, FS for Australia, New Zealand)	c129	82580-9250	IK
				EG-5, RR-7
	Differential lock magnetic valve (Inter-axle) (FR, FS, FY for except Australia, New Zealand)	sg3	82560-1340	IK
				RR-1, 2, 3, 4, 5
	Differential lock magnetic valve (Rear-rear axle)	c138	82580-9250	IL
				EG-5
	Differential lock switch (For right-hand drive model)	g5	82560-3010	IK, IL
				IP-2
	Differential lock switch (For left-hand drive model)	f85	82560-3010	IK
				IP-2
	Dome light LH (For left-hand drive model)	i10	82580-3360	CL
				CA-3
	Dome light RH (For right-hand drive model)	i9	82580-3360	CL
				CA-1
	Dump up switch	e28	82580-4240	IE
				RR-3
	Dump warning buzzer	a43	82580-6390	IE
				IP-2, 6
E	Earth AS-1	a105	82583-1680	AD, AE
				IP-1, 5
	Earth AS-2	a106	82583-1650	AD, AE
				IP-1, 5
	Earth AS-3	a107	82583-1660	AD, AE
				IP-1, 5
	Earth audio	f16	82583-1650	AE, DI
				IP-1, 5
	Earth DR-1	a66	82583-1680	AD, AE
				IP-2, 6
	Earth DR-2	a67	82583-1650	AD, AE
				IP-2, 6

https://truckmanualshub.com/

	NAME	CONNECTOR No.	PART No. (COLOR)	CIRCUIT OR AREA
E	Earth DR-3	a68	82583-1660	AD, AE
				IP-2, 6
	Earth power and light No.1	b79	9806-08150	AD, AF
				EG-5, 8, 13, 17, 20
	Earth power and light No.2	b80	9806-08150	AD, AF
				EG-5, 8, 13, 17, 20
	Earth power and light No.3	b81	9806-08150	AD, AF
				EG-5, 8, 13, 17, 20
	Earth power and light No.4	b87	9806-08020	AD, AF
				EG-5, 8, 13, 17, 20
	Earth power and light rear	e9	9806-08020	AD
				RR-1, 2, 3, 4, 5
	Earth power and light rear (Semi-tractor)	c116	9806-06050	AD, AF
				RR-6, 7
	Earth shield cable	ea5	9806-08010	FB
				EG-1, 6, 9, 14, 18
	Economy running switch	f49	82560-4120	FJ
				IP-2, 6
	ECU main relay	—	—	FA
				—
	EGR control	ea1	82580-8490	FC
				EG-1, 6, 9, 14, 18
	EGR coolant temperature sensor	ea18	82580-8760	FC
				EG-1, 6, 9, 14, 18
	Engine speed main sensor	ea16	82560-1230	FB
				EG-1, 6, 9, 14, 18
	Engine speed sub sensor	ea15	82580-9960	FB
				EG-1, 6, 9, 14, 18
	Engine stop switch	—	—	FB, FI
				—
	ES start control valve	b91	82580-9250	GD
				EG-5, 8, 10
	ES start ECU (12 pin)	a15	82580-6890	GD
				IP-1, 5
	ES start ECU (26 pin)	a14	82560-1220	GD
				IP-1, 5
	ES start main switch (For right-hand drive model)	g16	82560-1100	GD
				IP-2
	ES start main switch (For left-hand drive model)	f84	82560-1100	GD
				IP-6
	ETC. sub power supply connector	f40	82580-6920	AM
				IP-2, 6
	Exhaust brake check switch	f50	82580-5600	FE
				IP-2, 6

https://truckmanualshub.com/

NAME		CONNECTOR No.	PART No. (COLOR)	CIRCUIT OR AREA
E	Exhaust brake magnetic valve	c37	82580-7180	FE EG-2, 3, 4, 7, 9, 15, 16
F	Fluorescent light	i7	82580-7330	CL CA-1, 3
	Fluorescent light switch	f60	82560-3010	CL IP-3, 7
	Front air gauge sender unit	b75	82560-3190	BB, BD EG-5, 8, 13, 17, 20
	Front fog light relay	a511	82660-1120	CF —
	Front fog light switch	a74	82580-8060	CF IP-2, 6
	Front side marker light LH (For right-hand drive model)	a2	82560-1670	CG CA-1
	Front side marker light LH (For left-hand drive model)	h15	82560-1670	CG CA-4
	Front side marker light RH (For left-hand drive model)	a2	82560-1670	CG CA-3
	Front side marker light RH (For right-hand drive model)	h5	82560-1670	CG CA-2
	Front side turn signal light LH (For left-hand drive model)	j2	82580-7580	CC, CE CA-4
	Front side turn signal light LH (For right-hand drive model)	j15	82580-7660	CC, CE CA-1
	Front side turn signal light RH (For left-hand drive model)	k2	82580-7580	CC, CE CA-3
	Front side turn signal light RH (For right-hand drive model)	k15	82580-7660	CC, CE CA-2
	Front speaker (LH)	a8	82580-8610	DI IP-1, 6
	Front speaker (RH)	a51	82580-8610	DI IP-1, 6
	Front turn signal light LH (For left-hand drive model)	h14	82580-7660	CC, CE CA-4
	Front turn signal light LH (For right-hand drive model)	a1	82580-7660	CC, CE CA-1
	Front turn signal light RH (For left-hand drive model)	a1	82580-7660	CC, CE CA-3
	Front turn signal light RH (For right-hand drive model)	h4	82580-7660	CC, CE CA-2
	Fuel filter warning switch	ea7	82580-9420	BG EG-1, 6, 9, 14, 18
	Fuel gauge sender unit (Except Hong Kong semi tractor, Australia, New Zealand)	c50	82560-4350	BB, BD EG-6, 8, 13, 16, 19

https://truckmanualshub.com/

NAME		CONNECTOR No.	PART No. (COLOR)	CIRCUIT OR AREA
F	Fuel gauge sender unit (Australia, New Zealand)	c51	82560-4350	BB, BD
				EG-5, 13
	Fuel gauge sender unit (Hong Kong semi-tractor)	c78	82560-3340	BD
				EG-15
	Fuel injector No.1	ia2	82580-9600	FB
				EG-2, 3, 4, 7, 9, 15, 16, 19
	Fuel injector No.2	ia3	82580-9600	FB
				EG-2, 3, 4, 7, 9, 15, 16, 19
	Fuel injector No.3	ia4	82580-9600	FB
				EG-2, 3, 4, 7, 9, 15, 16, 19
	Fuel injector No.4	ia5	82580-9600	FB
				EG-2, 3, 4, 7, 9, 15, 16, 19
	Fuel injector No.5	ia6	82580-9600	FB
				EG-2, 3, 4, 7, 9, 15, 16, 19
	Fuel injector No.6	ia7	82580-9600	FB
				EG-2, 3, 4, 7, 9, 15, 16, 19
	Fuel temperature sensor	ea11	82580-7210	FB
				EG-1, 6, 9, 14, 18
H	Headlight leveling actuator LH	sd2	82580-6970	CB, CO
				EG-1, 6, 9, 14, 18
	Headlight leveling actuator RH	sd5	82580-6970	CB, CO
				EG-1, 6, 9, 14, 18
	Headlight leveling switch	a73	82560-2290	CB
				IP-2, 6
	Headlight LH	sd1	82580-6970	CA
				EG-1, 6, 9, 14, 18
	Headlight relay (Dimmer)	—	—	AA, CA
				—
	Headlight relay (Main)	—	—	AA, CA
				—
	Headlight RH	sd4	82580-6970	CA
				EG-1, 6, 9, 14, 18
	Headlight short circuit connector (Cab side)	a100	82560-2540	CA, CO
				IP-1, 5
	Headlight short circuit connector (Discharge)	n2	82560-2550	CA
				IP-1
	Headlight short circuit connector (Halogen)	n1	82560-2550	CA
				IP-1, 5
	Headlight washer relay	a34	80560-2790	CN
				IP-1
	Heater relay	—	—	EA
				—
	Height control magnetic valve	sf17	82560-1260	IG
				RR-2

https://truckmanualshub.com/

NAME		CONNECTOR No.	PART No. (COLOR)	CIRCUIT OR AREA
H	Height sensor	d36	82560-4740	IG
				RR-2
	Hong Kong diode	a805	82560-3800	CC, CE
				IP-2
	Horn (Hi)	c19	82580-5680	DC
				EG-1, 6, 9, 14, 18
	Horn (Lo)	c20	82580-5680	DC
				EG-1, 6, 9, 14, 18
	Horn relay	a514	82660-1120	DC
				—
	Horn switch	a56	82580-8110	DC
				IP-2, 6
I	Idle volume (For right-hand drive model)	a70	82580-8660	FA
				IP-2
	Idle volume (For left-hand drive model)	f80	82580-8660	FA
				IP-6
	Intake air heater	sc2	98060-6150	AJ
				EG-1, 9, 14
	Intake air heater relay (Terminal F)	b67	98060-6150	AJ
				EG-5, 13, 17
	Intake air heater relay (Coil)	b69	82560-2810	AJ
				EG-5, 13, 17
	Interface ECU	a168	82560-2470	CO
				IP-1
J	JAKE EGR (Solenoid valve)	—	82828-1080	FC
				—
	JAKE retarder (Solenoid valve)	—	82828-1080	FE
				—
K	Keyless entry controller	f43	82580-7210	DF
				IP-2
	Keyless entry door lock controller	f79	82580-6870	DM
				IP-1
L	Left turn buzzer	c49	82580-7140	CD
				EG-7
	Leveling valve	h11	82580-6600	IH
				CA-2, 4
	License plate light LH	e11	82580-6600	CH, CI
				RR-3, 4, 5
	License plate light LH (Semi-tractor)	c109	82580-6600	CJ, CK
				RR-3, 5, 6, 7
	License plate light RH	e6	82580-6600	CH, CI
				RR-1, 2, 3, 4, 5
	License plate light RH (Semi-tractor)	c107	82580-6600	CJ, CK
				RR-6, 7

https://truckmanualshub.com/

	NAME	CONNECTOR No.	PART No. (COLOR)	CIRCUIT OR AREA
L	Light and turn switch	a54	82580-9310	CA, CC, CE, FG
				IP-2, 6
	Lock amp	f13	82580-7210	EA
				IP-1, 5
	Low pressure switch No.1	b71	82560-3590	BB, BD
				EG-5, 8, 13, 17, 20
	Low pressure switch No.2	b72	82560-3590	BB, BD
				EG-5, 8, 13, 17, 20
	Low pressure switch No.3	b73	82560-3590	BB, BD
				EG-5, 8, 13, 17, 20
	Low pressure switch No.4	b74	82560-3590	BB, BD
				EG-5, 13, 15, 17, 20
M	Mirror heater (Back LH) (Except Ireland model)	a7	82560-2650	DA
				CA-1, 3
	Mirror heater (Back LH) (For Ireland model)	j14	82560-2660	CI, DA
				—
	Mirror heater (Back RH) (Except Ireland model)	h3	82560-2640	DA, DB
				CA-2, 4
	Mirror heater (Back RH) (For Ireland model)	k14	82560-2660	DA, DB
				CA-2
	Mirror heater (Side under) (Except Ireland model)	a7	82560-2650	DA, DB
				CA-1, 3
	Mirror heater (Side under) (For Ireland model)	j14	82560-2660	DA
				CA-1
	Mirror heater relay	a511	82660-1120	DA
				—
	Mirror heater switch	f69	82580-6060	DA
				IP-3, 7
	Mixer idle up switch	g17	82580-7210	FJ
				IP-2
	MZ12 over run relay	a523	82660-1120	HB
				—
	MZ12 power shift magnetic valve	b101	82580-8490	HB
				EG-7, 10, 15, 19
	MZ12 power shift relay	a523	82660-1120	HB
				—
	MZ12 range and splitter change switch	f57	82580-6060	HB
				IP-2, 6
	MZ12 range front switch	b43	82580-6820	HB
				EG-7, 10, 15, 19
	MZ12 range rear switch	b42	82560-2950	HB
				EG-7, 10, 15, 19
	MZ12 range relay	a518	82660-1120	HB
				—

https://truckmanualshub.com/

NAME		CONNECTOR No.	PART No. (COLOR)	CIRCUIT OR AREA
M	MZ12 splitter front switch	b40	82560-2950	HB
				EG-7, 10, 15, 19
	MZ12 splitter magnetic valve	b100	82580-8350	HB
				EG-7, 10, 15, 19
	MZ12 splitter rear switch	b41	82580-7180	HB
				EG-7, 10, 15, 19
	MZ12 splitter relay	a518	82660-1120	HB
				—
	MZ12 transmission diode	a804	82560-4180	HB
				IP-2, 6
N	Neutral switch (EATON)	b104	82580-7180	AI
				EG-2, 12
	Neutral switch (HX, MZ)	b28	82580-7180	AH
				EG-3, 7, 10, 15, 19
	Neutral switch (ZF)	sa3	82560-1340	AI
				EG-4, 11, 16
O	Oil filter warning switch	ea21	82580-6570	BH
				EG-1, 6, 9, 14, 18
	Oil pressure warning switch	ea17	82580-6830	BB, BC
				EG-1, 6, 9, 14, 18
P	P.T.O. accelerator sensor	c48	82560-1260	FI, HA
				EG-2, 3, 4, 7, 9, 15, 16, 19
	P.T.O. diode	a807	82560-4180	IE
				IP-2, 6
	P.T.O. magnetic valve	c38	82580-7180	IE
				EG-3, 4, 7, 9, 15, 16, 19
	P.T.O. position switch (HX, MZ)	b31	82580-7180	IE
				EG-2, 7, 10, 15, 19
	P.T.O. position switch (ZF)	sb2	82560-1340	IE
				EG-4, 11, 16
	P/ACC CAB	f34	97840-4050	AL
				IP-2, 6
	P/ACC CHASSIS	c66	82580-4240	AL
				EG-5, 8, 13, 17, 20
	P/BAT	f32	97840-4050	AL
				IP-2, 6
	P/M	f33	97840-4050	AL
				IP-2, 6
	P/TAIL CAB	f35	97840-4050	AL
				IP-2, 6
	P/TAIL CHASSIS	c65	82580-4240	AL
				EG-5, 8, 13, 17, 20
	P12V connector	o1	82580-6920	AN
				IP-1

https://truckmanualshub.com/

	NAME	CONNECTOR No.	PART No. (COLOR)	CIRCUIT OR AREA
P	P24V connector	o3	82580-7210	AN
				IP-2
	Parking light switch	a122	82560-2900	CC, CE
				IP-2, 6
	Parking light short circuit connector	a123	82560-2890	CC, CE
				IP-2, 6
	PCV (Pump Control Valve) No.1	ea13	82580-8260	FB
				EG-1, 6, 9, 14, 18
	PCV (Pump Control Valve) No.2	ea14	82580-8260	FB
				EG-1, 6, 9, 14, 18
	PCV diode	—	—	FA
				—
	PCV relay	—	—	AA, FA
				—
	Pick-up controller	a18	82580-7210	CE
				IP-1, 5
	Power accessory relay	—	—	AA
				—
	Power door lock actuator (Assistant's side) (For right-hand drive model)	j5	82580-7660	DM
				CA-1
	Power door lock actuator (Assistant's side) (For left-hand drive model)	k12	82580-7660	DM
				CA-3
	Power door lock controller	f23	82580-6870	DM
				IP-2, 6
	Power door lock switch (Driver's side) (For right-hand drive model)	k6	82560-3300	DF, DM
				CA-2
	Power door lock switch (Driver's side) (For left-hand drive model)	j13	82560-3300	DM
				CA-4
	Power mirror controller	f22	82580-6870	DN
				IP-1
	Power mirror motor	a5	82580-9420	DN
				CA-1
	Power mirror switch	f67	82560-2840	DN
				IP-3
	Power window motor (Assistant's side) (For right-hand drive model)	j3	82580-9420	DG
				CA-1
	Power window motor (Assistant's side) (For left-hand drive model)	k10	82560-4400	DH
				CA-3
	Power window motor (Driver's side) (For right-hand drive model)	k3	82560-4400	DG
				CA-2
	Power window motor (Driver's side) (For left-hand drive model)	j9	82580-9420	DH
				CA-4
	Power window switch (Assistant's side) (For right-hand drive model)	j4	82580-6250	DG
				CA-1

https://truckmanualshub.com/

NAME		CONNECTOR No.	PART No. (COLOR)	CIRCUIT OR AREA
P	Power window switch (Assistant's side) (For left-hand drive model)	k11	82580-6250	DH
				CA-3
	Power window switch (Driver's side) (For right-hand drive model)	k4	825800-7210	DG
				CA-2
	Power window switch (Driver's side) (For left-hand drive model)	j10	82580-7210	DH
				CA-4
	Pressure switch (Triple)	h13	82560-4270	EA
				CA-2, 4
	Pulse adjust computer	a25	82580-7960	BA, BC
				IP-1, 5
R	Radio/Audio unit	f24	82580-8810	DI
				IP-2, 6
	Rear air gauge sender unit	b76	82560-3190	BB, BD
				EG-5, 8, 13, 17, 20
	Rear combination light LH	e2	80580-8350	CD
				RR-1, 2, 3, 4, 5
	Rear combination light LH (Semi-tractor)	c105	80580-8350	CE
				RR-6, 7
	Rear combination light RH	e8	80580-8350	CD
				RR-1, 2, 3, 4, 5
	Rear combination light RH (Semi-tractor)	c111	80580-8350	CE
				RR-6, 7
	Rear endout marker light LH	c95	82580-7180	CG
				RR-6
	Rear endout marker light RH	c94	82580-7180	CG
				RR-6
	Rear fog light (Semi-tractor)	c108	82580-6600	CF
				RR-6
	Rear fog light (Except semi-tractor)	e5	82580-6600	CF
				RR-3, 5
	Rear fog light LH (In case of with 2 pieces)	e13	82580-6600	CF
				—
	Rear fog light relay	a514	82660-1120	CF
				—
	Rear fog light switch	a76	82560-2560	CF
				IP-2
	Remote control mirror LH	h3	82560-2640	DB
				CA-2
	Remote control mirror LH (For Ireland model)	j14	82560-2660	DB
				CA-1
	Remote control mirror RH	a7	82560-2650	DB
				CA-1
	Remote control mirror RH (For Ireland model)	k14	82560-2660	DB
				CA-2

https://truckmanualshub.com/

NAME		CONNECTOR No.	PART No. (COLOR)	CIRCUIT OR AREA
R	Remote control mirror switch	f64	82580-3870	DB IP-3
	Right turn buzzer (For Taiwan dump truck)	c139	82580-7140	CD EG-8
	Roof marker light LH	i2	8280-8100	CG CA-1, 3
	Roof marker light RH	i8	82580-8100	CG CA-1, 3
	Room light diode No.1	f800	82560-2030	CL IP-2, 6
	Room light diode No.2	a801	82560-2030	CH, CL IP-1, 5
S	SERVICE CAB 1	f36	97840-4050	AL IP-2, 6
	SERVICE CAB 2	f37	97840-4050	AL IP-2, 6
	SERVICE CAB 3	f38	97840-4050	AL IP-2, 6
	SERVICE CHASSIS No.1	c67	82580-4240	AL EG-5, 8, 13, 17, 20
	SERVICE CHASSIS No.2	c68	82580-4240	AL EG-5, 8, 13, 17, 20
	SERVICE CHASSIS No.3	c69	82580-4240	AL EG-5, 8, 13, 17, 20
	Shift buzzer	f78	82560-2990	HB IP-1, 6
	Side turn signal light LH (For Taiwan dump truck)	sh3	82580-6600	CD EG-8
	Side turn signal light RH (For Taiwan dump truck)	sh4	82580-6600	CD EG-8
	Speed sensor (For ZF transmission)	sa4	82560-1340	BB, BD, BF EG-4, 11, 16
	Speed sensor (Except ZF transmission)	b35	82560-3570	BB EG-2, 3, 7, 12, 15
	Speed sensor (Except ZF transmission) (Semi-tractor)	b37	82560-1340	BB, BD EG-7, 10, 15, 19
	Spot light	c31	82580-6600	CM EG-15, 16, 19
	Spot light switch	c30	82580-7140	CM EG-15, 16, 19
	Spring brake switch	sg5	82580-6770	BB RR-1, 2, 3, 4, 5
	Spring brake switch (Semi-tractor)	sg13	82580-6770	BD EG-17, 20

https://truckmanualshub.com/

NAME		CONNECTOR No.	PART No. (COLOR)	CIRCUIT OR AREA
S	Starter (Terminal B)	ba1	82580-6730	AH, AI
				EG-2, 3, 4, 7, 10, 12, 15, 16, 19
	Starter (Terminal C)	b49	82580-6730	AH, AI
				EG-2, 4, 12, 16
	Starter relay (Coil)	b68	82580-7320	AH, AI
				EG-5, 8, 13, 17, 20
	Starter relay (Terminal C)	b66	9806-06050	AH, AI
				EG-5, 8, 13, 17, 20
	Starter switch	a52	82580-6060	AA
				IP-2, 6
	Starting idle up switch	f82	82560-4120	FH
				IP-6
	Step light LH (For left-hand drive model)	j1	82580-6600	CL
				CA-4
	Step light RH (For right-hand drive model)	k1	82580-6600	CL
				CA-2
	Stop light relay	—	—	CC, CE
				—
	Stop light switch	a60	82560-3030	CC, CE
				IP-2, 6
T	Tachograph/KIENZLE Tachograph	f31	92580-7000	BE, BF
				IP-2, 6
	Tail light relay No.1	—	—	AA, CA
				—
	Tail light relay No.2	—	—	AA, CA
				—
	Tailer tail light relay (For Tractor)	a511	82660-1120	AA
				—
	Trailer hand brake switch (For right-hand drive model)	f75	82580-6820	BA, BC
				IP-2
	Trailer hand brake switch (For left-hand drive model)	h17	82580-6820	BC
				CA-4
	Trailer pick-up controller	a18	82580-7210	CC
				IP-1
	Trailer socket (Full-tractor)	e40	82580-6040	CD
				RR-4, 5
	Trailer socket (Semi-tractor)	c33	82580-6040	CE
				EG-15, 16, 19
	Trailer stop light switch (Full-tractor)	e63	82560-3610	CD
				RR-4
	Trailer stop light switch (Semi-tractor)	b90	82580-7550	CE
				EG-17, 20

https://truckmanualshub.com/

NAME		CONNECTOR No.	PART No. (COLOR)	CIRCUIT OR AREA
T	Transmission P.T.O. switch (For left-hand drive model)	a157	82580-6870	IE
				IP-6
	Transmission P.T.O. switch (For right-hand drive model)	f51	82580-6870	IE
				IP-2
	Transmission PCS (Power cut system) switch No.1	b32	82560-2950	FJ
				EG-3, 7
	Transmission PCS (Power cut system) switch No.2	b98	82560-2950	FJ
				EG-3, 7
	Turbocharger revolution sensor	ea6	82828-1100	FC
				EG-1, 6, 9, 14, 18
	Turn signal flasher	a120	82580-6060	CC, CE
				IP-1, 5
V	Vehicle height sensor (Front)	b140	82560-4750	CO
				EG-15
	Vehicle height sensor (Rear)	c150	82580-9960	CO
				RR-6
	VNT control	ea4	82560-3560	FC, KA, KB, KC
				EG-1, 6, 9, 14, 18
W	Warning buzzer	a45	82580-6390	BA, BC
				IP-2, 6
	Washer pump motor	a3	82580-8350	CN, DL
				CA-1, 3
	Wiper and retarder switch	a53	82580-9320	CC, CE, DL, FE
				IP-2, 6
	Wiper and retarder switch	f48	82580-3250	CN
				IP-2
	Wiper motor	h10	82580-8350	DL
				CA-2, 4
	Wiper relay	a121	82580-5820	DL
				IP-1, 5
Z	ZF clutch magnetic valve	c45	82580-9250	HA
				EG-4, 16
	ZF Hi-Lo magnetic valve	c46	82580-9250	HA
				EG-4, 16
	ZF range Hi switch	sa7	82560-1340	HA
				EG-4, 11, 16
	ZF range relay	a513	82660-1120	HA
				—
	ZF splitter change switch	f57	82580-6060	HA
				IP-2

https://truckmanualshub.com/

WIRE TO WIRE CONNECTOR

CONNECTOR No.	NAME	PART No.		CIRCUIT OR AREA
		MALE	FEMALE	
a-b 1	Cab main wiring harness to Front RH wiring harness 1	82560-3640	82560-3650	AD, AE, AF, AG
				IP-1, 5, EG-1, 6, 9, 14, 18
a-b 2	Cab main wiring harness to Front RH wiring harness 2	82560-2870	82560-3670	AD, AE, AF, AG
				IP-1, 5, EG-1, 6, 9, 14, 18
a-b 3	Cab main wiring harness to Front RH wiring harness 3	82560-3620	82560-3630	AA, AC
				IP-1, 5, EG-1, 6, 9, 14, 18
a-b 4	Cab main wiring harness to Front RH wiring harness 4	82560-4500	82560-4510	AA, AC, AH, AI, AJ, CO, FA, FB, FJ
				IP-1, 5, EG-1, 6, 9, 14, 18
a-b 5	Cab main wiring harness to Front RH wiring harness 5	82560-4540	82560-4550	BA, BB, BC,BD, GA, GB, GC, GD, IE, IM
				IP-1, 5, EG-1, 6, 9, 14, 18
a-b 6	Cab main wiring harness to Front RH wiring harness 6	82560-4540	82560-4550	HB
				IP-1, 5, EG-6, 9, 14, 18
a-b 7	Cab main wiring harness to Front RH wiring harness 7	82560-4560	82560-4570	BA, BB, BC, BD, CE
				IP-1, 5, EG-1, 6, 9, 14, 18
a-c 1	Cab main wiring harness to Front LH wiring harness 1	82560-2110	82560-2120	AC, AH, AI, AL, CA, CB, CH, CI, CJ, CK, CM, CO, FE, FI, GB, GC, IA, IB, IC, ID, IE, IF, IG, IH, IK, IL
				IP-1, 5, EG-1, 6, 9, 14, 18
a-c 2	Cab main wiring harness to Front LH wiring harness 2	82560-2130	82560-2140	AI, AL, BA, BB, BC, BD, CC, CD, CE, CF, DC, FA, FB, FI, IJ
				IP-1, 5, EG-1, 6, 9, 14, 18
a-c 3	Cab main wiring harness to Front LH wiring harness 3	82560-2150	82560-2160	GA, GB, GC
				IP-1, 5, EG-1, 6, 9, 14, 18
a-c 5	Cab main wiring harness to Front LH wiring harness 5	82560-2220	82560-2230	BA, BB, BC, BD, BF, HA, IE
				IP-1, EG-1, 9, 14
a-f 1	Cab main wiring harness to Instrument panel wiring harness 1	82560-4500	82560-4510	AC, AD, AE, AL, BA, BC, BE, BF, CL, DA, DD, DE, DN, HB, IK, IL
				IP-1, 5
a-f 2	Cab main wiring harness to Instrument panel wiring harness 2	82560-4540	82560-4550	IG
				IP-5
a-f 3	Cab main wiring harness to Instrument panel wiring harness 3	82560-4540	82560-4550	DI, EA, FE, HB, IA, IB, IC, ID, IE
				IP-1, 5
a-f 4	Cab main wiring harness to Instrument panel wiring harness 4	82560-4560	82560-4570	AD, AE, DF, DM, FA, HA, HB
				IP-1, 5
a-f 5	Cab main wiring harness to Instrument panel wiring harness 5	82560-2460	82560-2470	CB, CN, CO, DB, FH, FJ, HB, IE, IF, IK, IL
				IP-2, 6
a-f 6	Cab main wiring harness to Instrument panel wiring harness 6	82580-7340	82580-7210	AD, AG, DM, EA, FJ, GD
				IP-1, 5
a-h 1	Cab main wiring harness to Dash panel wiring harness 1	82560-2170	82560-2180	AE, AG, BC, CC, CE, CG, CL, DA, DB, DF, DG, DH, DL, DM, EA, FA, GD, IH
				IP-1, 5, CA-2, 4

https://truckmanualshub.com/

CONNECTOR No.	NAME	PART No.		CIRCUIT OR AREA
		MALE	FEMALE	
a-i 1	Cab main wiring harness to Roof wiring harness 1	82580-7340	82580-7210	AE, CG, CL, DI
				IP-1, 5, CA-1, 3
a-j 1	Cab main wiring harness to Door LH wiring harness 1	82560-2670	82560-2680	AE, CC, CE, DA, DG, DM
				CA-1
a-j 2	Cab main wiring harness to Door LH wiring harness 2	82560-6030	82580-6040	DB
				CA-1
a-k 1	Cab main wiring harness to Door RH wiring harness 1	82560-2670	82560-2680	AE, CC, CE, DH, DM
				CA-3
a-ea 1	Cab main wiring harness to Engine wiring harness 1	82560-4520	82560-4530	BA, BB, BC, BH, EA, FA, FB, FC, FE
				IP-1, 5, EG-1, 6, 9, 14, 18
a-ea 2	Cab main wiring harness to Engine wiring harness 2	82560-4540	82560-4550	FA, FB, FC
				IP-1, 5, EG-1, 6, 9, 14, 18
a-ea 3	Cab main wiring harness to Engine wiring harness 3	82560-4540	82560-4550	FA, FB, FC
				IP-1, 5, EG-1, 6, 9, 14, 18
a-ea 4	Cab main wiring harness to Engine wiring harness 4	82560-4560	82560-4570	AE, AK, BG, FC
				IP-1, 5, EG-1, 6, 9, 14, 18
a-ea 5	Cab main wiring harness to Engine wiring harness 5	82560-3270	82560-3730	FA, FB
				IP-1, 5, EG-1, 6, 9, 14, 18
b-c 1	Front RH wiring harness to Front LH wiring harness 1	82560-1640	82560-1650	AD, AG, CH, CI, CJ, IC, ID
				EG-2, 3, 4, 8, 10, 11, 12, 17, 20
b-c 2	Front RH wiring harness to Front LH wiring harness 2	82580-7540	82580-7550	AD, AF, AG, AH, BD, IA, IC
				EG-2, 3, 4, 8, 10, 11, 12, 17, 20
b-c 3	Front RH wiring harness to Front LH wiring harness 3	82560-1780	82560-1790	AJ
				EG-7, 19
b-sc 1	Front RH wiring harness to Intake air heater sub wiring harness 1	82560-1780	82560-1790	AJ
				EG-1, 9, 14
c-d 1	Front LH wiring harness to Intermediate wiring harness 1	82560-1320	82560-1330	AD, AF, BB, CD, CF, CI, GA
				EG-5, 8, 13, RR-3
c-d 11	Front LH wiring harness to Intermediate wiring harness 11	82580-8480	82580-8490	IG
				EG-8
c-e 1	Front LH wiring harness to Rear wiring harness 1	82560-1320	82560-1330	BB, CD, CF, CH, GA, GB
				EG-5, 8, 13, RR-3, 4
c-e 3	Front LH wiring harness to Rear wiring harness 3	82560-2940	82560-2950	IE, IK, IL
				EG-5, 8, 13, RR-3, 4
c-e 9	Front LH wiring harness to Rear wiring harness 9	82580-7540	82560-7550	CD, GB
				EG-5, 13, RR-4
c-e 10	Front LH wiring harness to Rear wiring harness 10	82580-6980	82560-6990	GB
				EG-5, 13, RR-4
c-sa 2	Front LH wiring harness to ZF transmission sub wiring harness 2	82580-9030	82580-9040	AG, AI, BB, BD, BF, CH, CI, CK, HA, IE
				EG-4, 11, 16
c-sc 1	Front LH wiring harness to Intake air heater sub wiring harness 1	82560-1780	82560-1790	AJ
				—

https://truckmanualshub.com/

CONNECTOR No.	NAME	PART No.		CIRCUIT OR AREA
		MALE	FEMALE	
c-sd 1	Front LH wiring harness to Headlight sub wiring harness 1	82580-6030	82580-6040	AF, CA, CO EG-1, 6, 9, 14, 18
c-sd 2	Front LH wiring harness to Headlight sub wiring harness 2	82580-6030	82580-6040	AF, CA, CB, CO EG-1, 6, 9, 14, 18
c-se 1	Front LH wiring harness to Cab tilt sub wiring harness 1	82560-2780	82560-2790	AD, AF, IC, ID EG-1, 9, 14, 18
c-sf 2	Front LH wiring harness to Air suspension valve box sub wiring harness 2	82560-1250	82560-1260	AF, IF RR-6
c-sg 1	Front LH wiring harness to Brake valve box sub wiring harness 1	82560-3530	82560-3540	AF, BD EG-17, 20, RR-6
c-sh 1	Front LH wiring harness to Side turn signal wiring harness 1	82580-8340	82580-8350	AF, CD EG-8
d-e 1	Intermediate wiring harness to Rear wiring harness 1	82560-4380	82560-4390	AD, AF, CD, CF, CI RR-1, 2, 3, 5
d-sf 1	Intermediate wiring harness to Air suspension valve box sub wiring harness 1	82560-3350	82560-4750	AF, IG RR-2
d-sg 1	Intermediate wiring harness to Brake valve box sub wiring harness 1	82560-3530	82560-3540	BB, GA RR-1, 2, 3, 5
e-sg 1	Rear wiring harness to Brake valve box sub wiring harness 1	82560-3530	82560-3540	BB, IK, IL RR-3, 4, 5
e-sh 1	Rear wiring harness to Side turn signal wiring harness 1	82580-8340	82580-8350	AF, CD RR-3
f-g 1	Instrument panel wiring harness to Instrument panel switch wiring harness 1	82560-2150	82560-2160	DD, FH, FJ, GD, IK IP-2
f-m 1	Instrument panel wiring harness to Floor wiring harness 1	82580-8730	82580-8740	AE, CL, IA, IB, IC, ID IP-3, 7,
h-j 1	Dash panel wiring harness to Door LH wiring harness 1	82560-2670	82560-2680	AE, CC, CE, CL, DH CA-4
h-j 2	Dash panel wiring harness to Door LH wiring harness 2	82580-6030	82580-6040	DH,DM CA-4
h-k 1	Dash panel wiring harness to Door RH wiring harness 1	82560-2670	82560-2680	AE, CC, CE, CL, DA, DF, DG CA-2
h-k 2	Dash panel wiring harness to Door RH wiring harness 2	82580-6030	82580-6040	AE, DB, DG, DM CA-2
sa-sb 1	ZF transmission sub wiring harness to ZF transmission P.T.O. sub wiring harness 1	82580-7170	82580-7180	IE EG-4, 11, 16

https://truckmanualshub.com/

JUNCTION CONNECTOR

CONNECTOR No.	NAME	PART No.	CIRCUIT OR AREA
a606	J/C ETC 14P	82560-3790 82550-1170	FA, IE
			IP-2, 6
a607	J/C Earth 14P	82560-3790 82550-1180	AD, AE, AG, FG, FH
			IP-2, 6
a608	J/C Earth 14P-G2	82560-3790 82550-1190	AD, AE
			IP-2, 6
a609	J/C Common rail 20P	82560-4770 82550-1300	AH, AI, FA, FC, FE, FF, FH, FI, HA, HB, IE
			IP-1, 5
a612	J/C Earth 13P G2-a	82560-3690	AD, AE
			IP-2, 5
a613	J/C Common rail 13P	82560-3690 82550-1120	FA
			IP-1, 5
a614	J/C ETC 13P-1	82560-3690 82550-1120	BA, BC, CH, CI, CJ, CK, DJ
			IP-1, 5
a615	J/C ETC 13P-2	82560-3690 82550-1120	CA, CC, CE, CF, FA, FE
			IP-1, 5
a619	J/C CAN	82560-4770 82550-1280	BA, BC, FA, IK, IL
			IP-1, 5
b201	J/C Earth	82580-6040 82550-1230	AD, AF, AG
			EG-3, 8, 10, 11, 12, 17, 20
b202	J/C Earth G2	82560-2680 82550-1220	AC, AD, AF
			EG-3, 8, 10, 11, 12, 17, 20
c201	J/C Earth G2-a	82560-2680 82550-1220	AC, AD, AF, IC, ID
			EG-2, 3, 4, 9, 15, 16, 19, RR-6
c202	J/C Earth G2-b	82560-2680 82550-1220	AD, AF
			RR-6, 7
f604	J/C Earth 14P-G2	82560-3790 82550-1190	AC, AD, AE, DF, FH
			IP-2, 6
ea3	J/C Engine CAN	82580-6040 82550-1230	FC
			EG-1, 6, 9, 14, 18

https://truckmanualshub.com/

Hino Motors, Ltd.

Pub. No. S1-YFSE17A EWD '07-3
S1-YFSE17B EWD '07-6
S1-YFSE17C EWD '07-9

https://truckmanualshub.com/