https://truckmanualshub.com/

CONTRUCCIONES EL CONDOR

CHASSIS: CN535111

MODEL NUMBER: 7600 SBA 6X4

BUILD DATE: 1/18/2011

CUSTOM PARTS CATALOG

Version 3.3.0

Copyright© 2011 by International Truck and Engine Corporation

International© Vehicles are custom built to meet the specific needs of individual customers. That's why there are so many customer options. To service a truck properly, you must have the parts that match its specifications.

Printed December 13, 2013

https://truckmanualshub.com/

Custom Parts Catalog

Copyright© 2011 by International Truck and Engine Corporation

COPYRIGHT© 2011INTERNATIONAL TRUCK AND ENGINE CORP.

https://truckmanualshub.com/

PARTS CATALOG CONTENTS

1. PARTS CATALOG GUIDE 17

2. LINE SET TICKET 29

3. FIGURE INDEX

Group 01 Frame	Figure	
FRAME RAIL REINF INSTL; OUTER	0FT86	36
FRAME RAIL SIDEMEMBER; 8.0 (5/16") THK, 120K	0L2C6	37
FRT BUMPER INSTL; 20" BOLT-ON EXTD RAIL; W/4" OFFS	0MQWY	38
FRT XMBR INSTL	0TQZC	41
CROSSMEMBER,RAD SUPT,	3612445C92	43
CROSSMEMBER,RAD SUPT,	3612447C3	45
CROSSMEMBER,RAD SUPT, CROSSMEM	6087945C91	47
TOW HOOK & MTG; FRONT RECOVERY DEVICES	07VQC	49
XMBR & MTG; INTMD, 5-PC	07TT3	51
CROSSMEMBER, ASSY	1664559C93	52

Group 02 Front Axle	Figure	
FRT AXLE ASM; MERITOR, NON-DRIVING, MFS-20, 20K	0K4L5	54
AXLE,ASSY FRT 02ARY 20K	3555306C91	55
KIT,KING PIN O/HAUL STD 18,20K	2505496C91	57
ROD,ASSY TIE W/ENDS 67.2"	2504538C91	59

Group 03 Chassis Springs	Figure	
FRT SUSP INSTL; 16,20K, W/SHK ABSBR	0Q71L	62
BRACKET,FRT SPG RR W/BUSHING	3541838C91	65
SPRING,CHASSIS FRONT 20K	3540085C91	67

Group 04 Brakes	Figure	
AIR BRK TUBING INSTL; CTR SECT, W/RSM UC TANK	0MHNY	70
HARNESS,NYLON TUBE, FOR 7600 W	3615914C91	77
AIR BRK TUBING INSTL; FRONT,QUICK RLSE, MODULATOR	0H75S	79
AIR BRK TUBING INSTL; REAR SECTION,HEND STL/RUB NO	0N54X	85
VALVE,BRK CONTROL, SR-7 SPRING	3821869C91	89
VALVE,QUICK RELEASE QRN	3628539C91	90
VALVE,RELAY R-12	3518861C91	91
AIR COMPSR & GOVERNOR INSTL	0K9YJ	92
GOVERNOR,ASSY D-2	410986C92	94
AIR COMPSR TUBING INSTL; W/CUM ISM ENG	0K9YS	96
AIR DRYER INSTL	0HZW5	101
COOLER ASSY,AIR	1673827C91	103
AIR DRYER TUBING INSTL; MTD O/S RT RAIL, W/SHUTT O	0H97V	105
HOSE, ASSEMBLY COMPONENTS	B000000000	108
AIR SOLENOID MNFLD MTG; W/4, 7, 14 MNFLD, W/CHECK	0HKJJ	110
AIR TANK FITTINGS; PRIMARY TANK, NGV W/STD 11" AIR	0XNSY	112
FITTINGS,PRIMARY AIR TANK	3830858F91	113
AIR TANK FITTINGS; SECONDARY TANK,11" DIA.	0LHMY	115
BBAT WET/SECONDARY AIR TAN	3830874F91	116
AIR TANK MODULE MTG; FRAME MTD	0VF0L	118
AIR TANK TUBING INSTL	0HC2S	121
AIR TANK TUBING; PRIMARY TANK	0HWF8	128
BBAT,PRIMARY AIR TANK TUBING	3558645F93	129
AIR TANK TUBING; WET/SECONDARY TANK, 11", BBAT MO	0HWF7	130
BBAT WET/2NDRY AIR TANK TUBING	3625467F91	131
AIR TANKS; STEEL, W/BATTERY BOX MODULE	0M72B	132
MODULE 2 AIR TANK 11" STEEL	6086293F92	133
BOC HOSE ROUTING & CLIP INSTL; BRAKE	0FR6Y	135

COPYRIGHT© 2011INTERNATIONAL TRUCK AND ENGINE CORP.

https://truckmanualshub.com/

PARTS CATALOG CONTENTS

Group 04 Brakes	Figure
BRAKE ACCESSORIES MODULE	06PDX 137
BRAKE,DCM TRUCK W/AIR	3808531F91 138
BRAKE CHAMBER INSTL; FRONT AXLE,10-20K,24" LONG ST	0V5ZP 140
BRAKE VALVE INSTL; CONTROL/PARKING/HAND CONTROL, A	06LQJ 141
DRIVER CONTROL, BRAKE VALVE	3807949F92 142
PEDAL,BRAKE ASSY	2594626C91 144
VALVE,PARKING BRAKE PUSH-PULL	2505876C91 145
BRK CHAMBER INSTL; HALDEX 30" SERV & 30/30",W/TAND	0TLT4 147
DRAIN VALVE; AIR TANK	0MPJV 151
BRAKE*DRAIN VALVES	3555432F91 152
FRT AXLE HOSING	0H75R 154
FRT BRAKE INSTL; MERITOR, 16.5X6, Q+, W/14-20K AXL	0FSNX 155
BRAKE,GROUP FRT LT*16.5X6.0 Q+	3558031C91 156
BRAKE,GROUP FRT RT*16.5X6.0 Q+	3558032C91 158
RR AXLE HOSING INSTL; W/HEND STL/RUB NON ABS	0N56C 160
RR BRAKE INSTL; MERITOR 16.5 X 7 Q+	0DR90 161
BRAKE,GROUP REAR LT*16.5 X 7.0	3547998C91 165
BRAKE,GROUP REAR LT*16.5X7 Q+	3591885C91 167
BRAKE,GROUP REAR RT*16.5 X 7.0	3547999C91 169
BRAKE,GROUP REAR RT*16.5X7 Q+	3591886C91 171
Group 05 Steering Gear	**Figure**
POWER STEERING HOSING INSTL; GEAR TO GEAR	0M9XT 174
ELBOW,FLARED TUBE*3/8" TUBE, 4	3593674C91 176
ELBOW,FLARED TUBE*37DEG FLARE,	3593052C91 177
ELBOW,PIPE*45DEG ELBOW, 3/4" H	3593045C91 178
FITTING,*3/4-16, 3/4:ID HOSE N	3592892C91 179
POWER STEERING RESERVOIR & MTG; W/1.5 LT	0M9SJ 180
RESERVOIR,POWER STRG PUMP,	3836348C91 181
POWER STEERING SHAFT INSTL; INTERMEDIATE	06SPX 182
POWER STRG PUMP INSTL; W/HDD ENGINES	0G5GN 184
PWR STRG GEAR INSTL; W/SHEPPARD M80, M100	0MFX6 185
GEAR,ASM DUAL PWR STRG M80	3558090C91 189
LINK,STEERING DRAG*16-20K LH	3558241C91 191
LINK,STEERING DRAG*16-20K RH	3558242C91 192
PWR STRG HOSING INSTL; W/M100 OR M100/M80 HD94 GEA	0RS3B 193
ELBOW,PIPE*45DEG ELBOW, 1" HOS	3593042C91 196
ELBOW,PIPE*ELBOW,90 DEG 3/4-16	3590828C91 197
STEERING COLUMN; DCM, TILT/TELE, FIXED	06BMC 198
DRVR CONT TILT COLUMN	3563854F93 199
HOUSING,STRG COLUMN TILT, KIT	2596791C91 201
KIT,STEERING*COL COVER TC7	2505690C91 203
STEERING WHEEL & MTG; 18", W/HORN BUTTON, CRUISE C	0GPCT 205
WHEEL,STEERING 18 IN, W/CRUISE	3546229C93 206
Group 06 Propeller Shafts	**Figure**
CENTER BEARING, MTG PARTS	026CH 210
CTR BRG MTG BRKT; FIRST	01VHX 212
INPUT YOKE; FWD REAR AXLE	0L821 213
KIT,STRAP&BOLT 1710,1760,1810	2035774C91 214
INPUT YOKE; RR RR AXLE	0VJDW 216
SHAFT,R/R AXLE OUTPT YK 1710	3705300F91 217
INPUT YOKE; SINGLE RR AUX/TANDEM RR AUX	01ZVM 218
KIT,STRAP&BOLT 1710,1760,1810	2035774C91 214
OUTPUT YOKE; FWD REAR AXLE	01ZV0 221

COPYRIGHT© 2011INTERNATIONAL TRUCK AND ENGINE CORP.

https://truckmanualshub.com/

PARTS CATALOG CONTENTS

Group 06 Propeller Shafts	Figure	
KIT,STRAP&BOLT 1710,1760,1810	2035774C91	214
PROP SHAFT ASM; 1710 SERIES	01ZDG	224
DRIVESHAFT ASSY,1710 SERIES,ME	427DTPXXXX	225
PROP SHAFT ASM; 1810 SERIES	0HKXW	233
DRIVESHAFT ASSY, 1810 SERIES M	429DTCXXXX	234
PROP SHAFT ASM; 1810 SERIES	039Y6	243
DRIVESHAFT ASSY, 1810 SERIES M	429DTMXXXX	244
XMSN OUTPUT YOKE; U-JOINT STRAP & BOLT KIT	0XYP7	252
KIT,STRAP&BOLT 1710,1760,1810	2035774C91	214

Group 07 Exhaust	Figure	
EXHAUST SYSTEM INSTL; VERT TAILPIPE, W/SUPPORT	07VJX	256
PIPE,TAIL	3558131C1	257
SHIELD,EXH PIPE	3541401C91	258
SUPPORT,*VERT TAIPIPE STANCHIO	3587567C1	260
MUFFLER INSTL; RT SIDE MTD EXHAUST	0G89F	262
TURBO PIPE INSTL; W/UNDER CAB MTD MUFFLER	0G8JL	263
PIPE,TURBO,INSULATED ASSY	3821536C1	264

Group 08 Electrical	Figure	
AIR SOLENOID INSTL; ACCESSORY CONTROLS	0CBKD	266
BRACKET, SOLENOID*FOUR PACK	2505594C1	268
KIT,AIR BRK*SOLENOID COVER PLT	2507597C91	269
AIR SOLENOID VALVE; DIFF LOCK,TRAC DIFF,2-SPD AXLE	0CBYL	270
VALVE,SOLENOID*DCLD CONTROL	3553344F91	271
AIR SOLENOID VALVE; POWER TAKE OFF CONTROL	0CBZL	272
VALVE,AIR CONTROL PWR TAKE OFF	3553363F92	273
VALVE,SOLENOID*AIR SUSPENSION	3576680C1	274
ALT PULLEY INSTL; W/CUM ISM ENG	0J53G	275
ALTERNATOR MTG; 12V,PAD MTD,DELCO,DENSO,L/N,BOSCH	0TPK1	276
BATT BOX COVER & HOLD DOWN; FOR 18" BATT BOX	0HL97	277
COVER ASM,BATTERY BOX	3578370C92	279
BATT BOX SUPT INSTL; 18" RSM LONG BOX	0HL95	280
BATT CABLE INSTL; RIGHT SIDE BACK OF FUEL TANK	0GCJY	281
CABLE,ASM*CLEAN PWR FEED, 2900	3547673C91	289
BATT CABLE INTERCONNECT INSTL; 3 BTRY SYS, GROUP 3	0GB97	291
BATT CABLE WIRING MTG	0K6NZ	294
BATTERIES	0RPBM	295
BATTERY BOX MODULE; JUMP START STUD & DISCONNECT S	0LSFJ	296
BBAT, W/R TRACTOR BOX STUD	3559976F93	297
BATTERY BOX TRAY; MODULE	0HL44	299
ELECTRICAL 18" BRTY BOX ASM	3576153F92	300
BATTERY CABLE SADDLE & PLUG; CLIP INSTL, W/ COVER	0RS40	302
ELECT W/RT TRCTR BOX SADDLE	3576430F91	303
CENTER CHASSIS HARNESS ASM; COMMON BASE WIRING (AB	0FCS0	304
ELEC CTR CHAS, BASE +2500MM	3555955F92	305
CENTER CHASSIS HARNESS ASM; FUEL TANK WIRING (ABR	0JF60	306
CENTER CHASSIS HARNESS ASM; WORK LIGHT WIRING (ABR	0FCS5	307
ELEC CTR CHAS,*WORK LIG	3553986F92	308
CENTER CHASSIS HARNESS; ABR#8, SOLENOID, 4 PACK WI	0FCS7	309
ELEC CTR CHAS,*SOLENOID	3553991F92	310
HARNESS,ELEC; SOLENOID 4 PK W	3554059C92	311
CENTER IP, PATTERN CUTOUTS (ABR #70)	0FBCV	313
DASH HARNESS ASM; BODY BUILDER/TRAILER SOCKET WIR	0MTVC	314
HARN,DASH,TRLR SCKT/BODY BLDR	3603996F91	315

Info

COPYRIGHT© 2011INTERNATIONAL TRUCK AND ENGINE CORP.

PARTS CATALOG CONTENTS

Group 08 Electrical	Figure	
HARNESS,DASH W/TRLR OR BB CONN	3581900C91	317
HARNESS,TRAILER SOCKET*BODY BU	3545759C92	320
DASH HARNESS ASM; ENGINE SYSTEM WIRING	0CS9S	323
DASH HARNESS ASM; FOR EXPORT ENGINES, NOT RHD	0RP28	325
DASH HARNESS ASM; FUSE BLOCK, COMMON BASE WIRING	0CS5P	328
HARNESS,DASH WIRING, BASE , -	3604078C93	330
HOUSING,CONTROL, POWER DISTRIB	3682393C91	339
DASH HARNESS ASM; HEAD-AUX-FOG LIGHT WIRING	0CSBZ	340
HARNESS,DASH ELEC; HEA	3544508F94	341
HARNESS,HEAD LIGHT WIRING *HEA	3560280C91	342
DASH HARNESS ASM; HVAC SYSTEM WIRING	0CSB9	345
HARNESS, A/C SYSTEM	3829624F92	346
HARNESS,DASH,HEATER RECIRC	3603978C91	347
DASH HARNESS ASM; PDC BATTERY GRID (ABR #38)	0FZBX	350
ELEC DASH,BTRY GRID N/MAXI-	3581925F91	351
HARN,PDC BTRY GRID N/MAXI-FUSE	3581923C91	352
DASH HARNESS ASM; PYROMETER WIRING	0CSCL	355
DASH HARNESS ASM; REMOTE START/STOP (ABR #41)	0FZG3	357
HARN,CAB,MANL XMSN,STRTR KEY	3604052C91	359
DASH HARNESS ASM; STARTER THERMAL OVERCRANK EFFECT	0FZBS	362
HARN,DASH,MANL XMSN/STRT,BIG B	3604048F91	363
DASH HARNESS ASM; TRANS SYSTEM WIRING	0P0W4	365
ELECTRICAL DASH HARNESS*MAN	3561132F91	366
HARNESS,ELEC; XMSN WIRIN	3561092C91	368
DASH HARNESS ASM; WASHER PUMP/LEVEL SENSOR WIRING	0FDBH	371
HARN,DASH,WASHER PUMP/LEVEL SN	3604018F91	372
HARNESS,CHASSIS WIRING*WASHER	3557990C91	374
DASH HARNESS ASM; WORK LIGHT WIRING	0CSBS	377
HARNESS,DASH ELEC; WOR	3544502F92	378
HARNESS,FLOOD LIGHT WIRING*WOR	3545544C92	379
DCM; CLOCK SPRING, ELECTRICAL	0DCJY	382
ELEC DCM*CLOCKSPRING	3545990F91	383
SPRING,CLOCK W/CANCEL CAM, KIT	2505657C91	385
ELECTRICAL SERVICE ASM; CENTER CHASSIS	0M51L	386
ELECTRICAL SERVICE ASM; FORWARD CHASSIS	0M4ZH	387
ELECTRICAL SERVICE ASM; INSTRUMENT PANEL	0M517	388
FRONT END WIRING INSTL; LIGHTING AND HARDWARE	0M7RR	389
HARNESS,CLEARANCE & MARKER LT*	3570620C91	395
LIGHT,HEAD,CHROM/PNTD BEZEL RH	3605817C92	397
LIGHT,HEAD,CHROM/PNTD BEZEL,LH	3605816C92	399
LIGHT,TURN SIG,HOOD MOUNTD,LH	3580631C92	401
LIGHT,TURN SIGNAL,HOOD MTD,RH	3580632C92	402
LITE,TURN SIG,HOOD MTD,LH,CHRM	3537872C95	403
LITE,TURN SIG,HOOD MTD,RH,CHRM	3537873C95	404
FWD CHASSIS HARN ASM; BLACK OUT/FOG LIGHTS (ABR #2	0F64W	405
FWD CHASSIS HARN ASM; HORN (ABR #11)	0G1PT	406
FWD CHASSIS HARN ASM; SNOW PLOW/FOG LIGHTS (ABR #1	0F64M	407
ELEC FWD CHAS BASE	3572236F91	408
FWD CHASSIS HARNESS WIRING	0WYBZ	412
HARNESS ASM, DASH; AIR DRYER WIRING	0CSC2	418
HARNESS,DASH ELEC; AIR	3544510F92	419
HARNESS,ELEC; AIR DRYER	3545551C92	420
HARNESS ASM, DASH; DIFF LOCK SENDER WIRING	0CSBR	423

COPYRIGHT© 2011INTERNATIONAL TRUCK AND ENGINE CORP.

https://truckmanualshub.com/

PARTS CATALOG CONTENTS

Group 08 Electrical	Figure	
HARNESS ASM, DASH; SOLENOID 7 PACK WIRING	0CSBW	425
HARNESS,DASH ELEC; AIR	3544506F92	426
HARNESS,ELEC; SOLENOID 4 PK	3545549C92	427
HARNESS, CENTER CHASSIS; AIR DRYER WIRING (ABR #9)	0FCS8	430
ELEC CTR CHAS, L AIR DR	3553993F91	431
HARNESS,ELEC; AIR DRYER	3554060C91	432
HARNESS, CENTER CHASSIS; BODY BUILDER EOF EFFECTS	0JFJC	435
HARNESS, CENTER CHASSIS; DIFF LOCK WARNING LIGHT W	0FCS6	436
ELEC CTR CHAS,*REAR & R	3556085F92	437
HARNESS, CENTER CHASSIS; WASHER BOTTLE WIRING SS/R	0JFCK	438
ELEC CTR CHAS,*SS/RH WA	3558533F91	439
IP MODULE EFFECTS; ABR#27, RADIO PANEL	06QK9	440
IP, TRIM-PREMIUM 16-WAY CON	3598055F92	441
IP MODULE EFFECTS; ABR#28, CENTER PANEL, POWER SOU	0DBN1	442
ELEC IP,W/CIG LTR & W/BRKR	3581553F91	443
IP MODULE EFFECTS; ABR#29, KEY SWITCH & LOCK SET	0PQ9V	445
IP, ELECTRICAL IP KEY SWITC	3552906F92	446
KIT,DOOR LK,W/STD CAB & W/KEYS	3546619C92	447
IP MODULE EFFECTS; ABR#31, PRODUCT GRAPHIC, FUSE P	06TDF	448
IP,FUSE PANEL GRAPHIC,SPANISH	3588093F96	449
IP MODULE EFFECTS; ABR#32, RPO BASE WIRING HARNESS	0HQJ0	450
IP,SS/RH/HDD,F1,2,3,4 W/BKR	3810187F91	451
STUD,M8 X 1.25 DUAL SIDED	3606873C1	454
IP MODULE EFFECTS; ABR#35, FILTER MINDER	0DBN3	455
IP, PANEL GAUGE FILTER MIND	3545804F93	456
IP MODULE EFFECTS; ABR#37, OPTIONAL FUSE BLOCK	0JKCD	457
IP MODULE EFFECTS; ABR#47, MISCELLANEOUS WIRING	0JVT2	459
ELEC IP,MISC WRG-OPT PNL LT	3581429F91	460
IP MODULE EFFECTS; ABR#48, CRANK & POWERTRAIN WIRI	0MT13	462
IP, KEY START, FUSE BLOCK 1	3604143F92	463
IP MODULE EFFECTS; ABR#50, ELECTRONIC SYSTEM CONTR	06SHZ	464
CONTROL,ELECTRONIC, ESC2: BOOT	3833155C2	465
IP, ESC2: ASM,WBOOT LOADER	3579360F95	468
IP MODULE, HOUSING ASM; 3-SWITCH, LOC #5 (ABR #58)	0DBN4	469
ELEC IP,ROOF AUX WRG W/BRKR	3581434F91	470
IP MODULE, HOUSING ASM; SWITCH/GAUGE/ENG DISPLAY (	0L4GS	472
HOUSING,SWITCH*6 PACK DIN MULT	3549776C4	473
IP-FULL SW PK W/MIN PK,POKT	3594374F91	475
IP MODULE, MISC EFFECTS (ABR #95)	0G1KJ	476
ELEC IP,FTR CAT#95 MISC EFF	3578228F91	477
IP MODULE, SWITCH ASM; AIR HORN CNTRL (ABR #68)	0DCZL	478
ELEC IP; W/AIR HORN SWITCH	3554183F91	479
IP MODULE, SWITCH ASM; AXLE CNTRLS (ABR #62)	0DC3W	480
IP,SWITCH,DRVR CTRLR,DIFF LOCK	3608281F91	481
IP MODULE, SWITCH ASM; POWER DIVIDER LOCK CNTRL (A	0DC3X	483
ELEC IP,PDL IN/OUT SWITCH	3578747F91	484
IP MODULE, SWITCH ASM; PTO CNTRL (ABR #67)	0DC5T	486
ELECTRICAL IP,PTO SWITCH	3578721F91	487
SWITCH,ELECTRONIC PTO	3563079C1	488
IP MODULE, SWITCH HOUSING ASM; BLANKS (ABR #80)	0L5BD	490
IP-4 SWITCH BLANK PLUGS	3595680F91	491
IP MODULE, SWITCH INSTL; EXH/COMP BRAKE (ABR #53)	0DC6X	492
ELEC IP,FAN O'RIDE&ENG BRK	3578730F91	493

Info

COPYRIGHT© 2011INTERNATIONAL TRUCK AND ENGINE CORP.

https://truckmanualshub.com/

PARTS CATALOG CONTENTS

Group 08 Electrical	Figure
SWITCH,ELEC ENGINE BRK SELECT	3560047C1 495
SWITCH,ELECTRONIC FAN OVERRIDE	3560048C1 497
IP MODULE, SWITCH INSTL; FOG/AUX LIGHT (ABR #54)	0DC6Y 499
ELECTRICAL IP,FOG LIGHT SW	3578732F91 500
IP MODULE, WIRING ASM; BASE TRANS (ABR #97)	0G1KP 502
HARN,IP,CAB J1708,XMSN J1939	3604129F91 503
IP MODULE, WIRING ASM; ELEC CAB OVERLAY/DIFF LOCK	0G1C1 505
IP MODULE, WIRING INSTL; POWER BRAKE LIGHT (ABR #8	0G10N 507
IP, CLUSTER PWR - N/FULL PO	3809724F91 508
RADIO ANTENNA INSTL;	0G219 510
RADIO INSTL; SPEAKERS, DUAL CONE OR COAXIAL	0S6RV 511
RR CHASSIS HARNESS; COMMON BASE WIRING, (ABR#1)	0FBTX 512
HARNESS,REAR CHSS,BASE +1000MM	3571016F94 513
RR CHASSIS HARNESS; DIFF LOCK WARN LT WIRING, (ABR	0FBV2 516
RR CHASSISHARNESS ASM; W/TURN SIGNAL LIGHT	0HQHQ 517
RR LIGHT INSTL; STD TAIL LIGHTS	0HDDK 527
HARNESS,STOP & TAIL LIGHT*LIGH	3552880C91 535
LIGHT,ASSY STOP TAIL TURN WITH	1661282C91 538
LIGHT,ASSY STOP TAIL WITH LICE	1661281C91 540
STOP,TAIL & TURN WIRING INSTL; W/HEND OR CHLMR SUS	0HDJP 542
TURN SIGNAL SWITCH & DCM HARNESS	06QS5 545
ELECTRICAL DCM W/AIR BRAKES	3554196F93 546
KIT,PRK BRAKE PRESS SWITCH	2505667C91 548
TRANSDUCER,AIR,KIT	2505669C91 550
VALVE, AIR SOLENOID; AIR HORN	0CBZX 551
VALVE,AIR CNTRL AIR HORN SLND	3553365F93 552
VALVE, AIR SOLENOID; POWER DIVIDER LOCK	0CBYW 553
VALVE,SOLENOID*NC PDL CONTROL	3553350F91 554
WORK LIGHT INSTL; CUSTOMER FURNISHED	0GVJ5 555

Group 09 Front Sheet Metal	Figure
FENDER EXTENSION INSTL	0TB0T 558
BRACE,ASSY FENDER BRKT LH	3819464C1 560
BRACE,ASSY FENDER BRKT RH	3819465C1 561
EXTENSION,ASSY SBA HDD FRT LH	3610428C93 562
EXTENSION,ASSY SBA HDD FRT RH	3610429C93 563
EXTENSION,ASSY SBA REAR LH	3610420C92 564
EXTENSION,ASSY SBA REAR RH	3610421C92 565
FENDER EXTENSIONS; FRONT END	0JCHB 566
BRACE,FENDER BRKT, LH ASSY	3811084C3 568
BRACE,FENDER BRKT, RH ASSY	3811085C3 569
EXTENSION, FRONT FENDER SBA -	3571824C8 570
EXTENSION, FRONT FENDER SBA -	3571825C8 572
FRONT END ASM; HOOD	0TX7F 574
HINGE,HOOD, SUPPORT ASSY	3836993C1 576
HOOD, ASM, N/ACCESS HATCH	3613765C96 577
REINFORCEMENT, HOOD FRONT ASSY	3613752C93 581
REINFORCEMENT,, HOOD REAR RH	3613754C1 583
REINFORCEMENT,HOOD REAR ASY LH	3613755C92 584
REINFORCEMENT,HOOD REAR ASY,RH	3613756C91 586
FRT GRILLE INSTL; CHROME SURROUND	0M7VR 588
GRILLE,ASY,CHROME,FXD W/SCREEN	3613683C91 589
GRILLE,SURROUND ASSY, CHROME	3613675C93 591
SUPPORT, GRILLE MOUNTING ASSY	3613687C92 592

COPYRIGHT© 2011INTERNATIONAL TRUCK AND ENGINE CORP.

https://truckmanualshub.com/

PARTS CATALOG CONTENTS

Group 09 Front Sheet Metal	Figure
GRILLE INSTL, AIR INTAKE	0MFHH 593
GRILLE,ASSY, AIR INTAKE, LH	3622627C1 594
GRILLE,ASSY, AIR INTAKE, RH	3622628C1 595
HOOD ASSIST INSTL	0NT98 596
CABLE,HOOD SAFETY, ASSY - ,	3625938C93 598
HOOD LATCH INSTL	0ML1Y 600
HOOD SUPPORT INSTL	0ML1Z 602
MUD GUARD INSTL; NO FBC VEHICLES	0F448 603
SPLASH PANEL INSTL; (FRONT END)	0MC0S 605
BRACE,ASM SPLSH SHLD LH FRT HD	3811081C2 608
BRACE,ASM SPLSH SHLD RH FRT HD	3811082C2 610
BRACE,ASM SPLSH SHLD RR LH HDD	3626358C2 612
BRACE,ASM SPLSH SHLD RR RH HDD	3626359C2 614
PANEL,ASSY UPR SPLASH LH	3622632C92 616
Group 10 Miscellaneous	**Figure**
BULK MATERIAL; ESCOBEDO, SEVERE SERVICE	0MRQC 618
LUG WRENCH & HANDLE; TOOL KIT	0F7JY 619
OWNER/OPERATOR MANUAL; NGV 7000 SERIES	0MRV3 620
PAINT, CAB & HOOD; SINGLE COLOR	0N5Z1 621
PRODUCT GRAPHIC; FRAME DRILLING & WELDING	0KD5K 622
Group 11 Clutch	**Figure**
CLUTCH CONTROLS MTG; HORIZONTAL LINK	06VKP 624
ROD,CLUTCH CONTROL*LOWER ROD A	3581044C91 626
CLUTCH INSTL; DANA	06MG9 628
CLUTCH PEDAL & SHAFT INSTL; W/ OR W/O PEDAL	06LQ5 630
PEDAL,CLUTCH (DCM)	3871566F91 631
INTMD CLUTCH CONTROLS; (LHD)	06VKH 633
LEVER,BELLCRANK CLUTCH CONT*AS	3582272C91 635
ROD, CLUTCH CONTROL ASSY	3544408C92 637
LOWER CLUTCH CONTROL INSTL	06VL5 639
Group 12 Engines	**Figure**
ACCEL PEDAL ASM	0W8VM 642
KIT,ACCEL PEDAL ASSY	2596214C91 643
PEDAL,ELECTRONIC ACCEL	3592631F93 644
AIR CLEANER INSTL	0RRLX 645
CLEANER ASM AIR DRY TYPE W/PR	3605668C91 646
AIR CLEANER PIPING INSTL; CLEAN AIR DUCT W/CAT & I	0RRLV 648
AIR RECIRC SEALS; RADIATOR, (ABR#6)	0M9RN 649
AIR RESTRICTION GAUGE INSTL	0RRLW 650
CAC PIPING INSTL; CUM ISM ENG	0MBRJ 652
PIPE,AIR, CAC COLD SIDE, ASSY	3674477C91 654
PIPE,AIR, CAC HOT SIDE, ASSY	3674177C91 655
COOLING PACKAGE; A/C CONDENSER,(ABR#5)	0M9RM 656
KIT,HARDWARE REPAIR CONDENSER	2591831C91 657
RADIATOR, CONDENSER	3605574F92 659
COOLING PKG MTG; RADIATOR	0M9RR 661
DEARTN HOSING INSTL; (CUM ISM ENG)	0MBYJ 662
DEARTN/SURGE TANK DECAL INSTL	0M9S5 664
ENG MTG INSTL; FRONT & REAR	0G55C 665
CROSSMEMBER ENGINE MTG ASSEMB	3581681C92 667
ENGINE HARNESS; W/CUMMINS ISM ENG	0K338 669
ENGINE WIRING INSTL; CUMMINS ISM ENGINE, N/EGR	0K337 670
FAN DRIVE HOSING INSTL; W/7600, 8600, W/CAT C10,C1	0FX8L 672

Info

COPYRIGHT© 2011INTERNATIONAL TRUCK AND ENGINE CORP.

https://truckmanualshub.com/

PARTS CATALOG CONTENTS

Group 12 Engines	Figure
FAN DRIVE INSTL; SS HDD W/HORTON & BORG WARNER	0PVQG 675
DRIVE,FAN & MTG ASM, 12TKS 21	3605645C92 677
FAN SHROUD INSTL; COOLING PKG, 32"	0M9RK 678
KIT,HARDWARE FAN SHROUD REPAIR	2591782C91 679
SHROUD,FAN	3605572F92 680
MAJOR COMPONENT LUBRICATION; MANUAL TRANSMISSION O	0FKZG 682
MAJOR COMPONENT LUBRICATION; OIL FOR LARGE BORE EN	0FXY8 683
MAJOR COMPONENT LUBRICATION; OIL FOR REAR AXLES	06WYK 684
OIL FILL/GAUGE INSTL; 7600, W/ISM EXPORT, W/2007 C	0RQWV 685
PIPE,OIL FILLER, ASSY	3674933C1 687
OPERATION/MAINTENANCE MANUAL; CUMMINS	0FY6P 689
PRODUCT GRAPHIC; ENGINE OIL	0G5H6 690
PRODUCT GRAPHIC; FAN DRIVE	0M9RT 691
RAD HOSING INSTL; (CUM ISM)	0MBRC 692
PIPE,RADIATOR, ASSY,UPPER	3605670C2 695
RAD STAY ROD INSTL; LOWER	0M9RS 696
RADIATOR ASM; RAD/CAC	0M9RJ 698
KIT,RAD CAC REPAIR	2591778C91 699
KIT,RADIATOR GROUND CABLE	2591821C91 700
RADIATOR	2592329C92 702
RADIATOR, ALUMINUM RAD/CAC	3605571F95 704
STARTING MOTOR INSTL; W/CAT C10,C11,C12,C13 ISM EN	0FS1H 705
SURGE TANK & MTG; DEAERATION	0M9RL 710
KIT, SURGE TANK REPAIR	2591791C91 711
RADIATOR, SURGE TANK SYSTEM	3605573F92 713
TANK,RAD SURGE	2594379C91 714
TRANS OIL COOLER; (ABR#7)	0M9S6 716
KIT,OIL COOLER	2592324C91 717
RADIATOR COOLER, XMSN OIL	2603229C91 718
RADIATOR, COOLER, XMSN OIL	3695846F91 719

Group 13 Transmission	Figure
CLUTCH HSG INSTL; W/FULLER, SPICER & MERITOR TRANS	0FK2V 722
CLUTCH HSG; FULLER FR(O)-X210B(C)	0P6CN 723
HOUSING,XMSH BELL ALSO FOR CLU	3567118F91 724
PRODUCT GRAPHIC, XMSN LABEL; SHIFT, SPANISH	0RK18 726
RR BEARING RETAINER; FULLER FR(O)-X210B(C)	0P6CF 727
RETAINER MASHFT REAR BRG*RR BR	3567114F91 728
SHIFT BAR HSG ASM; FULLER FR(O)-X210B(C)	0P6C2 730
HOUSING SHIFT BAR*FORWARD SHIF	3567093F91 731
XMSN BASE ASM; FULLER FR(O)-X210B(C	0P6BD 733
SHAFT,TRANS MAIN	2507195C91 734
TRANSMISSION L/HSG*EATON FR0(F	3567054F91 736
XMSN CONTROLS; AIR SUPPLY, XMSN, NGV	0G9L7 744
XMSN CONTROLS; MANUAL, W/M-NGV-SS-HDD & W/CAT ENGI	0J23M 745
HOUSING,CONTROL W/LEVER*CONTRO	3574829C91 747
LEVER,XMSN*SHIFTER LEVER ASSY	3558940C95 749
XMSN INPUT SHAFT; FULLER FR(O)-X210B(C)	0P6CW 751
SHAFT CLUTCH INPUT*2.00" INPT	3567122F91 752
XMSN OIL COOLER HOSING INSTL; 76/7700 TOC W/ C2000	0MBMG 754
HOSE, ASSY,XMSN OIL COOLER	M10AH00092 757
XMSN OIL PUMP; FULLER FR(O)-X210B(C)	0P6CK 759
COOLER OIL XMSN*LUBE PUMP-EATO	3567120F91 760
XMSN OPERATORS MANUAL; FULLER, SPANISH	0JG9H 762

COPYRIGHT© 2011INTERNATIONAL TRUCK AND ENGINE CORP.

https://truckmanualshub.com/

PARTS CATALOG CONTENTS

Group 13 Transmission	Figure
XMSN PTO; FULLER FR(O)-X210B(C)	0P6CZ 763
CTRSHAFT,W/O THRU-SHAFT PTO	3567136F91 764
XMSN WIRING INSTL; NGV	0NCY3 766

Group 14 Rear Axle	Figure
AIR BRK TUBING INSTL; PDL CONTROL, W/DANA OR MERIT	0GRRS 772
AXLE CONTROLS INSTL; HEND WALKING BEAM, N/IND CNTR	0GNXX 777
AXLE HSG; FWD RR	0VFKJ 781
HOUSING,F/R AXLE HND 2X2 N/ABS	3707298F91 782
AXLE HSG; RR RR	0VFL4 784
HOUSING,R/R AXLE HND 2X2 W/ABS	3707384F91 785
AXLE SHAFT HSG; FWD RR	0VJCR 787
SHAFT,F/R AXLE LH&RH DCDL 160	3707312F91 788
AXLE SHAFT; RR RR	0VJDS 789
SHAFT,RR AXLE RT160 LH&RH	3707305F91 790
AXLE STOP & MTG; REAR, W/HEND RT, RTE SUSP	07KYX 791
BREATHER COVER INSTL; ALL ARVIN MERITOR & DIRONA A	0W7D7 792
DIFF CARRIER; FWD RR AXLE	0VJCP 793
DIFF CARRIER; RR RR AXLE	0VJDP 794
DIFF RATIO; FWD RR AXLE	0VJCQ 795
GEAR SET,DIFF R/P 5.38	2589438C91 796
GEAR SET,F/R AXLE 5.38 RT160	3705281F91 797
DIFF RATIO; RR RR AXLE	0VJDQ 798
GEAR SET,R/R AXLE 5.38 RT160	3707354F91 799
FITTING, ELBOW; PDL CONTROL	0GRRV 800
INPUT YOKE; FWD RR AXLE	0VJCS 801
SHAFT,F/R AXLE INTPU YOKE 1810	3705291F91 802
LIFT AXLE CONTROLS; GROMMET, CAB FLOOR	0GGDZ 803
OUTPUT YOKE; FWD RR AXLE	0VJCT 804
SHAFT,F/R AXLE OUTPUT YK 1710	3705295F91 805
REAR AXLE INFO KIT	0VJFG 806
PRODUCT GRAPHICS,LABEL CAUTION	1651215C91 807
RR AXLE PLUG CHART	06WX8 808
RR AXLE SHAFT MTG HDWE	0P715 809
RR SPRING SUSP INSTL	076FG 811
SPRING & SADDLE ASSY RT440,460	598909C92 813
SPRING & SADDLE ASSY RT440,460	598910C92 815
RR SUSP PARTS; TORQUE ROD ASM, FWD/RR; 23 3/4"	0FVCQ 817
RR SUSP PARTS; TORQUE ROD ASM, RR/RR; 29"	0FVR5 818
SUSP BEAM INSTL; REAR, HENDRICKSON	076XS 819
BEAM,EQUAL W/RUBR BUSH 54" 46K	3536528C91 820
SUSP BRKT INSTL; TRANSVERSE TORQUE ROD	0VJFJ 822
TORQUE ROD INSTL; LONGITUDINAL, W/HEND RT SUSP	07KYW 824
TRANSVERSE TORQUE ROD INSTL; W/HEND RT SUSP	07KYK 825
WEIGHT CAPACITY RATING; RR RR AXLE	0VJDX 827
XMBR SUSP BRKT; SEVERE SERVICE	06ZMF 828
CROSSMEMBER, ASSY	1664559C93 52
CROSSMEMBER,SUSPENSION 7 PIECE	1670010C94 831

Group 15 Fuel Tanks	Figure
FUEL HOSING INSTL; W/CUM ISM ENG & W/LSM & DUAL UC	0KHQ8 834
TUBE ASM, FUEL LINE	SA00000000 841
TUBE, FUEL LINE	RA00000000 843
TUBE, FUEL LINE	SB00000000 845
FUEL TANK MODULE; LT SIDE CAP, (ABR#10)	0V091 847

Info

COPYRIGHT© 2011INTERNATIONAL TRUCK AND ENGINE CORP.

PARTS CATALOG CONTENTS

Group 15 Fuel Tanks	Figure
FUEL TANK, VENT & HOSE,DUAL	3605000F92 849
FUEL TANK MODULE; LT SIDE DRAW TUBES, (ABR#14)	0FTQK 851
FUEL TANK, FITTINGS, 23" D-	3589948F92 852
OUTLET,FUEL TANK, TUBE, FUEL T	3559217C2 854
FUEL TANK MODULE; LT SIDE MTD TANK, (ABR #2)	0FTGW 855
FUEL TANK*100 GAL N/P AL D-	3589922F92 856
FUEL TANK MODULE; LT SIDE SENDER, (ABR#12)	0FTPV 857
FUEL TANK FUEL SENDER 23	3869200F91 858
FUEL TANK MODULE; LT SIDE STEPS, (ABR#08)	0GLNF 859
FUEL TANK STEPS LSM	3580022F93 861
FUEL TANK MODULE; LT SIDE STRAPS, (ABR#6)	0FTH5 863
FUEL TK*LEFT SIDE 23" DEEP	3577265F94 864
STRAP,FUEL TANK MTG*STRAP ASSY	3559012C5 866
FUEL TANK MODULE; LT SIDE SUPPORTS,(ABR#4)	0FTH3 868
FUEL TK*SUPT FL TK FOR LSM	3577264F93 869
SUPPORT,FUEL TANK*FOR SS 23IN	3589340C1 870
FUEL/WATER SEPARATOR INSTL	0KHPP 871
LT SIDE FUEL TANK MTG	0FV9D 873
SUPPORT, ASSY FOR 23" DEEP SS	3884386C1 875

Group 16 Cab	Figure
A/C COMPSR INSTL; W/CUM ISM ENG	0J53H 878
COMPRESSOR AIR COND	3628699C1 879
AIR HORN INSTL; MTD RIGHT FRAME RAIL	0P1WR 880
CAB ASM; NGV	0HCPH 882
CAB,REGULAR,	3863714C91 884
DOOR,CAB LT, ASSY WELDED	3687177C92 886
DOOR,CAB LT, INNER ASSY	3687175C92 888
DOOR,CAB RT, ASSY WELDED	3687178C92 890
DOOR,CAB RT, INNER ASSY	3687176C92 891
FRAME,DOOR OPENING ASSY RH	3562419C3 893
FRAME,DOOR OPNG SUB-ASSY RH	3546331C5 895
HEADER,DOOR OPENING RR CRNR RH	3562417C1 897
PANEL, BACK ASSY WELDED CONV.	3511399C98 898
PANEL, DASH ASSY COMPLETE, LHD	3602956C92 900
PANEL,ASSY BACK WELDED	3511399C96 902
PANEL,ASSY SIDE BODY COWL RH	3544952C3 904
PANEL,ROOF ASSY WLDD W/O AERO	3511401C94 905
PANEL,SIDE BDY ASSY WLDD RH NG	3579430C91 906
PANEL,SIDE BODY ASSY WLDD LH	3579429C91 907
PANEL,SIDE BODY COWL LH	3544951C3 908
REINFORCEMENT,	3534377C3 909
REINFORCEMENT, CAB BACK PANEL,	3534376C5 910
REINFORCEMENT, CAB BACK PANEL,	3592808C2 911
REINFORCEMENT, DASH PANEL ASSY	3602952C2 912
REINFORCEMENT,, , FLOOR CENTER	3572053C2 914
REINFORCEMENT,CAB BACK PANEL	3592808C1 915
REINFORCEMENT,CAB BACK PNL LH	3534376C4 916
REINFORCEMENT,SILL OR SUB SILL	3510126C2 917
SILL,ASSY, ASSY REAR	3509307C5 918
UNDERBODY,ASM, CONV BB	3818932C91 920
CAB DASH INTERIOR TRIM INSTL; INSULATION	0XQ3B 922
CAB DOOR PANEL INSTL; FRONT LEFT DOOR TRIM	0SXVH 923
PANEL,DOOR TRM LH FRT STD MAN	3533752C94 924

COPYRIGHT© 2011INTERNATIONAL TRUCK AND ENGINE CORP.

https://truckmanualshub.com/

PARTS CATALOG CONTENTS

Group 16 Cab	Figure
CAB MTG; FRONT	0LLJR 925
BRACKET ASM,CAB FRONT MTG	3596416C91 929
CAB MTG; FRT	0WKT9 930
CROSSMEMBER,CAB REAR SUPT ASSY	3567192C93 931
SUPPORT, LT, CT CAB, SLOTTED	3589600C92 933
SUPPORT, RT, CT CAB	3582996C92 935
CAB MTG; RR	06QSL 937
CAB AIR SUSPENSION HIGH	3563057C94 939
CAB SEALING INSTL	0F26J 941
CENTER IP, GAUGE INSTL; SPEEDO & TACH (ABR #76)	0HT25 948
IP, CENTER MODULE (METRIC)	3604607F92 949
SPEEDOMETER,& TACH HEAD ASM, C	3604599C92 950
CLEARANCE/MARKER LT WIRING INSTL	06V2B 952
LIGHT,*INCANDESCENT AMBER	3524553C94 953
COAT HOOK INSTL INSTL	0JCJ7 954
COMPLETENESS; FLOOR MAT	0WLS0 955
MAT,FLOOR,	3881734C1 956
DCM BASE PLATE ASM	06LWF 958
DCM MOUNTING HARDWARE	06QS3 959
DOOR COMPONENT INSTL; CAB, W/VENT WINDOW	06MT8 961
HANDLE,WINDOW REGULATOR MANUAL	3508990C4 968
HINGE,WING WINDOW VENT, RH ASM	3546657C4 970
REGULATOR,DOOR GLASS LT, DOOR	3556202C96 971
REGULATOR,DOOR GLASS LT, DOOR	3556203C96 974
WINDOW,VENT LH	3567240C92 977
WINDOW,VENT RH	3567241C92 979
DRIVERS SEAT INSTL; W/BELT, NATIONAL	0FVYN 981
KIT, SEAT SHAFT ASSY W/BUSH	1660393C91 985
KIT,FRT SEAT CUSH ADJ REPAIR	2595024C91 987
KIT,SEAT BCK FRM TO LWR FRM	2505361C91 989
KIT,SEAT CHUGGER	1698197C91 991
KIT,SEAT CHUGGER LOCKOUT	2505379C91 993
KIT,TRACK SEAT ADJ	2505886C91 995
SEAT DRIVER HI AIR SUSP VINYL	3558490C93 997
ENGINE COVER INSTL	0JT53 1002
COVER, ENGINE HDD FRONT ASSY-P	3841735C91 1003
COVER, ENGINE HDD REAR ASSY-PA	3823561C91 1005
GRAB HANDLE & MTG; CAB, INTERIOR, A & B-PILLAR	06STC 1007
HEADER PANEL INSTL; FRONT	0D927 1008
LIGHT,DOME DRAWBRIDGE GRAY	3609781C1 1010
PANEL, OVERHEAD CONSOLE, STD	3546500C96 1011
HTR & A/C UNIT INSTL; W/DUCT	0QPGB 1013
AIR CONDITIONER,ASSY, LOW COST	3670125C93 1016
EVAPORATOR,AIR COND, ASSY-LOW	3670133C91 1018
EVAPORATOR,ASSY A/C W/FOAM	3670132C1 1019
FILTER,ASSY CAB FRESH A/C	3791081C91 1020
FILTER,DRIER AIR COND, ASSY, H	3670135C91 1021
HARNESS,CAB/PLATFORM WIRING BA	3545211C93 1022
HEATER, FRESH AIR ASSY-EXPORT	3677090C91 1025
HOUSING,HEATER W/O DOOR/SEAL	3674286C1 1027
TUBE, ASSY SUCTION LINE-LOW CO	3670136C92 1028
HTR OR HTR & A/C HOSE ROUTING; W/ CUM ISM ENG (SS	0RNXY 1029
EXTENSION, ANGLE BRKT ASSY	3850294C1 1035

Info

COPYRIGHT© 2011INTERNATIONAL TRUCK AND ENGINE CORP.

https://truckmanualshub.com/

PARTS CATALOG CONTENTS

Group 16 Cab	Figure
EXTENSION,, ASSY "Z" STYLE W/M	3538199C5 1036
HOSE, A/C, ASSY COMPRESSOR TO	3606259C94 1037
HOSE, A/C, ASSY CONDENSER TO	3605975C95 1039
HOSE,ASSY ACCUM TO COMPR	3606258C92 1041
PIPE,FLUID, CAB HEATER SUPPLY	3576520C92 1043
INSTR PANEL MTG & WIRING INSTL; CONTROL MODULE	06TRV 1044
INSTRUMENT PANEL INSTL; MTG HDWE FOR CUPHOLDER	06RNB 1045
COVER, INSTRUMENT PANEL,	3544344C3 1046
HOLDER,CUP 2-CUP W/ ASHTRAY	3553479C2 1047
INTERIOR TRIM INSTL; A-PILLAR	0D92B 1048
INTERIOR TRIM INSTL; BACK & SIDE,B-PILLAR COVERS	06SH9 1049
INTERIOR TRIM INSTL; CONV FRONT RIGHT DOOR TRIM	0SXSH 1053
PANEL,DOOR TRIM RH CONV FRONT	3558221C92 1054
INTERIOR TRIM; FLOOR MAT	0WLXG 1055
INTERIOR TRIM; HEADLINER	06SH8 1057
INTERIOR TRIM; KICK PANEL INSTL	06NKM 1060
IP MODULE EFFECTS, ABR#41, ENGINE OIL TEMP GAUGE	0DBW3 1062
GAUGE,ELTRNC*ENGINE OIL TEMPER	3533886C1 1064
IP MODULE EFFECTS; ABR#1, MAIN CARRIER ASM	06JTX 1066
INST PANEL MAIN CARRIER LHD	3511018F93 1067
IP MODULE EFFECTS; ABR#2, LEFT CLOSEOUT PANEL	06JV1 1069
INST PNL CLSTR CLSOUT LHD	3511042F93 1070
IP MODULE EFFECTS; ABR#22, RIGHT SIDE WARNING LIGH	06P5C 1071
HARNESS,WARNING LITES,W/PANEL	3550743C92 1072
IP,CLUSTER,RH WARNING LIGHTS	3550701F94 1074
IP MODULE EFFECTS; ABR#23, LEFT HAND SWITCH HOUSIN	0J7JK 1076
ELEC IP,3 SW HDLGT MOD-2LYR	3581699F91 1077
IP MODULE EFFECTS; ABR#3, RIGHT CLOSEOUT PANEL	06JV5 1079
INST PNL PASS CLSOUT LHD	3511056F93 1080
IP MODULE EFFECTS; ABR#30, COURTESY & DOME LIGHT W	0DC0X 1082
ELEC IP; DOME & COURTESY LIGHT	3549471F92 1083
IP MODULE EFFECTS; ABR#36, DOOR WIRING	0RWQD 1084
HARNESS,ELECTRICAL, MIRROR WIR	3581315C91 1085
HARNESS,POWER TRAIN D-LINK WRG	3549338C92 1087
IP, HT & LT MIR & W/ FUSE W	3598028F91 1089
IP MODULE EFFECTS; ABR#39, #1 AND #2 AIR GAUGES	0DBW1 1091
ELEC IP; GAUGES, CLUST	3545994F92 1092
GAUGE,ELTRNC*AIR 1 (ENGLISH)	3533883C1 1093
GAUGE,ELTRNC*AIR 2 (ENGLISH)	3533884C1 1095
IP MODULE EFFECTS; ABR#4, CENTER COVER ASM	06JV9 1097
INST PNL FLT CTR ASSY LHD	3511044F93 1098
PANEL,INSTR CNTR FLAT COVR LHD	3547254C1 1100
IP MODULE EFFECTS; ABR#40, TRANS OIL TEMP GAUGE	0DBW2 1102
ELEC IP; GAUGES, XMSN	3545995F92 1103
GAUGE,ELTRNC*TRANSMISSION OIL	3533885C1 1104
IP MODULE EFFECTS; ABR#46, GAUGE PRIORITY	0DBW8 1106
IP MODULE EFFECTS; ABR#7, HVAC CONTROL	06M0N 1108
DRIVER CONTROL, HEATER AND	3545546F95 1109
IP MODULE, HOUSING INSTL (ABR #20)	0LK4R 1110
IP, CLSTR HSG N/PRNDL, NO O	3599648F93 1111
IP MODULE, LCD DISPLAY; ODOMETER (ABR #74)	0FFCK 1112
ELEC IP; LCD N/EATON A	3554423F91 1113
IP MODULE, SWITCH ASM; HEATED MIRROR CNTRL (ABR #6	0J7LC 1114

COPYRIGHT© 2011INTERNATIONAL TRUCK AND ENGINE CORP.

https://truckmanualshub.com/

PARTS CATALOG CONTENTS

Group 16 Cab	Figure
ELEC IP,MIRROR HEAT ON/OFF	3582190F91 1115
SWITCH,ELECTRONIC MIRROR HEAT	3582129C1 1116
IP MODULE, WARNING LIGHTS; LT (ABR #75)	0FFCL 1118
IP,CLUSTER,LEFT WARNING LIGHTS	3604603F91 1119
IP MODULE, WIRING INSTL; WARNING LIGHT (ABR #77)	0FG0C 1120
ELEC IP,WARN LIGHT IGN ADAP	3588120F91 1121
MIRROR ASM & MTG; REAR VIEW	0M72R 1122
KIT,FLIP-OUT ARM LH	2507655C91 1123
KIT,FLIP-OUT ARM RH	2507656C91 1125
MIRROR,REAR VIEW, LH STD-HT-CV	3602836C95 1127
MIRROR,REAR VIEW, RH STD-HT-CV	3602840C95 1129
MODESTY PANEL INSTL; MTG BRKT	0VMB6 1131
SUPPORT,SKIRT FRONT MOUNTNG LH	3561821C2 1132
PASS SEAT INSTL; W/ BELT	0GWJ7 1133
SEAT,PASS 1/3 HI BCK GRAY VNYL	3575620C93 1135
PRODUCT GRAPHIC; CAB/HOOD, PRODUCT ID	0QLT2 1137
PRODUCT GRAPHIC; LEGISLATIVE	07M4J 1138
PRODUCT GRAPHIC,NOISE, EMISSIO	3593358C3 1141
PRODUCT GRAPHIC; NON-LEGISLATIVE	0FDGN 1142
REAR WINDOW INSTL	0FPSH 1149
SCUFF PLATE INSTL; LT/RT	06NKY 1150
SERVICE CAB ASM	0M56Q 1151
SERVICE CAB ASM; DRIVER CONTROL MODULE	0M3VN 1152
SERVICE CAB ASM; INSTRUMENT PANEL	0M3W4 1153
SERVICE CAB ASM; MATRIX	0M58J 1154
STEPS; AIR TANKS MODULE	0HKTX 1155
BRAKE*AIR TANK STEPS	3576210F92 1156
SUNSHADE INSTL; PAINTED, MOUNTING FOR NGV, LINE HA	0WTN6 1158
SUPPORT, ASSY, SUNSHADE	3554772C94 1160
SUPPORT, ASSY, SUNSHADE	3596417C93 1162
SWITCH INSTL, DOOR; DOME LGHT, MAGNETIC, STD/EXTD/	0J4WM 1163
SWITCH,DOR CNTRL DOME/CRTSY LT	3579984C1 1164
THERMAL INSULATION; INTERIOR TRIM	0JWV9 1165
TRANSMISSION COVER INSTL	0G4M9 1169
WINDSHIELD INSTL; W/REAR SIDE QTR WINDOW	0FPSJ 1170
WINDSHIELD WASHER INSTL	06TJY 1171
TANK,W/S WASHER, BOTTLE ASSY R	3561152C97 1188
TUBE,PLASTIC WSHR FILL W/CAP	3552649C1 1190
WINDSHIELD WIPER INSTL; W/BAFFLE ASM	06SLV 1191
ARM,W/S WIPER LHD DRVR SIDE	3535049C2 1197
ARM,W/S WIPER PASS, LH DRIVE	3535050C3 1198
BAFFLE,ASM MOTOR COVER, COWL	3710649C91 1199
WIPER,W/S ELECT, MODULE	3554255C98 1201
WIRING INSTL; CAB, STD, EXTD, CREW CABS	0JDY4 1202

Group 17 Wheels	Figure
FLUID; RR AXLE,F-200,WHEEL END,BOG	0KTH8 1204
FLUID; WHEEL/HUB,F-F16,SGL,FRTAXLE	0KNS2 1205
HDWE, RR AXLE RIM MTG; M22X1.5 NUT, W/10-STUD HUB	0MVFK 1206
HDWE; FRT AXLE RIM MTG,M22 - 1.5 MM NUT	0MTH4 1207
HUB CAP KIT; FRONT WHEEL	07T1Q 1208
CAP HUB FRONT OIL	2016460C91 1209
RIM, FRT AXLE; DISC WHEEL 1-PC	06LYK 1210
RIM; RR AXLE, DISC WHEEL, 1-PC	06M11 1211

Info

COPYRIGHT© 2011INTERNATIONAL TRUCK AND ENGINE CORP.

https://truckmanualshub.com/

PARTS CATALOG CONTENTS

Group 17 Wheels	Figure
WHEEL,DISC, 22.5X8.25DC, 285 S	3527746C2 1212
RR WHEEL HUB ASM; DISC	06LVQ 1213
HUB,REAR WHEEL W/DRUM*CAST	2014885C93 1214
SEAL & BRGS; WHEELS,RR AXLE	06M1J 1216
SEALS & BEARINGS; WHEELS, FRONT AXLE	07SZV 1217
SPARE WHEEL ASM; DISC, 22.5 X 9.00DC STEEL	0HQ8S 1218
VALVE,TUBELESS TIRE W/CAP	3500941C93 1219
TIRE VALVE & CAP; REAR WHEEL, TR572	0P6ML 1220
VALVE,TUBELESS TIRE W/CAP 3.75	158120R93 1221
TIRE VALVE ASM; W/CAP, TR573-E17	0S0RW 1222
VALVE,TUBELESS TIRE W/CAP	3500941C93 1219
TIRE; GOODYEAR, 12R22.5 UNISTEEL G	0M9JF 1224
TIRE; GOODYEAR, 315/80R22.5 G287 MSA	0N4JC 1225
WHEEL HUB ASM; FRONT, DISC, W/DRUM	06LXT 1226
HUB,FRT WHEEL W/DRUM	2035633C91 1227

4. APPENDIX

ABBREVIATIONS 1231
PART DESCRIPTION INDEX 1235
PART NUMBER INDEX 1299

COPYRIGHT© 2011INTERNATIONAL TRUCK AND ENGINE CORP.

Info

A BRIEF GUIDE TO USING THIS PARTS CATALOG

I. THE VEHICLE AND ITS SPECIFICATIONS 18
- **A. Automated Line Set Ticket (ALST)** 18
- **B. Understanding the Automated Lines Set Ticket (ALST)** 18
  - •Chassis Build Date 18
  - •Vehicle Identification Number (VIN) 18

II. CATALOG SECTIONS 19
- **A. Front Page** 19
- **B. Parts Catalog Contents** 19
- **C. Parts Catalog Guide** 19
- **D. Line Set Ticket** 19
- **E. Component Groups 01 through 17** 19
  - •Figures 19
  - •Reference Figures 20
  - •Non-Illustrated Reference Figures 20
  - •Kit Reference 20
- **F. Appendix** 21
  - •List of Abbreviations 21
  - •Part Description Index 21
  - •Part Number Index 21

III. NAVIGATING THROUGH THE CATALOG 21
- •The Bookmarks Window 21
- •The Navigation Bar 22
- •Paging Through the Catalog 22
- •Paging Through a Catalog Section 23
- •How to Display a Figure or Reference Figure 23

IV. SEARCHING FOR CATALOG ITEMS 23
- •How to Search a Figure or Reference Figure 23
- •How to Search the Part Description Index 24
- •How to Search the Part Number Index 24
- •Global Search 25

V. HOW TO PRINT A CATALOG 26

VI. COPYING CATALOG DATA TO THE CLIPBOARD 27
- •Selecting Data to Copy 27
- •Copying Data to the Clipboard 27
- •Appending Data to the Clipboard 27

VII. ZOOMING THE CATALOG IMAGE 27

VIII. THE POP-UP MENU 27

IX. ELECTRONIC PARTS CATALOG INFORMATION 28

COPYRIGHT© 2011INTERNATIONAL TRUCK AND ENGINE CORP.

I. THE VEHICLE AND ITS SPECIFICATIONS

A. Automated Line Set Ticket (ALST)

The LST is the vehicle build record. Each Unit Code represents a group of components or instructions used to manufacture the vehicle. The LST for the truck can be found in the Line Set Ticket Section of this Catalog

B. Understanding the Automated Line Set Ticket (ALST)

Since 1974 the Chassis Build Date has been stamped on the capacity plate of the truck, in the section called Date Mfg. This information has been used since 1974 in the Master Parts Catalog to identify parts differences due to design change. This is necessary since trucks are not always built in Chassis Number sequence. The Chassis Build Date is also stamped on all LST copies, except for the reduced size.

The number as stamped on the capacity plate is structured as follows:

9	-	8	-	75	-	1
MONTH		DAY		YEAR		SHIFT

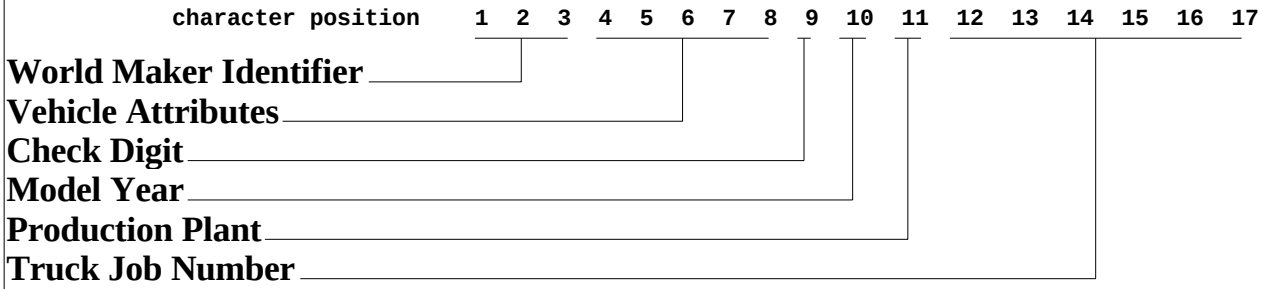

POSITIONS 1-3 WMI

1HT = U.S. PRODUCED TRUCK
1HV = U.S. PRODUCED BUS
1HS = U.S. PRODUCED TRACTOR
2HT = CANADA PRODUCED TRUCK
2HV = CANADA PRODUCED BUS
2HS = CANADA PRODUCED TRACTOR

POSITIONS 4-5 ATTRIBUTES

MODEL IDENTIFICATION

POSITIONS 6-7 ATTRIBUTES

ENGINE IDENTIFICATION

POSITION 8 ATTRIBUTES

GVW RANGE & BRAKE SYSTEM

GVW RANGE			BRAKE SYSTEM AIR	BRAKE SYSTEM HYD
0	TO	6000	A	B
6001	TO	10000	C	D
10001	TO	14000	E	F
14001	TO	16000	G	H
16001	TO	19500	J	K
19501	TO	26000	L	M
26001	TO	33000	N	P
33001	TO	55000	R	S
55001	TO	110000	T	U

POSITION 9 CHECK DIGIT

CALCULATED FROM OTHER 16 POSITIONS

COPYRIGHT© 2011INTERNATIONAL TRUCK AND ENGINE CORP.

POSITION 10 MODEL YEAR

L = 1990	V = 1997
J = 1988	W = 1998
K = 1989	X = 1999
L = 1990	Y = 2000
M = 1991	1 = 2001
N = 1992	2 = 2002
P = 1993	3 = 2003
R = 1994	4 = 2004
S = 1995	5 = 2005
T = 1996	6 = 2006

POSITION 11 PRODUCTION PLANT

A = CONWAY, ARKANSAS
B = TULSA, OKLAHOMA
C = CHATHAM, ONTARIO, CANADA
G = TRAILERS DE MONTEREY
H = SPRINGFIELD, OHIO
J = GARLAND, TEXAS
L or N = ESCOBEDO, MEXICO
R = AGRALE, BRAZIL

POSITION 12-17 JOB NUMBER

6 DIGIT TRUCK JOB NUMBER

Info

II. CATALOG SECTIONS

A. Front Page

Page 1 of the catalog contains some general information about the current chassis, including the identity of the original Purchasor, the Chassis Model and the Date the chassis was manufactured. It also contains CopyRight information for the catalog.

B. Parts Catalog Contents

The Parts Catalog Contents Section contains a listing of the Figures contained in the Catalog and their associated page numbers in the Catalog. This can be used, with a printed catalog, to locate a specific Figure. You may mouse double-click on an individual Figure to go directly to that Figure in the Catalog, when using the Electronic Catalog.

C. Parts Catalog Guide

The Parts Catalog Guide Section (the section you are now reading), contains information and instructions on how to easily use the Catalog, whether you are using it on-line or using a printed Catalog. Complete instructions for Navigating through the catalog using the Navigation Bar, finding parts by Part Number or Description and how to print a Catalog are covered in this Section

D. Line Set Ticket

This Section contains the information contained in the Chassis Line Set Ticket. The first section gives the features of the Chassis, including Model, Dimensions, Build Data and other information of importance.
After the intitial features are listed, the Line Set Ticket lists each of the Component Group Indexes, followed by each Unit Code contained within the Component Group. Some of the Unit Codes will be followed by (Cost Code).
This indicates the Unit Code is a Cost Code, and will have no Figures, Reference Figures or Data Information associated with it.

E. Component Groups 01 through 17

There are 17 Component Group Folders show in the Bookmarks Window. By clicking the mouse on the Box [+] to the left of each Component Group Folder, you may open the Folder and display the Figures and Reference Figures contained in the Component Group. There are two types of figures shown, that can be distinguished by their different Icons. The first type of figure is a Figure, that has the following Icon associated with it:
You can open the Parts Detail associated with the Figure by double-clicking the mouse on the Figure Icon. This will cause the parts detail of the Figure and a Parts Illustration (if not a Non-Illustrated Figure) to be displayed on the screen.

Figure Icon

You can open the Parts Detail associated with the Figure by double-clicking the mouse on the Figure Icon. This will cause the parts detail of the Figure and Parts Illustration (if not a Non-Illustrated Figure) to be displayed on the screen.

COPYRIGHT© 2011INTERNATIONAL TRUCK AND ENGINE CORP.

Each page of the Figure Parts Detail will contain one or more rows of information, contained in the columns shown below:

Item	Part#	Qty	Description	Kit	Var	Fig
005	1664568C95	1	CROSSMEMBER, CAB OR BODY MTG			1664568C95
	1664568C95	1	FOR PARTS LIST SEE 1664568C95			1664568C95
025	1664608C3	1	CROSSMEMBER		03ZN2	1664608C3
	1660004C2	1	CROSSMEMBER, REAR		03ZN2	1660004C2
	1660004C2	1	SEE NOTE 2		03ZN2	1660004C2
030	414053C1	6	BOLT, HEX-HD 1/2-20UNF X 1-3/4 IN.		03ZN2	

The first column is a reference number used to find the part on the Illustration (if not a Non-Illustrated Figure), the second column is the Part Number, the third column contains the number of the items used, the next column contains the Part Description, the fifth column contains any Kit References, the sixth column contains the Variation Number and the last column contains references to either Illustrated or Non-Illustrated Figures, that provide more detail by exploding the part.

The third line refers to a Reference Figure. Reference Figures are designated by being colored green in the Figure Parts Detail Lines. Examples are lines 3, 4 and 5 in the Parts Figure Detail shown above. Reference Figures have their own Parts Illustration and detail. All Reference Figures associated with a Figure are shown immediately below their parent Figure in the Book-marks Window. They have the following Icon associated with them;

Reference Figure Icon

Notice that line 1 and 2 of the Parts Figure Detail shown above are colored red. This indicates they are Non-Illustrated Reference Figures. These may be present in either Figures or Reference Figures. Although these items do not have an illustration, they do contain additional detail about the part. These items are expanded below all other parts in either a Figure or Reference Figure Parts Detail listing at the end of the listing, as shown below:

			NON-ILLUSTRATED REFERENCE FIGURE 1664568C95	
001	473323C4	1	CROSSMEMBER, CAB RR	473323C4
002	468836C4	2	BRACKET, CAB MTG XMBR LT	
003	468837C5	2	BRACKET, CAB MTG XMBR RT	
004	414052C1	12	BOLT, HEX-HD 1/2-20UNF X 1-1/2 IN.	
005	414087C1	12	WASHER, HEX-LK	

Notice that the Reference Figure 479929C4 shown in the above Non-Illustrated Reference Figure. This is the green line. This Reference Figure will be listed in the Booksmarks Window, immediately after the Figure. Non-Illustrated Reference Figures may also contain references to additional Non-Illustrated Reference Figures. In this case the lines will be red. These Non-Illustrated Reference Figures will be expanded at bottom of the Figure

Some Figures and Reference Figures will make reference to kits. The kit reference will be shown in the Qty column as "KT". This will be followed by (CONSISTS OF PARTS DENOTED BY KA) where KA is the kit identifier. There may be several kits in a figure detail, each denoted by a a different kit identifier, ie: KA, KB, KC, etc. This can be seen on the next diagram.

Alias Figure Icon

An Alias Icon represents a Figure that is in another section of the catalog. Clicking on the Alias Figure will take you to that section. For example: You may be looking for vehicle brakes. On a front wheel driving axle, the brakes may be in Section 02 - Front Axles. This lets you find the brakes in Section 04 - Brakes, where you may expect them to be.

COPYRIGHT© 2011INTERNATIONAL TRUCK AND ENGINE CORP.

Info

Item	Part#	Qty	Description	Kit	Var	Fig
004	56121R3	2	SEAL, BRAKE CAMSHAFT			
005	1693181C1	1	RING, O BRAKE SPIDER			
006	983622R1	2	PIN,BRK SHOE ANCHOR			
007	262365C1	A	RIVET,BK SHOE LINING	KA		
008	577652C1	2	RETAINER, BRK ROLLER			
009	126404R1	2	ROLLER, BK SHOE			
010	577653C1	2	PIN,BRK SHOE ANCHOR			
011	577654C1	1	WASHER,FLAT SPECIAL			
012	1693182C1	1	SPRING,BRK SHOE RETURN			
013	1685491C1	2	SPRING,BRK SHOE RETAINER			
014	24861R1	4	BOLT, 1/2 X 1-1/4 PHC TYPE 8			
015		2	SHOE, BRK W/LINING 162	KB		
016		2	LINING, BRAKE SHOE	KA		
870	1693188C91	KT	SET, LINING ABB931-162			
	1693188C91	KT	(CONSIST OF PARTS DENOTED BY KA)			
871	KSR3014707	KT	KIT, BRK SHOE W/LINING			
	KSR3014707	KT	(CONSIST OF PARTS DENOTED BY KB)			

Notice the kit identifiers KA and KB in the Kit column of the Figure Parts Detail. This indicates that the part containing the kit identifier in the Kit column is contained in the indicated kit. In this case 2 "LINING, BRAKE SHOE" and a "RIVET,BK SHOE LINING" are contained in the kit with kit identifier KA.

The Appendix Section of the catalog contains three sections. The first section is the List of Abbreviations. This section contains, listed in alphabetic order, abbreviations that are used in the catalog. This provides a quick lookup for users who may encounter an abbreviation that they do not understand.

The second section contains, listed in alphabetic order by Part Description, a complete listing of all parts referred to in any section of the catalog. This is titled Part Description Index.

The final section contains, listed in ascending part number order, a complete listing of all parts that are referred to in any section of the catalog. This is titled Part Number Index.

When using either the Part Description Index or the Part Number Index, you may go directly to the Figure or Reference Figure containing the part, by double-clicking the mouse on the line containing the part.

III. NAVIGATING THROUGH THE CATALOG

The two primary methods of navigating through the catalog are the Bookmarks Window and the Navigation Bar. A portion of the Bookmarks Window is shown in the next diagram.

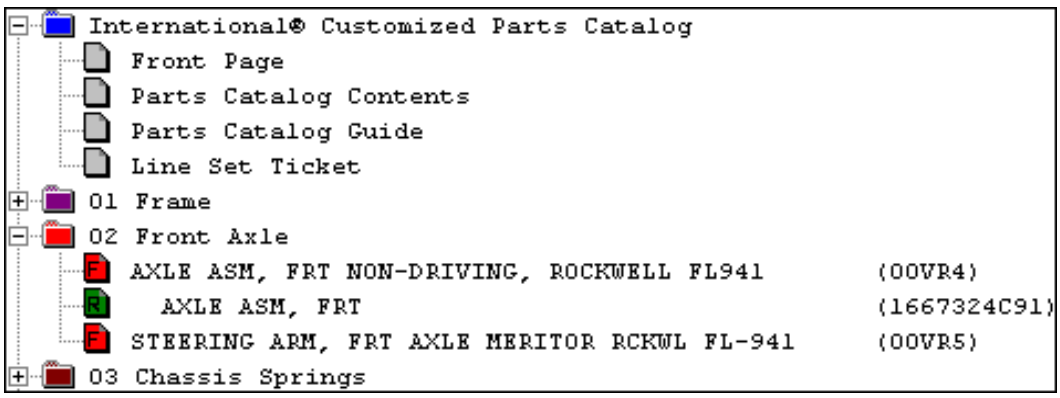

COPYRIGHT© 2011INTERNATIONAL TRUCK AND ENGINE CORP.

The Bookmarks Window contains a folder for each Catalog Section. Typical folder Icons are shown below. The Icon on the left is in the closed position, this is indicated by the small small plus sign inside the box. The Icon on the right is in the open position, this is indicated by the small minus sign inside the box. To open or close a folder, simply click the mouse with the cursor positioned over the small box containing the plus and minus signs.

Each folder will normally contain one or more page Icons. In some cases a Group folder may be empty. This will occur when no items in the Group are installed on the Chassis. There are three types of page Icons. They represent individual pages in the catalog. To display the page represented by a page Icon, position the cursor over the page Icon of interest and double-click the mouse button. The three types of page Icons are shown below:

The Information Icon represents all pages except for the Figure, Reference Figure and. Alias pages. For example, the Catalog Index, Part Description Index and Part Number Index are represented by Information Icons.

The second method of navigating through the catalog is by using the Navigation Bars. These are dockable bars located at the top and right of the Custom Parts Catalog Window. The Navigation Bars are shown below:

The Navigation Bars can be divided into six functional sections: Printing and Opening Files, Catalog Browsing, Catalog Searches, Section Browsing, History, Copy/Append and Zoom:

Open File and Print Catalog Buttons

The Printing Function is used to print a copy of the catalog. It's use is covered later in this section of the catalog. The File Button is used to open a new Chassis File.

Copy and Append Buttons

Zoom-In and Zoom-Out Buttons

The Clipboard Copy and Append Buttons are used to copy and append data to the System ClipBoard. The Zoom-In and Zoom-Out Buttons are used to select a normal or full screen view of a Catalog Page. The use of these four buttons is explained later in this catalog section.

Catalog Browsing Arrows

The Catalog Browsing Arrows are used to browse through the catalog one page at a time. The Previous Page Arrow (on the top) is used to move one page back and the Next Page Arrow is used to move one page forward in the catalog. If you are at the first page of the catalog, the Previous Page Arrow will be disabled. If you are at the last page of the catalog, the Next Page Arrow will be disabled. The Browse Arrows are located below the right scroll bar, in the bottom right corner of the screen.

Catalog Search Buttons

The Catalog Search Buttons are used to do searches for specific part numbers or descriptions when a Figure, Reference Figure, Part Description Index page or Part Number Index page is being viewed. Their use will be explaned later in this section.

COPYRIGHT© 2011INTERNATIONAL TRUCK AND ENGINE CORP.

A section is a group of pages associated with one of the major catalog sections. For example all of the pages contained in the Line Set Ticket Group are contained in the Line Set Ticket Section, all of the pages associated with a Figure or Reference Figure are contained in the the section for that particular Figure or Reference Figure.

The Section Page Browse Buttons are used to browse through the pages of a section. When you are displaying the first page of a section, the Section Previous Page Button (button on the left below) will be disabled. When you are displaying the last page of a section, the Section Next Page Button (button on the right below) will be disabled. These two buttons are used in all sections:

Section Page Browse Buttons

The Figure or Reference Figure First Page button (button on the left above) is only used when Figures or Reference Figures are being displayed. When displaying other sections, this button will be disabled. This button is used to return to the first page of a Figure or Reference Figure Section. This allows you to quickly go to the first illustration for a parts illustration reference. Some Figures and Reference Figures have more than one illustration associated with them. This button will return you to the first illustration in the section

The Section Browse Buttons will be disabled if a Figure or True Figure section is being displayed and the figure information is contained in only one page.

The History Browse Buttons (shown below) are used to navigate to screens previously visited. Items selected by clicking on an item in the Bookmark Window, the Parts Contents Section, the Part Description Index or the Part Number Index are added to the history record.

History Browse Buttons

The History Browse Buttons can be very useful when switching from either the Part Description Index, Part Number Index or Contents Section to Figures and then back to the preceeding section

The methods that can be used to display a Figure or Reference Figure are:

- Double-click with the mouse positioned on the appropriate icon in the Bookmarks Window
- Browse through the catalog using the Catalog Browse Arrows
- Double-click on a line in the Part Description Index
- Double-click on a line in the Part Number Index
- Double-click on a Figure line in the Parts Catalog Contents Section

IV. SEARCHING FOR CATALOG ITEMS

You may search three sections of the catalog for part number, descriptions or any character string. The three sections that can be searched are Figure or Reference Figures, the Part Description Index or the Part Number Index. The Search buttons will be disabled when any other section of the catalog is being displayed. Searches are done using the three buttons shown below. They are located on the Navigation Bar:

Search Buttons

To start a search click on the Search Button (button in the middle above). This will bring up the Enter Search String dialog, that is shown below. Enter the string you wish to find, and press Find on the dialog. If the string is not found in the section, a second dialog will be displayed advising you that the string you entered was not found. The search string is not case sensitive. You may enter gasket or Gasket, and all occurrances of gasket will be found.

COPYRIGHT© 2011INTERNATIONAL TRUCK AND ENGINE CORP.

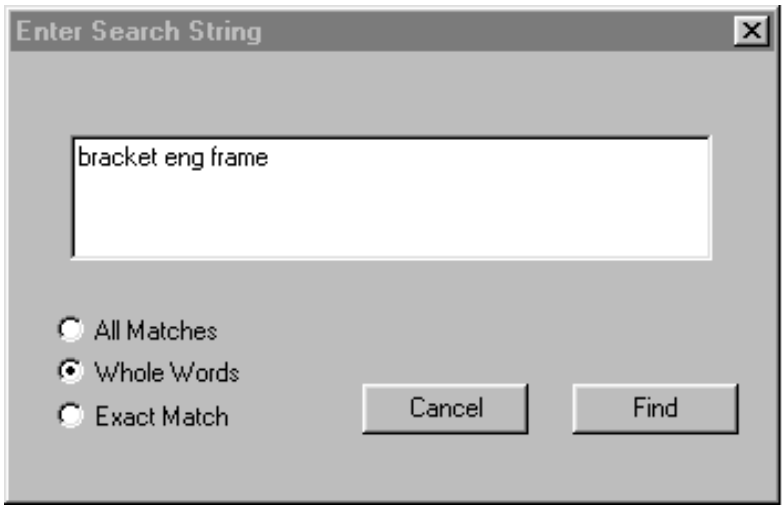

Three search options are available:

All Matches:
All occurrances of the search string, including those embedded in words, will be found.

Whole Words:
Multiple words can be entered, in any order, and the search will find lines containing those whole word combinations. For example ("nut size hex" will find the line containing "nut, hex Give Size")

Exact Match:
Only exact word matches, of the entered string, will be found.

If the search string was found in the section being searched, all occurrances of the search string will be highlighted on the first page that the search string was found. The first search item found will be highlighted in blue and other finds will be highlighted in yellow. If there is more than one item found, the Search Forward button (button on the right above) will be highlighted. If you click on the Search Forward Button the selection will move to the next location of the string in the section. At this point, the Search Back Button (button on the left above) will be enabled, allowing you to move back to the previous position. If you are at the first position of the search string in the section the Search Back Button will be disabled. If you are at the last location of the search string in the section, the Search Forward Button will be disabled. If there is only one occurance of the string in the section both the Search Back and Search Forward Buttons will be disabled. A typical search result, for the search string "filter" is shown below:

Part No.	Description	Group	Figure	Page
1618318C91	GENERATOR, 12V 160 AMP	8	00198	159
1618386C91	FILTER, FUEL & WATER SEPARATOR	15	03SL0	394
1618386C92	FILTER, FUEL	15	03SL0	394
1618585C1	BRACKET, REAR MIRROR MTG	16	02P67	506
1618678C91	LIGHT ASSY TURN SIGNAL LH AMBE	8	02J82	132
1618679C91	LIGHT ASSY TURN SIGNAL RH AMBE	8	02J82	132

If you place the mouse on the selected (blue) search line and double-click the mouse button, the Figure 03SL0 will be displayed on the screen. This feature is only available when doing a search in the Part Description Index or the Part Number Index section, and is not available when you are doing a search in a Figure or Reference Figure section.

COPYRIGHT© 2011INTERNATIONAL TRUCK AND ENGINE CORP.

You can search for words globally across the catalog. You can find a popup menu item 'Global Search' when you right click on any page. This will bring up the Enter Search String dialog, that is shown below. Enter the string you wish to find, and press Find on the dialog. If the string is not found in the section, a second dialog will be displayed advising you that the string you entered was not found. The search string is not case sensitive. You may enter gasket or Gasket, and all occurrances of gasket will be displayed in a dialog box as shown below.

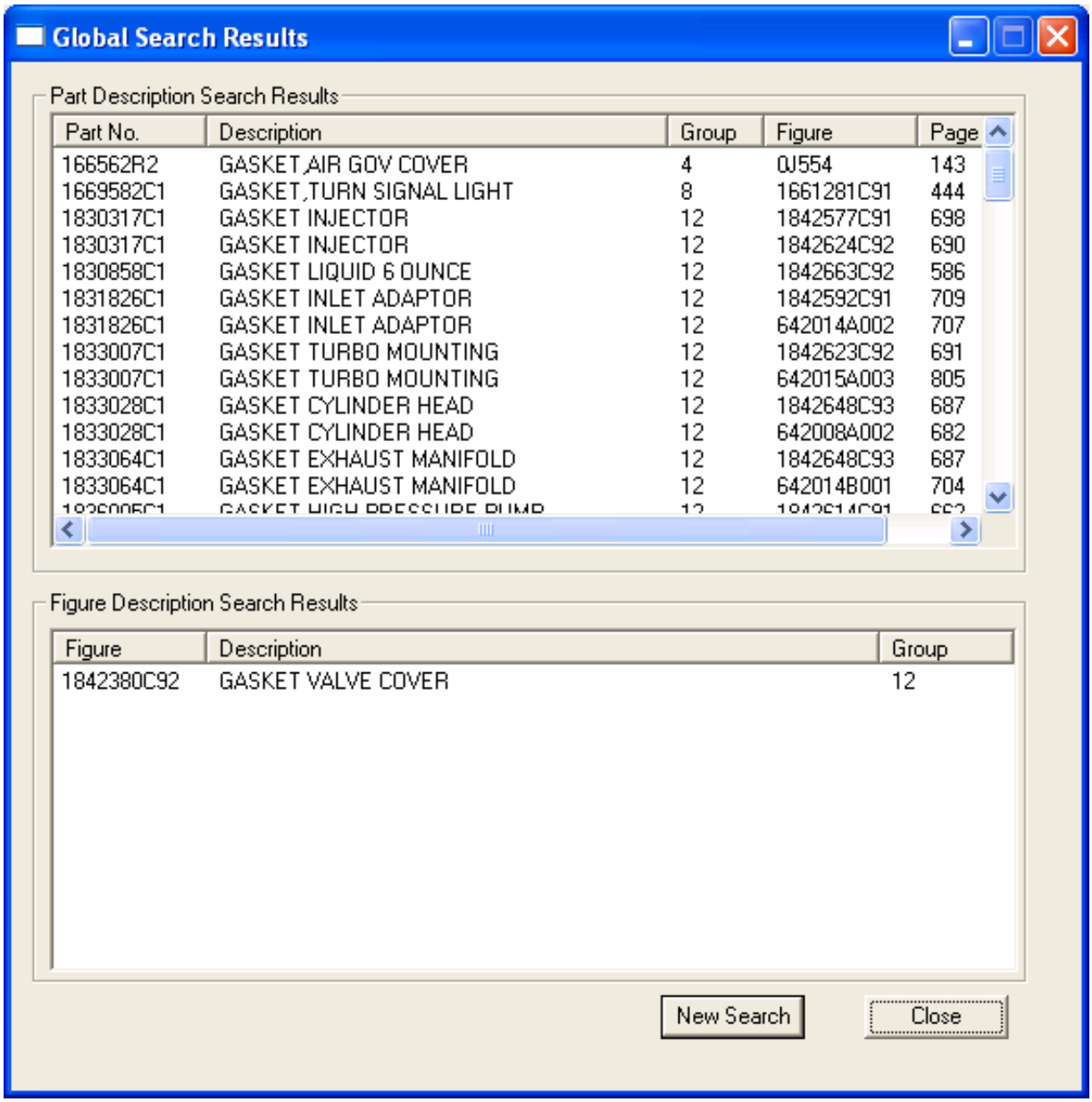

The result dialog has two parts that display the search results found. The first part displays the string match found in the catalog pages and the second part display the string match found in the navigation pane. Both parts can be sorted ascending or descending by clicking on the column header Doubleclick on the resultant rows to take you to the corresponding info on the catalog page. However your result dialog will remain on the foreground. You can minimize the window dialog box to have a full view of the catalog pages

Click on the 'Close' button to close the result dialog. Click on 'New Search' to search for a new string. The results of a new page will be opened in a new dialog box which will be tiled to the previous search dialog box

COPYRIGHT© 2011INTERNATIONAL TRUCK AND ENGINE CORP.

V. HOW TO PRINT A CATALOG

Your Custom Parts Catalog can be printed on any Windows compatible printer, capable of printing color or grey scale. It is recommended that you print the catalog in color so as to not lose Reference Figure and Non-Illustrated Reference Figure color indicators. To print your catalog, simply click on the Print button on the Navigation bar:

Print Button

After clicking on the Print button a Print Dialog will be displayed on the screen. The actual dialog look will vary, depending on which printer you are using. A typical print dialog is shown below:

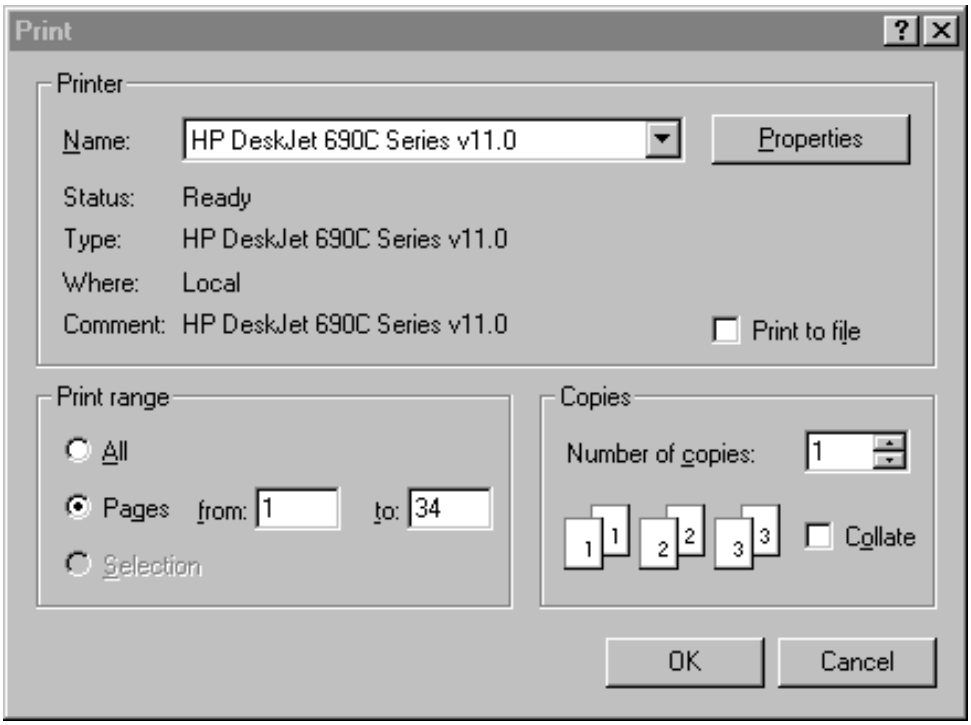

At this point you either click the All button to print the entire catalog or enter the specific pages you wish to print in the From and To edit lines. In the example shown, the user has elected to print pages 1 to 34. After selecting the pages to print, press the Print button

If you have access to a color or grey scale printer with duplex capability, you can print your catalog two sides to a page. This makes a great catalog, and reduces the number of catalog pages by one-half. When printing on a duplex (two sides to a page) printer, be sure that the printer automatically inserts gutters for left and right pages, or can be set to provide page gutters. Even page numbers are left side pages and odd page numbers are right side pages.

When printing a catalog it is easier if you print on paper that is prepunched for the type of binder the manual will be placed into. Prepunched paper is available through your local paper supplier.

COPYRIGHT© 2011INTERNATIONAL TRUCK AND ENGINE CORP.

Info

VI. COPYING CATALOG DATA TO THE CLIPBOARD

Copy and Append Buttons

You may copy data from three sections of the catalog to the System Clipboard. Data can be copied from the Figure or Reference Figures, the Part Description Index or the Part Number Index. The copied items can then be pasted into a word processor or spreadsheet program. This feature can be useful for preparing parts lists for repair estimates or part orders.

These buttons will be disabled until you select an item or multiple items using standard Windows text selection methods (i.e. click click and extend with the Shift Key and click and add or delete with the Ctrl Key). The Copy button replaces the current clipboard contents with the selection and the Append Button will add the selection to the end of the clipboard.

You can use the Select All (Ctrl-A) to select an entire page of a section. To select the entire section, use Select All for the first page, then go to the last page of the section, hold down the Shift Key and single click on the last line of data.

VII. ZOOMING THE CATALOG IMAGE

Zoom-In and Zoom-Out Buttons

You may use the Zoom-In and Zoom-Out buttons to zoom in and out on the catalog pages. This allows you to see the entire page, when you have selected the zoom out button. To return to the normal view, simply click on the Zoom-In button. Selections and Search details will not be visible when you have selected the Zoom-Out option, but will return when you select the normal view by clicking the Zoom-In button.

VIII. THE POP-UP MENU

Click the right mouse button in the main screen to view the Pop-Up menu shown below:

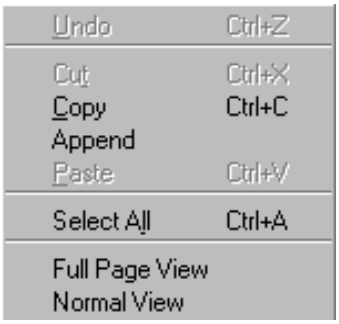

The Pop-Up menu provides you with a quick and handy method to perform the following tasks:

Copy, Append and Select All
These options, explained earlier in this section, are only available when you have a Figure Reference Figure, Description Index or Part Number Index view selected.

Full Page View and Normal View
These options allow you to quickly toggle the view between Full Page and Normal.

COPYRIGHT© 2011INTERNATIONAL TRUCK AND ENGINE CORP.

IX. ELECTRONIC PARTS CATALOG INFORMATION

This catalog is available in electronic form delivered on CD-ROM format. It is available in the of the following format:

Microsoft Windows

Minimum System Requirements for Microsoft Windows

Windows 98, Windows 2000 or Windows XP
1029 X 768 Pixel Monitor
16 bit Color
CD-ROM Drive

To order an electronic form of the catalog, contact your International© Dealer, who will provide you with complete ordering information

COPYRIGHT© 2011INTERNATIONAL TRUCK AND ENGINE CORP.

https://truckmanualshub.com/

LINE SET TICKET

Chassis: CN535111

PROP SHAFT LOCATIONS
1 0429DTC0930
3 0429DTM0910
4 0427DTP0515

Info

ORDER NO..... 566896
TRUCK MODEL..... 7600 SBA 6X4
TRUCK SALES REGION.... 830
SOLD TO..... CONTRUCCIONES EL CONDOR
DEALER..... 987560

AF DIMENSION.....0190.0
GVWR.....64180
BUILD DATE.....1/18/2011
VIN.....3HTWYAHT0CN535111
WHEEL BASE.....0490.0

GEAR RATIO.....05.38
IGNITION KEY.....Z000
ORDER QUANTITY.. 5
ENGINE NUMBER....035280201

Group 01 Frame

0001570	TWO FRONT TOW HOOKS
0001CBU	FRAME RAIL 120,000 PSI YIELD 480.0" OAL
0001GBP	FRAME REINF-OUTER "C"
0001LLA	FRT BUMPER-SWEPT BACK (STEEL)
0001WAC	4 IN FRT BMPR EXT (Cost Code)
0001WBC	1 HD BOGIE CROSSMEMBER (Cost Code)
0001WHP	WHEEL BASE RANGE 183" THRU 248" (Cost Code)

Group 02 Front Axle

0002ARY	MERITOR MFS-20-133A 20K FT AXLE WIDE TK

Group 03 Chassis Springs

0003708	FRONT SHOCK ABSORBERS (Cost Code)
0003ACS	20,000-LB FRONT MULTILEAF SUSPENSION

Group 04 Brakes

0004091	TRUCK DUAL AIR BRK SYSTEM
0004193	16.5"X 6" W/24" LONG STROKE
0004732	BERG DRAIN VALVE W/PULL CHAIN (Cost Code)
0004AZG	OMIT AIR BRAKE ANTILOCK SYSTEM (Cost Code)
0004EBS	AIR DRYER BENDIX (AD-9)
0004ETE	FRT CHAMBERS HALDEX 24" (Cost Code)
0004EVL	REAR BRAKE CHAMBERS HALDEX GC3030LHDHO (Cost Code)
0004LAA	HALDEX AUTO SLACK ADJUSTERS-FRT (Cost Code)
0004LGA	HALDEX AUTO SLACK ADJUSTERS-REAR (Cost Code)
0004NDB	16.5X7 R S-CAM BRKS 30/30 L/S CHAMBERS
0004SPA	18.7-CFM CUMMINS AIR COMPRESSOR
0004WDW	CHMBRS LOCATED INSIDE RR TIRE ENVELOPE (Cost Code)
0504013	MOUNT 2 AIR TANKS
0504058	AIR TANK VOLUME ID NOMINAL 6054 (Cost Code)
0504061	SPRING BRAKE VALVE RELAY (Cost Code)
0504201	STANDARD AIR TANK DRAIN VALVES (Cost Code)
0504360	STEEL AIR TANK W/THREAD O-RING PORTS (Cost Code)
0504396	MOUNT 1 AIR DRYER INSIDE LT RAIL BOC (Cost Code)
0504433	MERITOR R403 FRONT BRAKE LININGS (Cost Code)
0504435	MERITOR R301 REAR BRAKE LININGS (Cost Code)
0504441	MERITOR Q-PLUS FRONT BRAKE (Cost Code)
0504442	MERITOR Q-PLUS REAR BRAKE (Cost Code)
0504470	FRONT DUST SHIELDS FOR AIR BRAKES (Cost Code)
0504471	REAR DUST SHIELDS FOR AIR BRAKES (Cost Code)

Group 05 Steering Gear

0005708	TILTING STEERING COLUMN (Cost Code)
0005CAL	18" DIAMETER STEERING WHEEL
0005PTB	SHEPPARD M-100/M-80 DUAL POWER STEERING

COPYRIGHT© 2011INTERNATIONAL TRUCK AND ENGINE CORP.

https://truckmanualshub.com/

LINE SET TICKET

Group 06 Propeller Shafts

0506001	TRANSMISSION OUTPUT YOKE
0506007	FORWARD REAR AXLE INPUT YOKE
0506008	FORWARD REAR AXLE REAR OUTPUT YOKE
0506010	REAR REAR AXLE INPUT YOKE
0506100	DRIVELINE LABOR
0506102	FIRST CENTER BEARING
0506110	CENTER BEARING MOUNTING PARTS

Group 07 Exhaust

0007BAV	EXH SGL HORZ/VERT RSM UNDER CAB
0007MAL	TURNBACK TAIL PIPE,NON-BRTFINISH,SINGLE (Cost Code)
0007SAM	ENG COMPRESSION BRAKE (JACOBS) (Cost Code)
0007WZZ	HEAT SHIELD; UNDER CAB EXHT CONTAIN SYS (Cost Code)

Group 08 Electrical

0008000	ELEC SYS (12 VOLT)
0008518	CIGAR LIGHTER (Cost Code)
0008540	DUAL ELECTRIC HORNS (Cost Code)
0008585	TOGGLE SW/WIRING-CUSTMR MTD DR/FOG LGHTS (Cost Code)
0008787	RADIO ACC.PKG(WIRING-ANT.-SPKS.)
0008871	START MOTOR (DELCO MT-42 TYPE 450) O/C (Cost Code)
0008GGB	135 AMP 12V ALT DELCO 35-SI
0008HAB	BODY BLDR WIRING BOC OR U/C AT LT FRAME (Cost Code)
0008MPT	BATTERY SYS 3 12-V 1950CCA EXIDE
0008TMH	SWITCH AUX ACCESSORY CONTROL (Cost Code)
0008WBW	'JUMP-START' STUD TERMINAL (REMOTE MTD)
0008WCL	1 AIR HORN BLACK
0008WGL	WIPER SLOW INTERMITTENT W/PARK BRAKE (Cost Code)
0008WMA	SPECIAL WIRING F/CUST FURN LITE
0008WML	HEADLIGHTS (2) LONG LIFE HALOGEN (Cost Code)
0008WPZ	TEST EXTERIOR LAMPS EXCEPT BACK UPS (Cost Code)
0008WRB	HEADLIGHTS ON WITH WIPERS (Cost Code)
0008XAH	MANUAL-RESET CIRC BREAKERS (MAIN PANEL) (Cost Code)
0508005	BATT BOX 2/3/4 BACK RIGHT SIDE FUEL TANK
0508010	AIR SOLENOID 4-PAK NO ECU OR J1939
0508014	STOP TURN TAIL B/U INSIDE RAIL (Cost Code)
0508050	ELECTRICAL SYSTEM MUX FOR ESC ONLY

Group 09 Front Sheet Metal

0009585	RUBBER FENDER EXT
0009HBM	STATIONARY GRILLE CHROME (Cost Code)
0009WAC	BUG SCREEN (Cost Code)
0009WBC	FIBERGLASS TILT FE 3 PIECE 2007 & 2010

Group 10 Miscellaneous

0010060	SINGLE COLOR 100 PT SCHEMATIC (Cost Code)
0010210	EMISSION LABELS (FUEL ECONOMY/NOISE) (Cost Code)
0010506	RIM WRENCH AND HANDLE
0010761	PAINT-BASE COAT/CLEAR COAT 1-2 TONE (Cost Code)
0010NHJ	IDENTITY CODE FOR COLOMBIA (Cost Code)
0010WAS	IDENTITY CODE (SPANISH) (Cost Code)
0510000	BULK MATERIAL
0510002	SERVICE ASM; CAB, DCM, HARNESS, IP
0510908	RED EXTENDED LIFE COOLANT EFFECTS (Cost Code)
0510923	ENGINEERING PROG ID NON-2007 EMISSIONS (Cost Code)
0510926	ENGINEERING PROG ID 76 WAY CONNECT (Cost Code)
0510993	VEPS IDENTITY (Cost Code)
0535008	PAINT CHASSIS COLOR GROUP NO. 08
0535011	IDENTITY CODE FOR STD PAINT COLORS ONLY (Cost Code)
0535911	PAINT COLOR GROUP PT1 NO.1

COPYRIGHT© 2011INTERNATIONAL TRUCK AND ENGINE CORP.

https://truckmanualshub.com/

LINE SET TICKET

0595008	ESC PROG AIR PRESSURE GAUGE/AIR BRAKE (Cost Code)
0595014	ESC PROG PARK BRAKES W/IND LIGHT (Cost Code)
0595015	ESC PROG BRAKES SWITCH (Cost Code)
0595017	ESC PROG ENGINE COMPRESS BRAKE (Cost Code)
0595018	ESC PROG HEADLIGHTS DAY/RUN (Cost Code)
0595019	ESC PROG FOG LIGHT ACCOMM PACKAGE (Cost Code)
0595021	ESC PROG TURN SIGNAL/BRAKE (Cost Code)
0595022	ESC PROG AIR HORN W/ OR WITHOUT SWITCH (Cost Code)
0595023	ESC PROG ELECTRIC HORN CITY KEYLESS ENTR (Cost Code)
0595024	ESC PROG DOME LITE W/DIM & KEYLESS ENTRY (Cost Code)
0595027	ESC PROG DIAGNOSTICS (Cost Code)
0595030	ESC PROG TRAILER MARKER LIGHT (Cost Code)
0595031	ESC PROG IGNITION KEY OR KEYLESS (Cost Code)
0595037	ESC PROG CLUTCH SWITCH (Cost Code)
0595040	ESC PROG DIFFERENTIAL LOCK (Cost Code)
0595041	ESC PROG POWER DIVIDER LOCK (Cost Code)
0595048	ESC PROG LO WASHER FLUID W/LIGHT (Cost Code)
0595049	ESC PRG ELET PRAM DEFL SET W/ALL UNIT (Cost Code)
0595051	ESC PROG ENGINE FAN OVERRIDE (Cost Code)
0595052	ESC PROG SINGLE FUEL GA SENSOR (Cost Code)
0595061	ESC PROG VOLTMETER (Cost Code)
0595063	ESC PROG SEAT BELT IND LIGHT (Cost Code)
0595066	T/R DATA ENGINE OIL PRESS GAUGE (Cost Code)
0595067	T/R DATA ENGINE COOLANT TEMP GA (Cost Code)
0595069	T/R DATA VEHICLE SPEED GAUGE (Cost Code)
0595079	T/R DATA WARNING LIGHTS (Cost Code)
0595080	ESC PROG AIR SOLENOID POWER (Cost Code)
0595083	ESC PROG CRUISE CONTROL SWITCH STATE (Cost Code)
0595084	ESC PROG ENGINE FAN REQUEST (Cost Code)
0595085	ESC PROG GAUGE CLUSTER ALARM HANDLER (Cost Code)
0595095	ESC PROG ENGINE STATE (Cost Code)
0595097	T/R DATA, OIL TEMP GAUGE ECM DRIVEN (Cost Code)
0595102	ESC PROG CRUISE/RESCM OUTPUT HANDLER (Cost Code)
0595103	ESC PROG HARDWIRE CONFIG DATA (Cost Code)
0595104	ESC PROG NETWORK CONFIG DATA (Cost Code)
0595105	ESC PROG IP CONFIG DATA (Cost Code)
0595112	T/R DATA NO PRNDL (Cost Code)
0595127	T/R DATA, ENGINE TYPE CUMMINS (Cost Code)
0595145	ESC PROG, TRANS OIL TEMP GAUGE MANUAL (Cost Code)
0595161	ESC PROG OMIT FOG LIGHT (Cost Code)
0595162	ESC PROG OMIT STOP/TURN DIAGNOSTICS (Cost Code)
0595168	ESC PROG WORK LITE DIAGNOSTICS OMIT (Cost Code)
0595179	ESC PROG, PTO LOGIC (Cost Code)
0595207	ESC PROG, PTO SWITCH CRUISE ENABLER (Cost Code)
0595208	T/R DATA, ENGINE SPEED GAUGE (Cost Code)
0595234	ESC PROG BATT FEED FUES DET #2 (Cost Code)
0595249	ESC PROG HEATED MIRROR (Cost Code)
0595250	ESC PROG WORK LITE W/TIMER/KEYLESS ENTRY (Cost Code)
0595251	ESC PROG PARKING/MARKER W/15AMP FUSE (Cost Code)
0595267	ESC PROG DASH MTG PTO FOR CUSTOMER (Cost Code)
0595288	ESC WINDSHELD WIPER SLOW W/P-BRAKE ESC-2 (Cost Code)
0595296	ESC PROG, PRE TRIP ALL EXTERIOR LAMPS (Cost Code)
0595314	ESC PROG, HEADLIGHT ON W/WIPERS (Cost Code)
0595329	ESC PROG, ENGINE IDLE SHUTDOWN LIGHT (Cost Code)
0595336	ESC PROG REFRIGERANT CONTROL HVAC W/LITE (Cost Code)
0595356	ESC PROG, ESC-2 FOR TRUCK (Cost Code)

Group 11 Clutch

0011MGZ	CLUTCH 15.5" EATON EASY-PEDAL ADVANTAGE

COPYRIGHT© 2011INTERNATIONAL TRUCK AND ENGINE CORP.

https://truckmanualshub.com/

LINE SET TICKET

Group 12 Engines

0012CXH	CUM ISM-350V 335HP@2100RPM N-EGR EXPORT	
0012TKU	FAN DRIVE ON/OFF BORG-WARNER K30	
0012UYH	RAD 1469" CAC 1172"	
0012VBG	DUAL ELEMENT AIR CLNR W/PRE CLEANER	
0012WBR	MANUAL FAN DRIVE OVERRIDE	(Cost Code)

Group 13 Transmission

0013GHL	FULLER FRO-14210C 10-SPD TRANS W/OD	
0013WAN	MANUAL TRANS COOLER - AIR TO OIL	
0013WAP	LUBE PUMP, TRANSMISSION	(Cost Code)
0013XAA	PTO CONTROLS,DASH MOUNTED	(Cost Code)

Group 14 Rear Axle

0014HRE	MERITOR RT46-164P 46K TANK DBL TRAC DIFF	
0014UHK	HEND RT-463 SUSP 54"(WALKING BEAM)46K	(Cost Code)
0014WAL	BAR PIN ATTACH/MERITOR RR AXLE IDENT	(Cost Code)
0014WBS	TRANSVERSE TORQ RODS	
0514005	TORQUE ROD FWD REAR	
0514006	TORQUE ROD REAR REAR	
0514012	CONTROLS LIFT AXLE CAB EFFECTS	

Group 15 Fuel Tanks

0015LGL	FUEL/WATER SEPARTOR DAVCO 382	
0015SET	SGL 100 G FL TK D STYLE ALUM 23" DEEP	
0515006	OMIT PRIMARY FUEL FILTER & BASE	(Cost Code)

Group 16 Cab

0016000	TRANS COVER, FLOOR MATS, SEALS	
0016030	CAB CONVENTIONAL	
0016HBB	ENGLISH GA CLUSTER W/METRIC SPEEDO	(Cost Code)
0016HGG	OIL TEMPERATURE GAUGE (ENGINE)	(Cost Code)
0016HGJ	TEMP GAUGE OIL MANUAL TRANS	(Cost Code)
0016HHE	FILTER MINDER DASH MTD BLACK BEZEL	(Cost Code)
0016HKT	IP CLUSTER DISPLAY DIAGNOSTICS	(Cost Code)
0016JNT	DRIVER SEAT NAT'L	
0016PJH	PASSENGER SEAT GRA-MAG	
0016SDE	1 LOOK DOWN MIRROR RIGHT SIDE 6"X10 1/4"	(Cost Code)
0016SDL	2-MIRRORS HEAT BLACK HEADS	
0016VHH	INSULATION PAK INSULATION UN FLOOR,DASH	(Cost Code)
0016WJS	INSTR PANEL CENTER SECTION FLAT	(Cost Code)
0016WKB	HTR&A/C (INTERNATIONAL BLEND-AIR)	
0016WKY	HVAC FRESH AIR FILTER	(Cost Code)
0016WLE	STORAGE POCKET, PASS DOOR	(Cost Code)
0016WLS	FRESH AIR FILTER AIR INTAKE UNDER HOOD	(Cost Code)
0016WRX	CAB INT TRIM - DELUXE	
0016WSK	CAB REAR AIR SUSPENSION	(Cost Code)
0016XWD	EXTERIOR SUNSHADE PAINTED AERO	
0516003	CAB ACCESS 2 STEPS PER DOOR REG/EXT CAB	
0516100	MIRROR, CONVEX LEFT ONLY	(Cost Code)
0516101	MIRROR, HEATED ALL HEADS	(Cost Code)
0516104	MIRROR STYLE RECTANGULAR NON AERO	(Cost Code)

Group 17 Wheels

0026DRE	SPARE WHL(22.5"DISC 10STUD)9.00DC RIM	
0027DMW	DISC FRT WHL(22.5"PT-STL 10S) 9.00DC RIM	
0028DPM	DISC RR WHLS(22.5"PT-STL 10S)8.25DC RIM	
0529001	LUBE FRT WHL BEARINGS	
0529002	LUBE REAR WHL BEARINGS	
0530100	TIRES	

COPYRIGHT© 2011INTERNATIONAL TRUCK AND ENGINE CORP.

https://truckmanualshub.com/

LINE SET TICKET

COPYRIGHT© 2011INTERNATIONAL TRUCK AND ENGINE CORP.

https://truckmanualshub.com/

MANUAL NOTES

COPYRIGHT© 2011INTERNATIONAL TRUCK AND ENGINE CORP.

https://truckmanualshub.com/

Group 01
Frame

COPYRIGHT© 2011INTERNATIONAL TRUCK AND ENGINE CORP.

https://truckmanualshub.com/

Figure 01 of 186

FRAME RAIL REINF INSTL; OUTER

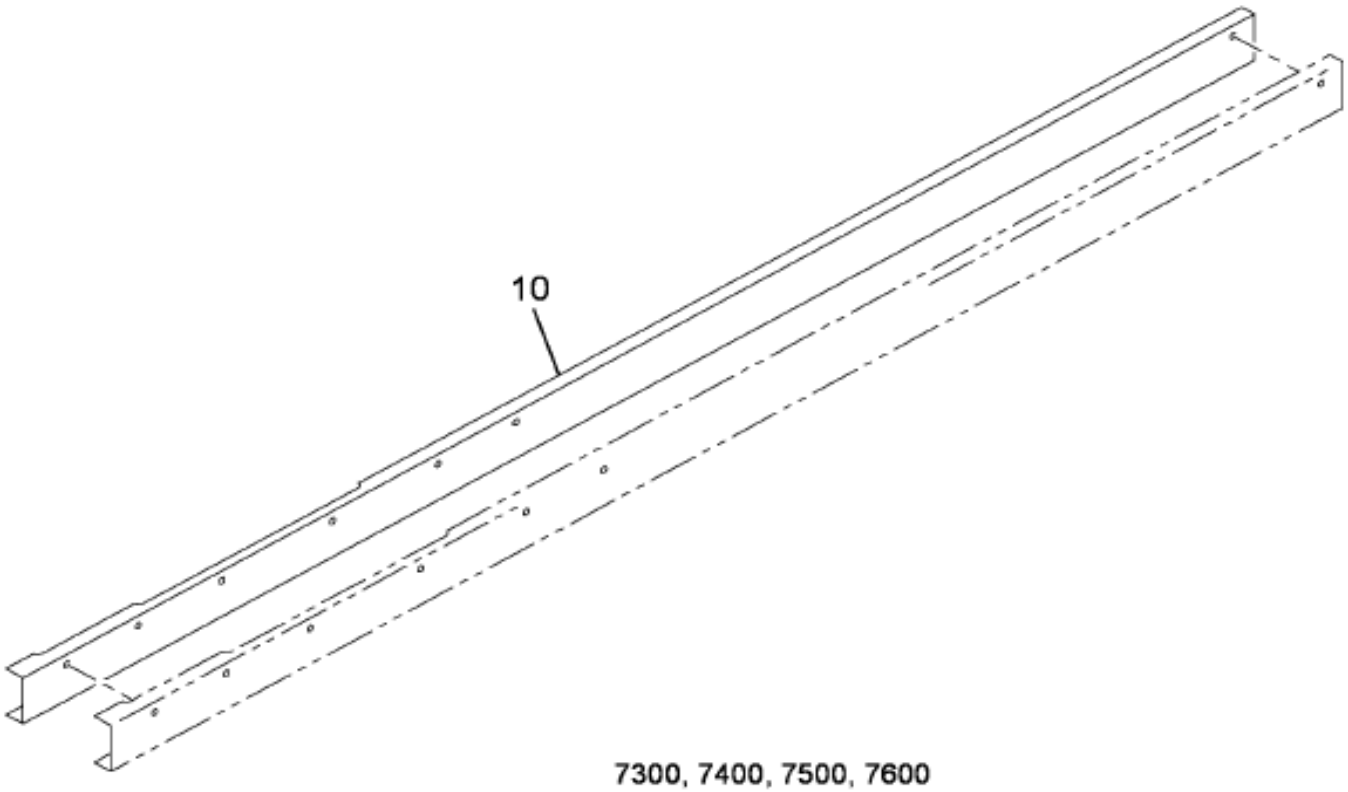

7300, 7400, 7500, 7600
N/INTEGRAL FRONT
FRAME EXTENSION
(N/01 WDS, 01WDT)

01-740-0017-EA E09

Item	Part No.	Qty	Description	Kit	Var	Figure
10	6088448C1	1	REINFORCMNT,SMBR LH,7.94X8088		0TSYX	
10	6088449C1	1	REINFORCMNT,SMBR RH,7.94X8088		0TSYX	
10	30746R2	6	BOLT M12 X 40MM PHC FLG CLASS		0FT86	
10	30755R1	6	NUT,HEX M12 FLANGED		0FT86	

COPYRIGHT© 2011INTERNATIONAL TRUCK AND ENGINE CORP.

https://truckmanualshub.com/

Figure 01L2C6

FRAME RAIL SIDEMEMBER; 8.0 (5/16") THK, 120K

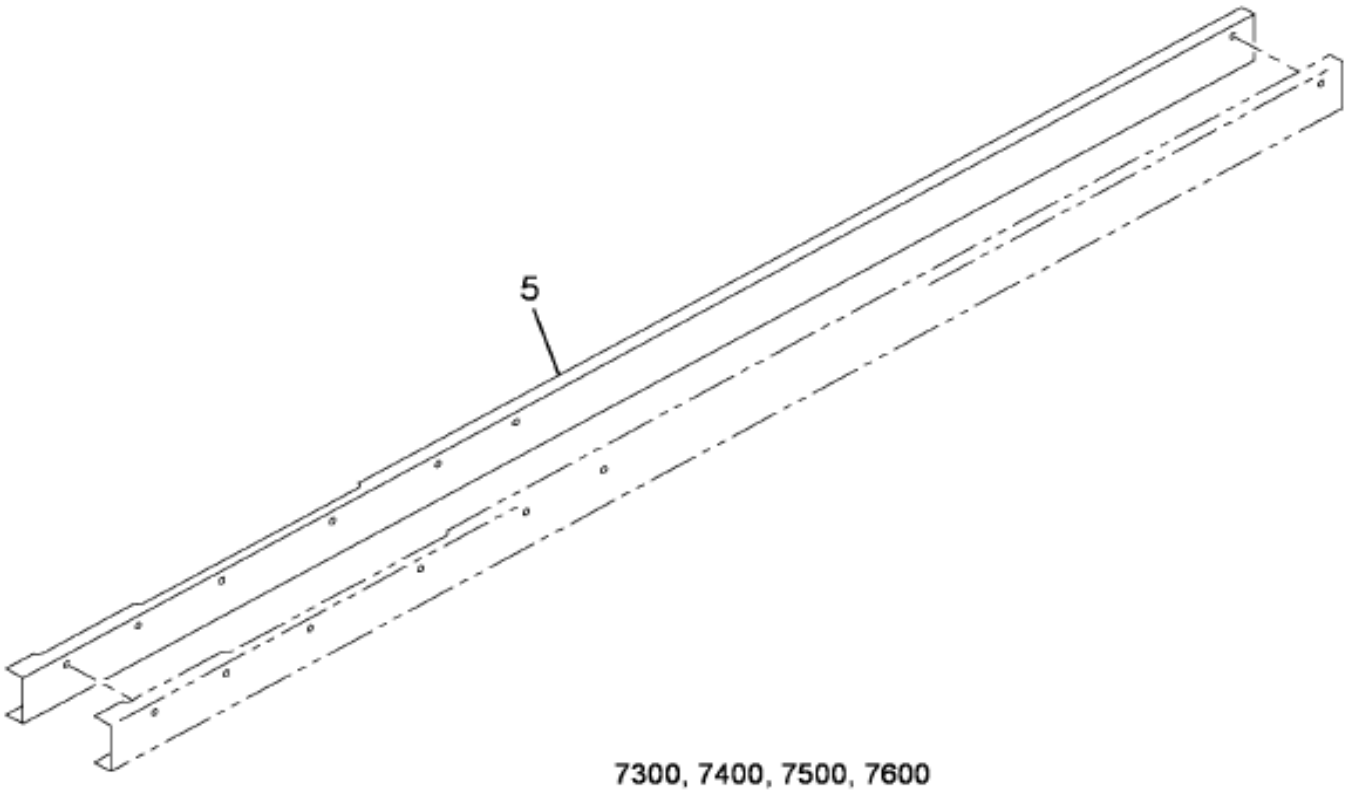

7300, 7400, 7500, 7600
N/INTEGRAL FRONT
FRAME EXTENSION
(N/01 WDS, 01WDT)

01-001-0182-BA E09

Item	Part No.	Qty	Description	Kit	Var	Figure
5	6088374C1	1	MEMBER,SIDE FRAME,LH,7.94X8088		0TSYL	
5	6088375C1	1	MEMBER,SIDE FRAME,RH,7.94X8088		0TSYL	

COPYRIGHT© 2011INTERNATIONAL TRUCK AND ENGINE CORP.

https://truckmanualshub.com/

Figure 0MQWY

FRT BUMPER INSTL; 20" BOLT-ON EXTD RAIL; W/4" OFFSET MTG

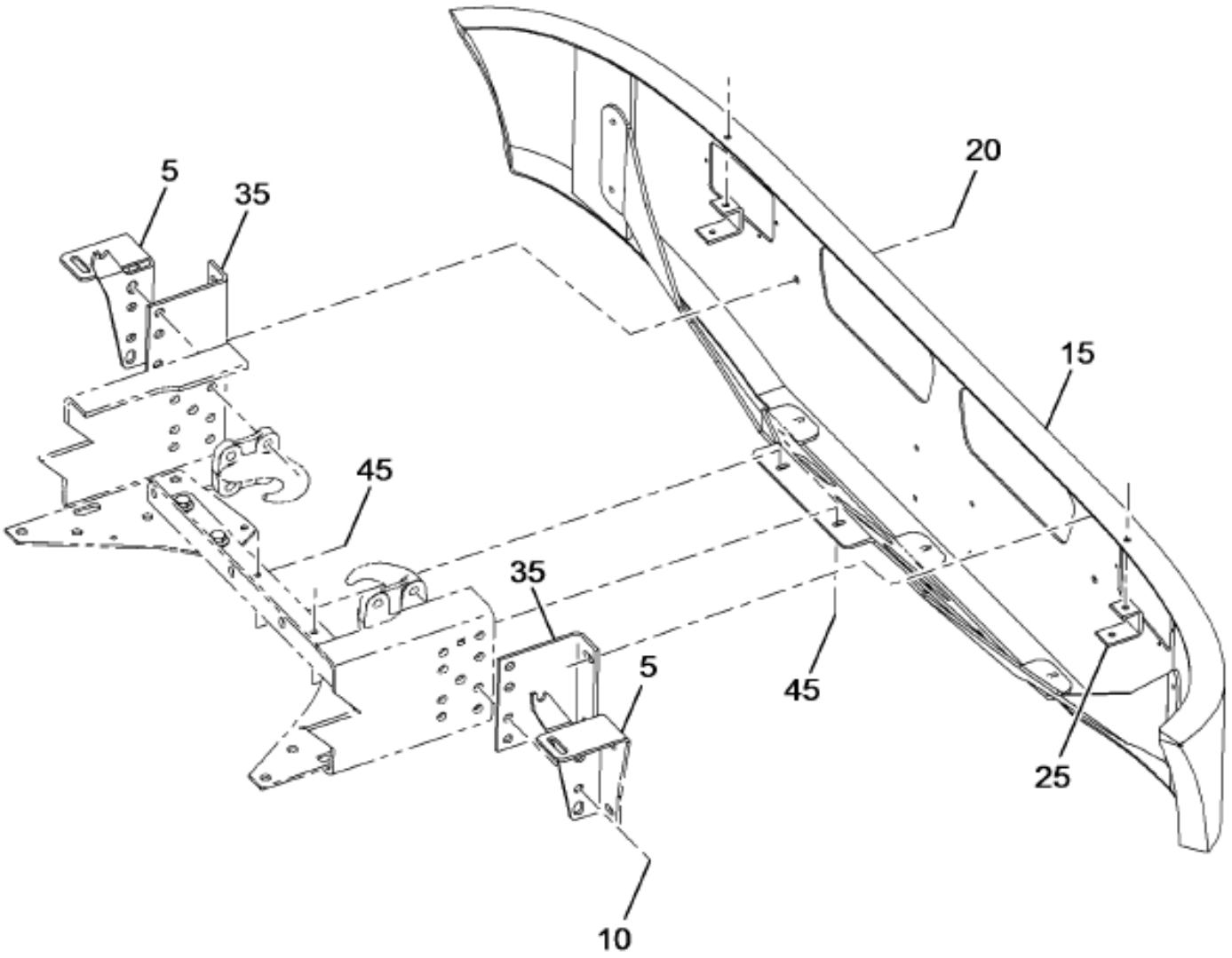

M-NGV-SS
& W/1LPS

01-003-0200-01 C10

Figure 1 of 2

COPYRIGHT© 2011INTERNATIONAL TRUCK AND ENGINE CORP.

https://truckmanualshub.com/

Figure 0MQWY

FRT BUMPER INSTL; 20" BOLT-ON EXTD RAIL; W/4" OFFSET MTG

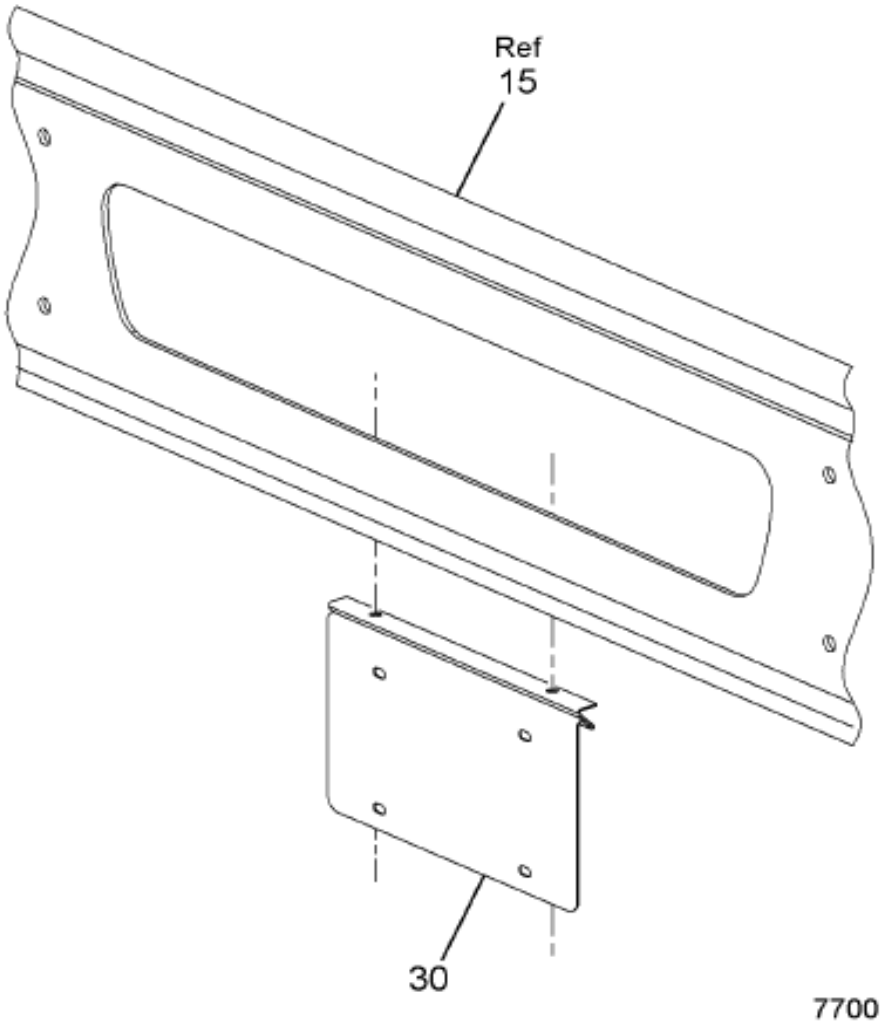

7700
W/LICENSE PLATE
MOUNTED BELOW BUMPER

01-003-0300-01 F08

Item	Part No.	Qty	Description	Kit	Var	Figure
5	3841767C1	1	SUPPORT,BUMPER/HOOD TORSION LH		0MQWY	
5	3841768C1	1	SUPPORT,BUMPER/HOOD TORSION RH		0MQWY	
10	30756R1	4	NUT,HEX M16 PRVTRQ		0MQX5	
10	30753R2	4	BOLT, M16 X 60MM PHC FLG CLASS		0MQX5	
15	3704775C1	1	BUMPER, FRONT 15 DEGREE SWEPT		0MQWZ	
20	3535859C1	4	NUT,HEX METRIC PREV. TORQ*M12		0MQX5	

COPYRIGHT© 2011INTERNATIONAL TRUCK AND ENGINE CORP.

https://truckmanualshub.com/

Figure 0MQWY

FRT BUMPER INSTL; 20" BOLT-ON EXTD RAIL; W/4" OFFSET MTG

Item	Part No.	Qty	Description	Kit	Var	Figure
20	3579048C1	4	BOLT,BUMPER*6 LOBE M12 X 41 S		0MQX5	
20	3579049C1	4	WASHER, FLAT*M12,OD 27,SST		0MQX5	
35	3555336C3	2	SUPPORT, BUMPER		0MQX5	

COPYRIGHT© 2011INTERNATIONAL TRUCK AND ENGINE CORP.

https://truckmanualshub.com/

Figure 01QZC
FRT XMBR INSTL

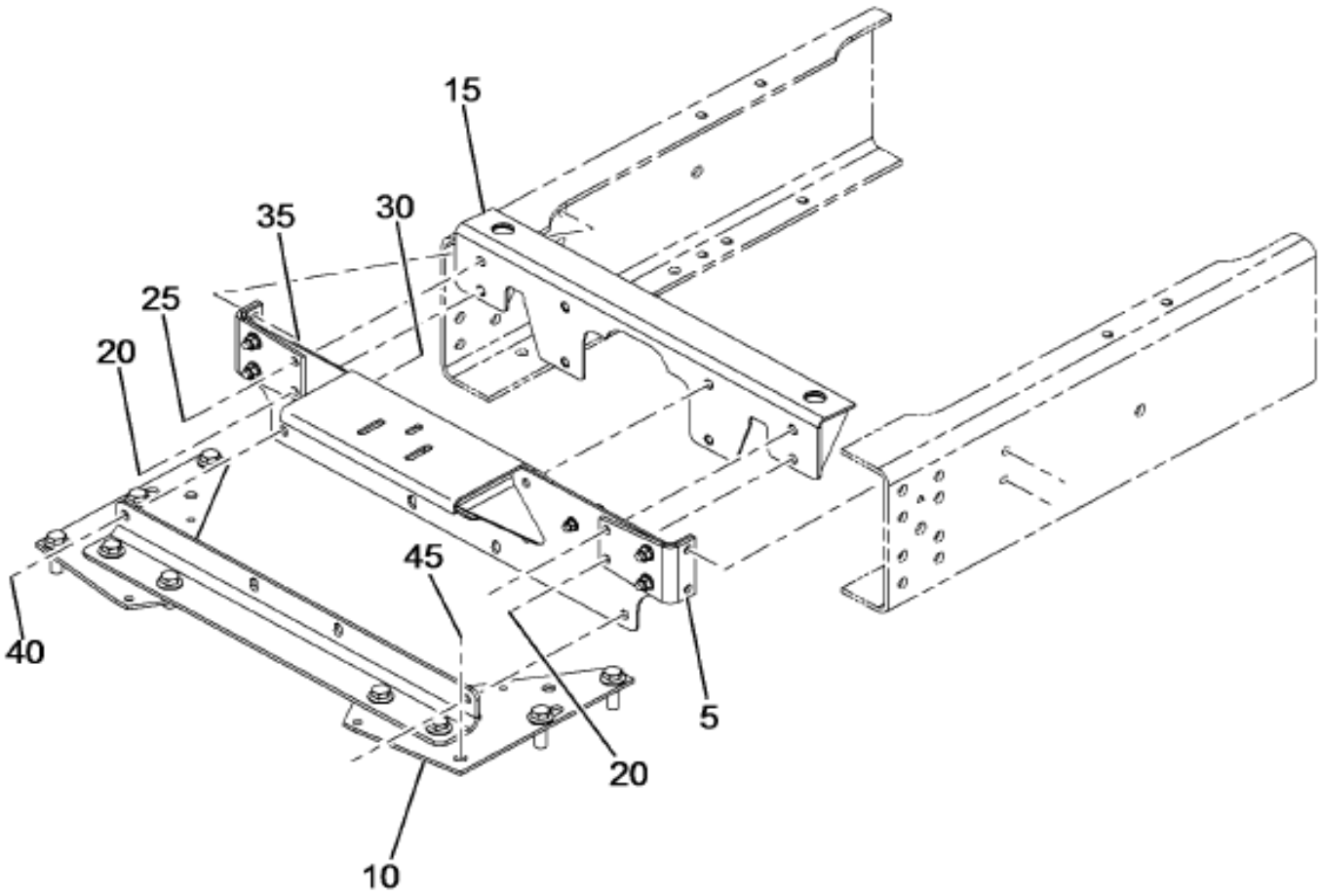

7000

01-V11-0073-01 L08

Item	Part No.	Qty	Description	Kit	Var	Figure
5	6087945C91	1	CROSSMEMBER,RAD SUPT, CROSSMEM		0XZ9W	6087945C91
10	3612445C92	1	CROSSMEMBER,RAD SUPT,		0TQZD	3612445C92
15	3612447C3	1	CROSSMEMBER,RAD SUPT,		0TQZJ	3612447C3
20	3554702C1	2	BOLT,HEX FLG HD METRIC*M12 X 3		0TQZJ	
25	3535858C1	6	BOLT,HEX FLG HD METRIC*M12-1.7		0TQZJ	
30	30745R2	4	BOLT M12 X 35 HEX FLG HD		0TQZC	

COPYRIGHT© 2011INTERNATIONAL TRUCK AND ENGINE CORP.

https://truckmanualshub.com/

Figure 01QZC
FRT XMBR INSTL

Item	Part No.	Qty	Description	Kit	Var	Figure
35	30747R2	4	BOLT,HEX FLG HD METRIC M12X45		0TQZC	
35	30755R1	4	NUT,HEX M12 FLANGED		0TQZC	
40	28423R1	4	WASHER,.531 X 1.250 X .188 HD		0TQZC	
40	30755R1	4	NUT,HEX M12 FLANGED		0TQZC	
45	30752R2	6	BOLT, M16 X 50MM PHC FLG CLASS		0TQZD	
45	30756R1	6	NUT,HEX M16 PRVTRQ		0TQZD	

COPYRIGHT© 2011INTERNATIONAL TRUCK AND ENGINE CORP.

https://truckmanualshub.com/

Figure 3612443C92
CROSSMEMBER,RAD SUPT,

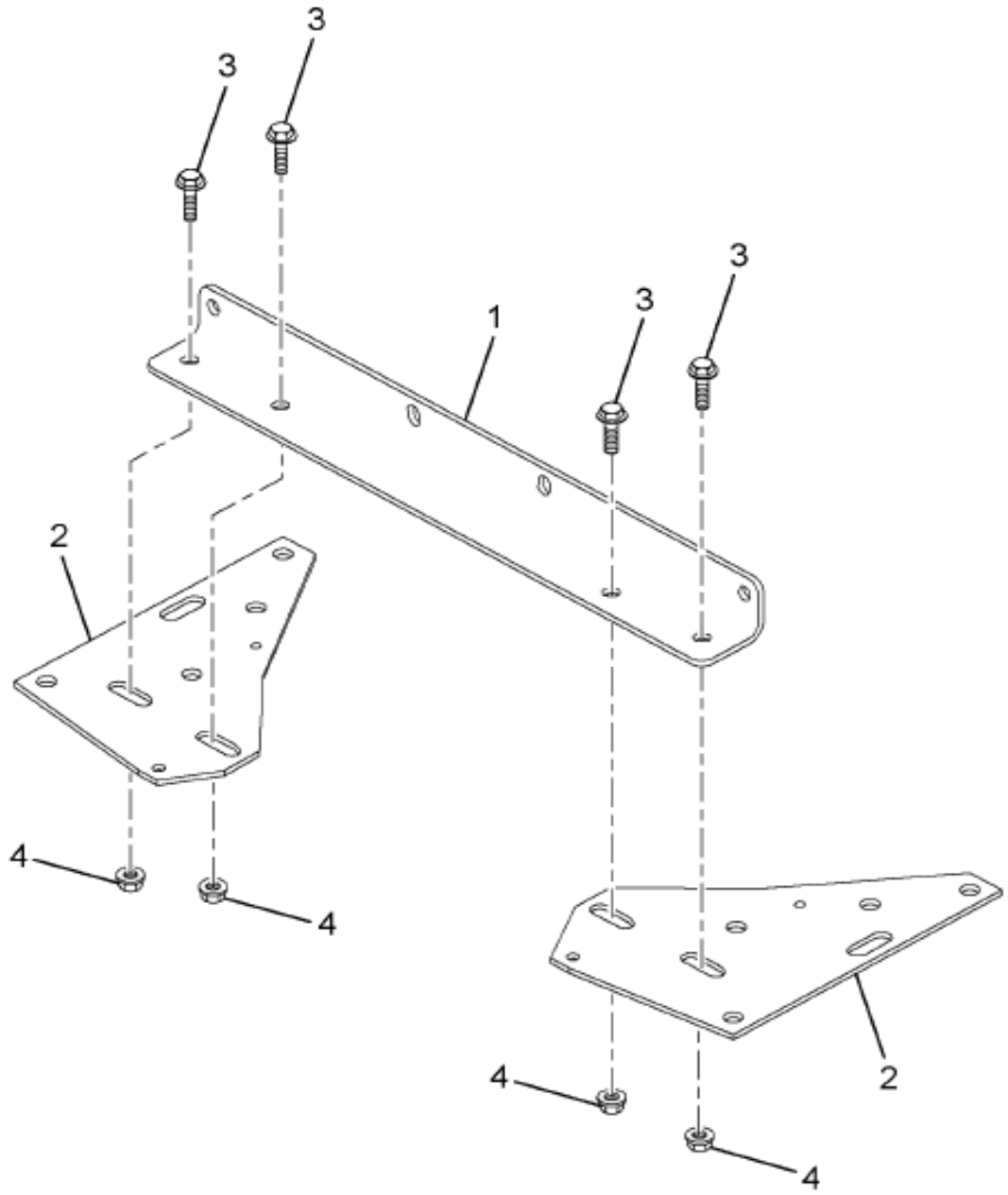

01-V11-0037-01 J06

Item	Part No.	Qty	Description	Kit	Var	Figure
1	3612442C2	1	CROSSMEMBER,RAD SUPT,			
2	3566354C3	2	GUSSET,,			
3	30750R2	4	BOLT, M16 X 40MM PHC FLG CLASS			
4	30756R1	4	NUT,HEX M16 PRVTRQ			
880		RF	NOTE: ASM BELOW COMPRISED OF ABOVE COMPONENTS			

COPYRIGHT© 2011INTERNATIONAL TRUCK AND ENGINE CORP.

https://truckmanualshub.com/

Figure 3612445C92

CROSSMEMBER,RAD SUPT,

Item	Part No.	Qty	Description	Kit	Var	Figure
881	3612445C92	RF	CROSSMEMBER,RAD SUPT,			

COPYRIGHT© 2011INTERNATIONAL TRUCK AND ENGINE CORP.

https://truckmanualshub.com/

Figure 3612447C3

CROSSMEMBER,RAD SUPT,

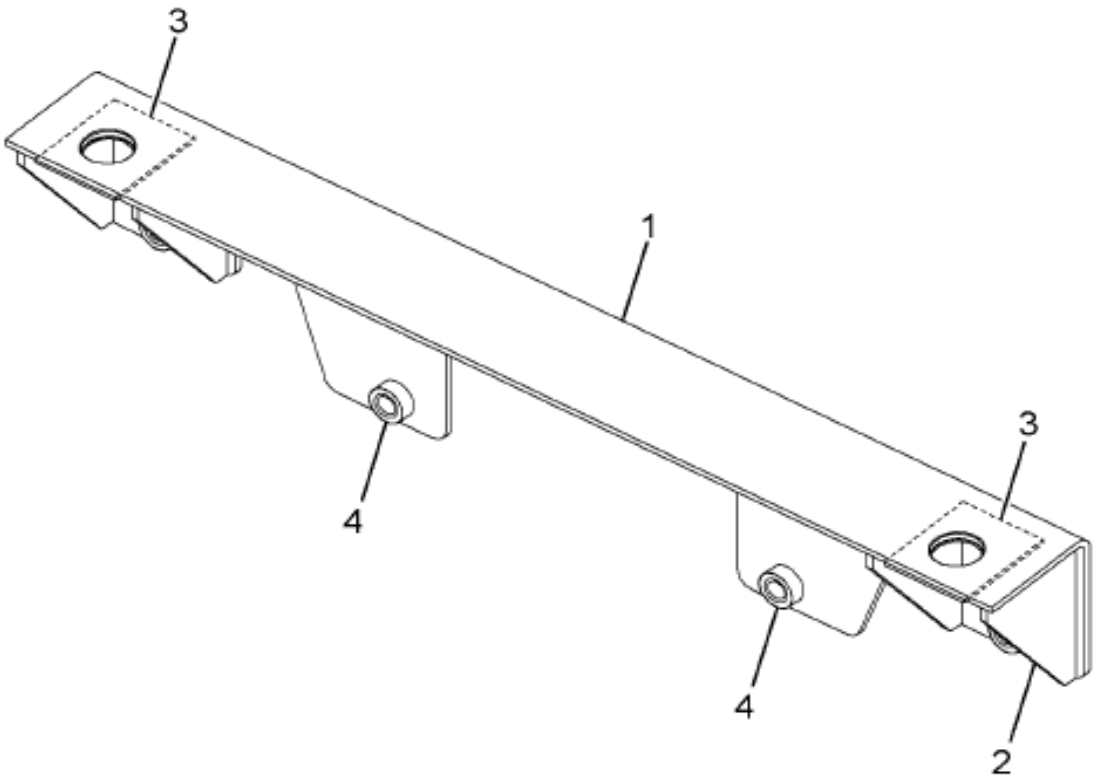

01-V11-0089-01 M08

Item	Part No.	Qty	Description	Kit	Var	Figure
1	3612446C2	1	CROSSMEMBER,RAD SPRT,			
2	3612427C1	4	REINFORCEMENT,, GUSSET FOR SS			
3	3560683C2	2	PLATE,XMBR*PLATE, XMBR ISOLATE			
4	30755R1	8	NUT,HEX M12 FLANGED			
4	30754R1	8	NUT,LOCK OR HEX SPECIAL*PREVAI			
880		RF	NOTE: ASM BELOW COMPRISED OF ABOVE			

COPYRIGHT© 2011INTERNATIONAL TRUCK AND ENGINE CORP.

https://truckmanualshub.com/

Figure 3612447C3

CROSSMEMBER,RAD SUPT,

Item	Part No.	Qty	Description	Kit	Var	Figure
			COMPONENTS			
881	3612447C3	RF	CROSSMEMBER,RAD SUPT,			

COPYRIGHT© 2011INTERNATIONAL TRUCK AND ENGINE CORP.

https://truckmanualshub.com/

Figure 6087945C91

CROSSMEMBER,RAD SUPT, CROSSMEM

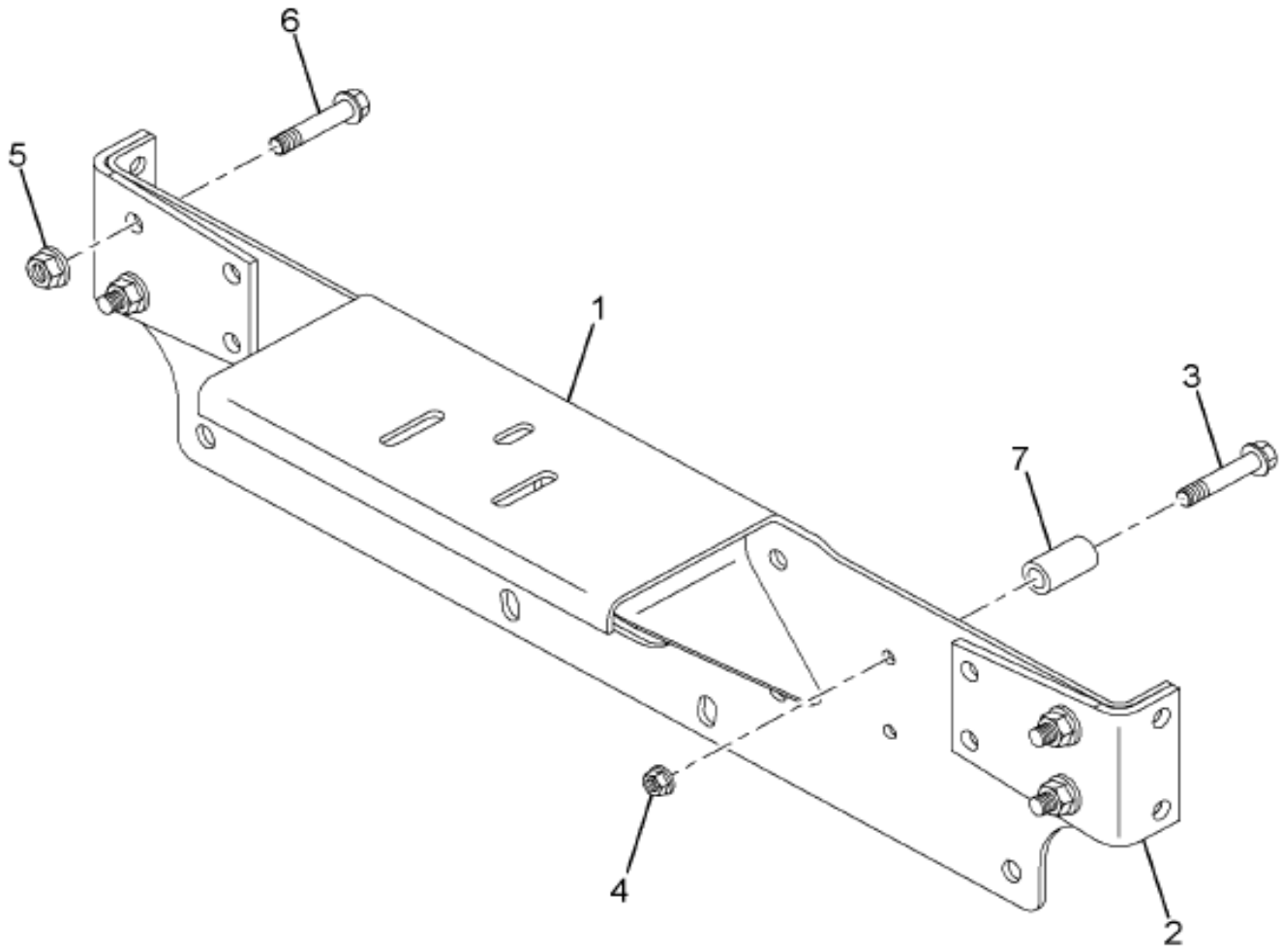

01-V11-0065-01 J07

Item	Part No.	Qty	Description	Kit	Var	Figure
1	6087944C1	1	CROSSMEMBER,RAD SUPT, CROSSMEM			
2	3612448C1	2	REINFORCEMENT,, FOR SS RAD MTG			
3	31062R1	2	BOLT, M10 X 60 PHC CL 10.9 FLG			
4	30754R1	2	NUT,LOCK OR HEX SPECIAL*PREVAI			
5	30755R1	4	NUT,HEX M12 FLANGED			
6	30744R2	4	BOLT,HEX HD MET M12X30 PHC FLG			

COPYRIGHT© 2011INTERNATIONAL TRUCK AND ENGINE CORP.

https://truckmanualshub.com/

Figure 6087945C91

CROSSMEMBER,RAD SUPT, CROSSMEM

Item	Part No.	Qty	Description	Kit	Var	Figure
7	3614750C1	2	PIN,RAD CROSS SUPPRT,40X22MM			
880		RF	NOTE: ASM BELOW COMPRISED OF ABOVE COMPONENTS			
881	6087945C91	RF	CROSSMEMBER,RAD SUPT, CROSSMEM			

COPYRIGHT© 2011INTERNATIONAL TRUCK AND ENGINE CORP.

https://truckmanualshub.com/

Figure 07VQE

TOW HOOK & MTG; FRONT RECOVERY DEVICES

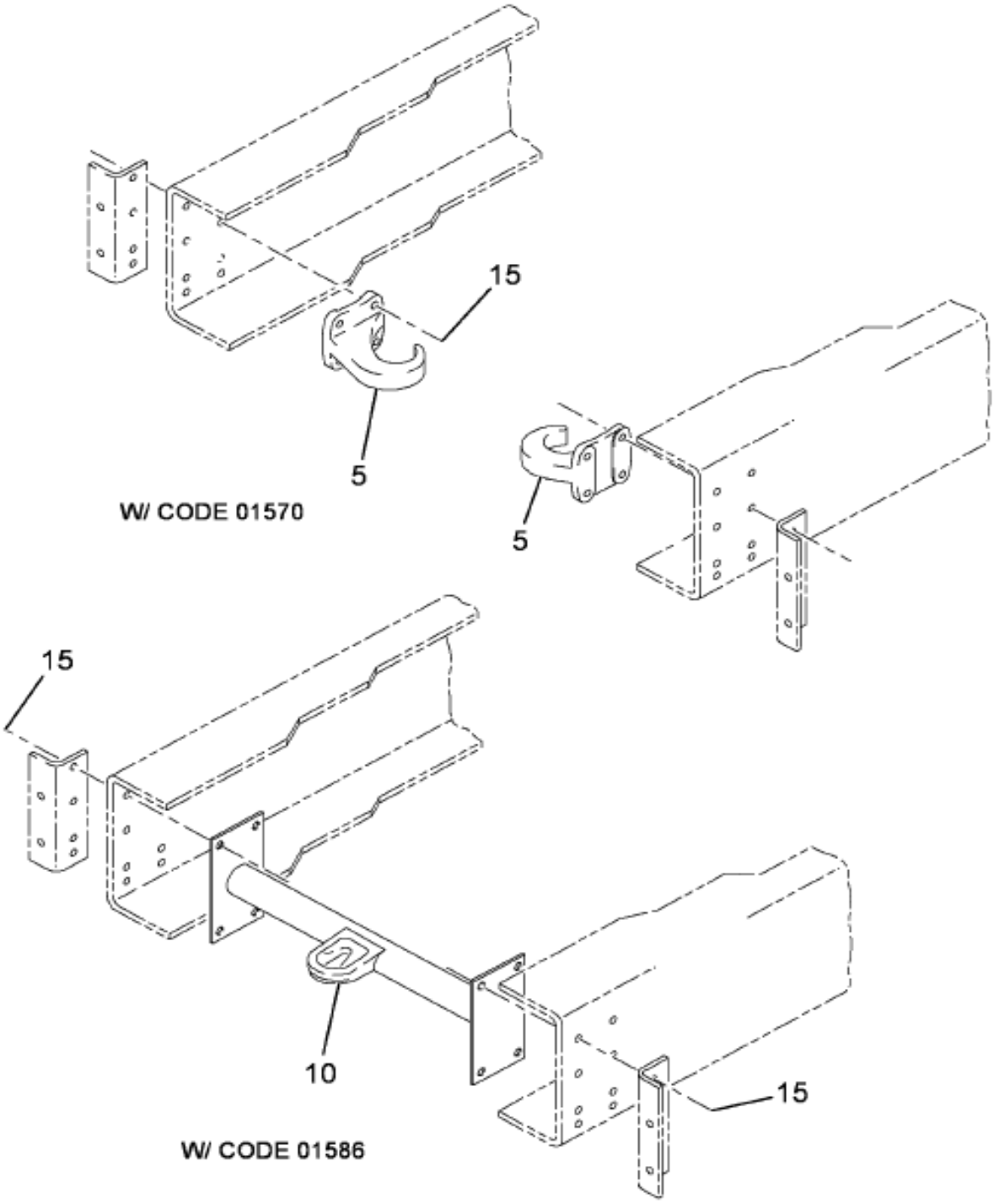

Figure 1 of 2

COPYRIGHT© 2011INTERNATIONAL TRUCK AND ENGINE CORP.

https://truckmanualshub.com/

Figure 07VQC

TOW HOOK & MTG; FRONT RECOVERY DEVICES

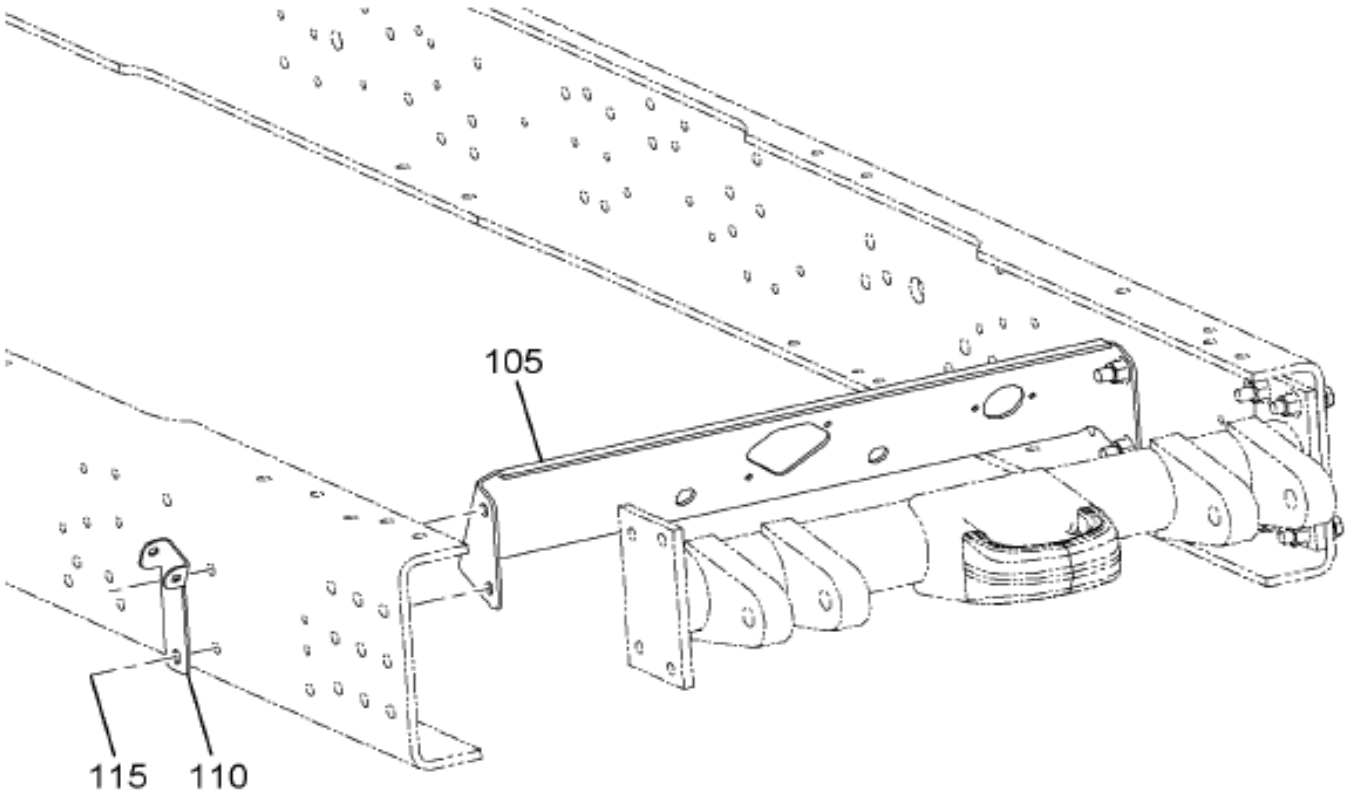

01-018-0038-01 H08

Item	Part No.	Qty	Description	Kit	Var	Figure
5	3540837C1	2	HOOK-TOW		07VQD	
15	30756R1	8	NUT,HEX M16 PRVTRQ		07VQC	
15	31075R1	8	BOLT, M16 X 70 PHC CL 10.9 FLG		07VQC	

COPYRIGHT© 2011INTERNATIONAL TRUCK AND ENGINE CORP.

https://truckmanualshub.com/

Figure 07113

XMBR & MTG; INTMD, 5-PC

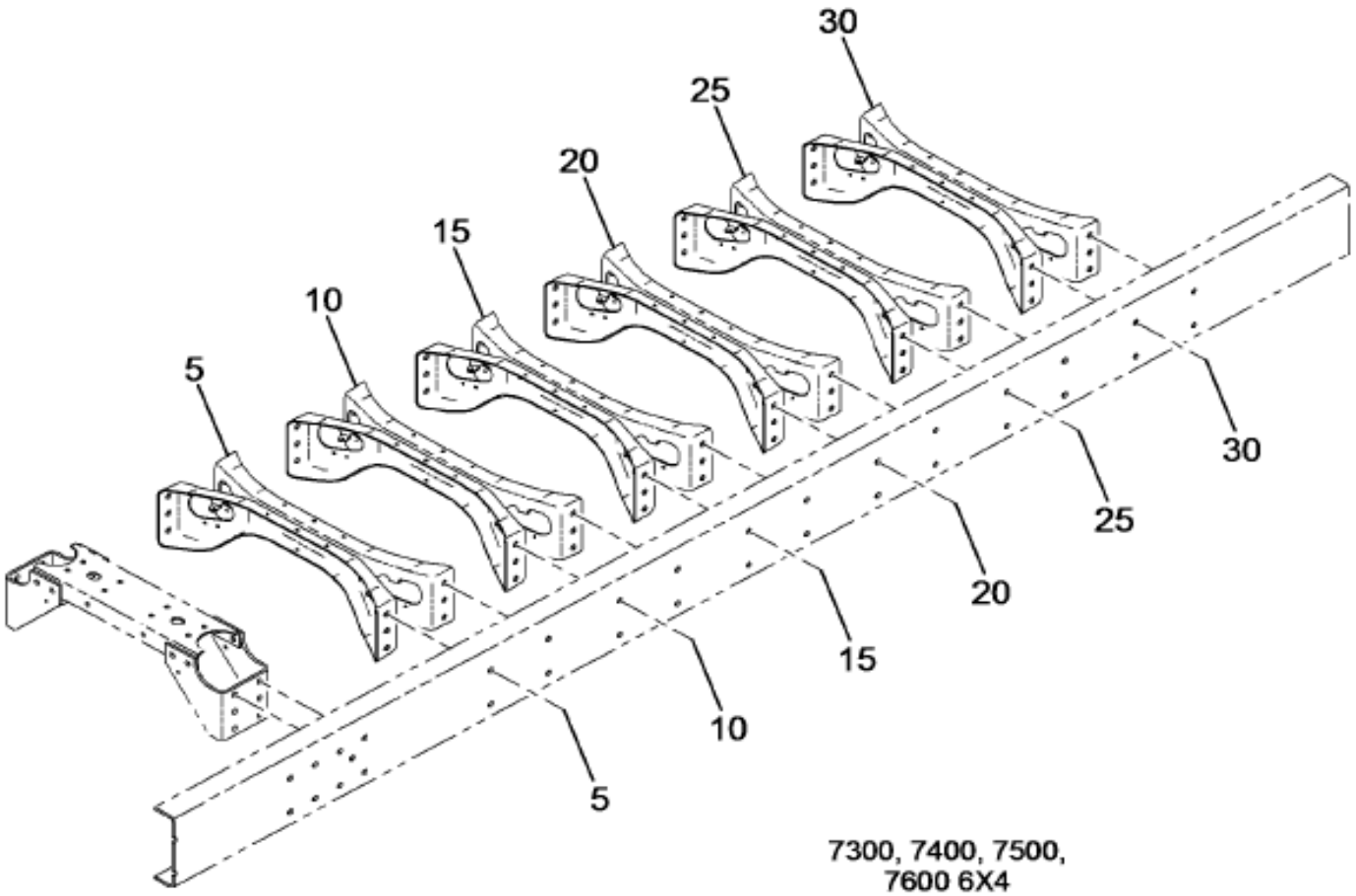

01-004-0156-AA F09

Item	Part No.	Qty	Description	Kit	Var	Figure
5	1664559C93	1	CROSSMEMBER, ASSY		07TT5	1664559C93
5	3691086C1	8	BOLT, HUCK-SPIN 5/8 DIA -12		07TT5	
5	3691083C1	8	NUT, HUCK SPIN COLLAR 5/8 DIA		07TT5	

COPYRIGHT© 2011INTERNATIONAL TRUCK AND ENGINE CORP.

https://truckmanualshub.com/

Figure 1664559C93
CROSSMEMBER, ASSY

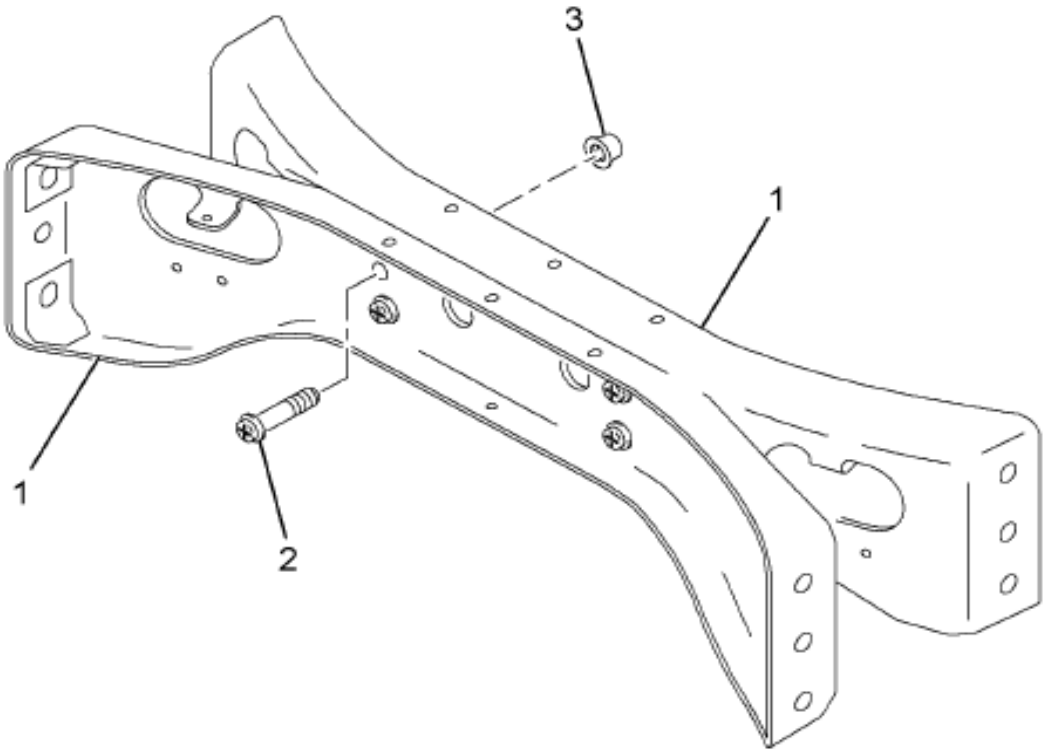

01-004-0099-00 C05

Item	Part No.	Qty	Description	Kit	Var	Figure
1	1660091C2	2	C MEMBER			
2	3691076C1	4	BOLT, HUCK-SPIN 1/2 DIA -8			
3	3691074C1	4	NUT, HUCK SPIN COLLAR 1/2 DIA			
880		RF	NOTE: ASM BELOW COMPRISED OF ABOVE COMPONENTS			
881	1664559C93	RF	CROSSMEMBER, ASSY			

COPYRIGHT© 2011INTERNATIONAL TRUCK AND ENGINE CORP.

https://truckmanualshub.com/

Group 02
Front Axle

COPYRIGHT© 2011INTERNATIONAL TRUCK AND ENGINE CORP.

https://truckmanualshub.com/

Figure 0K4L5

FRT AXLE ASM; MERITOR, NON-DRIVING, MFS-20, 20K

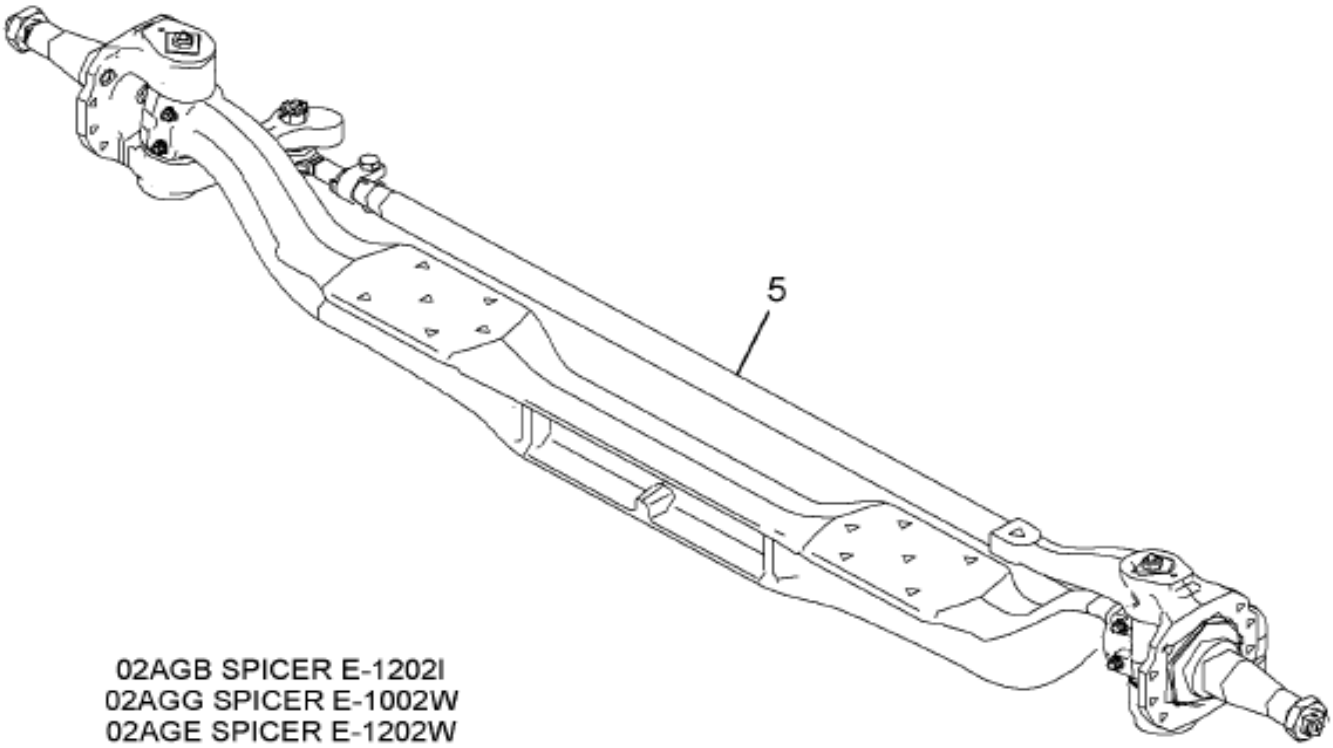

02AGB SPICER E-1202I
02AGG SPICER E-1002W
02AGE SPICER E-1202W
02AGD SPICER E-1322W
02AGA SPICER E-1203I
02AEZ SPICER E-1462I
02AGM SPICER E-1002I
02AGC SPICER E-1462W

02-021-0092-AA L08

Item	Part No.	Qty	Description	Kit	Var	Figure
5	3555306C91	1	AXLE,ASSY FRT 02ARY 20K		0K5QH	3555306C91

COPYRIGHT© 2011INTERNATIONAL TRUCK AND ENGINE CORP.

https://truckmanualshub.com/

Figure 3333306C91

AXLE,ASSY FRT 02ARY 20K

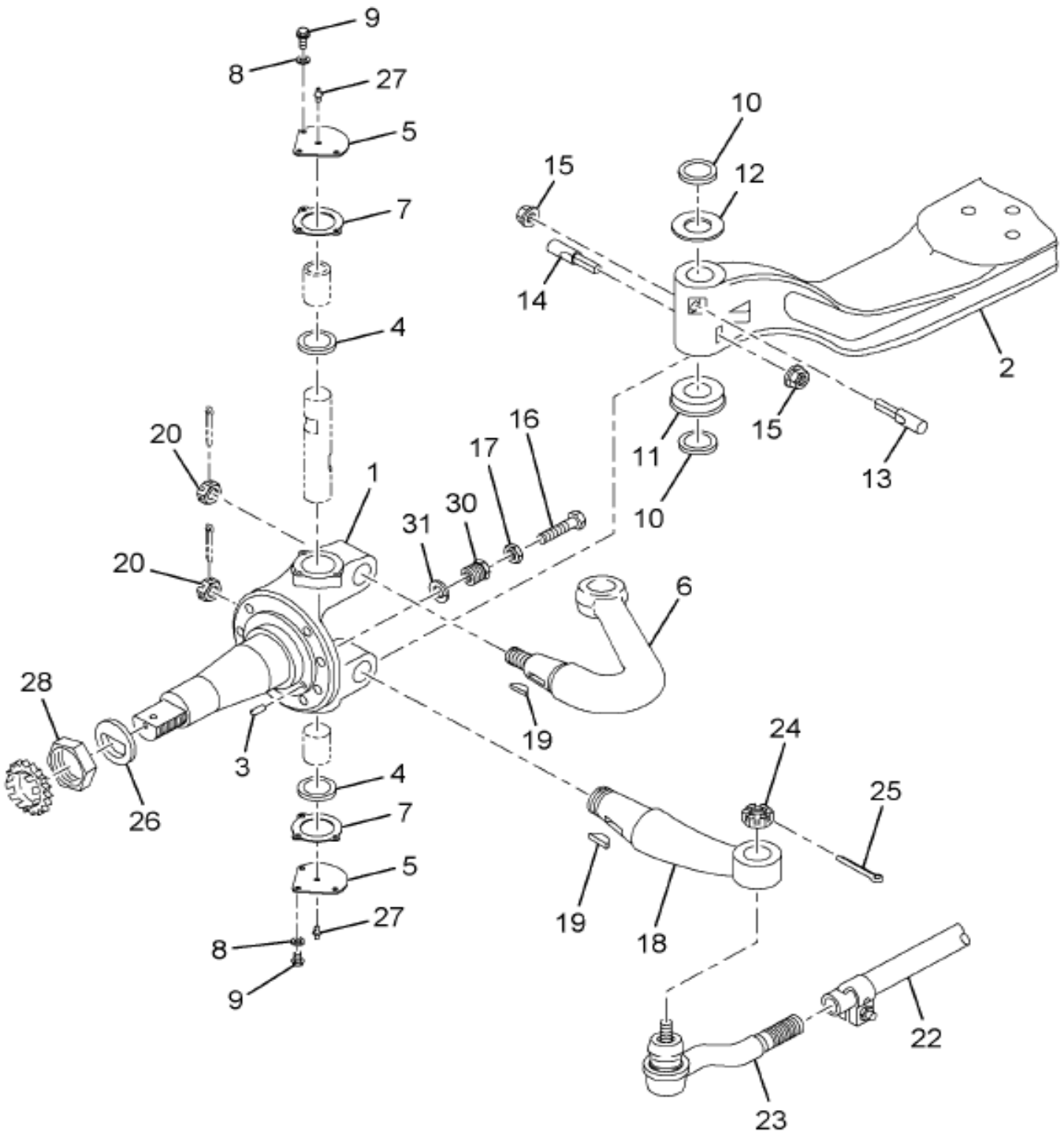

02-021-0357-01 G07

Item	Part No.	Qty	Description	Kit	Var	Figure
1	1695791C91	1	KNUCKLE,STRG LT W/BUSHING			
1		RF	LEFT			
1	1695792C91	1	KNUCKLE,STRG RT W/BUSHING			
1		RF	RIGHT			
2	2505827C1	1	BEAM,I FRT AXLE			
3	2502201C1	2	BUSHING,FRT AXLE WHL KNCKL ABS			

COPYRIGHT© 2011INTERNATIONAL TRUCK AND ENGINE CORP.

https://truckmanualshub.com/

Figure 3555306C91

AXLE,ASSY FRT 02ARY 20K

Item	Part No.	Qty	Description	Kit	Var	Figure
4	478750C1	4	SEAL,STRG KNUCKLE KING PIN	A		
5	478749C1	4	CAP,KING PIN BRG	A		
6	2586863C1	1	ARM,STEERING UPPER LT			
6		RF	LEFT			
6	2586864C1	1	ARM,STEERING UPPER RT			
6		RF	RIGHT			
7	474523C1	4	GASKET,STRG KNUCKLE CAP	A		
8	483361C1	12	WASHER,BRG CAP BOLT	A		
9	25493R1	12	BOLT HH 5/16X1 PHC TYP 8	A		
10	1694399C91	2	BEARING,THRUST W/SEAL	A		
11	478751C1	2	SEAL,STRG KNUCKLE KING PIN			
12	258877C1	2	SHIM,STRG KNCKL KING PIN	A		
12	307197C1	2	SHIM,KING PIN .005	A		
12	966145R1	2	SHIM,STRG KNUCKLE KING PIN .01	A		
13	1665528C1	2	KEY,K/P DRAW 5/8 X 3 1/4			
13	1665528C1	2	KEY,K/P DRAW 5/8 X 3 1/4	A		
14	474522C1	2	KEY,DRAW KING PIN	A		
15	549817C1	4	NUT,SPECIAL	A		
16	1665529C1	1	BOLT,HH STRG STOP			
17	3248502R1	2	NUT,STRG ARM TO KNCKL BOLT			
18	2506384C1	1	ARM,STRG TIE ROD LT			
18		RF	LEFT			
18	2506385C1	1	ARM,STRG TIE ROD RT			
18		RF	RIGHT			
19	3502384C1	2	KEY,STRG ARM SPL (WOODRUFF)			
20	141037H	2	NUT,HH SLOT STRG ARM 1 1/8-12			
22		1	ROD,FRT AXLE TIE PLAIN ROD OR	B		
23	R230072	1	END,ASM TIE ROD LT	B		
23		RF	LEFT			
23	R230073	1	END,ASM TIE ROD RT	B		
23		RF	RIGHT			
24	680358R1	2	NUT,DIFF CARR MTG STUD			
25	103388	2	PIN,COTTER 1/8 X 1-3/4 PLN			
26	896942R1	2	WASHER,FRT WHEEL BRG ADJ NUT			
27	109460	4	FITTING, 1/8 PTF SHORT 65D LUB			
28	896943R1	2	NUT-FRT WHEEL BRG ADJ			
30	1668561C1	2	BOLT,SPECIAL			
31	1668560C1	2	WASHER,SPECIAL			
800		RF	NOTE: THE FOLLOWING PARTS ARE NON-ILLUSTRATED			
801	2505496C91	KT	KIT,KING PIN O/HAUL STD 18,20K			2505496C91
801		RF	(CONSISTS OF PARTS DENOTED BY A)			
802	2504538C91	KT	ROD,ASSY TIE W/ENDS 67.2"			2504538C91
802		RF	(CONSISTS OF PARTS DENOTED BY B)			
803	9412231	2	NUT,HEX LOCK 5/8 NC			
880		RF	NOTE: ASM BELOW COMPRISED OF ABOVE COMPONENTS			
881	3555306C91	RF	AXLE,ASSY FRT 02ARY 20K			

COPYRIGHT© 2011INTERNATIONAL TRUCK AND ENGINE CORP.

https://truckmanualshub.com/

Figure 2303456C91
KIT,KING PIN O/HAUL STD 18,20K

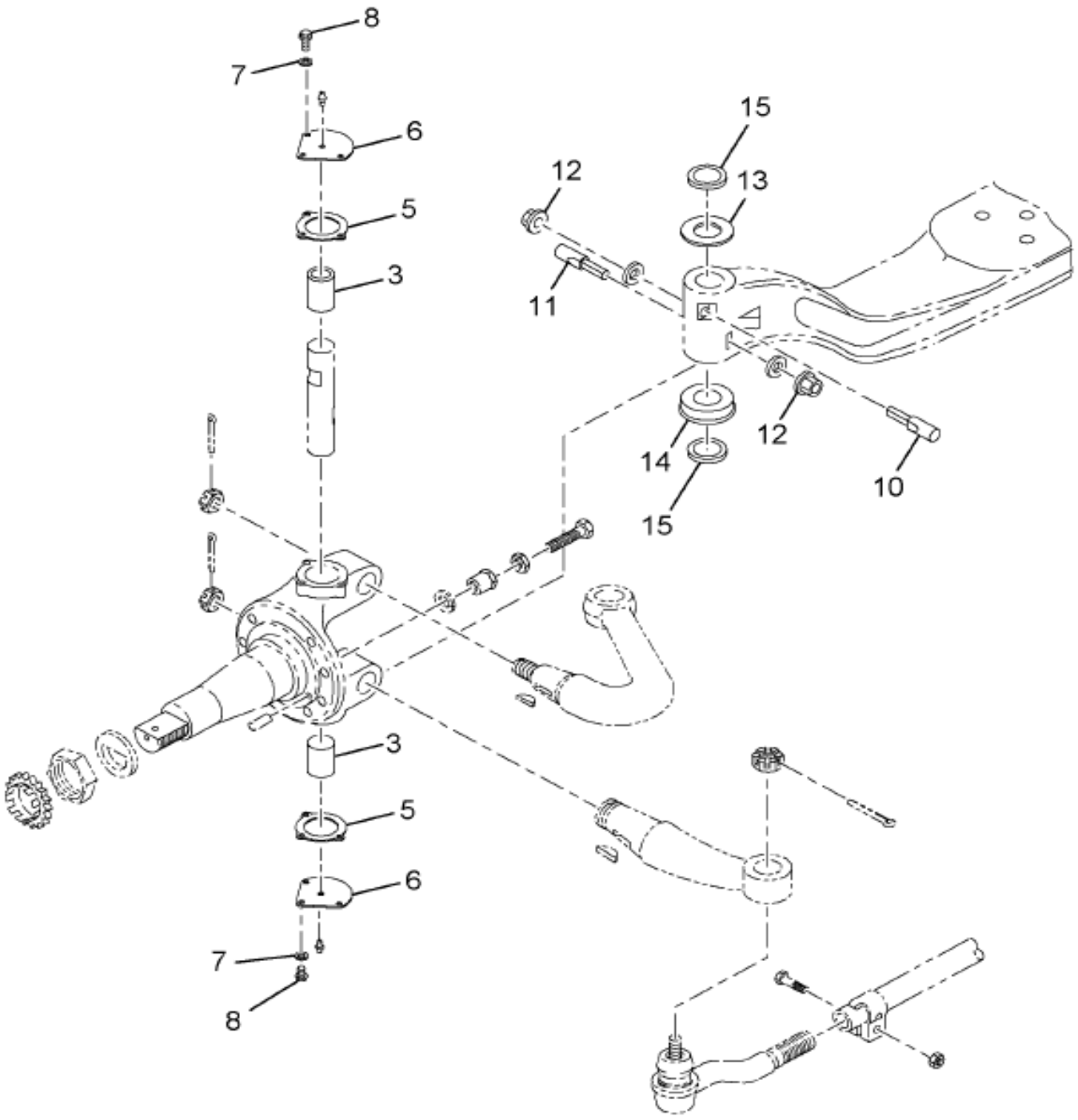

02-021-0378-01 F08

Item	Part No.	Qty	Description	Kit	Var	Figure
3	597261C1	4	BUSHING STEERING KNUCKLE EASY			
5	474523C1	4	GASKET,STRG KNUCKLE CAP			
6	478749C1	4	CAP,KING PIN BRG			
7	483361C1	12	WASHER,BRG CAP BOLT			
8	25493R1	12	BOLT HH 5/16X1 PHC TYP 8			
10	1665528C1	2	KEY,K/P DRAW 5/8 X 3 1/4			

COPYRIGHT© 2011INTERNATIONAL TRUCK AND ENGINE CORP.

https://truckmanualshub.com/

Figure 2505496C91

KIT,KING PIN O/HAUL STD 18,20K

Item	Part No.	Qty	Description	Kit	Var	Figure
11	474522C1	2	KEY,DRAW KING PIN			
12	549817C1	4	NUT,SPECIAL			
13	258877C1	2	SHIM,STRG KNCKL KING PIN			
13	307197C1	2	SHIM,KING PIN .005			
13	3213825R1	4	SHIM BRG SPACER .030			
13	966145R1	2	SHIM,STRG KNUCKLE KING PIN .01			
14	301534R91	2	BEARING,THRUST			
15	478750C1	4	SEAL,STRG KNUCKLE KING PIN			
15	478751C1	2	SEAL,STRG KNUCKLE KING PIN			
880		RF	NOTE: ASM BELOW COMPRISED OF ABOVE COMPONENTS			
881	2505496C91	RF	KIT,KING PIN O/HAUL STD 18,20K			

COPYRIGHT© 2011INTERNATIONAL TRUCK AND ENGINE CORP.

https://truckmanualshub.com/

Figure 2304538C91

ROD,ASSY TIE W/ENDS 67.2"

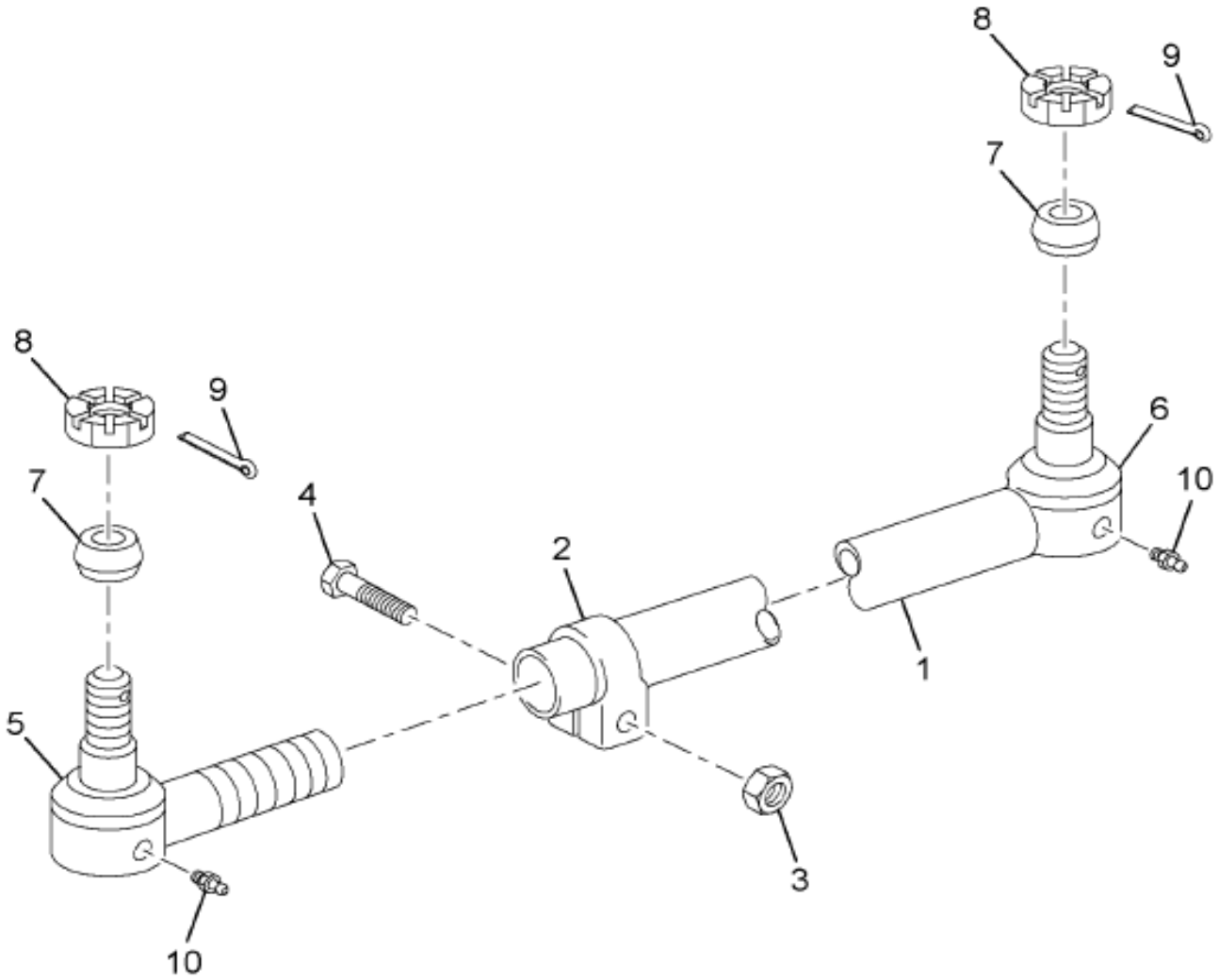

02-021-0209-01 K04

Item	Part No.	Qty	Description	Kit	Var	Figure
1	2586885C91	1	ROD,ASSY TIE W/CLAMPS			
2	492709C91	1	CLAMP,ASSY TIE ROD 1-5/8 I.D.			
3	9411658	2	NUT,HEX LOCK 5/8 NF			
4	24879R1	2	BOLT,HH 5/8NC X 3 PHC GRADE 8			
5	590583C91	1	END ASSY,TIE ROD LT			
5		RF	LEFT			

COPYRIGHT© 2011INTERNATIONAL TRUCK AND ENGINE CORP.

https://truckmanualshub.com/

Figure 2504538C91

ROD,ASSY TIE W/ENDS 67.2"

Item	Part No.	Qty	Description	Kit	Var	Figure
6	590584C91	1	END ASSY,TIE ROD RT			590584C91
6		RF	RIGHT			
7	1699340C1	2	SEAL,LINK DUST SHIELD			
8	26963R1	2	NUT,HEX SLOTTED 7/8 NF TYPE 8			
9	103389	2	PIN, 1/8 X 2 PLN COTTER			
10	109461	2	FITTING, 1/8 PTF X/SHORT LUB			
880		RF	NOTE: ASM BELOW COMPRISED OF ABOVE COMPONENTS			
881	2504538C91	RF	ROD,ASSY TIE W/ENDS 67.2"			
			NON-ILLUSTRATED REFERENCE FIGURE 590584C91			
1	506685C1	1	SEAL,DUST			
2	272336	1	NUT, 7/8 ZND SLT-THK TYPE 5			
880		RF	NOTE: ASM BELOW COMPRISED OF ABOVE COMPONENTS			
881	590584C91	RF	END ASSY,TIE ROD RT			

COPYRIGHT© 2011INTERNATIONAL TRUCK AND ENGINE CORP.

https://truckmanualshub.com/

Group 03
Chassis Springs

COPYRIGHT© 2011INTERNATIONAL TRUCK AND ENGINE CORP.

https://truckmanualshub.com/

Figure 0Q71L
FRT SUSP INSTL; 16,20K, W/SHK ABSBR

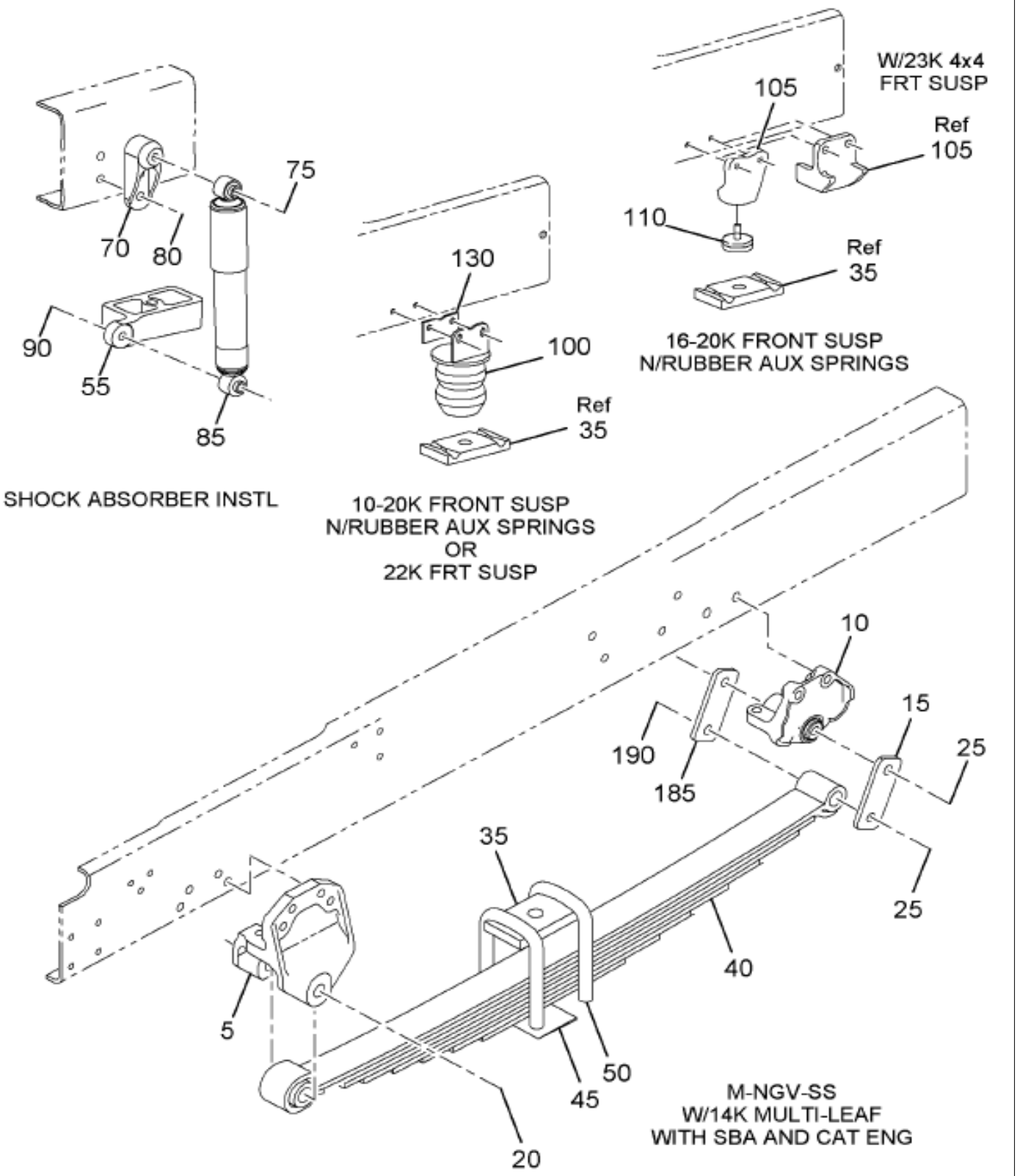

Figure 1 of 2

COPYRIGHT© 2011INTERNATIONAL TRUCK AND ENGINE CORP.

https://truckmanualshub.com/

Figure 0Q71E

FRT SUSP INSTL; 16,20K, W/SHK ABSBR

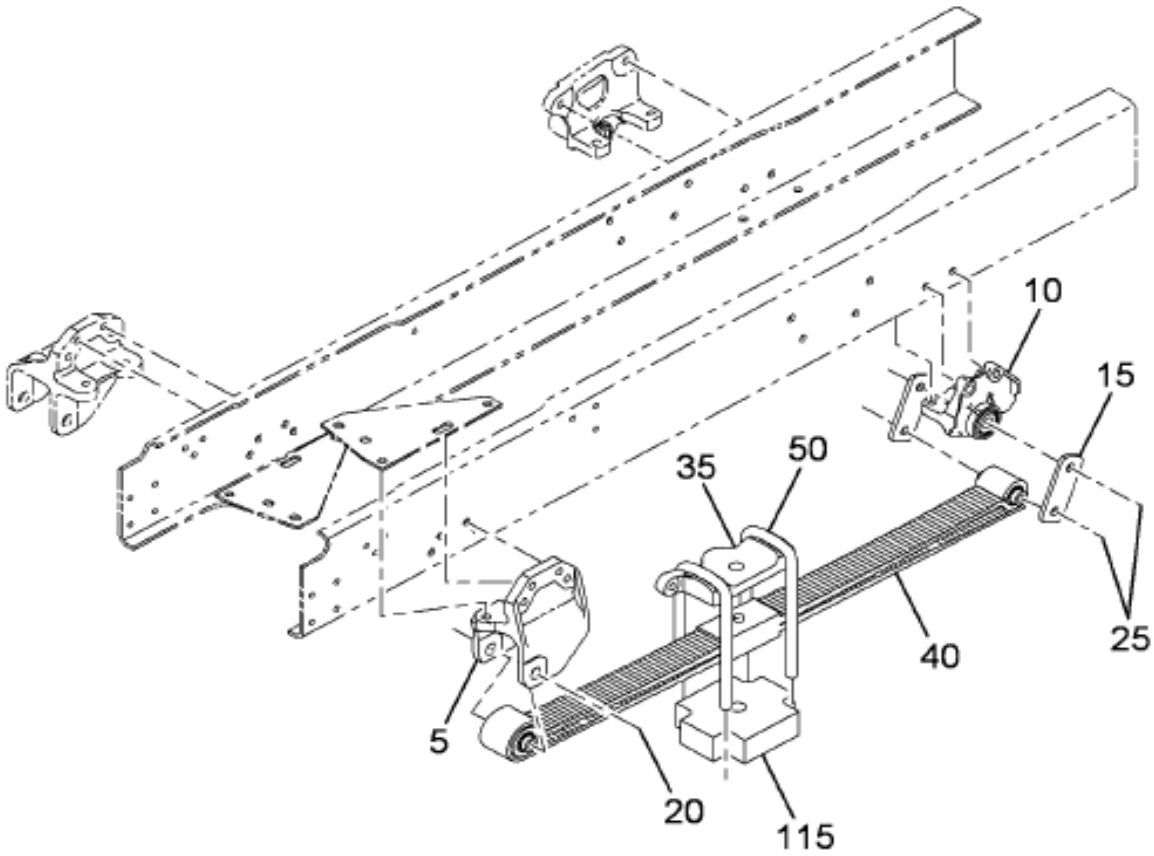

W/M-NGV-SS
W/10-20K TAPER LEAF
W/13TKE

03-022-0352-01 K10

Item	Part No.	Qty	Description	Kit	Var	Figure
5	3541828C2	2	BRACKET,FRONT SPRING SBA 16-20		0Q71R	
5	3691089C1	8	BOLT, HUCK-SPIN 5/8 DIA -20		0Q71R	
5	3691083C1	8	NUT, HUCK SPIN COLLAR 5/8 DIA		0Q71R	
5	31075R1	4	BOLT, M16 X 70 PHC CL 10.9 FLG		0Q71R	
5	30756R1	4	NUT,HEX M16 PRVTRQ		0Q71R	
10	3541838C91	2	BRACKET,FRT SPG RR W/BUSHING		0Q71R	3541838C91

COPYRIGHT© 2011INTERNATIONAL TRUCK AND ENGINE CORP.

https://truckmanualshub.com/

Figure 0Q71L

FRT SUSP INSTL; 16,20K, W/SHK ABSBR

Item	Part No.	Qty	Description	Kit	Var	Figure
10	3691090C1	8	BOLT, HUCK-SPIN 5/8 DIA -24		0Q71R	
10	3691083C1	8	NUT, HUCK SPIN COLLAR 5/8 DIA		0Q71R	
15	3533231C1	4	SHACKLE,FRT SPRING 14-20K		0Q71W	
20	25885R1	2	BOLT 1 X 7 PHC TYPE 8		0Q71R	
20	9413986	2	NUT HEX LOCK 1"-8 NC		0Q71R	
20	25540R1	2	WASHER,LOCK 1.062 X 2.0 X .134		0Q71R	
25	26632R1	4	BOLT, 1 X 6-1/2 PHC TYPE 8		0Q71W	
25	9413986	4	NUT HEX LOCK 1"-8 NC		0Q71W	
35	3553188C1	2	SEAT,U BOLT FRONT 4" SPG WIDTH		0Q722	
40	3540085C91	2	SPRING,CHASSIS FRONT 20K		0Q71W	3540085C91
45	692455R1	1	WEDGE, FRT AXLE 2 DEG		0Q71W	
45	692454R1	1	WEDGE,FRT AXLE 1DEG 30MIN		0Q71W	
50	444736C1	4	BOLT U SPRING 1-14X9		0Q71W	
50	144426H	8	NUT, 1-NF CAD P/T LOCK TYPE 8		0Q71W	
50	25847R1	8	WASHER,LOCK,HARDENED,M24 OR 1"		0Q71W	
55	3558093C1	2	BRACKET,SHK/ABS MTG FRONT		0Q72D	
70	3541648C2	2	BRACKET,FRONT ABS MTG SHOCK		0Q72D	
75	30298R1	2	BOLT,HH M16X80 SHOCK MTG		0Q72D	
75	578075C1	2	WASHER,FLAT OR SPECIAL		0Q72D	
80	30753R2	4	BOLT, M16 X 60MM PHC FLG CLASS		0Q735	
80	30756R1	4	NUT,HEX M16 PRVTRQ		0Q735	
85	3558089C3	2	ABSORBER,SHOCK COMMON TO, 16-2		0Q72D	
90	31080R1	2	BOLT, M16 X 160 PHC CL 10.9 FL		0Q72D	
90	578075C1	4	WASHER,FLAT OR SPECIAL		0Q72D	
90	30756R1	2	NUT,HEX M16 PRVTRQ		0Q72D	
105	3553638C1	2	STOP,FRONT AXLE 16-20K SUSP		0Q723	
105	30749R2	4	BOLT HEX HD METRIC M12X60 PHC		0Q723	
105	30755R1	4	NUT,HEX M12 FLANGED		0Q723	
110	1656697C1	2	BUMPER FRT SPG		0Q723	
110	9412230	2	NUT HEX LOCK 1/2 NC		0Q723	

COPYRIGHT© 2011INTERNATIONAL TRUCK AND ENGINE CORP.

https://truckmanualshub.com/

Figure 3341838C91

BRACKET,FRT SPG RR W/BUSHING

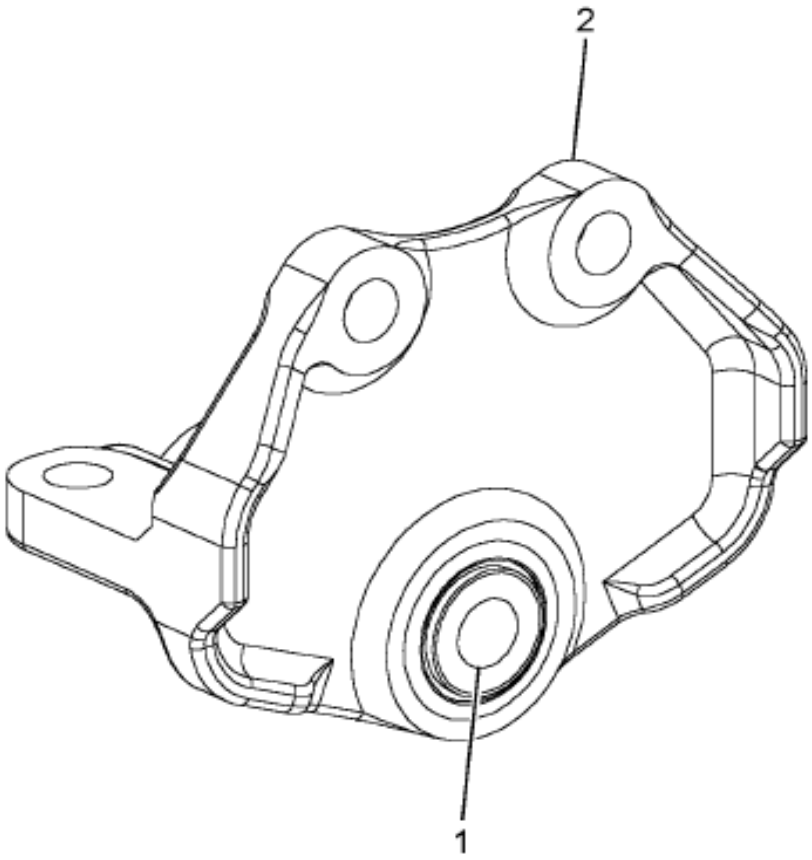

03-022-0150-01 A03

Figure 1 of 2

COPYRIGHT© 2011INTERNATIONAL TRUCK AND ENGINE CORP.

https://truckmanualshub.com/

Figure 3541838C91
BRACKET,FRT SPG RR W/BUSHING

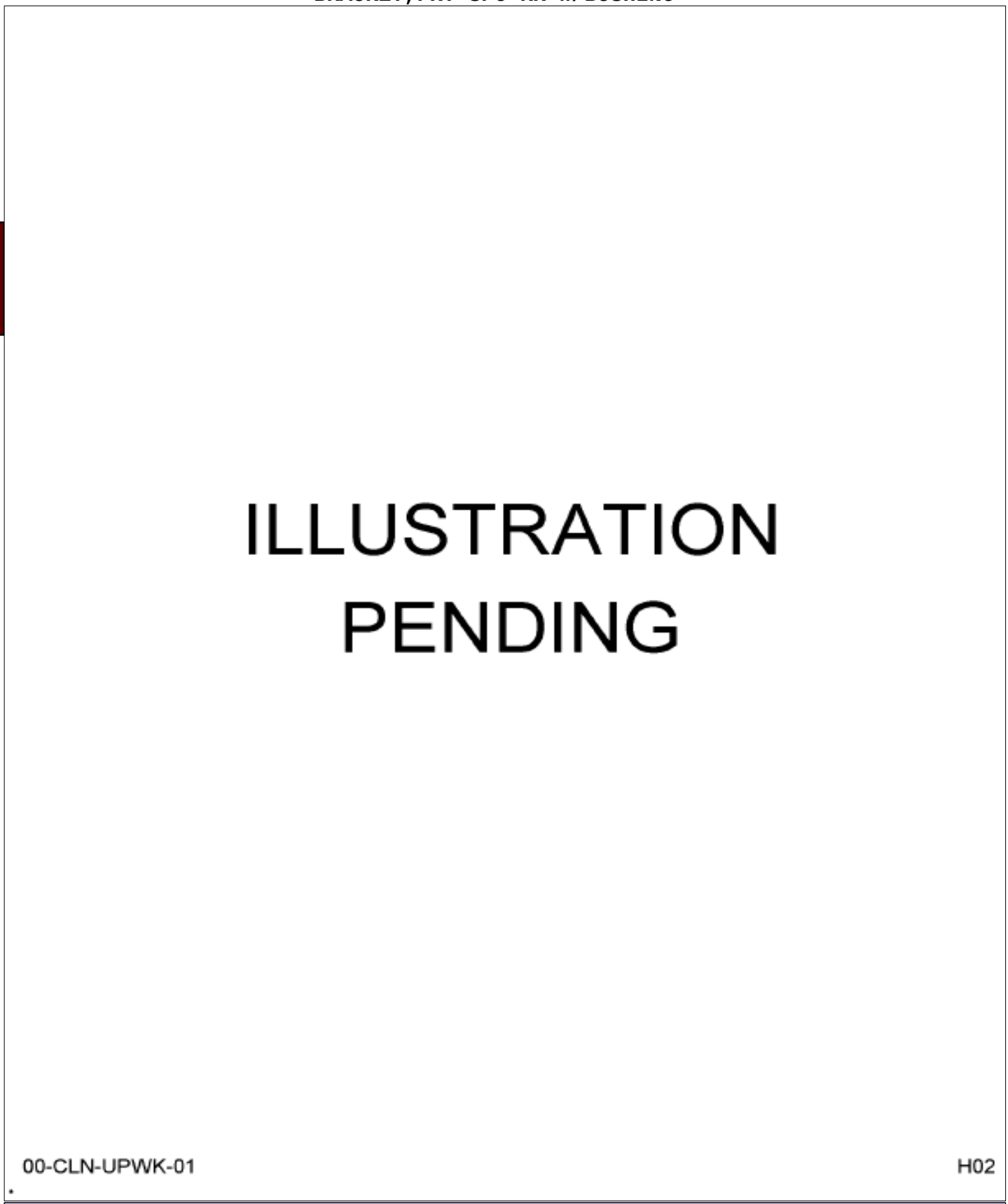

Item	Part No.	Qty	Description	Kit	Var	Figure
1	3533233C1	1	BUSHING,SPG PIN RUBBER 14-20K			
2	3541837C1	1	BRACKET,FRONT SPRING RR			
880		RF	NOTE: ASM BELOW COMPRISED OF ABOVE COMPONENTS			
881	3541838C91	RF	BRACKET,FRT SPG RR W/BUSHING			

COPYRIGHT© 2011INTERNATIONAL TRUCK AND ENGINE CORP.

https://truckmanualshub.com/

Figure 3540085C91

SPRING,CHASSIS FRONT 20K

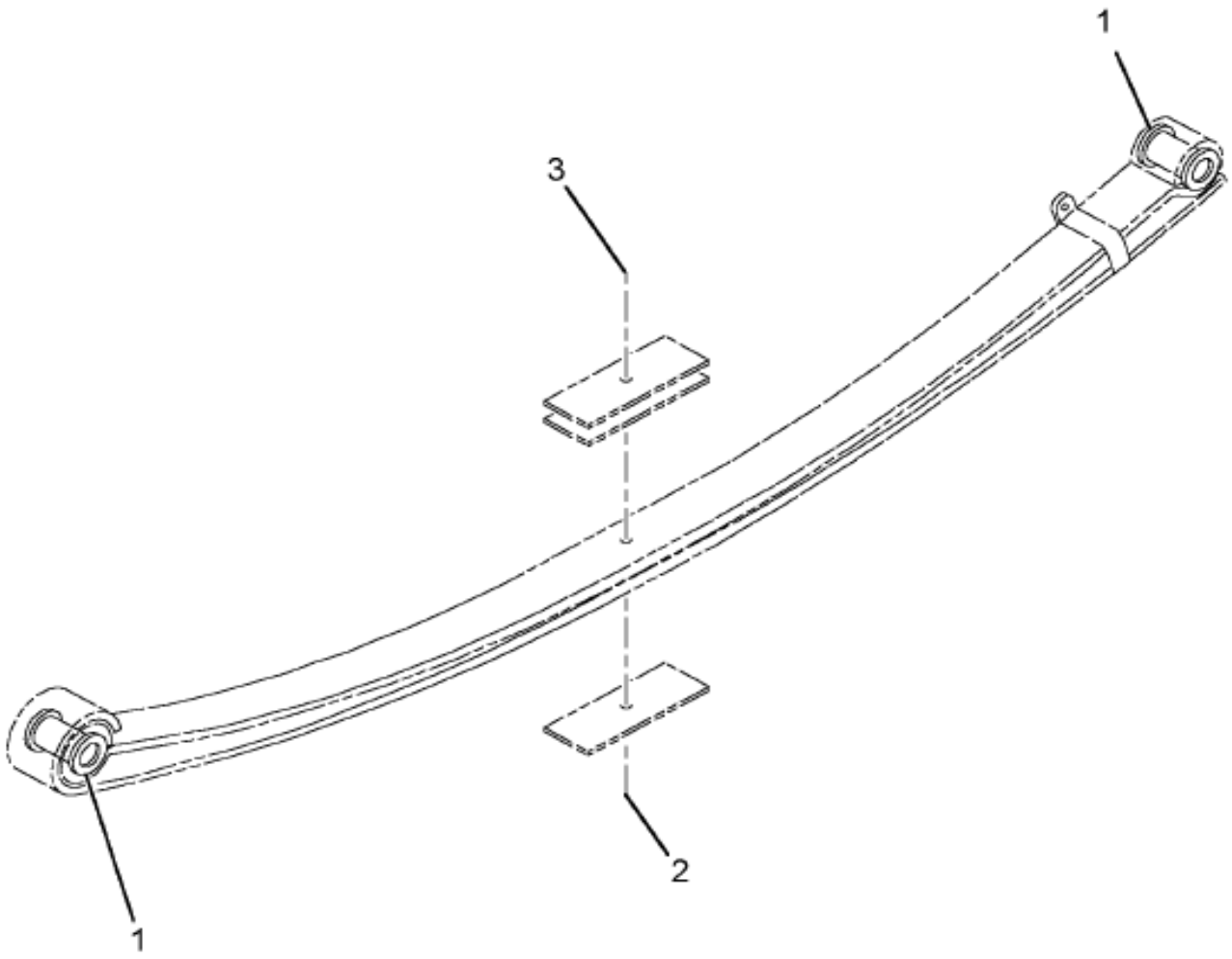

03-022-0065-00 C04

Item	Part No.	Qty	Description	Kit	Var	Figure
1	3533233C1	2	BUSHING,SPG PIN RUBBER 14-20K			
2	58694R1	1	BOLT,SPG CTR 1/2NF X 8 1/2			
3	25527R1	1	NUT, 1/2-NF PHC TYPE 8			
880		RF	NOTE: ASM BELOW COMPRISED OF ABOVE COMPONENTS			
881	3540085C91	RF	SPRING,CHASSIS FRONT 20K			

COPYRIGHT© 2011INTERNATIONAL TRUCK AND ENGINE CORP.

https://truckmanualshub.com/

MANUAL NOTES

COPYRIGHT© 2011INTERNATIONAL TRUCK AND ENGINE CORP.

https://truckmanualshub.com/

Group 04
Brakes

COPYRIGHT© 2011INTERNATIONAL TRUCK AND ENGINE CORP.

https://truckmanualshub.com/

Figure 0MHN1

AIR BRK TUBING INSTL; CTR SECT, W/RSM UC TANK

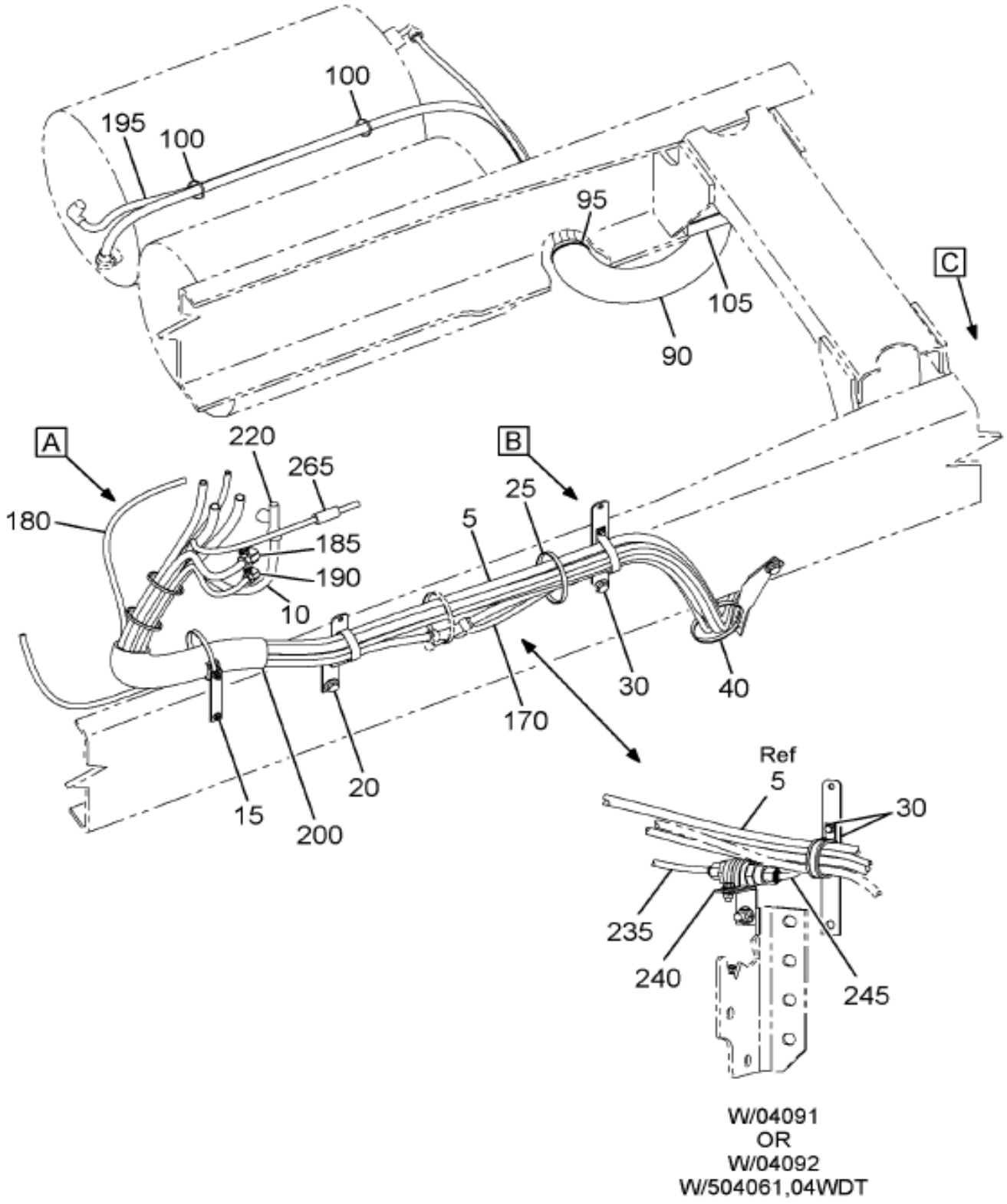

Figure 1 of 5

COPYRIGHT© 2011INTERNATIONAL TRUCK AND ENGINE CORP.

https://truckmanualshub.com/

Figure 0MHN1

AIR BRK TUBING INSTL; CTR SECT, W/RSM UC TANK

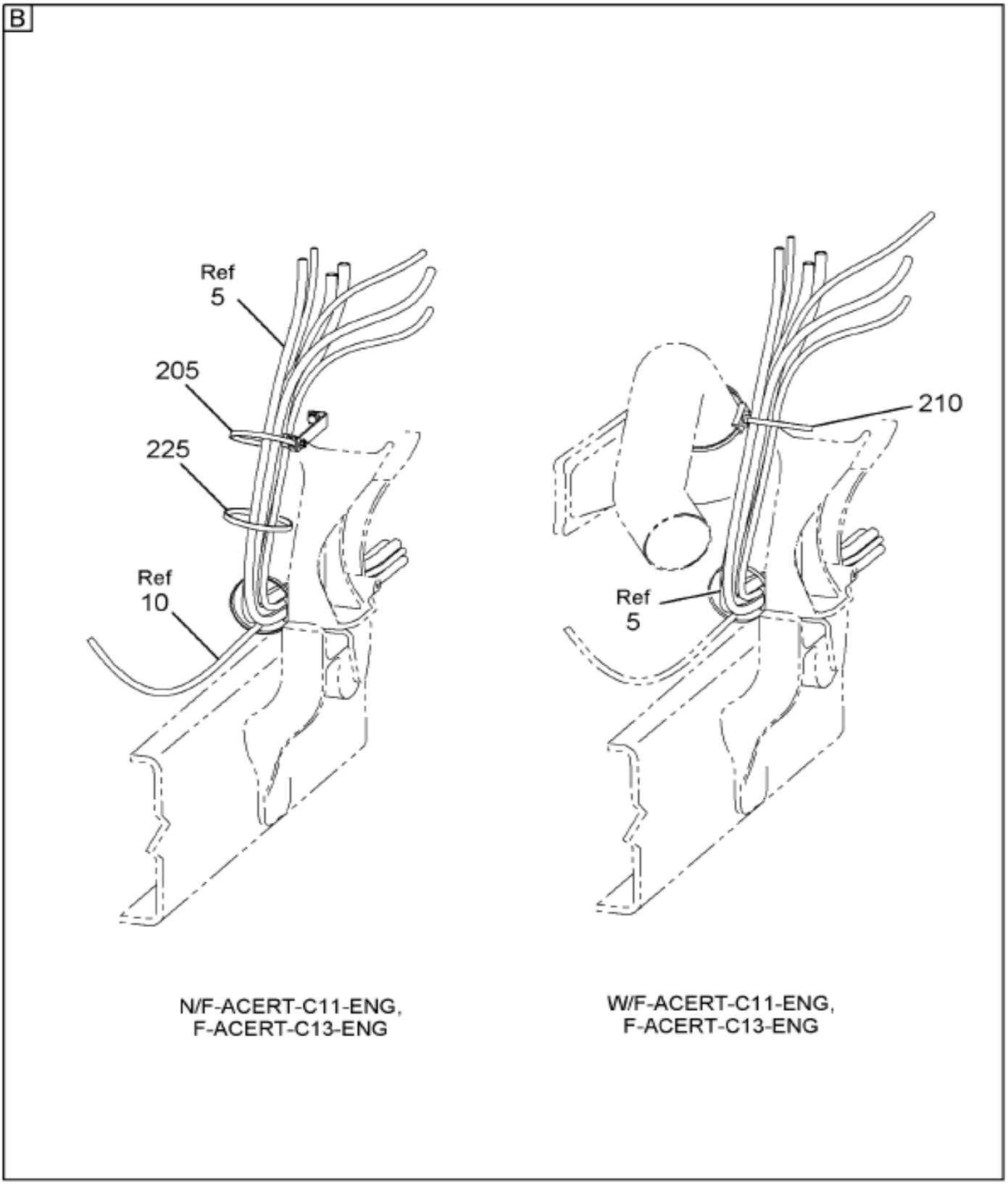

Grp 04

Figure 2 of 5

COPYRIGHT© 2011INTERNATIONAL TRUCK AND ENGINE CORP.

https://truckmanualshub.com/

Figure 0MHN1
AIR BRK TUBING INSTL; CTR SECT, W/RSM UC TANK

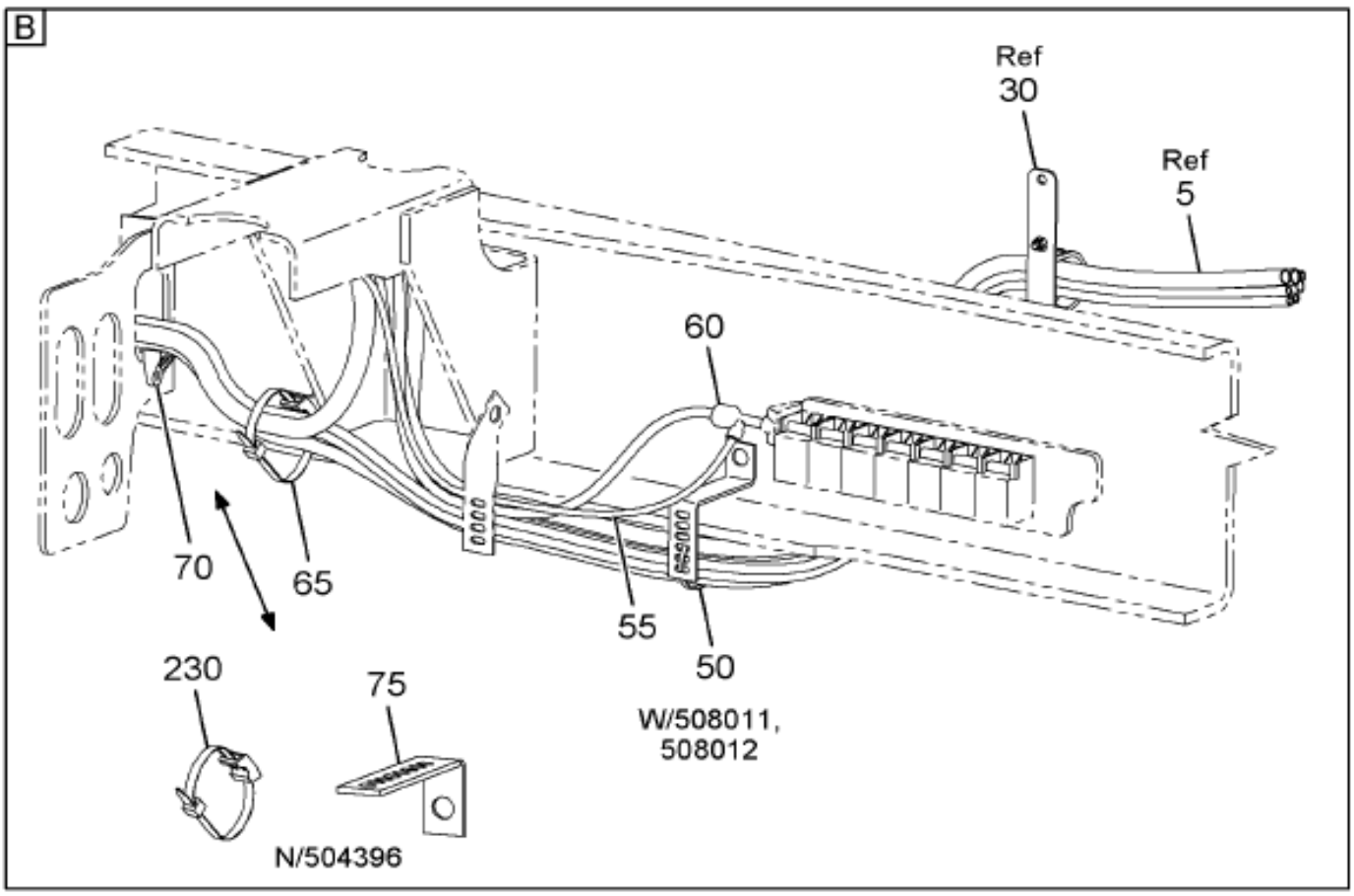

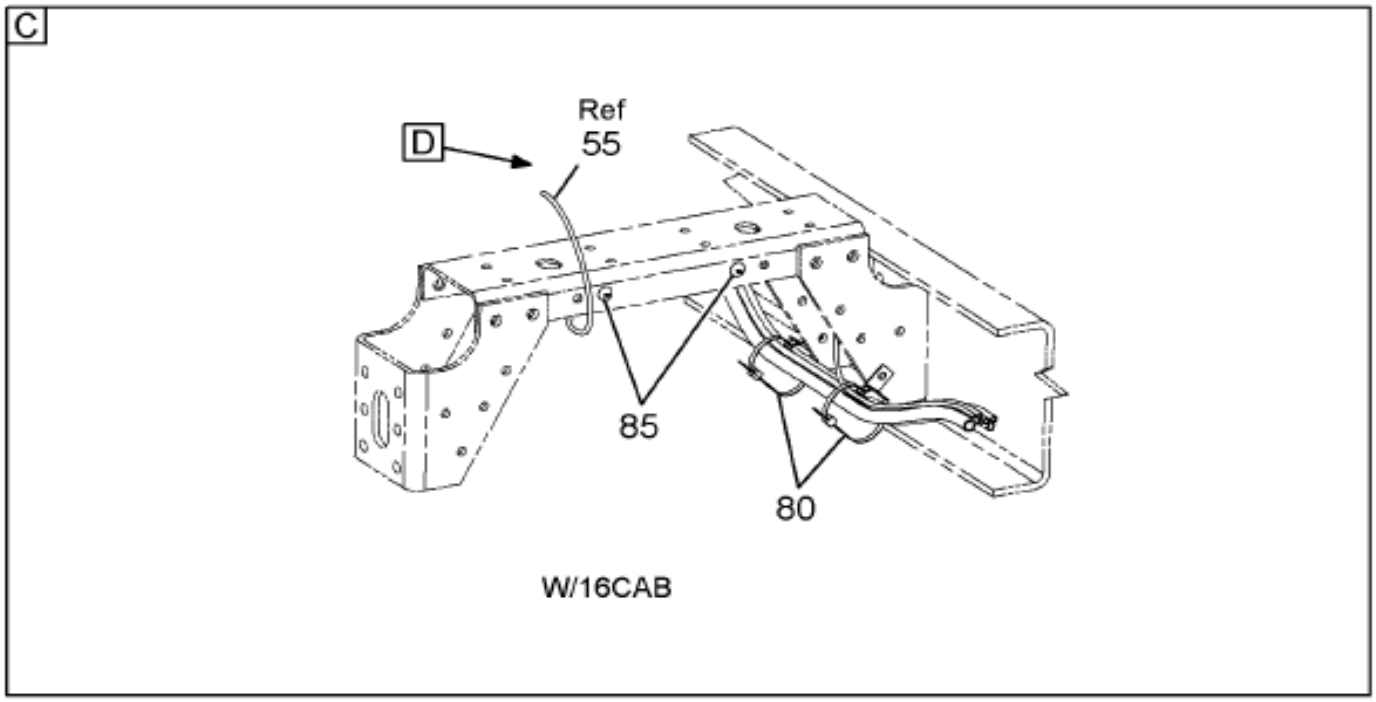

04-042-0576-03 C10

Figure 3 of 5

COPYRIGHT© 2011INTERNATIONAL TRUCK AND ENGINE CORP.

https://truckmanualshub.com/

Figure 0MHN1

AIR BRK TUBING INSTL; CTR SECT, W/RSM UC TANK

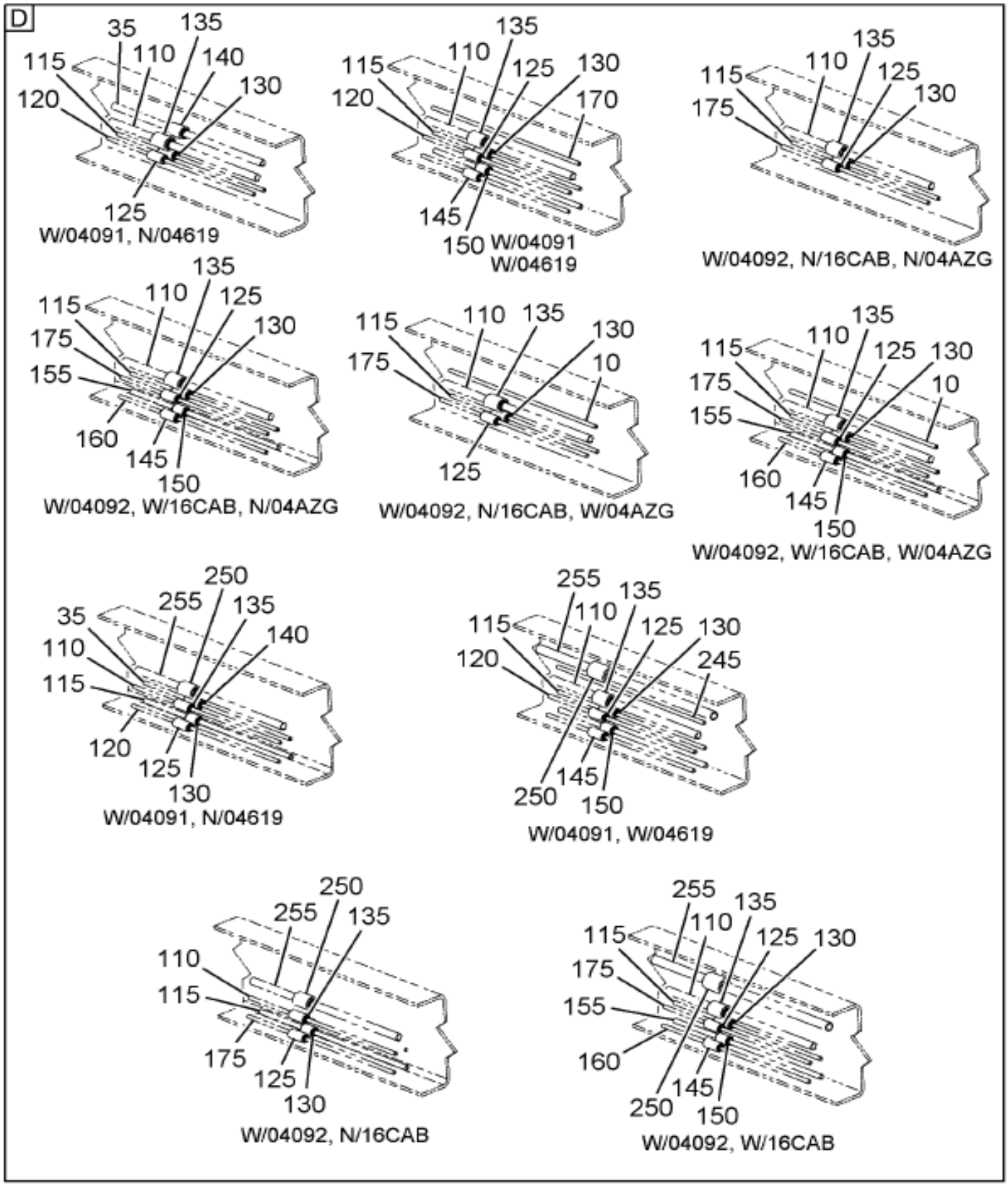

04-042-0576-04 C10

Grp 04

Figure 4 of 5

COPYRIGHT© 2011INTERNATIONAL TRUCK AND ENGINE CORP.

https://truckmanualshub.com/

Figure 0MHNY
AIR BRK TUBING INSTL; CTR SECT, W/RSM UC TANK

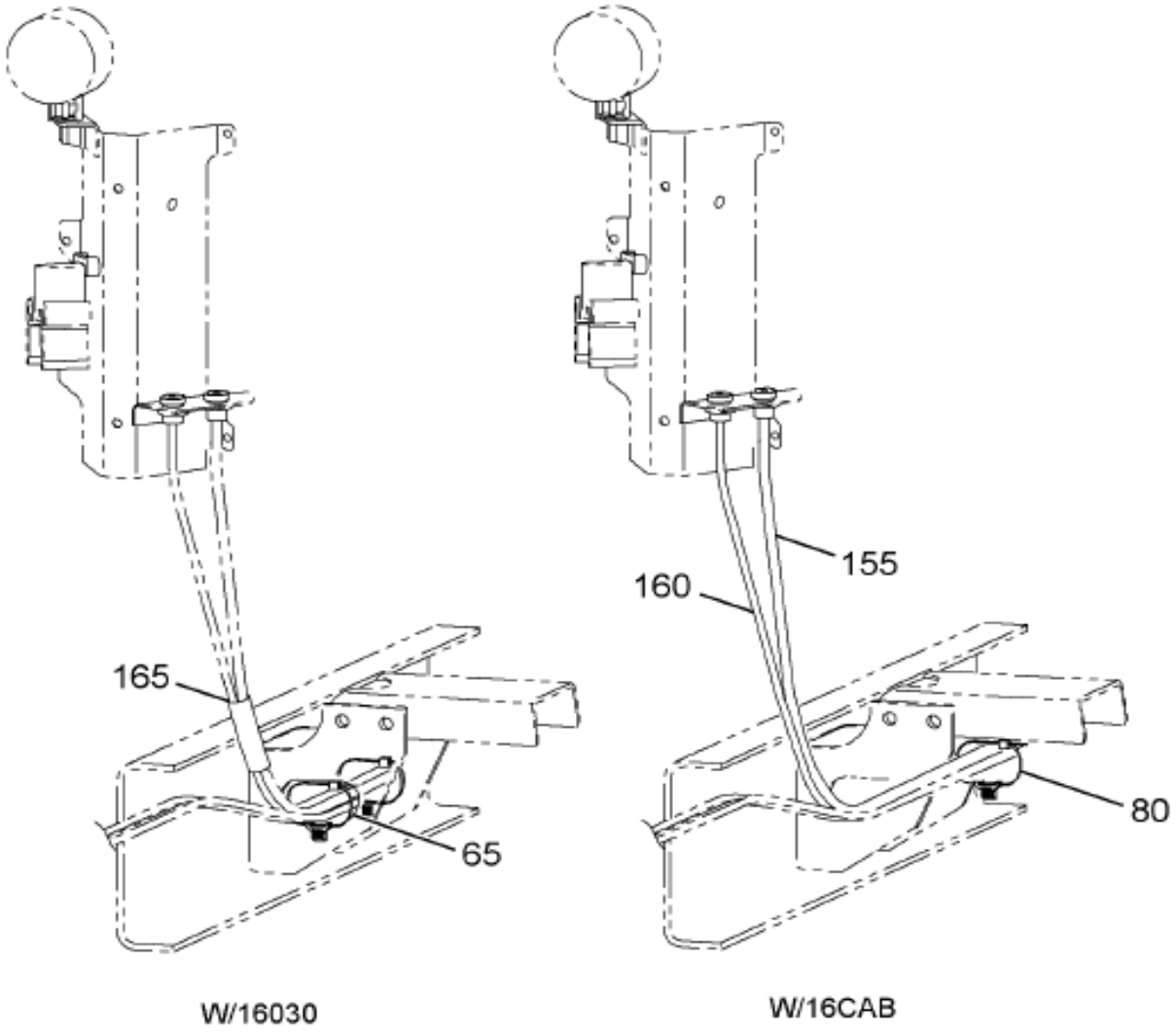

04-042-0576-05 C10

Item	Part No.	Qty	Description	Kit	Var	Figure
5	3615914C91	1	HARNESS,NYLON TUBE, FOR 7600 W		0MHRQ	3615914C91
15	3589105C1	1	EXTENSION,CLIP*90 DEG		0MHNY	
15	3561048C1	1	BOLT,HH FLG HD M8 X 30 METRIC		0MHNY	
15	3544379C1	1	NUT,HEX FLG M8 METRIC		0MHNY	
15	2041341C1	1	SADDLE,CLAMP CABLE LOCK MT 1/4		0MHNY	
15	931585R1	1	BOLT,HH, M6-15MM CLASS 10		0MHNY	

COPYRIGHT© 2011INTERNATIONAL TRUCK AND ENGINE CORP.

https://truckmanualshub.com/

Figure 0MHNY

AIR BRK TUBING INSTL; CTR SECT, W/RSM UC TANK

Item	Part No.	Qty	Description	Kit	Var	Figure
15	3544378C1	1	NUT,HEX METRIC PREV. TORQ*M6 H		0MHNY	
15	306132C1	1	STRAP,CABLE LOCK		0MHNY	
20	3567388C2	1	EXTENSION,CLIP*AIR BRAKE & FUE		0MHNY	
20	3535858C1	1	BOLT,HEX FLG HD METRIC*M12-1.7		0MHNY	
20	3535859C1	1	NUT,HEX METRIC PREV. TORQ*M12		0MHNY	
20	1684265C1	1	CLAMP,CABLE RUBBER CUSHIONED		0MHNY	
20	40235R1	1	BOLT HEX FLG HD METRIC*M6 X 16		0MHNY	
20	3544378C1	1	NUT,HEX METRIC PREV. TORQ*M6 H		0MHNY	
25	306132C1	1	STRAP,CABLE LOCK		0MHRV	
30	3598101C1	1	EXTENSION,CLIP		0MHNY	
30	3535858C1	1	BOLT,HEX FLG HD METRIC*M12-1.7		0MHNY	
30	3535859C1	1	NUT,HEX METRIC PREV. TORQ*M12		0MHNY	
30	1684265C1	1	CLAMP,CABLE RUBBER CUSHIONED		0MHNY	
30	40235R1	1	BOLT HEX FLG HD METRIC*M6 X 16		0MHNY	
30	3544378C1	1	NUT,HEX METRIC PREV. TORQ*M6 H		0MHNY	
35	2643441R2		TUBE,NYLON BULK 3/8 ORANGE		0MHQK	
40	3551192C1	1	EXTENSION,CLIP*		0MHNZ	
40	3535858C1	1	BOLT,HEX FLG HD METRIC*M12-1.7		0MHNZ	
40	3535859C1	1	NUT,HEX METRIC PREV. TORQ*M12		0MHNZ	
40	306132C1	1	STRAP,CABLE LOCK		0MHNZ	
50	3567391C1	1	EXTENSION,CLIP*SLOTTED LADDER-		0MHNY	
50	306132C1	1	STRAP,CABLE LOCK		0MHNY	
55	3520527C2	1150	TUBE,NYLON BULK 1/4 YELLOW		0MHP5	
60	2028986C1	1	TEE,QC 3/8FX1/4FX3/8M STEM		0MHNY	
65	315850C1	1	EXTENSION,CLIP		0MHNY	
65	40218R1	1	BOLT,HEX FLG HD METRIC*M10X25,		0MHNY	
65	3535556C1	1	NUT,HEX METRIC PREV. TORQ*M10		0MHNY	
65	2041341C1	1	SADDLE,CLAMP CABLE LOCK MT 1/4		0MHNY	
65	931585R1	1	BOLT,HH, M6-15MM CLASS 10		0MHNY	
65	3544378C1	1	NUT,HEX METRIC PREV. TORQ*M6 H		0MHNY	
65	306132C1	1	STRAP,CABLE LOCK		0MHNY	
70	3548585C1	1	GUIDE,BRK HOSE & CABLE*SADDLE		0MHP4	
70	3552155C1	1	BOLT,HEX FLG HD METRIC*M6 X 20		0MHP4	
70	3544378C1	1	NUT,HEX METRIC PREV. TORQ*M6 H		0MHP4	
70	306132C1	1	STRAP,CABLE LOCK		0MHP4	
90	2643669R1		LOOM,CABLE		0MHQ5	
90	306132C1	2	STRAP,CABLE LOCK		0MHQ5	
95	3551192C1	1	EXTENSION,CLIP*		0MHNY	
95	3535858C1	1	BOLT,HEX FLG HD METRIC*M12-1.7		0MHNY	
95	3535859C1	1	NUT,HEX METRIC PREV. TORQ*M12		0MHNY	
95	306132C1	1	STRAP,CABLE LOCK		0MHNY	
100	306132C1	2	STRAP,CABLE LOCK		0MHRX	
105	3517469C1	1	EXTENSION,CLIP		0MHNY	
105	306132C1	1	STRAP,CABLE LOCK		0MHNY	
110	2643575R2	2200	TUBE,NYLON BULK 3/4 GREEN		0MHQK	
115	2643440R2	2200	TUBE,NYLON BULK 3/8 GREEN		0MHQK	
120	2643443R2		TUBE,NYLON BULK 3/8 YELLOW		0MHQK	
125	2017507C1	1	COUPLING,PTC 3/8 QC		0MHNY	
130	2017507C1	1	COUPLING,PTC 3/8 QC		0MHNY	
135	3522524C1	1	COUPLING,PUSH TO CONNECT*		0MHNY	
140	2017507C1	1	COUPLING,PTC 3/8 QC		0MHRQ	
195	2643446R2	4450	TUBE,NYLON BULK 1/2 ORANGE		0MHQK	
205	3589105C1	1	EXTENSION,CLIP*90 DEG		0MHQC	
205	3547776C1	1	BOLT,HEX FLG HD METRIC*M8 X 20		0MHQC	
205	2041341C1	1	SADDLE,CLAMP CABLE LOCK MT 1/4		0MHQC	
205	25222R1	1	BOLT,HH 1/4-20 X 3/4 PHC TYP 8		0MHQC	
205	120380	1	WASHER LOCK 1/4",REG,STL/ZNC		0MHQC	
205	25519R1	1	NUT,1/4 NC TYPE 8		0MHQC	

COPYRIGHT© 2011INTERNATIONAL TRUCK AND ENGINE CORP.

https://truckmanualshub.com/

Figure 0MHNY

AIR BRK TUBING INSTL; CTR SECT, W/RSM UC TANK

Item	Part No.	Qty	Description	Kit	Var	Figure
205	306132C1	1	STRAP,CABLE LOCK		0MHQC	
265	2017507C1	1	COUPLING,PTC 3/8 QC		0MHNY	

COPYRIGHT© 2011INTERNATIONAL TRUCK AND ENGINE CORP.

https://truckmanualshub.com/

Figure 3613514C91
HARNESS,NYLON TUBE, FOR 7600 W

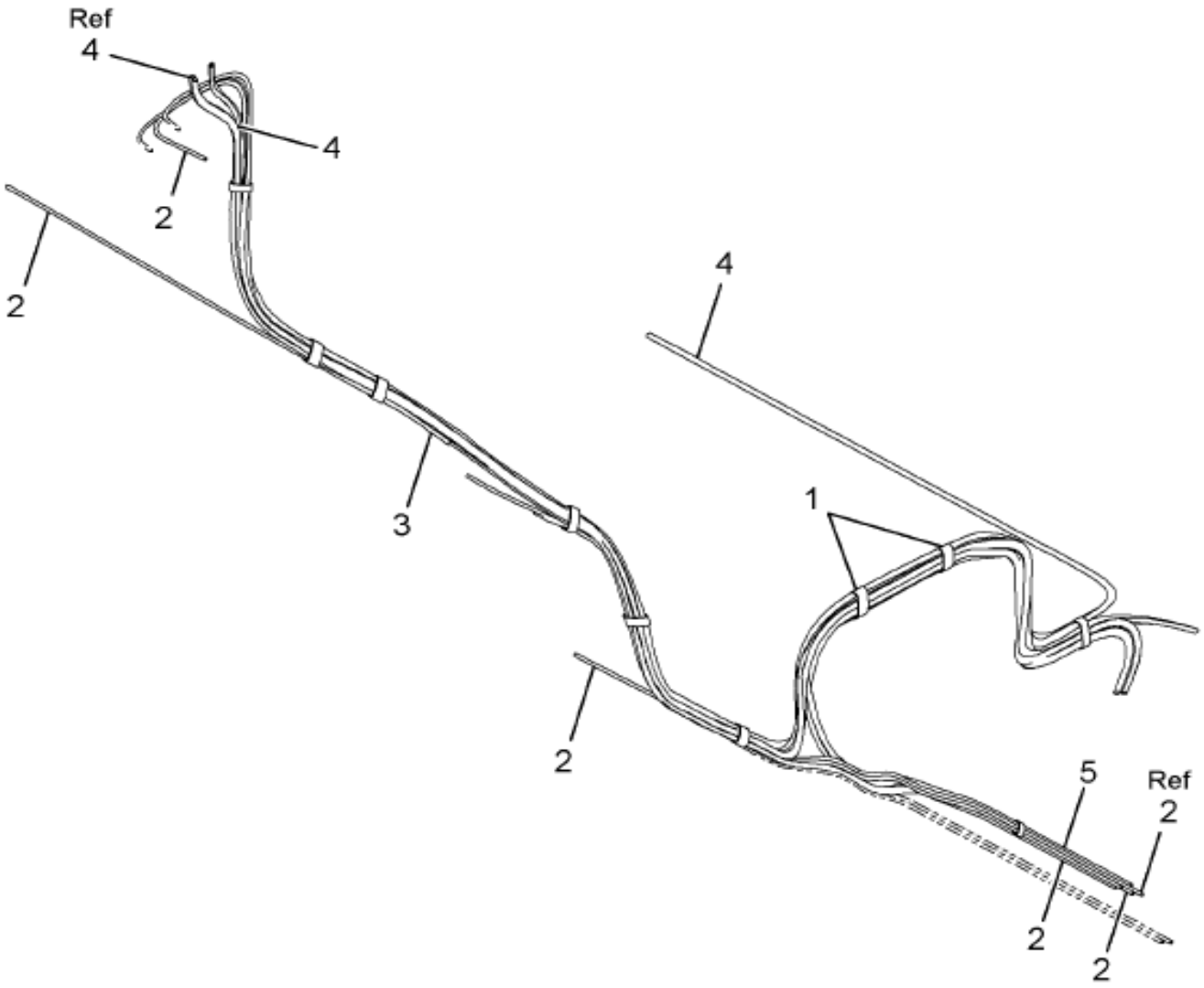

04-042-0662-01 M06

Item	Part No.	Qty	Description	Kit	Var	Figure
1	996205R3	AR	TAPE,PLASTIC ELECTRICAL 3/4"			
2	417199C3	AR	TUBE,NYLON BULK 3/8 OD BLACK			
3	417200C3	AR	TUBE,NYLON BULK 1/2 OD BLACK			
4	417201C3	AR	TUBE,NYLON BULK 5/8 OD BLACK			
5	417202C3	AR	TUBE,NYLON BULK 3/4 OD BLACK			
880		RF	NOTE: ASM BELOW COMPRISED OF ABOVE			

COPYRIGHT© 2011INTERNATIONAL TRUCK AND ENGINE CORP.

https://truckmanualshub.com/

Figure 3615914C91

HARNESS,NYLON TUBE, FOR 7600 W

Item	Part No.	Qty	Description	Kit	Var	Figure
			COMPONENTS			
881	3615914C91	RF	HARNESS,NYLON TUBE, FOR 7600 W			

COPYRIGHT© 2011INTERNATIONAL TRUCK AND ENGINE CORP.

https://truckmanualshub.com/

Figure 01733

AIR BRK TUBING INSTL; FRONT,QUICK RLSE, MODULATOR

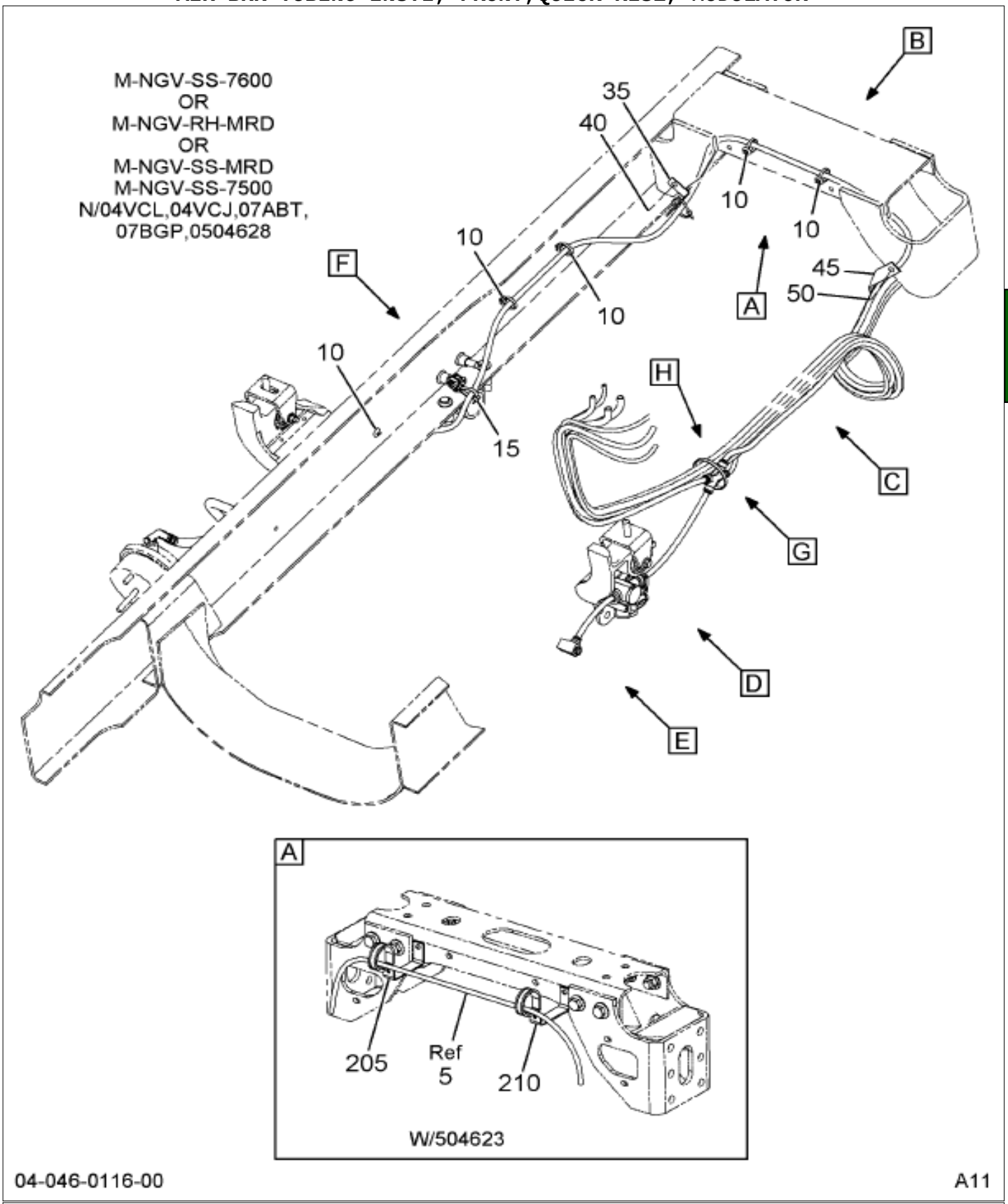

04-046-0116-00 A11

Grp 04

Figure 1 of 5

COPYRIGHT© 2011INTERNATIONAL TRUCK AND ENGINE CORP.

https://truckmanualshub.com/

Figure 011753

AIR BRK TUBING INSTL; FRONT,QUICK RLSE, MODULATOR

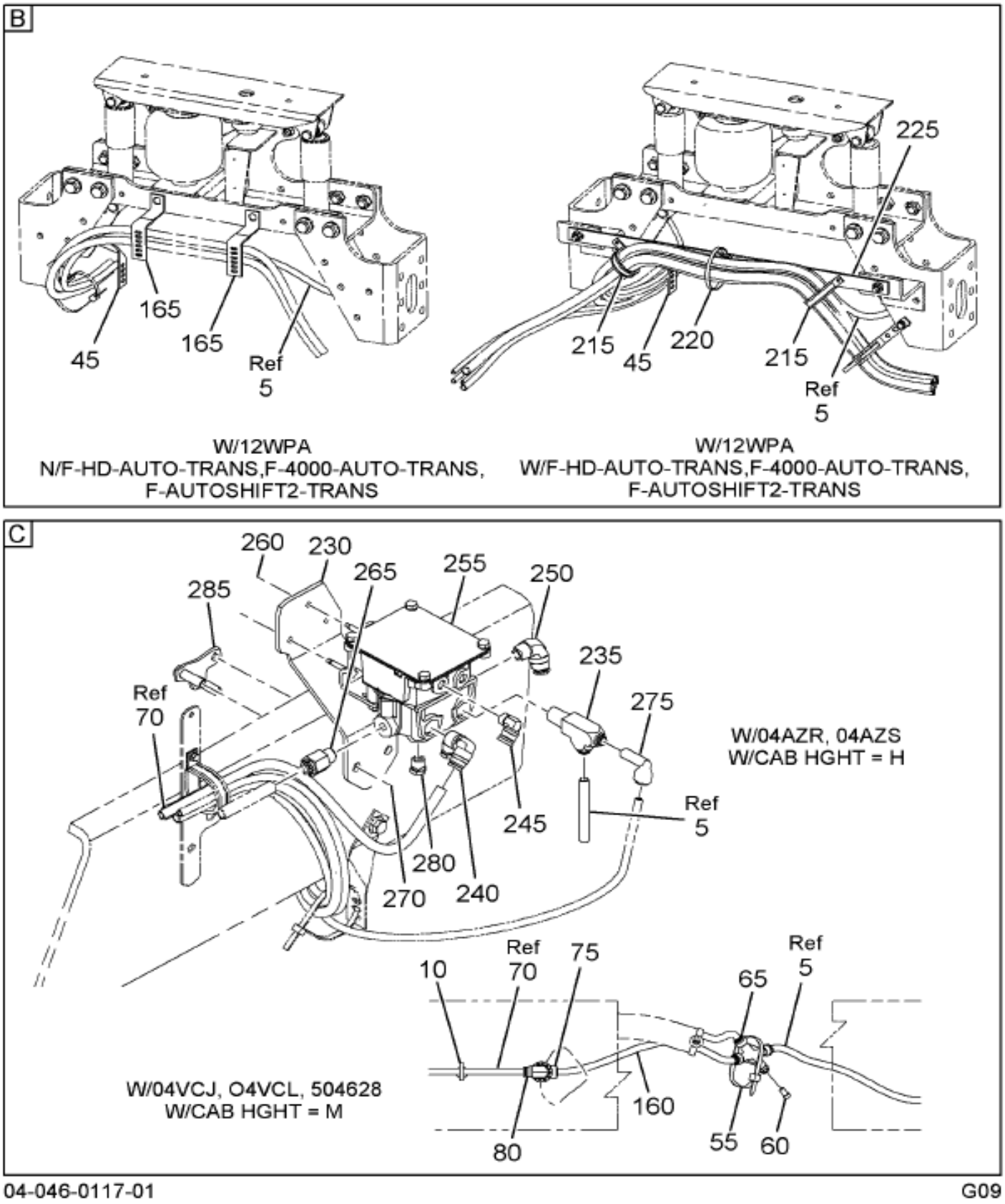

Figure 2 of 5

COPYRIGHT© 2011INTERNATIONAL TRUCK AND ENGINE CORP.

https://truckmanualshub.com/

Figure 01753

AIR BRK TUBING INSTL; FRONT,QUICK RLSE, MODULATOR

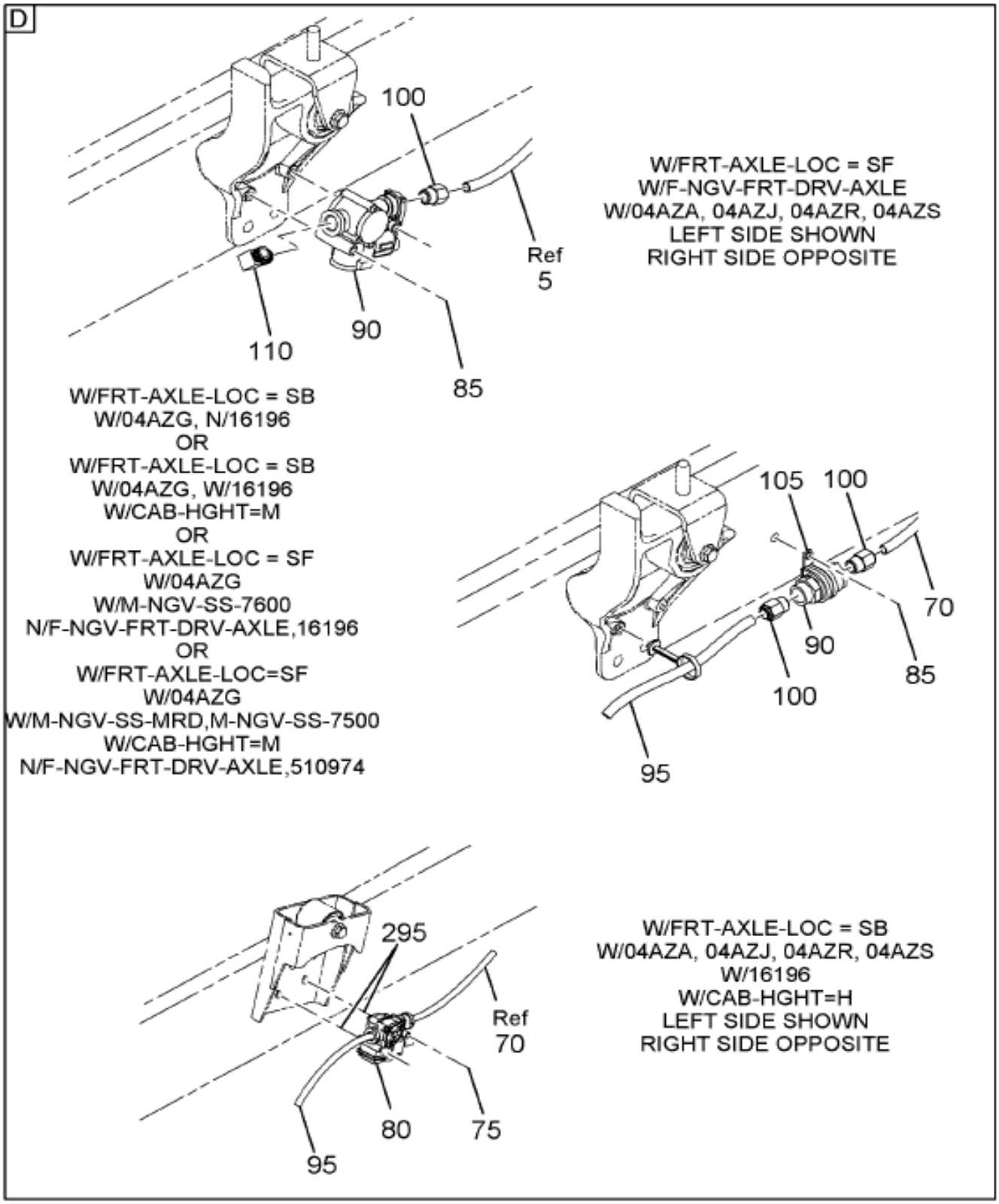

Grp 04

Figure 3 of 5

COPYRIGHT© 2011INTERNATIONAL TRUCK AND ENGINE CORP.

https://truckmanualshub.com/

Figure 011733

AIR BRK TUBING INSTL; FRONT,QUICK RLSE, MODULATOR

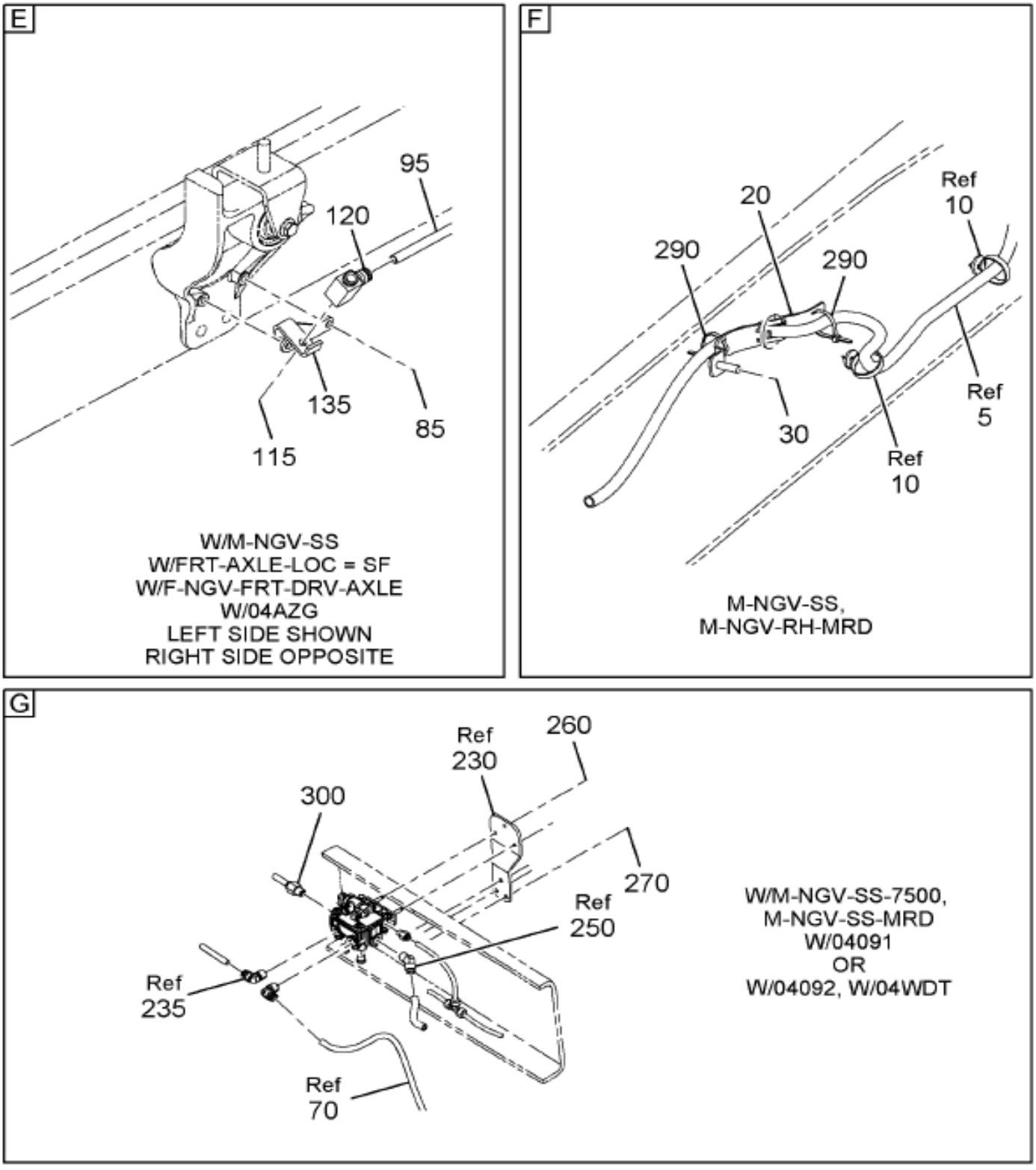

04-046-0287-02 G09

Figure 4 of 5

COPYRIGHT© 2011INTERNATIONAL TRUCK AND ENGINE CORP.

https://truckmanualshub.com/

Figure 0H753

AIR BRK TUBING INSTL; FRONT,QUICK RLSE, MODULATOR

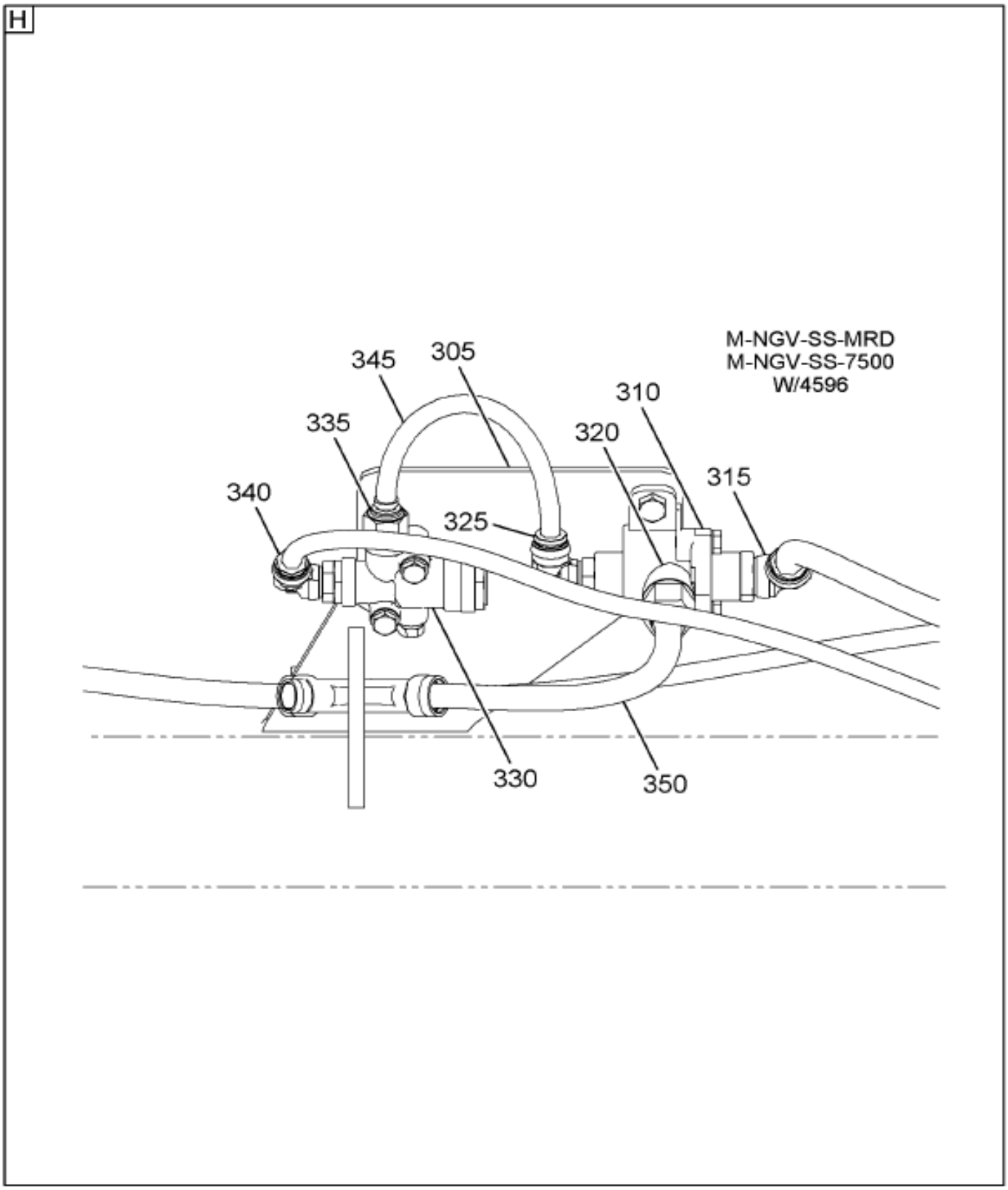

04-046-0358-01 A11

Item	Part No.	Qty	Description	Kit	Var	Figure
5	2643446R2	2225	TUBE,NYLON BULK 1/2 ORANGE		0H768	
10	3544557C1	2	STRAP,CABLE LOCK*382MM BUTTON		0H768	
10	3544557C1	2	STRAP,CABLE LOCK*382MM BUTTON		0JCZH	
10	3544557C1	3	STRAP,CABLE LOCK*382MM BUTTON		0H75S	
15	3691109C1	1	GUIDE,BRK HOSE & CABLE		0H75Y	
15	306132C1	1	STRAP,CABLE LOCK		0H75Y	

COPYRIGHT© 2011INTERNATIONAL TRUCK AND ENGINE CORP.

https://truckmanualshub.com/

Figure 011733

AIR BRK TUBING INSTL; FRONT,QUICK RLSE, MODULATOR

Item	Part No.	Qty	Description	Kit	Var	Figure
35	3517469C1	1	EXTENSION,CLIP		0YMW0	
35	306132C1	1	STRAP,CABLE LOCK		0YMW0	
40	3551579C1	1	BOLT,HEX FLG HD METRIC*HVY, M1		0YMW0	
40	3535556C1	1	NUT,HEX METRIC PREV. TORQ*M10		0YMW0	
45	3551192C1	1	EXTENSION,CLIP*		0H75W	
45	306132C1	1	STRAP,CABLE LOCK		0H75W	
50	3551579C1	1	BOLT,HEX FLG HD METRIC*HVY, M1		0H75W	
50	3535556C1	1	NUT,HEX METRIC PREV. TORQ*M10		0H75W	
55	306132C1	1	STRAP,CABLE LOCK		0RS1K	
65	3571907C1	1	MANIFOLD,FLEX TUBE NON METALS*		0RS1K	
70	2643446R2	25	TUBE,NYLON BULK 1/2 ORANGE		0H768	
85	3551579C1	2	BOLT,HEX FLG HD METRIC*HVY, M1		0H768	
85	3535556C1	2	NUT,HEX METRIC PREV. TORQ*M10		0H768	
90	3548736C1	2	VALVE,QUICK RELEASE*IN LINE		0H768	
95	2643446R2	25	TUBE,NYLON BULK 1/2 ORANGE		0H768	
95	2643446R2	1175	TUBE,NYLON BULK 1/2 ORANGE		0H768	
100	2017491C1	4	CONNECTOR,PUSH TO CONNECT*		0H768	
105	299276C91	2	CLAMP,RUBBER CUSHIONED		0H768	
115	3570658C1	2	BOLT,HEX FLG HD METRIC*M10 X 2		0P1VV	
120	3570576C1	2	ELBOW,DROP*M10 X 3/4-20 UNEF		0P1VV	

COPYRIGHT© 2011INTERNATIONAL TRUCK AND ENGINE CORP.

https://truckmanualshub.com/

Figure 0N54X

AIR BRK TUBING INSTL; REAR SECTION,HEND STL/RUB NON ABS

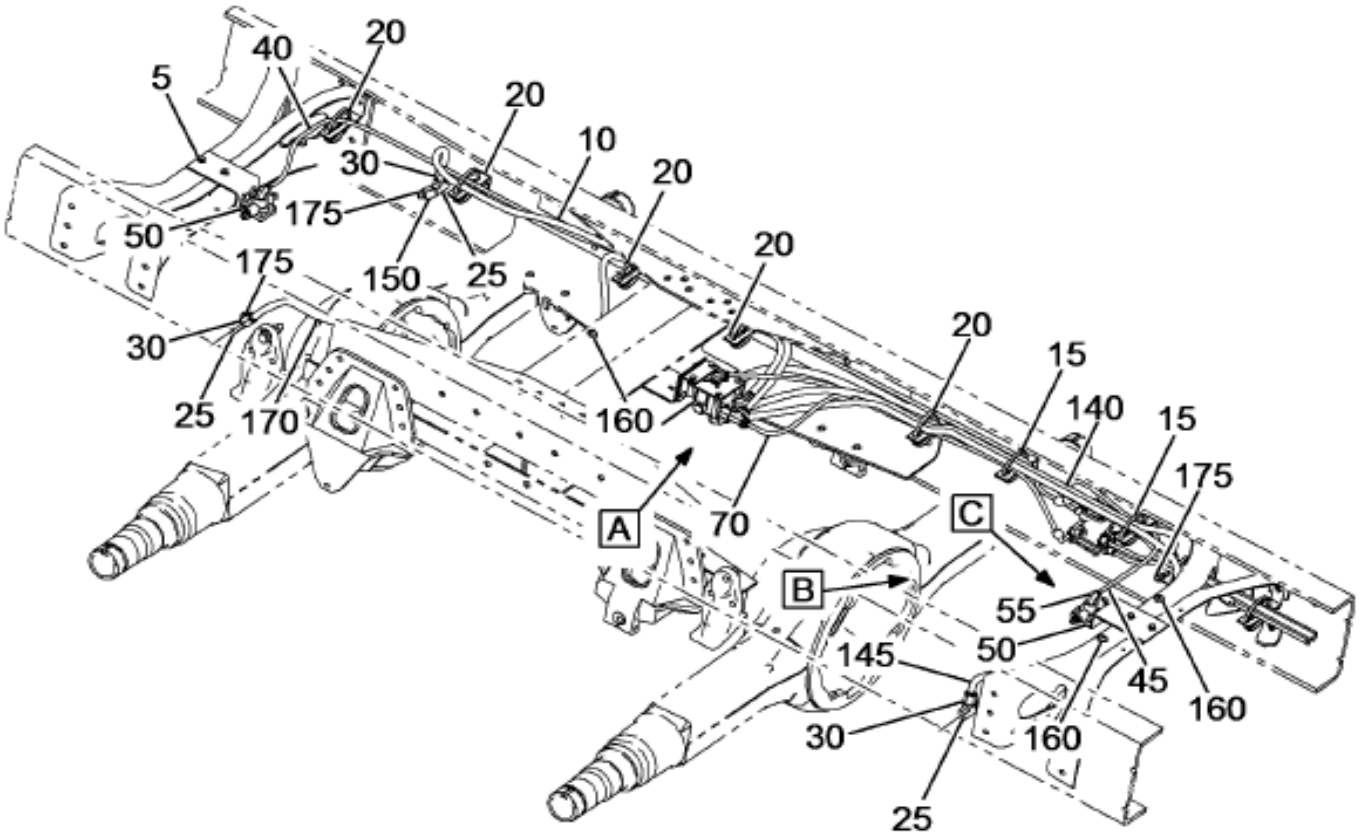

W/M-NGV-SS,M-CAT-SS
W/04091
W/04AZG
W/HEND WALKING
BEAM SUSP

04-056-0829-01 G11

Figure 1 of 3

COPYRIGHT© 2011INTERNATIONAL TRUCK AND ENGINE CORP.

https://truckmanualshub.com/

Figure 0N54X

AIR BRK TUBING INSTL; REAR SECTION,HEND STL/RUB NON ABS

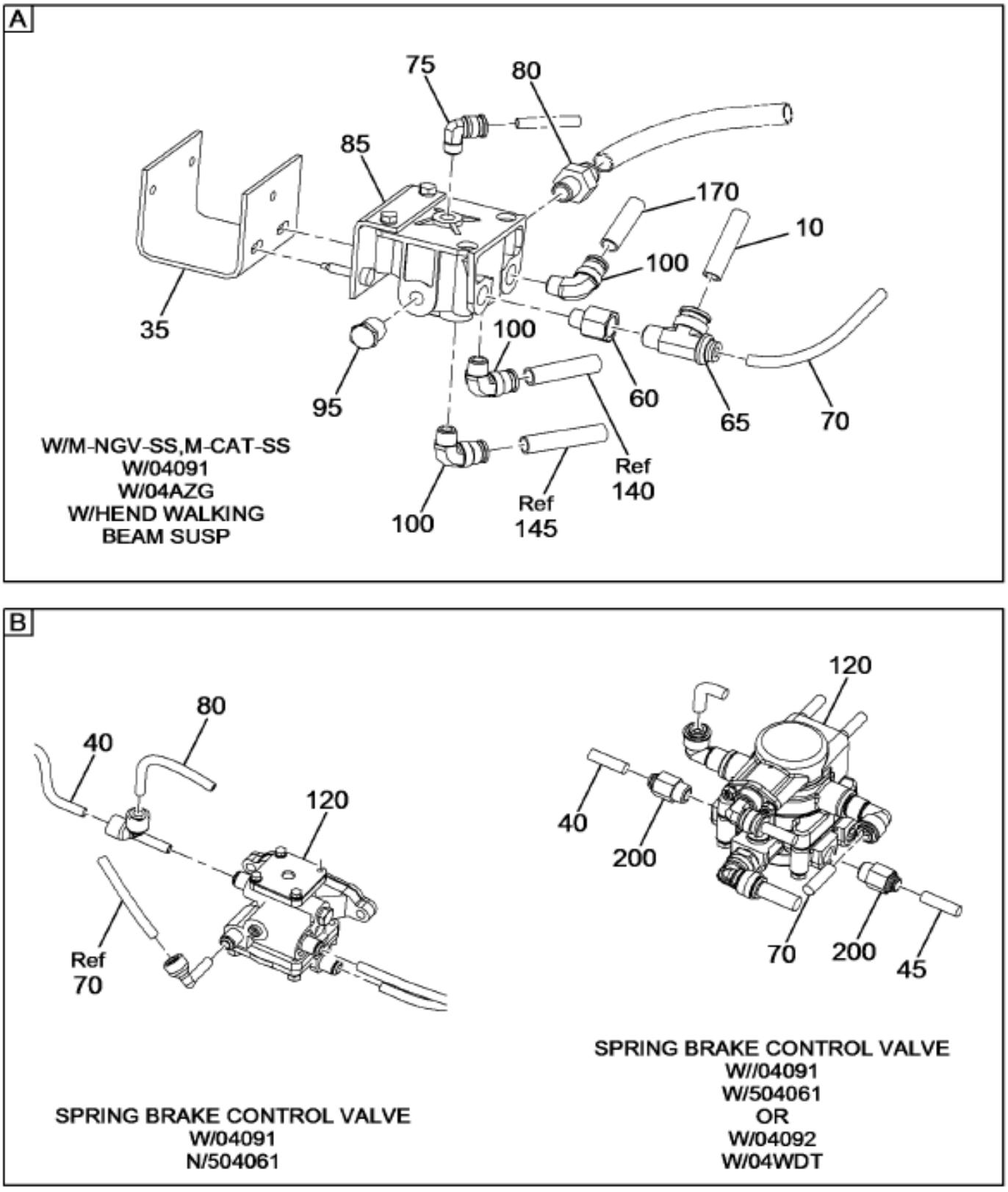

04-056-0556-01 G11

Figure 2 of 3

COPYRIGHT© 2011INTERNATIONAL TRUCK AND ENGINE CORP.

https://truckmanualshub.com/

AIR BRK TUBING INSTL; REAR SECTION,HEND STL/RUB NON ABS

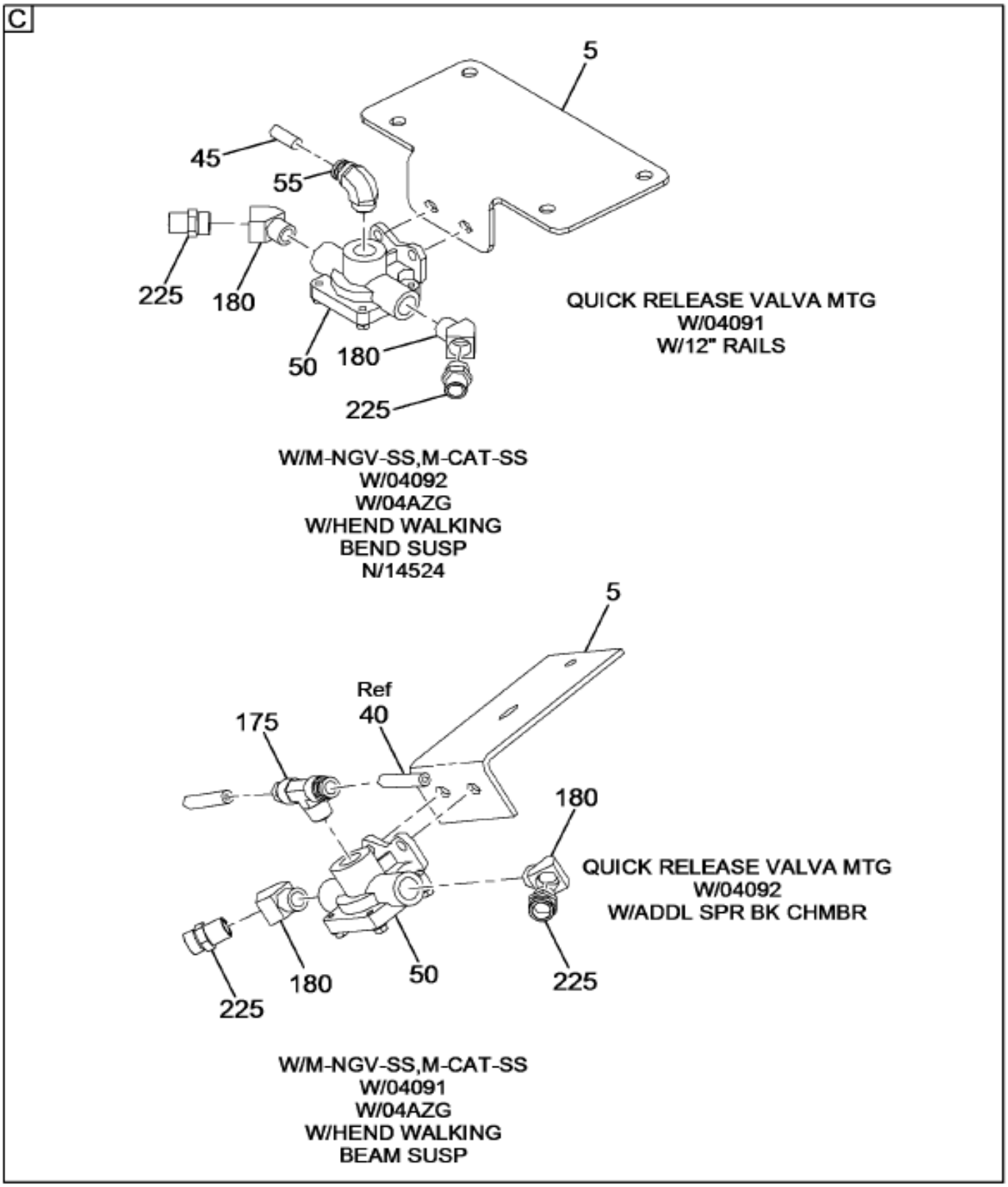

04-056-0721-01 G11

Item	Part No.	Qty	Description	Kit	Var	Figure
5	3604271C1	2	SUPPORT,, SPRING BRAKE QRV		0N55D	
5	31055R1	4	BOLT M8 X 25 PHC CL 8.8 FLG/H		0N55D	
5	3544379C1	4	NUT,HEX FLG M8 METRIC		0N55D	
10	2643448R2	1125	TUBE,NYLON BULK 5/8 GREEN		0N557	
15	306132C1	2	STRAP,CABLE LOCK		0N54X	
15	2034206C1	2	EXTENSION CLIP		0N54X	

COPYRIGHT© 2011INTERNATIONAL TRUCK AND ENGINE CORP.

https://truckmanualshub.com/

Figure 0N54X

AIR BRK TUBING INSTL; REAR SECTION,HEND STL/RUB NON ABS

Item	Part No.	Qty	Description	Kit	Var	Figure
15	30850R2	2	BOLT HEX FLG HD METRIC*M10 X 4		0N54X	
15	3535556C1	2	NUT,HEX METRIC PREV. TORQ*M10		0N54X	
20	306132C1	6	STRAP,CABLE LOCK		0N54X	
20	2034206C1	6	EXTENSION CLIP		0N54X	
25	459280C1	4	ELBOW,SPECIAL DROP		0N54X	
25	25483R1	4	BOLT 1/4 X 1 PHC TYPE 8		0N54X	
25	933833R1	4	WASHER,6MM LOCK		0N54X	
25	30210R1	4	WASHER, 6.4 X 14 X 2.5MM PHC		0N54X	
30	2017489C1	4	CONN,PUSH TO CONN 3/8 MPT		0N54X	
35	3542130C1	1	BRACKET,RELAY VALVE*RELAY/QUIC		0N54X	
35	40249R1	2	BOLT,HEX FLG HD METRIC		0N54X	
35	3544379C1	2	NUT,HEX FLG M8 METRIC		0N54X	
40	2643443R2	2275	TUBE,NYLON BULK 3/8 YELLOW		0N54Y	
45	2643443R2		TUBE,NYLON BULK 3/8 YELLOW		0N54X	
50	3628539C91	2	VALVE,QUICK RELEASE QRN		0N54X	3628539C91
50	31055R1	4	BOLT M8 X 25 PHC CL 8.8 FLG/H		0N54X	
50	3544379C1	4	NUT,HEX FLG M8 METRIC		0N54X	
55	2017514C2	2	ELBOW, 90 DEG 3/8 MPT X 3/8 PT		0N54X	
60	444016	1	BUSHING, 1/2 TO 3/8 PLN AUTO P		0N54X	
65	2034955C1	1	TEE,PUSH TO CONNECT*		0N54X	
70	2643440R2	1150	TUBE,NYLON BULK 3/8 GREEN		0N557	
75	2017511C2	1	ELBOW, 90 DEG 3/8 PTC X 1/4 MP		0N54X	
80	2017493C1	1	CONNECTOR,PTC 1/2MPT X 3/4QC		0N54X	
85	3518861C91	1	VALVE,RELAY R-12		0N54X	3518861C91
85	25520R1	2	NUT, 5/16 PHC TYPE 8		0N54X	
85	120214	2	WASHER,LOCK 5/16,REG,STL/ZNC		0N54X	
95	444632	1	PLUG, 1/2-14 PLN H/HD PIPE		0N54X	
100	2017516C2	3	ELBOW, 5/8 PTC X 3/8 MPT		0N54X	
120	3821869C91	1	VALVE,BRK CONTROL, SR-7 SPRING		0N55C	3821869C91
120	30754R1	2	NUT,LOCK OR HEX SPECIAL*PREVAI		0N55C	
140	2643448R2	1175	TUBE,NYLON BULK 5/8 GREEN		0N557	
145	2643448R2	2200	TUBE,NYLON BULK 5/8 GREEN		0N557	
150	444056	2	ELBOW, 3/8-18 PLN AUTO 45D PIP		0N54X	
160	3530605C2	3	STRAP,CABLE LOCK, BUTTON STRAP		0N54X	
170	2643448R2	2200	TUBE,NYLON BULK 5/8 GREEN		0N557	
175	3572104C1	6	FITTING,SPECIAL*3/8PT X 3/4ST		0N54X	
180	444056	2	ELBOW, 3/8-18 PLN AUTO 45D PIP		0N54X	
200	2017487C1	2	CONNECTOR,3/8MPT X 3/8QC STRGT		0N55C	
225	3572104C1	2	FITTING,SPECIAL*3/8PT X 3/4ST		0N54X	

COPYRIGHT© 2011INTERNATIONAL TRUCK AND ENGINE CORP.

https://truckmanualshub.com/

Figure 3821869C91
VALVE,BRK CONTROL, SR-7 SPRING

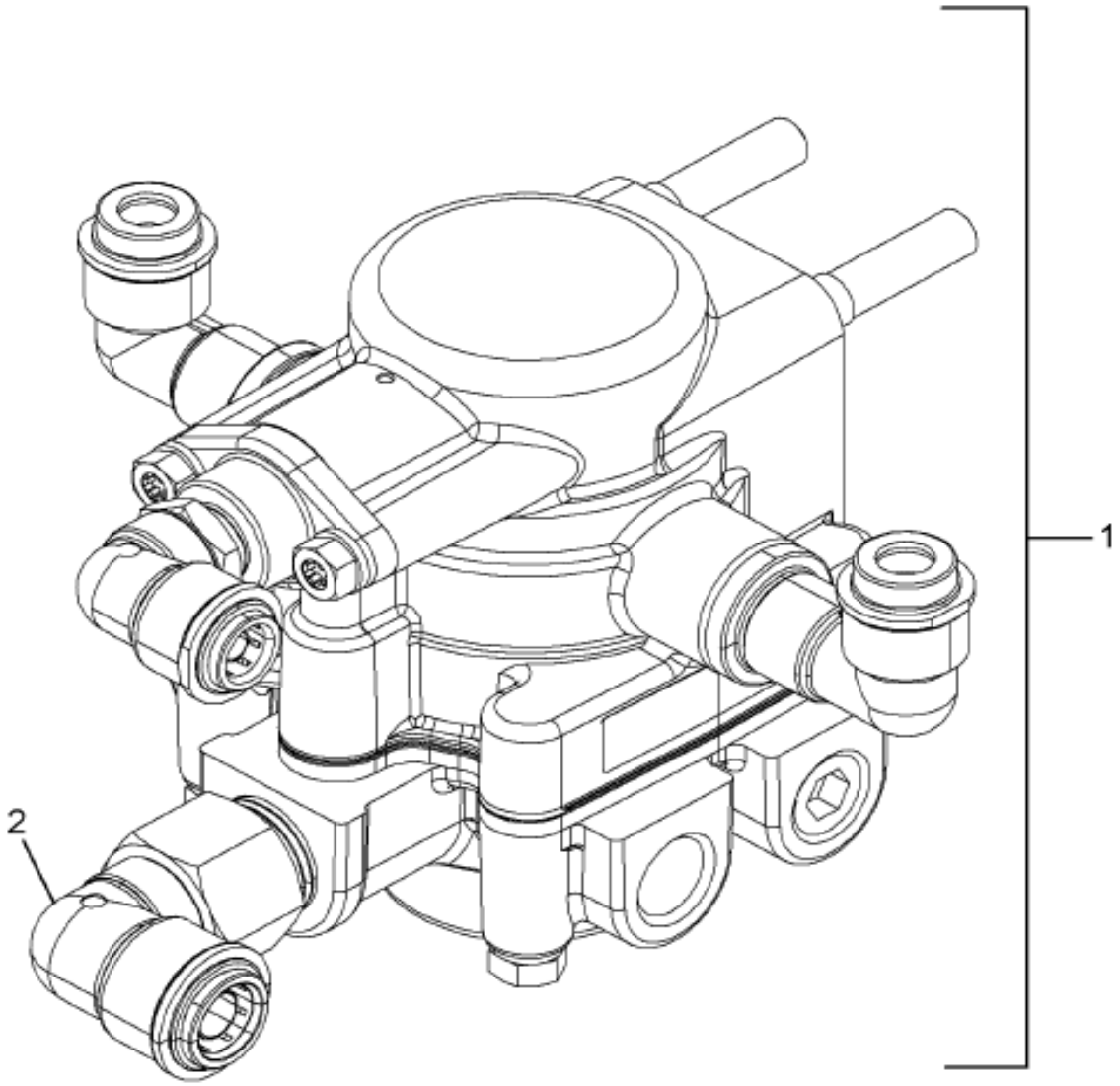

04-056-0658-01 J08

Item	Part No.	Qty	Description	Kit	Var	Figure
1	2596561C91	1	VALVE,BRK CONTROL SR-7 SPRING			
2	BX5013665	1	VALVE,CHECK 1/2" 90D			
880		RF	NOTE: ASM BELOW COMPRISED OF ABOVE COMPONENTS			
881	3821869C91	RF	VALVE,BRK CONTROL, SR-7 SPRING			

COPYRIGHT© 2011INTERNATIONAL TRUCK AND ENGINE CORP.

https://truckmanualshub.com/

Figure 3628539C91
VALVE,QUICK RELEASE QRN

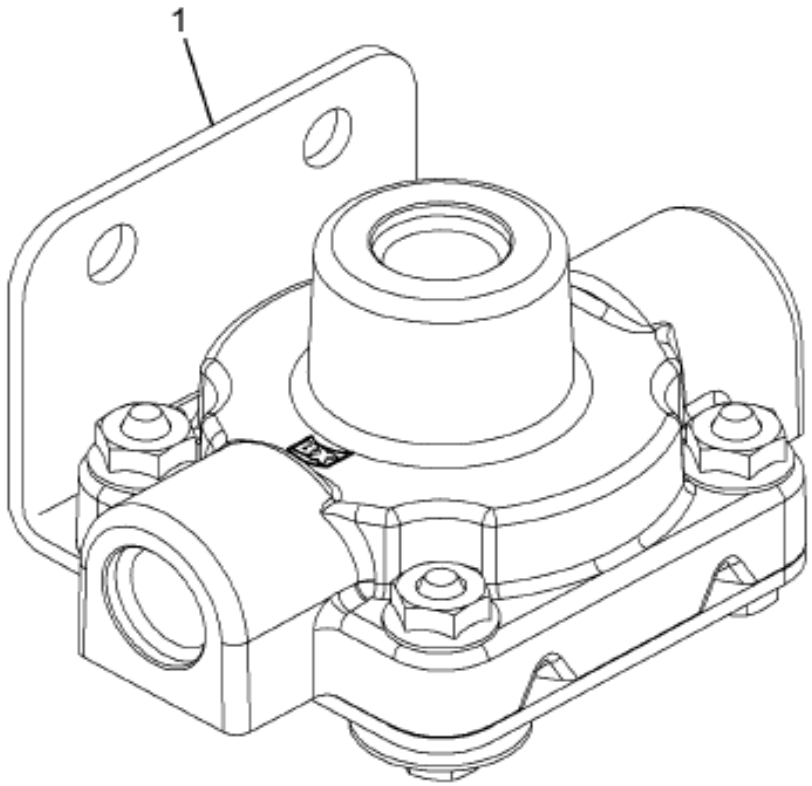

04-046-0199-01 J07

Item	Part No.	Qty	Description	Kit	Var	Figure
1	1693125C91	KT	KIT,QR VALVE MAINTENANCE			
880		RF	NOTE: ASM BELOW COMPRISED OF ABOVE COMPONENTS			
881	3628539C91	RF	VALVE,QUICK RELEASE QRN			

COPYRIGHT© 2011INTERNATIONAL TRUCK AND ENGINE CORP.

https://truckmanualshub.com/

Figure 3518861C91
VALVE,RELAY R-12

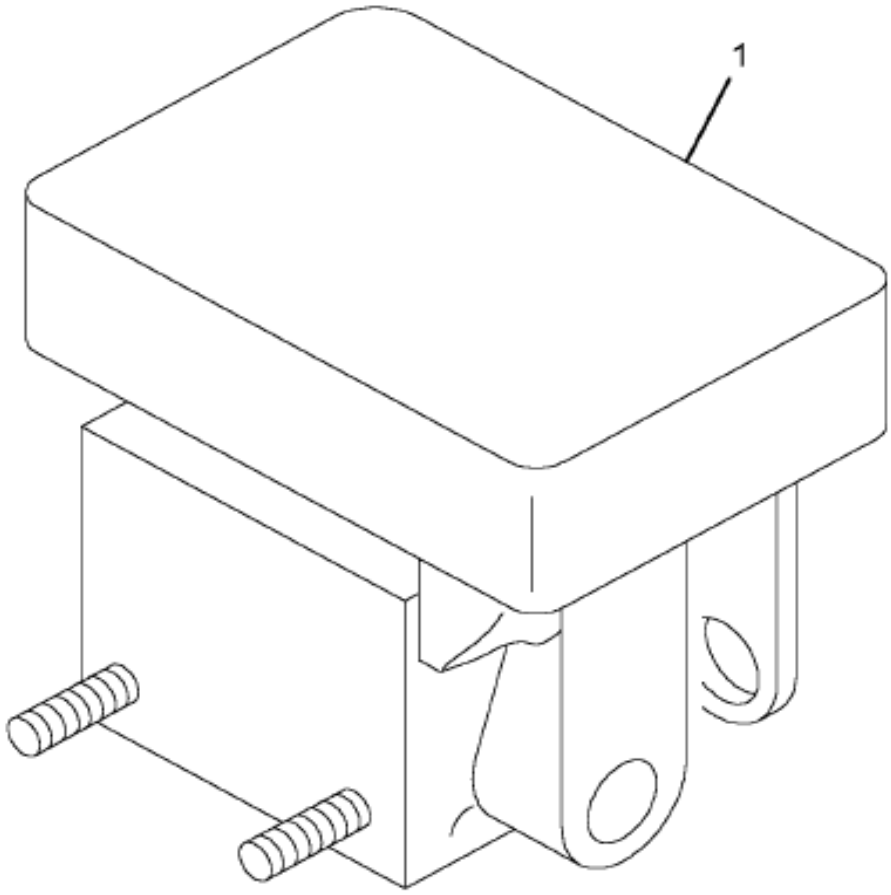

04-056-0049-00 E04

Item	Part No.	Qty	Description	Kit	Var	Figure
1	1676687C91	KT	KIT,REPAIR RELAY VALVE			
880		RF	NOTE: ASM BELOW COMPRISED OF ABOVE COMPONENTS			
881	3518861C91	RF	VALVE,RELAY R-12			

COPYRIGHT© 2011INTERNATIONAL TRUCK AND ENGINE CORP.

https://truckmanualshub.com/

Figure 0K9YJ

AIR COMPSR & GOVERNOR INSTL

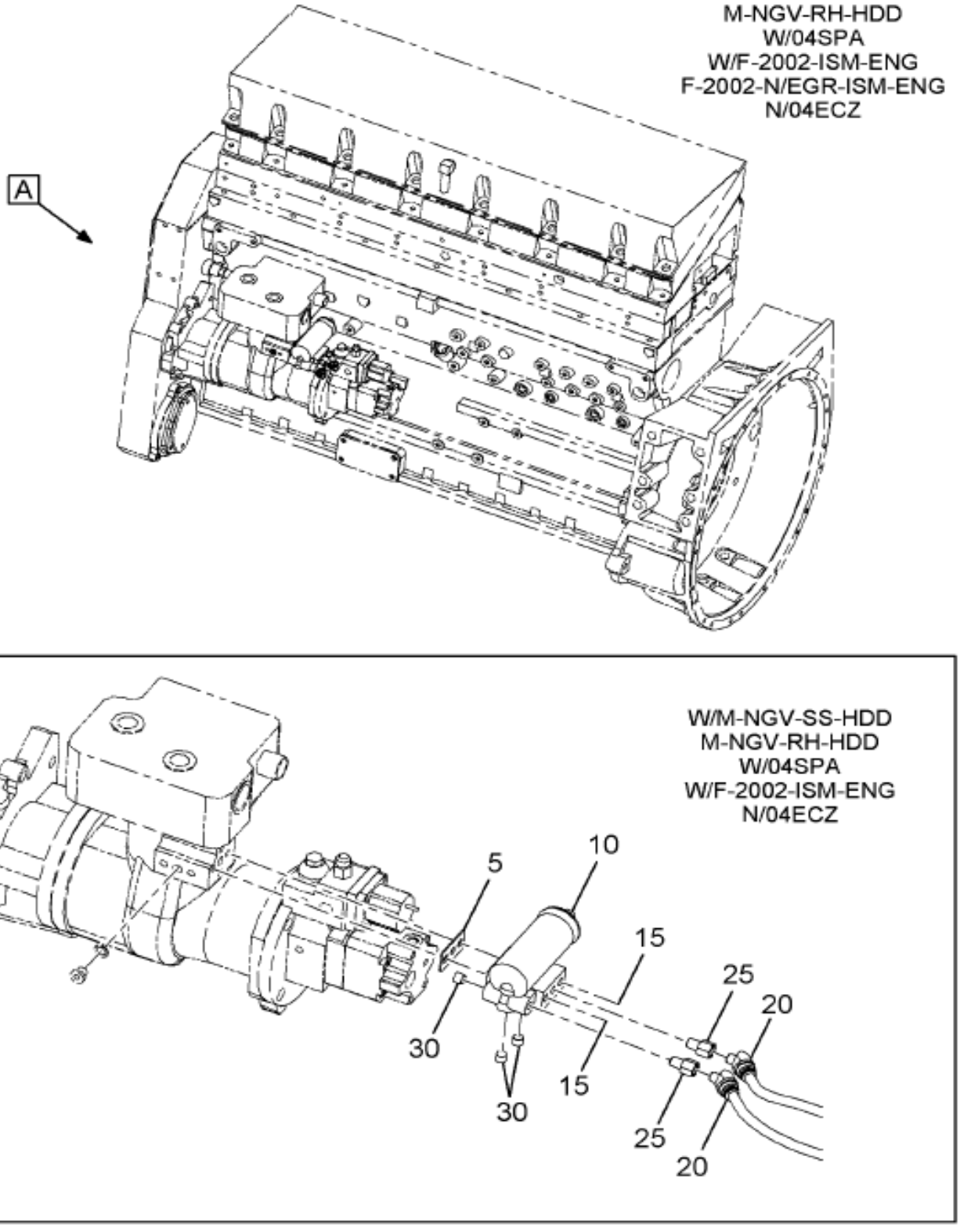

04-026-0164-01 D10

Item	Part No.	Qty	Description	Kit	Var	Figure
5	166562R2	1	GASKET,AIR GOV COVER		0K9YJ	
10	410986C92	1	GOVERNOR,ASSY D-2		0K9YJ	410986C92
15	3526063C1	2	SCREW,MACH SPECIAL*CAP HEX SOC		0K9YJ	
15	25708R1	2	WASHER,FLAT 5/16(.344X.688X.08		0K9YJ	
20	3520250C2	1	ELBOW, 45 DEG 3/8 PTC X 1/8 MP		0K9YJ	
20	3520250C2	1	ELBOW, 45 DEG 3/8 PTC X 1/8 MP		0K9YK	

COPYRIGHT© 2011INTERNATIONAL TRUCK AND ENGINE CORP.

https://truckmanualshub.com/

Figure 0K9YJ

AIR COMPSR & GOVERNOR INSTL

Item	Part No.	Qty	Description	Kit	Var	Figure
25	443998	1	ADAPTER, 1/8-27 PLN AUTO PIPE		0K9YJ	
25	443998	1	ADAPTER, 1/8-27 PLN AUTO PIPE		0K9YK	
30	444688	3	PLUG, 1/8-27 ZNP HEX/SKT AUTO		0K9YJ	

COPYRIGHT© 2011INTERNATIONAL TRUCK AND ENGINE CORP.

https://truckmanualshub.com/

Figure 410986C92

GOVERNOR,ASSY D-2

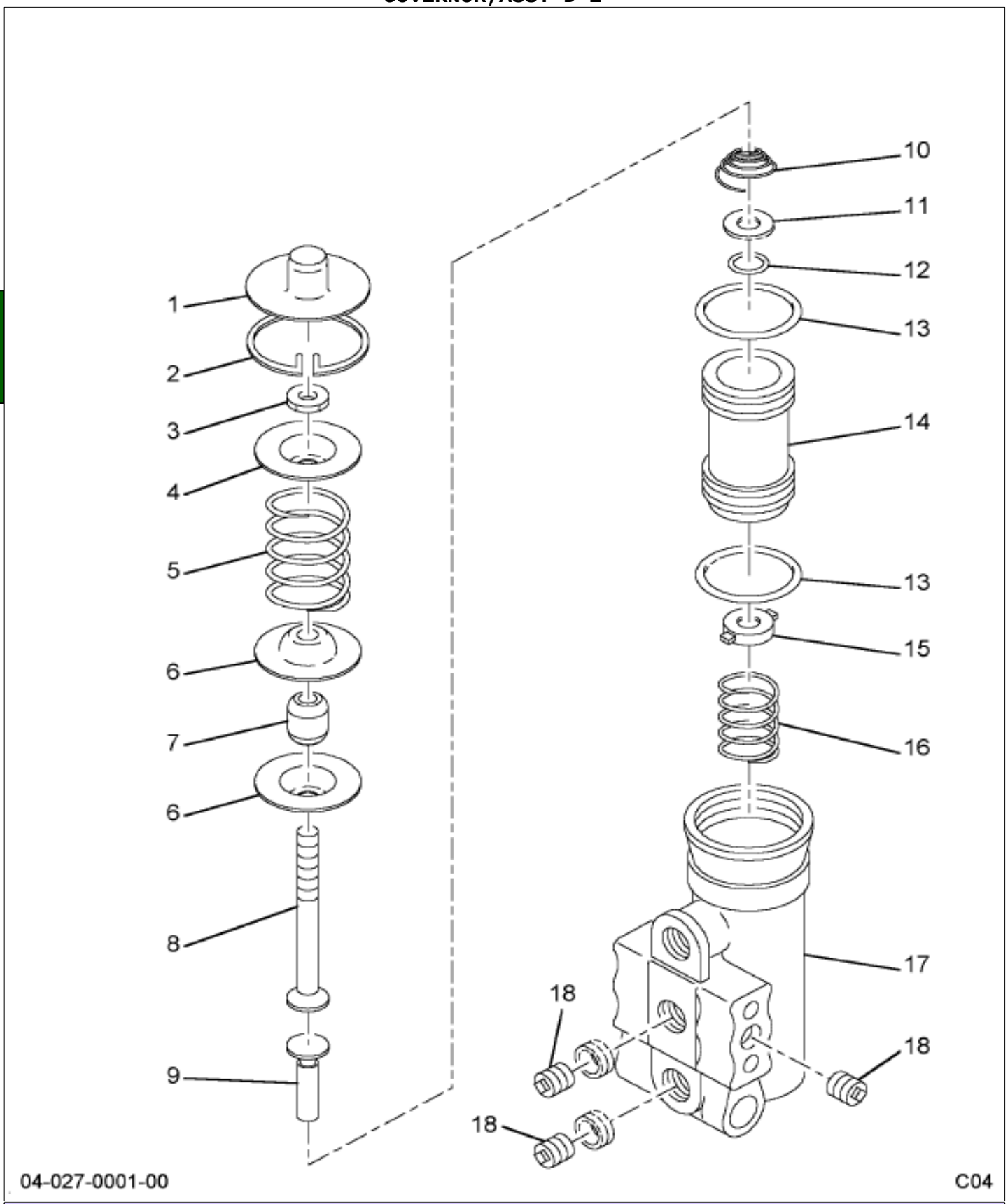

Item	Part No.	Qty	Description	Kit	Var	Figure
1	321739R1	1	COVER,AIR GOV			
2	160094R1	1	RING, 1.660 INT RET			
3	124818	1	NUT, 1/4 JAM TYPE 5			
4	177633H1	1	SEAT,AIR GOV SPRING UPPER			
5	321747R1	1	SPRING,AIR GOV VALVE			
6	321748R1	2	SEAT,AIR GOV SPG			

COPYRIGHT© 2011INTERNATIONAL TRUCK AND ENGINE CORP.

https://truckmanualshub.com/

Figure 410986C92

GOVERNOR,ASSY D-2

Item	Part No.	Qty	Description	Kit	Var	Figure
7	177629H1	1	SCREW			
8	177629H1	1	SCREW			
9	177627H1	1	STEM,GOV EXH VALVE D-2			
10	321742R1	1	SPRING,AIR GOV VALVE			
11	177622H1	1	WASHER,AIR GOV SPECIAL FLAT			
12	3046105R1	1	RING,O 7/32 X 11/32 CLASS 5			
13	382137R1	2	RING,O 1 X 1-3/16 CLASS 5			
14	321743R91	1	PISTON,AIR GOV			
15	321744R1	1	VALVE,AIR GOVERNOR			
16	321745R1	1	SPRING,AIR GOV VALVE			
17		RF	BODY, GOV			
18	444688	5	PLUG, 1/8-27 ZNP HEX/SKT AUTO			
801	631626C91	KT	KIT,GOVERNOR MAINT D-2			
880		RF	NOTE: ASM BELOW COMPRISED OF ABOVE COMPONENTS			
881	410986C92	RF	GOVERNOR,ASSY D-2			

COPYRIGHT© 2011INTERNATIONAL TRUCK AND ENGINE CORP.

https://truckmanualshub.com/

Figure 0K515
AIR COMPSR TUBING INSTL; W/CUM ISM ENG

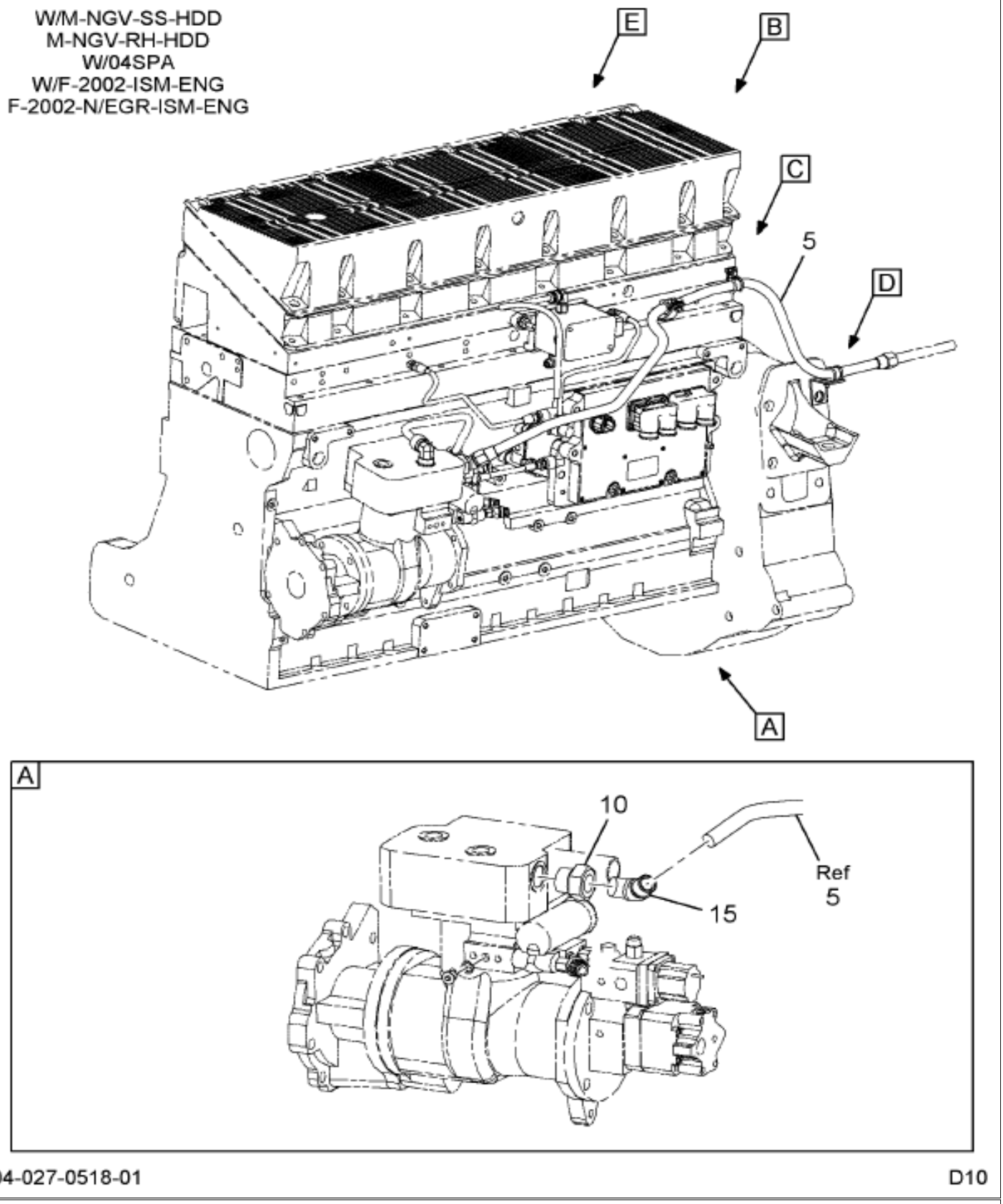

Figure 1 of 4

COPYRIGHT© 2011INTERNATIONAL TRUCK AND ENGINE CORP.

https://truckmanualshub.com/

Figure 0K515
AIR COMPSR TUBING INSTL; W/CUM ISM ENG

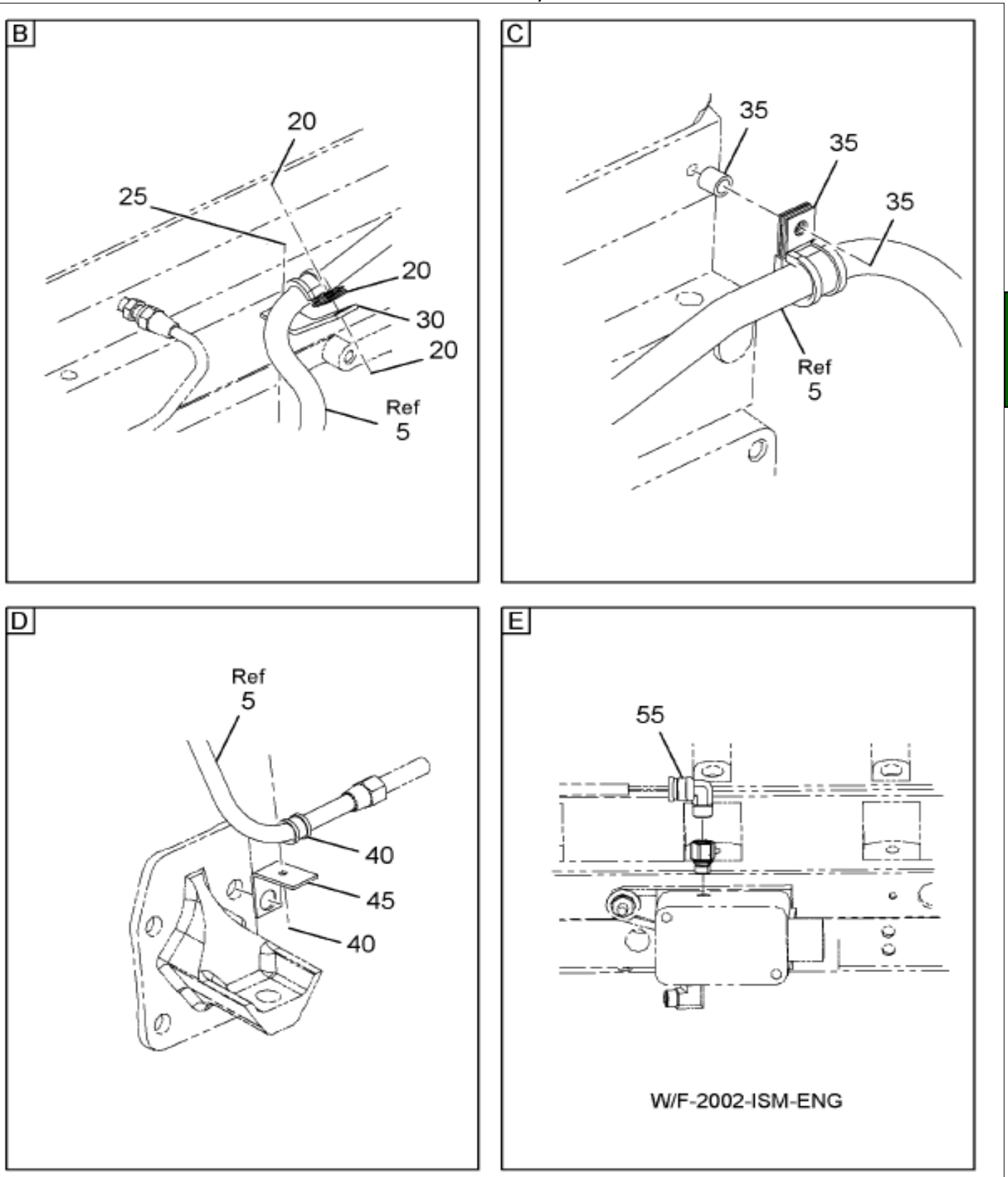

Grp 04

Figure 2 of 4

COPYRIGHT© 2011INTERNATIONAL TRUCK AND ENGINE CORP.

https://truckmanualshub.com/

Figure 0K515
AIR COMPSR TUBING INSTL; W/CUM ISM ENG

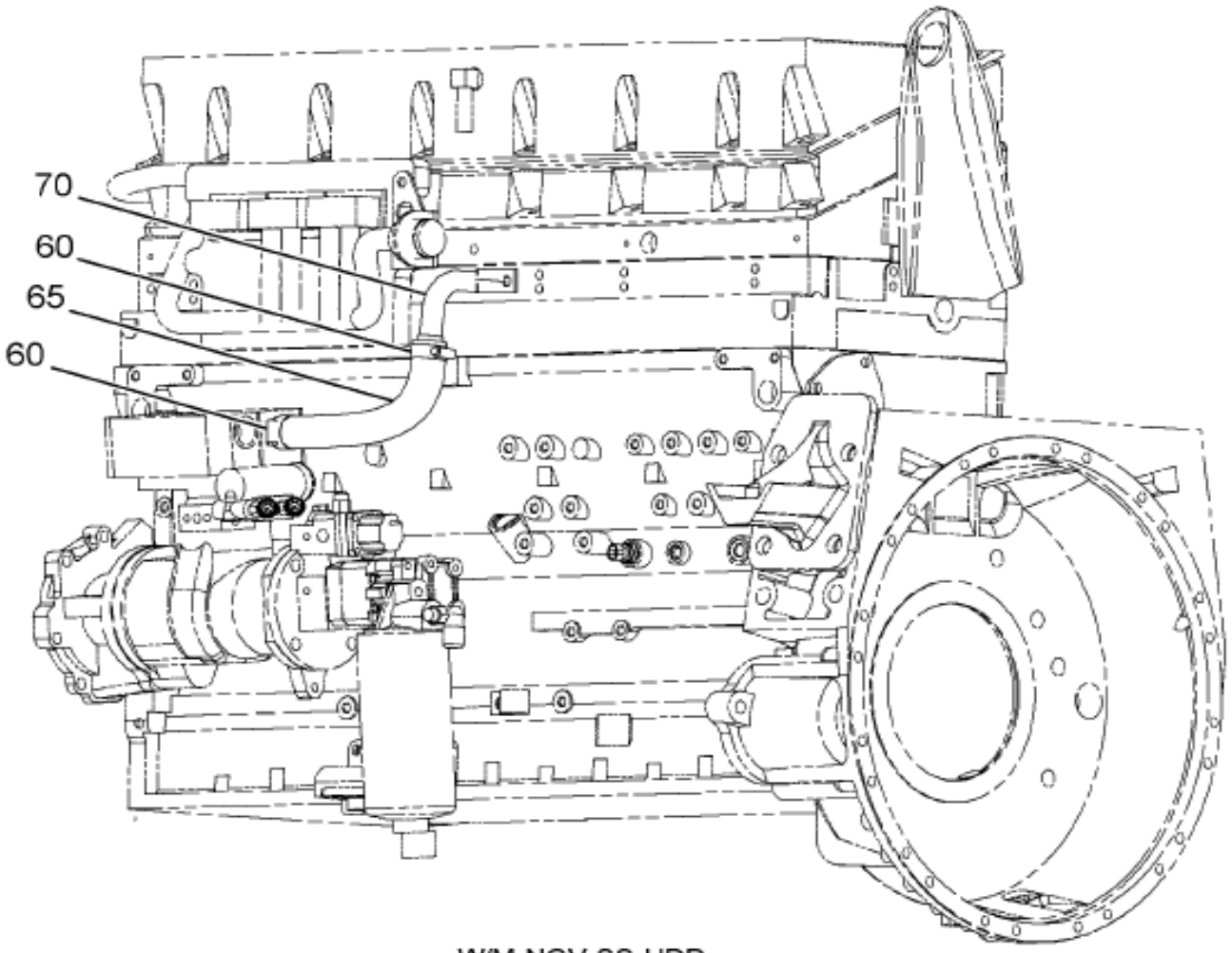

W/M-NGV-SS-HDD
M-NGV-RH-HDD
W/04SPA
W/F-2002-N/EGR-ISM-ENG

04-027-0518-03 D10

Figure 3 of 4

COPYRIGHT© 2011INTERNATIONAL TRUCK AND ENGINE CORP.

https://truckmanualshub.com/

Figure 0K915
AIR COMPSR TUBING INSTL; W/CUM ISM ENG

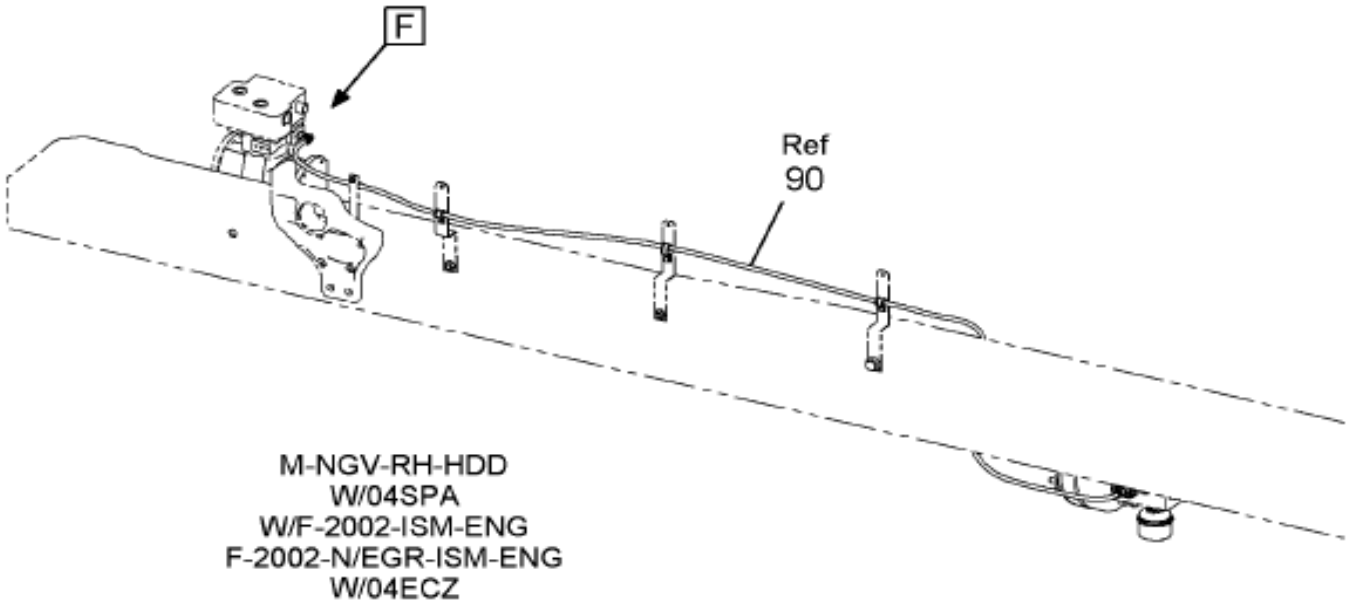

M-NGV-RH-HDD
W/04SPA
W/F-2002-ISM-ENG
F-2002-N/EGR-ISM-ENG
W/04ECZ

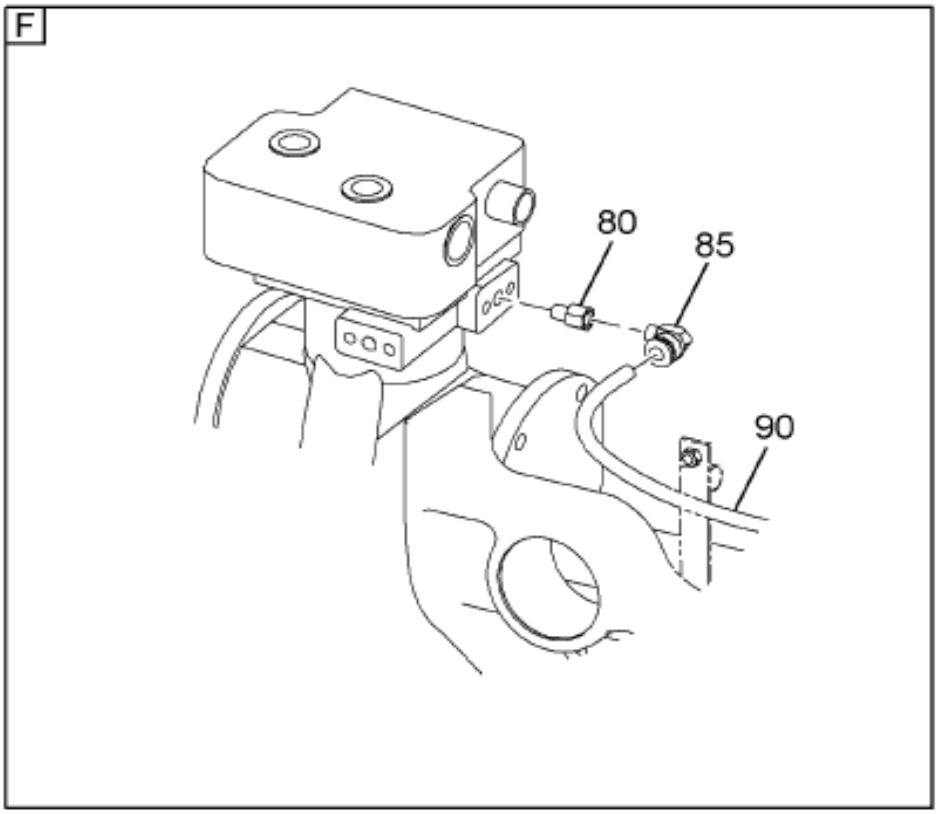

04-027-0771-01 D10

Item	Part No.	Qty	Description	Kit	Var	Figure
5	3578878C2	1	TUBE,AIR*AIR COMPRESSOR TO B-H		0KPVL	
10	3525295C4	1	ADAPTER,AIR COMP*M27 X 2.0 STR		0K9YS	
15	55896R1	1	SLEEVE,5/8 SPHERICAL COMP TUB		0KPVL	
15	55897R1	1	NUT,5/8 SPHERICAL SLEEVE		0KPVL	
15	59390R1	1	ELBOW,COMP TUBE 5/8X1/2P		0KPVL	
20	3564290C1	1	CLAMP,PIPE TEE ETC*SGL-CUSHION		0K9YS	

COPYRIGHT© 2011INTERNATIONAL TRUCK AND ENGINE CORP.

https://truckmanualshub.com/

Figure 0K9YS

AIR COMPSR TUBING INSTL; W/CUM ISM ENG

Item	Part No.	Qty	Description	Kit	Var	Figure
20	3552155C1	1	BOLT,HEX FLG HD METRIC*M6 X 20		0K9YS	
20	3544378C1	1	NUT,HEX METRIC PREV. TORQ*M6 H		0K9YS	
25	30167R1	1	NUT,M8 PHC CLASS 10		0K9YS	
25	3553000C1	1	WASHER FENDER MTG LOCK FLAT		0K9YS	
30	3578940C2	1	EXTENSION,CLIP		0K9YS	
35	M44913	1	SPACER		0K9YS	
35	3564290C1	1	CLAMP,PIPE TEE ETC*SGL-CUSHION		0K9YS	
35	31047R1	1	BOLT M6 X 25 PHC CL 8.8 FLG/H		0K9YS	
40	3564290C1	1	CLAMP,PIPE TEE ETC*SGL-CUSHION		0K9YS	
40	3552155C1	1	BOLT,HEX FLG HD METRIC*M6 X 20		0K9YS	
40	3544378C1	1	NUT,HEX METRIC PREV. TORQ*M6 H		0K9YS	
45	3525316C3	1	EXTENSION,CLIP		0K9YS	

COPYRIGHT© 2011INTERNATIONAL TRUCK AND ENGINE CORP.

https://truckmanualshub.com/

Figure 0H2W3

AIR DRYER INSTL

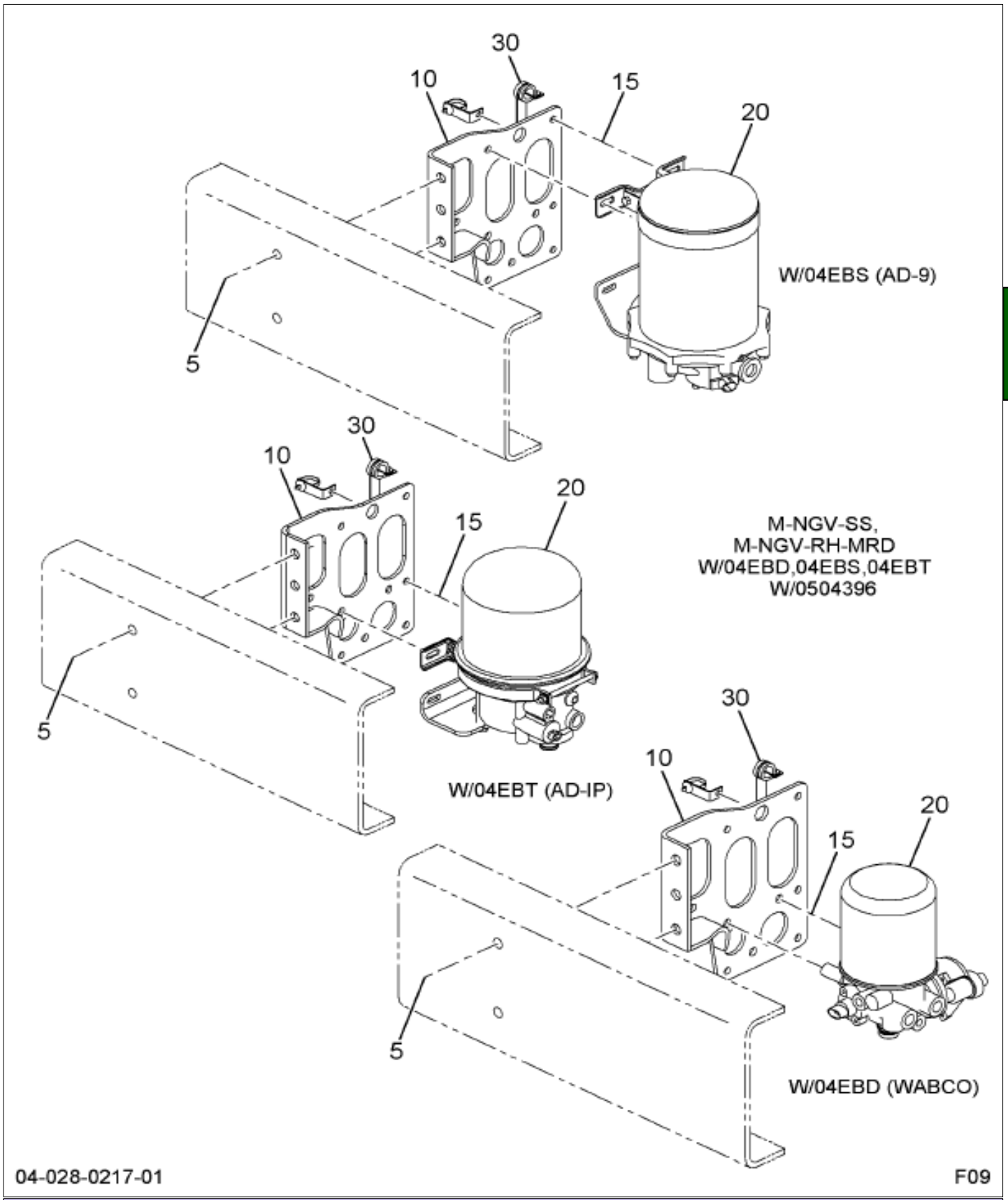

Item	Part No.	Qty	Description	Kit	Var	Figure
5	30751R2	2	BOLT,HEX FLG HD METRIC*M16 X 4		0QH2G	
5	30756R1	2	NUT,HEX M16 PRVTRQ		0QH2G	
10	3540418C2	1	BRACKET,AIR*AIR DRYER MOUNTING		0L4T3	
15	30665R2	4	BOLT, M10 X 30MM PHC FLG CLASS		0L4T3	
15	3535556C1	4	NUT,HEX METRIC PREV. TORQ*M10		0L4T3	
20	1673827C91	1	COOLER ASSY,AIR		0L4T3	1673827C91

COPYRIGHT© 2011INTERNATIONAL TRUCK AND ENGINE CORP.

https://truckmanualshub.com/

Figure 0H2W5

AIR DRYER INSTL

Item	Part No.	Qty	Description	Kit	Var	Figure
8005	505214C1	1	CLAMP,RUBBER		0M5VJ	
8005	530187C1	1	EXTENSION,CLIP		0M5VJ	
8005	3544378C1	1	NUT,HEX METRIC PREV. TORQ*M6 H		0M5VJ	
8005	3552155C1	1	BOLT,HEX FLG HD METRIC*M6 X 20		0M5VJ	

COPYRIGHT© 2011INTERNATIONAL TRUCK AND ENGINE CORP.

https://truckmanualshub.com/

Figure 1673827C91
COOLER ASSY,AIR

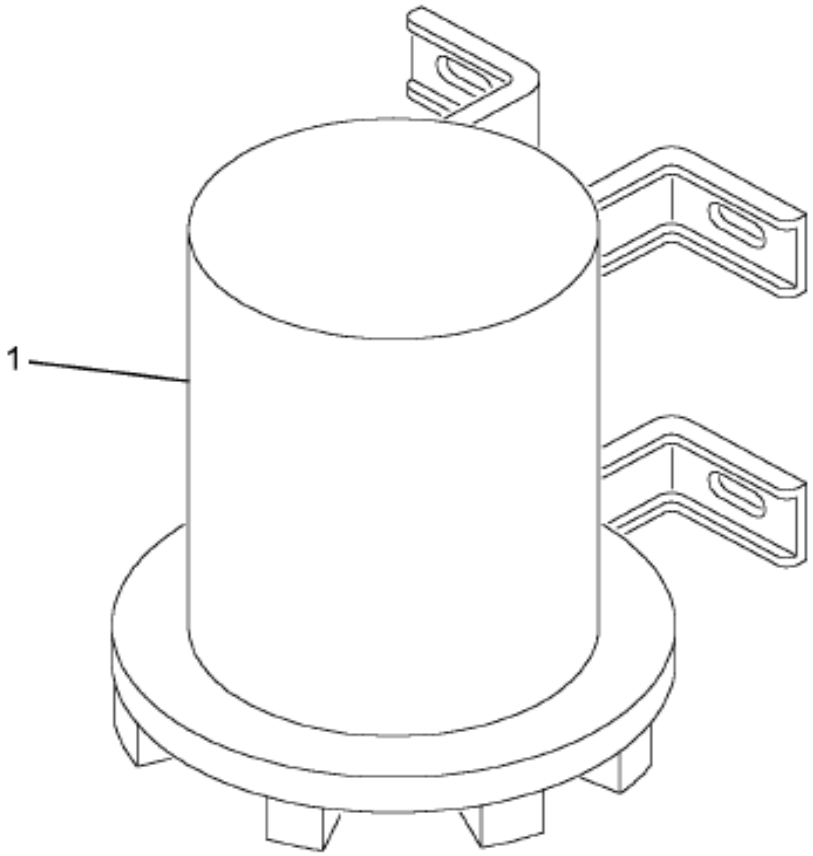

04-028-0066-01 M02

Item	Part No.	Qty	Description	Kit	Var	Figure
1		RF	COOLER, AIR			
1	1685512C91	1	VALVE,PURGE REPAIR			
1	1685516C1	1	VALVE,SAFETY AIR			
801	1685514C91	KT	KIT,REPAIR CHECK VALVE SEALS			
802	1685515C91	KT	KIT,REPAIR DESICCANT CARTRIDGE			
803	1685513C91	KT	KIT,PURGE VALVE AD9 12V W/HTR			

COPYRIGHT© 2011INTERNATIONAL TRUCK AND ENGINE CORP.

https://truckmanualshub.com/

Figure 1673827C91
COOLER ASSY,AIR

Item	Part No.	Qty	Description	Kit	Var	Figure
880		RF	NOTE: ASM BELOW COMPRISED OF ABOVE COMPONENTS			
881	1673827C91	RF	COOLER ASSY,AIR			

COPYRIGHT© 2011INTERNATIONAL TRUCK AND ENGINE CORP.

https://truckmanualshub.com/

Figure 0H37v

AIR DRYER TUBING INSTL; MTD O/S RT RAIL, W/SHUTT OFF

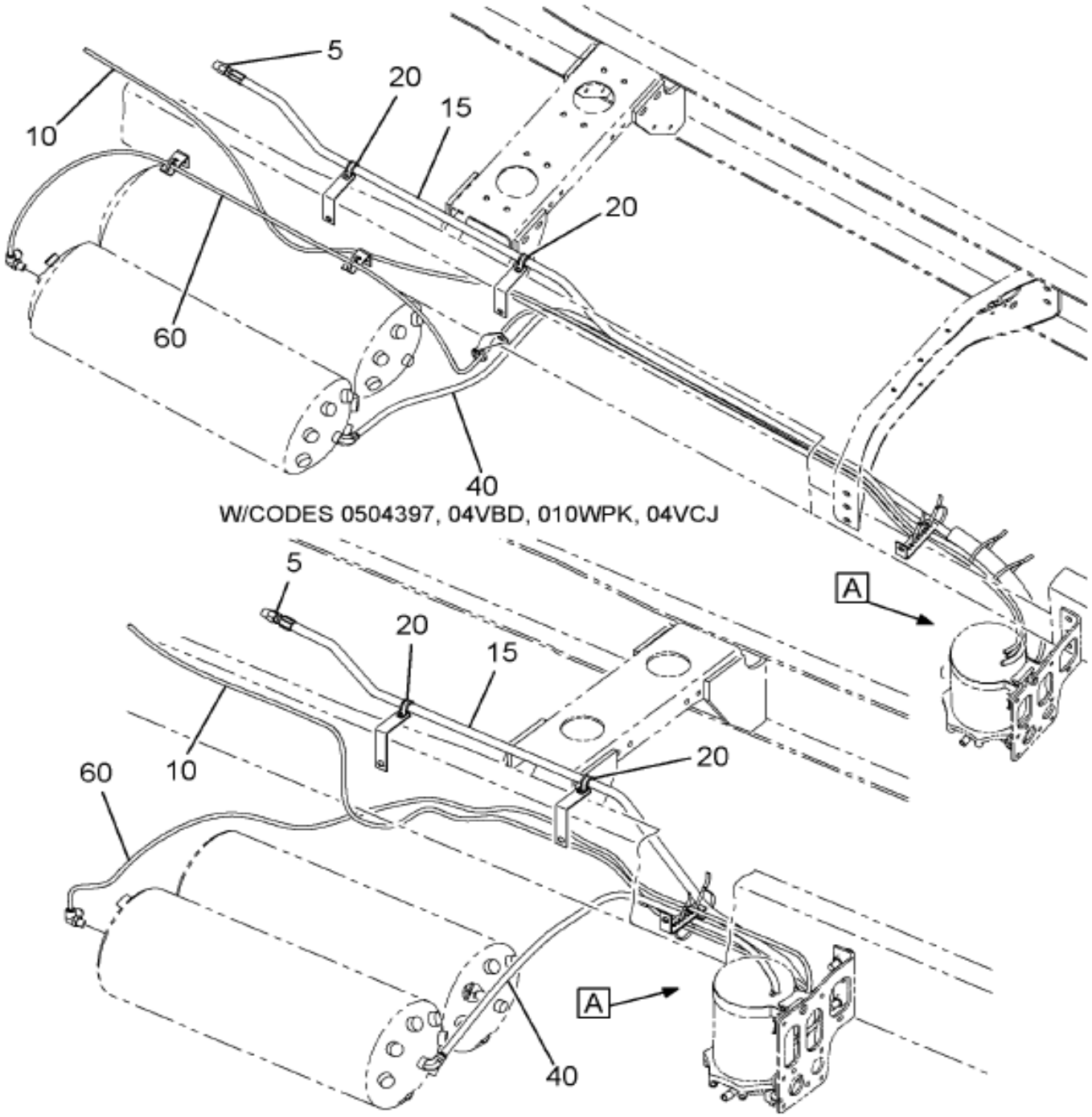

Grp 04

Figure 1 of 2

COPYRIGHT© 2011INTERNATIONAL TRUCK AND ENGINE CORP.

https://truckmanualshub.com/

Figure 0H97V

AIR DRYER TUBING INSTL; MTD O/S RT RAIL, W/SHUTT OFF

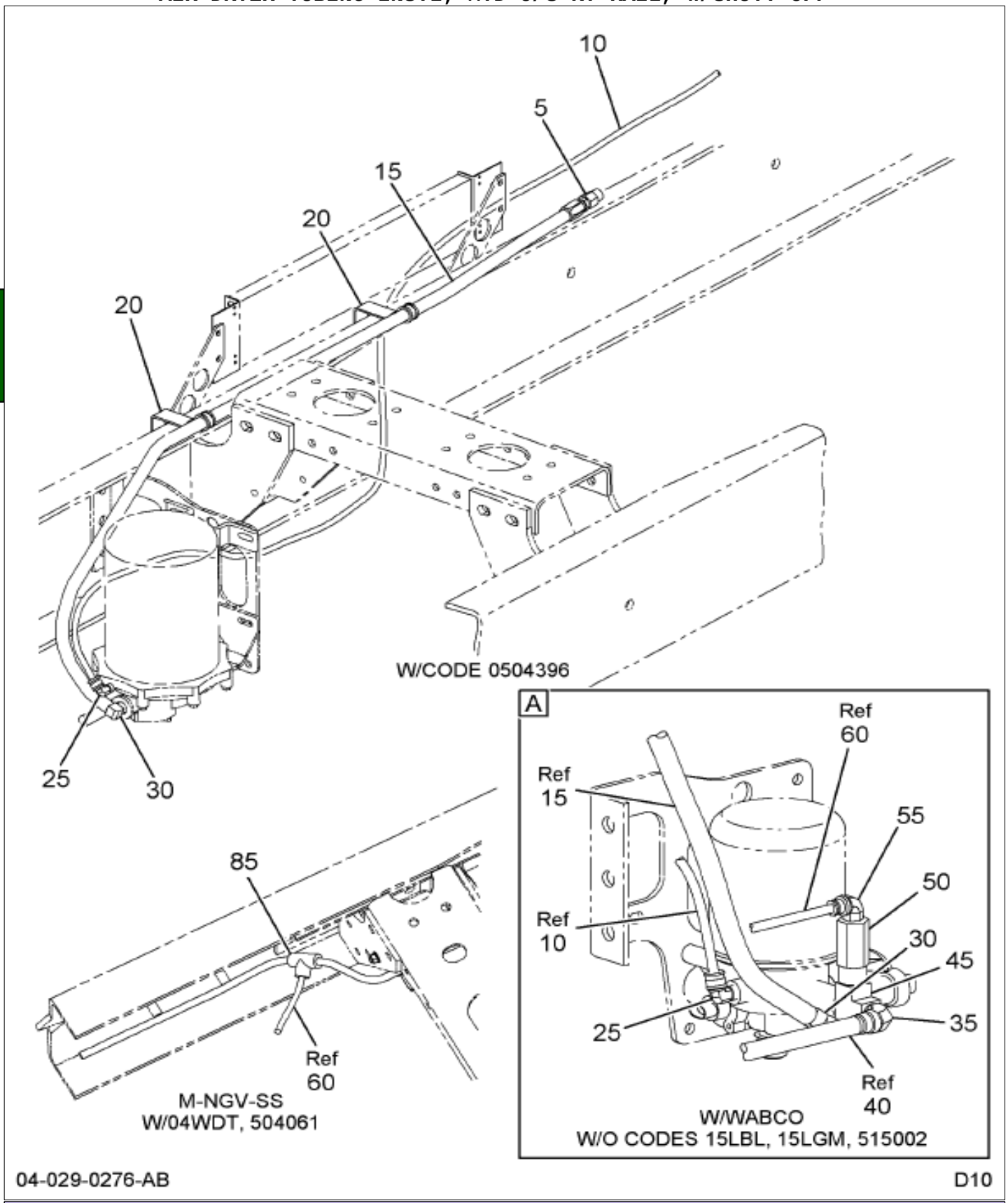

Item	Part No.	Qty	Description	Kit	Var	Figure
5	55896R1	1	SLEEVE,5/8 SPHERICAL COMP TUB		0LQ1X	
5	55897R1	1	NUT,5/8 SPHERICAL SLEEVE		0LQ1X	
10	3520436C2	2275	TUBE,NYLON BULK 3/8 SILVER		0H97V	
15	B100600000	1	HOSE,ASSY REH		0J3CY	B100600000
20	3579730C1	2	EXTENSION,CLIP		0H97V	
20	3549305C1	2	BOLT,HEX FLG HD METRIC*M10 X 3		0H97V	

COPYRIGHT© 2011INTERNATIONAL TRUCK AND ENGINE CORP.

https://truckmanualshub.com/

Figure 0H97V

AIR DRYER TUBING INSTL; MTD O/S RT RAIL, W/SHUTT OFF

Item	Part No.	Qty	Description	Kit	Var	Figure
20	3535556C1	2	NUT,HEX METRIC PREV. TORQ*M10		0H97V	
20	505211C1	2	CLAMP,RUBBER		0H97V	
20	3552155C1	2	BOLT,HEX FLG HD METRIC*M6 X 20		0H97V	
20	3544378C1	2	NUT,HEX METRIC PREV. TORQ*M6 H		0H97V	
25	2017511C2	1	ELBOW, 90 DEG 3/8 PTC X 1/4 MP		0H97V	
30	109429	1	ELBOW, 5/8 PLN 45D FLARED TUBE		0LQ1X	
35	2017519C2	1	ELBOW, 90 DEG 5/8 PTC X 1/2 MP		0H97V	
40	417201C3	2200	TUBE,NYLON BULK 5/8 OD BLACK		0H97V	
			NON-ILLUSTRATED REFERENCE FIGURE B100600000			
	B000000000	1	HOSE, ASSEMBLY COMPONENTS			B000000000

Grp 04

COPYRIGHT© 2011INTERNATIONAL TRUCK AND ENGINE CORP.

https://truckmanualshub.com/

Figure B000000000

HOSE, ASSEMBLY COMPONENTS

EXPLANATION OF 10-DIGIT CODE (Example: B100920006)

The following example explains the make-up of the 10-digit code. In this example, the hose material is per SAE J1402B, Type E, TMS-6016. The hose size is 5/8 inch. Assembly is 92 inches, including fittings (actual hose cut-off length is listed in the Conversion Lists and is 89.4 inches). The coil wrap length is 6 inches.

B	10	092.0	006
HOSE MATERIAL A SAE J1402B,Type E TMS-6016	**HOSE SIZE** Fitting Size 5/8" Dash Size -10 Refer to chart below for componets used in making assemblies.	**ASSEMBLY LENGTH** Assembled hose length in inches. Actual cut-off length will be slightly less to provide for fittings. See CHART below.	**COIL WRAP** Length in inches of cut coil wrap. **ALL ZEROS MEANS NO COIL WRAP.**

HOSE, ASSEMBLY COMPONENTS
(By Dash Size)

All of the components used to fabricate a complete assembly are listed by a dash number of reference in the chart below. Always use the part number listed in the Conversion Lists of fabricate assemblies.

Componet	-10
Fitting (1) (1)	592 945 C91 200 580 5C1
Bulk Hose (1 ft.)	375 055 C2
Bulk Coil Wrap (1 ft.)	375 048 C1
*Sub Allow For Fittings.	2.6

00-000-3667-01 A03

Item	Part No.	Qty	Description	Kit	Var	Figure
800		RF	NOTE: THE FOLLOWING PARTS ARE NON-ILLUSTRATED			
801	592945C91	1	FITTING,HOSE 5/8" AIR			
801	2005805C1	1	FITTING HOSE			
801	375055C2	AR	HOSE,AIR(.500 ID)BLK 5/8"TUBE			
801	375048C1	AR	LOOM,CABLE 5/8"			

COPYRIGHT© 2011INTERNATIONAL TRUCK AND ENGINE CORP.

https://truckmanualshub.com/

Figure B000000000

HOSE, ASSEMBLY COMPONENTS

Item	Part No.	Qty	Description	Kit	Var	Figure
880		RF	NOTE: ASM BELOW COMPRISED OF ABOVE COMPONENTS			
881	B000000000	RF	HOSE, ASSEMBLY COMPONENTS			

COPYRIGHT© 2011INTERNATIONAL TRUCK AND ENGINE CORP.

https://truckmanualshub.com/

Figure 0HK59

AIR SOLENOID MNFLD MTG; W/4, 7, 14 MNFLD, W/CHECK VALVE, AIR

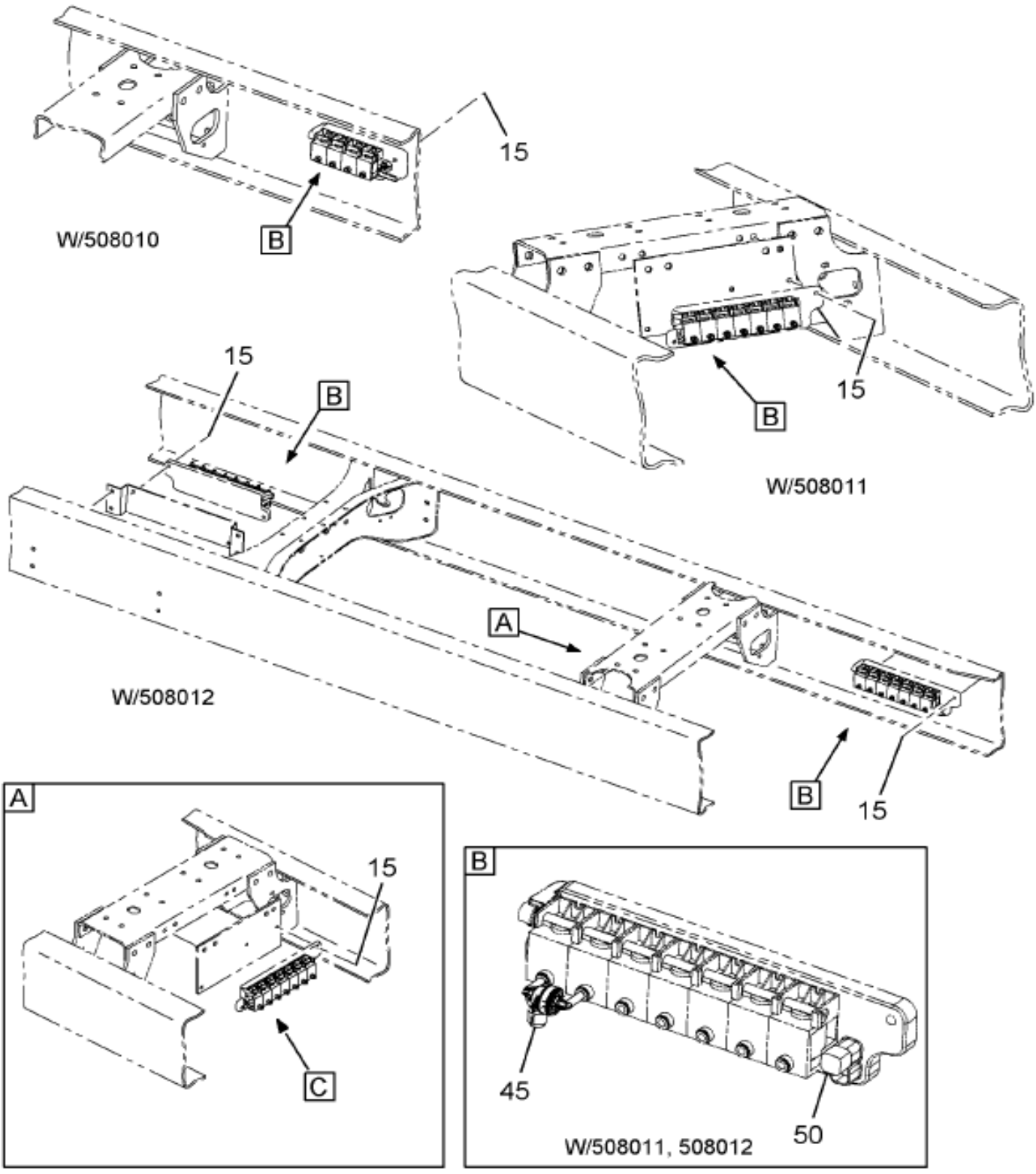

Figure 1 of 2

COPYRIGHT© 2011INTERNATIONAL TRUCK AND ENGINE CORP.

https://truckmanualshub.com/

Figure 0HK59

AIR SOLENOID MNFLD MTG; W/4, 7, 14 MNFLD, W/CHECK VALVE, AIR

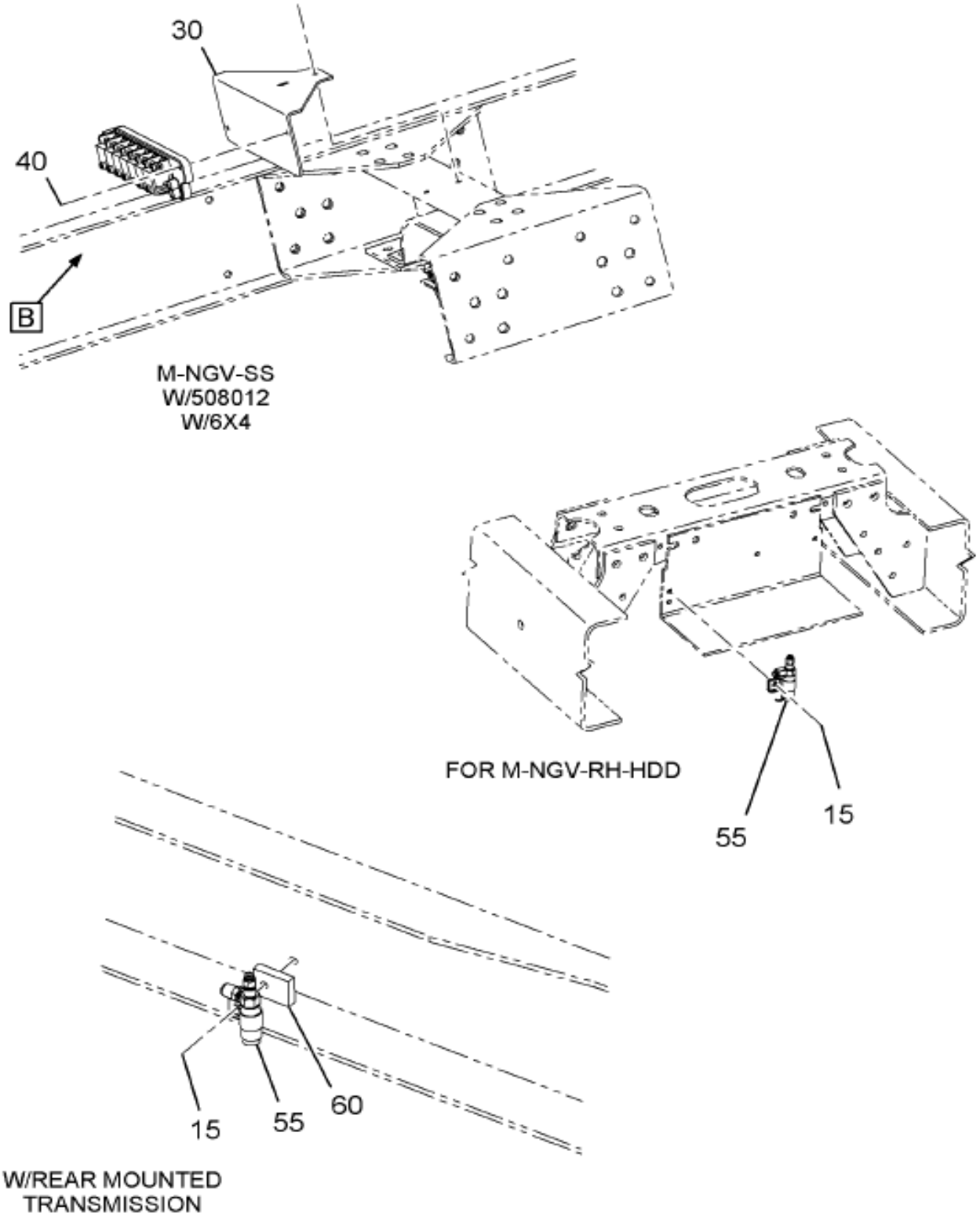

08-V84-0016-01 L04

Item	Part No.	Qty	Description	Kit	Var	Figure
15	31058R1	2	BOLT, M8 X 50 PHC CL 8.8 FLG/H		0HW49	
15	40066R1	2	NUT, M8 - HF LOCK		0HW49	

COPYRIGHT© 2011INTERNATIONAL TRUCK AND ENGINE CORP.

https://truckmanualshub.com/

Figure 0XNS1

AIR TANK FITTINGS; PRIMARY TANK, NGV W/STD 11" AIR TANK PKGS

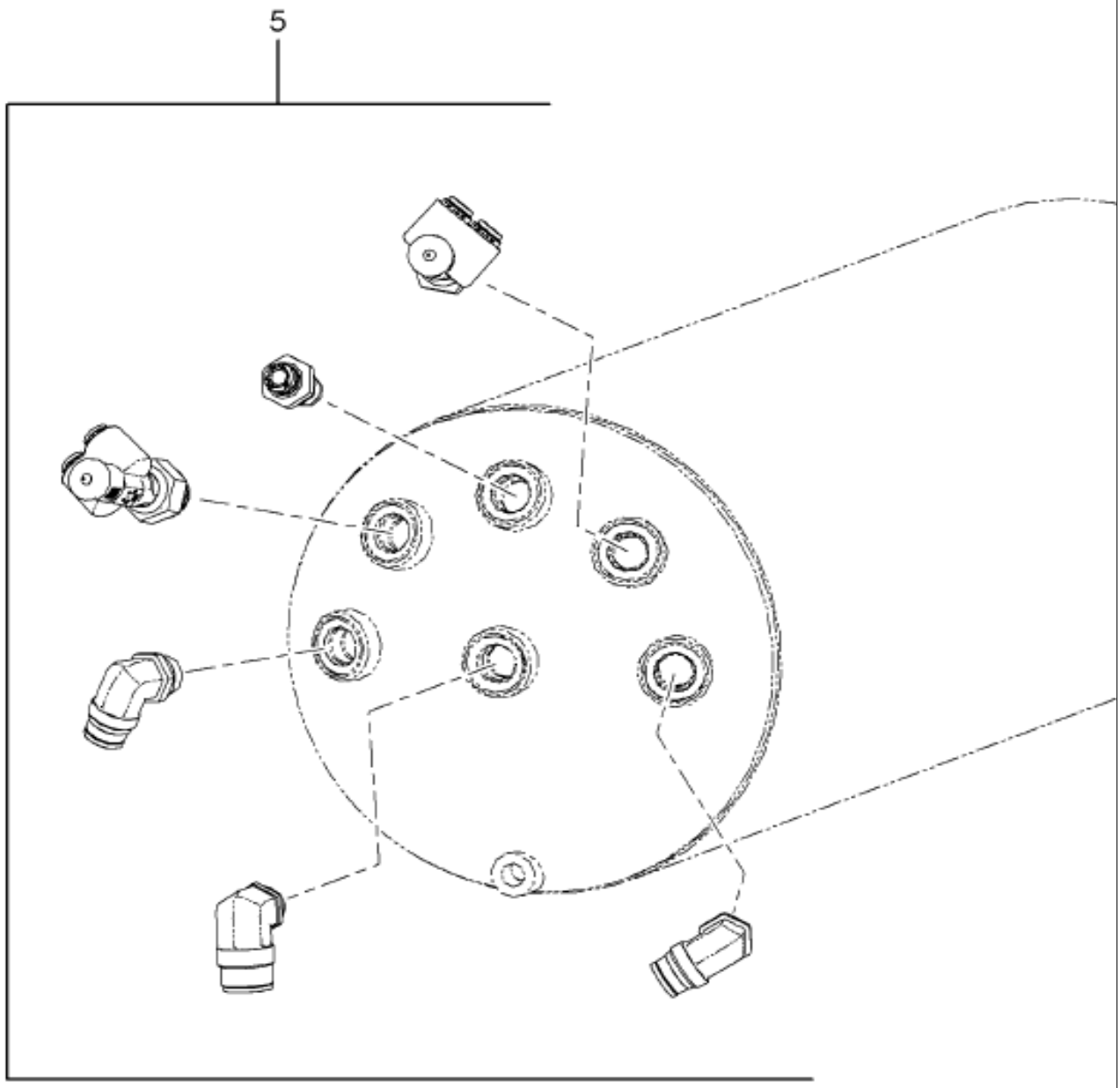

08-L42-0168-01 E10

Item	Part No.	Qty	Description	Kit	Var	Figure
5	3830858F91	1	FITTINGS,PRIMARY AIR TANK		0XNTH	3830858F91

COPYRIGHT© 2011INTERNATIONAL TRUCK AND ENGINE CORP.

https://truckmanualshub.com/

Figure 3830858F91

FITTINGS,PRIMARY AIR TANK

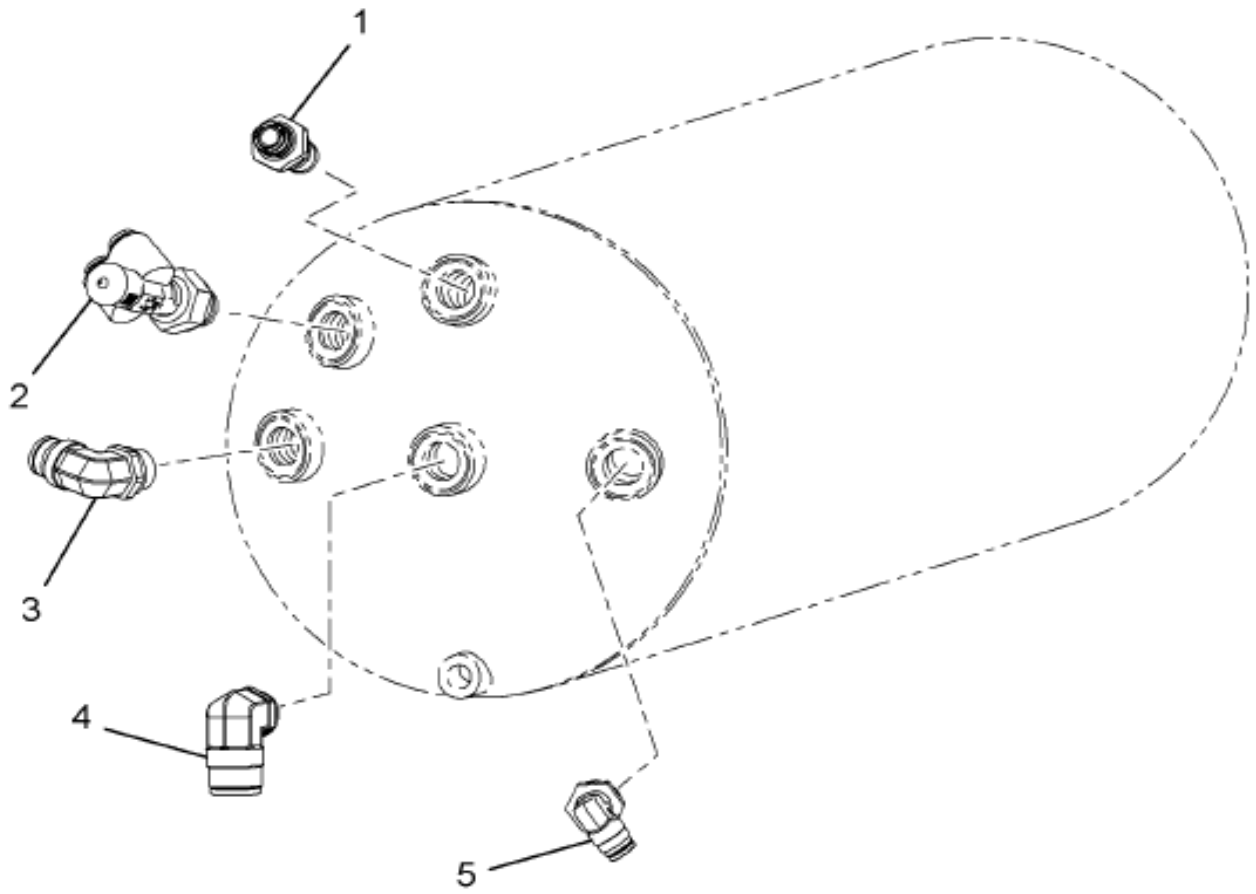

08-L42-0131-01 J09

Item	Part No.	Qty	Description	Kit	Var	Figure
1	3825830C1	1	VALVE,CHECK MA22 MALE X 3/8			
2	3820201C1	1	VALVE,PRESS PROTECT M22X3/8"QC			
3	3826346C1	1	ELBOW, 90 DEG M22 X 5/8" PTC			
4	3826347C1	1	ELBOW, 90 DEG M22 X 3/4" PTC			
5	3826350C1	1	ELBOW, 90 DEG M22 X 3/8" PTC			
880		RF	NOTE: ASM BELOW COMPRISED OF ABOVE			

COPYRIGHT© 2011INTERNATIONAL TRUCK AND ENGINE CORP.

https://truckmanualshub.com/

Figure 3830858F91

FITTINGS,PRIMARY AIR TANK

Item	Part No.	Qty	Description	Kit	Var	Figure
			COMPONENTS			
881	3830858F91	RF	FITTINGS,PRIMARY AIR TANK			

COPYRIGHT© 2011INTERNATIONAL TRUCK AND ENGINE CORP.

https://truckmanualshub.com/

Figure 01HM1

AIR TANK FITTINGS; SECONDARY TANK,11" DIA.

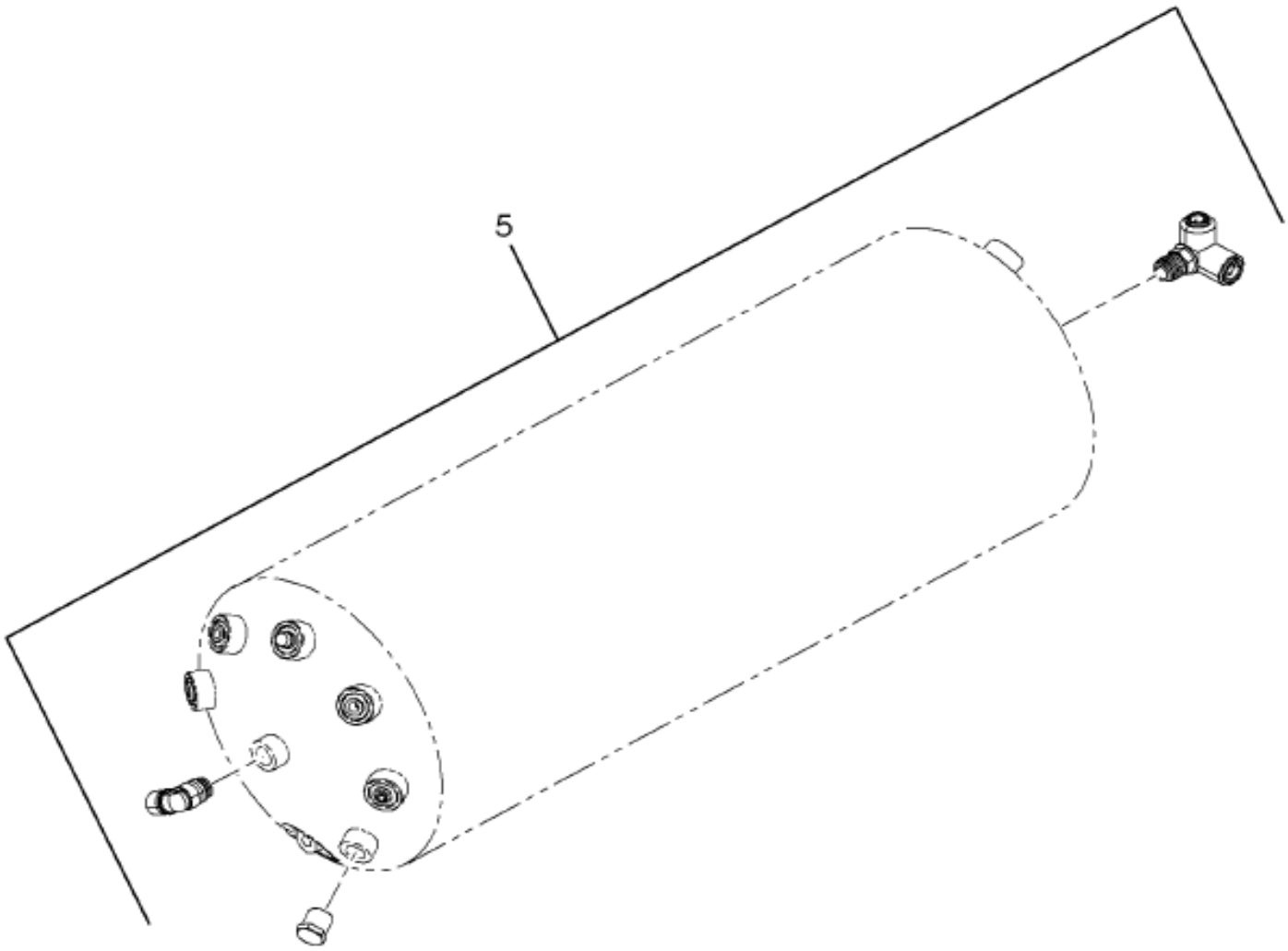

08-L41-0010-01 J08

Item	Part No.	Qty	Description	Kit	Var	Figure
5	3830874F91	1	BBAT WET/SECONDARY AIR TAN		0TRZM	3830874F91

COPYRIGHT© 2011INTERNATIONAL TRUCK AND ENGINE CORP.

https://truckmanualshub.com/

Figure 3830874F91

BBAT WET/SECONDARY AIR TAN

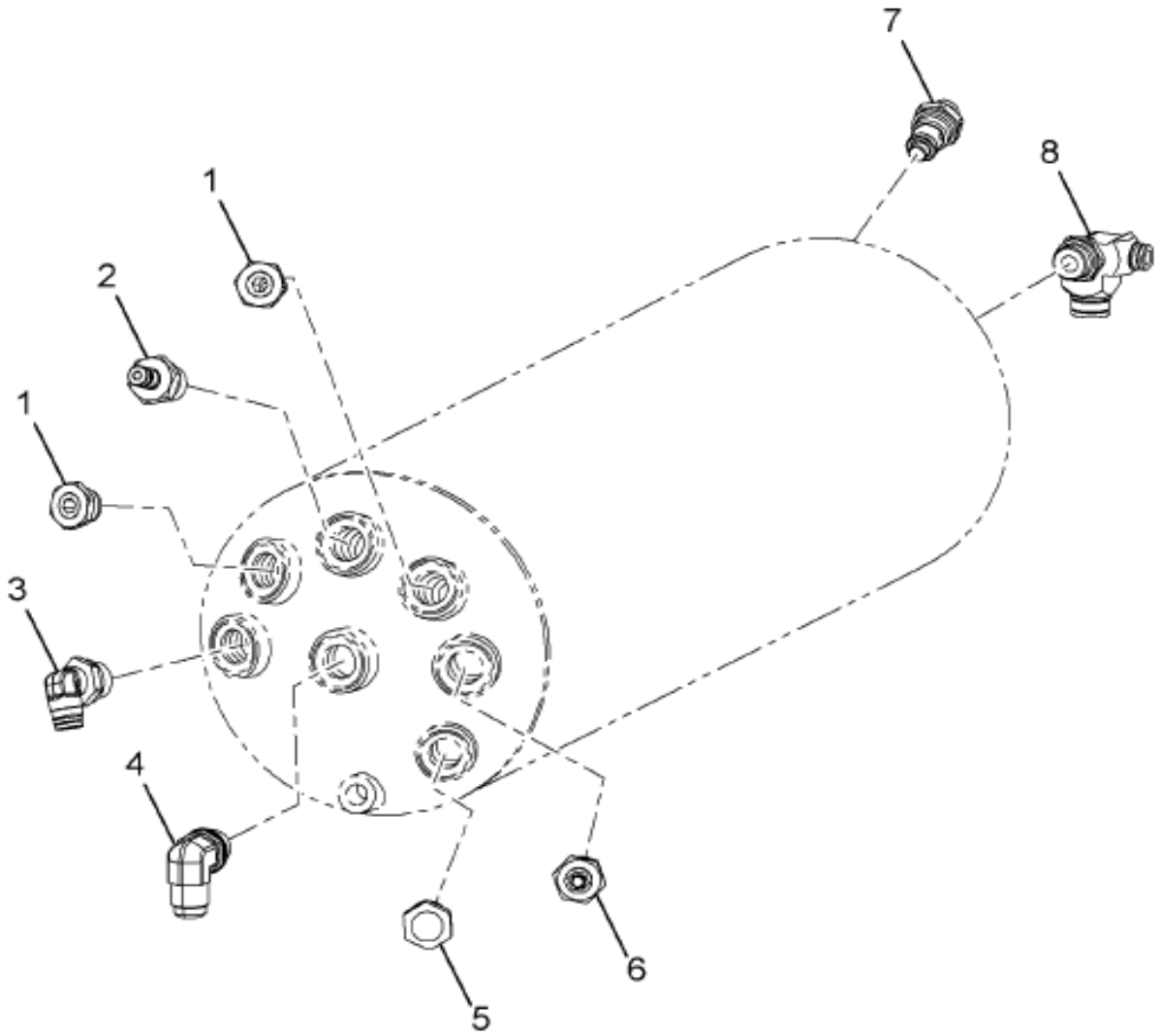

08-L41-0122-01 E09

Item	Part No.	Qty	Description	Kit	Var	Figure
1	3825833C1	2	CONNECTOR,MA22 MALE X 3/8 TUBE			
2	3830746C1	1	FITTING, COMP-U-CHECK, M22			
3	3826350C1	1	ELBOW, 90 DEG M22 X 3/8" PTC			
4	3826346C1	1	ELBOW, 90 DEG M22 X 5/8" PTC			
5	3826348C1	1	PLUG, M22			
6	3820172C1	1	VALVE,SAFETY AIR, M22			

COPYRIGHT© 2011INTERNATIONAL TRUCK AND ENGINE CORP.

https://truckmanualshub.com/

Figure 3830874F91

BBAT WET/SECONDARY AIR TAN

Item	Part No.	Qty	Description	Kit	Var	Figure
7	3825830C1	1	VALVE,CHECK MA22 MALE X 3/8			
8	3819960C1	1	MANIFOLD,AIR M22X1/2PTC X 5/8			
880		RF	NOTE: ASM BELOW COMPRISED OF ABOVE COMPONENTS			
881	3830874F91	RF	BBAT WET/SECONDARY AIR TAN			

COPYRIGHT© 2011INTERNATIONAL TRUCK AND ENGINE CORP.

https://truckmanualshub.com/

Figure 0V10E
AIR TANK MODULE MTG; FRAME MTD

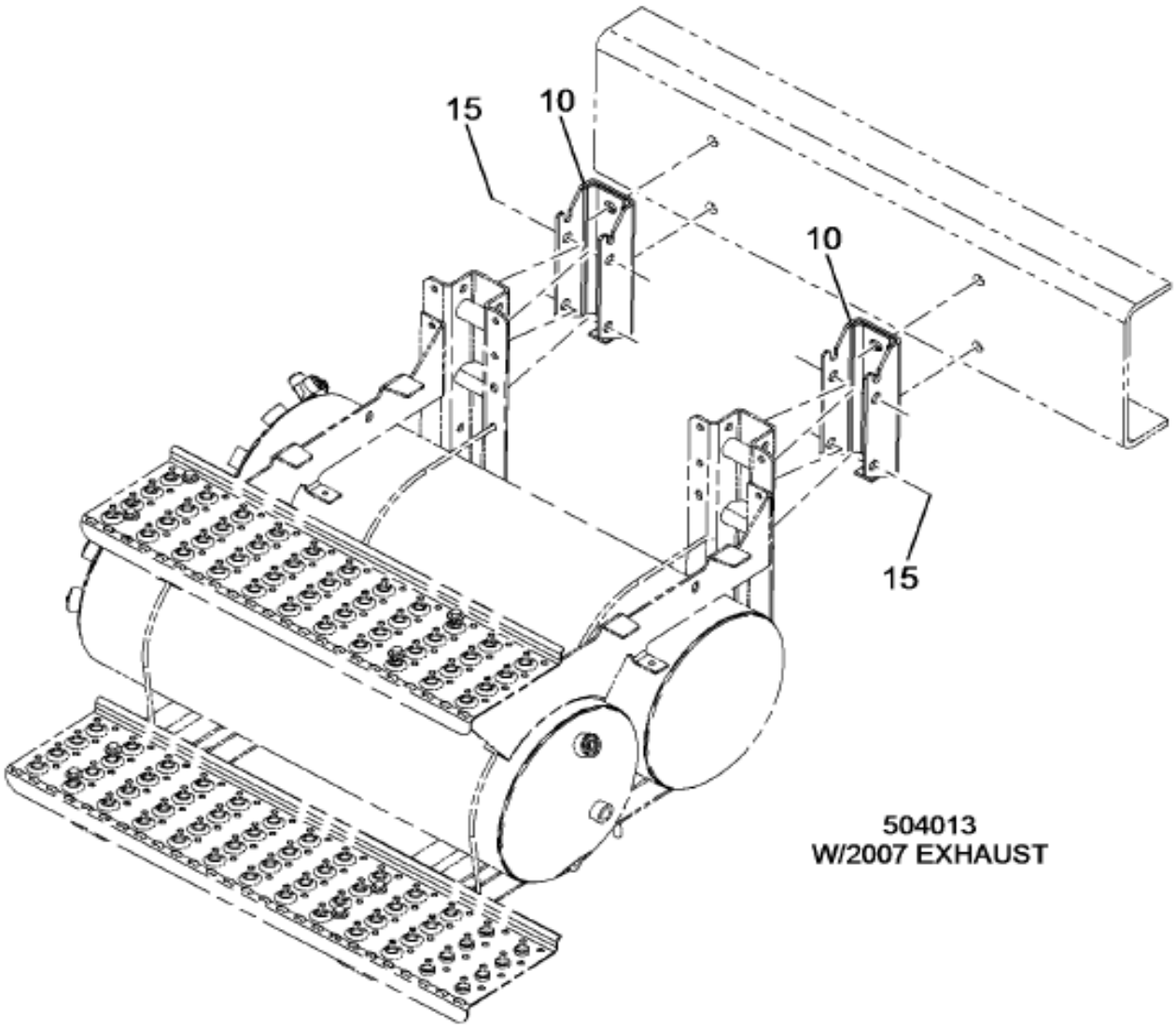

04-055-0025-01 H09

Figure 1 of 2

COPYRIGHT© 2011INTERNATIONAL TRUCK AND ENGINE CORP.

https://truckmanualshub.com/

Figure 0VF0E

AIR TANK MODULE MTG; FRAME MTD

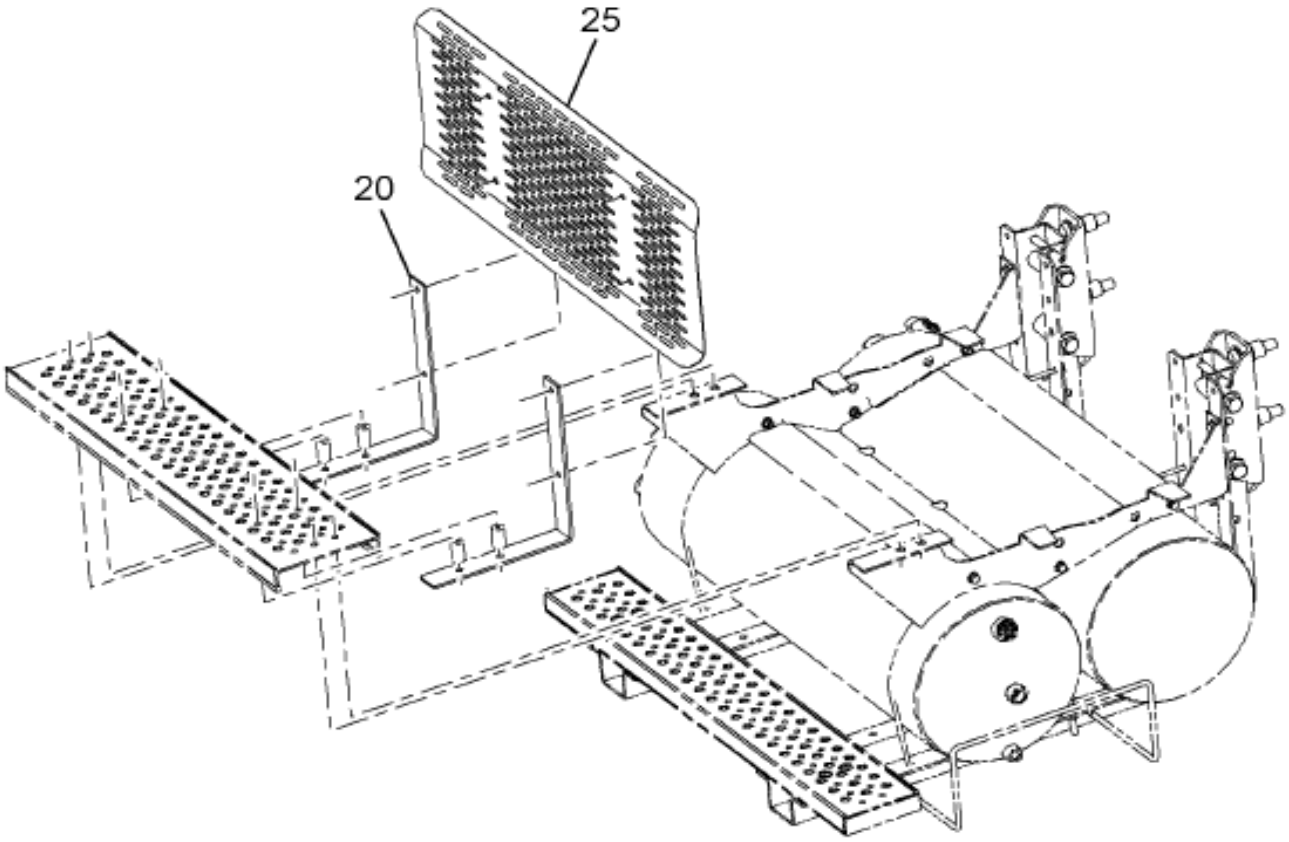

7600, 7700
W/504013
W/16XTK
OR
M-NGV-SS-7600-113
W/0001CAX, 0001CAW
W/0001WMA
W/504013, W/16XTK

04-055-0026-01 K09

Item	Part No.	Qty	Description	Kit	Var	Figure
10	3575139C1	2	BRACKET,FUEL TANK MTG (15-8790		0VF0R	
10	3691086C1	4	BOLT, HUCK-SPIN 5/8 DIA -12		0VF0R	
10	3691083C1	4	NUT, HUCK SPIN COLLAR 5/8 DIA		0VF0R	
15	40250R1	4	BOLT,HEX FLG HD METRIC*M16 X 1		0VF0R	
15	3535554C1	4	NUT,HEX METRIC PREV. TORQ*M16		0VF0R	
20	3587055C1	2	BRACE,MUFFLER HEAT SHIELD*		0VF0R	

COPYRIGHT© 2011INTERNATIONAL TRUCK AND ENGINE CORP.

https://truckmanualshub.com/

Figure 0VF0E

AIR TANK MODULE MTG; FRAME MTD

Item	Part No.	Qty	Description	Kit	Var	Figure
20	3541323C1	8	NUT,SPECIAL*M8 X 1.25 U-NUT (L		0VF0R	
20	3541322C1	4	BOLT,SPECIAL*M8 X 1.25 - 25 MM		0VF0R	
25	3572304C2	1	SHIELD,MUFFLER*		0VF0R	
25	931830R1	4	BOLT,M8X20 CLASS 8.8		0VF0R	
25	934675R1	4	WASHER, 8.8 X 17 X 1.6MM		0VF0R	

COPYRIGHT© 2011INTERNATIONAL TRUCK AND ENGINE CORP.

https://truckmanualshub.com/

Figure 0HC25
AIR TANK TUBING INSTL

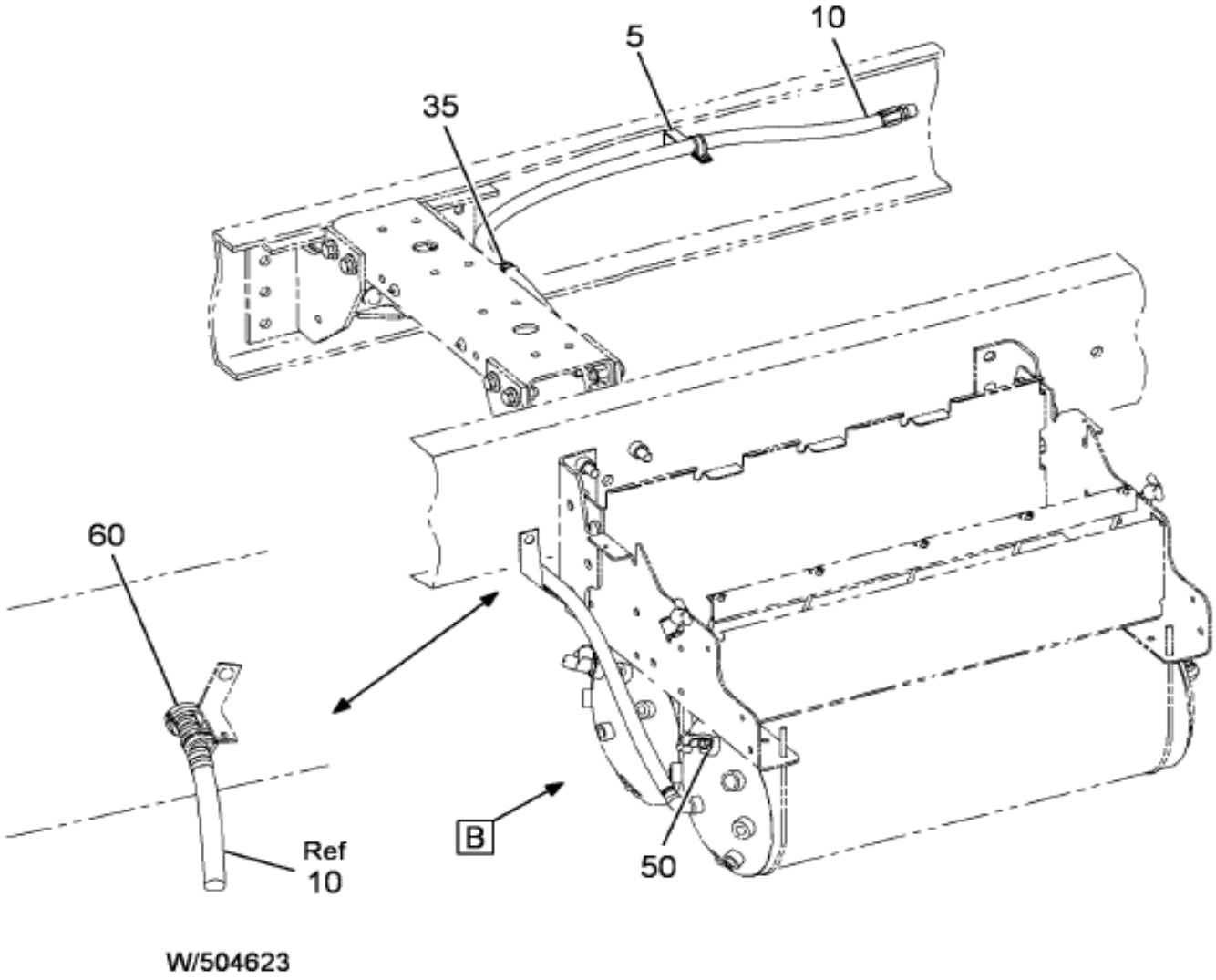

FOR: M-NGV-SS
W/ CAB-HGHT=M
W/ 504013
OR
W/ 504603

04-032-0312-01 M09

Figure 1 of 7

COPYRIGHT© 2011INTERNATIONAL TRUCK AND ENGINE CORP.

https://truckmanualshub.com/

Figure 0HC25
AIR TANK TUBING INSTL

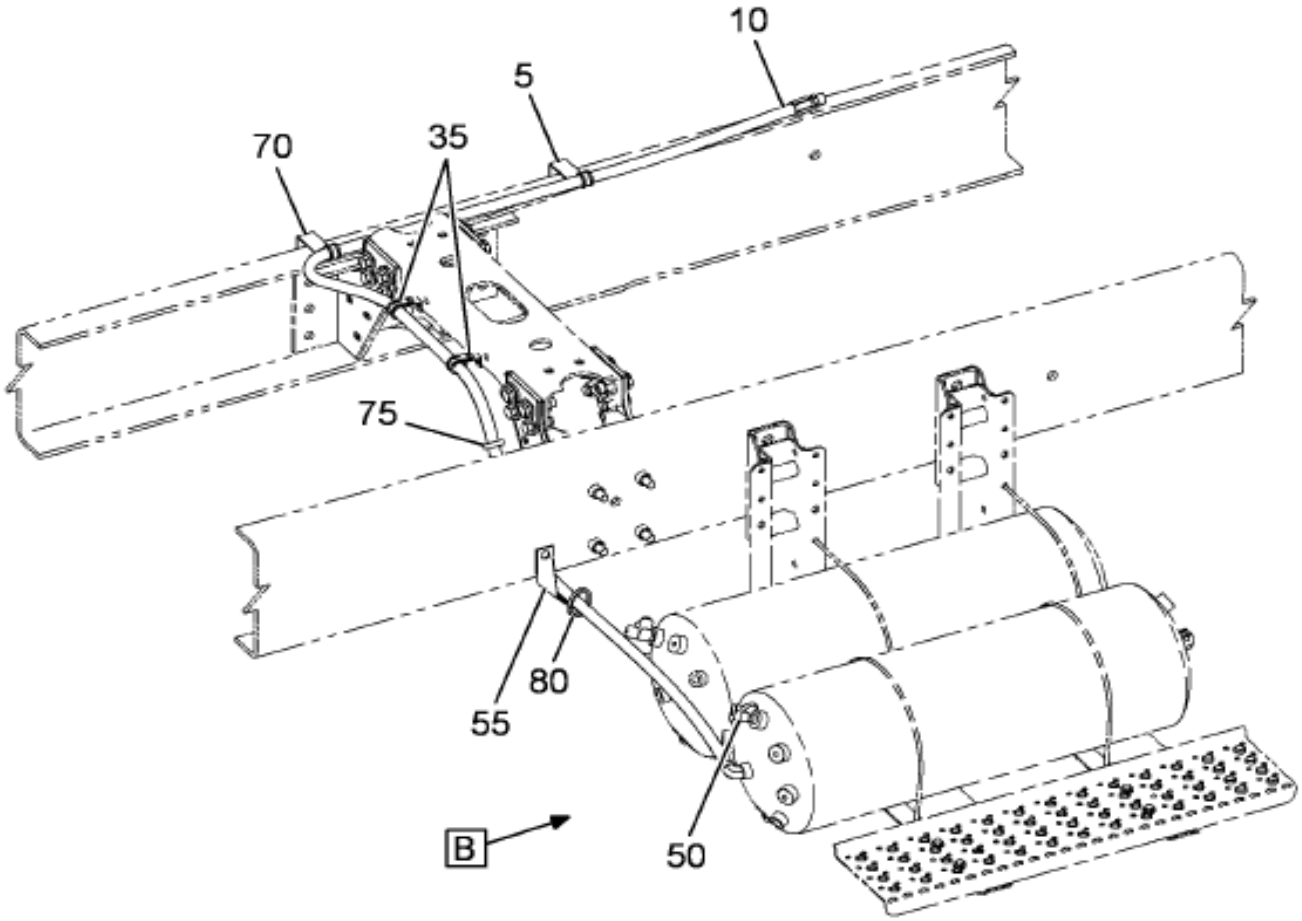

FOR: M-NGV-SS
W/ CAB-HGHT=H
W/ EATON XMSN
W/ 504013, 504603

04-032-0312-02 M09

Figure 2 of 7

COPYRIGHT© 2011INTERNATIONAL TRUCK AND ENGINE CORP.

https://truckmanualshub.com/

Figure 0HC25
AIR TANK TUBING INSTL

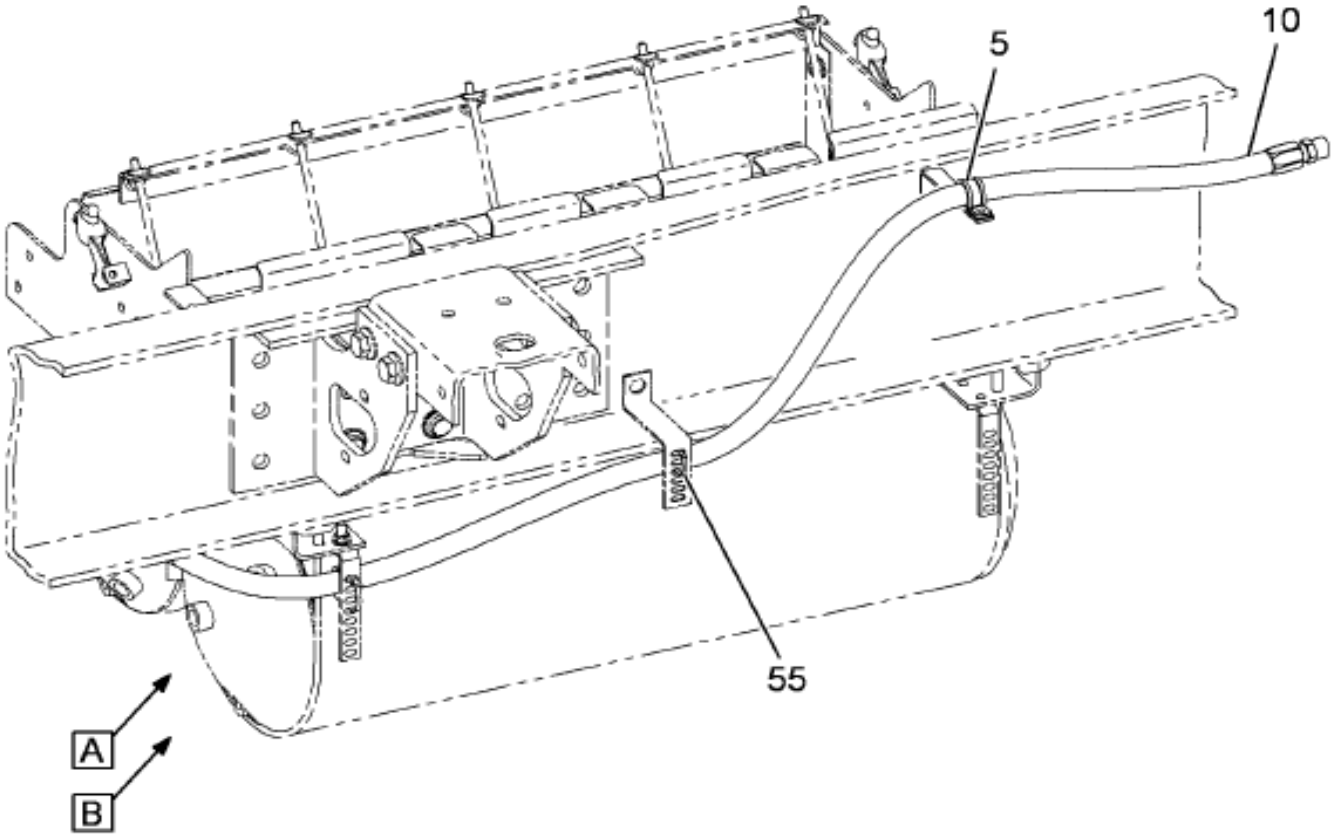

W/ 504602

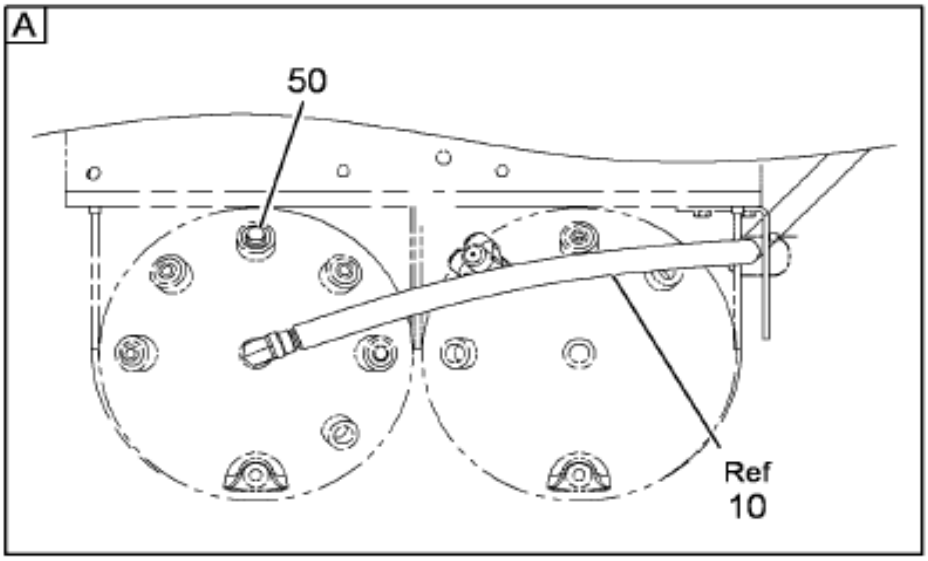

04-032-0312-03 M09

Grp 04

Figure 3 of 7

COPYRIGHT© 2011INTERNATIONAL TRUCK AND ENGINE CORP.

https://truckmanualshub.com/

Figure 0HC25
AIR TANK TUBING INSTL

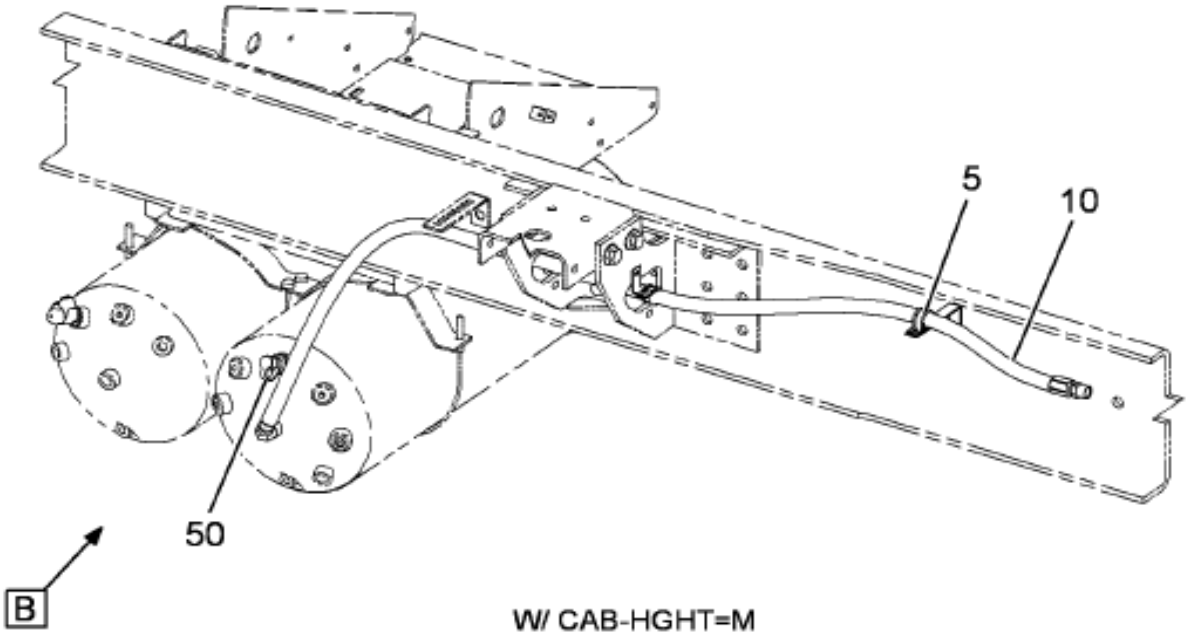

W/ CAB-HGHT=M
W/504620

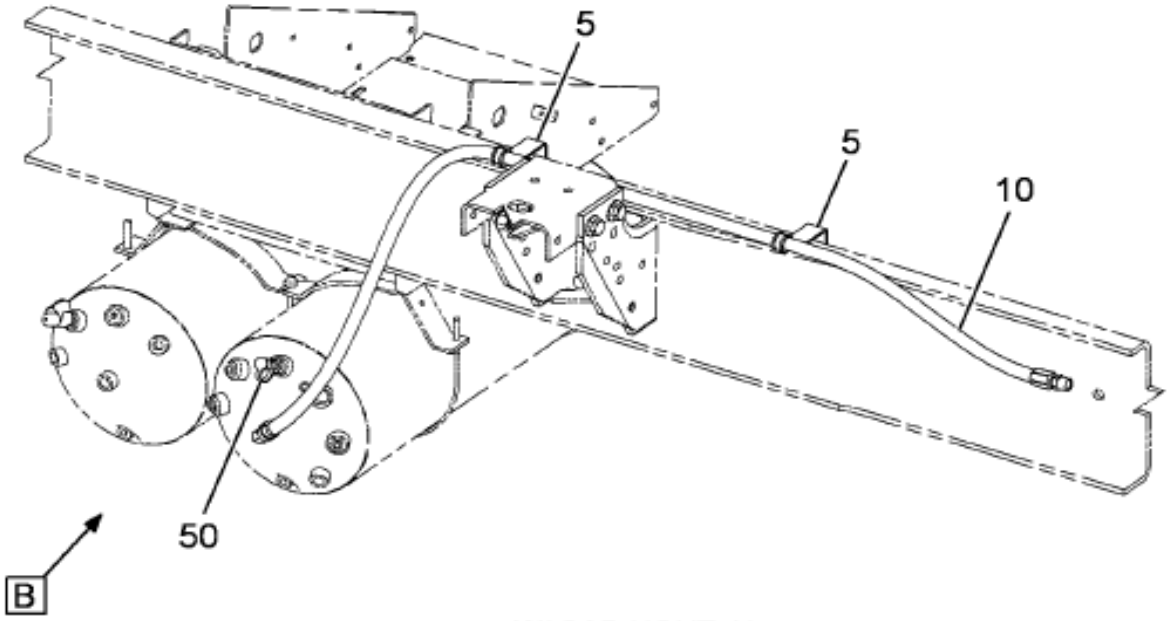

W/ CAB-HGHT=H
W/504620

04-032-0312-04 M09

Figure 4 of 7

COPYRIGHT© 2011INTERNATIONAL TRUCK AND ENGINE CORP.

https://truckmanualshub.com/

Figure 0HC25
AIR TANK TUBING INSTL

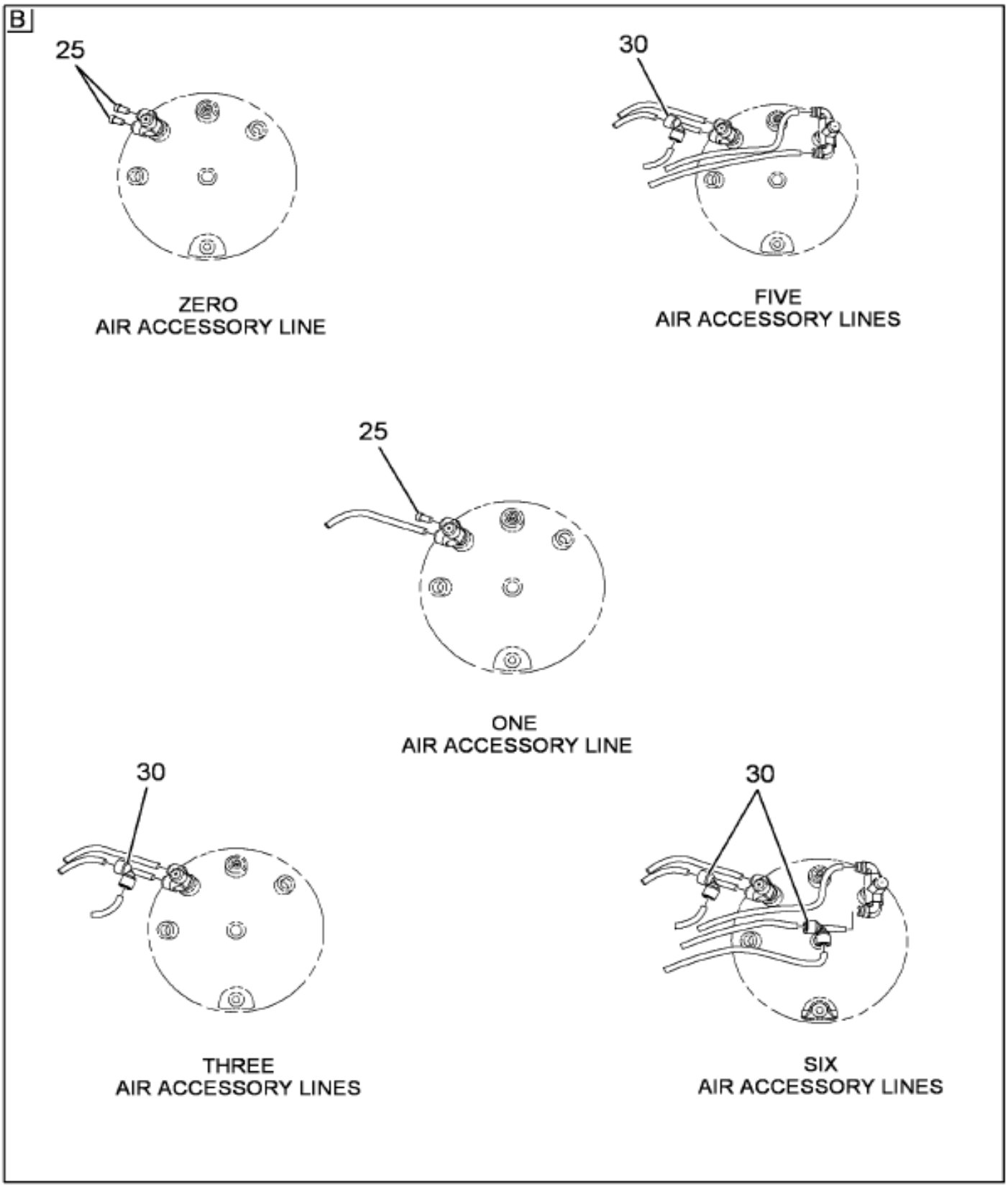

Grp 04

Figure 5 of 7

COPYRIGHT© 2011INTERNATIONAL TRUCK AND ENGINE CORP.

https://truckmanualshub.com/

Figure 0HC25
AIR TANK TUBING INSTL

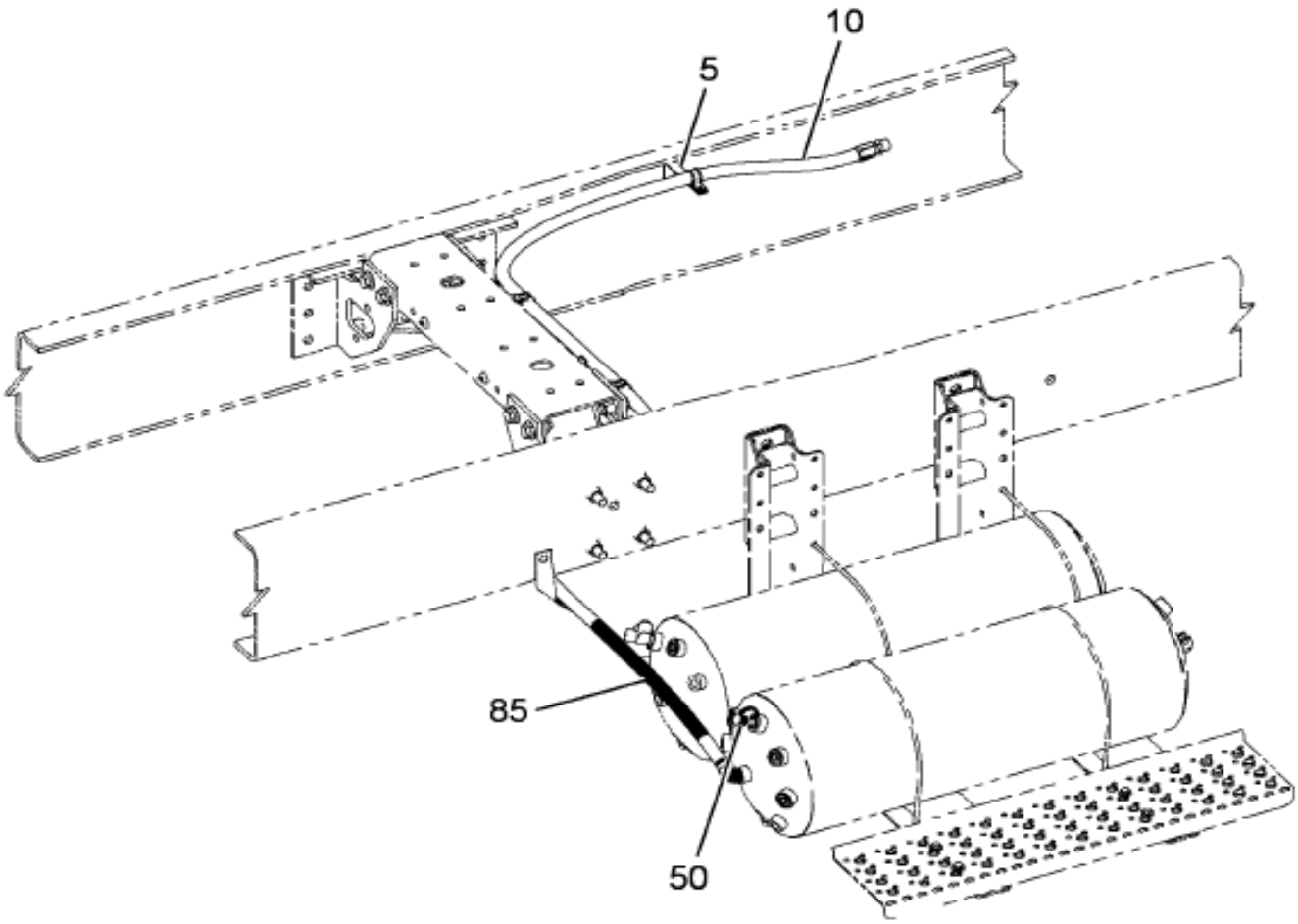

04-032-0343-01 M09

Figure 6 of 7

COPYRIGHT© 2011INTERNATIONAL TRUCK AND ENGINE CORP.

https://truckmanualshub.com/

Figure 0HC25

AIR TANK TUBING INSTL

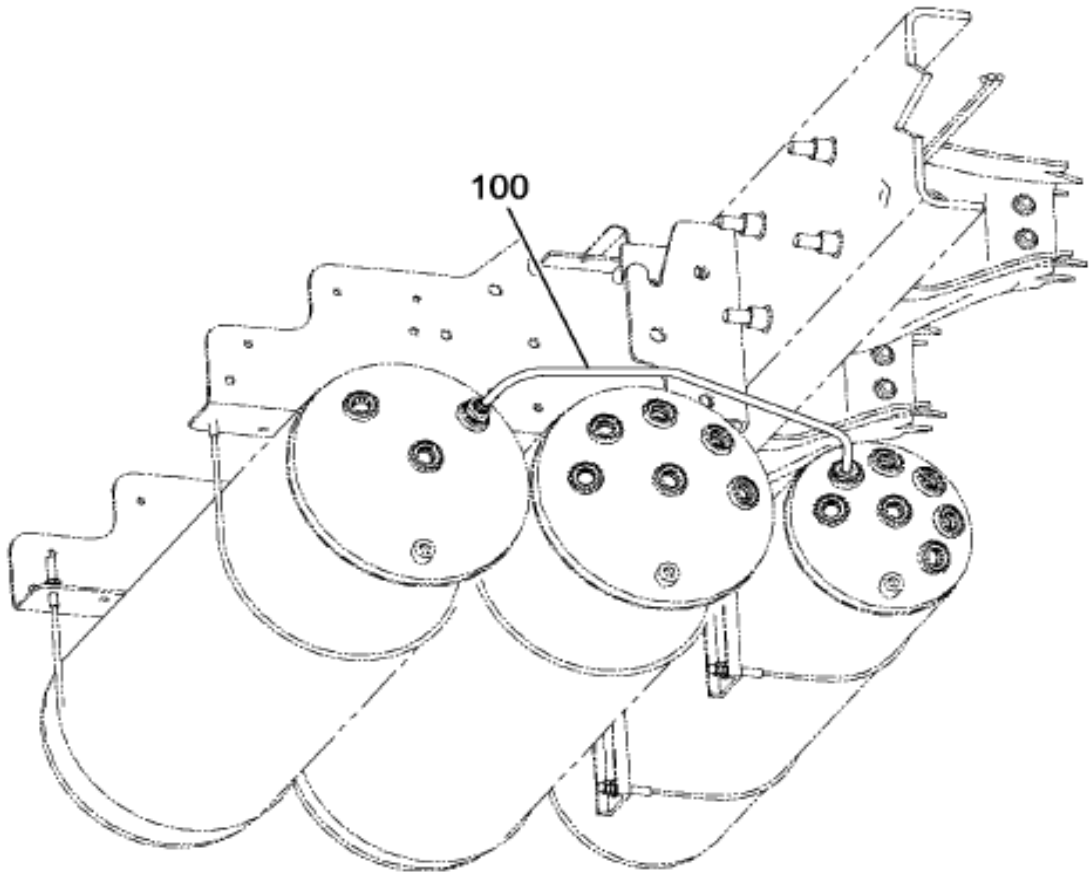

M-NGV-SS-7600-113
W/04VDU
W/10WHZ,10WJD

04-032-0452-01 G11

Item	Part No.	Qty	Description	Kit	Var	Figure
50	1655349C1	1	CAP,BRK CHAMBER		0HC2S	

COPYRIGHT© 2011INTERNATIONAL TRUCK AND ENGINE CORP.

https://truckmanualshub.com/

Figure 0H1W18

AIR TANK TUBING; PRIMARY TANK

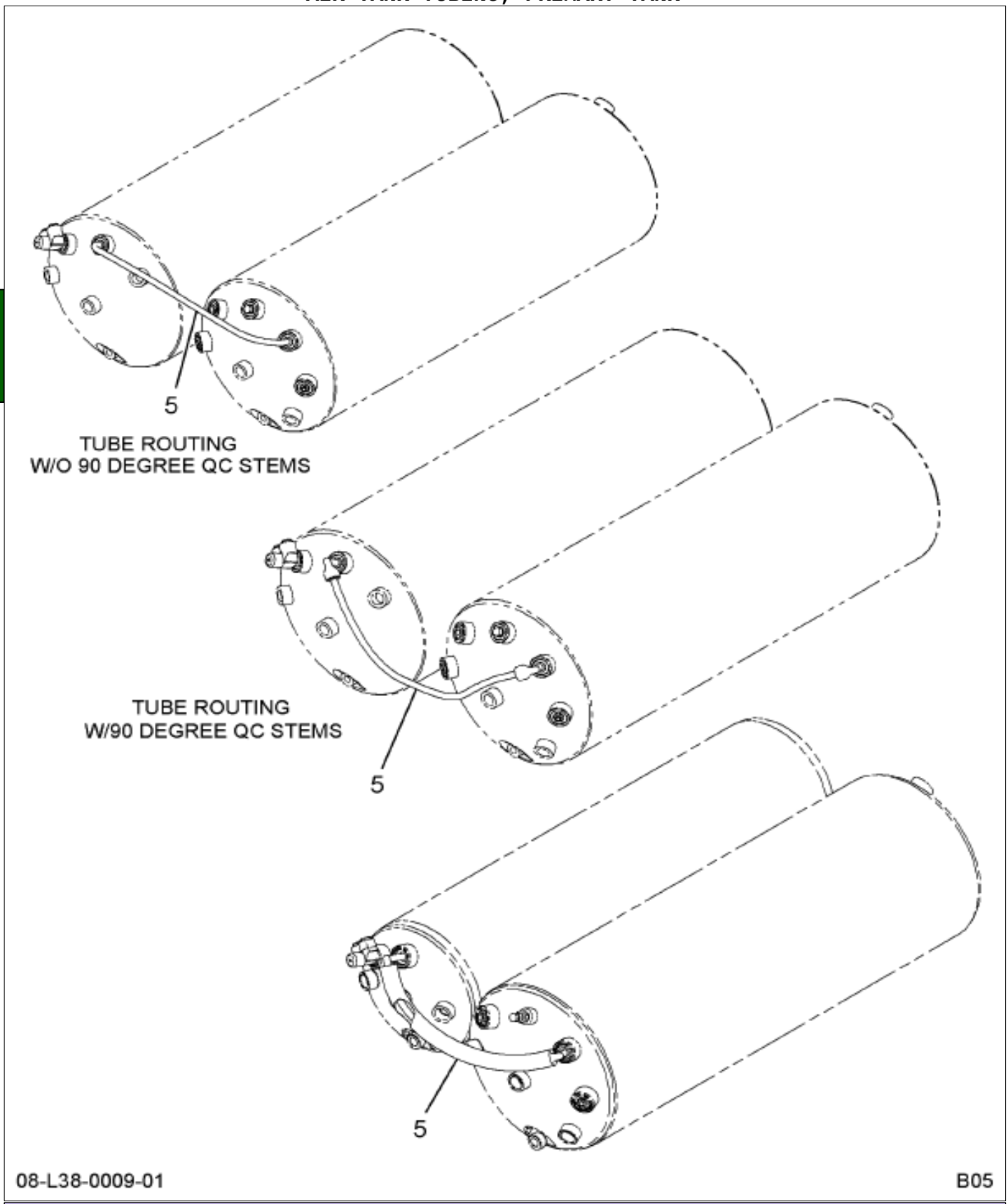

Item	Part No.	Qty	Description	Kit	Var	Figure
5	3558645F93	1	BBAT,PRIMARY AIR TANK TUBING		0QTLK	3558645F93

COPYRIGHT© 2011INTERNATIONAL TRUCK AND ENGINE CORP.

https://truckmanualshub.com/

Figure 3558645F93

BBAT,PRIMARY AIR TANK TUBING

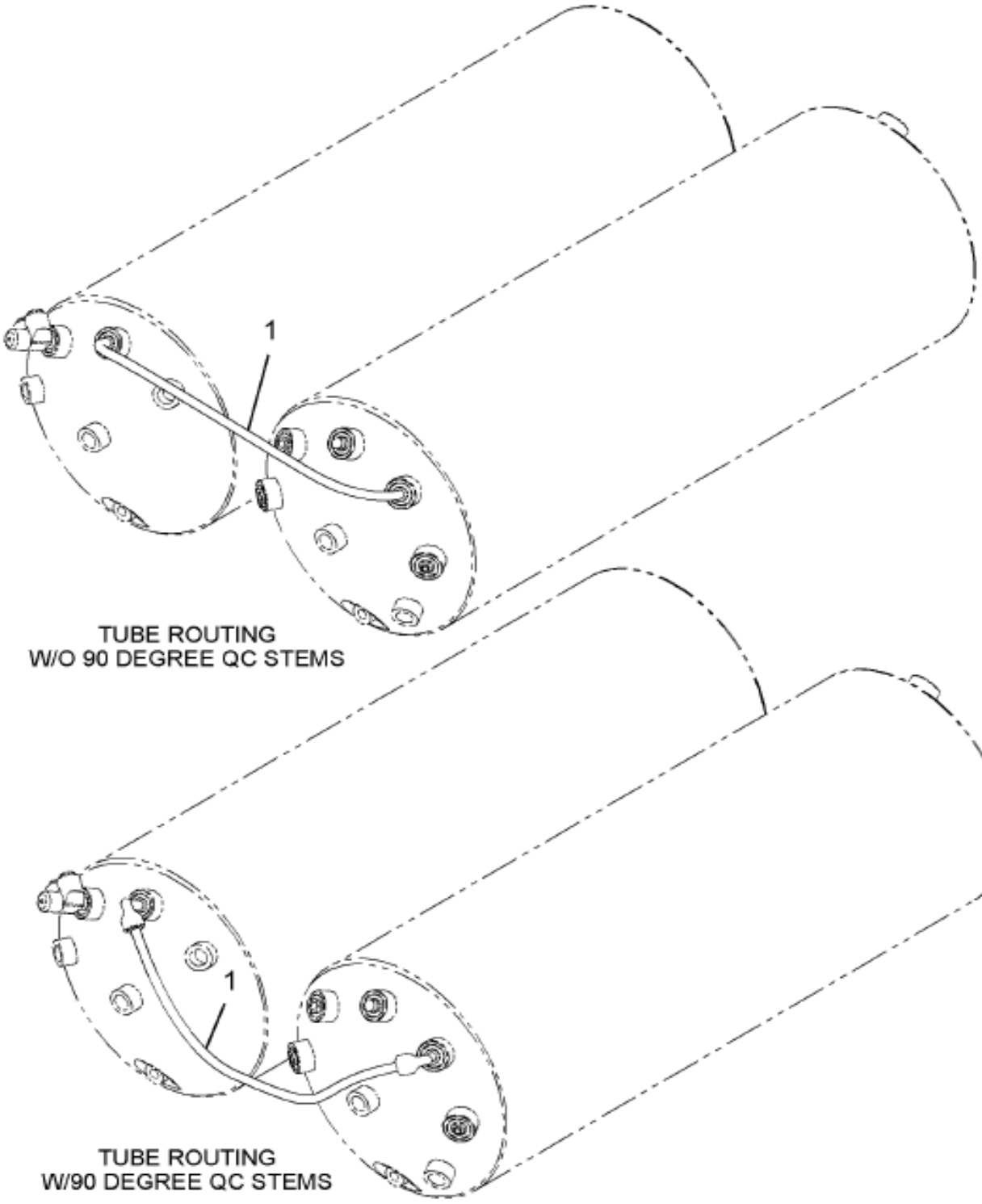

Item	Part No.	Qty	Description	Kit	Var	Figure
1	3603591C1	1	TUBE, FORMED - 3/8 GREEN			
880		RF	NOTE: ASM BELOW COMPRISED OF ABOVE COMPONENTS			
881	3558645F93	RF	BBAT,PRIMARY AIR TANK TUBING			

COPYRIGHT© 2011INTERNATIONAL TRUCK AND ENGINE CORP.

https://truckmanualshub.com/

Figure 0HWF7

AIR TANK TUBING; WET/SECONDARY TANK, 11", BBAT MOD (ABR #6)

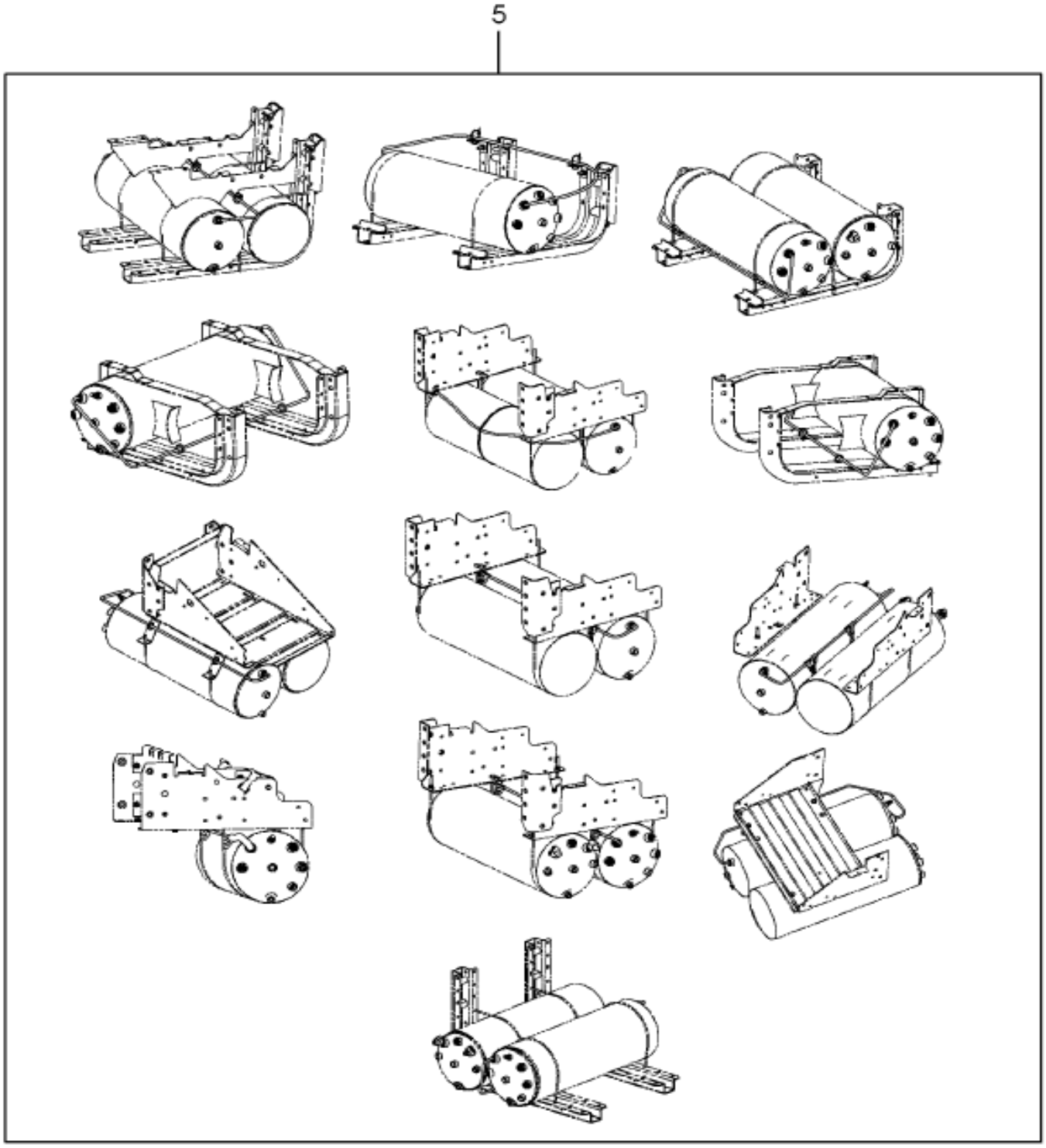

08-L37-0012-01 E10

Item	Part No.	Qty	Description	Kit	Var	Figure
5	3625467F91	1	BBAT WET/2NDRY AIR TANK TUBING		0HWGR	3625467F91

COPYRIGHT© 2011INTERNATIONAL TRUCK AND ENGINE CORP.

https://truckmanualshub.com/

Figure 3625467F91
BBAT WET/2NDRY AIR TANK TUBING

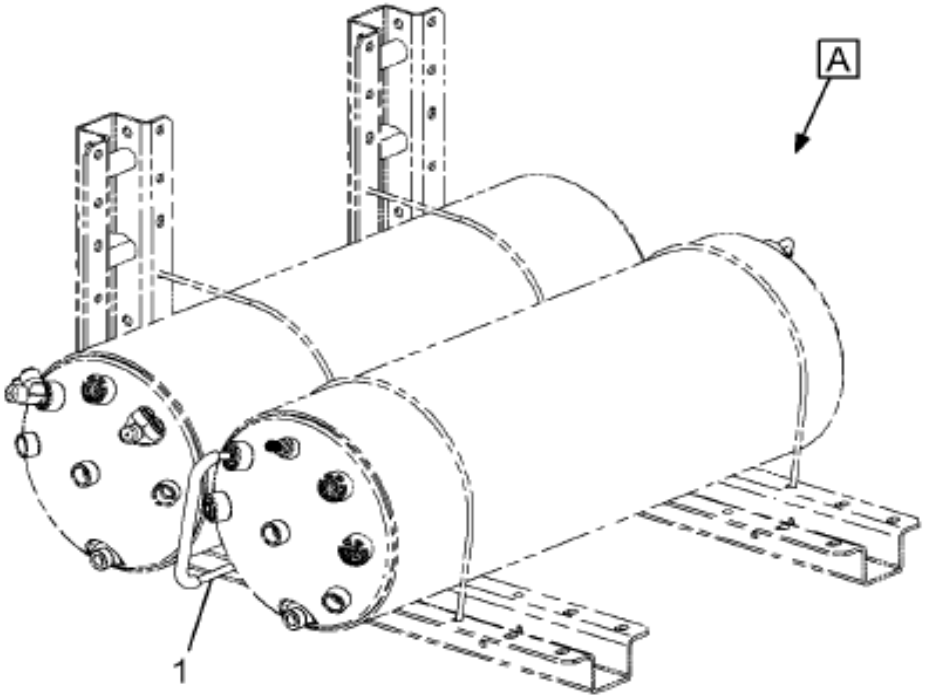

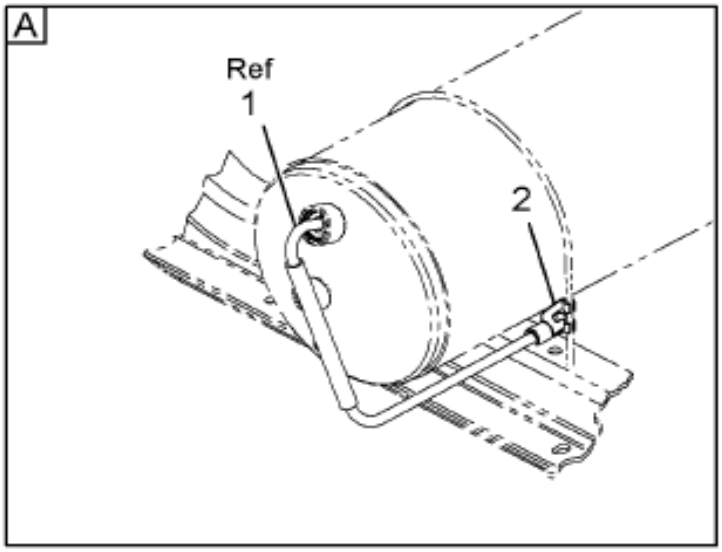

04-D62-M001-01 E09

Item	Part No.	Qty	Description	Kit	Var	Figure
1	3603578C1	1	TUBE, FORMED - 3/8 ORANGE			
2	3603891C1	2	SUPPORT,3/8" TUBE			
880		RF	NOTE: ASM BELOW COMPRISED OF ABOVE COMPONENTS			
881	3625467F91	RF	BBAT WET/2NDRY AIR TANK TUBING			

COPYRIGHT© 2011INTERNATIONAL TRUCK AND ENGINE CORP.

https://truckmanualshub.com/

Figure 0M72B

AIR TANKS; STEEL, W/BATTERY BOX MODULE

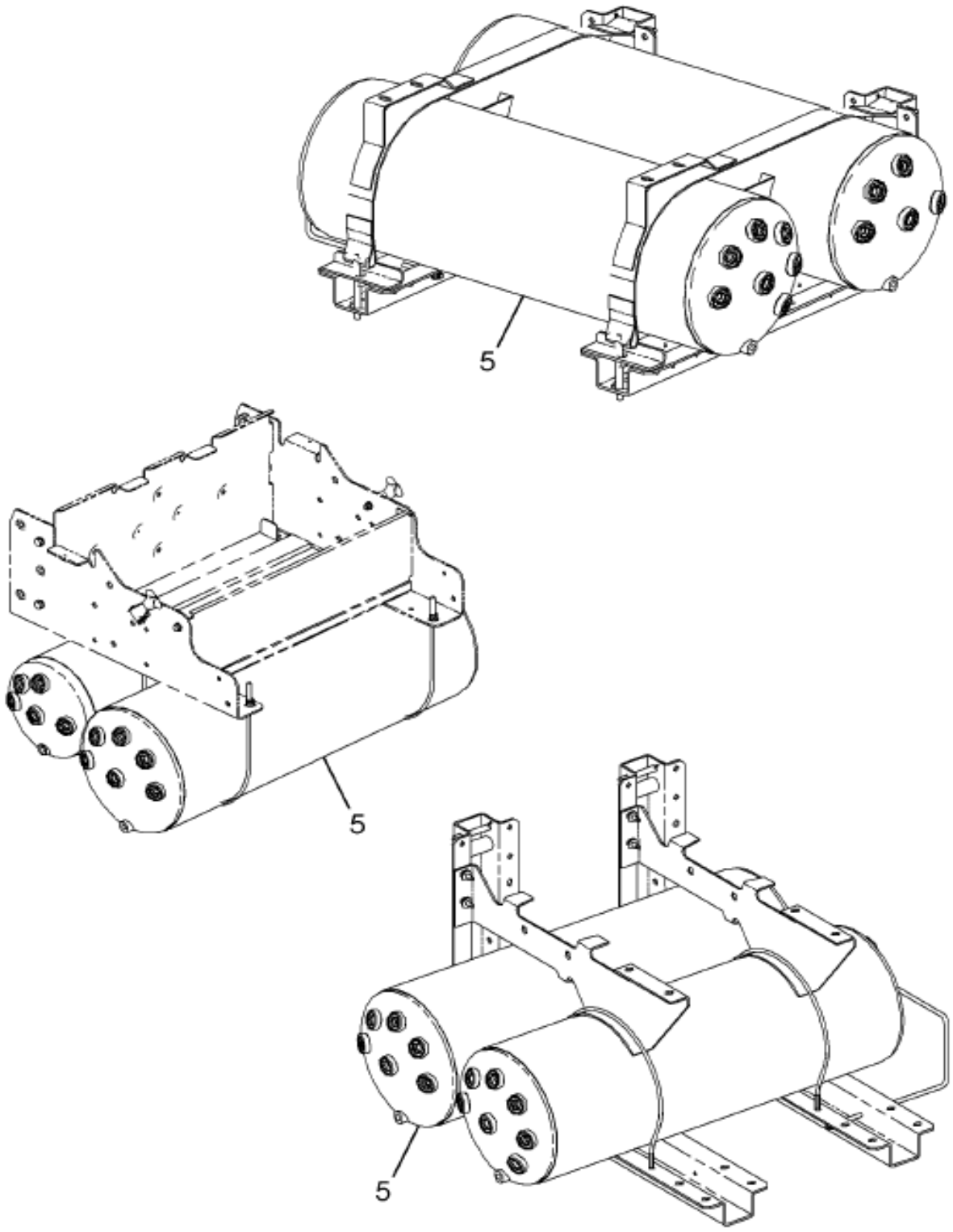

Item	Part No.	Qty	Description	Kit	Var	Figure
5	6086293F92	1	MODULE 2 AIR TANK 11" STEEL		0NLRL	6086293F92

COPYRIGHT© 2011INTERNATIONAL TRUCK AND ENGINE CORP.

https://truckmanualshub.com/

Figure 6086253F92

MODULE 2 AIR TANK 11" STEEL

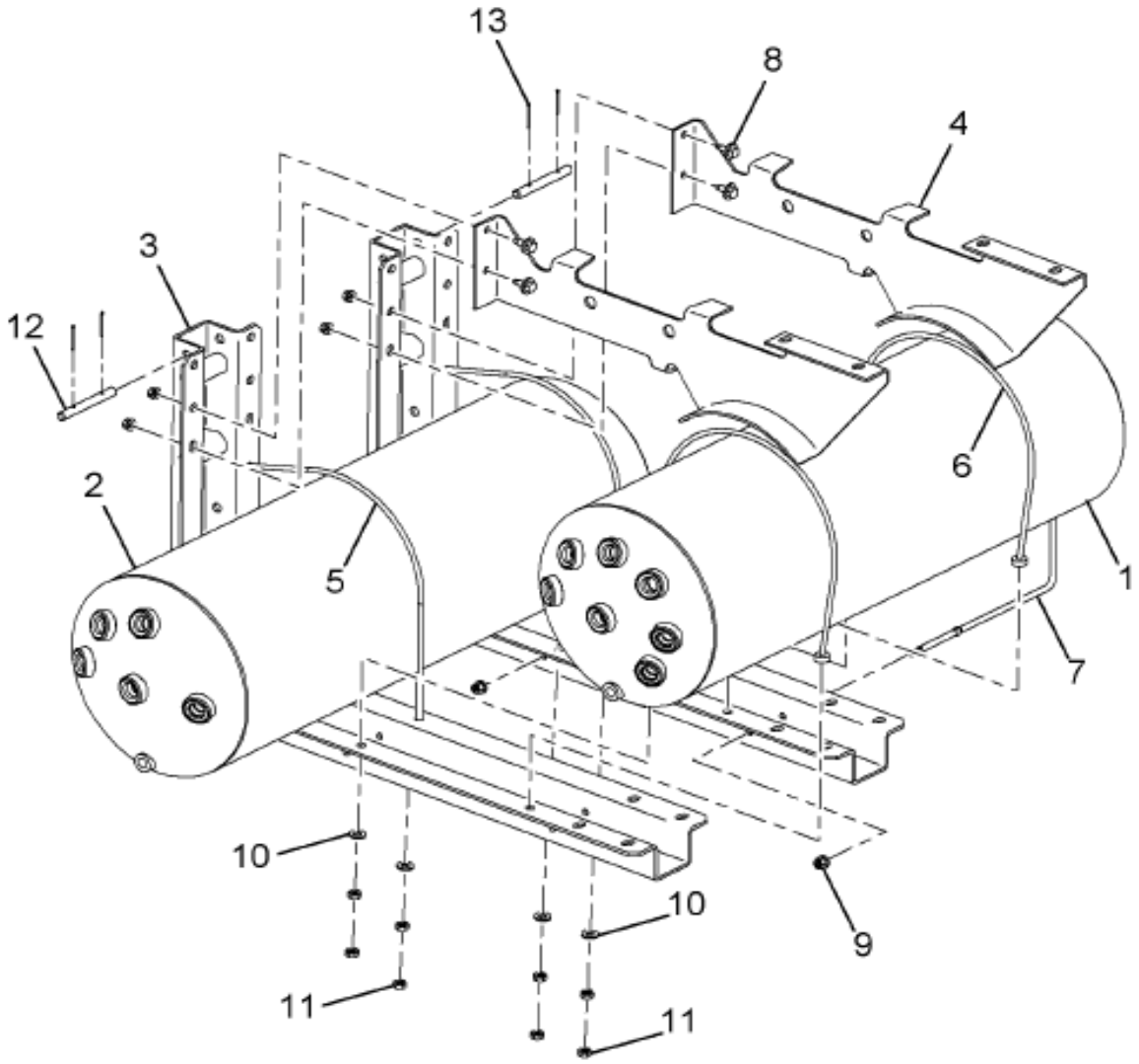

08-L35-0161-01 E09

Item	Part No.	Qty	Description	Kit	Var	Figure
1	3832979C1	1	TANK AIR PRESS WET/SECONDARY			
2	3832978C1	1	TANK AIR PRESS PRIMARY - STEEL			
3	3551226C4	2	SUPPORT,, FUEL TANK ASSY			
4	3551229C3	2	SUPPORT,TANK			
5	3558527C1	2	CABLE,TANK MTG*ASSY SURGE TANK			
6	3832384C1	2	CABLE,TANK MTG, 32.0 IN			

COPYRIGHT© 2011INTERNATIONAL TRUCK AND ENGINE CORP.

https://truckmanualshub.com/

Figure 6086293F92

MODULE 2 AIR TANK 11" STEEL

Item	Part No.	Qty	Description	Kit	Var	Figure
7	3558300C1	1	BRACKET,MUD FLAP GUARD			
8	3541322C1	4	BOLT,SPECIAL*M8 X 1.25 - 25 MM			
9	3544379C1	6	NUT,HEX FLG M8 METRIC			
10	25709R1	4	WASHER-.406X.812X.089HDN			
11	124925	8	NUT 3/8-NF JAM TYPE 5			
12	3586802C1	2	PIN,FUEL TANK STRAP*LOCATING P			
13	103375	4	PIN,3/32 X 1/4 PLN COTTER			
880		RF	NOTE: ASM BELOW COMPRISED OF ABOVE COMPONENTS			
881	6086293F92	RF	MODULE 2 AIR TANK 11" STEEL			

COPYRIGHT© 2011INTERNATIONAL TRUCK AND ENGINE CORP.

https://truckmanualshub.com/

Figure 0FR6Y

BOC HOSE ROUTING & CLIP INSTL; BRAKE

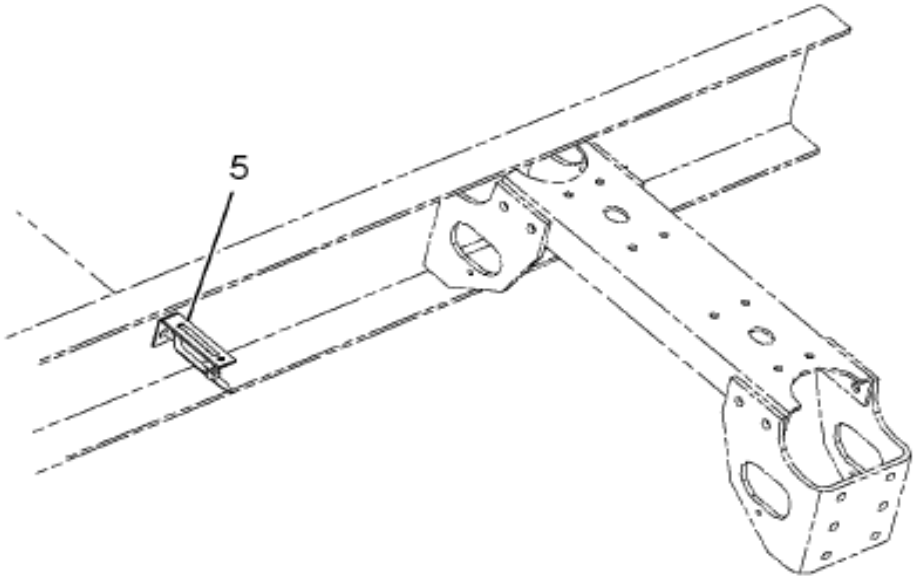

M-NGV-SS-MRD
M-NGV-SS-7500
M-NGV-SS-7600
W/AXLE-CONFIG=6x4
W/04091,04092
N/PUSHER AXLES, 1LZJ, 1UAR
OR
M-NGV-MD
W/W/AXLE-CONFIG=6x4
W/04091
OR
W/M-NGV-SS-7600-113
N-01CAX, 01CAW
W/AXLE-CONFIG=6x4
W/04091, 04092
N/PUSHER AXLES, 1LZJ, 1UAR

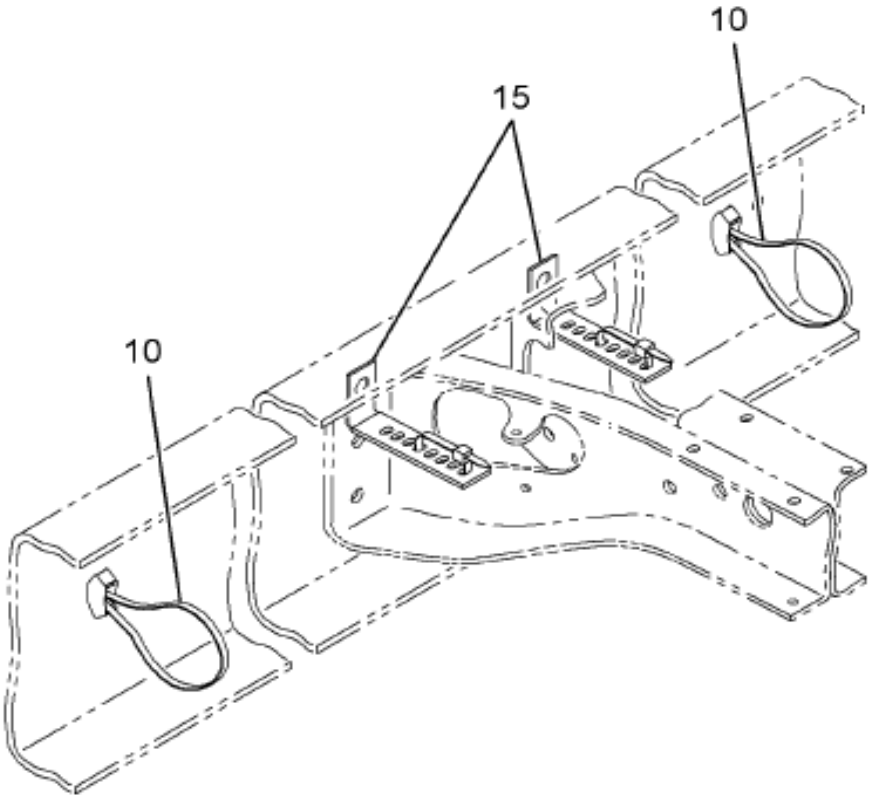

M-NGV-SS, M-NGV-SS-MD
W/6x4, 6X6
N/PUSHER AXLES
N/M-NGV-SS-770
OR
W/M-NGV-SS-7600-113
N/01CAX, 01CAW
W/6x4, 6x6
W/16030
N/PUSHER AXLES

04-036-0021-AA H09

Item	Part No.	Qty	Description	Kit	Var	Figure
5	2034206C1	1	EXTENSION CLIP		0G5DD	
5	30750R2	1	BOLT, M16 X 40MM PHC FLG CLASS		0G5DD	
5	30756R1	1	NUT,HEX M16 PRVTRQ		0G5DD	
5	306132C1	1	STRAP,CABLE LOCK		0G5DD	
10	3536111C1	2	GUIDE,BRK HOSE & CABLE*GUIDE S		0FR6Y	
10	3544557C1	3	STRAP,CABLE LOCK*382MM BUTTON		0FR6Y	

COPYRIGHT© 2011INTERNATIONAL TRUCK AND ENGINE CORP.

https://truckmanualshub.com/

Figure 0FR6Y

BOC HOSE ROUTING & CLIP INSTL; BRAKE

Item	Part No.	Qty	Description	Kit	Var	Figure
15	2034206C1	8	EXTENSION CLIP		0FR6Y	
15	306132C1	8	STRAP,CABLE LOCK		0FR6Y	

COPYRIGHT© 2011INTERNATIONAL TRUCK AND ENGINE CORP.

https://truckmanualshub.com/

Figure 06FDX

BRAKE ACCESSORIES MODULE

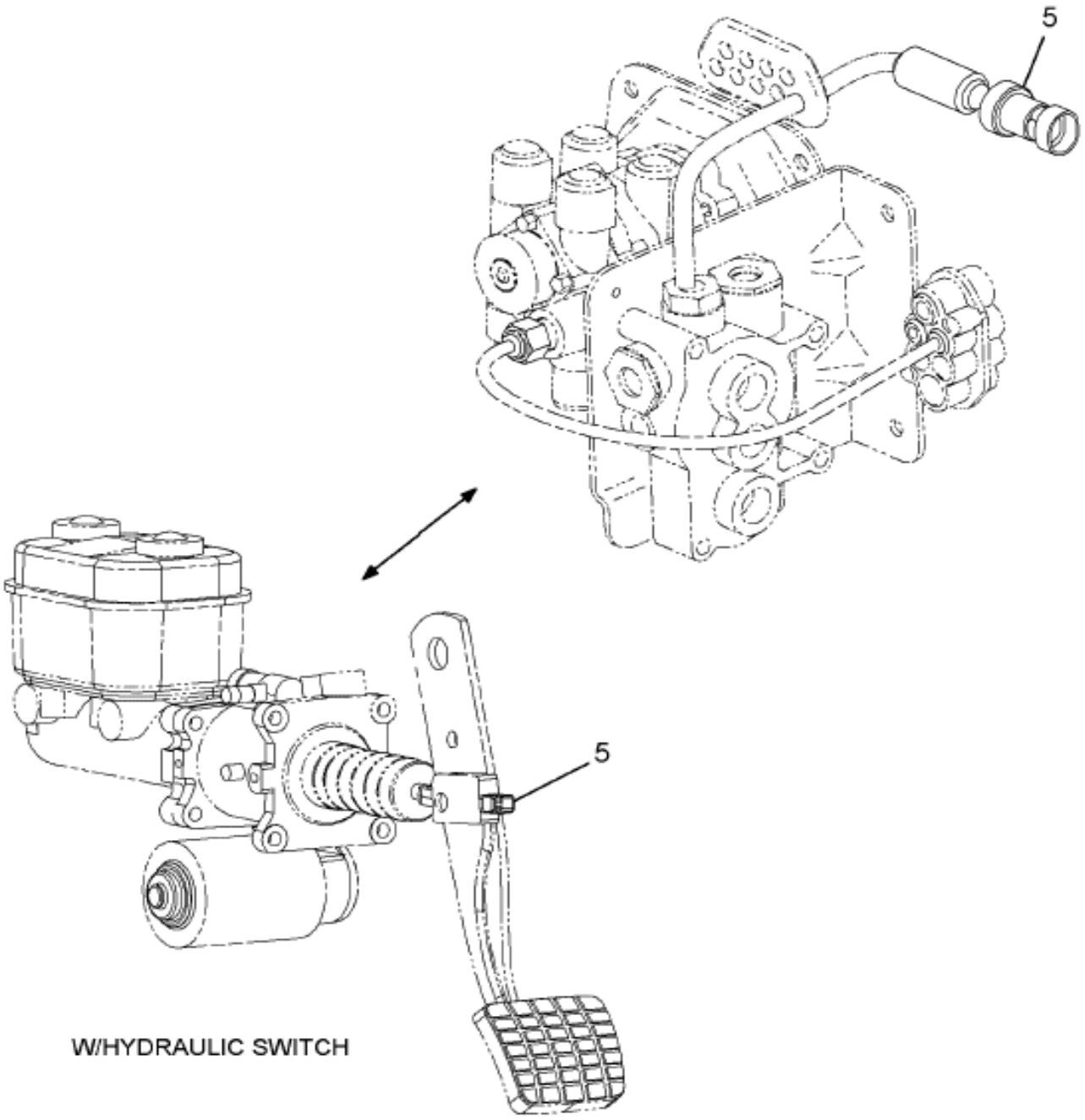

16-C15-0011-AA K09

Item	Part No.	Qty	Description	Kit	Var	Figure
5	3808531F91	1	BRAKE,DCM TRUCK W/AIR		0R911	3808531F91

COPYRIGHT© 2011INTERNATIONAL TRUCK AND ENGINE CORP.

https://truckmanualshub.com/

Figure 3808531F91
BRAKE,DCM TRUCK W/AIR

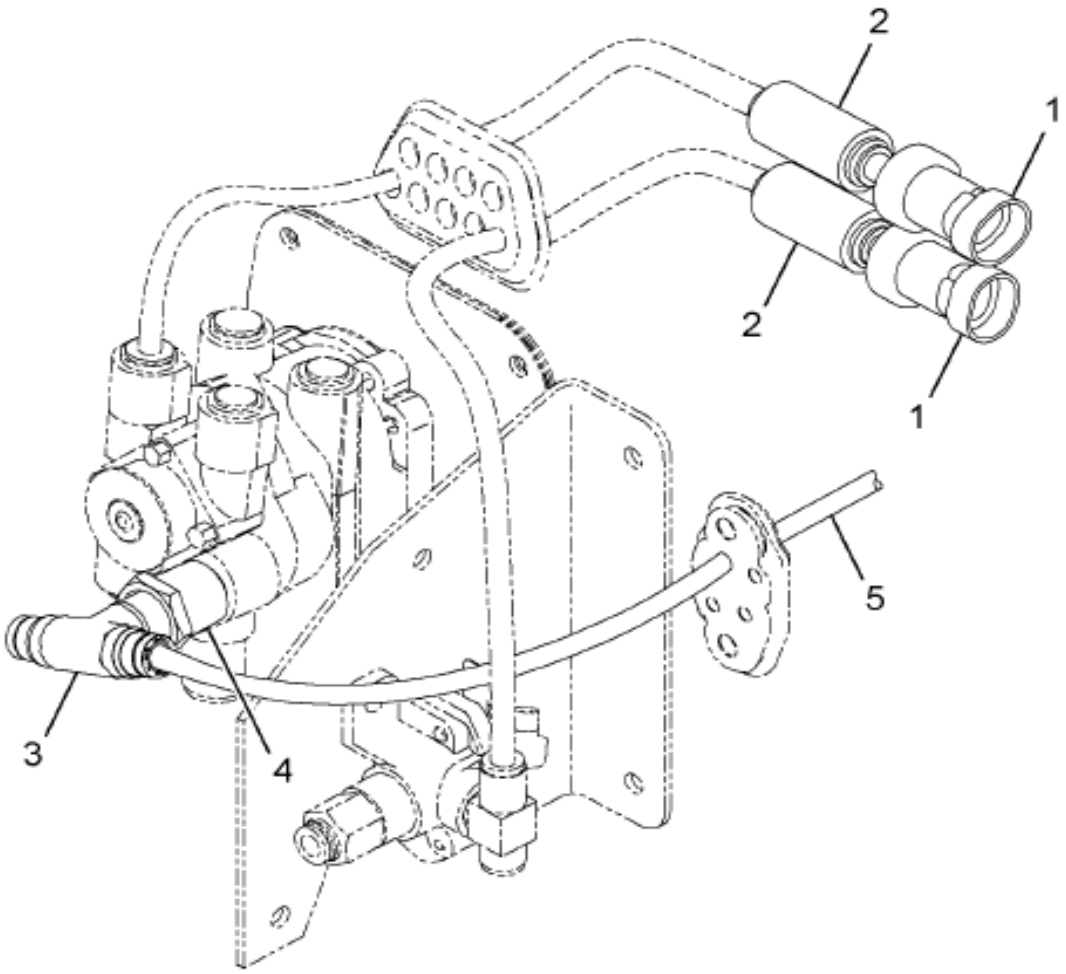

16-C15-0042-01 G10

Item	Part No.	Qty	Description	Kit	Var	Figure
1	2505850C1	2	SWITCH, PRESSURE - SLS			
2	2017507C1	2	COUPLING,PTC 3/8 QC			
3	2017495C1	1	TEE,QC 1/4NPT X 1/4QC X 1/4QC			
4	21378H	1	BUSHING,REDUCING 3/8"X1/4"NPT			
5	417196C3	AR	TUBE,NYLON BULK 1/4 OD BLACK			
880		RF	NOTE: ASM BELOW COMPRISED OF ABOVE			

COPYRIGHT© 2011INTERNATIONAL TRUCK AND ENGINE CORP.

https://truckmanualshub.com/

Figure 3808531F91

BRAKE,DCM TRUCK W/AIR

Item	Part No.	Qty	Description	Kit	Var	Figure
			COMPONENTS			
881	3808531F91	RF	BRAKE,DCM TRUCK W/AIR			

COPYRIGHT© 2011INTERNATIONAL TRUCK AND ENGINE CORP.

https://truckmanualshub.com/

Figure 0V5ZP

BRAKE CHAMBER INSTL; FRONT AXLE,10-20K,24" LONG STROKE

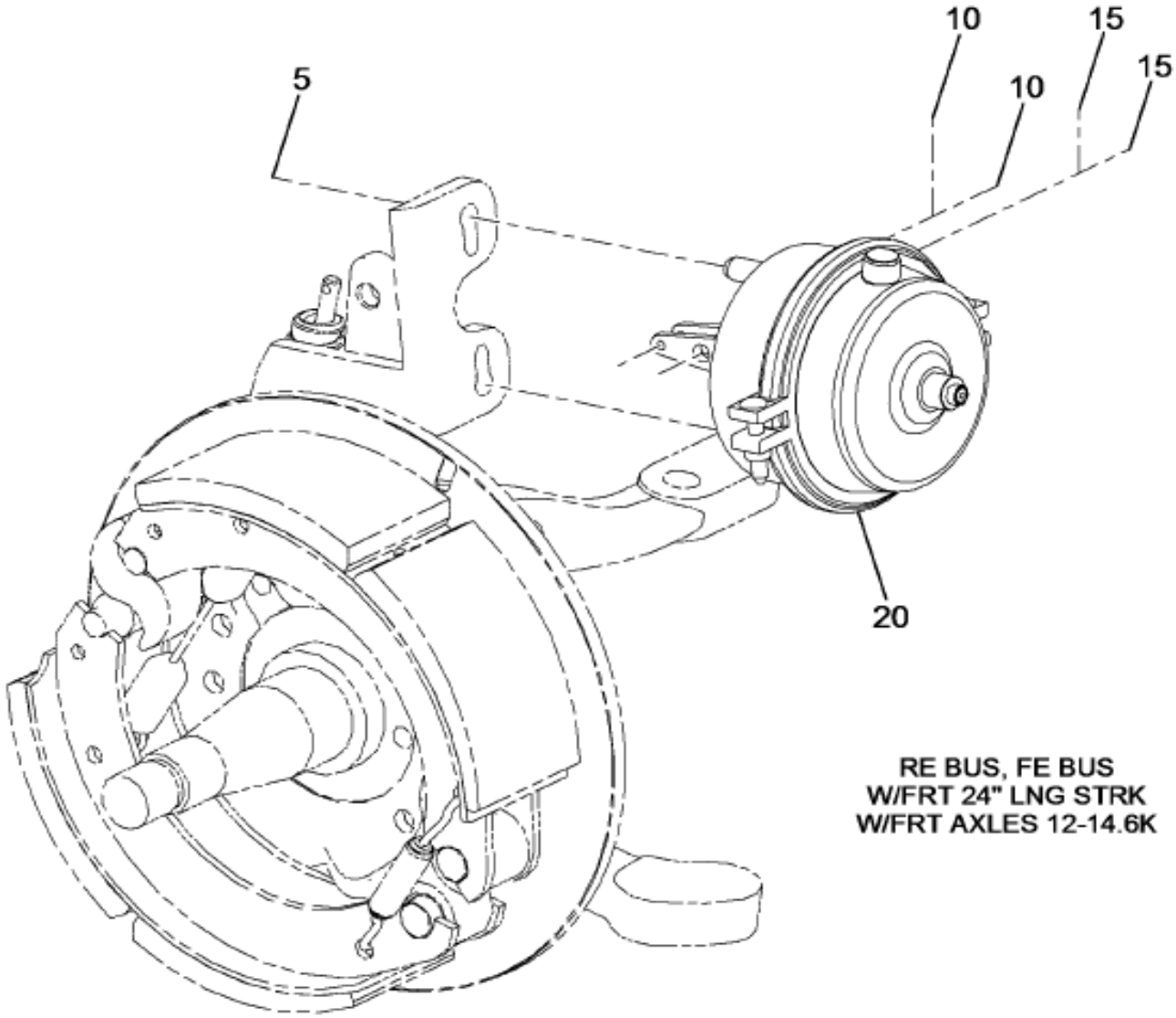

04-340-0012-01 G09

Item	Part No.	Qty	Description	Kit	Var	Figure
5	25711R1	4	WASHER,FLAT .656X1.312X.150 H		0V5ZP	
5	9412231	4	NUT,HEX LOCK 5/8 NC		0V5ZP	
10	21853H	2	PIN,YOKE 1/2 X 1.500 PLN		0V5ZS	
10	2024771C1	2	CLIP,SPRING TYPE		0V5ZS	
20	3682379C91	1	CHAMBER,BRAKE SERVICE T24		0W7FB	

COPYRIGHT© 2011INTERNATIONAL TRUCK AND ENGINE CORP.

https://truckmanualshub.com/

Figure 06LQ5

BRAKE VALVE INSTL; CONTROL/PARKING/HAND CONTROL, AIR/HYD

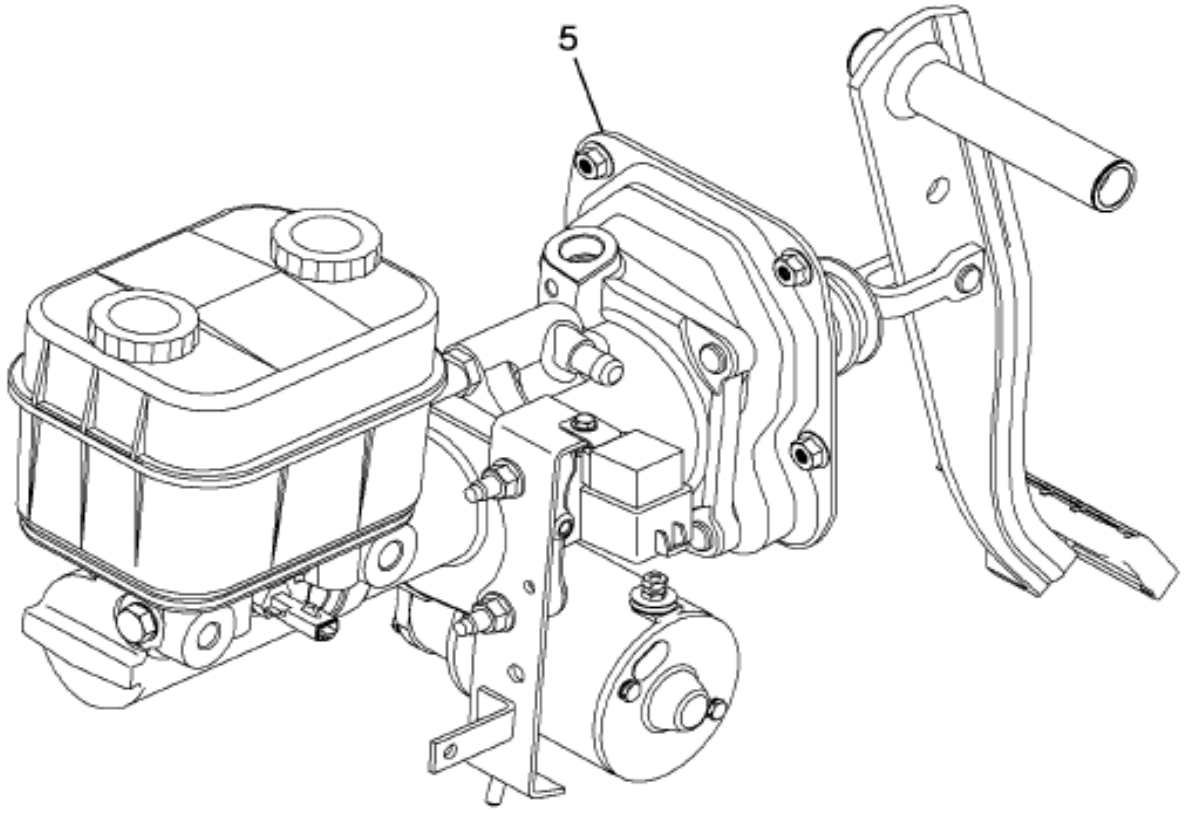

16-C17-0005-01 M09

Item	Part No.	Qty	Description	Kit	Var	Figure
5	3807949F92	1	DRIVER CONTROL, BRAKE VALVE		0RS0T	3807949F92

COPYRIGHT© 2011INTERNATIONAL TRUCK AND ENGINE CORP.

https://truckmanualshub.com/

Figure 3807345F92

DRIVER CONTROL, BRAKE VALVE

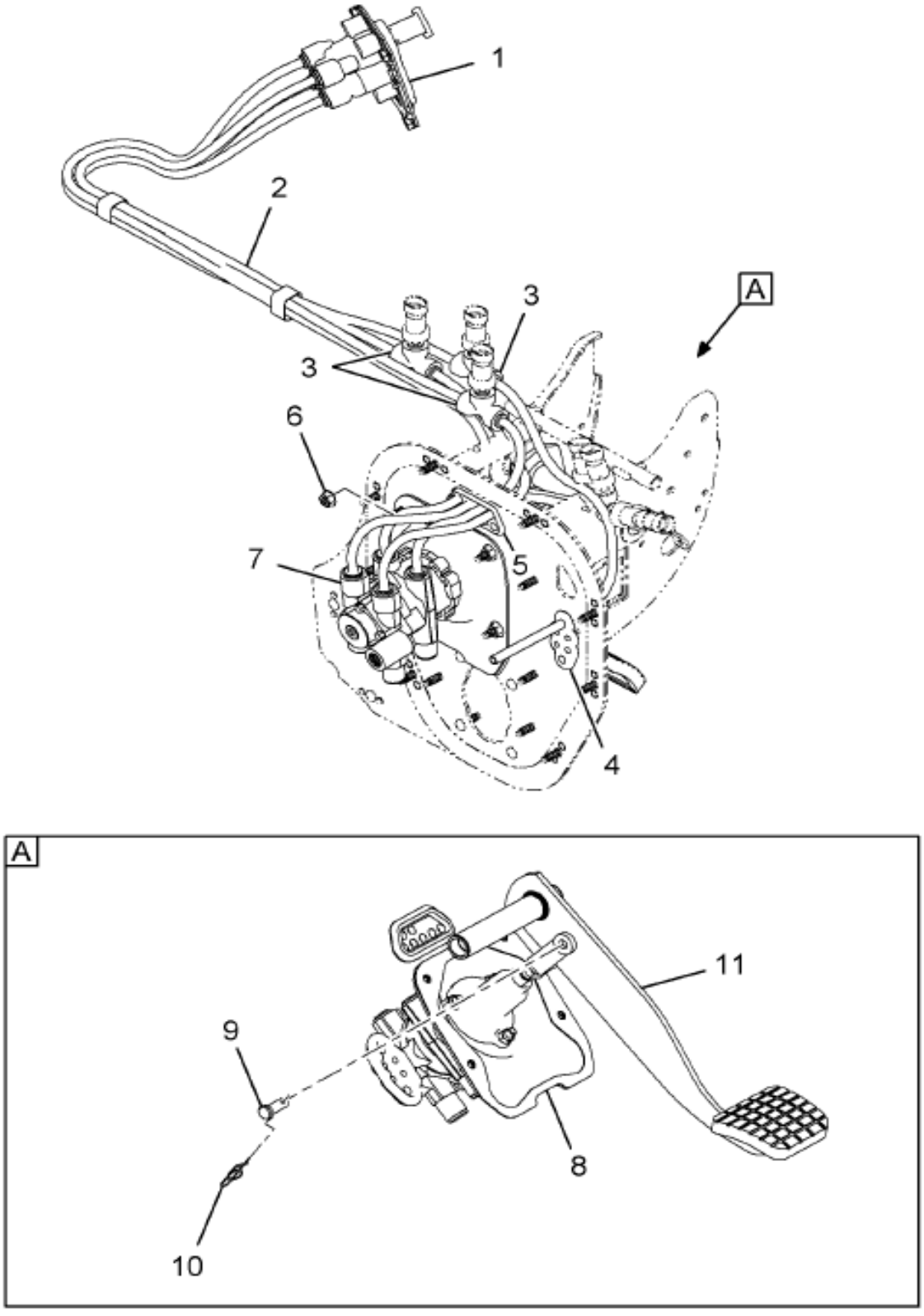

16-C17-0058-01 G10

Item	Part No.	Qty	Description	Kit	Var	Figure
1	2505876C91	1	VALVE,PARKING BRAKE PUSH-PULL			2505876C91
2	417199C3	AR	TUBE,NYLON BULK 3/8 OD BLACK			
3	2015727C1	AR	TEE,QC AIR TUBE 3/8FX3/8F/3/8F			
4	2594619C1	1	GUIDE,TUBE*PASSTHRU GLAND LOW			
5	2505840C1	1	GUIDE,TUBE*PASSTHRU GLAND UP			
6	2505842C1	4	NUT,8MM FLANGE			

COPYRIGHT© 2011INTERNATIONAL TRUCK AND ENGINE CORP.

https://truckmanualshub.com/

Figure 3807949F92

DRIVER CONTROL, BRAKE VALVE

Item	Part No.	Qty	Description	Kit	Var	Figure
7	2506077C91	1	VALVE,BRAKE E-8P FOOT			
8	2505853C1	1	GASKET,AIR HOSE BRKT			
9	BX200982	1	YOKE PIN			
10	3588744C1	1	CLIP,SPRING RUE RING RUE-22			
11	2594626C91	1	PEDAL,BRAKE ASSY			2594626C91
880		RF	NOTE: ASM BELOW COMPRISED OF ABOVE COMPONENTS			
881	3807949F92	RF	DRIVER CONTROL, BRAKE VALVE			

COPYRIGHT© 2011INTERNATIONAL TRUCK AND ENGINE CORP.

https://truckmanualshub.com/

Figure 2594626C91
PEDAL, BRAKE ASSY

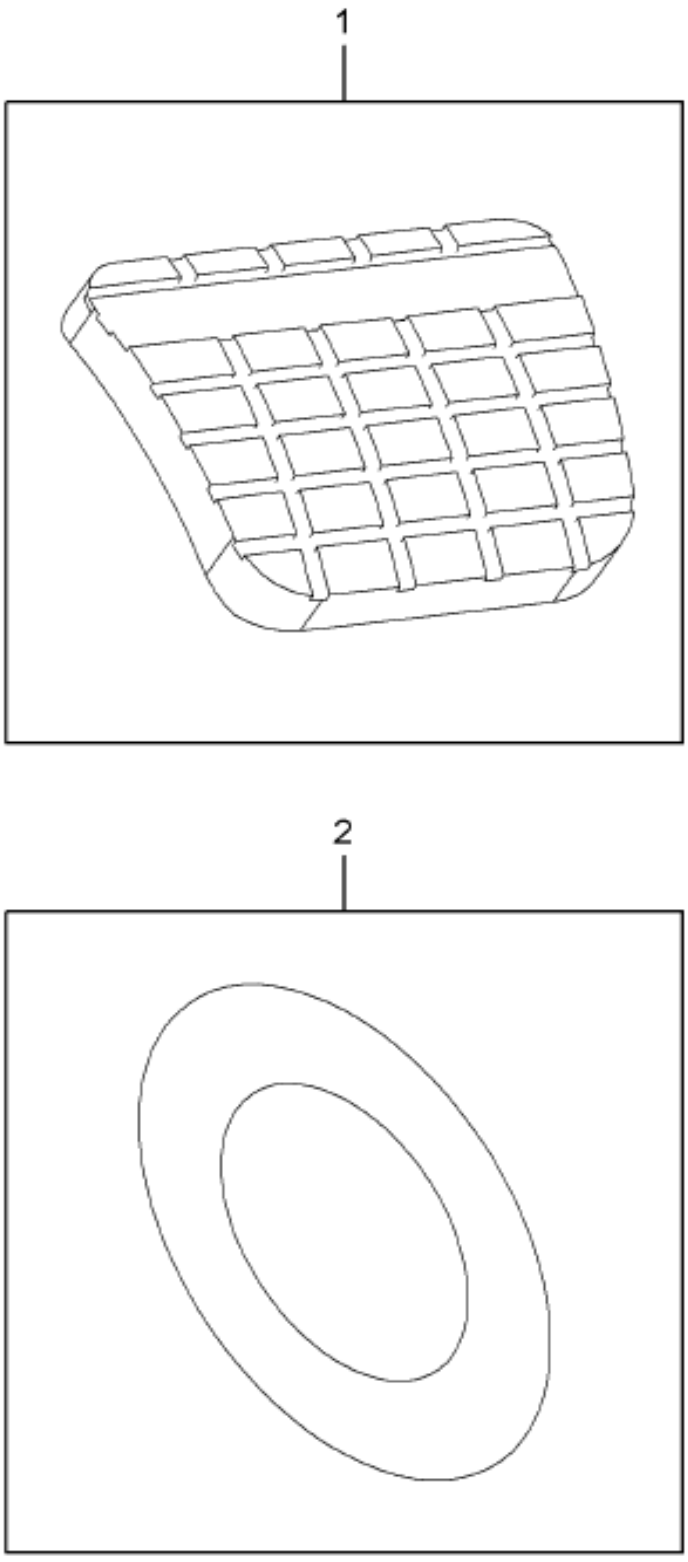

16-D75-M069-01 E09

Item	Part No.	Qty	Description	Kit	Var	Figure
1	BX234972	1	O-RING			
2	2505695C1	1	PAD,PEDAL*COVER			
880		RF	NOTE: ASM BELOW COMPRISED OF ABOVE COMPONENTS			
881	2594626C91	RF	PEDAL,BRAKE ASSY			

COPYRIGHT© 2011INTERNATIONAL TRUCK AND ENGINE CORP.

https://truckmanualshub.com/

Figure 2303876C91
VALVE,PARKING BRAKE PUSH-PULL

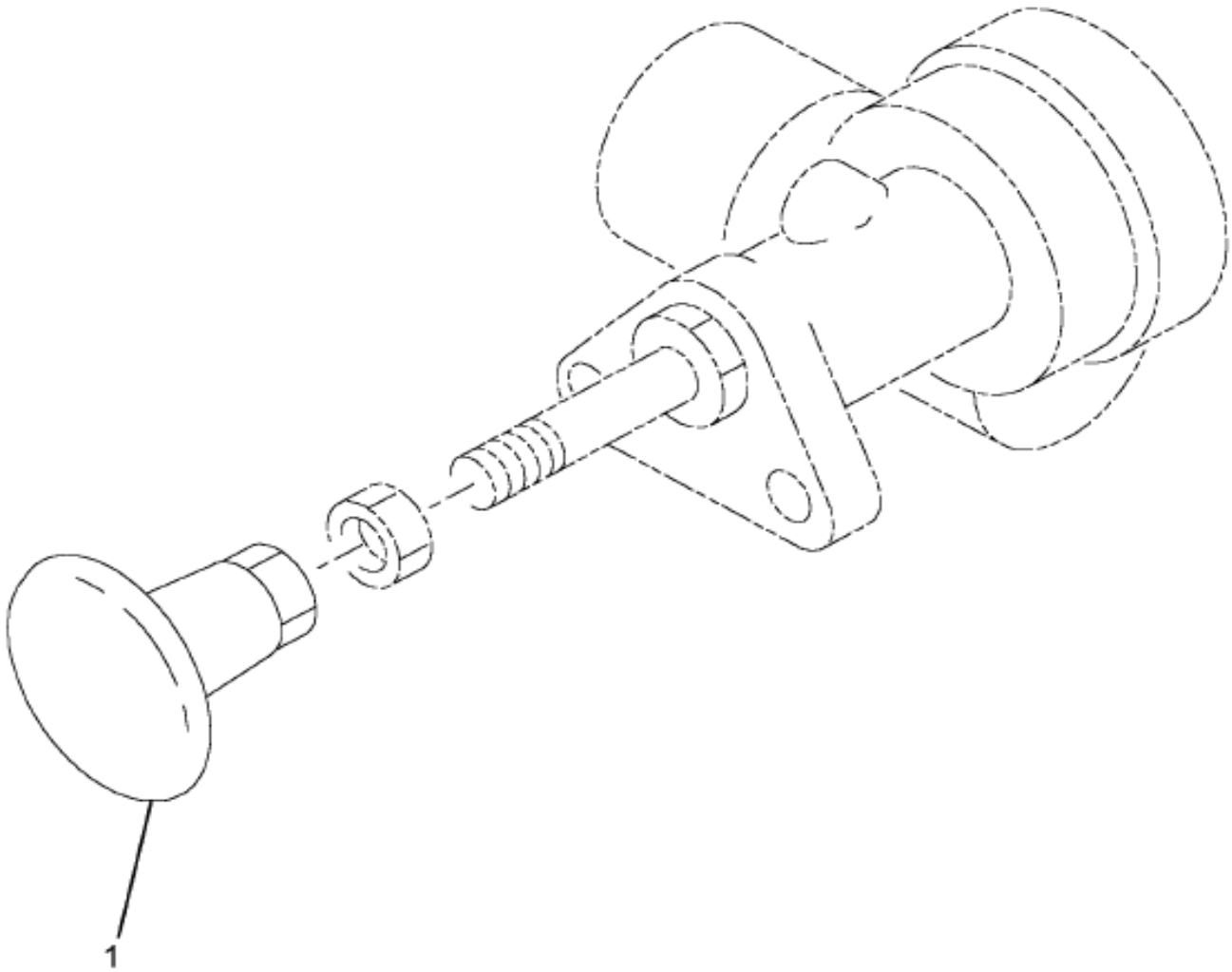

04-040-0018-00 D04

Item	Part No.	Qty	Description	Kit	Var	Figure
1	BX298818	1	KNOB,BRAKE VALVE*YLW-PRK BRAKE			
800		RF	NOTE: THE FOLLOWING PARTS ARE			
			NON-ILLUSTRATED			
801	1698729C91	KT	KIT,REPAIR HAND CONT VALVE			
880		RF	NOTE: ASM BELOW COMPRISED OF ABOVE			
			COMPONENTS			

COPYRIGHT© 2011INTERNATIONAL TRUCK AND ENGINE CORP.

https://truckmanualshub.com/

Figure 2505876C91

VALVE,PARKING BRAKE PUSH-PULL

Item	Part No.	Qty	Description	Kit	Var	Figure
881	2505876C91	RF	VALVE,PARKING BRAKE PUSH-PULL			

COPYRIGHT© 2011INTERNATIONAL TRUCK AND ENGINE CORP.

https://truckmanualshub.com/

Figure 01E14

BRK CHAMBER INSTL; HALDEX 30" SERV & 30/30",W/TANDEM AXLES

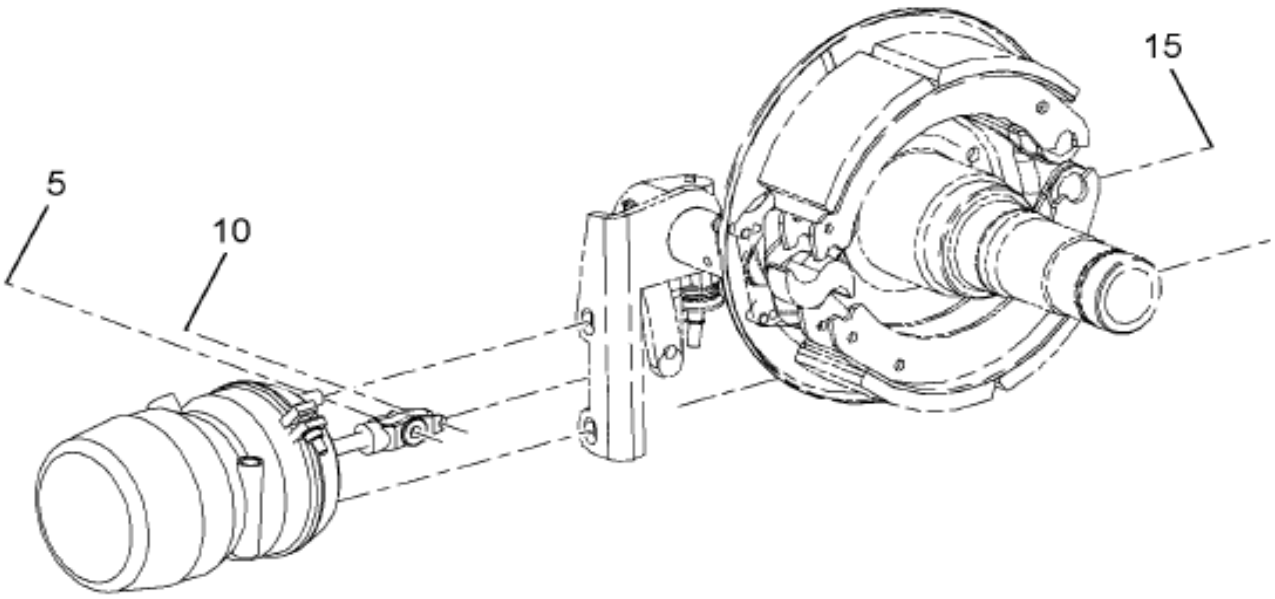

SINGLE AXLE
W/VARI-RATE, IROS,
HEND PAX SUSP
N/04ERC

04-341-0034-01 G09

Figure 1 of 3

COPYRIGHT© 2011INTERNATIONAL TRUCK AND ENGINE CORP.

https://truckmanualshub.com/

Figure 01E14

BRK CHAMBER INSTL; HALDEX 30" SERV & 30/30",W/TANDEM AXLES

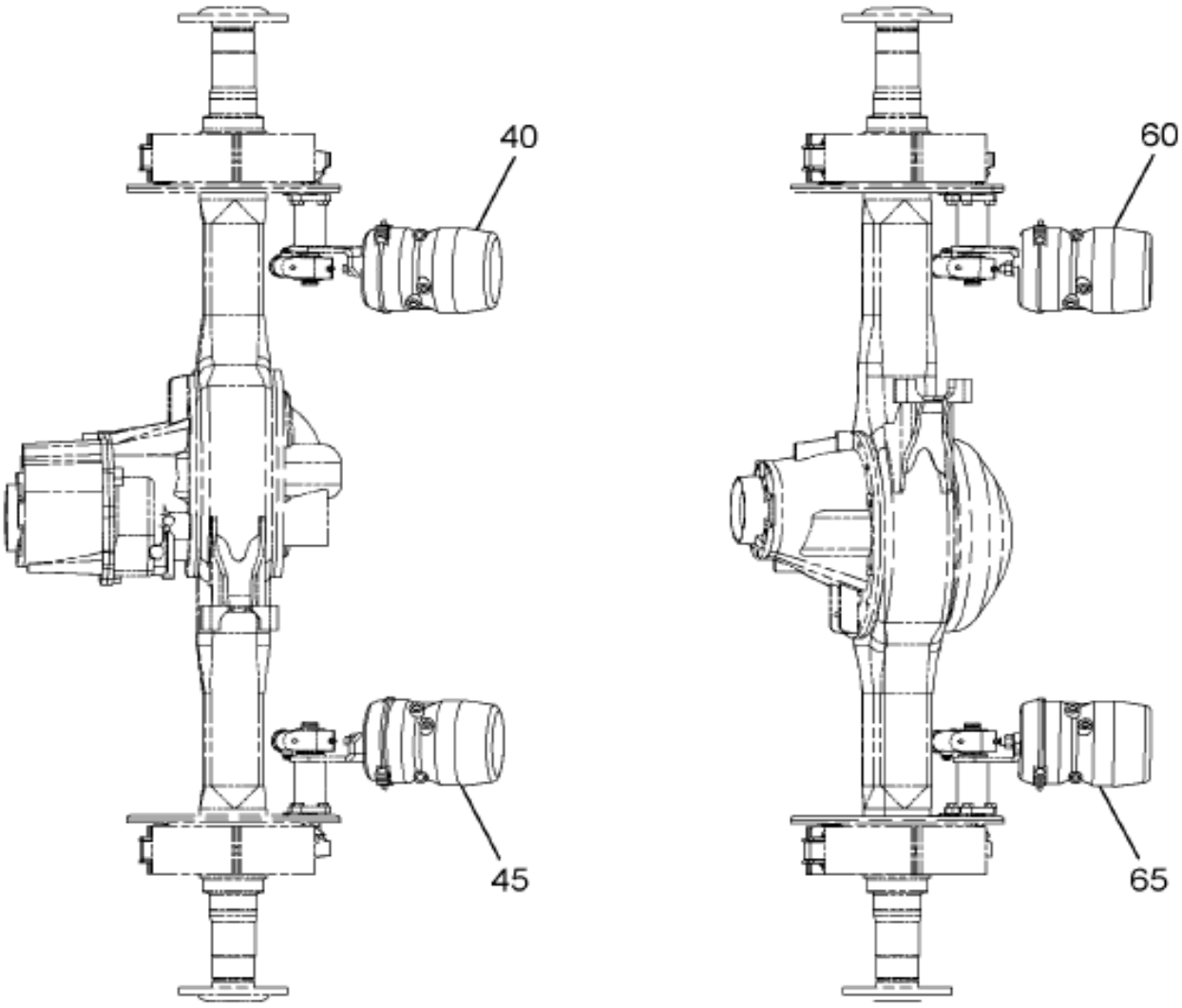

TANDEM AXLES
W/4-SPRING SUSP
W/04AAB, 4091

04-341-0034-02 G09

Figure 2 of 3

COPYRIGHT© 2011INTERNATIONAL TRUCK AND ENGINE CORP.

https://truckmanualshub.com/

Figure 01LT4

BRK CHAMBER INSTL; HALDEX 30" SERV & 30/30",W/TANDEM AXLES

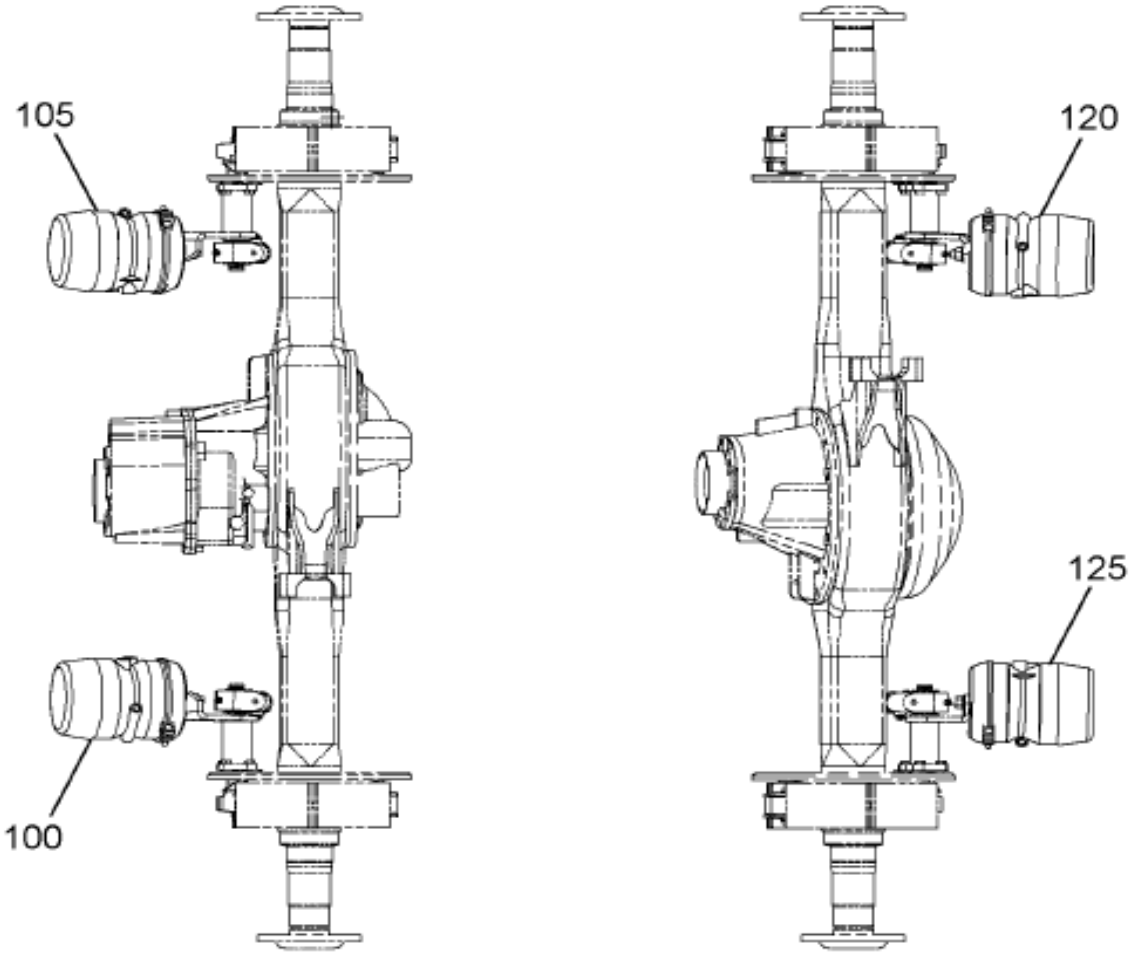

FWD REAR AXLE

RR REAR AXLE

TANDEM AXLE:
W/HEND WALKING BEAM,
CHALMBERS
W/4091, W/04WDW
N/504465, 804MAB
OR
W/HEND WALKING BEAM,
CHALMERS
W/4092,W/04AAB
N/504465, 804MAB

04-341-0034-03 G09

Item	Part No.	Qty	Description	Kit	Var	Figure
5	33557V	4	PIN, 1/2 X 1.594 PLN CLEVIS		0TLT9	
5	2024771C1	4	CLIP,SPRING TYPE		0TLT9	
15	9412231	8	NUT,HEX LOCK 5/8 NC		0TLT4	
15	25711R1	8	WASHER,FLAT .656X1.312X.150 H		0TLT4	
100	3682360C91	1	CHAMBER,BRAKE, HALDEX GC3030L		0TLTH	
105	3682360C91	1	CHAMBER,BRAKE, HALDEX GC3030L		0TLTH	

COPYRIGHT© 2011INTERNATIONAL TRUCK AND ENGINE CORP.

https://truckmanualshub.com/

Figure 01LT4

BRK CHAMBER INSTL; HALDEX 30" SERV & 30/30",W/TANDEM AXLES

Item	Part No.	Qty	Description	Kit	Var	Figure
120	3682360C91	1	CHAMBER,BRAKE, HALDEX GC3030L		0TLTH	
125	3682360C91	1	CHAMBER,BRAKE, HALDEX GC3030L		0TLTH	

COPYRIGHT© 2011INTERNATIONAL TRUCK AND ENGINE CORP.

https://truckmanualshub.com/
INTERNATIONAL

Figure 0MF3V

DRAIN VALVE; AIR TANK

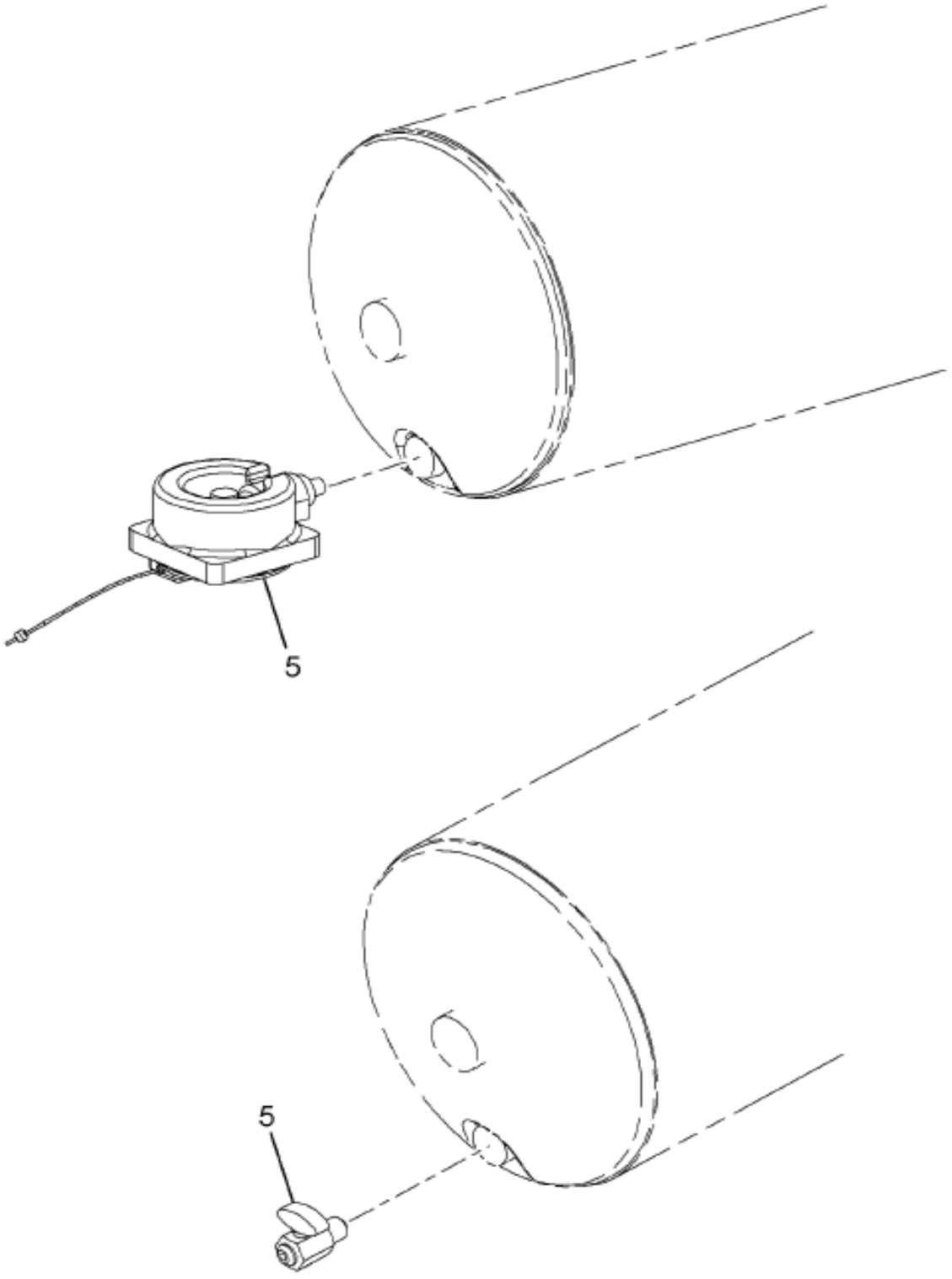

08-L44-0002-01 G08

Item	Part No.	Qty	Description	Kit	Var	Figure
5	3555432F91	1	BRAKE*DRAIN VALVES		0RRK8	3555432F91

COPYRIGHT© 2011INTERNATIONAL TRUCK AND ENGINE CORP.

https://truckmanualshub.com/

Figure 3333432F91
BRAKE*DRAIN VALVES

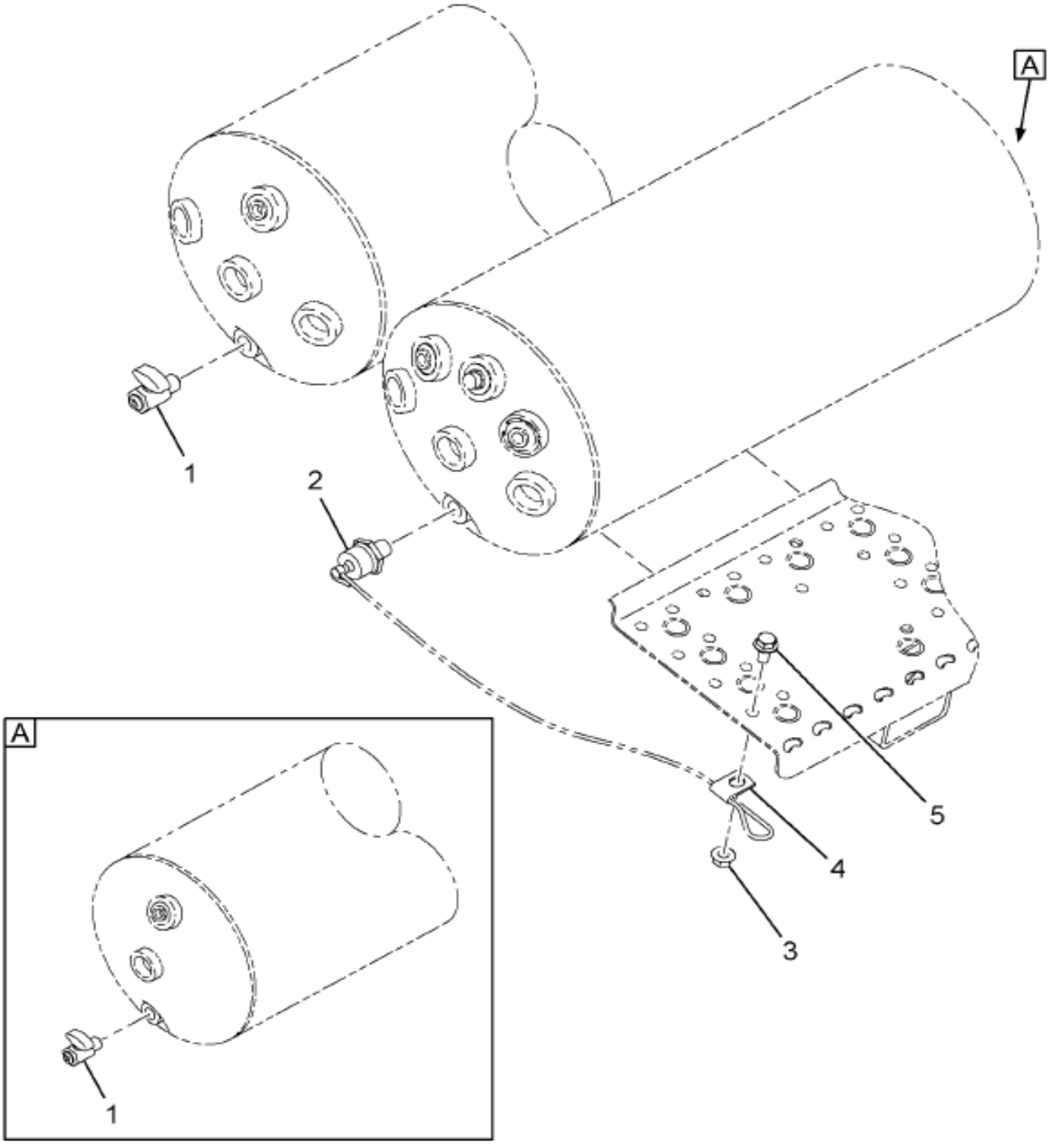

08-L40-0002-00 L04

Item	Part No.	Qty	Description	Kit	Var	Figure
1	25450H	2	VALVE,DRAIN 1/4" NPTF			
2	1671718C91	1	VALVE,DRAIN			
3	3544379C1	1	NUT,HEX FLG M8 METRIC			
4	299400C1	1	CLAMP .250 DIA ZNP COATED MED			
5	3544555C1	1	BOLT,LOCK M8-1.25X30 MM SST			
880		RF	NOTE: ASM BELOW COMPRISED OF ABOVE			

COPYRIGHT© 2011INTERNATIONAL TRUCK AND ENGINE CORP.

https://truckmanualshub.com/

Figure 3555432F91

BRAKE*DRAIN VALVES

Item	Part No.	Qty	Description	Kit	Var	Figure
			COMPONENTS			
881	3555432F91	RF	BRAKE*DRAIN VALVES			

COPYRIGHT© 2011INTERNATIONAL TRUCK AND ENGINE CORP.

https://truckmanualshub.com/

Figure 0H75R
FRT AXLE HOSING

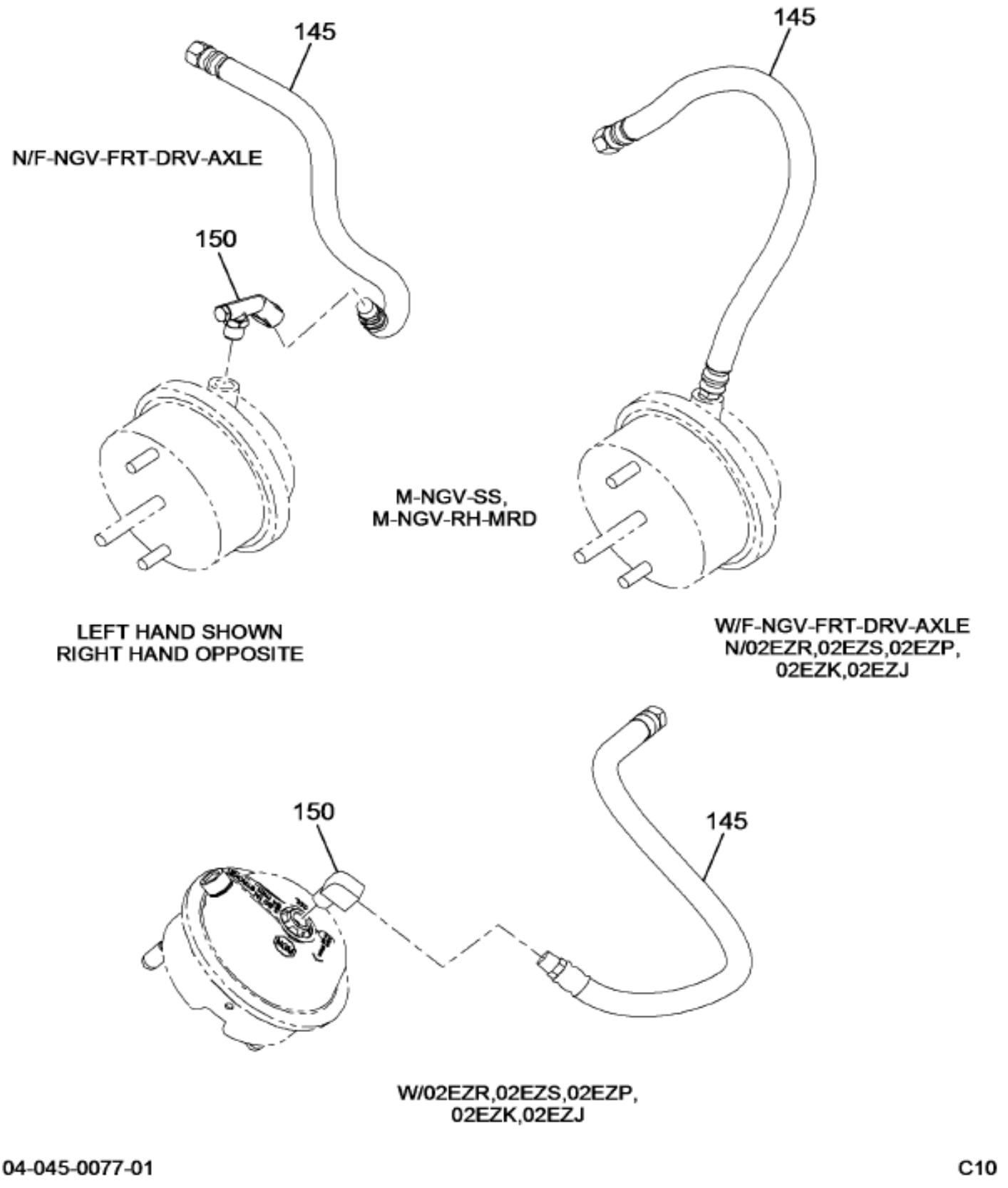

Item	Part No.	Qty	Description	Kit	Var	Figure
145	3570659C1	2	HOSE,FLEX AIR*AIR 1/2 ID X 7/8		0H75V	
150	3573049C1	1	FITTING,BRK CHAMBER*3/8 MPT LT		0H75V	
150	3573050C1	1	FITTING,BRK CHAMBER*3/8 MPT RT		0H75V	

COPYRIGHT© 2011INTERNATIONAL TRUCK AND ENGINE CORP.

https://truckmanualshub.com/

Figure 0F3NX
FRT BRAKE INSTL; MERITOR, 16.5X6, Q+, W/14-20K AXLES

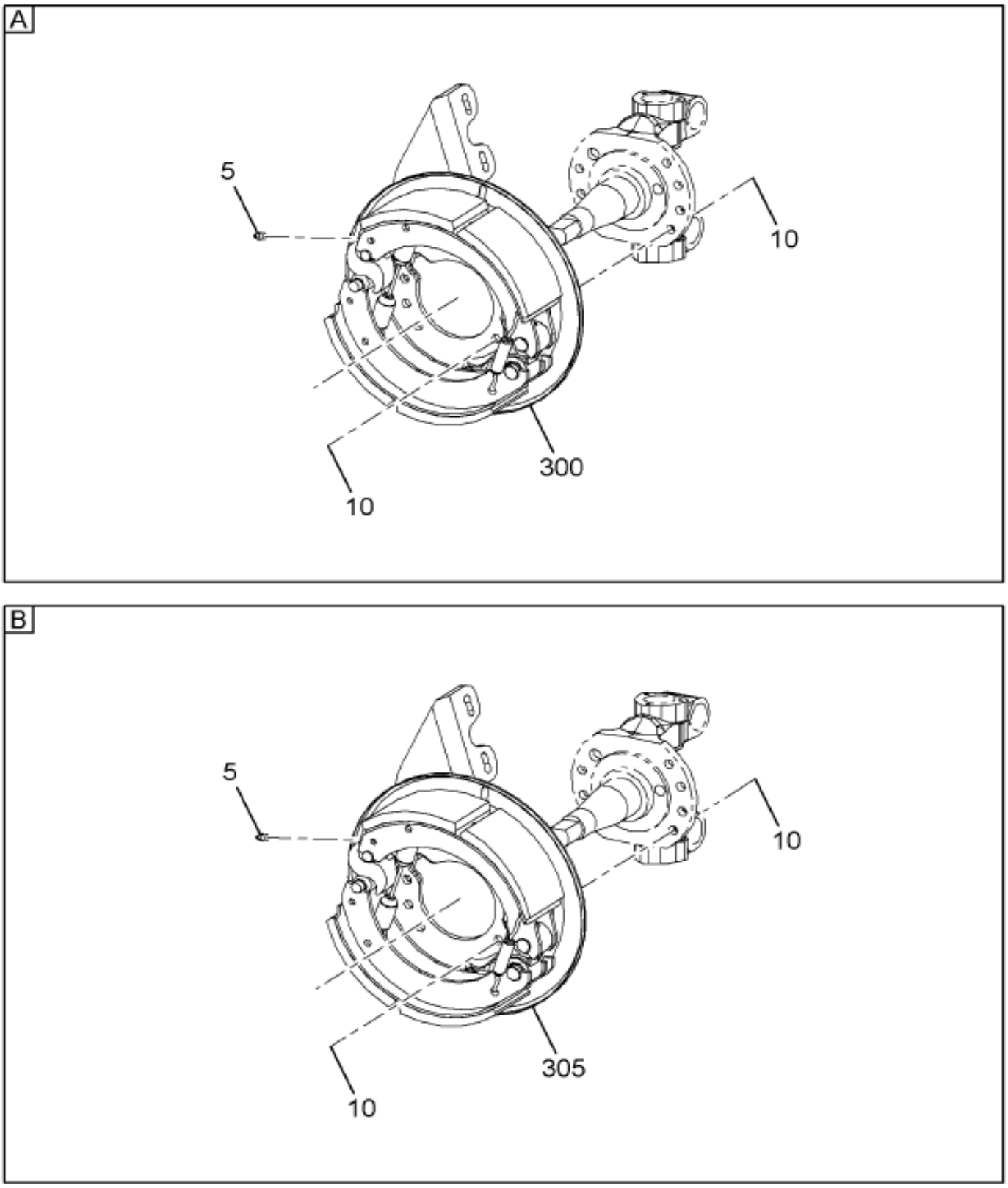

Item	Part No.	Qty	Description	Kit	Var	Figure
5	109461	2	FITTING, 1/8 PTF X/SHORT LUB		0RBZS	
10	25356R1	14	BOLT, 3/4-NF X 2 PHC TYPE 8		0RBZS	
10	9412368	14	NUT,HEX LK 3/4NF		0RBZS	
300	3558031C91	1	BRAKE,GROUP FRT LT*16.5X6.0 Q+		0RBZN	3558031C91
305	3558032C91	1	BRAKE,GROUP FRT RT*16.5X6.0 Q+		0RBZN	3558032C91

COPYRIGHT© 2011INTERNATIONAL TRUCK AND ENGINE CORP.

https://truckmanualshub.com/

Figure 3338031C91
BRAKE,GROUP FRT LT*16.5X6.0 Q+

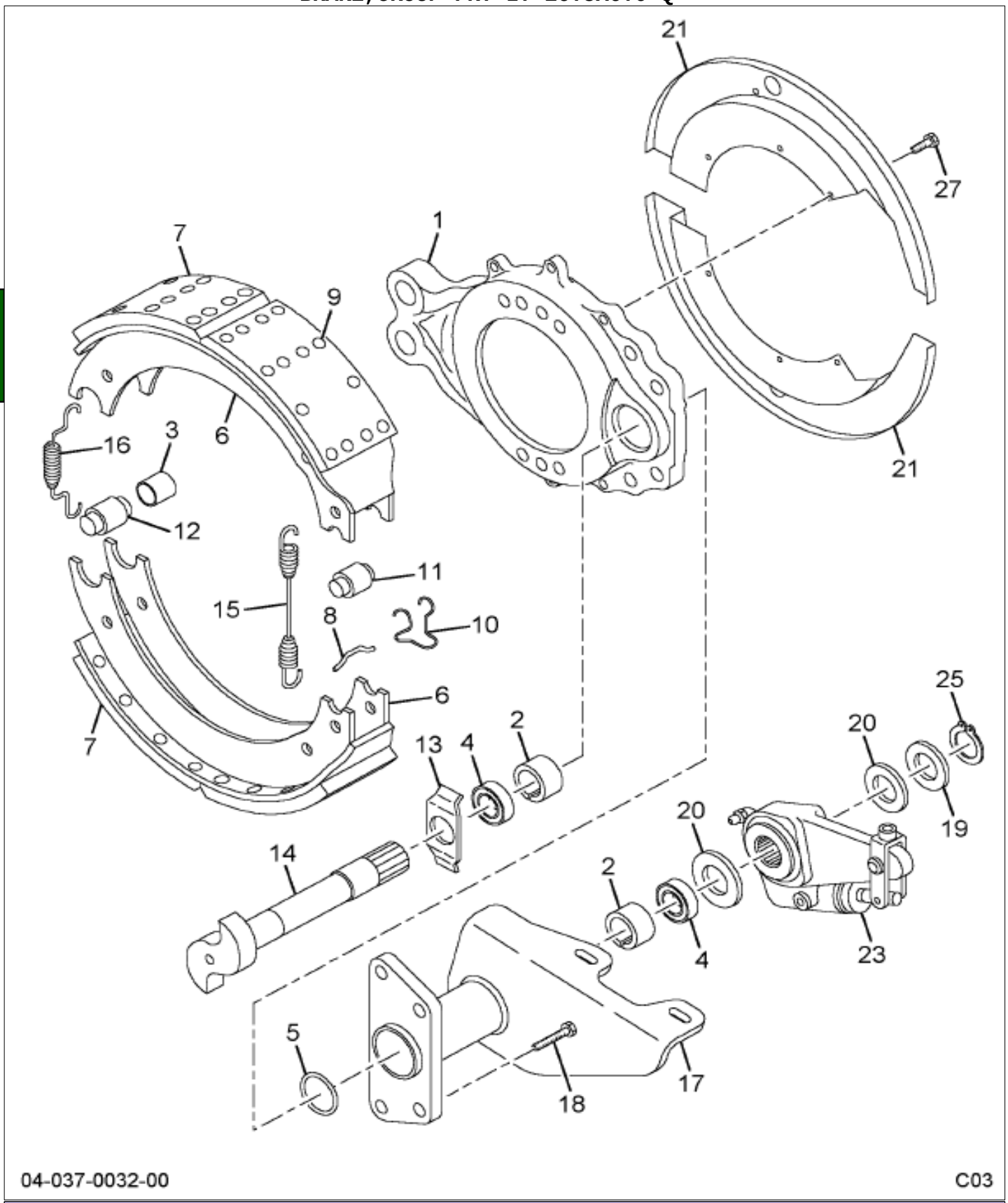

Item	Part No.	Qty	Description	Kit	Var	Figure
1	1695230C91	1	SPIDER,W/BUSH & SEAL			
1		RF	LEFT			
2	1691529C1	2	BUSHING,CAMSHAFT BRKT			
3	577650C1	2	BUSHING,BRK SHOE ANCHOR PIN			
4	56121R3	2	SEAL,BRAKE CAMSHAFT			
5	1693181C1	1	RING,O BRAKE SPIDER			

COPYRIGHT© 2011INTERNATIONAL TRUCK AND ENGINE CORP.

https://truckmanualshub.com/

Figure 3558031C91

BRAKE,GROUP FRT LT*16.5X6.0 Q+

Item	Part No.	Qty	Description	Kit	Var	Figure
6	2500413C91	2	SHOE,BRK W/LINING NAB456			
7		2	LINING, BRK SHOE	A		
8	983622R1	2	PIN,BRK SHOE ANCHOR			
9	262365C1	48	RIVET,BK SHOE LINING	A		
10	577652C1	2	RETAINER,BRK ROLLER			
11	2502427C1	2	ROLLER,BRK SHOE			
12	577653C1	2	PIN,BRK SHOE ANCHOR			
13	2500101C1	1	WASHER,FLAT SPECIAL			
14	1697183C1	1	CAMSHAFT,BRAKE			
14		RF	LEFT			
15	2500416C1	1	SPRING,BRK SHOE RETURN			
16	1685491C1	2	SPRING,BRK SHOE RETAIN			
17	2506086C91	1	BRACKET,BRK CAMSHAFT & CHAMBER			
17		RF	LEFT			
18	24861R1	4	BOLT,1/2 1-1/4 PHC TYPE 8			
19	574062C1	1	WASHER,BRK CMSHFT SPACER			
20	2500915C1	AR	WASHER,FLAT .030 THICKNESS			
20	586796C1	AR	WASHER,FLAT .054 THICKNESS			
20	2503616C1	AR	WASHER,FLAT .110 THICKNESS			
21	1651832C91	KT	SET,DUST SHIELD 2 PC 16 1/2X6			
23	2506084C91	1	ADJUSTER,BRK SLACK-HALDEX			
23		RF	LEFT OR RIGHT			
23	1691829C91	1	BRACKET,SLACK ADJ			
23		RF	LEFT OR RIGHT			
25	586797C1	1	RING,SNAP			
27	24838R1	6	BOLT 3/8 X 1/2 PHC TYPE 8			
800		RF	NOTE: THE FOLLOWING PARTS ARE			
			NON-ILLUSTRATED			
801	2500414C91	KT	SET,LINING NAB456			
801		RF	(CONSISTS OF PARTS DENOTED BY A)			
880		RF	NOTE: ASM BELOW COMPRISED OF ABOVE			
			COMPONENTS			
881	3558031C91	RF	BRAKE,GROUP FRT LT*16.5X6.0 Q+			

Grp 04

COPYRIGHT© 2011INTERNATIONAL TRUCK AND ENGINE CORP.

https://truckmanualshub.com/

Figure 3338032C91
BRAKE,GROUP FRT RT*16.5X6.0 Q+

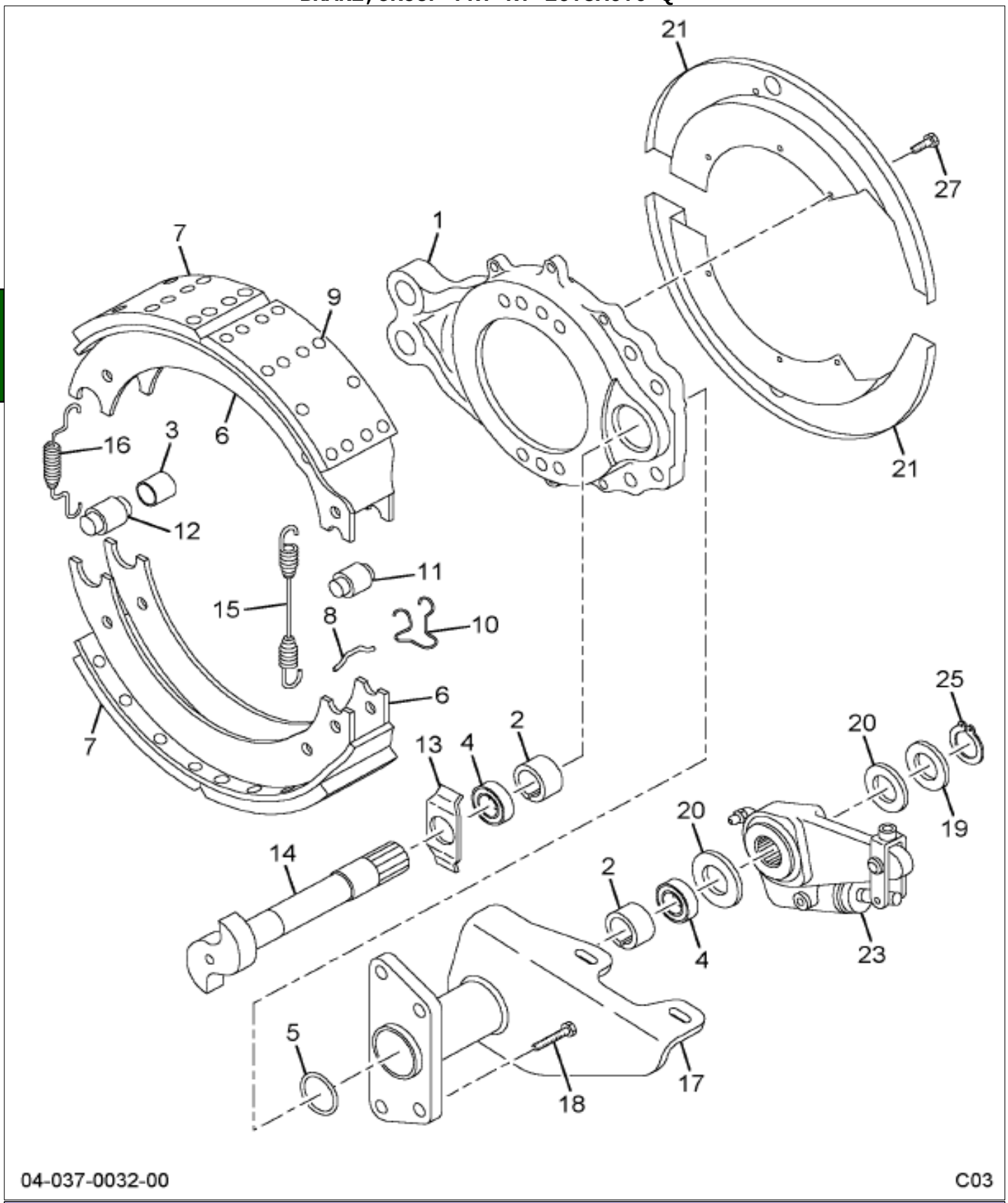

Item	Part No.	Qty	Description	Kit	Var	Figure
1	1695231C91	1	SPIDER,W/BUSH & SEAL			
1		RF	RIGHT			
2	1691529C1	2	BUSHING,CAMSHAFT BRKT			
3	577650C1	2	BUSHING,BRK SHOE ANCHOR PIN			
4	56121R3	2	SEAL,BRAKE CAMSHAFT			
5	1693181C1	1	RING,O BRAKE SPIDER			

COPYRIGHT© 2011INTERNATIONAL TRUCK AND ENGINE CORP.

https://truckmanualshub.com/

Figure 3558032C91

BRAKE,GROUP FRT RT*16.5X6.0 Q+

Item	Part No.	Qty	Description	Kit	Var	Figure
6	2500413C91	2	SHOE,BRK W/LINING NAB456			
7		2	LINING, BRK SHOE	A		
8	983622R1	2	PIN,BRK SHOE ANCHOR			
9	262365C1	48	RIVET,BK SHOE LINING	A		
10	577652C1	2	RETAINER,BRK ROLLER			
11	2502427C1	2	ROLLER,BRK SHOE			
12	577653C1	2	PIN,BRK SHOE ANCHOR			
13	2500101C1	1	WASHER,FLAT SPECIAL			
14	2210Z7514	1	CAMSHAFT,BRAKE FRT			
14		RF	RIGHT			
15	2500416C1	1	SPRING,BRK SHOE RETURN			
16	1685491C1	2	SPRING,BRK SHOE RETAIN			
17	2506087C91	1	BRACKET,BRK CAMSHAFT & CHAMBER			
17		RF	RIGHT			
18	24861R1	4	BOLT,1/2 1-1/4 PHC TYPE 8			
19	574062C1	1	WASHER,BRK CMSHFT SPACER			
20	2500915C1	AR	WASHER,FLAT .030 THICKNESS			
20	586796C1	AR	WASHER,FLAT .054 THICKNESS			
20	2503616C1	AR	WASHER,FLAT .110 THICKNESS			
21	1651832C91	KT	SET,DUST SHIELD 2 PC 16 1/2X6			
23	2506084C91	1	ADJUSTER,BRK SLACK-HALDEX			
23		RF	LEFT OR RIGHT			
23	1691829C91	1	BRACKET,SLACK ADJ			
23		RF	LEFT OR RIGHT			
25	586797C1	1	RING,SNAP			
27	24838R1	6	BOLT 3/8 X 1/2 PHC TYPE 8			
800		RF	NOTE: THE FOLLOWING PARTS ARE			
			NON-ILLUSTRATED			
801	2500414C91	KT	SET,LINING NAB456			
801		RF	(CONSISTS OF PARTS DENOTED BY A)			
880		RF	NOTE: ASM BELOW COMPRISED OF ABOVE			
			COMPONENTS			
881	3558032C91	RF	BRAKE,GROUP FRT RT*16.5X6.0 Q+			

Grp 04

COPYRIGHT© 2011INTERNATIONAL TRUCK AND ENGINE CORP.

https://truckmanualshub.com/

Figure 0N56C

RR AXLE HOSING INSTL; W/HEND STL/RUB NON ABS

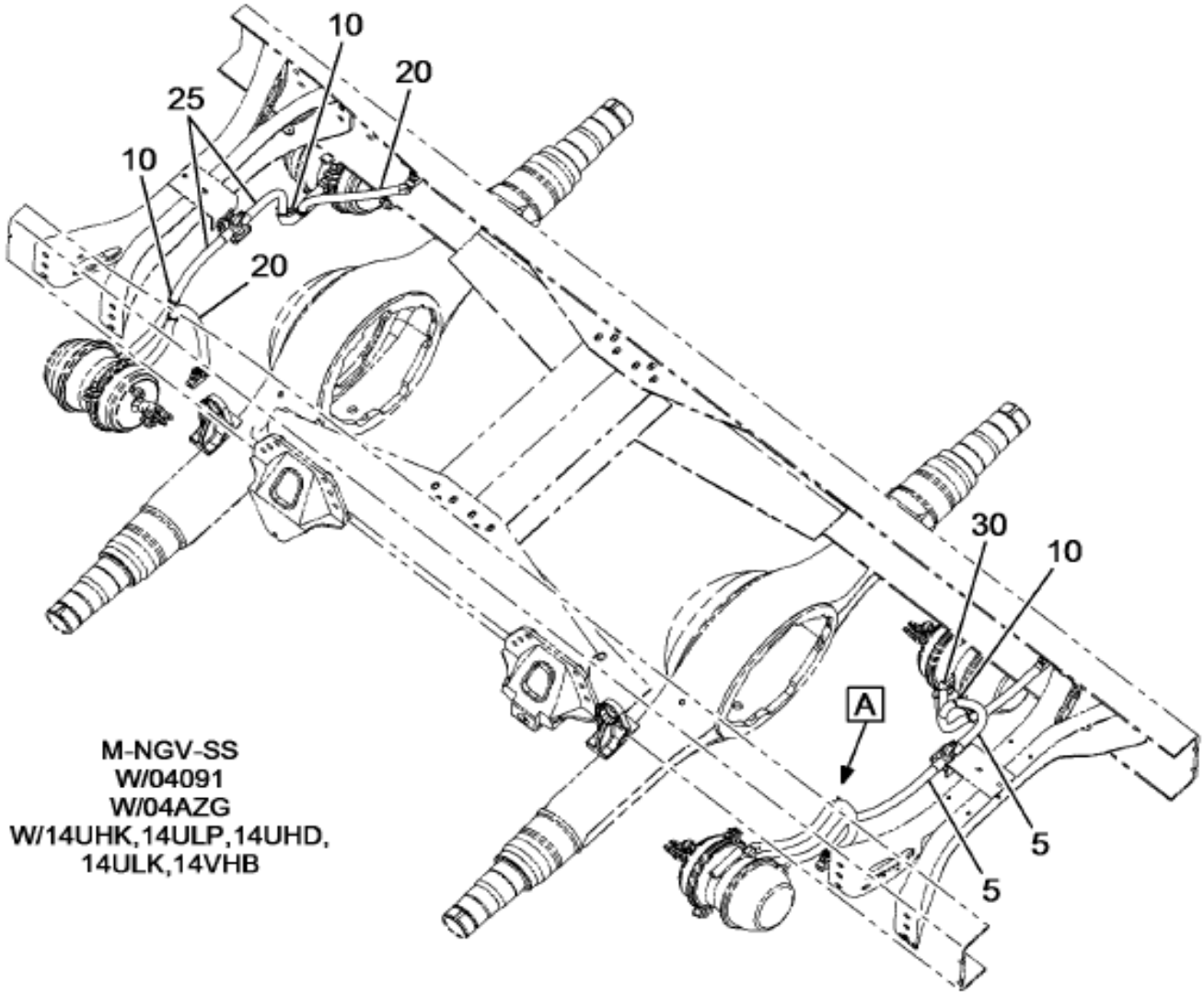

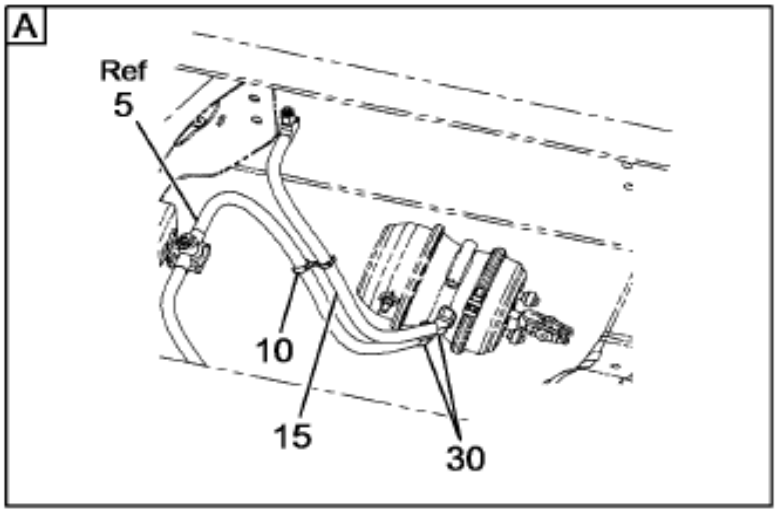

14-322-0082-AA K09

Item	Part No.	Qty	Description	Kit	Var	Figure
5	3576383C1	2	HOSE,FLEX AIR*1/2ID X 7/8OD 36		0N56P	
10	3535872C1	6	STRAP,CABLE LOCK*DUAL CLAMP TI		0N56P	
15	3576383C1	2	HOSE,FLEX AIR*1/2ID X 7/8OD 36		0N56P	
20	3590968C1	2	HOSE,FLEX AIR*1/2IDX7/8ODX30"		0N56P	
25	3576467C1	2	HOSE,FLEX AIR*1/2ID X 7/8OD 37		0N56Q	
30	444056	4	ELBOW, 3/8-18 PLN AUTO 45D PIP		0N56P	

COPYRIGHT© 2011INTERNATIONAL TRUCK AND ENGINE CORP.

https://truckmanualshub.com/

Figure 0DR50

RR BRAKE INSTL; MERITOR 16.5 X 7 Q+

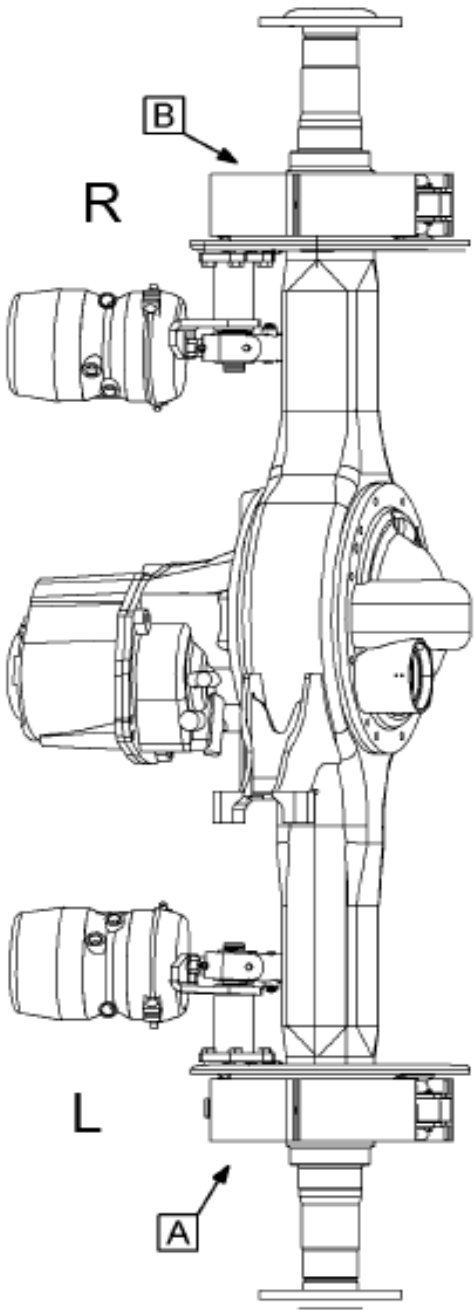

FWD REAR AXLE

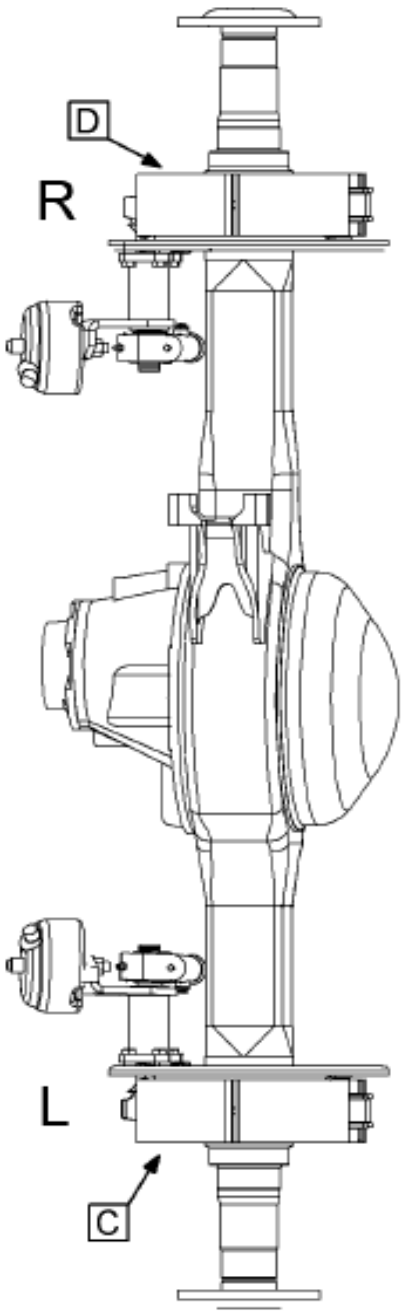

RR REAR AXLE

04-038-0452-01 D10

Grp 04

Figure 1 of 3

COPYRIGHT© 2011INTERNATIONAL TRUCK AND ENGINE CORP.

https://truckmanualshub.com/

Figure 0DR50

RR BRAKE INSTL; MERITOR 16.5 X 7 Q+

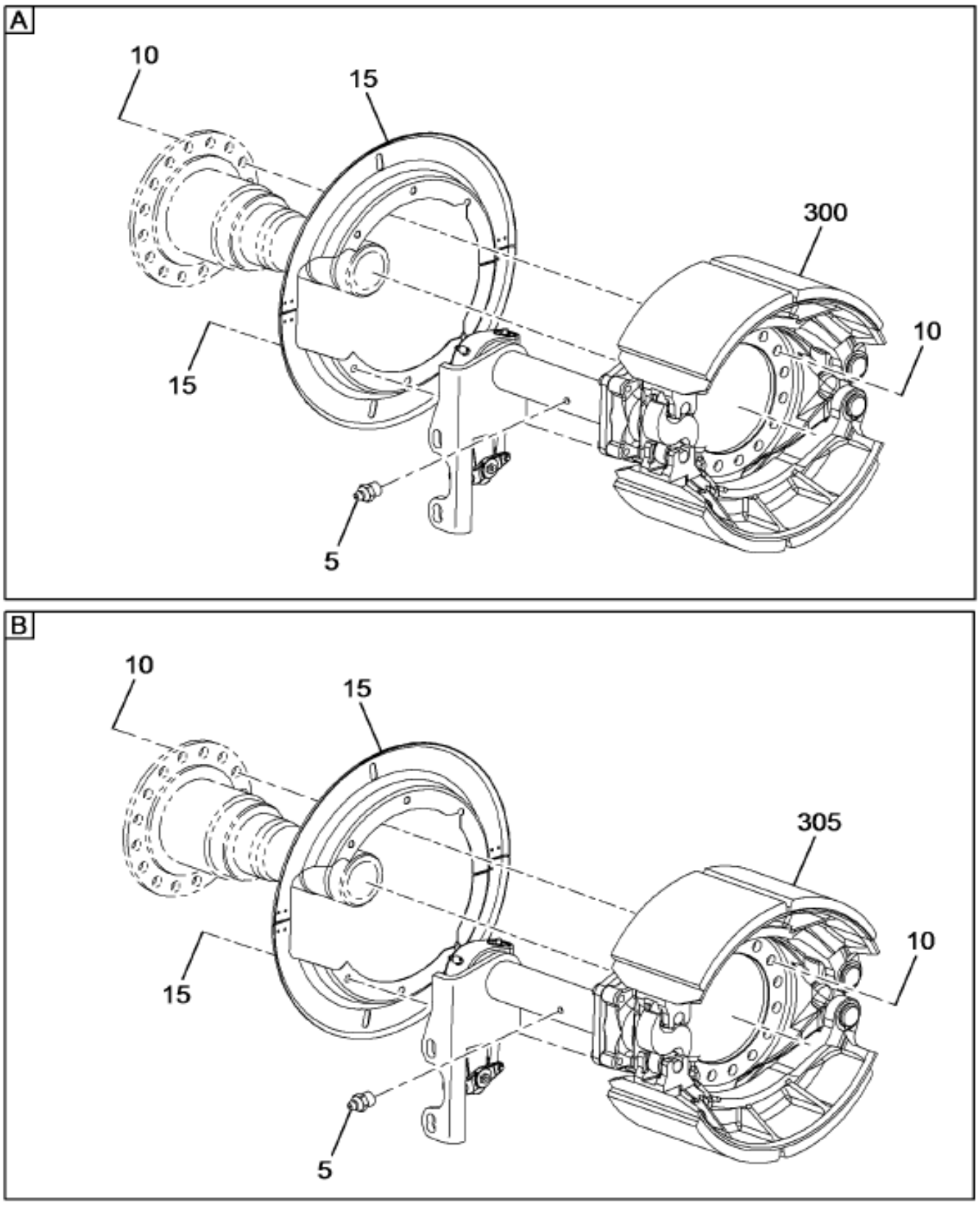

04-038-0471-01 B10

Figure 2 of 3

COPYRIGHT© 2011INTERNATIONAL TRUCK AND ENGINE CORP.

https://truckmanualshub.com/

Figure 0DR90

RR BRAKE INSTL; MERITOR 16.5 X 7 Q+

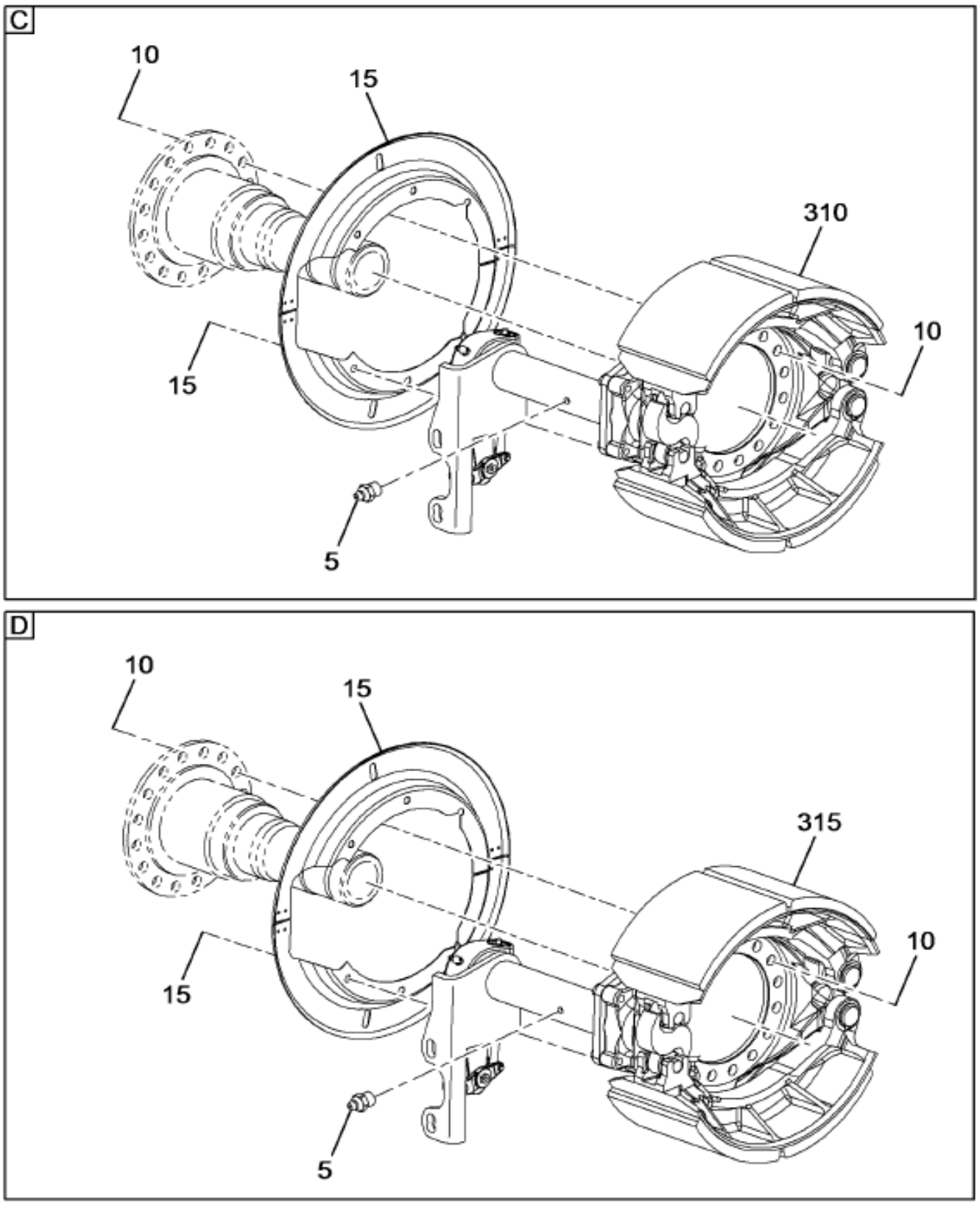

04-038-0471-02 B10

Item	Part No.	Qty	Description	Kit	Var	Figure
5	109461	4	FITTING, 1/8 PTF X/SHORT LUB		0DR90	
10	25051R1	40	BOLT, 5/8-NF X 2 PHC TYPE 8		0L8JG	
10	9411658	40	NUT,HEX LOCK 5/8 NF		0L8JG	
10	406267C1	40	WASHER SPECIAL 5/8		0L8JG	
15	69480R91	24	BOLT W/LOCK WASHER		0HYDY	
15	579098C1	4	SHIELD DUST LT 16.5X7 FOR CAST		0HYDY	

COPYRIGHT© 2011INTERNATIONAL TRUCK AND ENGINE CORP.

https://truckmanualshub.com/

Figure 0DR50

RR BRAKE INSTL; MERITOR 16.5 X 7 Q+

Item	Part No.	Qty	Description	Kit	Var	Figure
15	579099C1	4	SHIELD DUST RT 16.5X7 FOR CAST		0HYDY	
300	3547998C91	1	BRAKE,GROUP REAR LT*16.5 X 7.0		0KPGT	3547998C91
305	3547999C91	1	BRAKE,GROUP REAR RT*16.5 X 7.0		0KPGT	3547999C91
310	3591885C91	1	BRAKE,GROUP REAR LT*16.5X7 Q+		0KPGT	3591885C91
315	3591886C91	1	BRAKE,GROUP REAR RT*16.5X7 Q+		0KPGT	3591886C91

COPYRIGHT© 2011INTERNATIONAL TRUCK AND ENGINE CORP.

https://truckmanualshub.com/

Figure 3347998C91

BRAKE,GROUP REAR LT*16.5 X 7.0

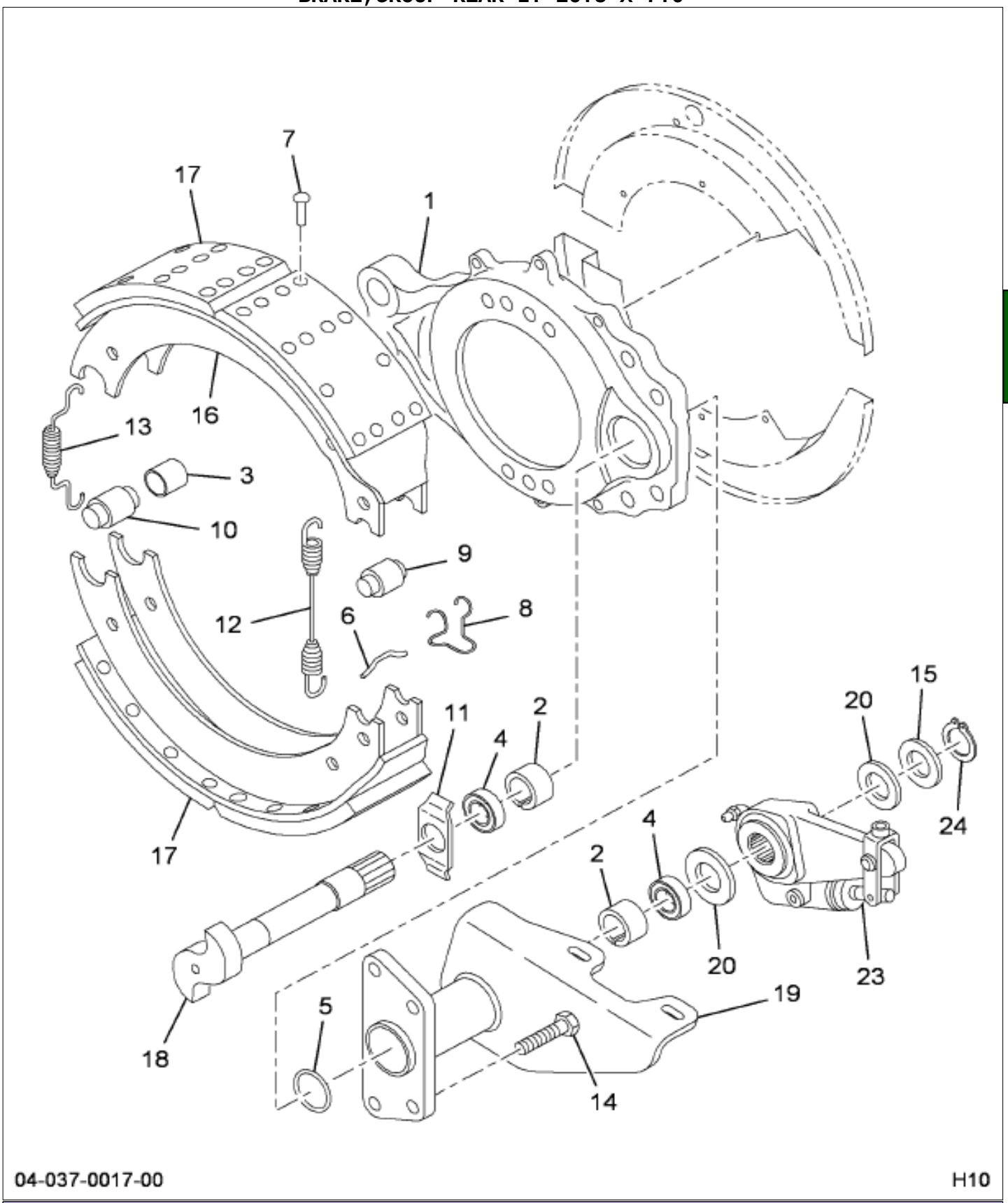

Item	Part No.	Qty	Description	Kit	Var	Figure
1	1691825C91	1	SPIDER,W/BUSH & SEAL			
2	1691529C1	2	BUSHING,CAMSHAFT BRKT			
3	577650C1	2	BUSHING,BRK SHOE ANCHOR PIN			
4	56121R3	2	SEAL,BRAKE CAMSHAFT			
5	1693181C1	1	RING,O BRAKE SPIDER			
6	983622R1	2	PIN,BRK SHOE ANCHOR			

COPYRIGHT© 2011INTERNATIONAL TRUCK AND ENGINE CORP.

https://truckmanualshub.com/

Figure 3547998C91

BRAKE,GROUP REAR LT*16.5 X 7.0

Item	Part No.	Qty	Description	Kit	Var	Figure
7	262365C1	56	RIVET,BK SHOE LINING			
8	577652C1	2	RETAINER,BRK ROLLER			
9	577653C1	2	PIN,BRK SHOE ANCHOR			
10	2502427C1	2	ROLLER,BRK SHOE			
11	2500101C1	1	WASHER,FLAT SPECIAL			
12	1693182C1	1	SPRING,BRK SHOE RETURN			
13	1685491C1	2	SPRING,BRK SHOE RETAIN			
14	24861R1	4	BOLT,1/2 1-1/4 PHC TYPE 8			
15	574062C1	1	WASHER,BRK CMSHFT SPACER			
16	1693187C91	2	SHOE,BRK W/LINING 162			
17	1693188C91	AR	SET,LINING ABB931-162			
18	2210W7537	1	CAMSHAFT,BRAKE			
19	1694330C91	1	BRACKET,BRK CAMSHAFT & CHAMBER			
20	2500915C1	2	WASHER,FLAT .030 THICKNESS			
20	2503616C1	2	WASHER,FLAT .110 THICKNESS			
20	586796C1	AR	WASHER,FLAT .054 THICKNESS			
23	1666360C91	1	ADJUSTER,BRK SLACK-HALDEX			
24	586797C1	1	RING,SNAP			
800		RF	NOTE: THE FOLLOWING PARTS ARE NON-ILLUSTRATED			
801	1658850C1	KT	BRACKET,SLACK ADJ			
880		RF	NOTE: ASM BELOW COMPRISED OF ABOVE COMPONENTS			
881	3547998C91	RF	BRAKE,GROUP REAR LT*16.5 X 7.0			

COPYRIGHT© 2011INTERNATIONAL TRUCK AND ENGINE CORP.

https://truckmanualshub.com/

Figure 3591865C91
BRAKE,GROUP REAR LT*16.5X7 Q+

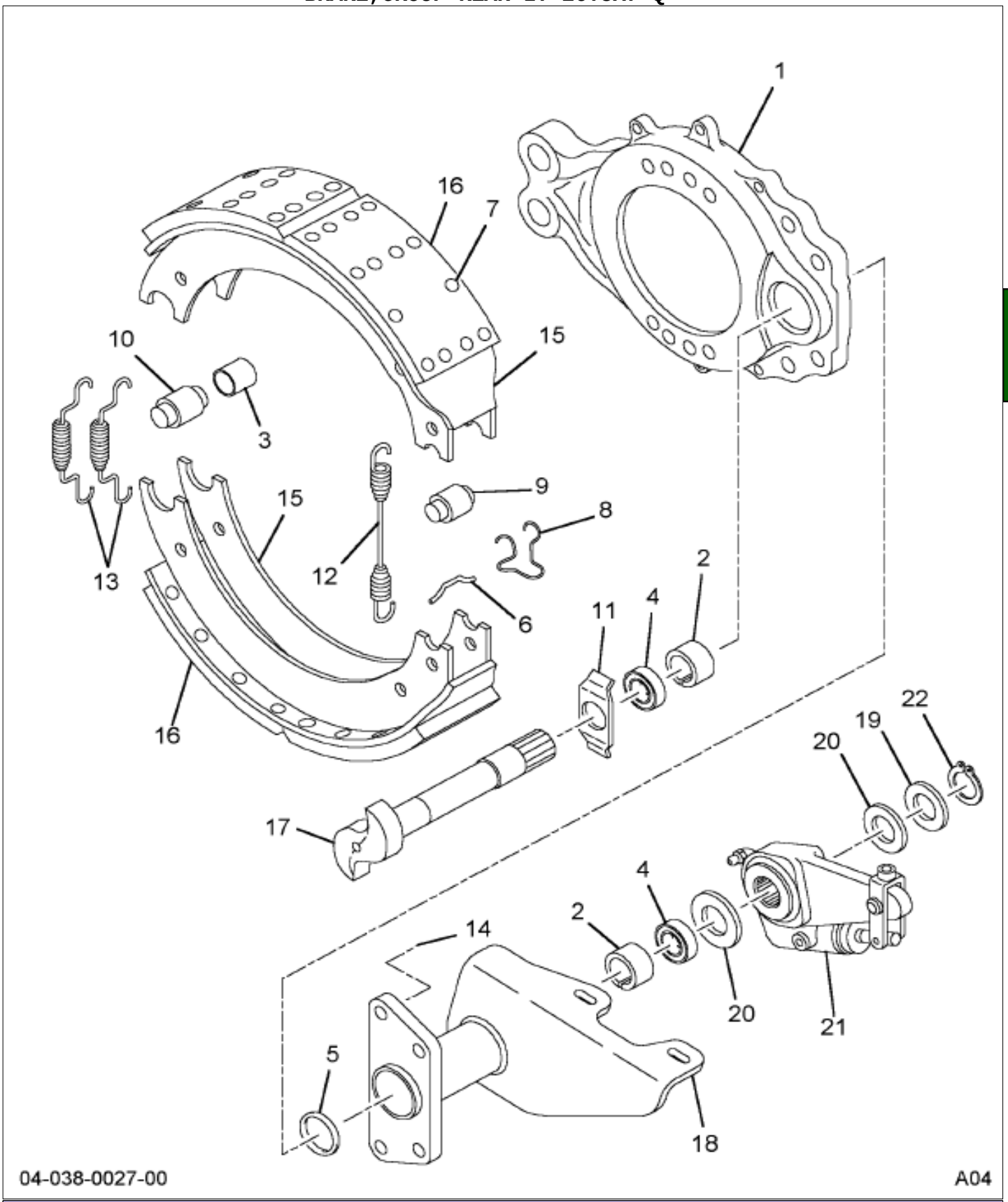

Item	Part No.	Qty	Description	Kit	Var	Figure
1	2587560C91	1	SPIDER,BRAKE			
1		1	LEFT			
2	1691529C1	2	BUSHING,CAMSHAFT BRKT			
3	577650C1	2	BUSHING,BRK SHOE ANCHOR PIN			
4	56121R3	2	SEAL,BRAKE CAMSHAFT			
5	1693181C1	1	RING,O BRAKE SPIDER			

COPYRIGHT© 2011INTERNATIONAL TRUCK AND ENGINE CORP.

https://truckmanualshub.com/

Figure 3591885C91

BRAKE,GROUP REAR LT*16.5X7 Q+

Item	Part No.	Qty	Description	Kit	Var	Figure
6	983622R1	2	PIN,BRK SHOE ANCHOR			
7	262365C1	56	RIVET,BK SHOE LINING	A		
8	577652C1	2	RETAINER,BRK ROLLER			
9	2502427C1	2	ROLLER,BRK SHOE			
10	577653C1	2	PIN,BRK SHOE ANCHOR			
11	2500101C1	1	WASHER,FLAT SPECIAL			
12	1693182C1	1	SPRING,BRK SHOE RETURN			
13	1685491C1	2	SPRING,BRK SHOE RETAIN			
14	24861R1	4	BOLT,1/2 1-1/4 PHC TYPE 8			
15	1693187C91	2	SHOE,BRK W/LINING 162			
16		2	LINING,BRK SHOE	A		
17	2210V7536	1	CAMSHAFT,BRAKE			
17		RF	LEFT			
18	2586760C91	1	BRACKET,BRK CAMSHAFT & CHAMBER			
18		RF	LEFT			
19	574062C1	1	WASHER,BRK CMSHFT SPACER			
20	2500915C1	AR	WASHER,FLAT .030 THICKNESS			
20	586796C1	AR	WASHER,FLAT .054 THICKNESS			
20	2503616C1	AR	WASHER,FLAT .110 THICKNESS			
21	2507794C91	1	ADJUSTER,BRK SLACK			
21		RF	LEFT OR RIGHT			
21	2507741C1	1	BRACKET,SLACK ADJ			
21		RF	LEFT OR RIGHT			
22	586797C1	1	RING,SNAP			
800		RF	NOTE: THE FOLLOWING PARTS ARE NON-ILLUSTRATED			
801	1693188C91	KT	SET,LINING ABB931-162			
801		RF	(CONSISTS OF PARTS DENOTED BY A)			
880		RF	NOTE: ASM BELOW COMPRISED OF ABOVE COMPONENTS			
881	3591885C91	RF	BRAKE,GROUP REAR LT*16.5X7 Q+			

COPYRIGHT© 2011INTERNATIONAL TRUCK AND ENGINE CORP.

https://truckmanualshub.com/

Figure 3347999C91

BRAKE,GROUP REAR RT*16.5 X 7.0

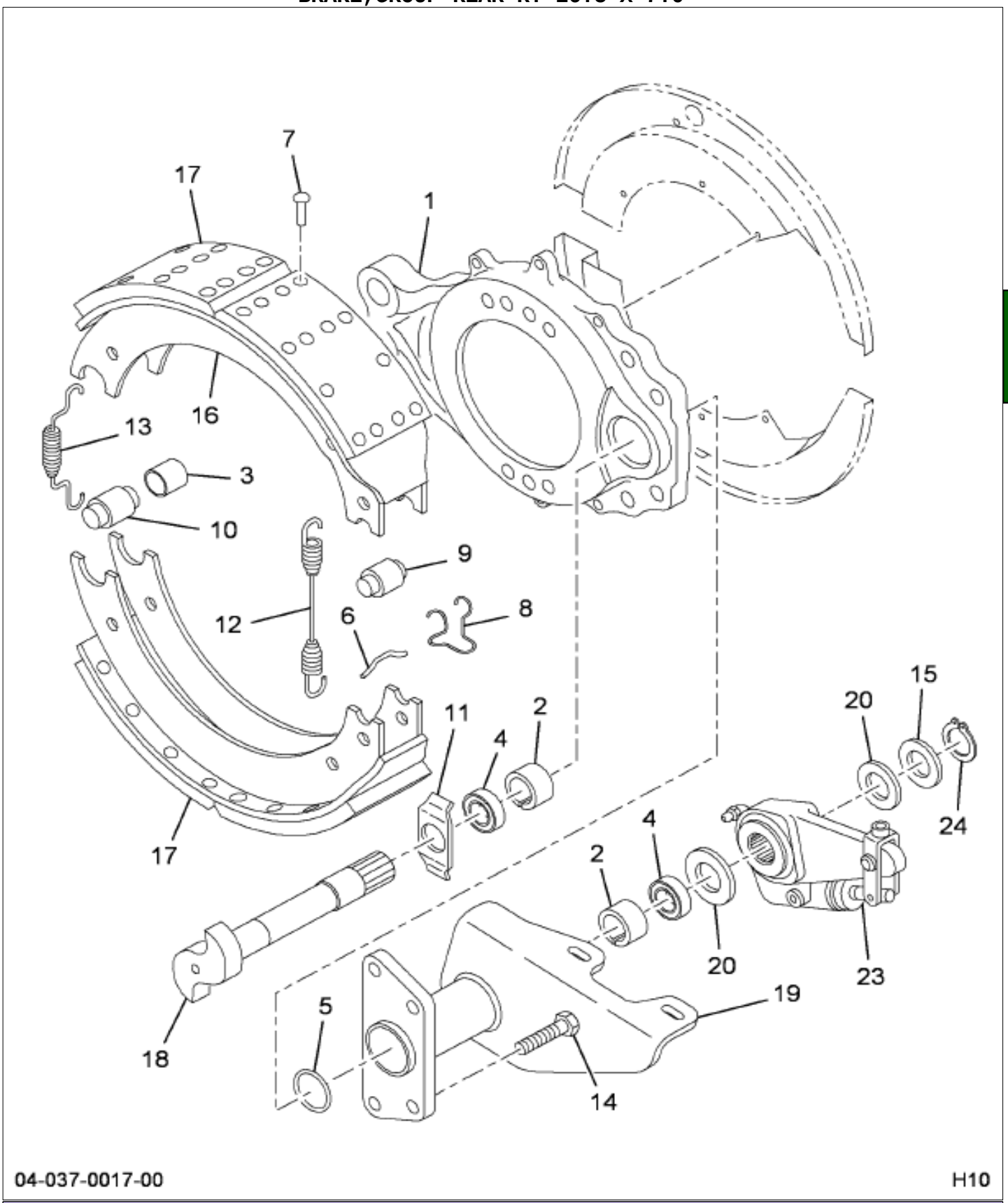

Item	Part No.	Qty	Description	Kit	Var	Figure
1	1691814C91	1	SPIDER,W/BUSH & SEAL			
2	1691529C1	2	BUSHING,CAMSHAFT BRKT			
3	577650C1	2	BUSHING,BRK SHOE ANCHOR PIN			
4	56121R3	2	SEAL,BRAKE CAMSHAFT			
5	1693181C1	1	RING,O BRAKE SPIDER			
6	983622R1	2	PIN,BRK SHOE ANCHOR			

COPYRIGHT© 2011INTERNATIONAL TRUCK AND ENGINE CORP.

https://truckmanualshub.com/

Figure 3547999C91

BRAKE,GROUP REAR RT*16.5 X 7.0

Item	Part No.	Qty	Description	Kit	Var	Figure
7	262365C1	56	RIVET,BK SHOE LINING			
8	577652C1	2	RETAINER,BRK ROLLER			
9	577653C1	2	PIN,BRK SHOE ANCHOR			
10	2502427C1	2	ROLLER,BRK SHOE			
11	2500101C1	1	WASHER,FLAT SPECIAL			
12	1693182C1	1	SPRING,BRK SHOE RETURN			
13	1685491C1	2	SPRING,BRK SHOE RETAIN			
14	24861R1	4	BOLT,1/2 1-1/4 PHC TYPE 8			
15	574062C1	1	WASHER,BRK CMSHFT SPACER			
16	1693187C91	2	SHOE,BRK W/LINING 162			
17	1693188C91	AR	SET,LINING ABB931-162			
18	2210V7536	1	CAMSHAFT,BRAKE			
19	1694332C91	1	BRACKET,BRK CAMSHAFT & CHAMBER			
20	2500915C1	2	WASHER,FLAT .030 THICKNESS			
20	2503616C1	2	WASHER,FLAT .110 THICKNESS			
20	586796C1	AR	WASHER,FLAT .054 THICKNESS			
23	1666360C91	1	ADJUSTER,BRK SLACK-HALDEX			
24	586797C1	1	RING,SNAP			
800		RF	NOTE: THE FOLLOWING PARTS ARE NON-ILLUSTRATED			
801	1658850C1	KT	BRACKET,SLACK ADJ			
880		RF	NOTE: ASM BELOW COMPRISED OF ABOVE COMPONENTS			
881	3547999C91	RF	BRAKE,GROUP REAR RT*16.5 X 7.0			

COPYRIGHT© 2011INTERNATIONAL TRUCK AND ENGINE CORP.

https://truckmanualshub.com/

Figure 3591866C91
BRAKE,GROUP REAR RT*16.5X7 Q+

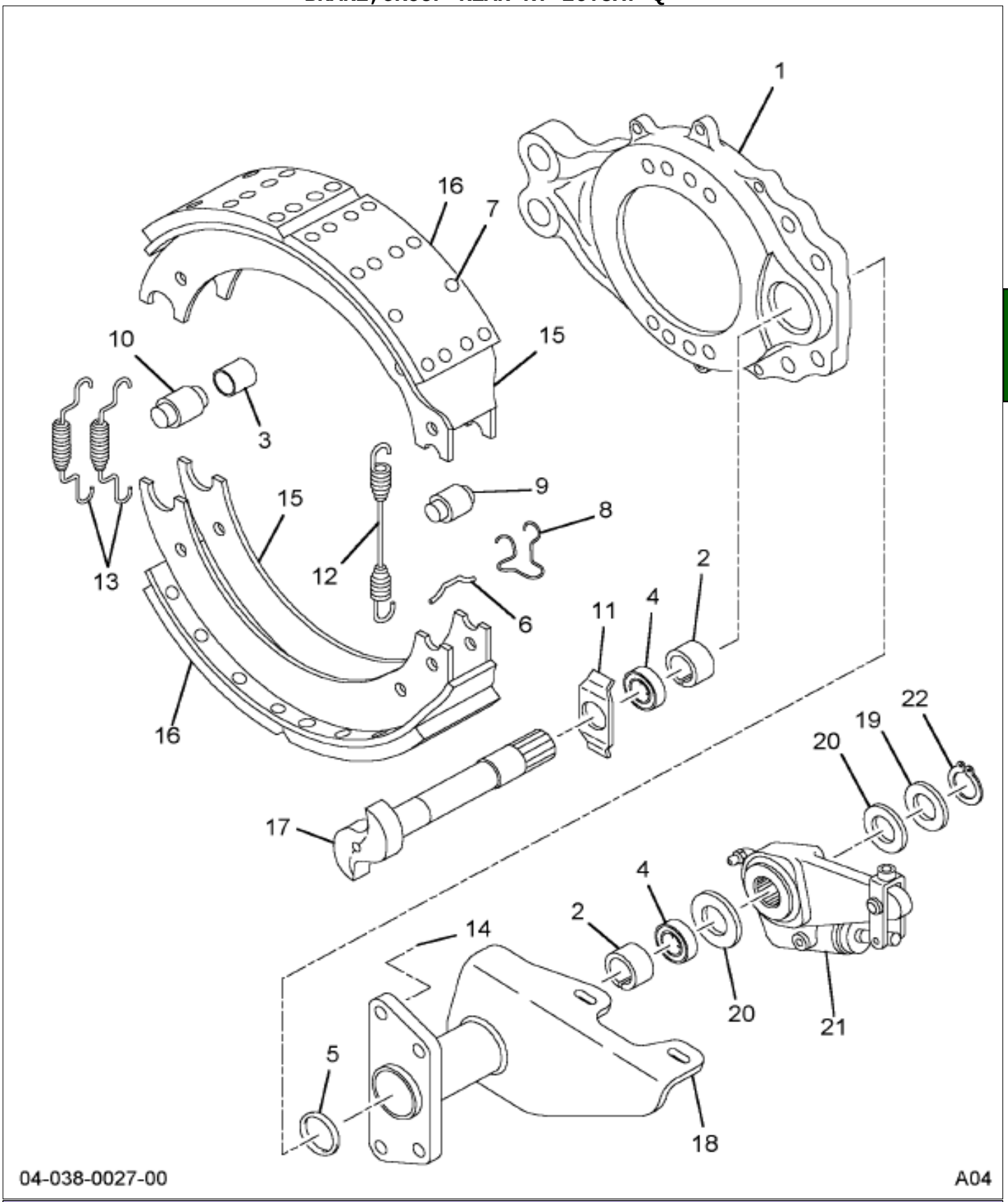

Item	Part No.	Qty	Description	Kit	Var	Figure
1	2587561C91	1	SPIDER,BRAKE			
1		RF	RIGHT			
2	1691529C1	2	BUSHING,CAMSHAFT BRKT			
3	577650C1	2	BUSHING,BRK SHOE ANCHOR PIN			
4	56121R3	2	SEAL,BRAKE CAMSHAFT			
5	1693181C1	1	RING,O BRAKE SPIDER			

COPYRIGHT© 2011INTERNATIONAL TRUCK AND ENGINE CORP.

https://truckmanualshub.com/

Figure 3591886C91

BRAKE,GROUP REAR RT*16.5X7 Q+

Item	Part No.	Qty	Description	Kit	Var	Figure
6	983622R1	2	PIN,BRK SHOE ANCHOR			
7	262365C1	56	RIVET,BK SHOE LINING			
8	577652C1	2	RETAINER,BRK ROLLER			
9	2502427C1	2	ROLLER,BRK SHOE			
10	577653C1	2	PIN,BRK SHOE ANCHOR			
11	2500101C1	1	WASHER,FLAT SPECIAL			
12	1693182C1	1	SPRING,BRK SHOE RETURN			
13	1685491C1	2	SPRING,BRK SHOE RETAIN			
14	24861R1	4	BOLT,1/2 1-1/4 PHC TYPE 8			
15	1693187C91	2	SHOE,BRK W/LINING 162			
16	1693188C91	KT	SET,LINING ABB931-162			
16		RF	INCLUDES ITEMS 7 AND 16			
17	2210W7537	1	CAMSHAFT,BRAKE			
17		RF	RIGHT			
18	2586759C91	1	BRACKET,BRK CAMSHAFT & CHAMBER			
18		RF	RIGHT			
19	574062C1	1	WASHER,BRK CMSHFT SPACER			
20	2500915C1	AR	WASHER,FLAT .030 THICKNESS			
20	586796C1	AR	WASHER,FLAT .054 THICKNESS			
20	2503616C1	AR	WASHER,FLAT .110 THICKNESS			
21	2507794C91	1	ADJUSTER,BRK SLACK			
21	2507741C1	1	BRACKET,SLACK ADJ			
22	586797C1	1	RING,SNAP			
880		RF	NOTE: ASM BELOW COMPRISED OF ABOVE COMPONENTS			
881	3591886C91	RF	BRAKE,GROUP REAR RT*16.5X7 Q+			

COPYRIGHT© 2011INTERNATIONAL TRUCK AND ENGINE CORP.

https://truckmanualshub.com/

Group 05
Steering Gear

COPYRIGHT© 2011INTERNATIONAL TRUCK AND ENGINE CORP.

https://truckmanualshub.com/

Figure 0M9X1

POWER STEERING HOSING INSTL; GEAR TO GEAR

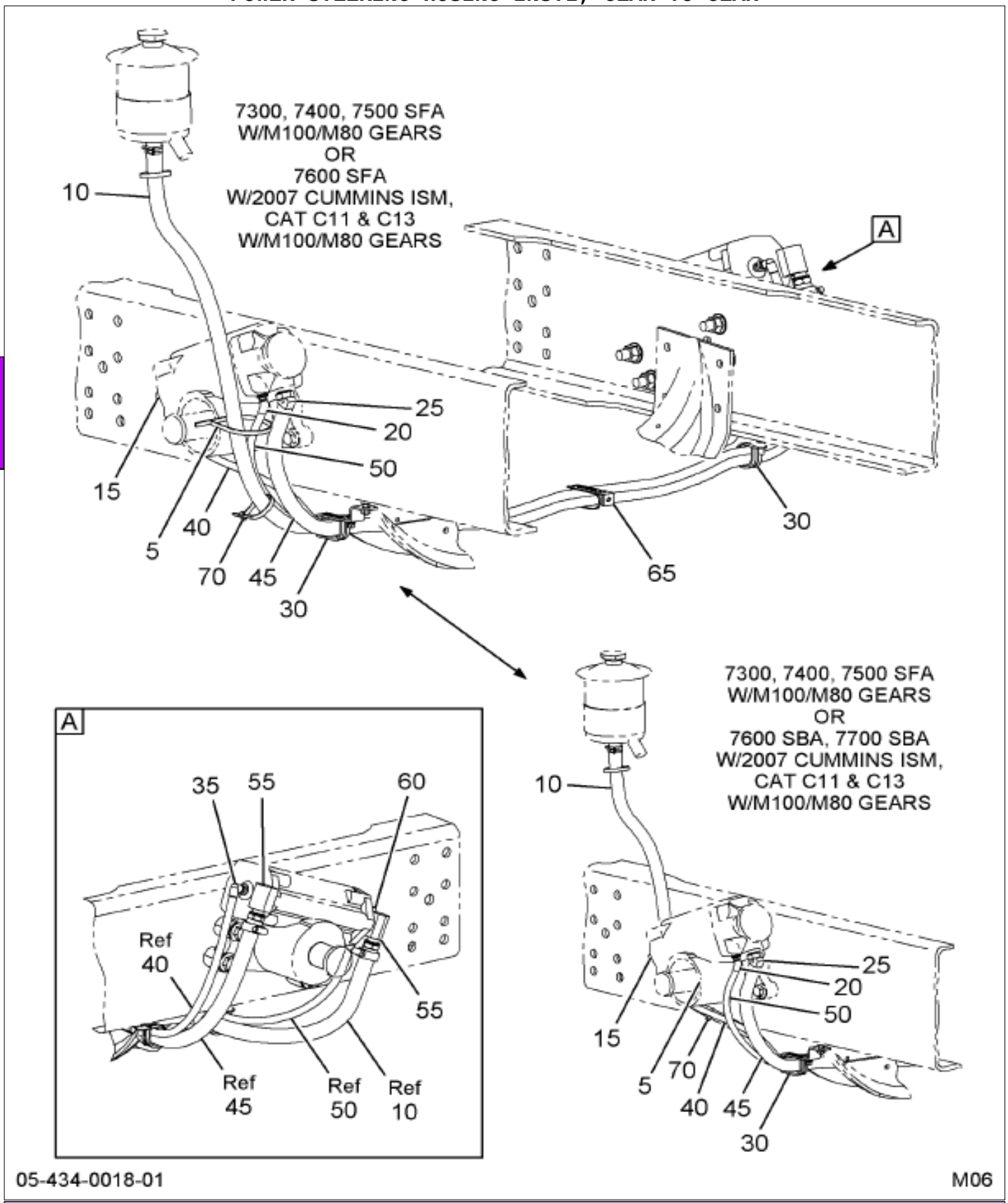

Item	Part No.	Qty	Description	Kit	Var	Figure
5	306132C1	1	STRAP,CABLE LOCK		0M9XV	
10	2643655R1	2225	HOSE,STRG 3/4" ID X 1.06" OD		0M9XV	
10	3576742C1	2	CLAMP,HEAT EXCHANGER*MUBEA 29		0M9XV	
15	3593052C91	1	ELBOW,FLARED TUBE*37DEG FLARE,		0M9XV	3593052C91
20	3593674C91	1	ELBOW,FLARED TUBE*3/8" TUBE, 4		0M9XV	3593674C91
25	3593045C91	1	ELBOW,PIPE*45DEG ELBOW, 3/4" H		0M9XV	3593045C91

COPYRIGHT© 2011INTERNATIONAL TRUCK AND ENGINE CORP.

https://truckmanualshub.com/

Figure 0M9X1

POWER STEERING HOSING INSTL; GEAR TO GEAR

Item	Part No.	Qty	Description	Kit	Var	Figure
30	505202C1	2	CLAMP MULTIPLE RUBBER CUSHION		0M9XV	
30	3530796C1	2	EXTENSION,EXH PIPE BRKT		0M9XV	
30	30755R1	2	NUT,HEX M12 FLANGED		0M9XV	
30	464433C1	2	BOLT HH 1/4-20X3/4CHROMATE		0M9XV	
30	25707R1	2	WASHER FLAT 1/4 (.281X.625X.07		0M9XV	
30	27303R1	2	WASHER,LOCK 1/4 SST		0M9XV	
30	25519R1	2	NUT,1/4 NC TYPE 8		0M9XV	
35	3593052C91	1	ELBOW,FLARED TUBE*37DEG FLARE,		0M9XV	3593052C91
40	3571569C1	1	HOSE,ASSY POWER STRG		0M9XV	
45	2643655R1	1100	HOSE,STRG 3/4" ID X 1.06" OD		0M9XV	
45	3576742C1	2	CLAMP,HEAT EXCHANGER*MUBEA 29		0M9XV	
50	3571569C1	1	HOSE,ASSY POWER STRG		0M9XV	
55	3592892C91	2	FITTING,*3/4-16, 3/4:ID HOSE N		0M9XV	3592892C91
60	3593052C91	1	ELBOW,FLARED TUBE*37DEG FLARE,		0M9XV	3593052C91
65	3566703C1	1	EXTENSION,CLIP		0M9XV	
65	31056R1	1	BOLT,HEX FLG HD M8 X 30 10.9 P		0M9XV	
65	40066R1	1	NUT, M8 - HF LOCK		0M9XV	
65	306132C1	1	STRAP,CABLE LOCK		0M9XV	
70	584067C1	75	CONDUIT,CABLE ELEC 1-1/4		0M9XV	
70	306132C1	2	STRAP,CABLE LOCK		0M9XV	

COPYRIGHT© 2011INTERNATIONAL TRUCK AND ENGINE CORP.

https://truckmanualshub.com/

Figure 3593674C91
ELBOW,FLARED TUBE*3/8" TUBE, 4

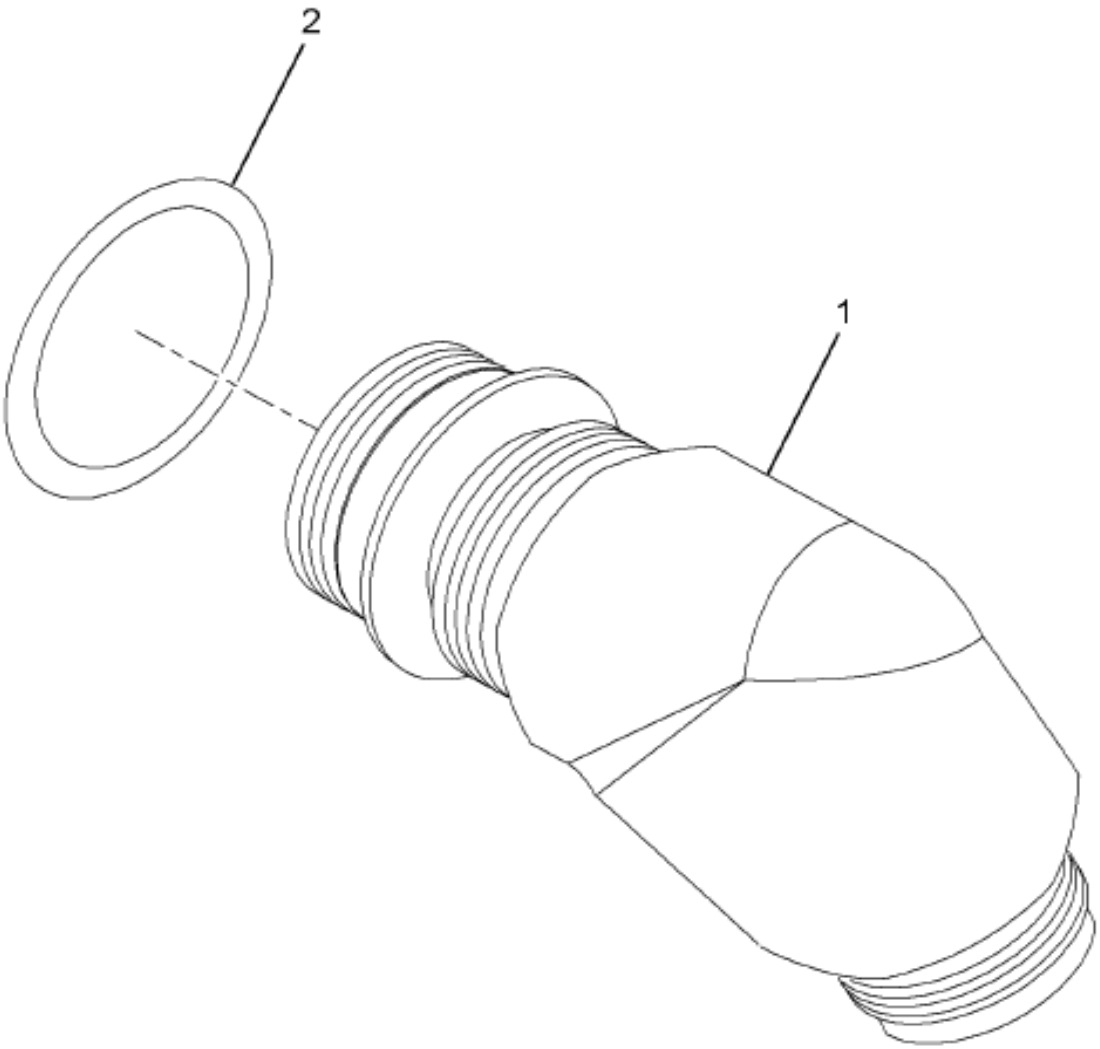

10-001-0007-01 K04

Item	Part No.	Qty	Description	Kit	Var	Figure
1	9411104	1	ELBOW,PIPE 3/8 TUBE 9/16-18			
2	882779C1	1	SEAL,LINK DUST SHIELD 3/8 OD			
880		RF	NOTE: ASM BELOW COMPRISED OF ABOVE COMPONENTS			
881	3593674C91	RF	ELBOW,FLARED TUBE*3/8" TUBE, 4			

COPYRIGHT© 2011INTERNATIONAL TRUCK AND ENGINE CORP.

https://truckmanualshub.com/

Figure 3593052C91
ELBOW,FLARED TUBE*37DEG FLARE,

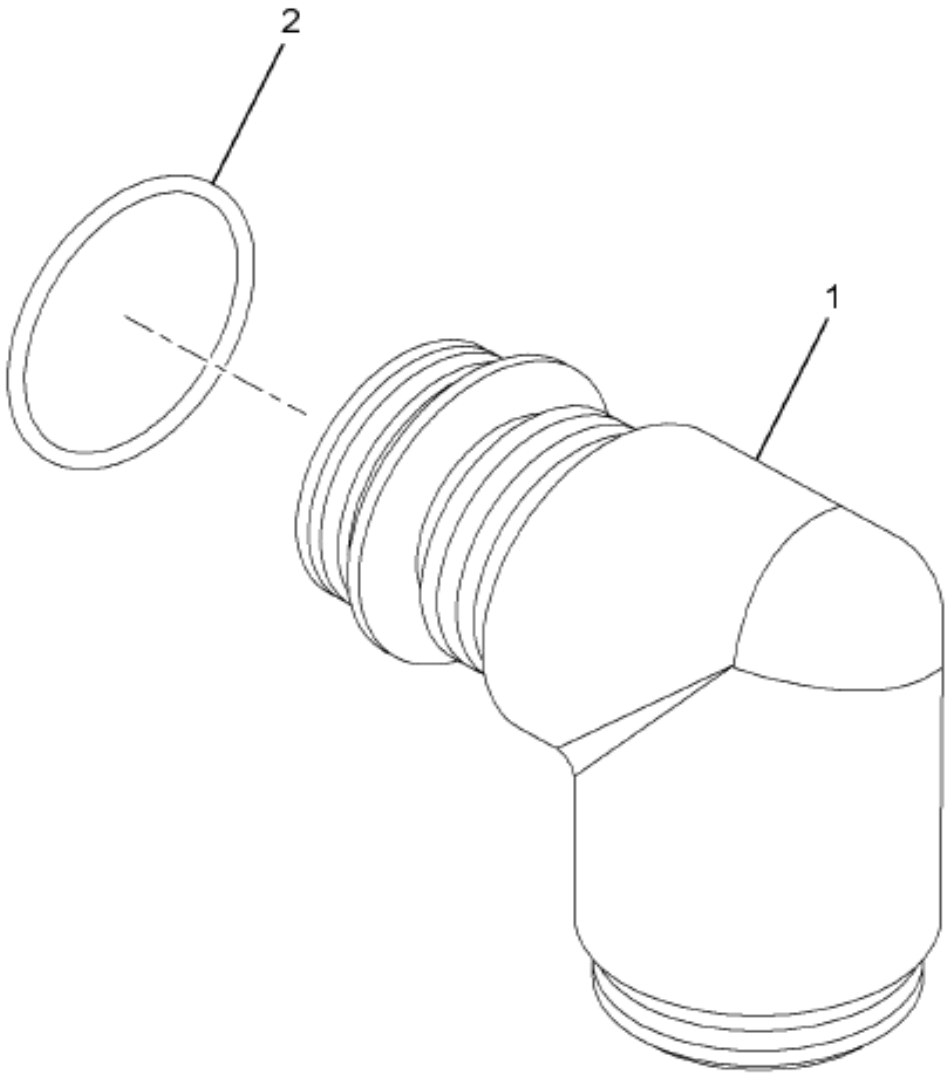

10-001-0005-01 K04

Item	Part No.	Qty	Description	Kit	Var	Figure
1	9410976	1	ELBOW,PIPE 90-37D FL TB .56-18			
2	882779C1	1	SEAL,LINK DUST SHIELD 3/8 OD			
880		RF	NOTE: ASM BELOW COMPRISED OF ABOVE COMPONENTS			
881	3593052C91	RF	ELBOW,FLARED TUBE*37DEG FLARE,			

COPYRIGHT© 2011INTERNATIONAL TRUCK AND ENGINE CORP.

https://truckmanualshub.com/

Figure 3593045C91
ELBOW,PIPE*45DEG ELBOW, 3/4" H

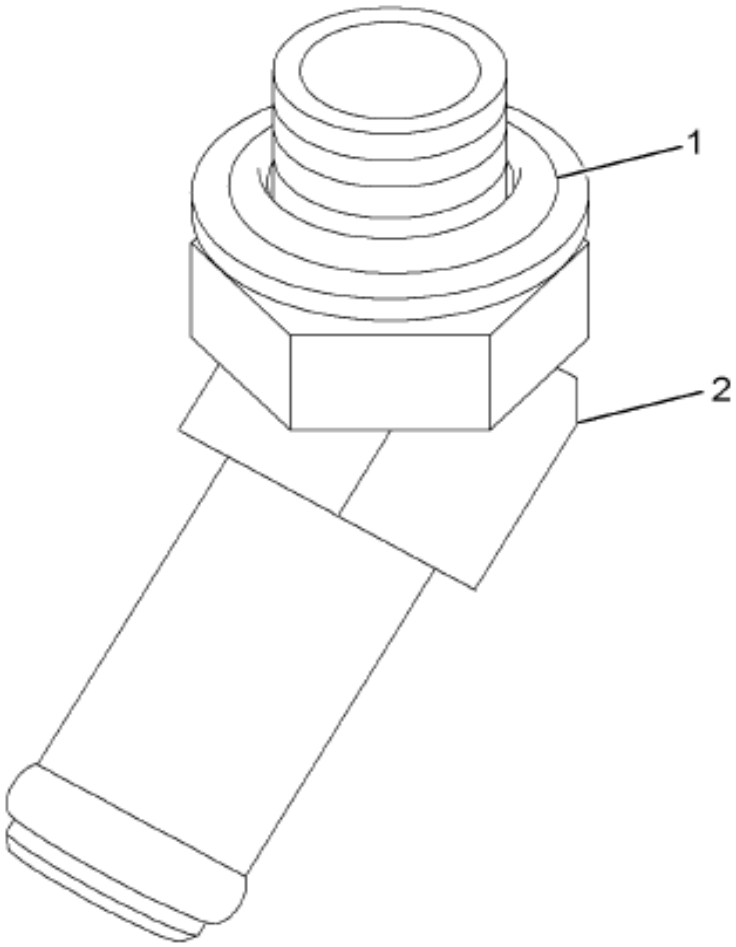

10-001-0001-01 K04

Item	Part No.	Qty	Description	Kit	Var	Figure
1	876106C1	1	RING,O 1/2 OD TUBE CLASS 8			
2	3541265C1	1	ELBOW,PIPE*3/4 ID, 3/4-16, 45			
880		RF	NOTE: ASM BELOW COMPRISED OF ABOVE COMPONENTS			
881	3593045C91	RF	ELBOW,PIPE*45DEG ELBOW, 3/4" H			

COPYRIGHT© 2011INTERNATIONAL TRUCK AND ENGINE CORP.

https://truckmanualshub.com/

Figure 3592892C91

FITTING,*3/4-16, 3/4:ID HOSE N

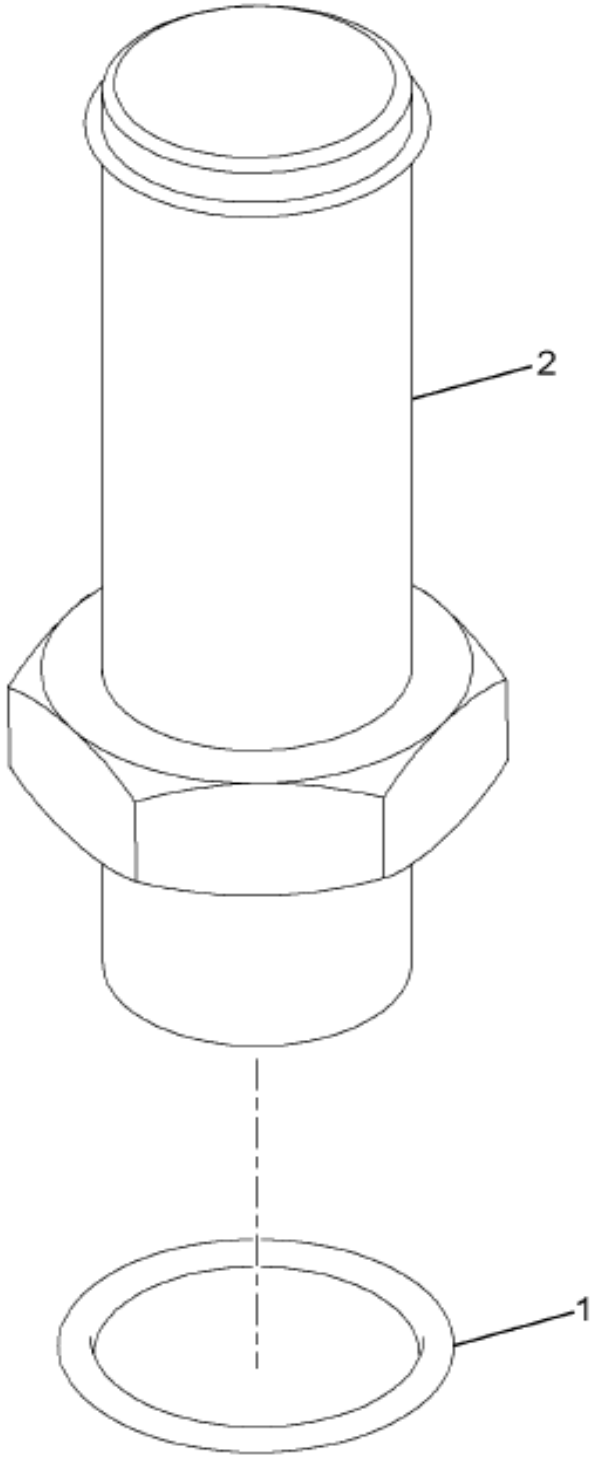

05-434-0020-01 D07

Item	Part No.	Qty	Description	Kit	Var	Figure
1	876106C1	1	RING,O 1/2 OD TUBE CLASS 8			
2	3540407C1	1	CONNECTOR,THREADED*3/4-16 X 3/			
880		RF	NOTE: ASM BELOW COMPRISED OF ABOVE COMPONENTS			
881	3592892C91	RF	FITTING,*3/4-16, 3/4:ID HOSE N			

COPYRIGHT© 2011INTERNATIONAL TRUCK AND ENGINE CORP.

https://truckmanualshub.com/

Figure 0M9SM

POWER STEERING RESERVOIR & MTG; W/1.5 LT

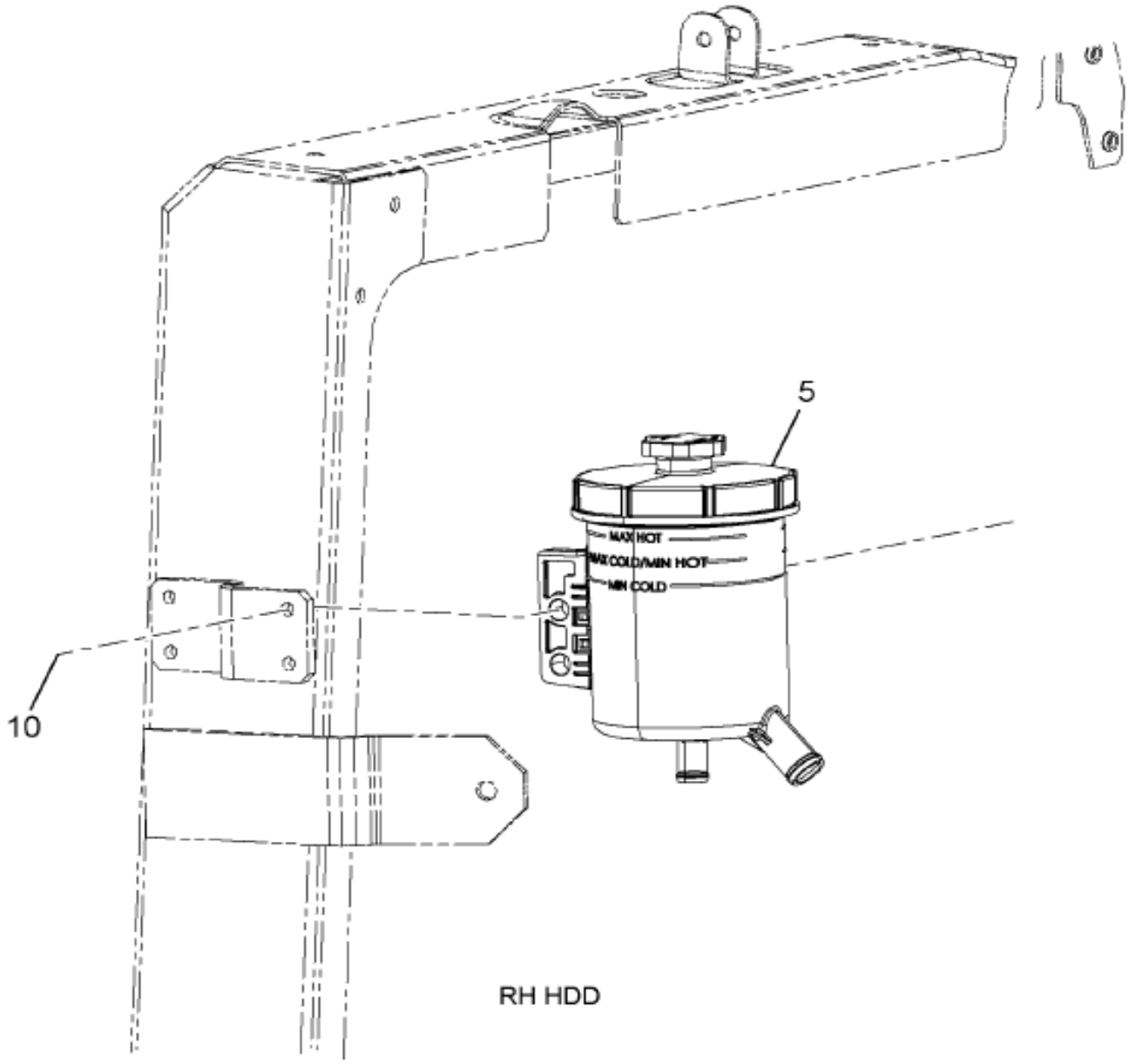

05-070-0034-01 H10

Item	Part No.	Qty	Description	Kit	Var	Figure
5	3836348C91	1	RESERVOIR,POWER STRG PUMP,		0M9SM	3836348C91
10	30866R2	2	BOLT, M10 X 40MM PHC FLG CLASS		0M9SM	
10	31083R1	2	NUT, M10 X 1.50 6H FN		0M9SM	

COPYRIGHT© 2011INTERNATIONAL TRUCK AND ENGINE CORP.

https://truckmanualshub.com/

Figure 3836348C91
RESERVOIR,POWER STRG PUMP,

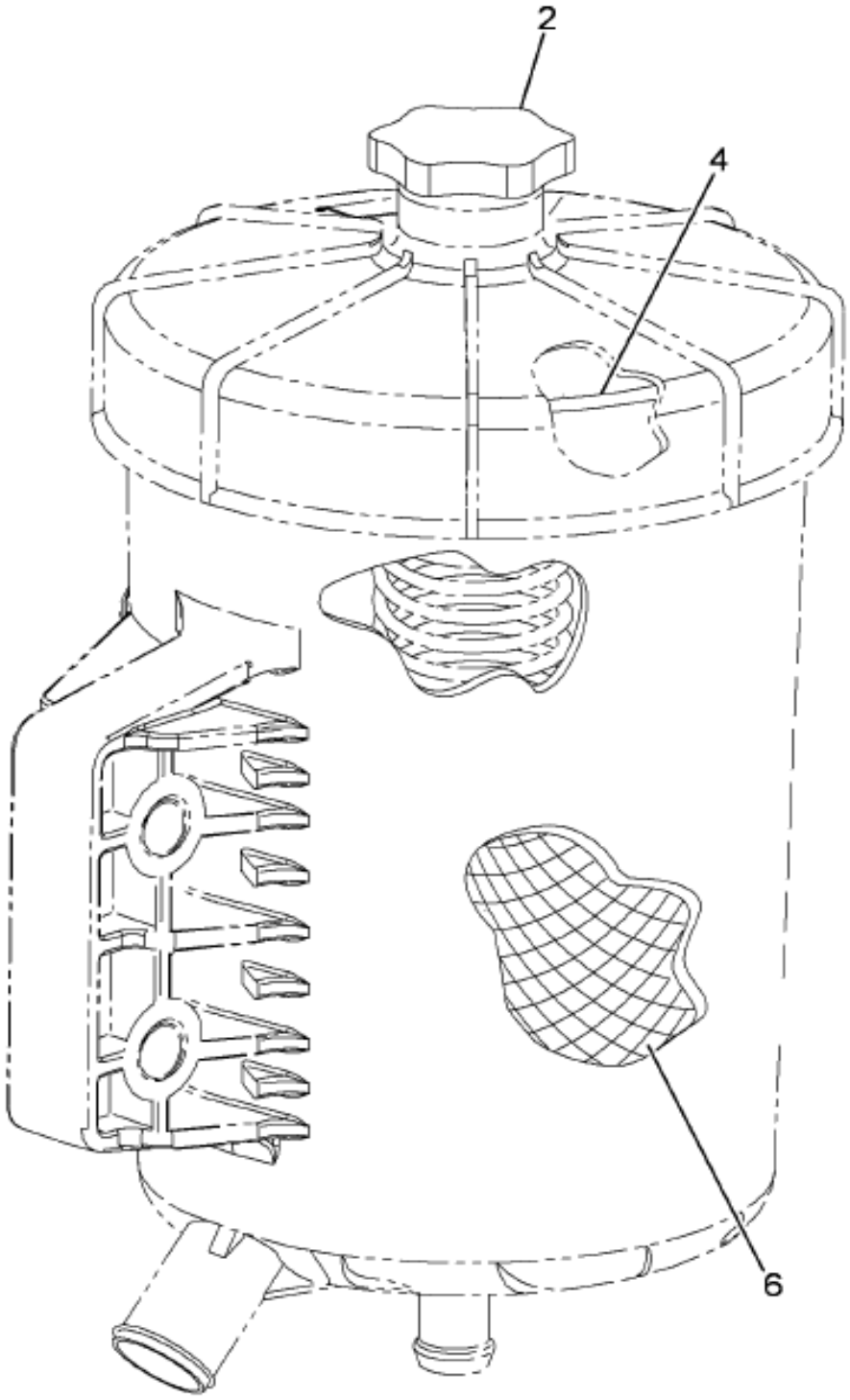

05-070-0052-01 E09

Item	Part No.	Qty	Description	Kit	Var	Figure
2	2602170C1	1	GAUGE,FLUID LEVEL*DIPSTICK			
4	2602171C1	1	GASKET,PWR STRG RESERVOIR			
6	2503221C1	1	FILTER,OIL P/S RESERVOIR			
880		RF	NOTE: ASM BELOW COMPRISED OF ABOVE COMPONENTS			
881	3836348C91	RF	RESERVOIR,POWER STRG PUMP,			

COPYRIGHT© 2011INTERNATIONAL TRUCK AND ENGINE CORP.

https://truckmanualshub.com/

Figure 0051X

POWER STEERING SHAFT INSTL; INTERMEDIATE

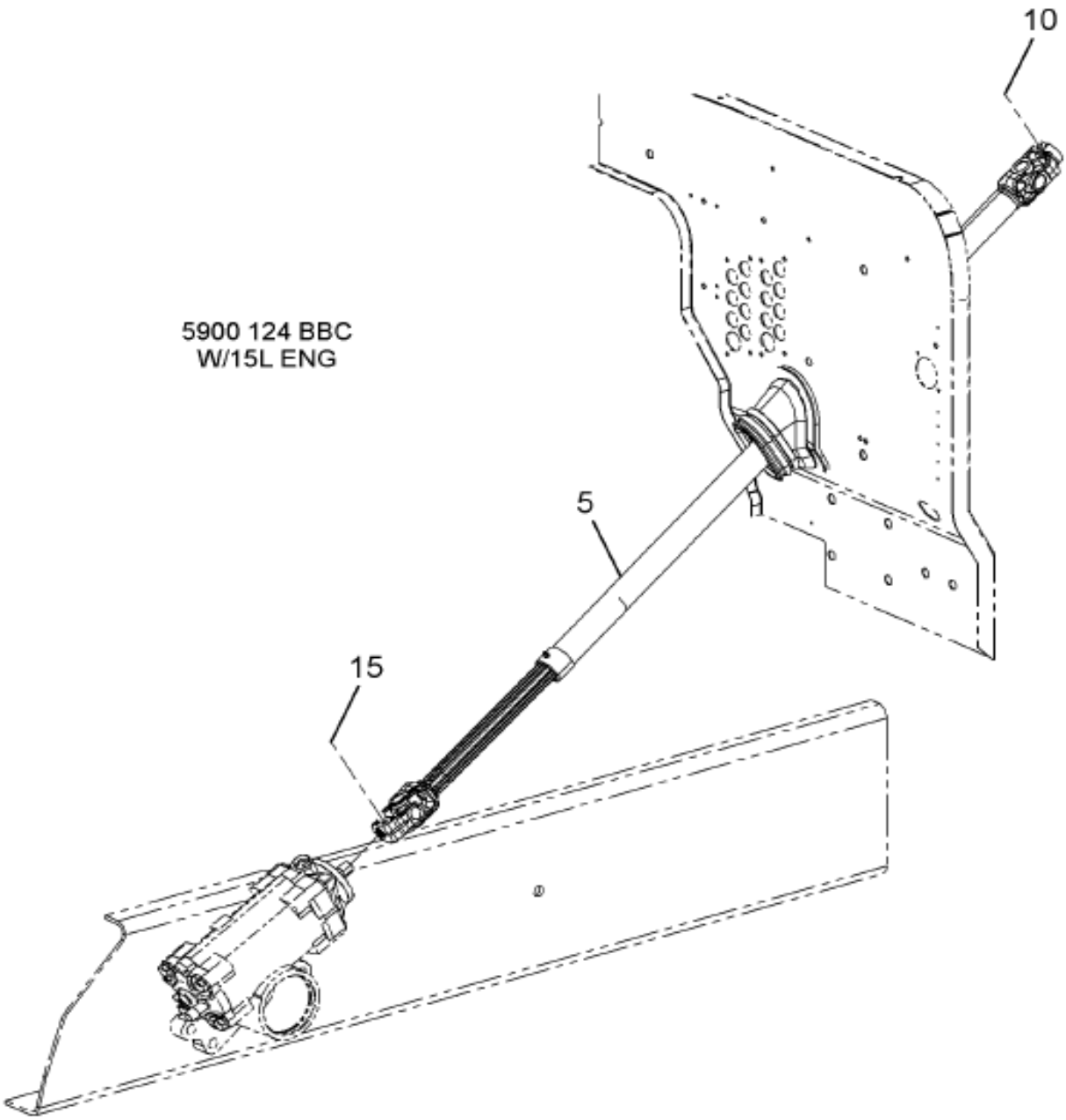

05-V90-0002-AA H10

Item	Part No.	Qty	Description	Kit	Var	Figure
5	3822725C91	1	SHAFT STEERING INTERMEDIATE		0GBY4	
10	3535854C1	1	BOLT SPECIAL*7/16-20 12-PT TOR		0GBY4	
10	273896	1	NUT, 7/16-NF PHC P/T LOCK TYPE		0GBY4	
10	25545R1	1	WASHER,.469 X .922 X .134 PHC		0GBY4	
15	3535854C1	1	BOLT SPECIAL*7/16-20 12-PT TOR		0GBY4	
15	273896	1	NUT, 7/16-NF PHC P/T LOCK TYPE		0GBY4	

COPYRIGHT© 2011INTERNATIONAL TRUCK AND ENGINE CORP.

https://truckmanualshub.com/

Figure 0051X

POWER STEERING SHAFT INSTL; INTERMEDIATE

Item	Part No.	Qty	Description	Kit	Var	Figure
15	25545R1	1	WASHER,.469 X .922 X .134 PHC		0GBY4	

COPYRIGHT© 2011INTERNATIONAL TRUCK AND ENGINE CORP.

https://truckmanualshub.com/

Figure 0G5GN

POWER STRG PUMP INSTL; W/HDD ENGINES

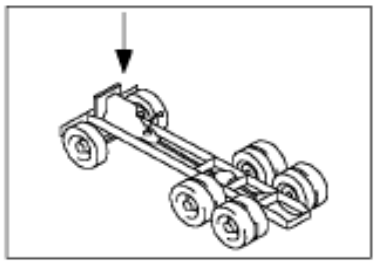

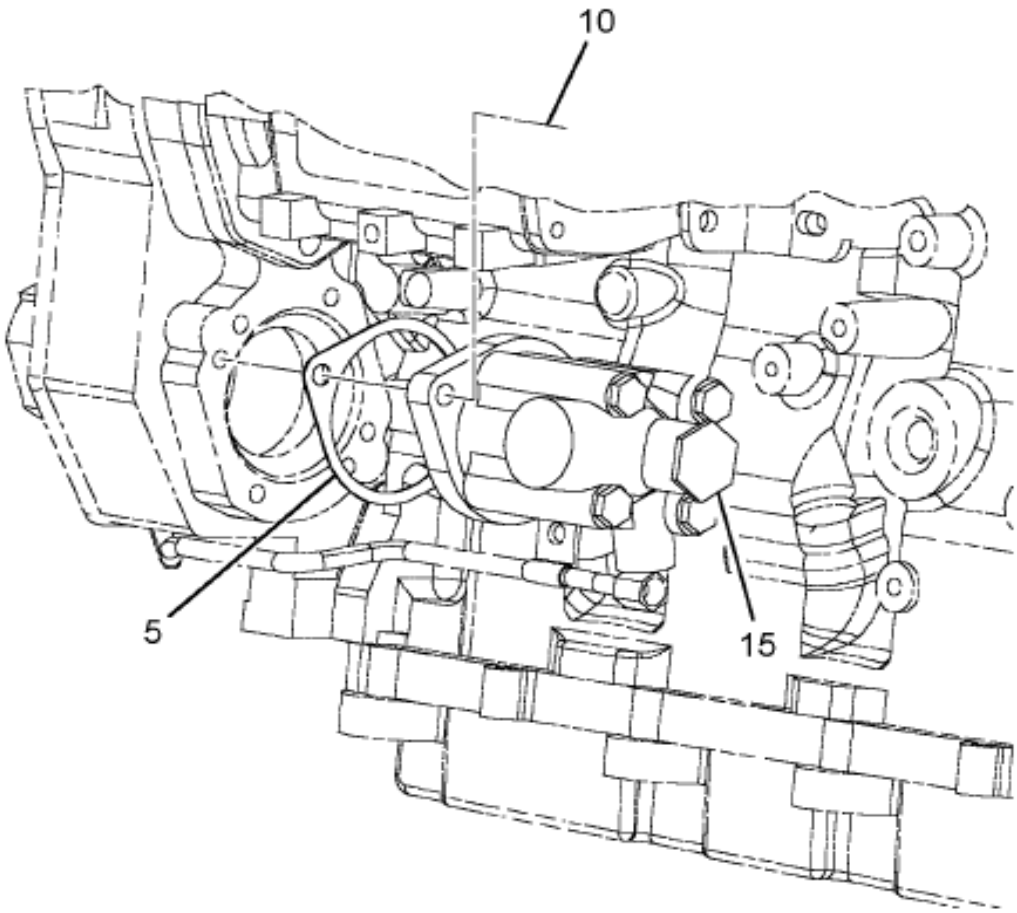

05-069-0020-A0 K02

Item	Part No.	Qty	Description	Kit	Var	Figure
5	3557141C1	1	GASKET POWER STRG PUMP		0J3LJ	
10	504188C1	2	BOLT SPECIAL M10X1.5X35		0J3LJ	
10	996593C1	2	WASHER LOCK M10		0J3LJ	
15	3820856C91	1	PUMP,POWER STRG		0J3LJ	

COPYRIGHT© 2011INTERNATIONAL TRUCK AND ENGINE CORP.

https://truckmanualshub.com/

Figure 0MF X6

PWR STRG GEAR INSTL; W/SHEPPARD M80, M100

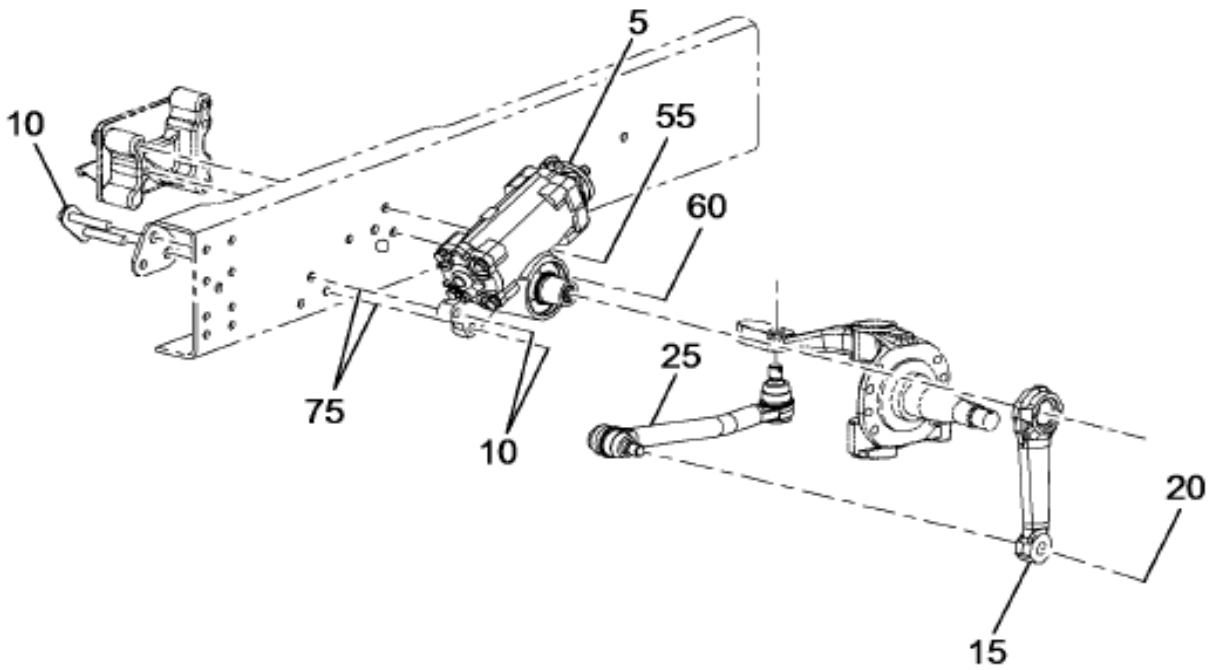

W/M-NGV-SS
W/M100
W/M100/M80
W/FRT AXLE LOC =SB
W/IBB ENG

05-072-0215-01 C11

Figure 1 of 3

COPYRIGHT© 2011INTERNATIONAL TRUCK AND ENGINE CORP.

https://truckmanualshub.com/

Figure 0MF X6

PWR STRG GEAR INSTL; W/SHEPPARD M80, M100

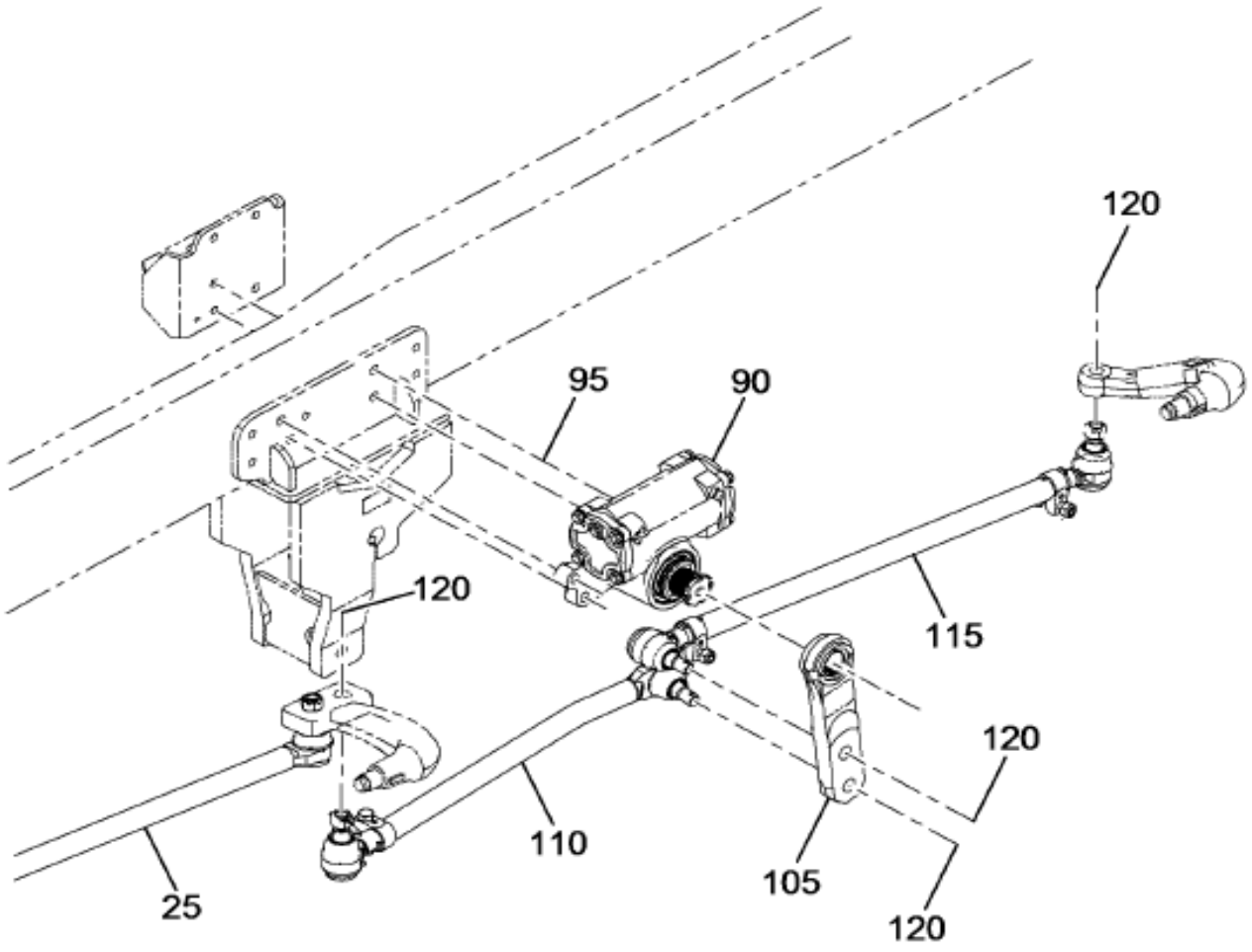

M-NGV-SS
W/M100/M80/M100
W/IBB ENG

05-072-0215-02 C11

Figure 2 of 3

COPYRIGHT© 2011INTERNATIONAL TRUCK AND ENGINE CORP.

https://truckmanualshub.com/

Figure 0MFX6

PWR STRG GEAR INSTL; W/SHEPPARD M80, M100

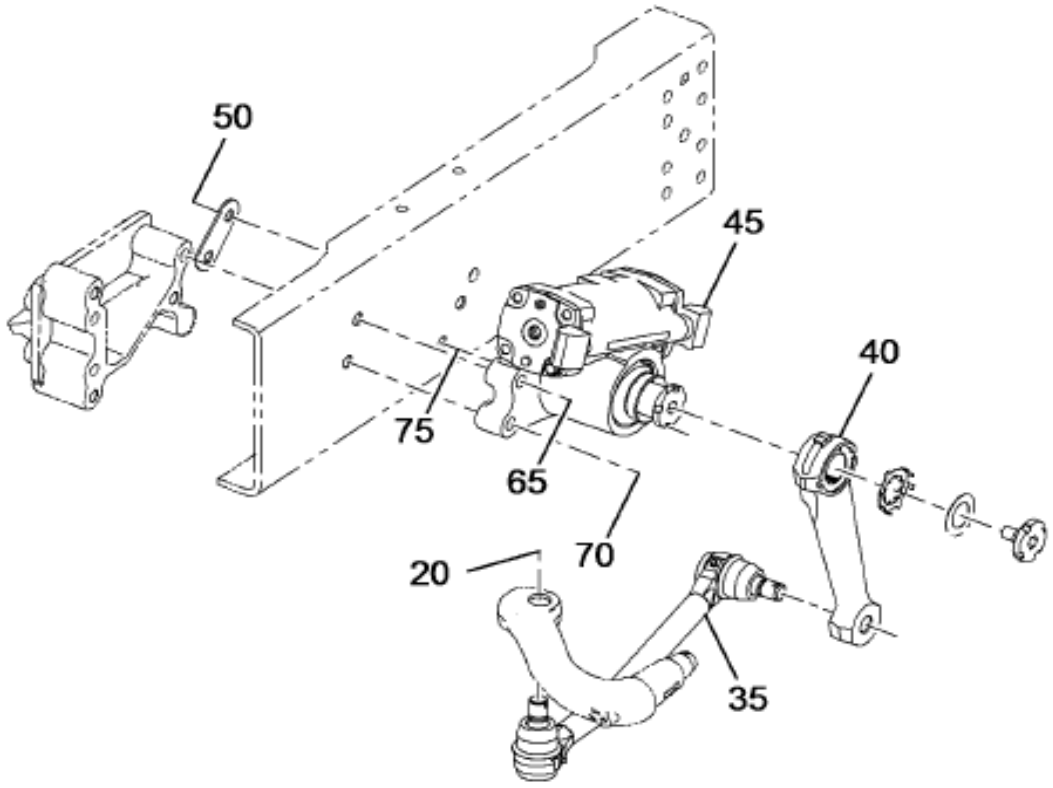

W/M-NGV-SS
W/M100/M80
W/FRT AXLE LOC=SB
W/1BB ENG
N/03WAM

05-072-0191-01 C11

Item	Part No.	Qty	Description	Kit	Var	Figure
5	3885826C91	1	GEAR,ASM STEERING, M100		0TNDM	3885826C91
10	31075R1	4	BOLT, M16 X 70 PHC CL 10.9 FLG		0TNDM	
10	30756R1	4	NUT,HEX M16 PRVTRQ		0TNDM	
15	3558239C1	1	ARM,STEERING GEAR*PITMAN ARM		0TNDM	
20	137214	4	PIN, COTTER 1/8 X 1-3/4		0TNDM	
25	3558241C91	1	LINK,STEERING DRAG*16-20K LH		0TNDM	3558241C91

COPYRIGHT© 2011INTERNATIONAL TRUCK AND ENGINE CORP.

https://truckmanualshub.com/

Figure 0MFX6

PWR STRG GEAR INSTL; W/SHEPPARD M80, M100

Item	Part No.	Qty	Description	Kit	Var	Figure
35	3558242C91	1	LINK,STEERING DRAG*16-20K RH		0TNDM	3558242C91
40	3558240C1	1	ARM,STEERING GEAR*PITMAN ARM		0TNDM	
45	3558090C91	1	GEAR,ASM DUAL PWR STRG M80		0TNDM	3558090C91
50	40203R1	4	BOLT HEX FLG HD METRIC*M16 X 9		0TNDM	
50	30756R1	4	NUT,HEX M16 PRVTRQ		0TNDM	
			NON-ILLUSTRATED REFERENCE FIGURE 3885826C91			
800		RF	NOTE: THE FOLLOWING PARTS ARE			
			NON-ILLUSTRATED			
870	2585853C91	KT	KIT,GASKET & SEAL INPUT SHAFT			
871	2602863C91	KT	KIT,SECTOR SHAFT SEAL			
872	2591852C91	KT	KIT,STRG GEAR PLUNGER W/O-RING			
873	1695398C91	KT	KIT,PITMAN ARM RETAINER			
874	2502495C91	KT	KIT,STRG GEAR RELIEF VALVE REP			
875	2585860C91	KT	KIT,SEAL END CAP M100			
876	2602864C91	KT	KIT,COMBINED SEAL			
877	2603813C91	KT	KIT,PITMAN ARM PULLER			
878	2603145C91	KT	KIT,PRESSURE & FLOW TEST			
880		RF	NOTE: ASM BELOW COMPRISED OF ABOVE			
			COMPONENTS			
881	3885826C91	RF	GEAR,ASM STEERING, M100			

COPYRIGHT© 2011INTERNATIONAL TRUCK AND ENGINE CORP.

https://truckmanualshub.com/

Figure 3338050C91
GEAR,ASM DUAL PWR STRG M80

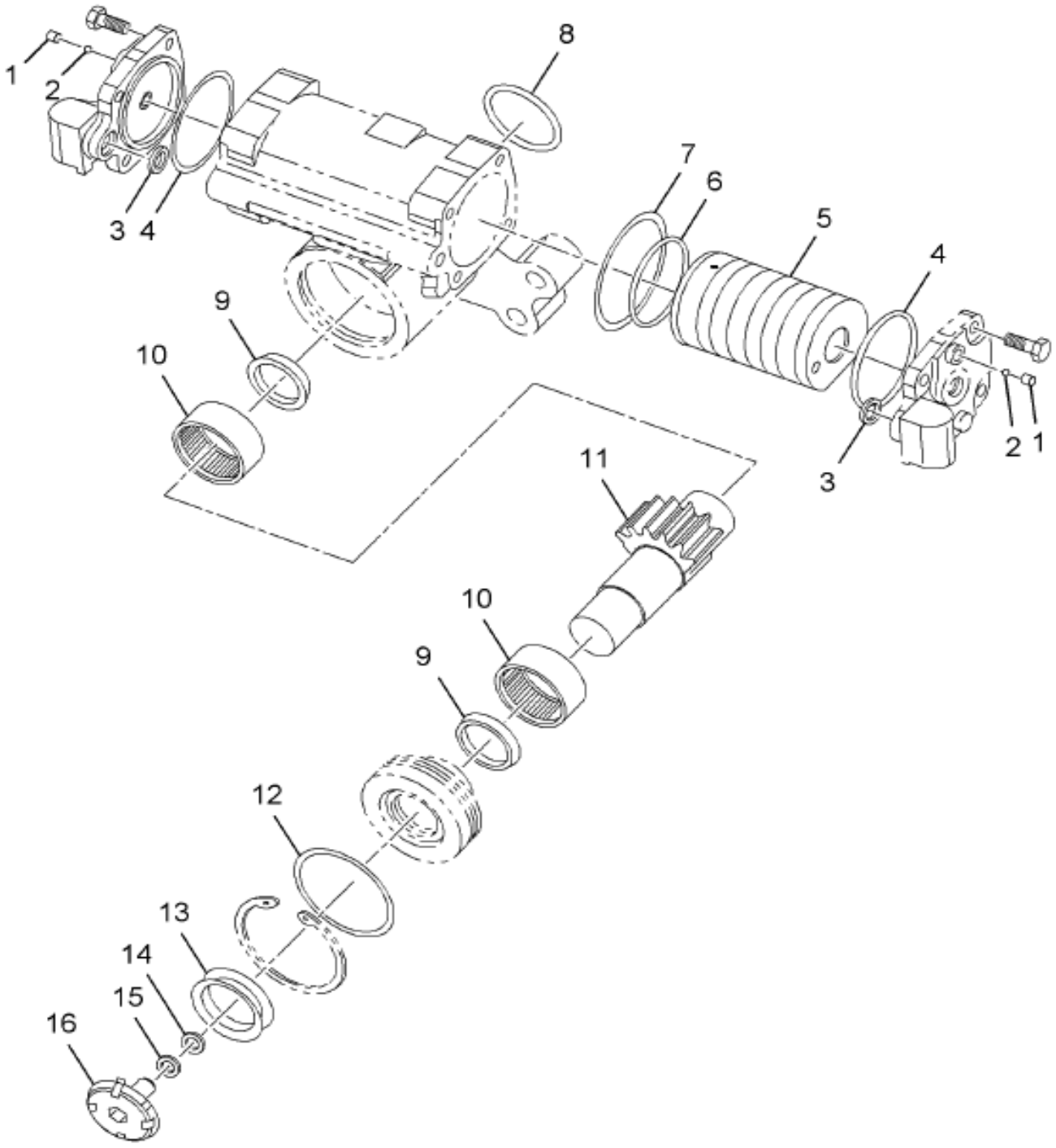

Item	Part No.	Qty	Description	Kit	Var	Figure
1		RF	SCREW,SET	D		
2		RF	BALL,STEEL .188	D		
3		RF	SEAL,SQUARE RING	C		
4		RF	RING,SQUARE COOLING PORT	C		
5		RF	PISTON,SLAVE M80	C,E		
6		RF	RING,O ENERGIZING	C		

COPYRIGHT© 2011INTERNATIONAL TRUCK AND ENGINE CORP.

https://truckmanualshub.com/

Figure 3558090C91

GEAR,ASM DUAL PWR STRG M80

Item	Part No.	Qty	Description	Kit	Var	Figure
7		RF	RING,PISTON SEAL	C		
8		RF	CAP,END	B,C,F		
9		RF	SEAL,INTERNAL EXCLUDER M80	B,C,F		
10		RF	BEARING,ROLLER	F		
11		RF	SHAFT,SECTOR	B		
12		RF	RING,O HOUSING COVER	B,C,F		
13		RF	BOOT,SECTOR SHAFT	C,F		
14		RF	WASHER,RETAINER TAB	A		
15		RF	WASHER,FRICTION PITTMAN ARM	A		
16		RF	RETAINER,PITTMAN ARM	A		
800		RF	NOTE: THE FOLLOWING PARTS ARE NON-ILLUSTRATED	RF		
801		RF	PIN,LOCKING	E		
802		RF	RING,O PISTON PLUG	E		
803		RF	PLUG,PISTON	E		
804	1663632C91	KT	KIT,PITMAN ARM RETAINER	A		
805	2500291C91	KT	SHAFT,OUTPUT W/SEALS	B		
806	2502697C91	KT	KIT,GASKET & SEAL REBUILD M80	C		
807	2502698C1	KT	KIT,AUTO BLEED PLUG & BALL	D		
808	2502699C91	KT	KIT,REPAIR PWR STRG PISTON	E		
809	2502700C91	KT	KIT,ROLL BRG W/END CAP & SEALS	F		
880		RF	NOTE: ASM BELOW COMPRISED OF ABOVE COMPONENTS			
881	3558090C91	RF	GEAR,ASM DUAL PWR STRG M80			

COPYRIGHT© 2011INTERNATIONAL TRUCK AND ENGINE CORP.

https://truckmanualshub.com/

Figure 3558241C91
LINK,STEERING DRAG*16-20K LH

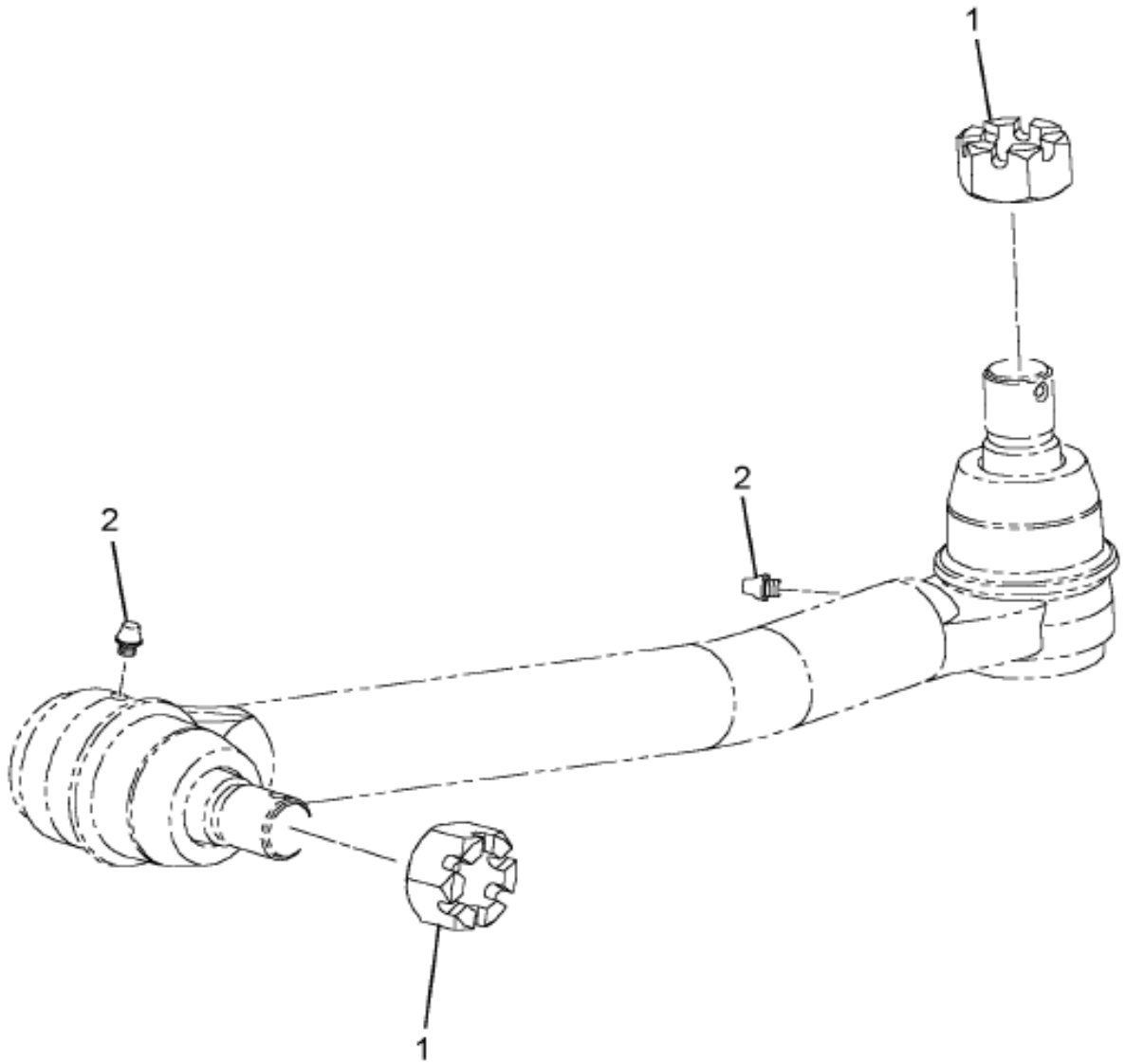

05-072-0060-00 J03

Item	Part No.	Qty	Description	Kit	Var	Figure
1	26963R1	2	NUT,HEX SLOTTED 7/8 NF TYPE 8			
2	109454	2	FITTING,1/4 LUB			
880		RF	NOTE: ASM BELOW COMPRISED OF ABOVE COMPONENTS			
881	3558241C91	RF	LINK,STEERING DRAG*16-20K LH			

COPYRIGHT© 2011INTERNATIONAL TRUCK AND ENGINE CORP.

https://truckmanualshub.com/

Figure 3558242C91
LINK,STEERING DRAG*16-20K RH

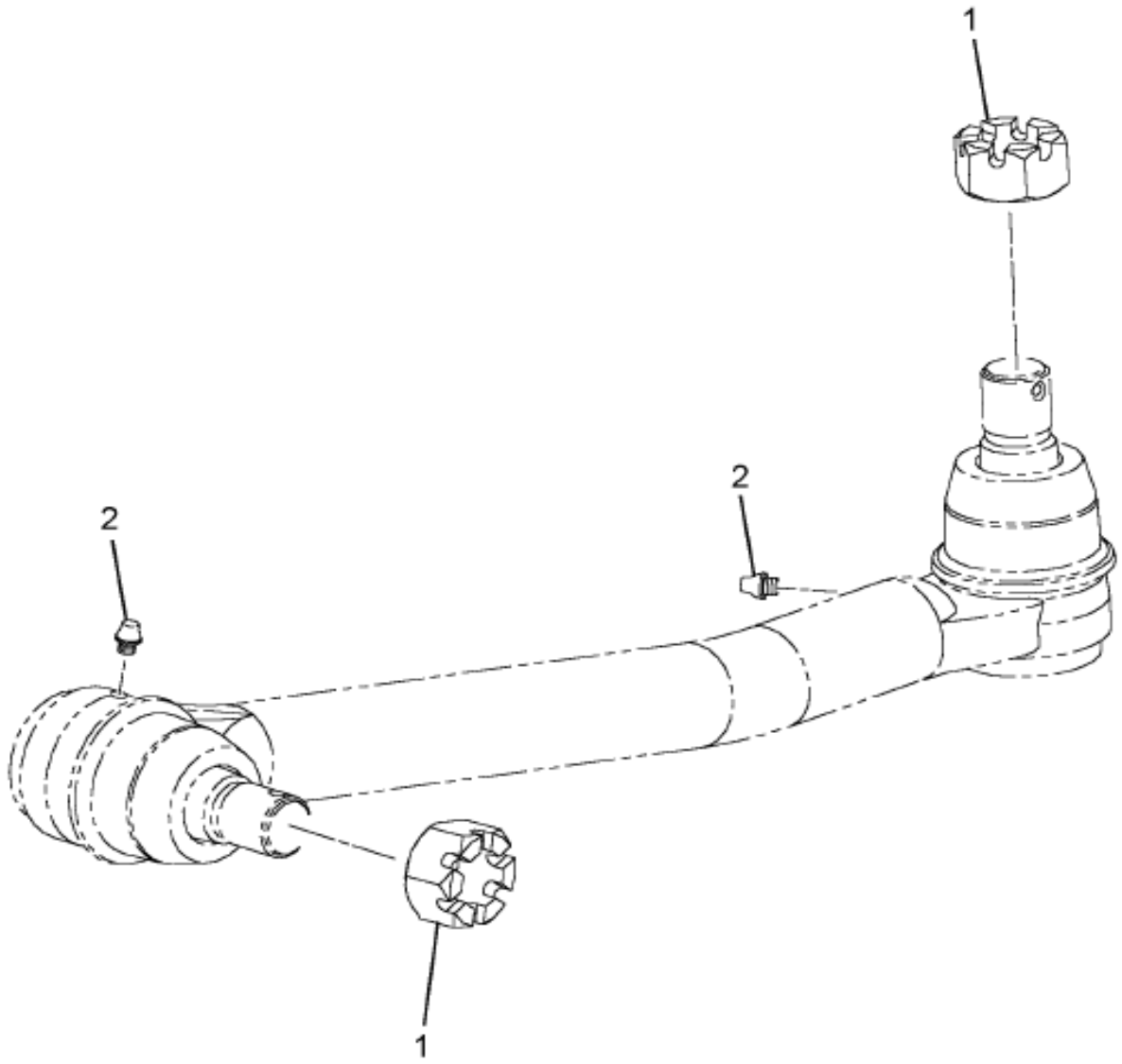

05-072-0060-00 J03

Item	Part No.	Qty	Description	Kit	Var	Figure
1	26963R1	2	NUT,HEX SLOTTED 7/8 NF TYPE 8			
2	109454	2	FITTING,1/4 LUB			
880		RF	NOTE: ASM BELOW COMPRISED OF ABOVE COMPONENTS			
881	3558242C91	RF	LINK,STEERING DRAG*16-20K RH			

COPYRIGHT© 2011INTERNATIONAL TRUCK AND ENGINE CORP.

https://truckmanualshub.com/

Figure 0R33B

PWR STRG HOSING INSTL; W/M100 OR M100/M80 HD94 GEARS

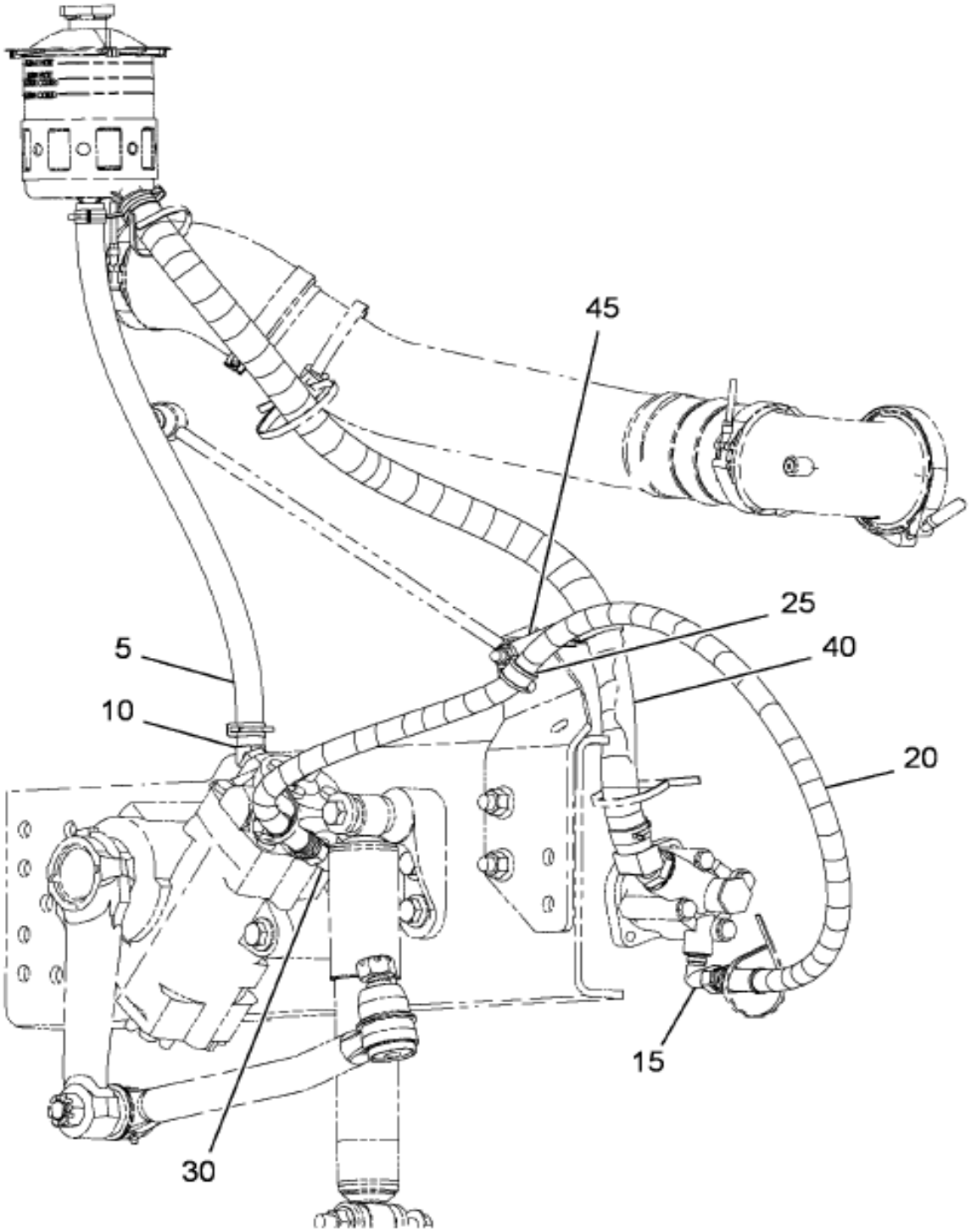

05-073-0165-01 C08

Grp 05

Figure 1 of 2

COPYRIGHT© 2011INTERNATIONAL TRUCK AND ENGINE CORP.

https://truckmanualshub.com/

Figure 0RS3B
PWR STRG HOSING INSTL; W/M100 OR M100/M80 HD94 GEARS

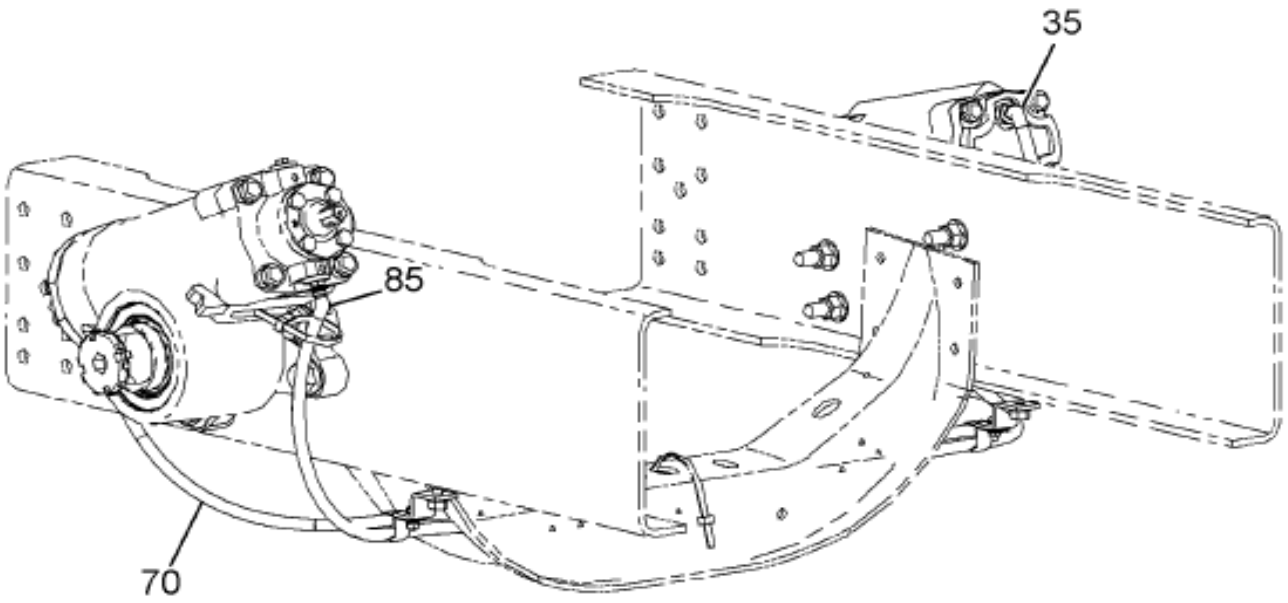

7000
W/M110/M100 GEARS

05-073-0169-01 F08

Item	Part No.	Qty	Description	Kit	Var	Figure
5	3590828C91	1	ELBOW,PIPE*ELBOW,90 DEG 3/4-16		0RS3D	3590828C91
10	3593042C91	1	ELBOW,PIPE*45DEG ELBOW, 1" HOS		0RS3D	3593042C91
15	3590828C91	1	ELBOW,PIPE*ELBOW,90 DEG 3/4-16		0RS3D	3590828C91
20	2005804C3	1	HOSE,ASSY POWER STRG 28.0"		0RS3D	
20	450017C1	75	CONDUIT,CABLE ELECTRICAL 1"ID		0RS3D	
20	306132C1	2	STRAP,CABLE LOCK		0RS3D	

COPYRIGHT© 2011INTERNATIONAL TRUCK AND ENGINE CORP.

https://truckmanualshub.com/

Figure 0RS3B

PWR STRG HOSING INSTL; W/M100 OR M100/M80 HD94 GEARS

Item	Part No.	Qty	Description	Kit	Var	Figure
25	306132C1	1	STRAP,CABLE LOCK		0RS3D	
30	2643623R1	1100	HOSE,1.0 ID X 1.4 OD BULK		0RS3D	
30	3523435C1	2	CLAMP,34MM DIA X15MM WD,1"HOSE		0RS3D	
40	2644081R1		CONDUIT CABLE 1.495IDX1.72		0RS3D	
40	306132C1	2	STRAP,CABLE LOCK		0RS3D	
45	299272C91	1	CLAMP,RUBBER CUSHIONED		0RS3D	
45	471875C1	1	EXTENSION,CLIP		0RS3D	
45	31045R1	1	BOLT M6-1-6 X 16 HEX FLG		0RS3D	
45	40209R1	1	NUT,M6 PREV TORX HF		0RS3D	

COPYRIGHT© 2011INTERNATIONAL TRUCK AND ENGINE CORP.

https://truckmanualshub.com/

Figure 3593042C91
ELBOW,PIPE*45DEG ELBOW, 1" HOS

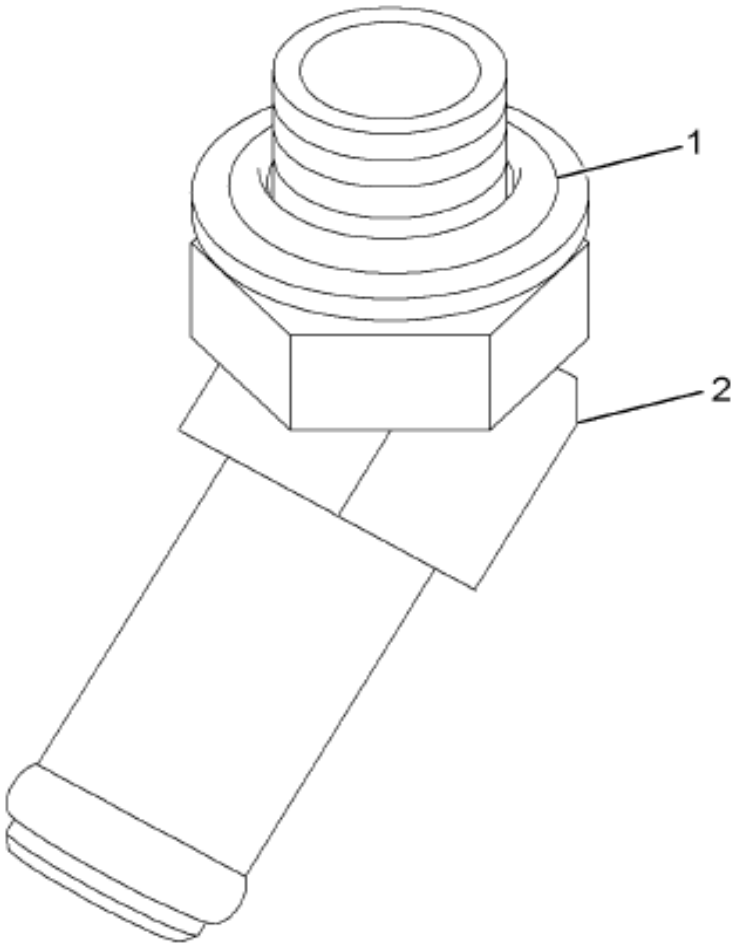

10-001-0001-01 K04

Item	Part No.	Qty	Description	Kit	Var	Figure
1	876108C1	1	RING,O 1-1/16-12 *STD			
2	2025773C1	1	ELBOW,PIPE 45 DEG			
880		RF	NOTE: ASM BELOW COMPRISED OF ABOVE COMPONENTS			
881	3593042C91	RF	ELBOW,PIPE*45DEG ELBOW, 1" HOS			

COPYRIGHT© 2011INTERNATIONAL TRUCK AND ENGINE CORP.

https://truckmanualshub.com/

Figure 3590828C91

ELBOW,PIPE*ELBOW,90 DEG 3/4-16

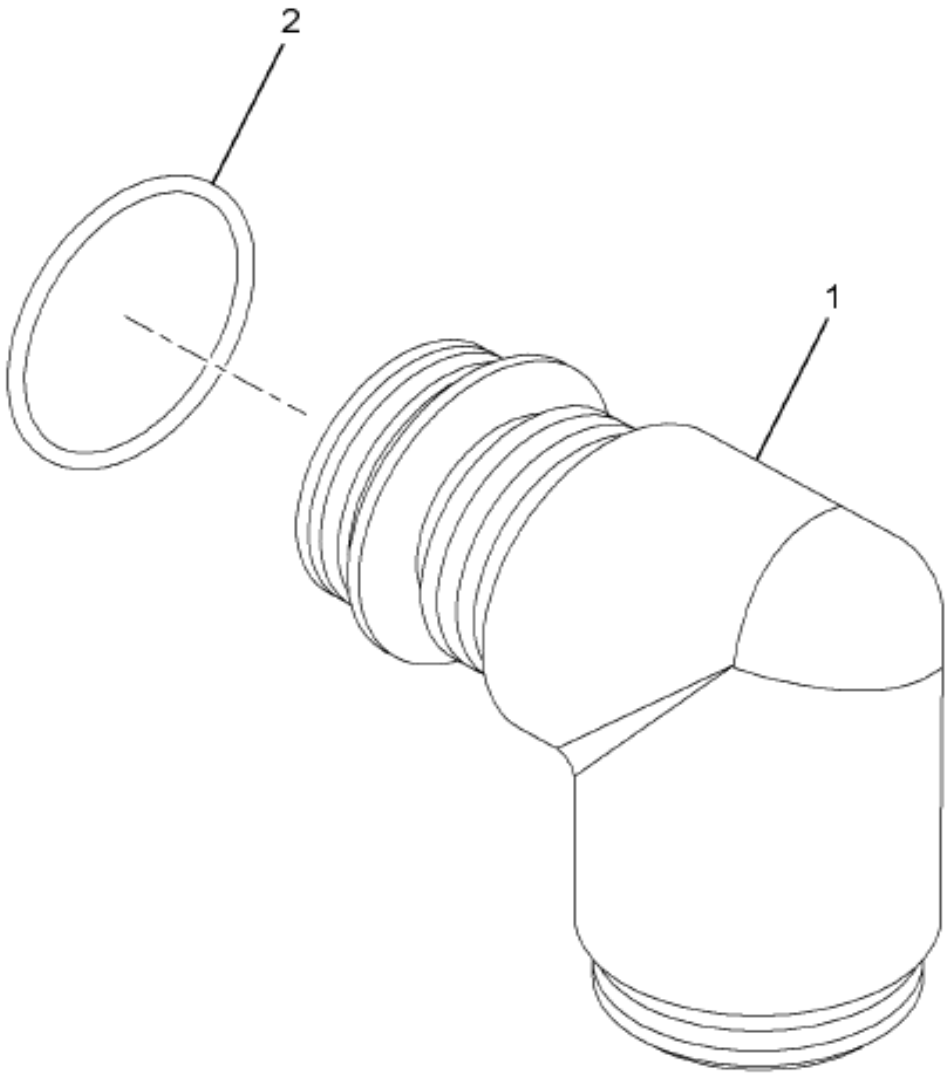

10-001-0005-01 K04

Item	Part No.	Qty	Description	Kit	Var	Figure
1	9410977	1	ELBOW PIPE 1/2 TUBE 3/4-16			
2	876106C1	1	RING,O 1/2 OD TUBE CLASS 8			
880		RF	NOTE: ASM BELOW COMPRISED OF ABOVE COMPONENTS			
881	3590828C91	RF	ELBOW,PIPE*ELBOW,90 DEG 3/4-16			

COPYRIGHT© 2011INTERNATIONAL TRUCK AND ENGINE CORP.

https://truckmanualshub.com/

Figure 06BMC

STEERING COLUMN; DCM, TILT/TELE, FIXED

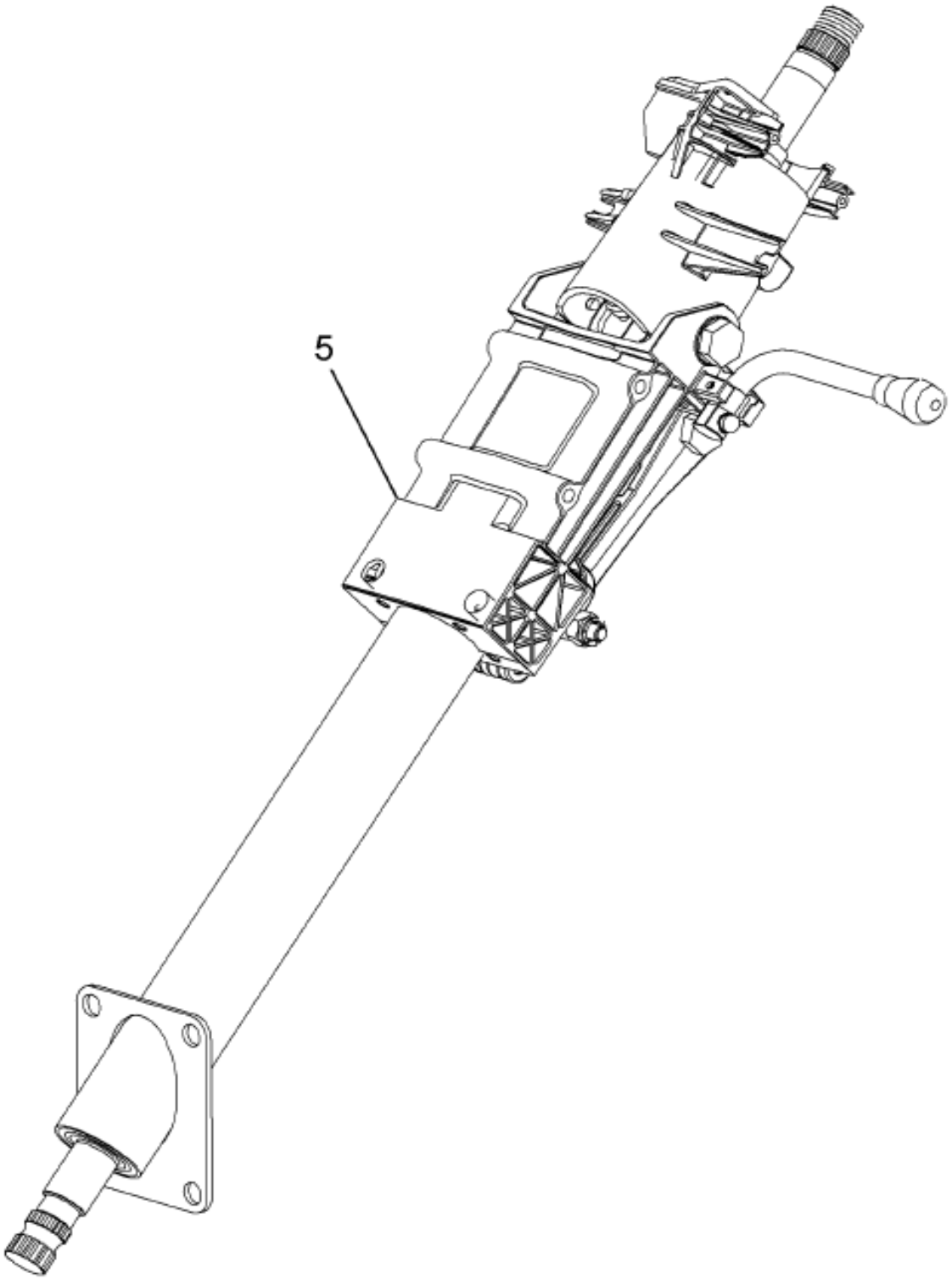

Item	Part No.	Qty	Description	Kit	Var	Figure
5	3563854F93	1	DRVR CONT TILT COLUMN		0HTF5	3563854F93

COPYRIGHT© 2011INTERNATIONAL TRUCK AND ENGINE CORP.

https://truckmanualshub.com/

Figure 3363854F93

DRVR CONT TILT COLUMN

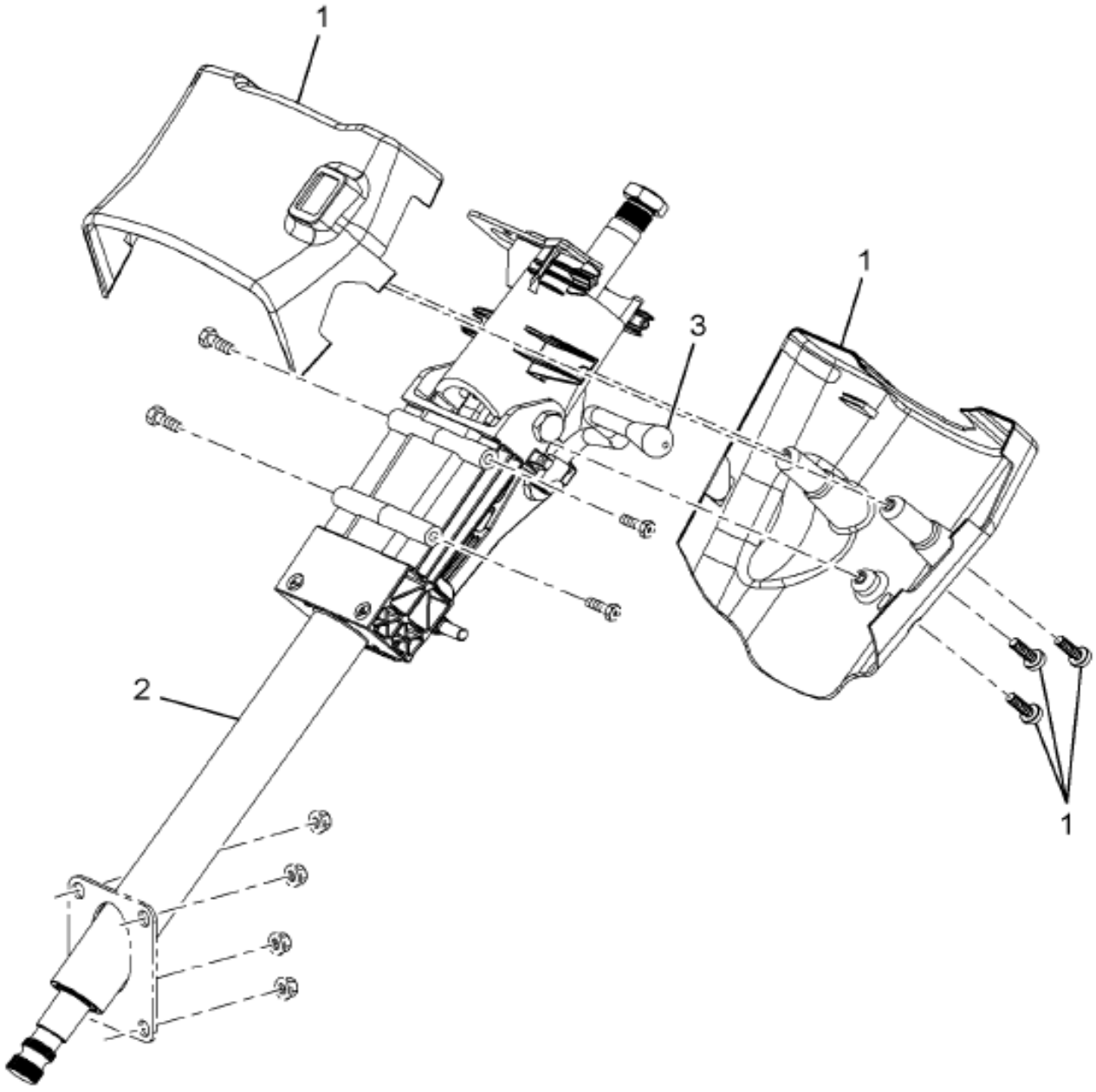

16-C14-0016-01 E08

Item	Part No.	Qty	Description	Kit	Var	Figure
1	2505690C91	KT	KIT,STEERING*COL COVER TC7	A		2505690C91
2	2507661C91	KT	KIT,TILT LEVER ROD & LOCKNUT	A		
3	1696299C1	1	KNOB,COL REL LEVER	A		
800		RF	NOTE: THE FOLLOWING PARTS ARE NON-ILLUSTRATED			
801	2596791C91	KT	HOUSING,STRG COLUMN TILT, KIT			2596791C91

COPYRIGHT© 2011INTERNATIONAL TRUCK AND ENGINE CORP.

https://truckmanualshub.com/
INTERNATIONAL

Figure 3563854F93

DRVR CONT TILT COLUMN

Item	Part No.	Qty	Description	Kit	Var	Figure
801		RF	(CONSISTS OF PARTS DENOTED BY A)			
802	2586763C91	KT	KIT,BUSHING*TILT LEVER			
880		RF	NOTE: ASM BELOW COMPRISED OF ABOVE COMPONENTS			
881	3563854F93	RF	DRVR CONT TILT COLUMN			

COPYRIGHT© 2011INTERNATIONAL TRUCK AND ENGINE CORP.

https://truckmanualshub.com/

Figure 2390791C91
HOUSING,STRG COLUMN TILT, KIT

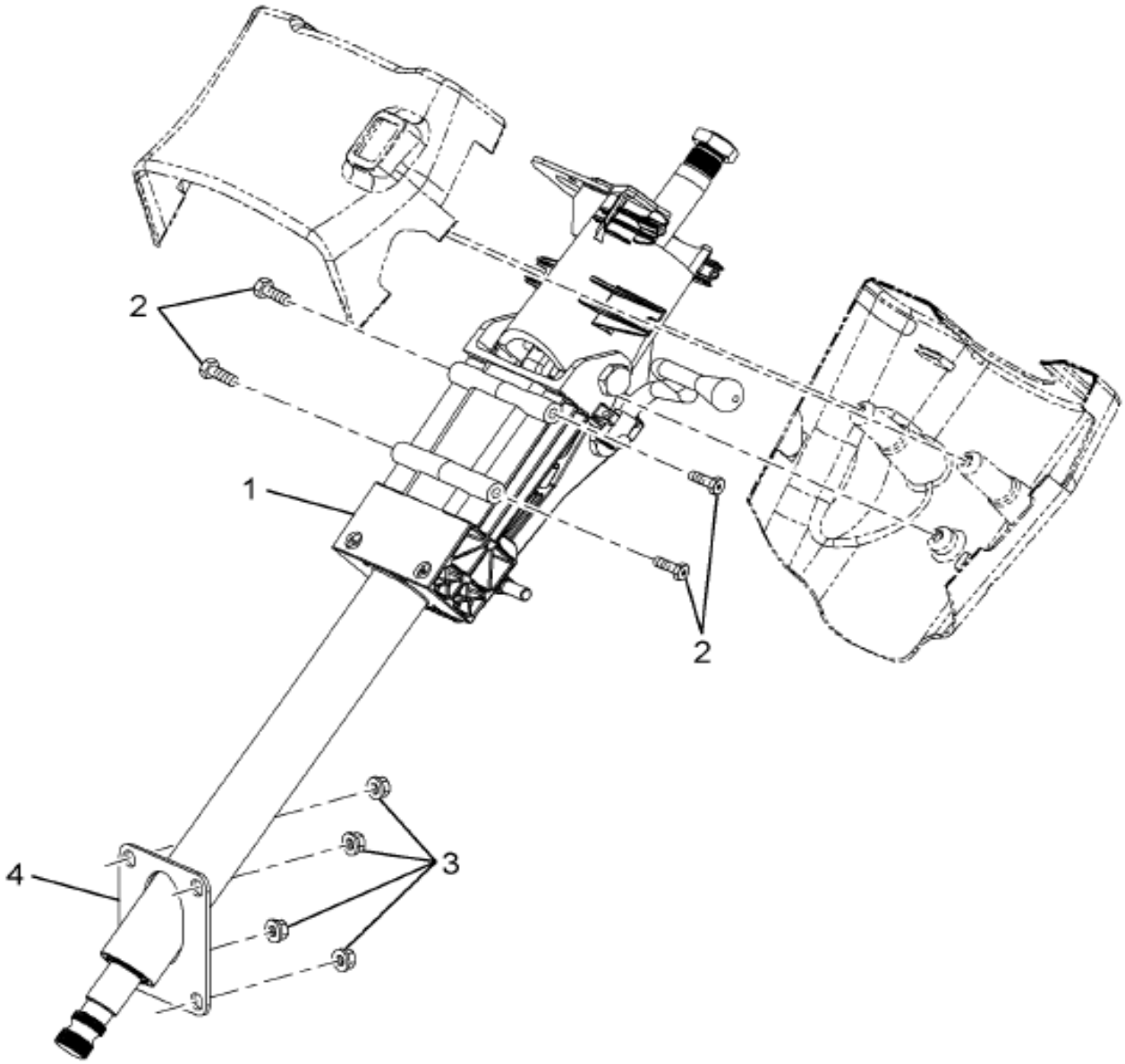

16-C14-0008-01 K07

Item	Part No.	Qty	Description	Kit	Var	Figure
1	2505845C91	1	HOUSING,STEER COL*TILT			
2	3587296C1	4	BOLT,SPL TORX HD 5/16-18X1			
3	2505842C1	4	NUT,8MM FLANGE			
4	2505773C1	1	GASKET,STEERING COLUMN			
880		RF	NOTE: ASM BELOW COMPRISED OF ABOVE COMPONENTS			

COPYRIGHT© 2011INTERNATIONAL TRUCK AND ENGINE CORP.

https://truckmanualshub.com/

Figure 2596791C91

HOUSING,STRG COLUMN TILT, KIT

Item	Part No.	Qty	Description	Kit	Var	Figure
881	2596791C91	RF	HOUSING,STRG COLUMN TILT, KIT			

COPYRIGHT© 2011INTERNATIONAL TRUCK AND ENGINE CORP.

https://truckmanualshub.com/

Figure 2505690C91
KIT,STEERING*COL COVER TC7

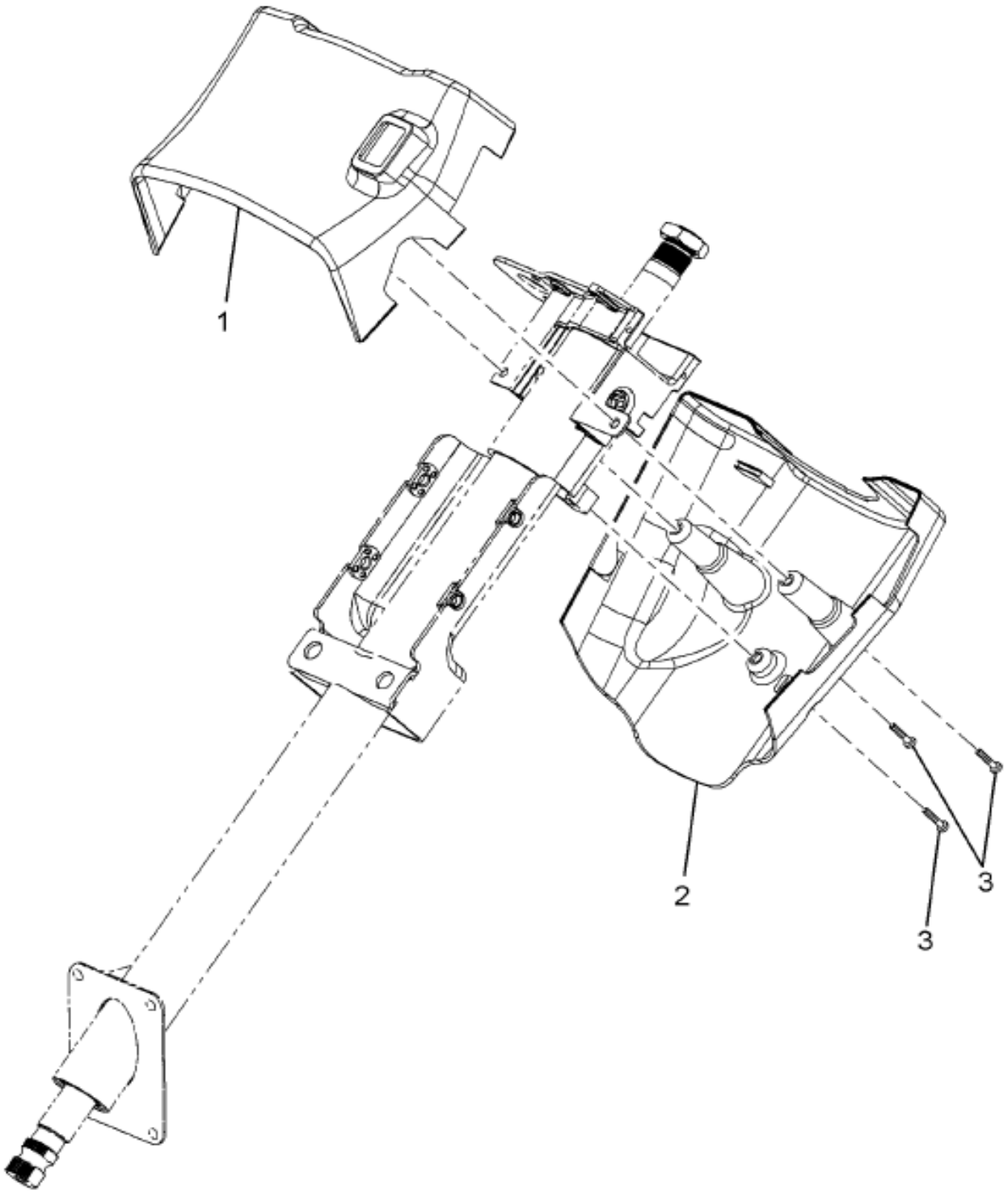

Item	Part No.	Qty	Description	Kit	Var	Figure
1	2505867C1	1	COVER,STEER COL HSNG TOP-TC7			
2	2505868C1	1	COVER,STEER COL HSNG LWR-TC7			
3	ZAC292247	3	SCREW,1/4-20 PAN HEAD			
800		RF	NOTE: THE FOLLOWING PARTS ARE NON-ILLUSTRATED			
801		1	MANUAL, INSTRUCTION SHEET			

COPYRIGHT© 2011INTERNATIONAL TRUCK AND ENGINE CORP.

https://truckmanualshub.com/

Figure 2505690C91

KIT,STEERING*COL COVER TC7

Item	Part No.	Qty	Description	Kit	Var	Figure
880		RF	NOTE: ASM BELOW COMPRISED OF ABOVE COMPONENTS			
881	2505690C91	RF	KIT,STEERING*COL COVER TC7			

COPYRIGHT© 2011INTERNATIONAL TRUCK AND ENGINE CORP.

https://truckmanualshub.com/

Figure 0GPC1

STEERING WHEEL & MTG; 18", W/HORN BUTTON, CRUISE CONTROL

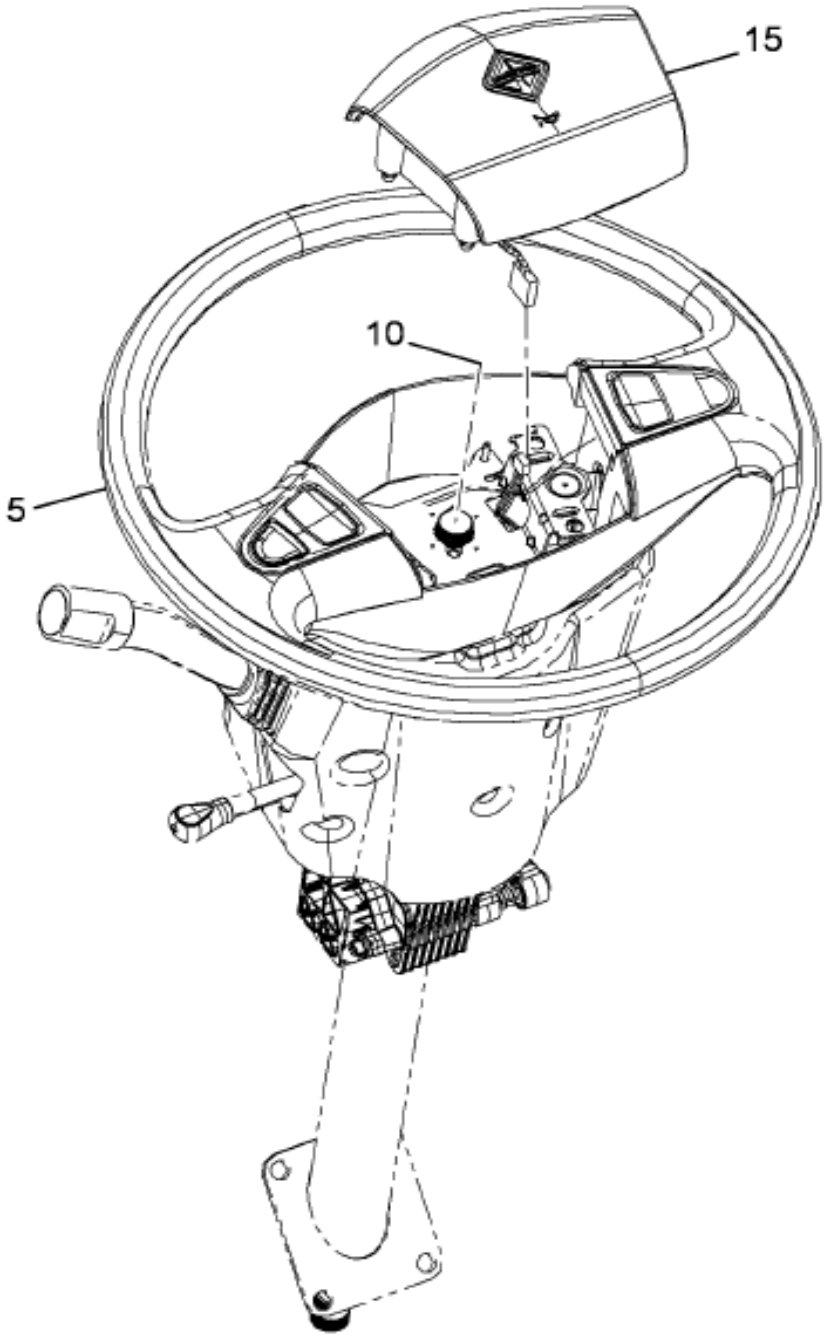

NGV

05-690-0017-CA M10

Item	Part No.	Qty	Description	Kit	Var	Figure
5	3546229C93	1	WHEEL,STEERING 18 IN, W/CRUISE		0GPGY	3546229C93
15	3616382C1	1	PAD,STEERING WHEEL HORN,BLACK		0GPGY	

COPYRIGHT© 2011INTERNATIONAL TRUCK AND ENGINE CORP.

https://truckmanualshub.com/

Figure 3346229C93

WHEEL,STEERING 18 IN, W/CRUISE

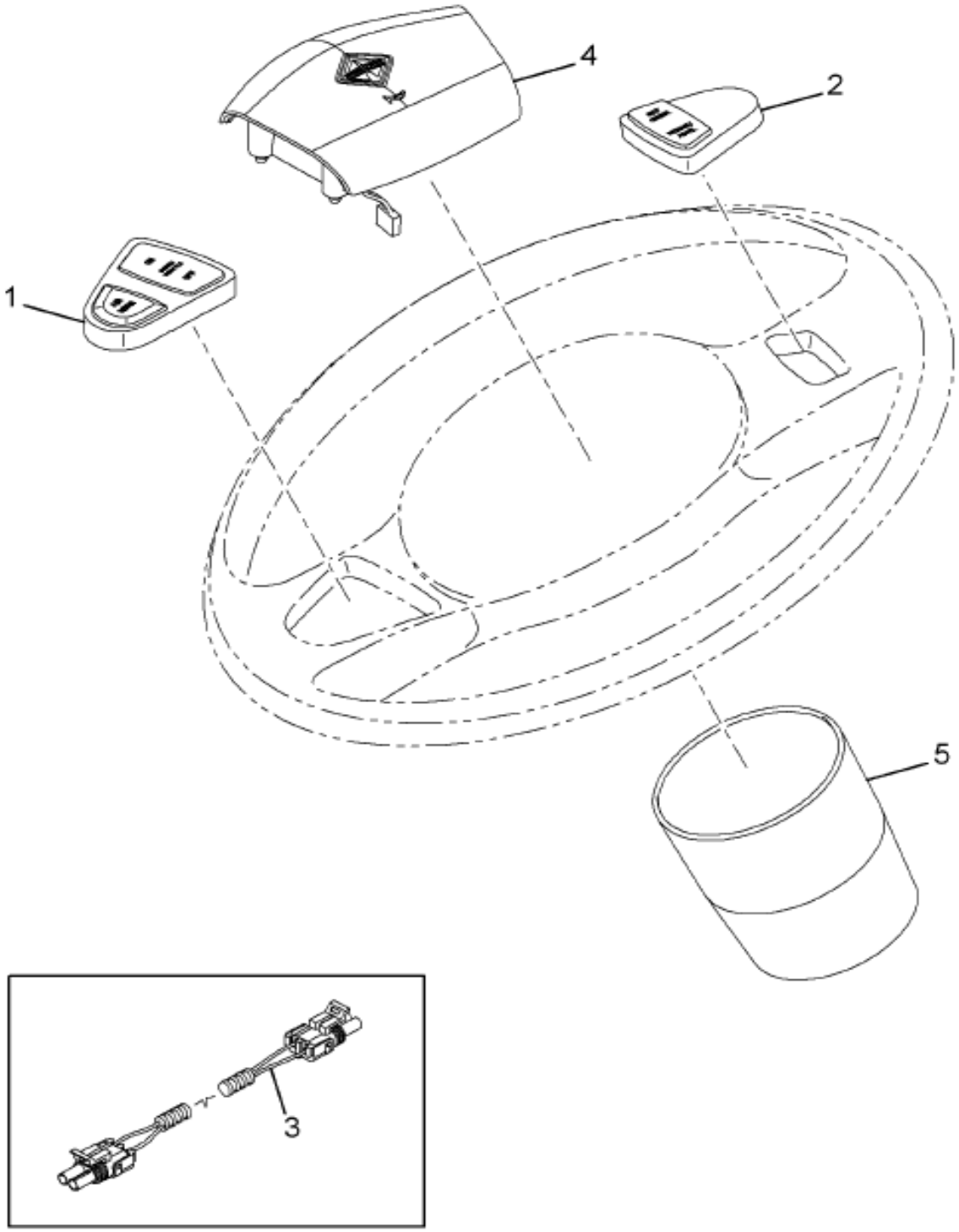

05-690-0027-01 H07

Item	Part No.	Qty	Description	Kit	Var	Figure
1	2599732C1	1	SWITCH,STR WHL,LH-CRS/THRTL/HR			
1		RF	LEFT			
2	2598851C1	1	SWITCH,STR WHL,RH-SET/CST ACCL			
2		RF	RIGHT			
3	2506329C1	1	HARNESS STEERING WHEEL*4 WIRE			
4	3541530C1	1	HORN,PAD STRG WHL W/DMND ROAD			

COPYRIGHT© 2011INTERNATIONAL TRUCK AND ENGINE CORP.

https://truckmanualshub.com/

Figure 3546229C93

WHEEL,STEERING 18 IN, W/CRUISE

Item	Part No.	Qty	Description	Kit	Var	Figure
5	2586623C1	1	COVER,LOWER STRG WHEEL*SHROUD			
880		RF	NOTE: ASM BELOW COMPRISED OF ABOVE COMPONENTS			
881	3546229C93	RF	WHEEL,STEERING 18 IN, W/CRUISE			

COPYRIGHT© 2011INTERNATIONAL TRUCK AND ENGINE CORP.

https://truckmanualshub.com/

MANUAL NOTES

COPYRIGHT© 2011INTERNATIONAL TRUCK AND ENGINE CORP.

https://truckmanualshub.com/

Group 06
Propeller Shafts

COPYRIGHT© 2011INTERNATIONAL TRUCK AND ENGINE CORP.

https://truckmanualshub.com/

Figure 026CH

CENTER BEARING, MTG PARTS

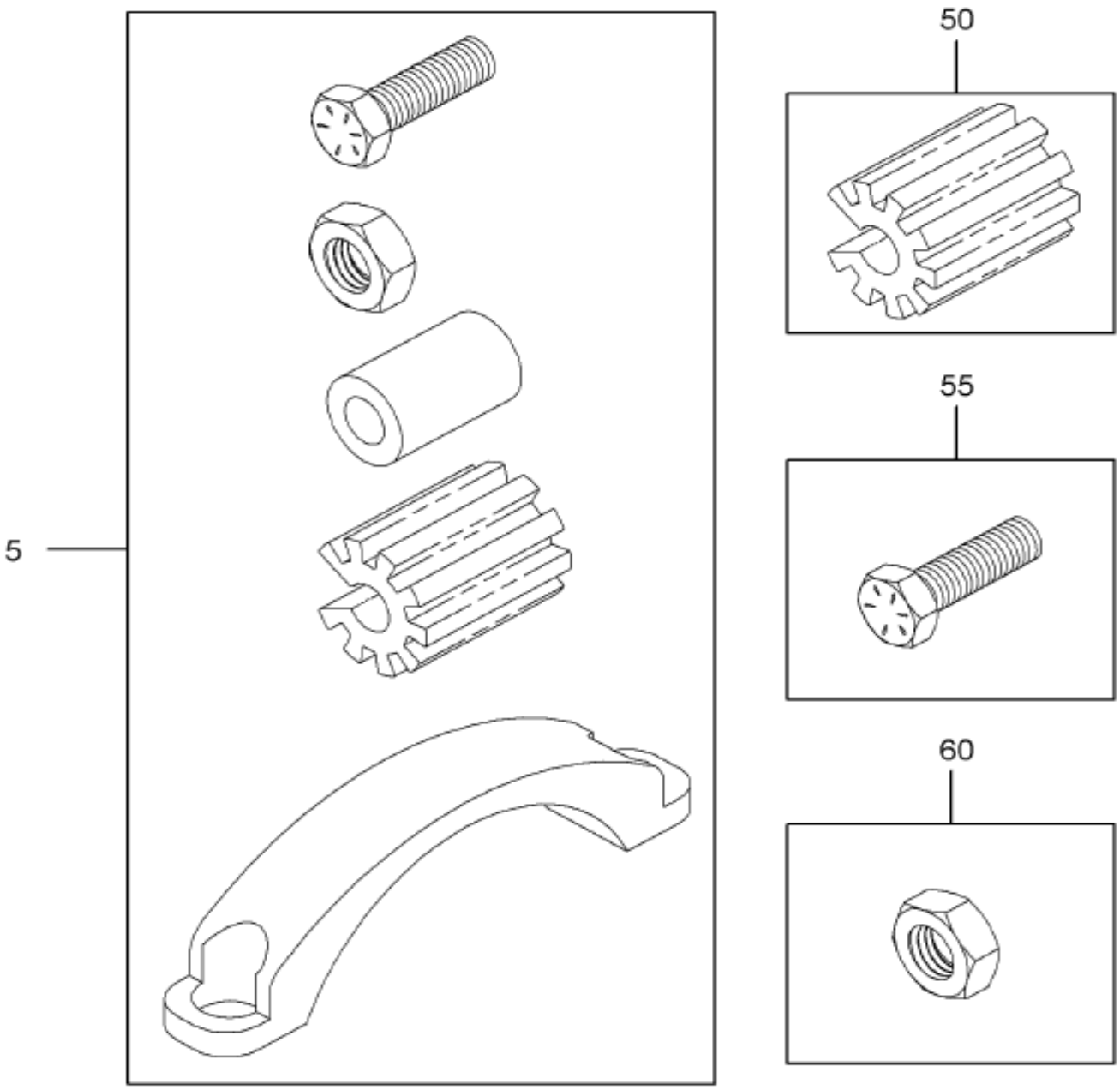

06-700-0002-01 E10

Item	Part No.	Qty	Description	Kit	Var	Figure
5	30744R2	2	BOLT,HEX HD MET M12X30 PHC FLG		0HK5D	
5	30755R1	2	NUT,HEX M12 FLANGED		0VS9H	
5	31071R1	2	BOLT, M12 X 100 PHC CL 10.9 FL		0VS9H	
5	3620411C1	2	BLOCK,, SPACER, CENTER BRG MOU		0VS9H	
5	30755R1	2	NUT,HEX M12 FLANGED		0HK5D	
5	1657368C1	2	STRAP TRUN BRG 1710 1760 1810		0HK5D	

COPYRIGHT© 2011INTERNATIONAL TRUCK AND ENGINE CORP.

https://truckmanualshub.com/

Figure 026C11

CENTER BEARING, MTG PARTS

Item	Part No.	Qty	Description	Kit	Var	Figure
5	1657366C1	4	BOLT 12-POINT		0HK5D	

COPYRIGHT© 2011INTERNATIONAL TRUCK AND ENGINE CORP.

https://truckmanualshub.com/

Figure 01VHX

CTR BRG MTG BRKT; FIRST

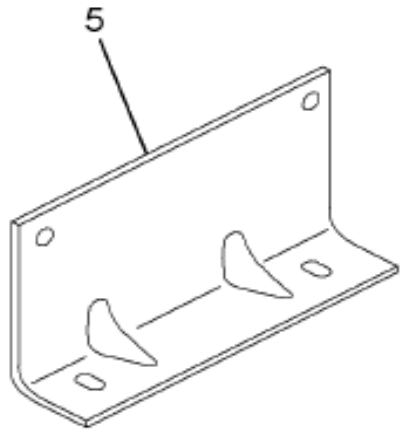

1480, 1550, 1590, 1610 & 1710
SERIES N/OFFSET

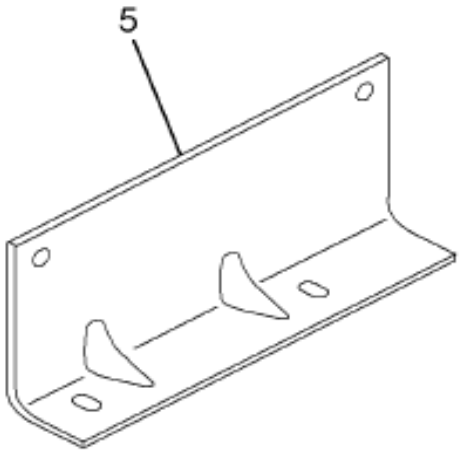

1480, 1550, 1590, 1610 & 1710 SERIES
W/OFFSET
1710HD & 1810 SERIES
W/OFFSET

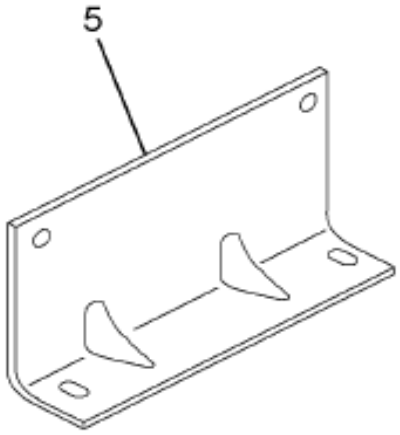

1710HD & 1810 SERIES
N/OFFSET

06-087-0002-01 H04

Item	Part No.	Qty	Description	Kit	Var	Figure
5	485165C1	1	BRACKET,CTR BRG		01VHX	

COPYRIGHT© 2011INTERNATIONAL TRUCK AND ENGINE CORP.

https://truckmanualshub.com/

Figure 0L821

INPUT YOKE; FWD REAR AXLE

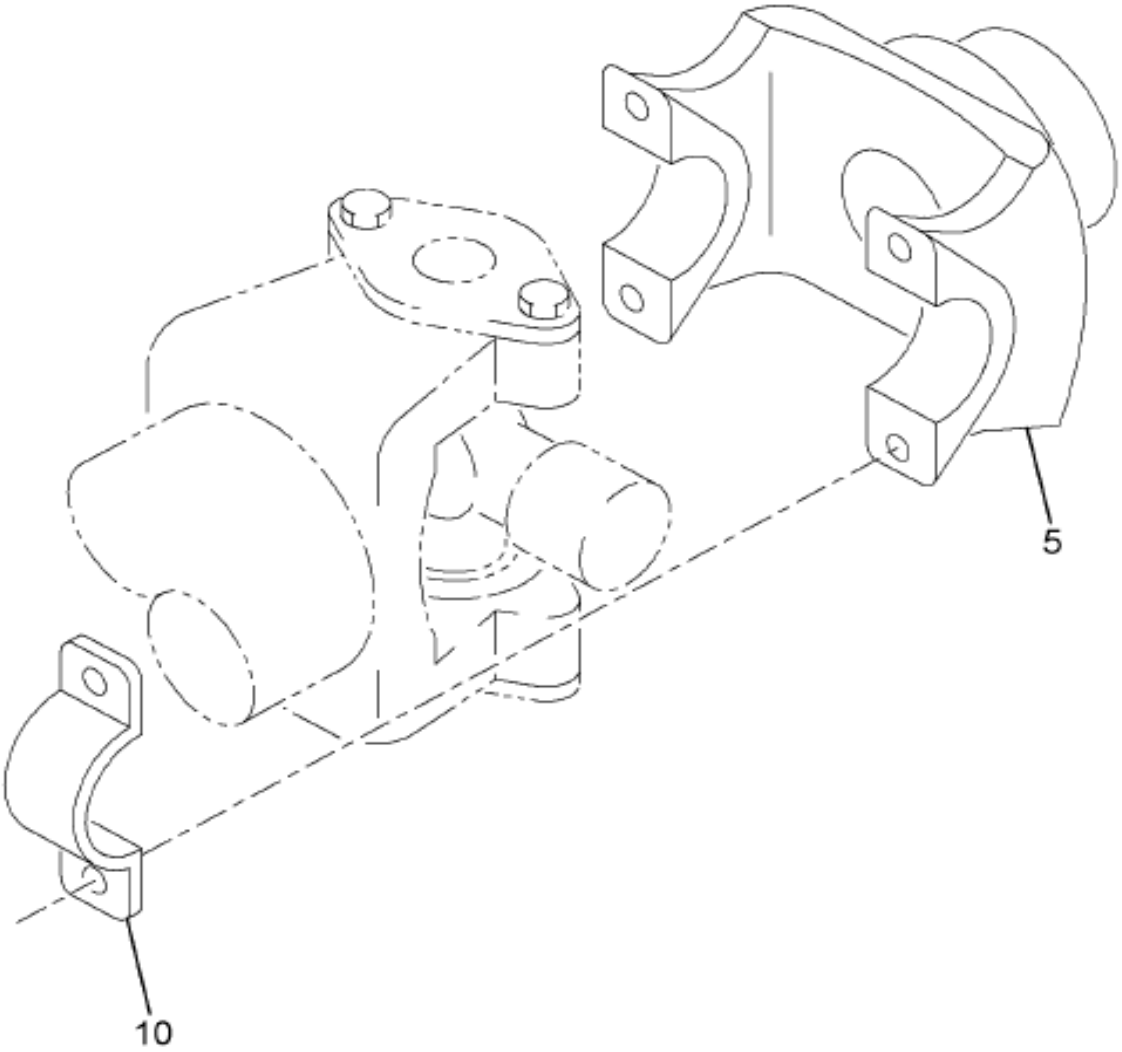

06-076-0001-00 C09

Item	Part No.	Qty	Description	Kit	Var	Figure
5		REF	FLANGE,TRUNNION W/SLINGER 1810		0L821	
10	2035774C91	1	KIT,STRAP&BOLT 1710,1760,1810		0L821	2035774C91

COPYRIGHT© 2011INTERNATIONAL TRUCK AND ENGINE CORP.

https://truckmanualshub.com/

Figure 2033774C91

KIT,STRAP&BOLT 1710,1760,1810

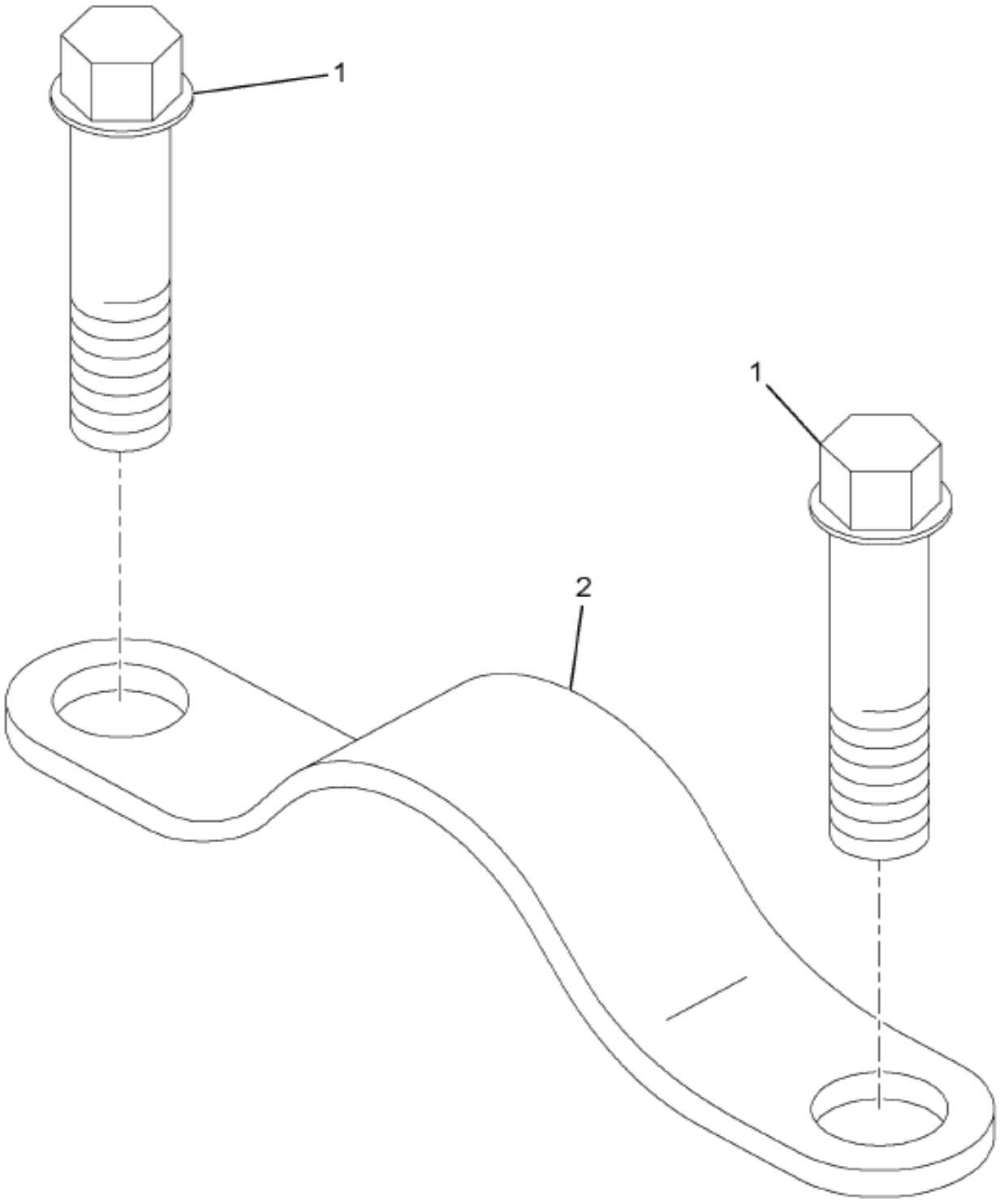

06-084-0002-00 H04

Item	Part No.	Qty	Description	Kit	Var	Figure
1	1657366C1	4	BOLT 12-POINT			
2	1657368C1	2	STRAP TRUN BRG 1710 1760 1810			
800		RF	NOTE: THE FOLLOWING PARTS ARE NON-ILLUSTRATED			
801	1657366C1	4	BOLT 12-POINT			
802	1657368C1	2	STRAP TRUN BRG 1710 1760 1810			

COPYRIGHT© 2011INTERNATIONAL TRUCK AND ENGINE CORP.

https://truckmanualshub.com/

Figure 2035774C91

KIT,STRAP&BOLT 1710,1760,1810

Item	Part No.	Qty	Description	Kit	Var	Figure
880		RF	NOTE: ASM BELOW COMPRISED OF ABOVE COMPONENTS			
881	2035774C91	RF	KIT,STRAP&BOLT 1710,1760,1810			

COPYRIGHT© 2011INTERNATIONAL TRUCK AND ENGINE CORP.

https://truckmanualshub.com/

Figure 0VJDW

INPUT YOKE; RR RR AXLE

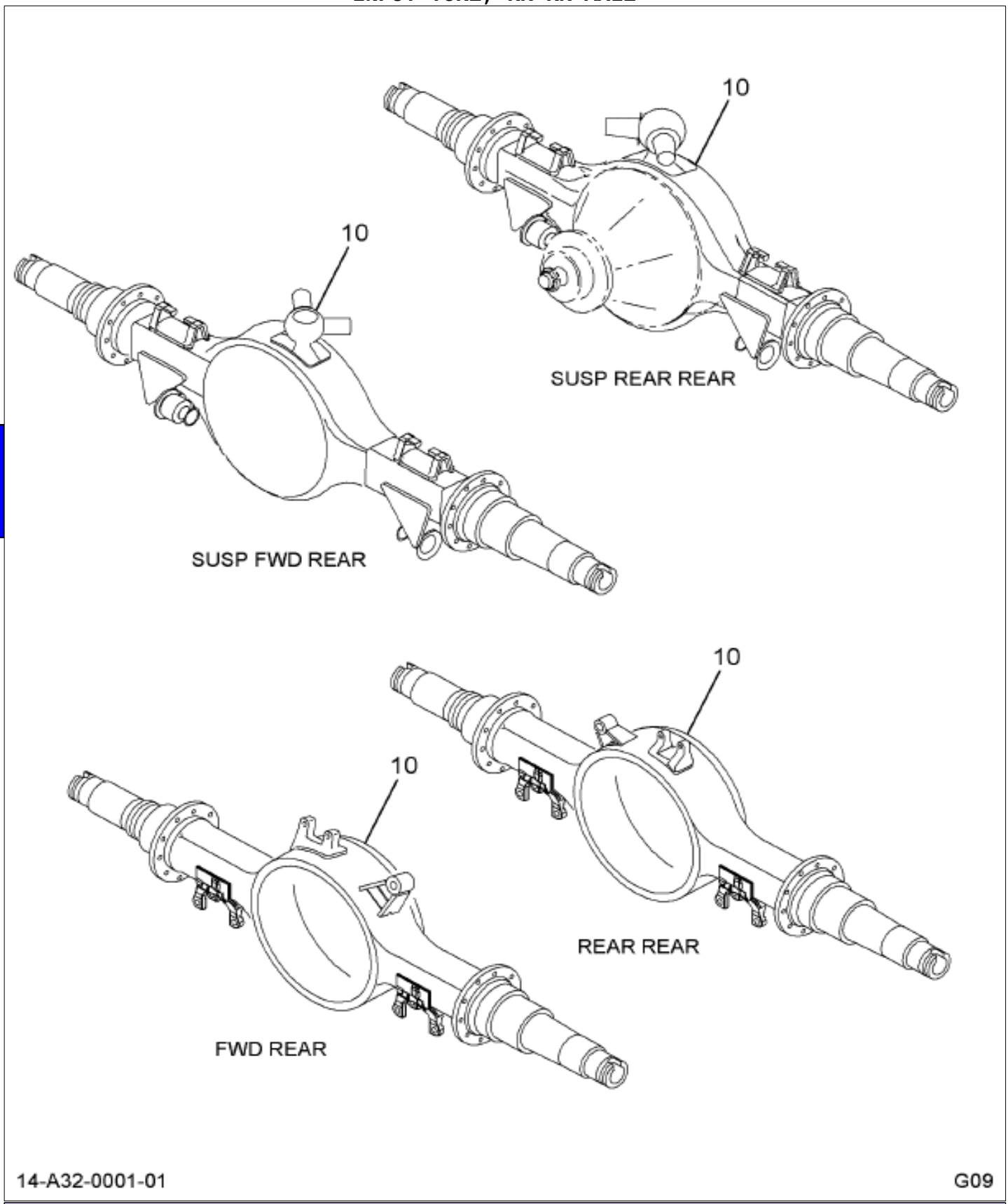

Item	Part No.	Qty	Description	Kit	Var	Figure
10	3705300F91	1	SHAFT,R/R AXLE OUTPT YK 1710		0VJPW	3705300F91

COPYRIGHT© 2011INTERNATIONAL TRUCK AND ENGINE CORP.

https://truckmanualshub.com/

Figure 3705300F91

SHAFT,R/R AXLE OUTPT YK 1710

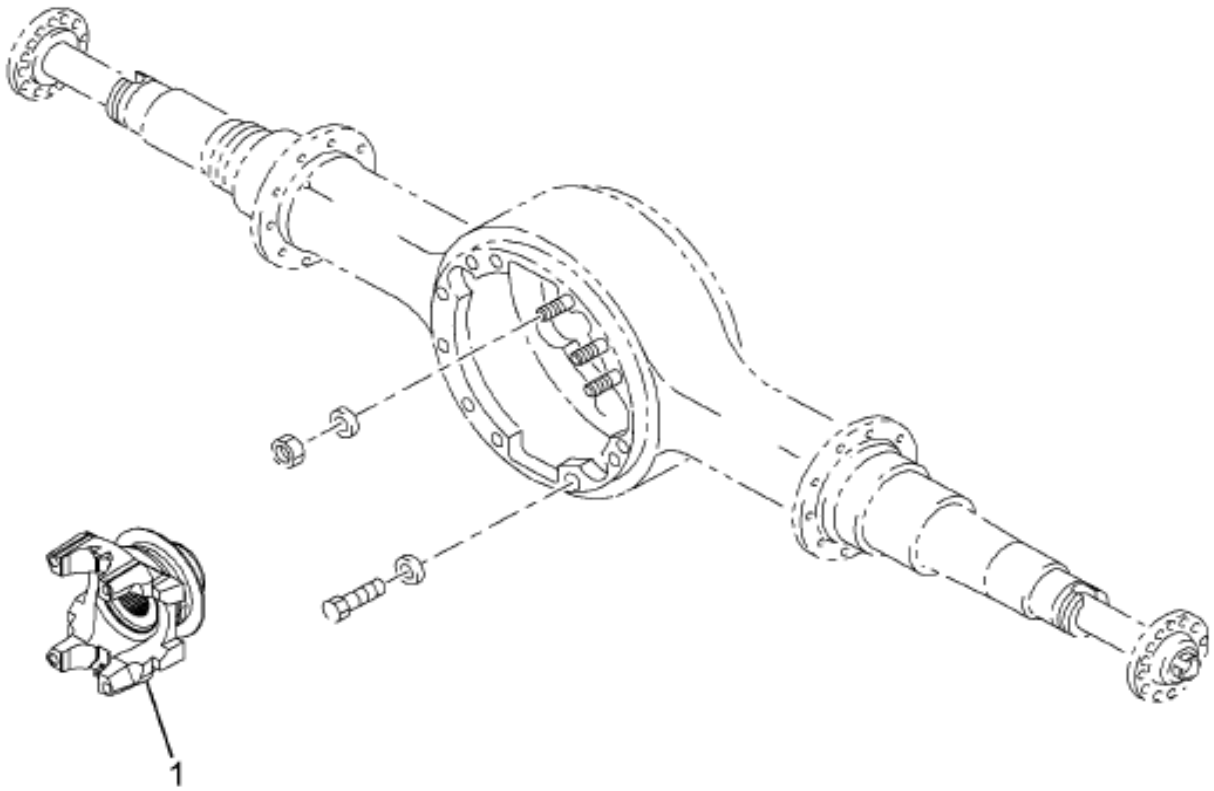

14-A45-0001-01 C09

Item	Part No.	Qty	Description	Kit	Var	Figure
1	2013008C91	1	FLANGE,TRUNNION 1710			
880		RF	NOTE: ASM BELOW COMPRISED OF ABOVE COMPONENTS			
881	3705300F91	RF	SHAFT,R/R AXLE OUTPT YK 1710			

COPYRIGHT© 2011INTERNATIONAL TRUCK AND ENGINE CORP.

https://truckmanualshub.com/

Figure 01ZVM

INPUT YOKE; SINGLE RR AUX/TANDEM RR AUX

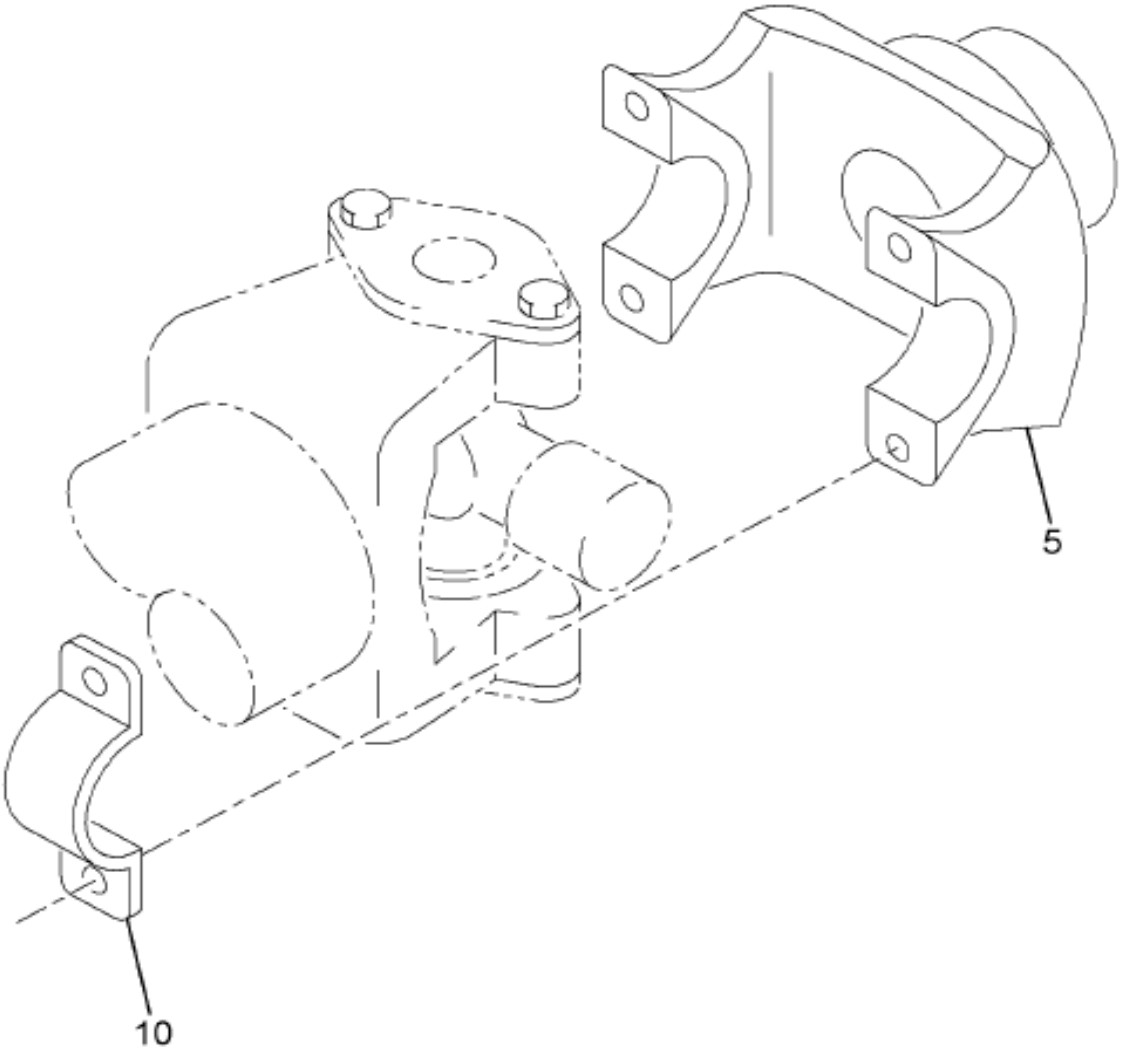

06-076-0001-00 C09

Item	Part No.	Qty	Description	Kit	Var	Figure
5		REF	FLANGE,TRUNNION 1710		01ZVM	
10	2035774C91	1	KIT,STRAP&BOLT 1710,1760,1810		01ZVM	2035774C91

COPYRIGHT© 2011INTERNATIONAL TRUCK AND ENGINE CORP.

https://truckmanualshub.com/

Figure 2033774C91

KIT,STRAP&BOLT 1710,1760,1810

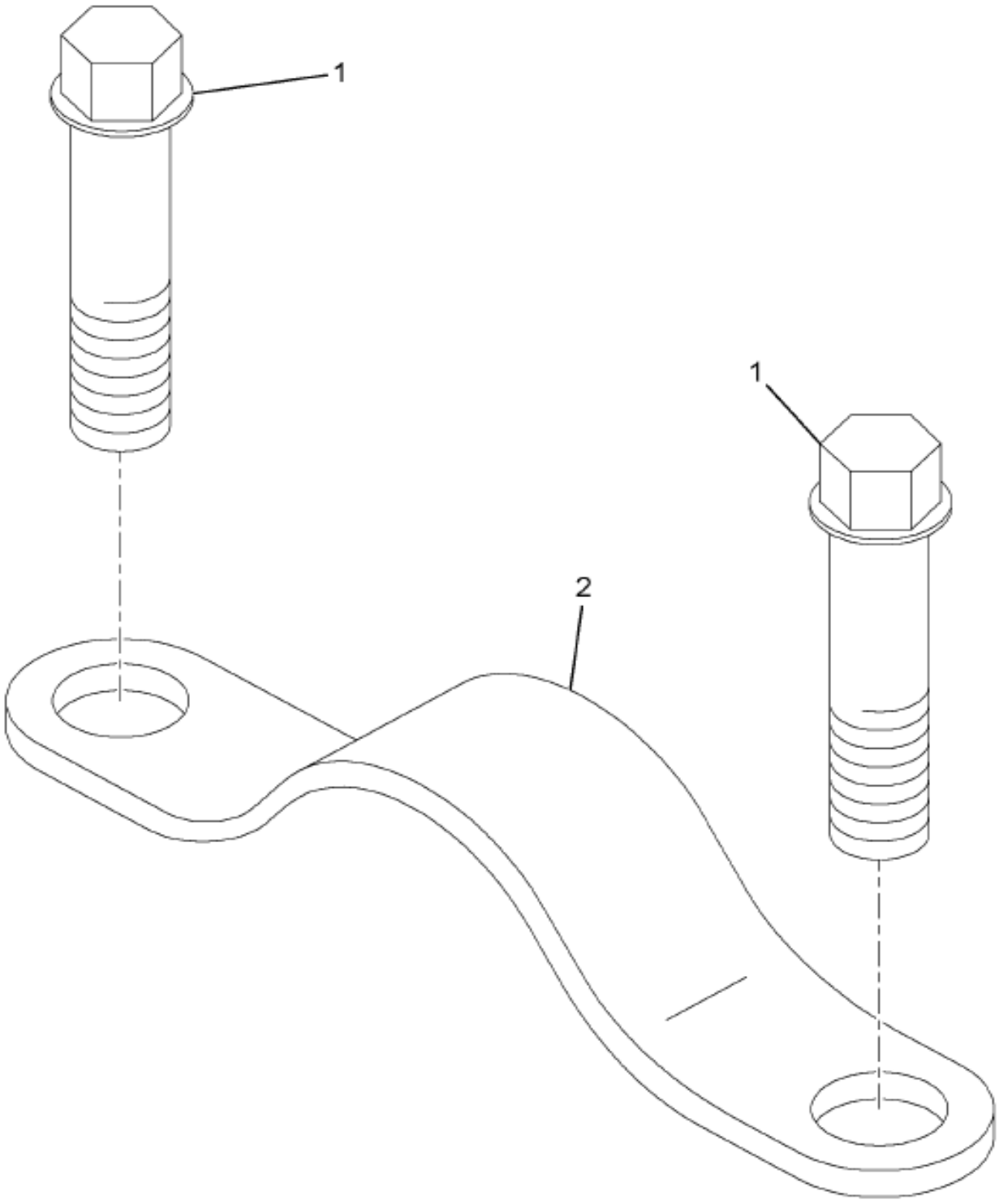

Item	Part No.	Qty	Description	Kit	Var	Figure
1	1657366C1	4	BOLT 12-POINT			
2	1657368C1	2	STRAP TRUN BRG 1710 1760 1810			
800		RF	NOTE: THE FOLLOWING PARTS ARE NON-ILLUSTRATED			
801	1657366C1	4	BOLT 12-POINT			
802	1657368C1	2	STRAP TRUN BRG 1710 1760 1810			

COPYRIGHT© 2011INTERNATIONAL TRUCK AND ENGINE CORP.

https://truckmanualshub.com/

Figure 2035774C91

KIT,STRAP&BOLT 1710,1760,1810

Item	Part No.	Qty	Description	Kit	Var	Figure
880		RF	NOTE: ASM BELOW COMPRISED OF ABOVE COMPONENTS			
881	2035774C91	RF	KIT,STRAP&BOLT 1710,1760,1810			

COPYRIGHT© 2011INTERNATIONAL TRUCK AND ENGINE CORP.

https://truckmanualshub.com/

Figure 01ZV0
OUTPUT YOKE; FWD REAR AXLE

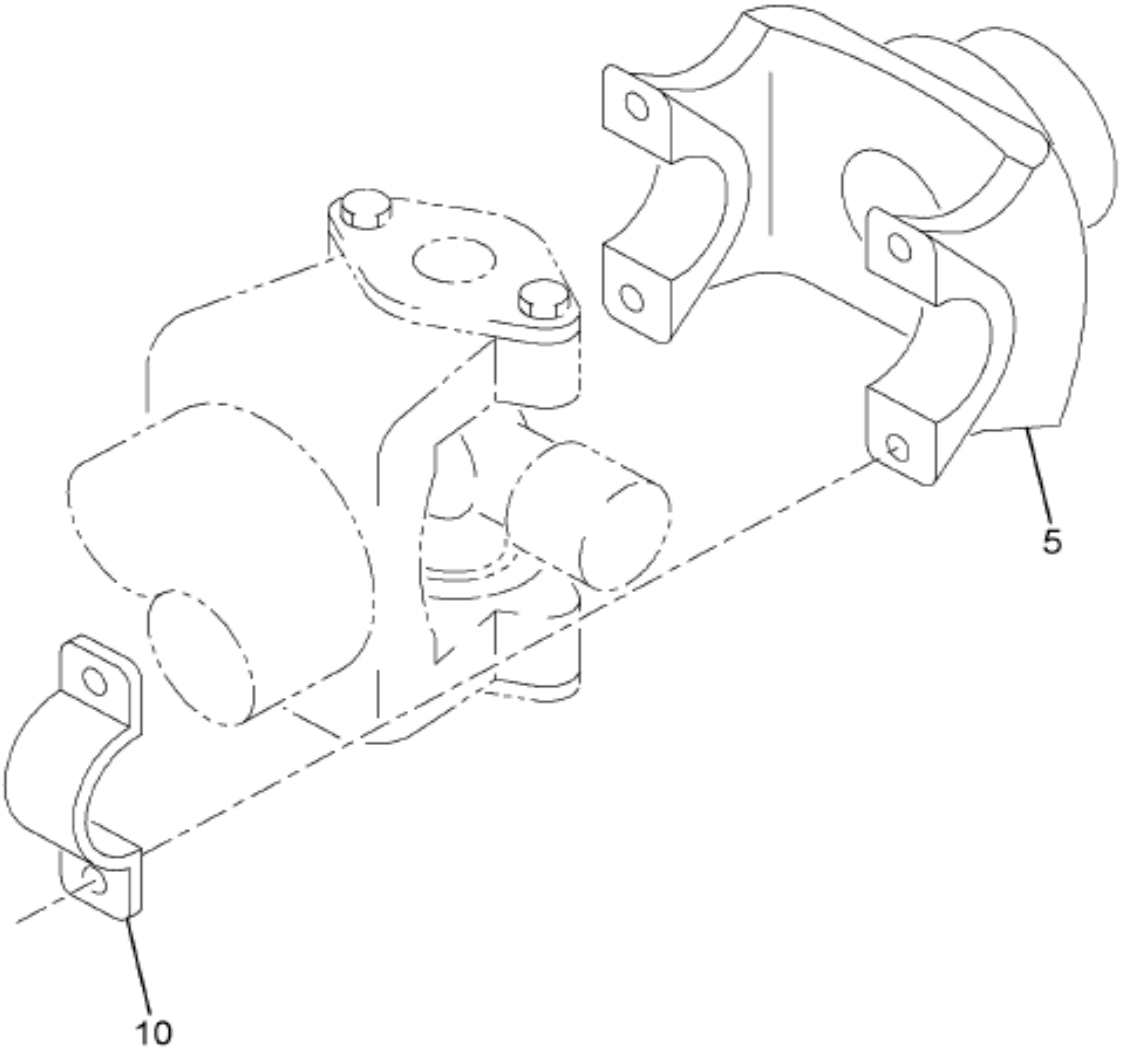

06-076-0001-00 C09

Item	Part No.	Qty	Description	Kit	Var	Figure
5		REF	FLANGE,TRUNNION 1710		01ZV0	
10	2035774C91	1	KIT,STRAP&BOLT 1710,1760,1810		01ZV0	2035774C91

COPYRIGHT© 2011INTERNATIONAL TRUCK AND ENGINE CORP.

https://truckmanualshub.com/

Figure 2033774C91

KIT,STRAP&BOLT 1710,1760,1810

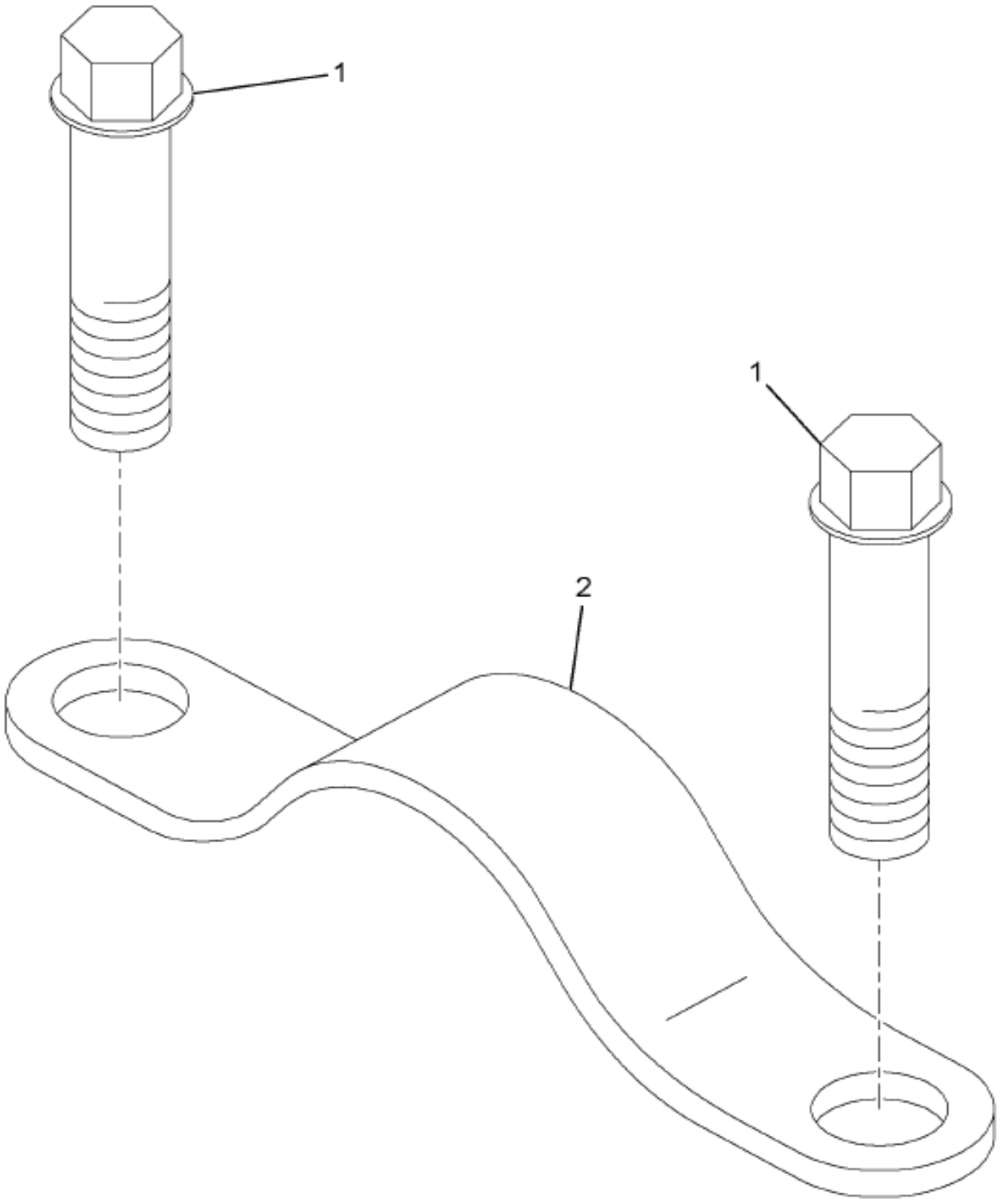

Item	Part No.	Qty	Description	Kit	Var	Figure
1	1657366C1	4	BOLT 12-POINT			
2	1657368C1	2	STRAP TRUN BRG 1710 1760 1810			
800		RF	NOTE: THE FOLLOWING PARTS ARE NON-ILLUSTRATED			
801	1657366C1	4	BOLT 12-POINT			
802	1657368C1	2	STRAP TRUN BRG 1710 1760 1810			

COPYRIGHT© 2011INTERNATIONAL TRUCK AND ENGINE CORP.

https://truckmanualshub.com/

Figure 2035774C91

KIT,STRAP&BOLT 1710,1760,1810

Item	Part No.	Qty	Description	Kit	Var	Figure
880		RF	NOTE: ASM BELOW COMPRISED OF ABOVE COMPONENTS			
881	2035774C91	RF	KIT,STRAP&BOLT 1710,1760,1810			

COPYRIGHT© 2011INTERNATIONAL TRUCK AND ENGINE CORP.

https://truckmanualshub.com/

Figure 01ZDG

PROP SHAFT ASM; 1710 SERIES

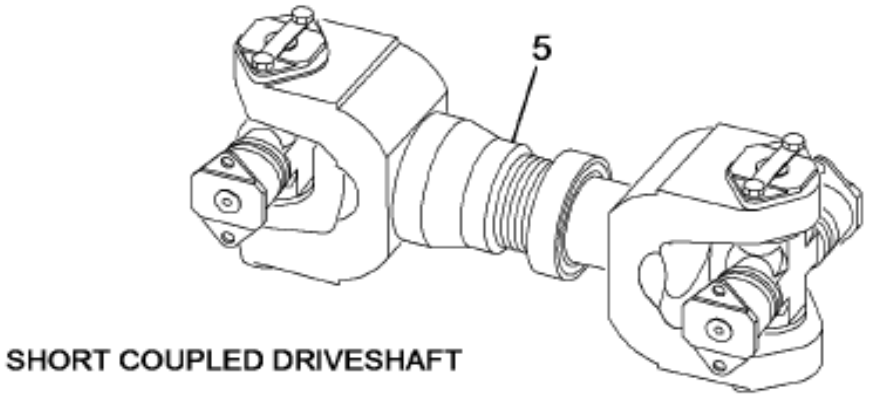

SHORT COUPLED DRIVESHAFT

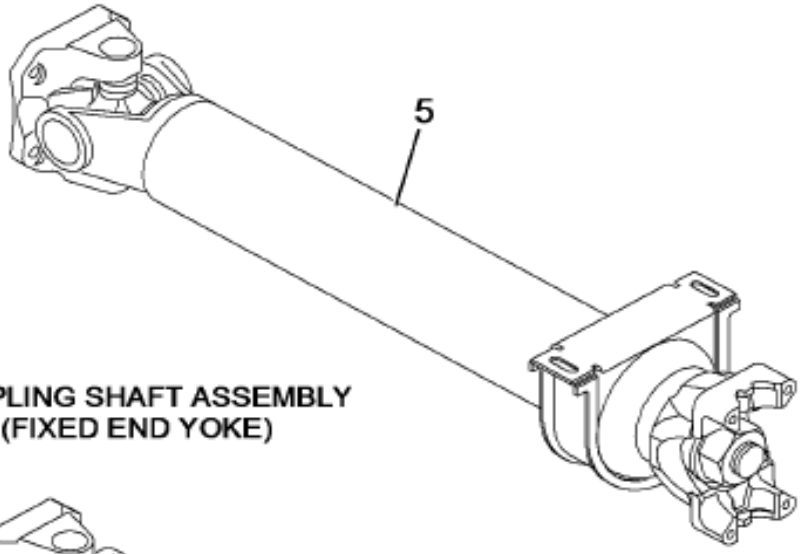

COUPLING SHAFT ASSEMBLY
(FIXED END YOKE)

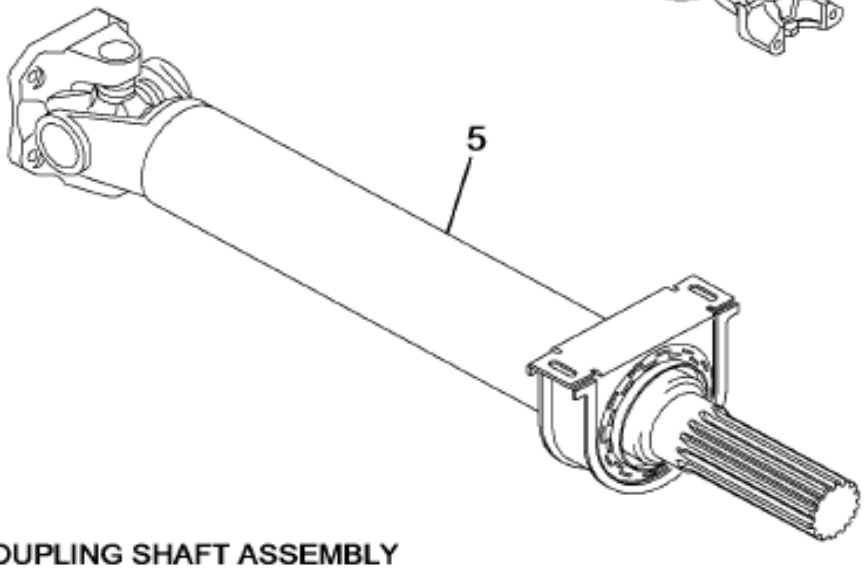

COUPLING SHAFT ASSEMBLY
(REVERSE SLIP TYPE)

06-752-0001-AA L09

Item	Part No.	Qty	Description	Kit	Var	Figure
5	427DTP0515	1	PROP SHAFT		01ZDG	427DTP0515
			NON-ILLUSTRATED REFERENCE FIGURE 427DTP0515			
	427DTPXXXX	1	DRIVESHAFT ASSY,1710 SERIES,ME			427DTPXXXX

COPYRIGHT© 2011INTERNATIONAL TRUCK AND ENGINE CORP.

https://truckmanualshub.com/

METRIC FABRICATION

ITEM	PRODUCTION NUMBER FABRICATION	SUBTRACT FROM LAST 3 DIGITS SECTION (1A)	SERVICE TUBE ASSEMBLY (METRIC) (1B)	BULK TUBE NUMBER (1C)	WELD COMPONENTS YOKE OR STUB (1D)	WELD COMPONENTS YOKE OR STUB (1E)	SPECIAL NOTES

XxXX Reference on production number indicates AN UNKNOWN PRODUCTION LENGTH that is determined from your lineset ticket 10-digit code.

IMPORTANT: When the last 4 digits of your 10-digit production propeller shaft number are identified; subtract the value shown in the subtraction column from these four digits for the BULK TUBE CUT LENGTH in millimeters.

00-000-4824-01 J03

Figure 1 of 7

COPYRIGHT© 2011INTERNATIONAL TRUCK AND ENGINE CORP.

https://truckmanualshub.com/

Figure 427DITFXXXX
DRIVESHAFT ASSY,1710 SERIES,ME

METRIC COMPONENTS

PRODUCTION NUMBER / ITEM	SLIP YOKE (2A)	U-JOINT KIT FRONT (2B)	U-JOINT KIT REAR (2C)	ADAPTER FRONT (2D)	ADAPTER REAR (2E)	NOTES

00-000-4826-01 K03

Figure 2 of 7

COPYRIGHT© 2011INTERNATIONAL TRUCK AND ENGINE CORP.

https://truckmanualshub.com/
Figure 427D1FXXXX
DRIVESHAFT ASSY,1710 SERIES,ME

EXPLANATION OF THE LOCATION OF PROPELLER SHAFTS AS SHOWN ON LINE SET TICKETS

The 10-digit code numbers are displayed on the Line Set Tickets which are attached to the sun visor and placed in the glove compartment of the truck, and are mailed to the selling dealer. When more than one propeller shaft is used on a truck, they are always listed in the same sequence on the Line Set Ticket as they are positioned on the truck (starting at the front and moving to the rear). Some Line Set Tickets show the position numbers of the propeller shafts.

For example, let's take a long wheelbase 9370 (6 x 4) with an auxiliary transmission. The shafts would be listed in this order: First the shaft from the main transmission to the auxiliary transmisson; next, the shaft from the auxiliary transmission to the center bearing; then the shaft from the center bearing to the forward-rear axle; and last, the shaft from the forward-rear axle to the rear-rear axle.

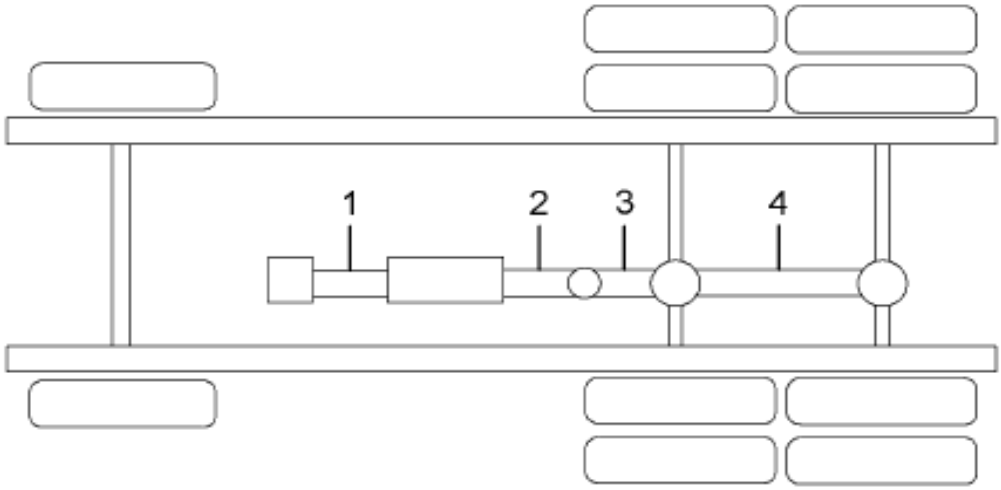

6X4, W/AUXILIARY TRANSMISSION
AND ONE CENTER BEARING

Exceptions to the procedure are: (1) Trucks with front driving axles(6 x 6 or 4 x 4). The shaft from the transfer case to the front axle is always listed last on Line Set Tickets for these trucks. (2) 1853FC and 3900FC models (forward-control school buses) with three center bearings list the third shaft last - the one between second and third center bearings - after the rear shaft.

This cross-reference can be used to determine the part numbers of the propeller tube assembly, slip yoke, and the U-joint kits without requiring and information othen than the 10-digit code number of the production shafts as shown on the Line Set Ticket.

06-752-0002-01 C05

Grp 06

Figure 3 of 7

COPYRIGHT© 2011INTERNATIONAL TRUCK AND ENGINE CORP.

https://truckmanualshub.com/
Figure 427DTFXXXX
DRIVESHAFT ASSY,1710 SERIES,ME

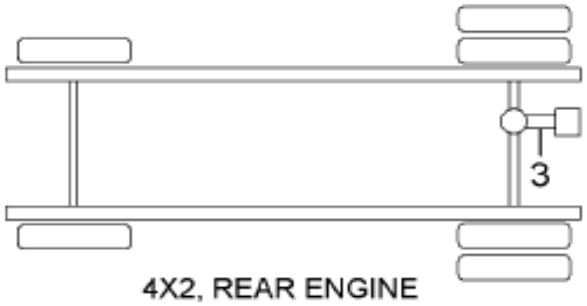

4X2, REAR ENGINE

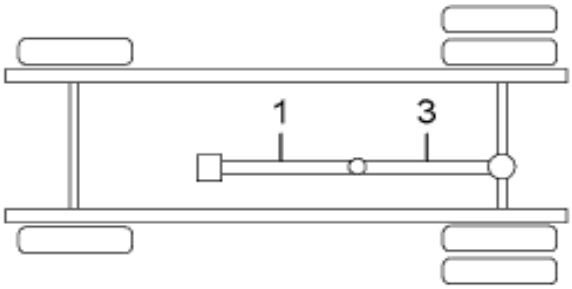

4X2, W/ ONE CENTER BEARING

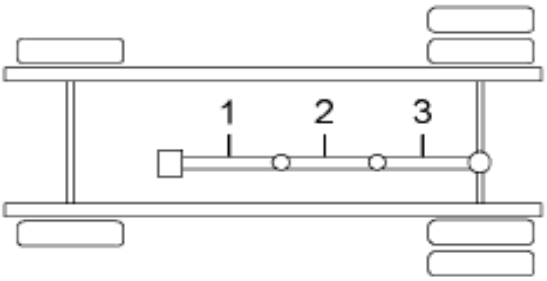

4X2, W/ TWO CENTER BEARINGS

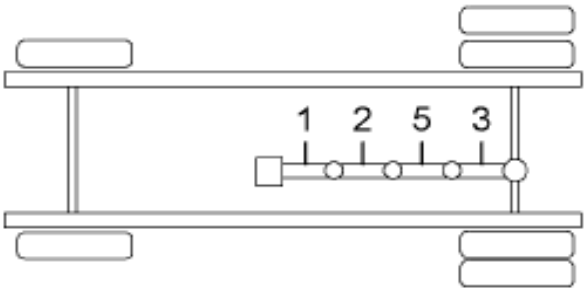

4X2, W/ THREE CENTER BEARINGS

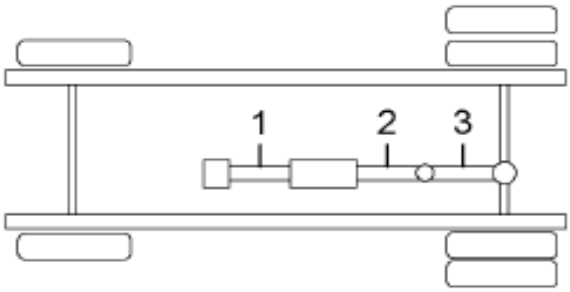

4X2, W/ AUXILIARY TRANSMISSON
AND ONE CENTER BEARING

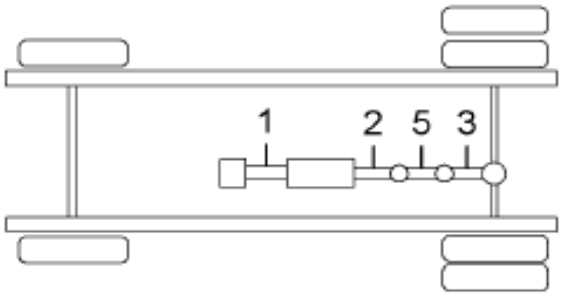

4X2, W/ AUXILIARY TRANSMISSON
AND TWO CENTER BEARINGS

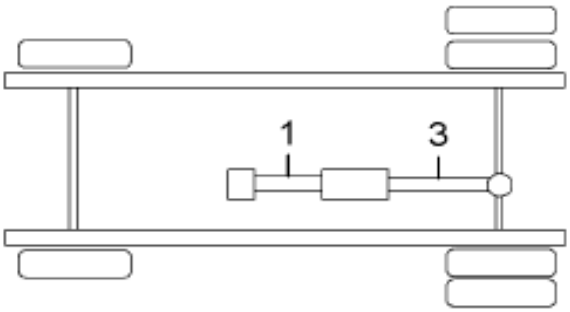

4X2, W/ AUXILIARY TRANSMISSION

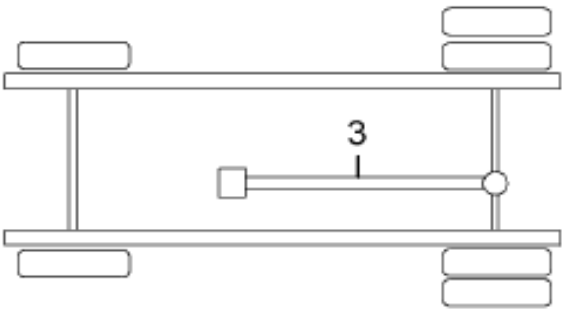

4X2, W/O CENTER BEARING

06-752-0002-02 C05

Figure 4 of 7

COPYRIGHT© 2011INTERNATIONAL TRUCK AND ENGINE CORP.

https://truckmanualshub.com/

Figure 427DITFXXXX
DRIVESHAFT ASSY,1710 SERIES,ME

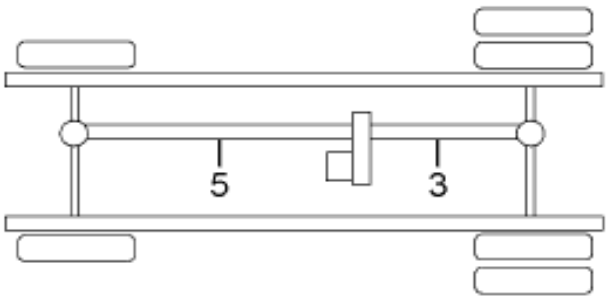

4X4, COMBINATION TRANSMISSION AND TRANSFER CASE

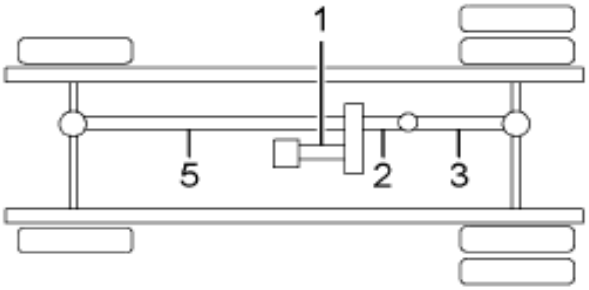

4X4, SEPERATE TRANSFER CASE AND ONE CENTER BEARING

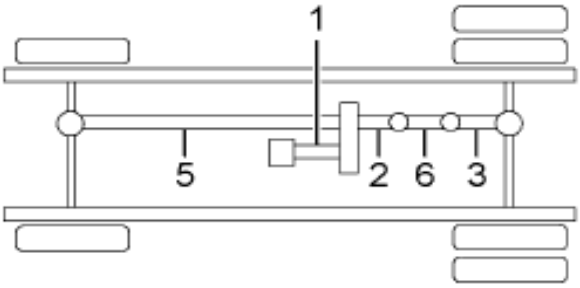

4X4, SEPERATE TRANSFER CASE AND TWO CENTER BEARINGS

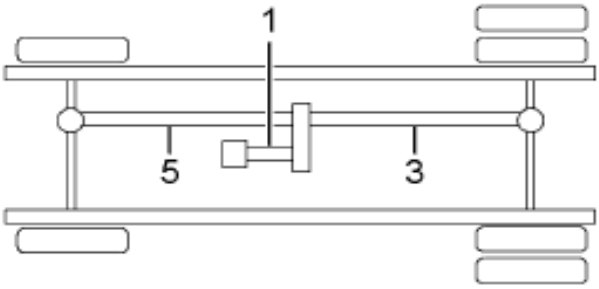

4X4, SEPERATE TRANSFER CASE W/O CENTER BEARING

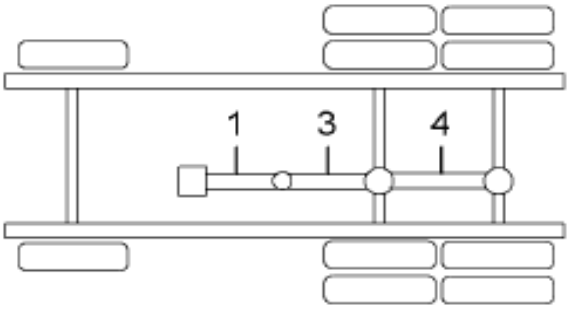

6X4, W/ONE CENTER BEARING

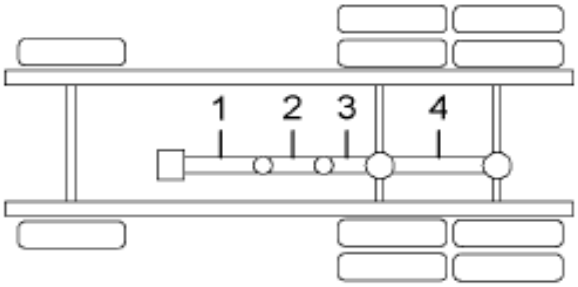

6X4, W/TWO CENTER BEARINGS

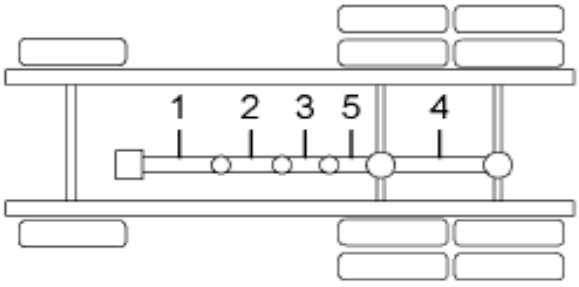

6X4, W/THREE CENTER BEARINGS

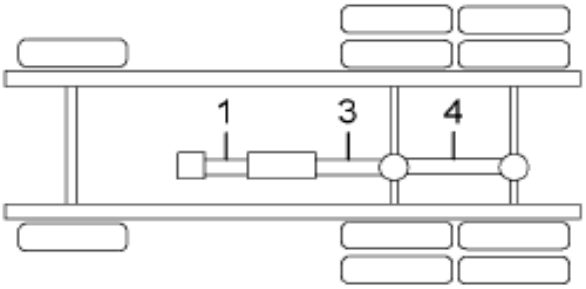

6X4, W/AUXILIARY TRANSMISSION

06-752-0002-03 C05

Grp 06

Figure 5 of 7

COPYRIGHT© 2011INTERNATIONAL TRUCK AND ENGINE CORP.

https://truckmanualshub.com/

Figure 427DTFXXXX
DRIVESHAFT ASSY,1710 SERIES,ME

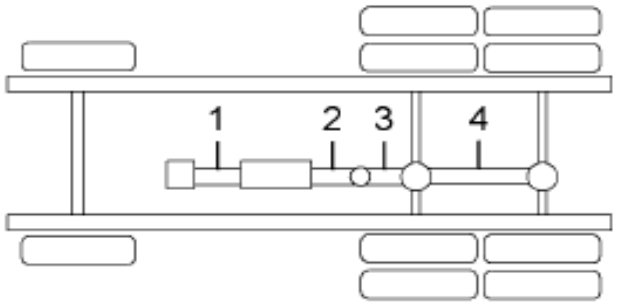

6X4, W/AUXILIARY TRANSMISSION AND ONE CENTER BEARING

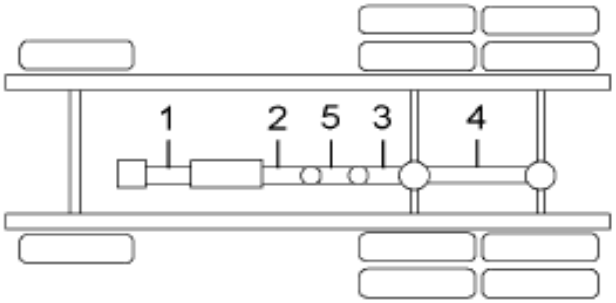

6X4, W/AUXILIARY TRANSMISSION AND TWO CENTER BEARINGS

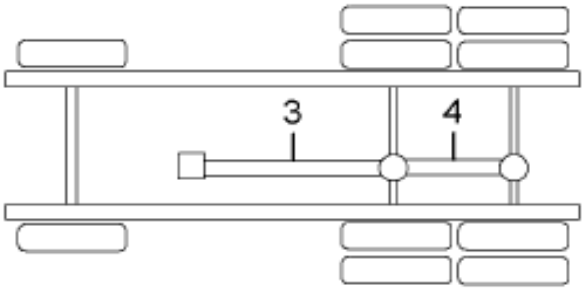

6X4, W/O CENTER BEARING

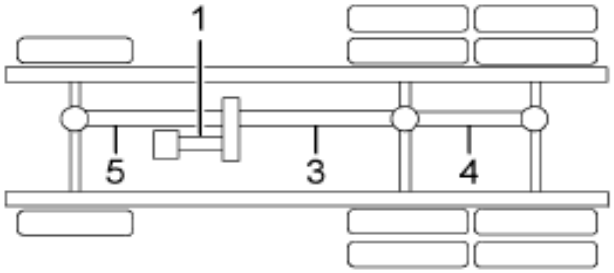

6X6, W/O CENTER BEARING

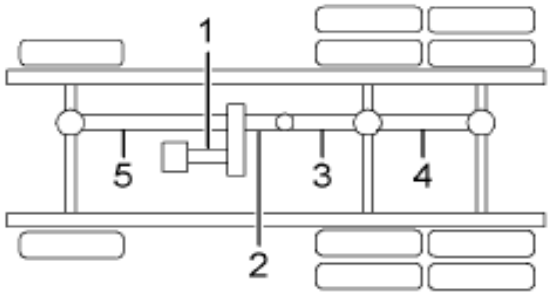

6X6, W/ONE CENTER BEARING

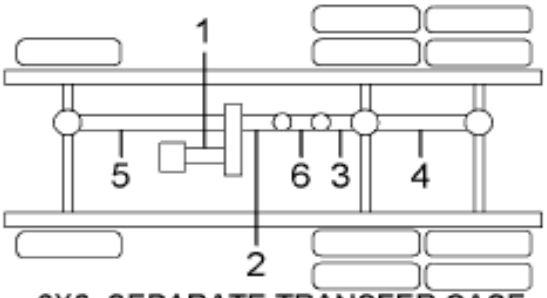

6X6, SEPARATE TRANSFER CASE W/ TWO CENTER BEARINGS

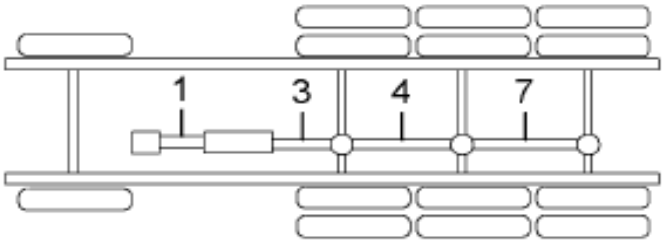

8X6, W/ AUXILIARY TRANSMISSION

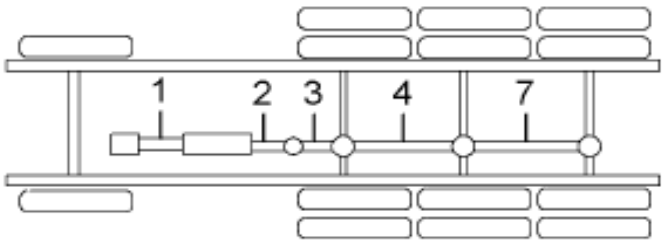

8X6, W/ AUXILIARY TRANSMISSION AND ONE CENTER BEARING

06-752-0002-04 F06

Figure 6 of 7

COPYRIGHT© 2011INTERNATIONAL TRUCK AND ENGINE CORP.

https://truckmanualshub.com/

Figure 427D1PXXXX
DRIVESHAFT ASSY,1710 SERIES,ME

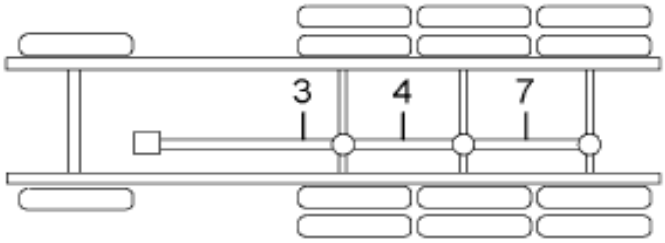

8X6, W/O CENTER BEARING

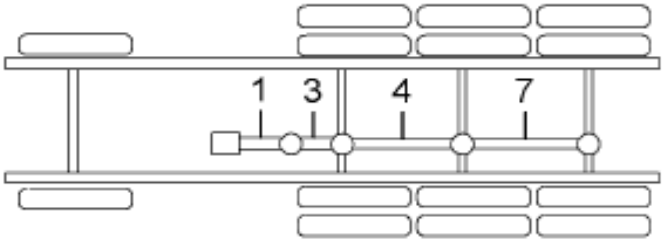

8X6, W/ ONE CENTER BEARING

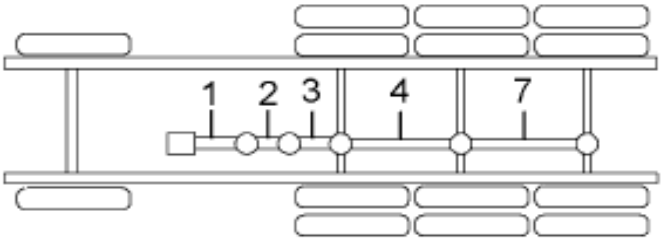

8X6, W/ ONE CENTER BEARING

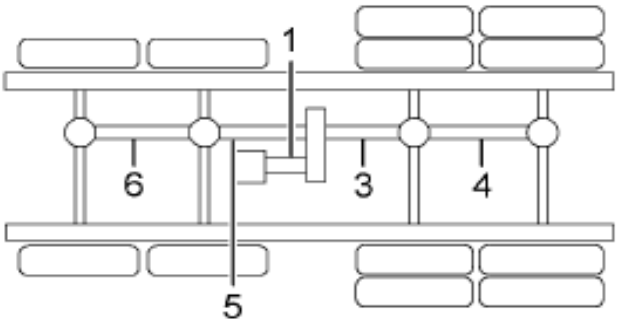

8X8, W/O CENTER BEARING

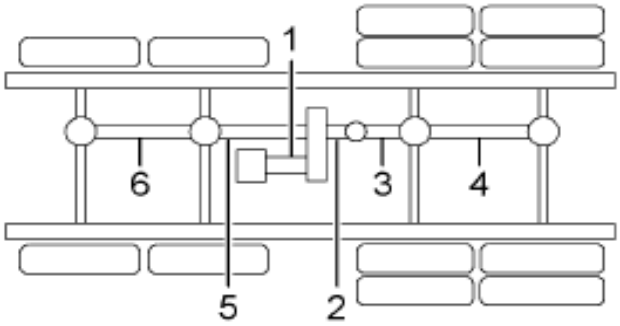

8X8, W/ONE CENTER BEARING

Grp 06

06-752-0002-05 F06

Item	Part No.	Qty	Description	Kit	Var	Figure
1		RF	SEE SHEET 1 FOR FABRICATION			
1		RF	SEE SHEET 2 FOR COMPONENTS			
1		RF	SUBTRACT 450 FROM XXXX TO GET TUBE CUT LENGTH			
1		AR	TUBE ASM,SERVICE			
1		AR	TUBE,WELDED PLAIN 4"X.109X1'			

COPYRIGHT© 2011INTERNATIONAL TRUCK AND ENGINE CORP.

https://truckmanualshub.com/

Figure 427DTPXXXX
DRIVESHAFT ASSY,1710 SERIES,ME

Item	Part No.	Qty	Description	Kit	Var	Figure
1	2508803C1	1	YOKE,WELD 1710			
1	425866C1	1	END,PROP TUBE STUB			
2	356601C21	1	YOKE,ASSY SLIP 1710 2.5X16 SPL			
2	1696915C91	KT	U-JOINT,W/STRAP & BOLTS,1710			
800		RF	NOTE: THE FOLLOWING PARTS ARE NON-ILLUSTRATED			
801	109461	1	FITTING, 1/8 PTF X/SHORT LUB			
802	1662161C1	1	KIT, DUST CAP			
880		RF	NOTE: ASM BELOW COMPRISED OF ABOVE COMPONENTS			
881	427DTPXXXX	RF	DRIVESHAFT ASSY,1710 SERIES,ME			

COPYRIGHT© 2011INTERNATIONAL TRUCK AND ENGINE CORP.

https://truckmanualshub.com/

Figure 0HKXW

PROP SHAFT ASM; 1810 SERIES

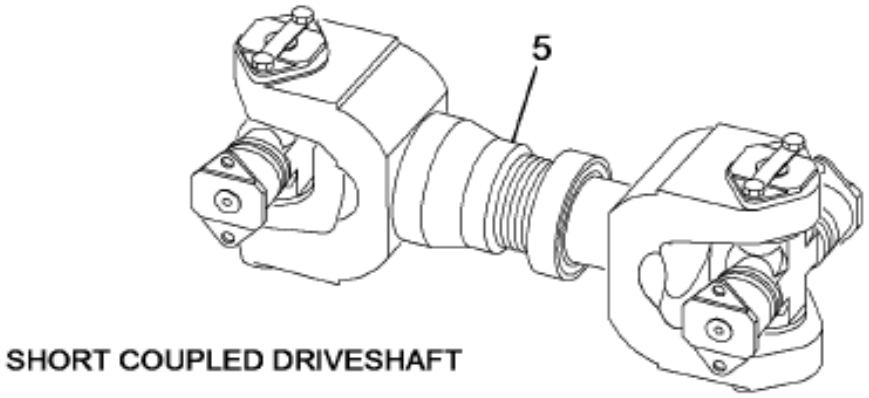

SHORT COUPLED DRIVESHAFT

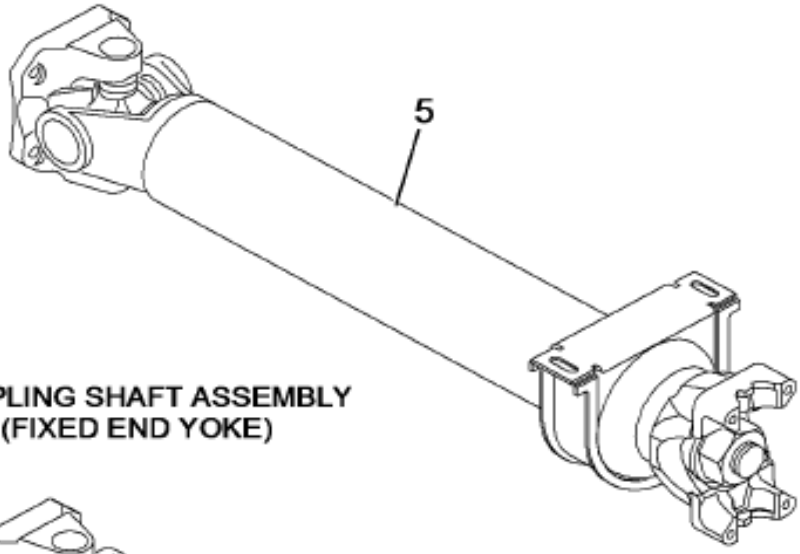

COUPLING SHAFT ASSEMBLY
(FIXED END YOKE)

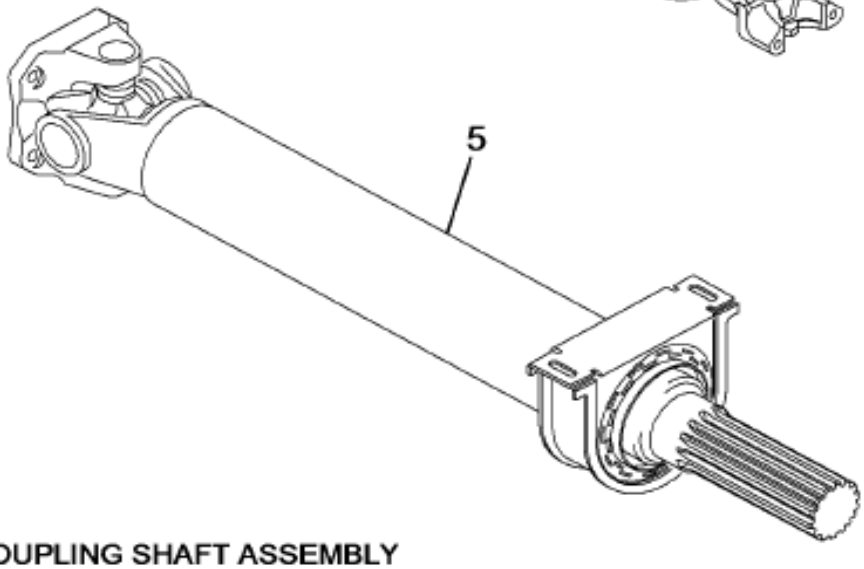

COUPLING SHAFT ASSEMBLY
(REVERSE SLIP TYPE)

06-752-0001-AA L09

Grp 06

Item	Part No.	Qty	Description	Kit	Var	Figure
5	429DTC0930	1	PROP SHAFT		0HKXW	429DTC0930
			NON-ILLUSTRATED REFERENCE FIGURE 429DTC0930			
	429DTCXXXX	1	DRIVESHAFT ASSY, 1810 SERIES M			429DTCXXXX

COPYRIGHT© 2011INTERNATIONAL TRUCK AND ENGINE CORP.

https://truckmanualshub.com/
Figure 429D1CXXXX
DRIVESHAFT ASSY, 1810 SERIES M

METRIC FABRICATION

PRODUCTION NUMBER FABRICATION ITEM	SUBTRACT FROM LAST 3 DIGITS SECTION (1A)	SERVICE TUBE ASSEMBLY (METRIC) (1B)	BULK TUBE NUMBER (1C)	WELD COMPONENTS YOKE OR STUB (1D)	WELD COMPONENTS YOKE OR STUB (1E)	SPECIAL NOTES

XxXX Reference on production number indicates AN UNKNOWN PRODUCTION LENGTH that is determined from your lineset ticket 10-digit code.

IMPORTANT: When the last 4 digits of your 10-digit production propeller shaft number are identified; subtract the value shown in the subtraction column from these four digits for the BULK TUBE CUT LENGTH in millimeters.

00-000-4824-01 J03

Figure 1 of 8

COPYRIGHT© 2011INTERNATIONAL TRUCK AND ENGINE CORP.

https://truckmanualshub.com/

Figure 429D1CXXXX
DRIVESHAFT ASSY, 1810 SERIES M

METRIC COMPONENTS

PRODUCTION NUMBER / ITEM	SLIP YOKE (2A)	U-JOINT KIT FRONT (2B)	U-JOINT KIT REAR (2C)	ADAPTER FRONT (2D)	ADAPTER REAR (2E)	NOTES

00-000-4826-01 K03

Grp 06

Figure 2 of 8

COPYRIGHT© 2011INTERNATIONAL TRUCK AND ENGINE CORP.

https://truckmanuals.hub.com/
Figure 429D1CXXXX
DRIVESHAFT ASSY, 1810 SERIES M

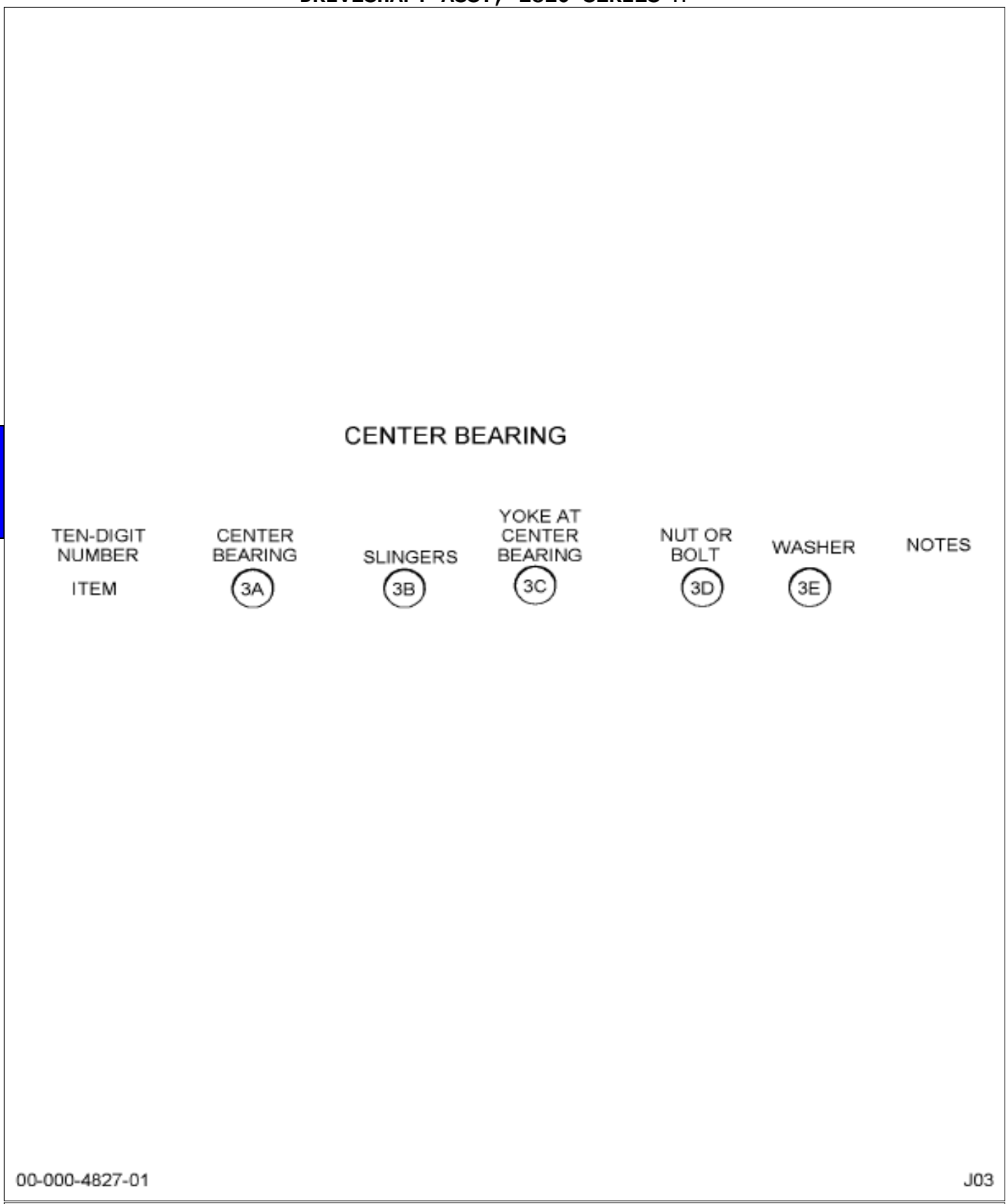

Figure 3 of 8

COPYRIGHT© 2011INTERNATIONAL TRUCK AND ENGINE CORP.

EXPLANATION OF THE LOCATION OF PROPELLER SHAFTS AS SHOWN ON LINE SET TICKETS

The 10-digit code numbers are displayed on the Line Set Tickets which are attached to the sun visor and placed in the glove compartment of the truck, and are mailed to the selling dealer. When more than one propeller shaft is used on a truck, they are always listed in the same sequence on the Line Set Ticket as they are positioned on the truck (starting at the front and moving to the rear). Some Line Set Tickets show the position numbers of the propeller shafts.

For example, let's take a long wheelbase 9370 (6 x 4) with an auxiliary transmission. The shafts would be listed in this order: First the shaft from the main transmission to the auxiliary transmisson; next, the shaft from the auxiliary transmission to the center bearing; then the shaft from the center bearing to the forward-rear axle; and last, the shaft from the forward-rear axle to the rear-rear axle.

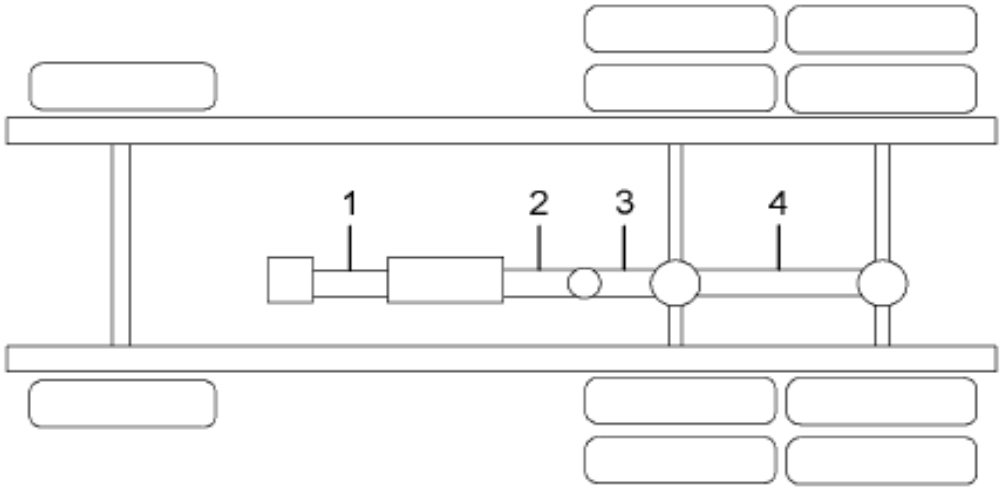

6X4, W/AUXILIARY TRANSMISSION
AND ONE CENTER BEARING

Exceptions to the procedure are: (1) Trucks with front driving axles(6 x 6 or 4 x 4). The shaft from the transfer case to the front axle is always listed last on Line Set Tickets for these trucks. (2) 1853FC and 3900FC models (forward-control school buses) with three center bearings list the third shaft last - the one between second and third center bearings - after the rear shaft.

This cross-reference can be used to determine the part numbers of the propeller tube assembly, slip yoke, and the U-joint kits without requiring and information othen than the 10-digit code number of the production shafts as shown on the Line Set Ticket.

06-752-0002-01 C05

Grp 06

Figure 4 of 8

COPYRIGHT© 2011INTERNATIONAL TRUCK AND ENGINE CORP.

https://truckmanualshub.com/

Figure 429D1CXXXX
DRIVESHAFT ASSY, 1810 SERIES M

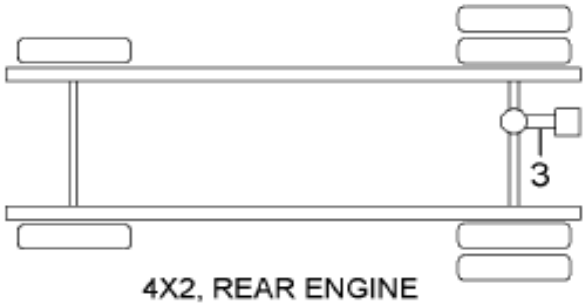

4X2, REAR ENGINE

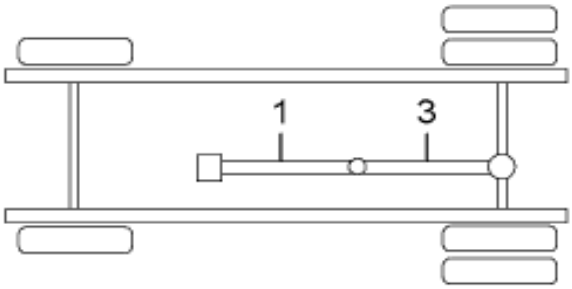

4X2, W/ ONE CENTER BEARING

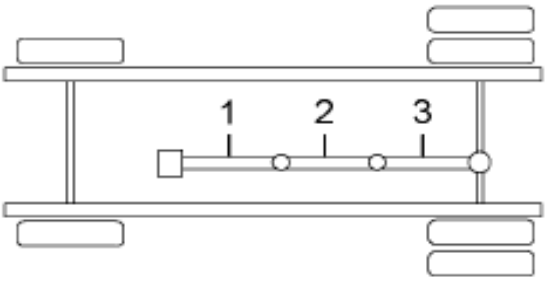

4X2, W/ TWO CENTER BEARINGS

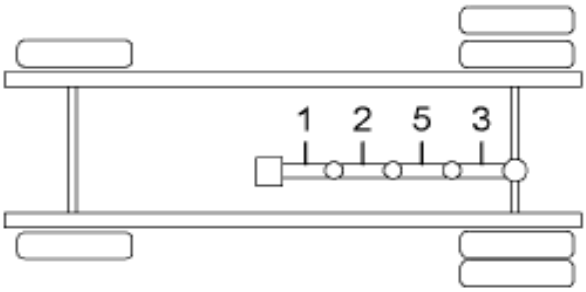

4X2, W/ THREE CENTER BEARINGS

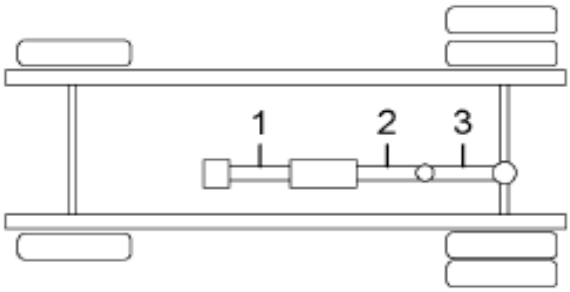

4X2, W/ AUXILIARY TRANSMISSON
AND ONE CENTER BEARING

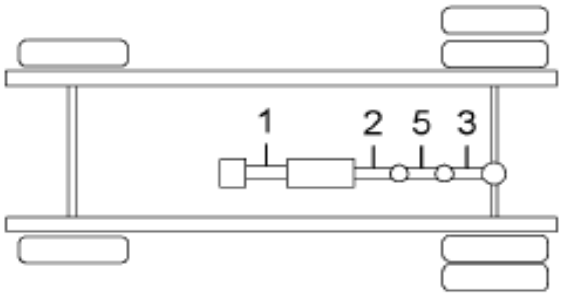

4X2, W/ AUXILIARY TRANSMISSON
AND TWO CENTER BEARINGS

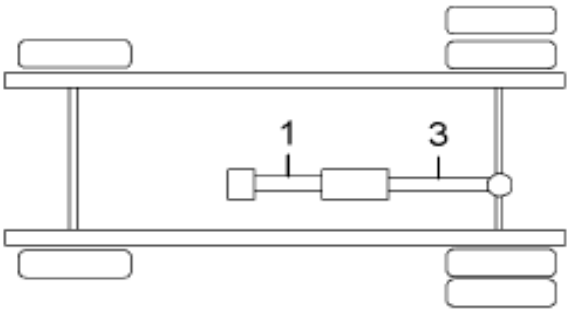

4X2, W/ AUXILIARY TRANSMISSION

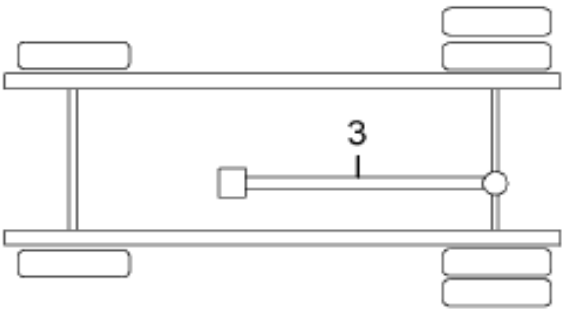

4X2, W/O CENTER BEARING

06-752-0002-02 C05

Figure 5 of 8

COPYRIGHT© 2011INTERNATIONAL TRUCK AND ENGINE CORP.

https://truckmanualshub.com/

Figure 429D1CXXXX
DRIVESHAFT ASSY, 1810 SERIES M

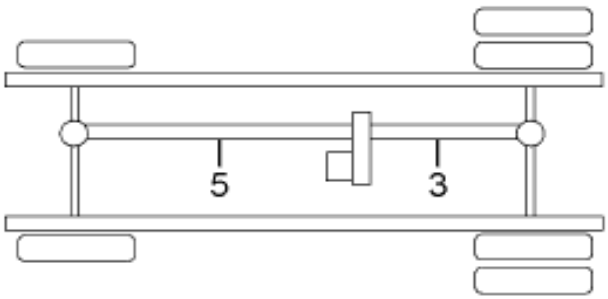

4X4, COMBINATION TRANSMISSION AND TRANSFER CASE

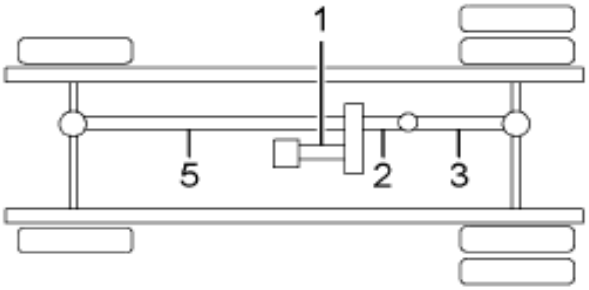

4X4, SEPERATE TRANSFER CASE AND ONE CENTER BEARING

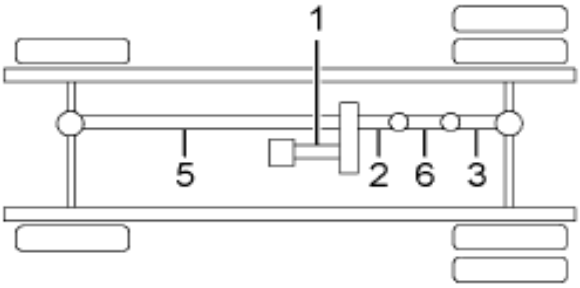

4X4, SEPERATE TRANSFER CASE AND TWO CENTER BEARINGS

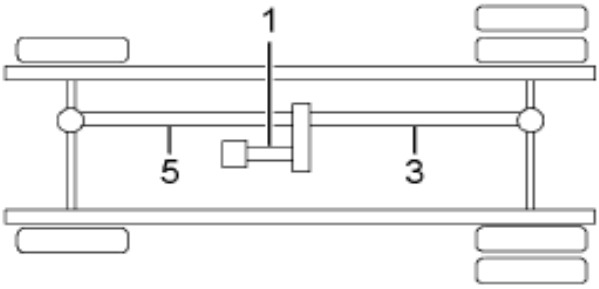

4X4, SEPERATE TRANSFER CASE W/O CENTER BEARING

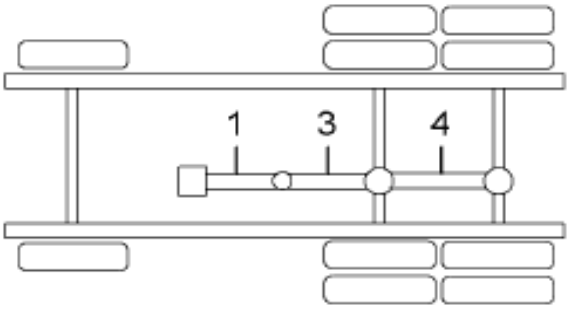

6X4, W/ONE CENTER BEARING

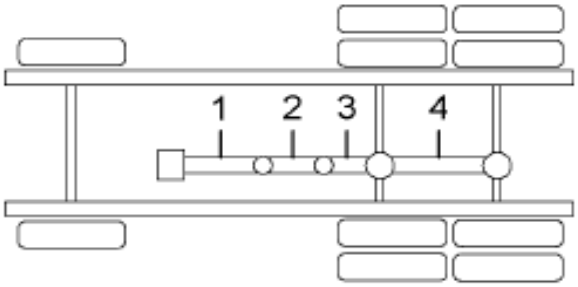

6X4, W/TWO CENTER BEARINGS

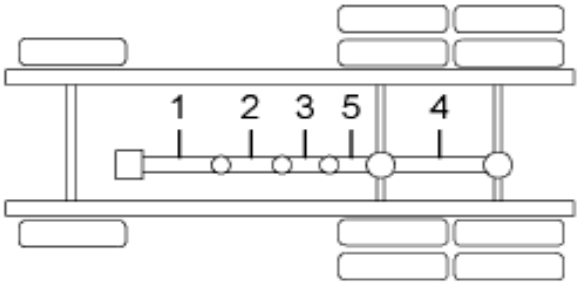

6X4, W/THREE CENTER BEARINGS

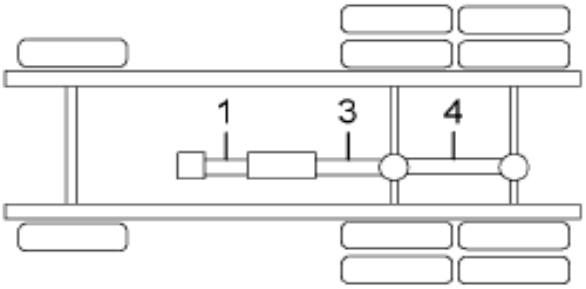

6X4, W/AUXILIARY TRANSMISSION

06-752-0002-03 C05

Grp 06

Figure 6 of 8

COPYRIGHT© 2011INTERNATIONAL TRUCK AND ENGINE CORP.

https://truckmanualshub.com/

Figure 429D1CXXXX
DRIVESHAFT ASSY, 1810 SERIES M

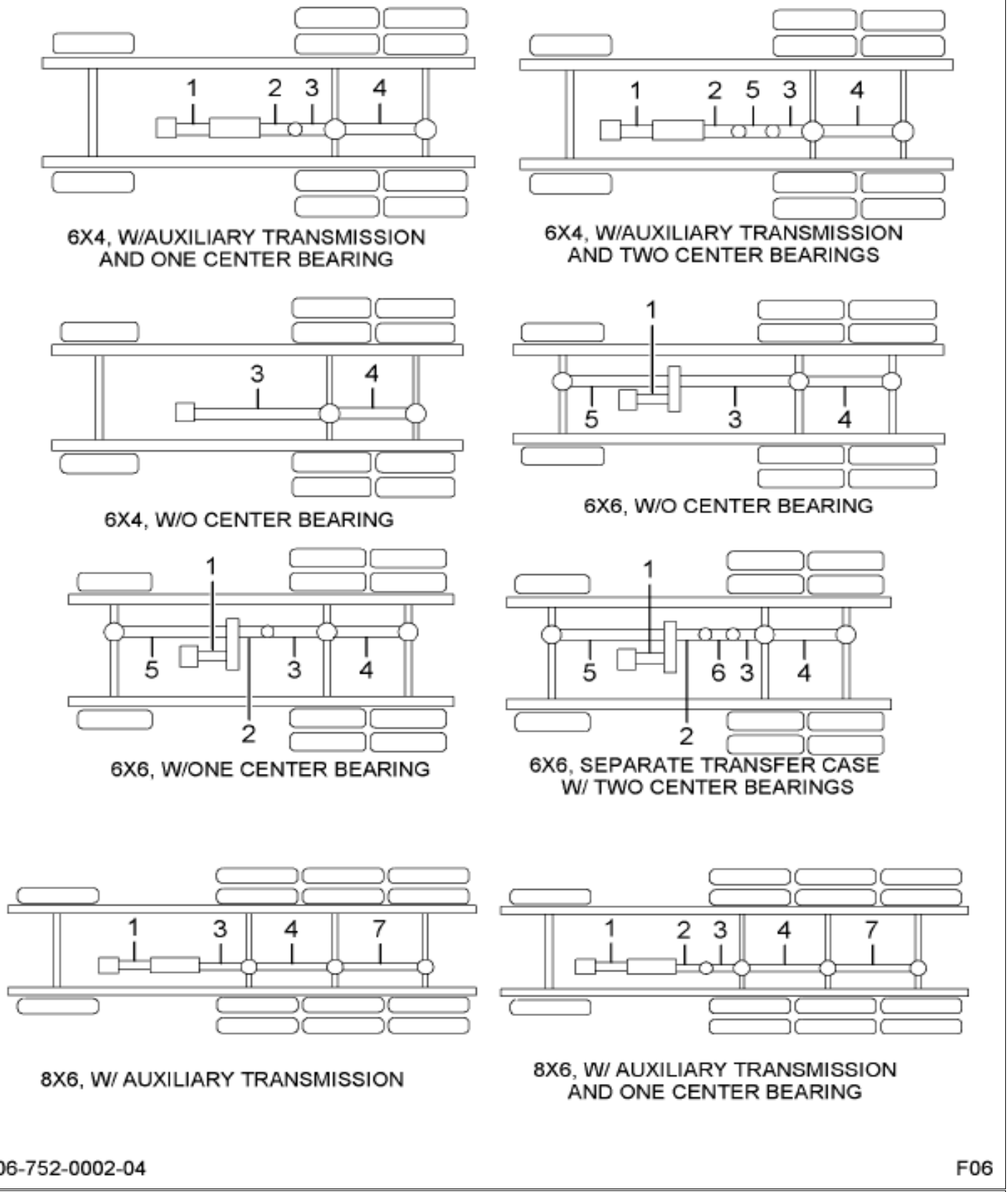

Figure 7 of 8

COPYRIGHT© 2011INTERNATIONAL TRUCK AND ENGINE CORP.

https://truckmanualshub.com/

Figure 425D1CXXXX

DRIVESHAFT ASSY, 1810 SERIES M

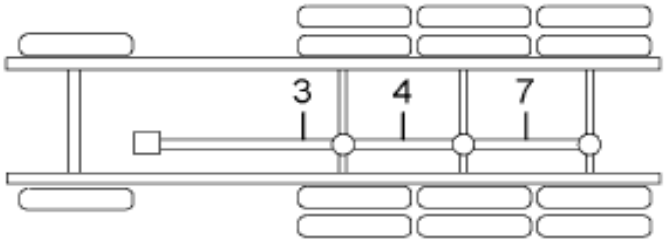

8X6, W/O CENTER BEARING

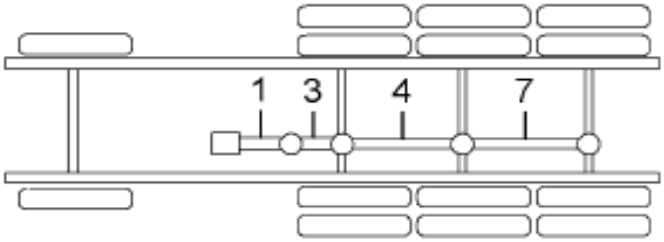

8X6, W/ ONE CENTER BEARING

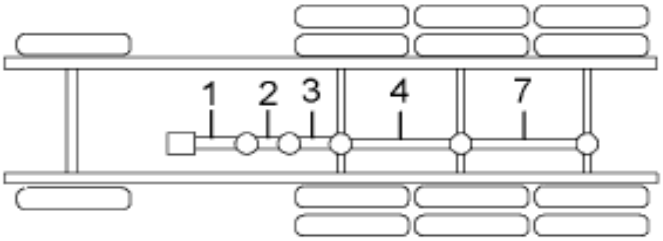

8X6, W/ ONE CENTER BEARING

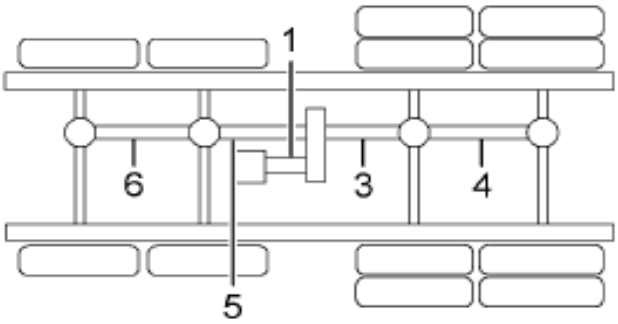

8X8, W/O CENTER BEARING

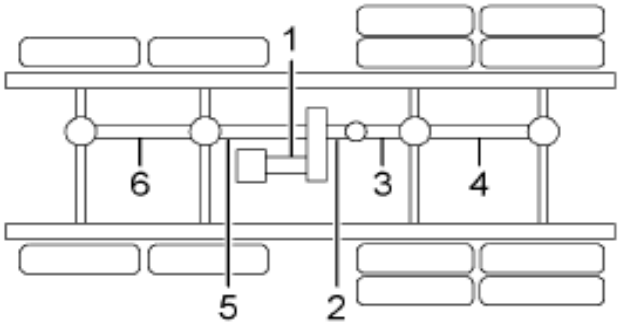

8X8, W/ONE CENTER BEARING

Grp 06

06-752-0002-05 F06

Item	Part No.	Qty	Description	Kit	Var	Figure
1		RF	SEE SHEET 1 FOR FABRICATION			
1		RF	SEE SHEET 2 FOR COMPONENTS			
1		RF	SEE SHEET 3 FOR CENTER BEARING			
1		RF	SUBTRACT 246 FROM XXXX TO GET TUBE CUT LENGTH			
1	ZAZ655391	1	TUBE SHAFT			

COPYRIGHT© 2011INTERNATIONAL TRUCK AND ENGINE CORP.

https://truckmanualshub.com/

Figure 429DTCXXXX

DRIVESHAFT ASSY, 1810 SERIES M

Item	Part No.	Qty	Description	Kit	Var	Figure
1	991849C1	AR	TUBE,WELD PLN 4.59X.180X100			
1	1662162C1	1	YOKE,PROP TUBE WELD GIVE SIZE			
2	1696916C91	KT	KIT,U-JT W/BOLTS & STRAPS 1810			
3	283071C93	1	H0USING,CTR BRG 1710/1760/1810			
3	2500115C1	1	NUT,CENTER BRG			
3	1662738C1	1	WASHER,COMP FLANGE NUT			
800		RF	NOTE: THE FOLLOWING PARTS ARE NON-ILLUSTRATED			
801	18N418911	1	END YOKE			
880		RF	NOTE: ASM BELOW COMPRISED OF ABOVE COMPONENTS			
881	429DTCXXXX	RF	DRIVESHAFT ASSY, 1810 SERIES M			

COPYRIGHT© 2011INTERNATIONAL TRUCK AND ENGINE CORP.

https://truckmanualshub.com/

Figure 039Y6

PROP SHAFT ASM; 1810 SERIES

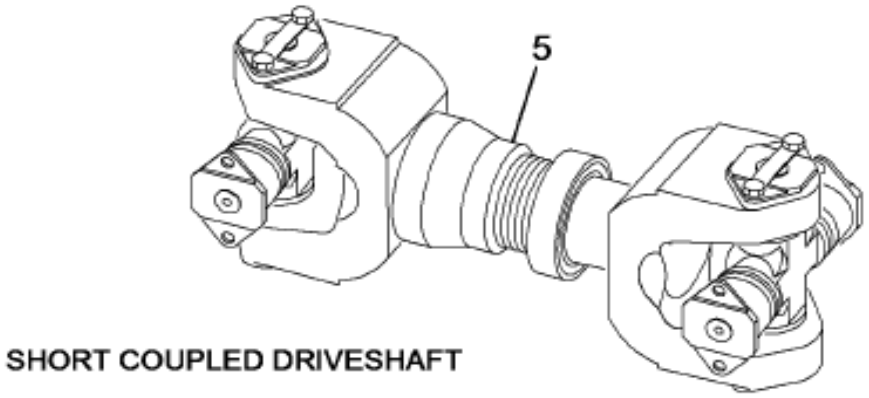

SHORT COUPLED DRIVESHAFT

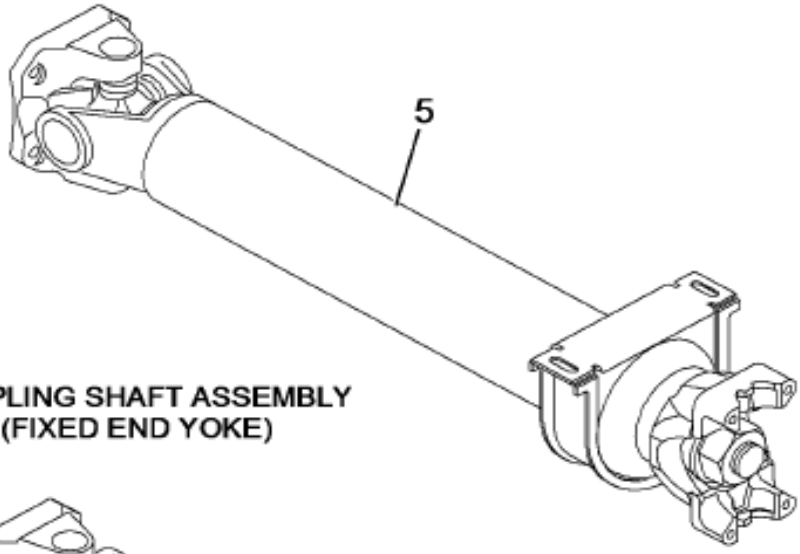

COUPLING SHAFT ASSEMBLY
(FIXED END YOKE)

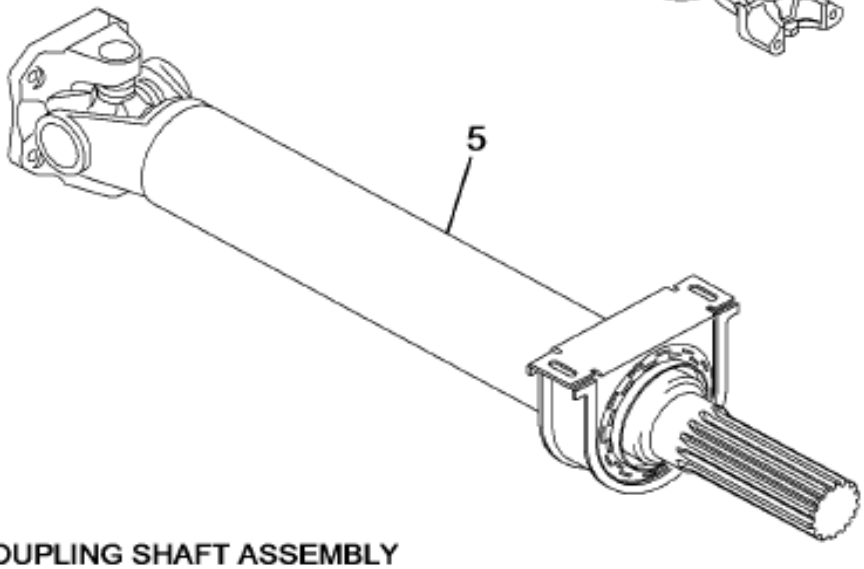

COUPLING SHAFT ASSEMBLY
(REVERSE SLIP TYPE)

06-752-0001-AA L09

Grp 06

Item	Part No.	Qty	Description	Kit	Var	Figure
5	429DTM0910	1	PROP SHAFT		039Y6	429DTM0910
			NON-ILLUSTRATED REFERENCE FIGURE 429DTM0910			
	429DTMXXXX	1	DRIVESHAFT ASSY, 1810 SERIES M			429DTMXXXX

COPYRIGHT© 2011INTERNATIONAL TRUCK AND ENGINE CORP.

https://truckmanualshub.com/
Figure 429D1MXXXX
DRIVESHAFT ASSY, 1810 SERIES M

METRIC FABRICATION

PRODUCTION NUMBER FABRICATION ITEM	SUBTRACT FROM LAST 3 DIGITS SECTION (1A)	SERVICE TUBE ASSEMBLY (METRIC) (1B)	BULK TUBE NUMBER (1C)	WELD COMPONENTS YOKE OR STUB (1D)	WELD COMPONENTS YOKE OR STUB (1E)	SPECIAL NOTES

XxXX Reference on production number indicates AN UNKNOWN PRODUCTION LENGTH that is determined from your lineset ticket 10-digit code.

IMPORTANT: When the last 4 digits of your 10-digit production propeller shaft number are identified; subtract the value shown in the subtraction column from these four digits for the BULK TUBE CUT LENGTH in millimeters.

00-000-4824-01 J03

Figure 1 of 7

COPYRIGHT© 2011INTERNATIONAL TRUCK AND ENGINE CORP.

https://truckmanualshub.com/
Figure 429D1MXXXX
DRIVESHAFT ASSY, 1810 SERIES M

METRIC COMPONENTS

PRODUCTION NUMBER / ITEM	SLIP YOKE	U-JOINT KIT FRONT	U-JOINT KIT REAR	ADAPTER FRONT	ADAPTER REAR	NOTES
	(2A)	(2B)	(2C)	(2D)	(2E)	

00-000-4826-01 K03

Figure 2 of 7

COPYRIGHT© 2011INTERNATIONAL TRUCK AND ENGINE CORP.

https://truckmanualshub.com/

EXPLANATION OF THE LOCATION OF PROPELLER SHAFTS AS SHOWN ON LINE SET TICKETS

The 10-digit code numbers are displayed on the Line Set Tickets which are attached to the sun visor and placed in the glove compartment of the truck, and are mailed to the selling dealer. When more than one propeller shaft is used on a truck, they are always listed in the same sequence on the Line Set Ticket as they are positioned on the truck (starting at the front and moving to the rear). Some Line Set Tickets show the position numbers of the propeller shafts.

For example, let's take a long wheelbase 9370 (6 x 4) with an auxiliary transmission. The shafts would be listed in this order: First the shaft from the main transmission to the auxiliary transmisson; next, the shaft from the auxiliary transmission to the center bearing; then the shaft from the center bearing to the forward-rear axle; and last, the shaft from the forward-rear axle to the rear-rear axle.

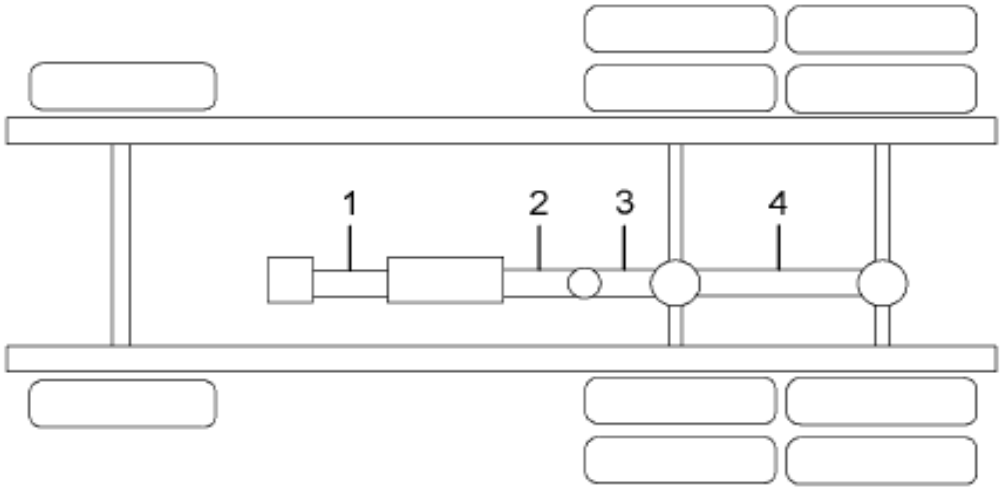

6X4, W/AUXILIARY TRANSMISSION
AND ONE CENTER BEARING

Exceptions to the procedure are: (1) Trucks with front driving axles(6 x 6 or 4 x 4). The shaft from the transfer case to the front axle is always listed last on Line Set Tickets for these trucks. (2) 1853FC and 3900FC models (forward-control school buses) with three center bearings list the third shaft last - the one between second and third center bearings - after the rear shaft.

This cross-reference can be used to determine the part numbers of the propeller tube assembly, slip yoke, and the U-joint kits without requiring and information othen than the 10-digit code number of the production shafts as shown on the Line Set Ticket.

06-752-0002-01 C05

Figure 3 of 7

COPYRIGHT© 2011INTERNATIONAL TRUCK AND ENGINE CORP.

https://truckmanualshub.com/

Figure 429D1MXXXX
DRIVESHAFT ASSY, 1810 SERIES M

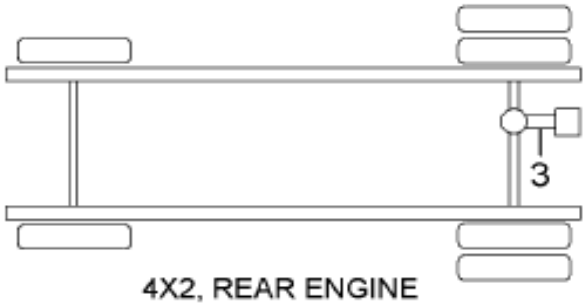

4X2, REAR ENGINE

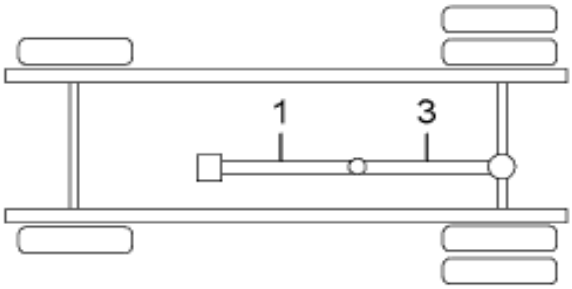

4X2, W/ ONE CENTER BEARING

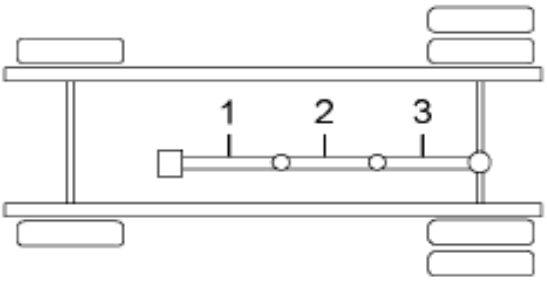

4X2, W/ TWO CENTER BEARINGS

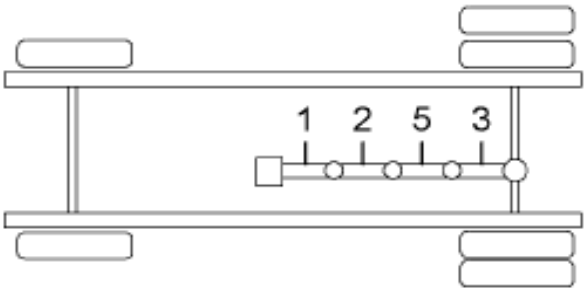

4X2, W/ THREE CENTER BEARINGS

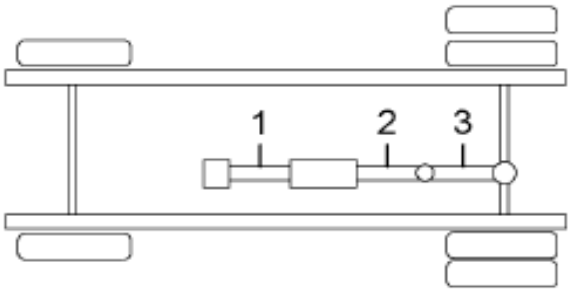

4X2, W/ AUXILIARY TRANSMISSON
AND ONE CENTER BEARING

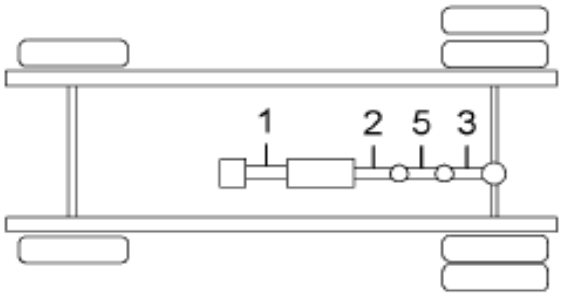

4X2, W/ AUXILIARY TRANSMISSON
AND TWO CENTER BEARINGS

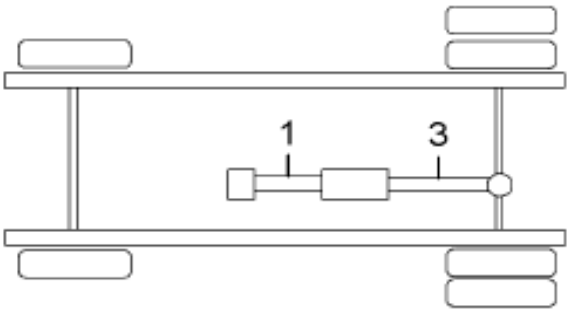

4X2, W/ AUXILIARY TRANSMISSION

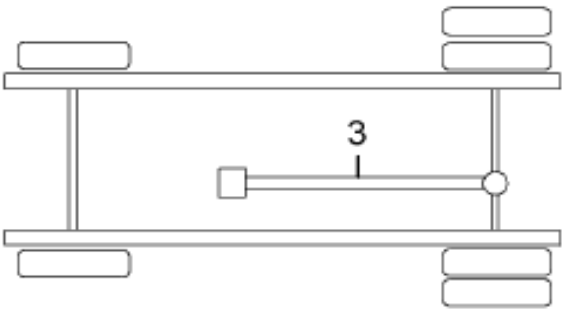

4X2, W/O CENTER BEARING

06-752-0002-02 C05

Grp 06

Figure 4 of 7

COPYRIGHT© 2011INTERNATIONAL TRUCK AND ENGINE CORP.

https://truckmanualshub.com/
Figure 429D1MXXXX
DRIVESHAFT ASSY, 1810 SERIES M

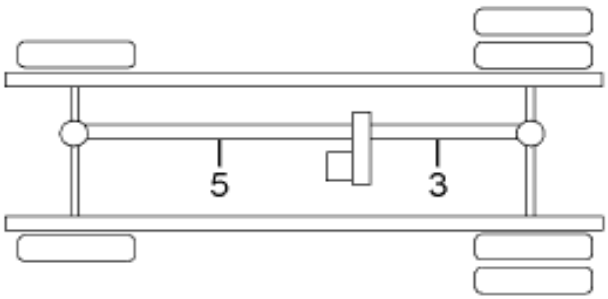

4X4, COMBINATION TRANSMISSION AND TRANSFER CASE

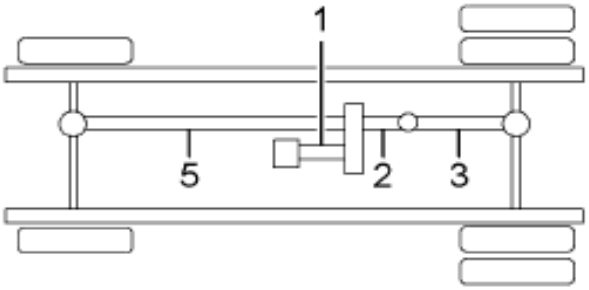

4X4, SEPERATE TRANSFER CASE AND ONE CENTER BEARING

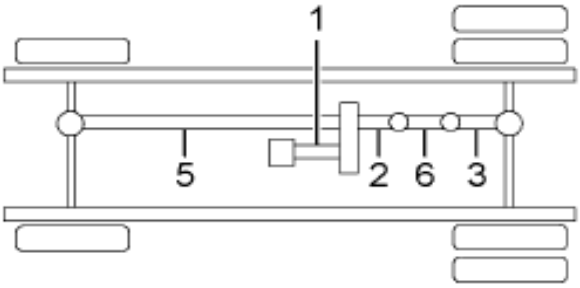

4X4, SEPERATE TRANSFER CASE AND TWO CENTER BEARINGS

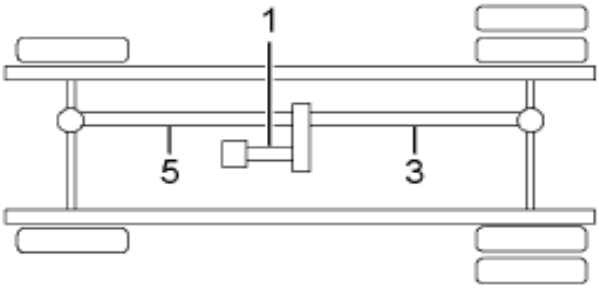

4X4, SEPERATE TRANSFER CASE W/O CENTER BEARING

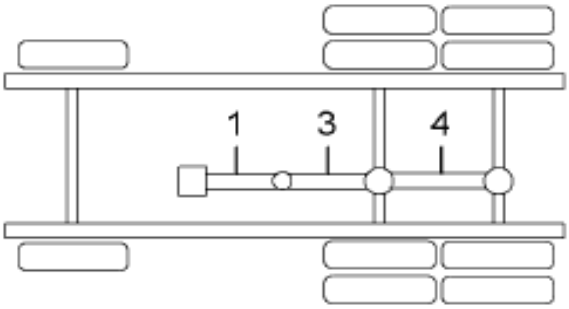

6X4, W/ONE CENTER BEARING

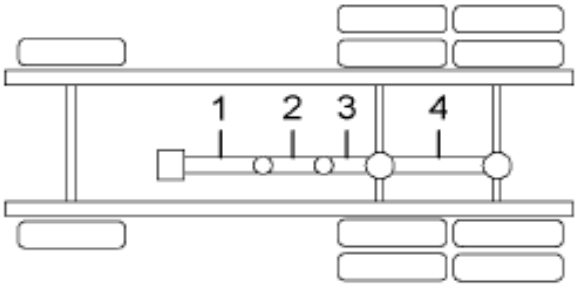

6X4, W/TWO CENTER BEARINGS

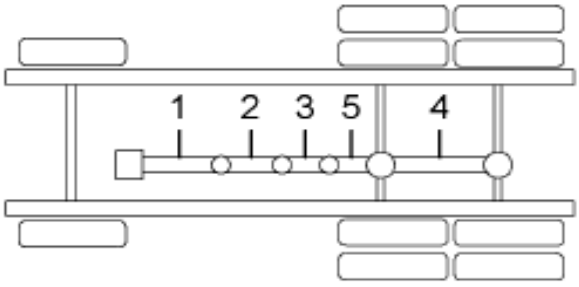

6X4, W/THREE CENTER BEARINGS

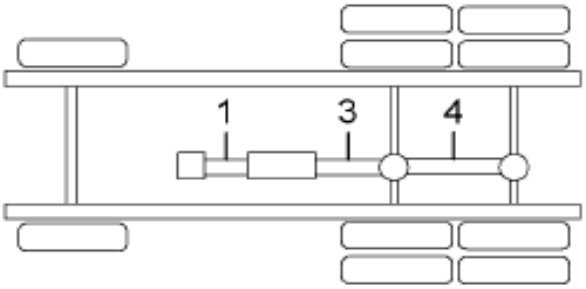

6X4, W/AUXILIARY TRANSMISSION

06-752-0002-03 C05

Figure 5 of 7

COPYRIGHT© 2011INTERNATIONAL TRUCK AND ENGINE CORP.

https://truckmanualshub.com/

Figure 429D1MXXXX
DRIVESHAFT ASSY, 1810 SERIES M

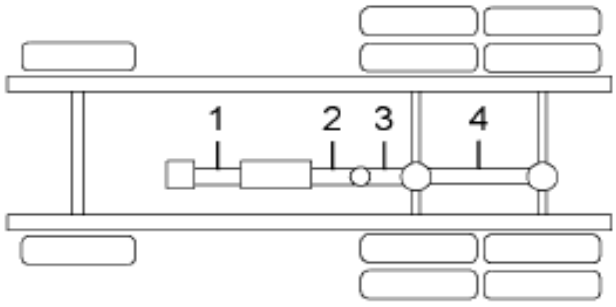

6X4, W/AUXILIARY TRANSMISSION AND ONE CENTER BEARING

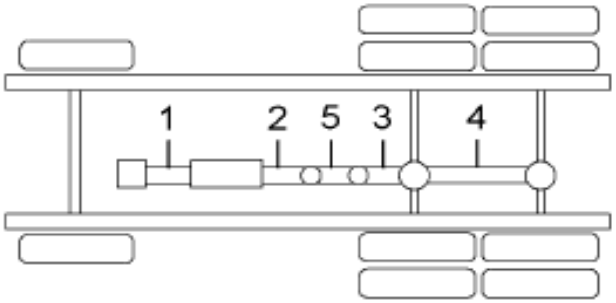

6X4, W/AUXILIARY TRANSMISSION AND TWO CENTER BEARINGS

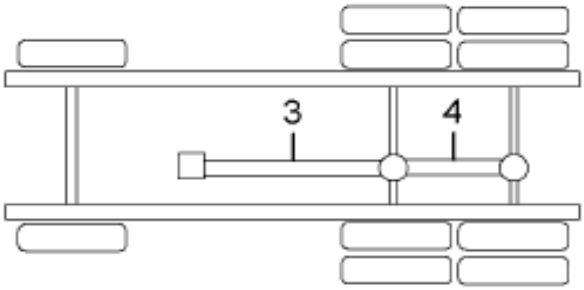

6X4, W/O CENTER BEARING

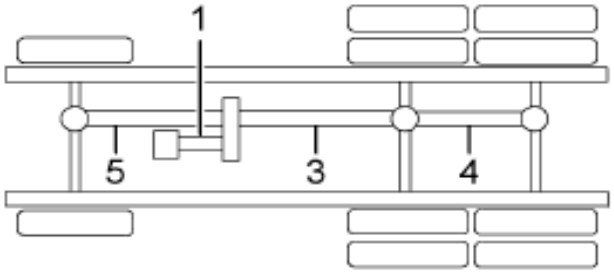

6X6, W/O CENTER BEARING

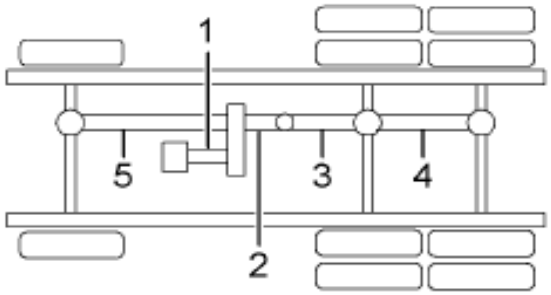

6X6, W/ONE CENTER BEARING

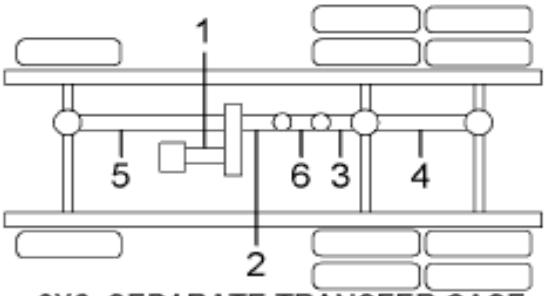

6X6, SEPARATE TRANSFER CASE W/ TWO CENTER BEARINGS

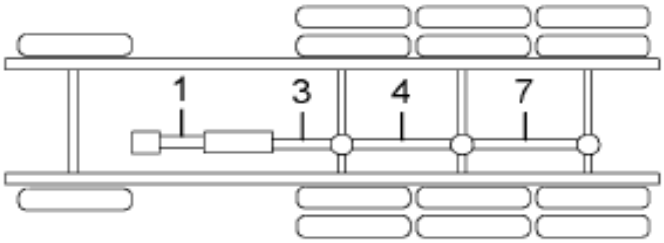

8X6, W/ AUXILIARY TRANSMISSION

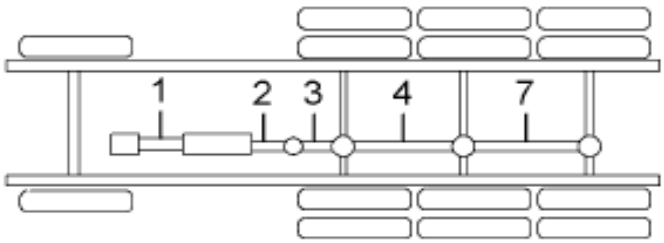

8X6, W/ AUXILIARY TRANSMISSION AND ONE CENTER BEARING

06-752-0002-04 F06

Grp 06

Figure 6 of 7

COPYRIGHT© 2011INTERNATIONAL TRUCK AND ENGINE CORP.

https://truckmanualshub.com/

Figure 429D1MXXXX

DRIVESHAFT ASSY, 1810 SERIES M

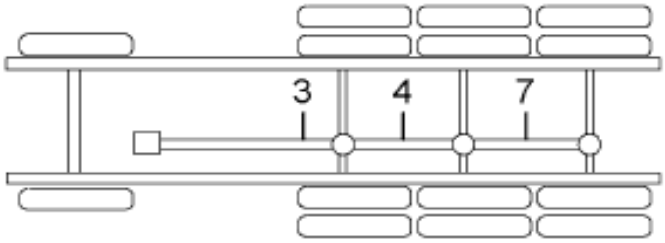

8X6, W/O CENTER BEARING

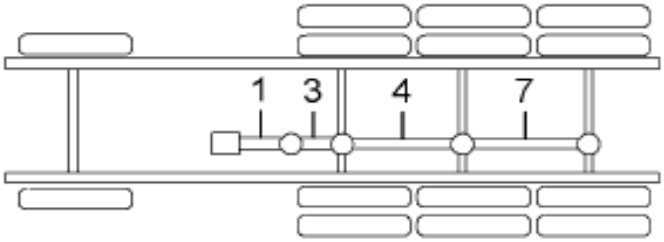

8X6, W/ ONE CENTER BEARING

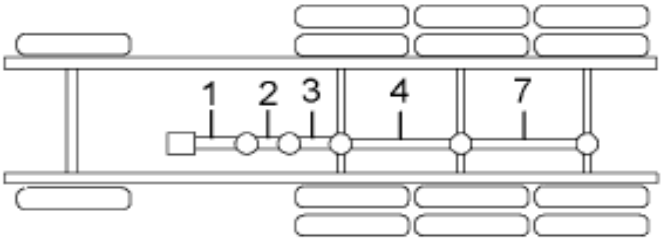

8X6, W/ ONE CENTER BEARING

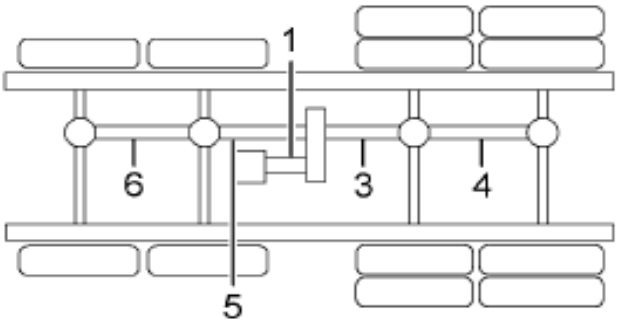

8X8, W/O CENTER BEARING

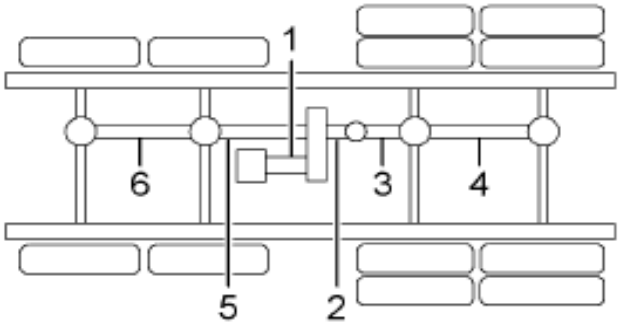

8X8, W/ONE CENTER BEARING

06-752-0002-05 F06

Item	Part No.	Qty	Description	Kit	Var	Figure
1		RF	SEE SHEET 1 FOR FABRICATION			
1		RF	SEE SHEET 2 FOR COMPONENTS			
1		RF	SUBTRACT 432 FROM XXXX TO GET TUBE CUT LENGTH			
1		AR	TUBE ASM,SERVICE			
1	991849C1	AR	TUBE,WELD PLN 4.59X.180X100			

COPYRIGHT© 2011INTERNATIONAL TRUCK AND ENGINE CORP.

https://truckmanualshub.com/

Figure 429DTMXXXX

DRIVESHAFT ASSY, 1810 SERIES M

Item	Part No.	Qty	Description	Kit	Var	Figure
1	1662162C1	1	YOKE,PROP TUBE WELD GIVE SIZE			
2	418324C91	1	YOKE,SLIP ASSY-COMP			
2	1696916C91	KT	KIT,U-JT W/BOLTS & STRAPS 1810			
800		RF	NOTE: THE FOLLOWING PARTS ARE NON-ILLUSTRATED			
801	ZAZ658638	1	BRG SEAL			
802	109461	1	FITTING, 1/8 PTF X/SHORT LUB			
880		RF	NOTE: ASM BELOW COMPRISED OF ABOVE COMPONENTS			
881	429DTMXXXX	RF	DRIVESHAFT ASSY, 1810 SERIES M			

COPYRIGHT© 2011INTERNATIONAL TRUCK AND ENGINE CORP.

https://truckmanualshub.com/

Figure 0XYP7

XMSN OUTPUT YOKE; U-JOINT STRAP & BOLT KIT

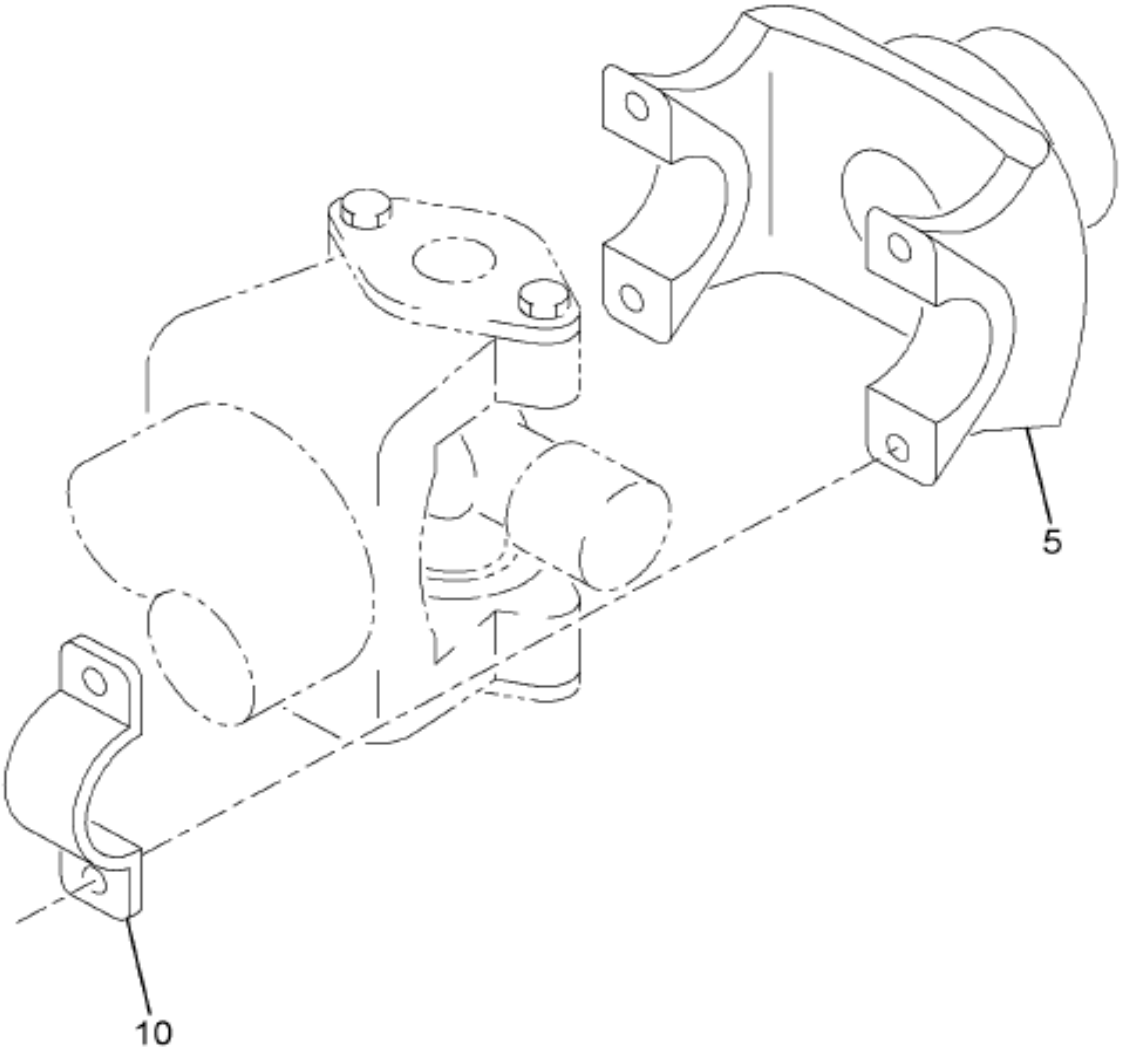

06-076-0001-00 C09

Item	Part No.	Qty	Description	Kit	Var	Figure
5	3507640C1	1	FLANGE,TRUNNION BRG 1810		0XYP7	
10	2035774C91	1	KIT,STRAP&BOLT 1710,1760,1810		0XYP7	2035774C91

COPYRIGHT© 2011INTERNATIONAL TRUCK AND ENGINE CORP.

https://truckmanualshub.com/

Figure 2033774C91
KIT,STRAP&BOLT 1710,1760,1810

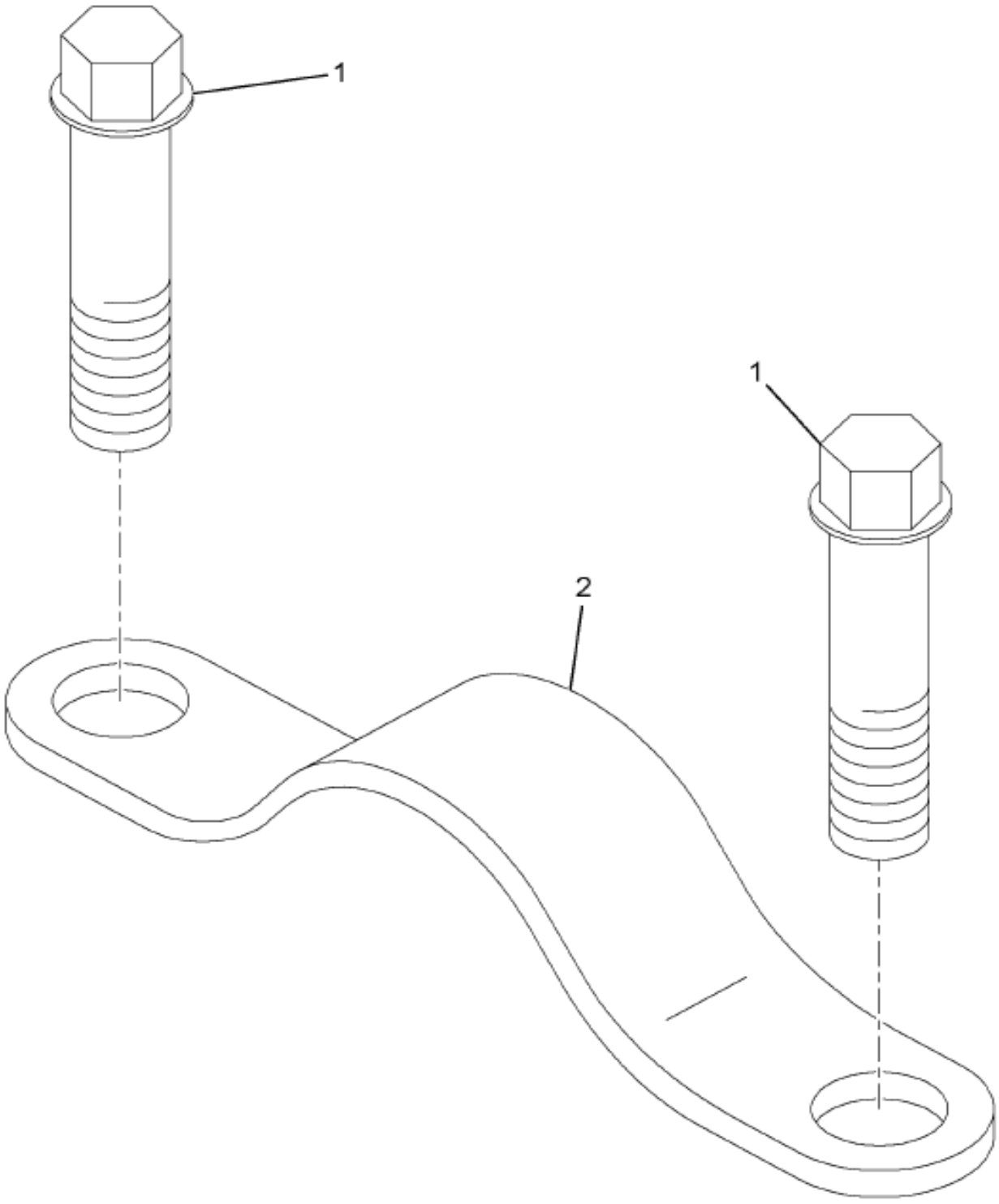

Item	Part No.	Qty	Description	Kit	Var	Figure
1	1657366C1	4	BOLT 12-POINT			
2	1657368C1	2	STRAP TRUN BRG 1710 1760 1810			
800		RF	NOTE: THE FOLLOWING PARTS ARE NON-ILLUSTRATED			
801	1657366C1	4	BOLT 12-POINT			
802	1657368C1	2	STRAP TRUN BRG 1710 1760 1810			

COPYRIGHT© 2011INTERNATIONAL TRUCK AND ENGINE CORP.

https://truckmanualshub.com/

Figure 2035774C91

KIT,STRAP&BOLT 1710,1760,1810

Item	Part No.	Qty	Description	Kit	Var	Figure
880		RF	NOTE: ASM BELOW COMPRISED OF ABOVE COMPONENTS			
881	2035774C91	RF	KIT,STRAP&BOLT 1710,1760,1810			

COPYRIGHT© 2011INTERNATIONAL TRUCK AND ENGINE CORP.

https://truckmanualshub.com/

Group 07
Exhaust

COPYRIGHT© 2011INTERNATIONAL TRUCK AND ENGINE CORP.

https://truckmanualshub.com/

Figure 07V3X

EXHAUST SYSTEM INSTL; VERT TAILPIPE, W/SUPPORT

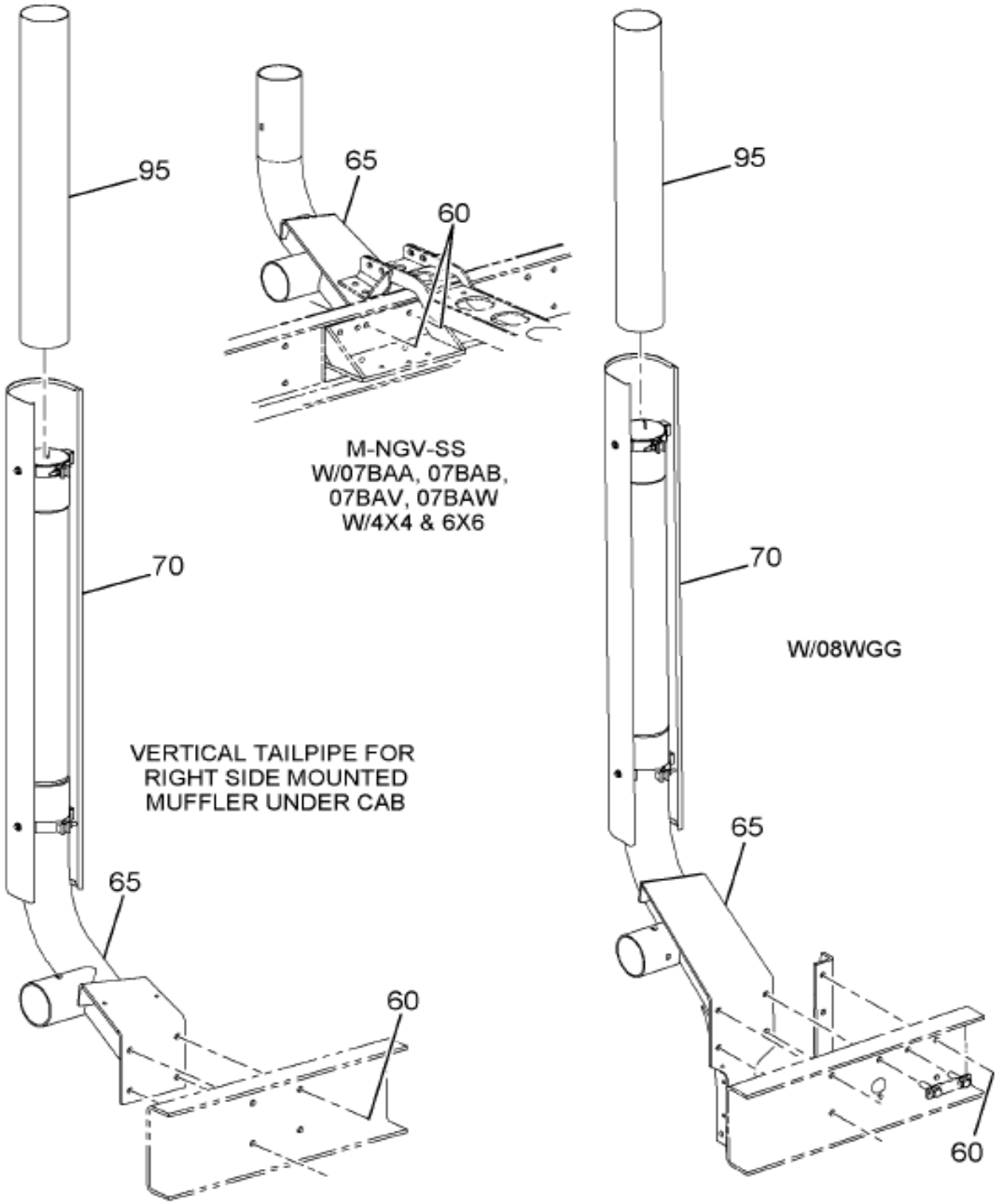

Item	Part No.	Qty	Description	Kit	Var	Figure
60	40222R1	4	BOLT HEX FLG HD METRIC*M16 X 5		0H55S	
60	3535554C1	4	NUT,HEX METRIC PREV. TORQ*M16		0H55S	
65	3587567C1	1	SUPPORT,*VERT TAIPIPE STANCHIO		0K25F	3587567C1
70	3541401C91	1	SHIELD,EXH PIPE		0H55S	3541401C91
95	3566286C1	1	PIPE,TAIL V/V, TURN-BACK, 5" O		0H55S	

COPYRIGHT© 2011INTERNATIONAL TRUCK AND ENGINE CORP.

https://truckmanualshub.com/

Figure 3558131C1
PIPE,TAIL

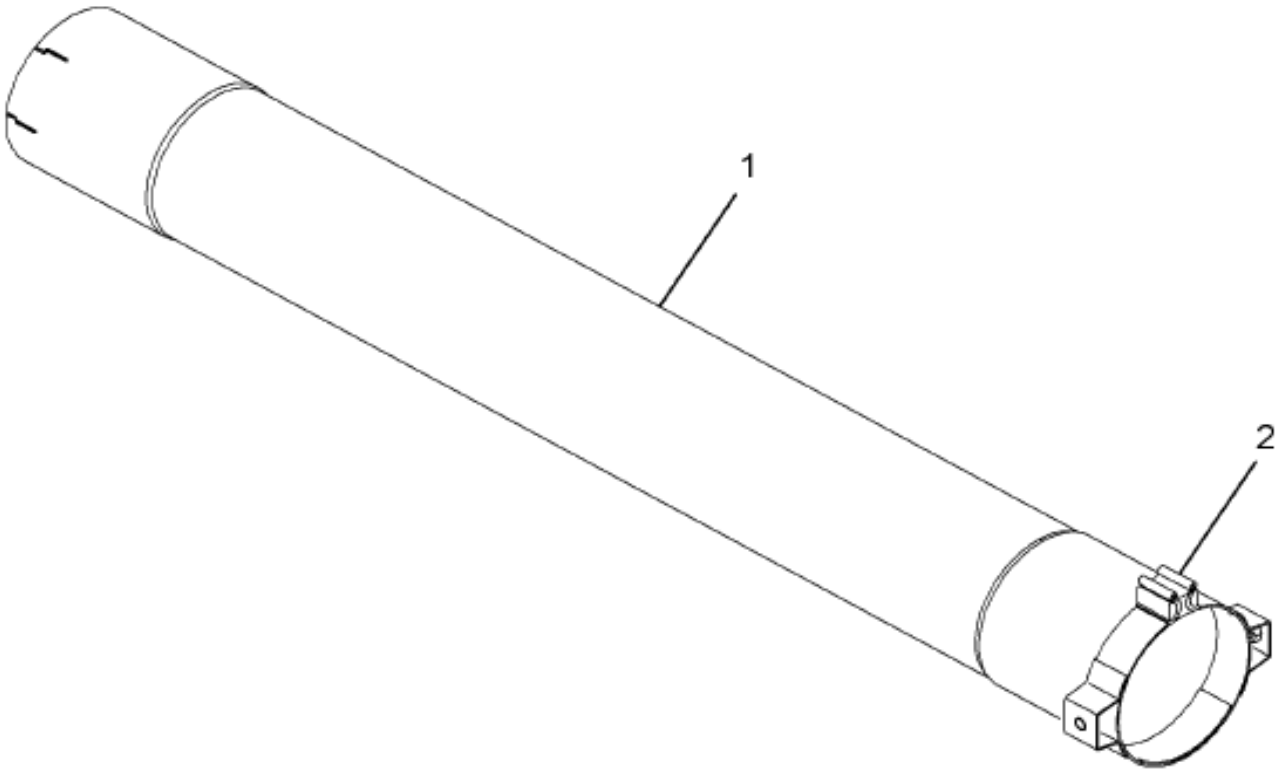

07-V32-0025-01 C05

Item	Part No.	Qty	Description	Kit	Var	Figure
1	3541400C1	1	PIPE,TAIL			
2	3558220C1	1	CLAMP,EXH PIPE SHIELD 5IN / 12			
880		RF	NOTE: ASM BELOW COMPRISED OF ABOVE COMPONENTS			
881	3558131C1	RF	PIPE,TAIL			

COPYRIGHT© 2011INTERNATIONAL TRUCK AND ENGINE CORP.

https://truckmanualshub.com/

Figure 3541401C91
SHIELD,EXH PIPE

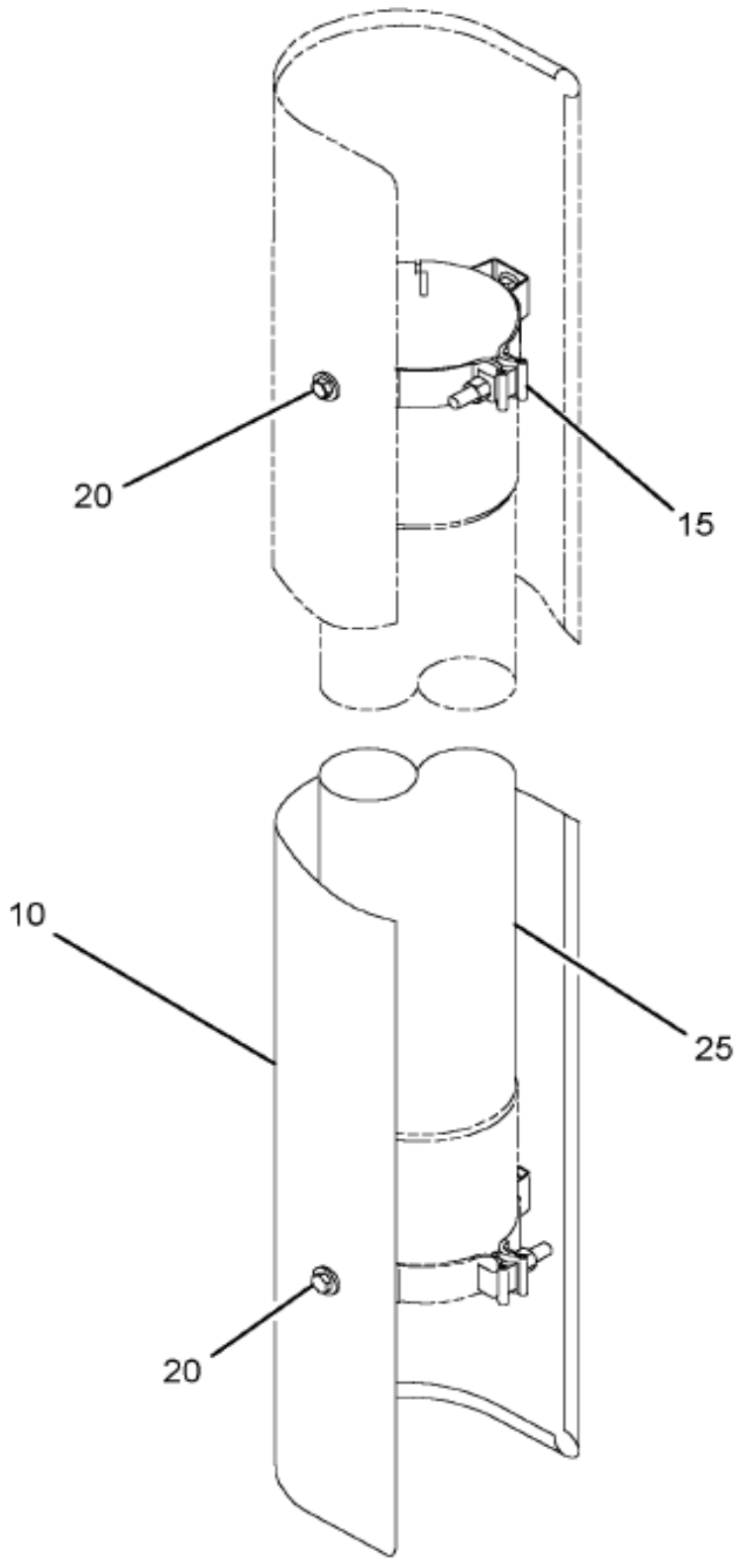

Item	Part No.	Qty	Description	Kit	Var	Figure
10	3558227C1	1	SHIELD,TAIL PIPE EXTENSION			
10	3541399C1	1	SHIELD,EXH PIPE			
15	3558220C1	1	CLAMP,EXH PIPE SHIELD 5IN / 12			
15	3541591C1	2	CLAMP,EXH PIPE SHIELD			
15	3546707C1	4	BOLT,HH*BOLT, HEX HEAD, M8-1.2			
20	3535228C1	4	SCREW,SPECIAL HEX FLG SCREW,5/			

COPYRIGHT© 2011INTERNATIONAL TRUCK AND ENGINE CORP.

https://truckmanualshub.com/

Figure 3541401C91

SHIELD,EXH PIPE

Item	Part No.	Qty	Description	Kit	Var	Figure
20	3542142C1	4	WASHER,GRAB HNDL MTG M8			
25	3558131C1	1	PIPE,TAIL			3558131C1
25	3541400C1	1	PIPE,TAIL			
880		RF	NOTE: ASM BELOW COMPRISED OF ABOVE COMPONENTS			
881	3541401C91	RF	SHIELD,EXH PIPE			

COPYRIGHT© 2011INTERNATIONAL TRUCK AND ENGINE CORP.

https://truckmanualshub.com/

Figure 3587567C1
SUPPORT,*VERT TAIPIPE STANCHIO

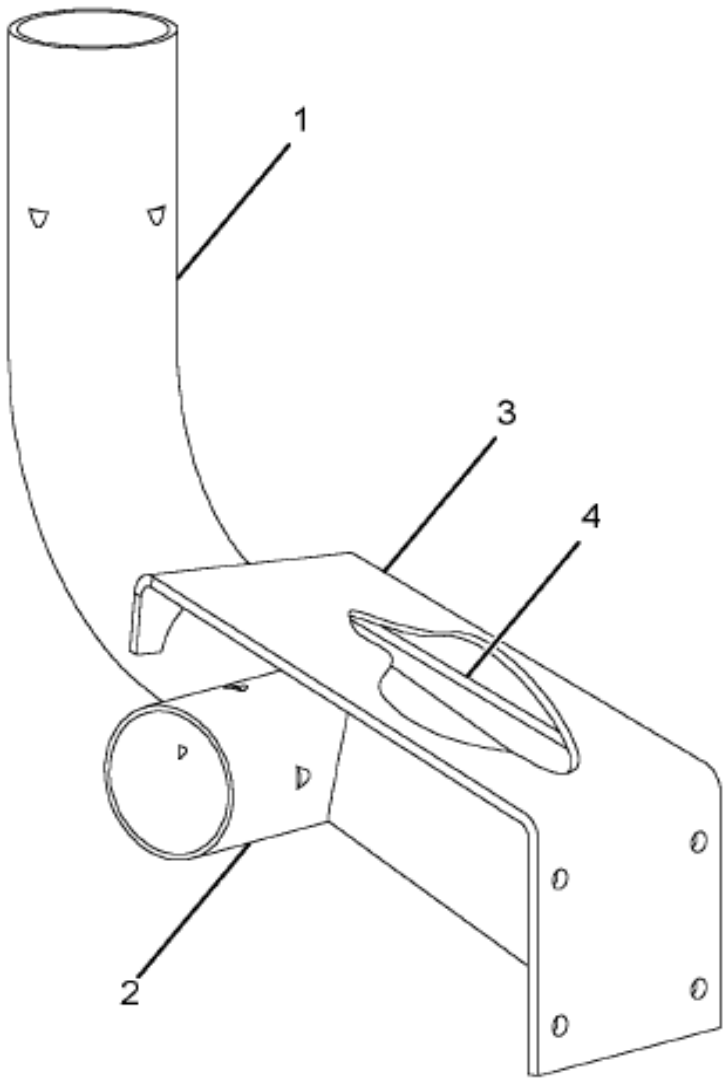

07-V32-0018-01 J03

Item	Part No.	Qty	Description	Kit	Var	Figure
1	3581715C2	1	PIPE,EXHAUST*FOR VERTICAL TAIP			
2	3581716C1	1	PIPE,EXHAUST*FOR VERTICAL TAIP			
3	3587568C1	1	BRACKET,EXH PIPE*FOR VERTICAL			
4	3587569C1	1	GUSSET,TAIL PIPE BRACE BRKT SU			
880		RF	NOTE: ASM BELOW COMPRISED OF ABOVE COMPONENTS			

COPYRIGHT© 2011INTERNATIONAL TRUCK AND ENGINE CORP.

https://truckmanualshub.com/

Figure 3587567C1

SUPPORT,*VERT TAIPIPE STANCHIO

Item	Part No.	Qty	Description	Kit	Var	Figure
881	3587567C1	RF	SUPPORT,*VERT TAIPIPE STANCHIO			

COPYRIGHT© 2011INTERNATIONAL TRUCK AND ENGINE CORP.

https://truckmanualshub.com/

Figure 0G89J
MUFFLER INSTL; RT SIDE MTD EXHAUST

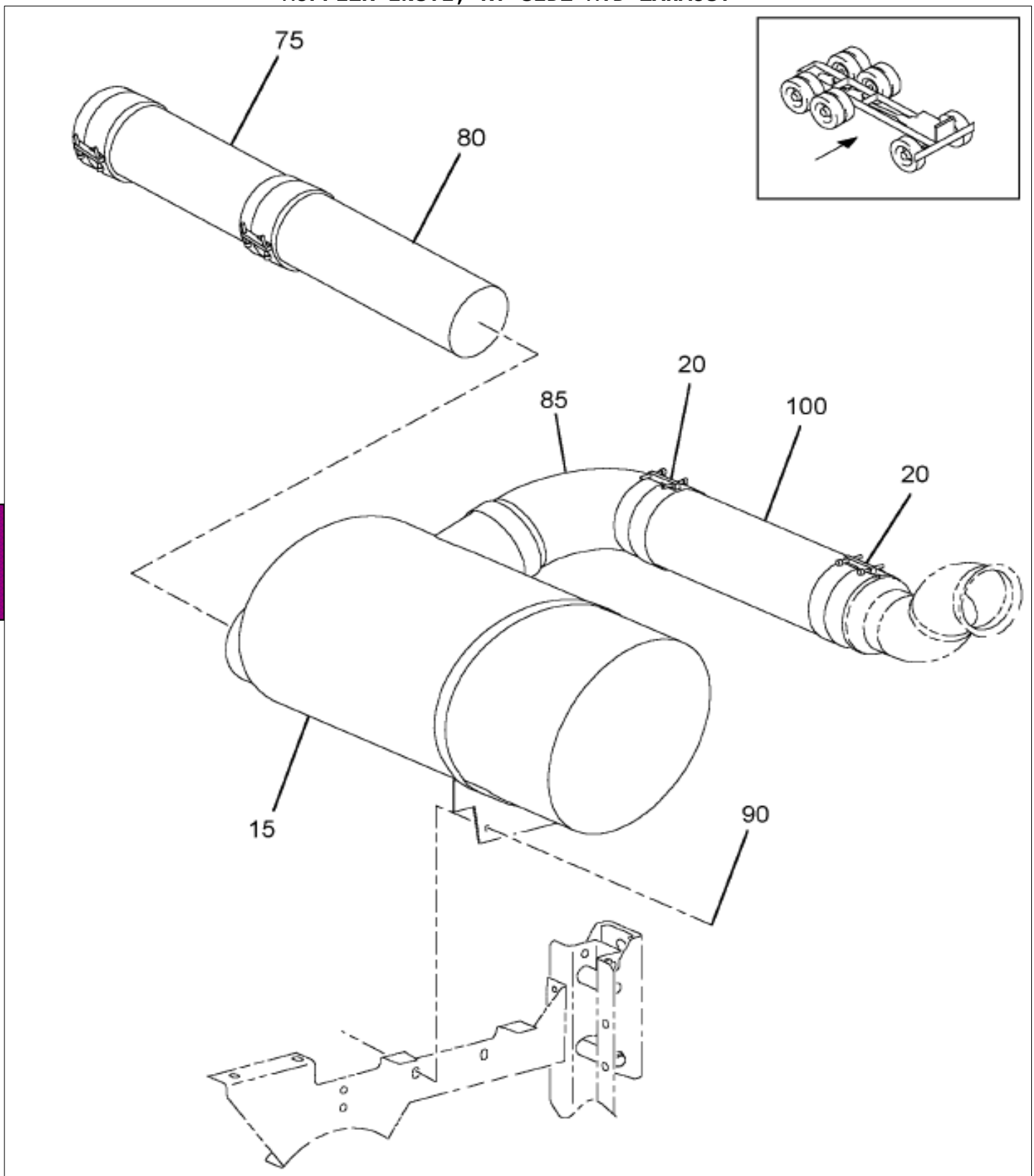

Item	Part No.	Qty	Description	Kit	Var	Figure
15	3571968C2	1	MUFFLER,ASM EXHAUST*SS HDD INS		0G89J	
20	583979C91	2	COUPLING EXH PIPE		0K184	
85	3561531C1	1	PIPE,EXHAUST INSERT INTERMED P		0K184	
90	3530018C1	2	BOLT SEMS ALL M10 X 1.50 35 MM		0G89J	
90	3587442C1	2	NUT,SPECIAL*M10 X 1.5 LONG, U-		0G89J	
100	3539796C1	1	TUBE,FLEX		0K184	

COPYRIGHT© 2011INTERNATIONAL TRUCK AND ENGINE CORP.

https://truckmanualshub.com/

Figure 0G8JE

TURBO PIPE INSTL; W/UNDER CAB MTD MUFFLER

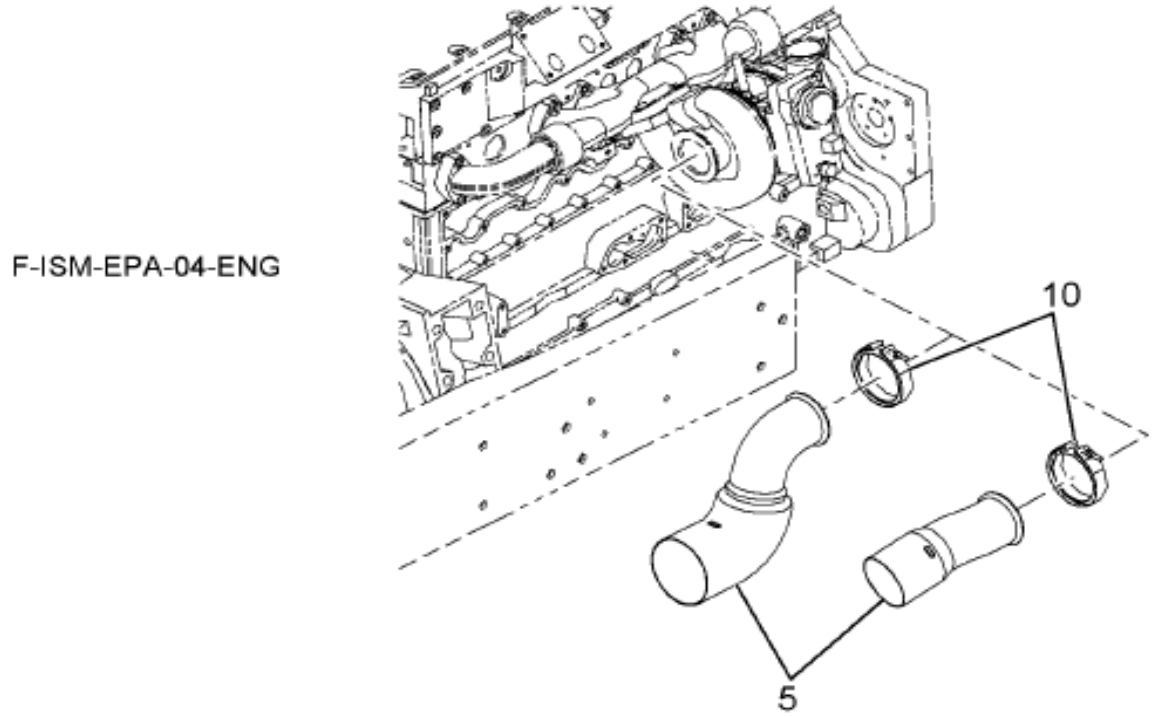

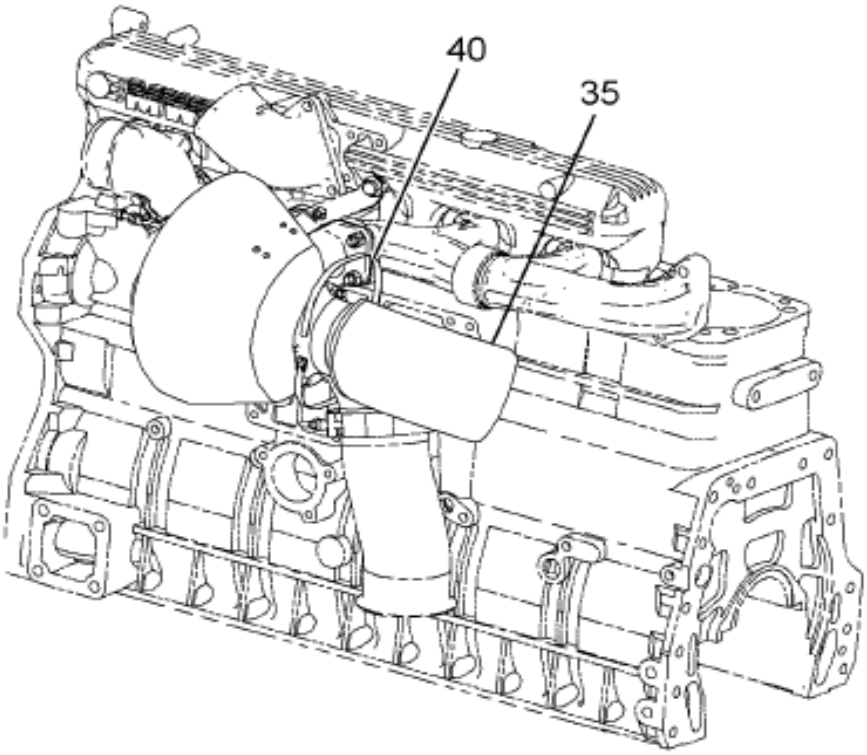

SA61500
W/012NTP, 012NTR

07-V30-0121-01 C09

Item	Part No.	Qty	Description	Kit	Var	Figure
5	3821536C1	1	PIPE,TURBO,INSULATED ASSY		0P6NG	3821536C1
10	1672105C91	1	CLAMP EXHAUST PIPE		0P6NG	
35	3667974C2	1	SHIELD,EXH PIPE, CUMMINS ISM T		0P6NG	
40	2000824C1	2	CLAMP,4 1/4 - 5 1/8		0P6NG	

Grp 07

COPYRIGHT© 2011INTERNATIONAL TRUCK AND ENGINE CORP.

https://truckmanualshub.com/

Figure 3821536C1
PIPE,TURBO,INSULATED ASSY

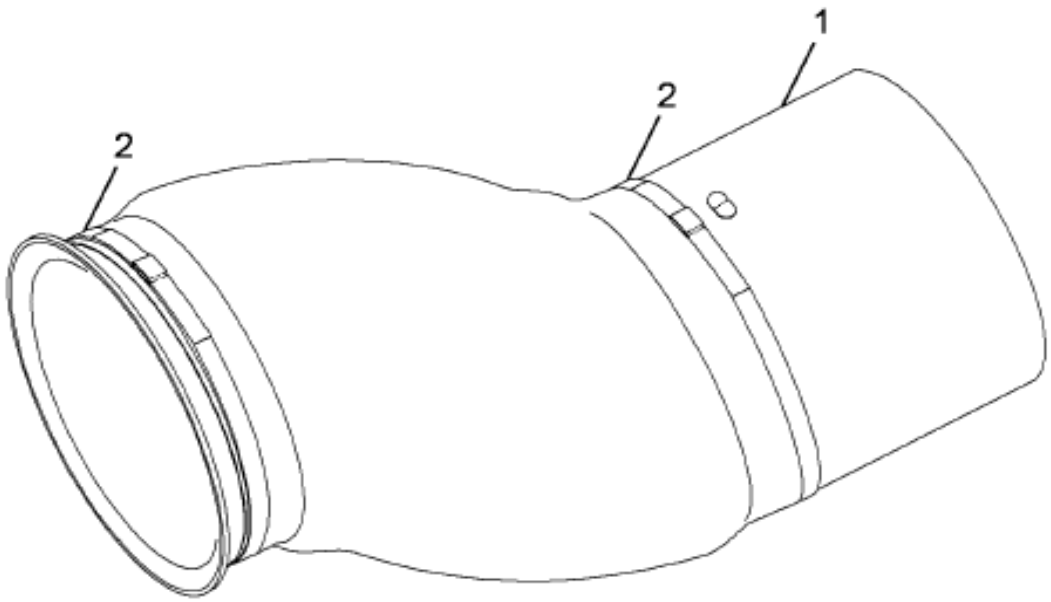

07-V30-0119-01 A09

Item	Part No.	Qty	Description	Kit	Var	Figure
1	3587981C2	1	PIPE,TURBO*NON-EGR ISM ENG, SS			
2	3821919C1	2	CLAMP,EXH PIPE SHIELD,			
880		RF	NOTE: ASM BELOW COMPRISED OF ABOVE COMPONENTS			
881	3821536C1	RF	PIPE,TURBO,INSULATED ASSY			

COPYRIGHT© 2011INTERNATIONAL TRUCK AND ENGINE CORP.

https://truckmanualshub.com/

Group 08
Electrical

COPYRIGHT© 2011INTERNATIONAL TRUCK AND ENGINE CORP.

https://truckmanualshub.com/

Figure 0CBRD
AIR SOLENOID INSTL; ACCESSORY CONTROLS

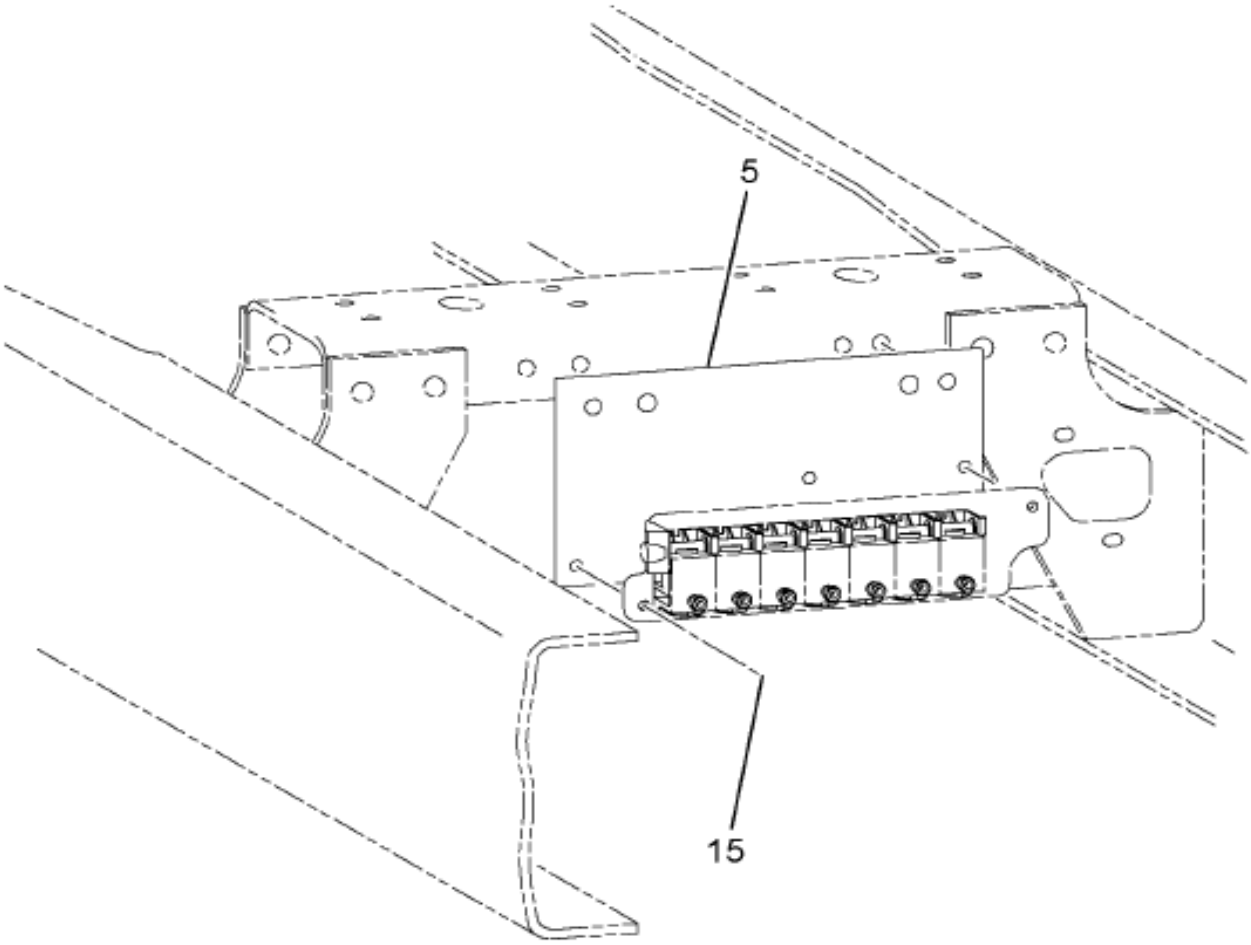

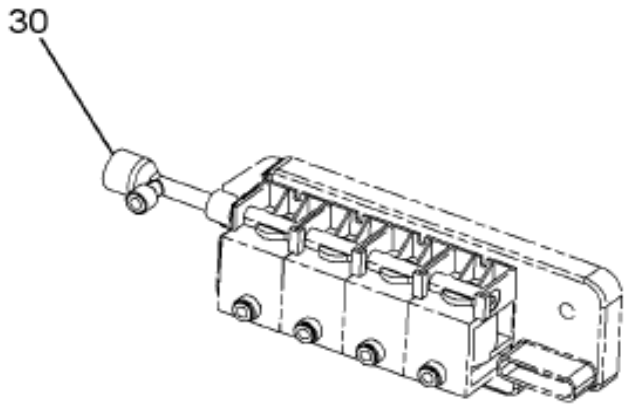

FOR M-NGV-SS W/ 13607

04-V80-0001-AA B10

Item	Part No.	Qty	Description	Kit	Var	Figure
5	3553321F91	1	BRACKET,SOLENOID*FOUR PACK		0CBR1	3553321F91
			NON-ILLUSTRATED REFERENCE FIGURE 3553321F91			
1	2505594C1	1	BRACKET, SOLENOID*FOUR PACK			2505594C1
880		RF	NOTE: ASM BELOW COMPRISED OF ABOVE COMPONENTS			

COPYRIGHT© 2011INTERNATIONAL TRUCK AND ENGINE CORP.

https://truckmanualshub.com/

Figure 0CBRD

AIR SOLENOID INSTL; ACCESSORY CONTROLS

Item	Part No.	Qty	Description	Kit	Var	Figure
881	3553321F91	RF	BRACKET,SOLENOID*FOUR PACK			

COPYRIGHT© 2011INTERNATIONAL TRUCK AND ENGINE CORP.

https://truckmanualshub.com/

Figure 2505594C1

BRACKET, SOLENOID*FOUR PACK

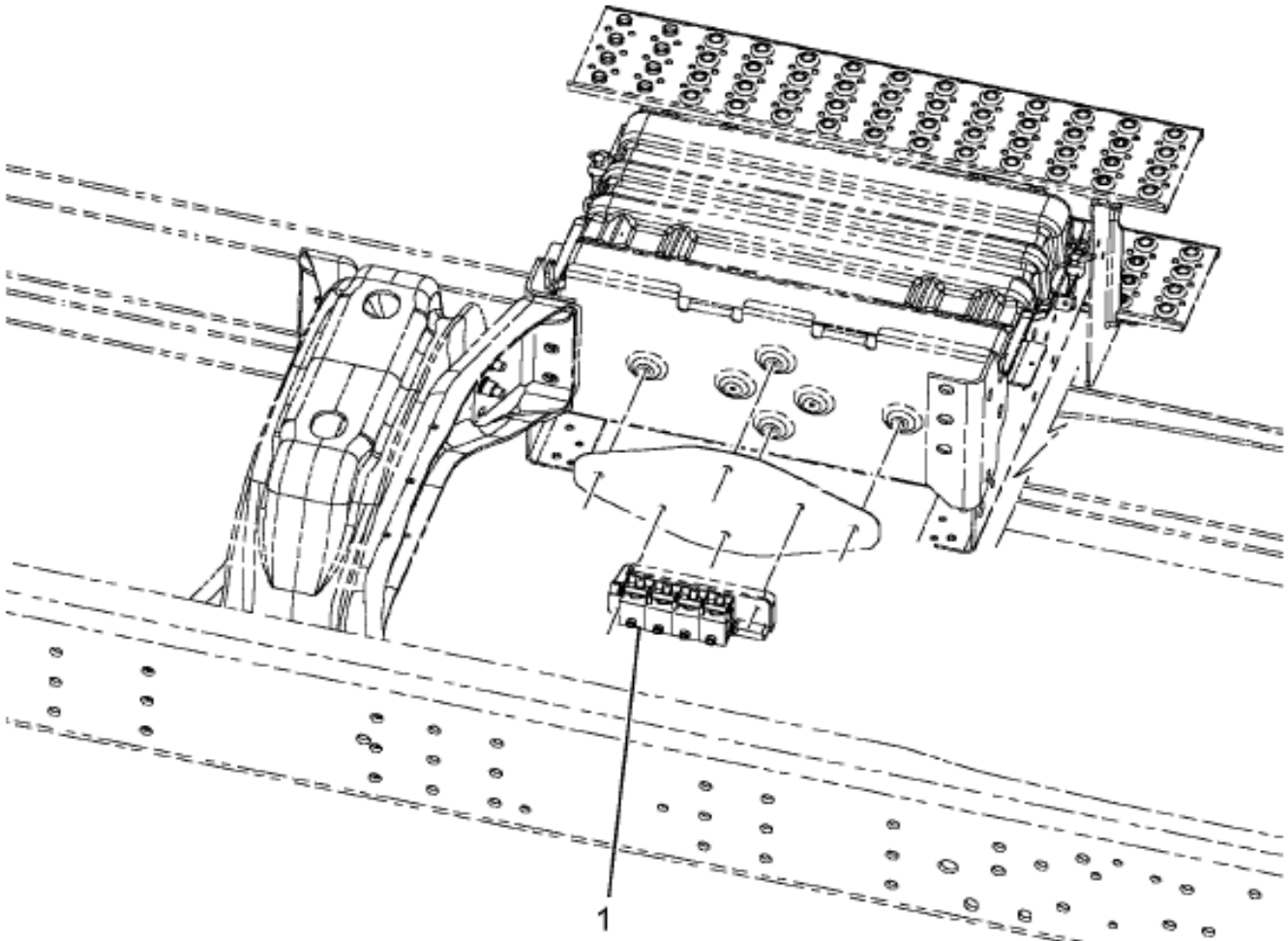

08-V84-0013-01 J03

Item	Part No.	Qty	Description	Kit	Var	Figure
1	2507597C91	KT	KIT,AIR BRK*SOLENOID COVER PLT			2507597C91
880		RF	NOTE: ASM BELOW COMPRISED OF ABOVE COMPONENTS			
881	2505594C1	RF	BRACKET, SOLENOID*FOUR PACK			

COPYRIGHT© 2011INTERNATIONAL TRUCK AND ENGINE CORP.

https://truckmanualshub.com/

Figure 2507597C91

KIT,AIR BRK*SOLENOID COVER PLT

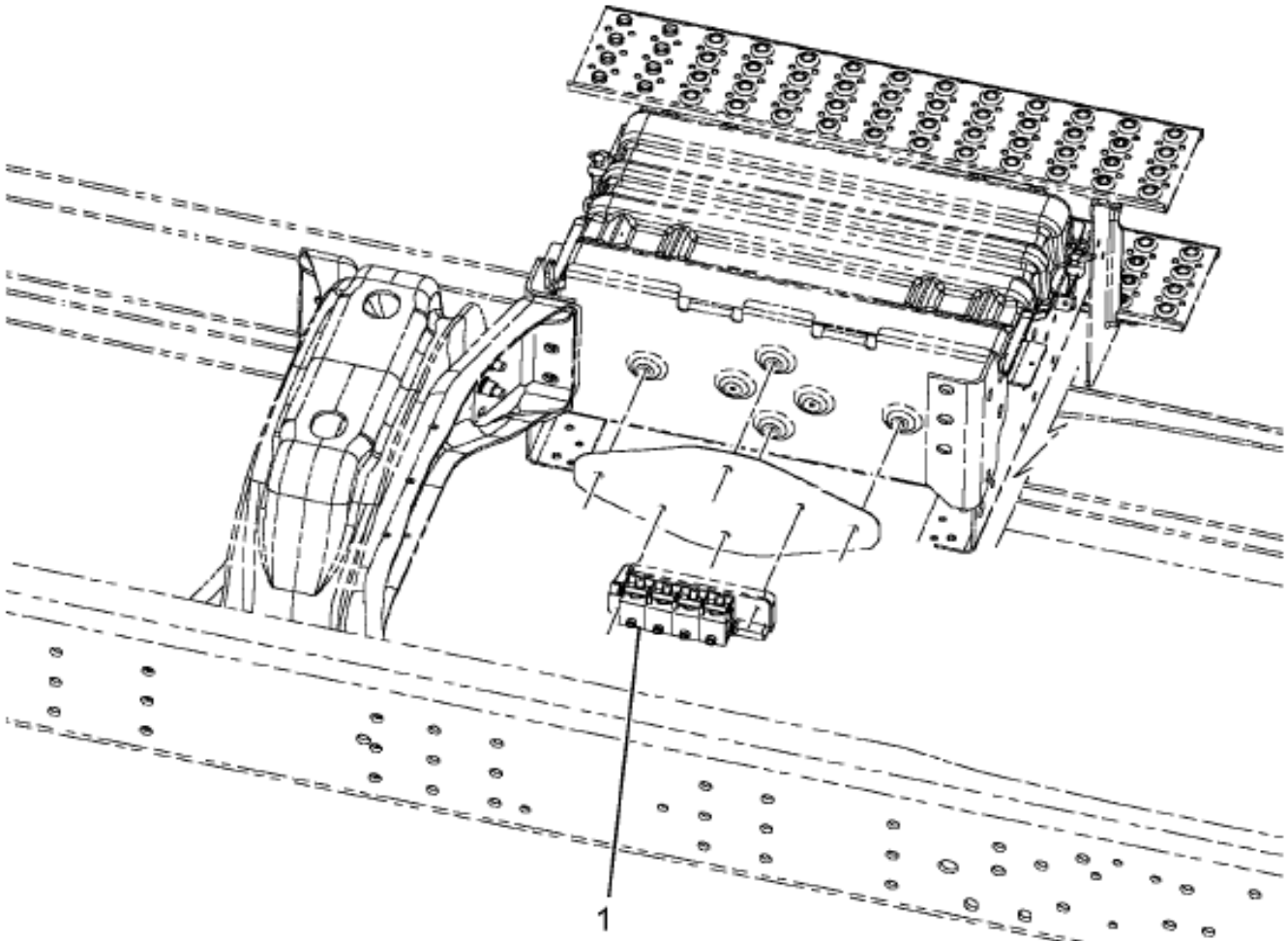

08-V84-0013-01 J03

Item	Part No.	Qty	Description	Kit	Var	Figure
1		1	COVER,AIR SOLENOID VALVE			
1		RF	SCREW,			
1		RF	RING,O			
880		RF	NOTE: ASM BELOW COMPRISED OF ABOVE COMPONENTS			
881	2507597C91	RF	KIT,AIR BRK*SOLENOID COVER PLT			

COPYRIGHT© 2011INTERNATIONAL TRUCK AND ENGINE CORP.

https://truckmanualshub.com/

Figure 0CBYL

AIR SOLENOID VALVE; DIFF LOCK,TRAC DIFF,2-SPD AXLE

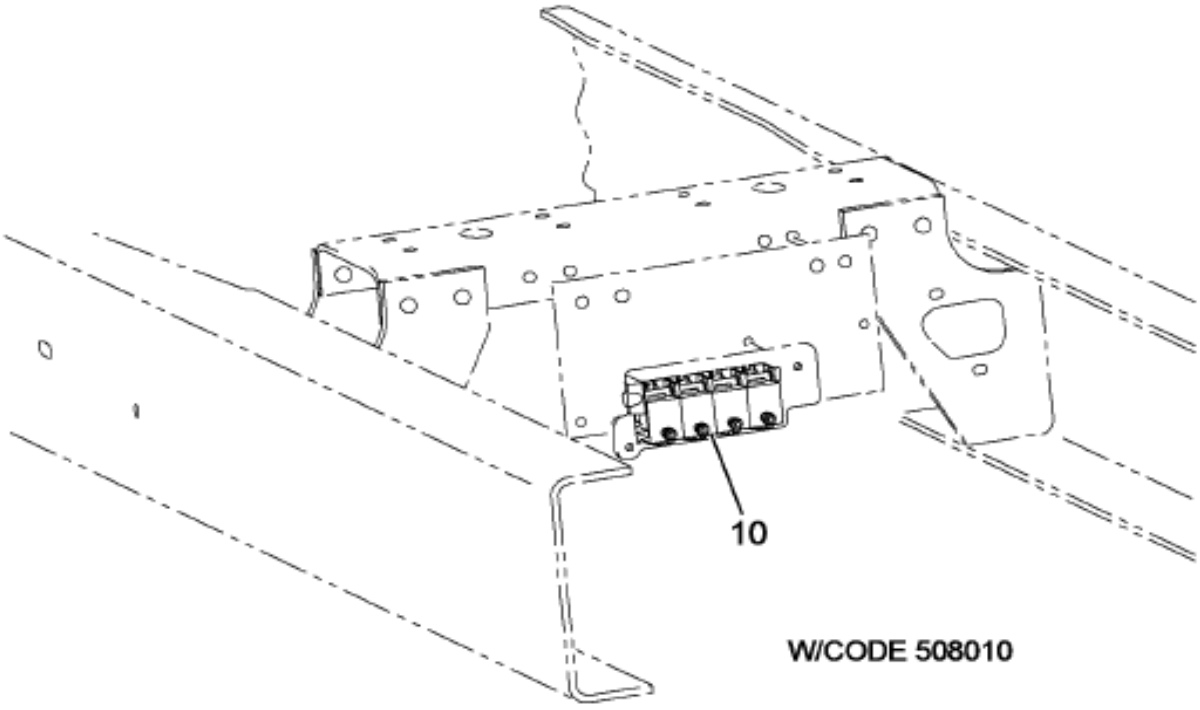

W/CODE 508010

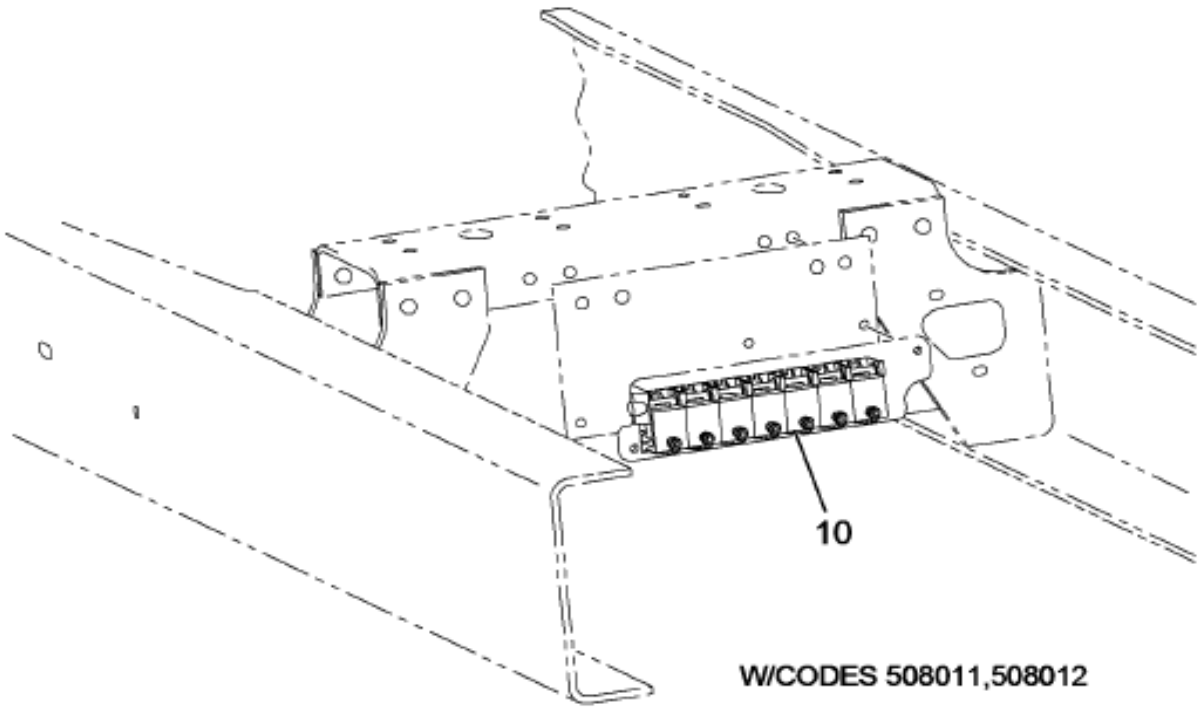

W/CODES 508011,508012

04-S02-0002-BA L09

Item	Part No.	Qty	Description	Kit	Var	Figure
10	3553344F91	1	VALVE,SOLENOID*DCLD CONTROL		0CBYP	3553344F91

COPYRIGHT© 2011INTERNATIONAL TRUCK AND ENGINE CORP.

https://truckmanualshub.com/

Figure 3553344F91
VALVE,SOLENOID*DCLD CONTROL

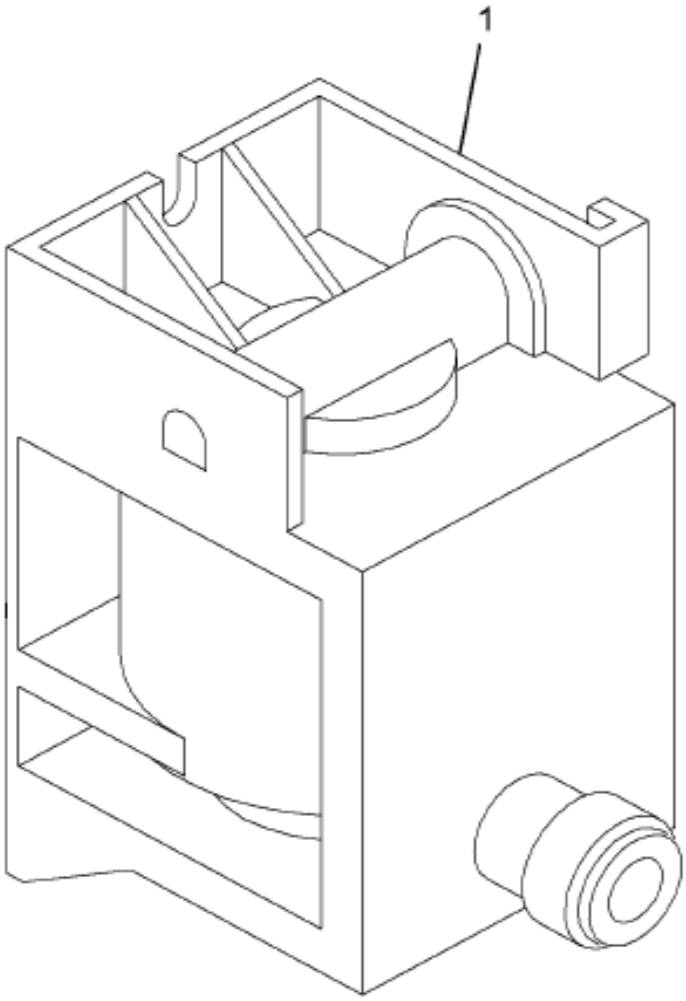

04-S02-0001-00 H05

Item	Part No.	Qty	Description	Kit	Var	Figure
1	2505591C1	1	VALVE,SOLENOID*N.C. AIR			
880		RF	NOTE: ASM BELOW COMPRISED OF ABOVE COMPONENTS			
881	3553344F91	RF	VALVE,SOLENOID*DCLD CONTROL			

COPYRIGHT© 2011INTERNATIONAL TRUCK AND ENGINE CORP.

https://truckmanualshub.com/

Figure 0CB2L

AIR SOLENOID VALVE; POWER TAKE OFF CONTROL

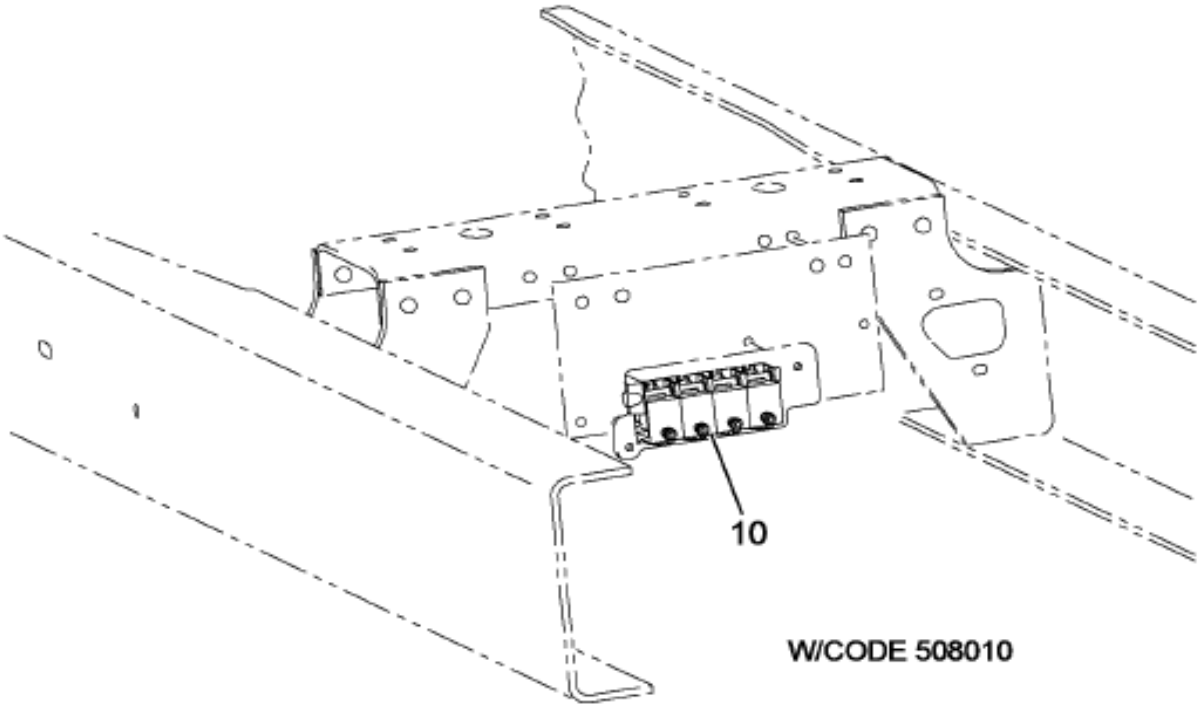

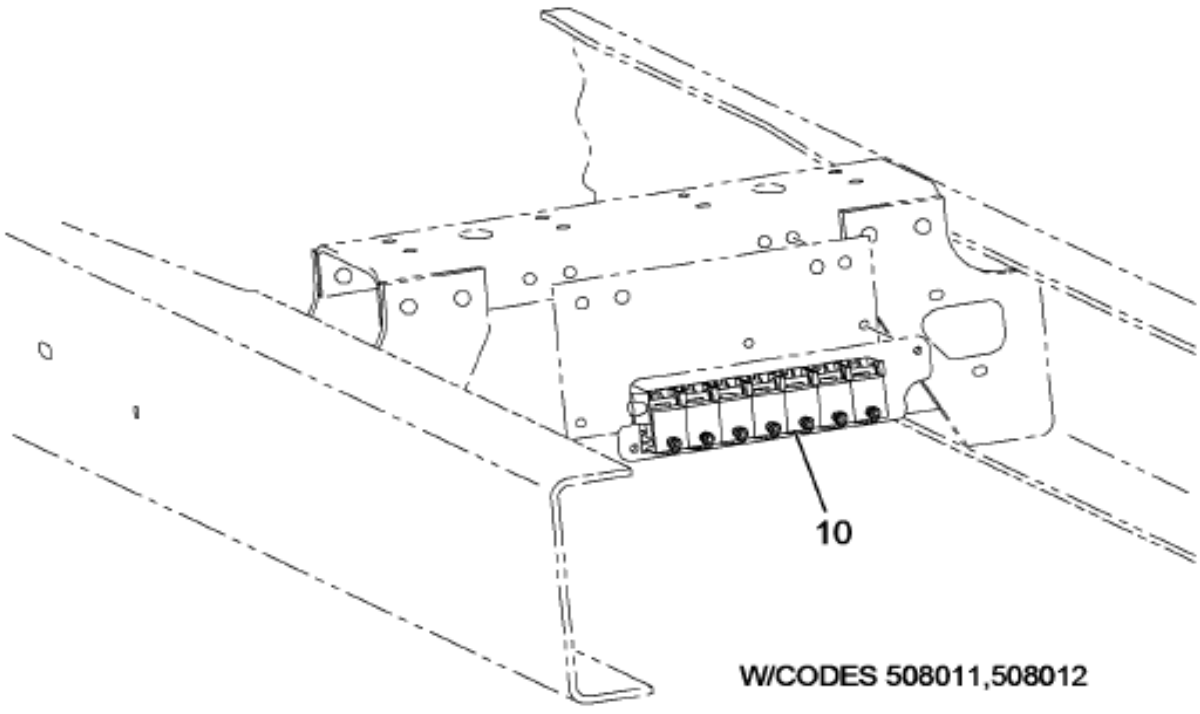

04-S02-0002-BA L09

Item	Part No.	Qty	Description	Kit	Var	Figure
10	3553363F92	1	VALVE,AIR CONTROL PWR TAKE OFF		0CC2R	3553363F92

COPYRIGHT© 2011INTERNATIONAL TRUCK AND ENGINE CORP.

https://truckmanualshub.com/

Figure 3553363F92

VALVE,AIR CONTROL PWR TAKE OFF

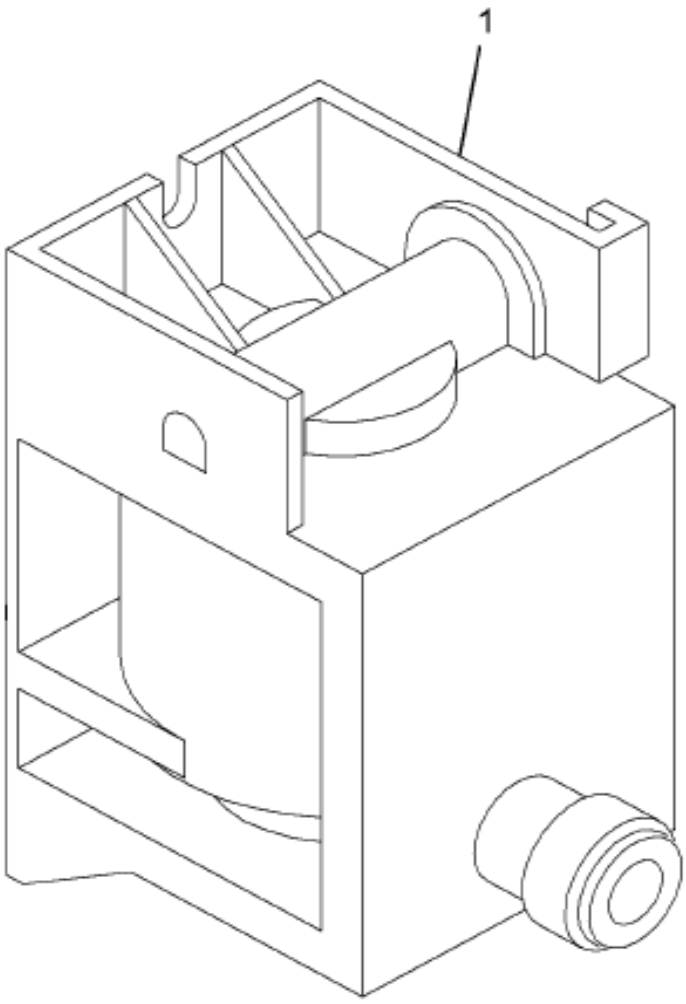

04-S02-0001-00 H05

Item	Part No.	Qty	Description	Kit	Var	Figure
1	3576680C1	1	VALVE,SOLENOID*AIR SUSPENSION			3576680C1
1	2020342C1	1	PLUG,FAST CONNECT 1/4 TUBE			
880		RF	NOTE: ASM BELOW COMPRISED OF ABOVE COMPONENTS			
881	3553363F92	RF	VALVE,AIR CONTROL PWR TAKE OFF			

Grp 08

COPYRIGHT© 2011INTERNATIONAL TRUCK AND ENGINE CORP.

https://truckmanualshub.com/

Figure 3576680C1
VALVE,SOLENOID*AIR SUSPENSION

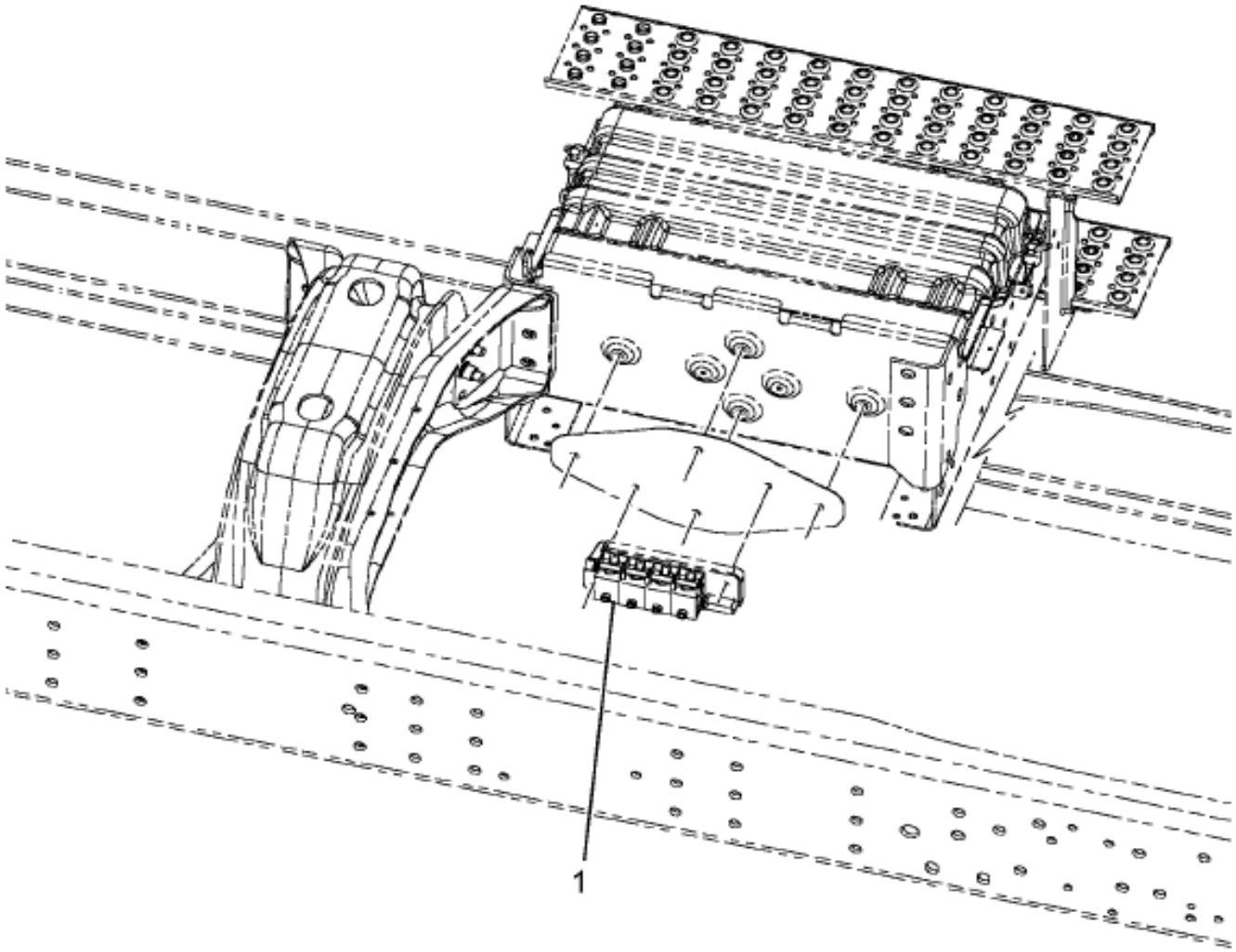

08-V84-0013-01 J03

Item	Part No.	Qty	Description	Kit	Var	Figure
1		1	VALVE,SOLENOID*AIR SUSPENSION			
1		RF	SCREW,#6 X 1/2 PNHD ZINC			
1		RF	RING,O			
880		RF	NOTE: ASM BELOW COMPRISED OF ABOVE COMPONENTS			
881	3576680C1	RF	VALVE,SOLENOID*AIR SUSPENSION			

COPYRIGHT© 2011INTERNATIONAL TRUCK AND ENGINE CORP.

https://truckmanualshub.com/

Figure 0J53G

ALT PULLEY INSTL; W/CUM ISM ENG

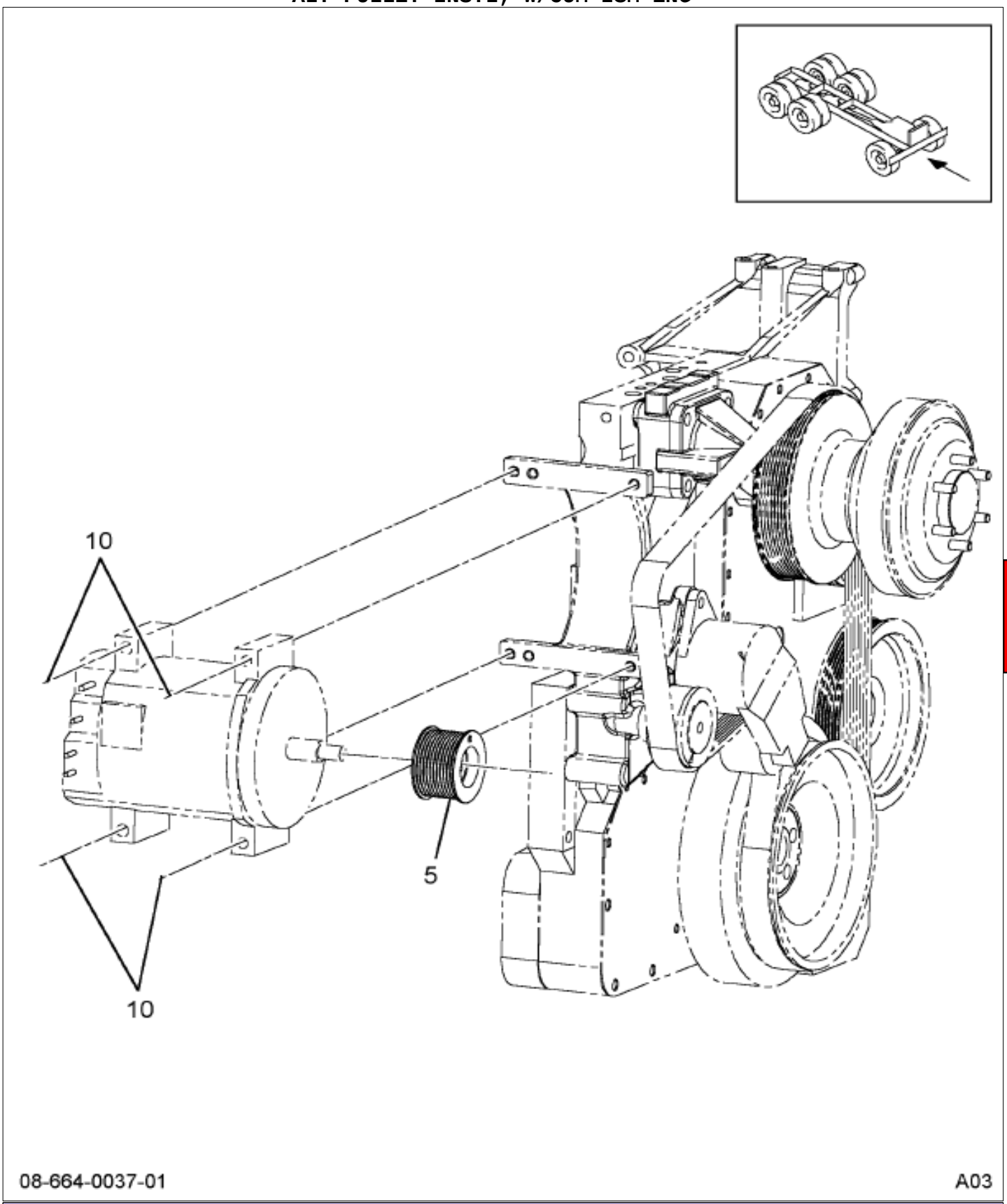

Grp 08

Item	Part No.	Qty	Description	Kit	Var	Figure
5	3579002C1	1	PULLEY,8PK X 66.48MM DIA FOR 2		0J53G	
10	31065R1	4	BOLT M10 X 100 PHC CL 10.9 FL		0J53G	

COPYRIGHT© 2011INTERNATIONAL TRUCK AND ENGINE CORP.

https://truckmanualshub.com/

Figure 011PK1

ALTERNATOR MTG; 12V,PAD MTD,DELCO,DENSO,L/N,BOSCH

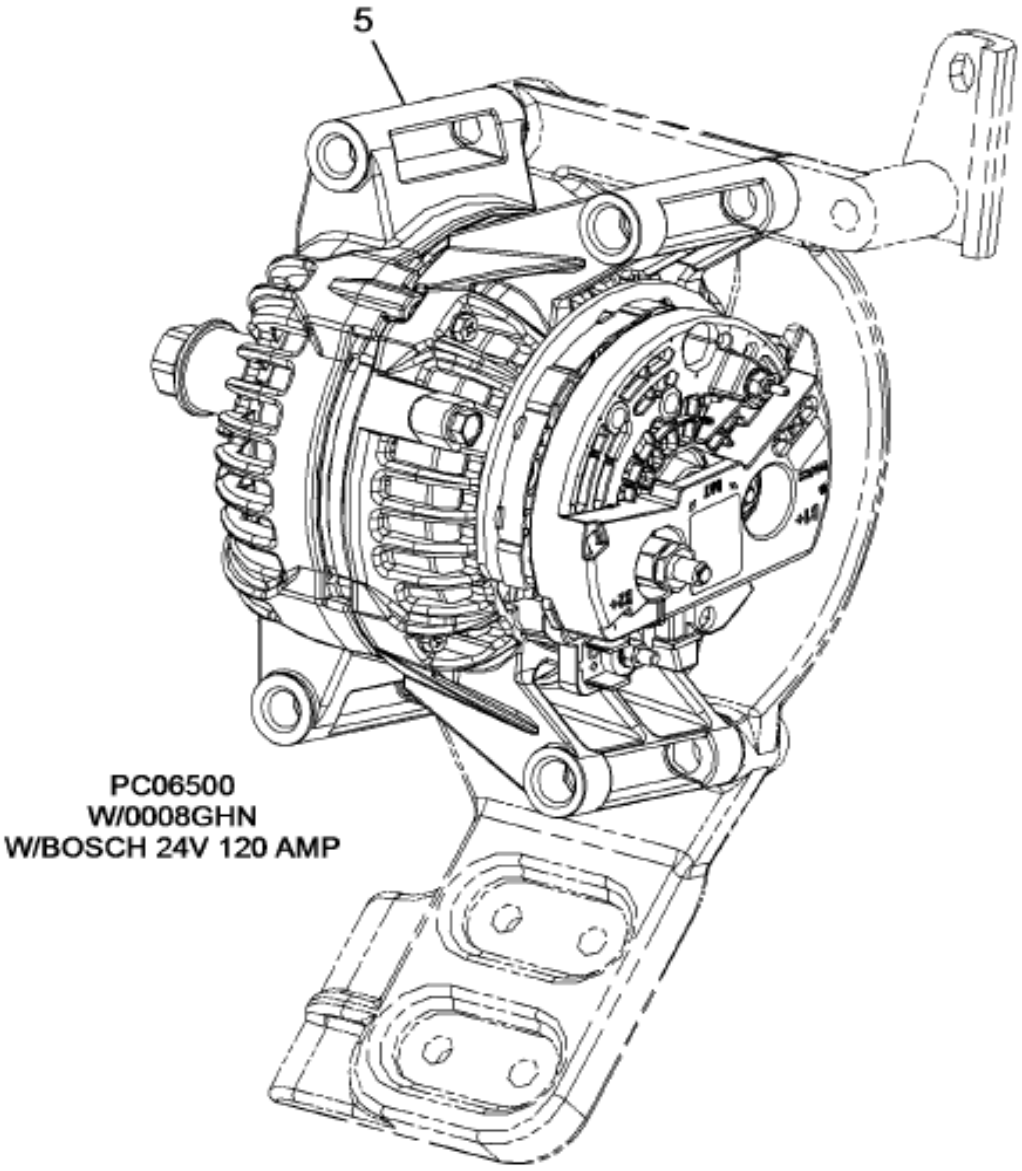

08-158-0030-01 J11

Item	Part No.	Qty	Description	Kit	Var	Figure
5	3604555C91	1	GENERATOR,12V, PAD MTD 135A DE		0V18J	

COPYRIGHT© 2011INTERNATIONAL TRUCK AND ENGINE CORP.

https://truckmanualshub.com/

Figure 01E59

BATT BOX COVER & HOLD DOWN; FOR 18" BATT BOX

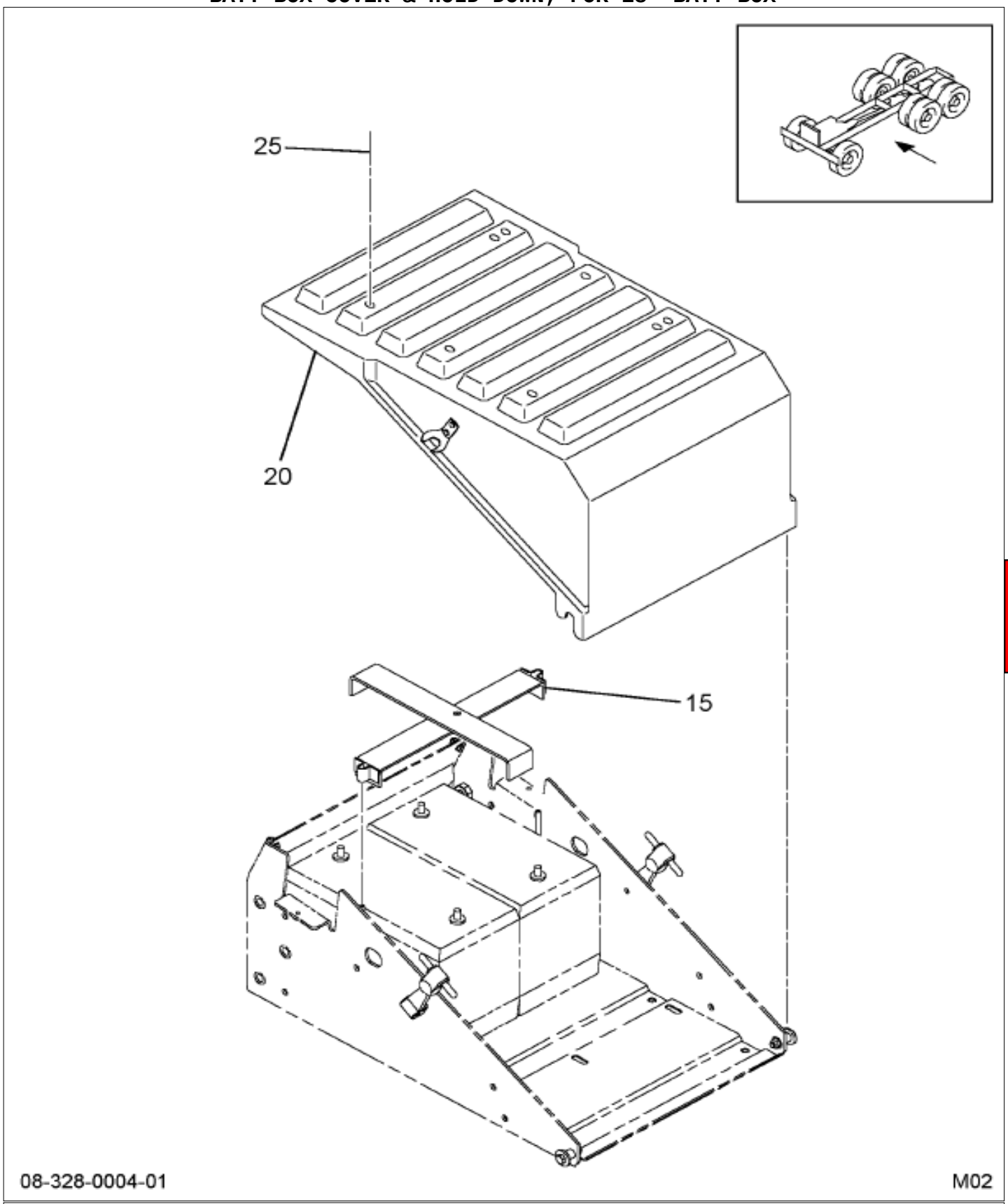

Grp 08

Figure 1 of 2

COPYRIGHT© 2011INTERNATIONAL TRUCK AND ENGINE CORP.

https://truckmanualshub.com/

Figure 0HL97

BATT BOX COVER & HOLD DOWN; FOR 18" BATT BOX

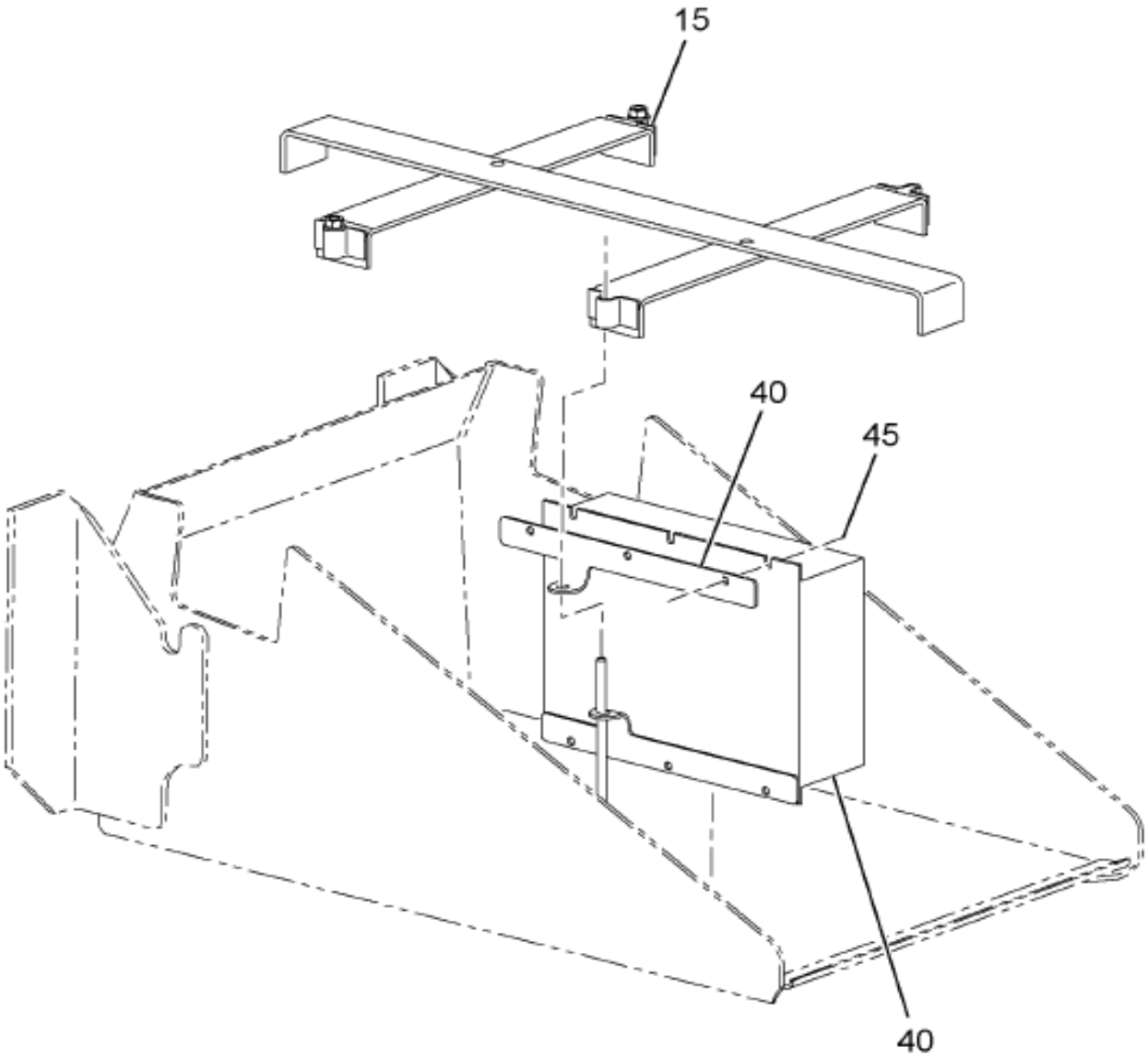

08-328-0014-01 M05

Item	Part No.	Qty	Description	Kit	Var	Figure
15	3557584C1	1	CLAMP,BATT HOLD DOWN*HOLD DOWN		0N42R	
15	3557576C2	4	BOLT HOOK BATT HOLD DOWN*BOLT		0N42R	
15	25708R1	4	WASHER,FLAT 5/16(.344X.688X.08		0N42R	
15	3553592C1	4	NUT,HEX METRIC PREV. TORQ*M8		0N42R	
15	579200C1	1	NUT,PUSH ON		0N42R	
20	3578370C92	1	COVER ASM,BATTERY BOX		0N42R	3578370C92

COPYRIGHT© 2011INTERNATIONAL TRUCK AND ENGINE CORP.

https://truckmanualshub.com/

Figure 3578370C92
COVER ASM,BATTERY BOX

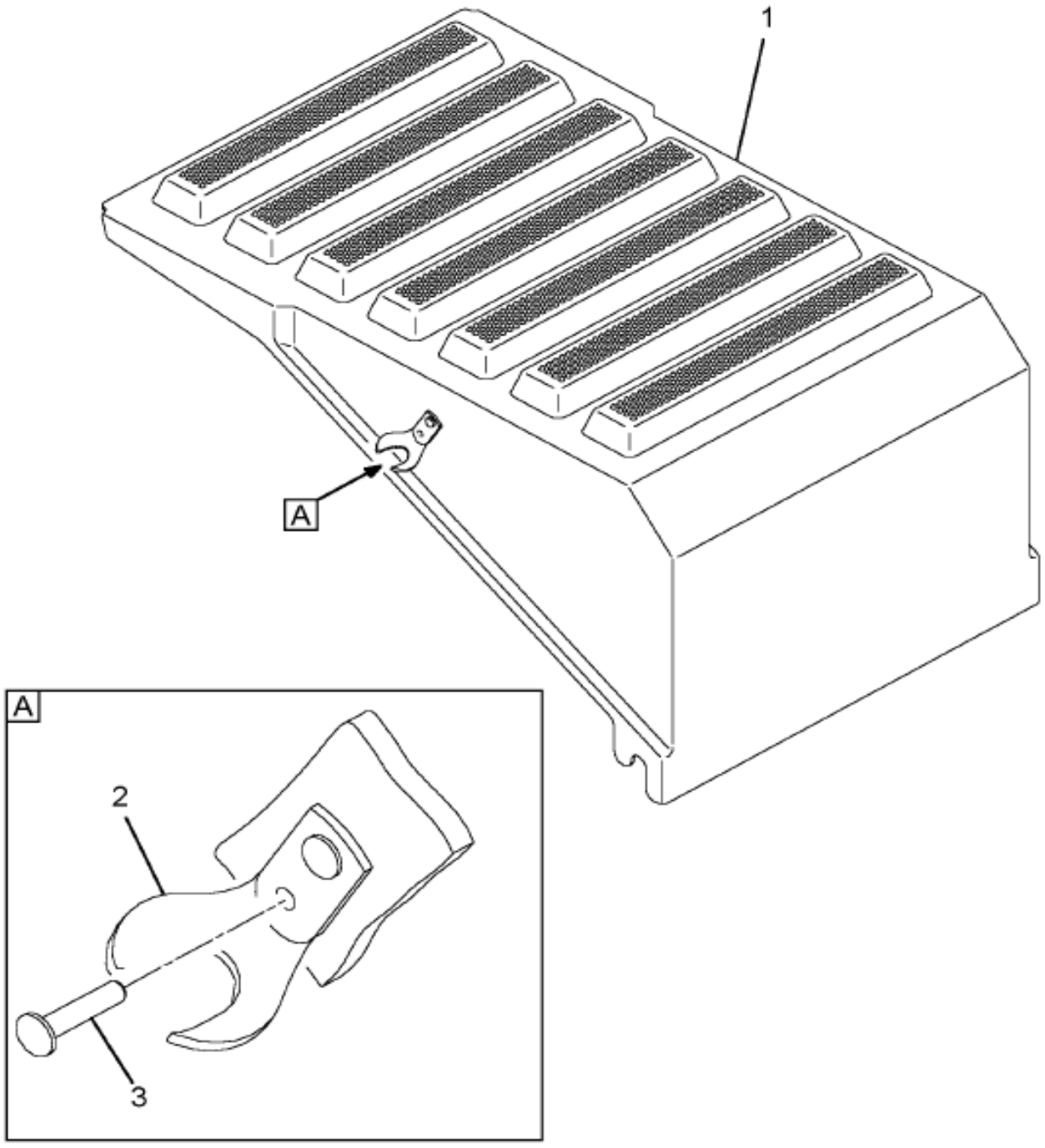

08-328-0007-01 J03

Item	Part No.	Qty	Description	Kit	Var	Figure
1	3578369C2	1	COVER,BATTERY BOX			
2	777937C1	2	RETAINER,RUBBER HOOK BTRY CVR			
3	3589877C1	4	RIVET,BLIND*3/16 (GRIP .060-.3			
880		RF	NOTE: ASM BELOW COMPRISED OF ABOVE COMPONENTS			
881	3578370C92	RF	COVER ASM,BATTERY BOX			

COPYRIGHT© 2011INTERNATIONAL TRUCK AND ENGINE CORP.

https://truckmanualshub.com/

Figure 0HL9D

BATT BOX SUPT INSTL; 18" RSM LONG BOX

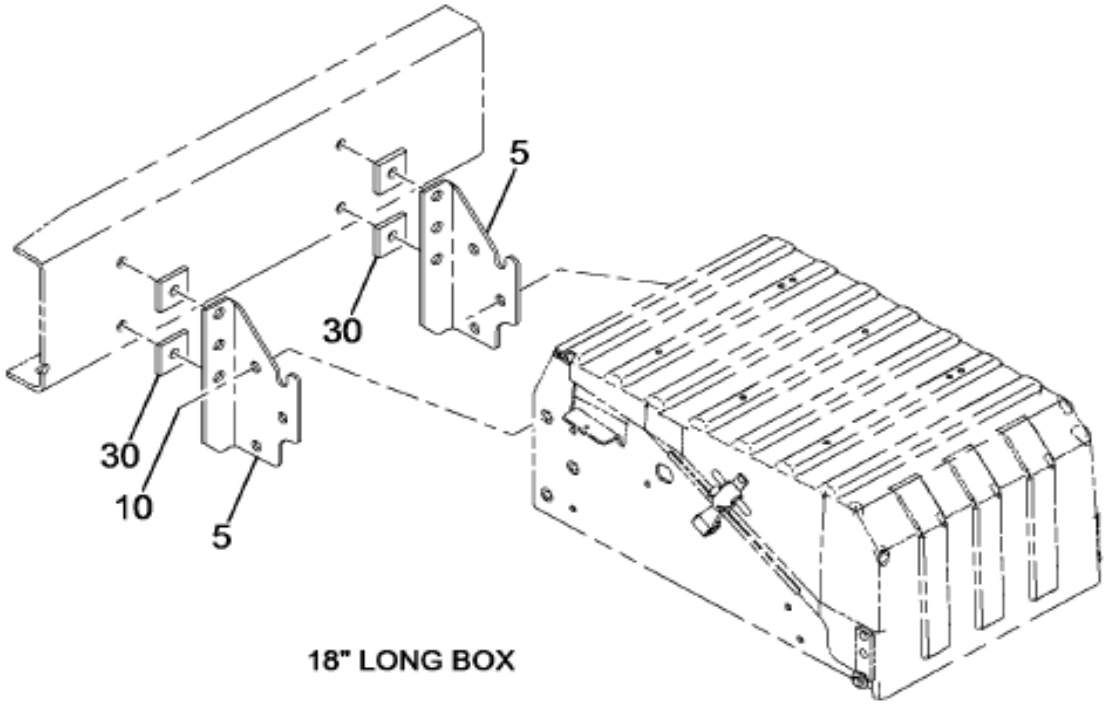

18" LONG BOX

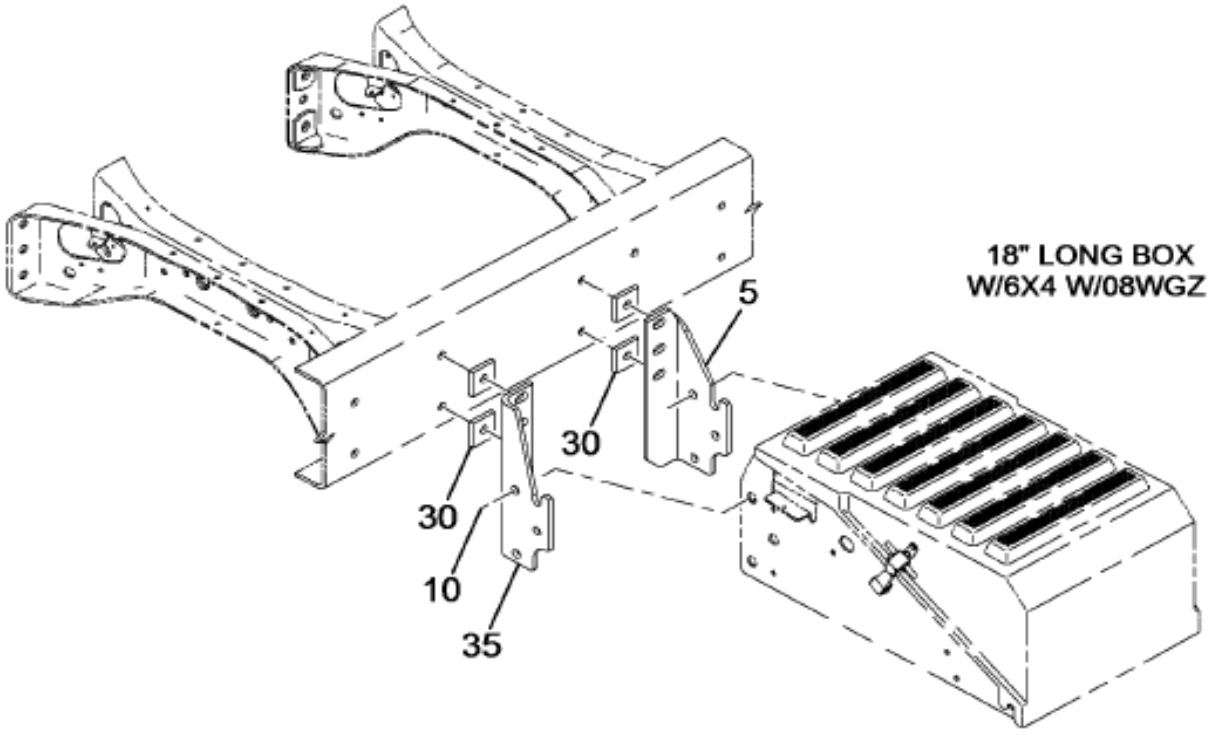

18" LONG BOX
W/6X4 W/08WGZ

08-334-0055-01 B09

Item	Part No.	Qty	Description	Kit	Var	Figure
5	3562405C4	2	BRACKET,*LEFT		0HL9D	
5	31075R1	4	BOLT, M16 X 70 PHC CL 10.9 FLG		0HL9D	
5	30756R1	4	NUT,HEX M16 PRVTRQ		0HL9D	
5	578075C1	4	WASHER,FLAT OR SPECIAL		0HL9D	
10	3536430C1	4	BOLT HEX FLG HD M16-2 X 30		0HL9D	

COPYRIGHT© 2011INTERNATIONAL TRUCK AND ENGINE CORP.

https://truckmanualshub.com/

Figure 0GCJ1

BATT CABLE INSTL; RIGHT SIDE BACK OF FUEL TANK

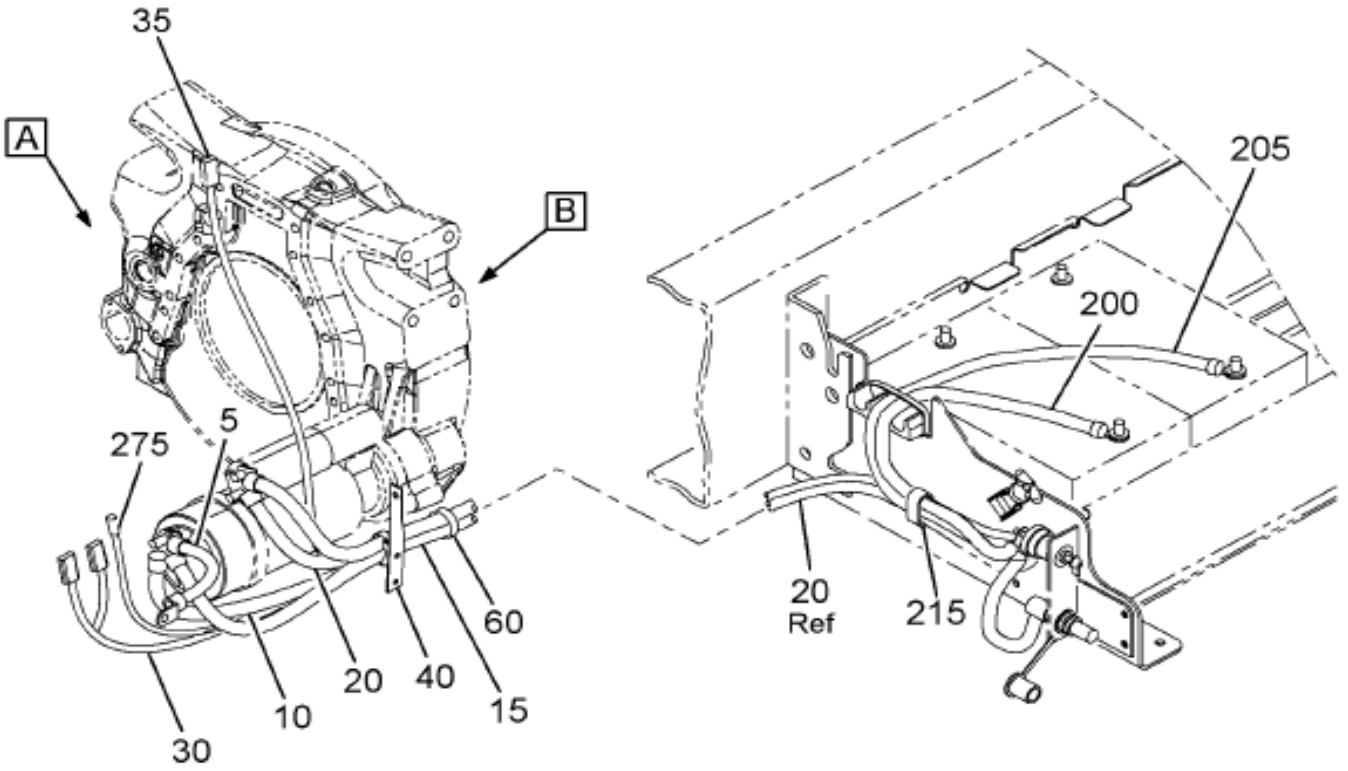

M-NGV-SS
W/INTERNATIONAL 16

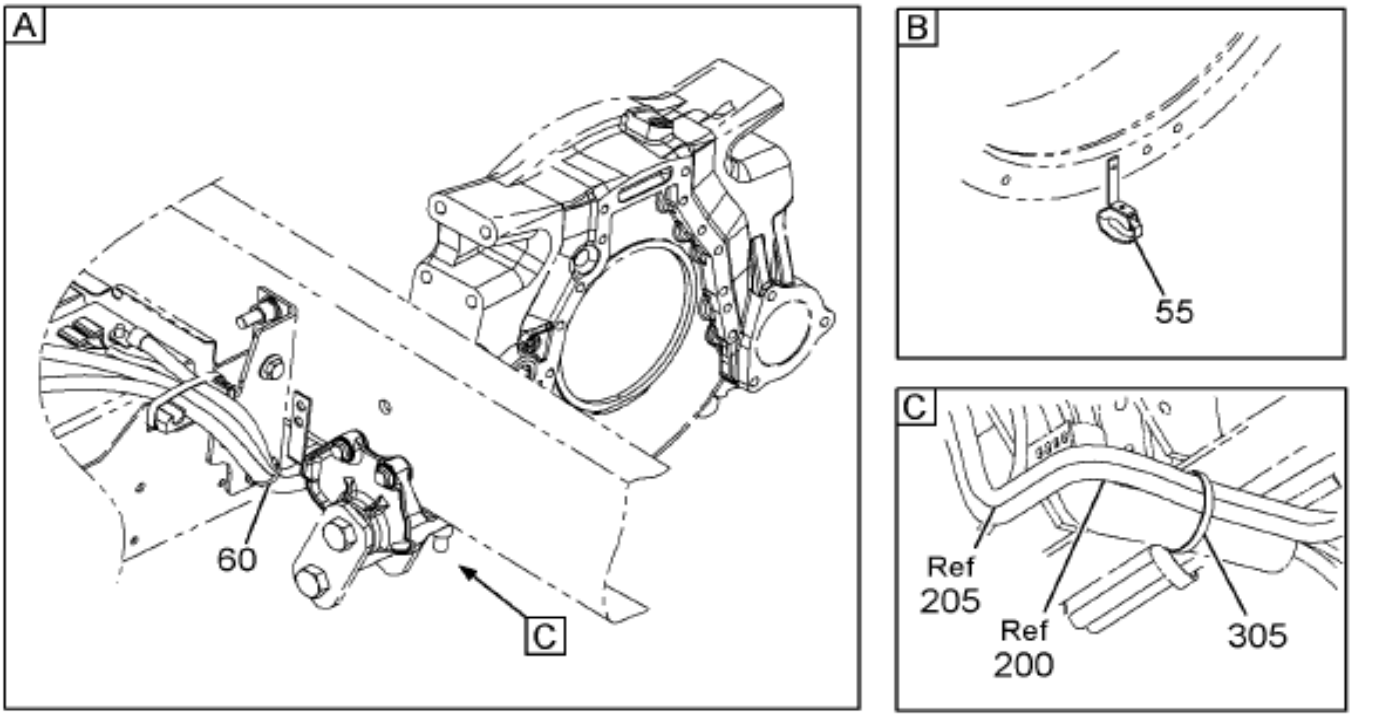

08-V13-0053-01 G09

Grp 08

Figure 1 of 7

COPYRIGHT© 2011INTERNATIONAL TRUCK AND ENGINE CORP.

https://truckmanualshub.com/

Figure 0GC31
BATT CABLE INSTL; RIGHT SIDE BACK OF FUEL TANK

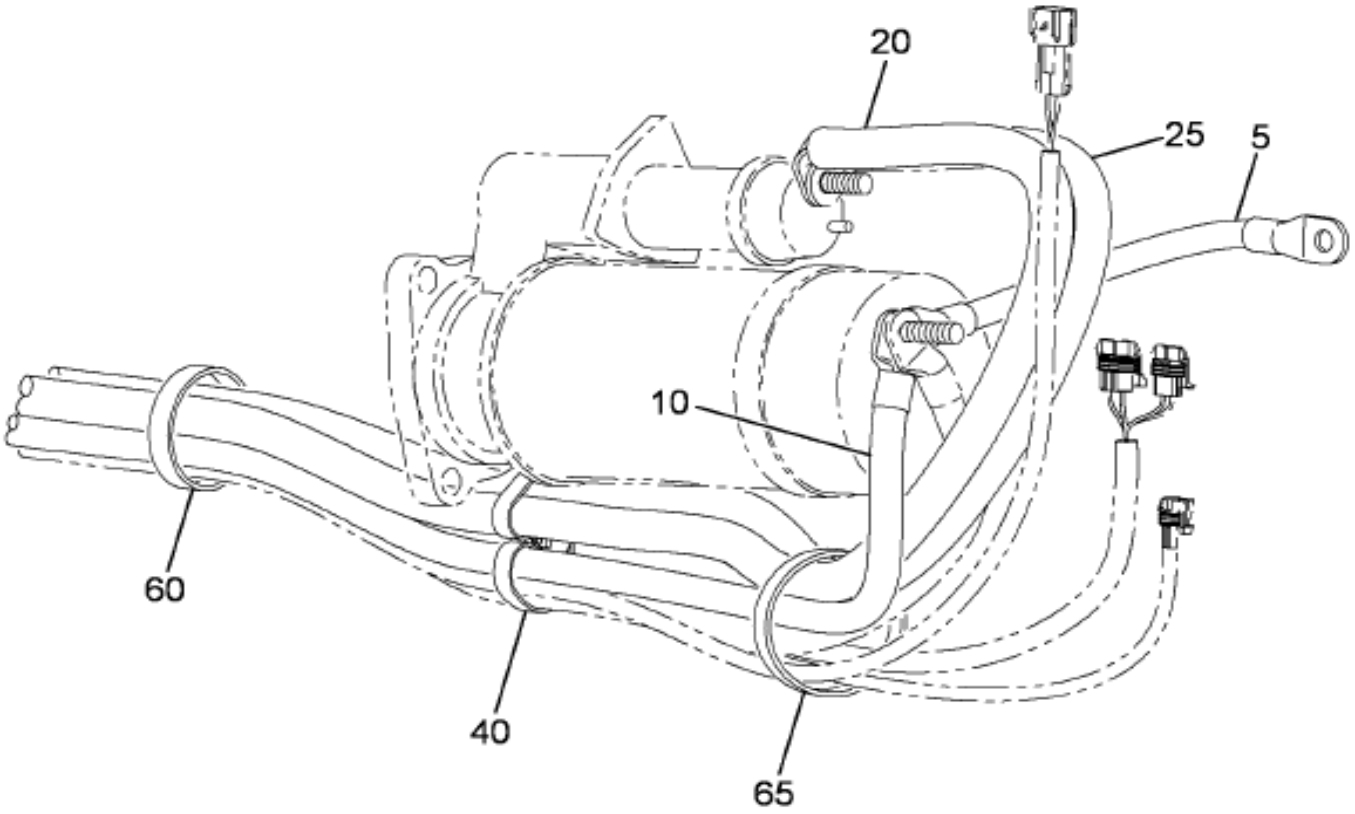

CAT C10,C12

08-V13-0024-AF F09

Figure 2 of 7

COPYRIGHT© 2011INTERNATIONAL TRUCK AND ENGINE CORP.

https://truckmanualshub.com/

Figure 0GCJ1

BATT CABLE INSTL; RIGHT SIDE BACK OF FUEL TANK

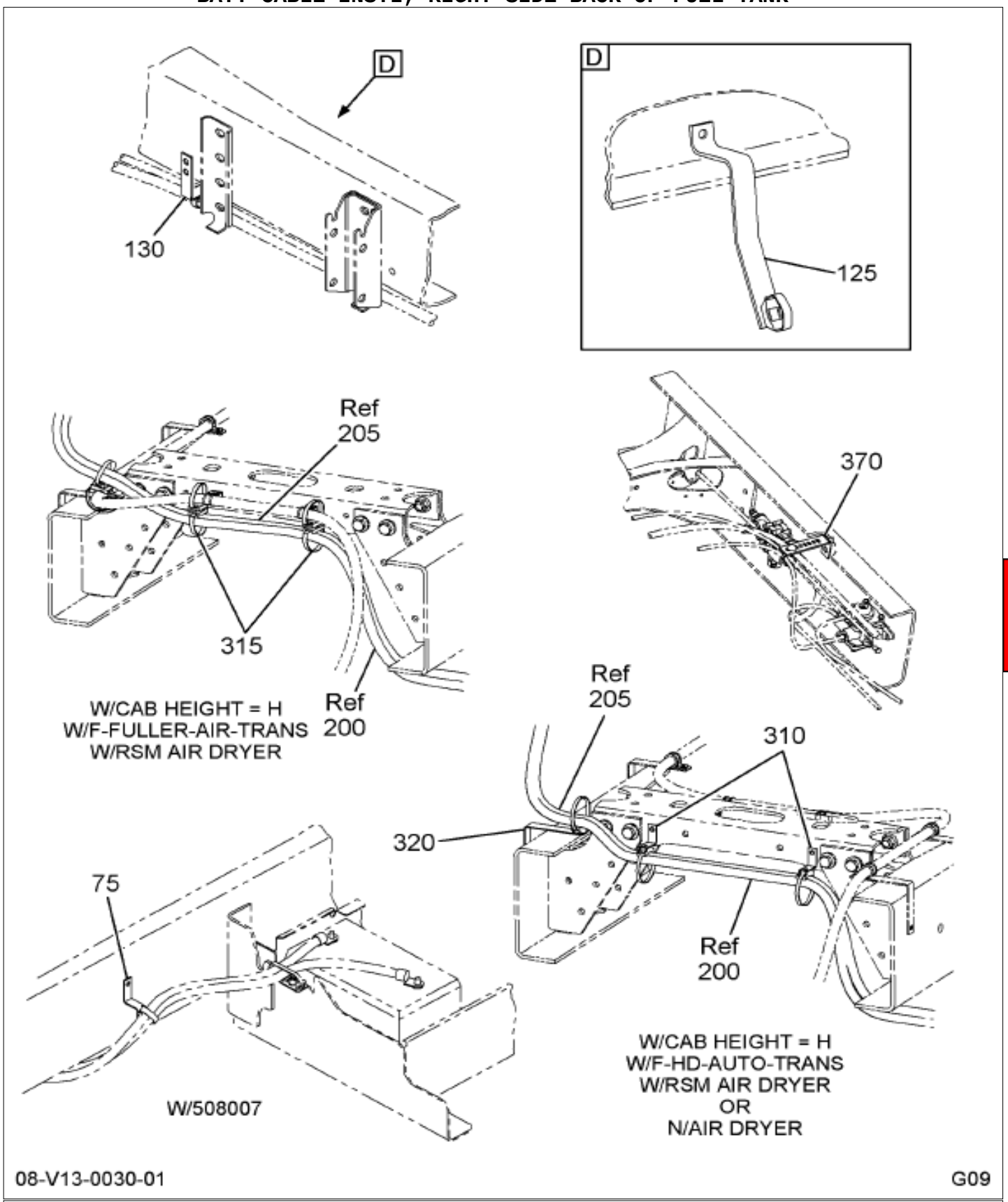

Grp 08

Figure 3 of 7

COPYRIGHT© 2011INTERNATIONAL TRUCK AND ENGINE CORP.

https://truckmanualshub.com/

Figure 0GCJ1
BATT CABLE INSTL; RIGHT SIDE BACK OF FUEL TANK

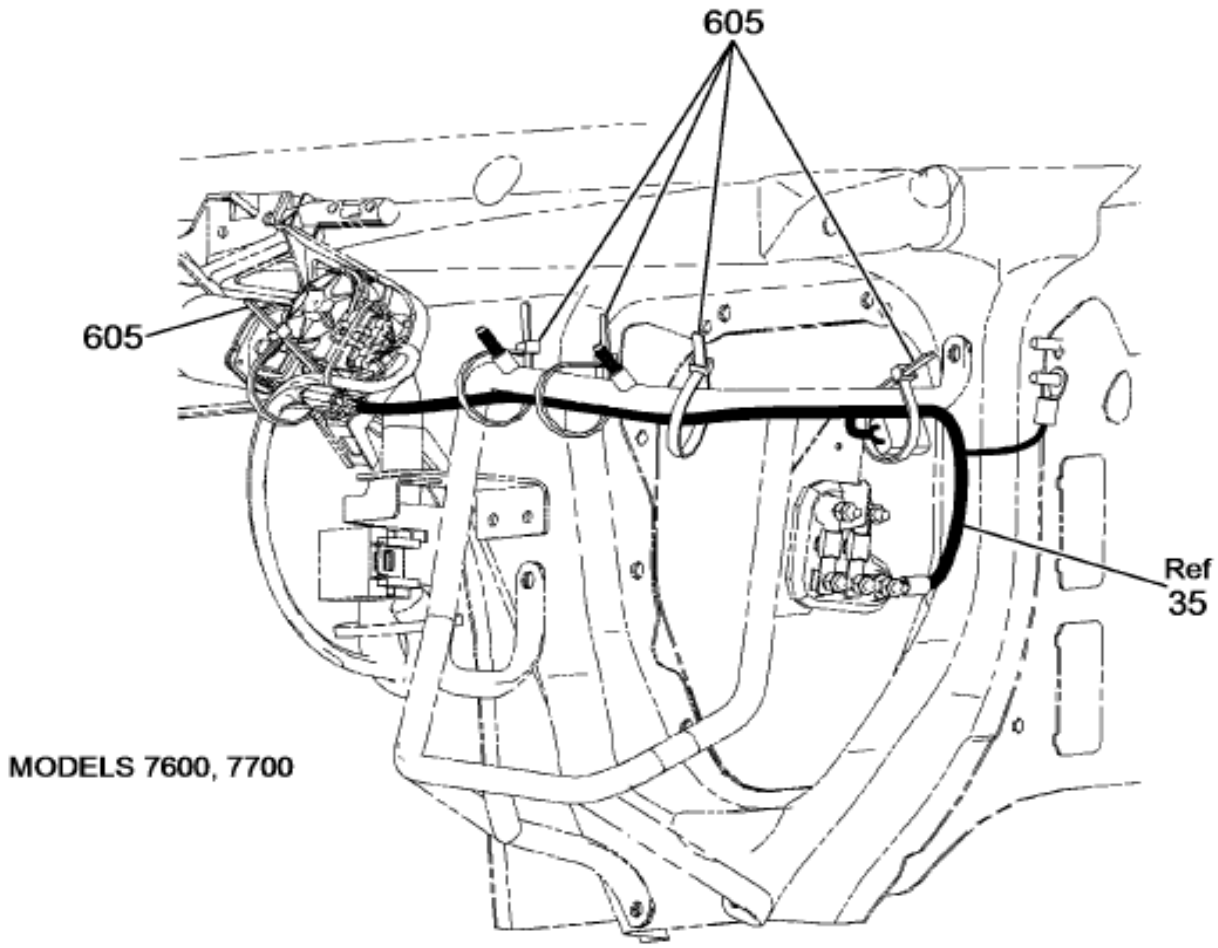

M-NGV-SS &
W/0510922 &
W/0008REA, 0008RGA

08-V13-0180-01 E09

Figure 4 of 7

COPYRIGHT© 2011INTERNATIONAL TRUCK AND ENGINE CORP.

https://truckmanualshub.com/

Figure 0GC31
BATT CABLE INSTL; RIGHT SIDE BACK OF FUEL TANK

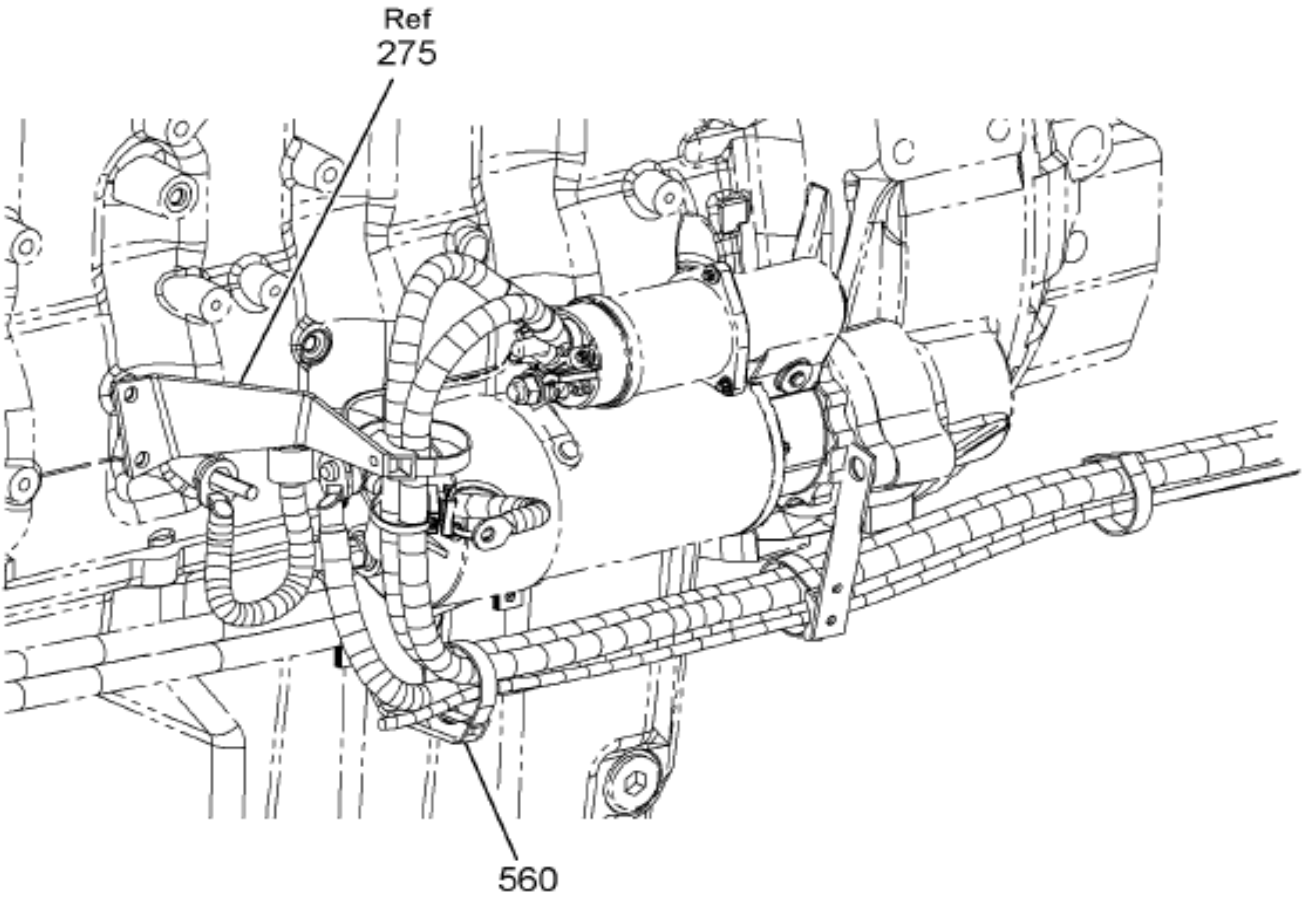

C13 ENGINE

08-V13-0200-02 B09

Grp 08

Figure 5 of 7

COPYRIGHT© 2011INTERNATIONAL TRUCK AND ENGINE CORP.

https://truckmanualshub.com/

Figure 0GC31
BATT CABLE INSTL; RIGHT SIDE BACK OF FUEL TANK

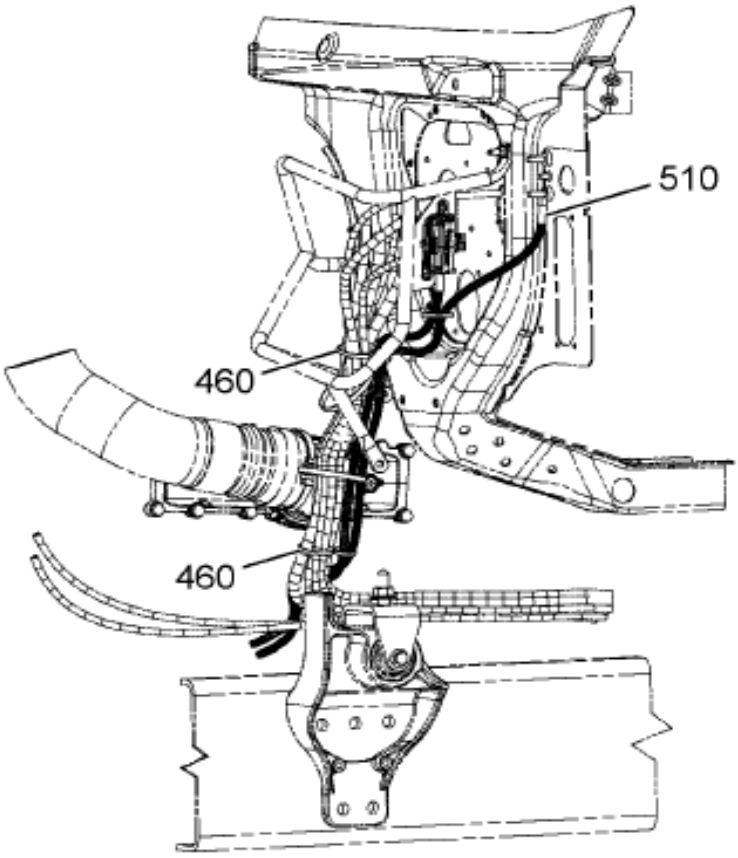

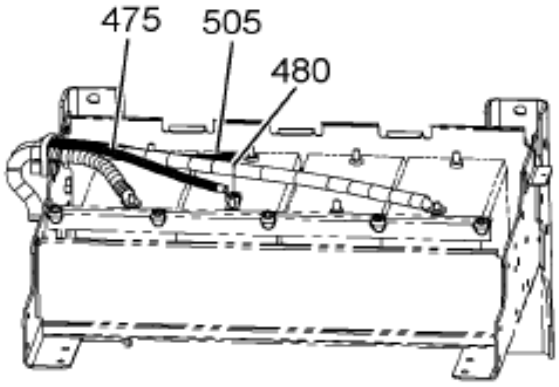

LEFT SIDE MOUNTED BOX SHOWN
RIGHT SIDE MOUNTED BOX
SYMMETRICALLY OPPOSITE

08-V13-0201-01 B09

Figure 6 of 7

COPYRIGHT© 2011INTERNATIONAL TRUCK AND ENGINE CORP.

https://truckmanualshub.com/

Figure 0GCJY
BATT CABLE INSTL; RIGHT SIDE BACK OF FUEL TANK

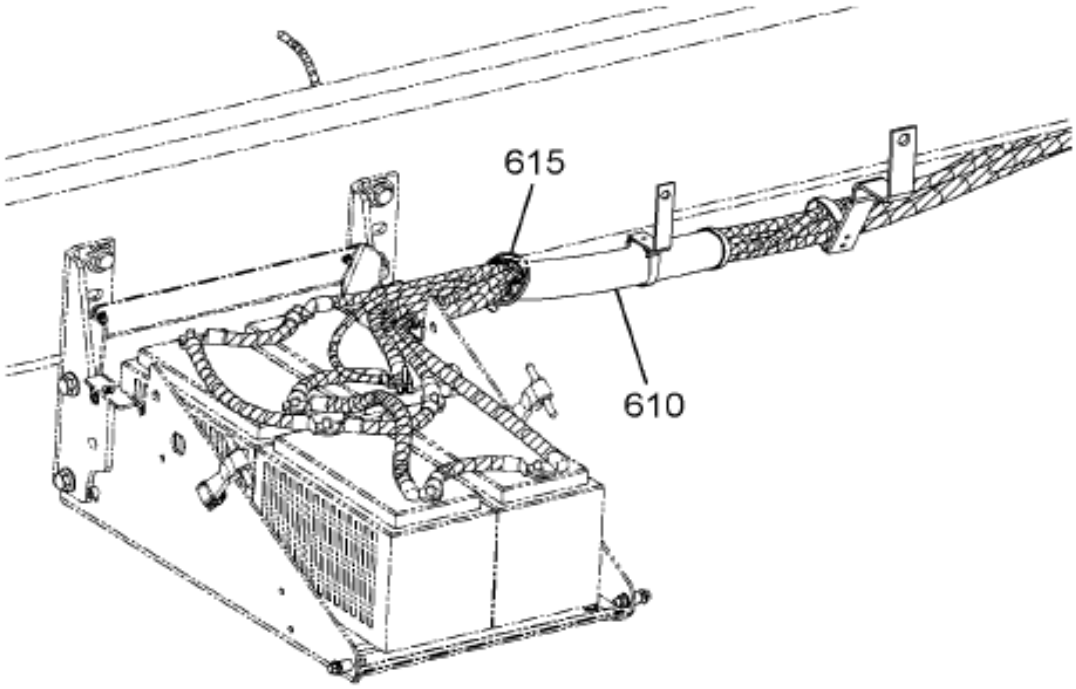

M-NGV-SS-7600
W/F-ISM-EPA-04ENG
W/0508005
W/0016030

08-V13-0220-01 G09

Item	Part No.	Qty	Description	Kit	Var	Figure
5	K2X2201036	1	CABLE,BATTERY, 2 GUAGE WHITE		0GCJY	
5	3718729C1	1	BOLT, HVY HEX FLG HD, M10 X 45		0GCJY	
5	25724R1	1	WASHER FLAT 3/8 ID X 1.12		0GCJY	
5	3718728C1	1	NUT, KEPS, M10-1.5, G-23 TIN-Z		0GCJY	
10	K4X1201270	1	CABLE,BATTERY, BTRY CBL 0000GA		0KQ57	
15	K4X1403290	1	CABLE,BATTERY, NEG 0000 GA 290		0KQ57	

COPYRIGHT© 2011INTERNATIONAL TRUCK AND ENGINE CORP.

https://truckmanualshub.com/

Figure 0GCJY
BATT CABLE INSTL; RIGHT SIDE BACK OF FUEL TANK

Item	Part No.	Qty	Description	Kit	Var	Figure
20	R4X6B11310	1	CABLE,		0KQ57	
25	R4X6B11340	1	CABLE,BATTERY,POS 0000GA 340CM		0KQ57	
30	3547673C91	1	CABLE,ASM*CLEAN PWR FEED, 2900		0L706	3547673C91
30	289862C1	1	STRAP,CABLE LOCK		0GCJY	
40	2040046C2	1	EXTENSION,CLIP 90 DEG TWIST		0GCQP	
40	25483R1	1	BOLT 1/4 X 1 PHC TYPE 8		0GCJY	
40	120380	1	WASHER LOCK 1/4",REG,STL/ZNC		0GCJY	
40	25519R1	1	NUT,1/4 NC TYPE 8		0GCJY	
40	2041341C1	1	SADDLE,CLAMP CABLE LOCK MT 1/4		0GCJY	
40	3516934C1	1	STRAP,CABLE LOCK 1/2" X 20"		0GCJY	
55	466369C1	1	EXTENSION CLIP		0GCJY	
55	25222R1	1	BOLT,HH 1/4-20 X 3/4 PHC TYP 8		0GCJY	
55	25519R1	1	NUT,1/4 NC TYPE 8		0GCJY	
55	120380	1	WASHER LOCK 1/4",REG,STL/ZNC		0GCJY	
55	2041341C1	1	SADDLE,CLAMP CABLE LOCK MT 1/4		0GCJY	
55	3516934C1	1	STRAP,CABLE LOCK 1/2" X 20"		0GCJY	
60	3516934C1	5	STRAP,CABLE LOCK 1/2" X 20"		0GCJY	
65	3516934C1	1	STRAP,CABLE LOCK 1/2" X 20"		0GCQP	
125	432736C2	1	EXTENSION,CLIP		0GCJY	
125	30849R2	1	BOLT HEX FLG HD METRIC		0GCJY	
125	30754R1	1	NUT,LOCK OR HEX SPECIAL*PREVAI		0GCJY	
125	25483R1	1	BOLT 1/4 X 1 PHC TYPE 8		0GCJY	
125	120380	1	WASHER LOCK 1/4",REG,STL/ZNC		0GCJY	
125	25519R1	1	NUT,1/4 NC TYPE 8		0GCJY	
125	2041341C1	1	SADDLE,CLAMP CABLE LOCK MT 1/4		0GCJY	
125	3516934C1	1	STRAP,CABLE LOCK 1/2" X 20"		0GCJY	
130	509388C1	1	EXTENSION,CLIP		0GCJY	
130	25483R1	1	BOLT 1/4 X 1 PHC TYPE 8		0GCJY	
130	3516934C1	1	STRAP,CABLE LOCK 1/2" X 20"		0GCJY	
215	3516934C1	1	STRAP,CABLE LOCK 1/2" X 20"		0GCJY	
215	3554554C1	1	GUIDE,BRK HOSE & CABLE*SWIVEL		0GCJY	
215	3554554C1	1	GUIDE,BRK HOSE & CABLE*SWIVEL		0KQ57	
215	795529C1	1	EXTENSION,CLIP		0QSZR	
215	25222R1	1	BOLT,HH 1/4-20 X 3/4 PHC TYP 8		0QSZR	
215	3516934C1	2	STRAP,CABLE LOCK 1/2" X 20"		0GCJY	
215	3516934C1	2	STRAP,CABLE LOCK 1/2" X 20"		0KQ57	
215	25519R1	1	NUT,1/4 NC TYPE 8		0QSZR	
215	120380	2	WASHER LOCK 1/4",REG,STL/ZNC		0QSZR	
215	2041341C1	1	SADDLE,CLAMP CABLE LOCK MT 1/4		0QSZR	
215	120380	1	WASHER LOCK 1/4",REG,STL/ZNC		0GCJY	
215	3516934C1	1	STRAP,CABLE LOCK 1/2" X 20"		0QSZR	
215	25519R1	1	NUT,1/4 NC TYPE 8		0GCJY	
215	2041341C1	1	SADDLE,CLAMP CABLE LOCK MT 1/4		0GCJY	

COPYRIGHT© 2011INTERNATIONAL TRUCK AND ENGINE CORP.

https://truckmanualshub.com/

Figure 3347673C91

CABLE,ASM*CLEAN PWR FEED, 2900

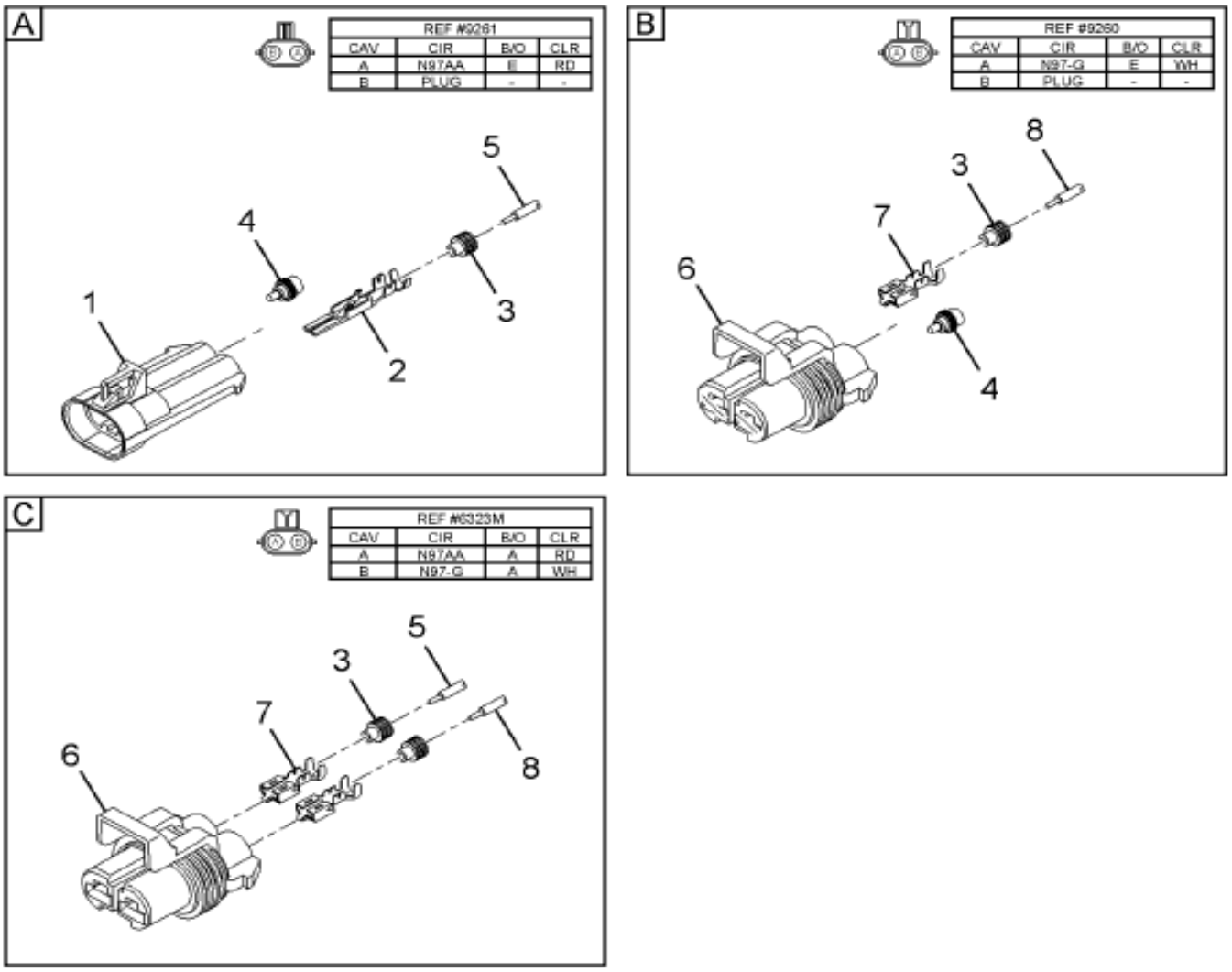

08-V13-0341-02 F11

Item	Part No.	Qty	Description	Kit	Var	Figure
1	2031520C1	1	CONNECTOR,BODY* 480 SEALED			
2	2025423C1	1	TERMINAL,CABLE 480SERIES MALE			
3	2025427C1	4	SEAL,CABLE TERMINAL 480 SERIES			
4	2025432C1	2	PLUG,SEALING 480 SERIES			
5	2643698R1	AR	CABLE LOW TENSION SINGLE COND			
6	2031522C1	2	CONNECTOR,RECTIFIER 480SEALED			

Grp 08

COPYRIGHT© 2011INTERNATIONAL TRUCK AND ENGINE CORP.

https://truckmanualshub.com/

Figure 3547673C91

CABLE,ASM*CLEAN PWR FEED, 2900

Item	Part No.	Qty	Description	Kit	Var	Figure
7	2031531C1	3	TERMINAL,CABLE 480 SEALED			
8	2643788R1	AR	CABLE LOW TENSION 10 GAUGE WHI			
880		RF	NOTE: ASM BELOW COMPRISED OF ABOVE COMPONENTS			
881	3547673C91	RF	CABLE,ASM*CLEAN PWR FEED, 2900			

COPYRIGHT© 2011INTERNATIONAL TRUCK AND ENGINE CORP.

https://truckmanualshub.com/

Figure 0GB97

BATT CABLE INTERCONNECT INSTL; 3 BTRY SYS, GROUP 31, 3/8

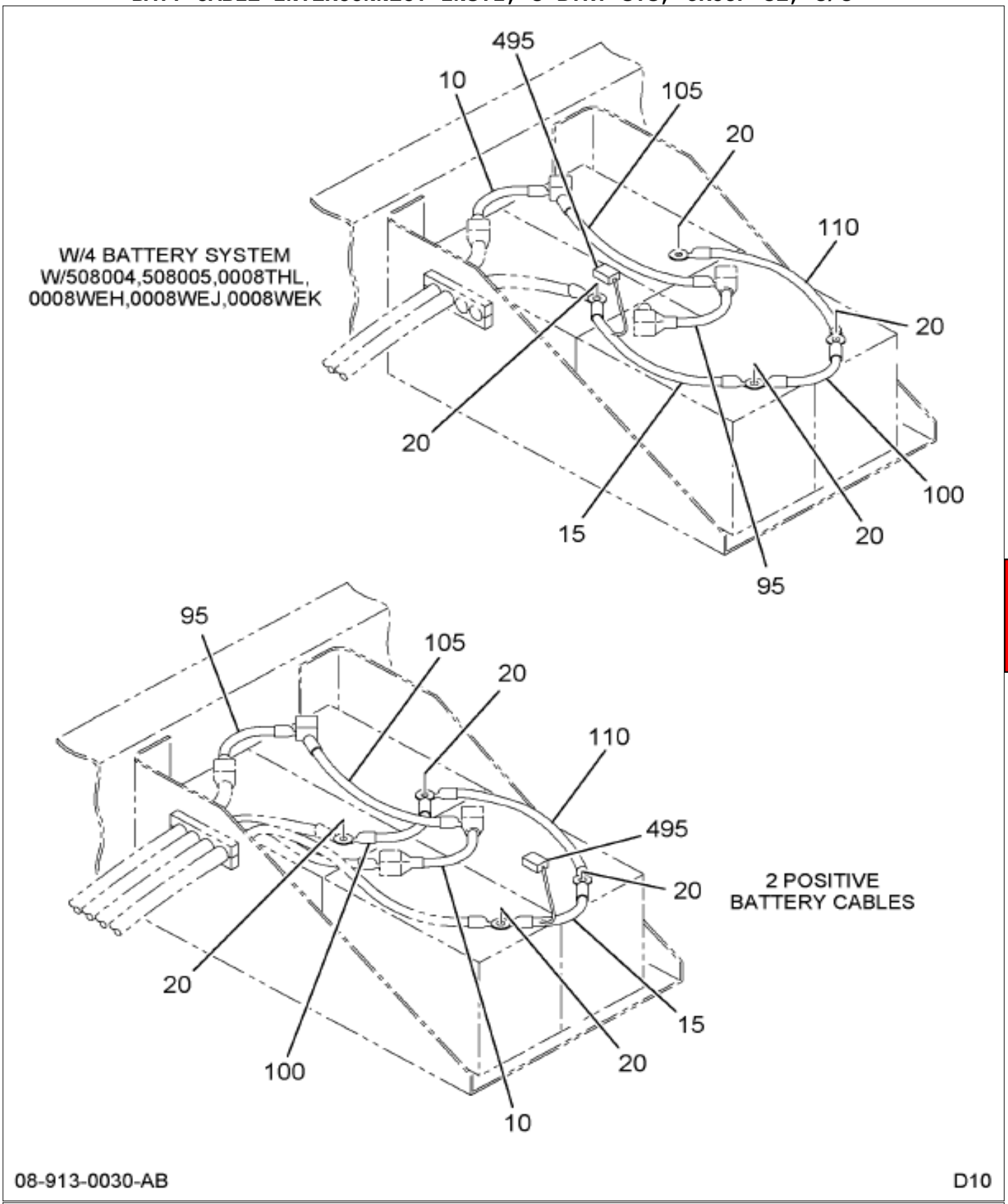

Grp 08

Figure 1 of 2

COPYRIGHT© 2011INTERNATIONAL TRUCK AND ENGINE CORP.

https://truckmanualshub.com/

Figure 0GB97

BATT CABLE INTERCONNECT INSTL; 3 BTRY SYS, GROUP 31, 3/8

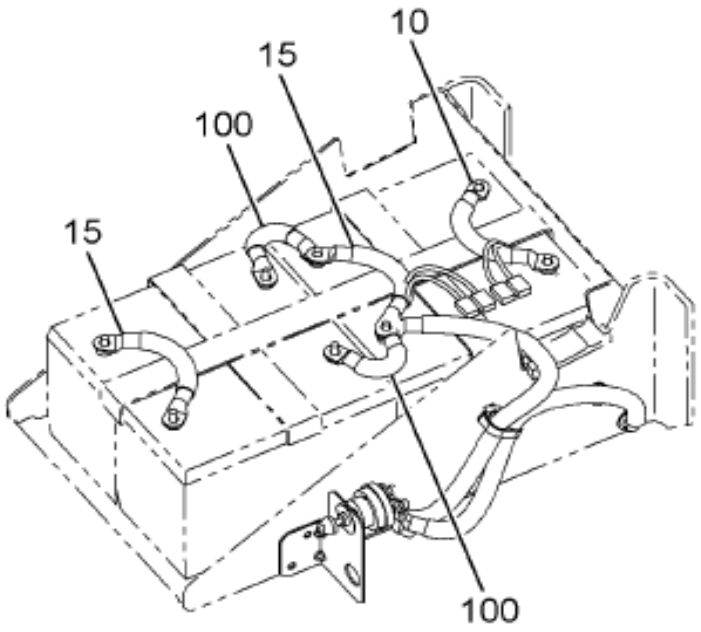

W/08MMB &
W/08WEK

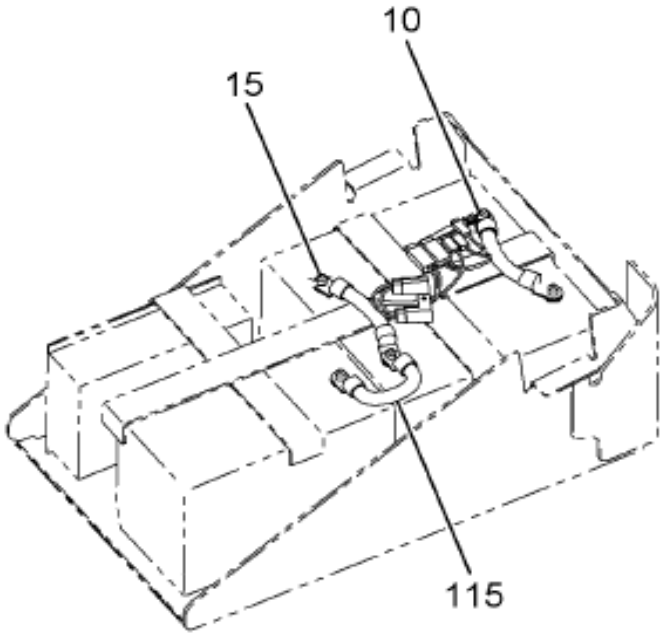

W/08WJL &
W/08WEK

08-913-0051-01 G10

Item	Part No.	Qty	Description	Kit	Var	Figure
10	3545881C92	1	CABLE,BTRY INTERCONN N/SEALED		0L36T	
15	3548966C92	1	CABLE, BATT INTERCONN N/SEALED		0L36T	
20	476074C1	5	NUT,BATT TERMINAL		0GB97	
20	522639C1	1	NUT,BATT TERMINAL BOLT		0GB97	
105	K101101036	1	CABLE,BATTERY		0GBBG	
110	R106601036	1	CABLE,BATTERY 0 GA		0GBBG	

COPYRIGHT© 2011INTERNATIONAL TRUCK AND ENGINE CORP.

https://truckmanualshub.com/

Figure 0GB97

BATT CABLE INTERCONNECT INSTL; 3 BTRY SYS, GROUP 31, 3/8

Item	Part No.	Qty	Description	Kit	Var	Figure
495	3504540C1	1	FUSE,40 AMP AUTOFUSE BLADE TYP		0GB97	

COPYRIGHT© 2011INTERNATIONAL TRUCK AND ENGINE CORP.

https://truckmanualshub.com/

Figure 0K6NZ

BATT CABLE WIRING MTG

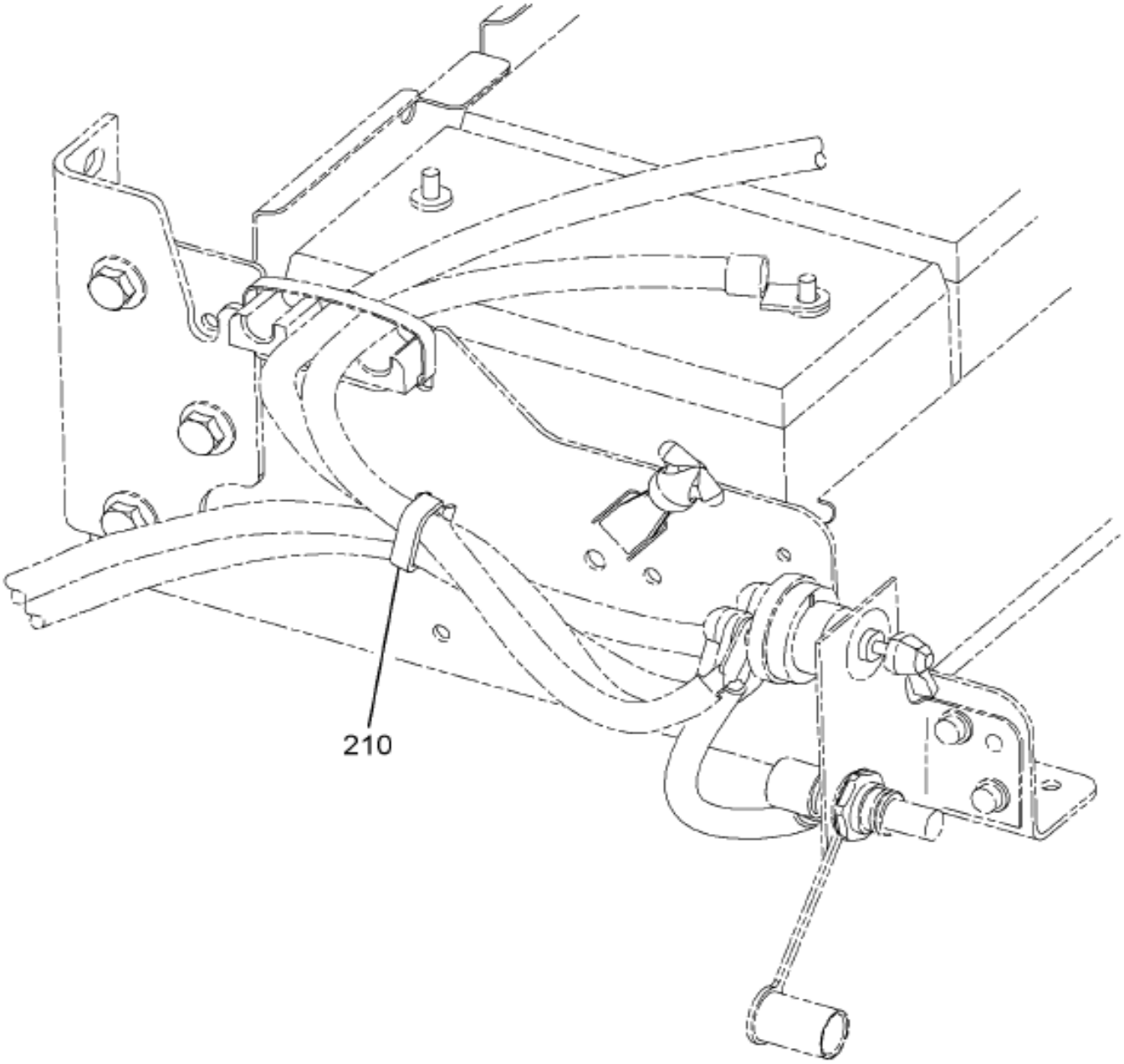

Item	Part No.	Qty	Description	Kit	Var	Figure
210	2041341C1	1	SADDLE,CLAMP CABLE LOCK MT 1/4		0K6NZ	
210	25222R1	1	BOLT,HH 1/4-20 X 3/4 PHC TYP 8		0K6NZ	
210	120380	1	WASHER LOCK 1/4",REG,STL/ZNC		0K6NZ	
210	25519R1	1	NUT,1/4 NC TYPE 8		0K6NZ	
210	3516934C1	1	STRAP,CABLE LOCK 1/2" X 20"		0K6NZ	
210	25708R1	1	WASHER,FLAT 5/16(.344X.688X.08		0K6NZ	

COPYRIGHT© 2011INTERNATIONAL TRUCK AND ENGINE CORP.

https://truckmanualshub.com/

Figure 0RPBM
BATTERIES

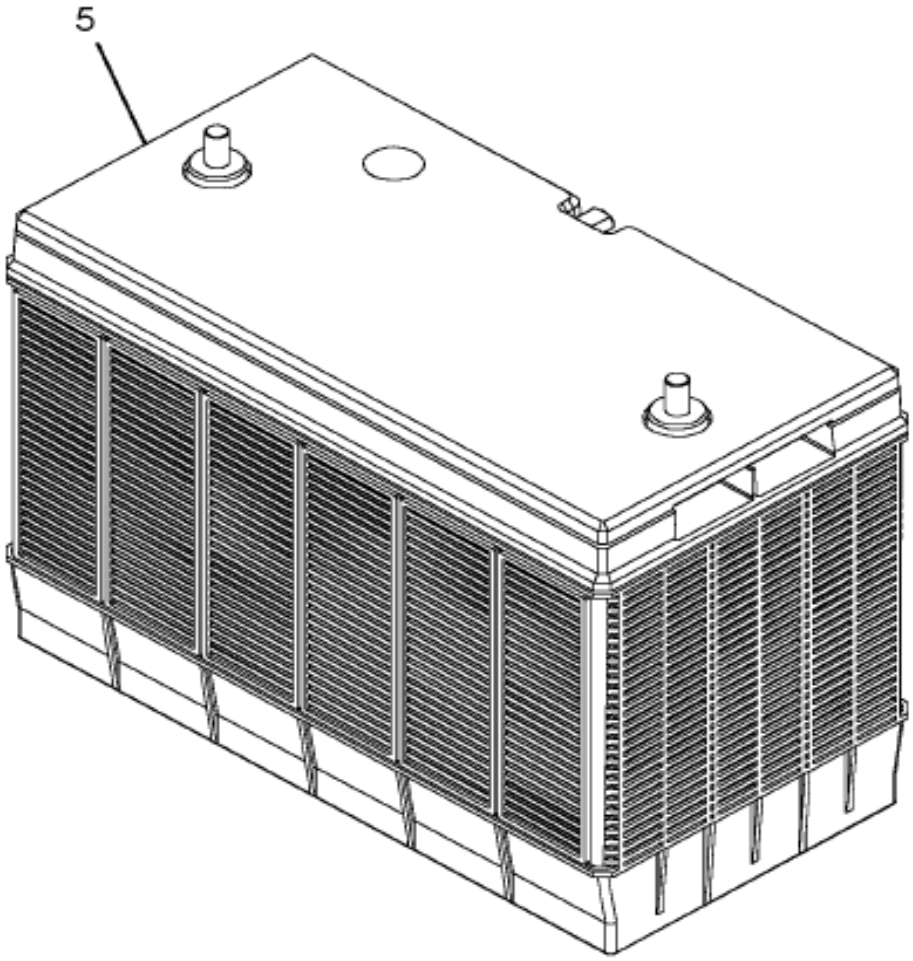

08-692-0002-01 D04

Item	Part No.	Qty	Description	Kit	Var	Figure
5	3608478C1	3	BATTERY,12V,650 CCA,STUD,55LB		0RQ47	

COPYRIGHT© 2011INTERNATIONAL TRUCK AND ENGINE CORP.

https://truckmanualshub.com/

Figure 0LSH6

BATTERY BOX MODULE; JUMP START STUD & DISCONNECT SWITCH

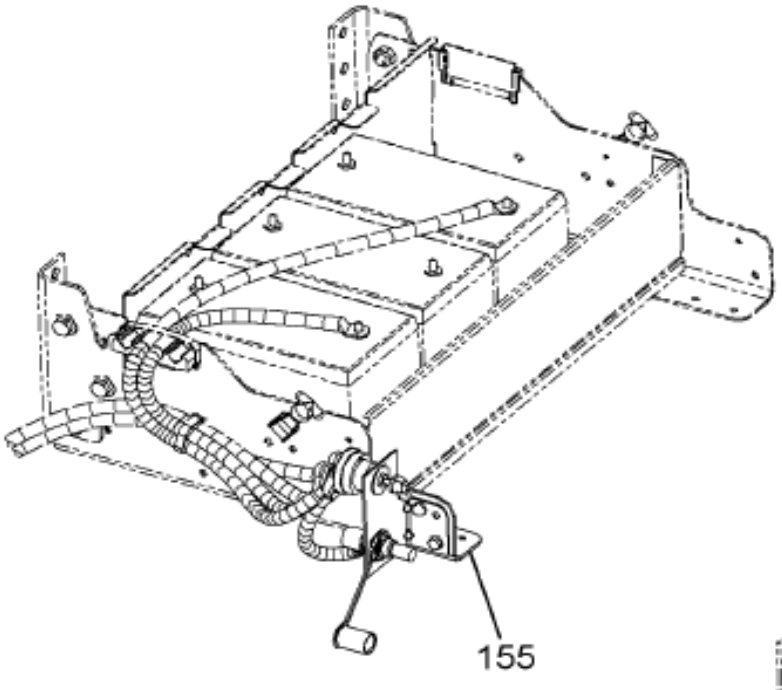

W/08WAD, 08WHX

M-NGV-SS
W/0008WAD,0008WHX
W/0008WBW
W/TRUCK BOX
OR
M-NGV-SS
W/08WJT,08WJU
W/08WBW
W/TRUCK BOX
OR
M-NGV-SS
W/0508001, 0508006
W/8WAD,8WHX,9WJT,8WJU
W/000WBW
W/F-INTL-I6-07-ENG
W/F-NGV-FRT-DRV-AXLE

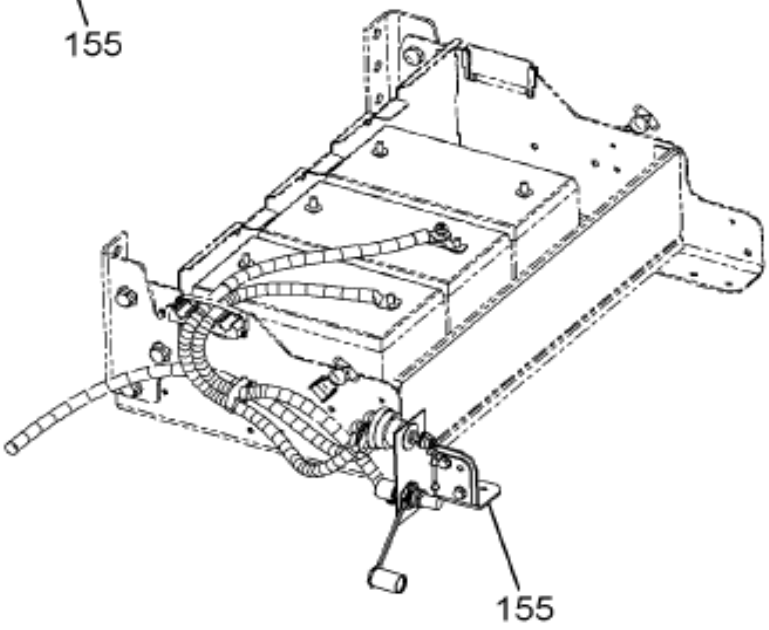

W/08WJT, 08WJU

08-L52-0206-01 J09

Item	Part No.	Qty	Description	Kit	Var	Figure
155	3559976F93	1	BBAT, W/R TRACTOR BOX STUD		0LSH6	3559976F93

COPYRIGHT© 2011INTERNATIONAL TRUCK AND ENGINE CORP.

https://truckmanualshub.com/

Figure 3339761F33

BBAT, W/R TRACTOR BOX STUD

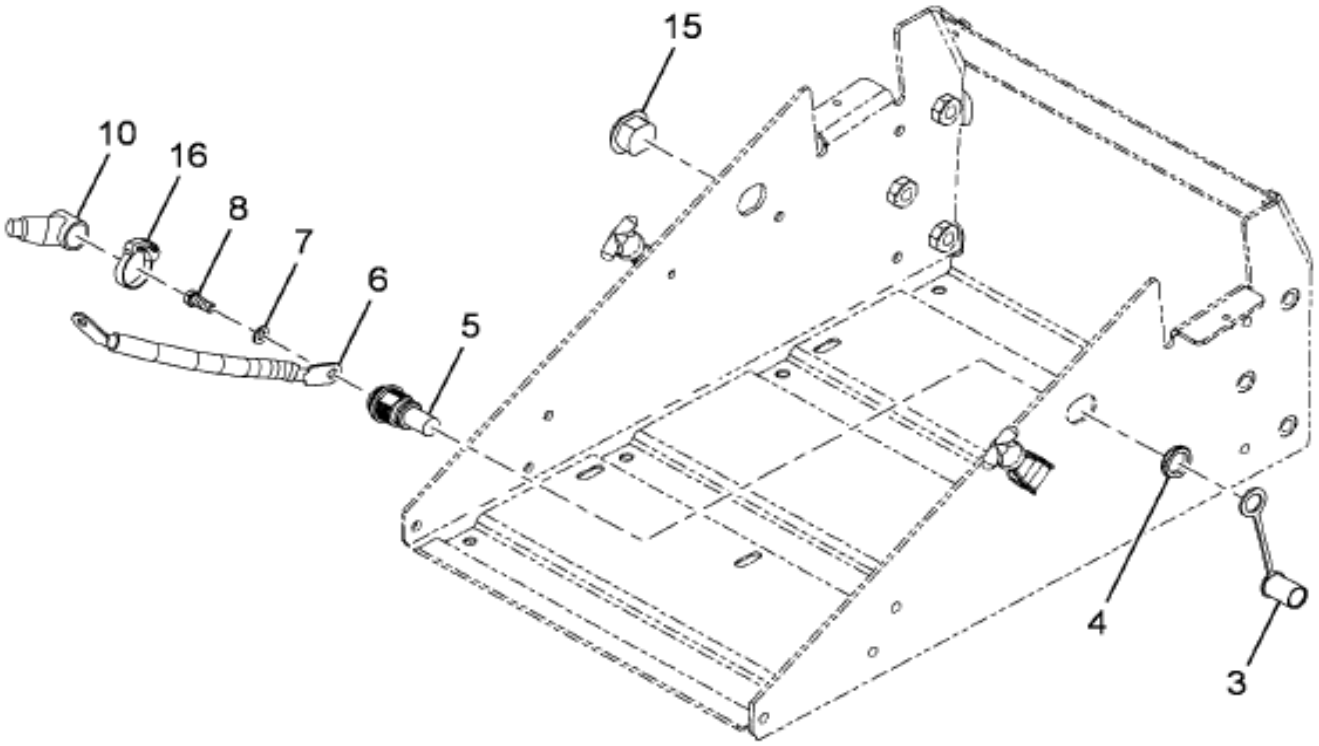

08-L52-0374-01 G11

Item	Part No.	Qty	Description	Kit	Var	Figure
3	1680503C3	1	CAP,TERMINAL,JMP START,RED			
4	1680712C1	1	NUT SPL JUMP START MTG			
5	1677937C3	1	STUD, ASSY, JUMP START			
6	R206611080	1	CABLE,BATTERY,			
6	R206111080	1	CABLE,BATTERY			
7	27500R1	1	WASHER,LOCK 3/8 SST			

COPYRIGHT© 2011INTERNATIONAL TRUCK AND ENGINE CORP.

https://truckmanualshub.com/

Figure 3559976F93

BBAT, W/R TRACTOR BOX STUD

Item	Part No.	Qty	Description	Kit	Var	Figure
8	310427R1	1	BOLT,HH 3/8-16X1 PLN SST 304			
10	1680496C2	1	BOOT,SWITCH, JUMP START STUD			
15	1518226C1	1	PLUG BUTTON (BATTERY BOX HOLE)			
16	1688980C1	1	CLAMP,CABLE			
880		RF	NOTE: ASM BELOW COMPRISED OF ABOVE COMPONENTS			
881	3559976F93	RF	BBAT, W/R TRACTOR BOX STUD			

COPYRIGHT© 2011INTERNATIONAL TRUCK AND ENGINE CORP.

https://truckmanualshub.com/

Figure 0HL44

BATTERY BOX TRAY; MODULE

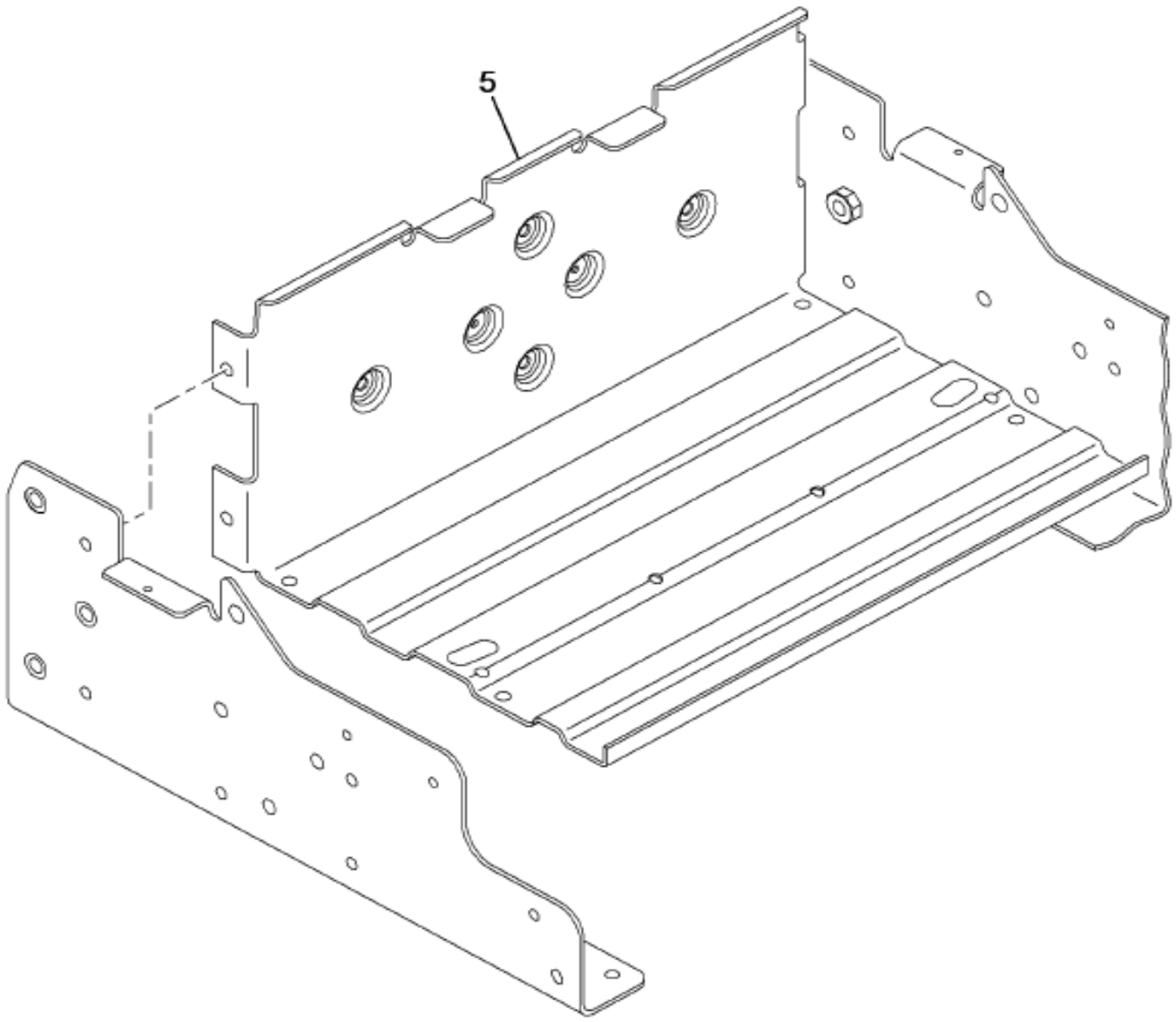

08-L45-0011-A0 E09

Item	Part No.	Qty	Description	Kit	Var	Figure
5	3576153F92	1	ELECTRICAL 18" BRTY BOX ASM		0HL4P	3576153F92

Grp 08

COPYRIGHT© 2011INTERNATIONAL TRUCK AND ENGINE CORP.

https://truckmanualshub.com/

Figure 3370153F92
ELECTRICAL 18" BRTY BOX ASM

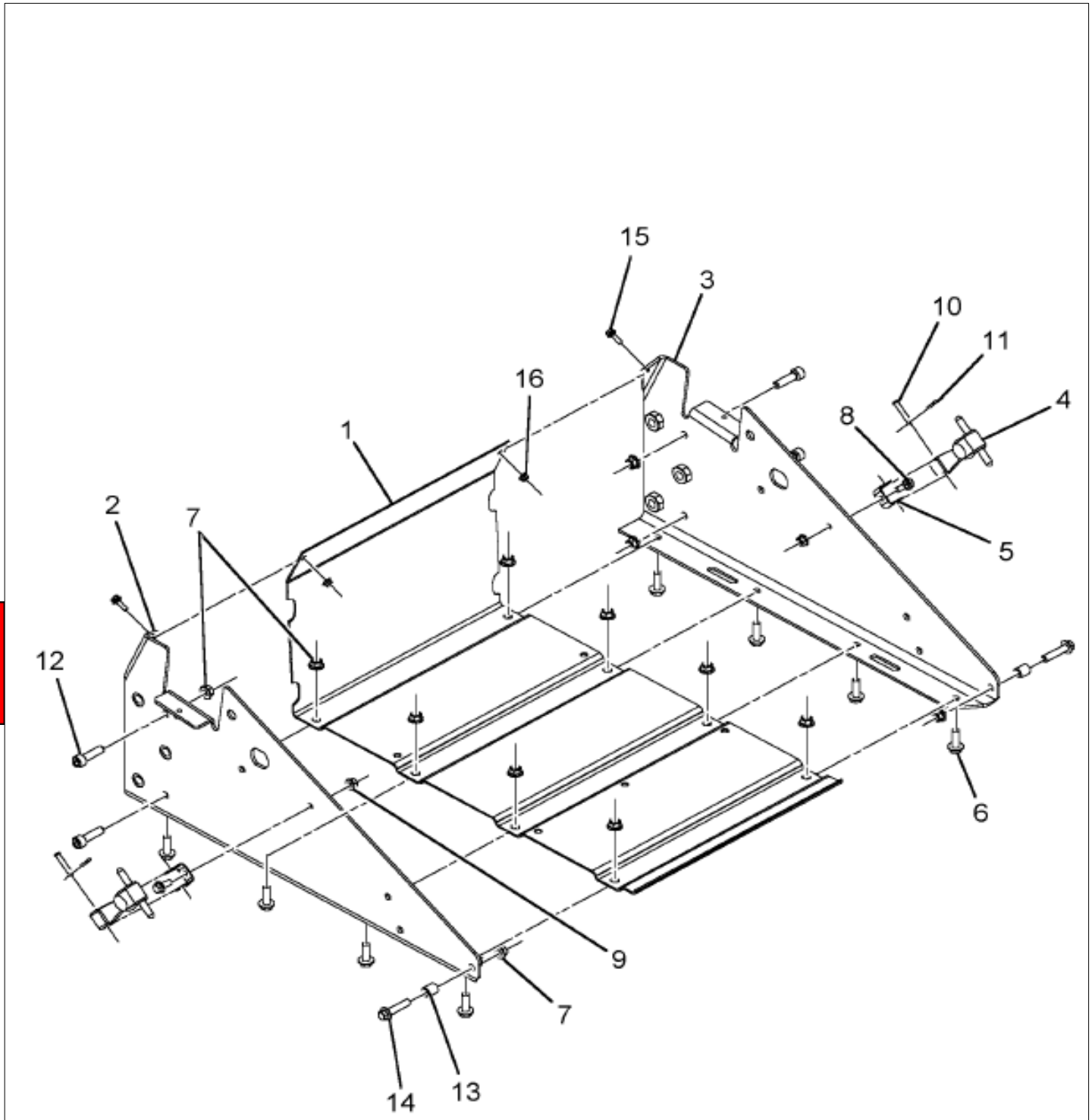

Item	Part No.	Qty	Description	Kit	Var	Figure
1	3557573C3	1	TRAY,BATTERY*			
2	3557051C4	1	BRACKET,BATTERY BOX LEFT			
3	3557052C4	1	BRACKET,BATTERY BOX RIGHT			
4	777812C91	2	LATCH,BATTERY BOX			
5	777814C1	2	BRACKET,BATTERY OR BOX MTG OR			
6	3549305C1	8	BOLT,HEX FLG HD METRIC*M10 X 3			

COPYRIGHT© 2011INTERNATIONAL TRUCK AND ENGINE CORP.

https://truckmanualshub.com/

Figure 3576153F92

ELECTRICAL 18" BRTY BOX ASM

Item	Part No.	Qty	Description	Kit	Var	Figure
7	3535556C1	14	NUT,HEX METRIC PREV. TORQ*M10			
8	3547776C1	2	BOLT,HEX FLG HD METRIC*M8 X 20			
9	3544379C1	2	NUT,HEX FLG M8 METRIC			
10	22910R1	2	PIN,1/4 X 1.500 HD TYPE 1			
11	177923	2	PIN,1/8 X 3/4 COTTER			
12	3574571C1	4	SCREW,MCH*M10-1.5X20MM CAP HEX			
13	567987R1	2	SPACER, 5/8 X .688 TUBE			
14	3554703C1	2	BOLT,HEX FLG HD METRIC*M10 X 4			
15	3552155C1	2	BOLT,HEX FLG HD METRIC*M6 X 20			
16	3544378C1	2	NUT,HEX METRIC PREV. TORQ*M6 H			
880		RF	NOTE: ASM BELOW COMPRISED OF ABOVE COMPONENTS			
881	3576153F92	RF	ELECTRICAL 18" BRTY BOX ASM			

Grp 08

COPYRIGHT© 2011INTERNATIONAL TRUCK AND ENGINE CORP.

https://truckmanualshub.com/

Figure 0RS40
BATTERY CABLE SADDLE & PLUG; CLIP INSTL, W/ COVER

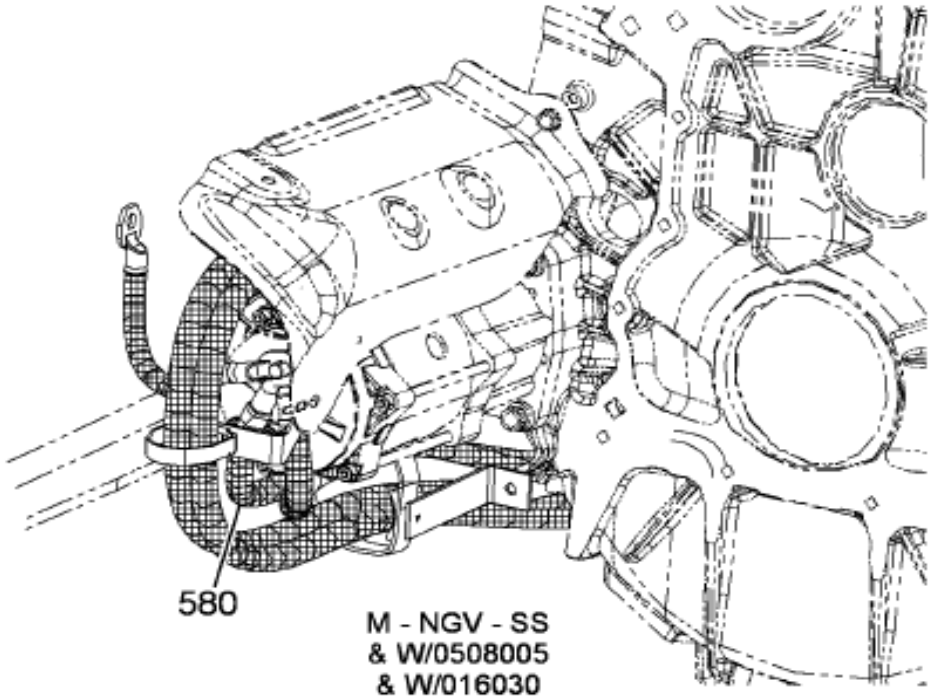

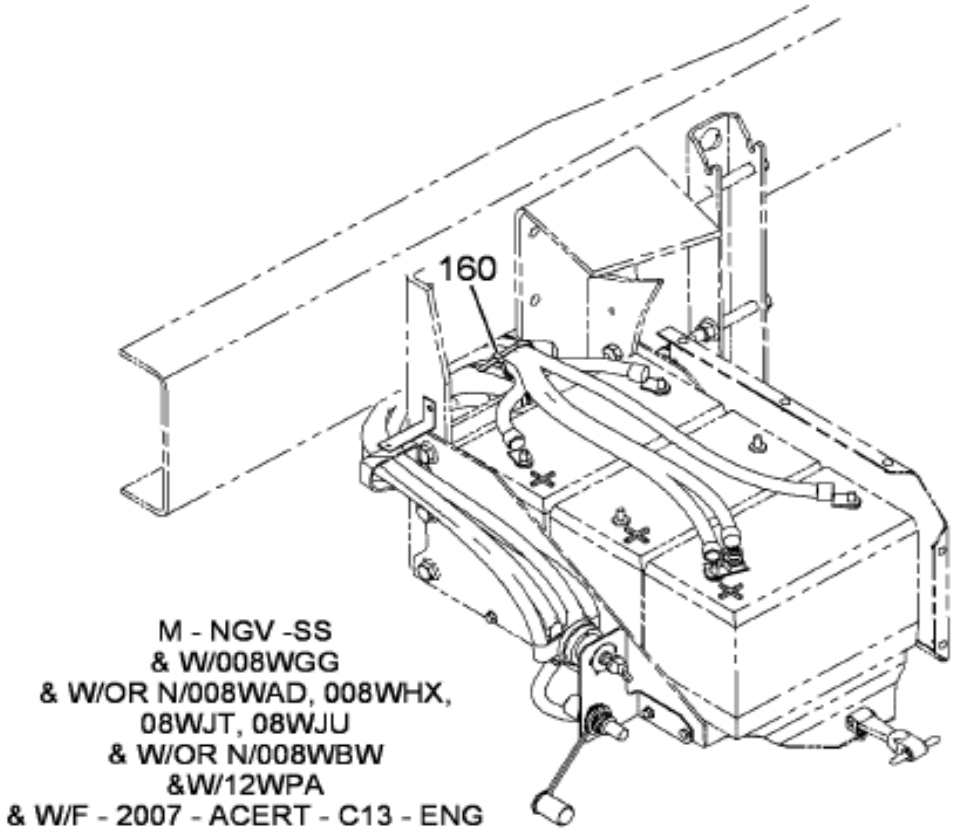

08-L53-0035-01 D10

Item	Part No.	Qty	Description	Kit	Var	Figure
160	3576430F91	1	ELECT W/RT TRCTR BOX SADDLE		0RS4N	3576430F91

COPYRIGHT© 2011INTERNATIONAL TRUCK AND ENGINE CORP.

https://truckmanualshub.com/

Figure 3576430F91

ELECT W/RT TRCTR BOX SADDLE

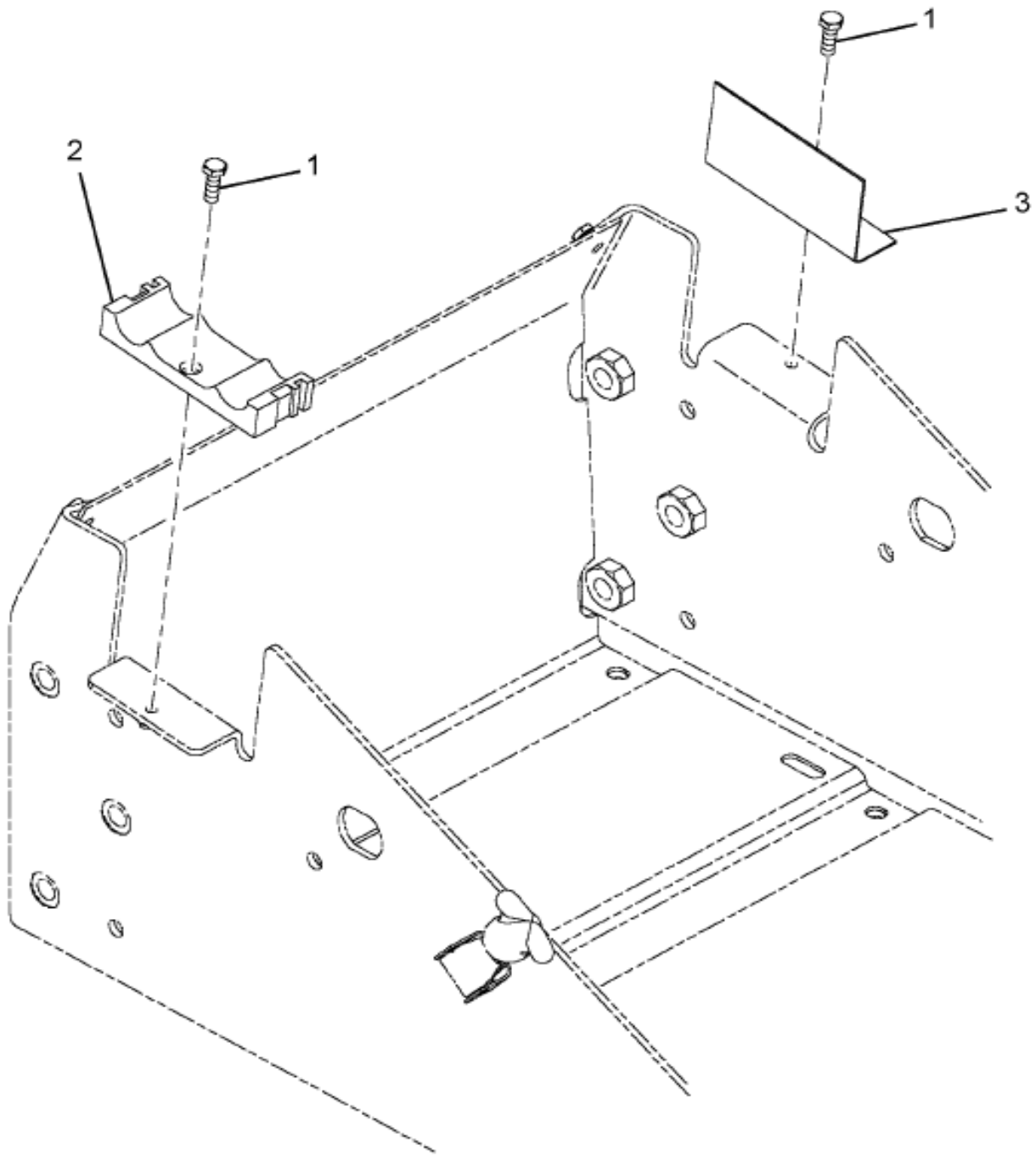

Grp 08

Item	Part No.	Qty	Description	Kit	Var	Figure
1	31126R1	2	SCREW,MACH*SCREW M6 X 20MM PAN			
2	3573047C1	1	CLIP,BATTERY CABLE SADDLE			
3	3576079C1	1	COVER,BATT BOX PLUG			
880		RF	NOTE: ASM BELOW COMPRISED OF ABOVE COMPONENTS			
881	3576430F91	RF	ELECT W/RT TRCTR BOX SADDLE			

COPYRIGHT© 2011INTERNATIONAL TRUCK AND ENGINE CORP.

https://truckmanualshub.com/

Figure 01C50

CENTER CHASSIS HARNESS ASM; COMMON BASE WIRING (ABR #1)

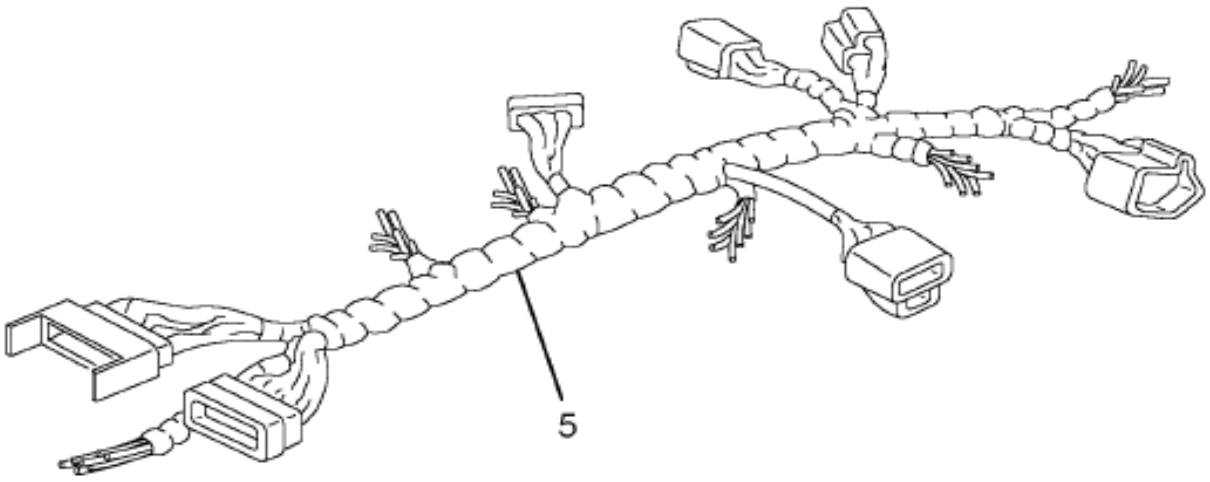

08-D01-0004-01 E04

Item	Part No.	Qty	Description	Kit	Var	Figure
5	3555955F92	1	ELEC CTR CHAS, BASE +2500MM		0NHRD	3555955F92

COPYRIGHT© 2011INTERNATIONAL TRUCK AND ENGINE CORP.

https://truckmanualshub.com/

Figure 3555955F92
ELEC CTR CHAS, BASE +2500MM

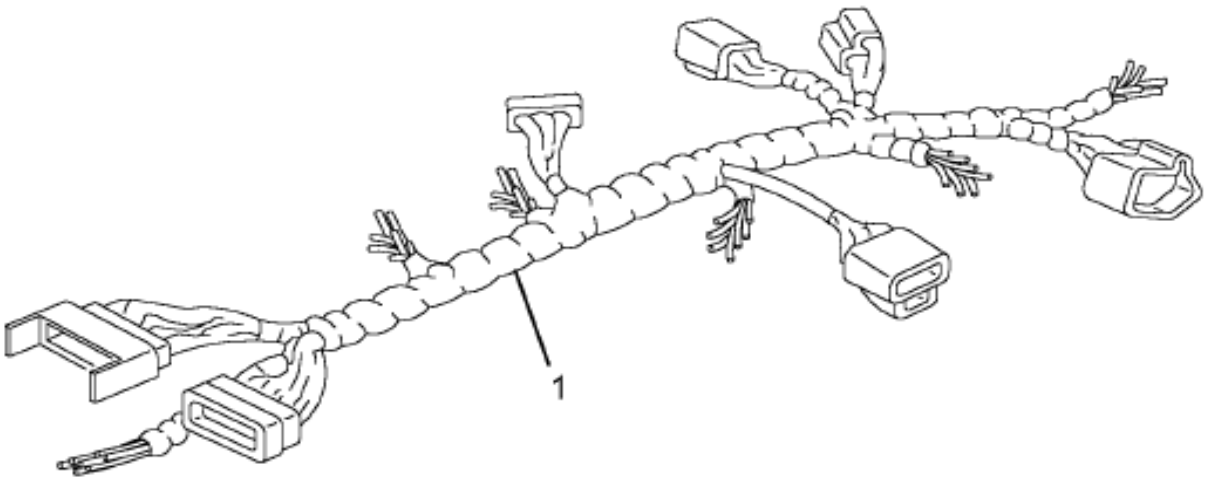

08-P58-0006-01 C03

Item	Part No.	Qty	Description	Kit	Var	Figure
1	3560433C91	1	HARNESS,LGT WRG,STOP,TAIL&TURN			
880		RF	NOTE: ASM BELOW COMPRISED OF ABOVE COMPONENTS			
881	3555955F92	RF	ELEC CTR CHAS, BASE +2500MM			

COPYRIGHT© 2011INTERNATIONAL TRUCK AND ENGINE CORP.

https://truckmanualshub.com/

Figure 0JF60

CENTER CHASSIS HARNESS ASM; FUEL TANK WIRING (ABR #10)

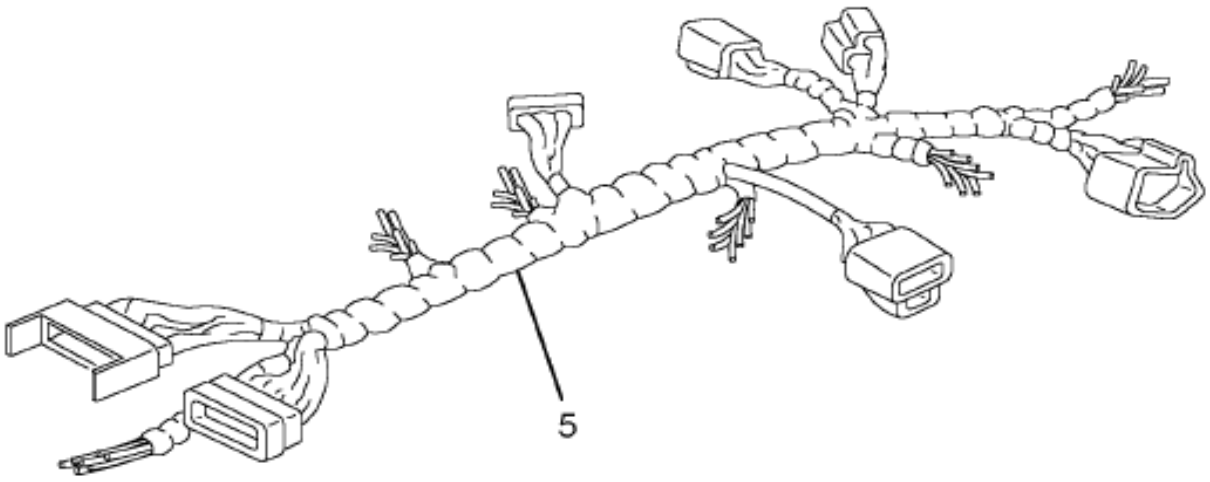

08-D01-0004-01 E04

Item	Part No.	Qty	Description	Kit	Var	Figure
50	3870881F91	1	HARNESS, LEFT SIDE MTD SING		0JF62	

COPYRIGHT© 2011INTERNATIONAL TRUCK AND ENGINE CORP.

https://truckmanualshub.com/

Figure 01CS3

CENTER CHASSIS HARNESS ASM; WORK LIGHT WIRING (ABR #6)

Item	Part No.	Qty	Description	Kit	Var	Figure
5	3553986F92	1	ELEC CTR CHAS,*WORK LIG		0H8D3	3553986F92

COPYRIGHT© 2011INTERNATIONAL TRUCK AND ENGINE CORP.

https://truckmanualshub.com/

Figure 3553986F92
ELEC CTR CHAS,*WORK LIG

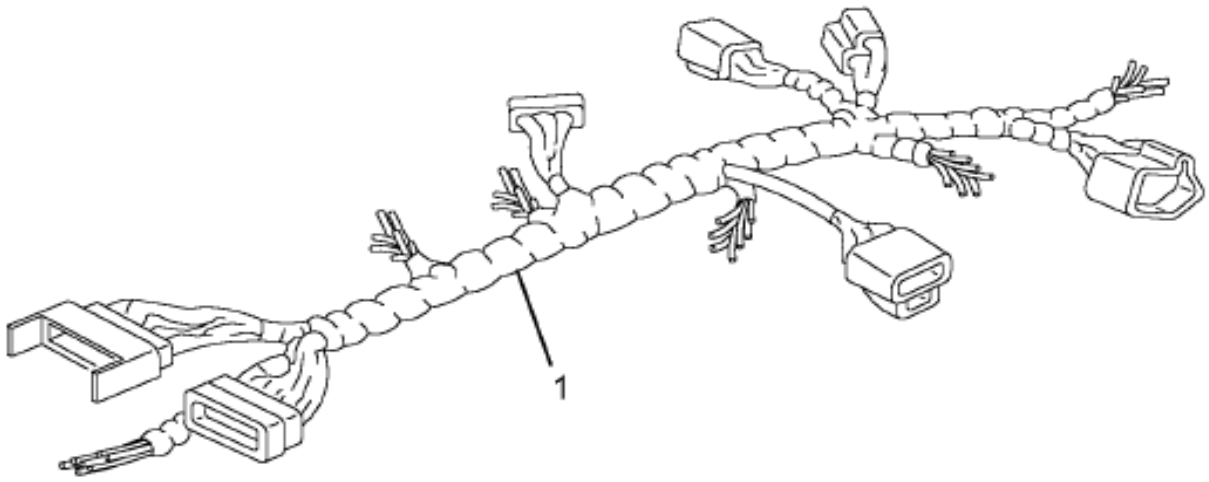

08-P58-0006-01 C03

Item	Part No.	Qty	Description	Kit	Var	Figure
1	3554056C92	1	HARNESS,CHASSIS*WORK LIGHT BOC			
880		RF	NOTE: ASM BELOW COMPRISED OF ABOVE COMPONENTS			
881	3553986F92	RF	ELEC CTR CHAS,*WORK LIG			

COPYRIGHT© 2011INTERNATIONAL TRUCK AND ENGINE CORP.

https://truckmanualshub.com/

Figure 01C57

CENTER CHASSIS HARNESS; ABR#8, SOLENOID, 4 PACK WIRING

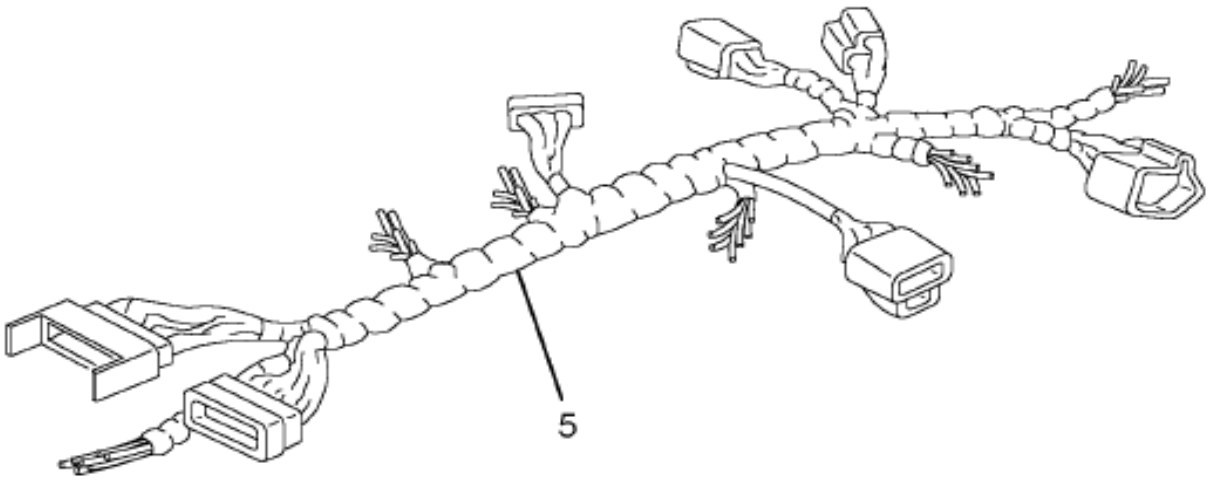

08-D01-0004-01 E04

Item	Part No.	Qty	Description	Kit	Var	Figure
5	3553991F92	1	ELEC CTR CHAS,*SOLENOID		0P5YY	3553991F92

COPYRIGHT© 2011INTERNATIONAL TRUCK AND ENGINE CORP.

https://truckmanualshub.com/

Figure 3553991F92
ELEC CTR CHAS,*SOLENOID

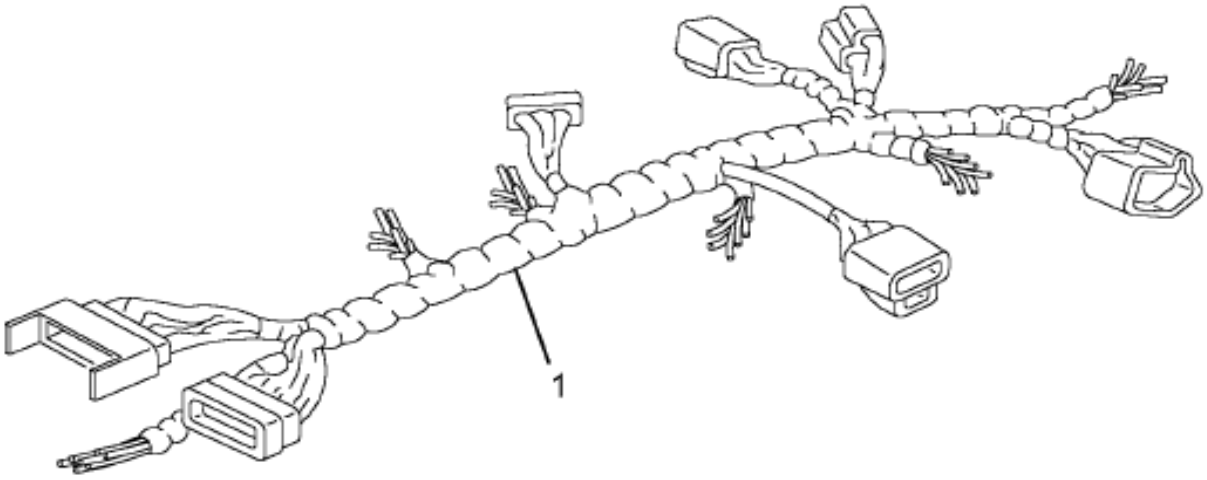

08-P58-0006-01 C03

Item	Part No.	Qty	Description	Kit	Var	Figure
1	3554059C92	1	HARNESS,ELEC; SOLENOID 4 PK W			3554059C92
880		RF	NOTE: ASM BELOW COMPRISED OF ABOVE COMPONENTS			
881	3553991F92	RF	ELEC CTR CHAS,*SOLENOID			

COPYRIGHT© 2011INTERNATIONAL TRUCK AND ENGINE CORP.

https://truckmanualshub.com/

Figure 3534059C92

HARNESS,ELEC; SOLENOID 4 PK W

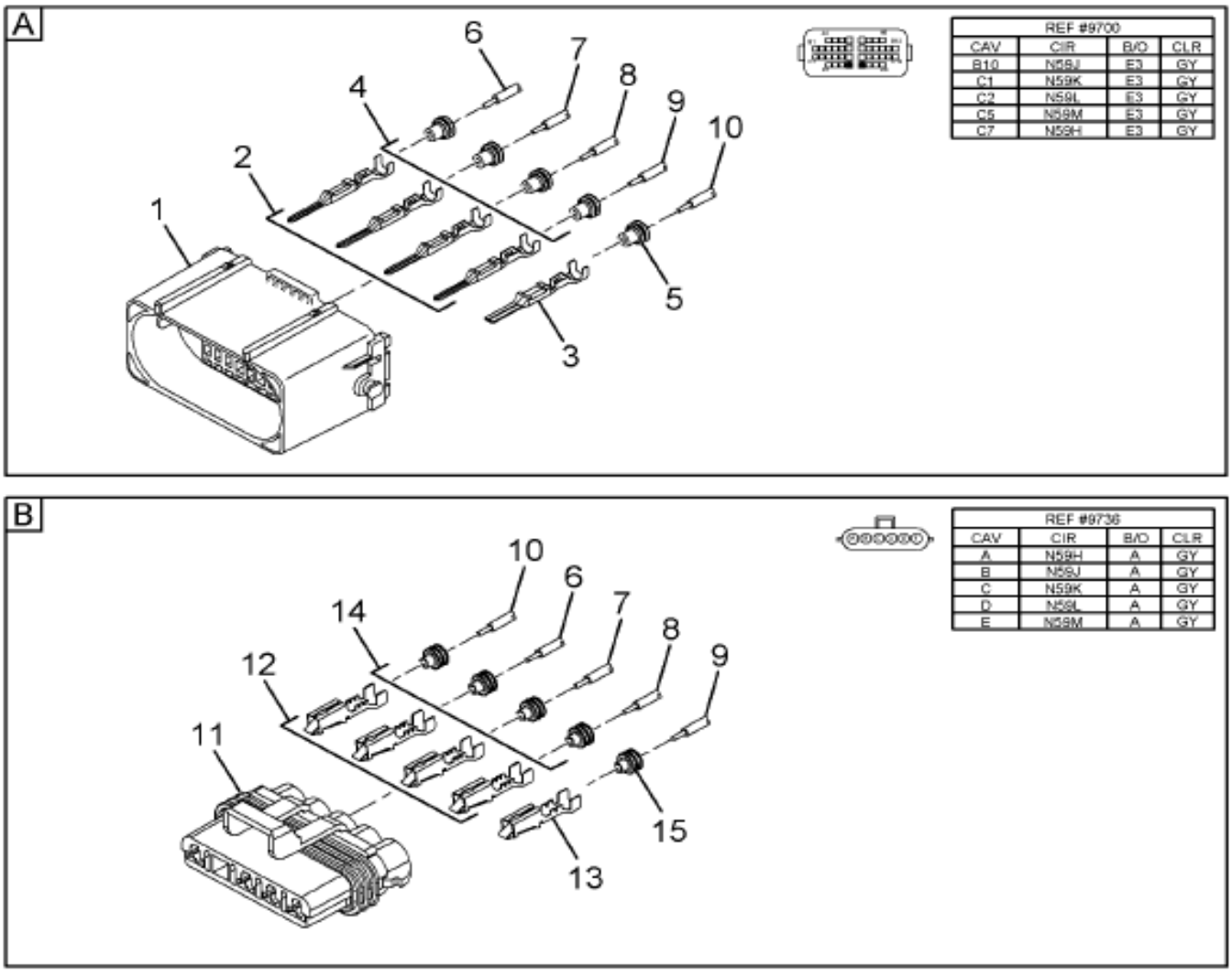

08-H08-0002-02 J11

Item	Part No.	Qty	Description	Kit	Var	Figure
1	3535310C1	1	CONNECTOR,BODY 38-WAY MALE GT			
2	3535305C1	4	TERMINAL,CABLE*CONN TERMINAL			
3	3535934C1	1	TERMINAL,CABLE*GT 280 SERIES 5			
4	3535424C1	4	PLUG,SEALING*CABLE TERMINAL SE			
5	3535937C1	1	SEAL,CABLE TERMINAL*GT 280 SER			
6	2643673R1	AR	CABLE LOW TENSION SINGLE COND			

COPYRIGHT© 2011INTERNATIONAL TRUCK AND ENGINE CORP.

https://truckmanualshub.com/

Figure 3554059C92

HARNESS,ELEC; SOLENOID 4 PK W

Item	Part No.	Qty	Description	Kit	Var	Figure
7	2643673R1	AR	CABLE LOW TENSION SINGLE COND			
8	2643673R1	AR	CABLE LOW TENSION SINGLE COND			
9	2643673R1	AR	CABLE LOW TENSION SINGLE COND			
10	2643782R1	AR	CABLE LOW TENSION 14 GAUGE GRA			
11	1661375C2	1	BODY,CONNECTOR			
12	2033819C1	4	TERMINAL,CABLE FOR 16 GA ONLY			
13	2033816C1	1	TERMINAL,CABLE (FOR 14 GA ONLY			
14	1652325C1	4	PLUG,SEALER			
15	589391C1	1	PLUG,SEALER, LOOSE PIECE			
880		RF	NOTE: ASM BELOW COMPRISED OF ABOVE COMPONENTS			
881	3554059C92	RF	HARNESS,ELEC; SOLENOID 4 PK W			

COPYRIGHT© 2011INTERNATIONAL TRUCK AND ENGINE CORP.

https://truckmanualshub.com/

Figure 0P1BCV

CENTER IP, PATTERN CUTOUTS (ABR #70)

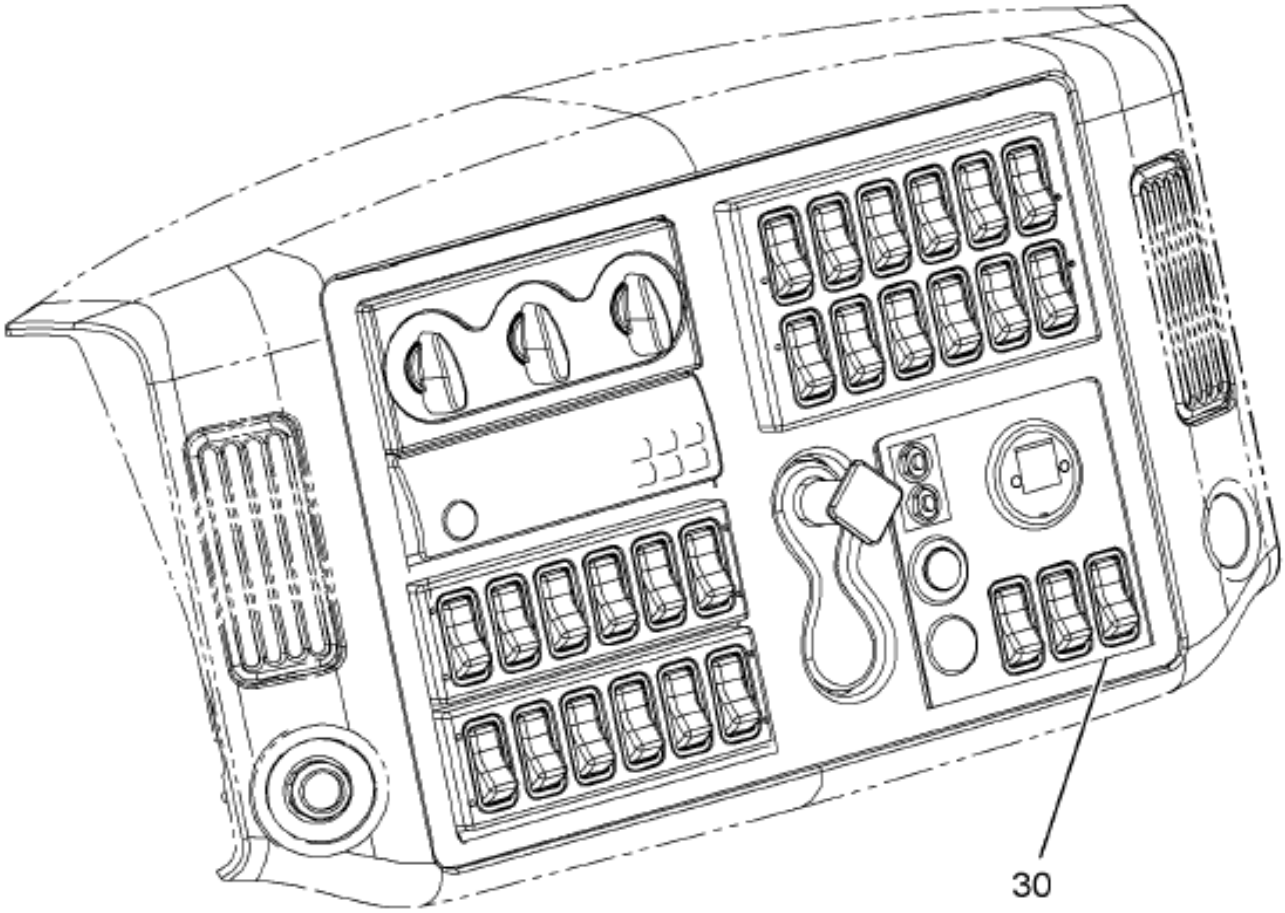

08-P70-0001-01 C07

Item	Part No.	Qty	Description	Kit	Var	Figure
30	3553759F91	1	ELEC IP; CENTER PANEL		0QWBH	

COPYRIGHT© 2011INTERNATIONAL TRUCK AND ENGINE CORP.

https://truckmanualshub.com/

Figure 0MTVC

DASH HARNESS ASM; BODY BUILDER/TRAILER SOCKET WIR (ABR #4)

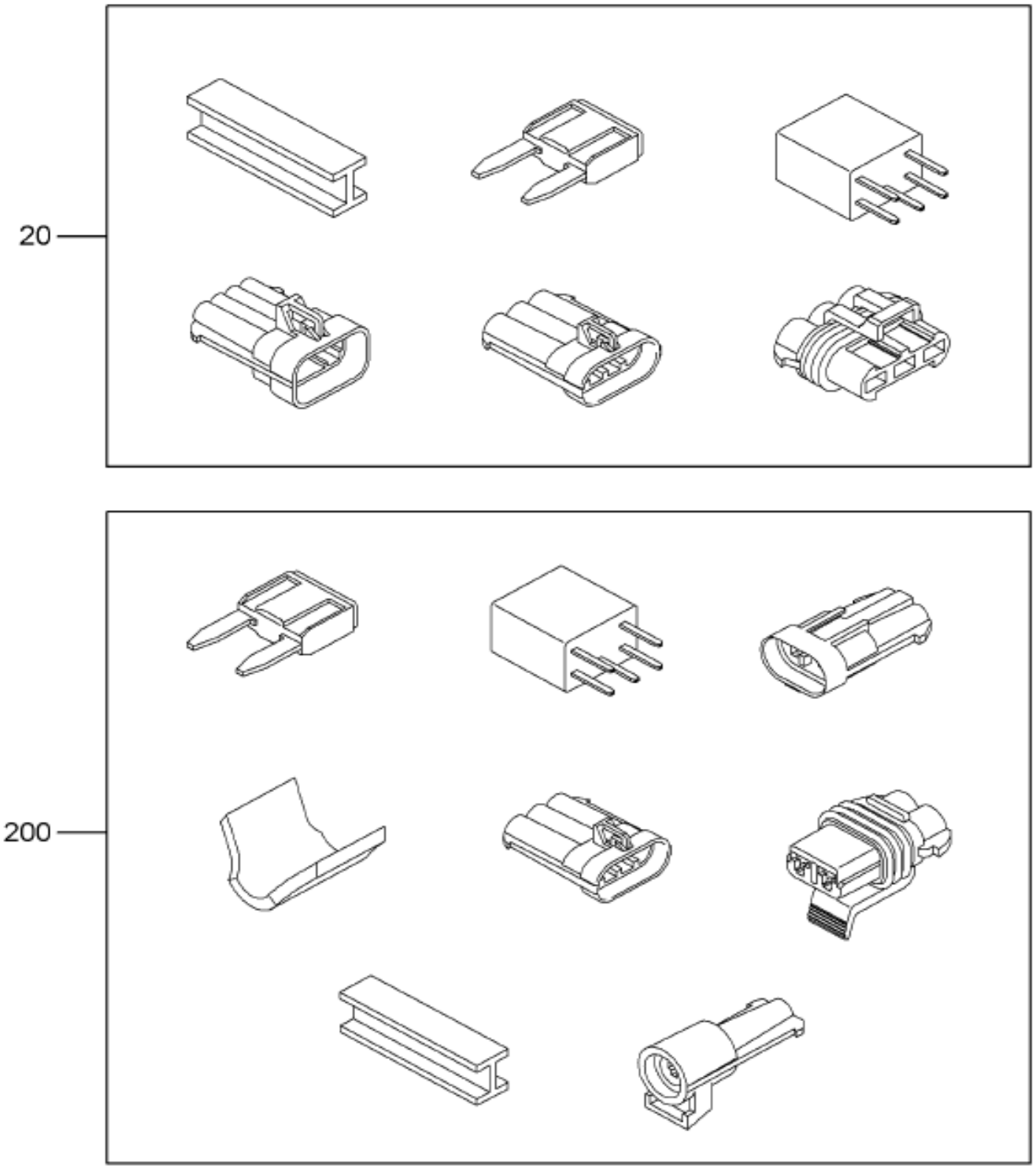

08-D04-0009-01 D09

Item	Part No.	Qty	Description	Kit	Var	Figure
20	3603996F91	1	HARN,DASH,TRLR SCKT/BODY BLDR		0MTW6	3603996F91

COPYRIGHT© 2011INTERNATIONAL TRUCK AND ENGINE CORP.

https://truckmanualshub.com/

Figure 3603990F91
HARN,DASH,TRLR SCKT/BODY BLDR

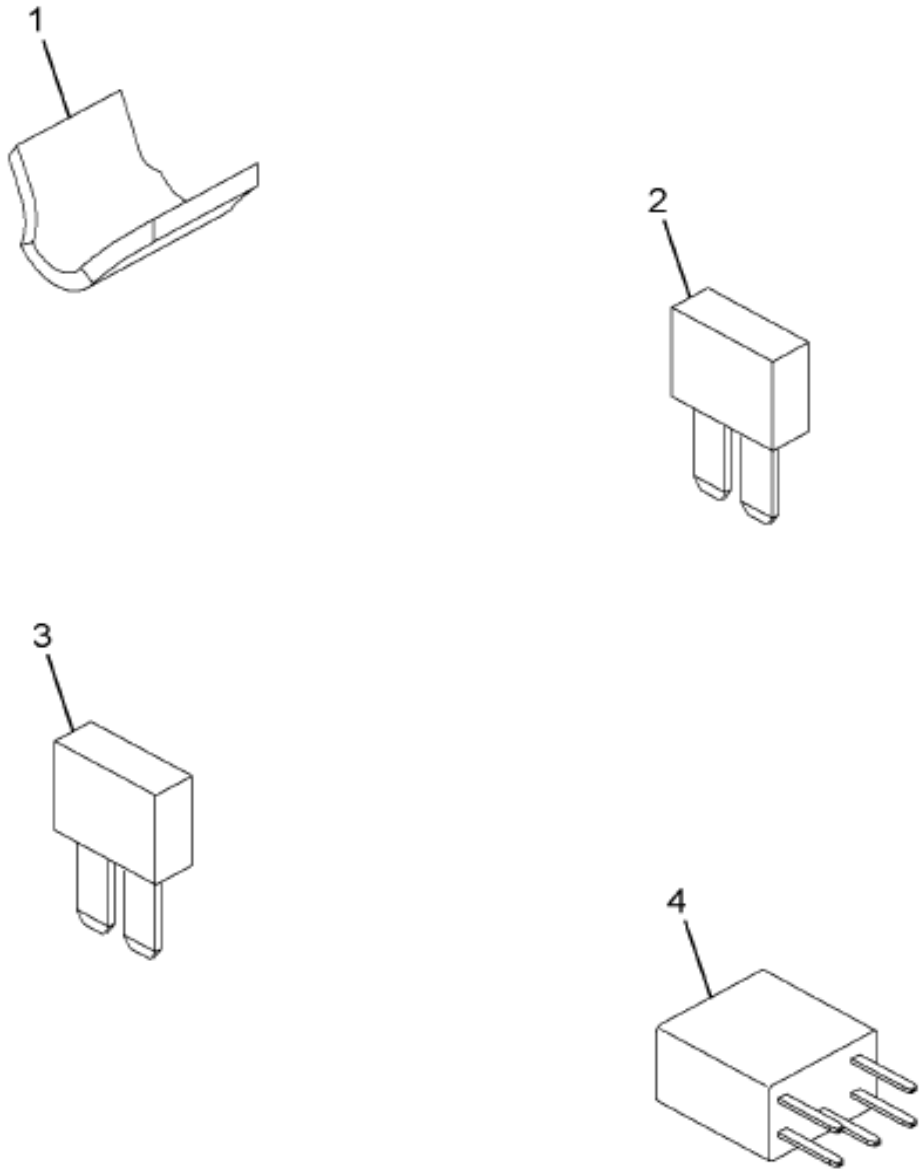

08-P58-0041-01 J05

Item	Part No.	Qty	Description	Kit	Var	Figure
1	3603990C91	1	HARNESS,TRAILER SCKT,BODY BLDR			
2	3534210C1	1	FUSE,*FUSE, 15AMP MINI			
3	3534211C1	3	FUSE,*FUSE, 20AMP MINI			
4	2012557C1	2	RELAY,GEN CONTROL			
800		RF	NOTE: THE FOLLOWING PARTS ARE NON-ILLUSTRATED			

COPYRIGHT© 2011INTERNATIONAL TRUCK AND ENGINE CORP.

https://truckmanualshub.com/

Figure 3603996F91

HARN,DASH,TRLR SCKT/BODY BLDR

Item	Part No.	Qty	Description	Kit	Var	Figure
801	3545759C92	1	HARNESS,TRAILER SOCKET*BODY BU			3545759C92
802	3581900C91	1	HARNESS,DASH W/TRLR OR BB CONN			3581900C91
803	3545759C92	1	HARNESS,TRAILER SOCKET*BODY BU			3545759C92
804	3581900C91	1	HARNESS,DASH W/TRLR OR BB CONN			3581900C91
805	3603990C91	1	HARNESS,TRAILER SCKT,BODY BLDR			
806	3534210C1	1	FUSE,*FUSE, 15AMP MINI			
807	3534211C1	3	FUSE,*FUSE, 20AMP MINI			
808	3607384C1	2	RELAY,GEN CONTROL, GEN CONTROL			
880		RF	NOTE: ASM BELOW COMPRISED OF ABOVE COMPONENTS			
881	3603996F91	RF	HARN,DASH,TRLR SCKT/BODY BLDR			

COPYRIGHT© 2011INTERNATIONAL TRUCK AND ENGINE CORP.

https://truckmanualshub.com/

Figure 3381500C91
HARNESS,DASH W/TRLR OR BB CONN

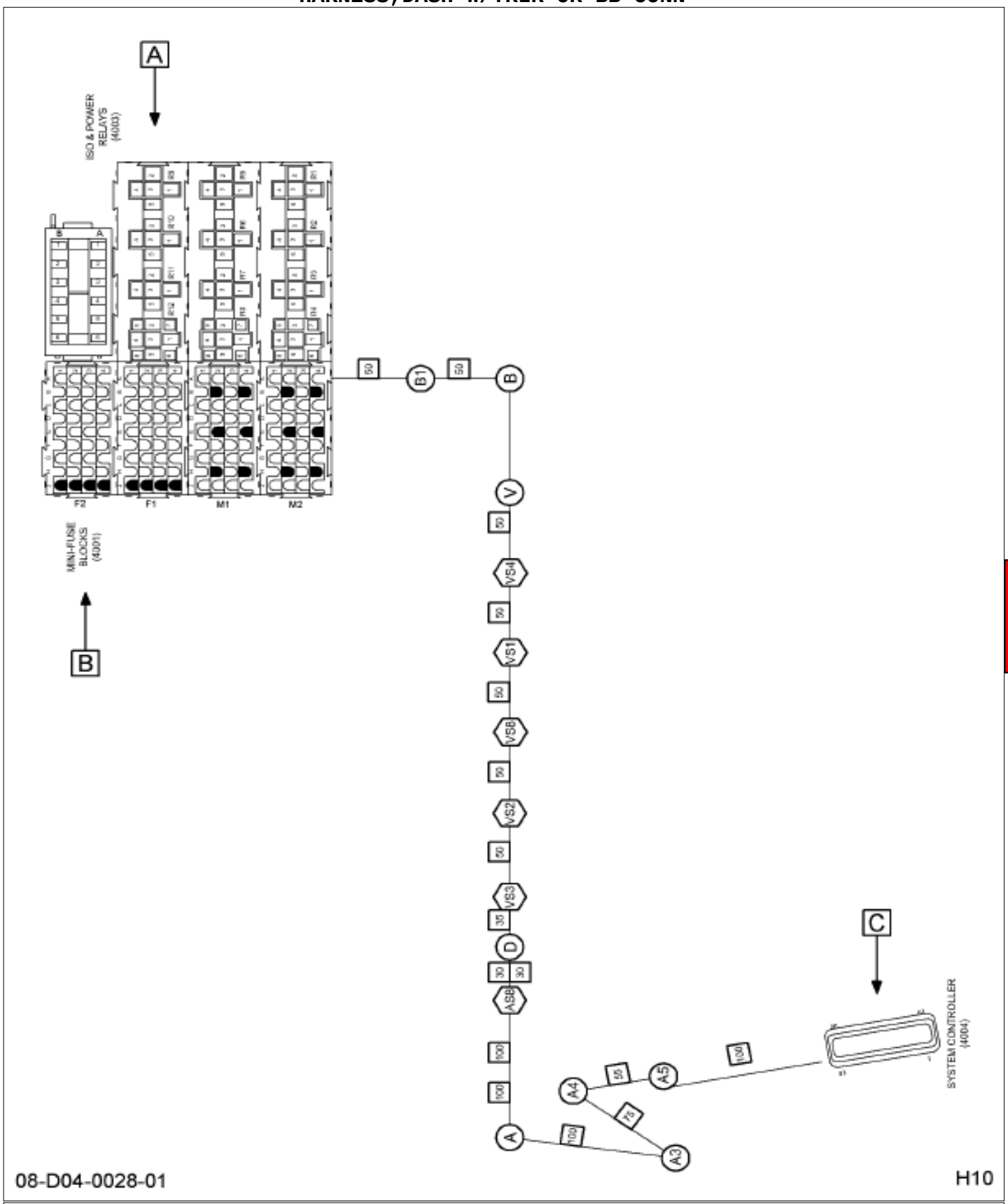

Grp 08

Figure 1 of 2

COPYRIGHT© 2011INTERNATIONAL TRUCK AND ENGINE CORP.

https://truckmanualshub.com/

Figure 3381300C91

HARNESS,DASH W/TRLR OR BB CONN

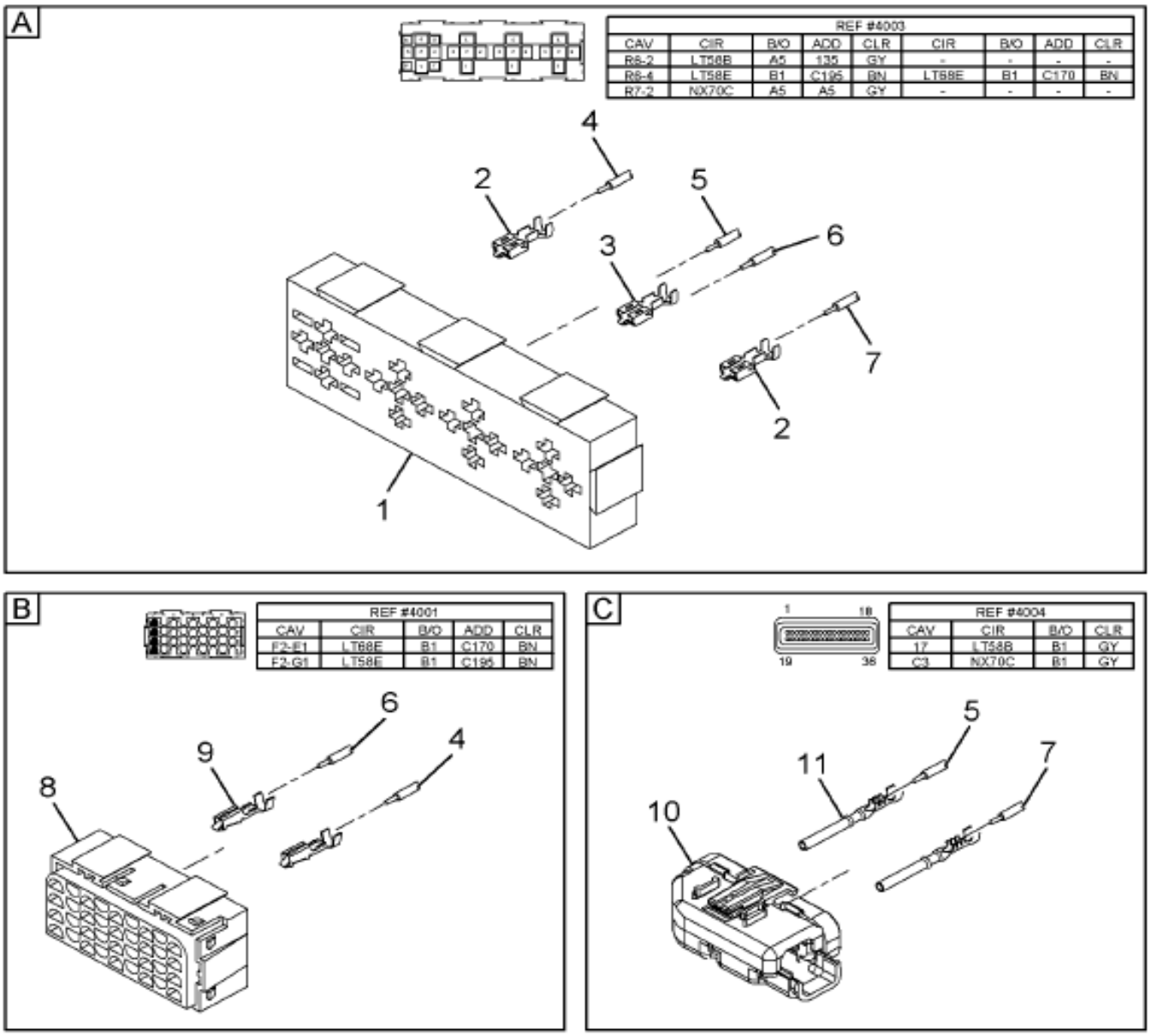

08-D04-0028-02 H10

Item	Part No.	Qty	Description	Kit	Var	Figure
1	3545600C91	1	CONNECTOR,BODY*RELAY BLOCKS FO			
2	1661224C1	2	TERMINAL,FEMALE 630 SERIES			
3	1661228C1	1	TERMINAL FEMALE 630 SERIES			
4	3510311R1	AR	CABLE,LOW TENSION TXL			
5	2643754R1	AR	CABLE LOW TENSION 12GA BROWN *			
6	2643754R1	AR	CABLE LOW TENSION 12GA BROWN *			

COPYRIGHT© 2011INTERNATIONAL TRUCK AND ENGINE CORP.

https://truckmanualshub.com/

Figure 3581900C91

HARNESS,DASH W/TRLR OR BB CONN

Item	Part No.	Qty	Description	Kit	Var	Figure
7	3510311R1	AR	CABLE,LOW TENSION TXL			
8	3545599C91	1	CONNECTOR,BODY*FUSE/CIRCUIT BR			
9	3573311C1	2	TERMINAL,CABLE,280SERIES FEMAL			
10	3533832C1	1	CONNECTOR,BODY*CNTR STRAIN REL			
11	3517243C1	2	TERMINAL,CABLE			
880		RF	NOTE: ASM BELOW COMPRISED OF ABOVE COMPONENTS			
881	3581900C91	RF	HARNESS,DASH W/TRLR OR BB CONN			

COPYRIGHT© 2011INTERNATIONAL TRUCK AND ENGINE CORP.

https://truckmanualshub.com/

Figure 3343739C92

HARNESS,TRAILER SOCKET*BODY BU

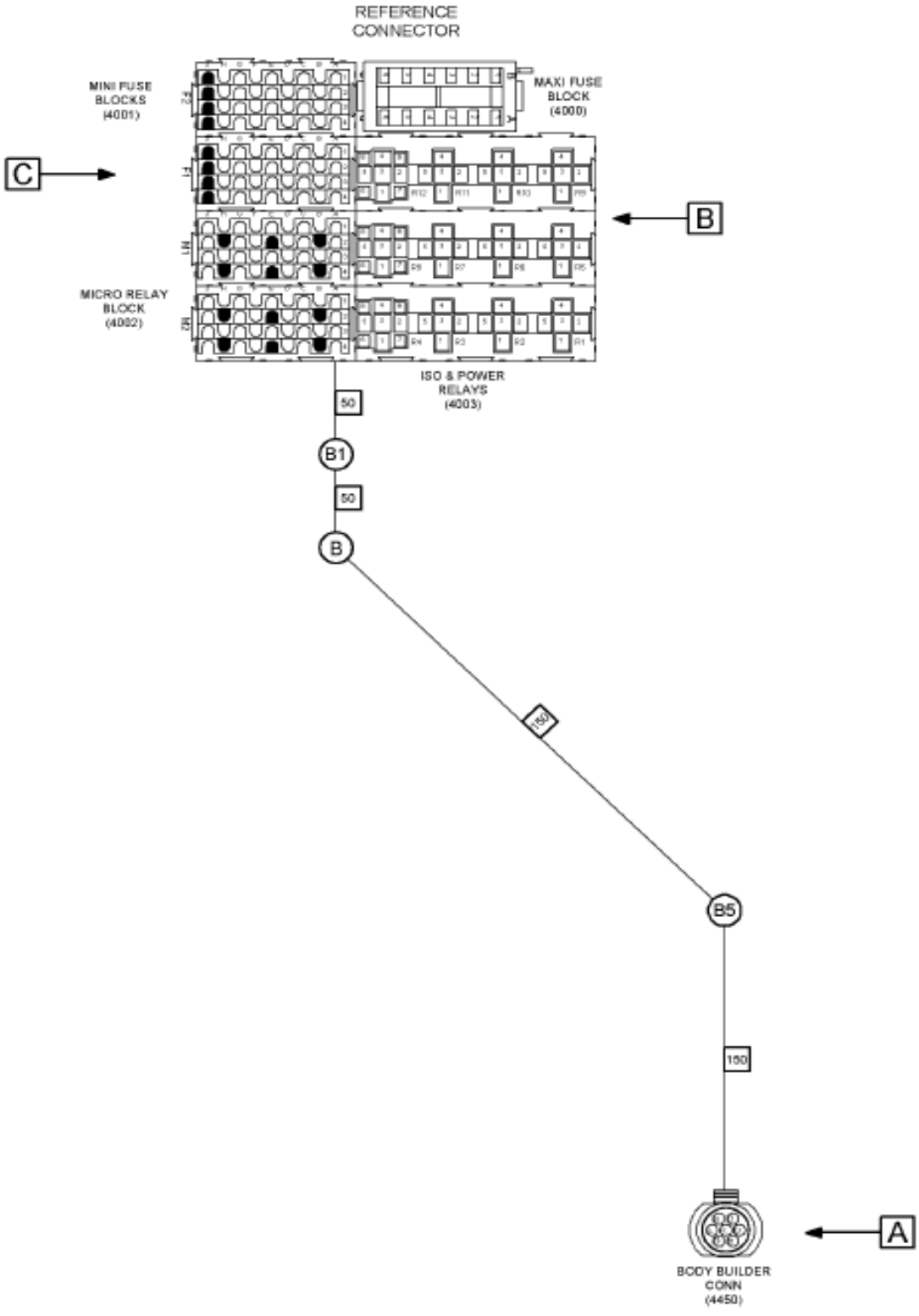

Figure 1 of 2

COPYRIGHT© 2011INTERNATIONAL TRUCK AND ENGINE CORP.

https://truckmanualshub.com/

Figure 3343739C92

HARNESS,TRAILER SOCKET*BODY BU

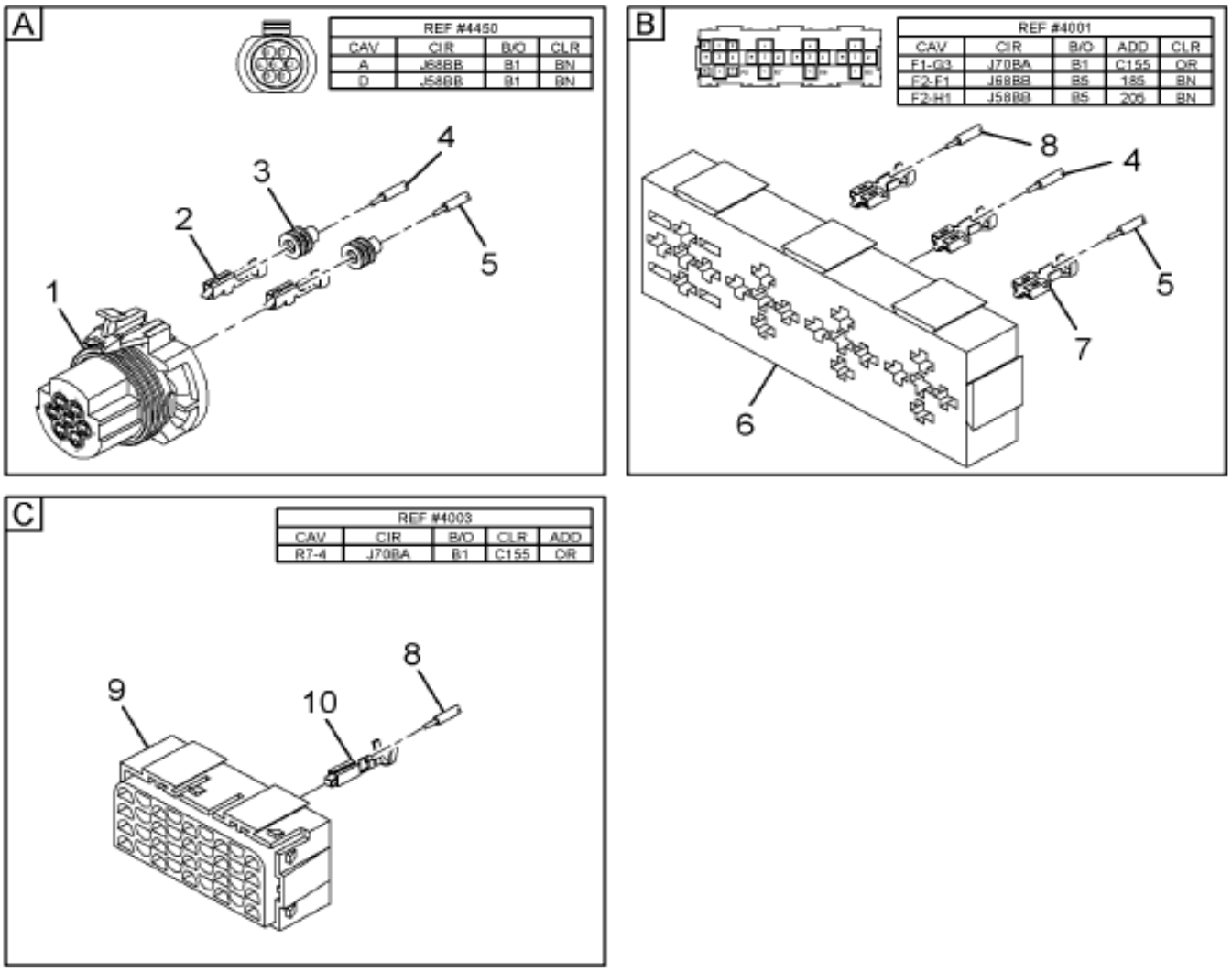

Grp 08

08-D04-0026-02 F10

Item	Part No.	Qty	Description	Kit	Var	Figure
1	2039311C91	1	BODY,CONNECTOR 7WAY METRI PAK			
2	3535486C1	2	TERMINAL,CABLE*14 AWG FEMALE P			
3	589391C1	2	PLUG,SEALER, LOOSE PIECE			
4	2643688R1	AR	CABLE LOW TENSION SINGLE COND			
5	2643688R1	AR	CABLE LOW TENSION SINGLE COND			
6	3545599C91	1	CONNECTOR,BODY*FUSE/CIRCUIT BR			

COPYRIGHT© 2011INTERNATIONAL TRUCK AND ENGINE CORP.

https://truckmanualshub.com/

Figure 3545759C92

HARNESS,TRAILER SOCKET*BODY BU

Item	Part No.	Qty	Description	Kit	Var	Figure
7	3573312C1	3	TERMINAL,CABLE,280SERIES FEMAL			
8	2643690R1	AR	CABLE LOW TENSION SINGLE COND			
9	3545600C91	1	CONNECTOR,BODY*RELAY BLOCKS FO			
10	1661226C1	1	TERMINAL,FEMALE 630 SERIES			
880		RF	NOTE: ASM BELOW COMPRISED OF ABOVE COMPONENTS			
881	3545759C92	RF	HARNESS,TRAILER SOCKET*BODY BU			

COPYRIGHT© 2011INTERNATIONAL TRUCK AND ENGINE CORP.

https://truckmanualshub.com/

Figure 0C393

DASH HARNESS ASM; ENGINE SYSTEM WIRING

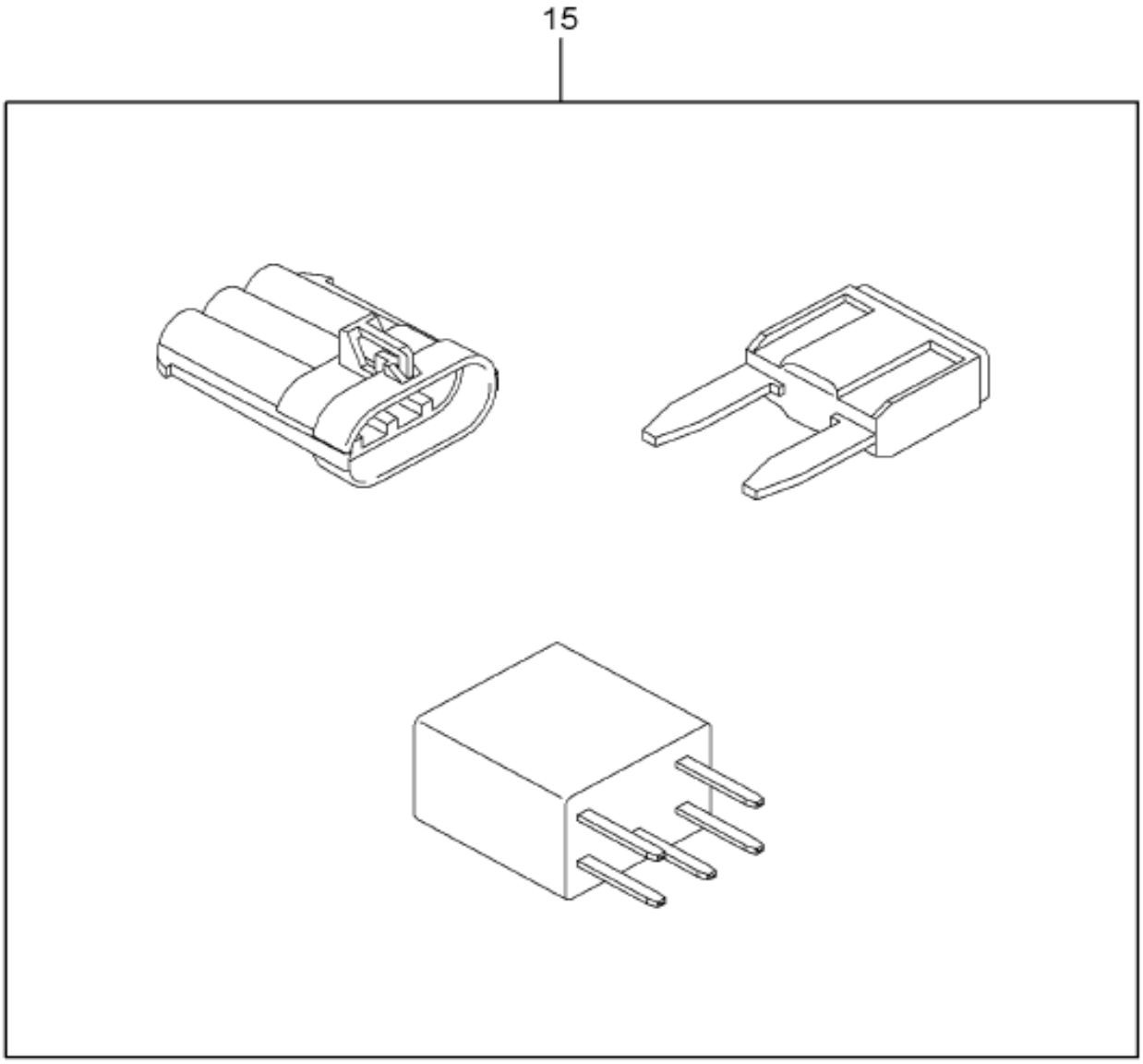

08-D03-0001-01 B09

Item	Part No.	Qty	Description	Kit	Var	Figure
15	3604083F91	1	HARNESS,CUMMINS ISM ENGINE		0M250	3604083F91
			NON-ILLUSTRATED REFERENCE FIGURE 3604083F91			
1	3604082C91	1	HARNESS,DASH, CUMMINS ENGINE			
880		RF	NOTE: ASM BELOW COMPRISED OF ABOVE COMPONENTS			

COPYRIGHT© 2011INTERNATIONAL TRUCK AND ENGINE CORP.

https://truckmanualshub.com/

Figure 0C393

DASH HARNESS ASM; ENGINE SYSTEM WIRING

Item	Part No.	Qty	Description	Kit	Var	Figure
881	3604083F91	RF	HARNESS,CUMMINS ISM ENGINE			

COPYRIGHT© 2011INTERNATIONAL TRUCK AND ENGINE CORP.

https://truckmanualshub.com/

Figure 0RP28

DASH HARNESS ASM; FOR EXPORT ENGINES, NOT RHD

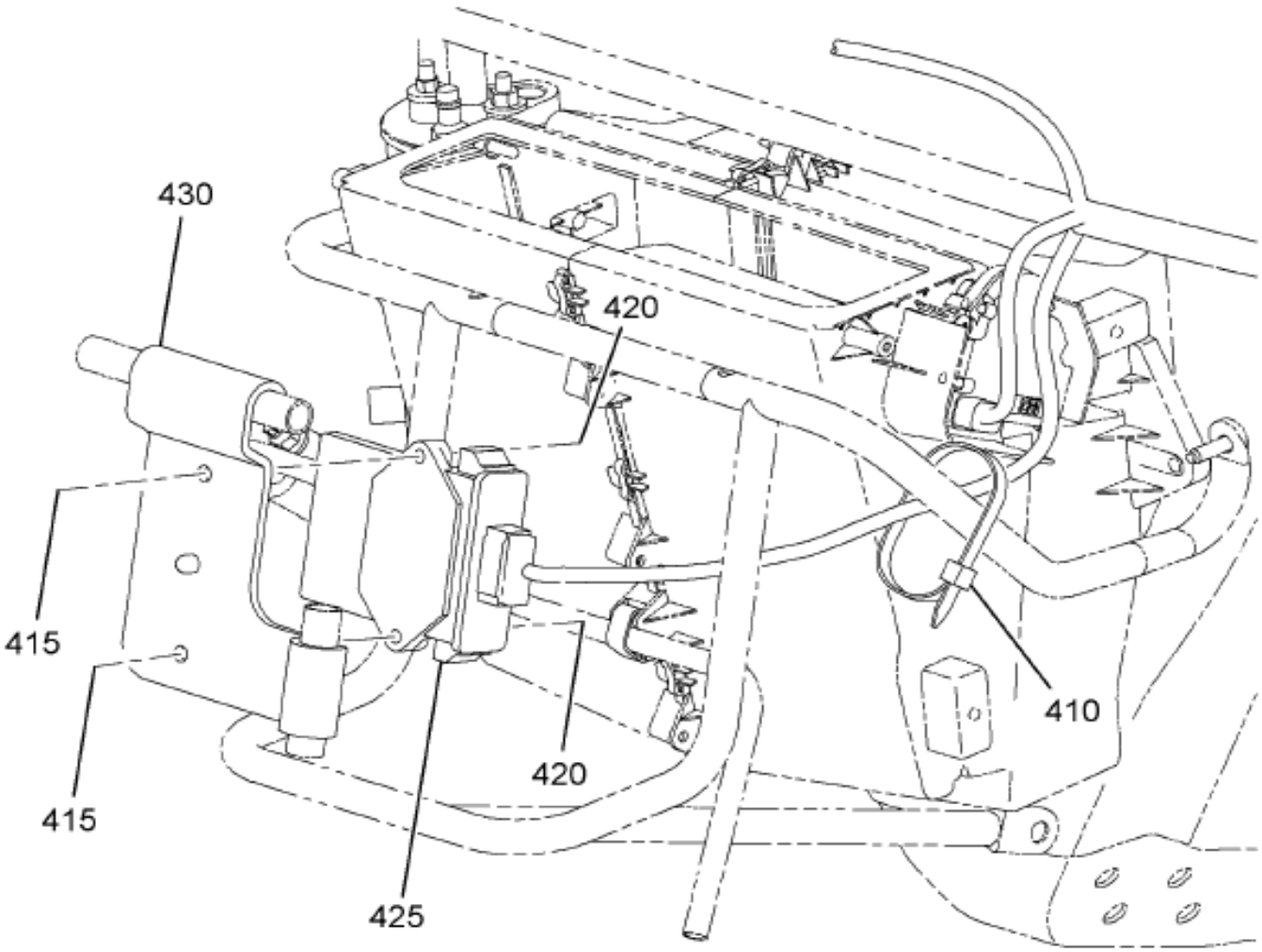

08-V26-0009-AF B10

Grp 08

Figure 1 of 2

COPYRIGHT© 2011INTERNATIONAL TRUCK AND ENGINE CORP.

https://truckmanualshub.com/

Figure 0RP28

DASH HARNESS ASM; FOR EXPORT ENGINES, NOT RHD

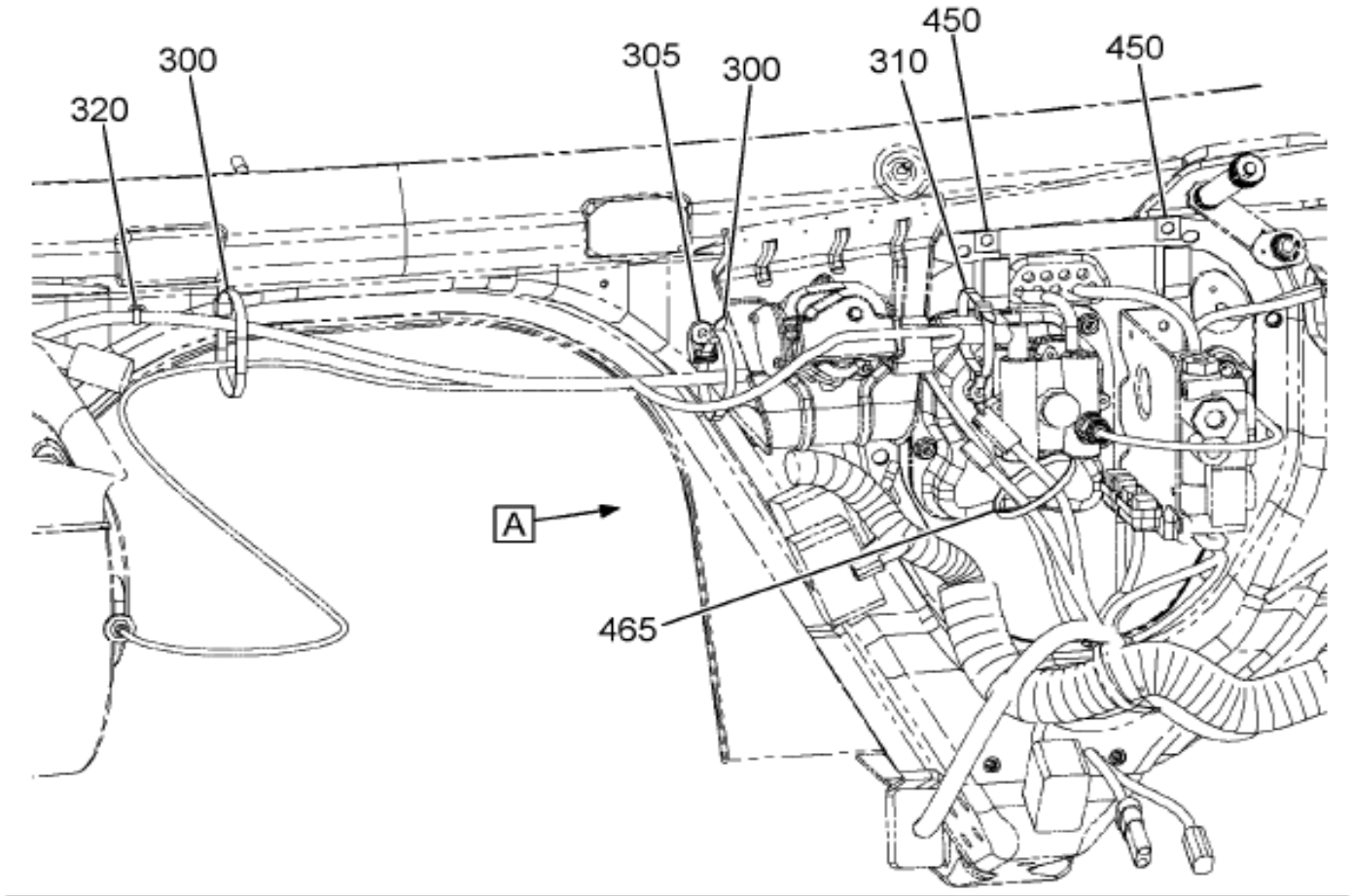

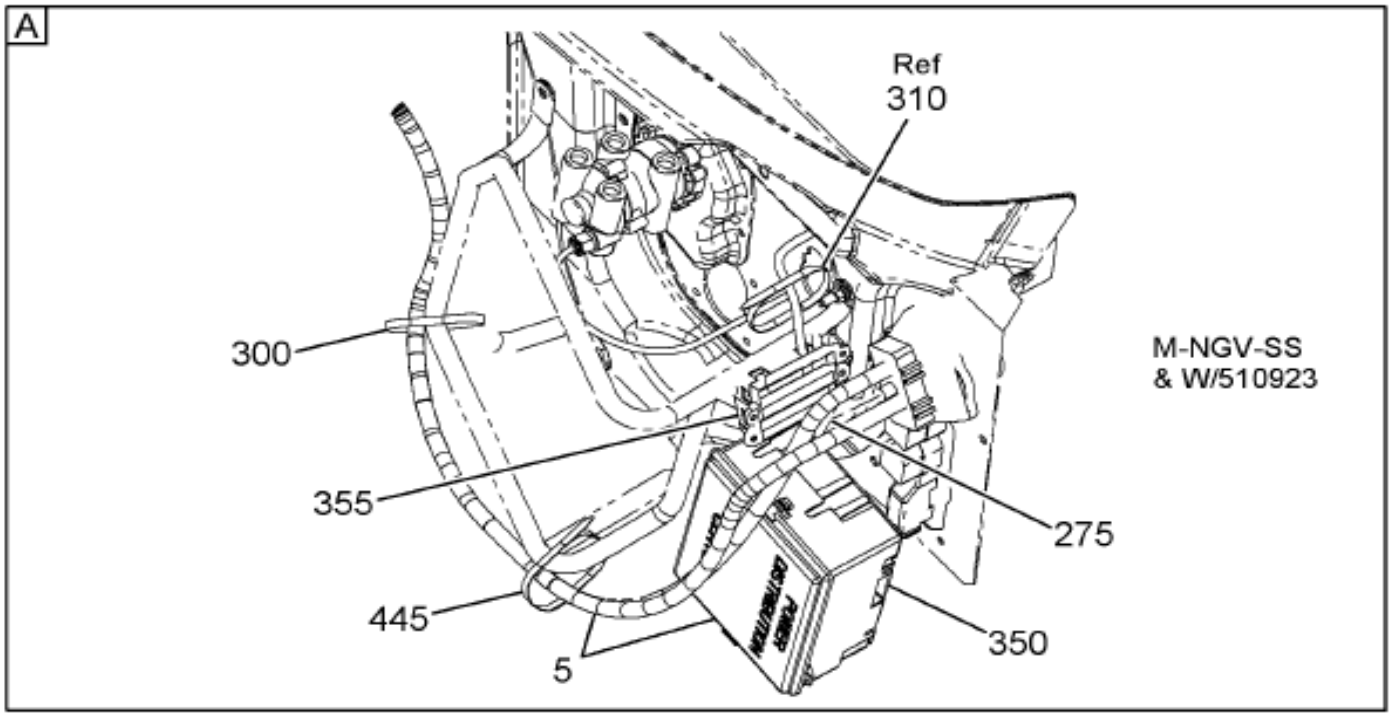

08-V26-0030-01 A09

Item	Part No.	Qty	Description	Kit	Var	Figure
275	3535162C1	2	NUT,HEX METRIC PREV. TORQ*M8 X		0RP28	
300	306132C1	1	STRAP,CABLE LOCK		0RP2K	
300	306132C1	3	STRAP,CABLE LOCK		0RP28	
305	3601280C1	1	GUIDE BRK HOSE & CABLE		0RP28	
305	40066R1	3	NUT, M8 - HF LOCK		0RP28	
310	289862C1	2	STRAP,CABLE LOCK		0RP28	

COPYRIGHT© 2011INTERNATIONAL TRUCK AND ENGINE CORP.

https://truckmanualshub.com/

Figure 0RP28

DASH HARNESS ASM; FOR EXPORT ENGINES, NOT RHD

Item	Part No.	Qty	Description	Kit	Var	Figure
310	289862C1	2	STRAP,CABLE LOCK		0RP2J	
320	3552653C1	1	BASE,STRAPLOCK MTG*STRAPLOCK M		0RP2S	
320	289862C1	1	STRAP,CABLE LOCK		0RP2S	
350	3674332C3	1	SUPPORT, PDC BRACKET		0RP28	
355	3573658C92	1	BLOCK,FUSE, MEGAFUSE HOLDER		0RP28	
355	3606527C1	2	NUT,SPECIAL, M8		0RP28	
355	3500131C2	1	FUSE, 100AMP "MEGA FUSE"		0RP28	
355	2040956C1	2	RIVET,BLIND* 3/16 STL .214-.43		0RP28	
355	2643099R3	1	FLUID LUBRICANT GRAFFO 112X		0RP28	
445	30167R1	1	NUT,M8 PHC CLASS 10		0RP34	
445	31054R1	1	BOLT, M8 X 20 PHC CL 8.8 FLG/H		0RP34	
445	934309R1	1	WASHER,8MM HELICAL SPR LOCK		0RP34	
445	306132C1	1	STRAP,CABLE LOCK		0RP28	
450	314249C91	2	CLIP,MEDIUM		0RP28	
450	3534873C2	1	NUT,HEX*M8 X 1.25 W/CAPTURE WA		0RP28	
8005	2643099R3	1	FLUID LUBRICANT GRAFFO 112X		0RP28	

Grp 08

COPYRIGHT© 2011INTERNATIONAL TRUCK AND ENGINE CORP.

https://truckmanualshub.com/

Figure 0C33F

DASH HARNESS ASM; FUSE BLOCK, COMMON BASE WIRING

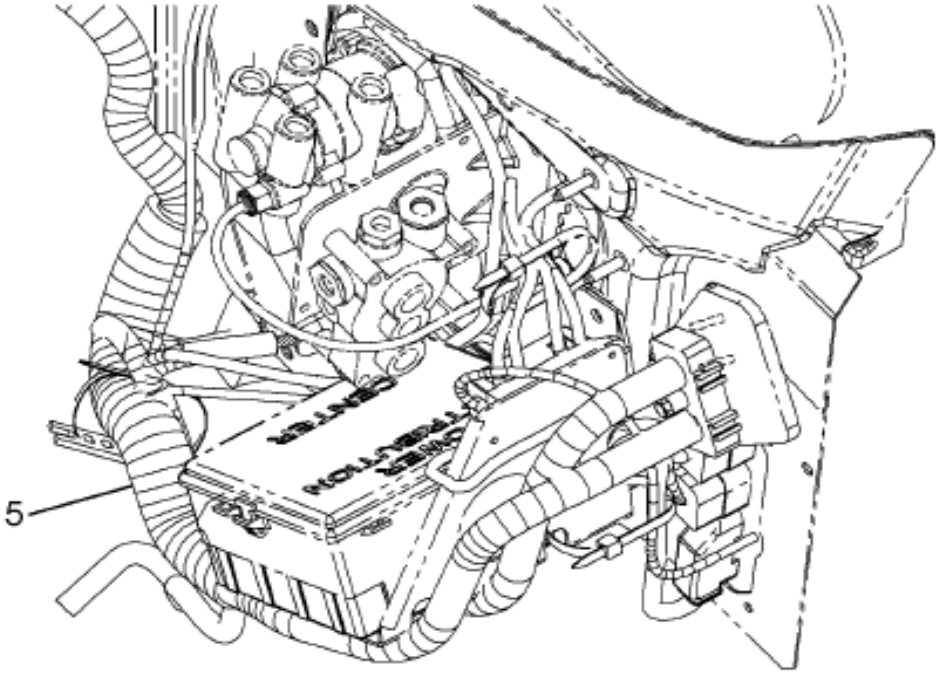

M-NGV-MD, M-NGV-SS
M-NGV-RH-MRD
N/510923

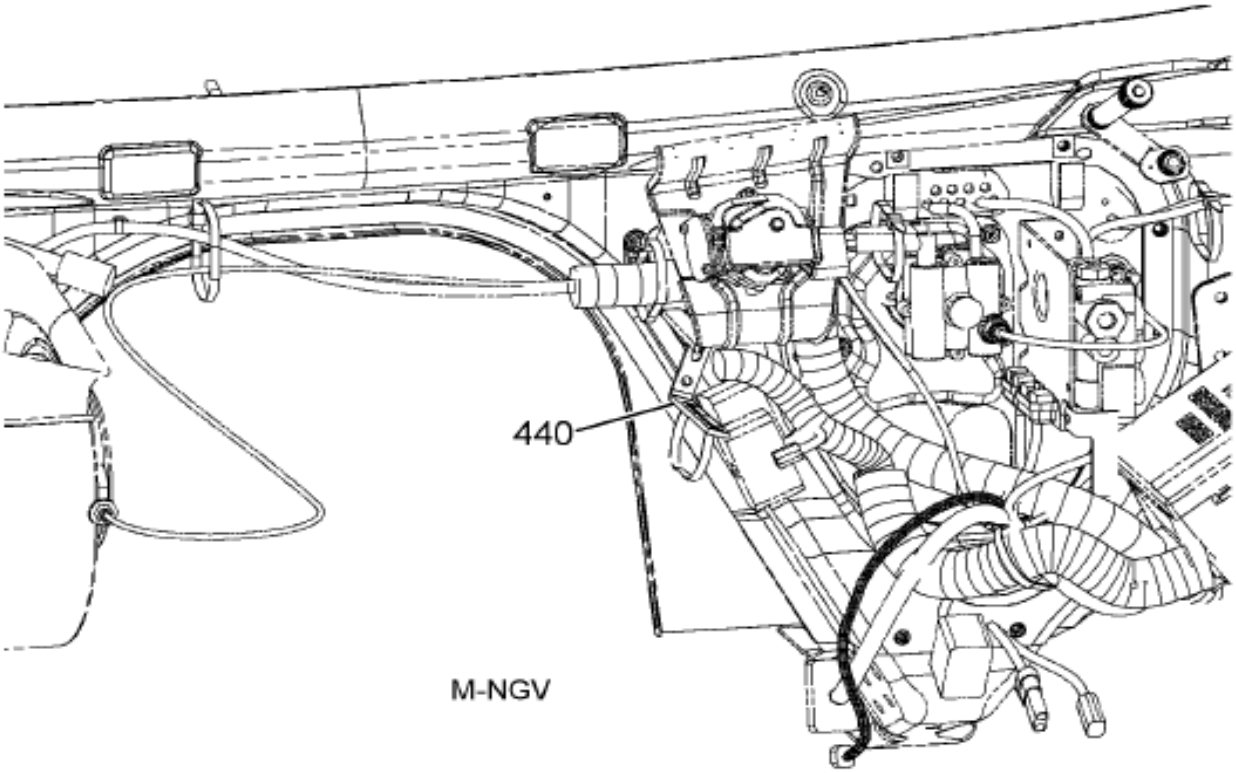

M-NGV

08-D01-0005-02 L10

Item	Part No.	Qty	Description	Kit	Var	Figure
5	3604079F95	1	HARNESS, DASH, BASE		0NND2	3604079F95
			NON-ILLUSTRATED REFERENCE FIGURE 3604079F95			
1	3604078C93	1	HARNESS,DASH WIRING, BASE , -			3604078C93
2	3534209C1	1	FUSE,*FUSE, 10AMP MINI			
3	2012557C1	3	RELAY,GEN CONTROL			

COPYRIGHT© 2011INTERNATIONAL TRUCK AND ENGINE CORP.

https://truckmanualshub.com/

Figure 0C33F

DASH HARNESS ASM; FUSE BLOCK, COMMON BASE WIRING

Item	Part No.	Qty	Description	Kit	Var	Figure
4	3682393C91	1	HOUSING,CONTROL, POWER DISTRIB			3682393C91
5	3548663C3	1	PROGRAPH,PROD PDC FUSE LABEL			
880		RF	NOTE: ASM BELOW COMPRISED OF ABOVE COMPONENTS			
881	3604079F95	RF	HARNESS, DASH, BASE			

COPYRIGHT© 2011INTERNATIONAL TRUCK AND ENGINE CORP.

https://truckmanualshub.com/

Figure 3604078C93
HARNESS,DASH WIRING, BASE , -

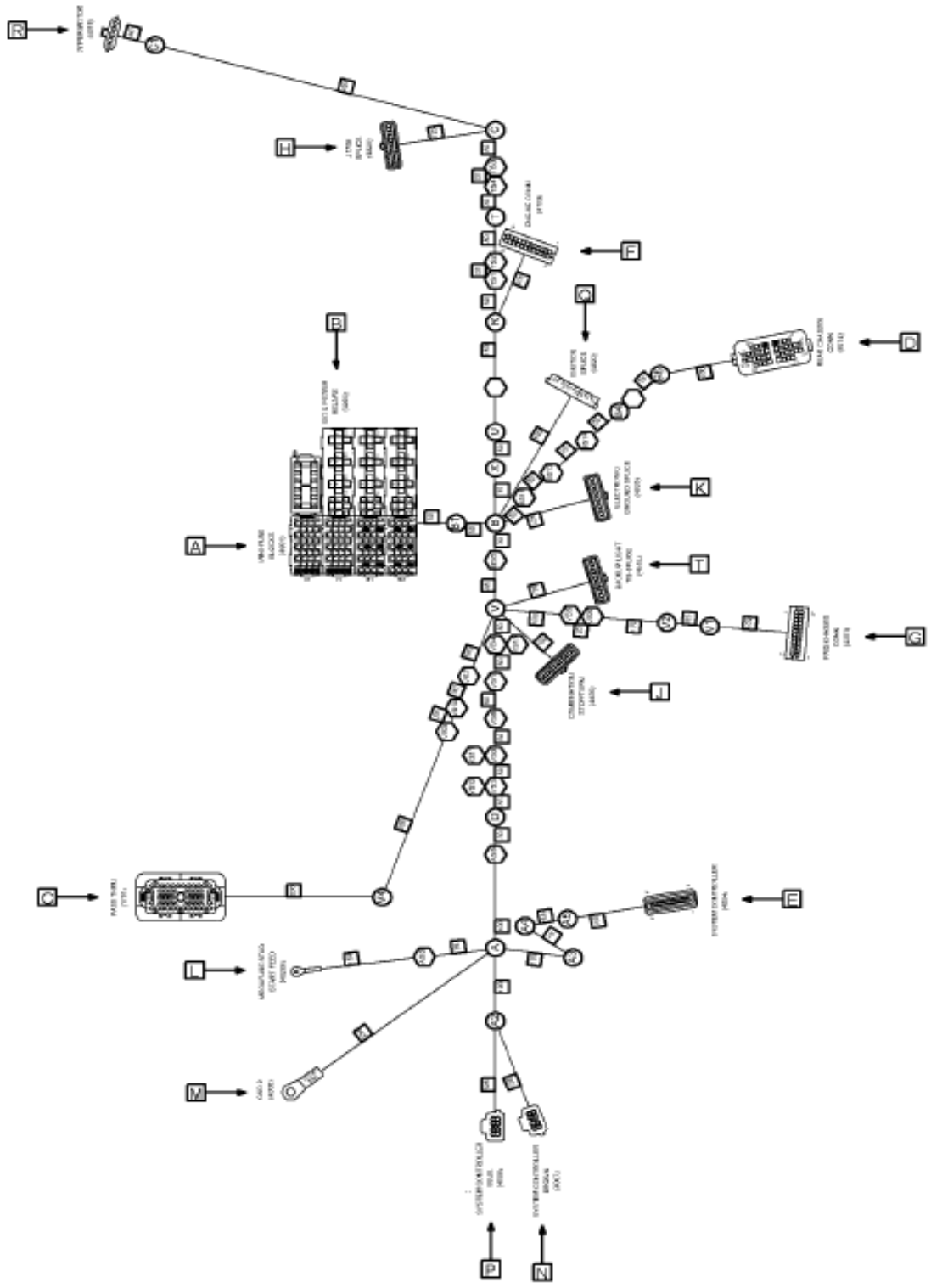

08-D01-0083-01 K10

Figure 1 of 7

COPYRIGHT© 2011INTERNATIONAL TRUCK AND ENGINE CORP.

https://truckmanualshub.com/

Figure 3604078C93
HARNESS,DASH WIRING, BASE , -

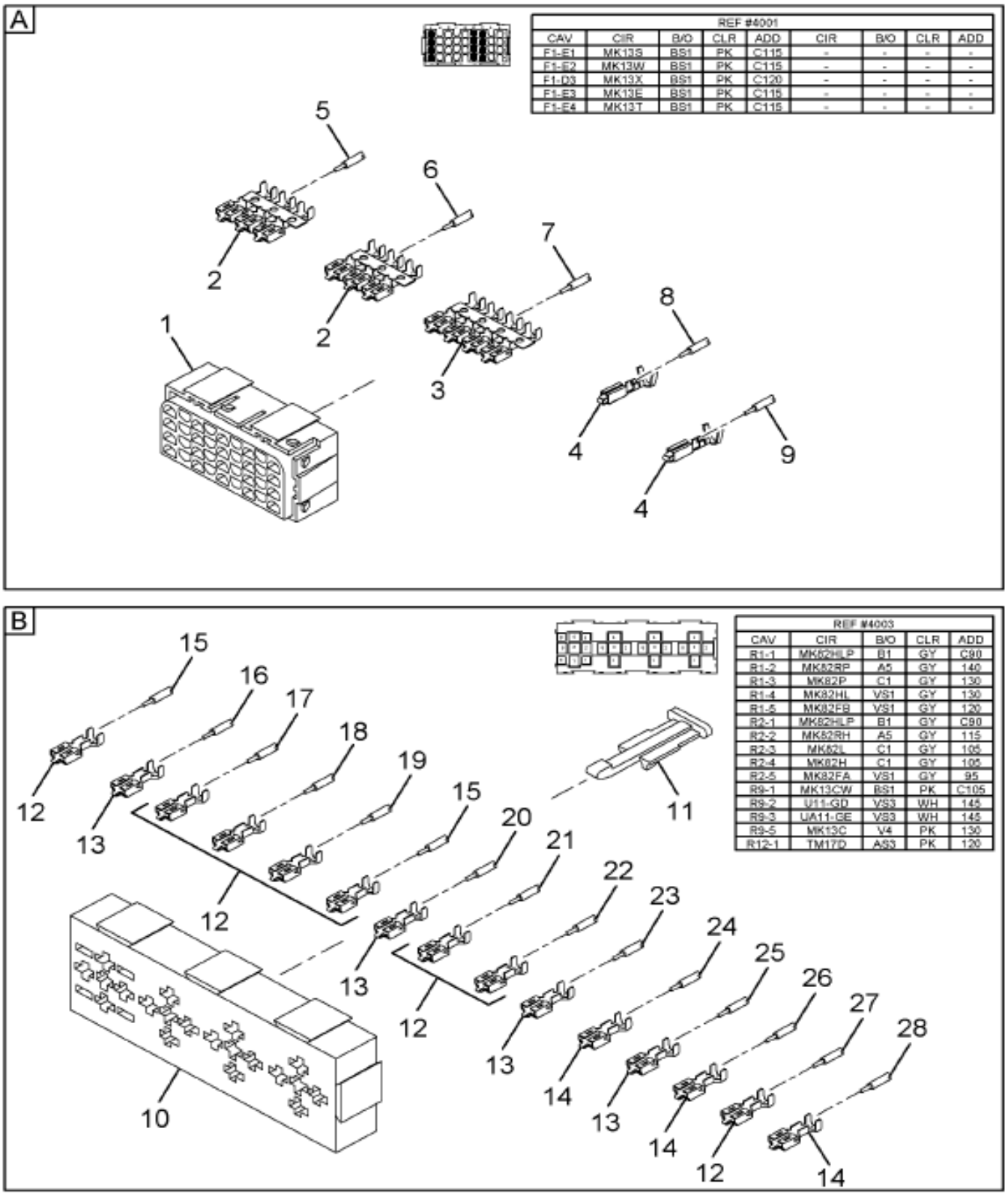

08-D01-0083-02 J10

Grp 08

Figure 2 of 7

COPYRIGHT© 2011INTERNATIONAL TRUCK AND ENGINE CORP.

https://truckmanualshub.com/

Figure 3604078C93
HARNESS,DASH WIRING, BASE , -

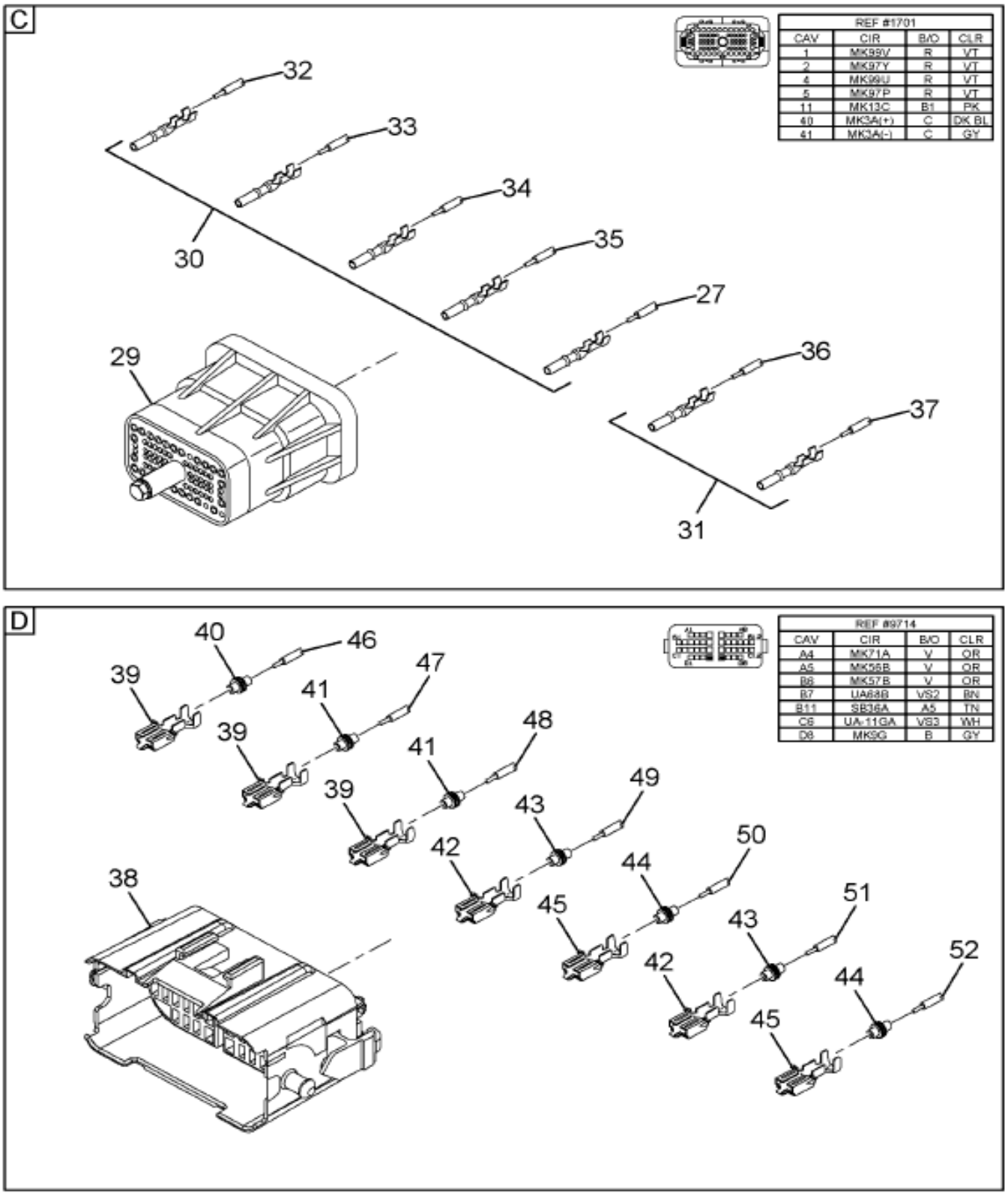

08-D01-0083-03 J10

Figure 3 of 7

COPYRIGHT© 2011INTERNATIONAL TRUCK AND ENGINE CORP.

https://truckmanualshub.com/

Figure 3604078C93

HARNESS,DASH WIRING, BASE , -

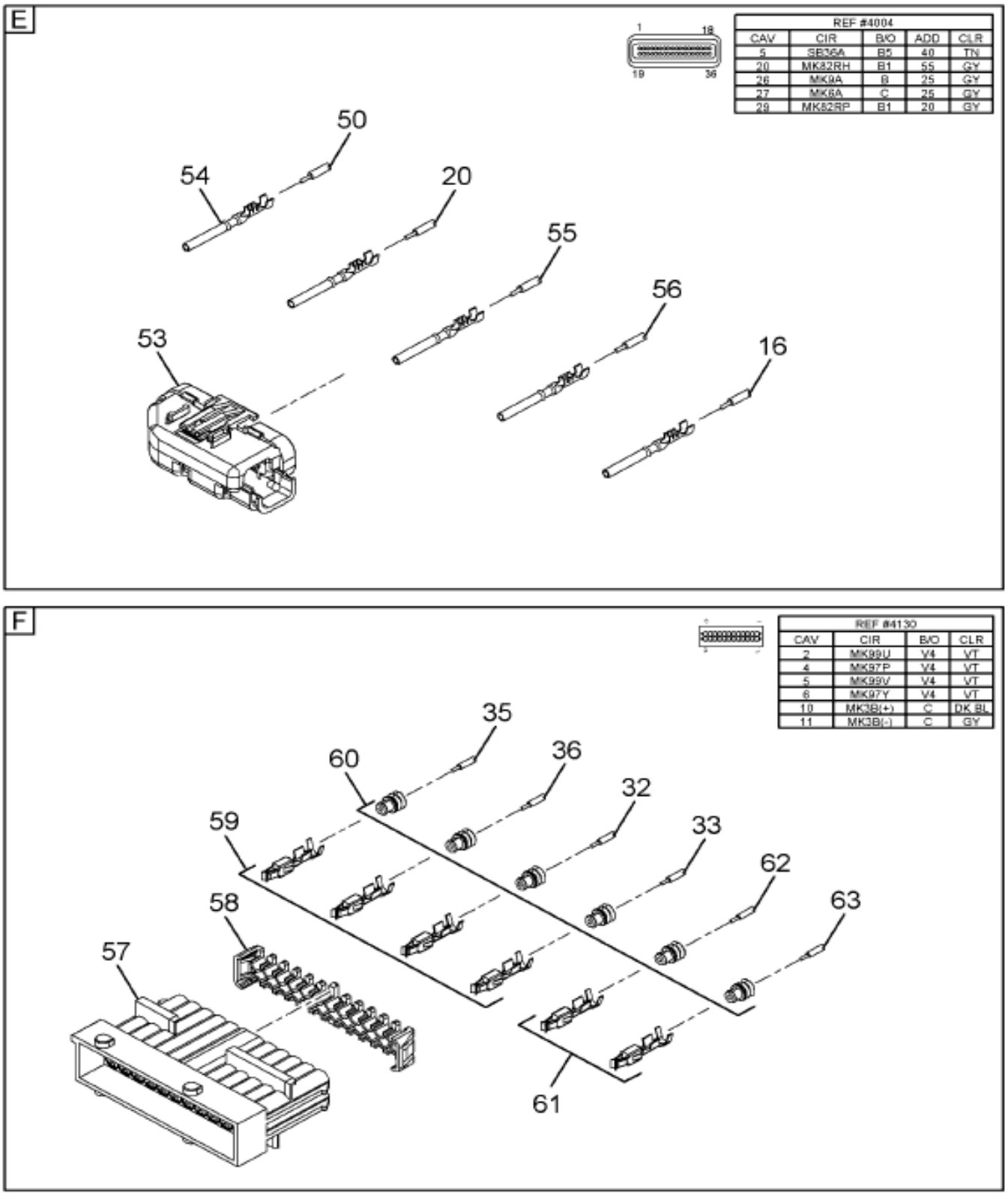

08-D01-0083-04 J10

Grp 08

Figure 4 of 7

COPYRIGHT© 2011INTERNATIONAL TRUCK AND ENGINE CORP.

https://truckmanualshub.com/

Figure 3604078C93
HARNESS,DASH WIRING, BASE , -

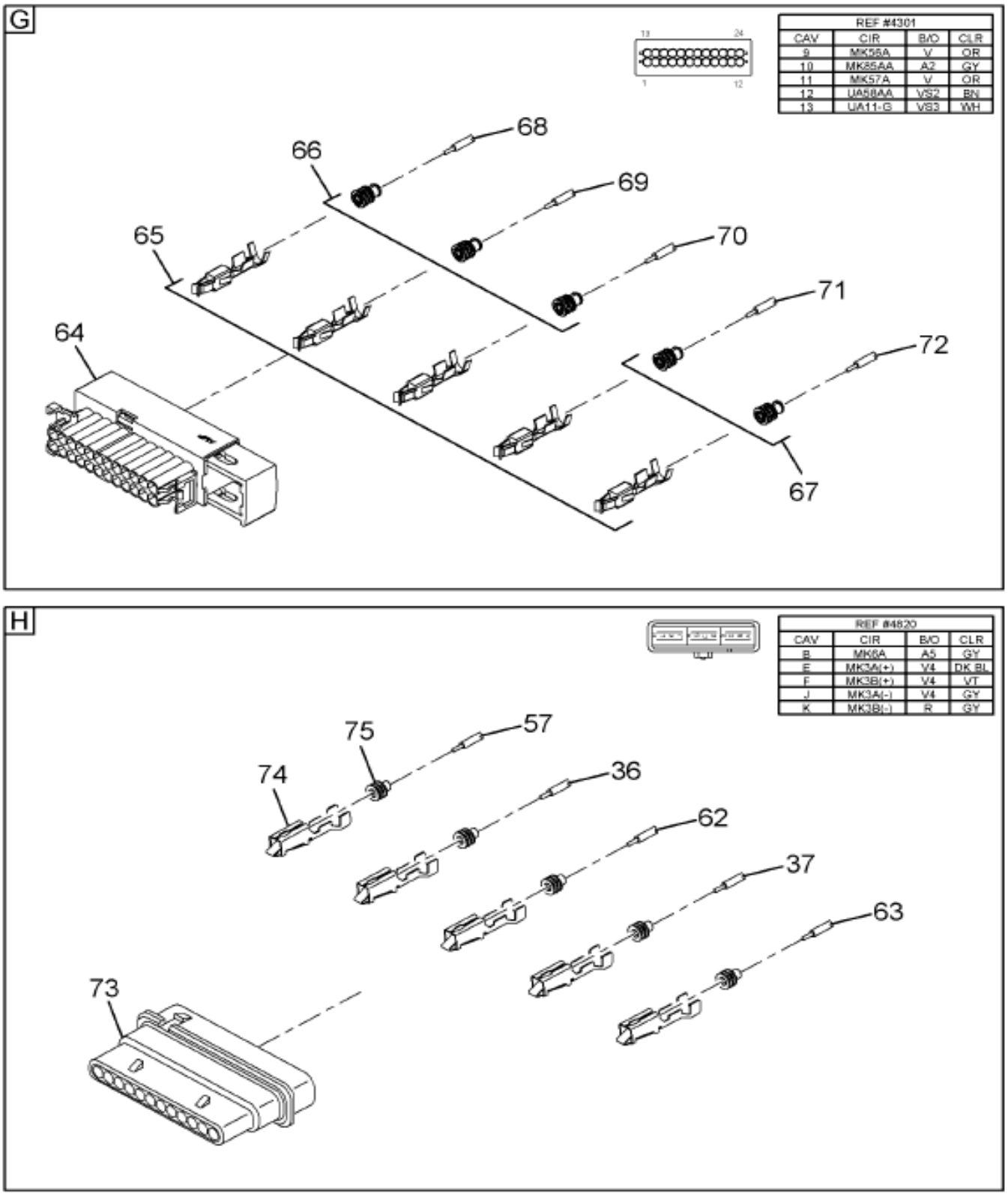

08-D01-0083-05 J10

Figure 5 of 7

COPYRIGHT© 2011INTERNATIONAL TRUCK AND ENGINE CORP.

https://truckmanualshub.com/

Figure 3604078C93

HARNESS,DASH WIRING, BASE , -

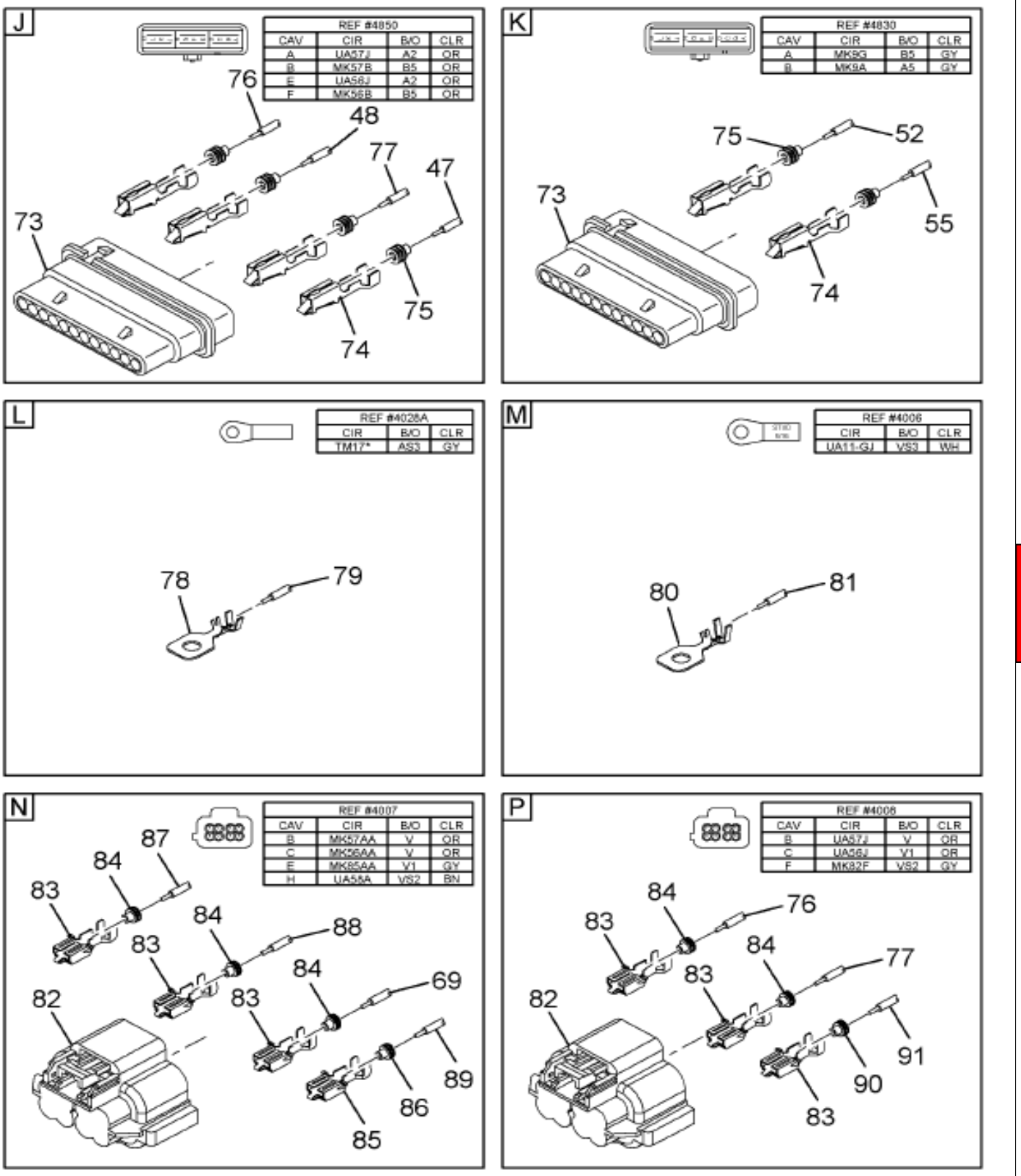

08-D01-0083-06 J10

Grp 08

Figure 6 of 7

COPYRIGHT© 2011INTERNATIONAL TRUCK AND ENGINE CORP.

https://truckmanualshub.com/

Figure 3604078C93

HARNESS,DASH WIRING, BASE , -

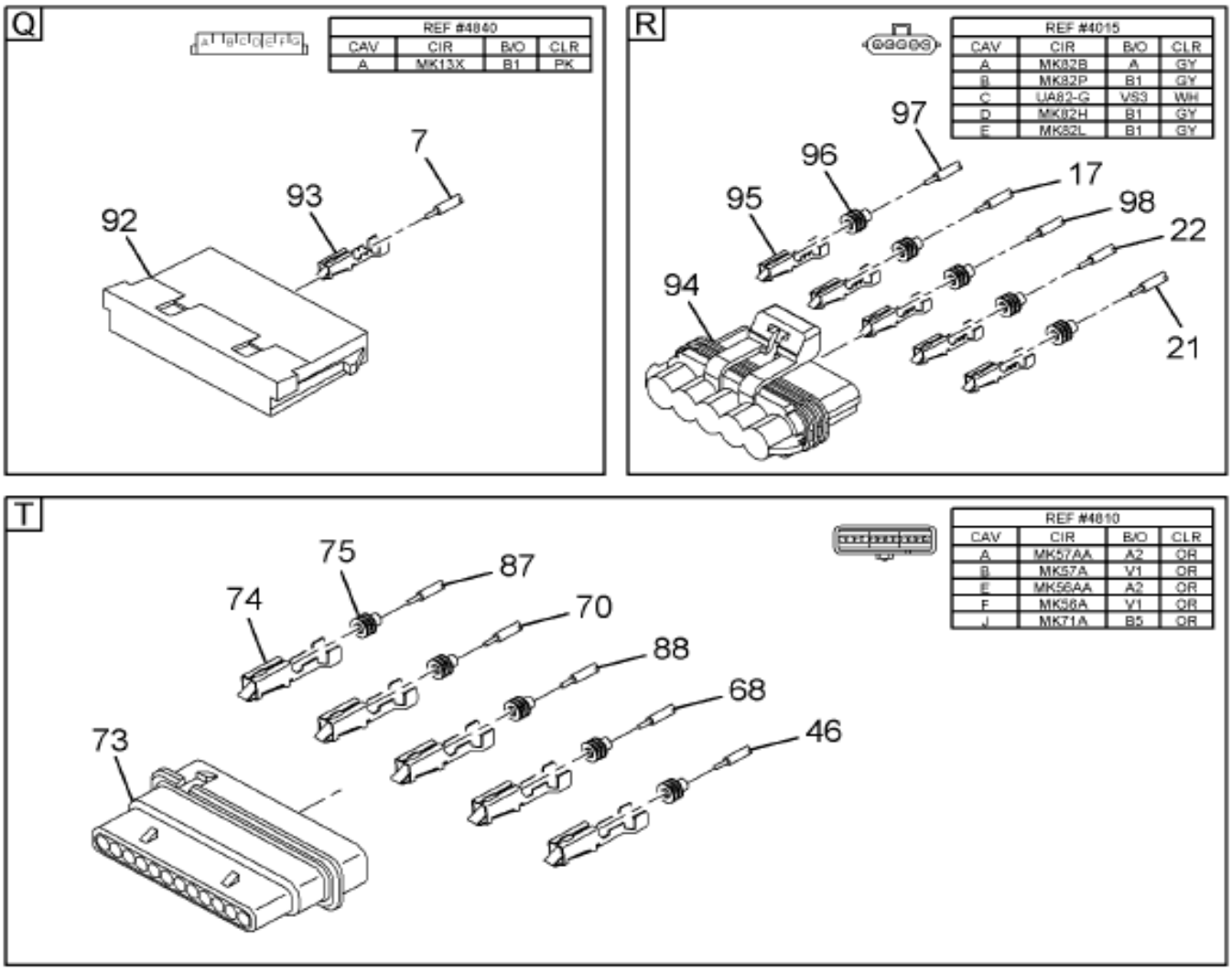

08-D01-0083-07 J10

Item	Part No.	Qty	Description	Kit	Var	Figure
1	3545599C91	1	CONNECTOR,BODY*FUSE/CIRCUIT BR			
2	3536304C1	2	TERMINAL,CABLE*280 SERIES TNGL			
3	3573312C1	1	TERMINAL,CABLE,280SERIES FEMAL			
4	3536301C1	2	TERMINAL,CABLE*280 SERIES TNGL			
5	2643691R1	AR	CABLE LOW TENSION SINGLE COND			
6	2643691R1	AR	CABLE LOW TENSION SINGLE COND			

COPYRIGHT© 2011INTERNATIONAL TRUCK AND ENGINE CORP.

https://truckmanualshub.com/

Figure 3604078C93

HARNESS,DASH WIRING, BASE , -

Item	Part No.	Qty	Description	Kit	Var	Figure
7	2643752R1	AR	CABLE BULK 16 GA PINK *			
8	2643691R1	AR	CABLE LOW TENSION SINGLE COND			
9	2643691R1	AR	CABLE LOW TENSION SINGLE COND			
10	3545600C91	1	CONNECTOR,BODY*RELAY BLOCKS FO			
11	3536093C1	1	LOCK,CONN BODY*LOCK-SEC (RED)			
12	1661226C1	7	TERMINAL,FEMALE 630 SERIES			
13	1661224C1	4	TERMINAL,FEMALE 630 SERIES			
14	1661227C1	1	TERMINAL FEMALE 630 SERIES			
15	2643680R1	AR	CABLE LOW TENSION SINGLE COND			
16	3510311R1	AR	CABLE,LOW TENSION TXL			
17	2643680R1	AR	CABLE LOW TENSION SINGLE COND			
18	2643680R1	AR	CABLE LOW TENSION SINGLE COND			
19	2643673R1	AR	CABLE LOW TENSION SINGLE COND			
20	3510311R1	AR	CABLE,LOW TENSION TXL			
21	2643680R1	AR	CABLE LOW TENSION SINGLE COND			
22	2643680R1	AR	CABLE LOW TENSION SINGLE COND			
23	2643673R1	AR	CABLE LOW TENSION SINGLE COND			
24	2643752R1	AR	CABLE BULK 16 GA PINK *			
25	2643674R1	AR	CABLE LOW TENSION SINGLE COND			
26	2643787R1	AR	CABLE LOW TENSION 12 GAUGE WHI			
27	2643752R1	AR	CABLE BULK 16 GA PINK *			
28	2643699R1	AR	CABLE LOW TENSION SINGLE COND			
29	3595624C1	1	CONNECTOR,BODY,76-WAY AMP MALE			
30	3549416C1	5	TERMINAL,CABLE*			
31	3549418C1	2	TERMINAL,CABLE*			
32	2643719R1	AR	CABLE LOW TENSION SINGLE COND			
33	2643719R1	AR	CABLE LOW TENSION SINGLE COND			
34	2643719R1	AR	CABLE LOW TENSION SINGLE COND			
35	2643719R1	AR	CABLE LOW TENSION SINGLE COND			
36	2643720R1	AR	CABLE LOW TENSION SINGLE COND			
37	2643673R1	AR	CABLE LOW TENSION SINGLE COND			
38	3535306C1	1	CONNECTOR BODY 38-WAY FEMALE G			
39	3535930C1	7	TERMINAL,CABLE*GT 280 SERIES 5			
40	3535937C1	2	SEAL,CABLE TERMINAL*GT 280 SER			
41	3535936C1	2	SEAL,CABLE TERMINAL*GT 280 SER			
42	3535931C1	3	TERMINAL,CABLE*GT 280 SERIES 5			
43	3548945C1	3	SEAL,CABLE TERMINAL*GT 280 SER			
44	3535424C1	2	PLUG,SEALING*CABLE TERMINAL SE			
45	3535303C1	2	TERMINAL,CABLE*CONN TERMINAL			
46	2643675R1	AR	CABLE LOW TENSION SINGLE COND			
47	3510318R1	AR	CABLE,LOW TENSION TXL			
48	3510318R1	AR	CABLE,LOW TENSION TXL			
49	2643688R1	AR	CABLE LOW TENSION SINGLE COND			
50	3510329R1	AR	CABLE,LOW TENSION TXL			
51	2643689R1	AR	CABLE LOW TENSION SINGLE COND			
52	2643673R1	AR	CABLE LOW TENSION SINGLE COND			
53	3533832C1	AR	CONNECTOR,BODY*CNTR STRAIN REL			
54	3517243C1	AR	TERMINAL,CABLE			
55	3510311R1	AR	CABLE,LOW TENSION TXL			
56	3510311R1	AR	CABLE,LOW TENSION TXL			
57	3558026C1	2	CONNECTOR,BODY*AMP JR-PWR-TIME			
58	3558056C1	2	LOCK,CONNECTOR BODY*AMP JR-PWR			
59	3559035C1	7	TERMINAL,CABLE*AMP JUNIOR-POWE			
60	3509903C1	9	SEAL,CABLE TERMINAL			
61	3509874C1	2	TERMINAL,CABLE			
62	2643720R1	AR	CABLE LOW TENSION SINGLE COND			
63	2643673R1	AR	CABLE LOW TENSION SINGLE COND			
64	3558026C1	2	CONNECTOR,BODY*AMP JR-PWR-TIME			

COPYRIGHT© 2011INTERNATIONAL TRUCK AND ENGINE CORP.

https://truckmanualshub.com/

Figure 3604078C93

HARNESS,DASH WIRING, BASE , -

Item	Part No.	Qty	Description	Kit	Var	Figure
65	3559035C1	7	TERMINAL,CABLE*AMP JUNIOR-POWE			
66	3509903C1	9	SEAL,CABLE TERMINAL			
67	3575783C1	2	SEAL,CABLE TERM JR TIMER 12-14			
68	3510318R1	AR	CABLE,LOW TENSION TXL			
69	3510312R1	AR	CABLE,LOW TENSION TXL			
70	3510318R1	AR	CABLE,LOW TENSION TXL			
71	2643688R1	AR	CABLE LOW TENSION SINGLE COND			
72	3510362R1	AR	CABLE,LOW TENSION TXL			
73	3543733C1	3	CONNECTOR,BUS BAR*BUS BAR* 150			
74	3535303C1	1	TERMINAL,CABLE*CONN TERMINAL			
75	3535424C1	1	PLUG,SEALING*CABLE TERMINAL SE			
76	3510318R1	AR	CABLE,LOW TENSION TXL			
77	3510318R1	AR	CABLE,LOW TENSION TXL			
78	3581768C1	1	TERM,CABLE,EYELET (5/16"OR 8MM			
79	2643114R1	AR	CABLE,FUSIBLE LINK (GRAY)			
80	2020632C1	1	TERMINAL,CABLE EYELET 5/16			
81	2643788R1	AR	CABLE LOW TENSION 10 GAUGE WHI			
82	3548934C1	1	CONNECTOR,BODY*8 WAY BROWN PAC			
83	3535930C1	2	TERMINAL,CABLE*GT 280 SERIES 5			
84	3535936C1	2	SEAL,CABLE TERMINAL*GT 280 SER			
85	3535931C1	3	TERMINAL,CABLE*GT 280 SERIES 5			
86	3548945C1	3	SEAL,CABLE TERMINAL*GT 280 SER			
87	3510318R1	AR	CABLE,LOW TENSION TXL			
88	3510318R1	AR	CABLE,LOW TENSION TXL			
89	2643688R1	AR	CABLE LOW TENSION SINGLE COND			
90	3535937C1	2	SEAL,CABLE TERMINAL*GT 280 SER			
91	2643680R1	AR	CABLE LOW TENSION SINGLE COND			
92	2006789C1	1	CONNECTOR,7-WAY BUS BAR			
93	1661209C1	1	TERMINAL,FEMALE 280 SERIES			
94	1661375C2	1	BODY,CONNECTOR			
95	2033819C1	1	TERMINAL,CABLE FOR 16 GA ONLY			
96	1652325C1	1	PLUG,SEALER			
97	2643680R1	AR	CABLE LOW TENSION SINGLE COND			
98	2643681R1	AR	CABLE LOW TENSION SINGLE COND			
880		RF	NOTE: ASM BELOW COMPRISED OF ABOVE COMPONENTS			
881	3604078C93	RF	HARNESS,DASH WIRING, BASE , -			

COPYRIGHT© 2011INTERNATIONAL TRUCK AND ENGINE CORP.

https://truckmanualshub.com/

Figure 3682393C91

HOUSING,CONTROL, POWER DISTRIB

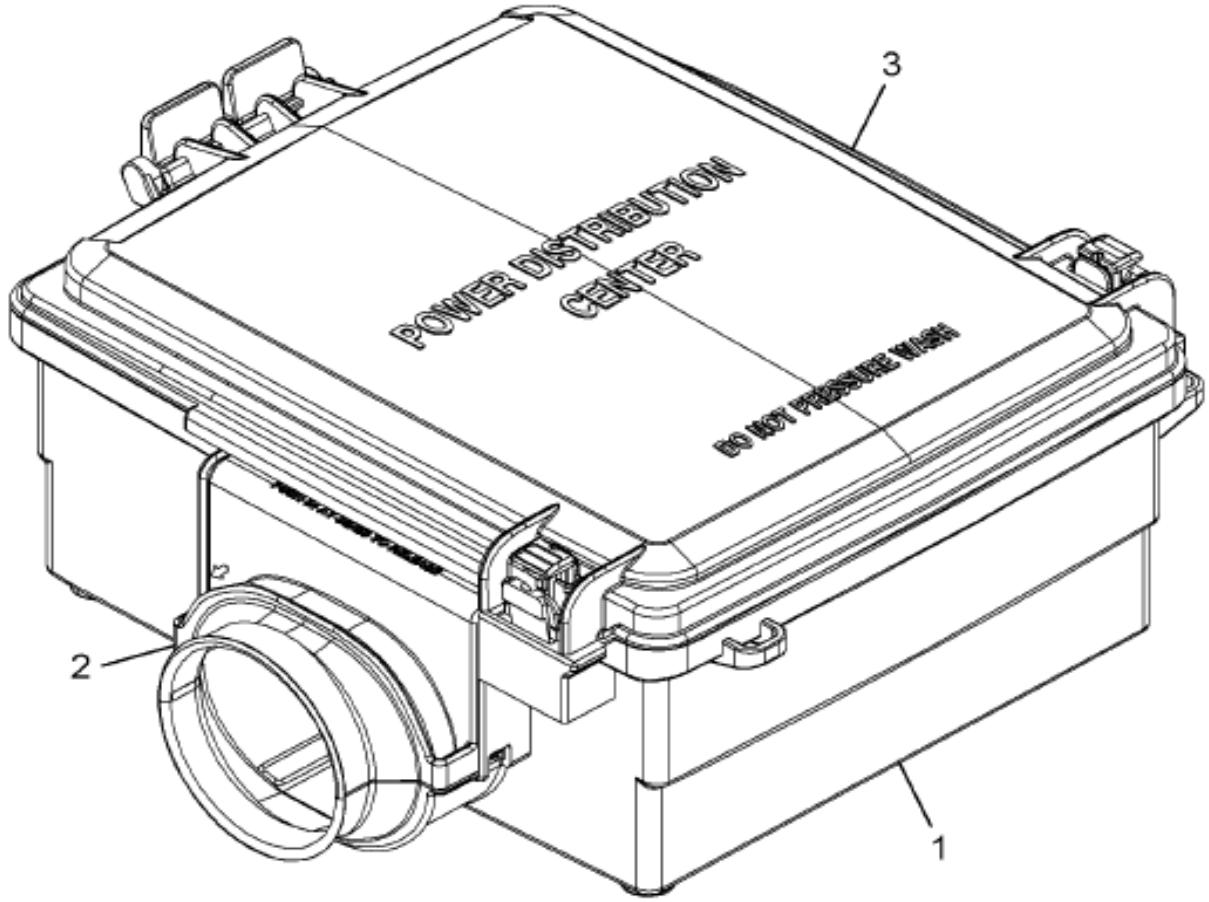

08-D01-0085-01 B11

Item	Part No.	Qty	Description	Kit	Var	Figure
1	3710368C1	1	HOUSING,CTRL,PWR DIST CTR BASE			
2	3710369C1	1	HOUSING,CTRL,PWR DIST CTR DOOR			
3	3710370C1	1	HOUSING,CTRL,PWR DIST LID			
880		RF	NOTE: ASM BELOW COMPRISED OF ABOVE COMPONENTS			
881	3682393C91	RF	HOUSING,CONTROL, POWER DISTRIB			

COPYRIGHT© 2011INTERNATIONAL TRUCK AND ENGINE CORP.

https://truckmanualshub.com/

Figure 0CSB2

DASH HARNESS ASM; HEAD-AUX-FOG LIGHT WIRING

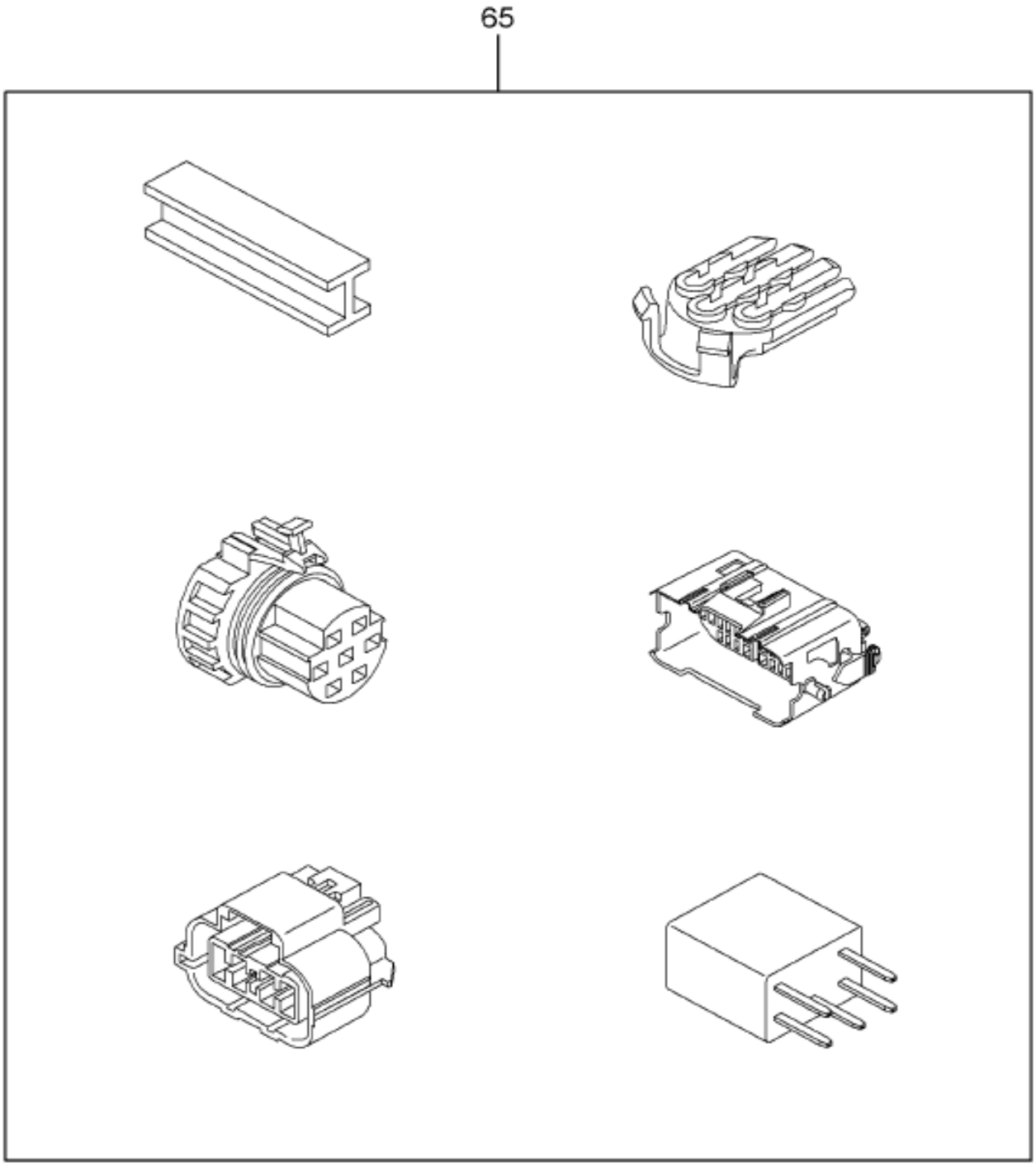

08-D13-0003-01 B09

Item	Part No.	Qty	Description	Kit	Var	Figure
65	3544508F94	1	HARNESS,DASH ELEC; HEA		0M8TC	3544508F94

COPYRIGHT© 2011INTERNATIONAL TRUCK AND ENGINE CORP.

https://truckmanualshub.com/

Figure 3544508F94
HARNESS,DASH ELEC; HEA

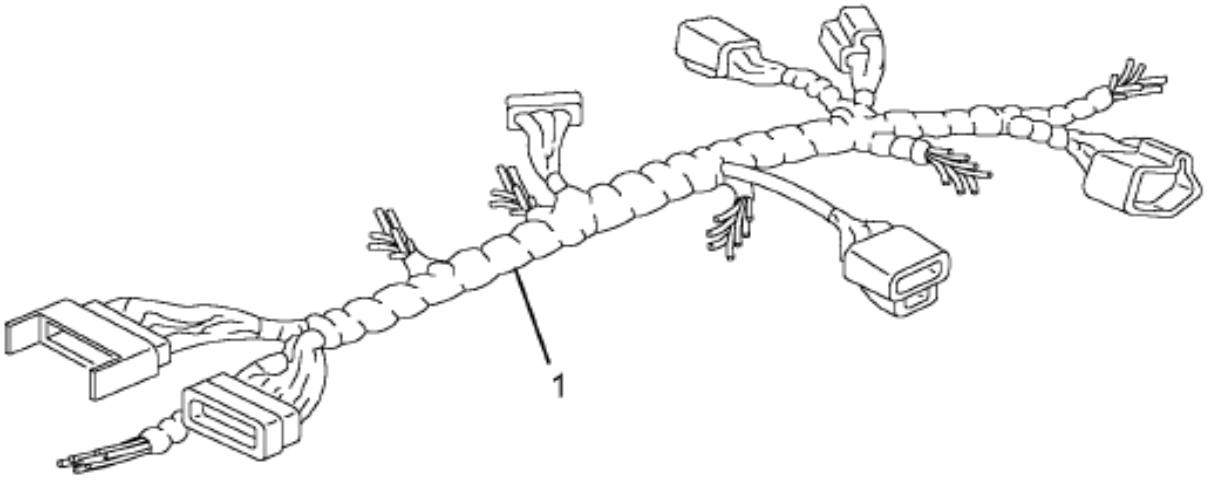

08-P58-0006-01 C03

Item	Part No.	Qty	Description	Kit	Var	Figure
1	3560279C91	1	HARNESS,*FOG LIGHTS			
1	3560280C91	1	HARNESS,HEAD LIGHT WIRING *HEA			3560280C91
880		RF	NOTE: ASM BELOW COMPRISED OF ABOVE COMPONENTS			
881	3544508F94	RF	HARNESS,DASH ELEC; HEA			

COPYRIGHT© 2011INTERNATIONAL TRUCK AND ENGINE CORP.

https://truckmanualshub.com/

Figure 3360280C91

HARNESS,HEAD LIGHT WIRING *HEA

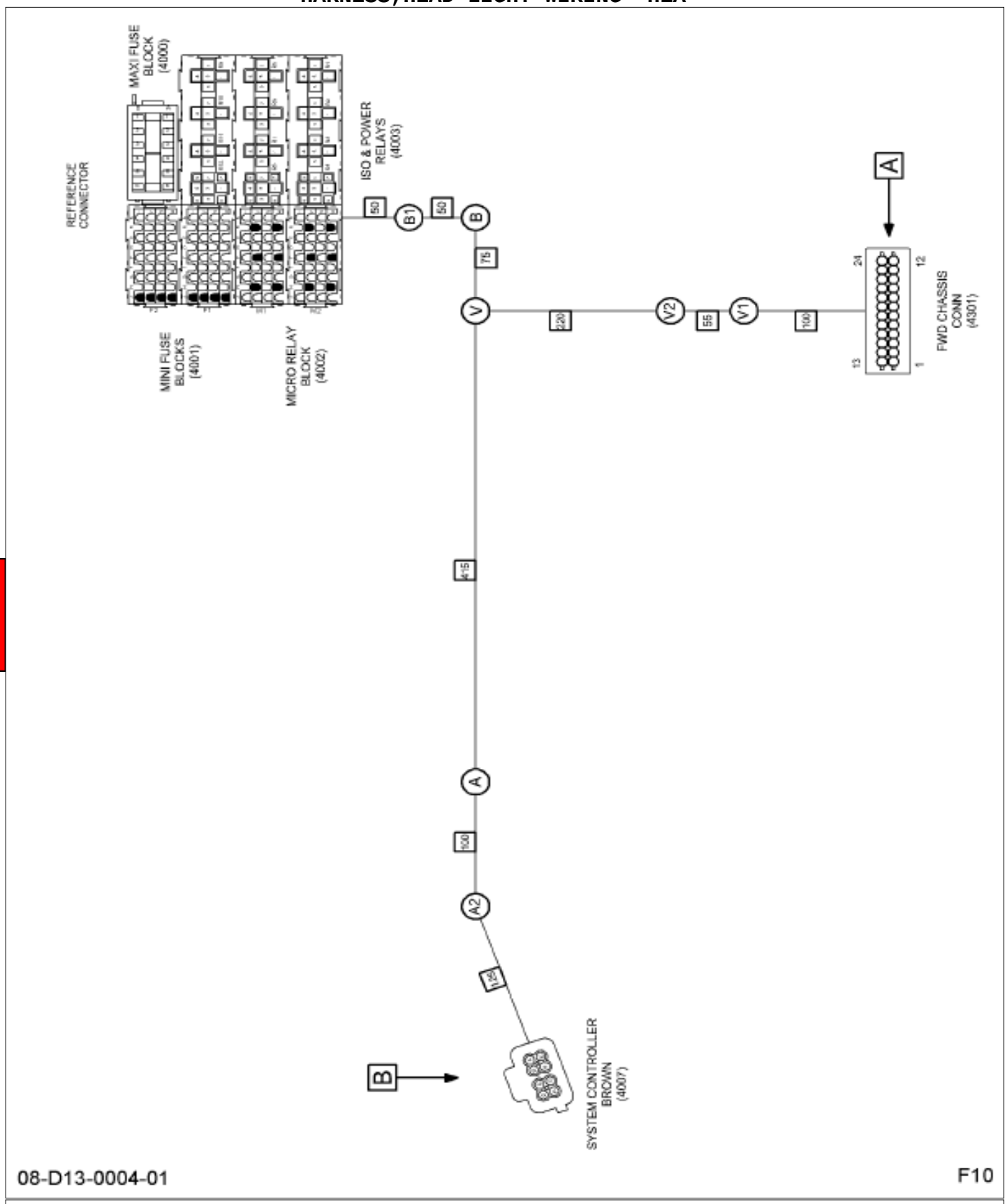

Figure 1 of 2

COPYRIGHT© 2011INTERNATIONAL TRUCK AND ENGINE CORP.

https://truckmanualshub.com/

Figure 3560280C91
HARNESS,HEAD LIGHT WIRING *HEA

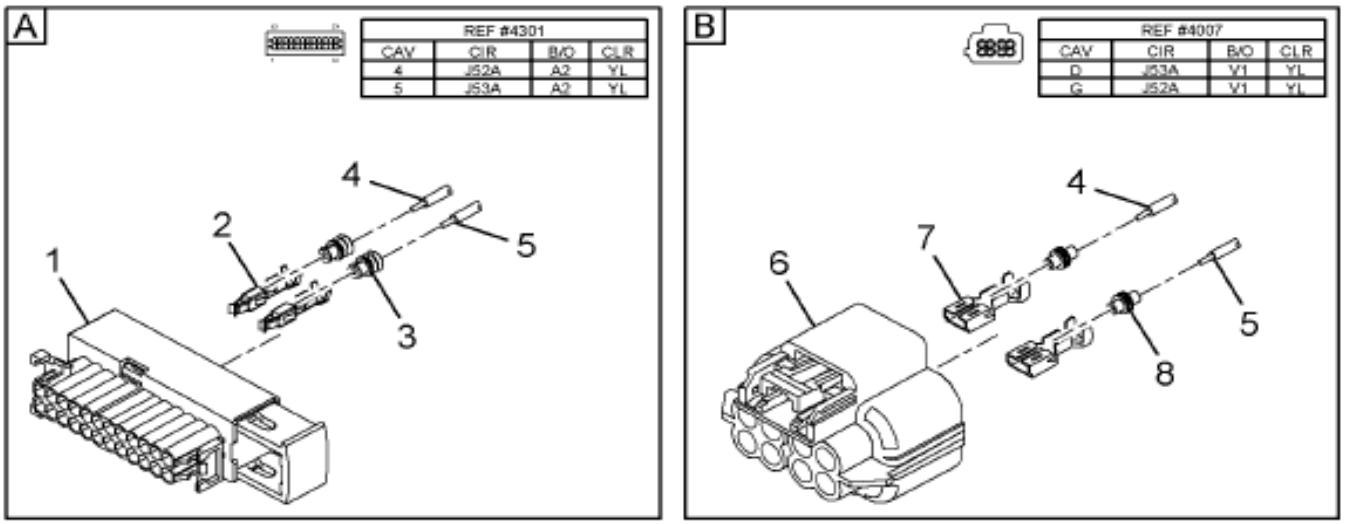

08-D13-0004-01 F10

Item	Part No.	Qty	Description	Kit	Var	Figure
1	3558026C1	1	CONNECTOR,BODY*AMP JR-PWR-TIME			
2	3559035C1	2	TERMINAL,CABLE*AMP JUNIOR-POWE			
3	3509903C1	2	SEAL,CABLE TERMINAL			
4	2643693R1	AR	CABLE LOW TENSION SINGLE COND			
5	2643693R1	AR	CABLE LOW TENSION SINGLE COND			
6	3548934C1	1	CONNECTOR,BODY*8 WAY BROWN PAC			

COPYRIGHT© 2011INTERNATIONAL TRUCK AND ENGINE CORP.

https://truckmanualshub.com/

Figure 3560280C91

HARNESS,HEAD LIGHT WIRING *HEA

Item	Part No.	Qty	Description	Kit	Var	Figure
7	3535931C1	2	TERMINAL,CABLE*GT 280 SERIES 5			
8	3535937C1	2	SEAL,CABLE TERMINAL*GT 280 SER			
880		RF	NOTE: ASM BELOW COMPRISED OF ABOVE COMPONENTS			
881	3560280C91	RF	HARNESS,HEAD LIGHT WIRING *HEA			

COPYRIGHT© 2011INTERNATIONAL TRUCK AND ENGINE CORP.

https://truckmanualshub.com/

Figure 0CSB9

DASH HARNESS ASM; HVAC SYSTEM WIRING

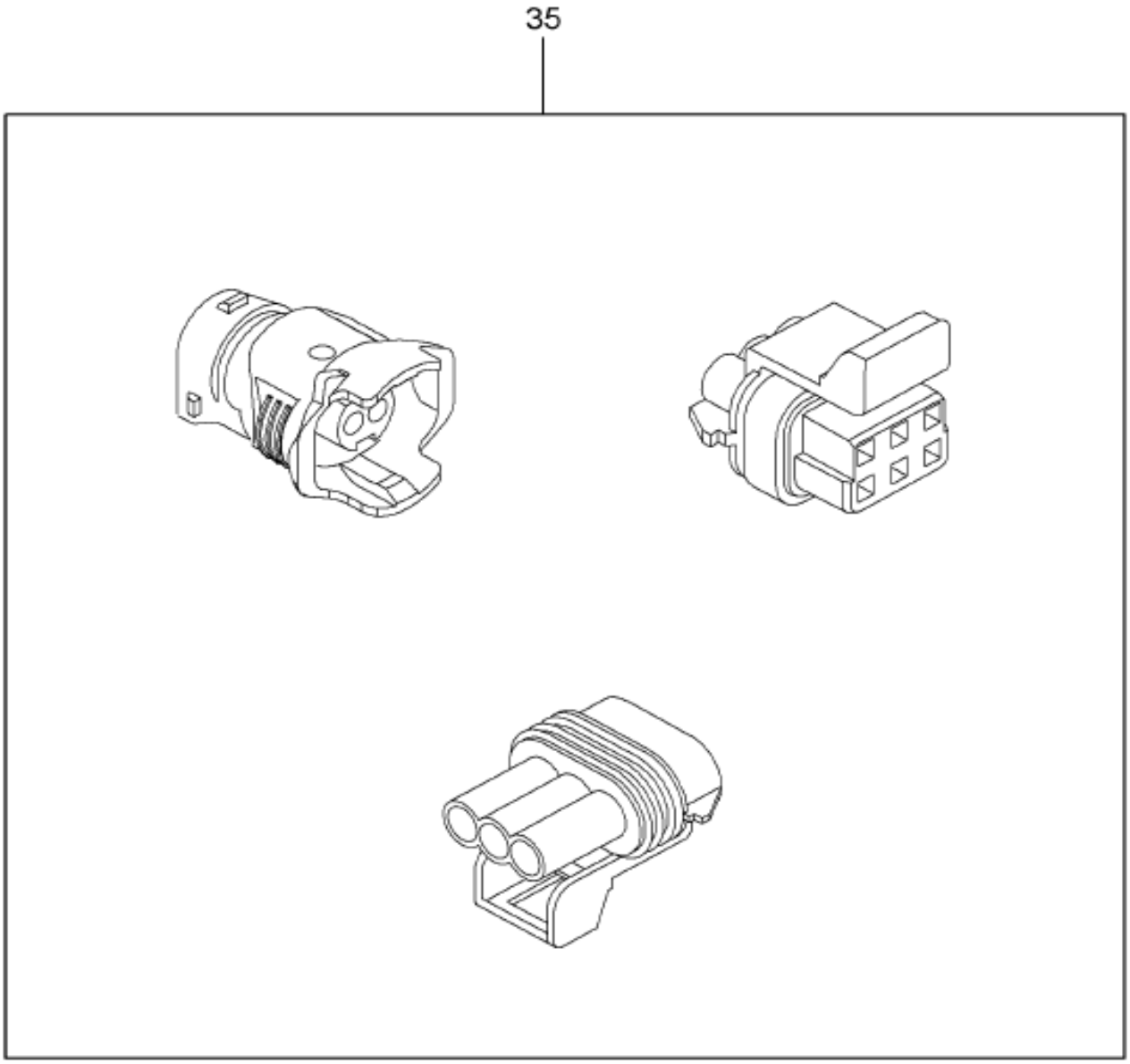

08-D07-0004-01 K08

Item	Part No.	Qty	Description	Kit	Var	Figure
35	3829624F92	1	HARNESS, A/C SYSTEM		0SNC2	3829624F92

COPYRIGHT© 2011INTERNATIONAL TRUCK AND ENGINE CORP.

https://truckmanualshub.com/

Figure 3829624F92

HARNESS, A/C SYSTEM

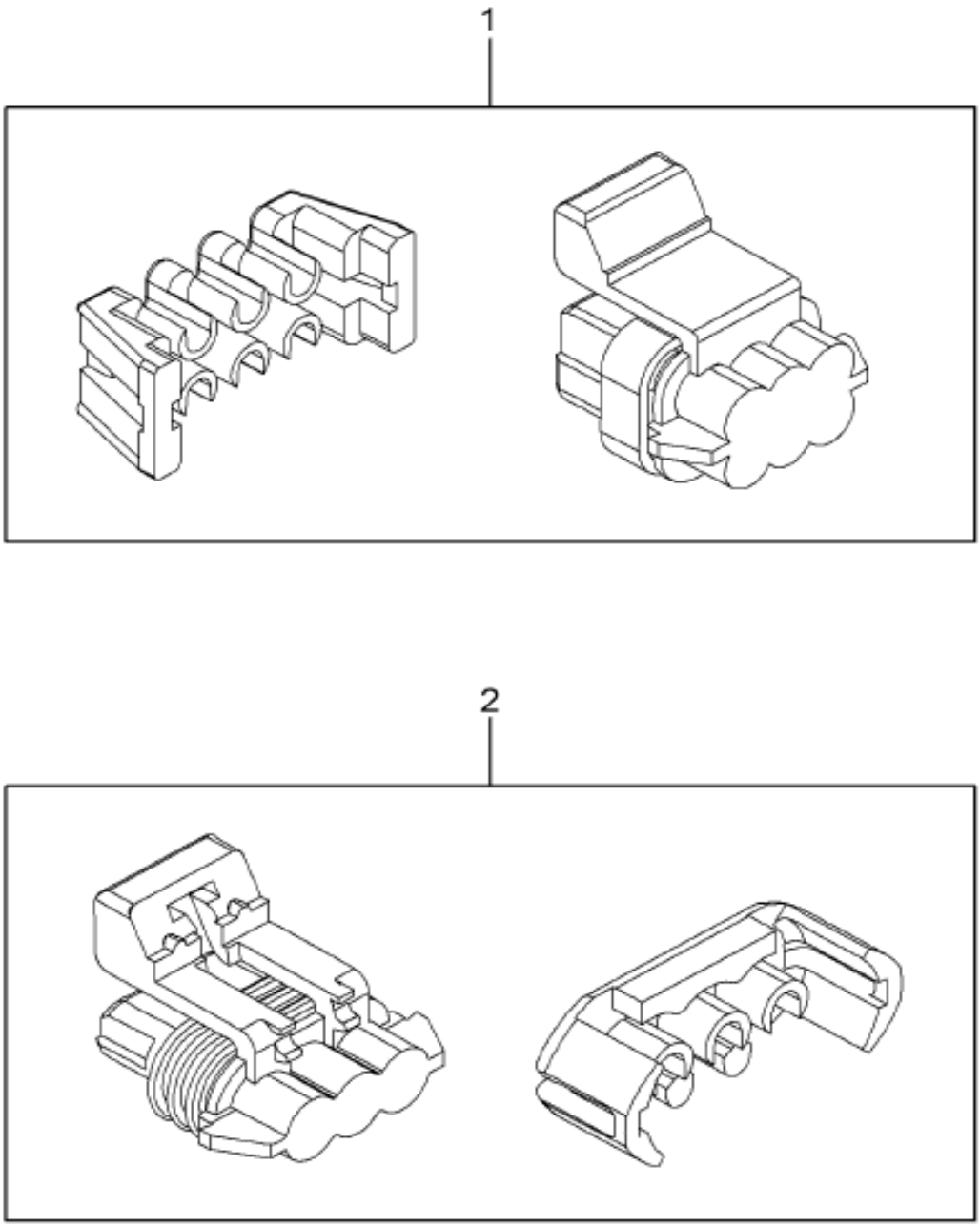

08-D07-0002-01 G08

Item	Part No.	Qty	Description	Kit	Var	Figure
1	3829736C92	1	HARNESS, DASH WIRING, A/C SYST			
2	3603978C91	1	HARNESS,DASH,HEATER RECIRC			3603978C91
880		RF	NOTE: ASM BELOW COMPRISED OF ABOVE COMPONENTS			
881	3829624F92	RF	HARNESS, A/C SYSTEM			

COPYRIGHT© 2011INTERNATIONAL TRUCK AND ENGINE CORP.

https://truckmanualshub.com/

Figure 3603978C91
HARNESS,DASH,HEATER RECIRC

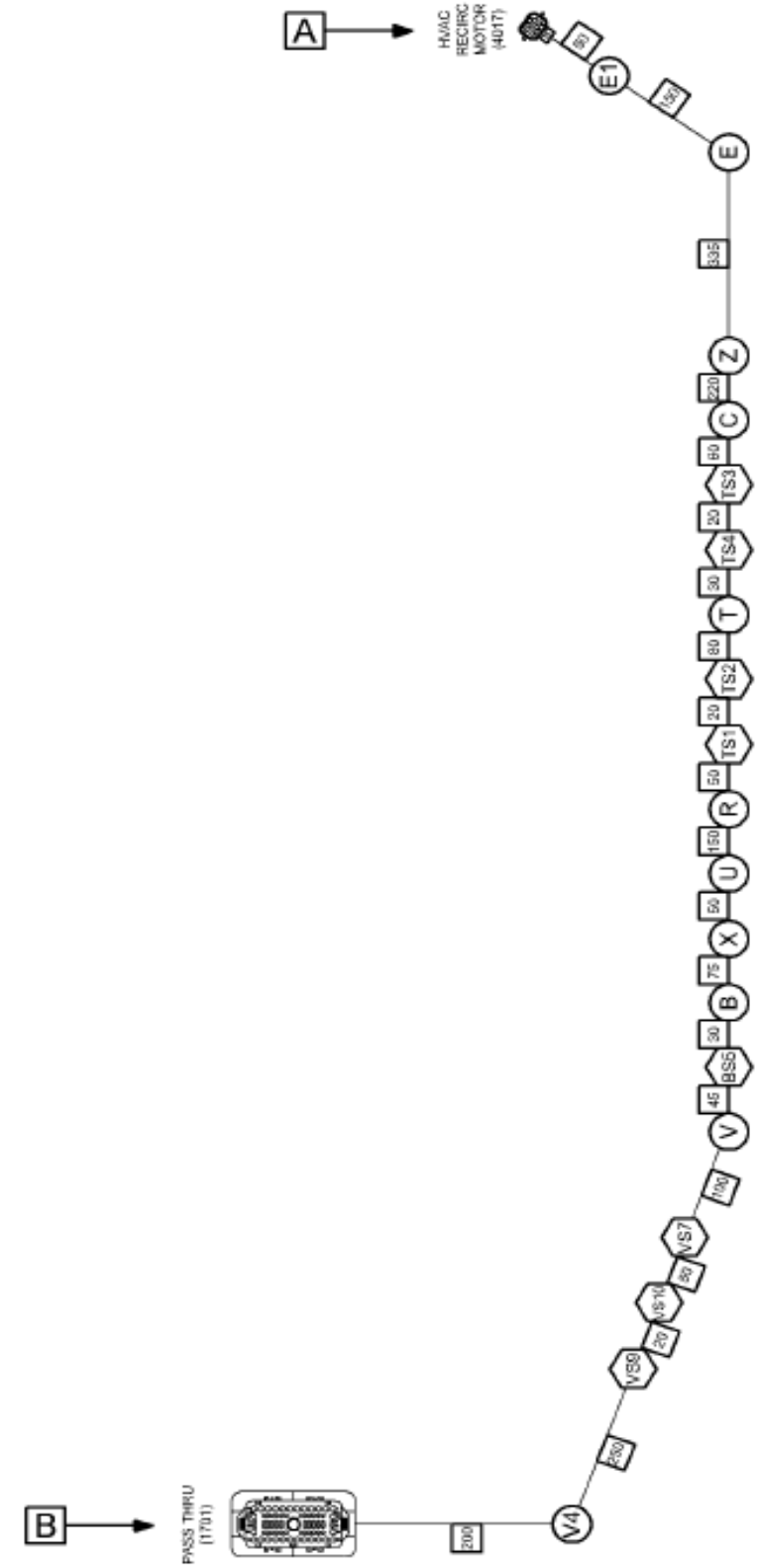

Grp 08

Figure 1 of 2

COPYRIGHT© 2011INTERNATIONAL TRUCK AND ENGINE CORP.

https://truckmanualshub.com/

Figure 3603978C91

HARNESS,DASH,HEATER RECIRC

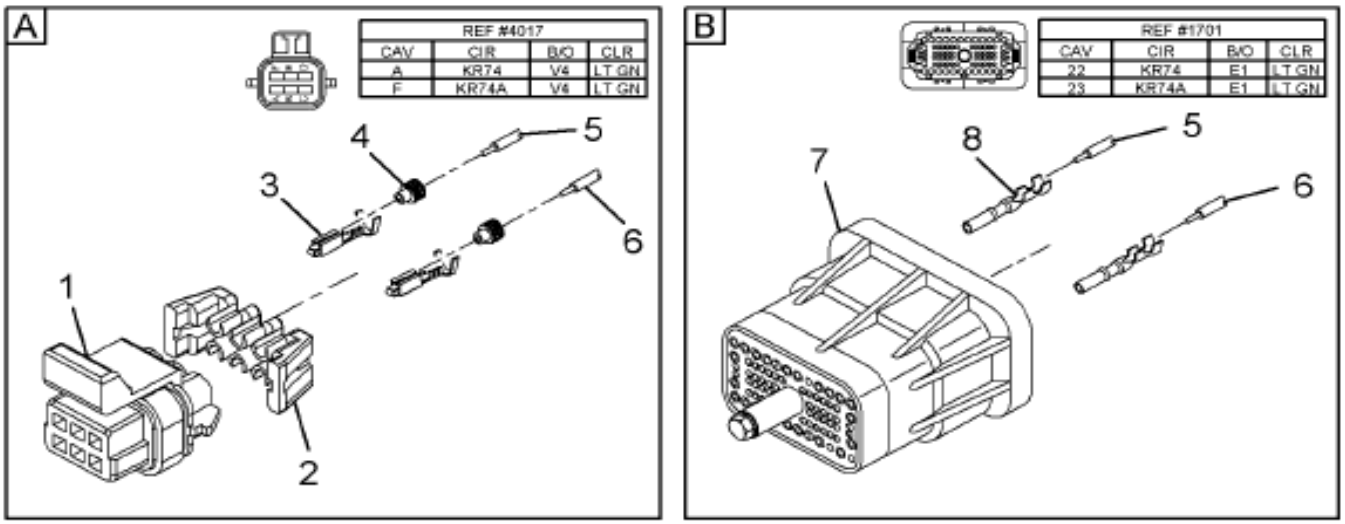

08-D07-0007-02 J10

Item	Part No.	Qty	Description	Kit	Var	Figure
1	2011340C1	1	CONNECTOR,BODY METRI-PACK 6-WY			
2	2011364C1	1	LOCK,CONNECTOR BODY SEC			
3	1661875C1	2	TERMINAL,FEMALE 150 SEALED			
4	1661872C1	2	SEAL,CABLE TERM 150 LOOSE			
5	2643671R1	AR	CABLE LOW TENSION SINGLE CONDU			
6	2643671R1	AR	CABLE LOW TENSION SINGLE CONDU			

COPYRIGHT© 2011INTERNATIONAL TRUCK AND ENGINE CORP.

https://truckmanualshub.com/

Figure 3603978C91

HARNESS,DASH,HEATER RECIRC

Item	Part No.	Qty	Description	Kit	Var	Figure
7	3595624C1	1	CONNECTOR,BODY,76-WAY AMP MALE			
8	3549418C1	2	TERMINAL,CABLE*			
880		RF	NOTE: ASM BELOW COMPRISED OF ABOVE COMPONENTS			
881	3603978C91	RF	HARNESS,DASH,HEATER RECIRC			

COPYRIGHT© 2011INTERNATIONAL TRUCK AND ENGINE CORP.

https://truckmanualshub.com/

Figure 0F2BX
DASH HARNESS ASM; PDC BATTERY GRID (ABR #38)

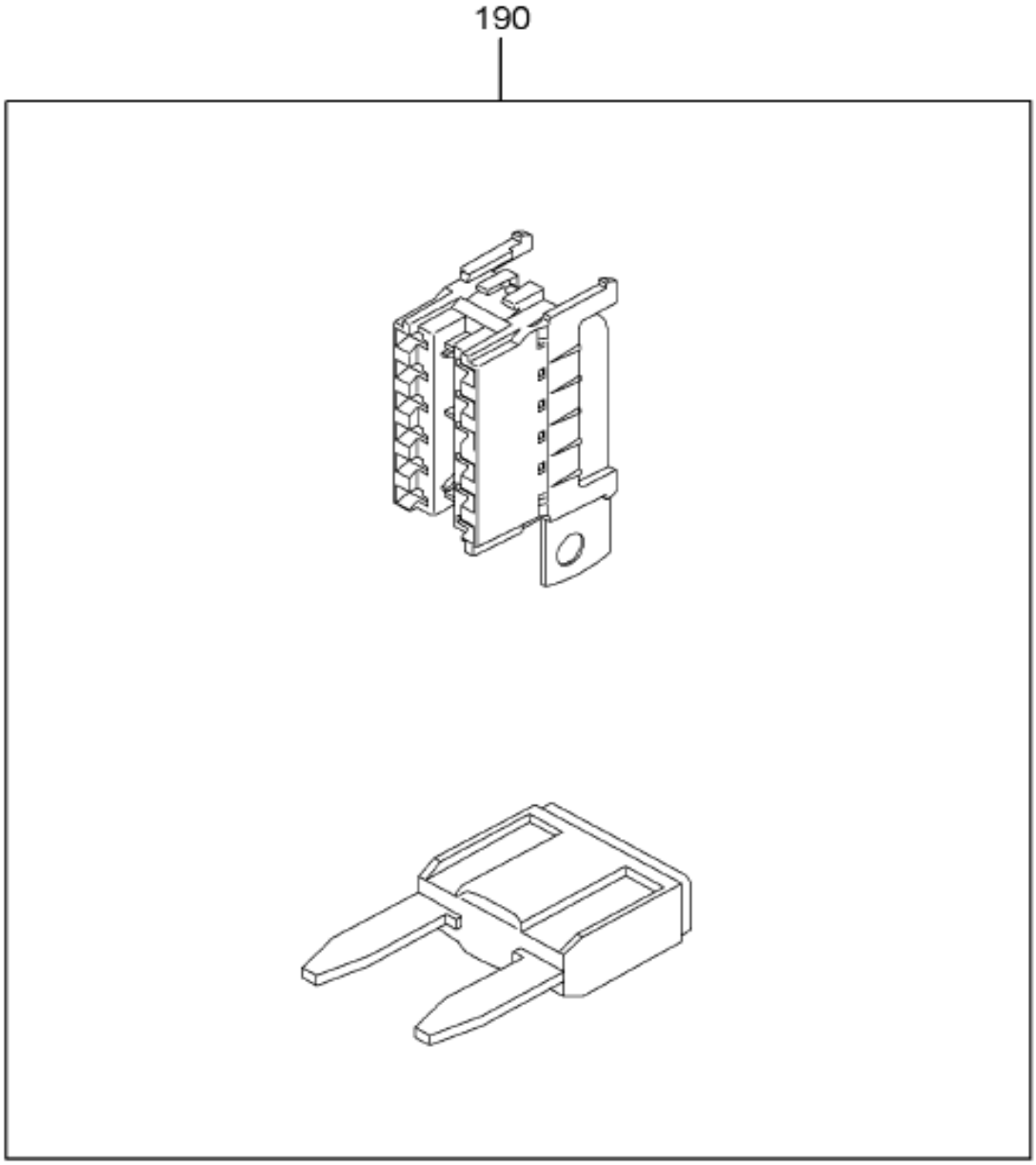

08-D38-0002-01 B09

Item	Part No.	Qty	Description	Kit	Var	Figure
190	3581925F91	1	ELEC DASH,BTRY GRID N/MAXI-		0N48S	3581925F91

COPYRIGHT© 2011INTERNATIONAL TRUCK AND ENGINE CORP.

https://truckmanualshub.com/

Figure 3581925F91
ELEC DASH,BTRY GRID N/MAXI-

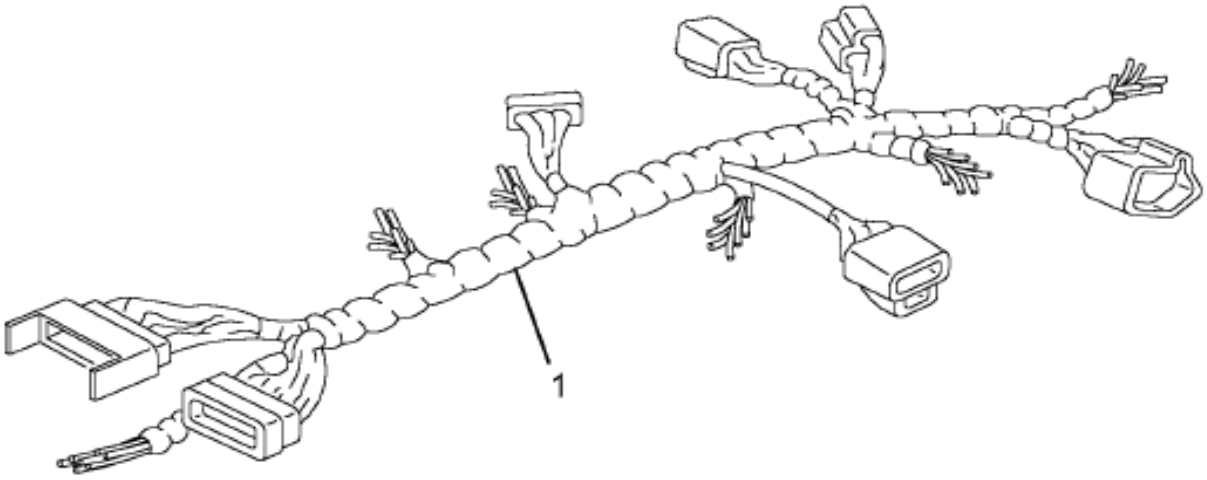

Grp 08

08-P58-0006-01 C03

Item	Part No.	Qty	Description	Kit	Var	Figure
1	3581923C91	1	HARN,PDC BTRY GRID N/MAXI-FUSE			3581923C91
880		RF	NOTE: ASM BELOW COMPRISED OF ABOVE COMPONENTS			
881	3581925F91	RF	ELEC DASH,BTRY GRID N/MAXI-			

COPYRIGHT© 2011INTERNATIONAL TRUCK AND ENGINE CORP.

https://truckmanualshub.com/

Figure 3381923C91

HARN,PDC BTRY GRID N/MAXI-FUSE

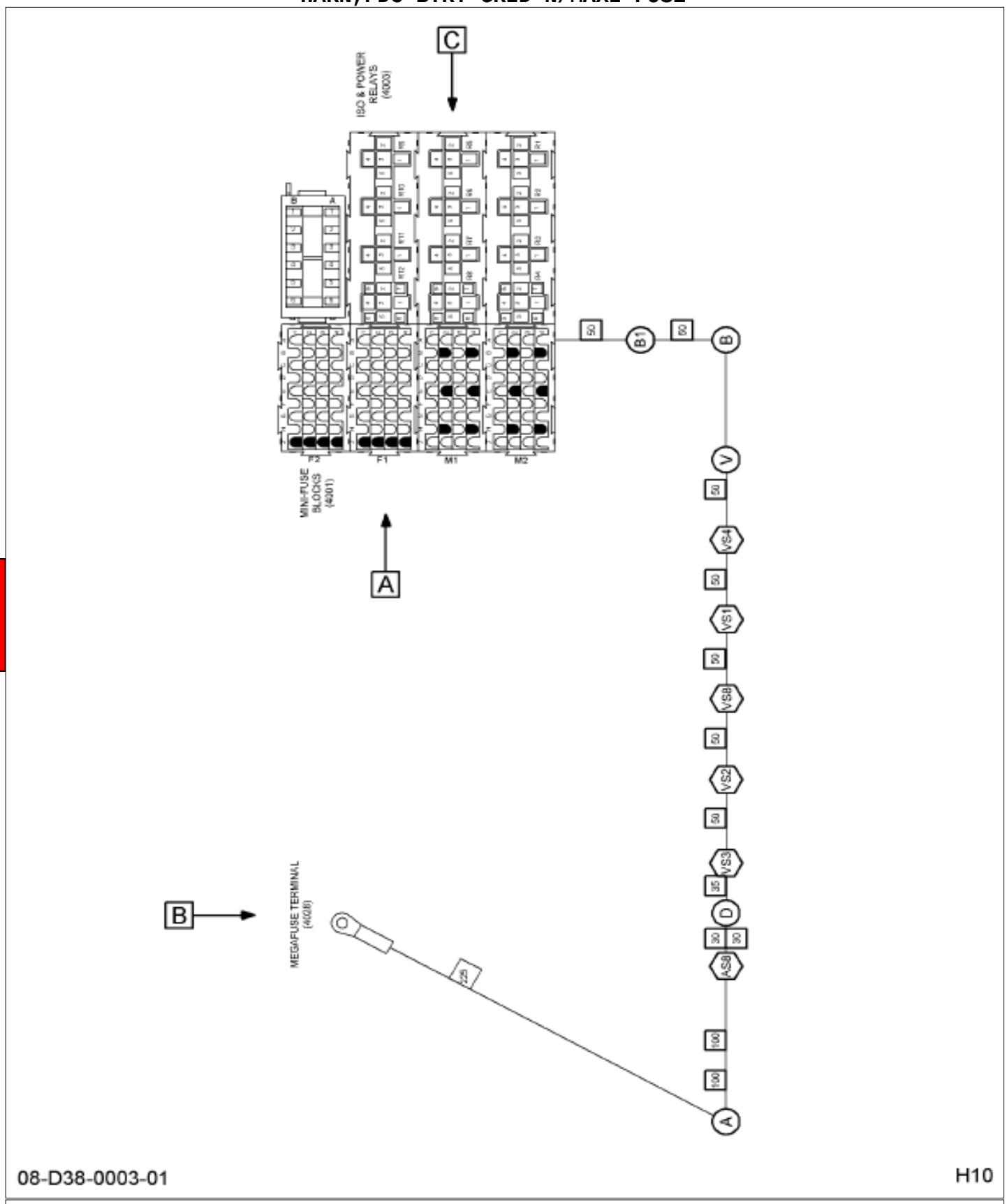

Figure 1 of 2

COPYRIGHT© 2011INTERNATIONAL TRUCK AND ENGINE CORP.

https://truckmanualshub.com/

Figure 3381923C91
HARN,PDC BTRY GRID N/MAXI-FUSE

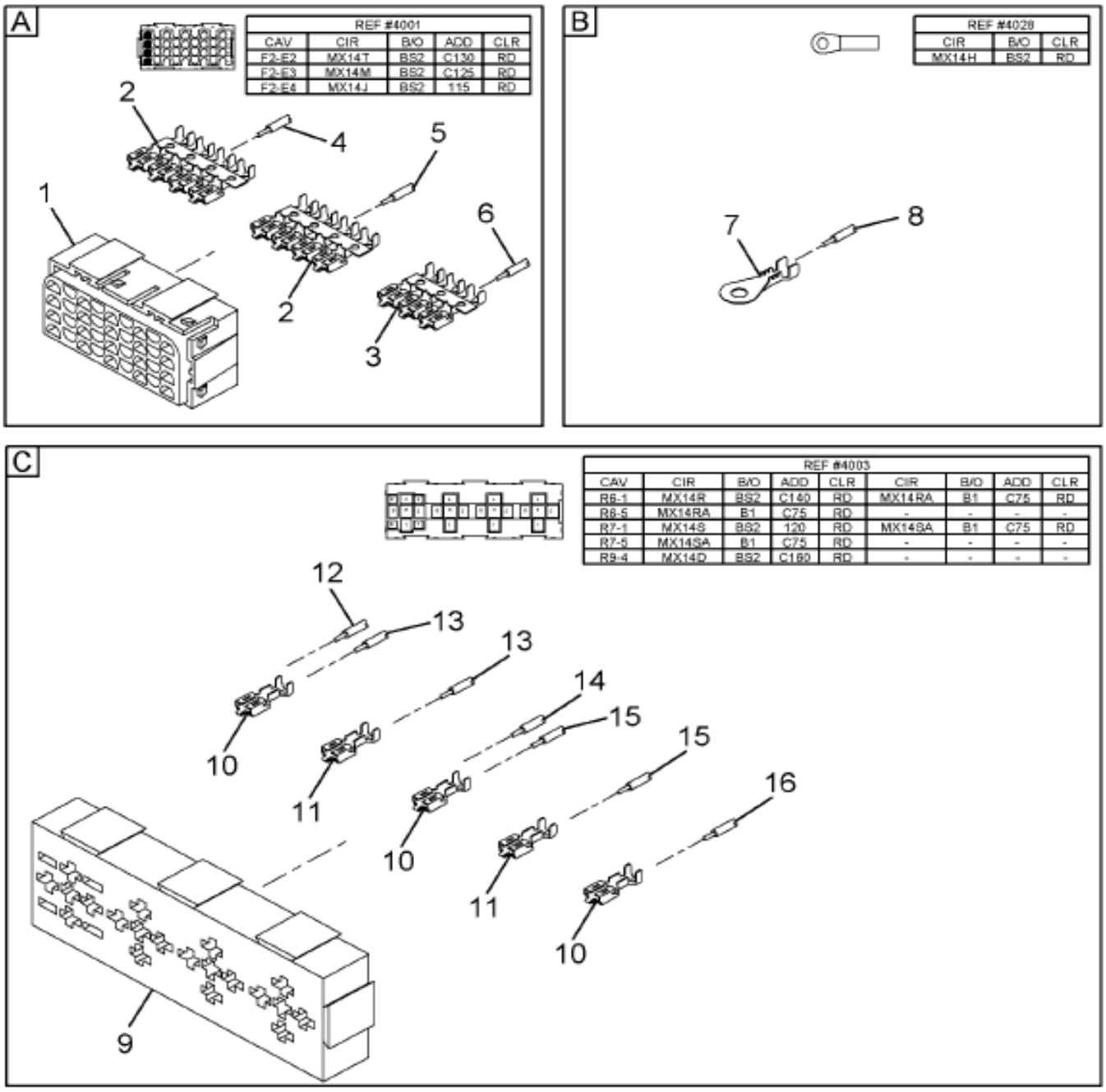

08-D38-0003-02 H10

Item	Part No.	Qty	Description	Kit	Var	Figure
1	3545599C91	1	CONNECTOR,BODY*FUSE/CIRCUIT BR			
2	3536304C1	2	TERMINAL,CABLE*280 SERIES TNGL			
3	3536301C1	1	TERMINAL,CABLE*280 SERIES TNGL			
4	2643695R1	AR	CABLE LOW TENSION SINGLE COND			
5	2643695R1	AR	CABLE LOW TENSION SINGLE COND			
6	2643695R1	AR	CABLE LOW TENSION SINGLE COND			

COPYRIGHT© 2011INTERNATIONAL TRUCK AND ENGINE CORP.

https://truckmanualshub.com/

Figure 3581923C91

HARN,PDC BTRY GRID N/MAXI-FUSE

Item	Part No.	Qty	Description	Kit	Var	Figure
7	2015884C1	1	TERMINAL,CABLE EYELET			
8	2644026R1	AR	CABLE,LOW TENSION BULK			
9	3545600C91	1	CONNECTOR,BODY*RELAY BLOCKS FO			
10	1661227C1	3	TERMINAL FEMALE 630 SERIES			
11	1661226C1	2	TERMINAL,FEMALE 630 SERIES			
12	2643695R1	AR	CABLE LOW TENSION SINGLE COND			
13	2643760R1	AR	CABLE LOW TENSION RED 16 GAUGE			
14	2643695R1	AR	CABLE LOW TENSION SINGLE COND			
15	2643760R1	AR	CABLE LOW TENSION RED 16 GAUGE			
16	2643695R1	AR	CABLE LOW TENSION SINGLE COND			
880		RF	NOTE: ASM BELOW COMPRISED OF ABOVE COMPONENTS			
881	3581923C91	RF	HARN,PDC BTRY GRID N/MAXI-FUSE			

COPYRIGHT© 2011INTERNATIONAL TRUCK AND ENGINE CORP.

https://truckmanualshub.com/

Figure 0CSCL

DASH HARNESS ASM; PYROMETER WIRING

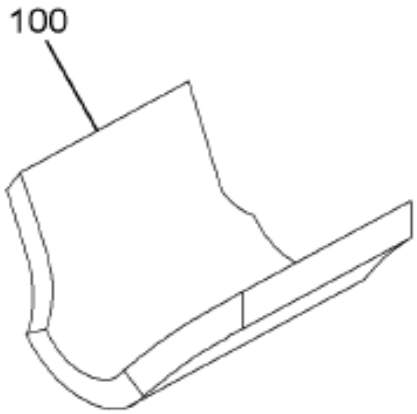

08-D20-0002-01 B09

Item	Part No.	Qty	Description	Kit	Var	Figure
100	3604038F91	1	HARN,PWR TRAIN,ENG J1939 D-LNK		0M280	3604038F91
			NON-ILLUSTRATED REFERENCE FIGURE 3604038F91			
	3604037C91	1	HARN,CAB,PWR TRAIN,J1939 D-LNK			
880		RF	NOTE: ASM BELOW COMPRISED OF ABOVE COMPONENTS			

COPYRIGHT© 2011INTERNATIONAL TRUCK AND ENGINE CORP.

https://truckmanualshub.com/

Figure 0CSCL

DASH HARNESS ASM; PYROMETER WIRING

Item	Part No.	Qty	Description	Kit	Var	Figure
881	3604038F91	RF	HARN,PWR TRAIN,ENG J1939 D-LNK			

COPYRIGHT© 2011INTERNATIONAL TRUCK AND ENGINE CORP.

https://truckmanualshub.com/

Figure 0F2G3

DASH HARNESS ASM; REMOTE START/STOP (ABR #41)

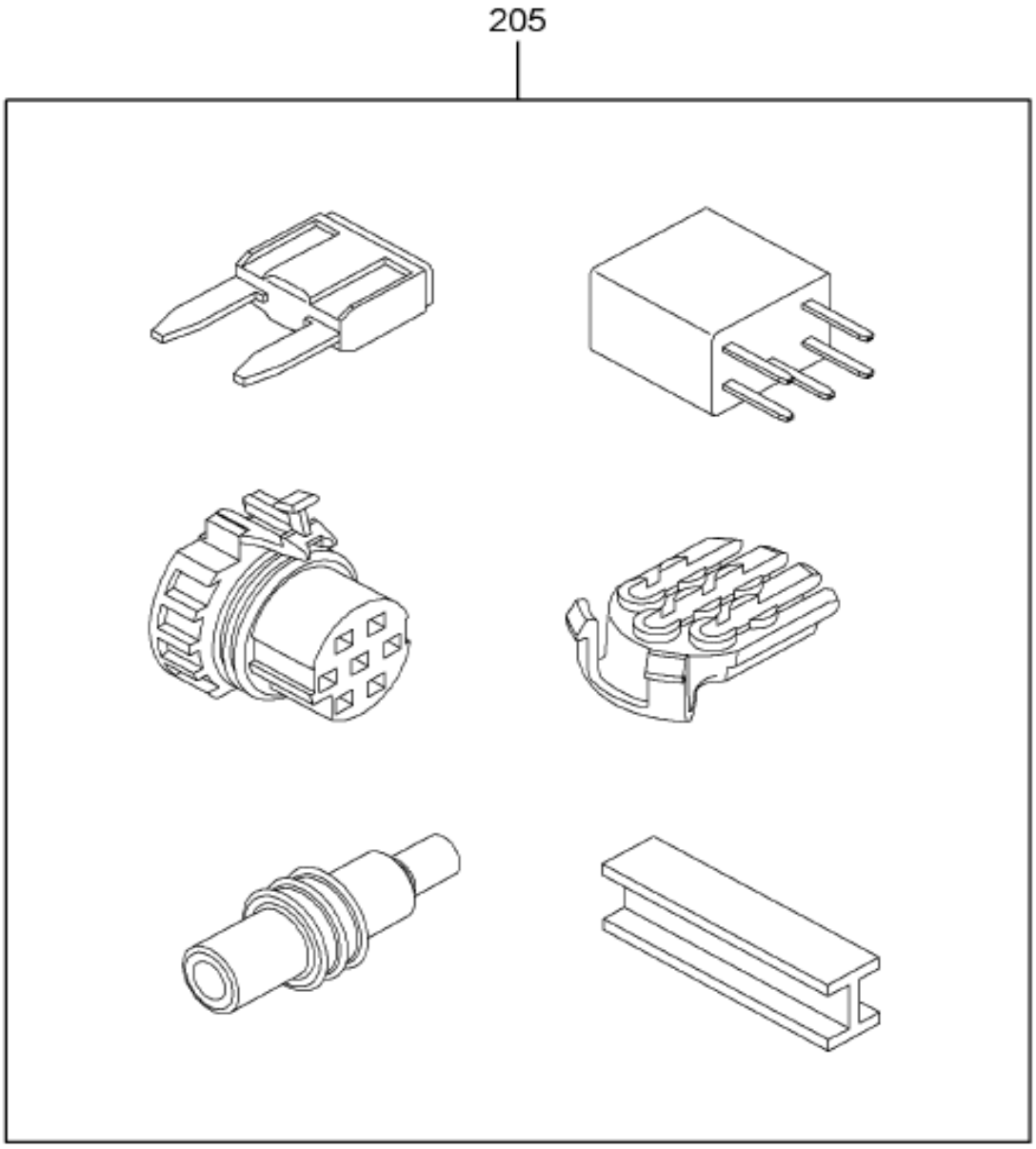

08-D41-0007-01 B09

Item	Part No.	Qty	Description	Kit	Var	Figure
205	3604059F91	1	HARN,DASH,STRTR KEY,MANL XMSN		0M29F	3604059F91
			NON-ILLUSTRATED REFERENCE FIGURE 3604059F91			
1	3604052C91	1	HARN,CAB,MANL XMSN,STRTR KEY			3604052C91
880		RF	NOTE: ASM BELOW COMPRISED OF ABOVE COMPONENTS			

COPYRIGHT© 2011INTERNATIONAL TRUCK AND ENGINE CORP.

https://truckmanualshub.com/

Figure 0F2G3

DASH HARNESS ASM; REMOTE START/STOP (ABR #41)

Item	Part No.	Qty	Description	Kit	Var	Figure
881	3604059F91	RF	HARN,DASH,STRTR KEY,MANL XMSN			

COPYRIGHT© 2011INTERNATIONAL TRUCK AND ENGINE CORP.

https://truckmanualshub.com/

Figure 3604052C91
HARN,CAB,MANL XMSN,STRTR KEY

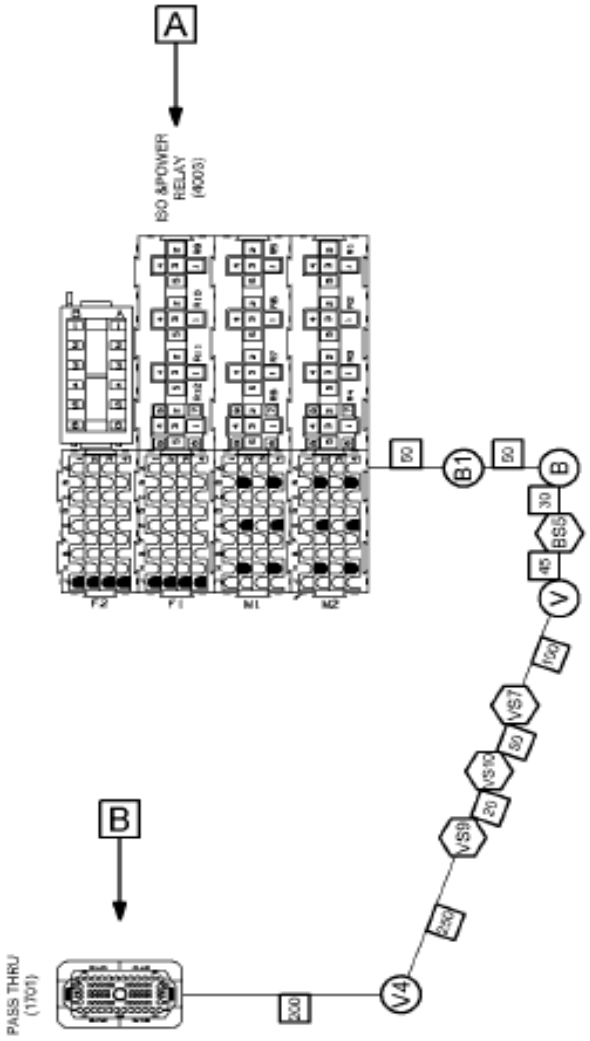

08-D05-0032-01 J10

Grp 08

Figure 1 of 2

COPYRIGHT© 2011INTERNATIONAL TRUCK AND ENGINE CORP.

https://truckmanualshub.com/

Figure 3604052C91
HARN,CAB,MANL XMSN,STRTR KEY

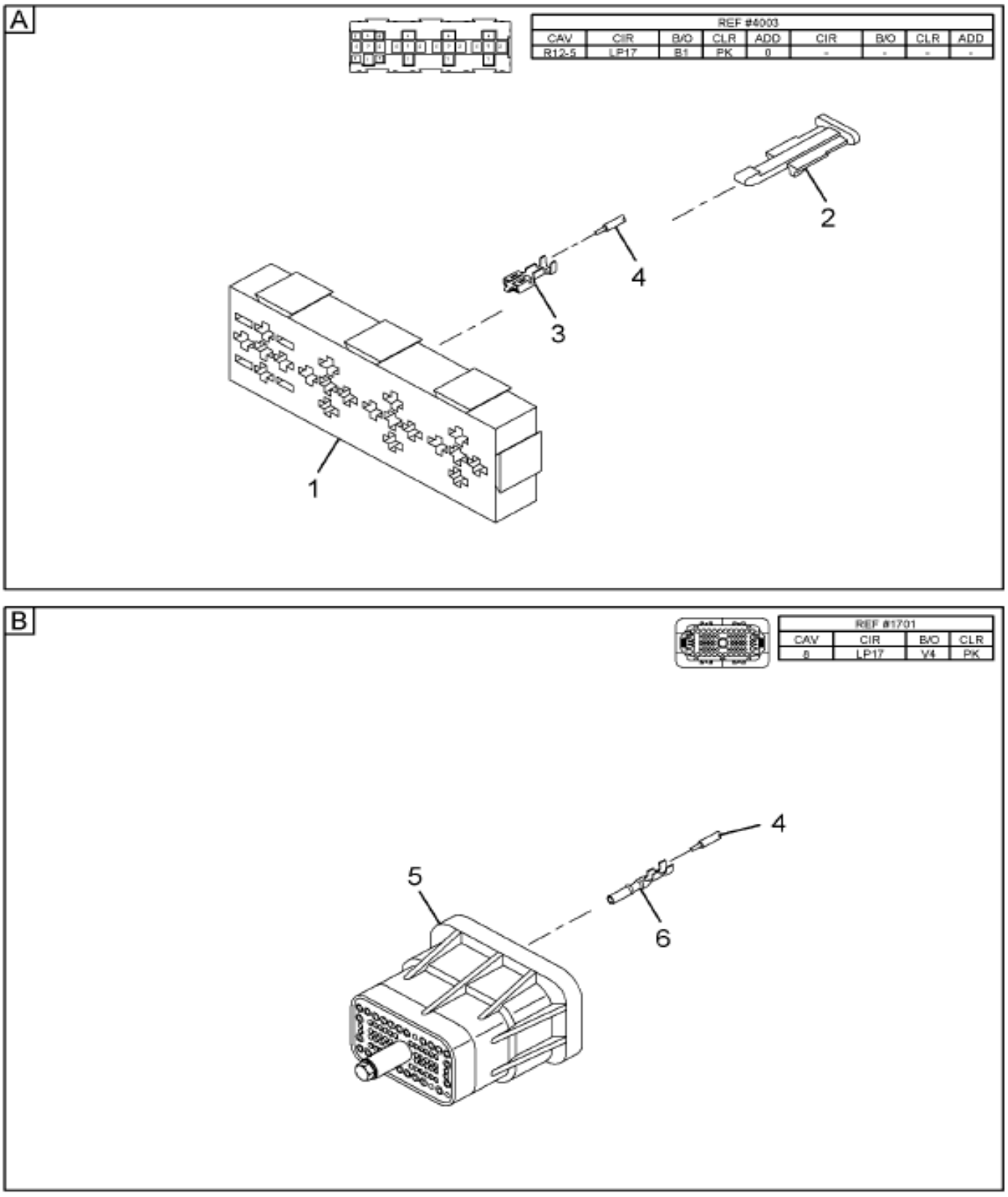

08-D05-0032-02 J10

Item	Part No.	Qty	Description	Kit	Var	Figure
1	3545600C91	1	CONNECTOR,BODY*RELAY BLOCKS FO			
2	3536093C1	1	LOCK,CONN BODY*LOCK-SEC (RED)			
3	1661226C1	1	TERMINAL,FEMALE 630 SERIES			
4	2643752R1	AR	CABLE BULK 16 GA PINK *			
5	3595624C1	1	CONNECTOR,BODY,76-WAY AMP MALE			
6	3549416C1	1	TERMINAL,CABLE*			

COPYRIGHT© 2011INTERNATIONAL TRUCK AND ENGINE CORP.

https://truckmanualshub.com/

Figure 3604052C91

HARN,CAB,MANL XMSN,STRTR KEY

Item	Part No.	Qty	Description	Kit	Var	Figure
880		RF	NOTE: ASM BELOW COMPRISED OF ABOVE COMPONENTS			
881	3604052C91	RF	HARN,CAB,MANL XMSN,STRTR KEY			

COPYRIGHT© 2011INTERNATIONAL TRUCK AND ENGINE CORP.

https://truckmanualshub.com/

Figure 0F2B3

DASH HARNESS ASM; STARTER THERMAL OVERCRANK EFFECTS

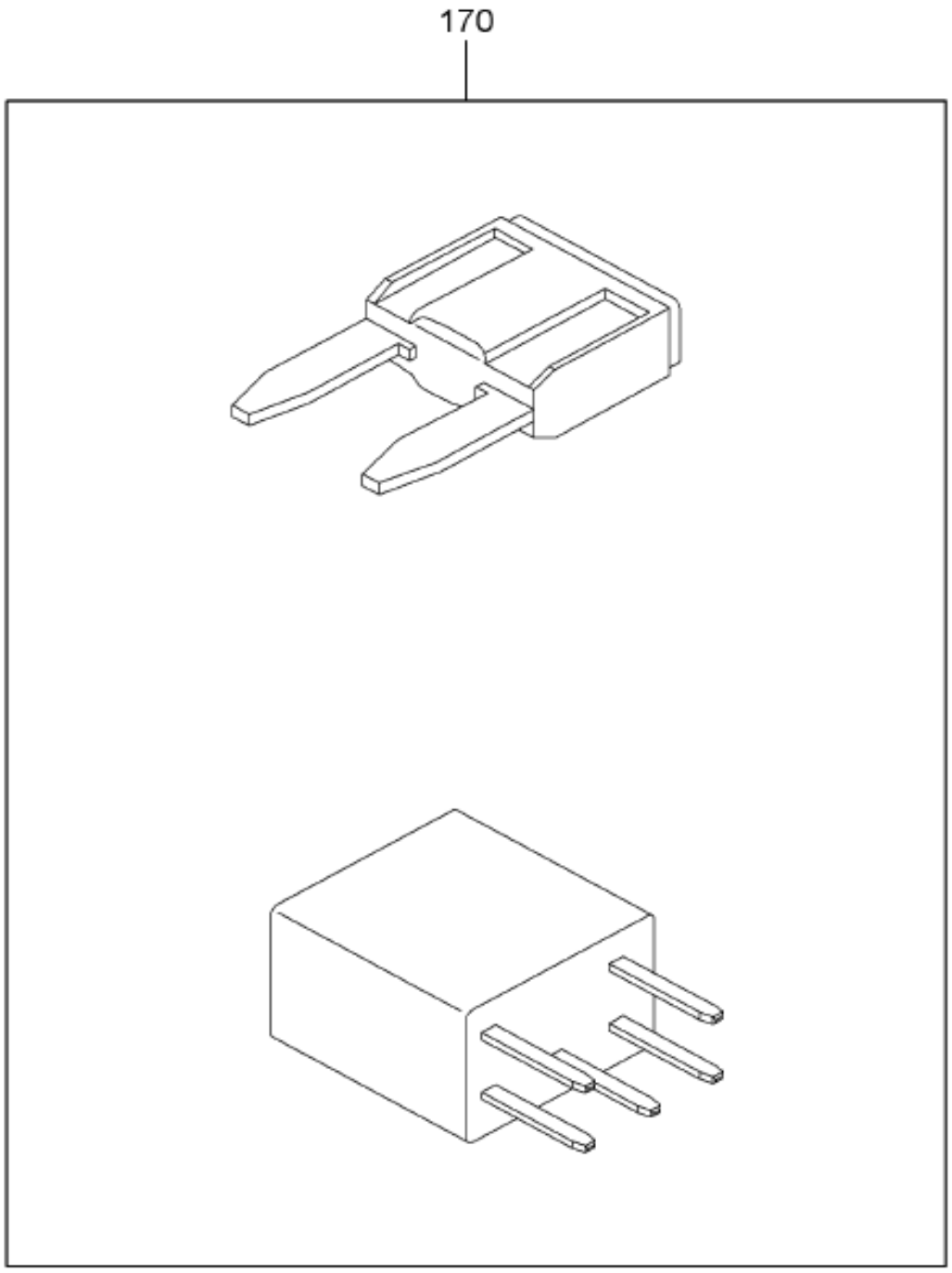

08-D34-0002-01 B09

Item	Part No.	Qty	Description	Kit	Var	Figure
170	3604048F91	1	HARN,DASH,MANL XMSN/STRT,BIG B		0M28W	3604048F91

COPYRIGHT© 2011INTERNATIONAL TRUCK AND ENGINE CORP.

https://truckmanualshub.com/

Figure 3604046F91
HARN,DASH,MANL XMSN/STRT,BIG B

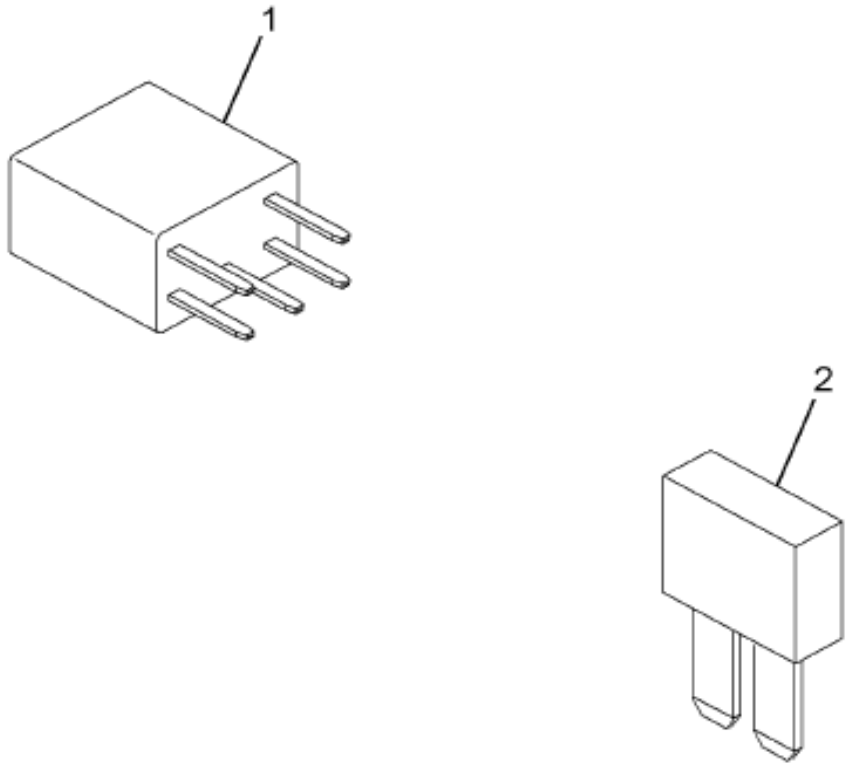

08-P58-0039-01 J05

Item	Part No.	Qty	Description	Kit	Var	Figure
1	2012557C1	1	RELAY,GEN CONTROL			
2	3534208C1	1	FUSE,*FUSE, 5AMP MINI			
800		RF	NOTE: THE FOLLOWING PARTS ARE NON-ILLUSTRATED			
801	3604045C91	1	HARN,CAB,MANL XMSN/STRT,BIG BR			
802	3581922C91	1	HARN,XMSN WRG,CAB,STARTR W/CAT			

COPYRIGHT© 2011INTERNATIONAL TRUCK AND ENGINE CORP.

https://truckmanualshub.com/

Figure 3604048F91

HARN,DASH,MANL XMSN/STRT,BIG B

Item	Part No.	Qty	Description	Kit	Var	Figure
803	3604045C91	1	HARN,CAB,MANL XMSN/STRT,BIG BR			
804	3607384C1	1	RELAY,GEN CONTROL, GEN CONTROL			
805	3581922C91	1	HARN,XMSN WRG,CAB,STARTR W/CAT			
806	3534208C1	1	FUSE,*FUSE, 5AMP MINI			
880		RF	NOTE: ASM BELOW COMPRISED OF ABOVE COMPONENTS			
881	3604048F91	RF	HARN,DASH,MANL XMSN/STRT,BIG B			

COPYRIGHT© 2011INTERNATIONAL TRUCK AND ENGINE CORP.

https://truckmanualshub.com/

Figure 0P0W4

DASH HARNESS ASM; TRANS SYSTEM WIRING

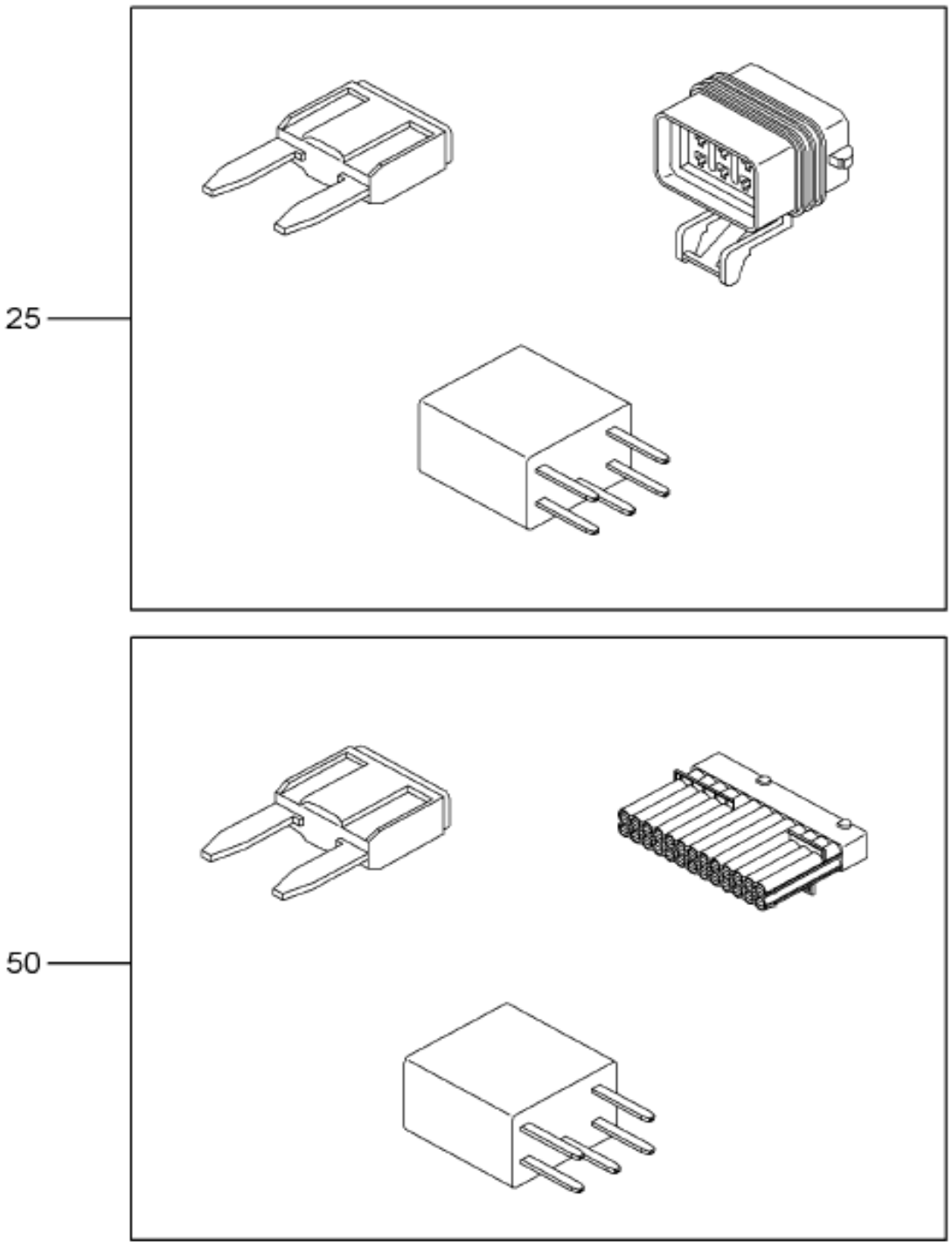

Item	Part No.	Qty	Description	Kit	Var	Figure
25	3561132F91	1	ELECTRICAL DASH HARNESS*MAN		0P0WD	3561132F91

COPYRIGHT© 2011INTERNATIONAL TRUCK AND ENGINE CORP.

https://truckmanualshub.com/

Figure 3561132F91

ELECTRICAL DASH HARNESS*MAN

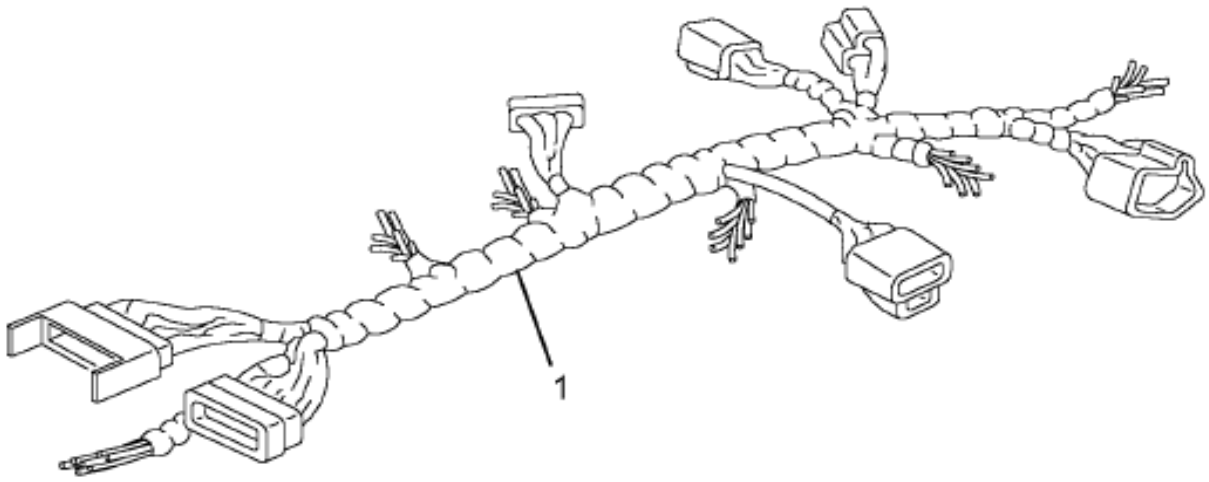

08-P58-0006-01 C03

Item	Part No.	Qty	Description	Kit	Var	Figure
1	3534209C1	1	FUSE,*FUSE, 10AMP MINI			
1	3561092C91	1	HARNESS,ELEC; XMSN WIRIN			3561092C91
1	3563108C91	1	HARNESS,ELEC; XMSN WIRIN			
1	3561081C91	1	HARNESS,ELEC; XMSN WIRIN			
880		RF	NOTE: ASM BELOW COMPRISED OF ABOVE COMPONENTS			

COPYRIGHT© 2011INTERNATIONAL TRUCK AND ENGINE CORP.

https://truckmanualshub.com/

Figure 3561132F91

ELECTRICAL DASH HARNESS*MAN

Item	Part No.	Qty	Description	Kit	Var	Figure
881	3561132F91	RF	ELECTRICAL DASH HARNESS*MAN			

COPYRIGHT© 2011INTERNATIONAL TRUCK AND ENGINE CORP.

https://truckmanualshub.com/

Figure 3361052C91
HARNESS,ELEC; XMSN WIRIN

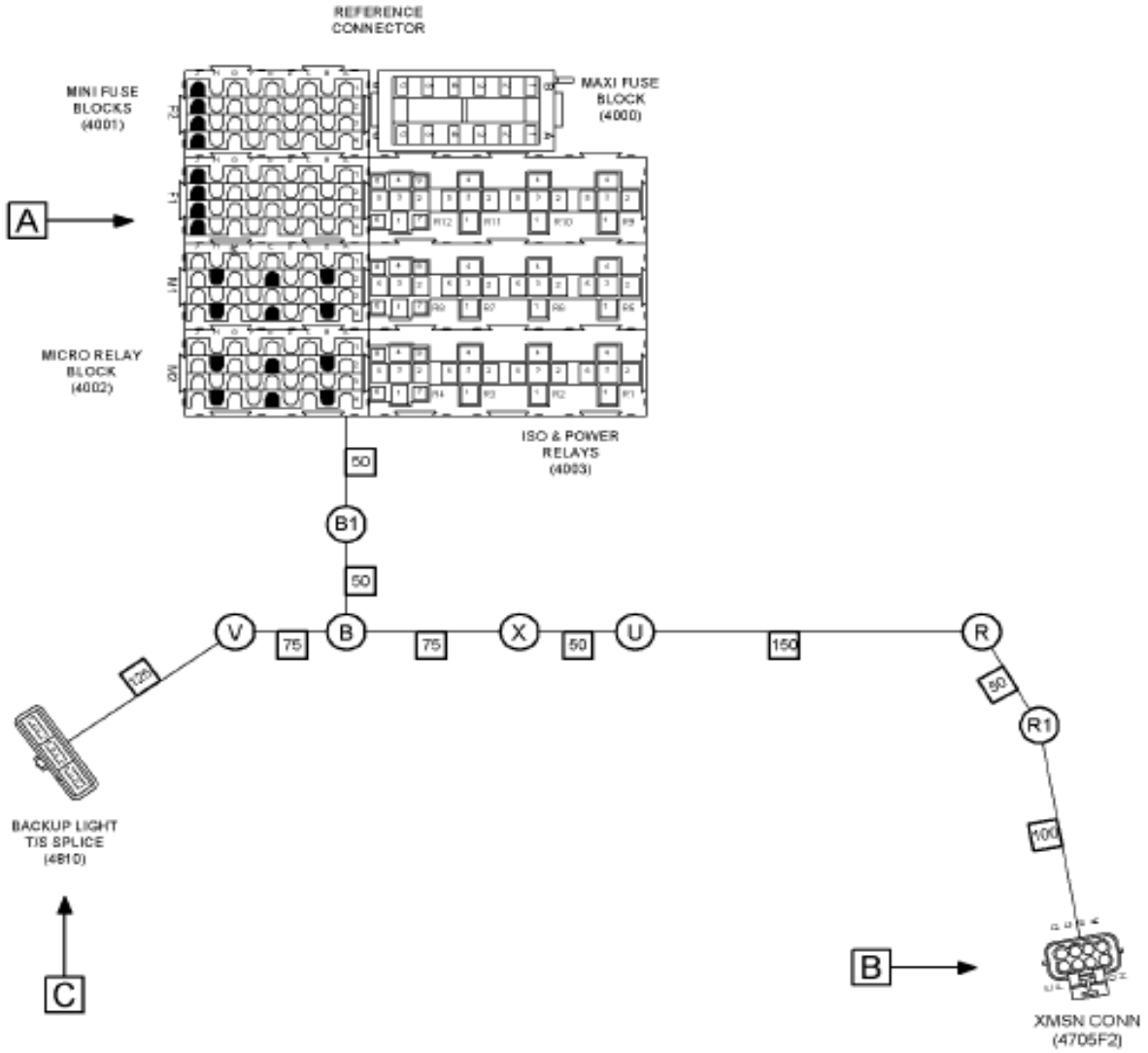

08-D05-0028-01 F10

Figure 1 of 2

COPYRIGHT© 2011INTERNATIONAL TRUCK AND ENGINE CORP.

https://truckmanualshub.com/

Figure 3361092C91
HARNESS,ELEC; XMSN WIRIN

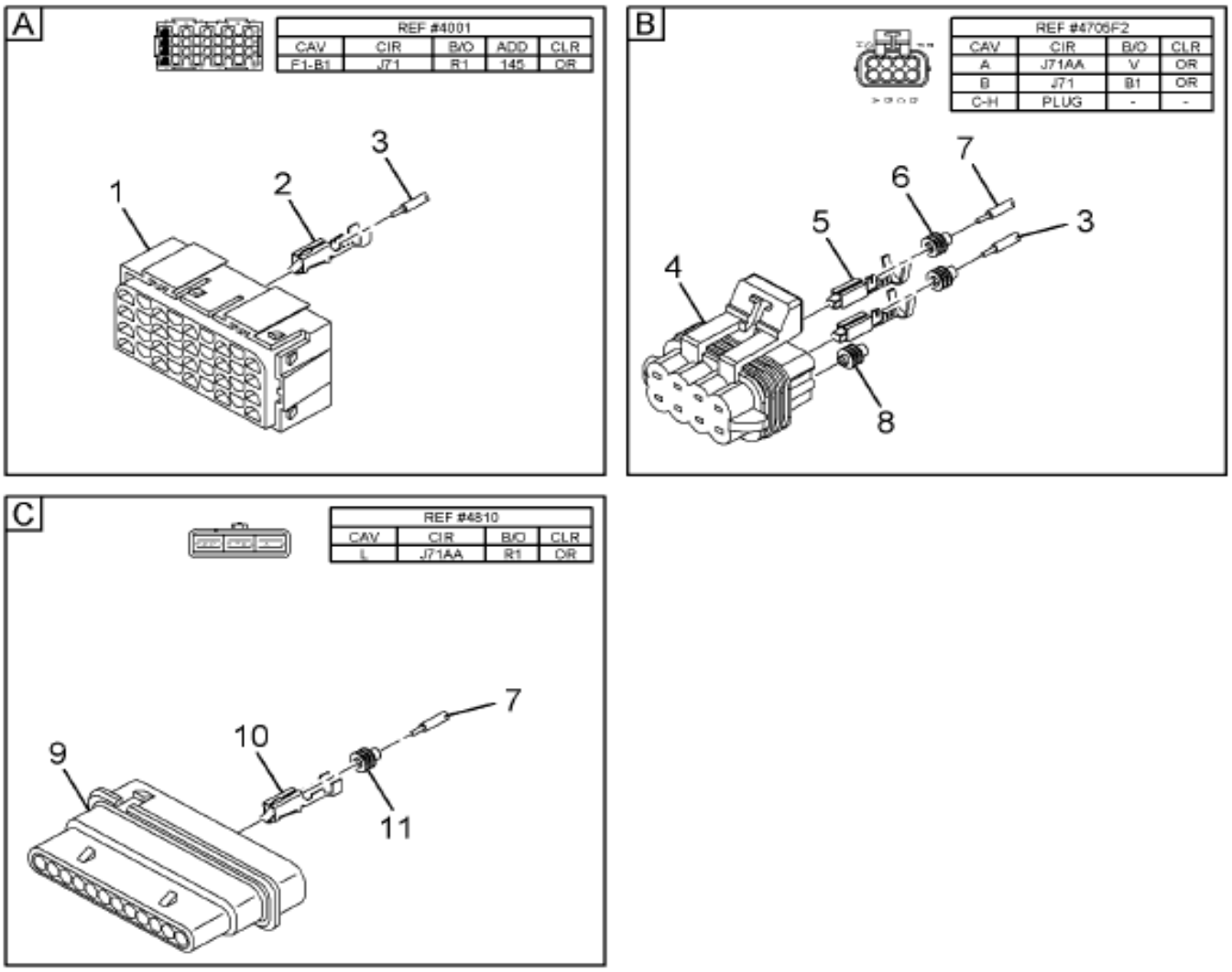

08-D05-0028-02 F10

Item	Part No.	Qty	Description	Kit	Var	Figure
1	3545599C91	1	CONNECTOR,BODY*FUSE/CIRCUIT BR			
2	3573312C1	1	TERMINAL,CABLE,280SERIES FEMAL			
3	2643682R1	AR	CABLE LOW TENSION SINGLE COND			
4	3525872C1	1	CONNECTOR,BODY** MALE 8-WAY(15			
5	1661875C1	2	TERMINAL,FEMALE 150 SEALED			
6	1661872C1	2	SEAL,CABLE TERM 150 LOOSE			

COPYRIGHT© 2011INTERNATIONAL TRUCK AND ENGINE CORP.

https://truckmanualshub.com/

Figure 3561092C91

HARNESS,ELEC; XMSN WIRIN

Item	Part No.	Qty	Description	Kit	Var	Figure
7	2643675R1	AR	CABLE LOW TENSION SINGLE COND			
8	2025431C1	1	PLUG,SEALING, 150 SERIES			
9	3543733C1	1	CONNECTOR,BUS BAR*BUS BAR* 150			
10	3535303C1	1	TERMINAL,CABLE*CONN TERMINAL			
11	3535424C1	1	PLUG,SEALING*CABLE TERMINAL SE			
880		RF	NOTE: ASM BELOW COMPRISED OF ABOVE COMPONENTS			
881	3561092C91	RF	HARNESS,ELEC; XMSN WIRIN			

COPYRIGHT© 2011INTERNATIONAL TRUCK AND ENGINE CORP.

https://truckmanualshub.com/

Figure 0FDBH

DASH HARNESS ASM; WASHER PUMP/LEVEL SENSOR WIRING (ABR #30)

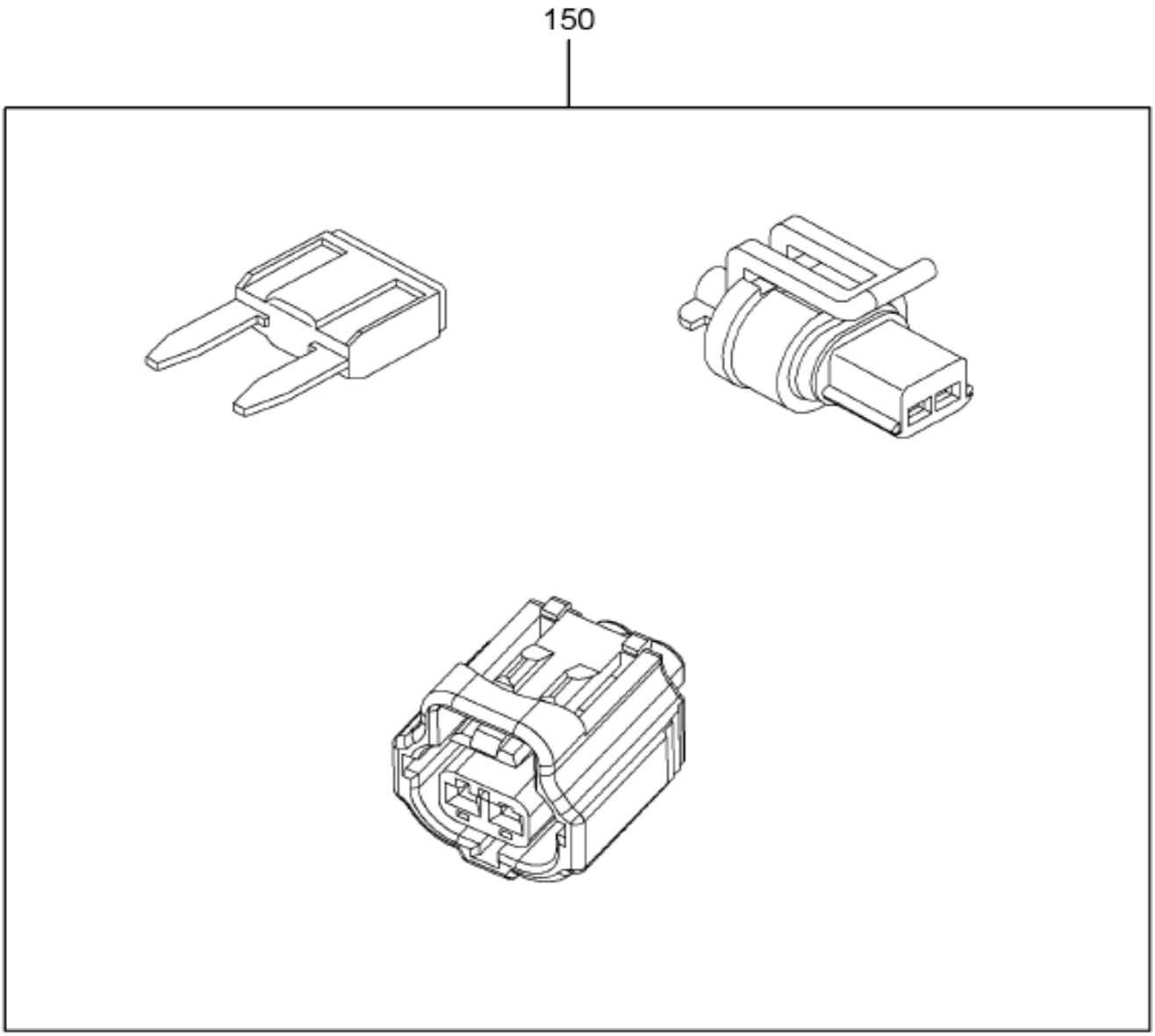

08-D30-0005-01 B09

Item	Part No.	Qty	Description	Kit	Var	Figure
150	3604018F91	1	HARN,DASH,WASHER PUMP/LEVEL SN		0M28Q	3604018F91

COPYRIGHT© 2011INTERNATIONAL TRUCK AND ENGINE CORP.

https://truckmanualshub.com/

Figure 3604018F91
HARN,DASH,WASHER PUMP/LEVEL SN

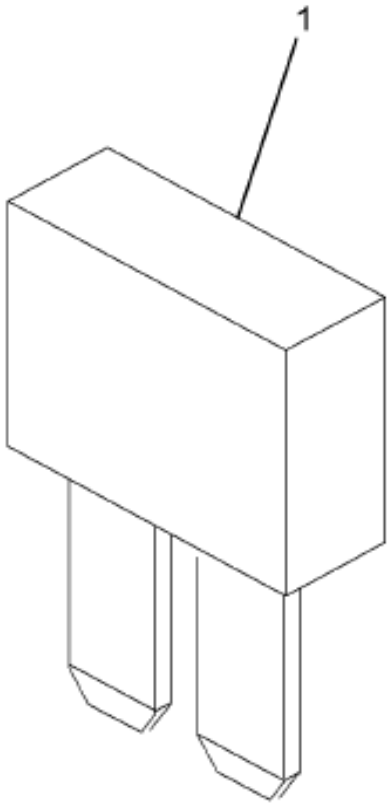

08-P58-0027-01 H05

Item	Part No.	Qty	Description	Kit	Var	Figure
1	3534209C1	1	FUSE,*FUSE, 10AMP MINI			
800		RF	NOTE: THE FOLLOWING PARTS ARE			
			NON-ILLUSTRATED			
801	3604017C91	1	HARNESS,CHASSIS, WASHER PUMP			
802	3557990C91	1	HARNESS,CHASSIS WIRING*WASHER			3557990C91
880		RF	NOTE: ASM BELOW COMPRISED OF ABOVE			

COPYRIGHT© 2011INTERNATIONAL TRUCK AND ENGINE CORP.

https://truckmanualshub.com/

Figure 3604018F91

HARN,DASH,WASHER PUMP/LEVEL SN

Item	Part No.	Qty	Description	Kit	Var	Figure
			COMPONENTS			
881	3604018F91	RF	HARN,DASH,WASHER PUMP/LEVEL SN			

COPYRIGHT© 2011INTERNATIONAL TRUCK AND ENGINE CORP.

https://truckmanualshub.com/

Figure 3337990C91
HARNESS,CHASSIS WIRING*WASHER

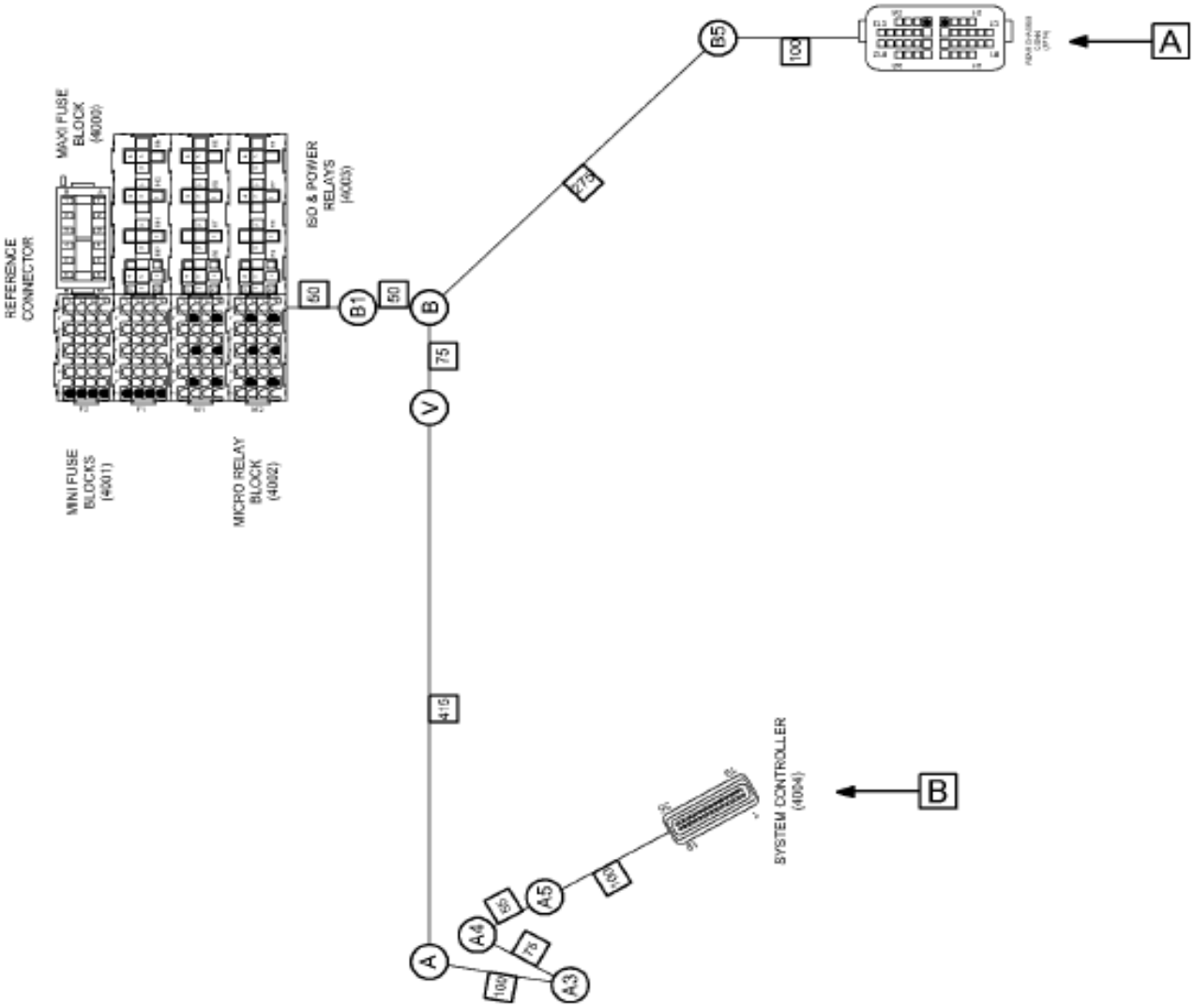

08-D30-0007-01 F10

Figure 1 of 2

COPYRIGHT© 2011INTERNATIONAL TRUCK AND ENGINE CORP.

https://truckmanualshub.com/

Figure 3537930C91
HARNESS,CHASSIS WIRING*WASHER

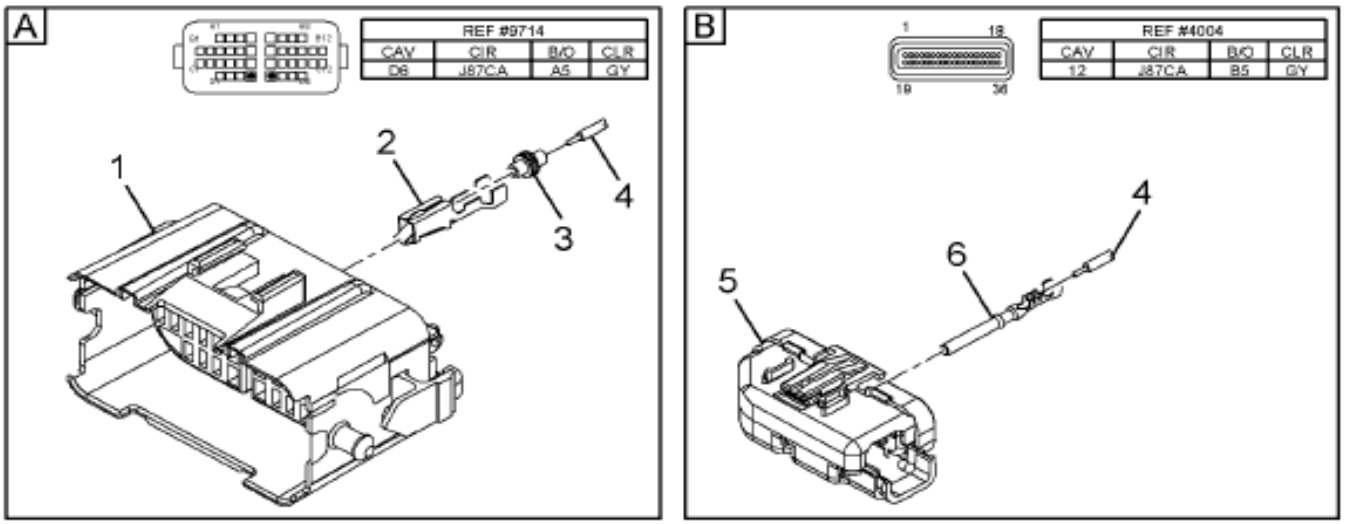

08-D30-0007-02 F10

Item	Part No.	Qty	Description	Kit	Var	Figure
1	3535306C1	1	CONNECTOR BODY 38-WAY FEMALE G			
2	3535303C1	1	TERMINAL,CABLE*CONN TERMINAL			
3	3535424C1	1	PLUG,SEALING*CABLE TERMINAL SE			
4	3510311R1	AR	CABLE,LOW TENSION TXL			
5	3533832C1	1	CONNECTOR,BODY*CNTR STRAIN REL			
6	3517243C1	1	TERMINAL,CABLE			

COPYRIGHT© 2011INTERNATIONAL TRUCK AND ENGINE CORP.

https://truckmanualshub.com/

Figure 3557990C91
HARNESS,CHASSIS WIRING*WASHER

Item	Part No.	Qty	Description	Kit	Var	Figure
880		RF	NOTE: ASM BELOW COMPRISED OF ABOVE COMPONENTS			
881	3557990C91	RF	HARNESS,CHASSIS WIRING*WASHER			

COPYRIGHT© 2011INTERNATIONAL TRUCK AND ENGINE CORP.

https://truckmanualshub.com/

Figure 0CSB3

DASH HARNESS ASM; WORK LIGHT WIRING

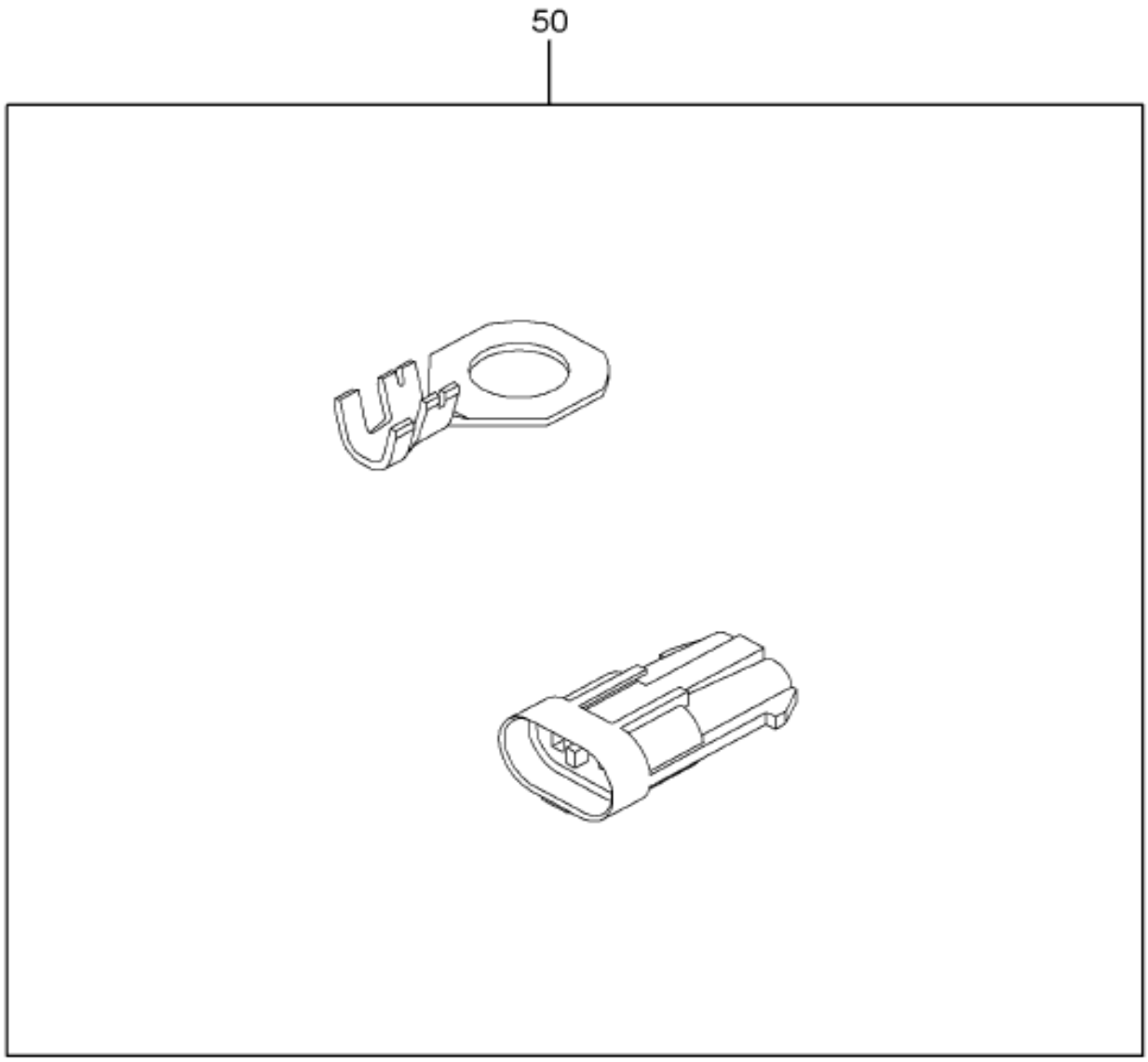

08-D10-0002-01 B09

Item	Part No.	Qty	Description	Kit	Var	Figure
50	3544502F92	1	HARNESS,DASH ELEC; WOR		0CT08	3544502F92

COPYRIGHT© 2011INTERNATIONAL TRUCK AND ENGINE CORP.

https://truckmanualshub.com/

Figure 3544502F92
HARNESS,DASH ELEC; WOR

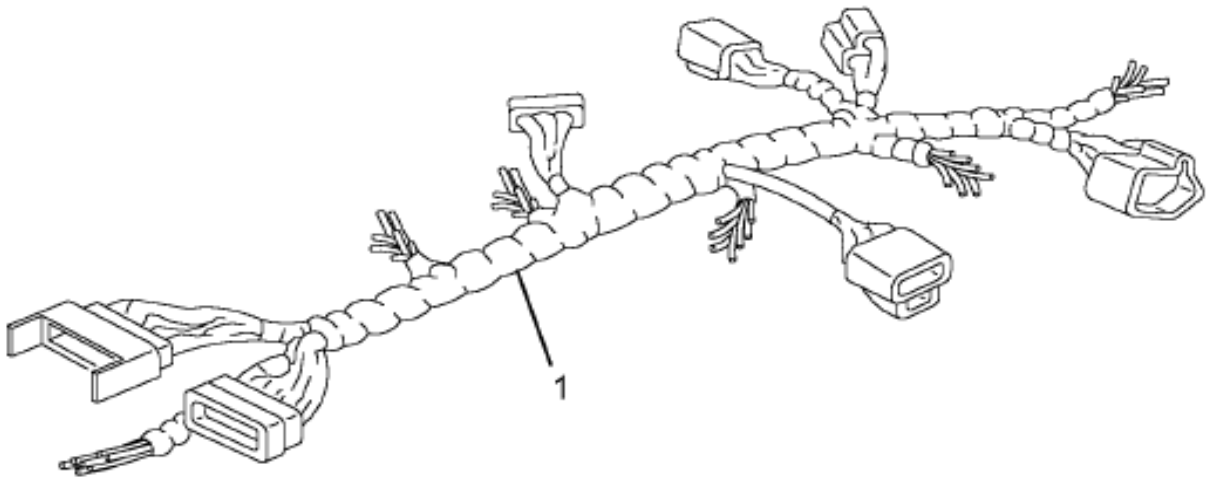

08-P58-0006-01 C03

Item	Part No.	Qty	Description	Kit	Var	Figure
1	3545544C92	1	HARNESS,FLOOD LIGHT WIRING*WOR			3545544C92
880		RF	NOTE: ASM BELOW COMPRISED OF ABOVE COMPONENTS			
881	3544502F92	RF	HARNESS,DASH ELEC; WOR			

COPYRIGHT© 2011INTERNATIONAL TRUCK AND ENGINE CORP.

https://truckmanualshub.com/

Figure 3343544C92

HARNESS,FLOOD LIGHT WIRING*WOR

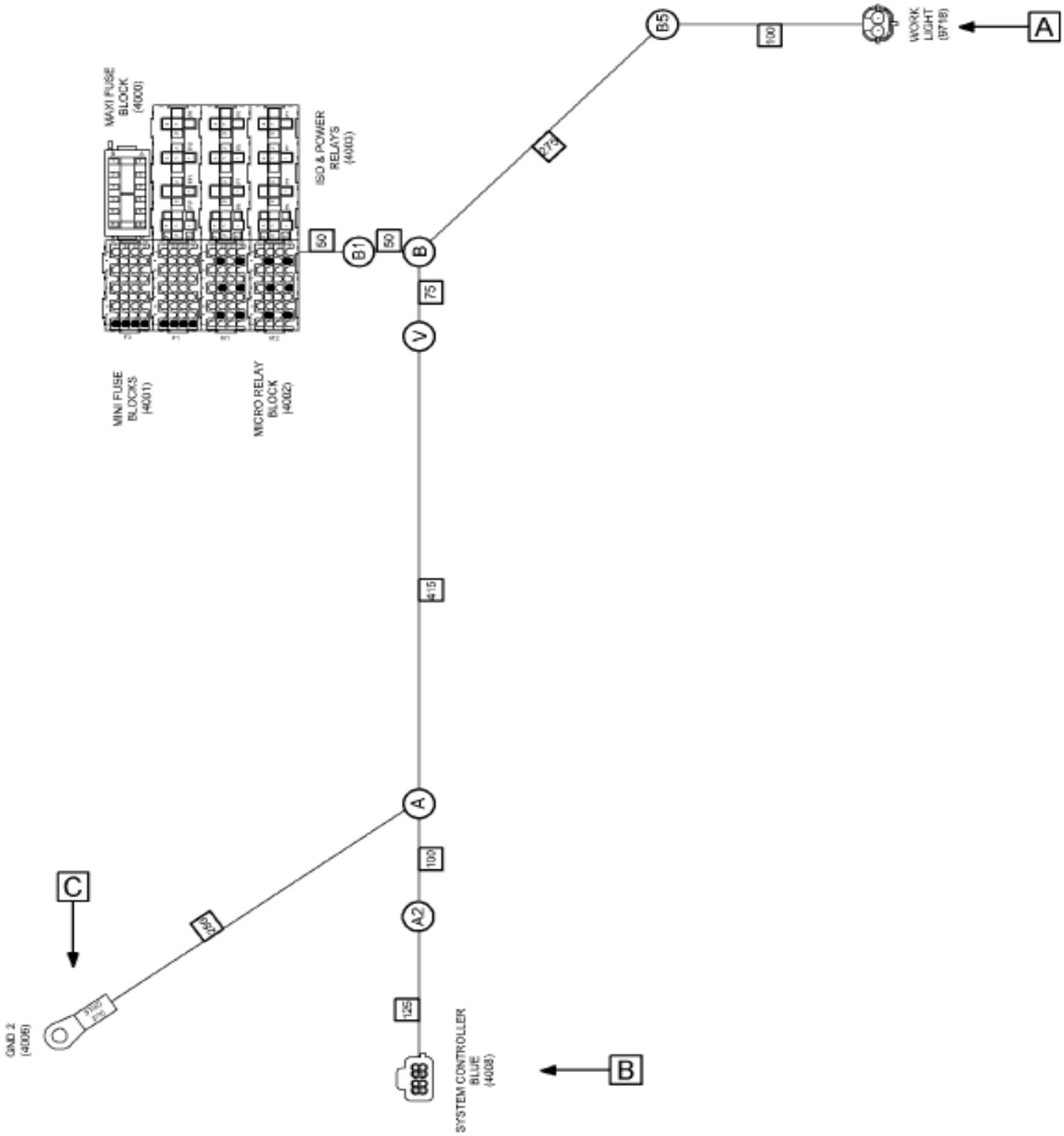

Figure 1 of 2

COPYRIGHT© 2011INTERNATIONAL TRUCK AND ENGINE CORP.

https://truckmanualshub.com/

Figure 3543544C92

HARNESS,FLOOD LIGHT WIRING*WOR

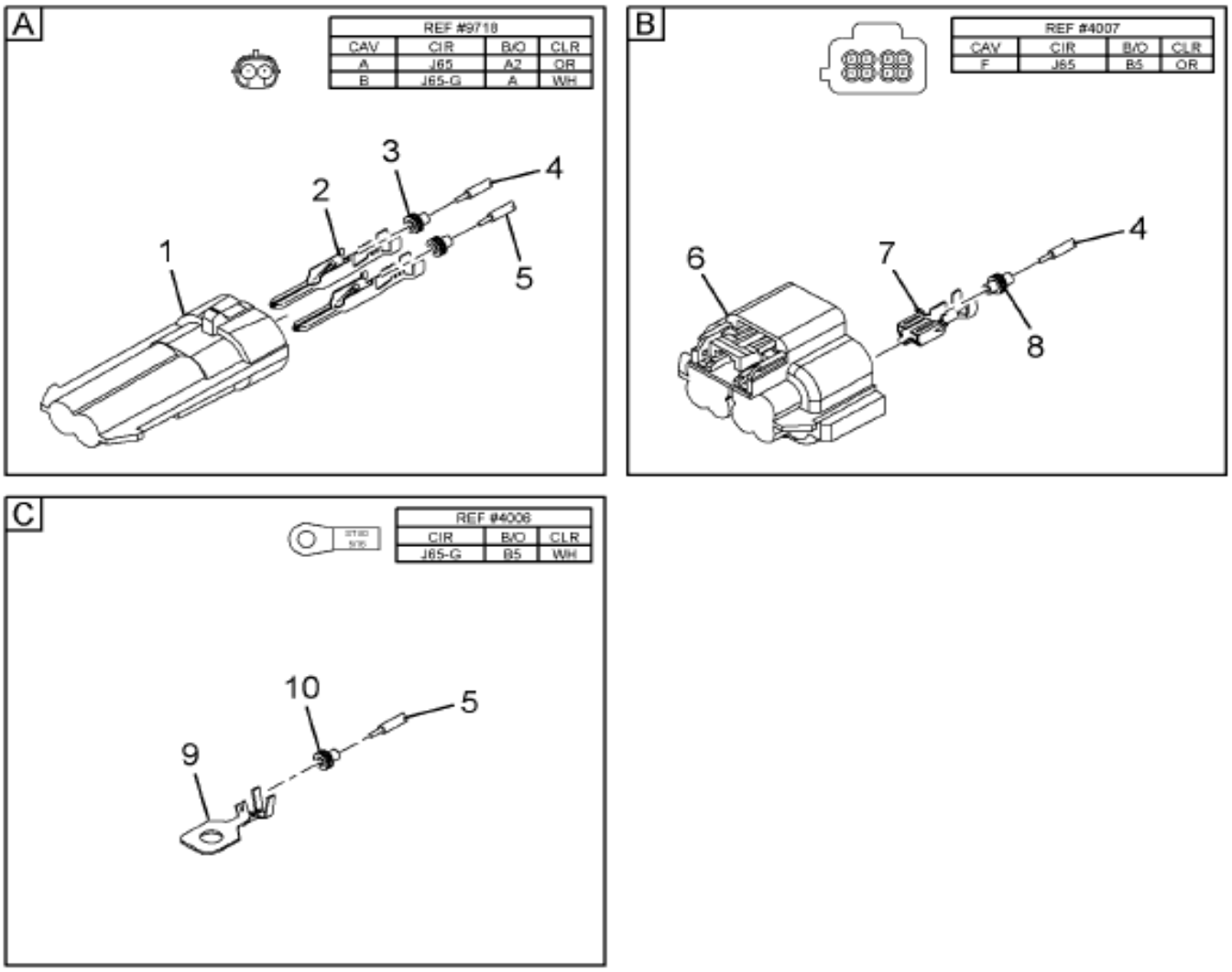

08-D10-0003-02 F10

Item	Part No.	Qty	Description	Kit	Var	Figure
1	3543888C1	1	BODY,CONNECTOR ELECT FEMALE			
2	1667742C1	2	TERMINAL,CABLE 150 SEALED MALE			
3	1661872C1	2	SEAL,CABLE TERM 150 LOOSE			
4	2643682R1	AR	CABLE LOW TENSION SINGLE COND			
5	2643681R1	AR	CABLE LOW TENSION SINGLE COND			
6	3543888C1	1	BODY,CONNECTOR ELECT FEMALE			

COPYRIGHT© 2011INTERNATIONAL TRUCK AND ENGINE CORP.

https://truckmanualshub.com/

Figure 3545544C92

HARNESS,FLOOD LIGHT WIRING*WOR

Item	Part No.	Qty	Description	Kit	Var	Figure
7	3535930C1	1	TERMINAL,CABLE*GT 280 SERIES 5			
8	3535936C1	1	SEAL,CABLE TERMINAL*GT 280 SER			
9	365680C2	1	TERMINAL,RING			
10	2644038R1	1	SLEEVE,CABLE INSULATING			
880		RF	NOTE: ASM BELOW COMPRISED OF ABOVE COMPONENTS			
881	3545544C92	RF	HARNESS,FLOOD LIGHT WIRING*WOR			

COPYRIGHT© 2011INTERNATIONAL TRUCK AND ENGINE CORP.

https://truckmanualshub.com/

Figure 0DCJY

DCM; CLOCK SPRING, ELECTRICAL

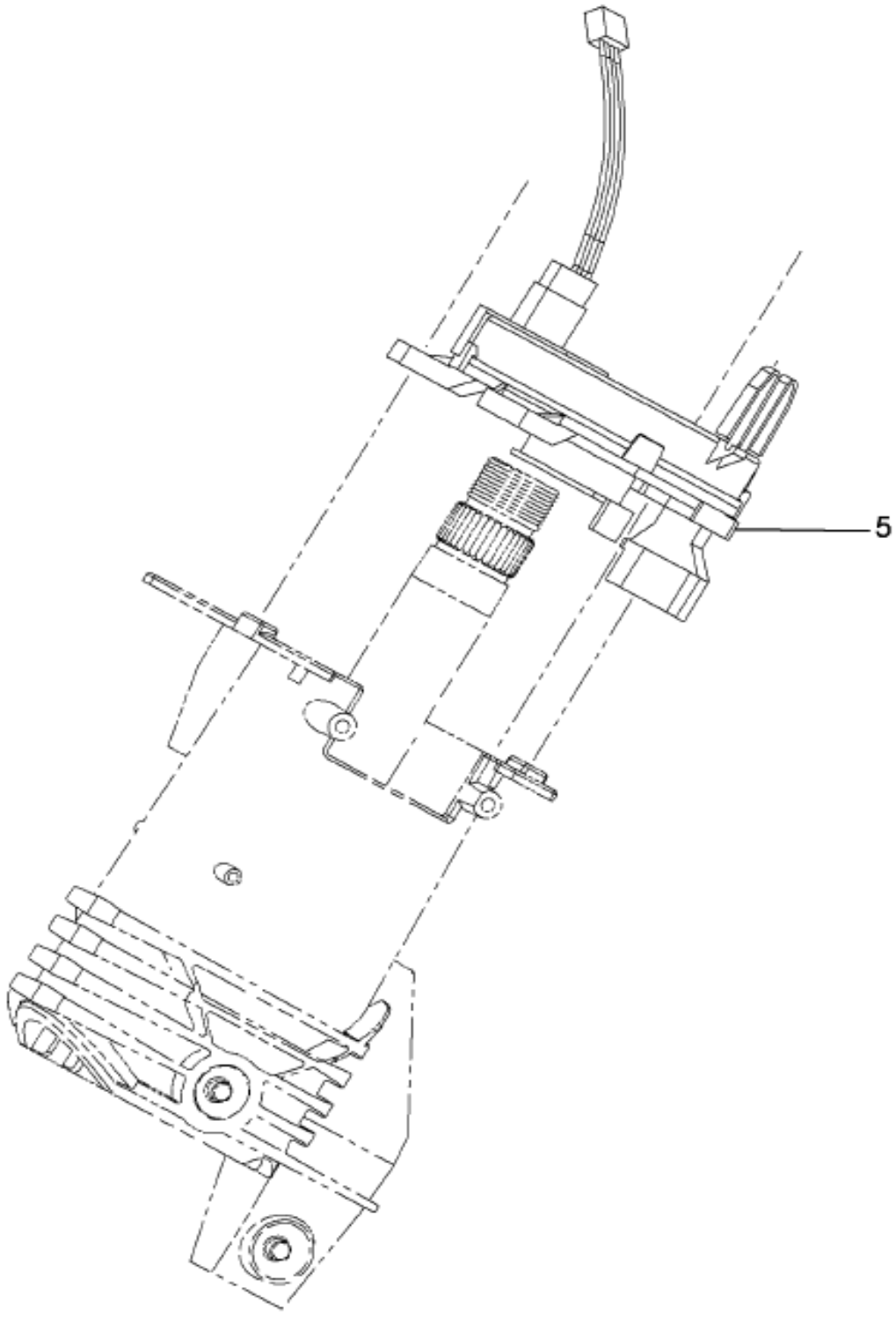

16-C19-0002-A0 E09

Item	Part No.	Qty	Description	Kit	Var	Figure
5	3545990F91	1	ELEC DCM*CLOCKSPRING		0MHC3	3545990F91

COPYRIGHT© 2011INTERNATIONAL TRUCK AND ENGINE CORP.

https://truckmanualshub.com/

Figure 3343390F91

ELEC DCM*CLOCKSPRING

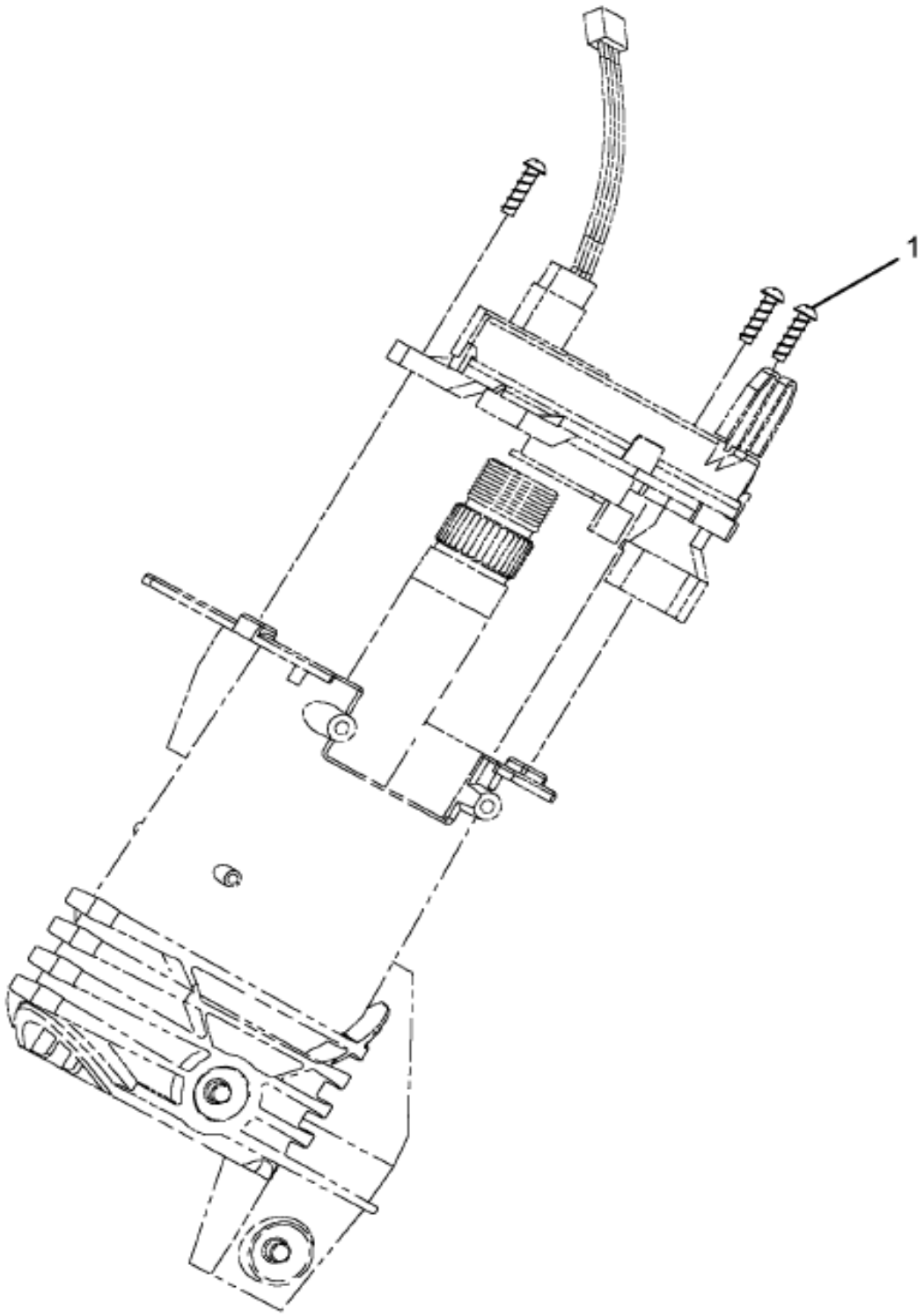

Item	Part No.	Qty	Description	Kit	Var	Figure
1	2505847C1	3	SCREW, PLASTITE #8X1/2" P/HEAD			
800		RF	NOTE: THE FOLLOWING PARTS ARE			
			NON-ILLUSTRATED			
801	2505657C91	KT	SPRING,CLOCK W/CANCEL CAM, KIT			2505657C91
880		RF	NOTE: ASM BELOW COMPRISED OF ABOVE			
			COMPONENTS			

COPYRIGHT© 2011INTERNATIONAL TRUCK AND ENGINE CORP.

https://truckmanualshub.com/

Figure 3545990F91

ELEC DCM*CLOCKSPRING

Item	Part No.	Qty	Description	Kit	Var	Figure
881	3545990F91	RF	ELEC DCM*CLOCKSPRING			

COPYRIGHT© 2011INTERNATIONAL TRUCK AND ENGINE CORP.

https://truckmanualshub.com/

Figure 2505657C91

SPRING,CLOCK W/CANCEL CAM, KIT

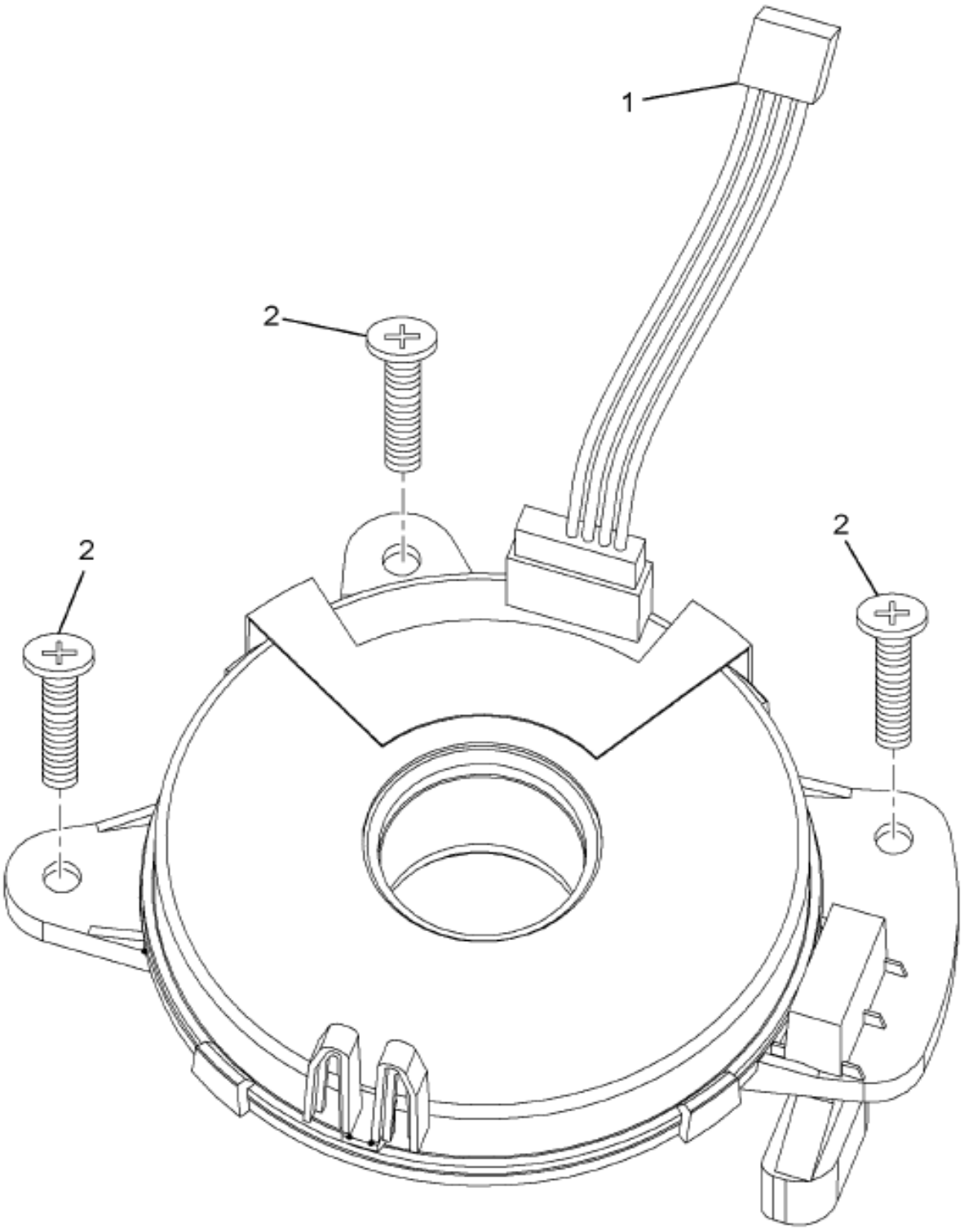

Grp 08

Item	Part No.	Qty	Description	Kit	Var	Figure
1	3591409C1	1	SPRING,CONTACT*CLOCKSPRING, 4			
2	2505847C1	3	SCREW, PLASTITE #8X1/2" P/HEAD			
880		RF	NOTE: ASM BELOW COMPRISED OF ABOVE COMPONENTS			
881	2505657C91	RF	SPRING,CLOCK W/CANCEL CAM, KIT			

COPYRIGHT© 2011INTERNATIONAL TRUCK AND ENGINE CORP.

https://truckmanualshub.com/

Figure 0M51L

ELECTRICAL SERVICE ASM; CENTER CHASSIS

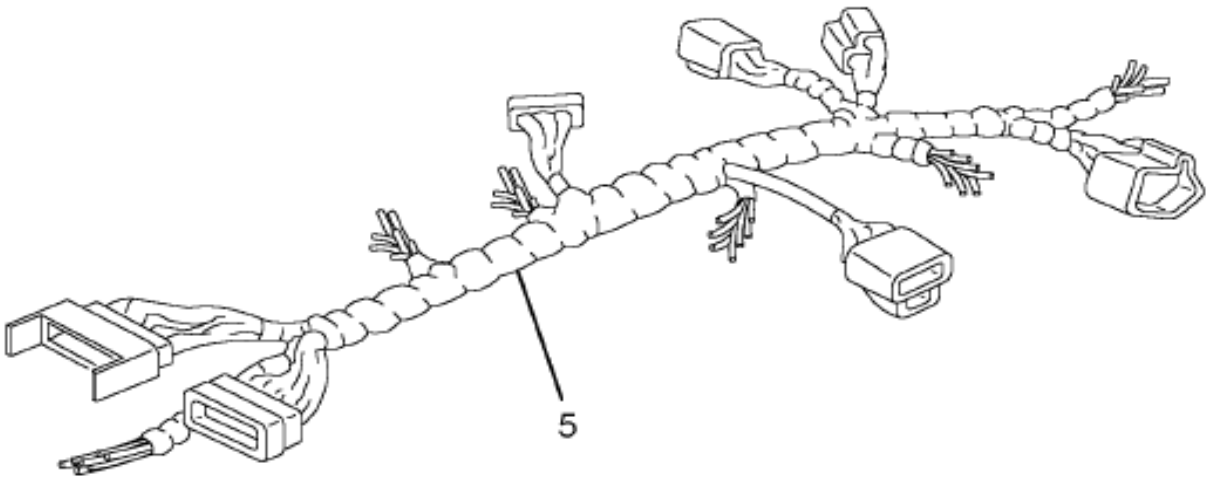

08-D01-0004-01 E04

Item	Part No.	Qty	Description	Kit	Var	Figure
25	2506256C92	AR	HARN,CTR CHAS-SVC ASM,3500,AIR		0M51P	

COPYRIGHT© 2011INTERNATIONAL TRUCK AND ENGINE CORP.

https://truckmanualshub.com/

Figure 0M4ZH

ELECTRICAL SERVICE ASM; FORWARD CHASSIS

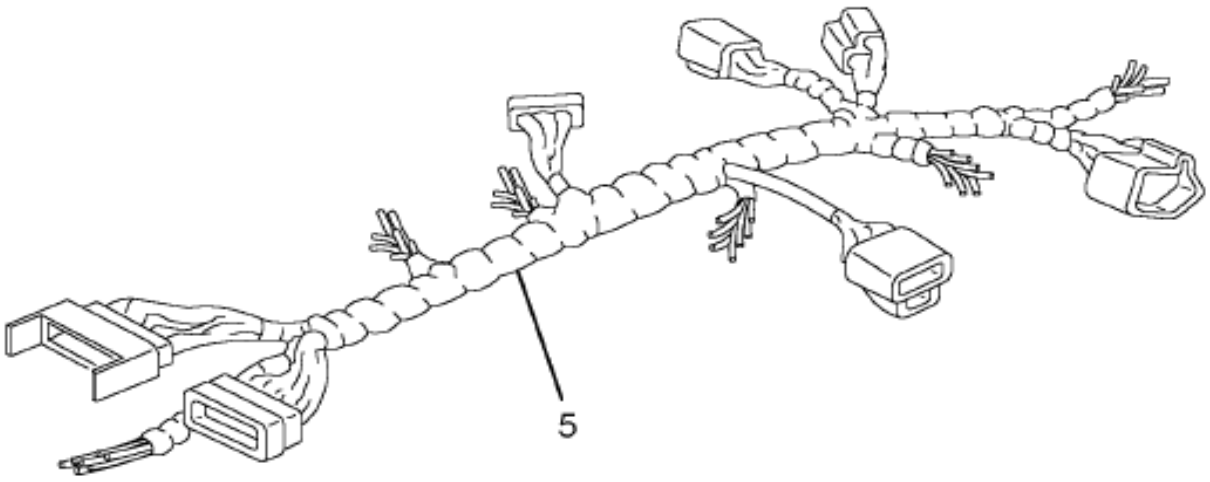

08-D01-0004-01 E04

Item	Part No.	Qty	Description	Kit	Var	Figure
5	2508848C91	AR	HARNESS FWD CHAS-SVC ASM W/AIR		0M4ZJ	

COPYRIGHT© 2011INTERNATIONAL TRUCK AND ENGINE CORP.

https://truckmanualshub.com/

Figure 0M517

ELECTRICAL SERVICE ASM; INSTRUMENT PANEL

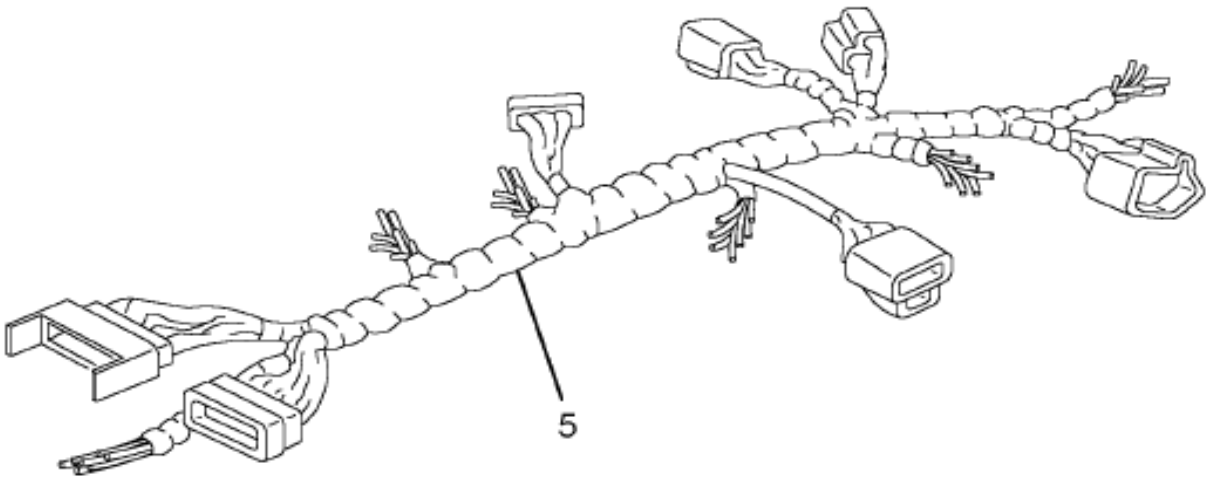

08-D01-0004-01 E04

Item	Part No.	Qty	Description	Kit	Var	Figure
5	2507679C91	AR	HARNESS,IP-SVC ASM W/MAN XMSN		0M518	

COPYRIGHT© 2011INTERNATIONAL TRUCK AND ENGINE CORP.

https://truckmanualshub.com/

Figure 0M7RR

FRONT END WIRING INSTL; LIGHTING AND HARDWARE

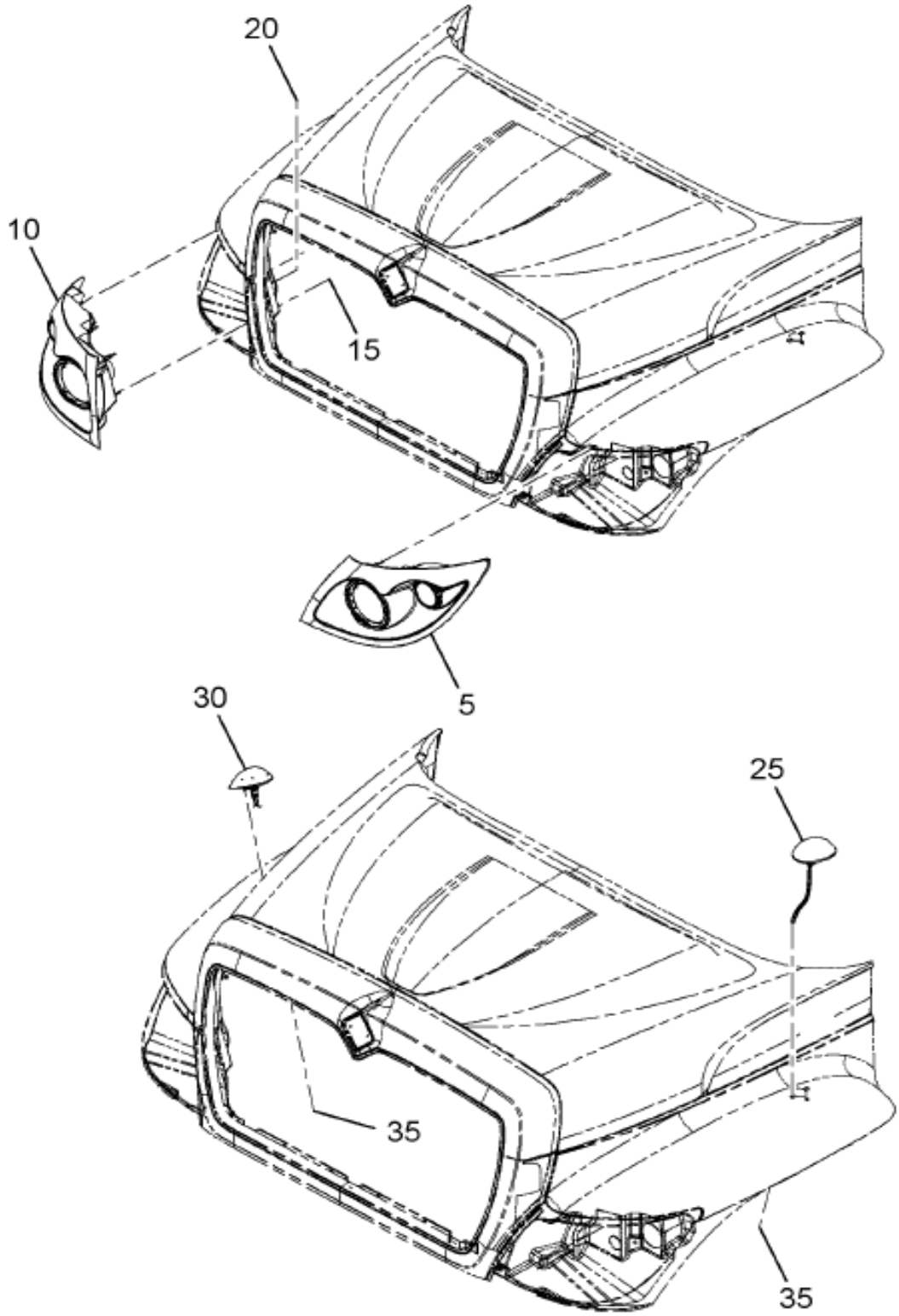

09-155-0171-01 C11

Grp 08

Figure 1 of 5

COPYRIGHT© 2011INTERNATIONAL TRUCK AND ENGINE CORP.

https://truckmanualshub.com/

Figure 0M7RR

FRONT END WIRING INSTL; LIGHTING AND HARDWARE

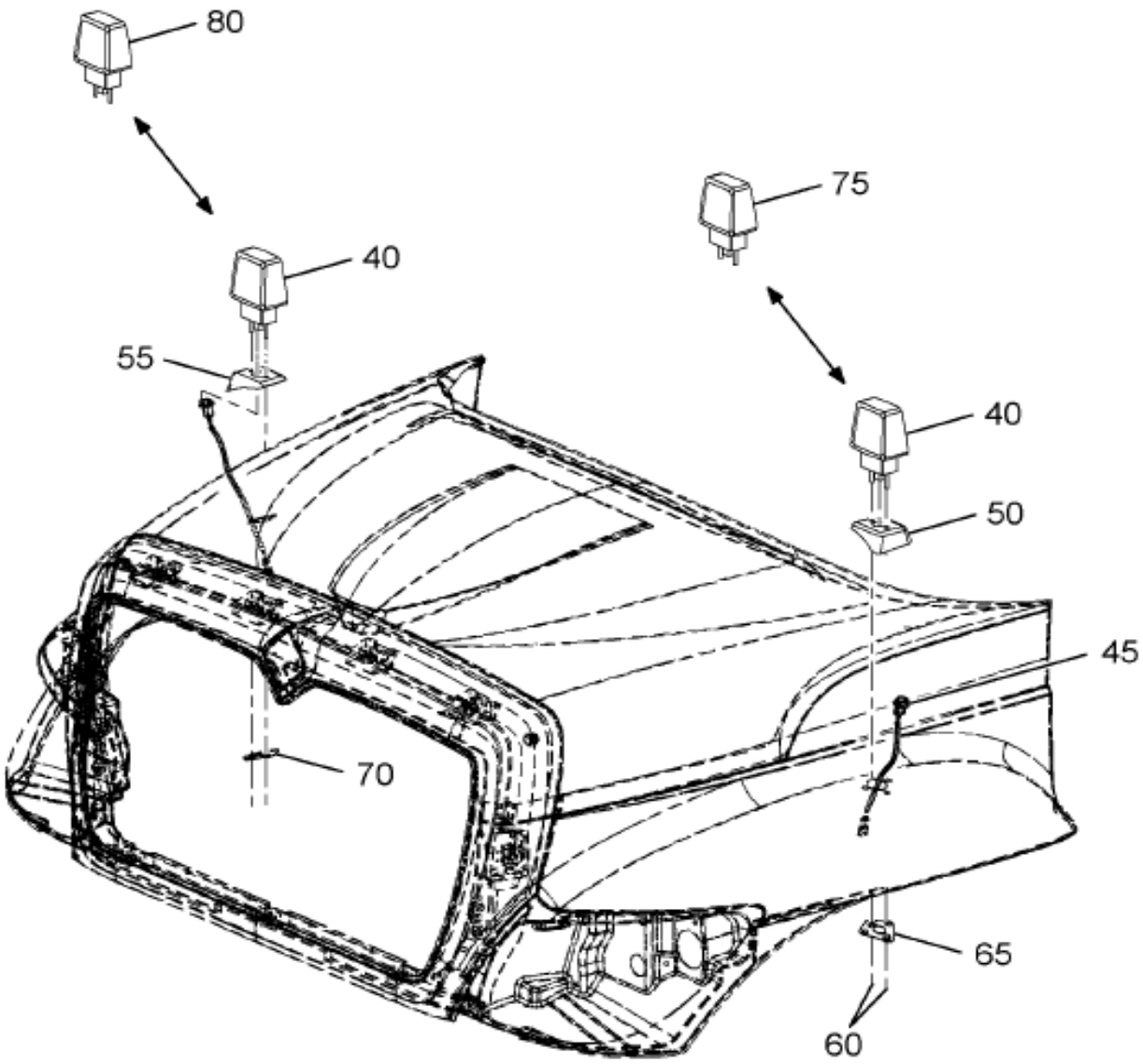

09-155-0171-02 C11

Figure 2 of 5

COPYRIGHT© 2011INTERNATIONAL TRUCK AND ENGINE CORP.

https://truckmanualshub.com/

Figure 0M7RR

FRONT END WIRING INSTL; LIGHTING AND HARDWARE

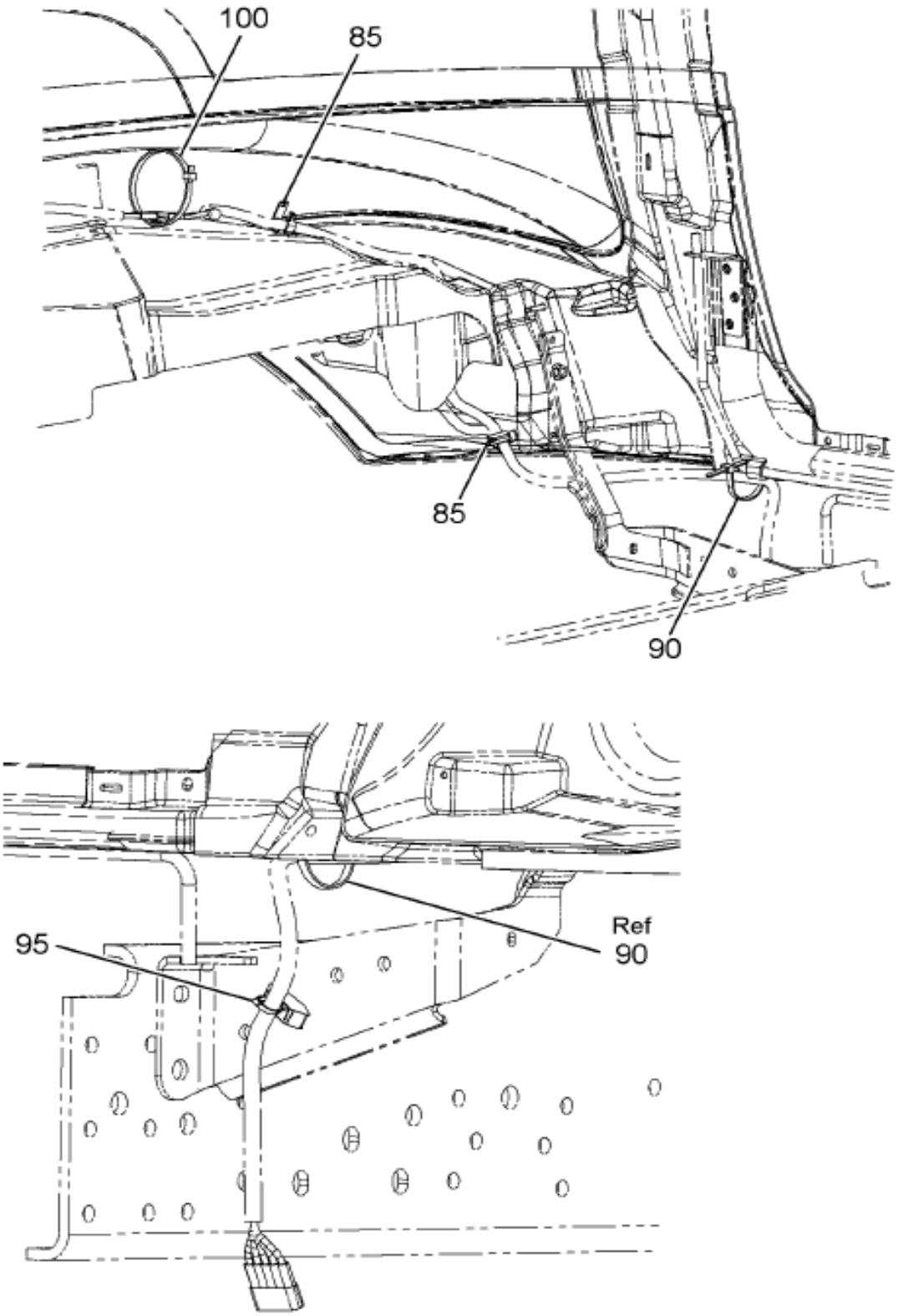

09-155-0171-03 C11

Grp 08

Figure 3 of 5

COPYRIGHT© 2011INTERNATIONAL TRUCK AND ENGINE CORP.

https://truckmanualshub.com/

Figure 0M7RR

FRONT END WIRING INSTL; LIGHTING AND HARDWARE

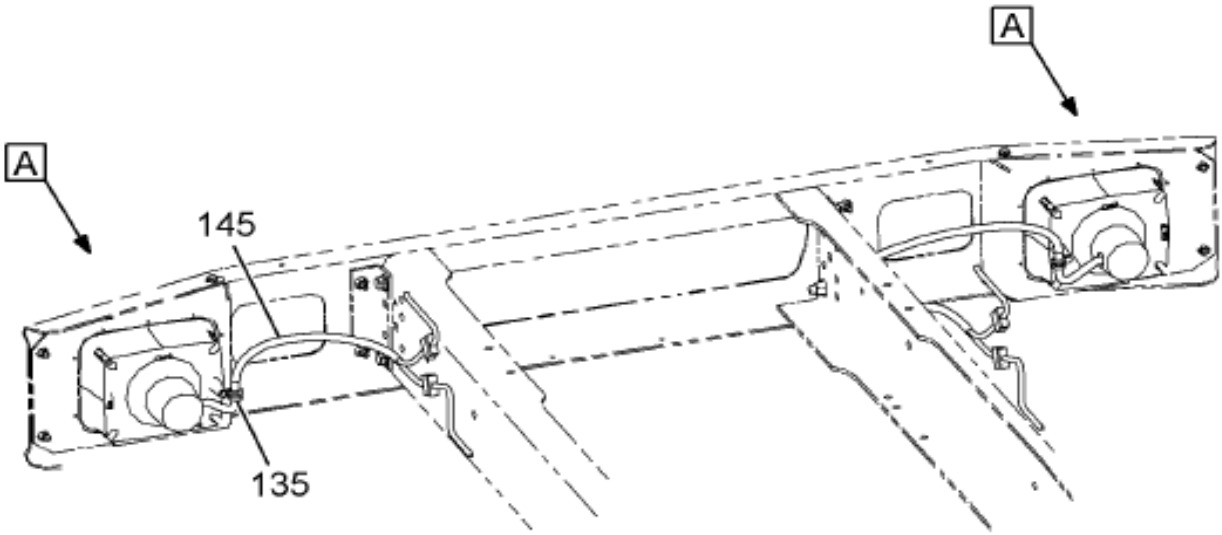

M-NGV-SS &
W / HEADLIGHTS IN BUMPER

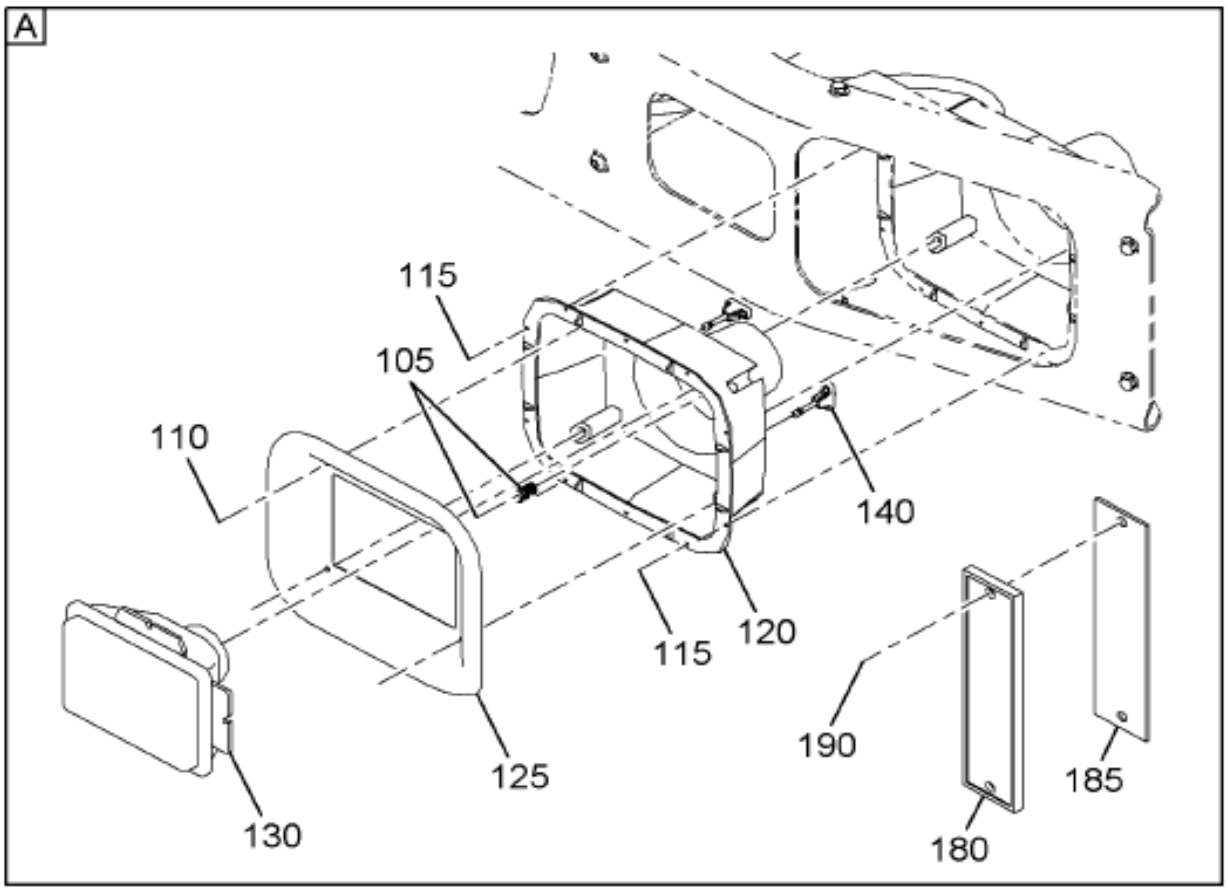

09-155-0193-01 K11

Figure 4 of 5

COPYRIGHT© 2011INTERNATIONAL TRUCK AND ENGINE CORP.

https://truckmanualshub.com/

Figure 0M7RR

FRONT END WIRING INSTL; LIGHTING AND HARDWARE

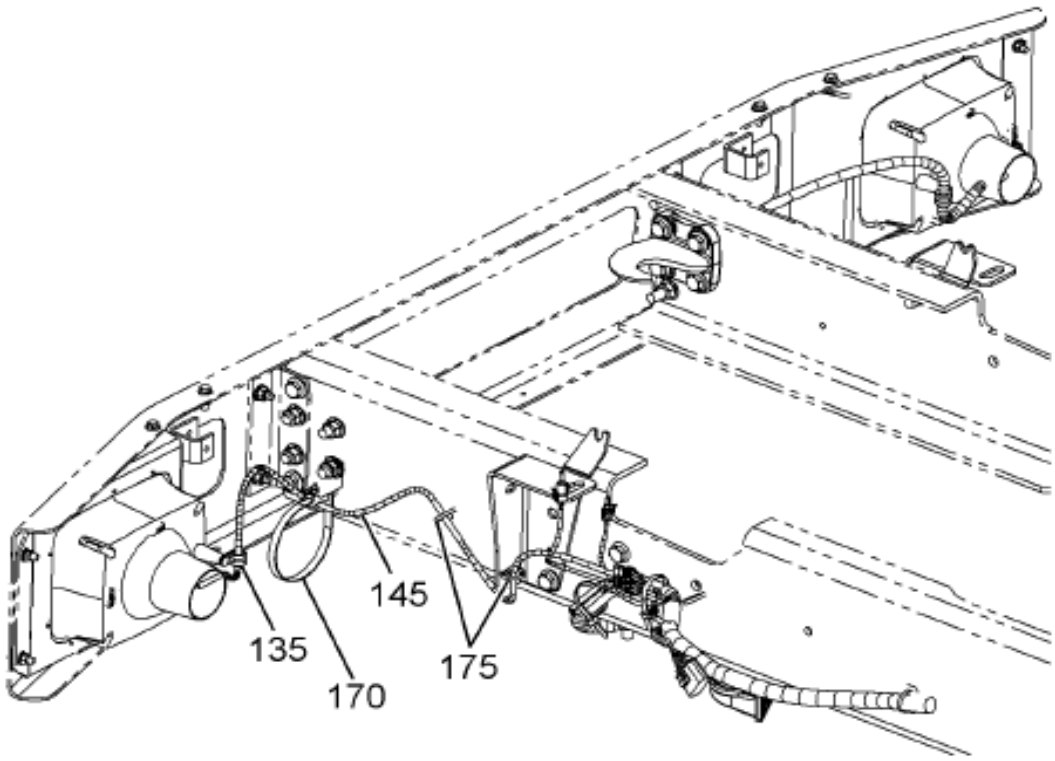

M-NGV-SS
W/CAB-HGHT = H
W/0508028
W/0001WDT, 0001WDS, 0001UAN
0001UAM

09-155-0233-01 C11

Item	Part No.	Qty	Description	Kit	Var	Figure
5	3605816C92	1	LIGHT,HEAD,CHROM/PNTD BEZEL,LH		0M7RS	3605816C92
10	3605817C92	1	LIGHT,HEAD,CHROM/PNTD BEZEL RH		0M7RS	3605817C92
15	3608911C1	4	NUT,, M6 KEPS W/FREE SPIN WSHR		0M7RR	
20	40235R1	1	BOLT HEX FLG HD METRIC*M6 X 16		0M7RR	
25	3537872C95	1	LITE,TURN SIG,HOOD MTD,LH,CHRM		0RR90	3537872C95
30	3537873C95	1	LITE,TURN SIG,HOOD MTD,RH,CHRM		0RR90	3537873C95

COPYRIGHT© 2011INTERNATIONAL TRUCK AND ENGINE CORP.

https://truckmanualshub.com/

Figure 0M7RR

FRONT END WIRING INSTL; LIGHTING AND HARDWARE

Item	Part No.	Qty	Description	Kit	Var	Figure
35	473146C1	1	SCREW,SPECIAL HI-LOW		0RR90	
35	22237R1	1	WASHER,LOCK .203X.750X.054		0RR90	
35	473146C1	1	SCREW,SPECIAL HI-LOW		0RR90	
35	22237R1	1	WASHER,LOCK .203X.750X.054		0RR90	
85	3530081C1	4	PLATE,TAPPING		0M7RR	
90	306132C1	1	STRAP,CABLE LOCK		0M7RR	
95	3544557C1	1	STRAP,CABLE LOCK*382MM BUTTON		0M7RR	
95	3536111C1	1	GUIDE,BRK HOSE & CABLE*GUIDE S		0M7RR	
95	3544557C1	1	STRAP,CABLE LOCK*382MM BUTTON		0M7RR	
95	3536111C1	1	GUIDE,BRK HOSE & CABLE*GUIDE S		0M7RR	
100	3551787C91	1	STRAP CABLE LOCK*HELLERMAN TYT		0M7RR	

COPYRIGHT© 2011INTERNATIONAL TRUCK AND ENGINE CORP.

https://truckmanualshub.com/

Figure 3570620C91

HARNESS,CLEARANCE & MARKER LT*

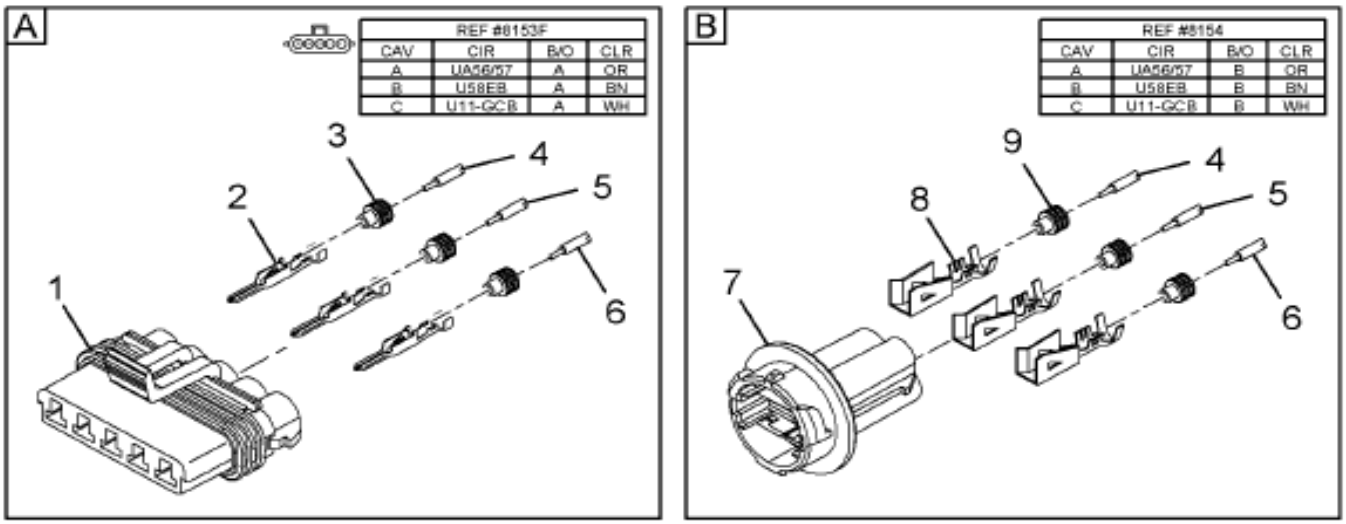

09-155-0234-02 E11

Item	Part No.	Qty	Description	Kit	Var	Figure
1	3553961C1	1	CONNECTOR,BODY*SEALED FEMALE 3			
2	2033912C1	3	TERMINAL,CABLE FOR 14GA ONLY			
3	589391C1	3	PLUG,SEALER, LOOSE PIECE			
4	2643690R1	AR	CABLE LOW TENSION SINGLE COND			
5	2643688R1	AR	CABLE LOW TENSION SINGLE COND			
6	2643681R1	AR	CABLE LOW TENSION SINGLE COND			

COPYRIGHT© 2011INTERNATIONAL TRUCK AND ENGINE CORP.

https://truckmanualshub.com/

Figure 3570620C91

HARNESS,CLEARANCE & MARKER LT*

Item	Part No.	Qty	Description	Kit	Var	Figure
7	1686738C1	1	SOCKET,LAMP			
8	1664231C1	3	TERMINAL FEMALE GROUND			
9	1664232C1	3	SEAL CABLE TERMINAL LOOSE			
880		RF	NOTE: ASM BELOW COMPRISED OF ABOVE COMPONENTS			
881	3570620C91	RF	HARNESS,CLEARANCE & MARKER LT*			

COPYRIGHT© 2011INTERNATIONAL TRUCK AND ENGINE CORP.

https://truckmanualshub.com/

Figure 3605817C92
LIGHT,HEAD,CHROM/PNTD BEZEL RH

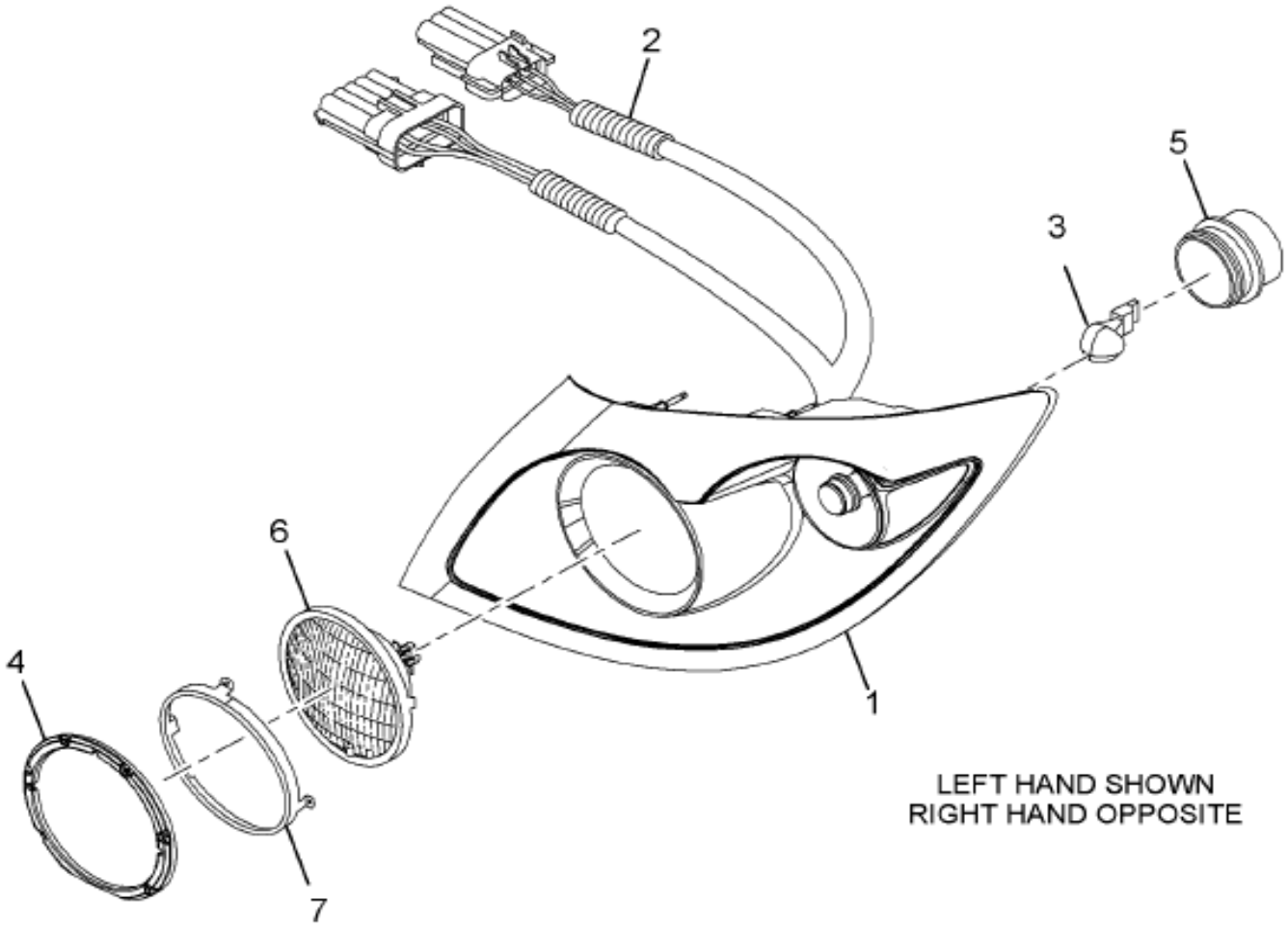

09-155-0230-01 L10

Grp 08

Item	Part No.	Qty	Description	Kit	Var	Figure
1	2589894C1	1	BEZEL,HEAD LIGHT RH			
1		RF	RIGHT			
2	2589897C91	1	HARNESS,HD LT PART OF HDLT ASM			
3	GE3157NAKR	1	LAMP,TURN SIG INCANDESCENT 12V			
4	2589895C1	1	RING,HEAD LIGHT TRIM			
5	2509599C91	1	COVER ASSY,HEADLGT BULB SOCKET			

COPYRIGHT© 2011INTERNATIONAL TRUCK AND ENGINE CORP.

https://truckmanualshub.com/

Figure 3605817C92

LIGHT,HEAD,CHROM/PNTD BEZEL RH

Item	Part No.	Qty	Description	Kit	Var	Figure
6	GEH5024	1	LAMP,HALOGEN SEALED BEAM			
7	2589896C1	1	RING,RETAINER			
800		RF	NOTE: THE FOLLOWING PARTS ARE NON-ILLUSTRATED			
801	2589898C91	1	LIGHT,TURN SIG LAMP MODULE RH			
801		RF	RIGHT			
802	2597353C1	4	SCREW,SELF TAP SS 3.0X10MM			
803	2597355C1	6	SCREW SELF TAP 3.0 X 11.6MM			
804	2509985C1	4	NUT,U TYPE SPEED			
880		RF	NOTE: ASM BELOW COMPRISED OF ABOVE COMPONENTS			
881	3605817C92	RF	LIGHT,HEAD,CHROM/PNTD BEZEL RH			

COPYRIGHT© 2011INTERNATIONAL TRUCK AND ENGINE CORP.

https://truckmanualshub.com/

Figure 3605816C92
LIGHT,HEAD,CHROM/PNTD BEZEL,LH

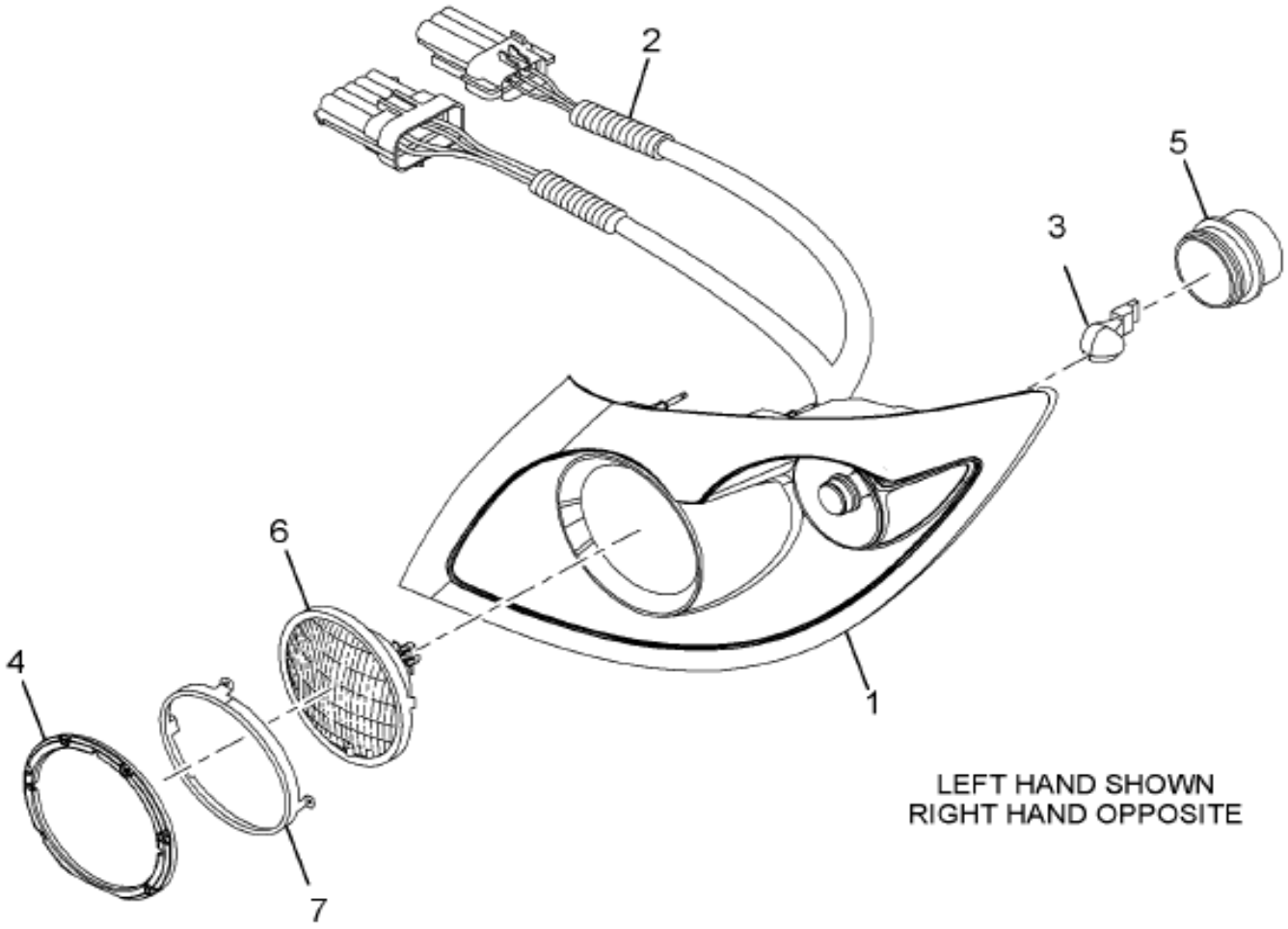

09-155-0230-01 L10

Grp 08

Item	Part No.	Qty	Description	Kit	Var	Figure
1	2589889C1	1	BEZEL,HEAD LIGHT LH			
1		RF	LEFT			
2	2589892C91	1	HARNESS,HD LT PART OF HDLT ASM			
3	GE3157NAKR	1	LAMP,TURN SIG INCANDESCENT 12V			
4	2589895C1	1	RING,HEAD LIGHT TRIM			
5	2509599C91	1	COVER ASSY,HEADLGT BULB SOCKET			

COPYRIGHT© 2011INTERNATIONAL TRUCK AND ENGINE CORP.

https://truckmanualshub.com/

Figure 3605816C92

LIGHT,HEAD,CHROM/PNTD BEZEL,LH

Item	Part No.	Qty	Description	Kit	Var	Figure
6	GEH5024	1	LAMP,HALOGEN SEALED BEAM			
7	2589896C1	1	RING,RETAINER			
800		RF	NOTE: THE FOLLOWING PARTS ARE NON-ILLUSTRATED			
801	2589893C91	1	LIGHT,TURN SIG LAMP MODULE LH			
801		RF	LEFT			
802	2597353C1	4	SCREW,SELF TAP SS 3.0X10MM			
803	2597355C1	6	SCREW SELF TAP 3.0 X 11.6MM			
804	2509985C1	4	NUT,U TYPE SPEED			
880		RF	NOTE: ASM BELOW COMPRISED OF ABOVE COMPONENTS			
881	3605816C92	RF	LIGHT,HEAD,CHROM/PNTD BEZEL,LH			

COPYRIGHT© 2011INTERNATIONAL TRUCK AND ENGINE CORP.

https://truckmanualshub.com/

Figure 3580631C92
LIGHT,TURN SIG,HOOD MOUNTD,LH

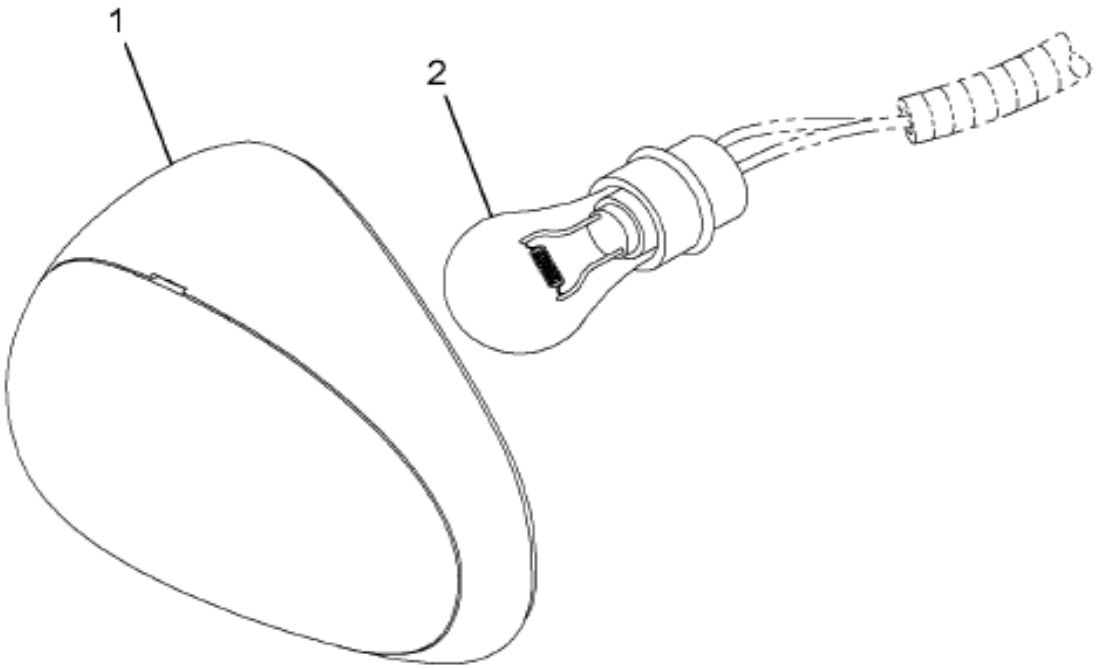

LEFT HAND SHOWN
RIGHT HAND OPPOSITE

09-155-0157-01 K05

Item	Part No.	Qty	Description	Kit	Var	Figure
1		1	LENS,AMBER LH			
1		RF	LEFT			
2	GE3157NAKR	1	LAMP,TURN SIG INCANDESCENT 12V			
880		RF	NOTE: ASM BELOW COMPRISED OF ABOVE COMPONENTS			
881	3580631C92	RF	LIGHT,TURN SIG,HOOD MOUNTD,LH			

COPYRIGHT© 2011INTERNATIONAL TRUCK AND ENGINE CORP.

https://truckmanualshub.com/

Figure 3580632C92
LIGHT,TURN SIGNAL,HOOD MTD,RH

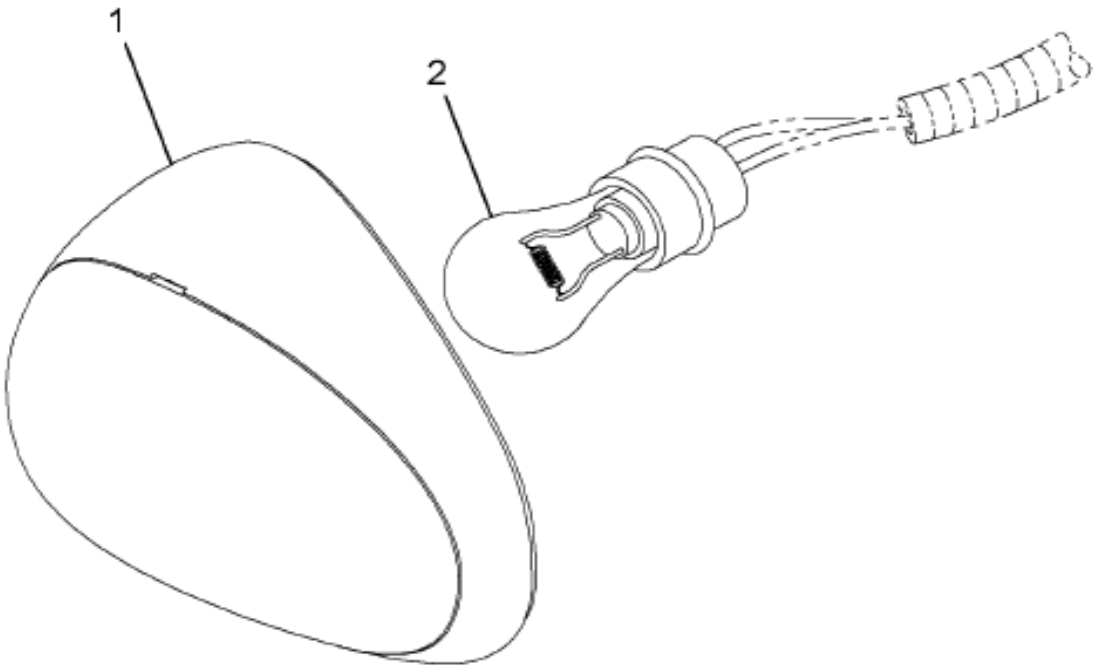

LEFT HAND SHOWN
RIGHT HAND OPPOSITE

09-155-0157-01 K05

Item	Part No.	Qty	Description	Kit	Var	Figure
1		1	LENS,AMBER RH			
1		RF	RIGHT			
2	GE3157NAKR	1	LAMP,TURN SIG INCANDESCENT 12V			
880		RF	NOTE: ASM BELOW COMPRISED OF ABOVE COMPONENTS			
881	3580632C92	RF	LIGHT,TURN SIGNAL,HOOD MTD,RH			

COPYRIGHT© 2011INTERNATIONAL TRUCK AND ENGINE CORP.

https://truckmanualshub.com/

Figure 3537872C95
LITE,TURN SIG,HOOD MTD,LH,CHRM

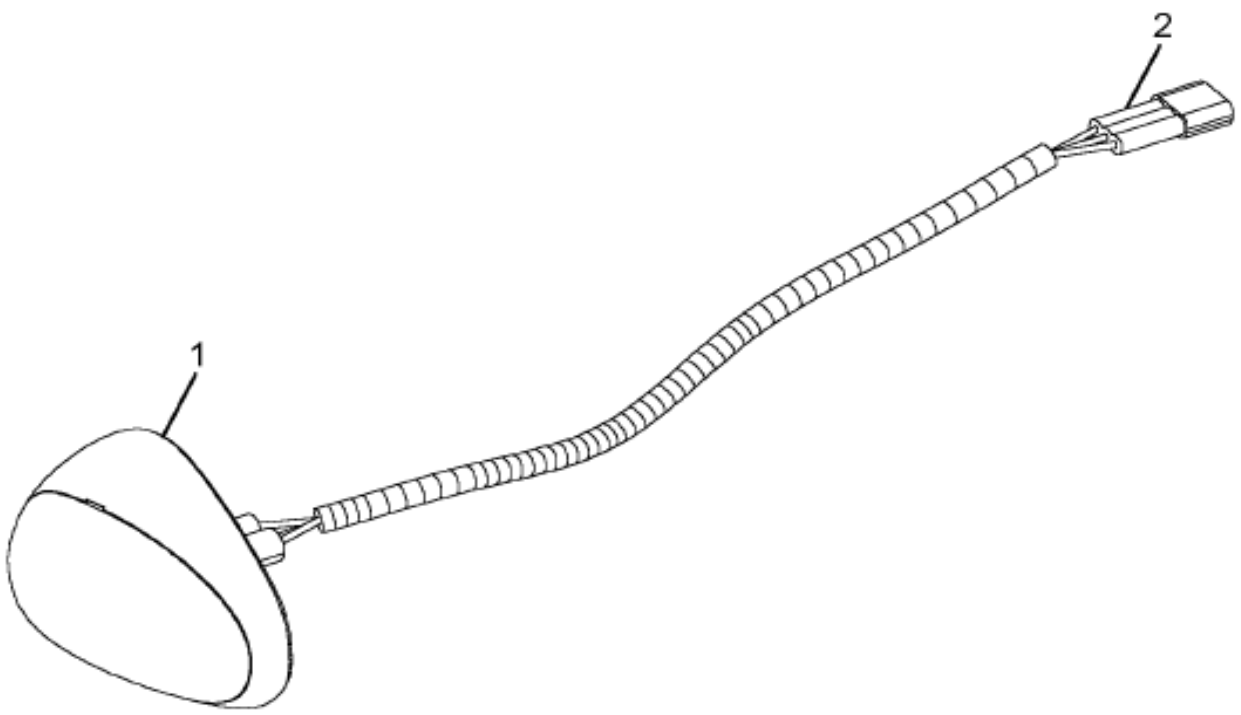

LEFT HAND SHOWN
RIGHT HAND OPPOSITE

Grp 08

09-155-0126-01 G03

Item	Part No.	Qty	Description	Kit	Var	Figure
1	3580631C92	1	LIGHT,TURN SIG,HOOD MOUNTD,LH			3580631C92
1		RF	LEFT			
2	3570620C91	1	HARNESS,CLEARANCE & MARKER LT*			3570620C91
880		RF	NOTE: ASM BELOW COMPRISED OF ABOVE COMPONENTS			
881	3537872C95	RF	LITE,TURN SIG,HOOD MTD,LH,CHRM			

COPYRIGHT© 2011INTERNATIONAL TRUCK AND ENGINE CORP.

https://truckmanualshub.com/

Figure 3537873C95
LITE,TURN SIG,HOOD MTD,RH,CHRM

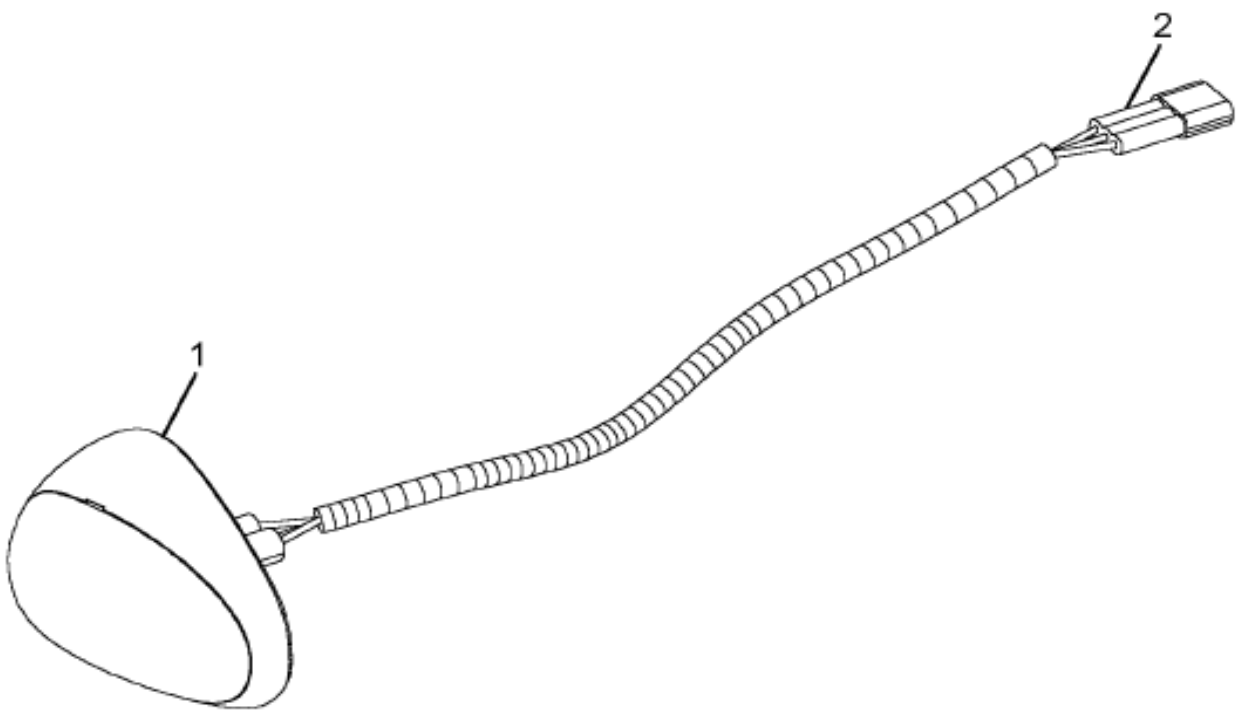

LEFT HAND SHOWN
RIGHT HAND OPPOSITE

09-155-0126-01 G03

Item	Part No.	Qty	Description	Kit	Var	Figure
1	3580632C92	1	LIGHT,TURN SIGNAL,HOOD MTD,RH			3580632C92
1		RF	RIGHT			
2	3570620C91	1	HARNESS,CLEARANCE & MARKER LT*			3570620C91
880		RF	NOTE: ASM BELOW COMPRISED OF ABOVE COMPONENTS			
881	3537873C95	RF	LITE,TURN SIG,HOOD MTD,RH,CHRM			

COPYRIGHT© 2011INTERNATIONAL TRUCK AND ENGINE CORP.

https://truckmanualshub.com/

Figure 0F64W

FWD CHASSIS HARN ASM; BLACK OUT/FOG LIGHTS (ABR #2)

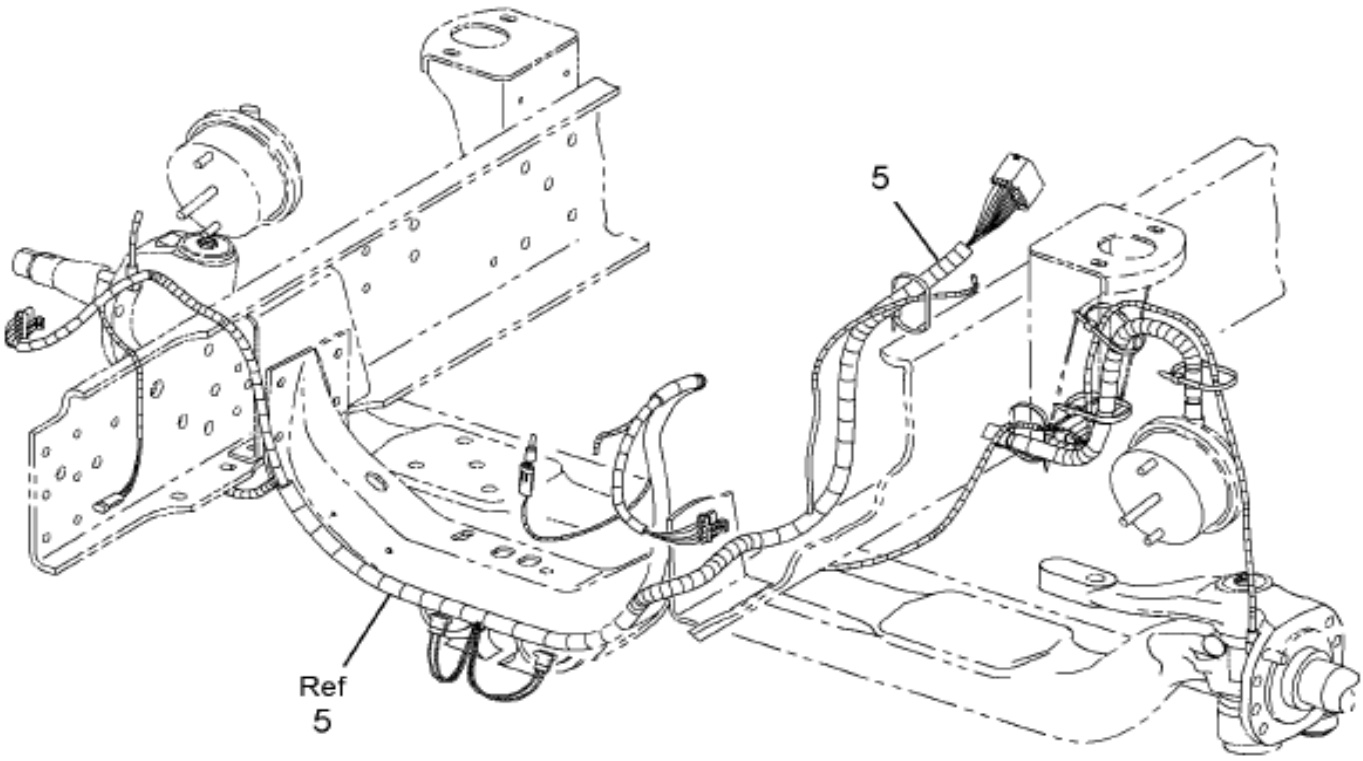

08-E75-0001-B0 L02

Item	Part No.	Qty	Description	Kit	Var	Figure
5	3572239F91	1	ELEC FWD CHAS FOGLGTS		0F64Y	

COPYRIGHT© 2011INTERNATIONAL TRUCK AND ENGINE CORP.

https://truckmanualshub.com/

Figure 0G1P1

FWD CHASSIS HARN ASM; HORN (ABR #11)

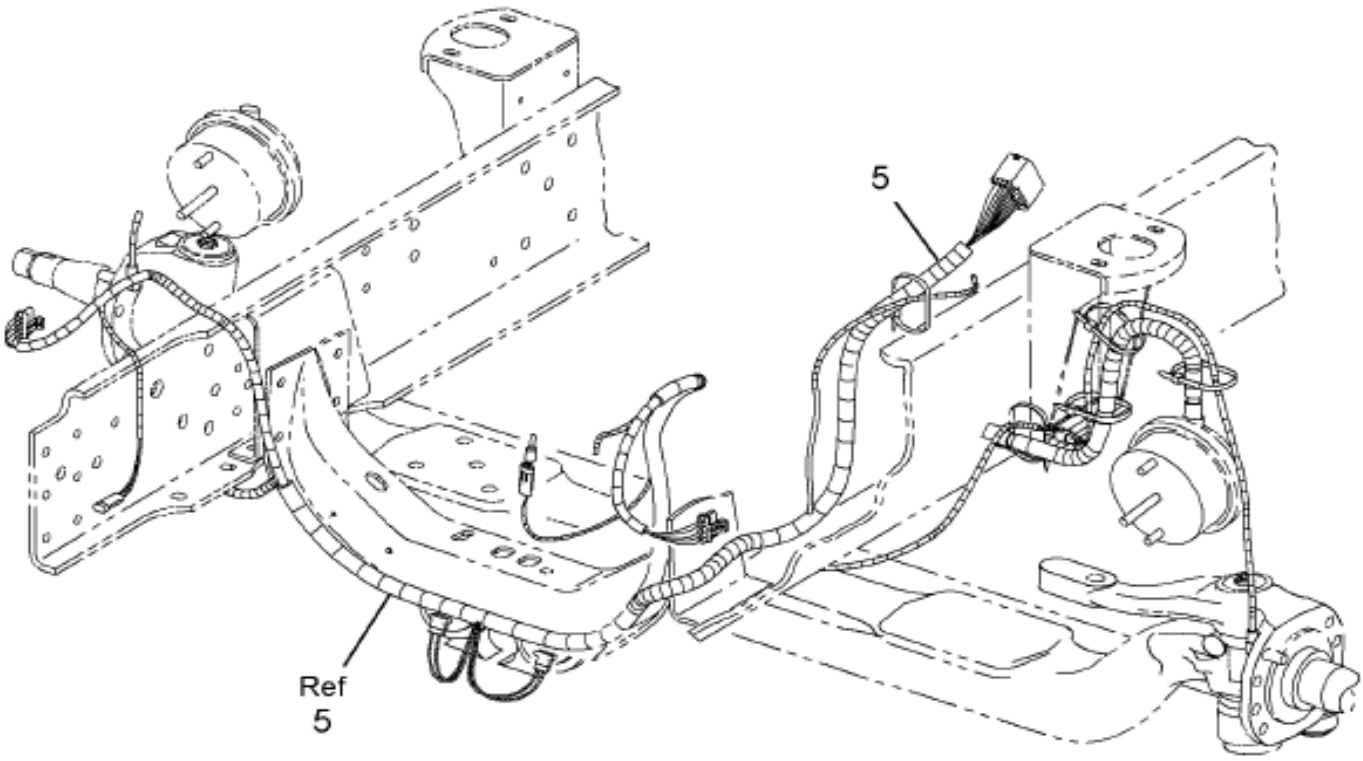

08-E75-0001-B0 L02

Item	Part No.	Qty	Description	Kit	Var	Figure
5	3572697F91	1	ELEC DUAL HORN W/M-NGV-SS		0H4NK	

COPYRIGHT© 2011INTERNATIONAL TRUCK AND ENGINE CORP.

https://truckmanualshub.com/

Figure 0F64M

FWD CHASSIS HARN ASM; SNOW PLOW/FOG LIGHTS (ABR #1)

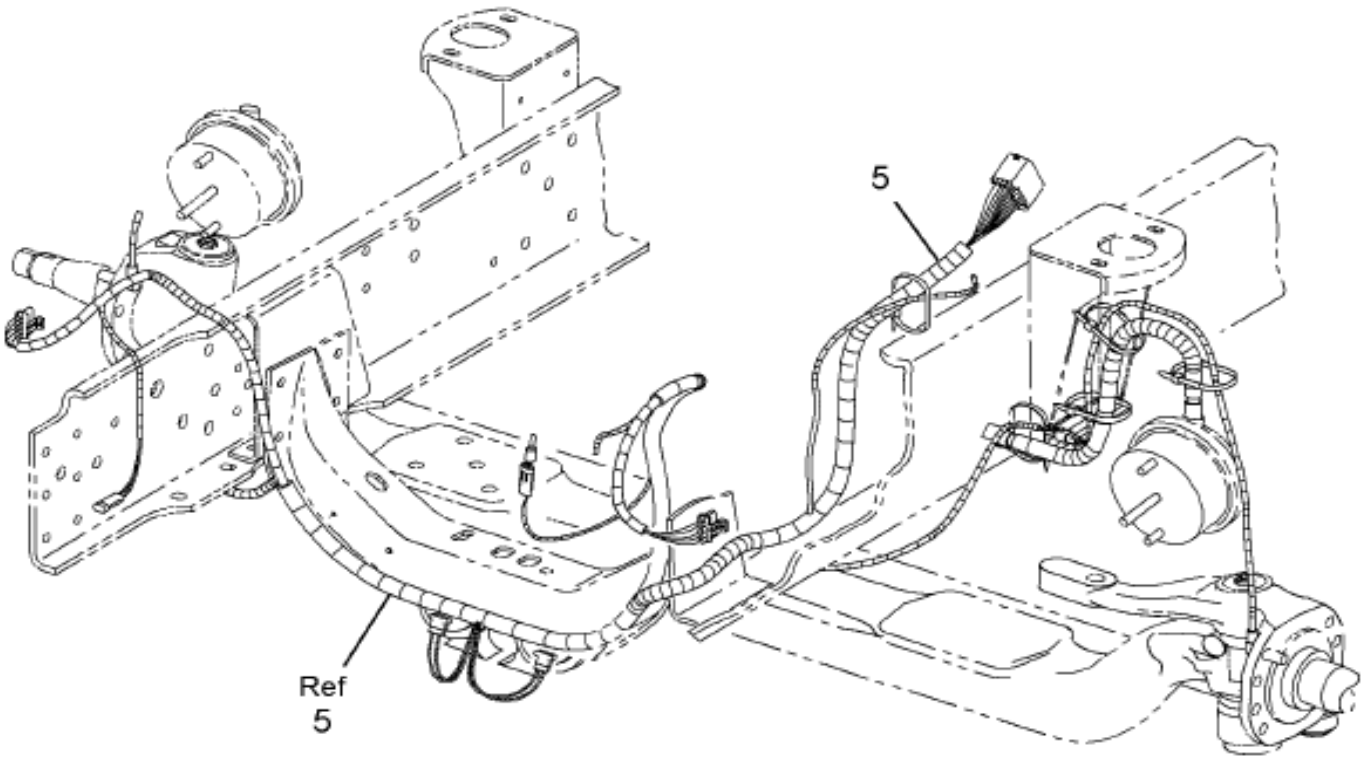

08-E75-0001-B0 L02

Grp 08

Item	Part No.	Qty	Description	Kit	Var	Figure
5	3572236F91	1	ELEC FWD CHAS BASE		0F64Q	3572236F91

COPYRIGHT© 2011INTERNATIONAL TRUCK AND ENGINE CORP.

https://truckmanualshub.com/

Figure 3372236F91
ELEC FWD CHAS BASE

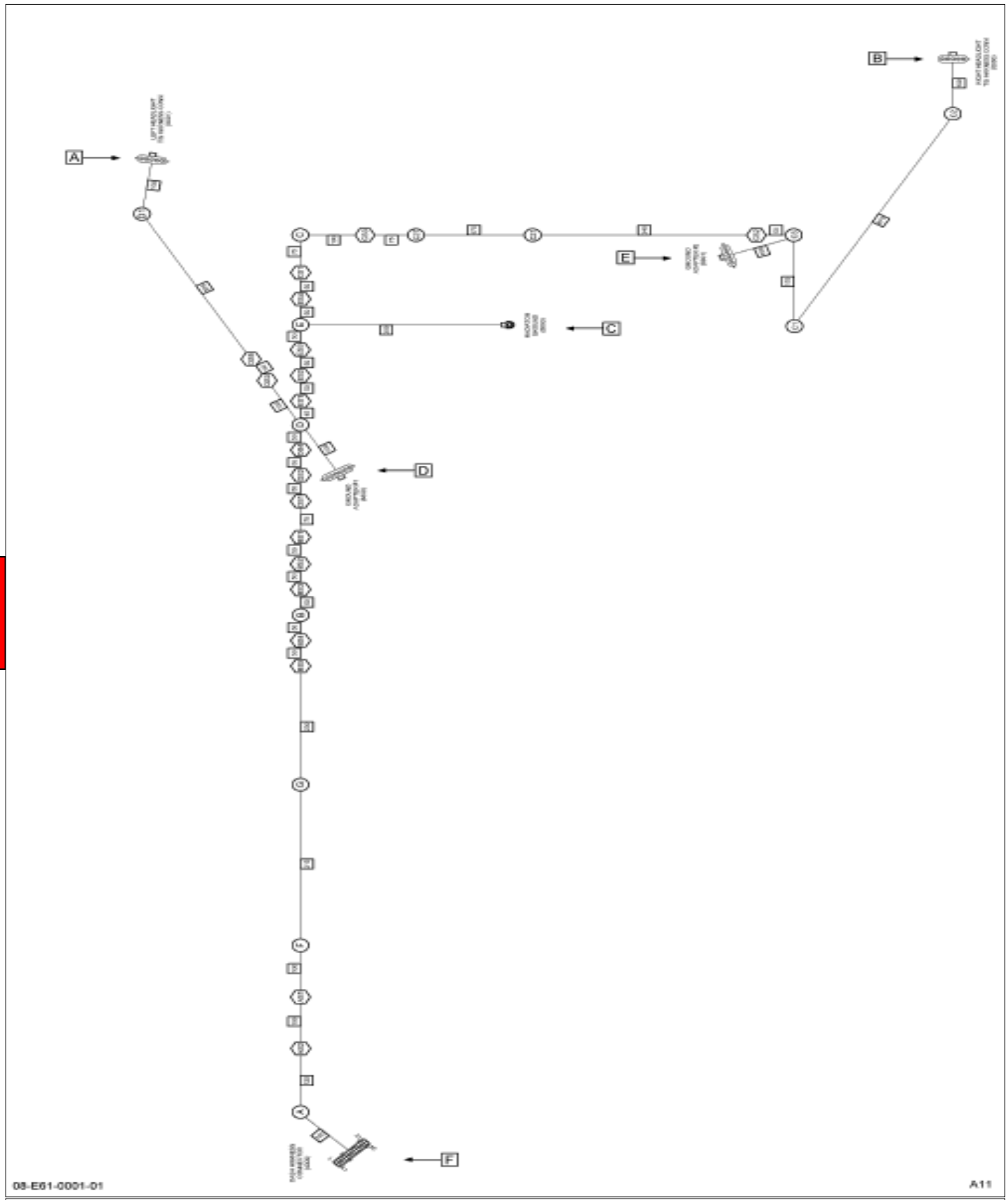

Figure 1 of 3

COPYRIGHT© 2011INTERNATIONAL TRUCK AND ENGINE CORP.

https://truckmanualshub.com/

Figure 3372236F91
ELEC FWD CHAS BASE

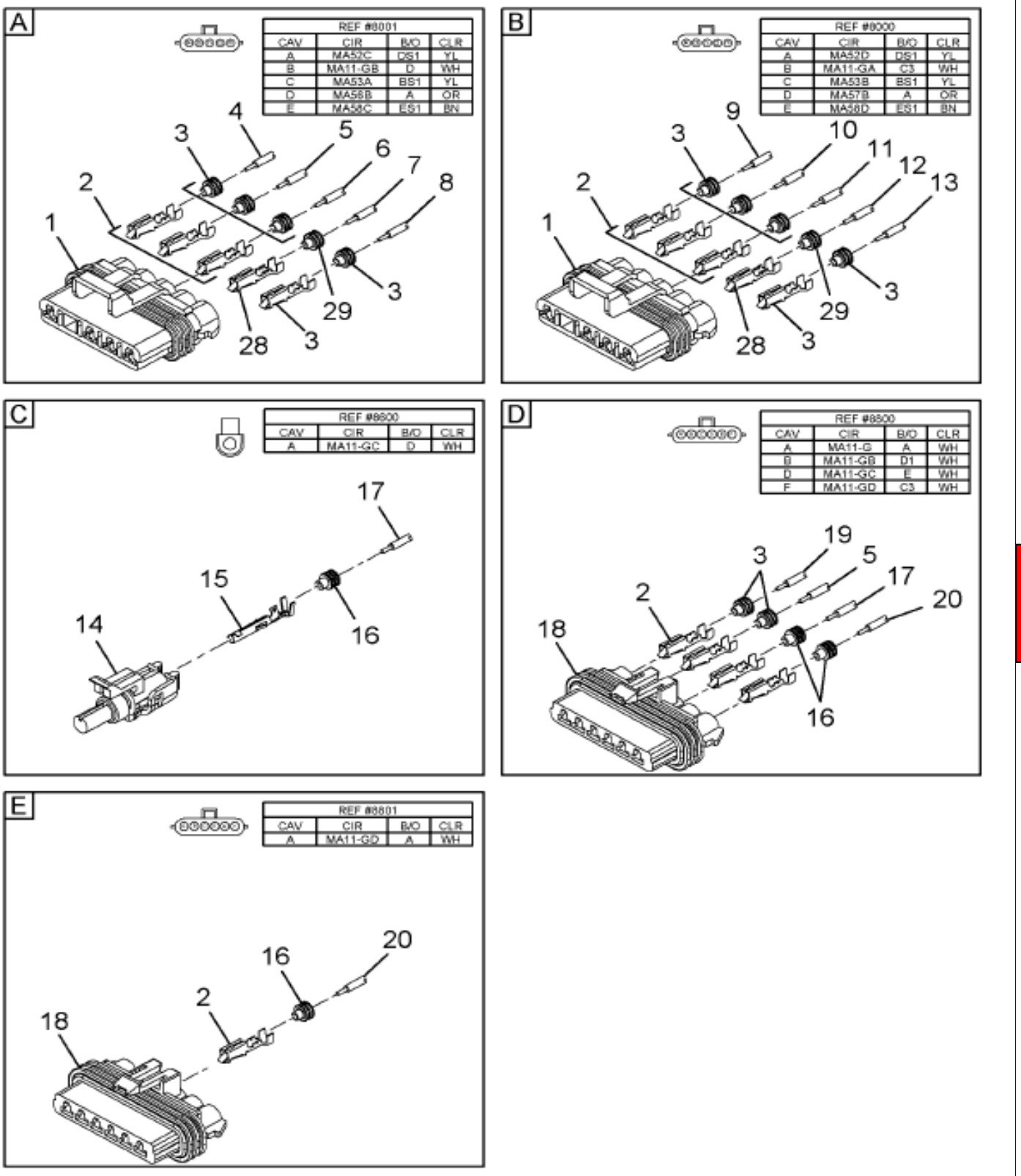

08-E61-0001-02 A11

Grp 08

Figure 2 of 3

COPYRIGHT© 2011INTERNATIONAL TRUCK AND ENGINE CORP.

https://truckmanualshub.com/

Figure 3372236F91
ELEC FWD CHAS BASE

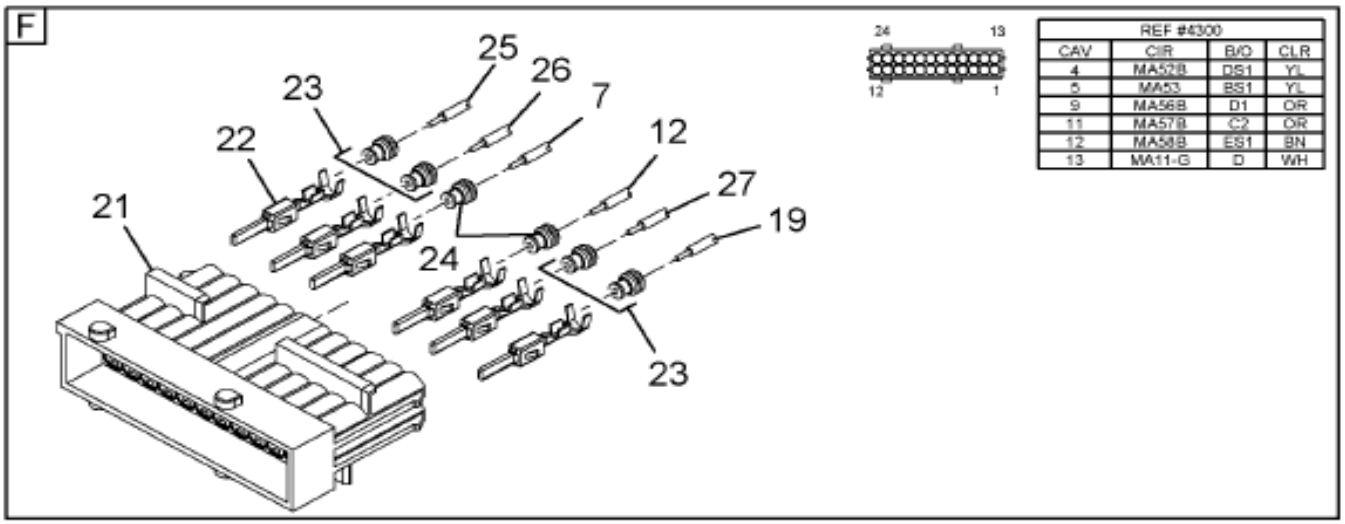

08-E61-0001-03 A11

Item	Part No.	Qty	Description	Kit	Var	Figure
1	1661375C2	2	BODY,CONNECTOR			
2	2033816C1	13	TERMINAL,CABLE (FOR 14 GA ONLY			
3	589391C1	12	PLUG,SEALER, LOOSE PIECE			
4	2643693R1	AR	CABLE LOW TENSION SINGLE COND			
5	2643689R1	AR	CABLE LOW TENSION SINGLE COND			
6	2643693R1	AR	CABLE LOW TENSION SINGLE COND			

COPYRIGHT© 2011INTERNATIONAL TRUCK AND ENGINE CORP.

https://truckmanualshub.com/

Figure 3572236F91

ELEC FWD CHAS BASE

Item	Part No.	Qty	Description	Kit	Var	Figure
7	3510318R1	AR	CABLE,LOW TENSION TXL			
8	2643688R1	AR	CABLE LOW TENSION SINGLE COND			
9	2643693R1	AR	CABLE LOW TENSION SINGLE COND			
10	2643689R1	AR	CABLE LOW TENSION SINGLE COND			
11	2643693R1	AR	CABLE LOW TENSION SINGLE COND			
12	3510318R1	AR	CABLE,LOW TENSION TXL			
13	2643688R1	AR	CABLE LOW TENSION SINGLE COND			
14	587566C91	1	BODY,CONNECTOR			
15	1673747C1	AR	TERMINAL,FEMALE			
16	589390C1	4	PLUG,SEALER LOOSE PIECE			
17	2643787R1	AR	CABLE LOW TENSION 12 GAUGE WHI			
18	3551896C1	2	CONNECTOR,CABLE SEE 19 FOR 4 A			
19	3510362R1	AR	CABLE,LOW TENSION TXL			
20	2643787R1	AR	CABLE LOW TENSION 12 GAUGE WHI			
21	3558022C1	1	CONNECTOR,BODY*AMP JR-PWR-TIME			
22	3559037C1	6	TERMINAL,CABLE*AMP JUNIOR-POWE			
23	3575783C1	4	SEAL,CABLE TERM JR TIMER 12-14			
24	3509903C1	2	SEAL,CABLE TERMINAL			
25	2643693R1	AR	CABLE LOW TENSION SINGLE COND			
26	2643693R1	AR	CABLE LOW TENSION SINGLE COND			
27	2643688R1	AR	CABLE LOW TENSION SINGLE COND			
28	2033819C1	2	TERMINAL,CABLE FOR 16 GA ONLY			
29	1652325C1	2	PLUG,SEALER			
880		RF	NOTE: ASM BELOW COMPRISED OF ABOVE COMPONENTS			
881	3572236F91	RF	ELEC FWD CHAS BASE			

COPYRIGHT© 2011INTERNATIONAL TRUCK AND ENGINE CORP.

https://truckmanualshub.com/

Figure 0W YB2
FWD CHASSIS HARNESS WIRING

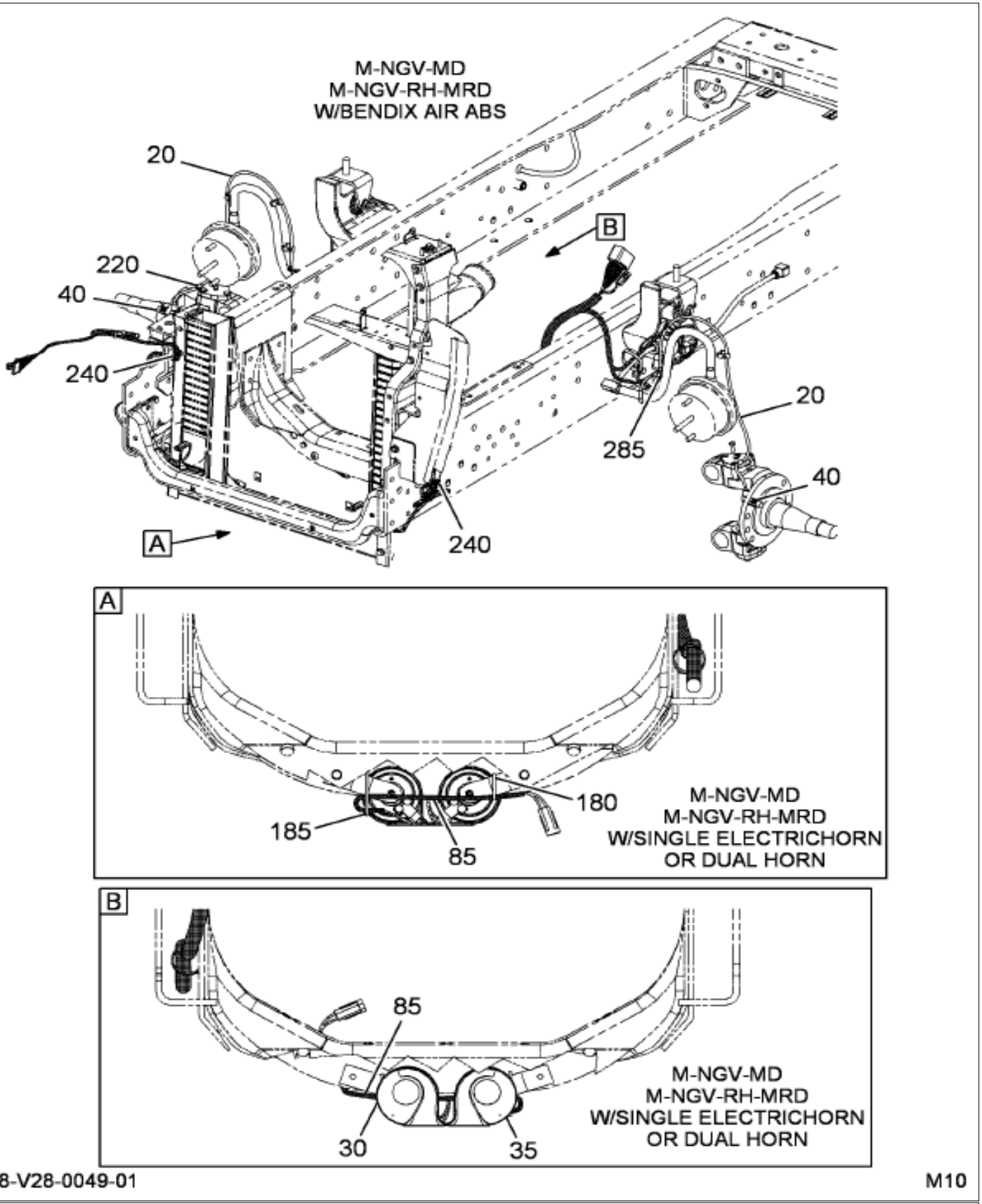

08-V28-0049-01 M10

Figure 1 of 5

COPYRIGHT© 2011INTERNATIONAL TRUCK AND ENGINE CORP.

https://truckmanualshub.com/

Figure 0W YB2
FWD CHASSIS HARNESS WIRING

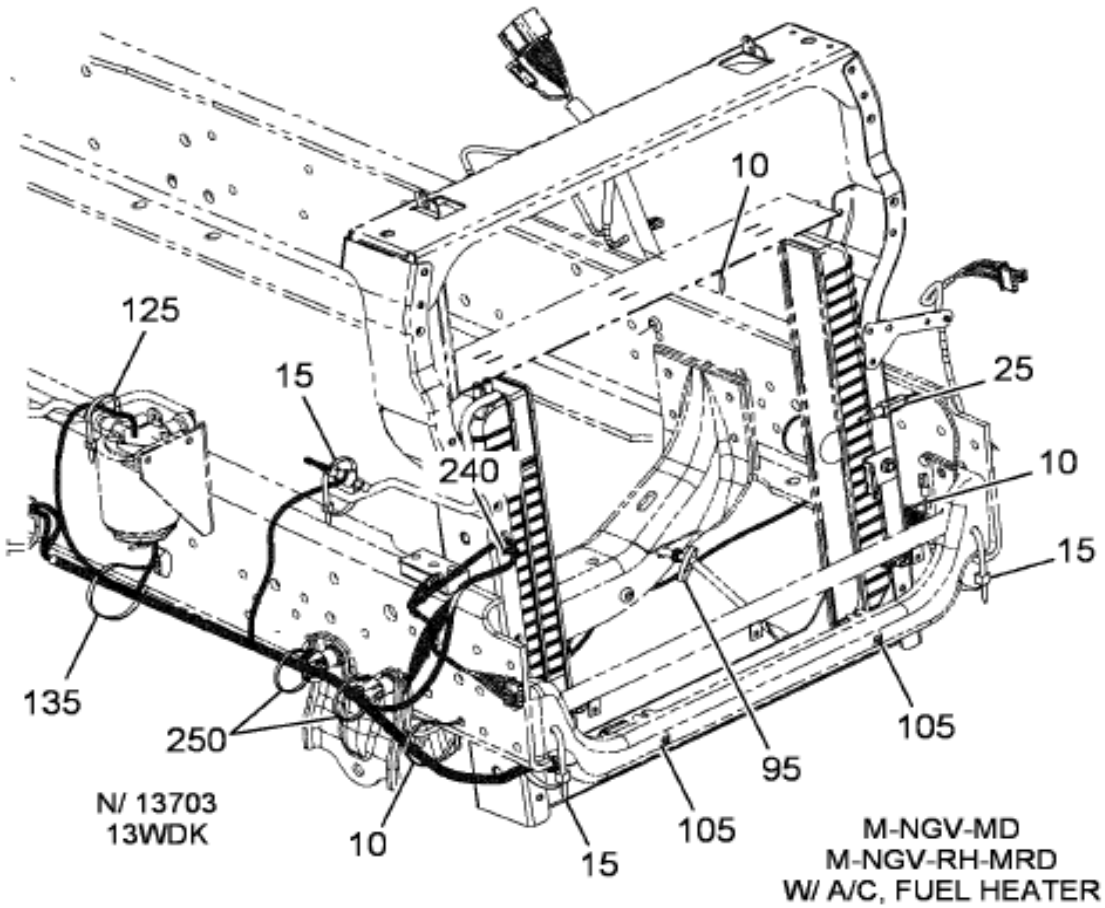

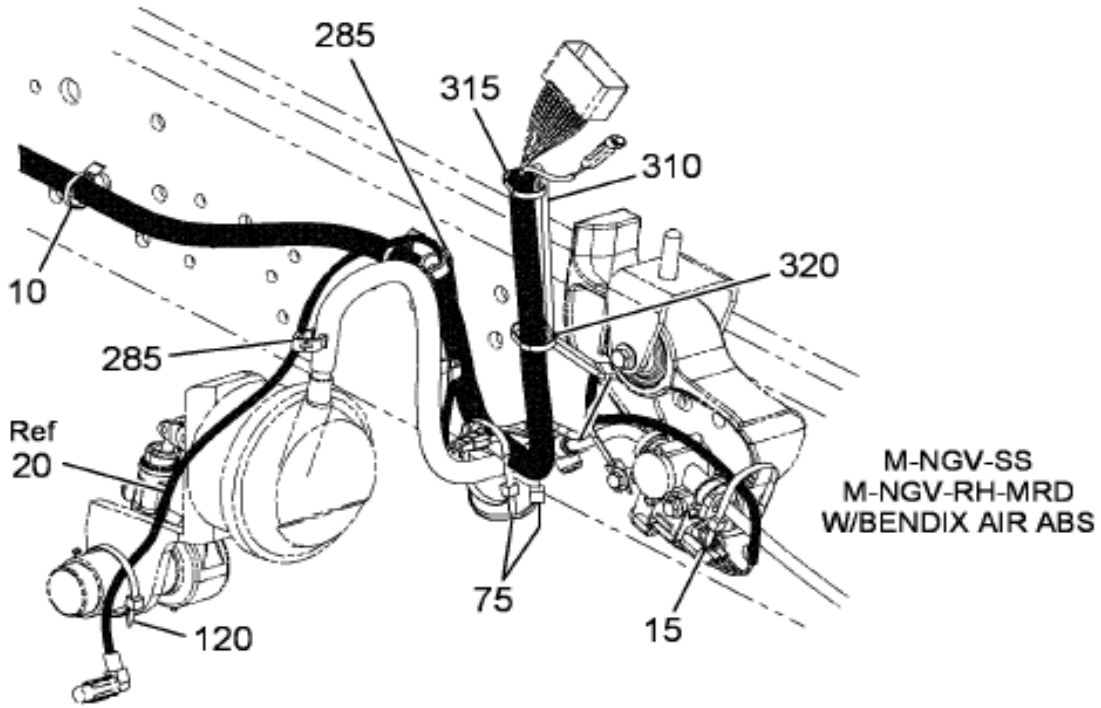

08-V28-0049-02 M10

Grp 08

Figure 2 of 5

COPYRIGHT© 2011INTERNATIONAL TRUCK AND ENGINE CORP.

https://truckmanualshub.com/

Figure 0W YBZ
FWD CHASSIS HARNESS WIRING

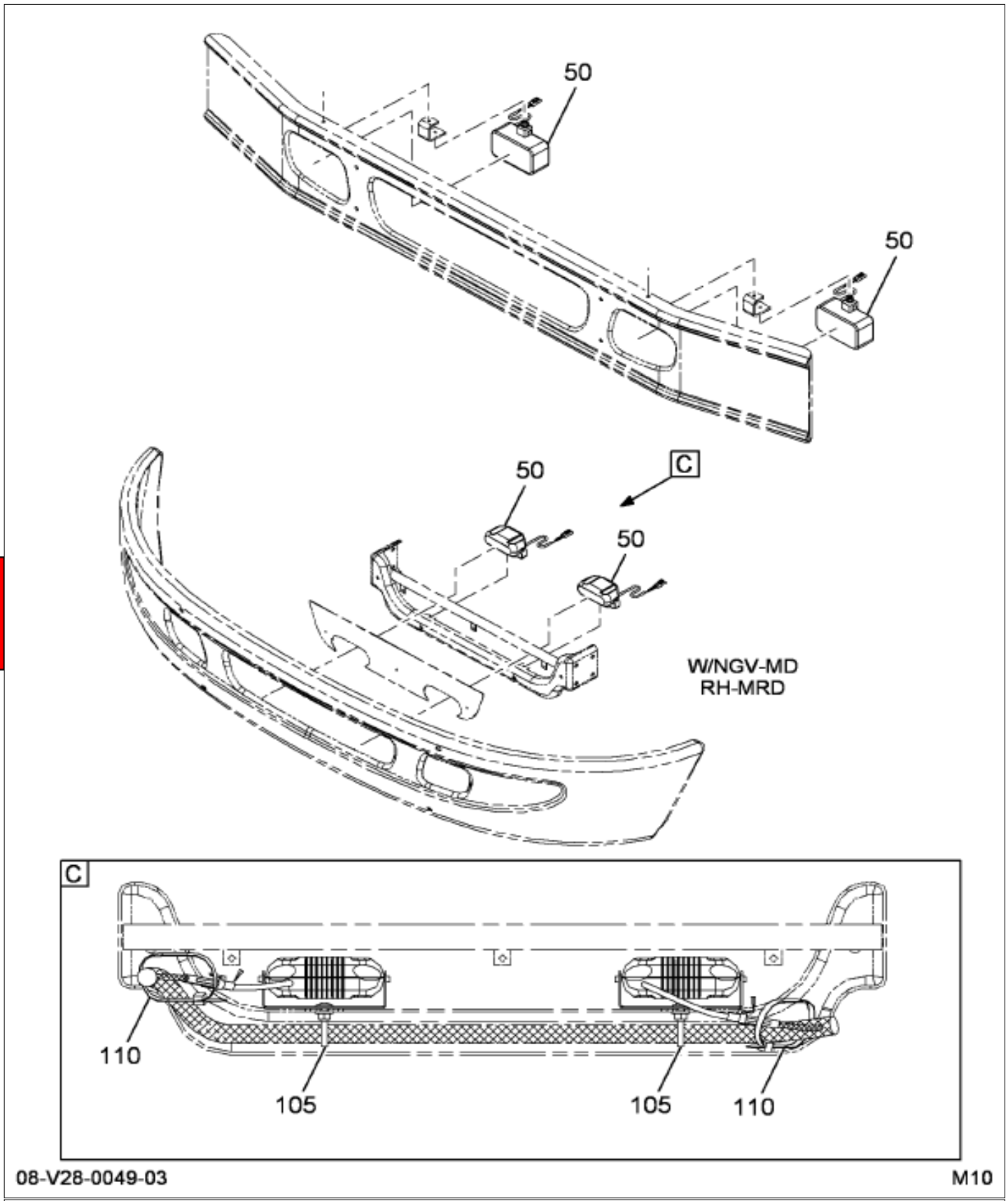

Figure 3 of 5

COPYRIGHT© 2011INTERNATIONAL TRUCK AND ENGINE CORP.

https://truckmanualshub.com/

Figure 0W YBZ
FWD CHASSIS HARNESS WIRING

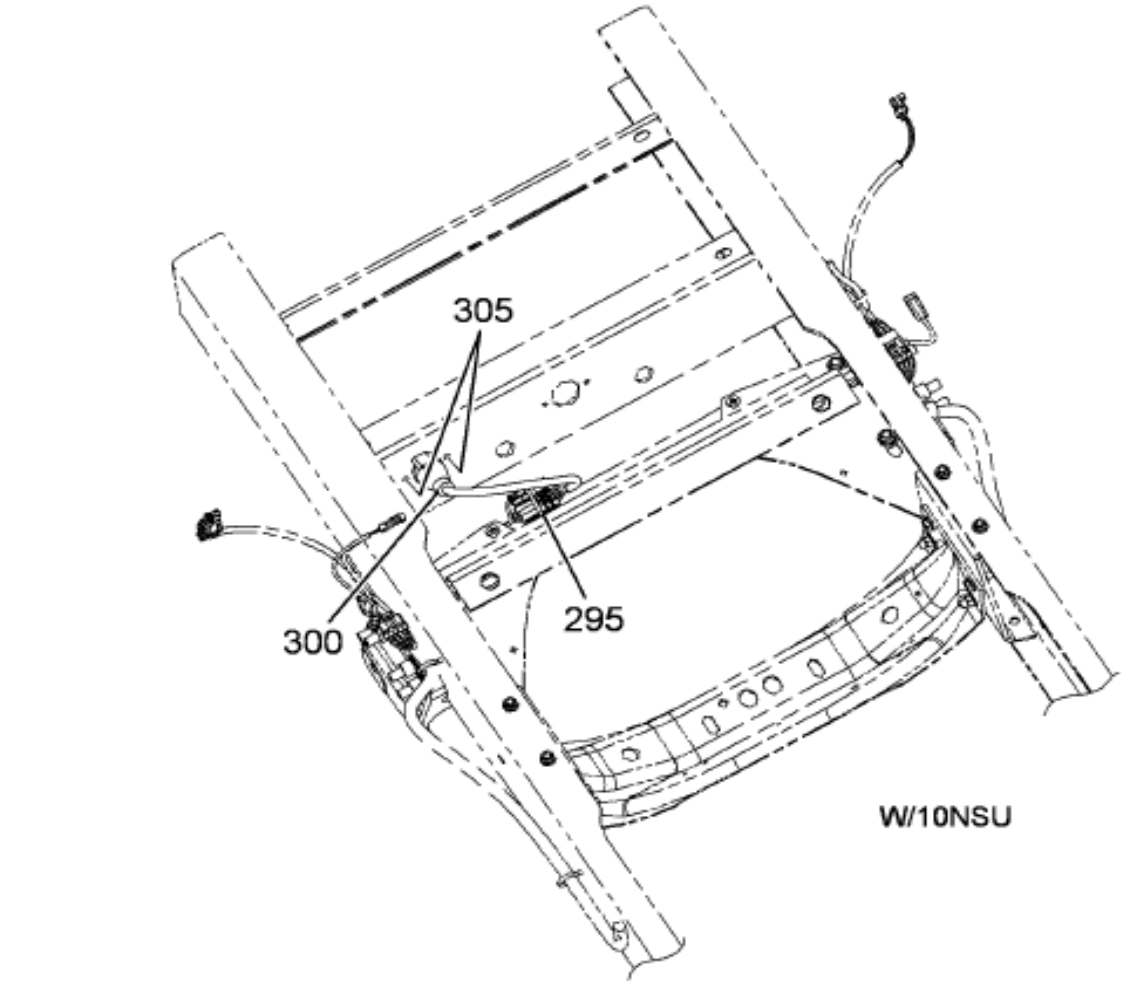

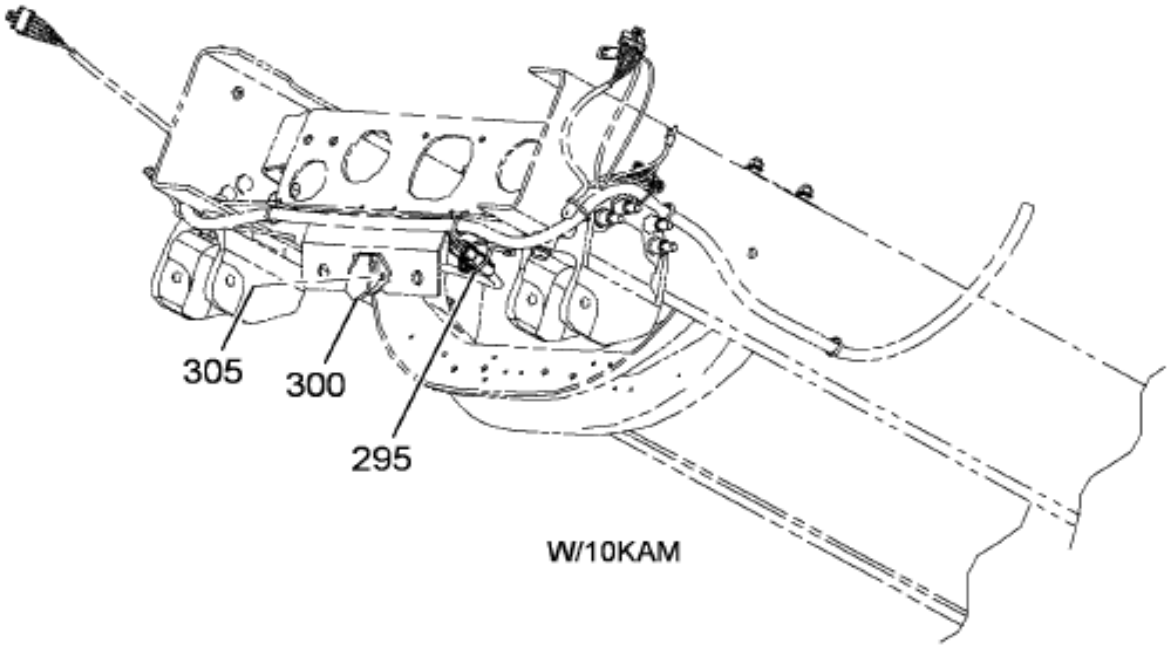

08-V28-0049-04 M10

Grp 08

Figure 4 of 5

COPYRIGHT© 2011INTERNATIONAL TRUCK AND ENGINE CORP.

https://truckmanualshub.com/

Figure 0WYBZ

FWD CHASSIS HARNESS WIRING

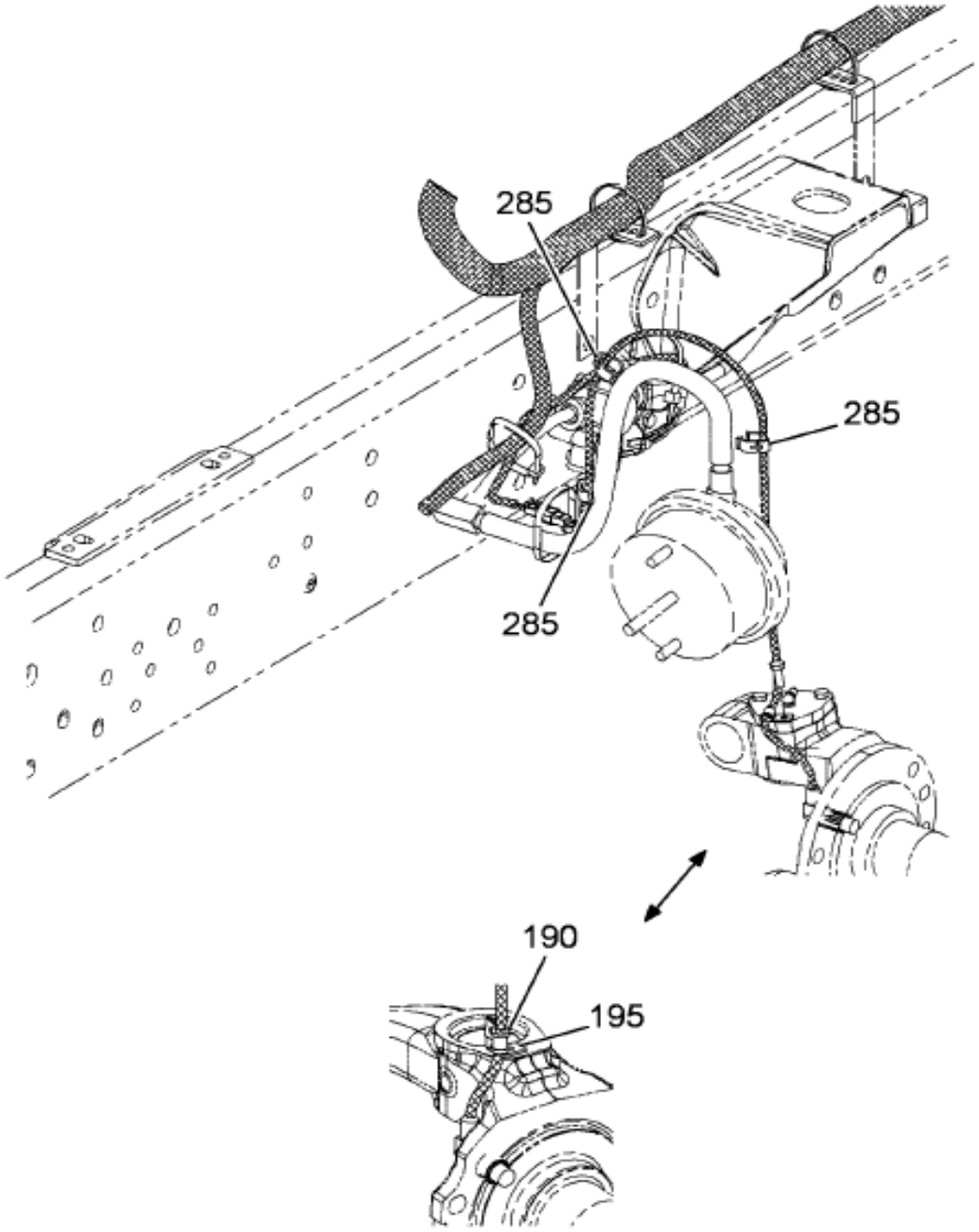

M-JVCC
M-F6/750-EPA07
W/04AZA OR 04AZJ

08-V28-0049-05 M10

Item	Part No.	Qty	Description	Kit	Var	Figure
10	3544557C1	4	STRAP,CABLE LOCK*382MM BUTTON		0WYBZ	
10	3536111C1	4	GUIDE,BRK HOSE & CABLE*GUIDE S		0WYBZ	
15	289862C1	1	STRAP,CABLE LOCK		0WYCK	
30	3523179C92	1	HORN,ELECT W/BRKTS LO-NOTE		0WYFG	
30	25493R1	1	BOLT HH 5/16X1 PHC TYP 8		0WYFG	
30	120214	1	WASHER,LOCK 5/16,REG,STL/ZNC		0WYFG	

COPYRIGHT© 2011INTERNATIONAL TRUCK AND ENGINE CORP.

https://truckmanualshub.com/

Figure 0WYBZ

FWD CHASSIS HARNESS WIRING

Item	Part No.	Qty	Description	Kit	Var	Figure
35	3558466C92	1	HORN,ELECT W/BRKTS HI-NOTE		0WYFG	
35	25493R1	1	BOLT HH 5/16X1 PHC TYP 8		0WYFG	
35	120214	1	WASHER,LOCK 5/16,REG,STL/ZNC		0WYFG	
95	291207C1	2	STRAP,CABLE LOCK		0WYBZ	
95	306132C1	4	STRAP,CABLE LOCK		0WYBZ	
95	306132C1	4	STRAP,CABLE LOCK		0WYDG	
105	3544557C1	2	STRAP,CABLE LOCK*382MM BUTTON		0WYBZ	
240	3560710C91	2	STRAP,CABLE LOCK*HELLERMAN TYT		0WYBZ	
250	3691109C1	4	GUIDE,BRK HOSE & CABLE		0WYBZ	
250	306132C1	4	STRAP,CABLE LOCK		0WYBZ	
310	3807853C1	1	EXTENSION,, CLIP		0WYDG	
310	3561048C1	1	BOLT,HH FLG HD M8 X 30 METRIC		0WYDG	
310	3544379C1	1	NUT,HEX FLG M8 METRIC		0WYDG	
315	3544557C1	1	STRAP,CABLE LOCK*382MM BUTTON		0WYDG	
320	306132C1	1	STRAP,CABLE LOCK		0WYDG	

COPYRIGHT© 2011INTERNATIONAL TRUCK AND ENGINE CORP.

https://truckmanualshub.com/

Figure 0CSC2

HARNESS ASM, DASH; AIR DRYER WIRING

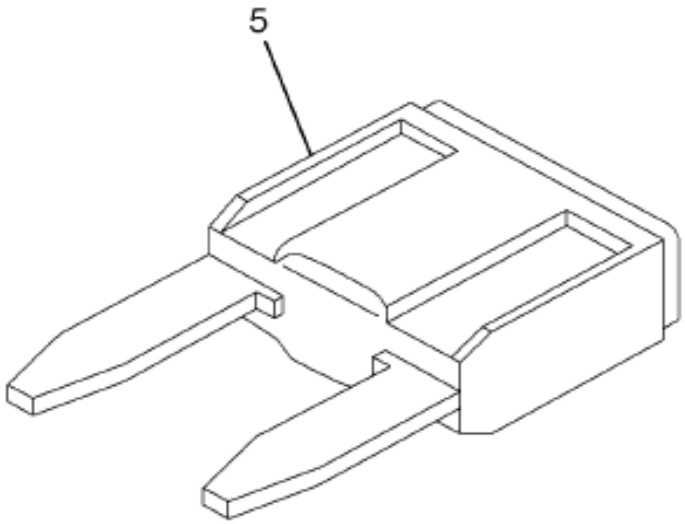

08-P58-0147-01 B09

Item	Part No.	Qty	Description	Kit	Var	Figure
5	3544510F92	1	HARNESS,DASH ELEC; AIR		0CT0L	3544510F92

COPYRIGHT© 2011INTERNATIONAL TRUCK AND ENGINE CORP.

https://truckmanualshub.com/

Figure 3544510F92
HARNESS,DASH ELEC; AIR

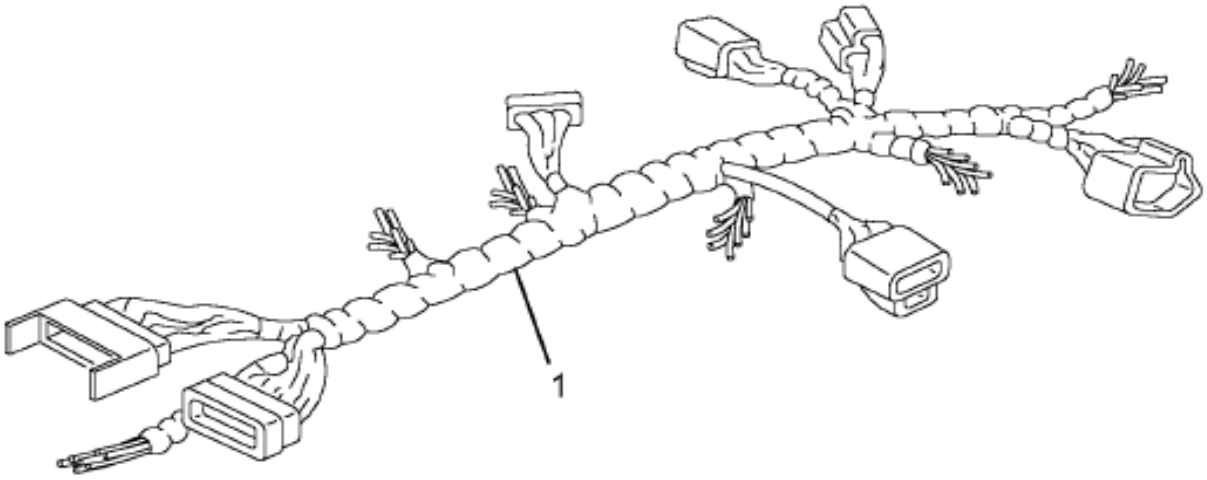

08-P58-0006-01 C03

Item	Part No.	Qty	Description	Kit	Var	Figure
1	3545551C92	1	HARNESS,ELEC; AIR DRYER			3545551C92
1	3534211C1	1	FUSE,*FUSE, 20AMP MINI			
880		RF	NOTE: ASM BELOW COMPRISED OF ABOVE COMPONENTS			
881	3544510F92	RF	HARNESS,DASH ELEC; AIR			

COPYRIGHT© 2011INTERNATIONAL TRUCK AND ENGINE CORP.

https://truckmanualshub.com/

Figure 3343331C92

HARNESS,ELEC; AIR DRYER

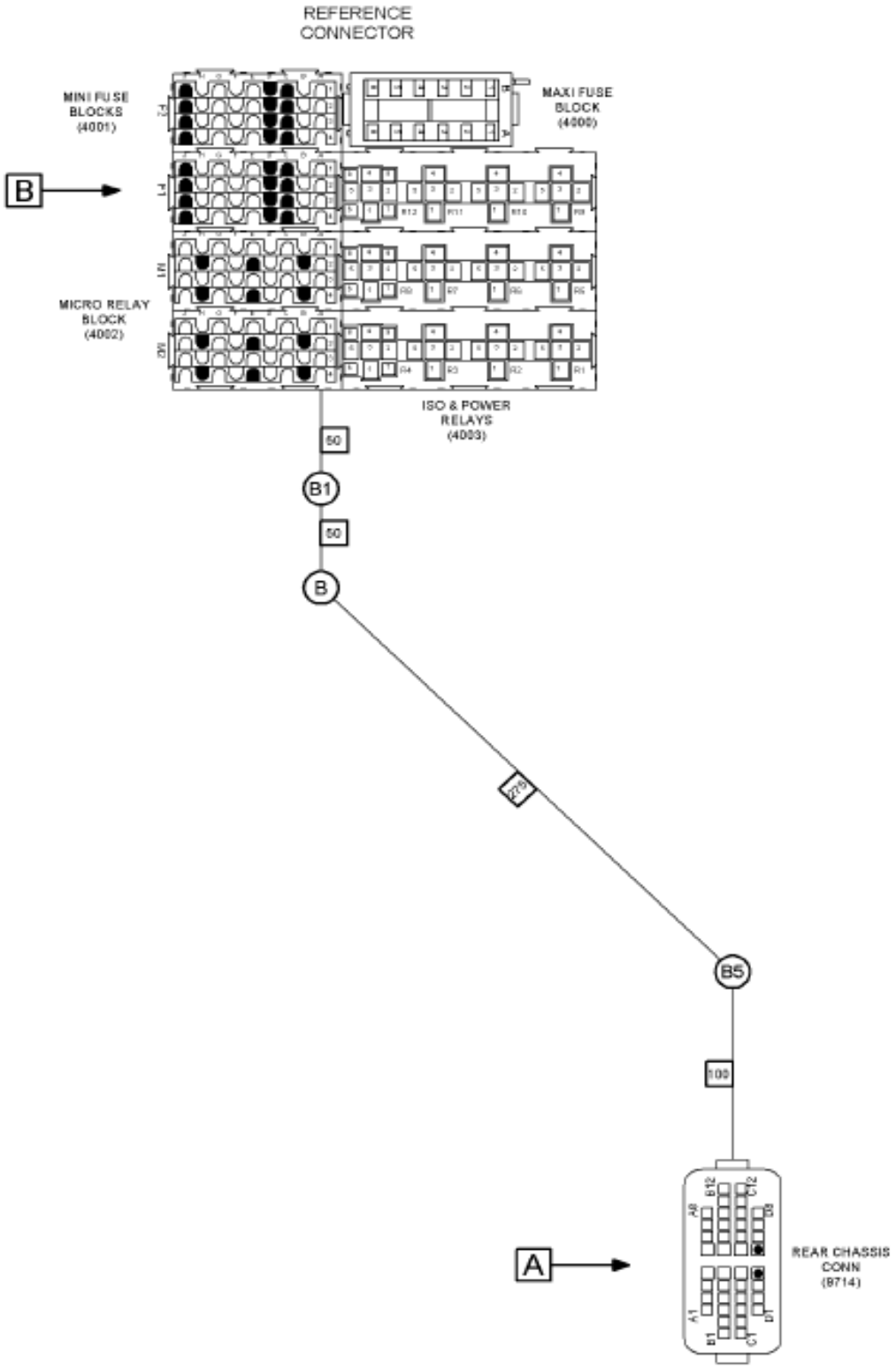

08-D14-0001-01 F10

Figure 1 of 2

COPYRIGHT© 2011INTERNATIONAL TRUCK AND ENGINE CORP.

https://truckmanualshub.com/

Figure 3545531C92

HARNESS,ELEC; AIR DRYER

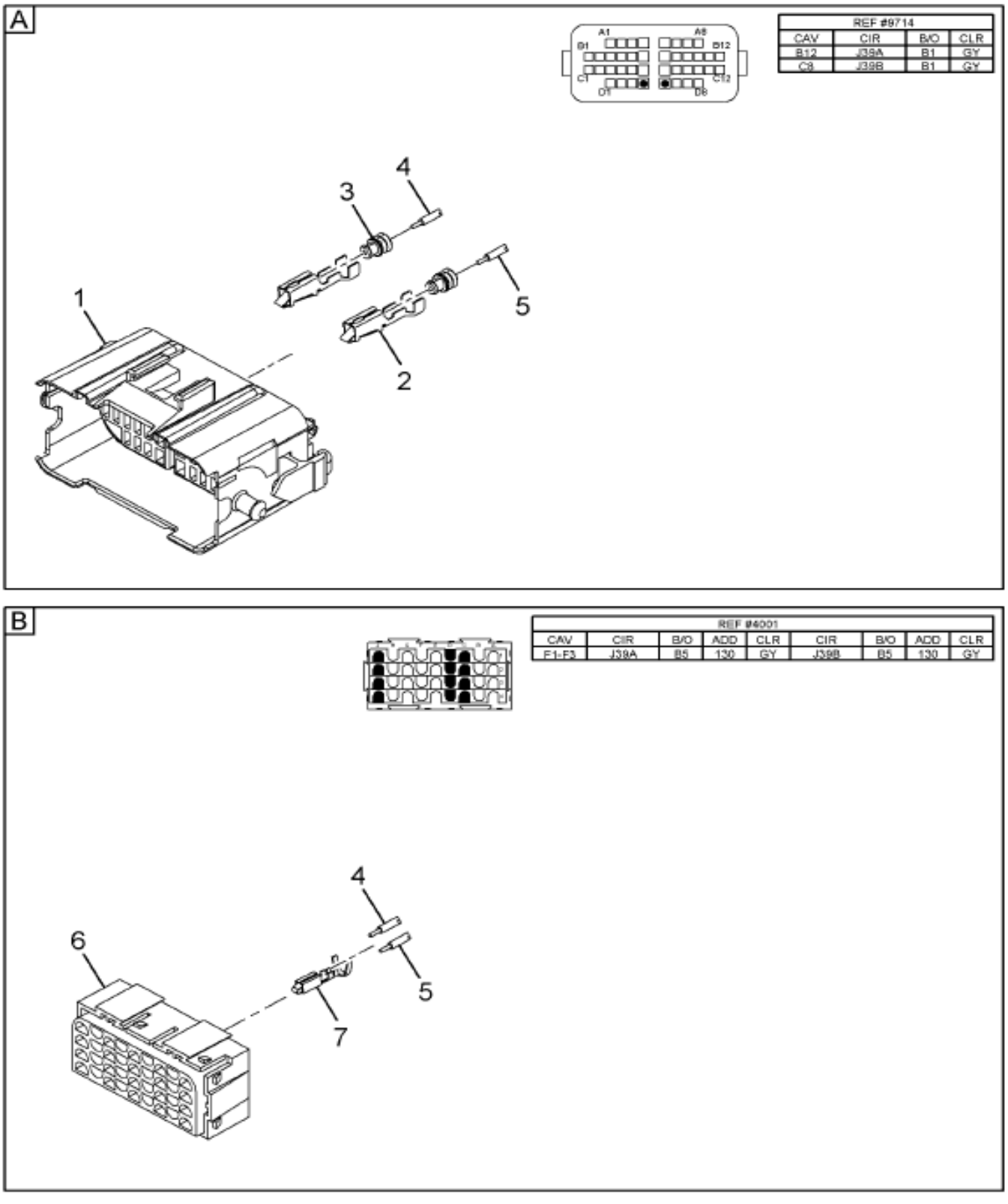

08-D14-0001-02 F10

Item	Part No.	Qty	Description	Kit	Var	Figure
1	3535306C1	1	CONNECTOR BODY 38-WAY FEMALE G			
2	3535303C1	2	TERMINAL,CABLE*CONN TERMINAL			
3	3535424C1	2	PLUG,SEALING*CABLE TERMINAL SE			
4	3510312R1	AR	CABLE,LOW TENSION TXL			
5	3510312R1	AR	CABLE,LOW TENSION TXL			
6	3545599C91	1	CONNECTOR,BODY*FUSE/CIRCUIT BR			

COPYRIGHT© 2011INTERNATIONAL TRUCK AND ENGINE CORP.

https://truckmanualshub.com/

Figure 3545551C92

HARNESS,ELEC; AIR DRYER

Item	Part No.	Qty	Description	Kit	Var	Figure
7	3536295C1	1	TERMINAL,CABLE*280 SERIES TNGL			
880		RF	NOTE: ASM BELOW COMPRISED OF ABOVE COMPONENTS			
881	3545551C92	RF	HARNESS,ELEC; AIR DRYER			

COPYRIGHT© 2011INTERNATIONAL TRUCK AND ENGINE CORP.

https://truckmanualshub.com/

Figure 0CSBR

HARNESS ASM, DASH; DIFF LOCK SENDER WIRING

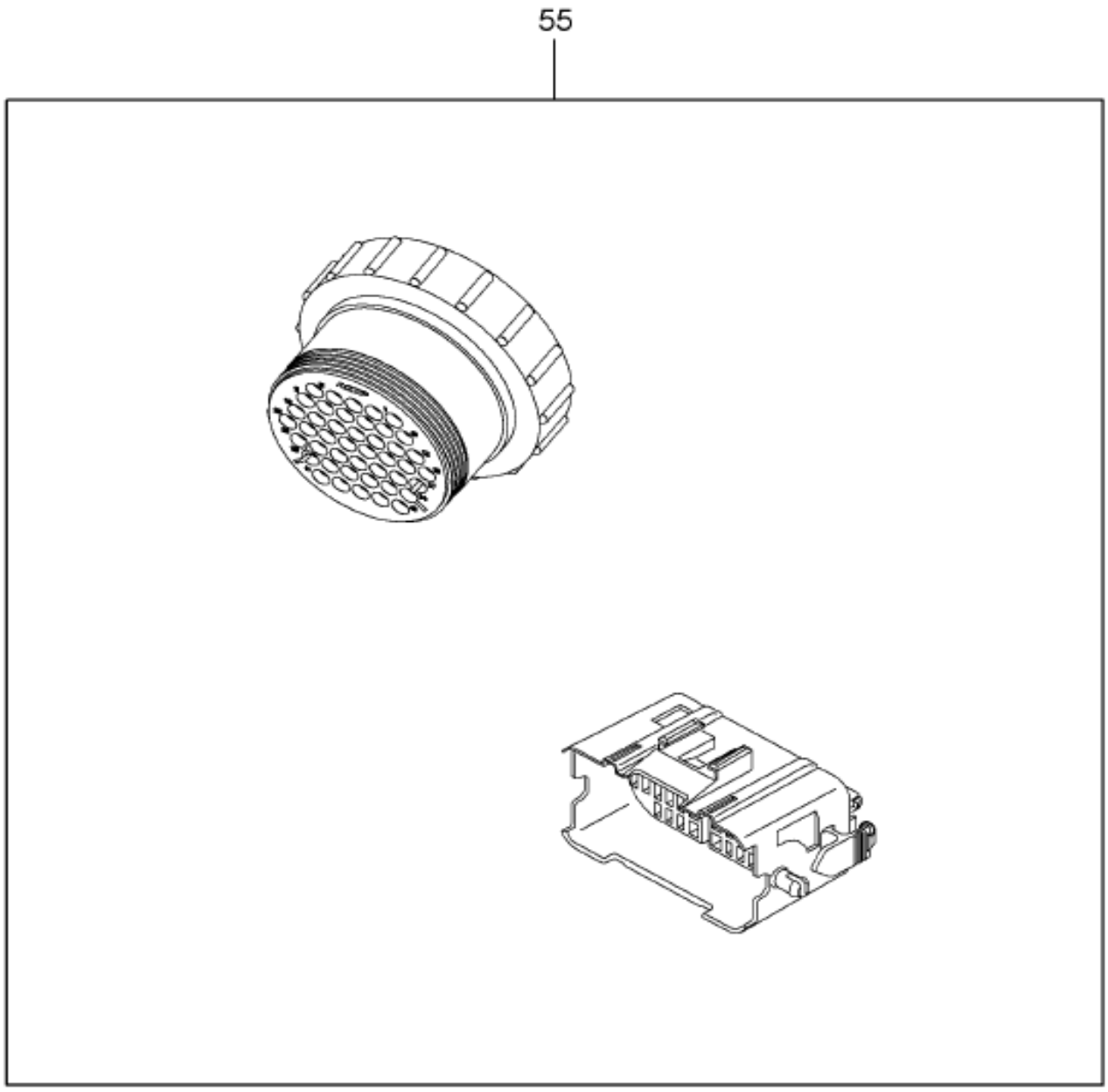

Item	Part No.	Qty	Description	Kit	Var	Figure
55	3603982F91	1	HARN,DASH,DIFF LOCK SNDR TANDM		0M7B6	3603982F91
			NON-ILLUSTRATED REFERENCE FIGURE 3603982F91			
1	3603981C91	1	HARNESS,DIFF LOCK SENDER SINGL			
2	3603984C91	1	HARN,DASH,2ND DIFF LOCK SENDER			
880		RF	NOTE: ASM BELOW COMPRISED OF ABOVE			

COPYRIGHT© 2011INTERNATIONAL TRUCK AND ENGINE CORP.

https://truckmanualshub.com/

Figure 0CSBR

HARNESS ASM, DASH; DIFF LOCK SENDER WIRING

Item	Part No.	Qty	Description	Kit	Var	Figure
			COMPONENTS			
881	3603982F91	RF	HARN,DASH,DIFF LOCK SNDR TANDM			

COPYRIGHT© 2011INTERNATIONAL TRUCK AND ENGINE CORP.

https://truckmanualshub.com/

Figure 0CSBW

HARNESS ASM, DASH; SOLENOID 7 PACK WIRING

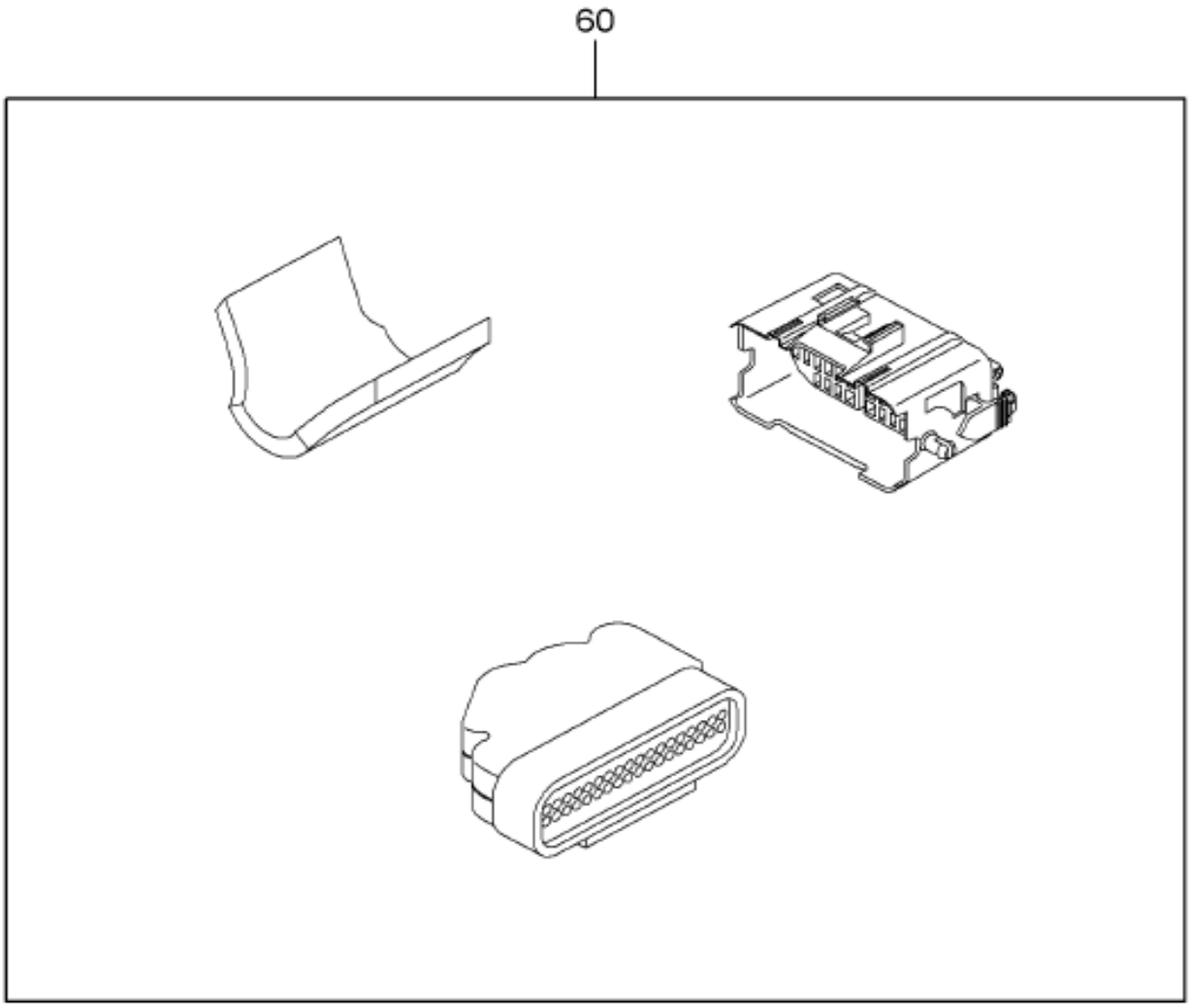

08-D12-0001-01 B09

Item	Part No.	Qty	Description	Kit	Var	Figure
60	3544506F92	1	HARNESS,DASH ELEC; AIR		0CT0F	3544506F92

COPYRIGHT© 2011INTERNATIONAL TRUCK AND ENGINE CORP.

https://truckmanualshub.com/

Figure 3544506F92
HARNESS,DASH ELEC; AIR

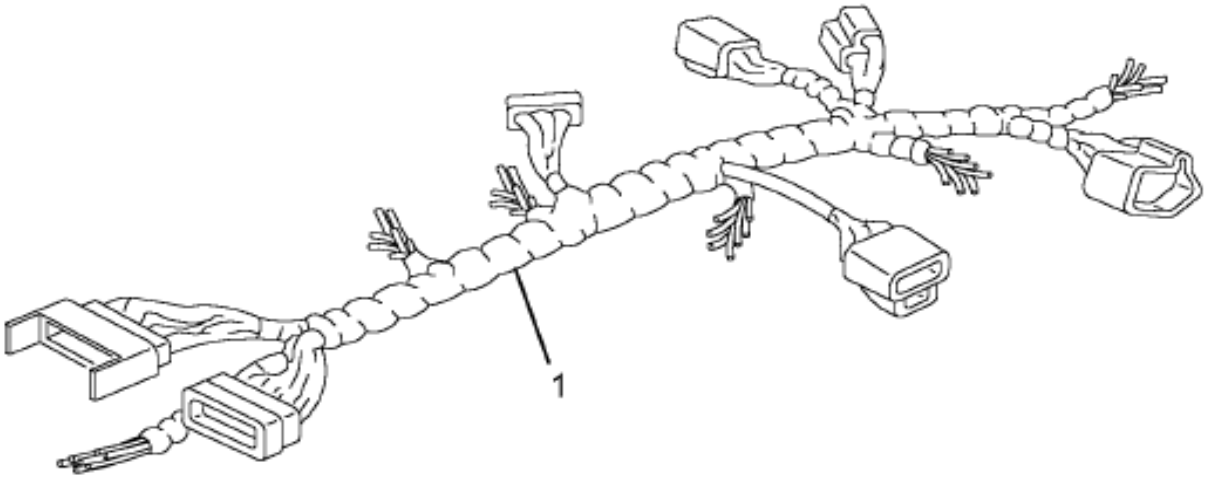

08-P58-0006-01 C03

Item	Part No.	Qty	Description	Kit	Var	Figure
1	3545549C92	1	HARNESS,ELEC; SOLENOID 4 PK			3545549C92
880		RF	NOTE: ASM BELOW COMPRISED OF ABOVE COMPONENTS			
881	3544506F92	RF	HARNESS,DASH ELEC; AIR			

COPYRIGHT© 2011INTERNATIONAL TRUCK AND ENGINE CORP.

https://truckmanualshub.com/

Figure 3343549C92

HARNESS,ELEC; SOLENOID 4 PK

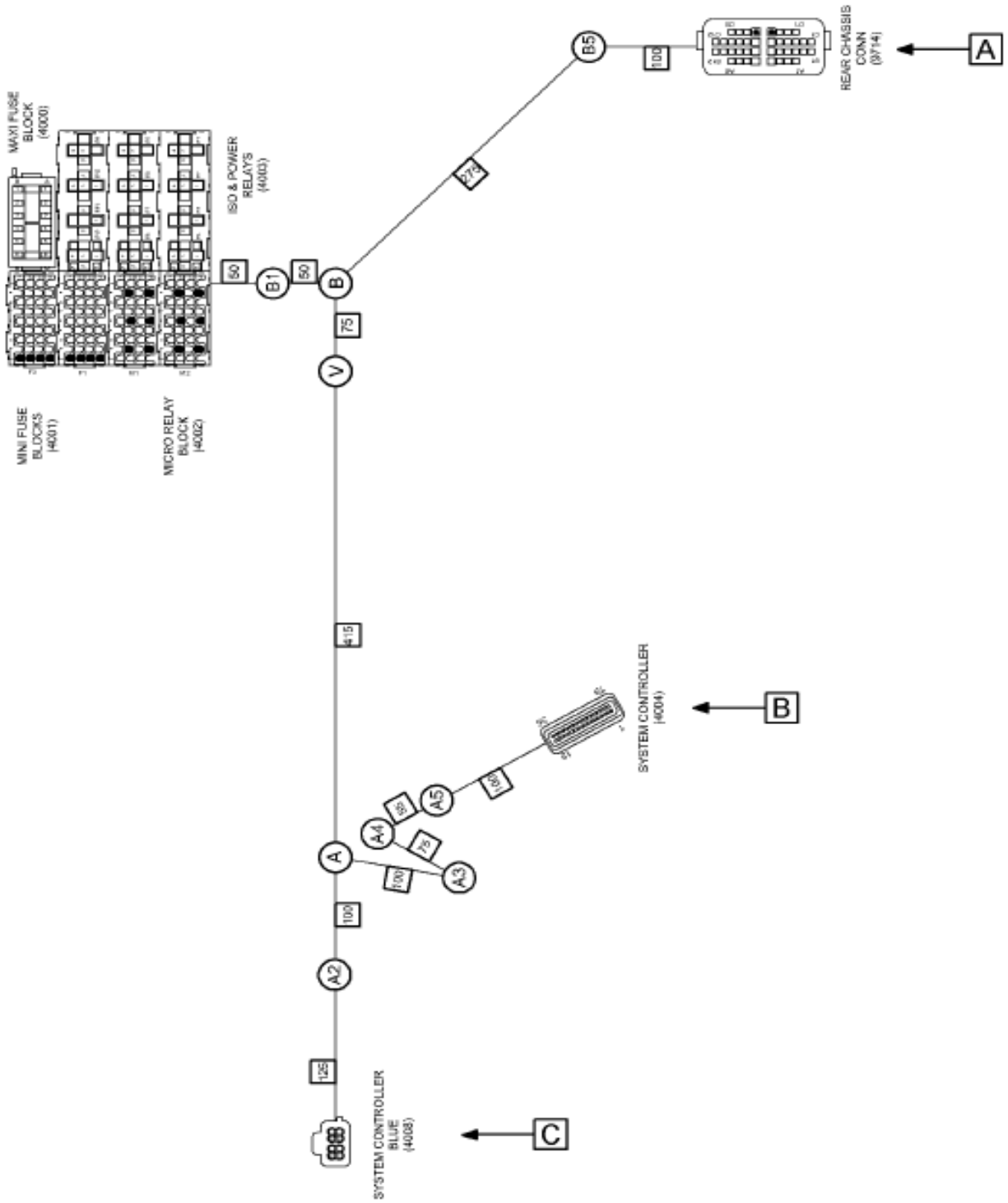

Grp 08

Figure 1 of 2

COPYRIGHT© 2011INTERNATIONAL TRUCK AND ENGINE CORP.

https://truckmanualshub.com/

Figure 3343549C92

HARNESS,ELEC; SOLENOID 4 PK

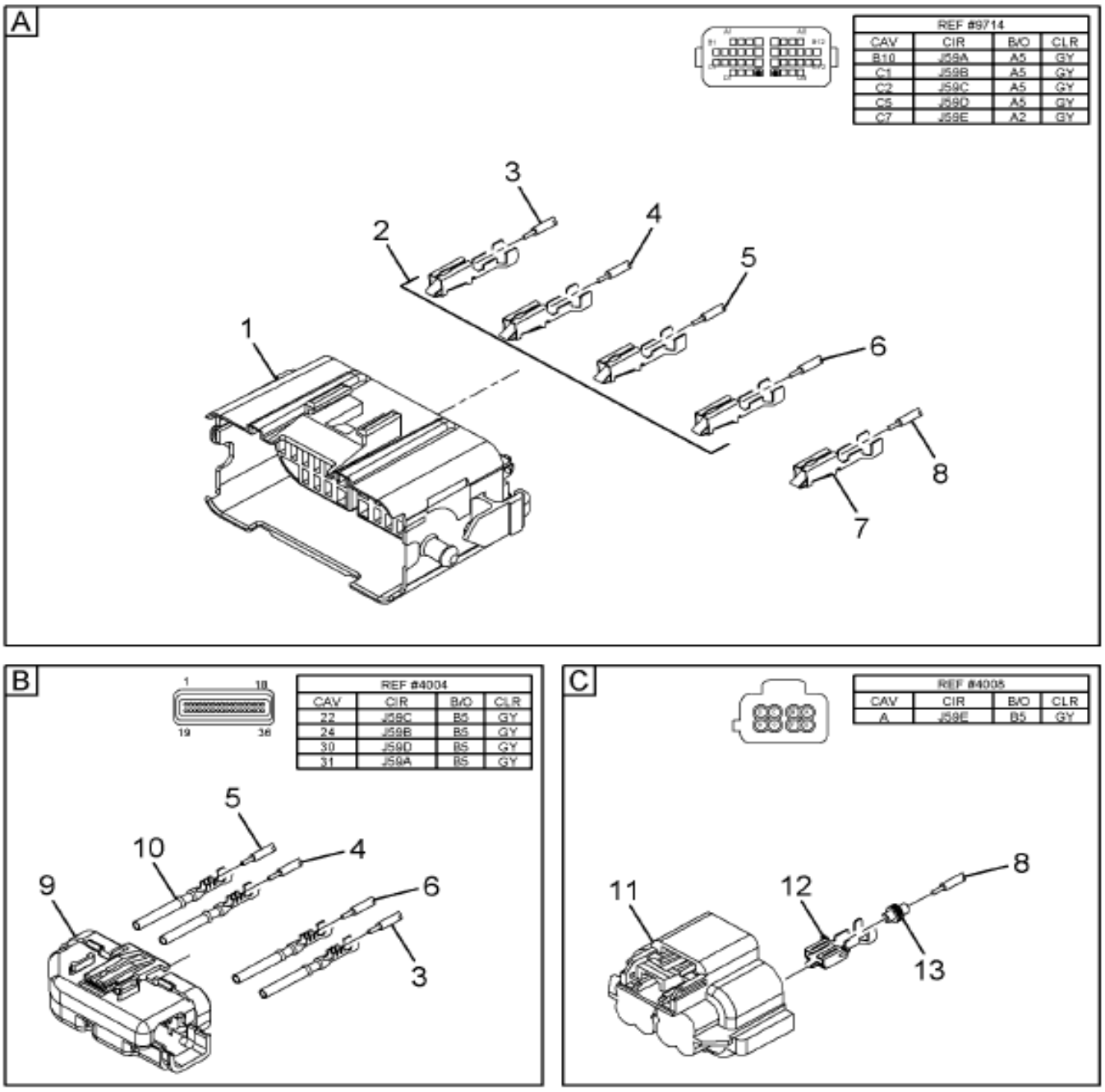

08-D12-0002-02 F10

Item	Part No.	Qty	Description	Kit	Var	Figure
1	3535306C1	1	CONNECTOR BODY 38-WAY FEMALE G			
2	3535303C1	4	TERMINAL,CABLE*CONN TERMINAL			
3	3510311R1	AR	CABLE,LOW TENSION TXL			
4	3510311R1	AR	CABLE,LOW TENSION TXL			
5	3510311R1	AR	CABLE,LOW TENSION TXL			
6	3510311R1	AR	CABLE,LOW TENSION TXL			

COPYRIGHT© 2011INTERNATIONAL TRUCK AND ENGINE CORP.

https://truckmanualshub.com/

Figure 3545549C92

HARNESS,ELEC; SOLENOID 4 PK

Item	Part No.	Qty	Description	Kit	Var	Figure
7	3535937C1	1	SEAL,CABLE TERMINAL*GT 280 SER			
8	2643782R1	AR	CABLE LOW TENSION 14 GAUGE GRA			
9	3533832C1	1	CONNECTOR,BODY*CNTR STRAIN REL			
10	3517243C1	4	TERMINAL,CABLE			
11	3548933C1	1	CONNECTOR,BODY*8 WAY BLUE PACK			
12	3535931C1	1	TERMINAL,CABLE*GT 280 SERIES 5			
13	3535937C1	1	SEAL,CABLE TERMINAL*GT 280 SER			
880		RF	NOTE: ASM BELOW COMPRISED OF ABOVE COMPONENTS			
881	3545549C92	RF	HARNESS,ELEC; SOLENOID 4 PK			

Grp 08

COPYRIGHT© 2011INTERNATIONAL TRUCK AND ENGINE CORP.

https://truckmanualshub.com/

Figure 01C58

HARNESS, CENTER CHASSIS; AIR DRYER WIRING (ABR #9)

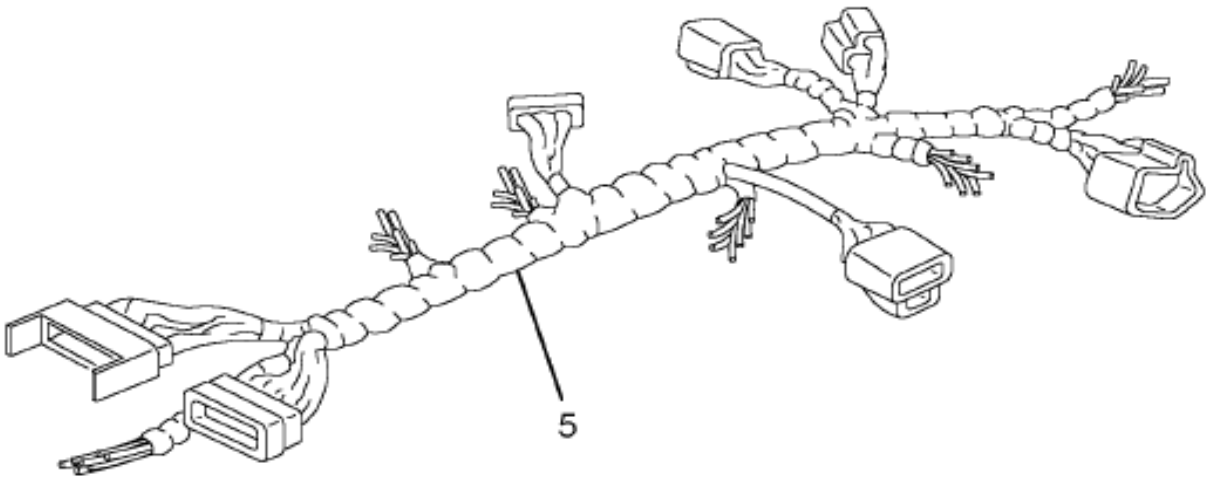

08-D01-0004-01 E04

Item	Part No.	Qty	Description	Kit	Var	Figure
5	3553993F91	1	ELEC CTR CHAS, L AIR DR		0QF9K	3553993F91

COPYRIGHT© 2011INTERNATIONAL TRUCK AND ENGINE CORP.

https://truckmanualshub.com/

Figure 3553993F91
ELEC CTR CHAS, L AIR DR

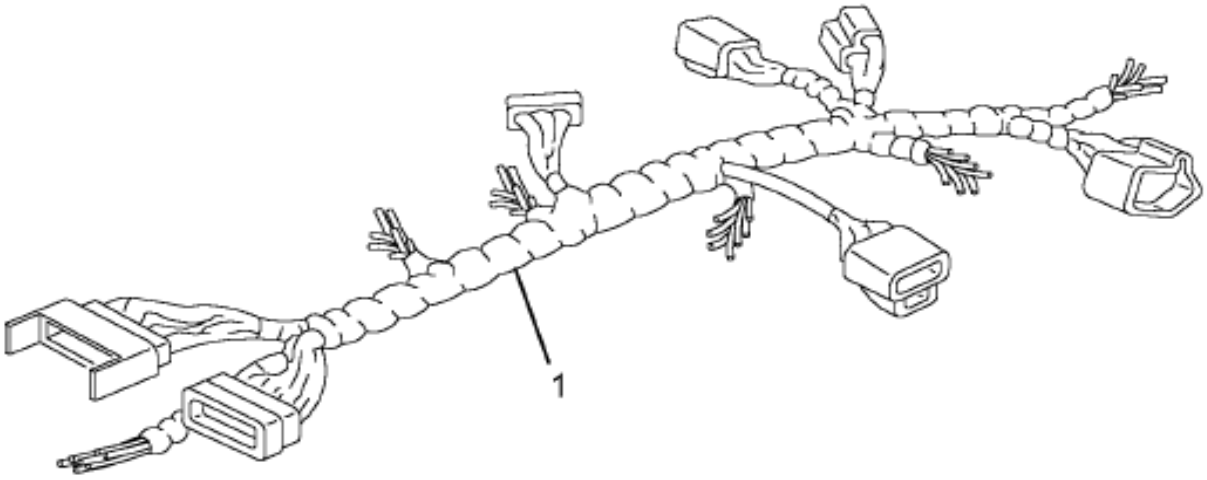

08-P58-0006-01 C03

Item	Part No.	Qty	Description	Kit	Var	Figure
1	3554060C91	1	HARNESS,ELEC; AIR DRYER			3554060C91
880		RF	NOTE: ASM BELOW COMPRISED OF ABOVE COMPONENTS			
881	3553993F91	RF	ELEC CTR CHAS, L AIR DR			

COPYRIGHT© 2011INTERNATIONAL TRUCK AND ENGINE CORP.

https://truckmanualshub.com/

Figure 3334060C91
HARNESS,ELEC; AIR DRYER

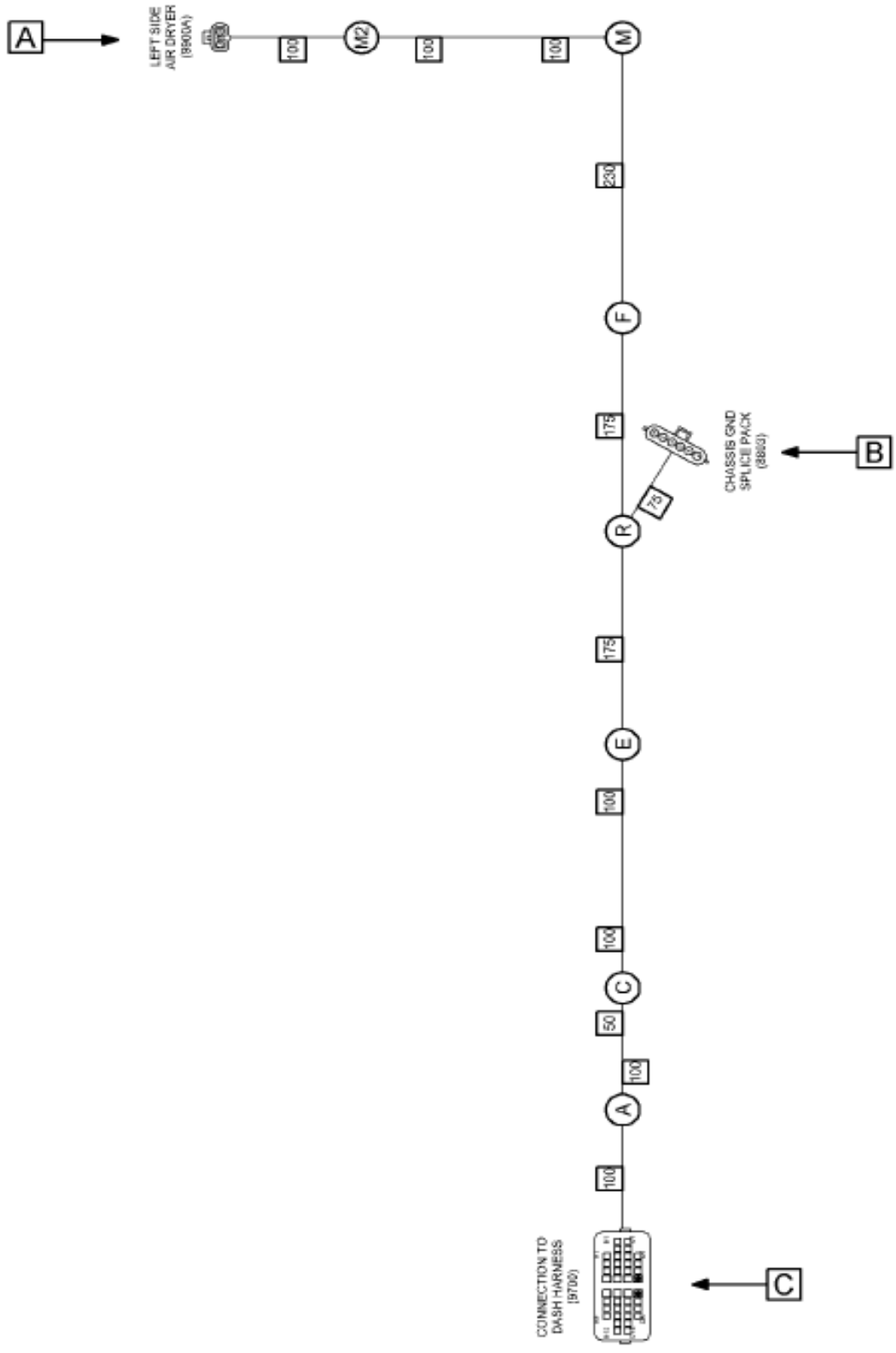

Figure 1 of 2

COPYRIGHT© 2011INTERNATIONAL TRUCK AND ENGINE CORP.

https://truckmanualshub.com/

Figure 3534060C91

HARNESS,ELEC; AIR DRYER

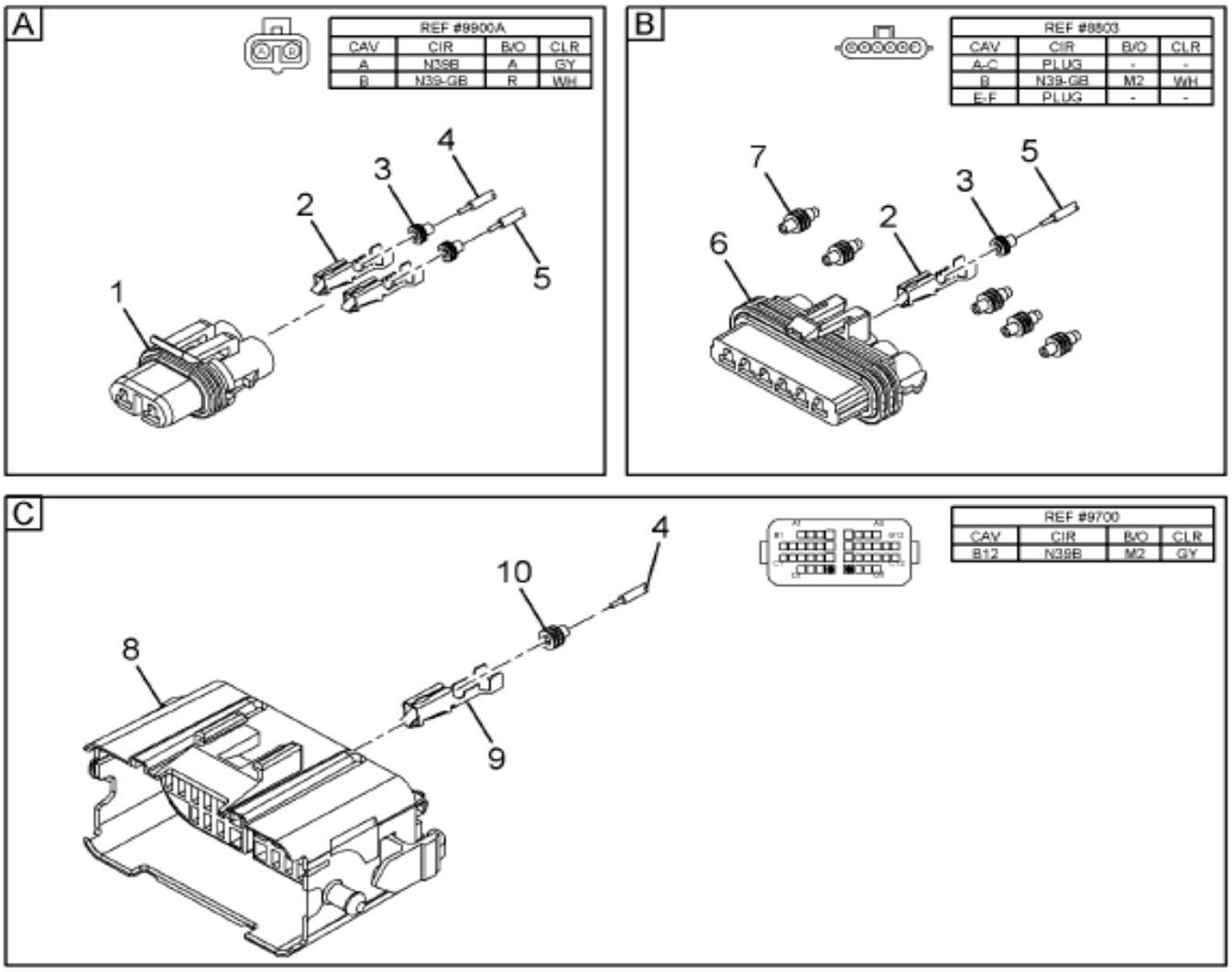

08-H09-0001-02 F10

Item	Part No.	Qty	Description	Kit	Var	Figure
1	1673790C1	1	CONNECTOR CABLE			
2	2033819C1	3	TERMINAL,CABLE FOR 16 GA ONLY			
3	1652325C1	3	PLUG,SEALER			
4	3510312R1	AR	CABLE,LOW TENSION TXL			
5	2643681R1	AR	CABLE LOW TENSION SINGLE COND			
6	3551896C1	1	CONNECTOR,CABLE SEE 19 FOR 4 A			

COPYRIGHT© 2011INTERNATIONAL TRUCK AND ENGINE CORP.

https://truckmanualshub.com/

Figure 3554060C91

HARNESS,ELEC; AIR DRYER

Item	Part No.	Qty	Description	Kit	Var	Figure
7	587579C1	5	PLUG,CAVITY			
8	3535310C1	1	CONNECTOR,BODY 38-WAY MALE GT			
9	3535305C1	1	TERMINAL,CABLE*CONN TERMINAL			
10	3535424C1	1	PLUG,SEALING*CABLE TERMINAL SE			
880		RF	NOTE: ASM BELOW COMPRISED OF ABOVE COMPONENTS			
881	3554060C91	RF	HARNESS,ELEC; AIR DRYER			

COPYRIGHT© 2011INTERNATIONAL TRUCK AND ENGINE CORP.

https://truckmanualshub.com/

Figure 09FJC

HARNESS, CENTER CHASSIS; BODY BUILDER EOF EFFECTS (ABR #24)

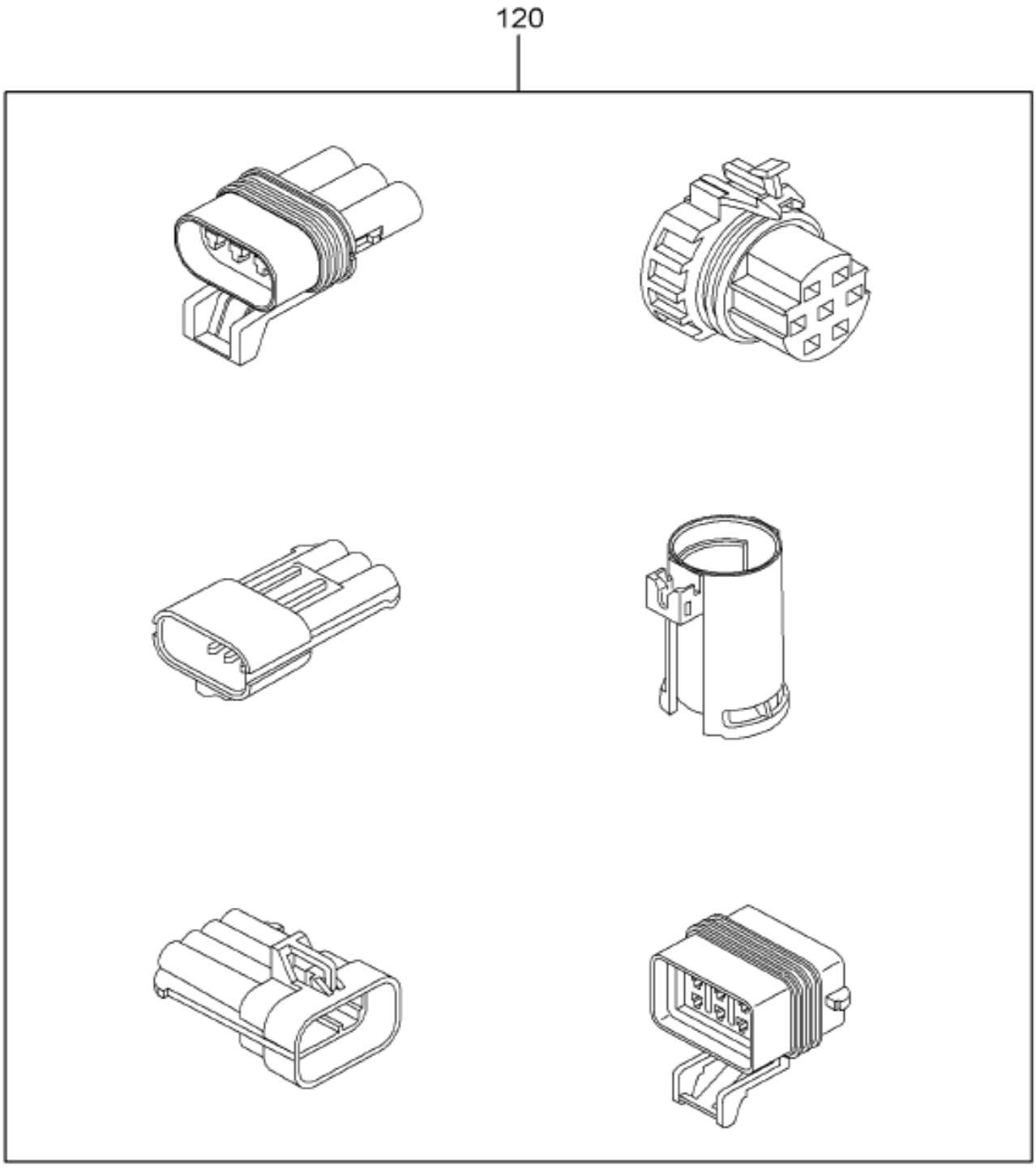

08-H24-0002-01 F09

Item	Part No.	Qty	Description	Kit	Var	Figure
120	3592077F91	1	ELEC CTR CHS-BOD BLD BOC		0ST87	

COPYRIGHT© 2011INTERNATIONAL TRUCK AND ENGINE CORP.

https://truckmanualshub.com/

Figure 01C56

HARNESS, CENTER CHASSIS; DIFF LOCK WARNING LIGHT WRG (ABR #7

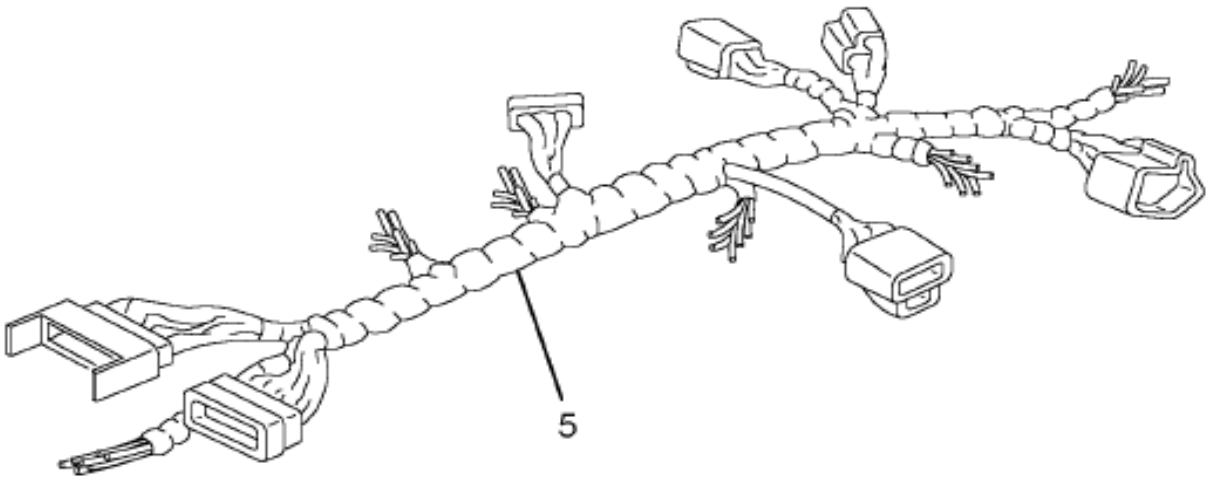

08-D01-0004-01 E04

Item	Part No.	Qty	Description	Kit	Var	Figure
5	3556085F92	1	ELEC CTR CHAS,*REAR & R		0FLM1	3556085F92

COPYRIGHT© 2011INTERNATIONAL TRUCK AND ENGINE CORP.

https://truckmanualshub.com/

Figure 3556085F92
ELEC CTR CHAS,*REAR & R

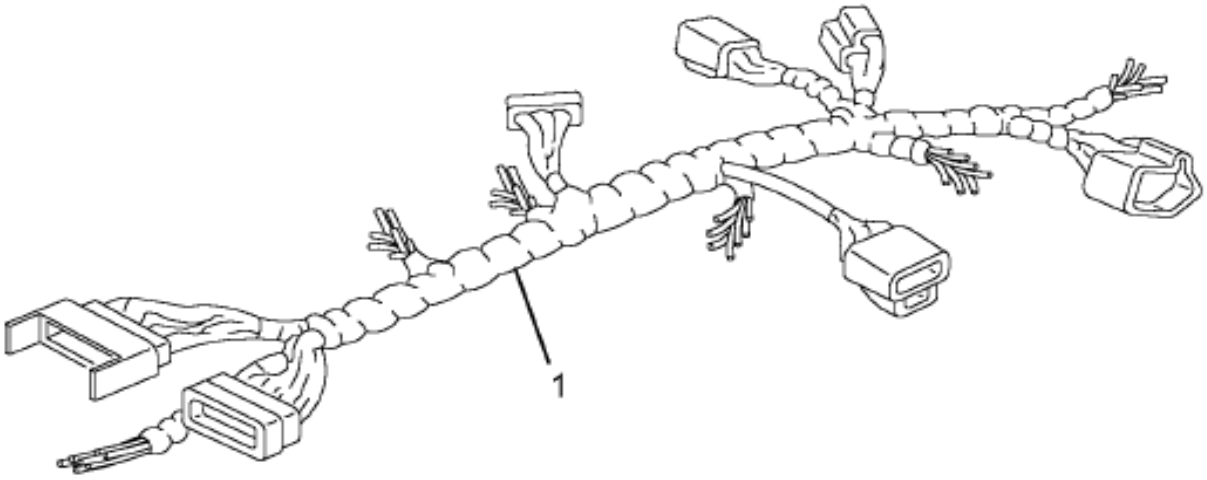

08-P58-0006-01 C03

Item	Part No.	Qty	Description	Kit	Var	Figure
1	3560440C91	1	HARNESS,ELEC; CHAS WI			
880		RF	NOTE: ASM BELOW COMPRISED OF ABOVE COMPONENTS			
881	3556085F92	RF	ELEC CTR CHAS,*REAR & R			

Grp 08

COPYRIGHT© 2011INTERNATIONAL TRUCK AND ENGINE CORP.

https://truckmanualshub.com/

Figure 0JFCK

HARNESS, CENTER CHASSIS; WASHER BOTTLE WIRING SS/RH (ABR #16

Item	Part No.	Qty	Description	Kit	Var	Figure
80	3558533F91	1	ELEC CTR CHAS,*SS/RH WA		0JFCX	3558533F91

COPYRIGHT© 2011INTERNATIONAL TRUCK AND ENGINE CORP.

https://truckmanualshub.com/

Figure 3558533F91
ELEC CTR CHAS,*SS/RH WA

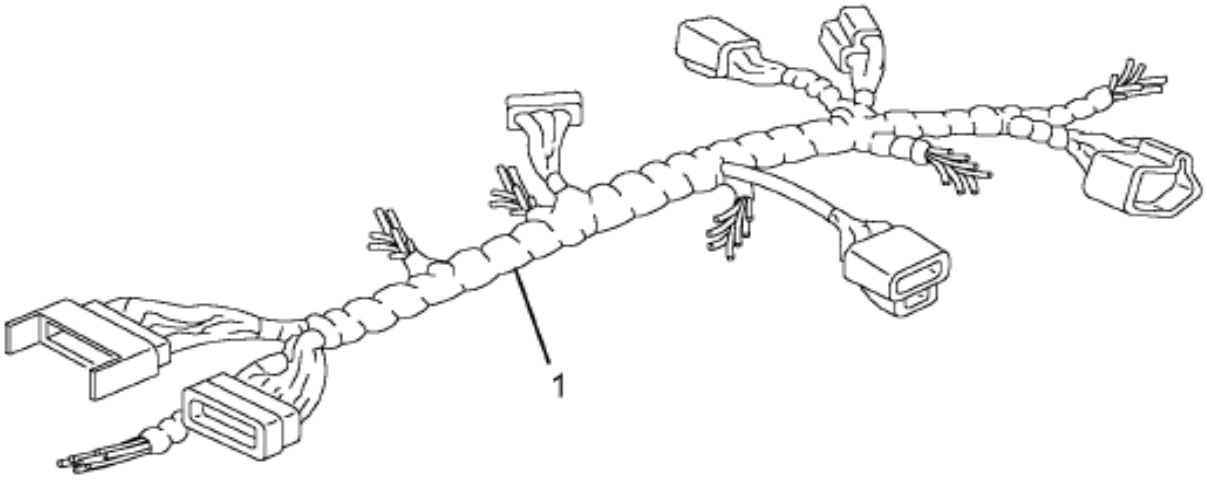

08-P58-0006-01 C03

Item	Part No.	Qty	Description	Kit	Var	Figure
1	3558524C91	1	HARNESS,CHASSIS WIRING*WASHER			
1	3558525C91	1	HARNESS,CHASSIS WIRING*WASHER			
880		RF	NOTE: ASM BELOW COMPRISED OF ABOVE COMPONENTS			
881	3558533F91	RF	ELEC CTR CHAS,*SS/RH WA			

Grp 08

COPYRIGHT© 2011INTERNATIONAL TRUCK AND ENGINE CORP.

https://truckmanualshub.com/

Figure 06QK9

IP MODULE EFFECTS; ABR#27, RADIO PANEL

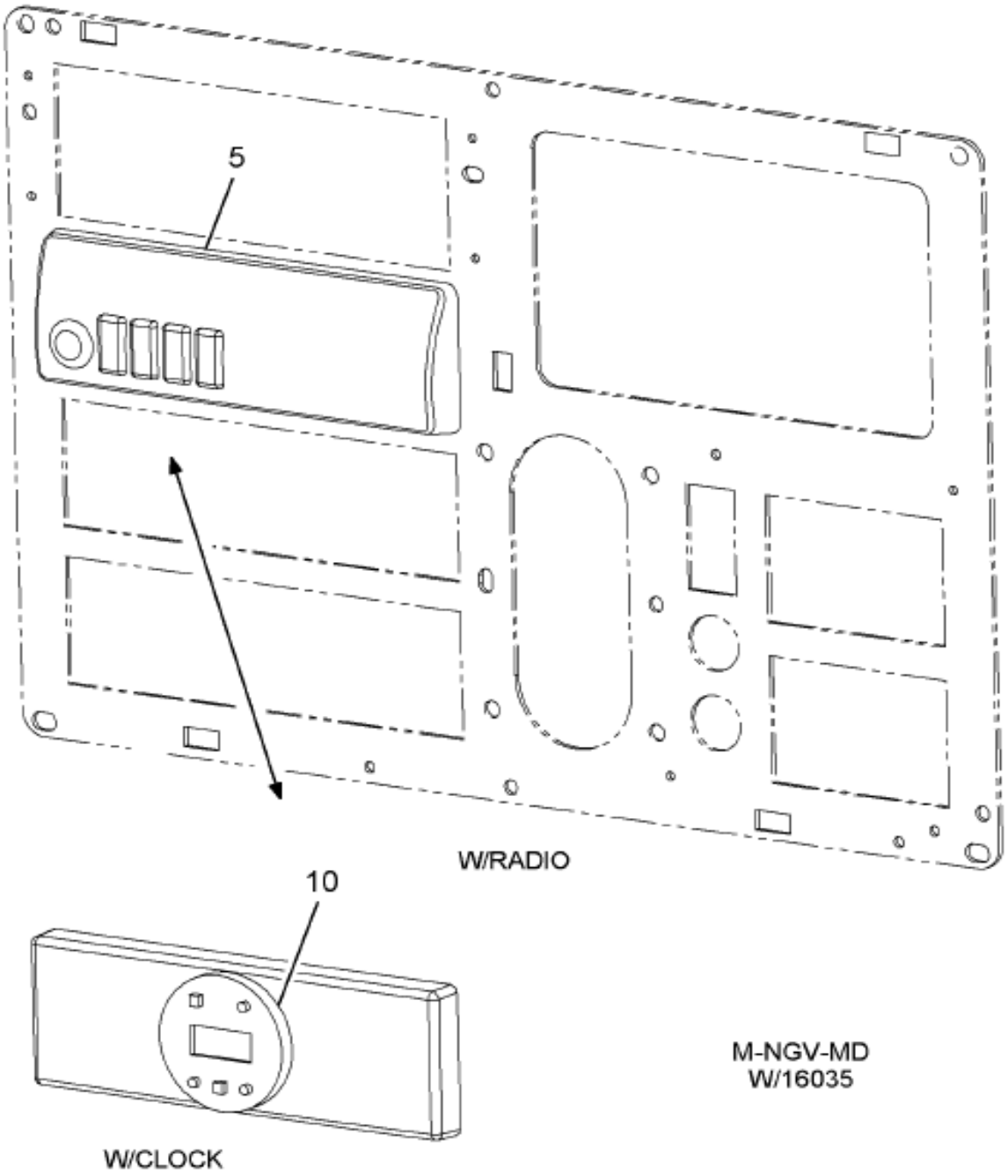

08-P27-0009-A0 L09

Item	Part No.	Qty	Description	Kit	Var	Figure
5	3598055F92	1	IP, TRIM-PREMIUM 16-WAY CON		06QLB	3598055F92

COPYRIGHT© 2011INTERNATIONAL TRUCK AND ENGINE CORP.

https://truckmanualshub.com/

Figure 3598055F92

IP, TRIM-PREMIUM 16-WAY CON

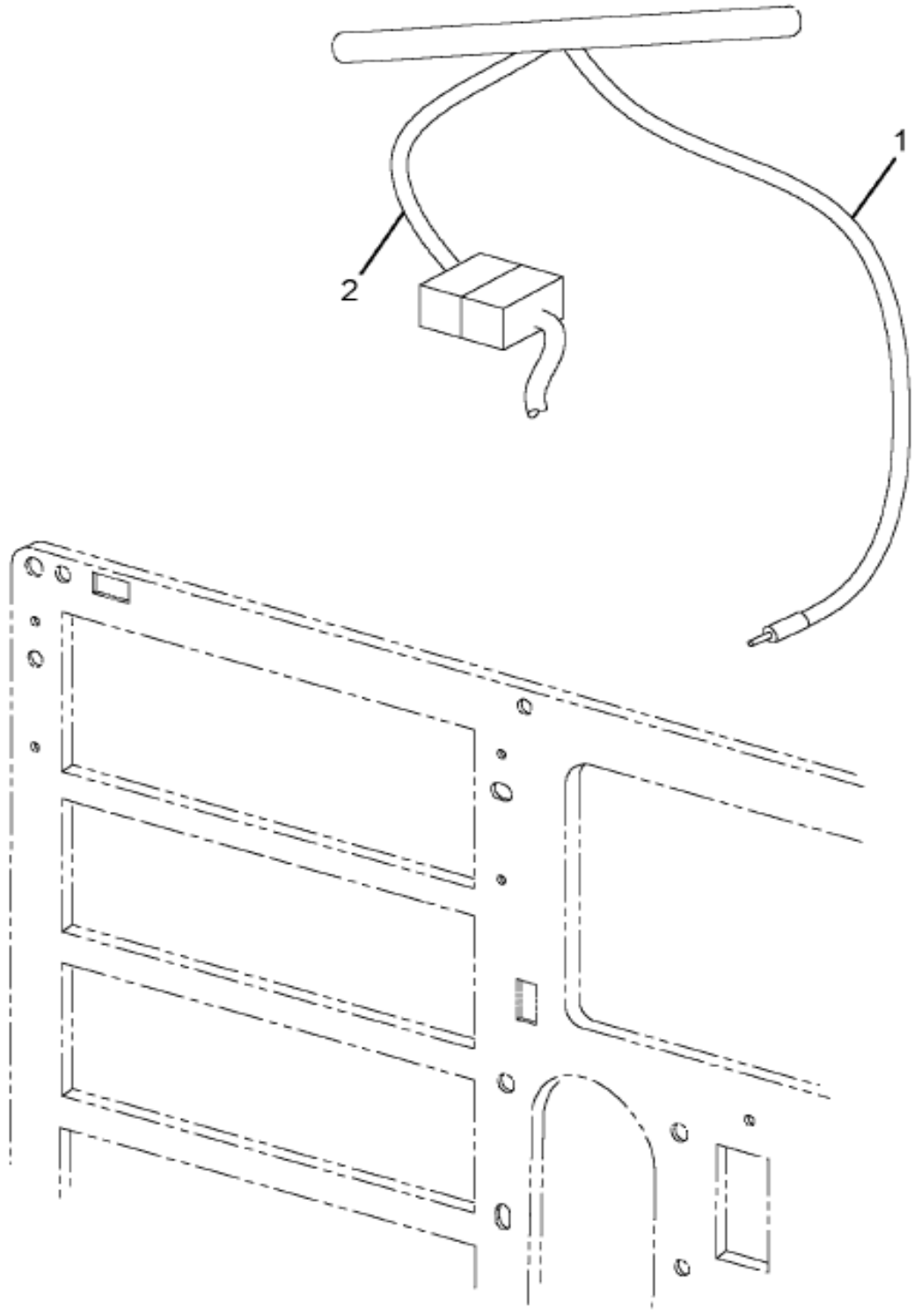

08-P27-0011-01 H03

Item	Part No.	Qty	Description	Kit	Var	Figure
1	3547279C93	1	CABLE,RADIO ANTENNA,1755MM			
2	3596958C91	1	HARN,CAB RADIO 16 WAY CONN			
880		RF	NOTE: ASM BELOW COMPRISED OF ABOVE COMPONENTS			
881	3598055F92	RF	IP, TRIM-PREMIUM 16-WAY CON			

COPYRIGHT© 2011INTERNATIONAL TRUCK AND ENGINE CORP.

https://truckmanualshub.com/

Figure 0DBN1

IP MODULE EFFECTS; ABR#28, CENTER PANEL, POWER SOURCE

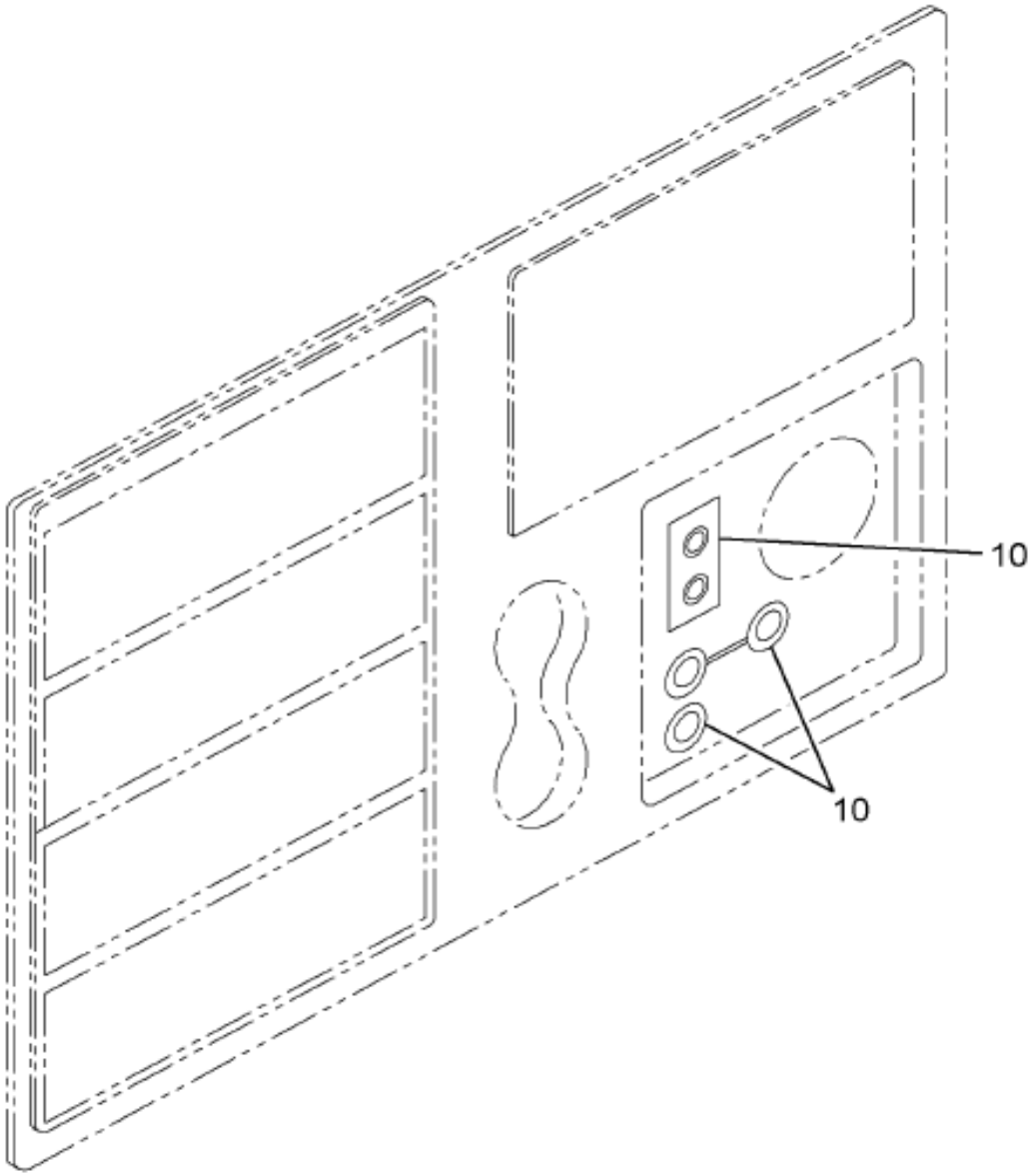

08-P28-0022-B0 B10

Item	Part No.	Qty	Description	Kit	Var	Figure
10	3581553F91	1	ELEC IP,W/CIG LTR & W/BRKR		0HMYR	3581553F91

COPYRIGHT© 2011INTERNATIONAL TRUCK AND ENGINE CORP.

https://truckmanualshub.com/

Figure 3581333F91

ELEC IP,W/CIG LTR & W/BRKR

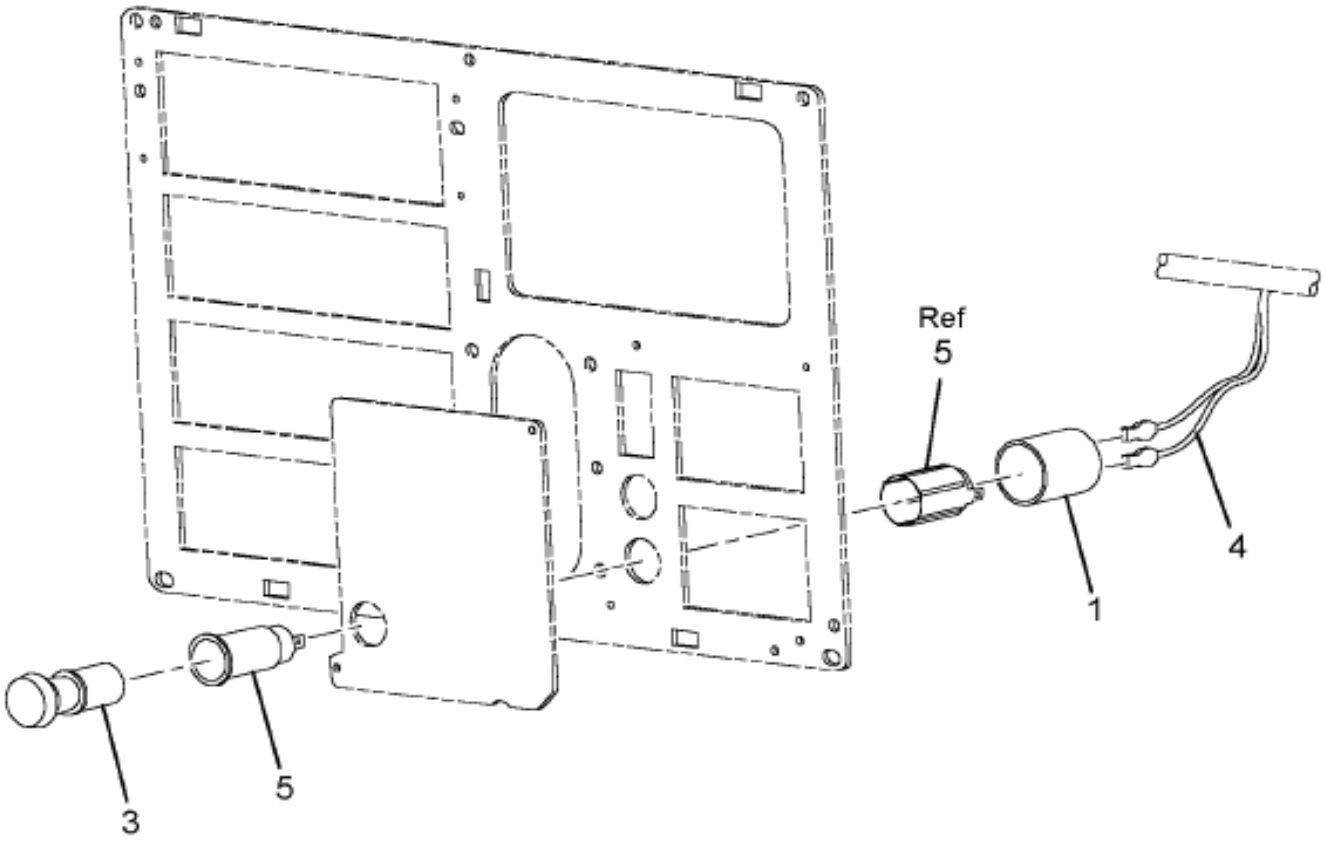

08-P28-0002-00 E04

Item	Part No.	Qty	Description	Kit	Var	Figure
1	2038725C3	1	INSULATOR, HOSE 1.25 X 1.5"			
3	3549468C92	1	ELEMENT,CIGAR LIGHTER W/KNOB			
4	3581340C91	1	CABLE,ASM*BTRY POWER SOURCE FE			
5	415837C91	1	HOUSING,LIGHTER			
800		RF	NOTE: THE FOLLOWING PARTS ARE			
			NON-ILLUSTRATED			

COPYRIGHT© 2011INTERNATIONAL TRUCK AND ENGINE CORP.

https://truckmanualshub.com/

Figure 3581553F91

ELEC IP,W/CIG LTR & W/BRKR

Item	Part No.	Qty	Description	Kit	Var	Figure
801	3536179C1	1	BREAKER CIRCUIT*15 AMP 12 VOL			
880		RF	NOTE: ASM BELOW COMPRISED OF ABOVE COMPONENTS			
881	3581553F91	RF	ELEC IP,W/CIG LTR & W/BRKR			

COPYRIGHT© 2011INTERNATIONAL TRUCK AND ENGINE CORP.

https://truckmanualshub.com/

Figure 0PQ9V

IP MODULE EFFECTS; ABR#29, KEY SWITCH & LOCK SET

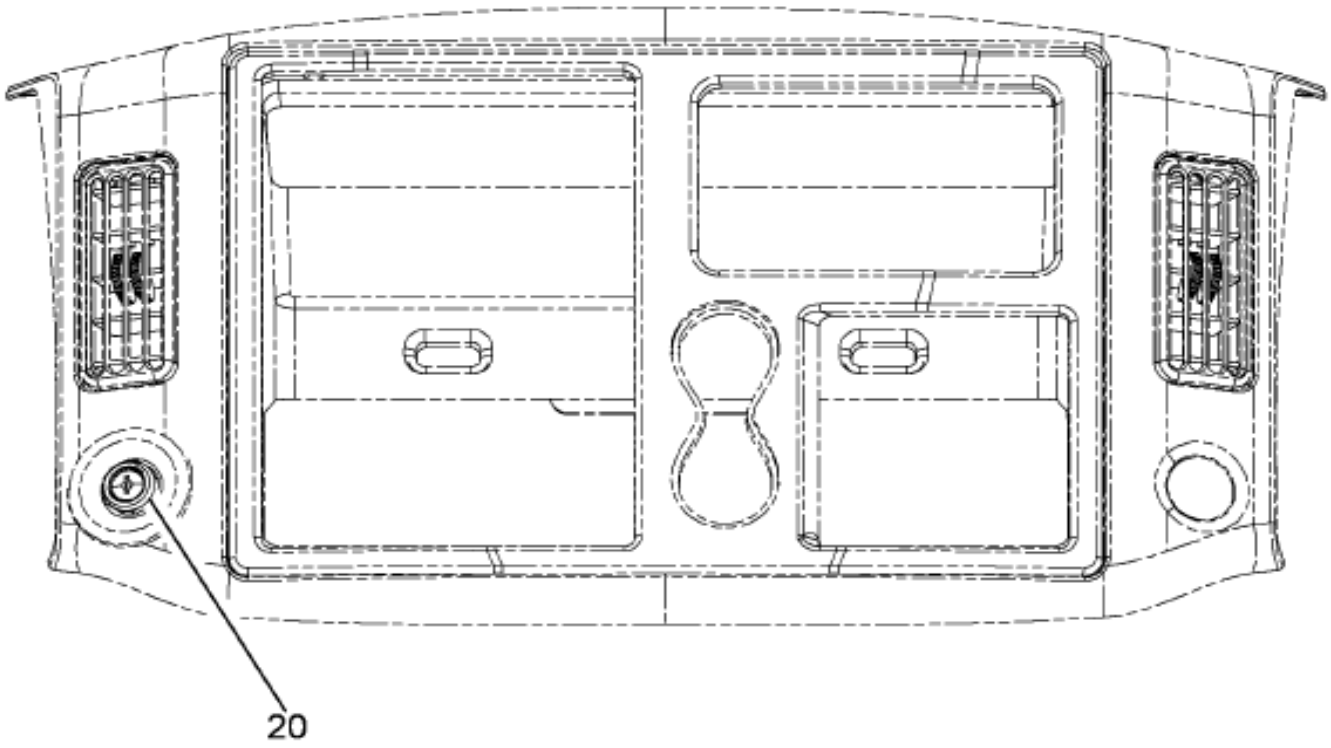

M-NGV-MD,M-NGV-SS
M-NGV-RH

08-P29-0006-A0 G09

Item	Part No.	Qty	Description	Kit	Var	Figure
20	3552906F92	1	IP, ELECTRICAL IP KEY SWITC		0PQ9X	3552906F92

COPYRIGHT© 2011INTERNATIONAL TRUCK AND ENGINE CORP.

Figure 3552906F92

IP, ELECTRICAL IP KEY SWITC

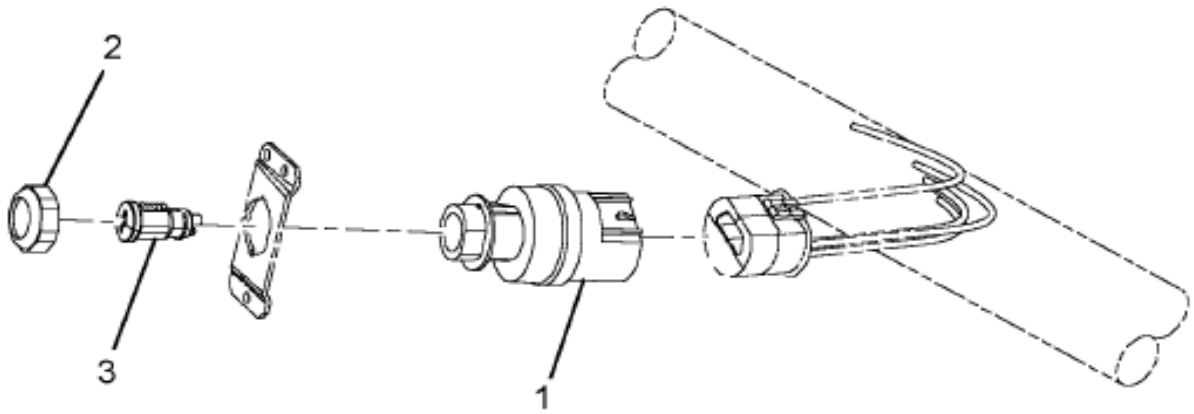

08-P29-0003-A0 E04

Item	Part No.	Qty	Description	Kit	Var	Figure
1	3545580C1	1	SWITCH,IGNITION*HOUSING WITH I			
2	3550642C1	1	NUT,SWITCH MTG 1"-16 THREAD			
3	3546619C92	1	KIT,DOOR LK,W/STD CAB & W/KEYS			3546619C92
880		RF	NOTE: ASM BELOW COMPRISED OF ABOVE COMPONENTS			
881	3552906F92	RF	IP, ELECTRICAL IP KEY SWITC			

COPYRIGHT© 2011INTERNATIONAL TRUCK AND ENGINE CORP.

https://truckmanualshub.com/

Figure 3546619C92

KIT,DOOR LK,W/STD CAB & W/KEYS

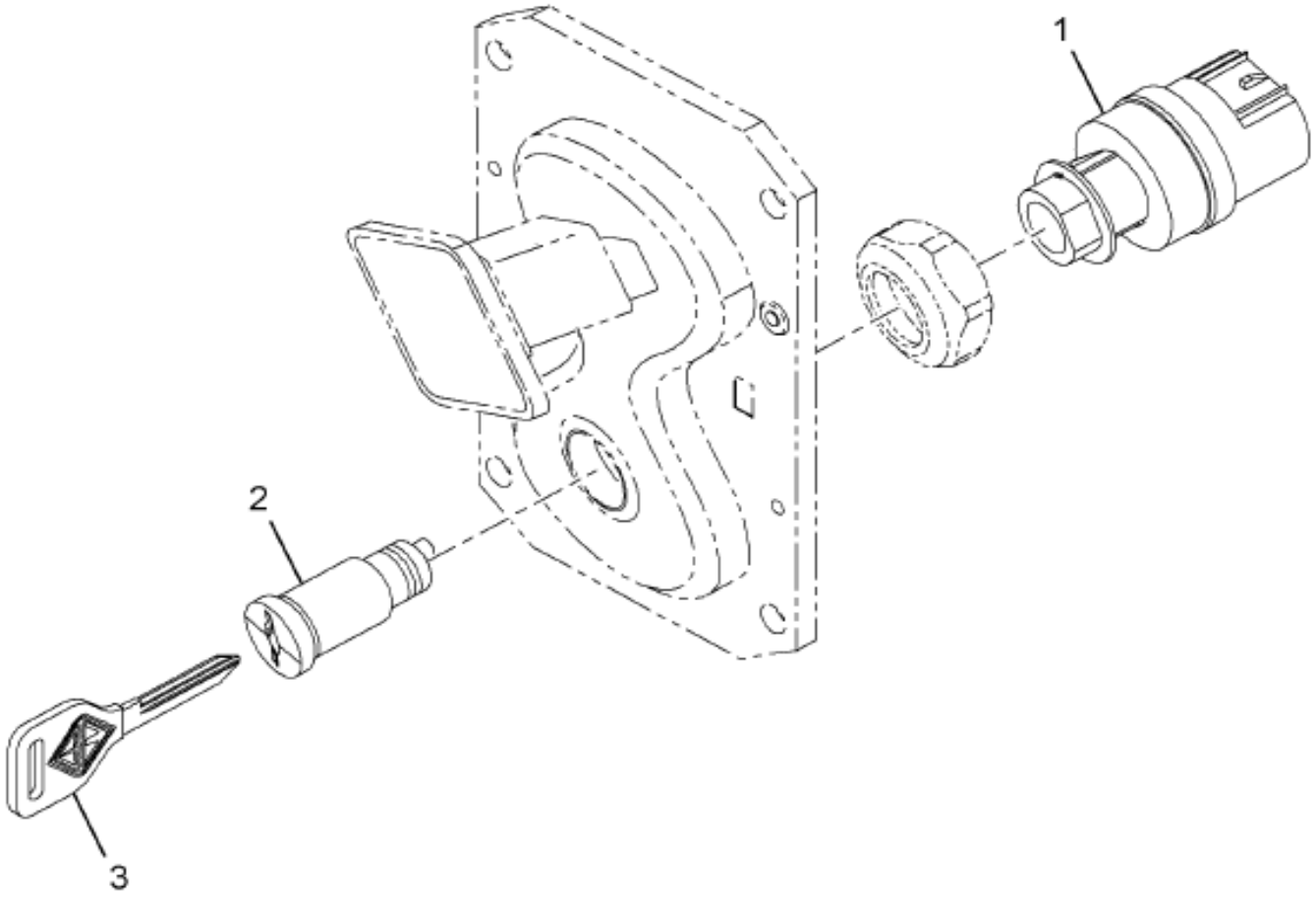

08-PHA-0005-01 J08

Item	Part No.	Qty	Description	Kit	Var	Figure
1	3545609C1	1	CYLINDER,LOCK IGN SW**			
2	3545628C2	2	LOCK,CAB DOOR,			
3	3546595C1	2	KEY,IGNITION LOCK*RANDOM CUT			
880		RF	NOTE: ASM BELOW COMPRISED OF ABOVE COMPONENTS			
881	3546619C92	RF	KIT,DOOR LK,W/STD CAB & W/KEYS			

COPYRIGHT© 2011INTERNATIONAL TRUCK AND ENGINE CORP.

https://truckmanualshub.com/

Figure 061DF

IP MODULE EFFECTS; ABR#31, PRODUCT GRAPHIC, FUSE PANEL

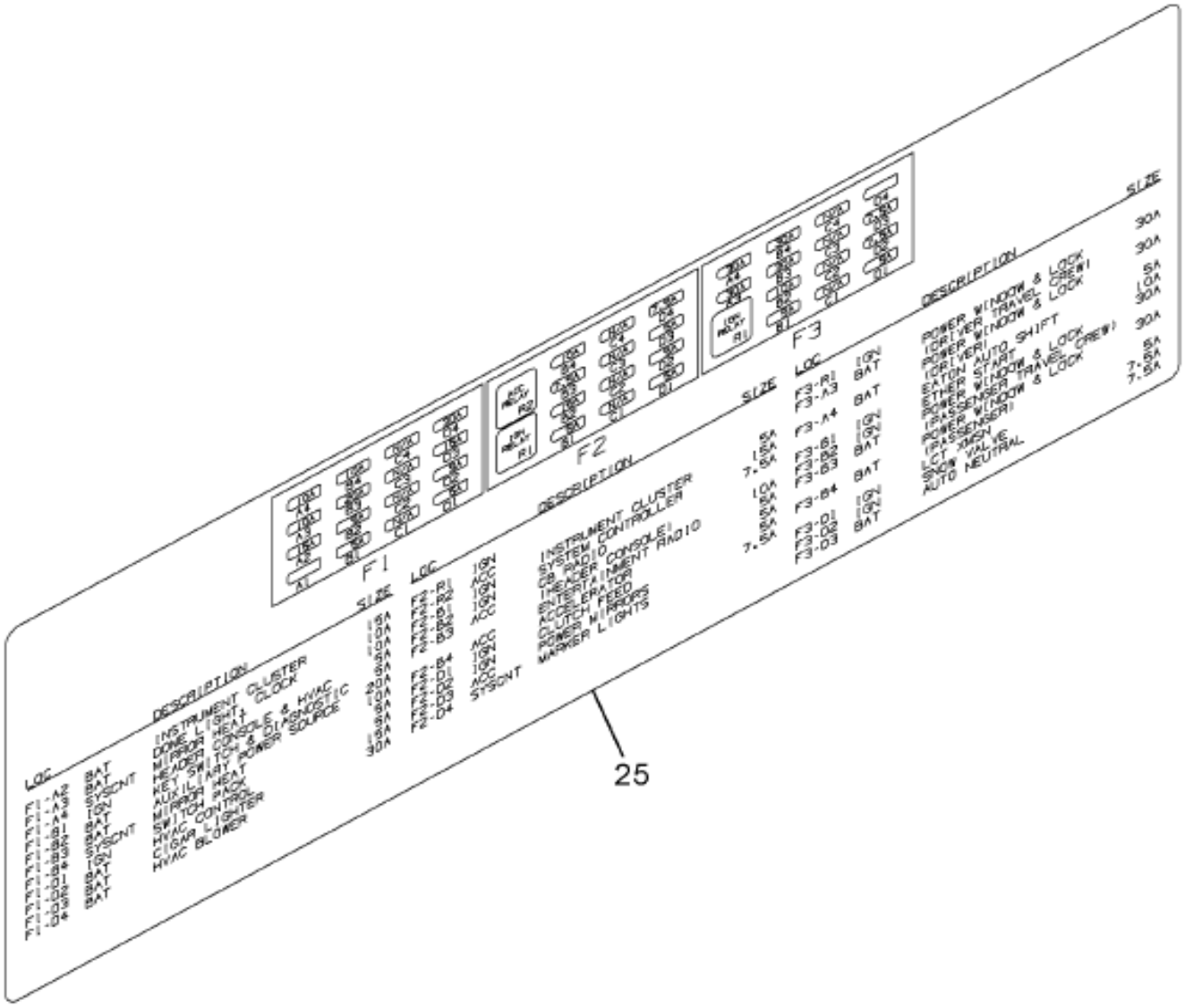

08-P31-0004-C0 K02

Item	Part No.	Qty	Description	Kit	Var	Figure
25	3588093F96	1	IP,FUSE PANEL GRAPHIC,SPANISH		0FJ1M	3588093F96

COPYRIGHT© 2011INTERNATIONAL TRUCK AND ENGINE CORP.

https://truckmanualshub.com/

Figure 3588093F96

IP,FUSE PANEL GRAPHIC,SPANISH

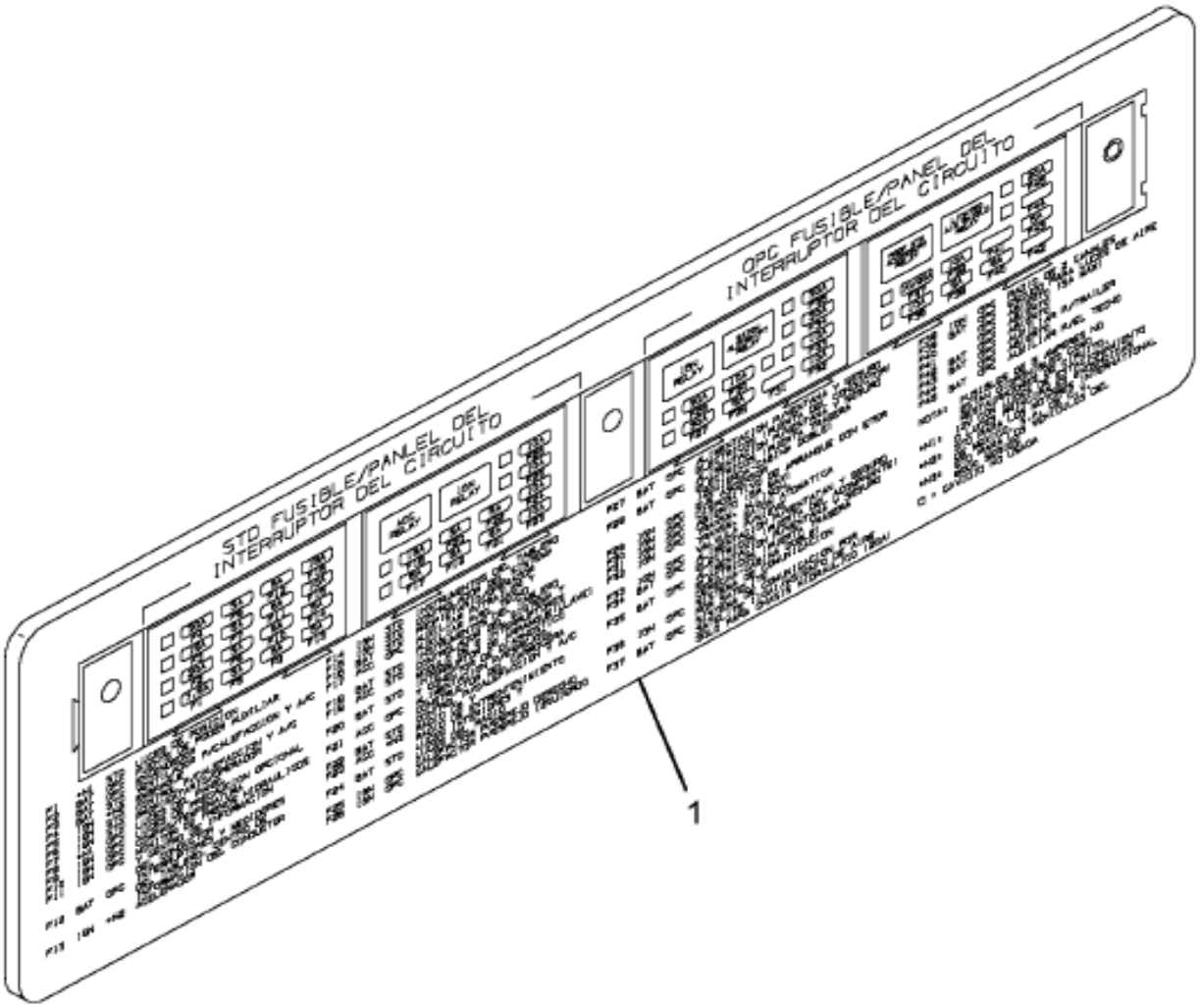

08-P31-0003-00 E04

Item	Part No.	Qty	Description	Kit	Var	Figure
1	3588091C6	1	PROD GRAPH,IP,FUSE PNL,SPANISH			
880		RF	NOTE: ASM BELOW COMPRISED OF ABOVE COMPONENTS			
881	3588093F96	RF	IP,FUSE PANEL GRAPHIC,SPANISH			

Grp 08

COPYRIGHT© 2011INTERNATIONAL TRUCK AND ENGINE CORP.

https://truckmanualshub.com/

Figure 0HQ30

IP MODULE EFFECTS; ABR#32, RPO BASE WIRING HARNESS

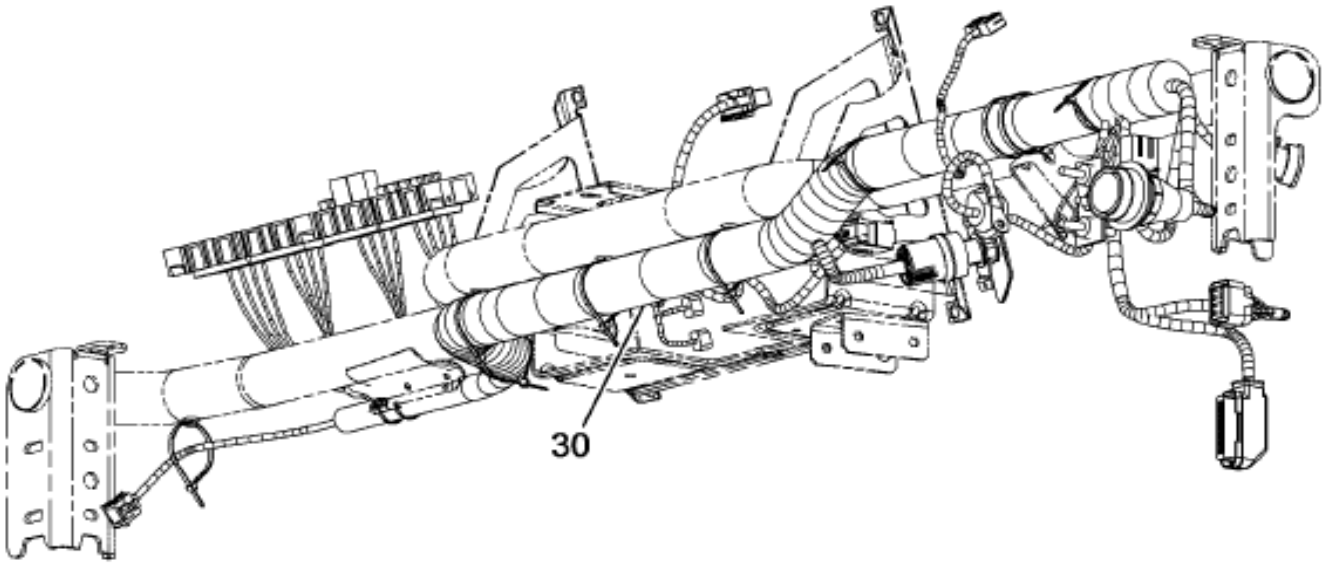

NGV
IP MOD-WRG,COMP

08-P32-0031-HA J11

Item	Part No.	Qty	Description	Kit	Var	Figure
30	3810187F91	1	IP,SS/RH/HDD,F1,2,3,4 W/BKR		0R10C	3810187F91

COPYRIGHT© 2011INTERNATIONAL TRUCK AND ENGINE CORP.

https://truckmanualshub.com/

Figure 3810187191
IP,SS/RH/HDD,F1,2,3,4 W/BKR

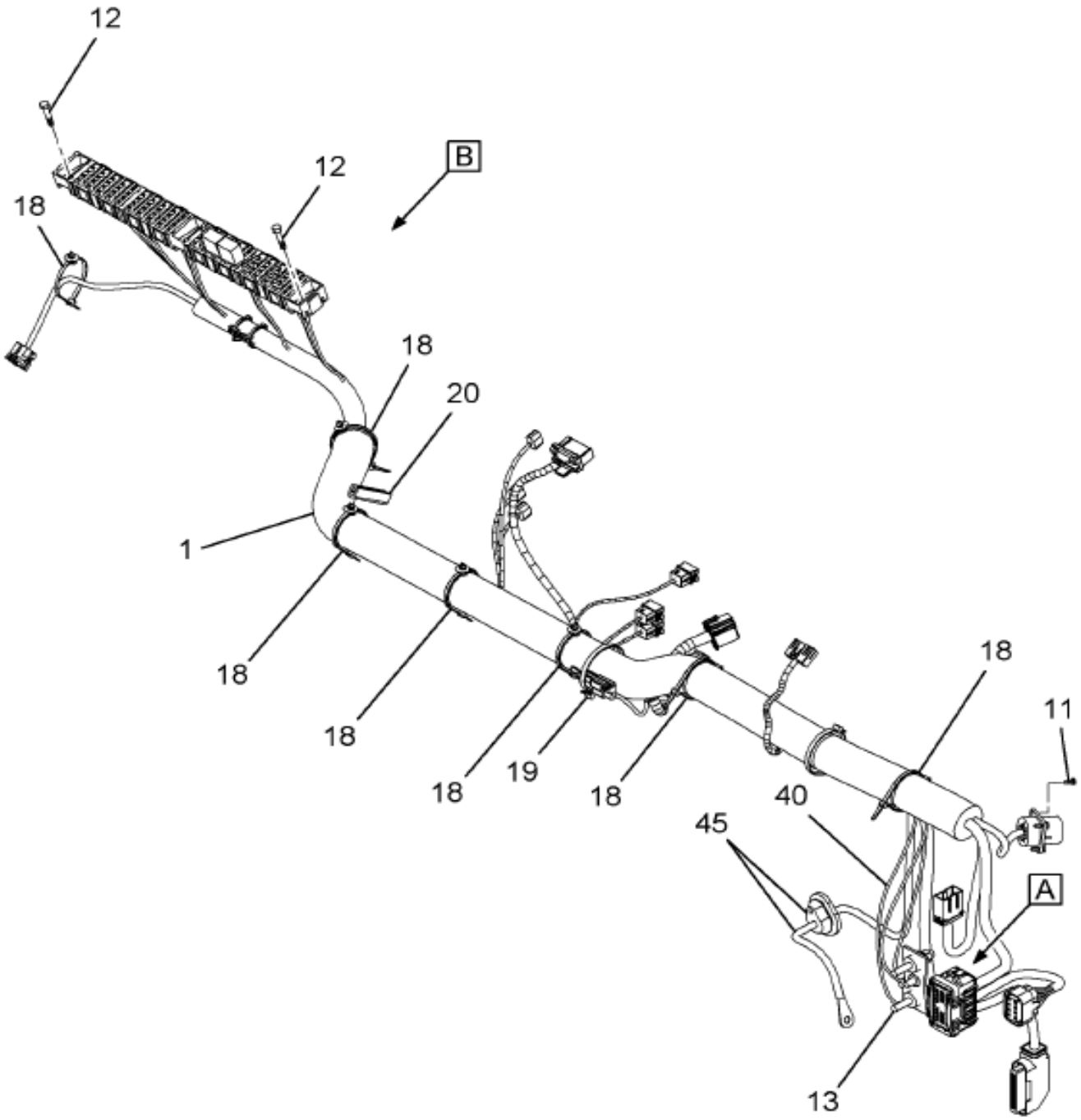

Grp 08

Figure 1 of 2

COPYRIGHT© 2011INTERNATIONAL TRUCK AND ENGINE CORP.

https://truckmanualshub.com/

Figure 3810187191
IP,SS/RH/HDD,F1,2,3,4 W/BKR

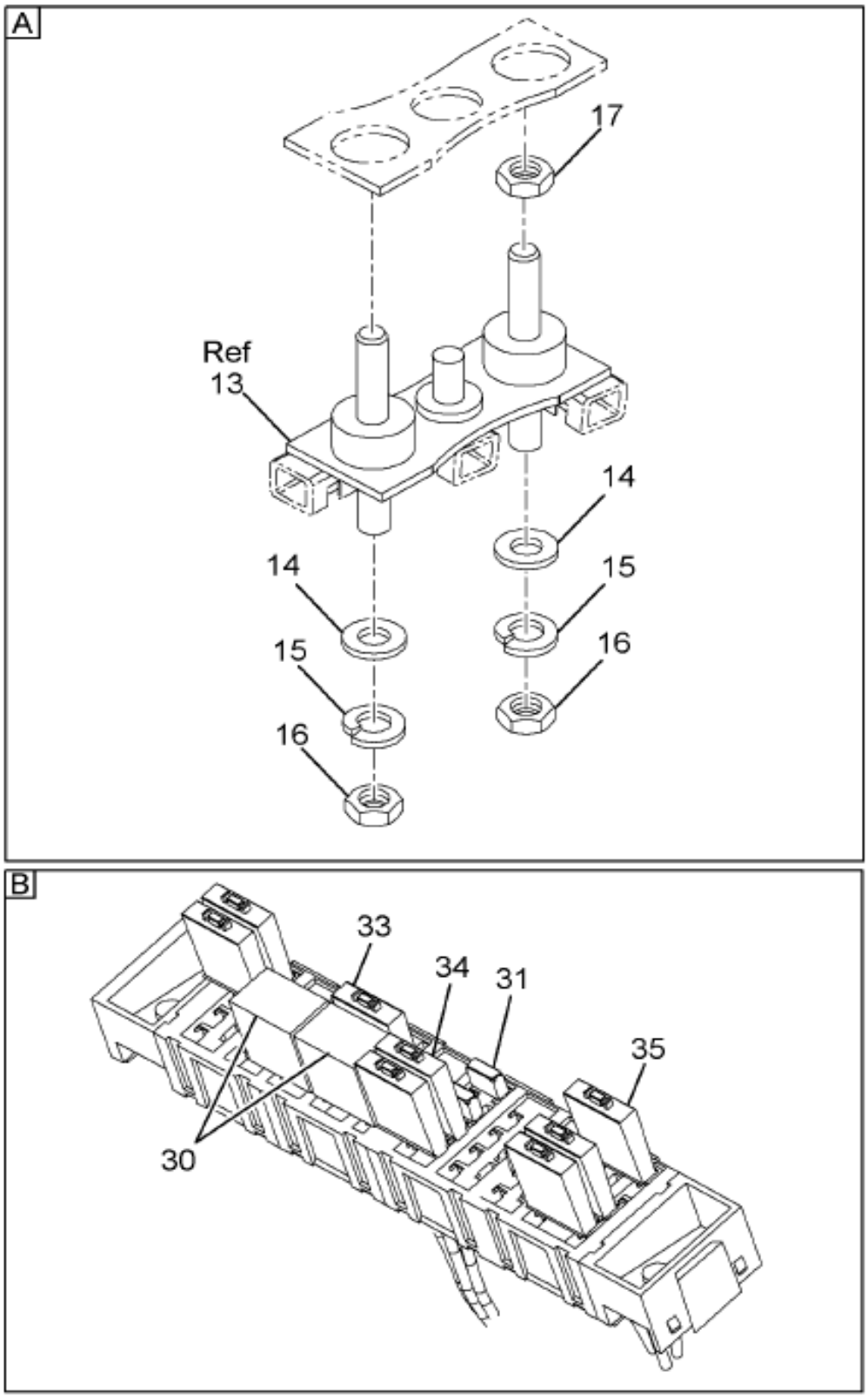

08-P32-0073-02 K06

Item	Part No.	Qty	Description	Kit	Var	Figure
1	3809152C91	1	HARNESS,ELECT, BASE CAB, LEFT			
1		RF	LEFT			
11	473158C1	4	SCREW SPL HI-LOW #8-18 X 1/2			
12	473143C1	2	SCREW SPECIAL HI-LOW			
13	3606873C1	1	STUD,M8 X 1.25 DUAL SIDED			3606873C1
14	3542142C1	2	WASHER,GRAB HNDL MTG M8			

COPYRIGHT© 2011INTERNATIONAL TRUCK AND ENGINE CORP.

https://truckmanualshub.com/

Figure 3810187F91

IP,SS/RH/HDD,F1,2,3,4 W/BKR

Item	Part No.	Qty	Description	Kit	Var	Figure
15	934309R1	2	WASHER,8MM HELICAL SPR LOCK			
16	934310R1	2	NUT, M8 CLASS 8			
17	3534873C2	1	NUT,HEX*M8 X 1.25 W/CAPTURE WA			
18	3551787C91	7	STRAP CABLE LOCK*HELLERMAN TYT			
19	291207C1	1	STRAP,CABLE LOCK			
20	3566722C1	1	STRIP,TRIM 65MM			
30	3519350C1	2	RELAY,MICRO SPDT			
31	3534208C1	5	FUSE,*FUSE, 5AMP MINI			
33	3536178C1	2	BREAKER,CIRCUIT*10 AMP, 12 VOL			
34	3536179C1	2	BREAKER CIRCUIT*15 AMP 12 VOL			
35	3536182C1	1	BREAKER,CIRCUIT*30 AMP, 12 VOL			
40	3603963C91	1	HARN,CAB OVERLY,ACCL/CLUTCH,HD			
45	3581301C91	1	HARNESS,CAB OVERLAY*BTRY F1,F2			
880		RF	NOTE: ASM BELOW COMPRISED OF ABOVE COMPONENTS			
881	3810187F91	RF	IP,SS/RH/HDD,F1,2,3,4 W/BKR			

Grp 08

COPYRIGHT© 2011INTERNATIONAL TRUCK AND ENGINE CORP.

https://truckmanualshub.com/

Figure 3606873C1

STUD,M8 X 1.25 DUAL SIDED

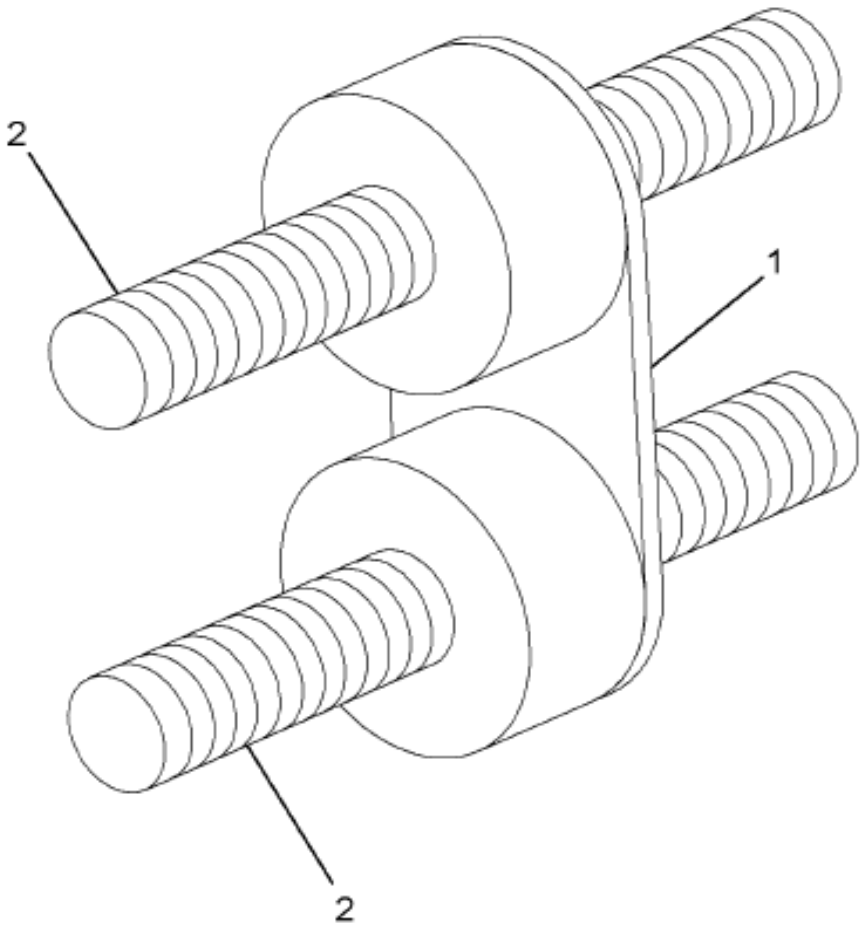

08-P32-0046-01 H05

Item	Part No.	Qty	Description	Kit	Var	Figure
1	3606876C1	1	PLATE,, ELECTRICAL GROUND STUD			
2	3551281C2	2	STUD,SPECIAL*M8 X 1.25 DUAL SI			
880		RF	NOTE: ASM BELOW COMPRISED OF ABOVE COMPONENTS			
881	3606873C1	RF	STUD,M8 X 1.25 DUAL SIDED			

COPYRIGHT© 2011INTERNATIONAL TRUCK AND ENGINE CORP.

https://truckmanualshub.com/

Figure 0DBN3
IP MODULE EFFECTS; ABR#35, FILTER MINDER

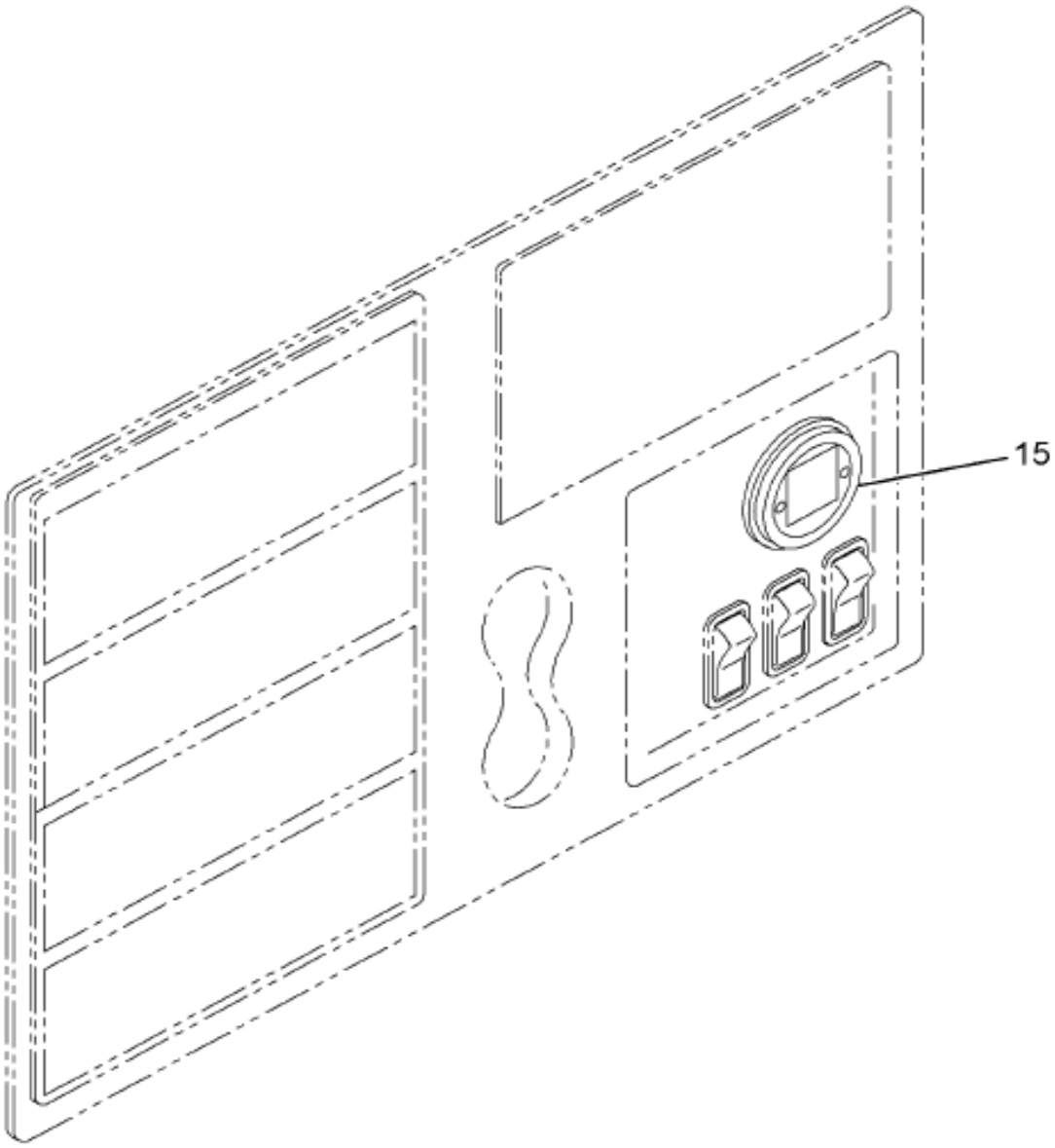

08-P35-0002-C0 B10

Item	Part No.	Qty	Description	Kit	Var	Figure
15	3545804F93	1	IP, PANEL GAUGE FILTER MIND		0DBQ2	3545804F93

COPYRIGHT© 2011INTERNATIONAL TRUCK AND ENGINE CORP.

https://truckmanualshub.com/

Figure 3545804F93

IP, PANEL GAUGE FILTER MIND

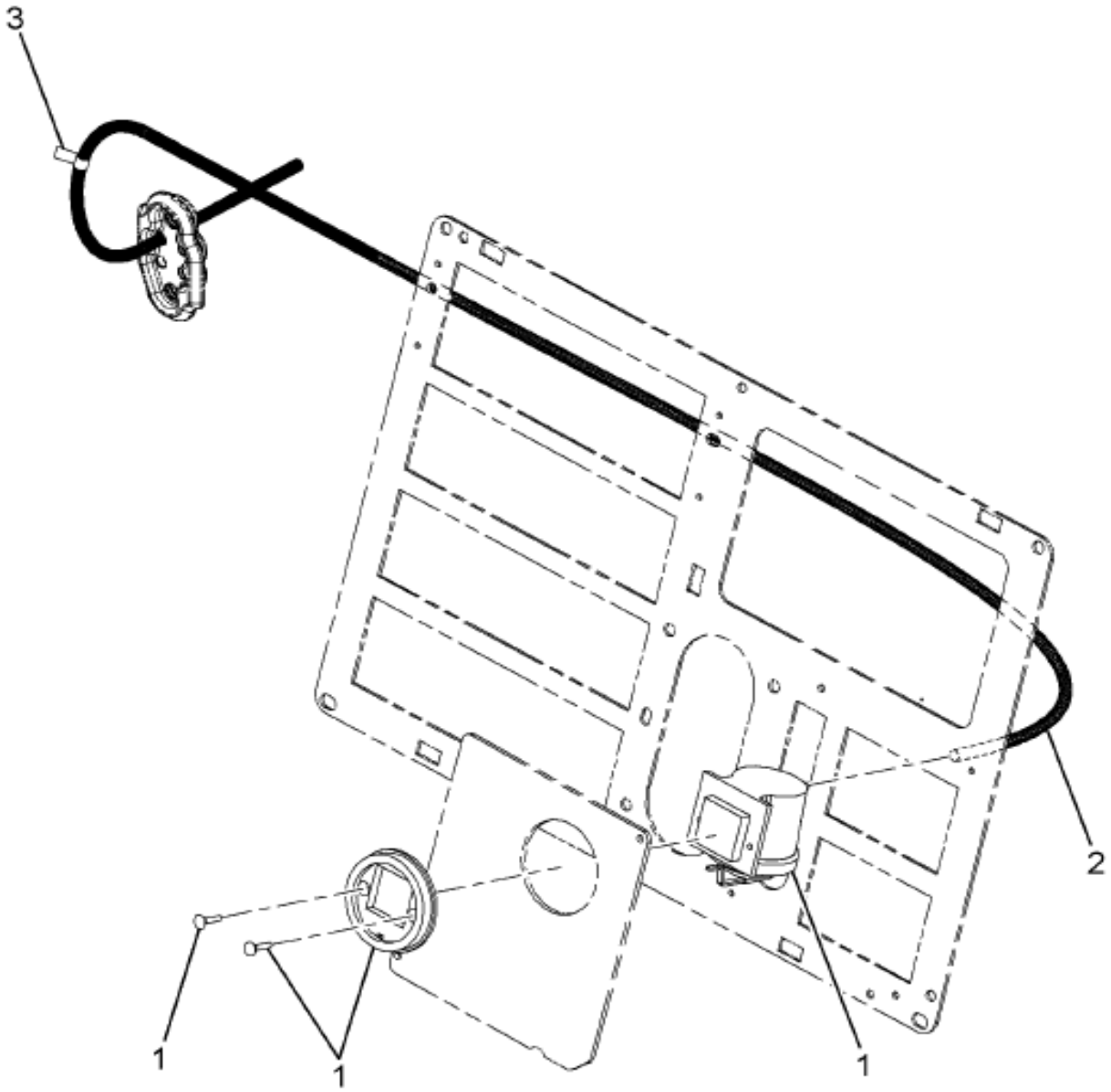

08-P35-0006-01 G06

Item	Part No.	Qty	Description	Kit	Var	Figure
1	556779C91	1	GAUGE FILTER LIFE			
2	417196C3	AR	TUBE,NYLON BULK 1/4 OD BLACK			
3	2016373C1	1	PRODUCT GRAPHICS,INFORMATION			
880		RF	NOTE: ASM BELOW COMPRISED OF ABOVE COMPONENTS			
881	3545804F93	RF	IP, PANEL GAUGE FILTER MIND			

COPYRIGHT© 2011INTERNATIONAL TRUCK AND ENGINE CORP.

https://truckmanualshub.com/

Figure 03KCD

IP MODULE EFFECTS; ABR#37, OPTIONAL FUSE BLOCK

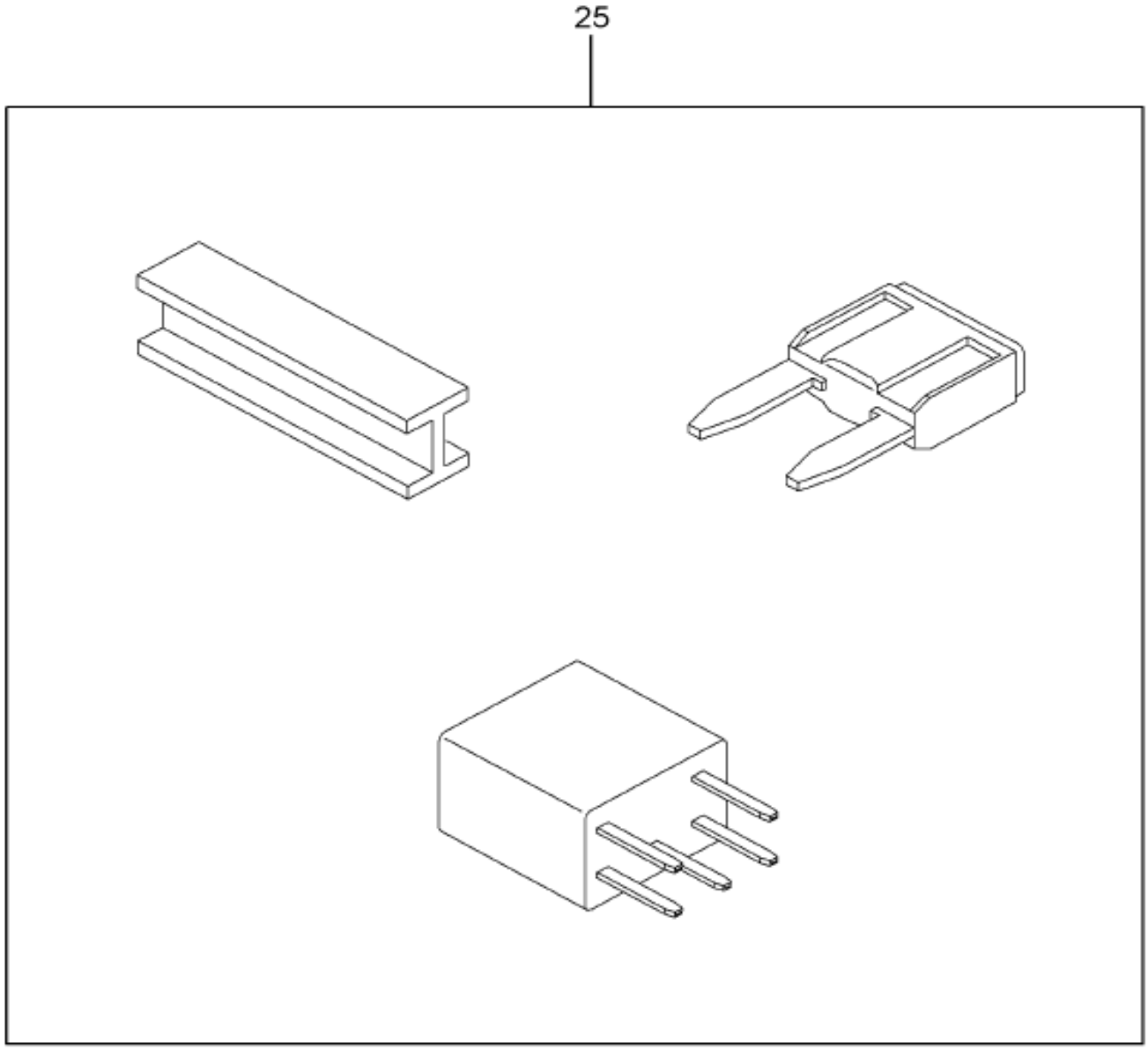

Item	Part No.	Qty	Description	Kit	Var	Figure
25	3581414F91	1	ELEC IP,OPT FUSE BLOCK 3&4		0NSLT	3581414F91
			NON-ILLUSTRATED REFERENCE FIGURE 3581414F91			
1	3519350C1	1	RELAY,MICRO SPDT			
1	473143C1	1	SCREW SPECIAL HI-LOW			
880		RF	NOTE: ASM BELOW COMPRISED OF ABOVE			

Grp 08

COPYRIGHT© 2011INTERNATIONAL TRUCK AND ENGINE CORP.

https://truckmanualshub.com/

Figure 03KCD

IP MODULE EFFECTS; ABR#37, OPTIONAL FUSE BLOCK

Item	Part No.	Qty	Description	Kit	Var	Figure
			COMPONENTS			
881	3581414F91	RF	ELEC IP,OPT FUSE BLOCK 3&4			

COPYRIGHT© 2011INTERNATIONAL TRUCK AND ENGINE CORP.

https://truckmanualshub.com/

Figure 09V12

IP MODULE EFFECTS; ABR#47, MISCELLANEOUS WIRING

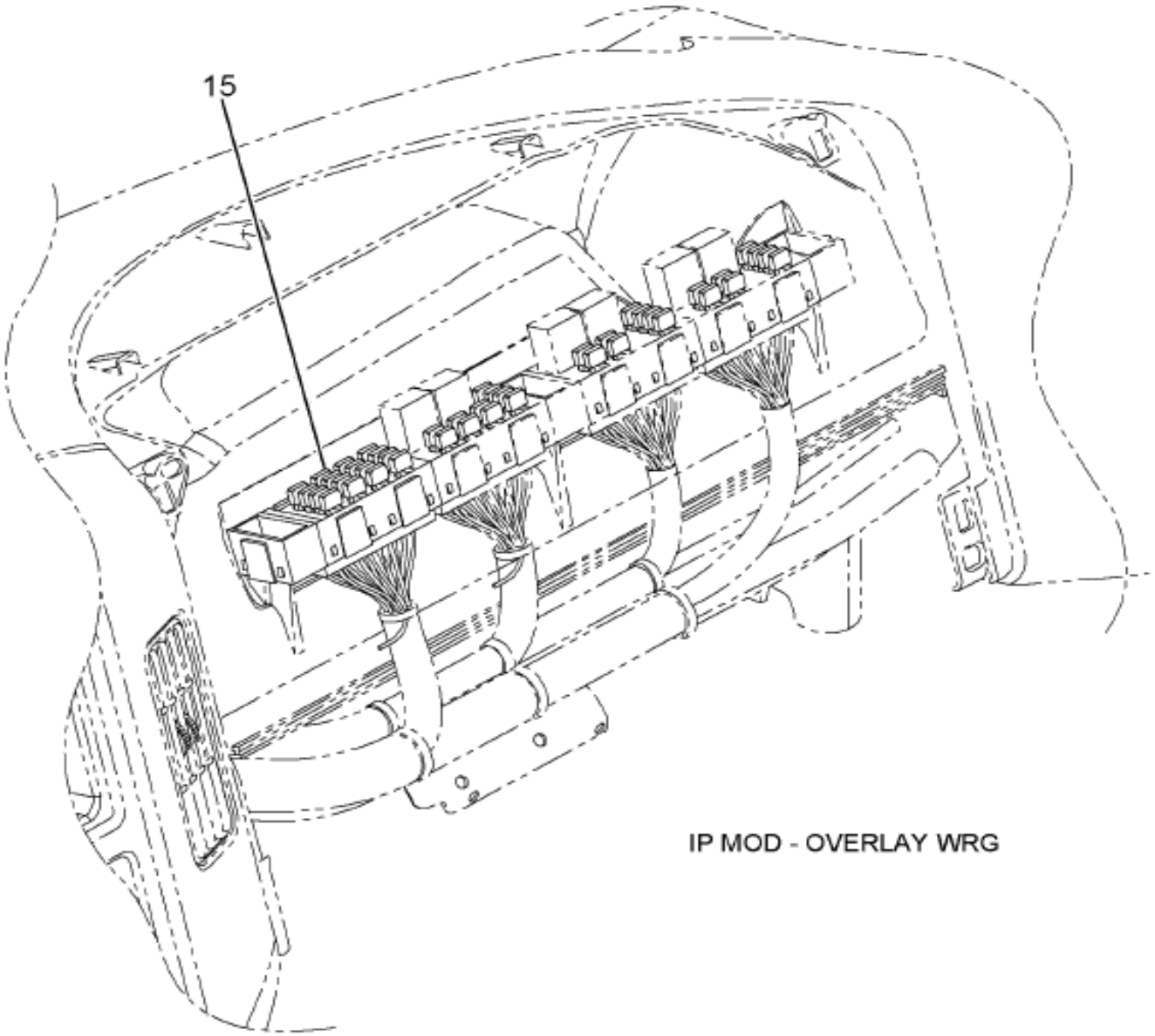

08-P47-0001-01 B09

Item	Part No.	Qty	Description	Kit	Var	Figure
15	3581429F91	1	ELEC IP,MISC WRG-OPT PNL LT		0NNT2	3581429F91

COPYRIGHT© 2011INTERNATIONAL TRUCK AND ENGINE CORP.

https://truckmanualshub.com/

Figure 3581429F91
ELEC IP,MISC WRG-OPT PNL LT

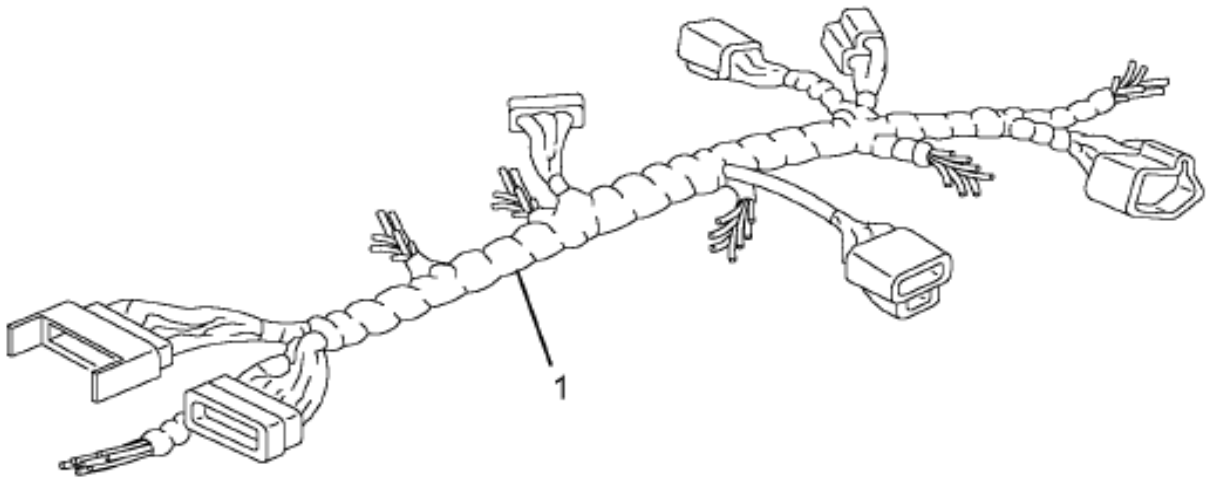

08-P58-0006-01 C03

Item	Part No.	Qty	Description	Kit	Var	Figure
1	3554116C91	1	HARNESS,CAB OVERLAY*ZERO REFER			
1	3581298C91	1	HARNESS,CAB OVERLAY*IP PANEL L			
1	3549344C92	1	CABLE,ASM*IP GROUND OVERLAY			
1	3534208C1	1	FUSE,*FUSE, 5AMP MINI			
1	291207C1	1	STRAP,CABLE LOCK			
880		RF	NOTE: ASM BELOW COMPRISED OF ABOVE			

COPYRIGHT© 2011INTERNATIONAL TRUCK AND ENGINE CORP.

https://truckmanualshub.com/

Figure 3581429F91

ELEC IP,MISC WRG-OPT PNL LT

Item	Part No.	Qty	Description	Kit	Var	Figure
			COMPONENTS			
881	3581429F91	RF	ELEC IP,MISC WRG-OPT PNL LT			

COPYRIGHT© 2011INTERNATIONAL TRUCK AND ENGINE CORP.

https://truckmanualshub.com/

Figure 0M113

IP MODULE EFFECTS; ABR#48, CRANK & POWERTRAIN WIRING

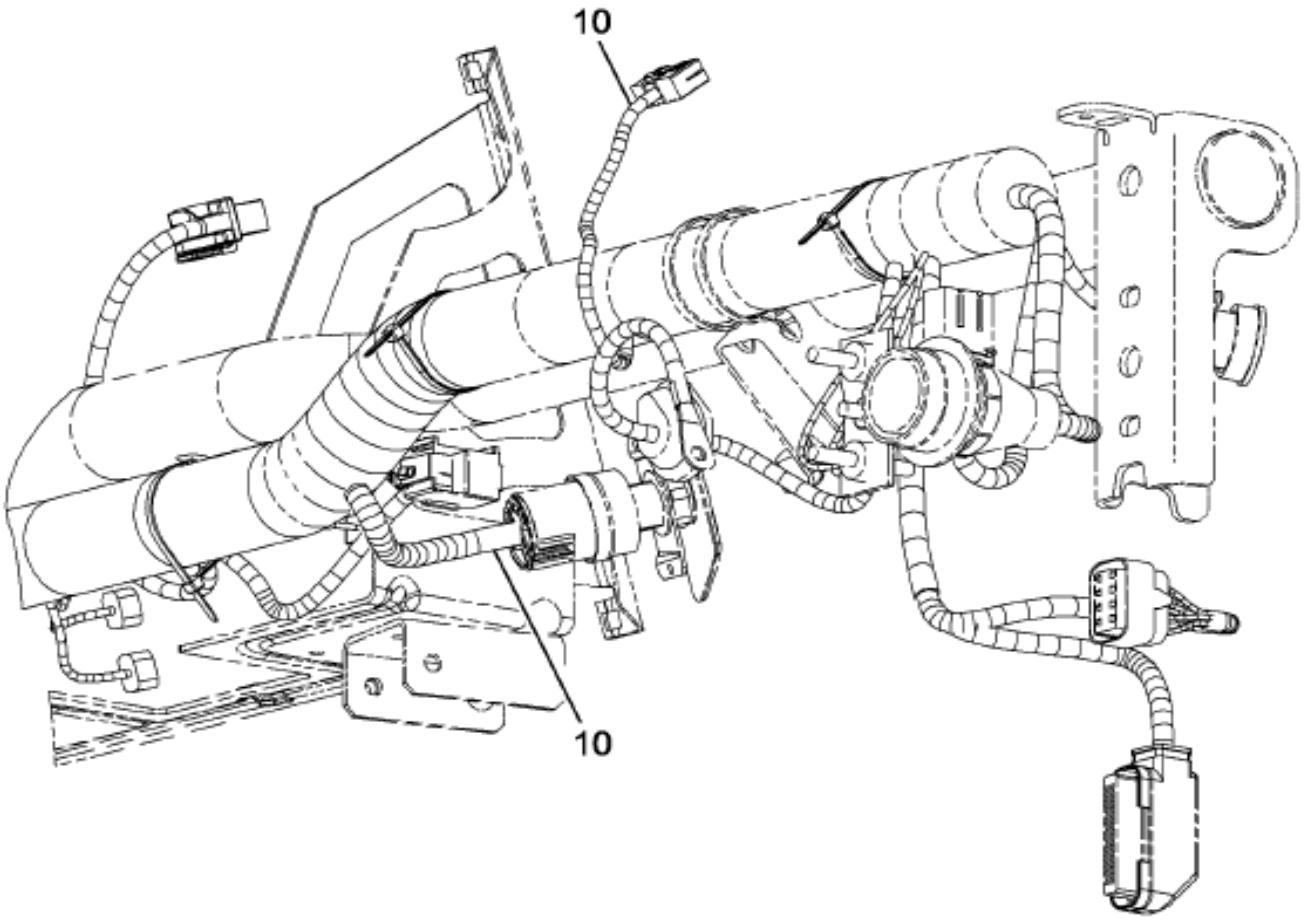

08-P48-0001-00 L08

Item	Part No.	Qty	Description	Kit	Var	Figure
10	3604143F92	1	IP, KEY START, FUSE BLOCK 1		0NFPP	3604143F92

COPYRIGHT© 2011INTERNATIONAL TRUCK AND ENGINE CORP.

https://truckmanualshub.com/

Figure 3604143F92

IP, KEY START, FUSE BLOCK 1

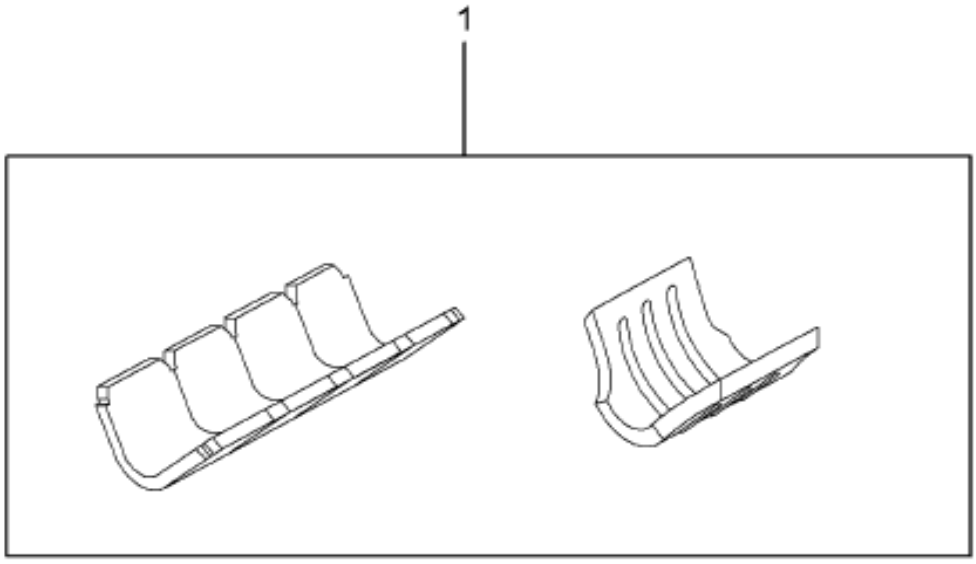

08-P48-0009-01 F06

Item	Part No.	Qty	Description	Kit	Var	Figure
1	3604190C92	1	HARNESS,SWITCH WIRING, START,			
880		RF	NOTE: ASM BELOW COMPRISED OF ABOVE COMPONENTS			
881	3604143F92	RF	IP, KEY START, FUSE BLOCK 1			

COPYRIGHT© 2011INTERNATIONAL TRUCK AND ENGINE CORP.

https://truckmanualshub.com/

Figure 0051IZ

IP MODULE EFFECTS; ABR#50, ELECTRONIC SYSTEM CONTROLLER

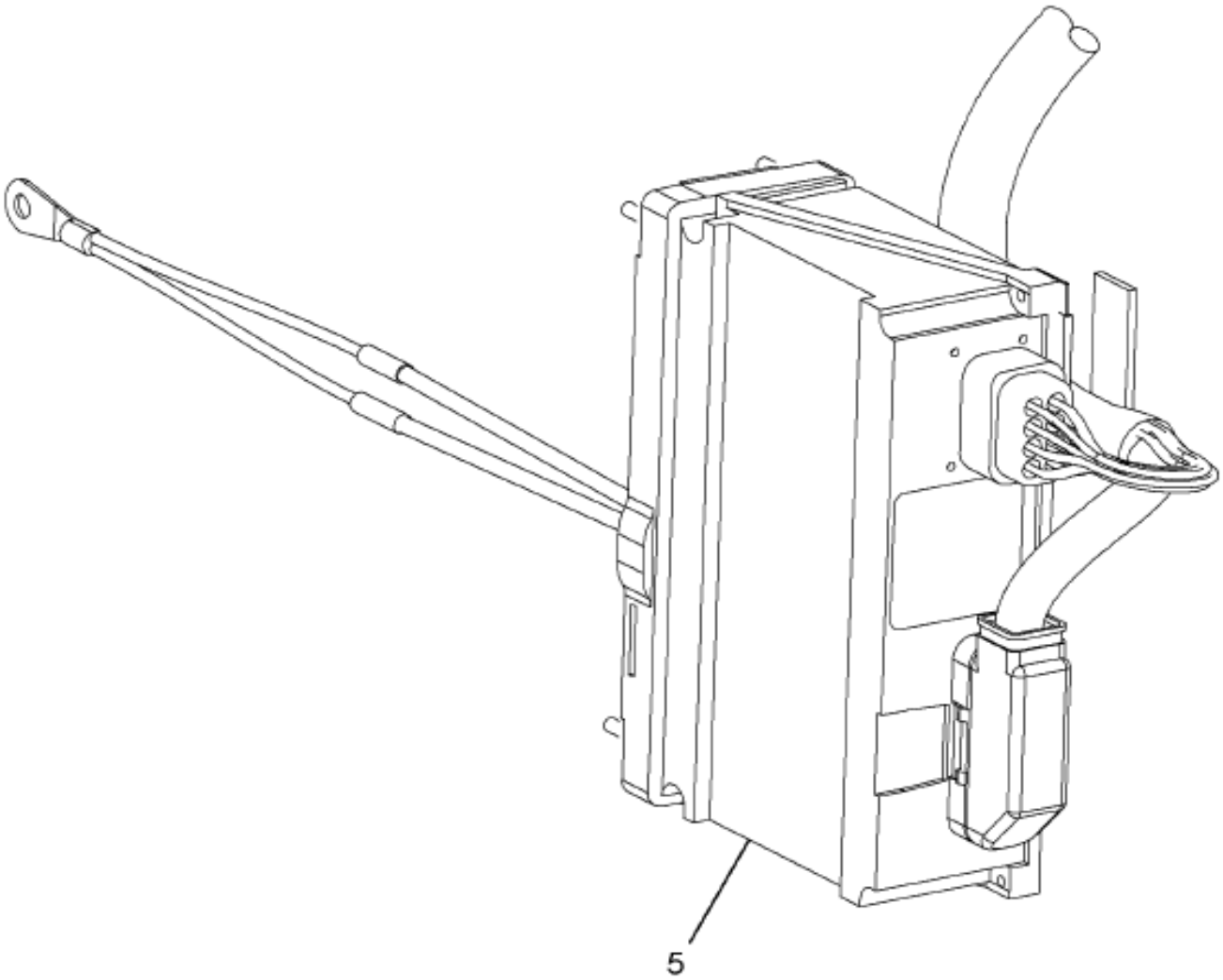

08-P50-0003-A0 B10

Item	Part No.	Qty	Description	Kit	Var	Figure
5	3579360F95	1	IP, ESC2: ASM,WBOOT LOADER		0HCJ4	3579360F95

COPYRIGHT© 2011INTERNATIONAL TRUCK AND ENGINE CORP.

https://truckmanualshub.com/

Figure 3833153C2

CONTROL,ELECTRONIC, ESC2: BOOT

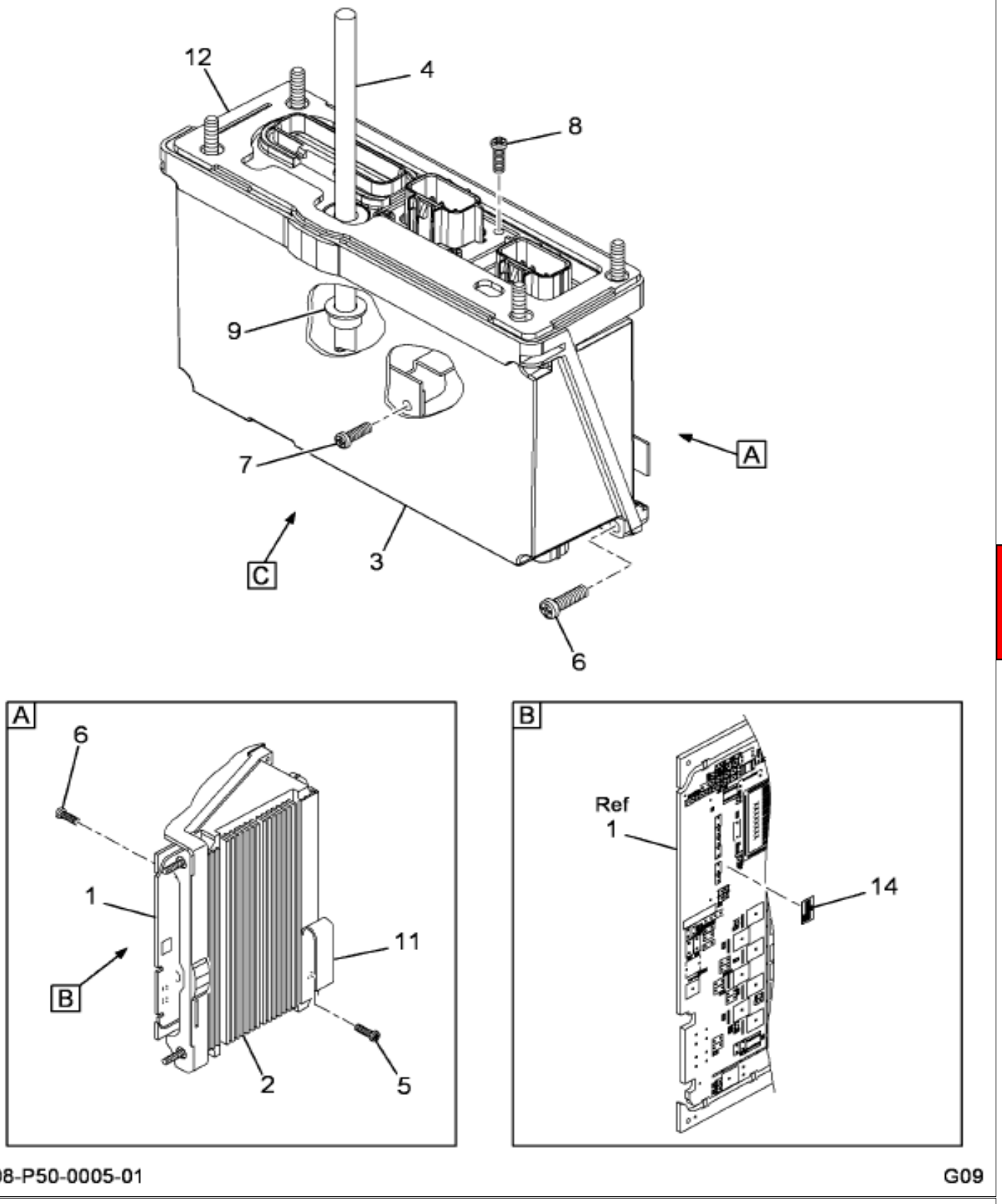

Grp 08

Figure 1 of 2

COPYRIGHT© 2011INTERNATIONAL TRUCK AND ENGINE CORP.

https://truckmanualshub.com/

Figure 3833153C2
CONTROL,ELECTRONIC, ESC2: BOOT

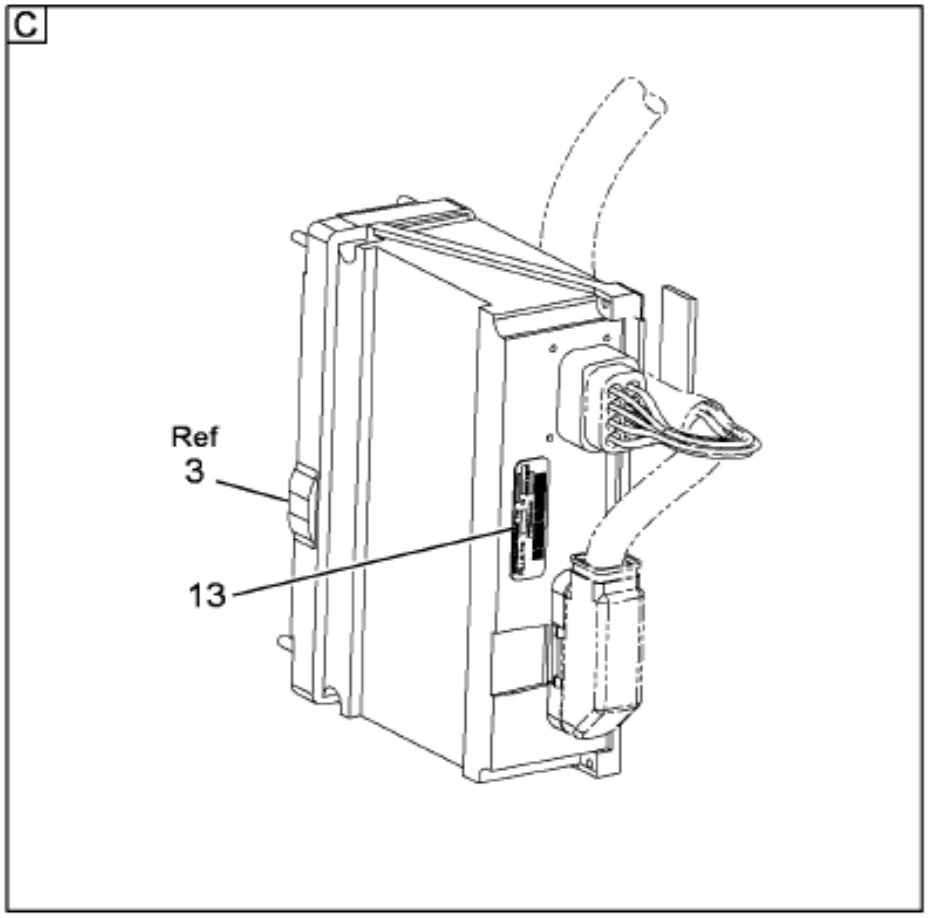

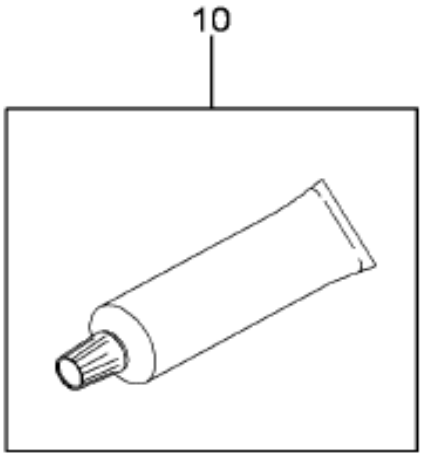

08-P50-0005-02 G09

Item	Part No.	Qty	Description	Kit	Var	Figure
1		1	PC BOARD ASM DRIVE PLUS ESC M			
2		1	HOUSING, DIE CAST ESC			
3		1	HOUSING, PLATIC ESC			
4		1	POWER CABLE ASM			
5		1	SCRE, 6-32 X 5/16 TAPT TORX			
6		4	SCREW, 10-24 X 5/8 TAPT TORX			

COPYRIGHT© 2011INTERNATIONAL TRUCK AND ENGINE CORP.

https://truckmanualshub.com/

Figure 3833155C2

CONTROL,ELECTRONIC, ESC2: BOOT

Item	Part No.	Qty	Description	Kit	Var	Figure
7		7	SCREW, 6-13 X 3/8 TAPT TORX			
8		12	SCREW, 6-19 X 1/2 PLAST TORX			
9		1	GROMMET			
10		AR	THERMAL PASTE AOS52043CR			
11		1	J-CLIP			
12		1	GASKET, FIREWALL			
13		1	LABEL, COMP IMPRINTABLE			
14		1	LABEL			
880		RF	NOTE: ASM BELOW COMPRISED OF ABOVE COMPONENTS			
881	3833155C2	RF	CONTROL,ELECTRONIC, ESC2: BOOT			

COPYRIGHT© 2011INTERNATIONAL TRUCK AND ENGINE CORP.

https://truckmanualshub.com/

Figure 3579360F95

IP, ESC2: ASM,WBOOT LOADER

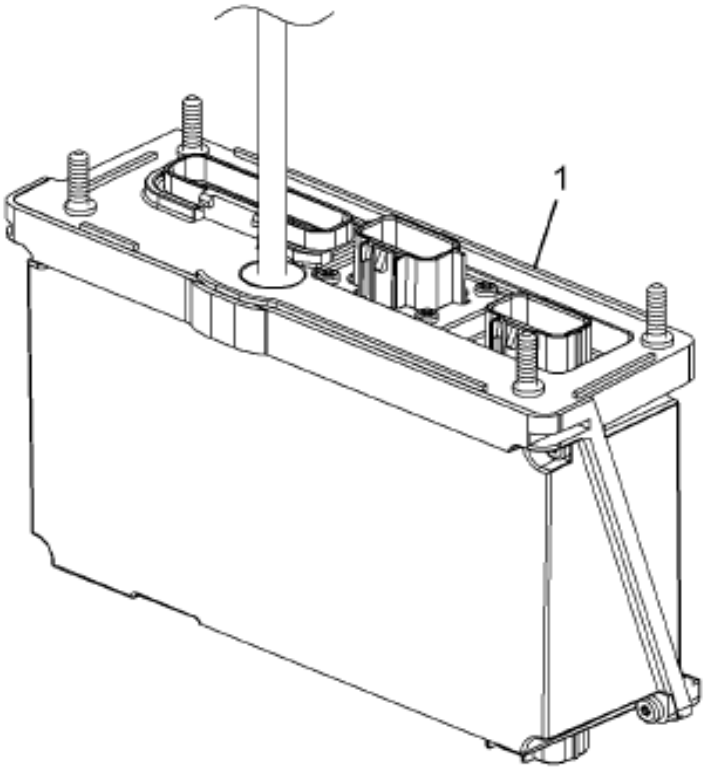

08-P50-0004-01 G07

Item	Part No.	Qty	Description	Kit	Var	Figure
1	3833155C2	RF	CONTROL,ELECTRONIC, ESC2: BOOT			3833155C2
880		RF	NOTE: ASM BELOW COMPRISED OF ABOVE COMPONENTS			
881	3579360F95	RF	IP, ESC2: ASM,WBOOT LOADER			

COPYRIGHT© 2011INTERNATIONAL TRUCK AND ENGINE CORP.

https://truckmanualshub.com/

Figure 0DBN4

IP MODULE, HOUSING ASM; 3-SWITCH, LOC #5 (ABR #58)

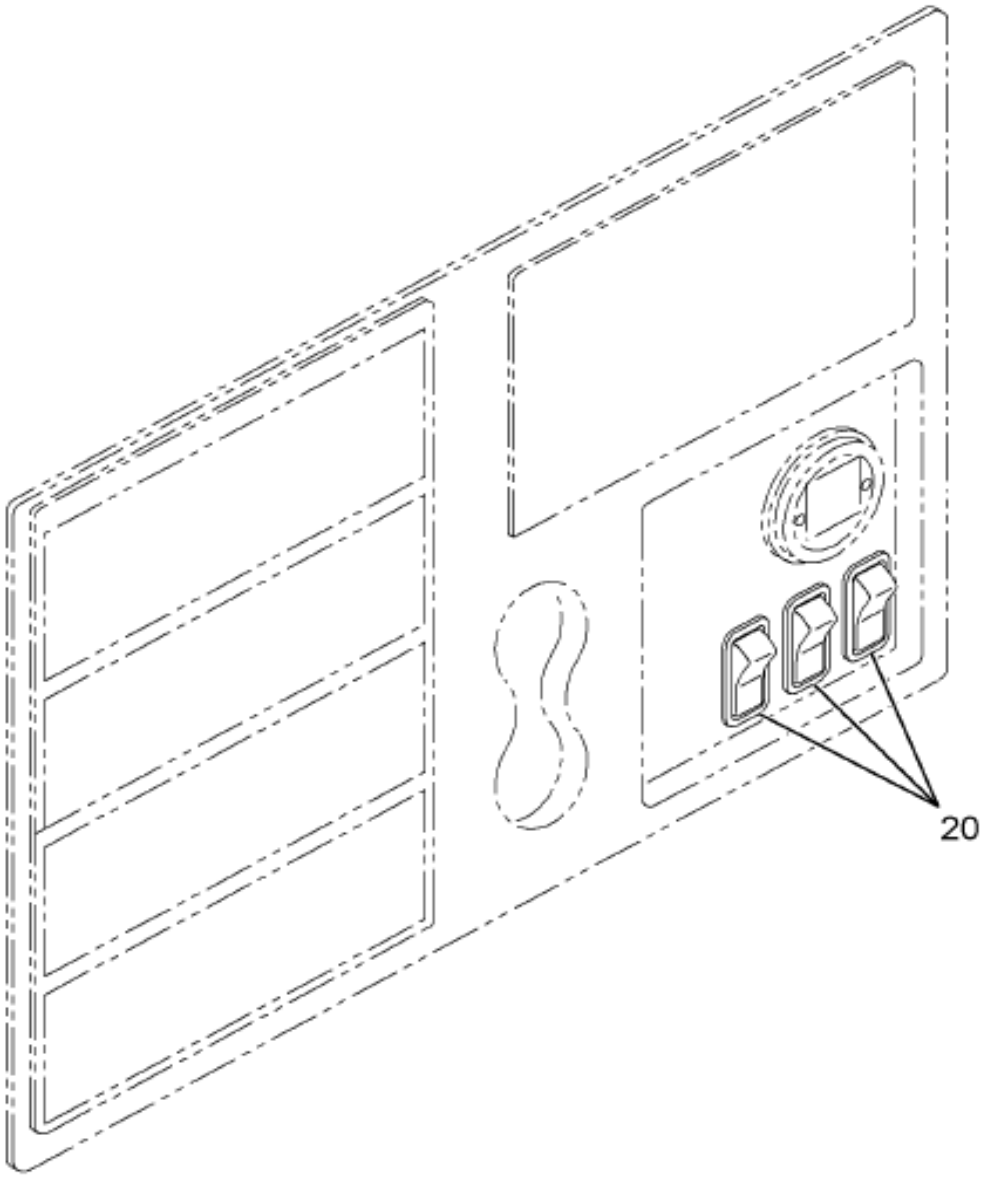

08-P58-0007-D0 J04

Item	Part No.	Qty	Description	Kit	Var	Figure
20	3581434F91	1	ELEC IP,ROOF AUX WRG W/BRKR		0NM2H	3581434F91

COPYRIGHT© 2011INTERNATIONAL TRUCK AND ENGINE CORP.

https://truckmanualshub.com/

Figure 3581434F91
ELEC IP,ROOF AUX WRG W/BRKR

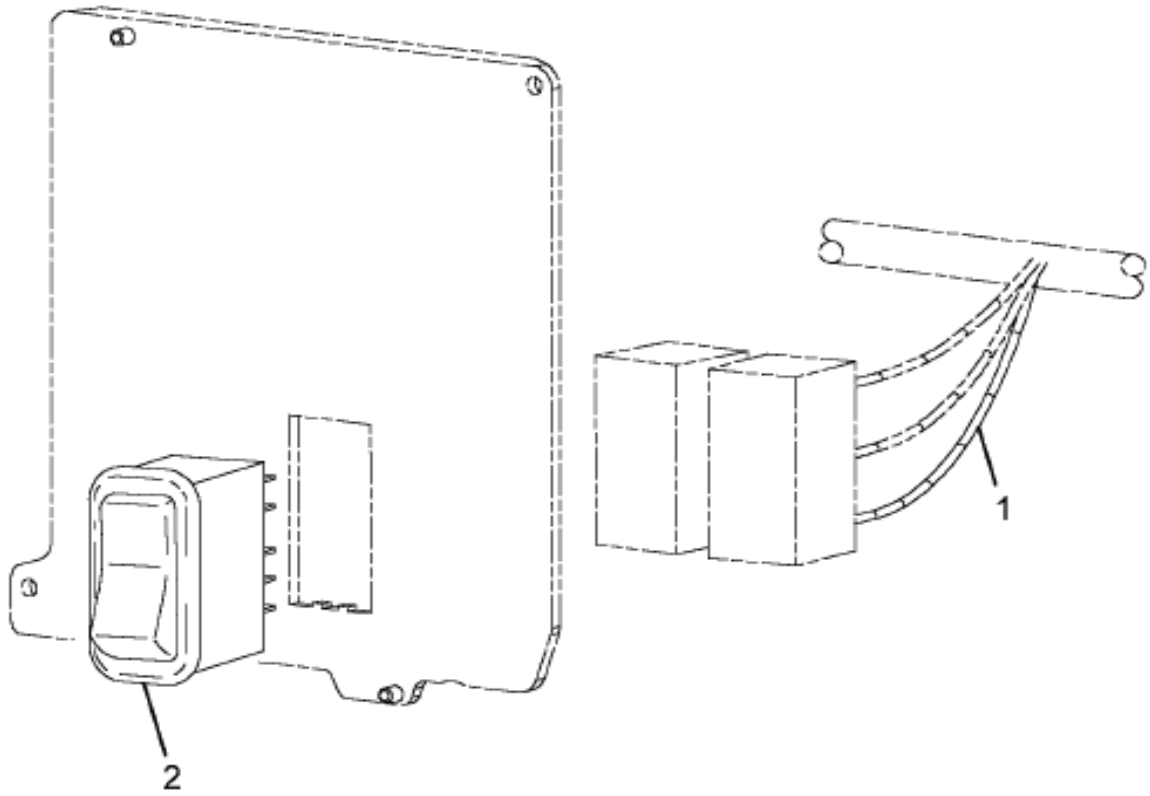

08-P58-0002-00 E04

Item	Part No.	Qty	Description	Kit	Var	Figure
1	3581305C91	1	HARNESS,ROOF WIRING*IP AUXILIA			
2	3557932C1	1	SWITCH;ELECTRONIC*ROOF AUX LOA			
800		RF	NOTE: THE FOLLOWING PARTS ARE			
			NON-ILLUSTRATED			
801	3519350C1	1	RELAY,MICRO SPDT			
802	3534208C1	1	FUSE,*FUSE, 5AMP MINI			

COPYRIGHT© 2011INTERNATIONAL TRUCK AND ENGINE CORP.

https://truckmanualshub.com/

Figure 3581434F91

ELEC IP,ROOF AUX WRG W/BRKR

Item	Part No.	Qty	Description	Kit	Var	Figure
803	3536180C1	1	BREAKER,CIRCUIT*20 AMP, 12 VOL			
880		RF	NOTE: ASM BELOW COMPRISED OF ABOVE COMPONENTS			
881	3581434F91	RF	ELEC IP,ROOF AUX WRG W/BRKR			

COPYRIGHT© 2011INTERNATIONAL TRUCK AND ENGINE CORP.

https://truckmanualshub.com/

Figure 0L4G3

IP MODULE, HOUSING ASM; SWITCH/GAUGE/ENG DISPLAY (ABR #79)

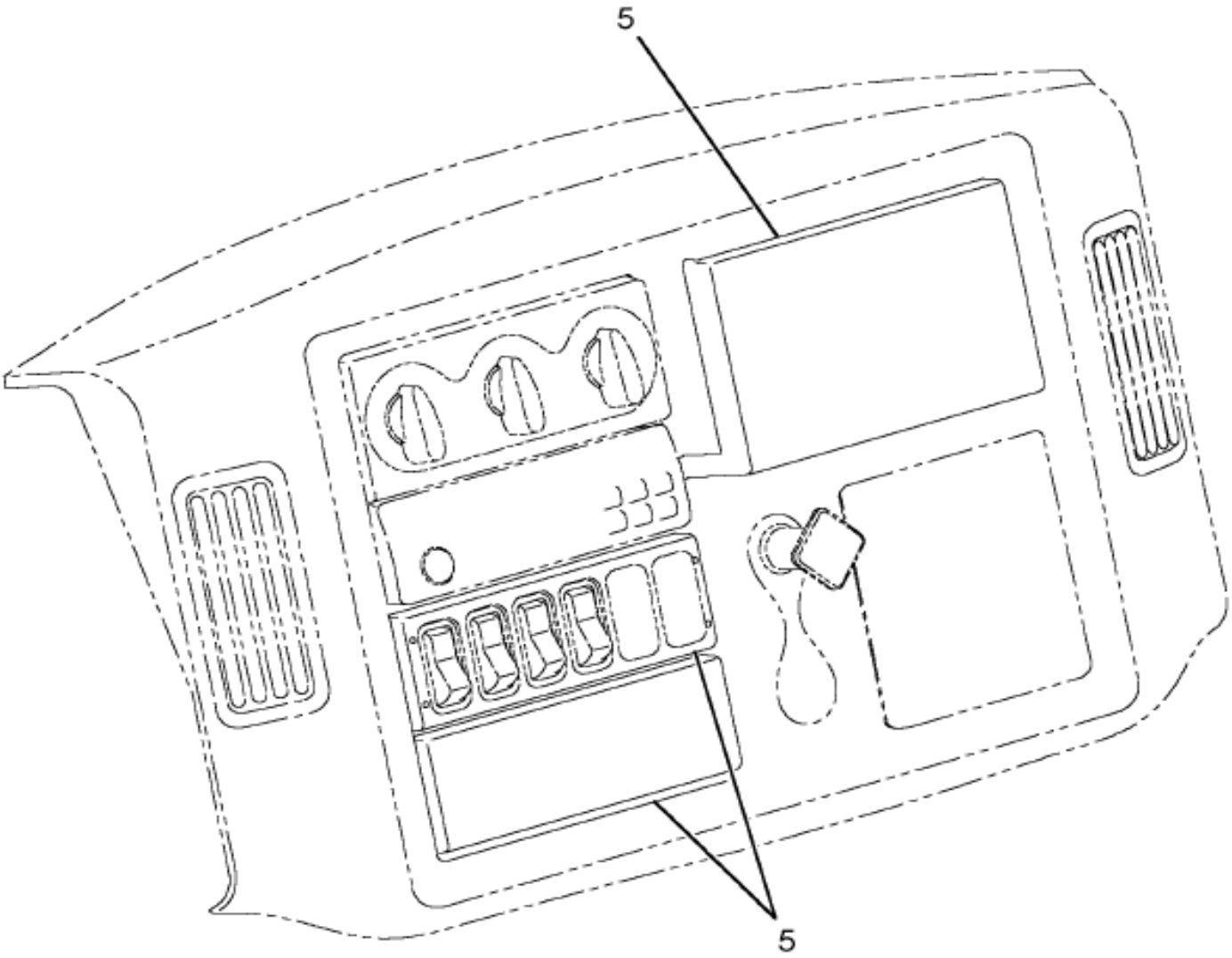

08-P34-0023-00 F04

Item	Part No.	Qty	Description	Kit	Var	Figure
5	3594374F91	1	IP-FULL SW PK W/MIN PK,POKT		0L546	3594374F91

COPYRIGHT© 2011INTERNATIONAL TRUCK AND ENGINE CORP.

https://truckmanualshub.com/

Figure 3549776C4

HOUSING,SWITCH*6 PACK DIN MULT

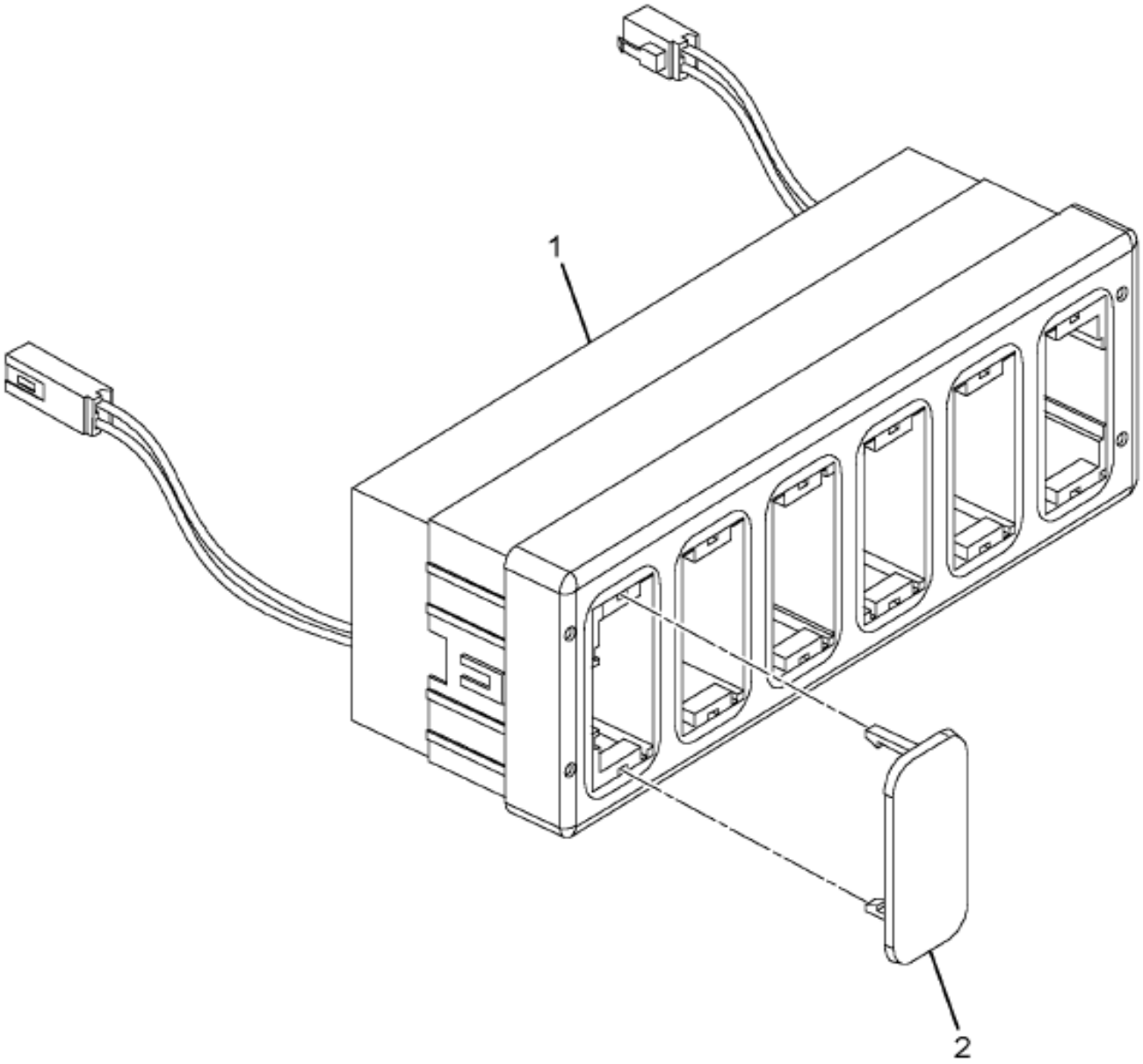

08-P53-0014-01 H03

Item	Part No.	Qty	Description	Kit	Var	Figure
1		1	6 PACK SWITCH MODULE			
2	3533950C1	6	PLUG,FILLER*SWITCH			
800		RF	NOTE: THE FOLLOWING PARTS ARE NON-ILLUSTRATED			
801	2506670R2	1	MANUAL,SWITCH INSTL SW HSG			
880		RF	NOTE: ASM BELOW COMPRISED OF ABOVE			

COPYRIGHT© 2011INTERNATIONAL TRUCK AND ENGINE CORP.

https://truckmanualshub.com/

Figure 3549776C4

HOUSING,SWITCH*6 PACK DIN MULT

Item	Part No.	Qty	Description	Kit	Var	Figure
			COMPONENTS			
881	3549776C4	RF	HOUSING,SWITCH*6 PACK DIN MULT			

COPYRIGHT© 2011INTERNATIONAL TRUCK AND ENGINE CORP.

https://truckmanualshub.com/

Figure 3594374F91
IP-FULL SW PK W/MIN PK,POKT

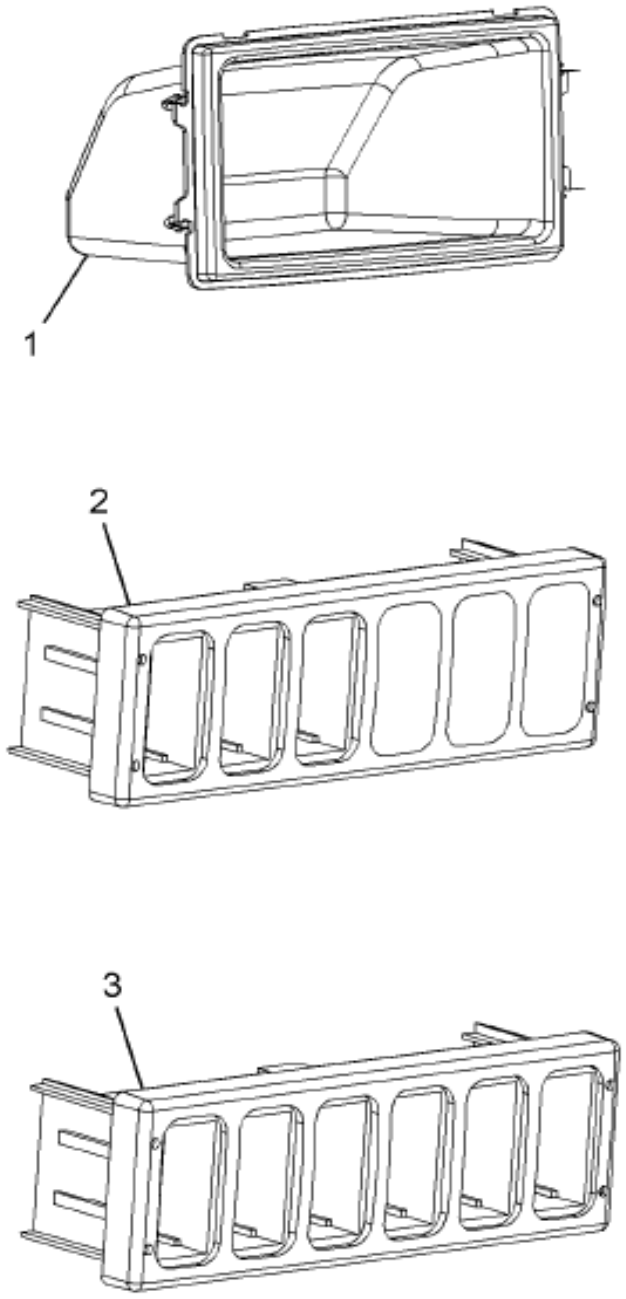

08-P34-0020-01 C04

Item	Part No.	Qty	Description	Kit	Var	Figure
1	3534056C2	1	PANEL,INSTRUMENT STORAGE BIN			
2	3575432C4	1	HOUSING,SWITCH*3 PACK DIN MULT			
3	3549776C4	1	HOUSING,SWITCH*6 PACK DIN MULT			3549776C4
880		RF	NOTE: ASM BELOW COMPRISED OF ABOVE COMPONENTS			
881	3594374F91	RF	IP-FULL SW PK W/MIN PK,POKT			

Grp 08

COPYRIGHT© 2011INTERNATIONAL TRUCK AND ENGINE CORP.

https://truckmanualshub.com/

Figure 0G1K9

IP MODULE, MISC EFFECTS (ABR #95)

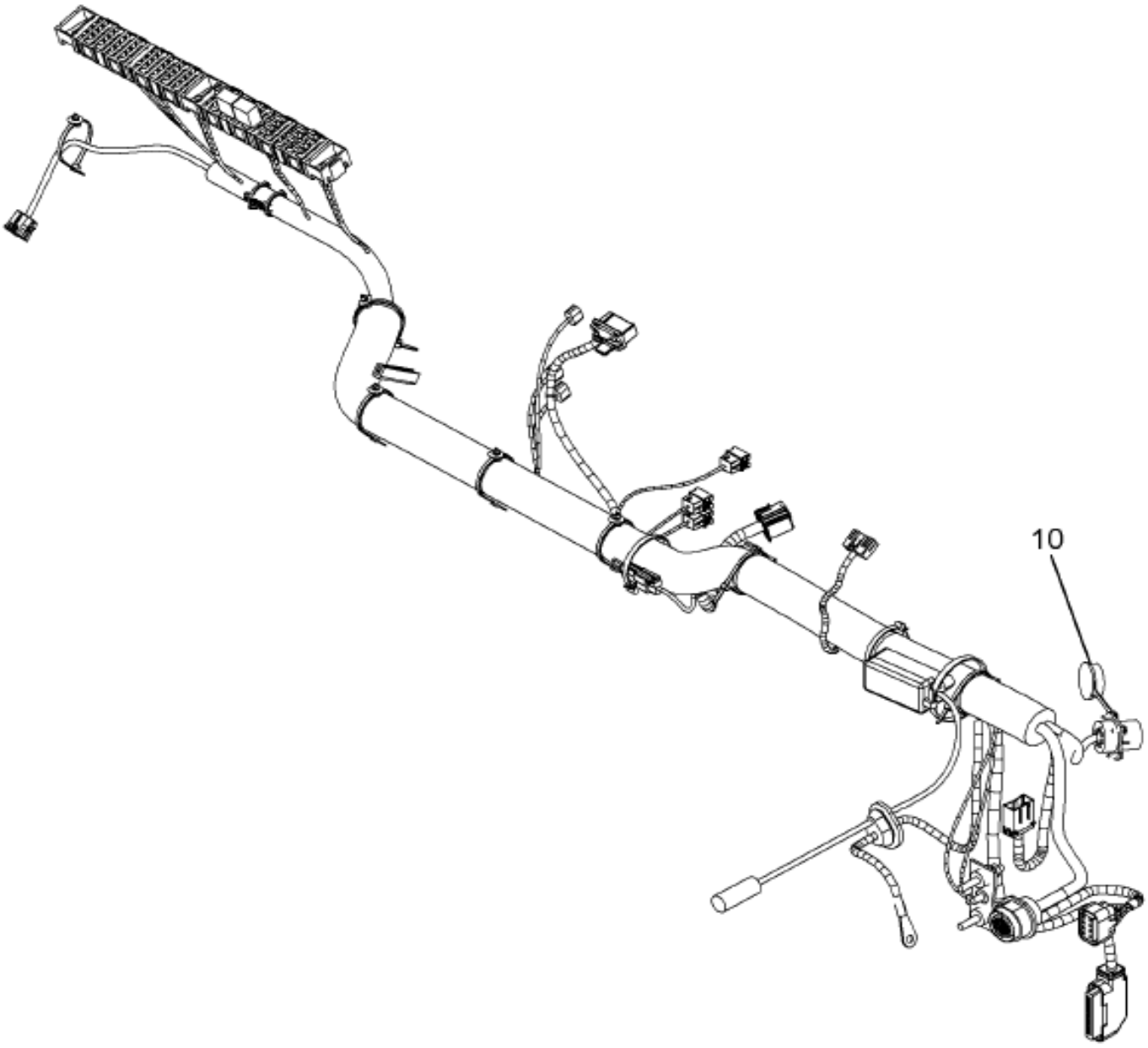

Item	Part No.	Qty	Description	Kit	Var	Figure
10	3578228F91	1	ELEC IP,FTR CAT#95 MISC EFF		0HR0M	3578228F91

COPYRIGHT© 2011INTERNATIONAL TRUCK AND ENGINE CORP.

https://truckmanualshub.com/

Figure 3578228F91
ELEC IP,FTR CAT#95 MISC EFF

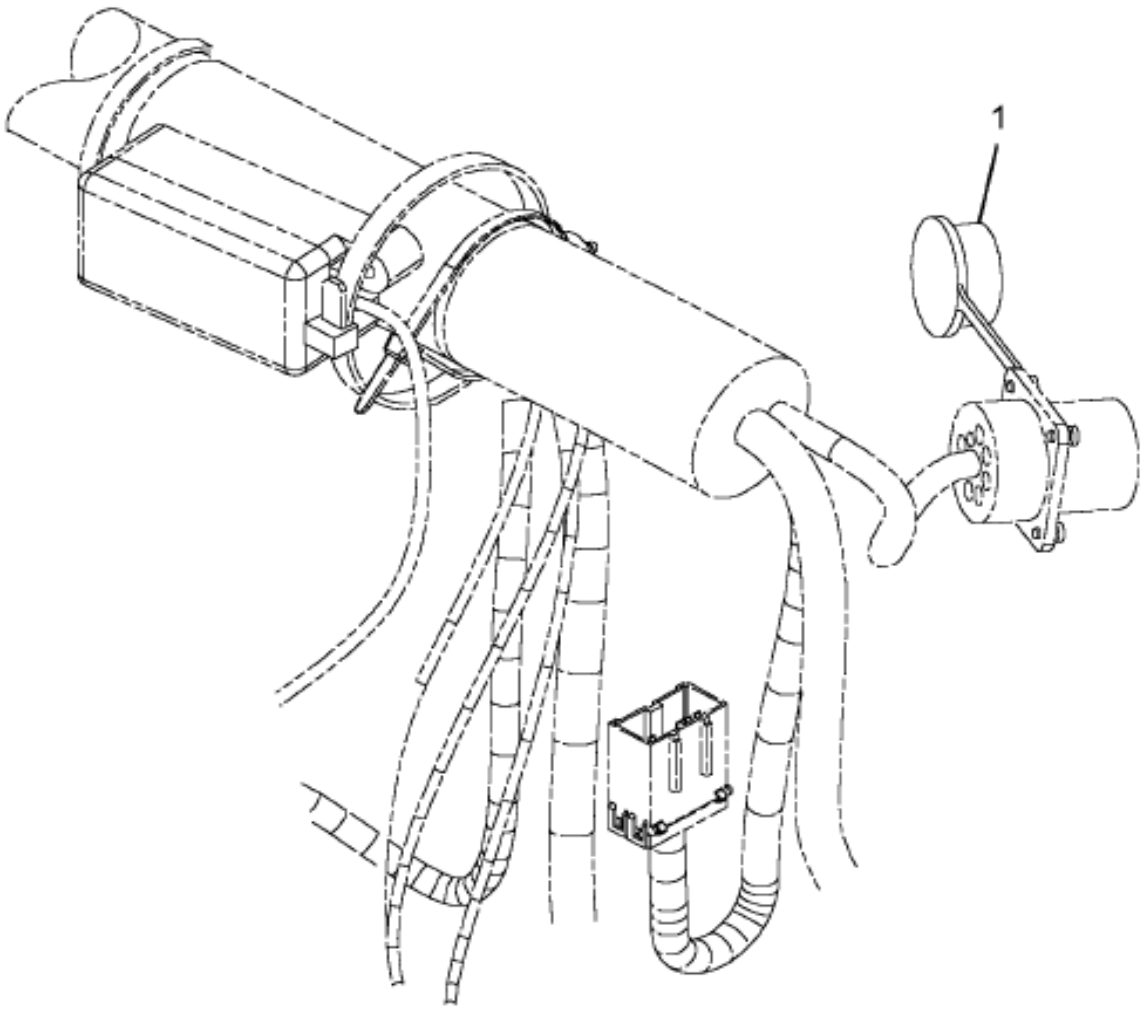

08-P95-0001-00 E04

Item	Part No.	Qty	Description	Kit	Var	Figure
1	3547843C1	1	CAP RECEPTACLE*9-PIN DATA LINK			
880		RF	NOTE: ASM BELOW COMPRISED OF ABOVE COMPONENTS			
881	3578228F91	RF	ELEC IP,FTR CAT#95 MISC EFF			

COPYRIGHT© 2011INTERNATIONAL TRUCK AND ENGINE CORP.

https://truckmanualshub.com/

Figure 0DCZL

IP MODULE, SWITCH ASM; AIR HORN CNTRL (ABR #68)

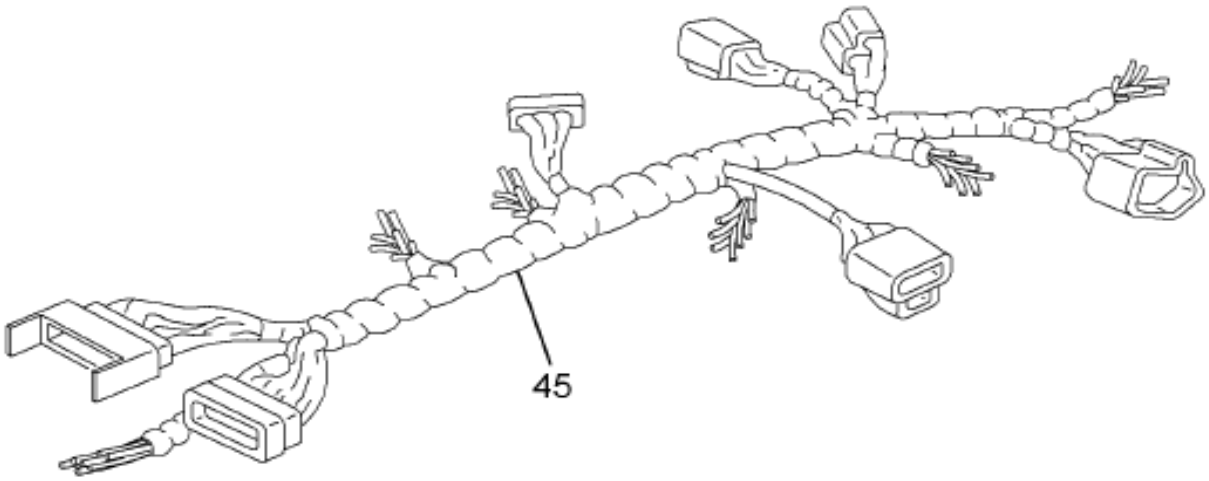

08-P68-0001-01 C03

Item	Part No.	Qty	Description	Kit	Var	Figure
45	3554183F91	1	ELEC IP; W/AIR HORN SWITCH		0DD1R	3554183F91

COPYRIGHT© 2011INTERNATIONAL TRUCK AND ENGINE CORP.

https://truckmanualshub.com/

Figure 3554183F91

ELEC IP; W/AIR HORN SWITCH

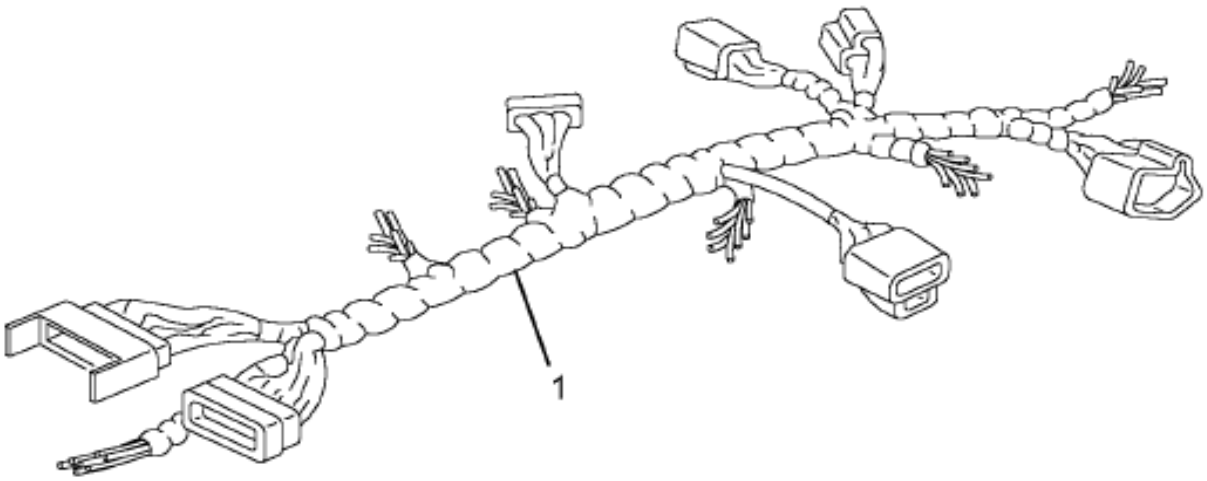

08-P58-0006-01 C03

Item	Part No.	Qty	Description	Kit	Var	Figure
1	3554117C91	1	HARNESS,CAB OVERLAY*W/AIR HORN			
880		RF	NOTE: ASM BELOW COMPRISED OF ABOVE COMPONENTS			
881	3554183F91	RF	ELEC IP; W/AIR HORN SWITCH			

COPYRIGHT© 2011INTERNATIONAL TRUCK AND ENGINE CORP.

https://truckmanualshub.com/

Figure 0DC3W

IP MODULE, SWITCH ASM; AXLE CNTRLS (ABR #62)

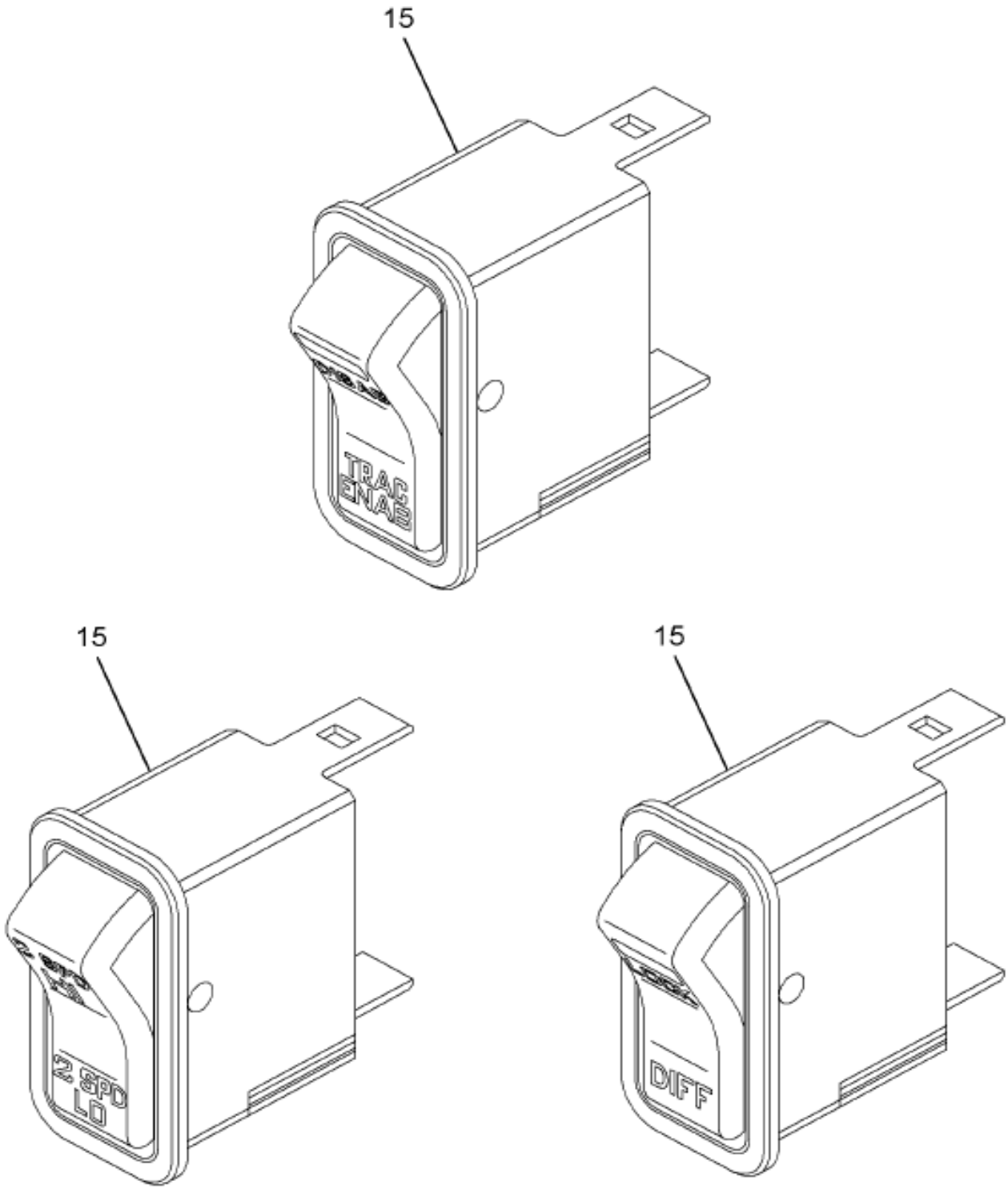

08-P62-0002-C0 L04

Item	Part No.	Qty	Description	Kit	Var	Figure
15	3608281F91	1	IP,SWITCH,DRVR CTRLR,DIFF LOCK		0JHRY	3608281F91

COPYRIGHT© 2011INTERNATIONAL TRUCK AND ENGINE CORP.

https://truckmanualshub.com/

Figure 3608281F91
IP,SWITCH,DRVR CTRLR,DIFF LOCK

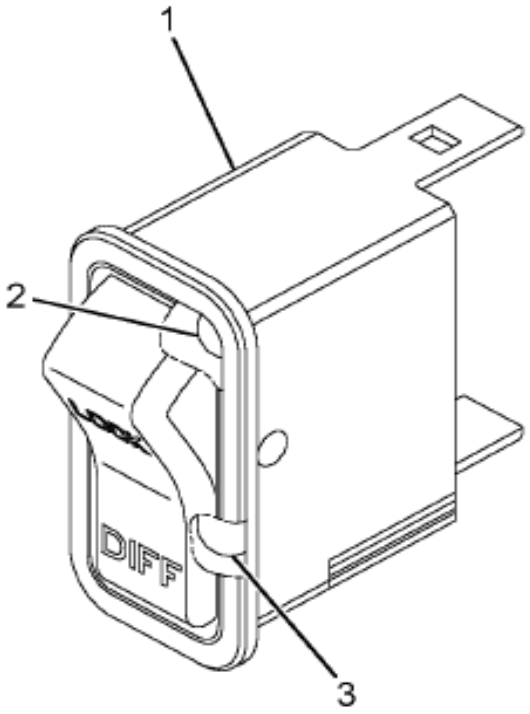

08-P53-0010-01 H03

Item	Part No.	Qty	Description	Kit	Var	Figure
1	3563074C1	1	SWITCH,ELECTRONIC DIFF LOCK			3563074C1
2	3578733C1	1	LIGHT,IND,LED ON-GREEN,BRIGHT			
3	3533928C1	1	LIGHT,IND,LED AMBER BKLGT			
880		RF	NOTE: ASM BELOW COMPRISED OF ABOVE COMPONENTS			
881	3608281F91	RF	IP,SWITCH,DRVR CTRLR,DIFF LOCK			

COPYRIGHT© 2011INTERNATIONAL TRUCK AND ENGINE CORP.

https://truckmanualshub.com/

Figure 3608281F91

IP,SWITCH,DRVR CTRLR,DIFF LOCK

Item	Part No.	Qty	Description	Kit	Var	Figure
			NON-ILLUSTRATED REFERENCE FIGURE 3563074C1			
1		RF	SWITCH,DIFF LOCK			
2	2506670R2	1	MANUAL,SWITCH INSTL SW HSG			
880		RF	NOTE: ASM BELOW COMPRISED OF ABOVE COMPONENTS			
881	3563074C1	RF	SWITCH,ELECTRONIC DIFF LOCK			

COPYRIGHT© 2011INTERNATIONAL TRUCK AND ENGINE CORP.

https://truckmanualshub.com/

Figure 0DC3X

IP MODULE, SWITCH ASM; POWER DIVIDER LOCK CNTRL (ABR #63)

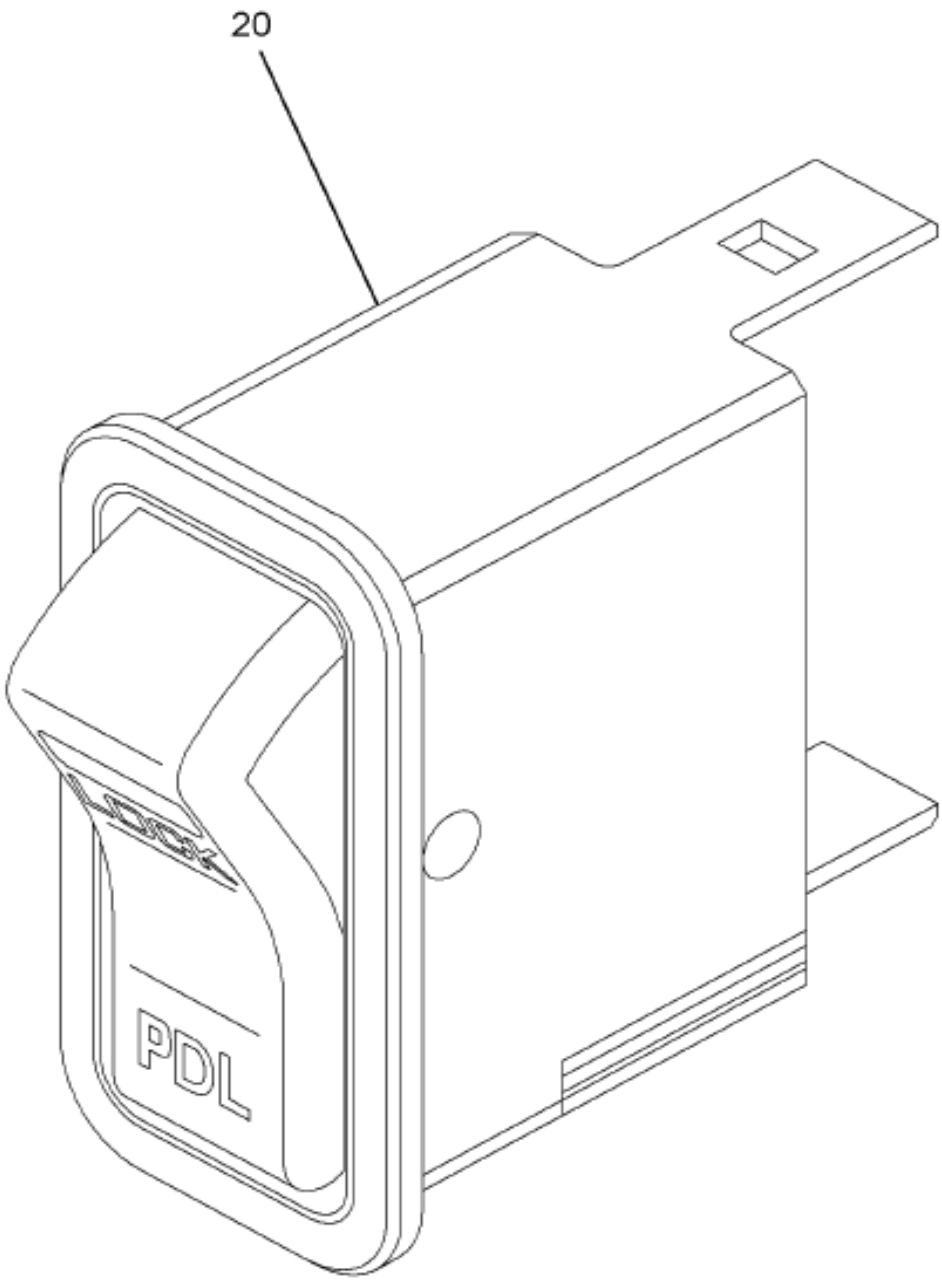

08-P63-0001-BA K04

Item	Part No.	Qty	Description	Kit	Var	Figure
20	3578747F91	1	ELEC IP,PDL IN/OUT SWITCH		0FQJJ	3578747F91

COPYRIGHT© 2011INTERNATIONAL TRUCK AND ENGINE CORP.

Figure 3578747F91
ELEC IP,PDL IN/OUT SWITCH

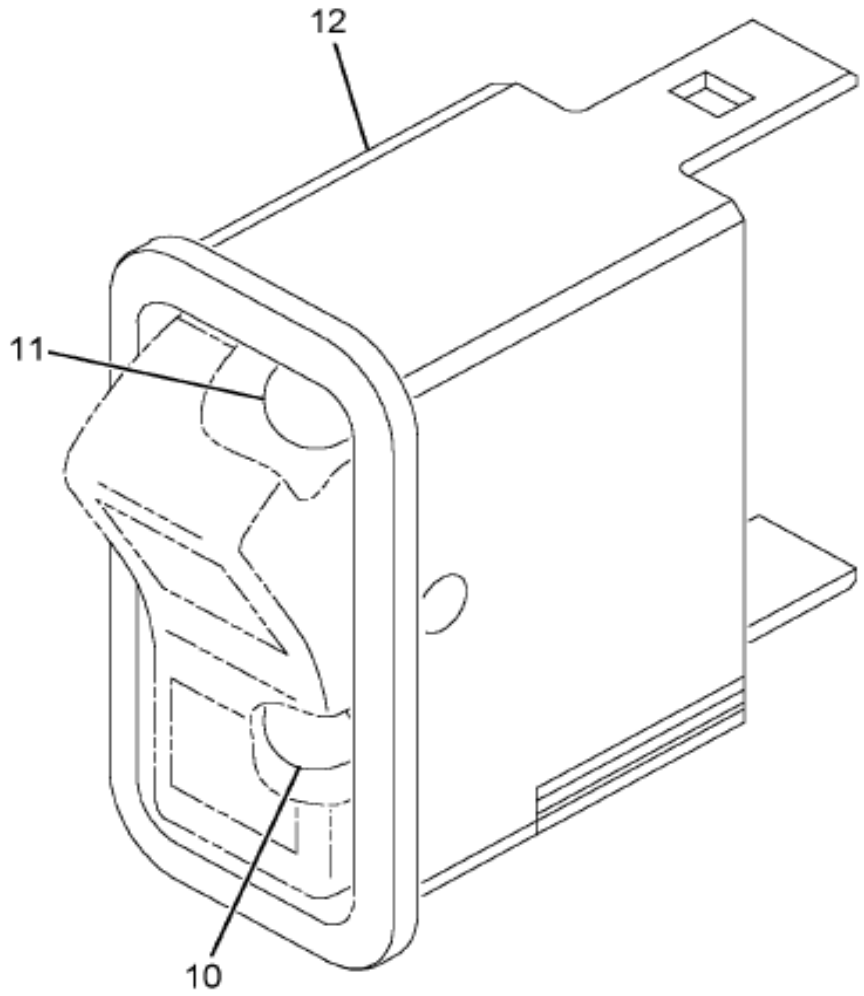

08-P91-0001-00 A03

Item	Part No.	Qty	Description	Kit	Var	Figure
10	3533928C1	1	LIGHT,IND,LED AMBER BKLGT			
11	3578733C1	1	LIGHT,IND,LED ON-GREEN,BRIGHT			
12	3563073C1	1	SWITCH,ELECTRONIC PDL LOCK			3563073C1
880		RF	NOTE: ASM BELOW COMPRISED OF ABOVE COMPONENTS			
881	3578747F91	RF	ELEC IP,PDL IN/OUT SWITCH			

COPYRIGHT© 2011INTERNATIONAL TRUCK AND ENGINE CORP.

https://truckmanualshub.com/

Figure 3378747F91

ELEC IP,PDL IN/OUT SWITCH

Item	Part No.	Qty	Description	Kit	Var	Figure
			NON-ILLUSTRATED REFERENCE FIGURE 3563073C1			
1		RF	SWITCH,PDL LOCK			
2	2506670R2	1	MANUAL,SWITCH INSTL SW HSG			
880		RF	NOTE: ASM BELOW COMPRISED OF ABOVE COMPONENTS			
881	3563073C1	RF	SWITCH,ELECTRONIC PDL LOCK			

COPYRIGHT© 2011INTERNATIONAL TRUCK AND ENGINE CORP.

https://truckmanualshub.com/

Figure 0DC31

IP MODULE, SWITCH ASM; PTO CNTRL (ABR #67)

Item	Part No.	Qty	Description	Kit	Var	Figure
40	3578721F91	1	ELECTRICAL IP,PTO SWITCH		0K8DG	3578721F91

COPYRIGHT© 2011INTERNATIONAL TRUCK AND ENGINE CORP.

https://truckmanualshub.com/

Figure 3578721F91
ELECTRICAL IP,PTO SWITCH

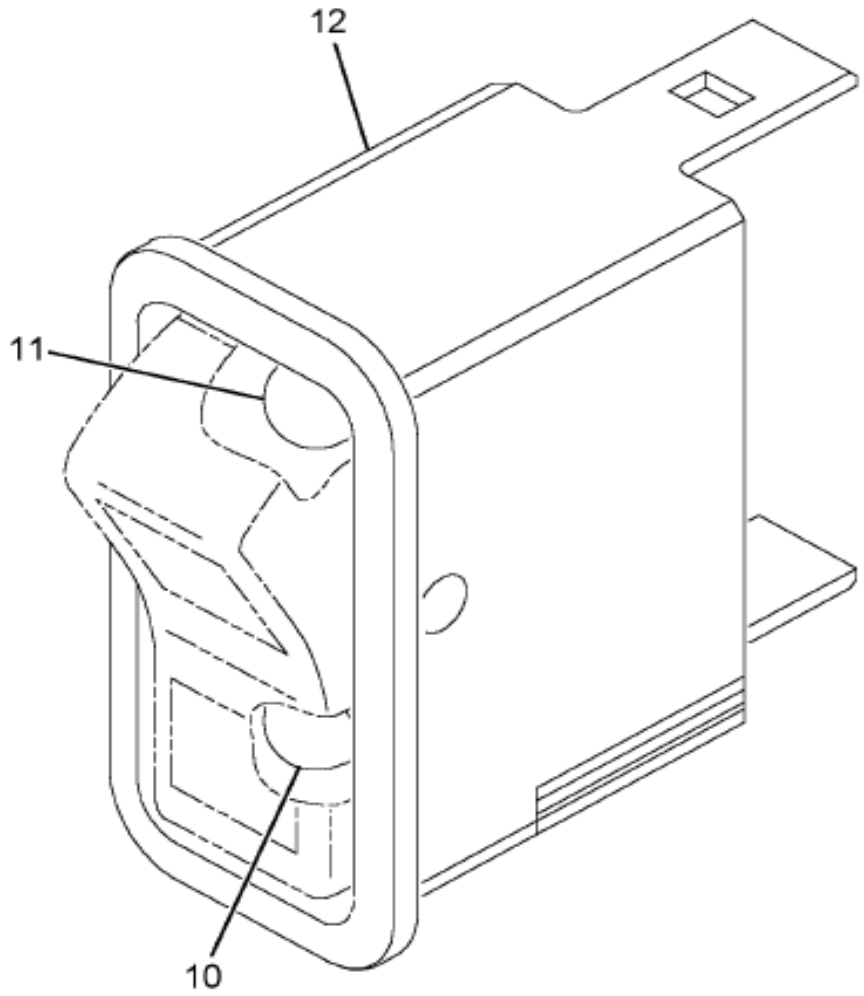

08-P91-0001-00 A03

Item	Part No.	Qty	Description	Kit	Var	Figure
10	3578733C1	1	LIGHT,IND,LED ON-GREEN,BRIGHT			
11	3533928C1	1	LIGHT,IND,LED AMBER BKLGT			
12	3563079C1	1	SWITCH,ELECTRONIC PTO			3563079C1
880		RF	NOTE: ASM BELOW COMPRISED OF ABOVE COMPONENTS			
881	3578721F91	RF	ELECTRICAL IP,PTO SWITCH			

COPYRIGHT© 2011INTERNATIONAL TRUCK AND ENGINE CORP.

https://truckmanualshub.com/

Figure 3565075C1
SWITCH,ELECTRONIC PTO

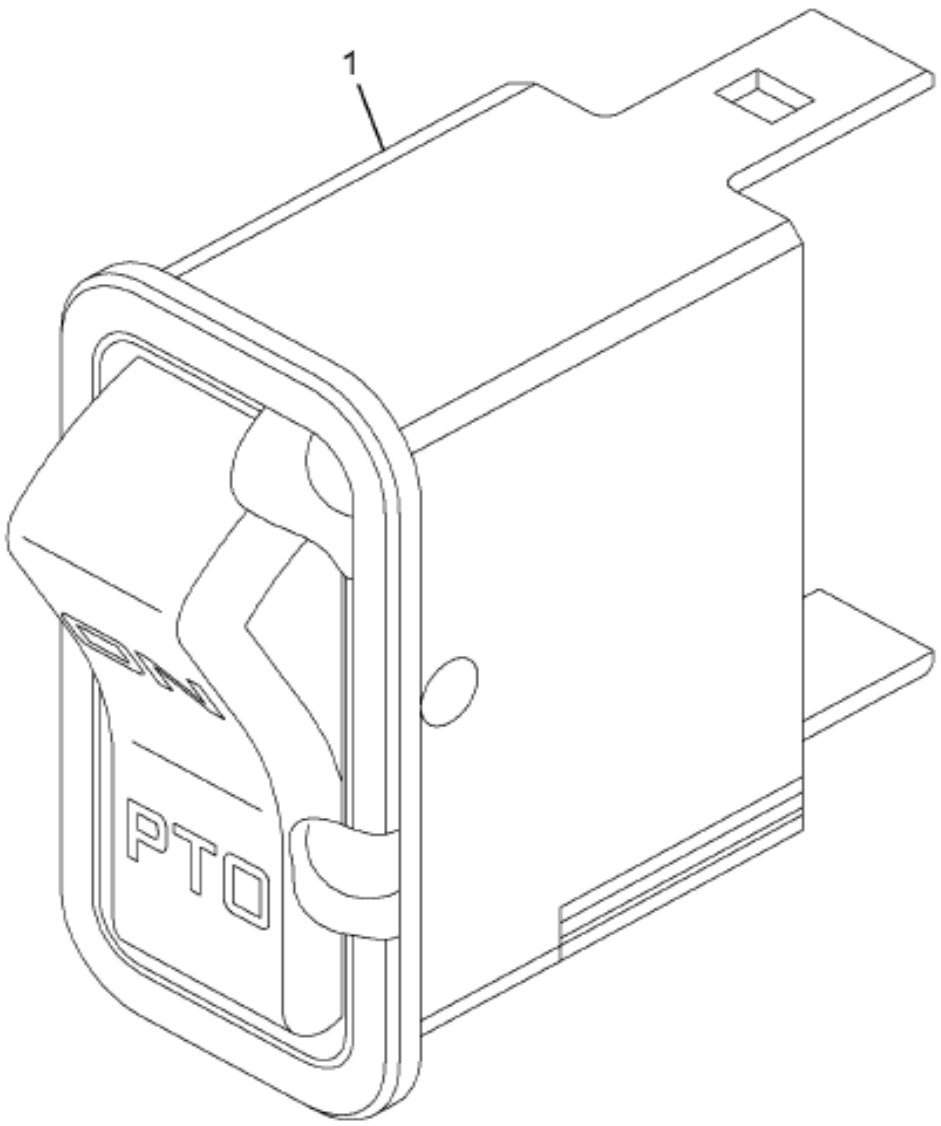

16-D75-M128-01 M09

Item	Part No.	Qty	Description	Kit	Var	Figure
1		RF	SWITCH, PTO ON/OFF			
800		RF	NOTE: THE FOLLOWING PARTS ARE			
			NON-ILLUSTRATED			
801	2506670R2	1	MANUAL,SWITCH INSTL SW HSG			
880		RF	NOTE: ASM BELOW COMPRISED OF ABOVE			
			COMPONENTS			

COPYRIGHT© 2011INTERNATIONAL TRUCK AND ENGINE CORP.

https://truckmanualshub.com/

Figure 3563079C1

SWITCH,ELECTRONIC PTO

Item	Part No.	Qty	Description	Kit	Var	Figure
881	3563079C1	RF	SWITCH,ELECTRONIC PTO			

COPYRIGHT© 2011INTERNATIONAL TRUCK AND ENGINE CORP.

https://truckmanualshub.com/

Figure 0L5BD

IP MODULE, SWITCH HOUSING ASM; BLANKS (ABR #80)

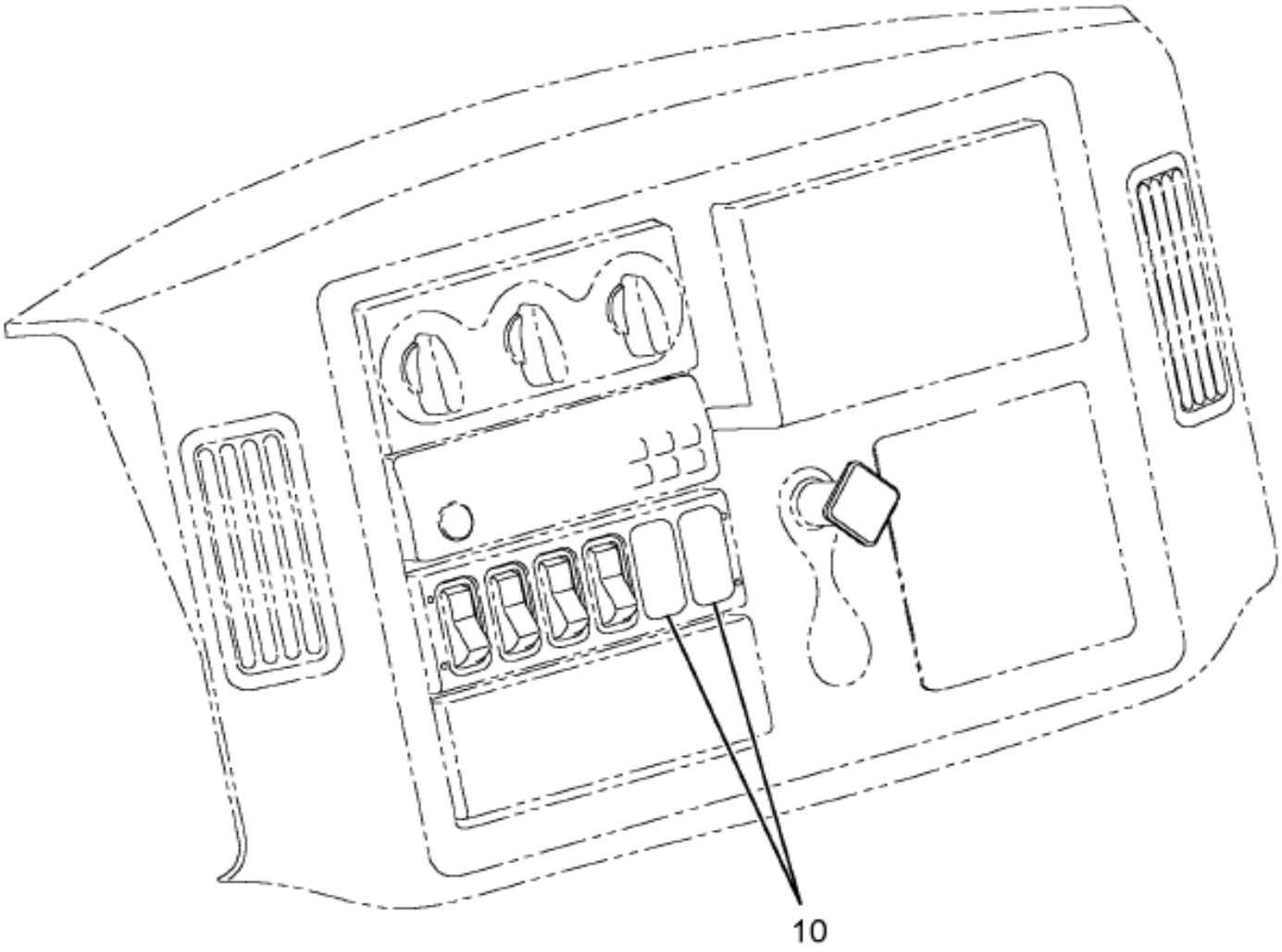

08-P34-0022-00 F04

Item	Part No.	Qty	Description	Kit	Var	Figure
10	3595680F91	1	IP-4 SWITCH BLANK PLUGS		0L5CT	3595680F91

COPYRIGHT© 2011INTERNATIONAL TRUCK AND ENGINE CORP.

https://truckmanualshub.com/

Figure 3595680F91

IP-4 SWITCH BLANK PLUGS

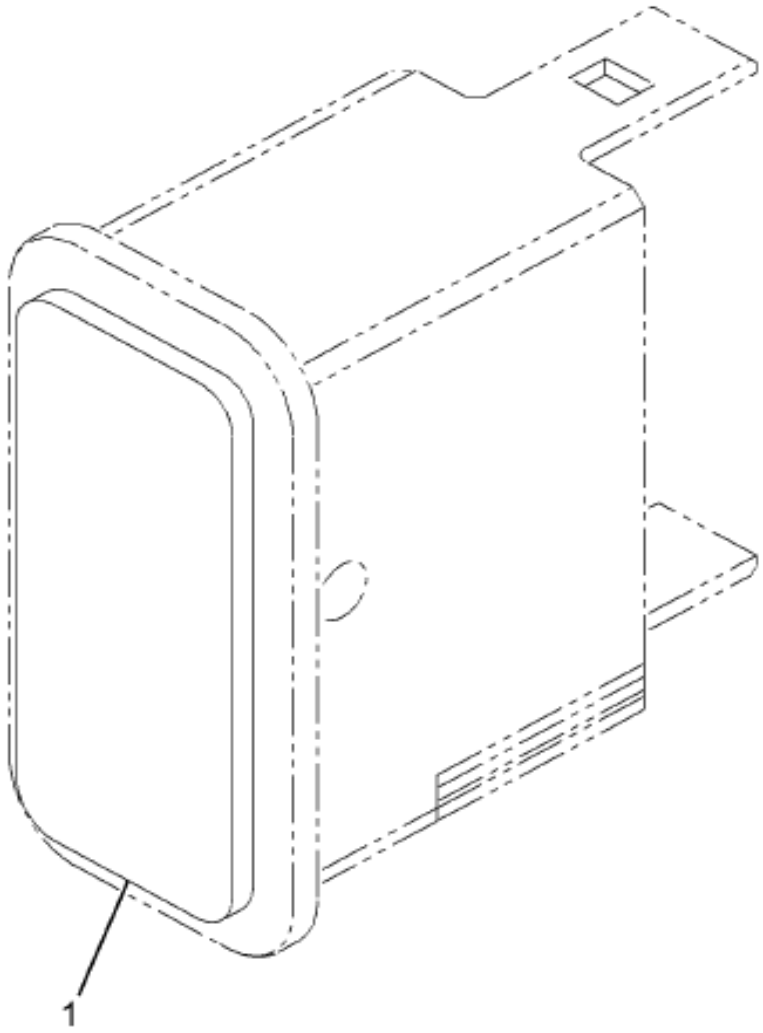

08-P61-0003-01 D04

Item	Part No.	Qty	Description	Kit	Var	Figure
1	3533950C1	4	PLUG,FILLER*SWITCH			
880		RF	NOTE: ASM BELOW COMPRISED OF ABOVE COMPONENTS			
881	3595680F91	RF	IP-4 SWITCH BLANK PLUGS			

COPYRIGHT© 2011INTERNATIONAL TRUCK AND ENGINE CORP.

https://truckmanualshub.com/

Figure 0DC6X

IP MODULE, SWITCH INSTL; EXH/COMP BRAKE (ABR #53)

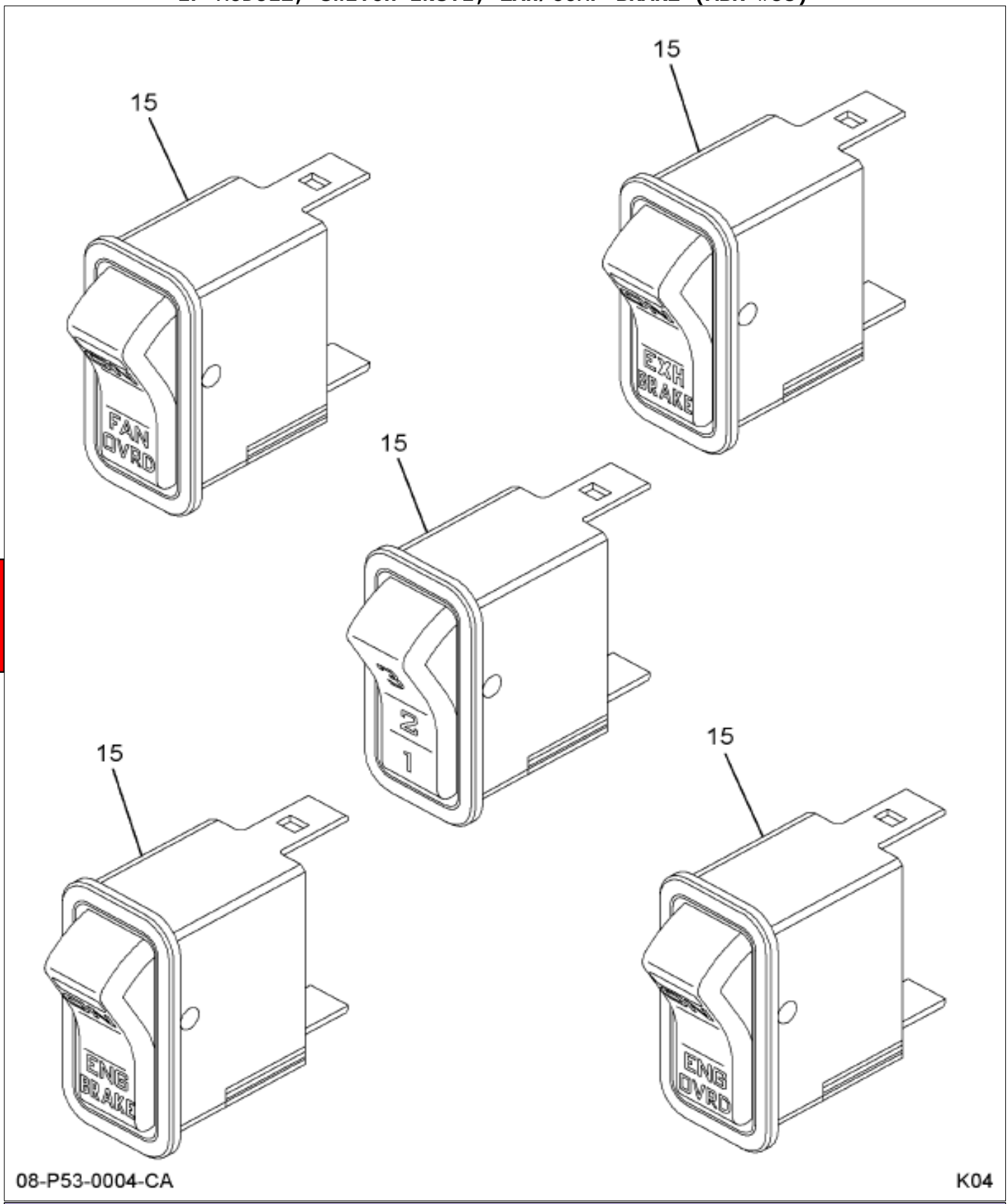

Item	Part No.	Qty	Description	Kit	Var	Figure
15	3578730F91	1	ELEC IP,FAN O'RIDE&ENG BRK		0FW0M	3578730F91

COPYRIGHT© 2011INTERNATIONAL TRUCK AND ENGINE CORP.

https://truckmanualshub.com/

Figure 3578730F91

ELEC IP,FAN O'RIDE&ENG BRK

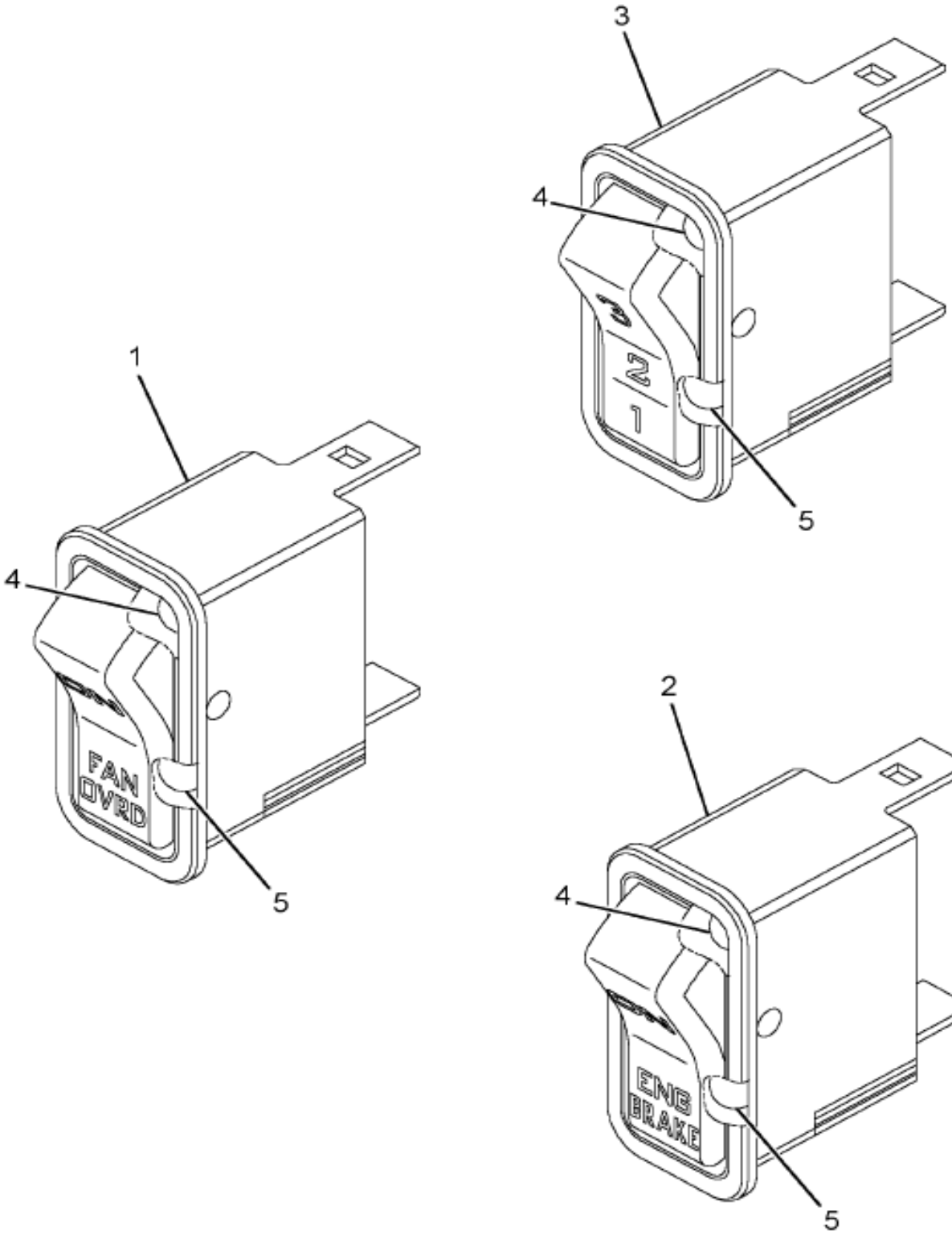

08-P53-0006-01 H03

Item	Part No.	Qty	Description	Kit	Var	Figure
1	3560048C1	1	SWITCH,ELECTRONIC FAN OVERRIDE			3560048C1
2	3560046C1	1	SWITCH,ELEC ENGINE BRAK ON/OFF			
3	3560047C1	1	SWITCH,ELEC ENGINE BRK SELECT			3560047C1
4	3578733C1	2	LIGHT,IND,LED ON-GREEN,BRIGHT			
5	3533928C1	4	LIGHT,IND,LED AMBER BKLGT			
880		RF	NOTE: ASM BELOW COMPRISED OF ABOVE			

COPYRIGHT© 2011INTERNATIONAL TRUCK AND ENGINE CORP.

https://truckmanualshub.com/

Figure 3578730F91

ELEC IP,FAN O'RIDE&ENG BRK

Item	Part No.	Qty	Description	Kit	Var	Figure
			COMPONENTS			
881	3578730F91	RF	ELEC IP,FAN O'RIDE&ENG BRK			

COPYRIGHT© 2011INTERNATIONAL TRUCK AND ENGINE CORP.

https://truckmanualshub.com/

Figure 3560047C1

SWITCH,ELEC ENGINE BRK SELECT

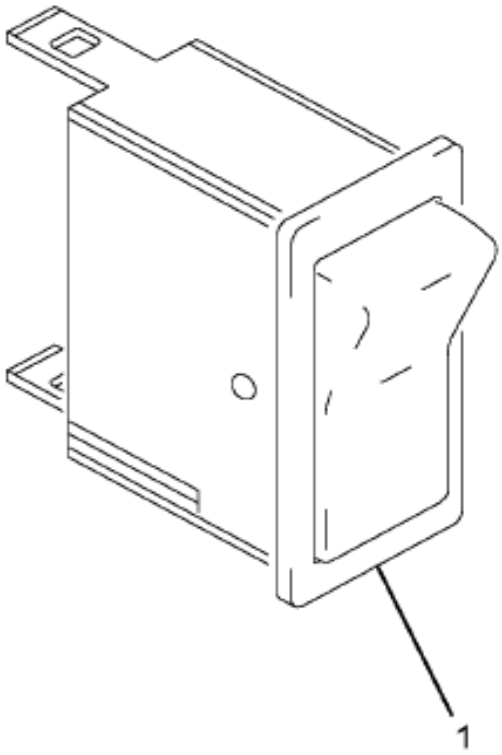

08-P52-0001-00 E04

Item	Part No.	Qty	Description	Kit	Var	Figure
1		RF	SWITCH,ELEC ENGINE BRK SELECT			
800		RF	NOTE: THE FOLLOWING PARTS ARE			
			NON-ILLUSTRATED			
801	2506670R2	1	MANUAL,SWITCH INSTL SW HSG			
880		RF	NOTE: ASM BELOW COMPRISED OF ABOVE			
			COMPONENTS			

COPYRIGHT© 2011INTERNATIONAL TRUCK AND ENGINE CORP.

https://truckmanualshub.com/

Figure 3560047C1

SWITCH,ELEC ENGINE BRK SELECT

Item	Part No.	Qty	Description	Kit	Var	Figure
881	3560047C1	RF	SWITCH,ELEC ENGINE BRK SELECT			

COPYRIGHT© 2011INTERNATIONAL TRUCK AND ENGINE CORP.

https://truckmanualshub.com/

Figure 3500048C1
SWITCH,ELECTRONIC FAN OVERRIDE

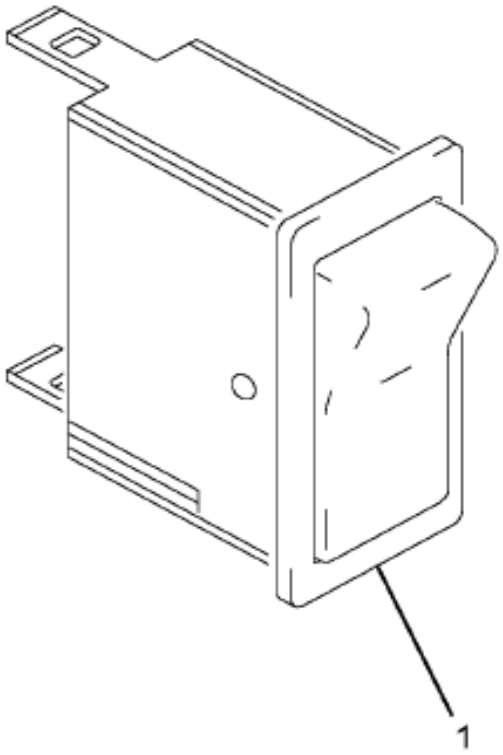

08-P52-0001-00 E04

Item	Part No.	Qty	Description	Kit	Var	Figure
1		RF	SWITCH,ELECTRONIC FAN OVERRIDE			
800		RF	NOTE: THE FOLLOWING PARTS ARE			
			NON-ILLUSTRATED			
801	2506670R2	1	MANUAL,SWITCH INSTL SW HSG			
880		RF	NOTE: ASM BELOW COMPRISED OF ABOVE			
			COMPONENTS			

COPYRIGHT© 2011INTERNATIONAL TRUCK AND ENGINE CORP.

https://truckmanualshub.com/

Figure 3560048C1

SWITCH,ELECTRONIC FAN OVERRIDE

Item	Part No.	Qty	Description	Kit	Var	Figure
881	3560048C1	RF	SWITCH,ELECTRONIC FAN OVERRIDE			

COPYRIGHT© 2011INTERNATIONAL TRUCK AND ENGINE CORP.

https://truckmanualshub.com/

Figure 0DC61

IP MODULE, SWITCH INSTL; FOG/AUX LIGHT (ABR #54)

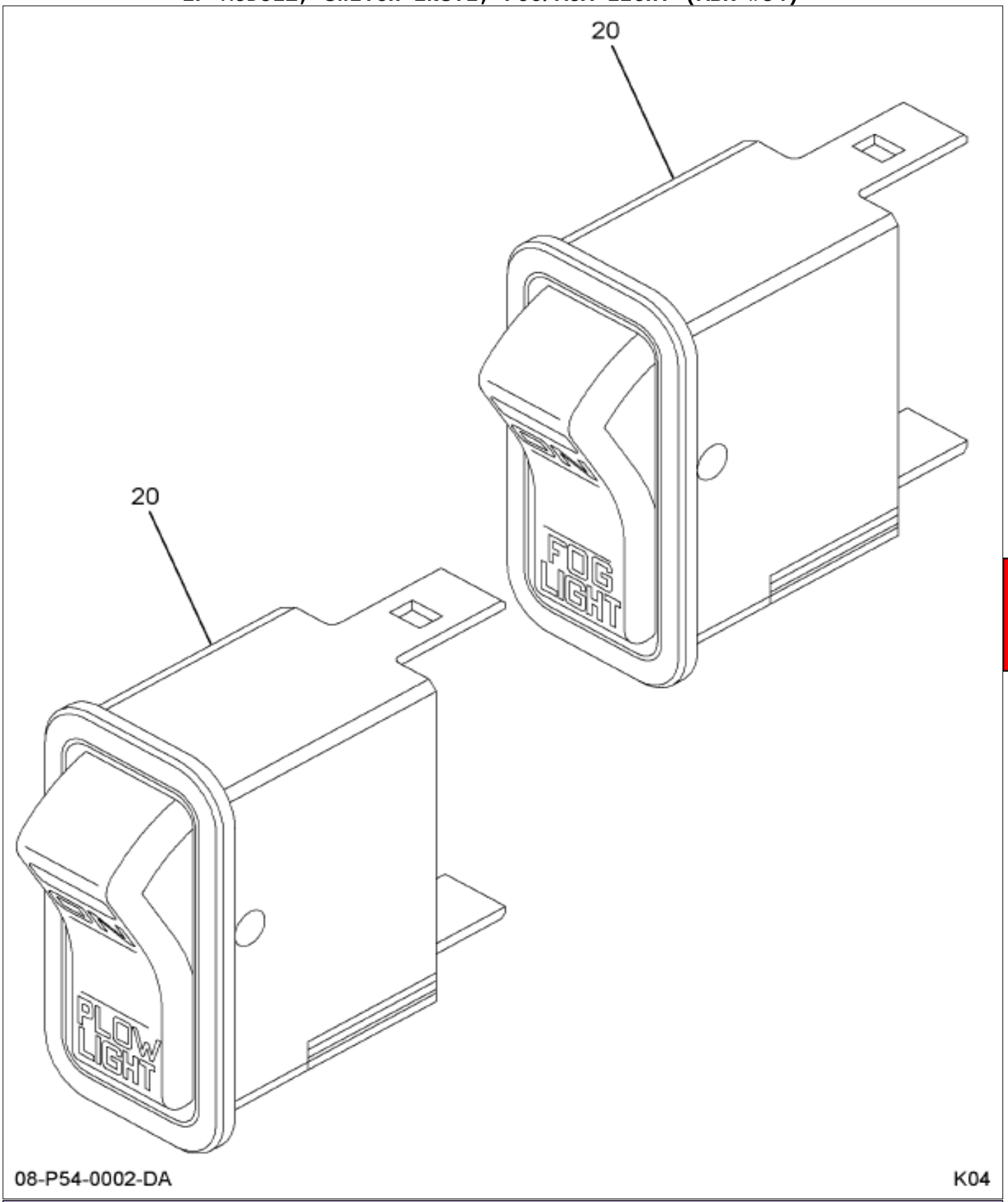

Grp 08

Item	Part No.	Qty	Description	Kit	Var	Figure
20	3578732F91	1	ELECTRICAL IP,FOG LIGHT SW		0DC7F	3578732F91

COPYRIGHT© 2011INTERNATIONAL TRUCK AND ENGINE CORP.

https://truckmanualshub.com/

Figure 3578732F91
ELECTRICAL IP,FOG LIGHT SW

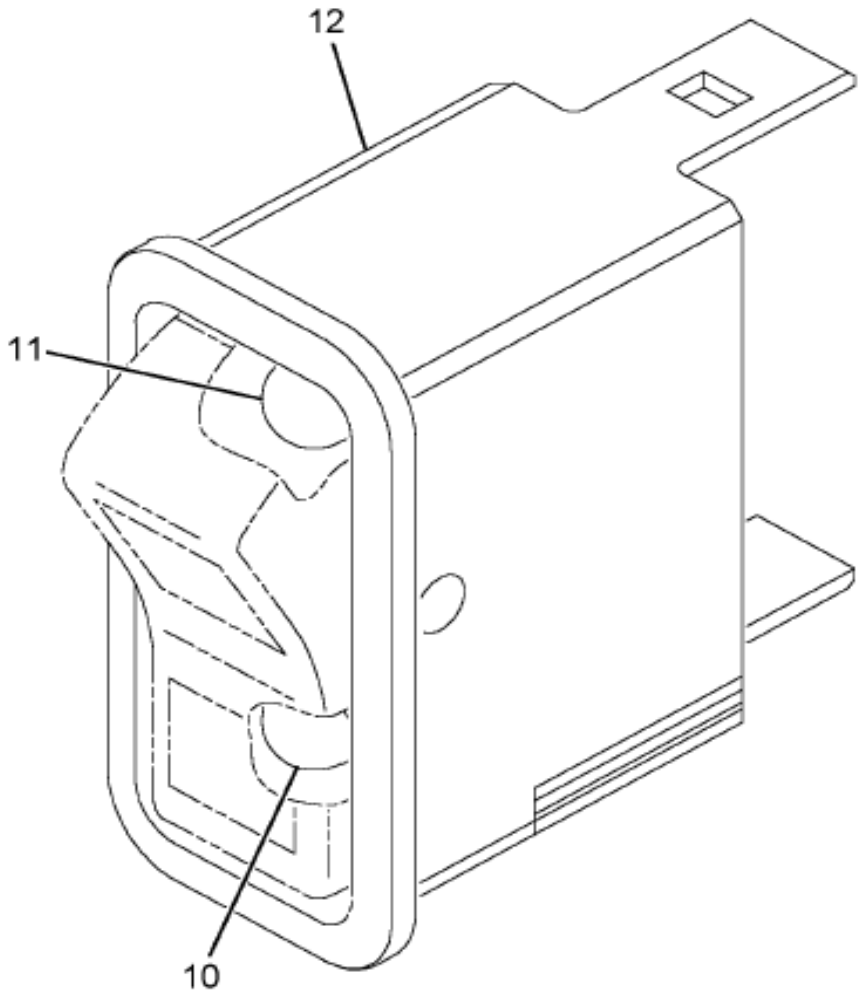

08-P91-0001-00 A03

Item	Part No.	Qty	Description	Kit	Var	Figure
10	3578733C1	1	LIGHT,IND,LED ON-GREEN,BRIGHT			
11	3533928C1	1	LIGHT,IND,LED AMBER BKLGT			
12	3563064C1	1	SWITCH,ELECTRONIC FOG LIGHT			3563064C1
880		RF	NOTE: ASM BELOW COMPRISED OF ABOVE COMPONENTS			
881	3578732F91	RF	ELECTRICAL IP,FOG LIGHT SW			

COPYRIGHT© 2011INTERNATIONAL TRUCK AND ENGINE CORP.

https://truckmanualshub.com/

Figure 3378732F91

ELECTRICAL IP,FOG LIGHT SW

Item	Part No.	Qty	Description	Kit	Var	Figure
			NON-ILLUSTRATED REFERENCE FIGURE 3563064C1			
1		RF	SWITCH,FOG LIGHT			
2	2506670R2	1	MANUAL,SWITCH INSTL SW HSG			
880		RF	NOTE: ASM BELOW COMPRISED OF ABOVE COMPONENTS			
881	3563064C1	RF	SWITCH,ELECTRONIC FOG LIGHT			

COPYRIGHT© 2011INTERNATIONAL TRUCK AND ENGINE CORP.

https://truckmanualshub.com/

Figure 0GIKP

IP MODULE, WIRING ASM; BASE TRANS (ABR #97)

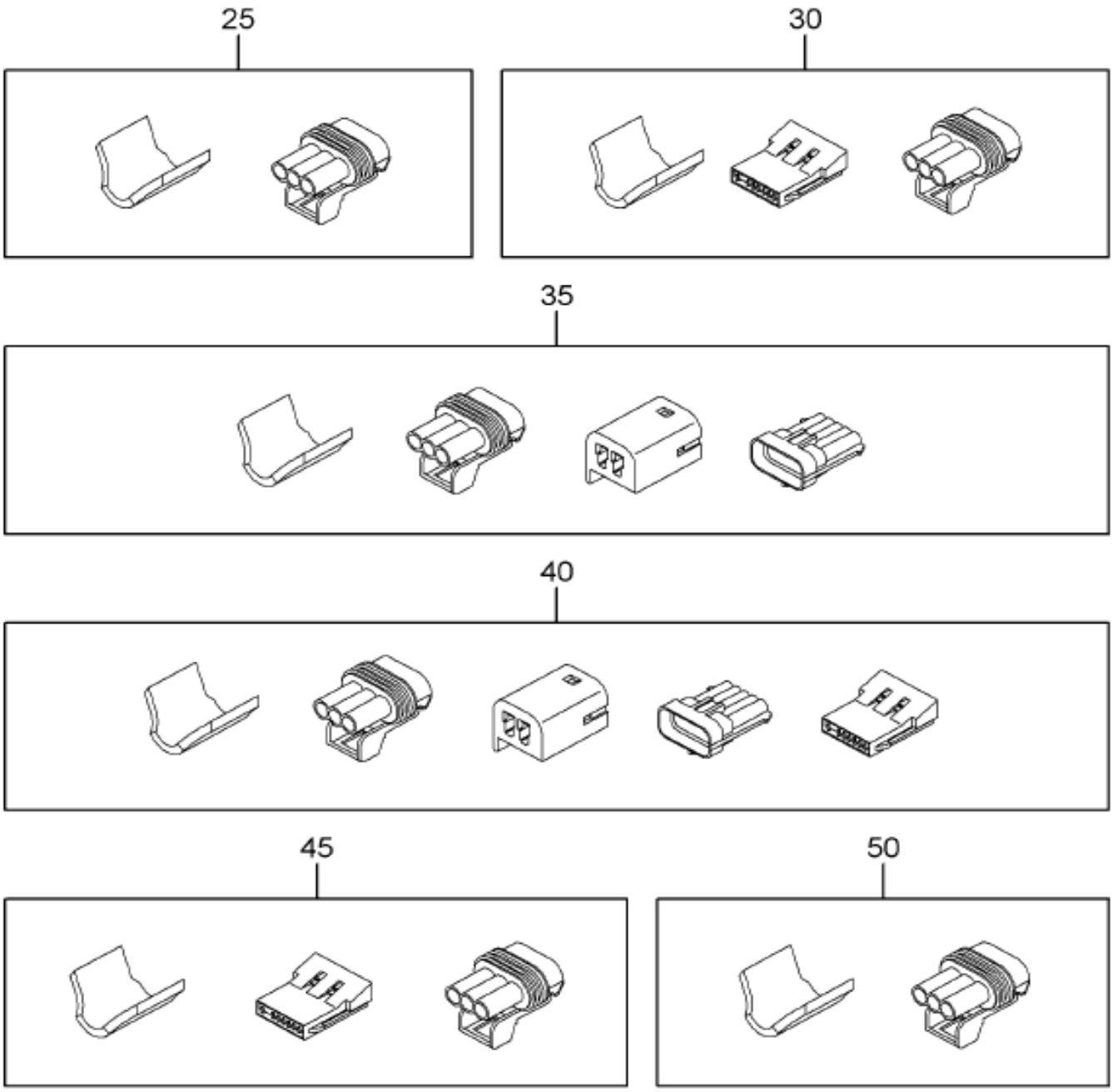

08-P97-0008-01 C09

Item	Part No.	Qty	Description	Kit	Var	Figure
25	3604129F91	1	HARN,IP,CAB J1708,XMSN J1939		0NXZQ	3604129F91

COPYRIGHT© 2011INTERNATIONAL TRUCK AND ENGINE CORP.

https://truckmanualshub.com/

Figure 3604129F91

HARN,IP,CAB J1708,XMSN J1939

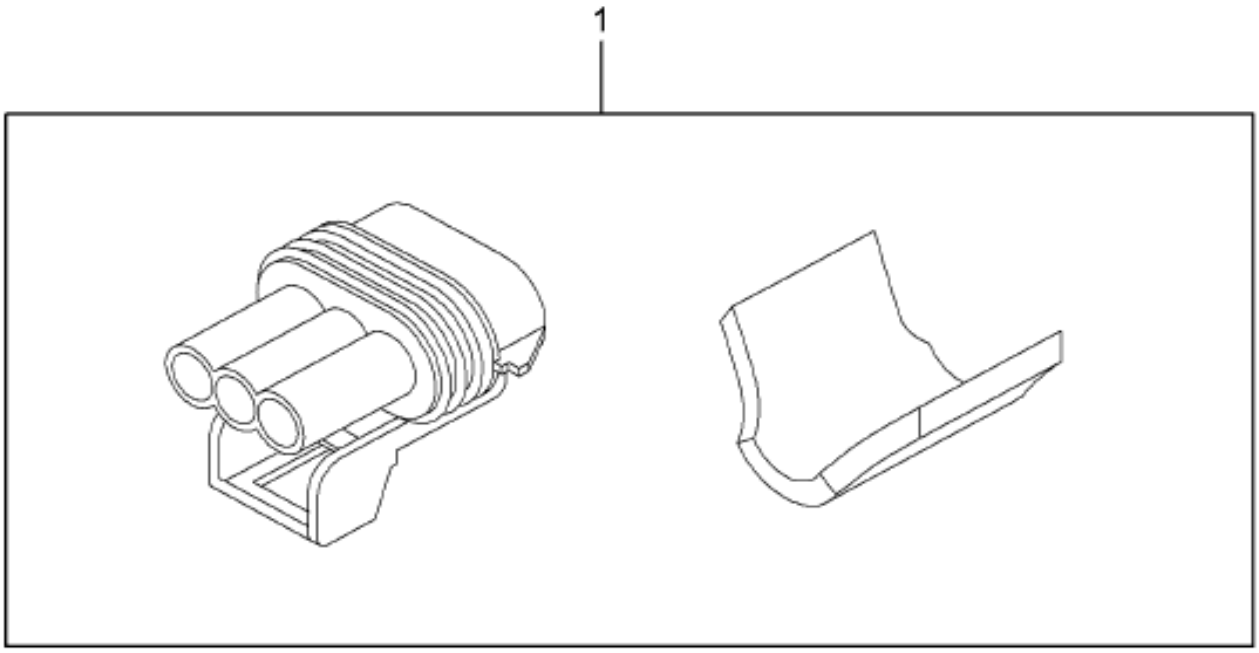

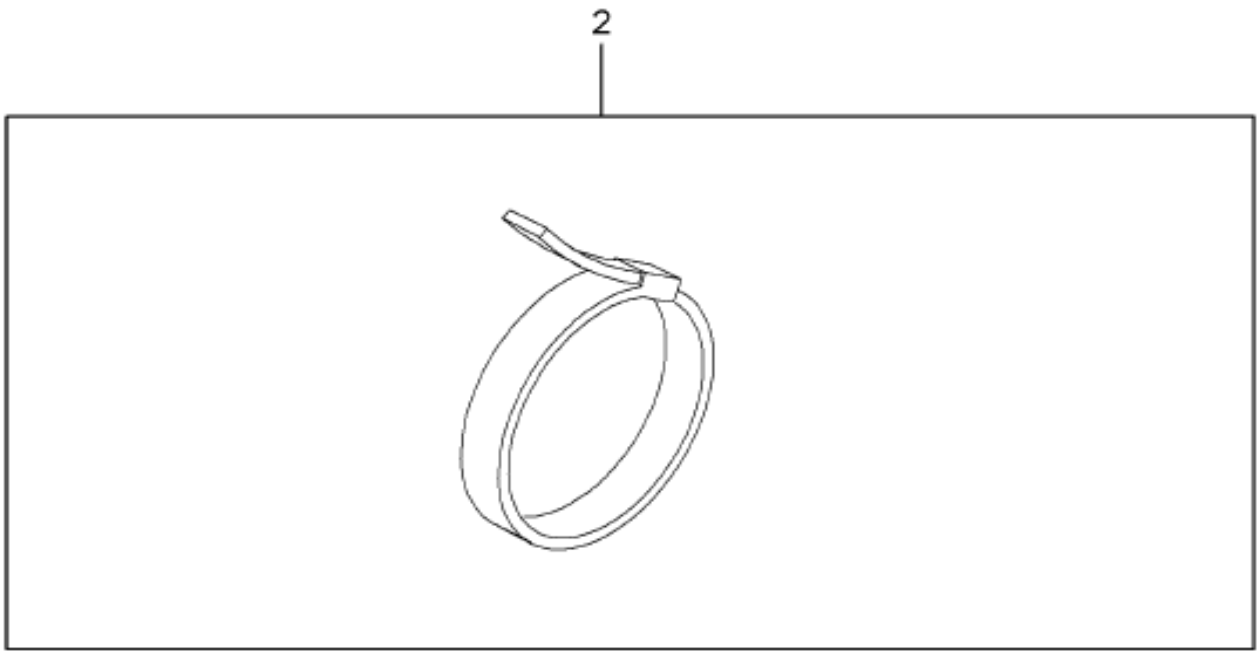

08-P58-0049-01 J05

Item	Part No.	Qty	Description	Kit	Var	Figure
1	3604135C91	1	HARNESS,XMSN WIRING,BASE J1939			
2	291207C1	1	STRAP,CABLE LOCK			
800		RF	NOTE: THE FOLLOWING PARTS ARE NON-ILLUSTRATED			
801	3603969C91	1	HARN,CAB,J1708 PWR TRAIN D-LNK			
880		RF	NOTE: ASM BELOW COMPRISED OF ABOVE			

COPYRIGHT© 2011INTERNATIONAL TRUCK AND ENGINE CORP.

https://truckmanualshub.com/

Figure 3604129F91

HARN,IP,CAB J1708,XMSN J1939

Item	Part No.	Qty	Description	Kit	Var	Figure
			COMPONENTS			
881	3604129F91	RF	HARN,IP,CAB J1708,XMSN J1939			

COPYRIGHT© 2011INTERNATIONAL TRUCK AND ENGINE CORP.

https://truckmanualshub.com/

Figure 0G1C1

IP MODULE, WIRING ASM; ELEC CAB OVERLAY/DIFF LOCK (ABR #90)

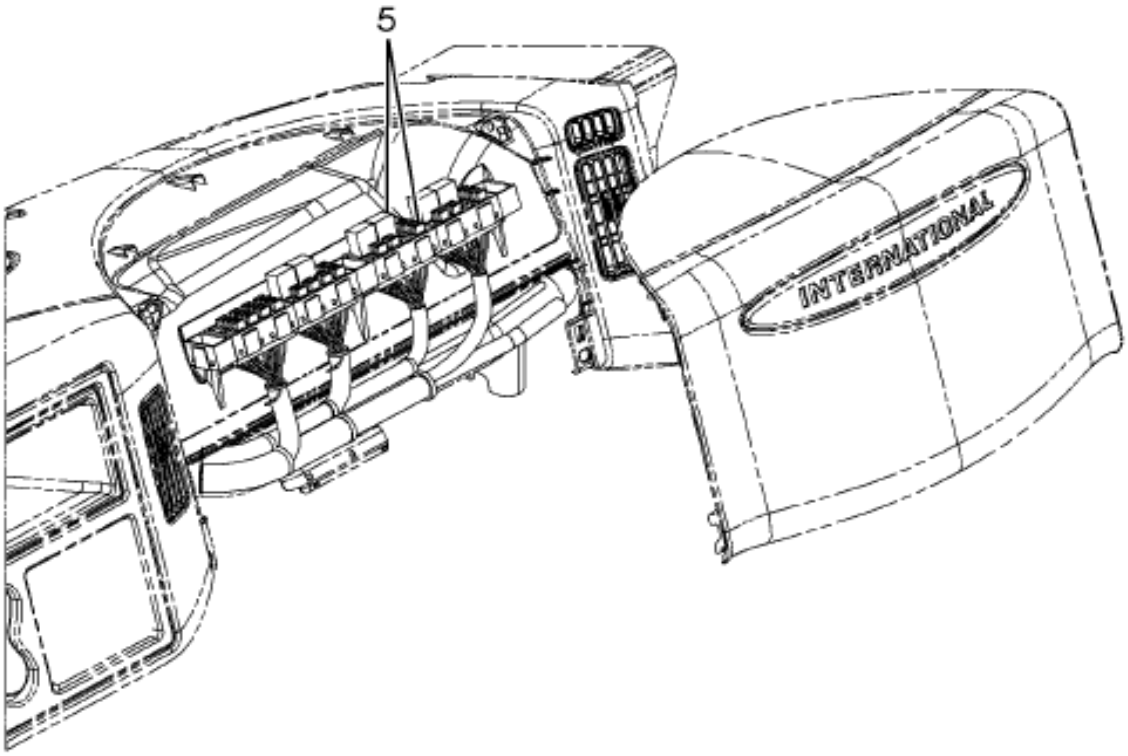

NGV

08-P24-0001-AA E11

Item	Part No.	Qty	Description	Kit	Var	Figure
5	3608335F91	1	HARN,IP,CAB OVRLY,DIFF LOCK LT		0MGX8	3608335F91
			NON-ILLUSTRATED REFERENCE FIGURE 3608335F91			
1	3604206C91	1	HARN,CAB OVRLY,RR&FWD DIFF LCK			
880		RF	NOTE: ASM BELOW COMPRISED OF ABOVE COMPONENTS			

COPYRIGHT© 2011INTERNATIONAL TRUCK AND ENGINE CORP.

https://truckmanualshub.com/

Figure 0G1C1

IP MODULE, WIRING ASM; ELEC CAB OVERLAY/DIFF LOCK (ABR #90)

Item	Part No.	Qty	Description	Kit	Var	Figure
881	3608335F91	RF	HARN,IP,CAB OVRLY,DIFF LOCK LT			

COPYRIGHT© 2011INTERNATIONAL TRUCK AND ENGINE CORP.

https://truckmanualshub.com/

Figure 0G10N

IP MODULE, WIRING INSTL; POWER BRAKE LIGHT (ABR #82)

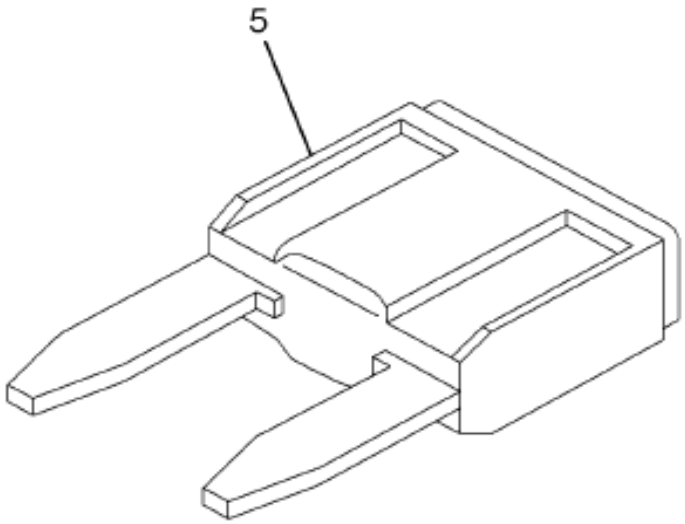

08-P58-0147-01 B09

Item	Part No.	Qty	Description	Kit	Var	Figure
5	3809724F91	1	IP, CLUSTER PWR - N/FULL PO		0SNP7	3809724F91

COPYRIGHT© 2011INTERNATIONAL TRUCK AND ENGINE CORP.

https://truckmanualshub.com/

Figure 3809724F91

IP, CLUSTER PWR - N/FULL PO

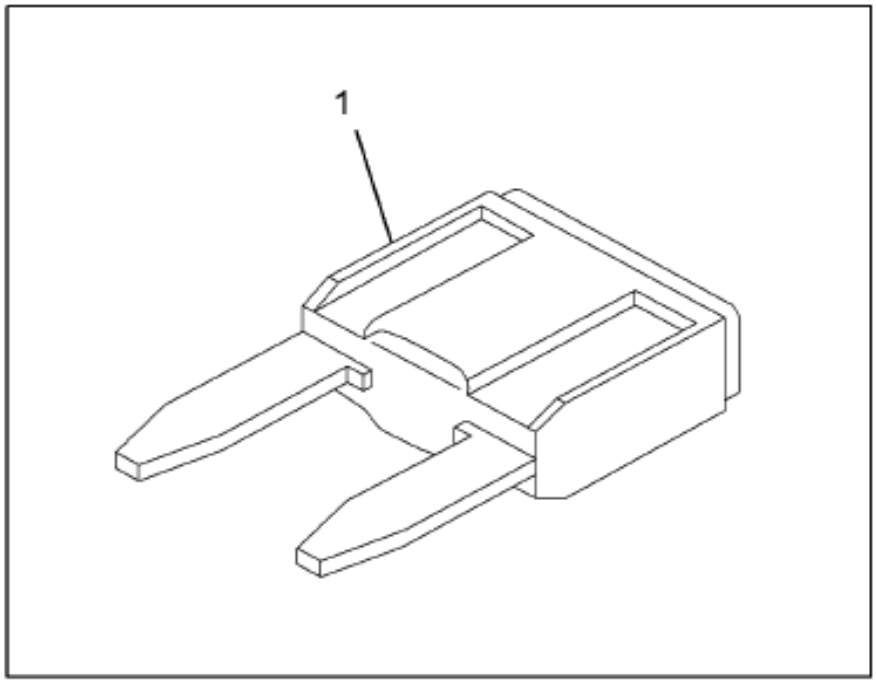

08-D02-0004-01 D06

Item	Part No.	Qty	Description	Kit	Var	Figure
1	3534208C1	1	FUSE,*FUSE, 5AMP MINI			
800		RF	NOTE: THE FOLLOWING PARTS ARE			
			NON-ILLUSTRATED			
801	3809224C91	1	HARNESS,IP,NO FULL POWER BRKS			
880		RF	NOTE: ASM BELOW COMPRISED OF ABOVE			
			COMPONENTS			

COPYRIGHT© 2011INTERNATIONAL TRUCK AND ENGINE CORP.

https://truckmanualshub.com/

Figure 3809724F91

IP, CLUSTER PWR - N/FULL PO

Item	Part No.	Qty	Description	Kit	Var	Figure
881	3809724F91	RF	IP, CLUSTER PWR - N/FULL PO			

COPYRIGHT© 2011INTERNATIONAL TRUCK AND ENGINE CORP.

https://truckmanualshub.com/

Figure 0G215

RADIO ANTENNA INSTL;

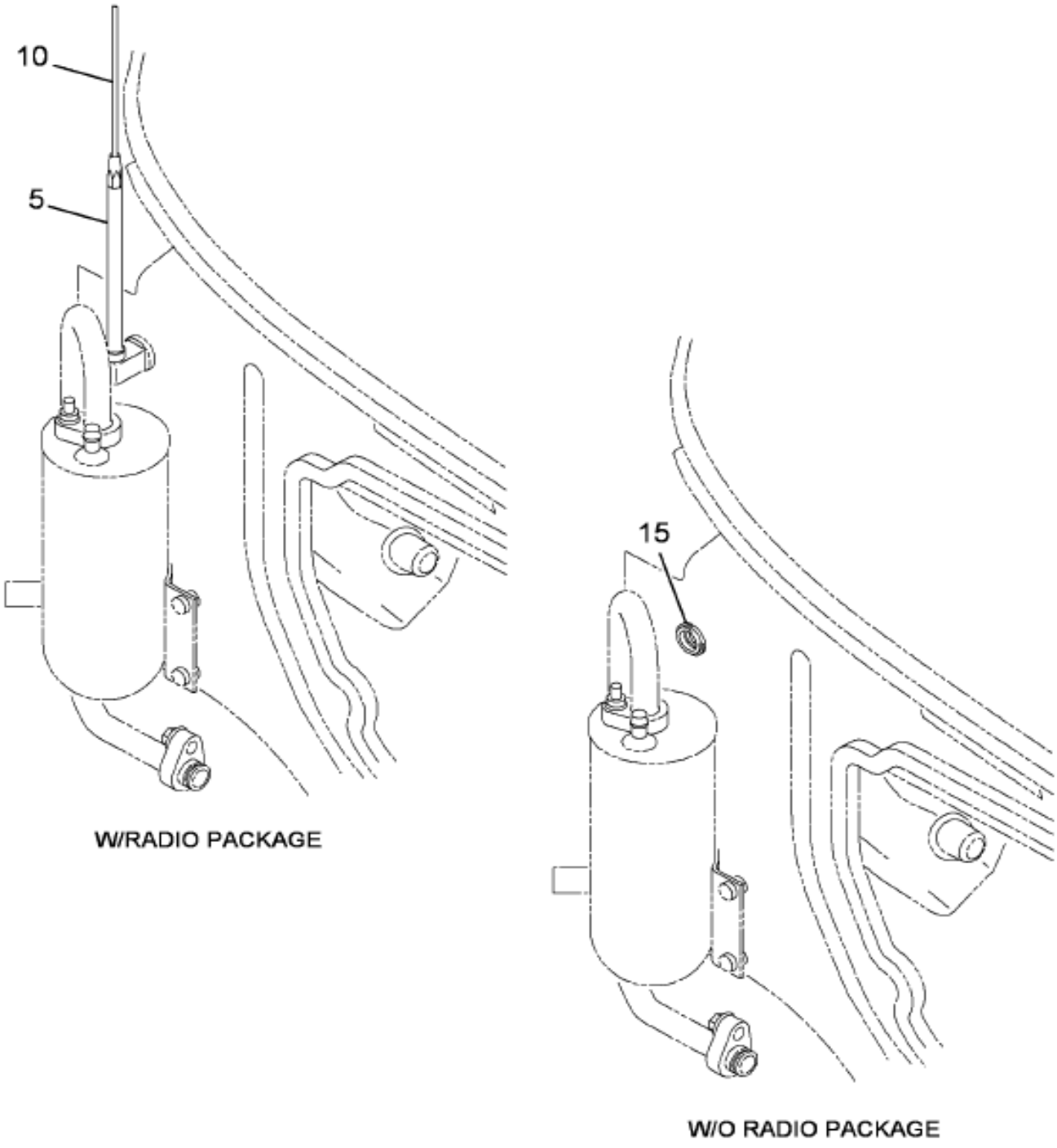

08-782-0004-BA G09

Item	Part No.	Qty	Description	Kit	Var	Figure
5	3536225C93	1	ANTENNA, BASE		0S6R2	
10	3580992C2	1	ANTENNA, MAST 785 MM LONG		0S6R2	

COPYRIGHT© 2011INTERNATIONAL TRUCK AND ENGINE CORP.

https://truckmanualshub.com/

Figure 0S6RW

RADIO INSTL; SPEAKERS, DUAL CONE OR COAXIAL

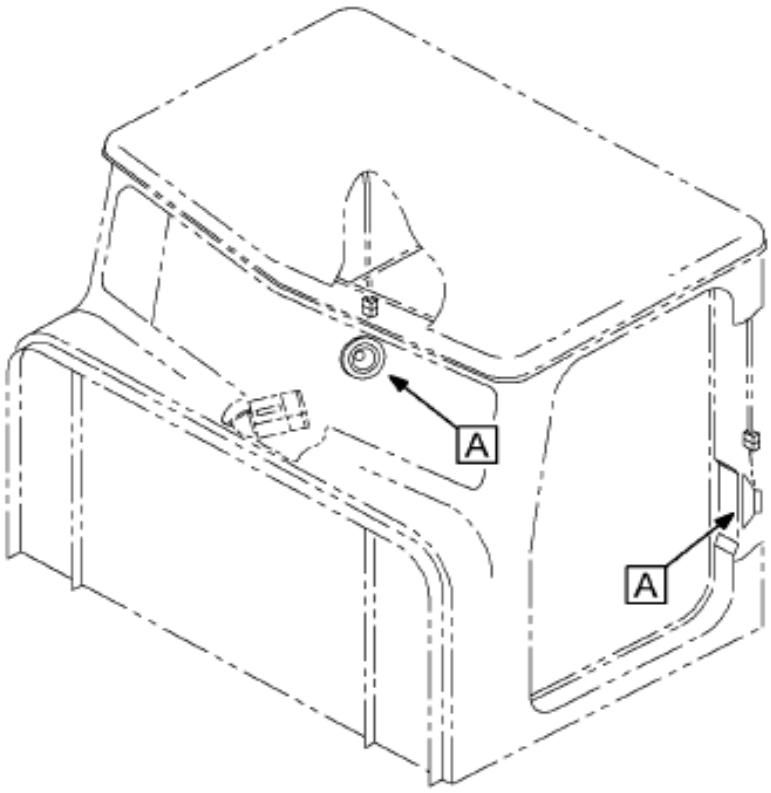

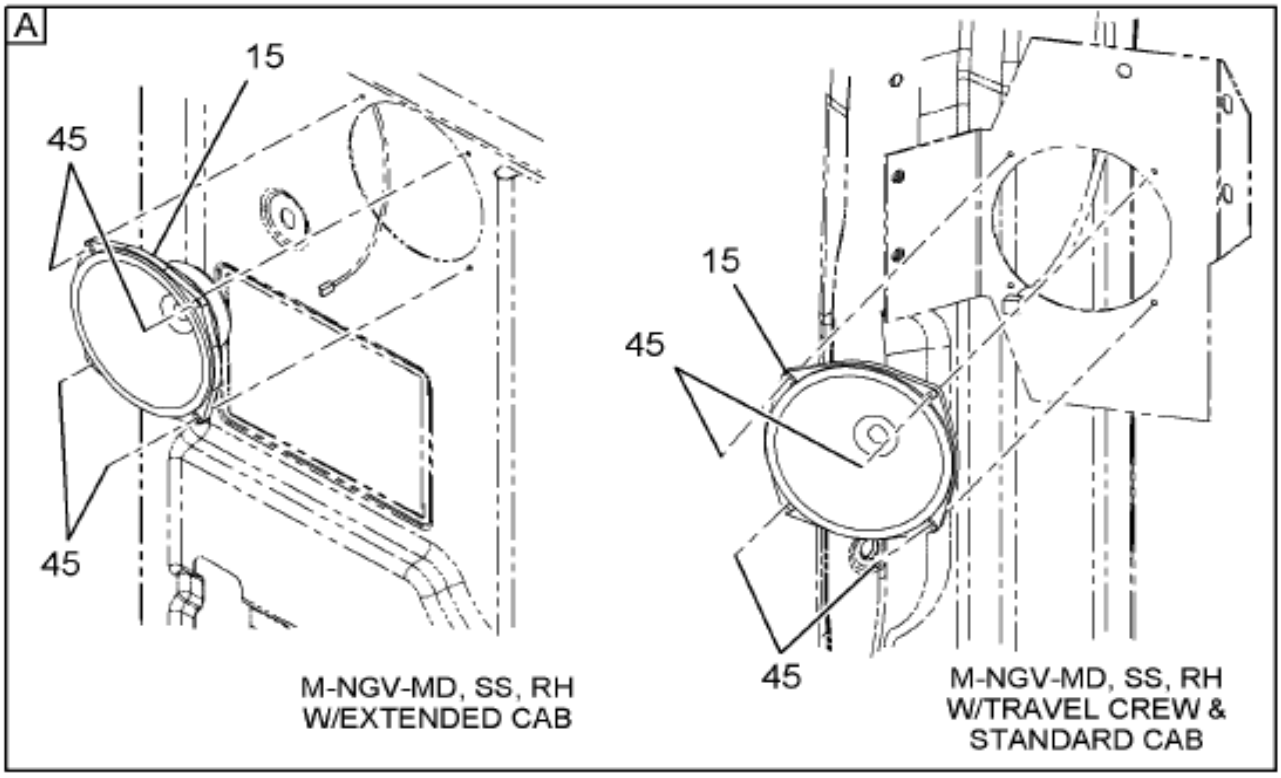

08-465-0022-01 F04

Item	Part No.	Qty	Description	Kit	Var	Figure
15	3544621C1	2	SPEAKER,RADIO 5 1/4" DUAL CONE		0S6RW	
45	24379R1	8	SCREW NO. 8-18 X 1/2 PHC P/HD		0S6RW	

Grp 08

COPYRIGHT© 2011INTERNATIONAL TRUCK AND ENGINE CORP.

https://truckmanualshub.com/

Figure 0FBTX

RR CHASSIS HARNESS; COMMON BASE WIRING, (ABR#1)

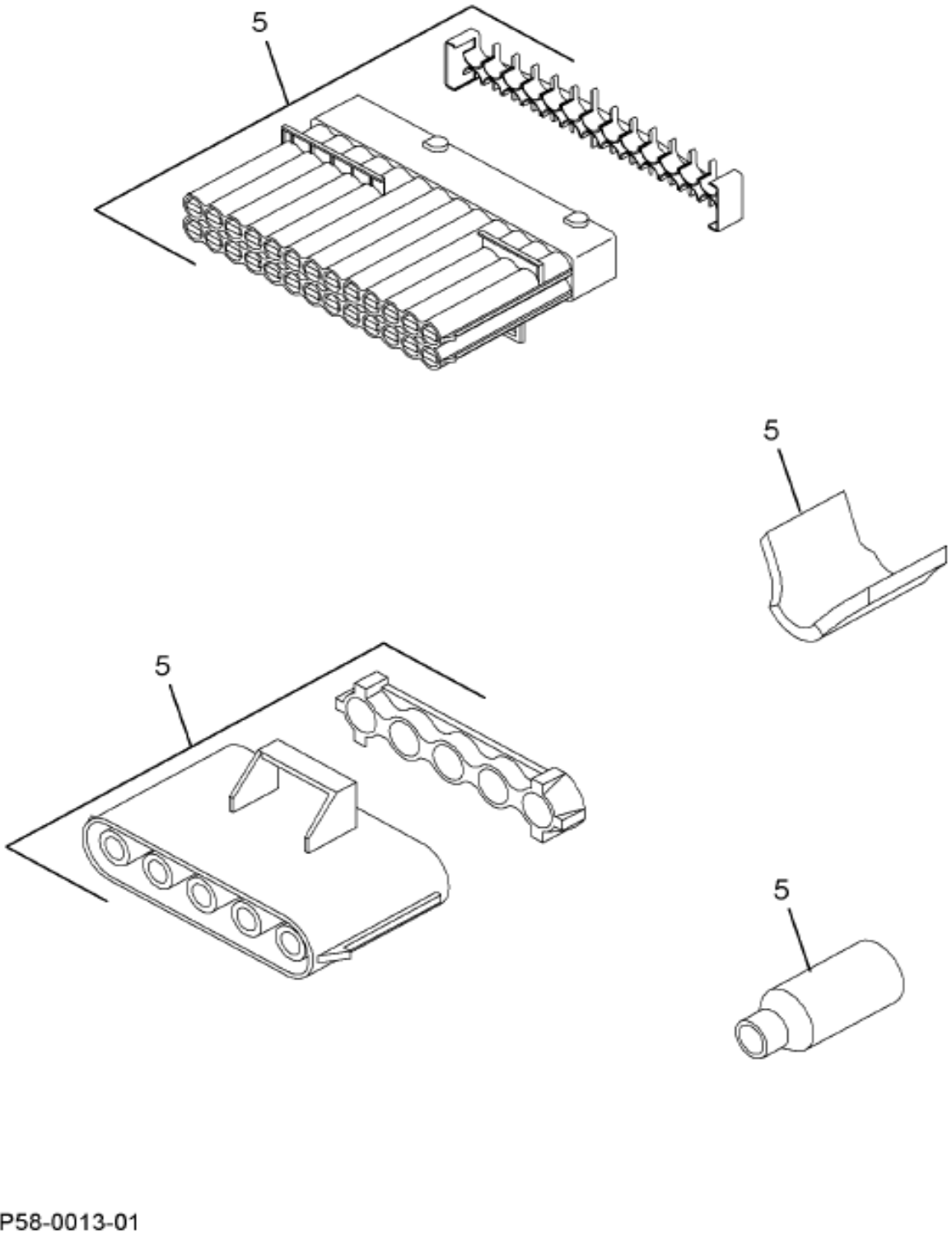

08-P58-0013-01 F05

Item	Part No.	Qty	Description	Kit	Var	Figure
5	3571016F94	1	HARNESS,REAR CHSS,BASE +1000MM		0FJMR	3571016F94

COPYRIGHT© 2011INTERNATIONAL TRUCK AND ENGINE CORP.

https://truckmanualshub.com/

Figure 3371016F54
HARNESS,REAR CHSS,BASE +1000MM

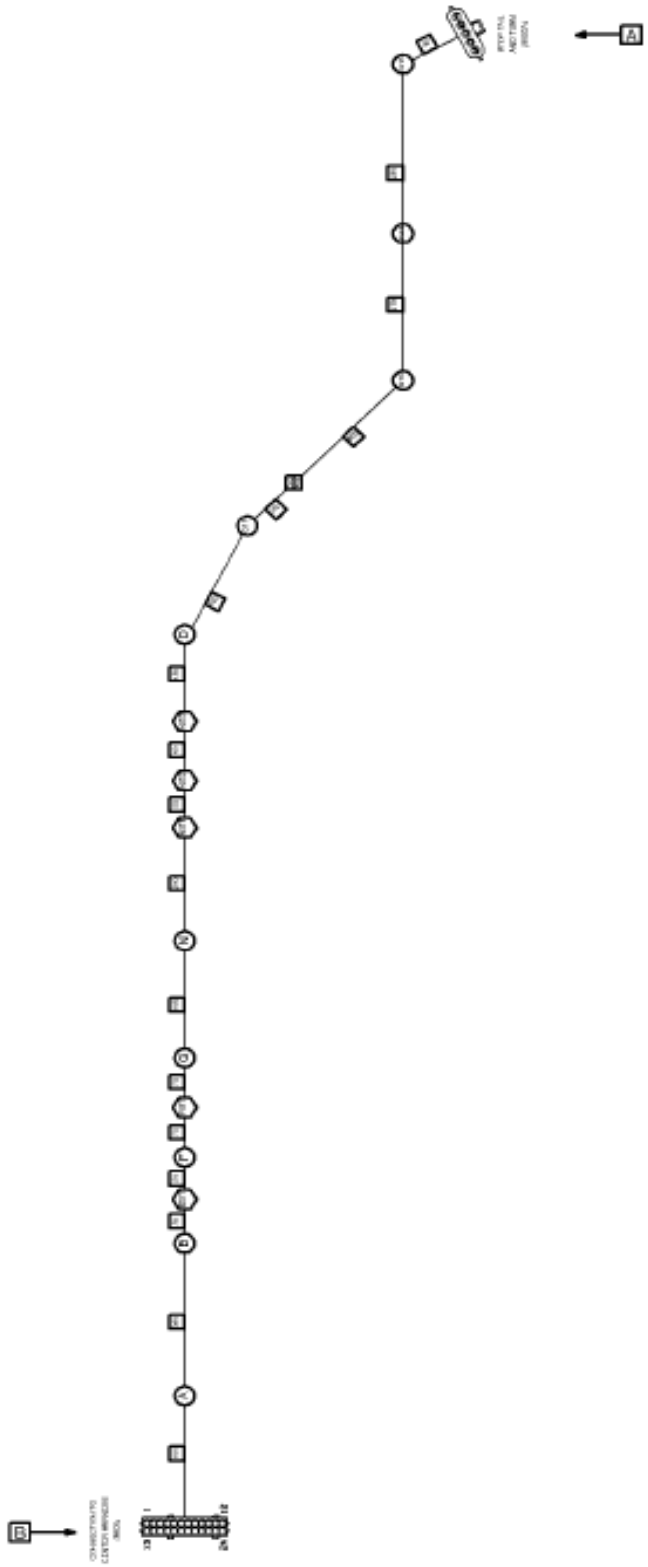

08-R01-0001-01 M10

Grp 08

Figure 1 of 2

COPYRIGHT© 2011INTERNATIONAL TRUCK AND ENGINE CORP.

https://truckmanualshub.com/

Figure 3571016F54

HARNESS,REAR CHSS,BASE +1000MM

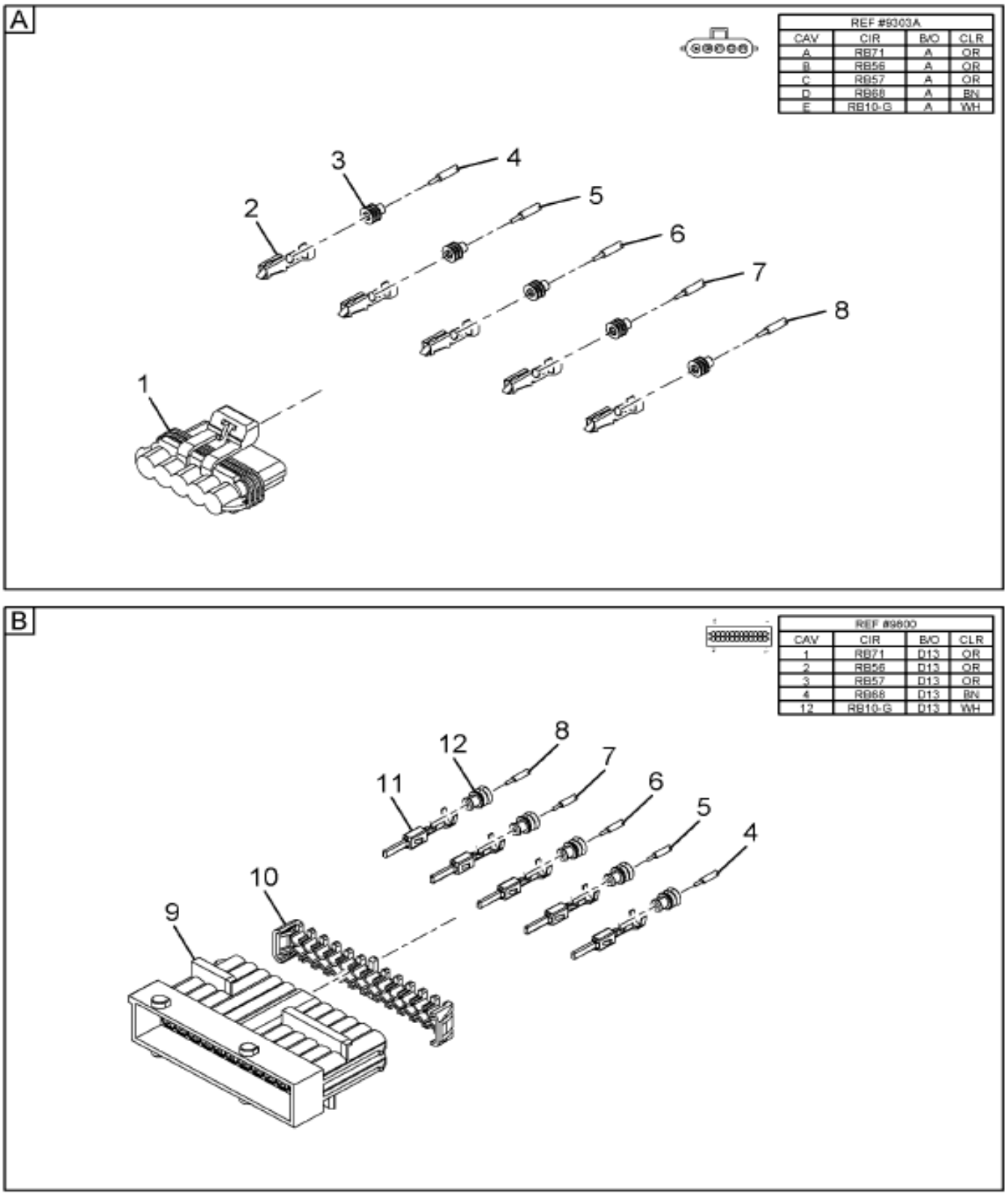

08-R01-0001-02 H10

Item	Part No.	Qty	Description	Kit	Var	Figure
1	1661375C2	1	BODY,CONNECTOR			
2	2033816C1	5	TERMINAL,CABLE (FOR 14 GA ONLY			
3	589391C1	5	PLUG,SEALER, LOOSE PIECE			
4	2643690R1	AR	CABLE LOW TENSION SINGLE COND			
5	2643690R1	AR	CABLE LOW TENSION SINGLE COND			
6	2643690R1	AR	CABLE LOW TENSION SINGLE COND			

COPYRIGHT© 2011INTERNATIONAL TRUCK AND ENGINE CORP.

https://truckmanualshub.com/

Figure 3571016F94

HARNESS,REAR CHSS,BASE +1000MM

Item	Part No.	Qty	Description	Kit	Var	Figure
7	2643688R1	AR	CABLE LOW TENSION SINGLE COND			
8	3510362R1	AR	CABLE,LOW TENSION TXL			
9	3558022C1	1	CONNECTOR,BODY*AMP JR-PWR-TIME			
10	3558056C1	1	LOCK,CONNECTOR BODY*AMP JR-PWR			
11	3559037C1	5	TERMINAL,CABLE*AMP JUNIOR-POWE			
12	3575783C1	5	SEAL,CABLE TERM JR TIMER 12-14			
880		RF	NOTE: ASM BELOW COMPRISED OF ABOVE COMPONENTS			
881	3571016F94	RF	HARNESS,REAR CHSS,BASE +1000MM			

COPYRIGHT© 2011INTERNATIONAL TRUCK AND ENGINE CORP.

https://truckmanualshub.com/

Figure 0FBV2

RR CHASSIS HARNESS; DIFF LOCK WARN LT WIRING, (ABR#6)

Item	Part No.	Qty	Description	Kit	Var	Figure
30	3571047F91	1	ELEC RR CHAS, DIFF LK WRN LT		0FBXZ	

COPYRIGHT© 2011INTERNATIONAL TRUCK AND ENGINE CORP.

https://truckmanualshub.com/

Figure 0HQHQ

RR CHASSISHARNESS ASM; W/TURN SIGNAL LIGHT

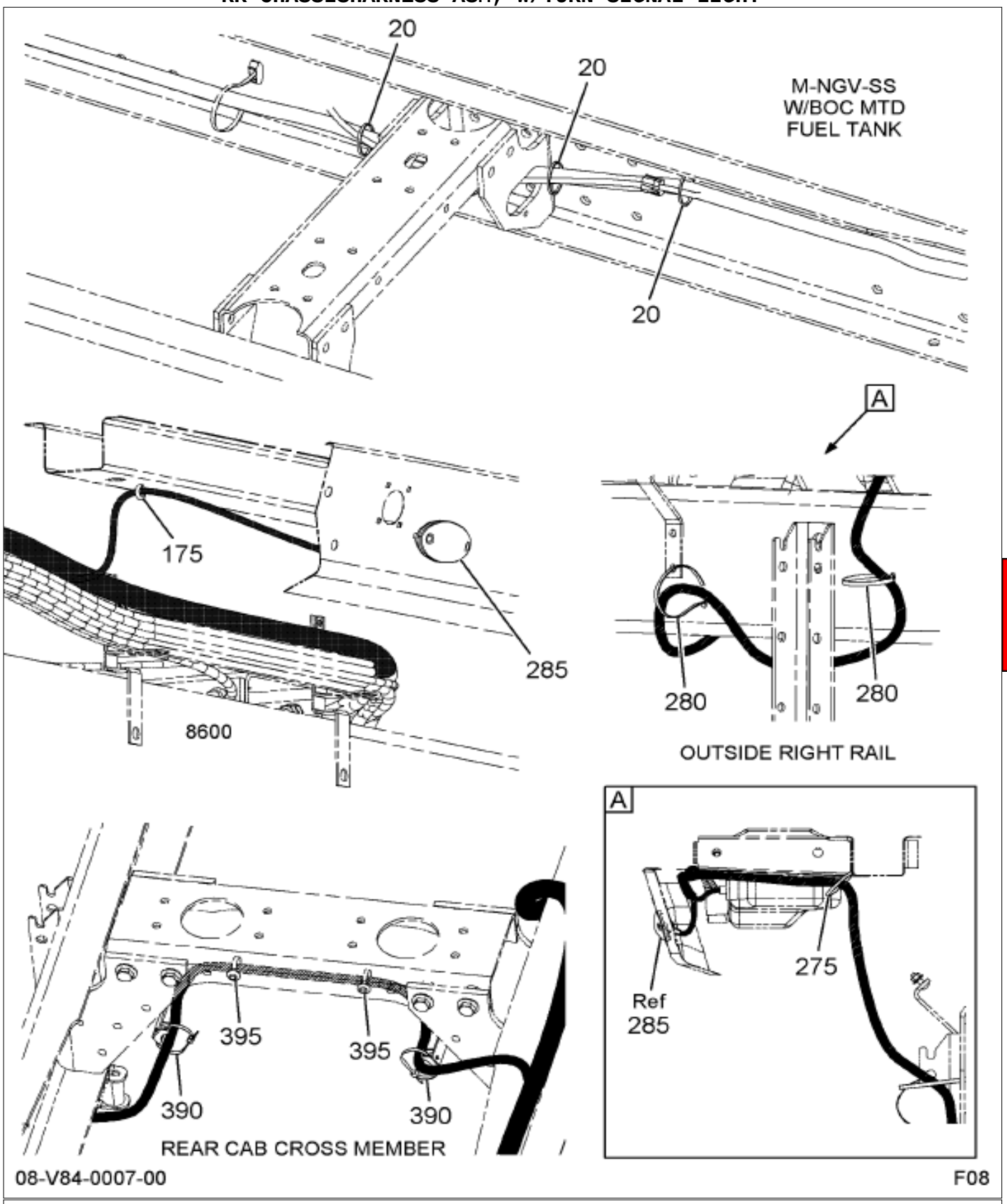

Grp 08

Figure 1 of 9

COPYRIGHT© 2011INTERNATIONAL TRUCK AND ENGINE CORP.

https://truckmanualshub.com/

Figure 0HQHQ
RR CHASSISHARNESS ASM; W/TURN SIGNAL LIGHT

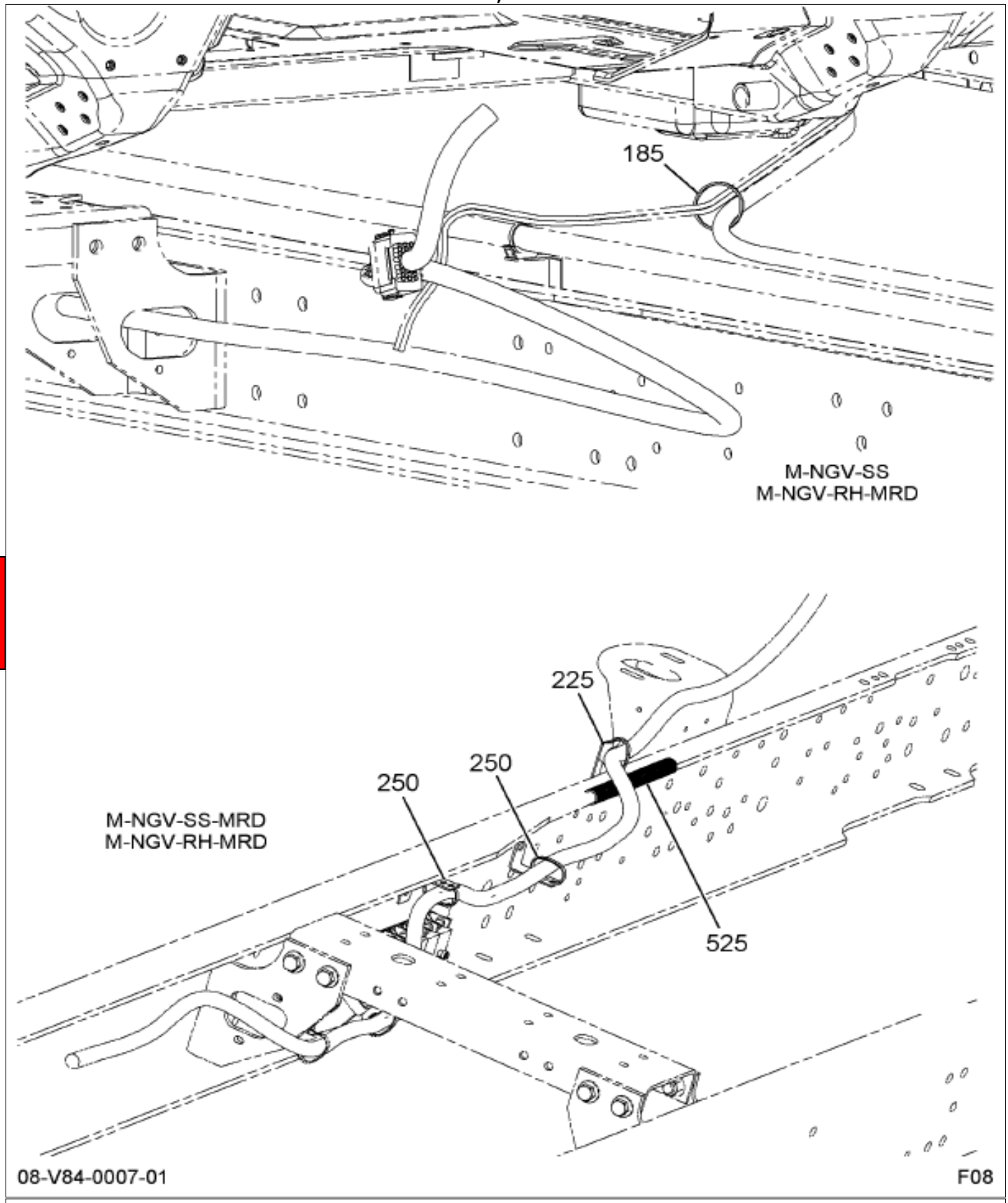

Figure 2 of 9

COPYRIGHT© 2011INTERNATIONAL TRUCK AND ENGINE CORP.

https://truckmanualshub.com/

Figure 0HQHQ

RR CHASSISHARNESS ASM; W/TURN SIGNAL LIGHT

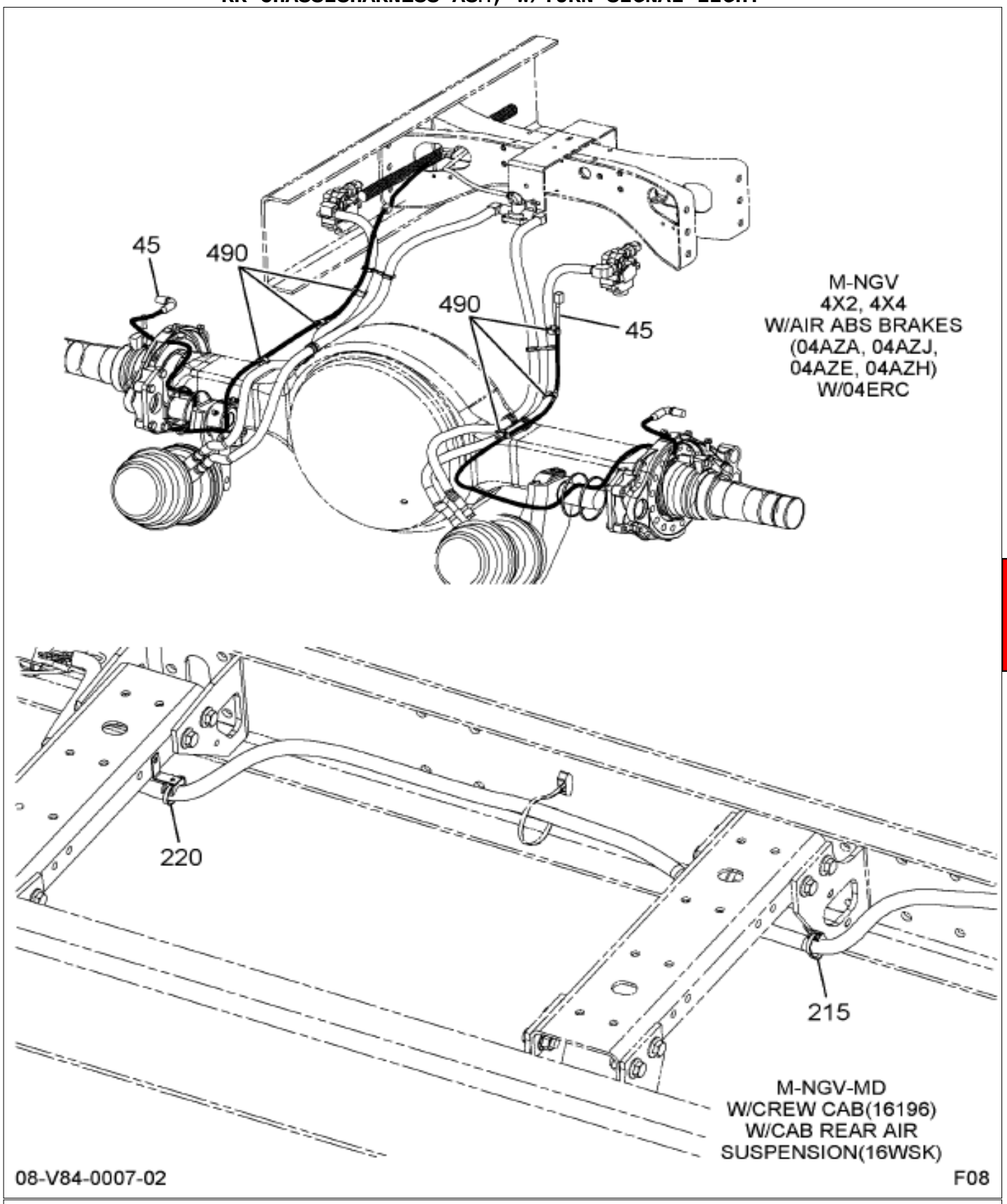

Grp 08

Figure 3 of 9

COPYRIGHT© 2011INTERNATIONAL TRUCK AND ENGINE CORP.

https://truckmanualshub.com/

Figure 0HQHQ

RR CHASSISHARNESS ASM; W/TURN SIGNAL LIGHT

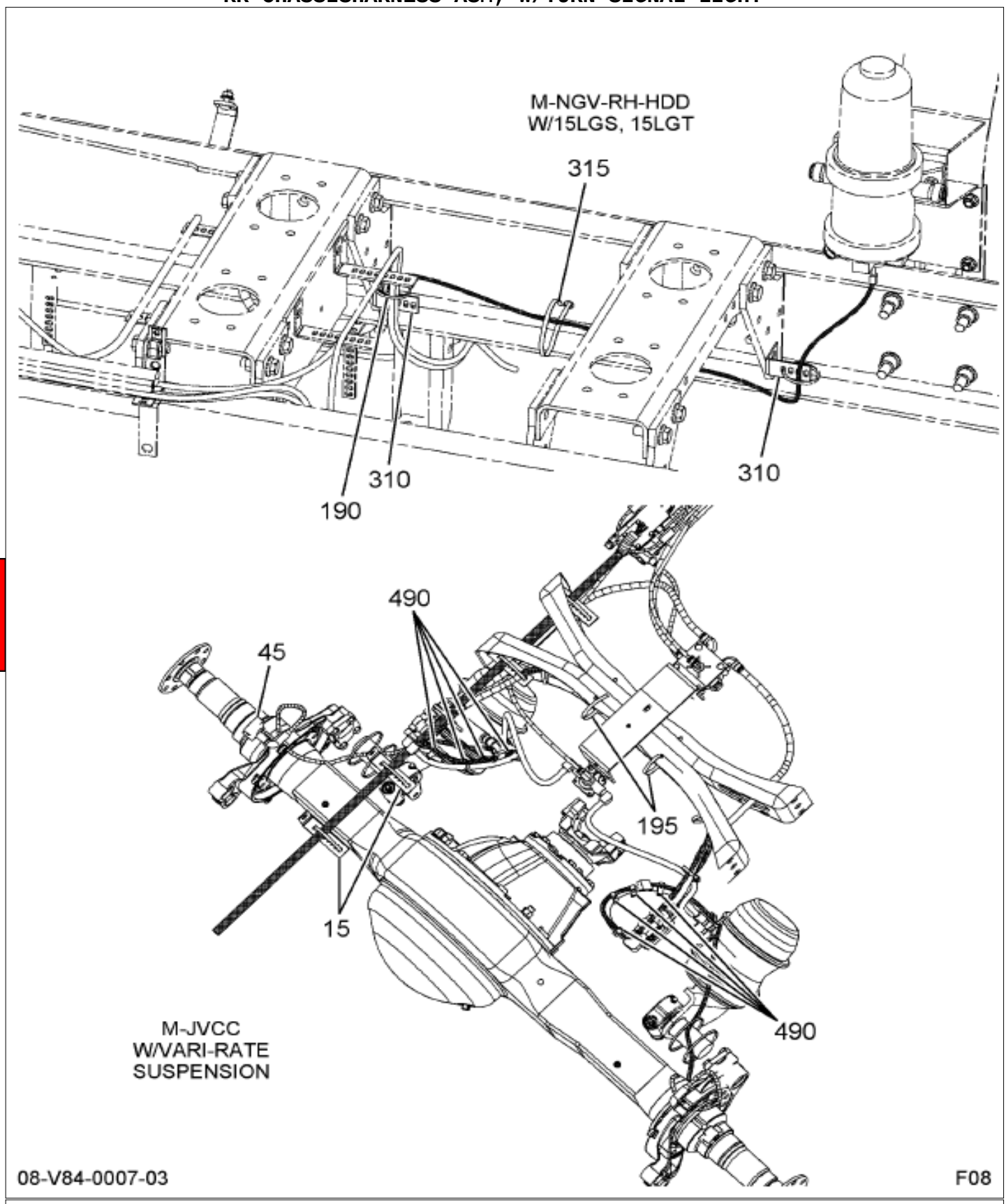

Figure 4 of 9

COPYRIGHT© 2011INTERNATIONAL TRUCK AND ENGINE CORP.

https://truckmanualshub.com/

Figure 0HQHQ

RR CHASSISHARNESS ASM; W/TURN SIGNAL LIGHT

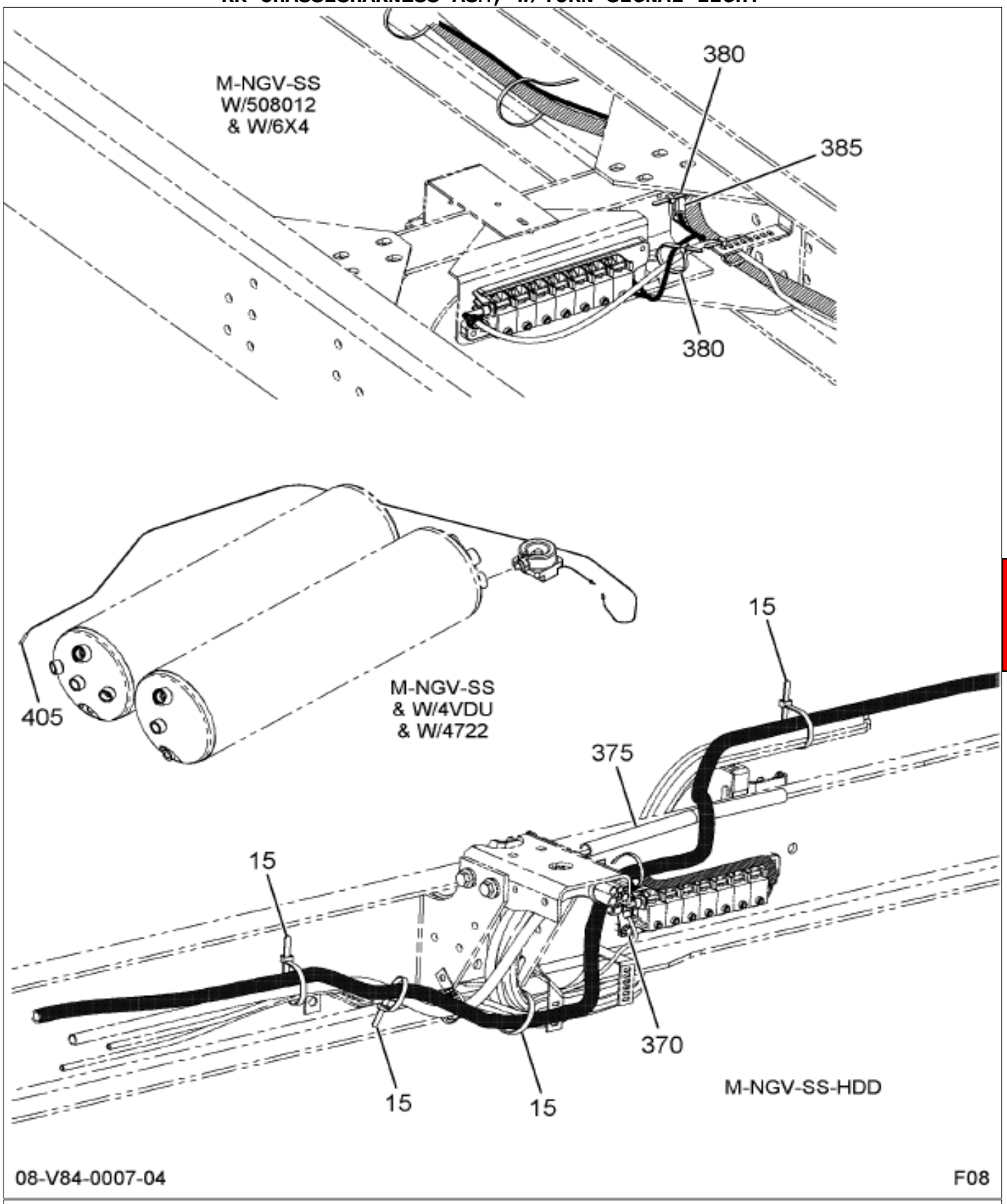

Grp 08

Figure 5 of 9

COPYRIGHT© 2011INTERNATIONAL TRUCK AND ENGINE CORP.

https://truckmanualshub.com/

Figure 0HQHQ

RR CHASSISHARNESS ASM; W/TURN SIGNAL LIGHT

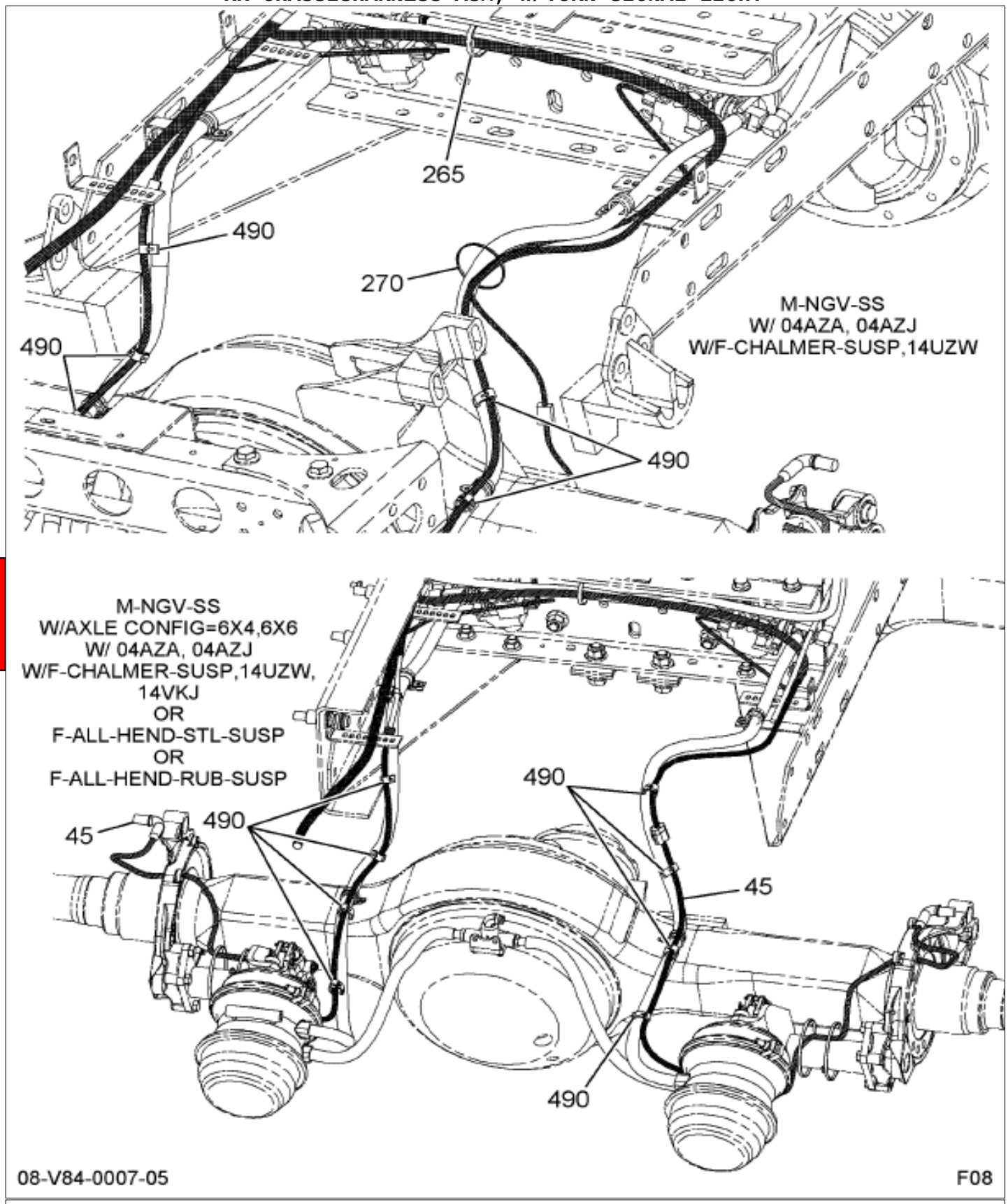

Figure 6 of 9

COPYRIGHT© 2011INTERNATIONAL TRUCK AND ENGINE CORP.

https://truckmanualshub.com/

Figure 0HQHQ
RR CHASSISHARNESS ASM; W/TURN SIGNAL LIGHT

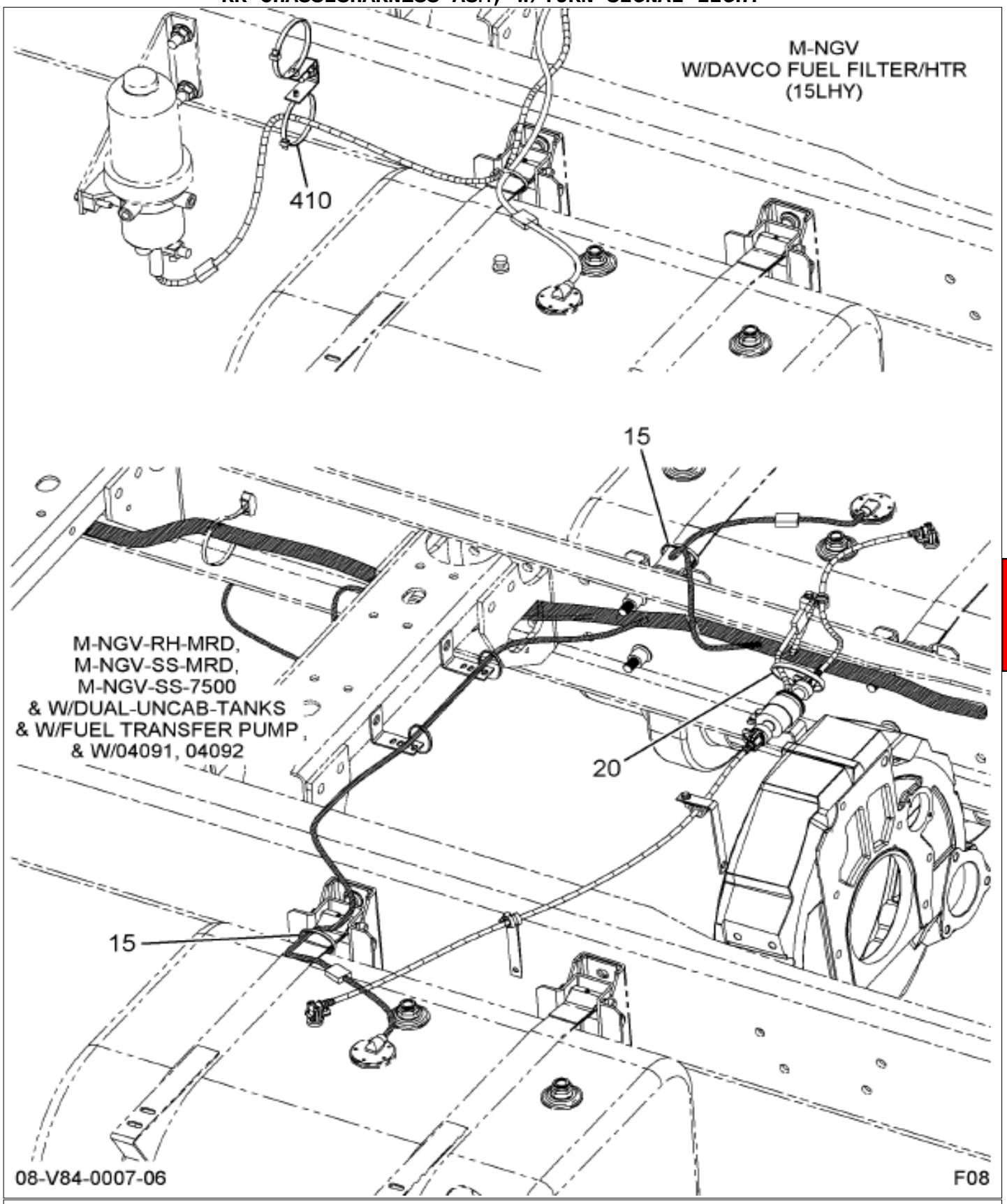

Grp 08

Figure 7 of 9

COPYRIGHT© 2011INTERNATIONAL TRUCK AND ENGINE CORP.

https://truckmanualshub.com/

Figure 0HQHQ
RR CHASSISHARNESS ASM; W/TURN SIGNAL LIGHT

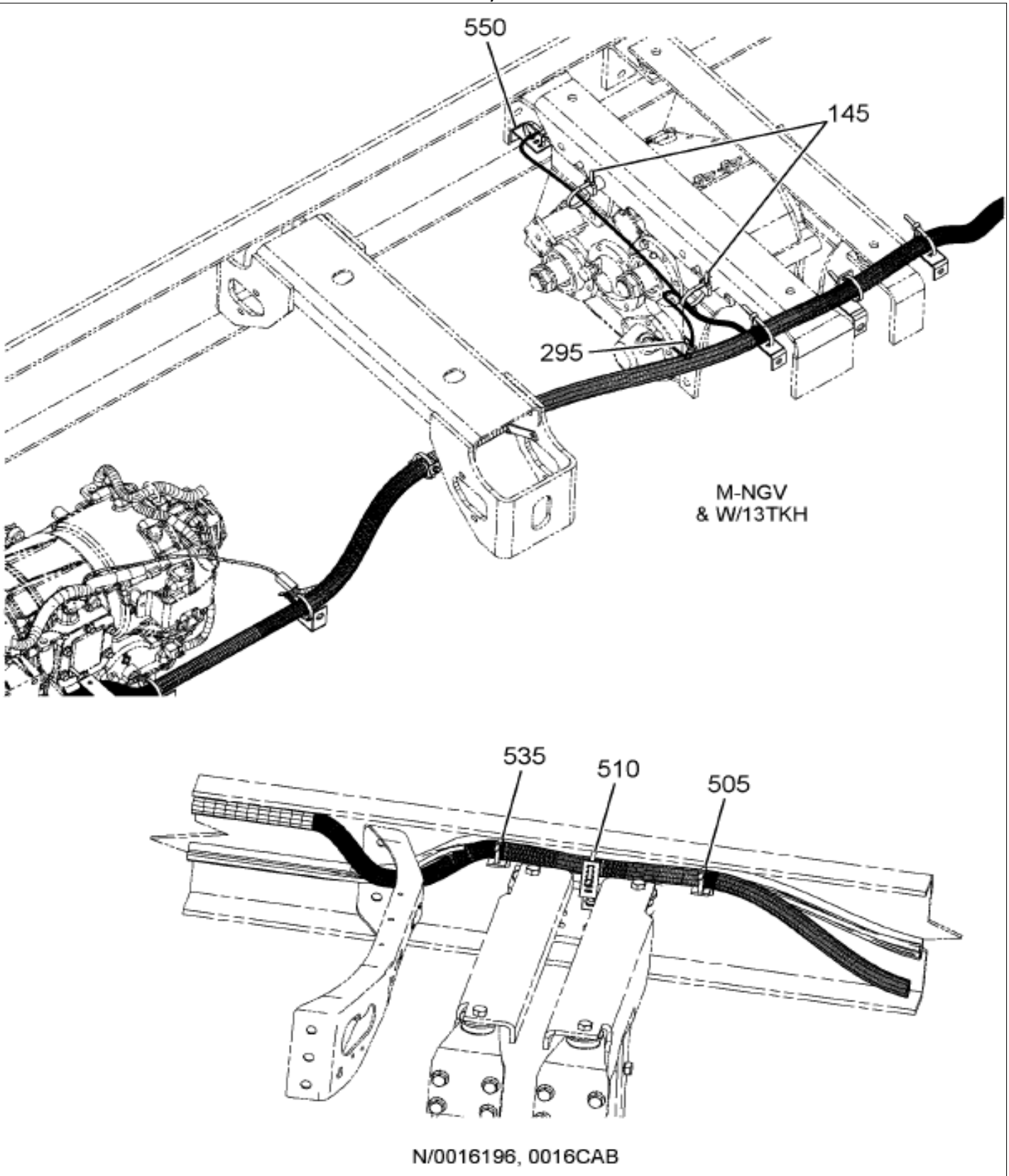

Figure 8 of 9

COPYRIGHT© 2011INTERNATIONAL TRUCK AND ENGINE CORP.

https://truckmanualshub.com/

Figure 0HQHQ

RR CHASSISHARNESS ASM; W/TURN SIGNAL LIGHT

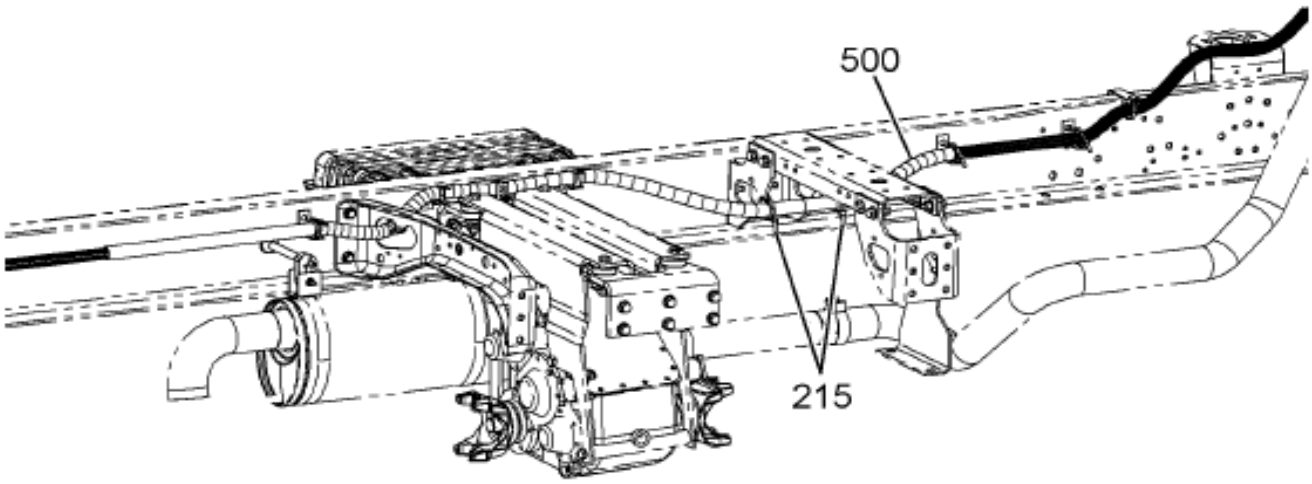

M-NGV
W/XFER-CASE

08-V29-0031-01 C09

Item	Part No.	Qty	Description	Kit	Var	Figure
15	306132C1	6	STRAP,CABLE LOCK		0HQHQ	
185	306132C1	1	STRAP,CABLE LOCK		0HQJT	
370	530187C1	1	EXTENSION,CLIP		0HQM2	
370	25222R1	1	BOLT,HH 1/4-20 X 3/4 PHC TYP 8		0HQM2	
370	120380	1	WASHER LOCK 1/4",REG,STL/ZNC		0HQM2	
370	25519R1	1	NUT,1/4 NC TYPE 8		0HQM2	

COPYRIGHT© 2011INTERNATIONAL TRUCK AND ENGINE CORP.

https://truckmanualshub.com/

Figure 0HQHQ

RR CHASSISHARNESS ASM; W/TURN SIGNAL LIGHT

Item	Part No.	Qty	Description	Kit	Var	Figure
370	2041341C1	1	SADDLE,CLAMP CABLE LOCK MT 1/4		0HQM2	
370	306132C1	1	STRAP,CABLE LOCK		0HQM2	
375	450016C1	18	CONDUIT CABLE ELECT 19MM ID		0HQM2	

COPYRIGHT© 2011INTERNATIONAL TRUCK AND ENGINE CORP.

https://truckmanualshub.com/

Figure 08DBK

RR LIGHT INSTL; STD TAIL LIGHTS

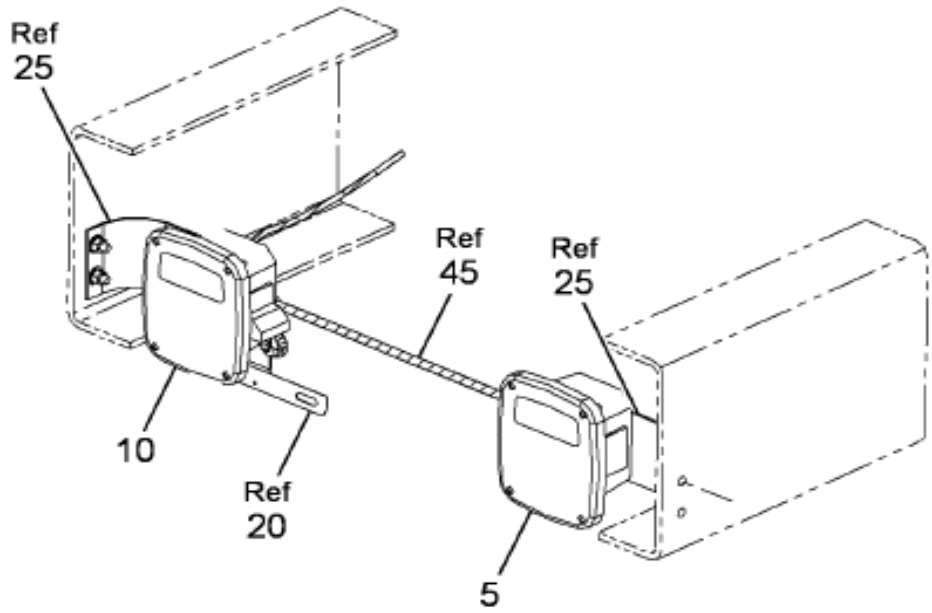

M-NGV
M-F6/750-EPA07
W/0508014,008TPD
N/01572

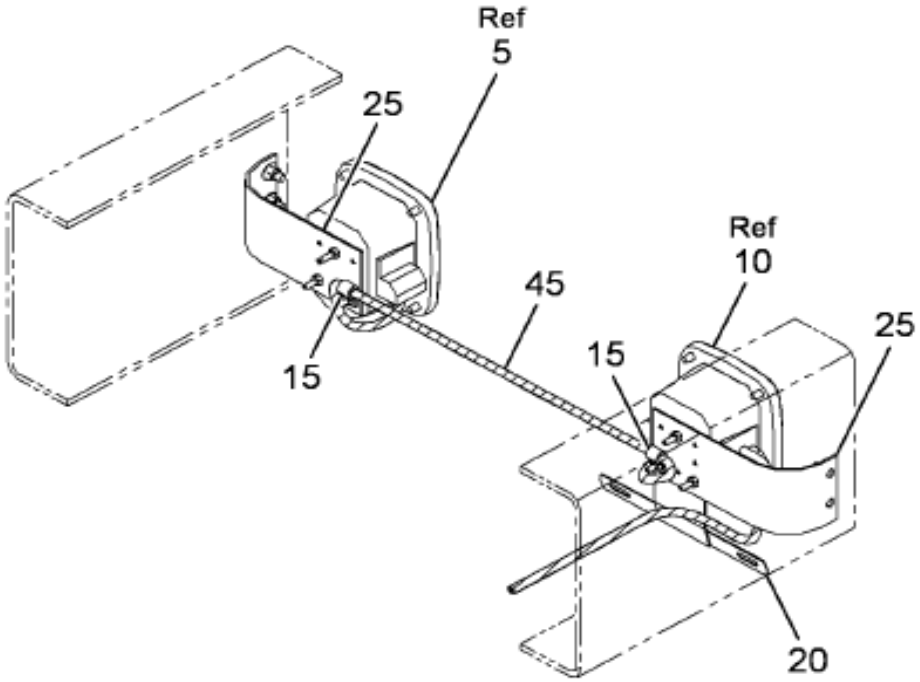

08-266-0059-01 C11

Grp 08

Figure 1 of 7

COPYRIGHT© 2011INTERNATIONAL TRUCK AND ENGINE CORP.

https://truckmanualshub.com/

Figure 0HDBK
RR LIGHT INSTL; STD TAIL LIGHTS

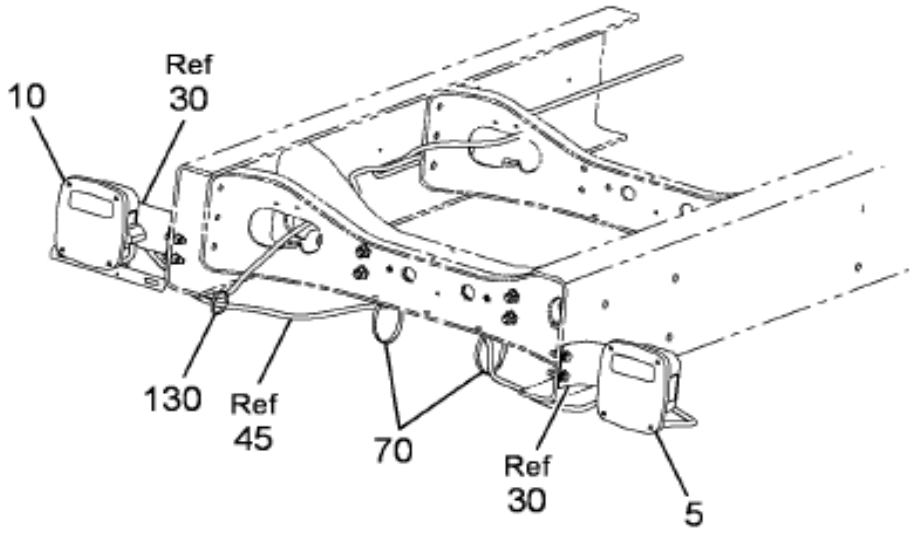

M-NGV
M-F6/750-EPA07
W/0508015,008TRW,
008TPC

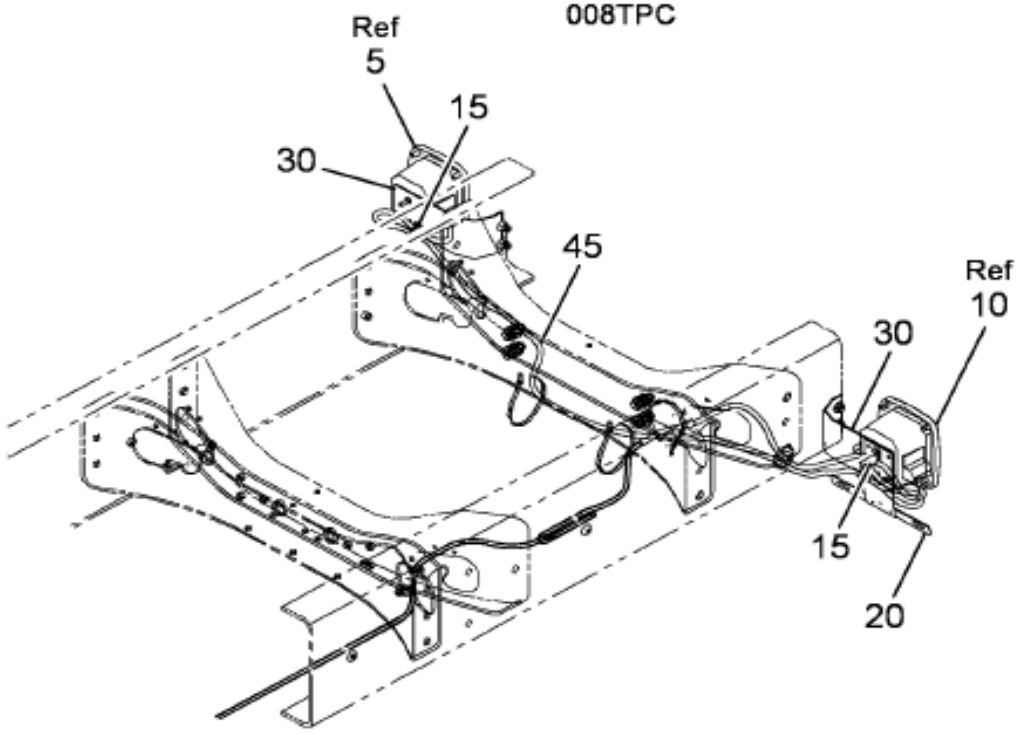

08-266-0059-02 C11

Figure 2 of 7

COPYRIGHT© 2011INTERNATIONAL TRUCK AND ENGINE CORP.

https://truckmanualshub.com/

Figure 08DBR
RR LIGHT INSTL; STD TAIL LIGHTS

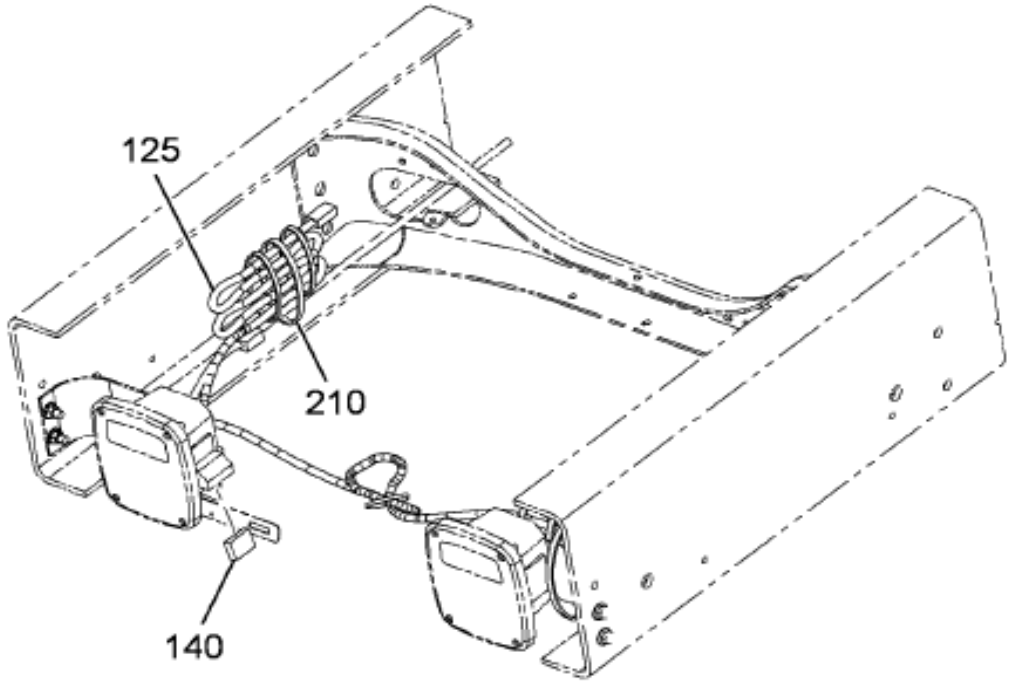

M-NGV
W/08NAA
N/1616

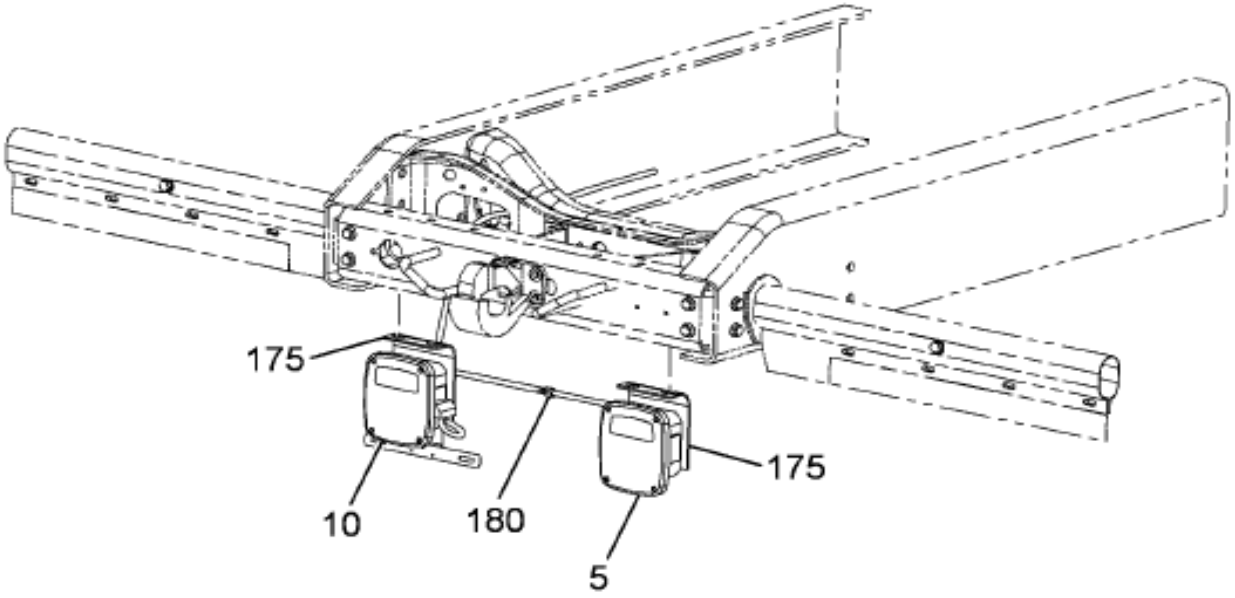

08-266-0059-03 C11

Grp 08

Figure 3 of 7

COPYRIGHT© 2011INTERNATIONAL TRUCK AND ENGINE CORP.

https://truckmanualshub.com/

Figure 0HDBK
RR LIGHT INSTL; STD TAIL LIGHTS

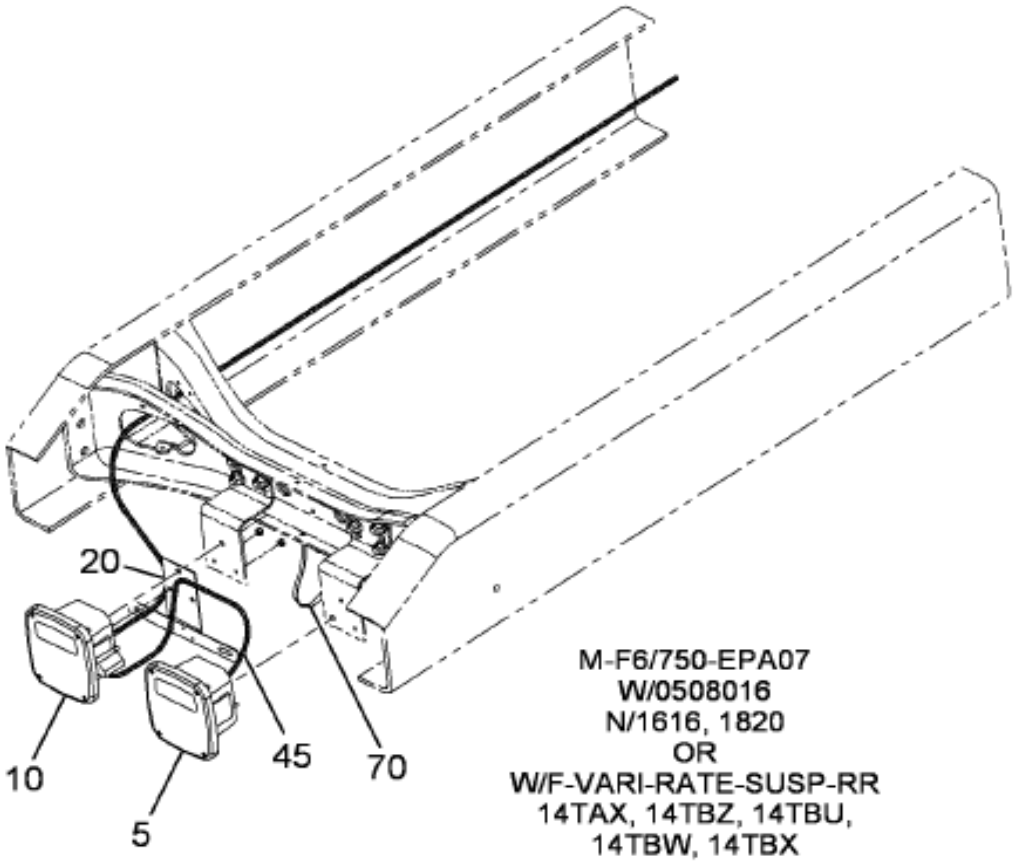

M-F6/750-EPA07
W/0508016
N/1616, 1820
OR
W/F-VARI-RATE-SUSP-RR
14TAX, 14TBZ, 14TBU,
14TBW, 14TBX
W/0508016

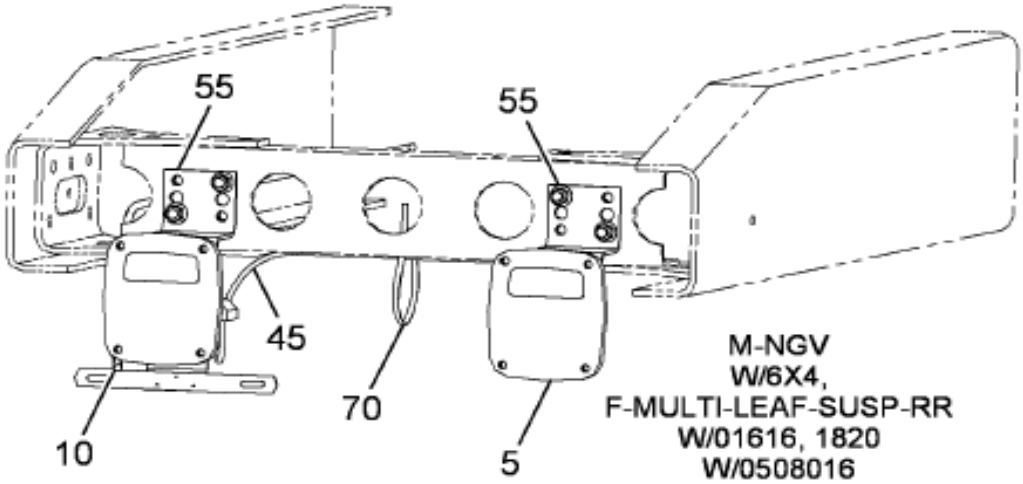

M-NGV
W/6X4,
F-MULTI-LEAF-SUSP-RR
W/01616, 1820
W/0508016
OR
M-F6/750-EPA07
W/4X2
W/508016
W/1616, 1820
W/14TAX

08-266-0059-04 C11

Figure 4 of 7

COPYRIGHT© 2011INTERNATIONAL TRUCK AND ENGINE CORP.

https://truckmanualshub.com/

Figure 01BDR

RR LIGHT INSTL; STD TAIL LIGHTS

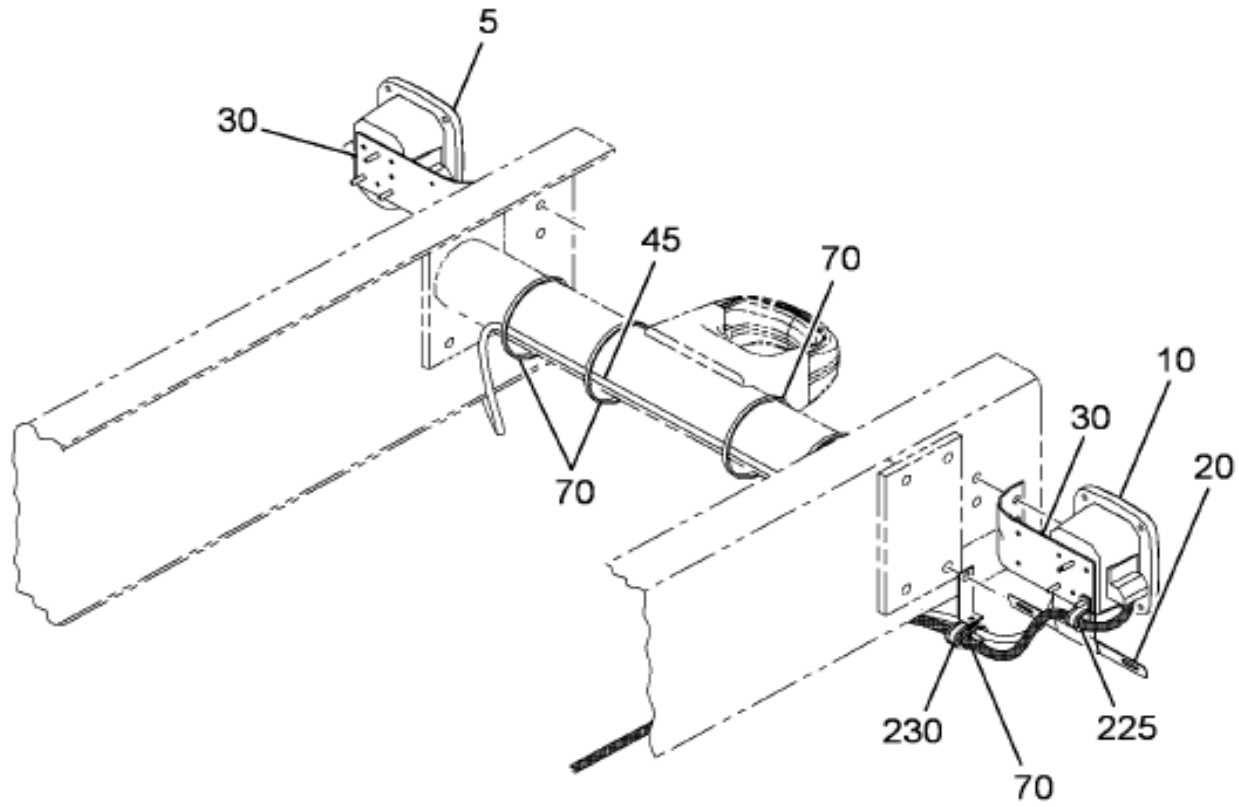

M-NGV
W/508015,8TRW
W/01UAJ

08-266-0011-01 G10

Grp 08

Figure 5 of 7

COPYRIGHT© 2011INTERNATIONAL TRUCK AND ENGINE CORP.

https://truckmanualshub.com/

Figure 01BBR
RR LIGHT INSTL; STD TAIL LIGHTS

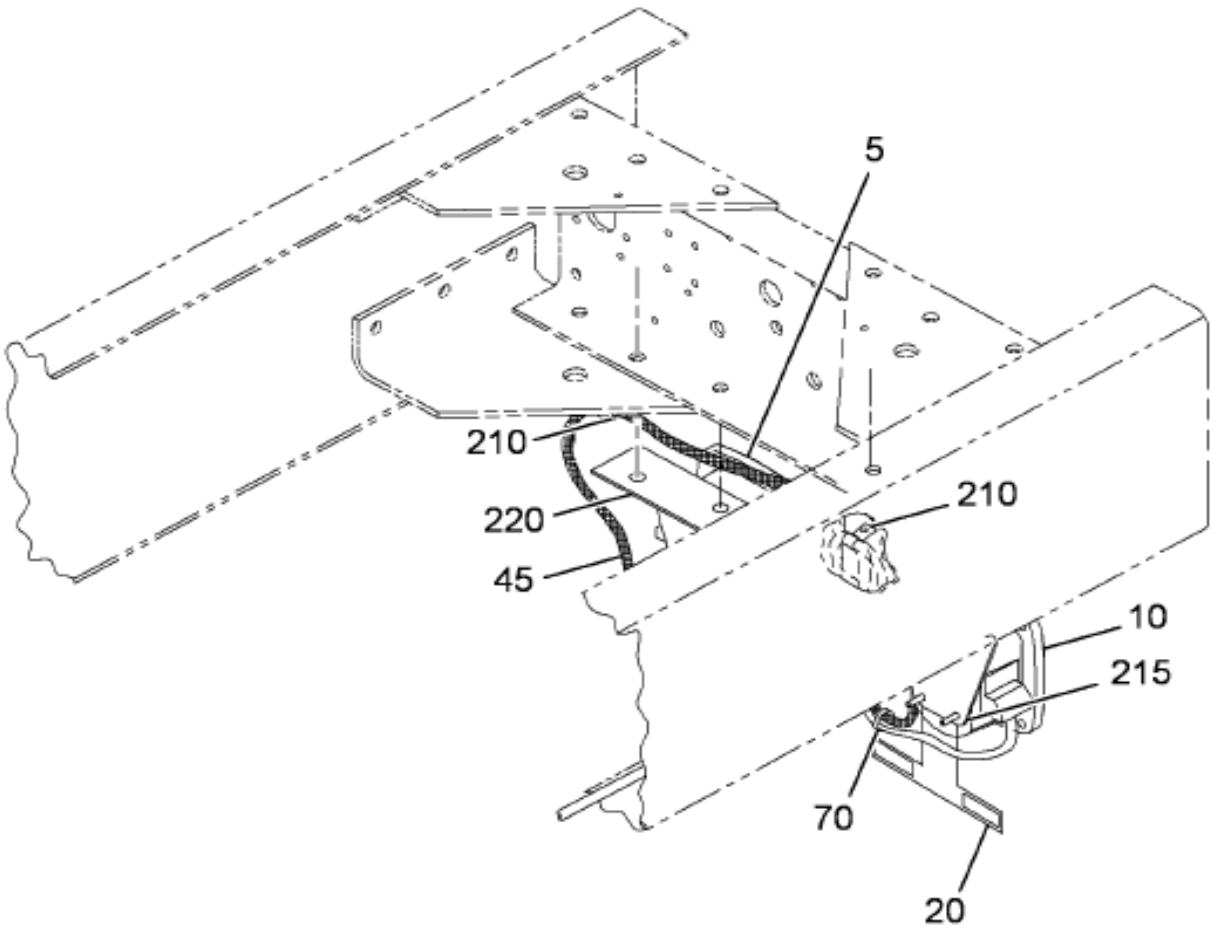

08-266-0012-01 G10

Figure 6 of 7

COPYRIGHT© 2011INTERNATIONAL TRUCK AND ENGINE CORP.

https://truckmanualshub.com/

Figure 0HDDK

RR LIGHT INSTL; STD TAIL LIGHTS

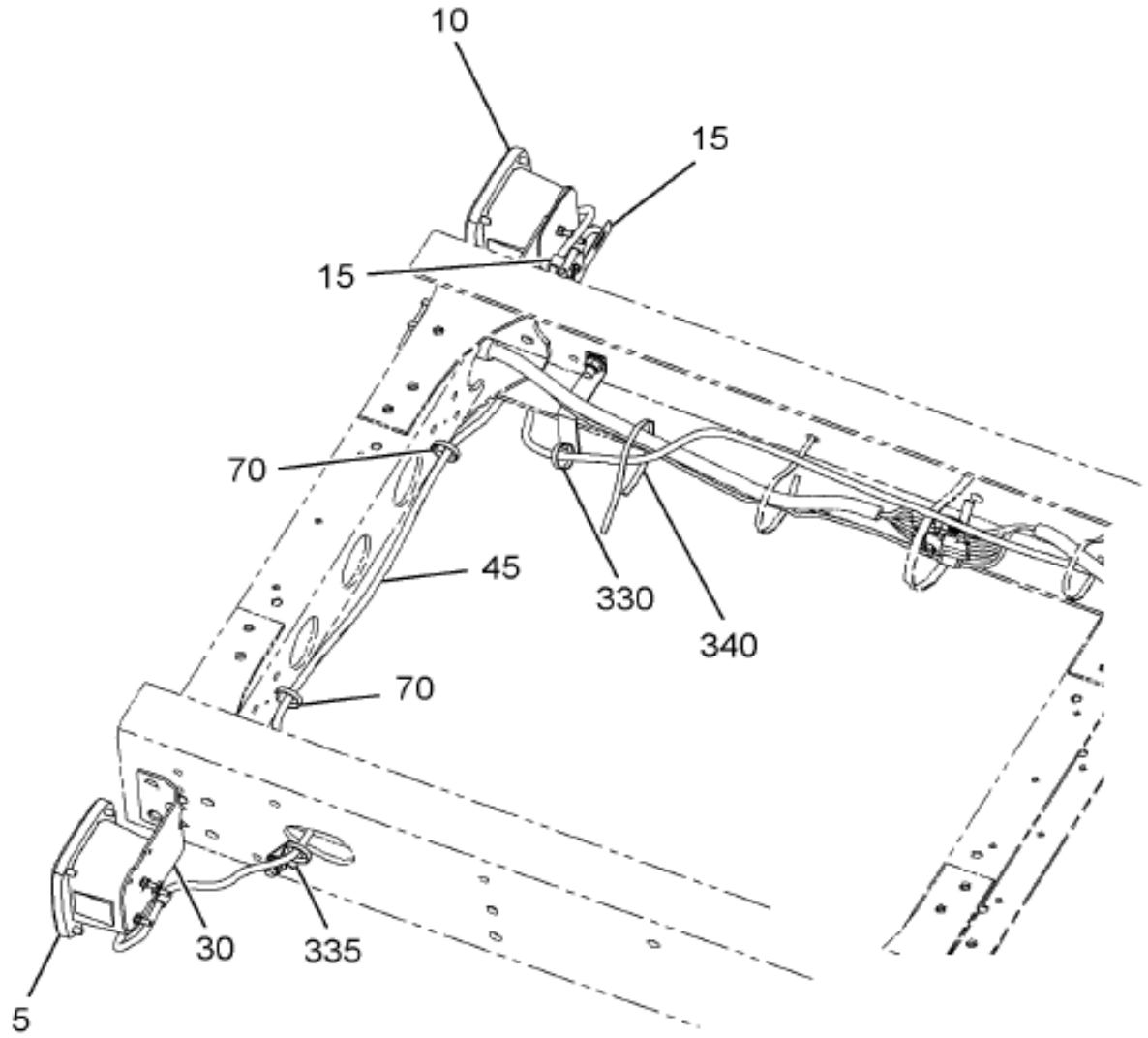

TA00500
W/0508015

08-266-0052-01 G10

Item	Part No.	Qty	Description	Kit	Var	Figure
5	1661282C91	1	LIGHT,ASSY STOP TAIL TURN WITH		0YV0H	1661282C91
5	9413992	3	NUT,HEX		0YV0H	
10	1661281C91	1	LIGHT,ASSY STOP TAIL WITH LICE		0YV0H	1661281C91
10	9413992	3	NUT,HEX		0YV0H	
15	3545771C1	2	GUIDE BRK HOSE & CABLE		0YV0H	
15	306132C1	2	STRAP,CABLE LOCK		0YV0H	

Grp 08

COPYRIGHT© 2011INTERNATIONAL TRUCK AND ENGINE CORP.

https://truckmanualshub.com/

Figure 0HDDK

RR LIGHT INSTL; STD TAIL LIGHTS

Item	Part No.	Qty	Description	Kit	Var	Figure
20	424536C2	1	SUPPORT, BRACKET, LICENSE PLAT		0YV0H	
25	3543311C1	2	BRACKET,*INSIDE RAIL 11.9 MM M		0YV0H	
25	30849R2	4	BOLT HEX FLG HD METRIC		0YV0H	
25	3535556C1	4	NUT,HEX METRIC PREV. TORQ*M10		0YV0H	
45	3552880C91	1	HARNESS,STOP & TAIL LIGHT*LIGH		0YV04	3552880C91
70	289862C1	4	STRAP,CABLE LOCK		0HDDK	

COPYRIGHT© 2011INTERNATIONAL TRUCK AND ENGINE CORP.

https://truckmanualshub.com/

Figure 3332880C91
HARNESS,STOP & TAIL LIGHT*LIGH

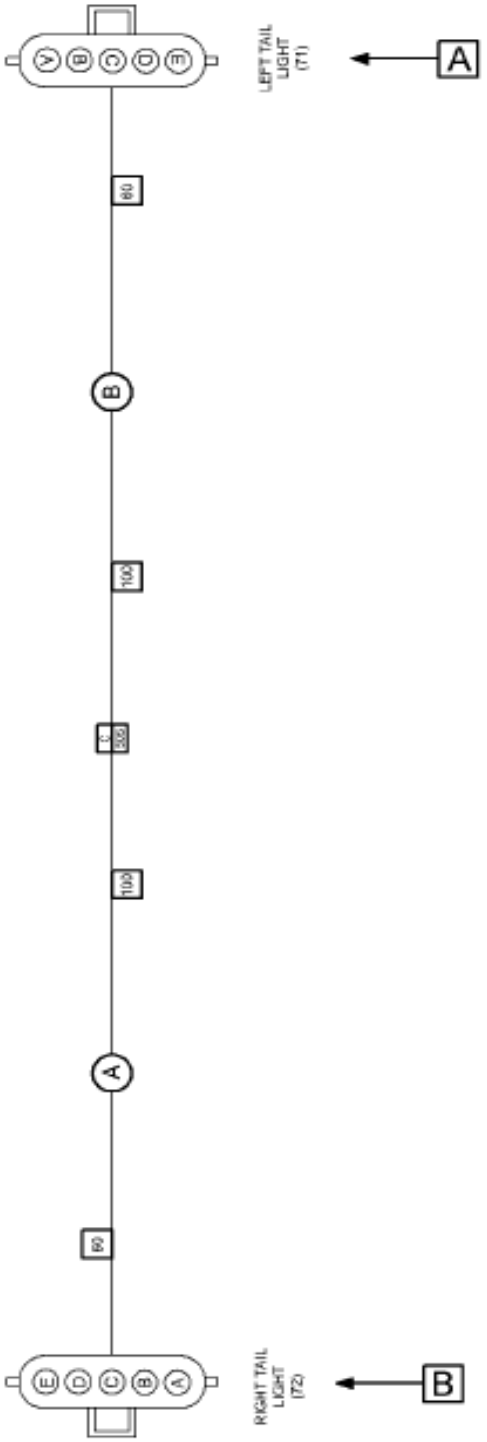

Grp 08

Figure 1 of 2

COPYRIGHT© 2011INTERNATIONAL TRUCK AND ENGINE CORP.

https://truckmanualshub.com/

Figure 3332880C91

HARNESS,STOP & TAIL LIGHT*LIGH

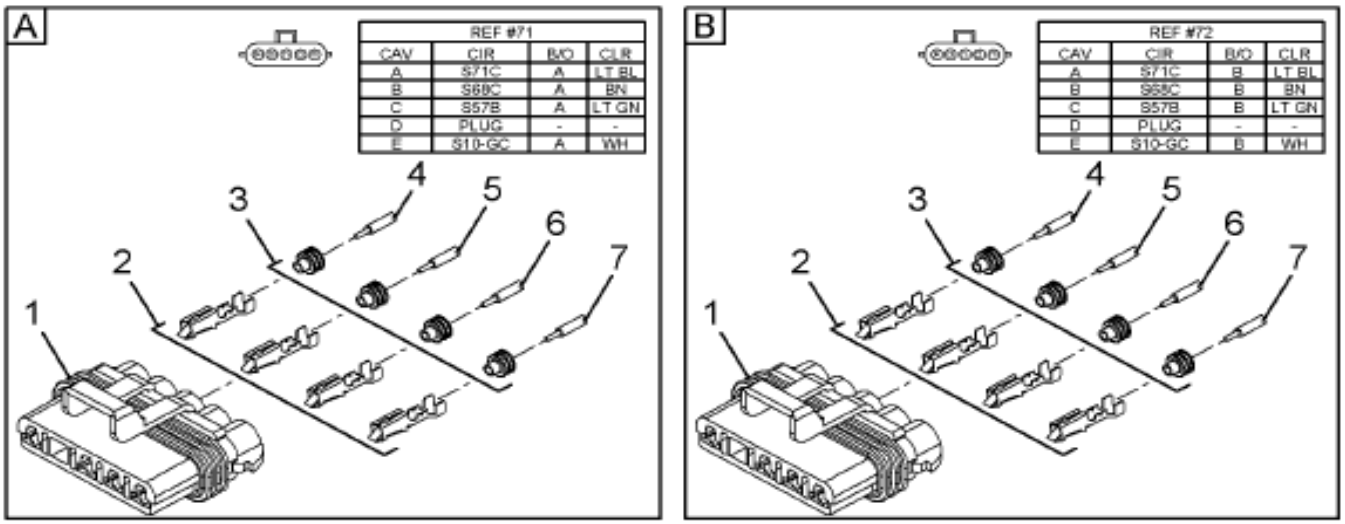

08-266-0068-02 J11

Item	Part No.	Qty	Description	Kit	Var	Figure
1	1661375C2	2	BODY,CONNECTOR			
2	2033816C1	8	TERMINAL,CABLE (FOR 14 GA ONLY			
3	589391C1	8	PLUG,SEALER, LOOSE PIECE			
4	2643694R1	AR	CABLE LOW TENSION SINGLE COND			
5	2643688R1	AR	CABLE LOW TENSION SINGLE COND			
6	2643687R1	AR	CABLE LOW TENSION SINGLE COND			

COPYRIGHT© 2011INTERNATIONAL TRUCK AND ENGINE CORP.

https://truckmanualshub.com/

Figure 3552880C91

HARNESS,STOP & TAIL LIGHT*LIGH

Item	Part No.	Qty	Description	Kit	Var	Figure
7	2643689R1	AR	CABLE LOW TENSION SINGLE COND			
880		RF	NOTE: ASM BELOW COMPRISED OF ABOVE COMPONENTS			
881	3552880C91	RF	HARNESS,STOP & TAIL LIGHT*LIGH			

COPYRIGHT© 2011INTERNATIONAL TRUCK AND ENGINE CORP.

https://truckmanualshub.com/

Figure 1661282C91 LIGHT,ASSY STOP TAIL TURN WITH

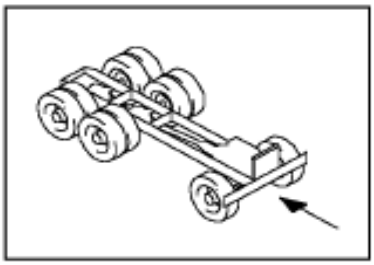

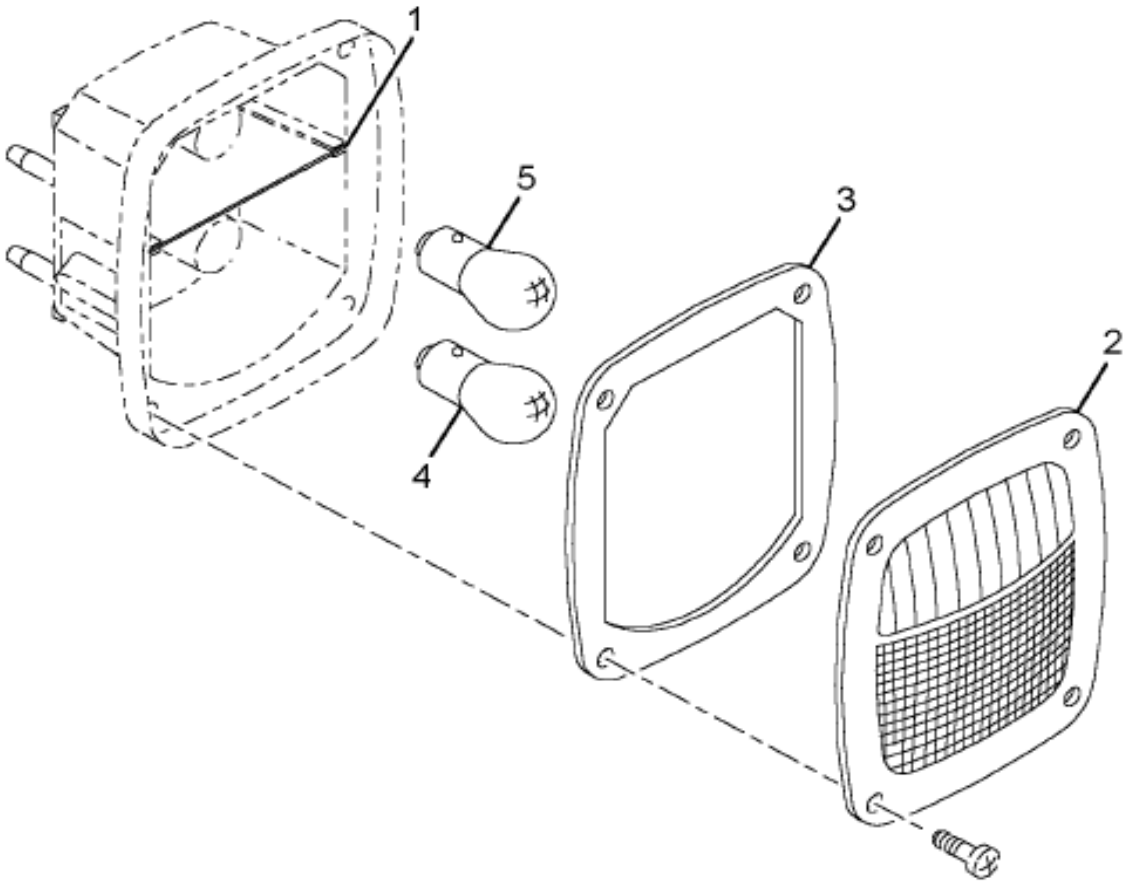

08-193-0021-00 G03

Item	Part No.	Qty	Description	Kit	Var	Figure
1		RF	BAFFLE, LIGHT			
2	1669581C1	1	LENS,TURN SIGNAL & STOP			
3	1669582C1	1	GASKET,TURN SIGNAL LIGHT			
4		1	LAMP,INCANDESCENT 12V			
5		1	LAMP,INCANDESCENT 12V			
800		RF	NOTE: THE FOLLOWING PARTS ARE			

COPYRIGHT© 2011INTERNATIONAL TRUCK AND ENGINE CORP.

https://truckmanualshub.com/

Figure 1661282C91

LIGHT,ASSY STOP TAIL TURN WITH

Item	Part No.	Qty	Description	Kit	Var	Figure
			NON-ILLUSTRATED			
801	9417867	1	LAMP			
802	9417866	1	LAMP			
880		RF	NOTE: ASM BELOW COMPRISED OF ABOVE COMPONENTS			
881	1661282C91	RF	LIGHT,ASSY STOP TAIL TURN WITH			

COPYRIGHT© 2011INTERNATIONAL TRUCK AND ENGINE CORP.

https://truckmanualshub.com/

Figure 1661281C91

LIGHT,ASSY STOP TAIL WITH LICE

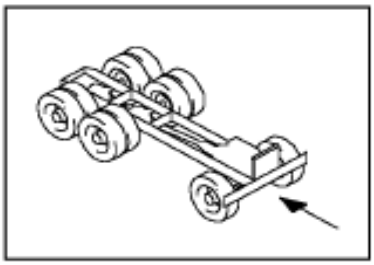

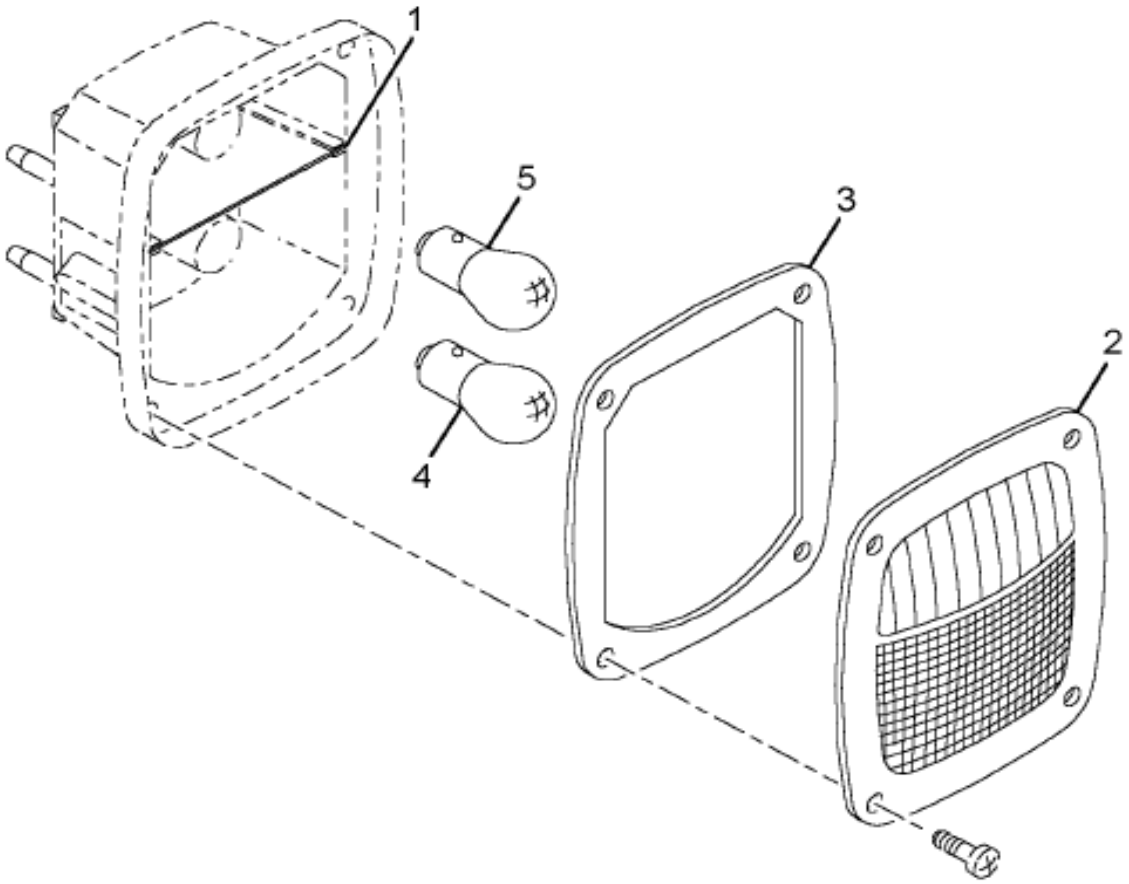

08-193-0021-00 G03

Item	Part No.	Qty	Description	Kit	Var	Figure
1		RF	BAFFLE, LIGHT			
2	1669581C1	1	LENS,TURN SIGNAL & STOP			
3	1669582C1	1	GASKET,TURN SIGNAL LIGHT			
4	9417867	1	LAMP			
5	9417866	1	LAMP			
880		RF	NOTE: ASM BELOW COMPRISED OF ABOVE			

COPYRIGHT© 2011INTERNATIONAL TRUCK AND ENGINE CORP.

https://truckmanualshub.com/

Figure 1661281C91

LIGHT,ASSY STOP TAIL WITH LICE

Item	Part No.	Qty	Description	Kit	Var	Figure
			COMPONENTS			
881	1661281C91	RF	LIGHT,ASSY STOP TAIL WITH LICE			

COPYRIGHT© 2011INTERNATIONAL TRUCK AND ENGINE CORP.

https://truckmanualshub.com/

Figure 0HB3P

STOP,TAIL & TURN WIRING INSTL; W/HEND OR CHLMR SUSP

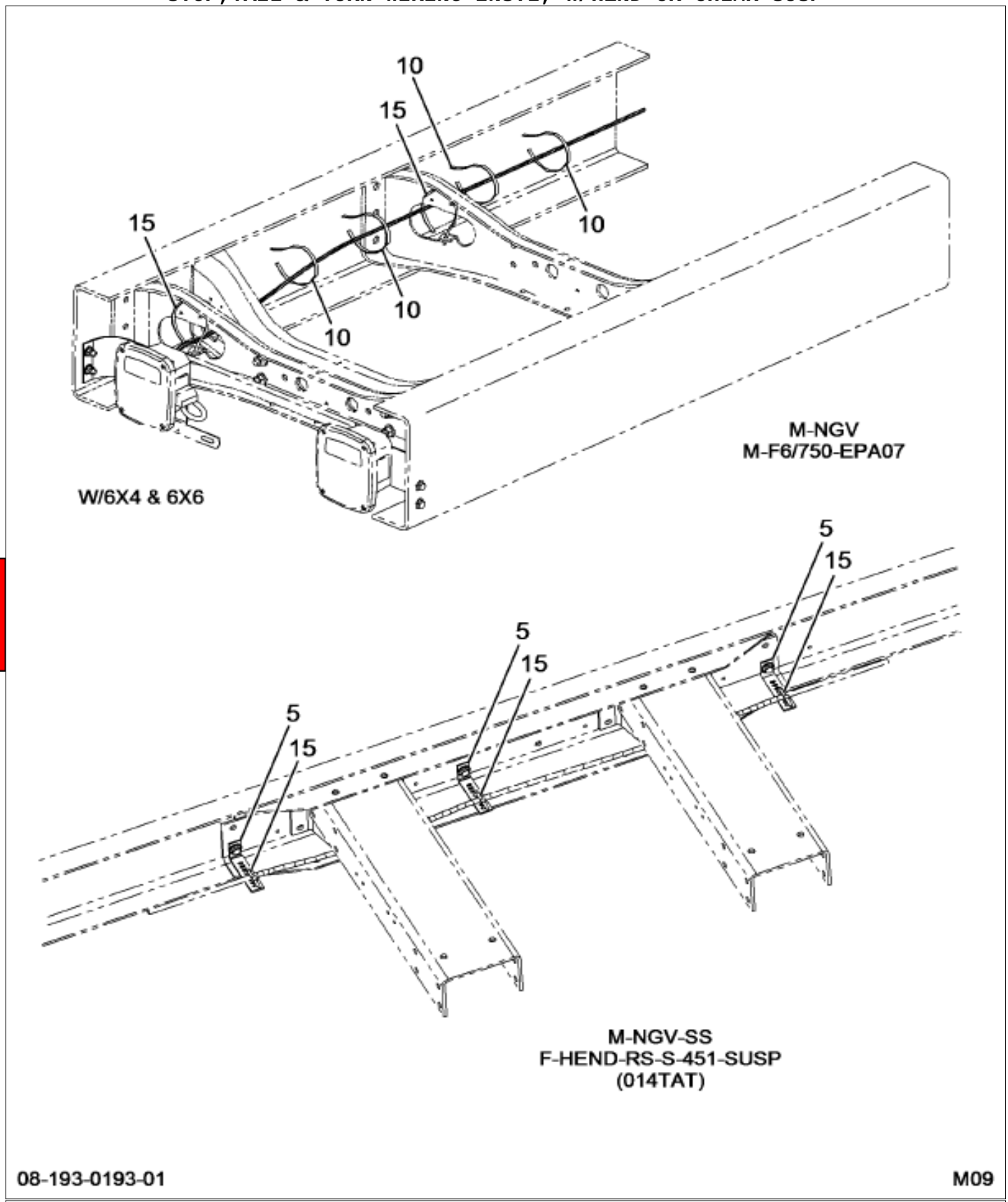

Figure 1 of 3

COPYRIGHT© 2011INTERNATIONAL TRUCK AND ENGINE CORP.

https://truckmanualshub.com/

Figure 0HB3P

STOP,TAIL & TURN WIRING INSTL; W/HEND OR CHLMR SUSP

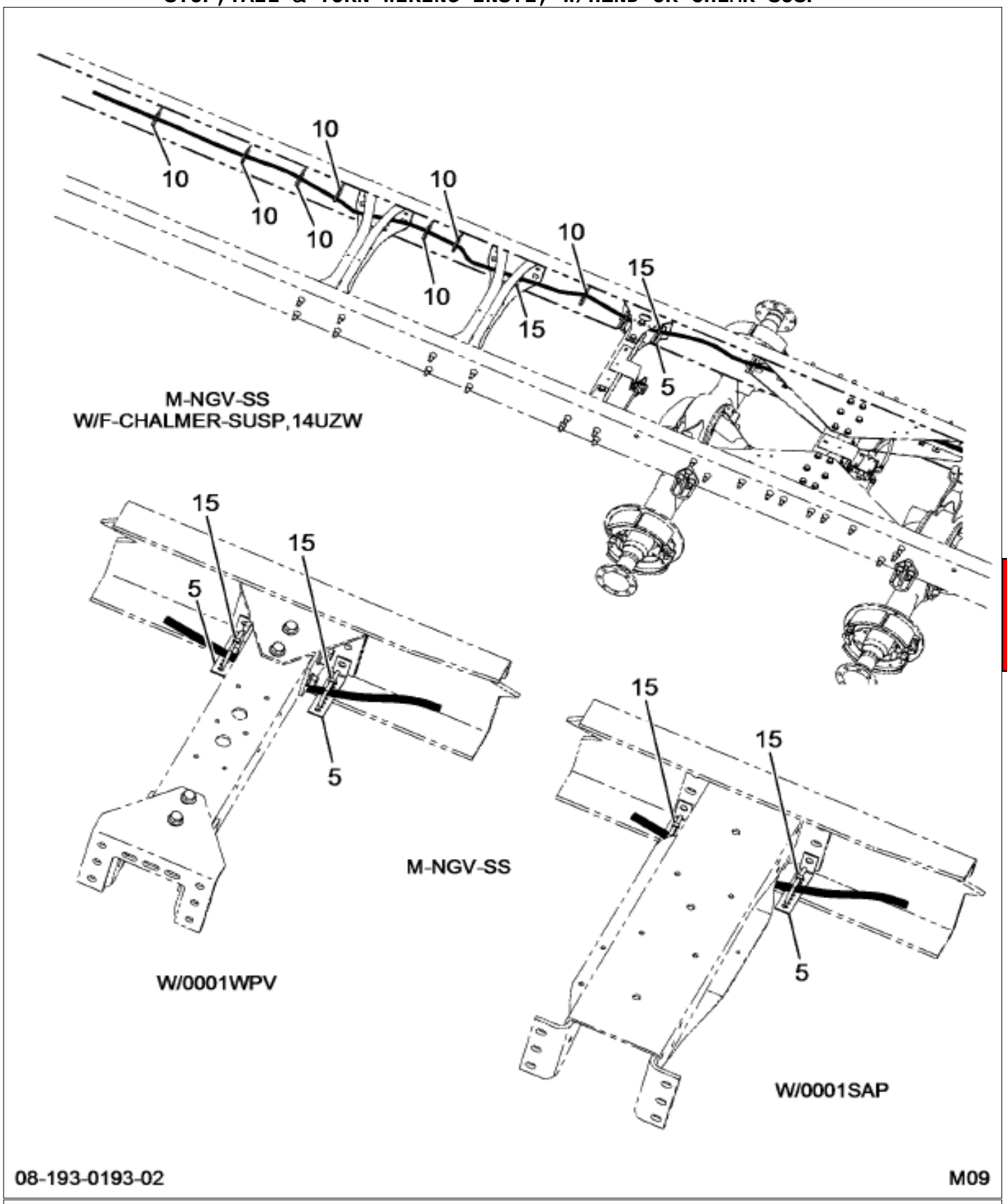

Grp 08

Figure 2 of 3

COPYRIGHT© 2011INTERNATIONAL TRUCK AND ENGINE CORP.

https://truckmanualshub.com/

Figure 0HDJP

STOP,TAIL & TURN WIRING INSTL; W/HEND OR CHLMR SUSP

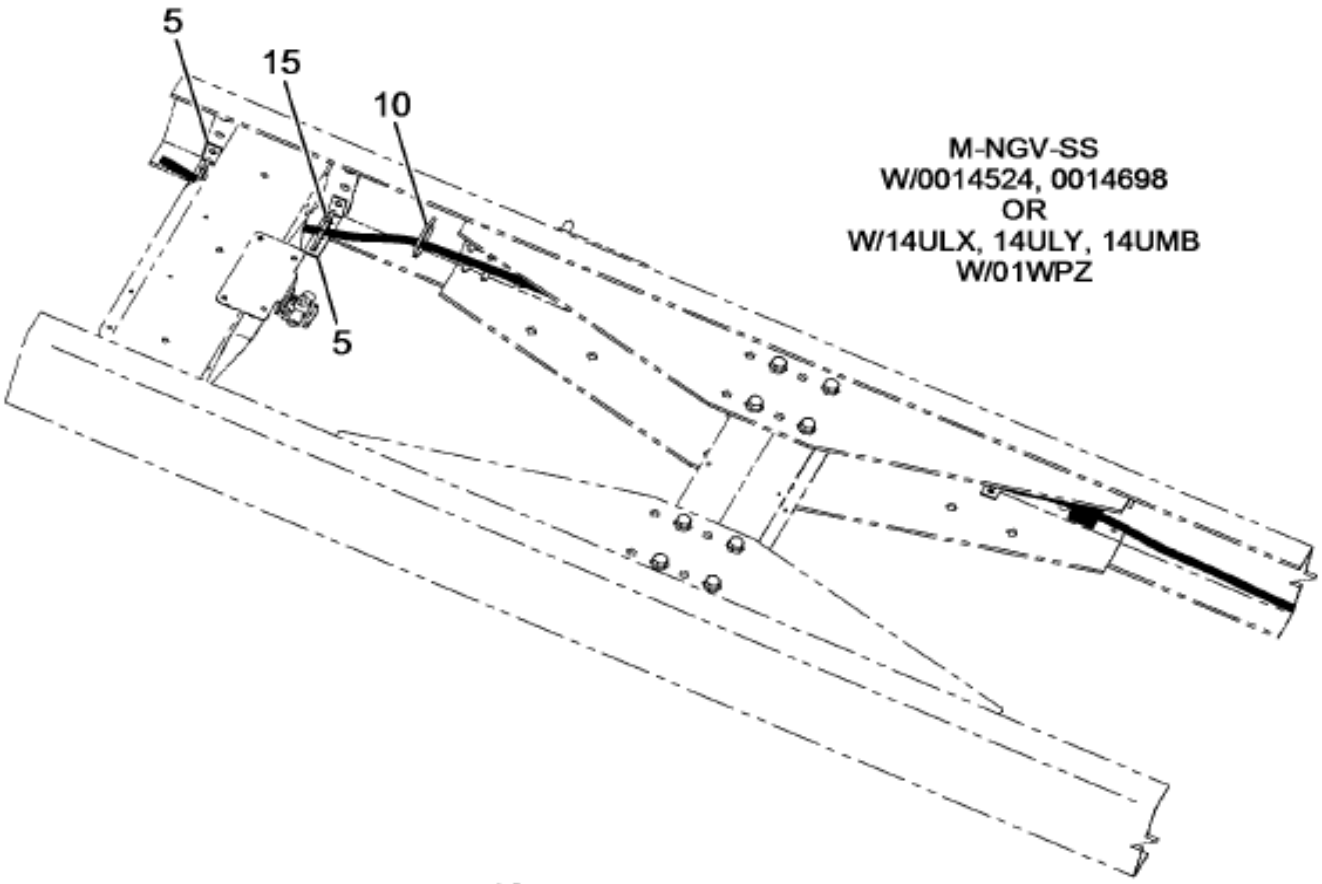

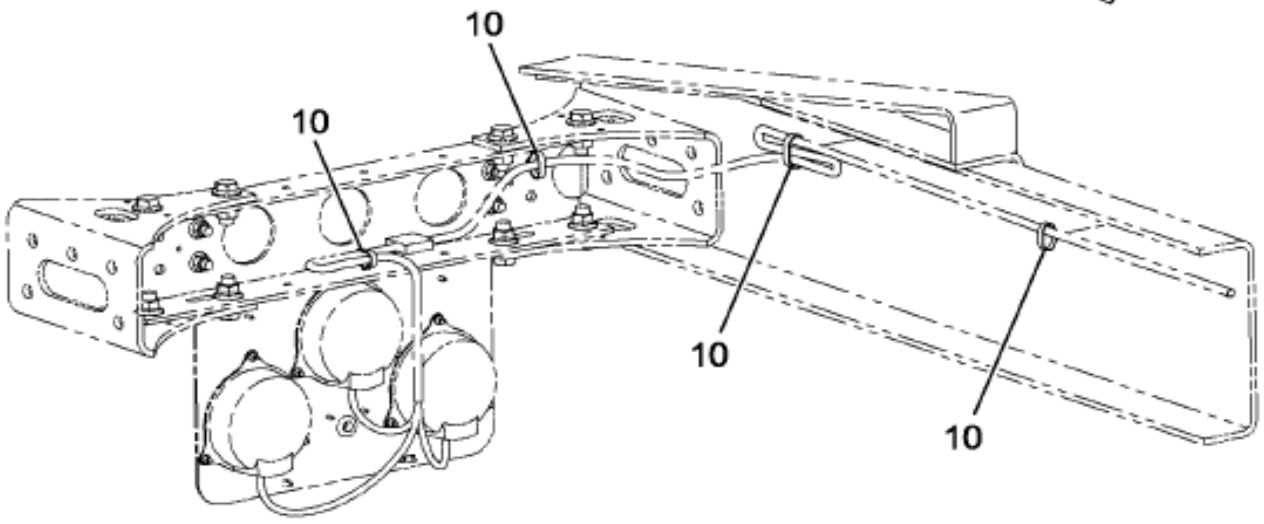

08-193-0193-03 M09

Item	Part No.	Qty	Description	Kit	Var	Figure
10	3544557C1	1	STRAP,CABLE LOCK*382MM BUTTON		0HDMJ	
15	289862C1	2	STRAP,CABLE LOCK		0HDMJ	

COPYRIGHT© 2011INTERNATIONAL TRUCK AND ENGINE CORP.

https://truckmanualshub.com/

Figure 06Q33

TURN SIGNAL SWITCH & DCM HARNESS

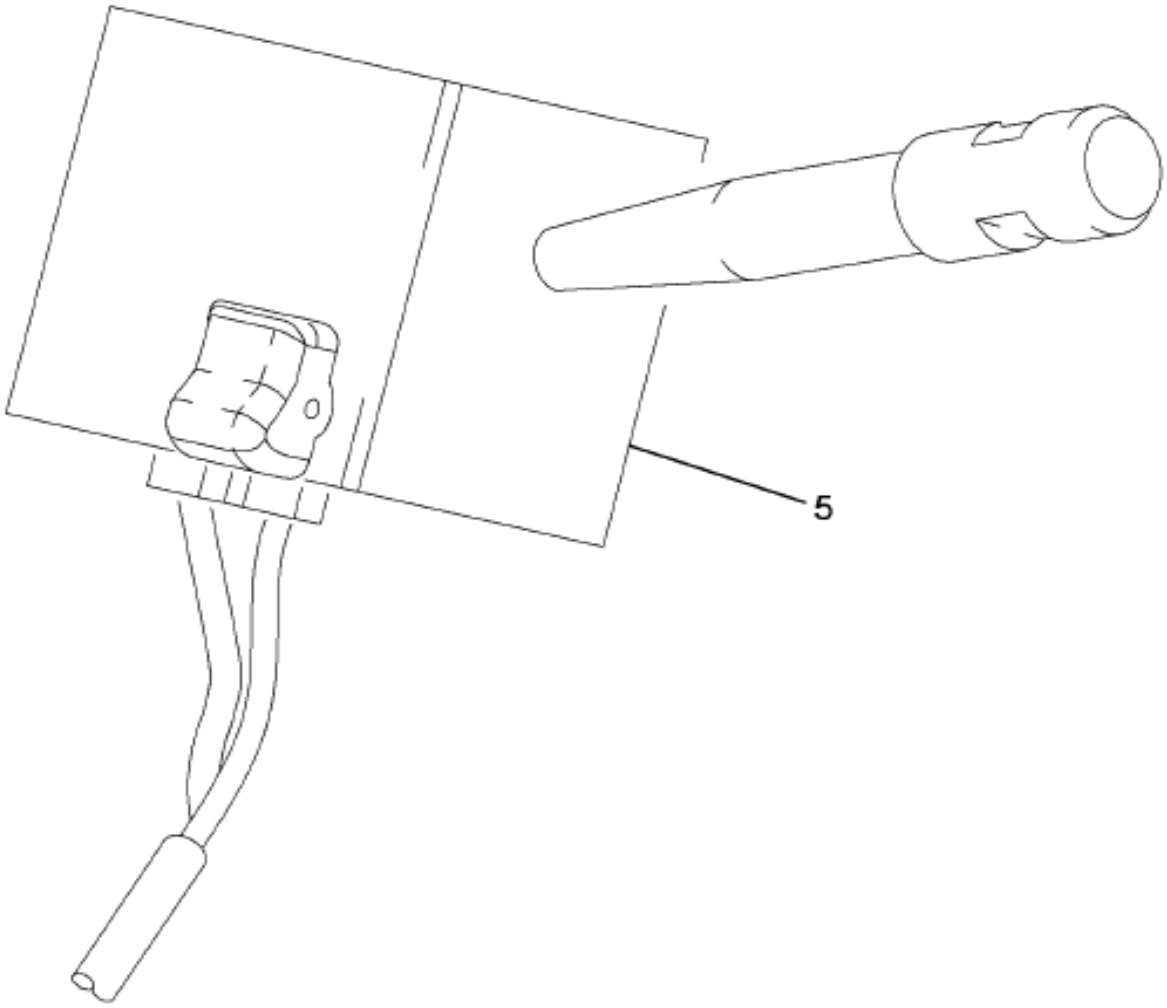

16-C13-0004-A0 G09

Item	Part No.	Qty	Description	Kit	Var	Figure
5	3554196F93	1	ELECTRICAL DCM W/AIR BRAKES		0J46V	3554196F93

COPYRIGHT© 2011INTERNATIONAL TRUCK AND ENGINE CORP.

https://truckmanualshub.com/

Figure 3554136F93

ELECTRICAL DCM W/AIR BRAKES

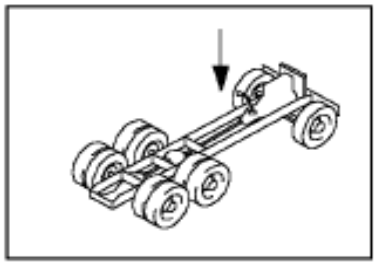

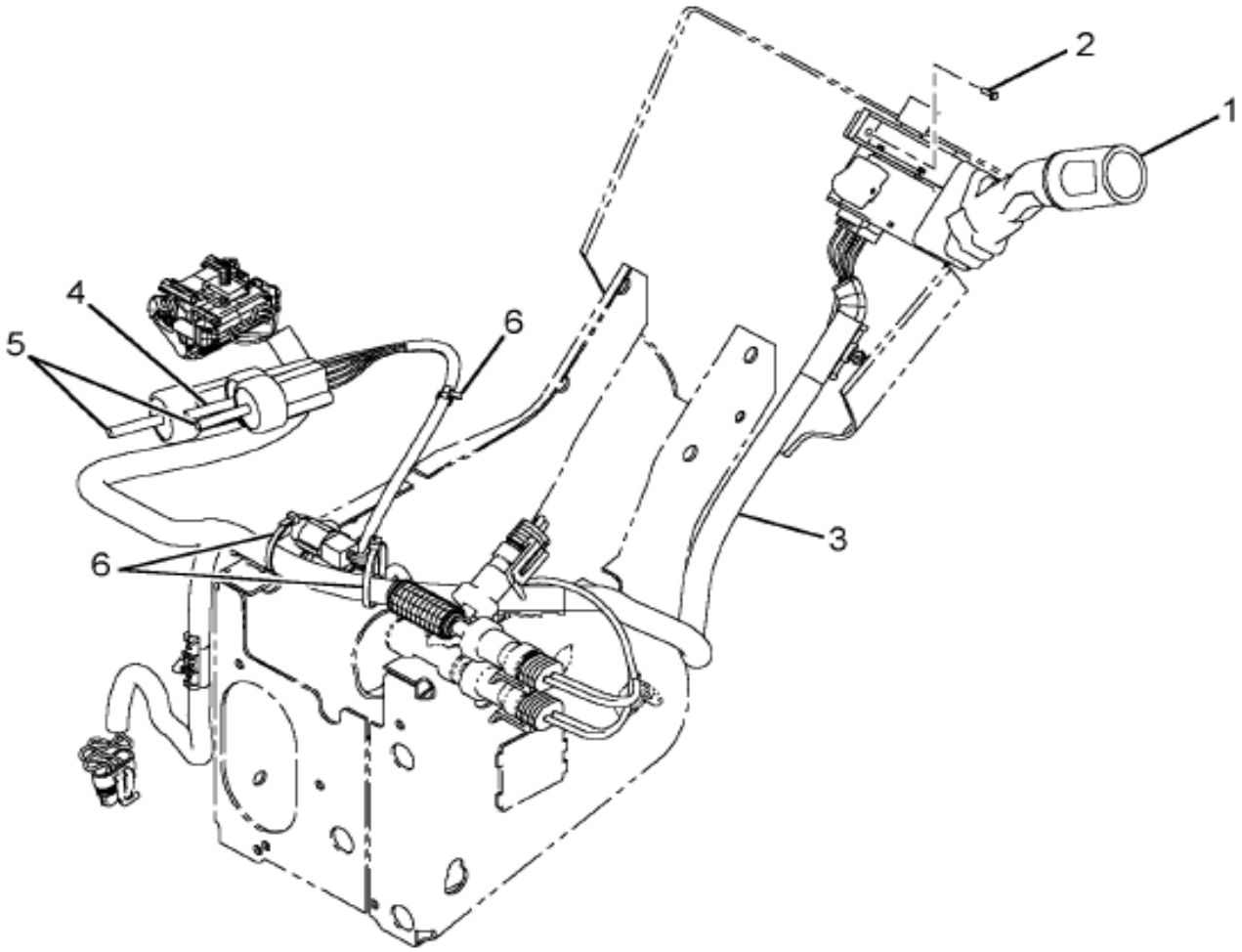

16-C17-0007-01 H03

Item	Part No.	Qty	Description	Kit	Var	Figure
1	2585904C91	1	SWITCH,TURN SIGNAL W/WIPE CTRL			
2	2505847C1	2	SCREW, PLASTITE #8X1/2" P/HEAD			
3	3554122C92	1	HARNESS,ELECT, BASE CAB, HARNE			
4	2507927C1	1	SWITCH,PRESSURE PARK BRK	B		
5		2	TRANSDUCER,AIR PRES GAUGE	A		
6		2	CABLE,STRAP LOCK 8" BLACK			

COPYRIGHT© 2011INTERNATIONAL TRUCK AND ENGINE CORP.

https://truckmanualshub.com/

Figure 3554196F93

ELECTRICAL DCM W/AIR BRAKES

Item	Part No.	Qty	Description	Kit	Var	Figure
801	2505669C91	KT	TRANSDUCER,AIR,KIT			2505669C91
801		RF	(CONSISTS OF PARTS DENOTED BY A)			
802	2505667C91	KT	KIT,PRK BRAKE PRESS SWITCH			2505667C91
802		RF	(CONSISTS OF PARTS DENOTED BY B)			
880		RF	NOTE: ASM BELOW COMPRISED OF ABOVE COMPONENTS			
881	3554196F93	RF	ELECTRICAL DCM W/AIR BRAKES			

Grp 08

COPYRIGHT© 2011INTERNATIONAL TRUCK AND ENGINE CORP.

https://truckmanualshub.com/

Figure 2503667C91

KIT,PRK BRAKE PRESS SWITCH

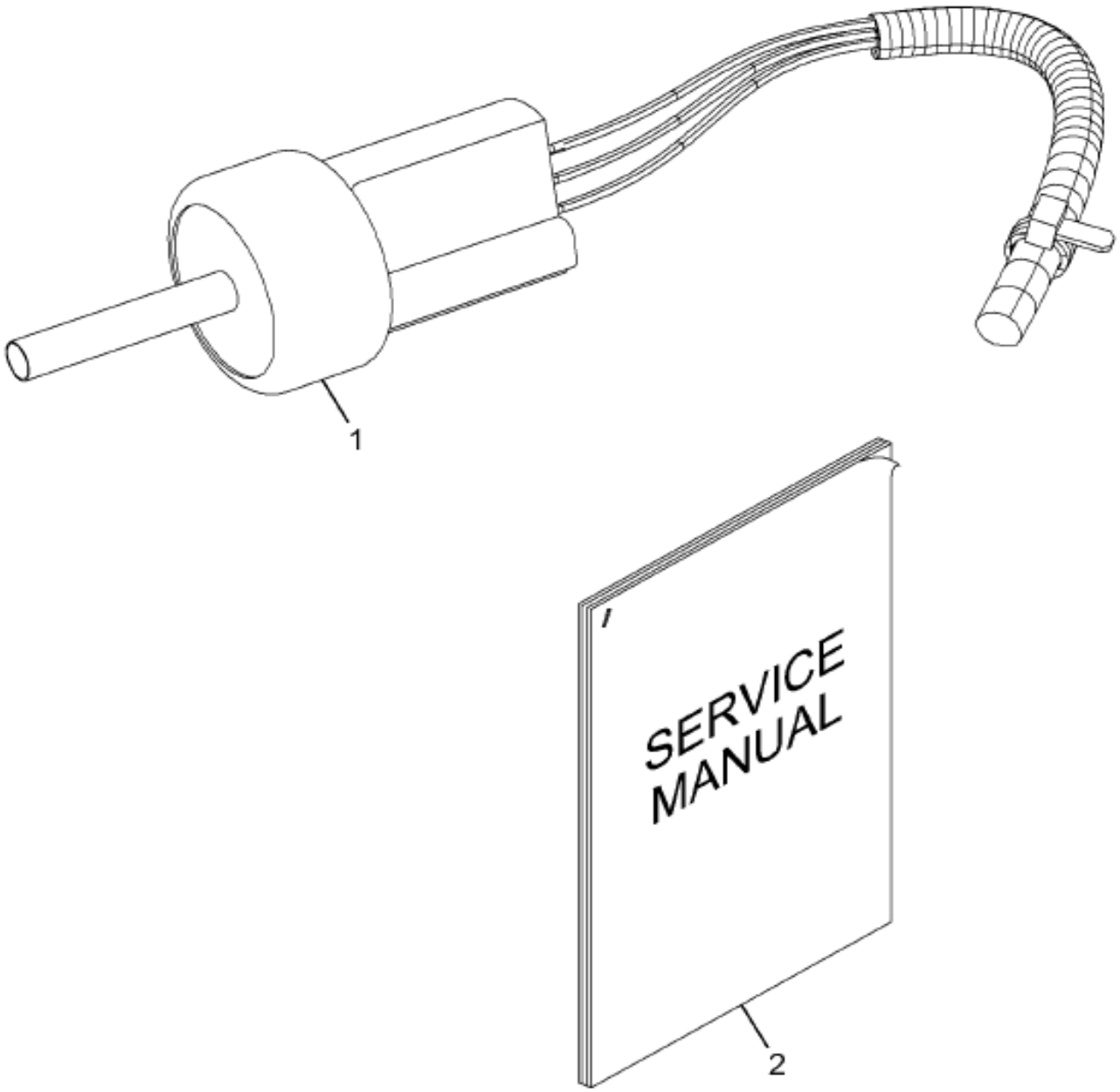

16-D75-M067-01 E09

Item	Part No.	Qty	Description	Kit	Var	Figure
1	2507927C1	1	SWITCH,PRESSURE PARK BRK			
2		RF	MANUAL, INSTRUCTION SHEET			
800		RF	NOTE: THE FOLLOWING PARTS ARE NON-ILLUSTRATED			
880		RF	NOTE: ASM BELOW COMPRISED OF ABOVE COMPONENTS			

COPYRIGHT© 2011INTERNATIONAL TRUCK AND ENGINE CORP.

https://truckmanualshub.com/

Figure 2505667C91

KIT,PRK BRAKE PRESS SWITCH

Item	Part No.	Qty	Description	Kit	Var	Figure
881	2505667C91	RF	KIT,PRK BRAKE PRESS SWITCH			

COPYRIGHT© 2011INTERNATIONAL TRUCK AND ENGINE CORP.

https://truckmanualshub.com/

Figure 2505669C91
TRANSDUCER,AIR,KIT

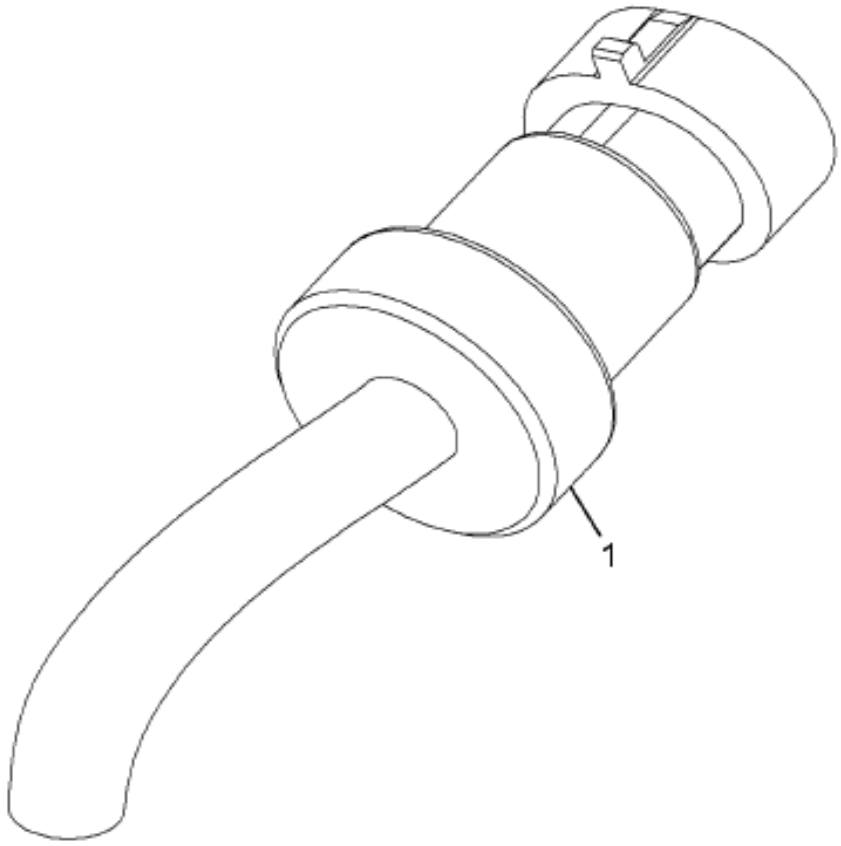

16-D75-M068-01 E09

Item	Part No.	Qty	Description	Kit	Var	Figure
1		1	TRANSDUCER, AIR PRESSURE GAUGE			
880		RF	NOTE: ASM BELOW COMPRISED OF ABOVE COMPONENTS			
881	2505669C91	RF	TRANSDUCER,AIR,KIT			

COPYRIGHT© 2011INTERNATIONAL TRUCK AND ENGINE CORP.

https://truckmanualshub.com/

Figure 0CB2X
VALVE, AIR SOLENOID; AIR HORN

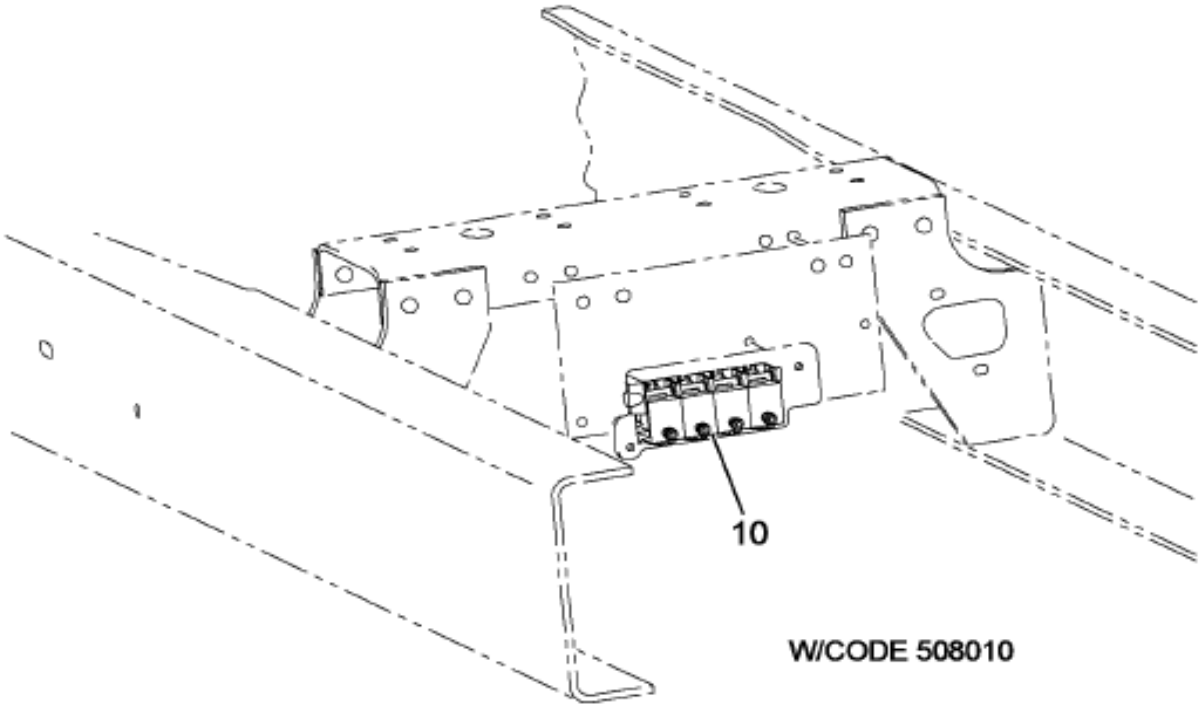

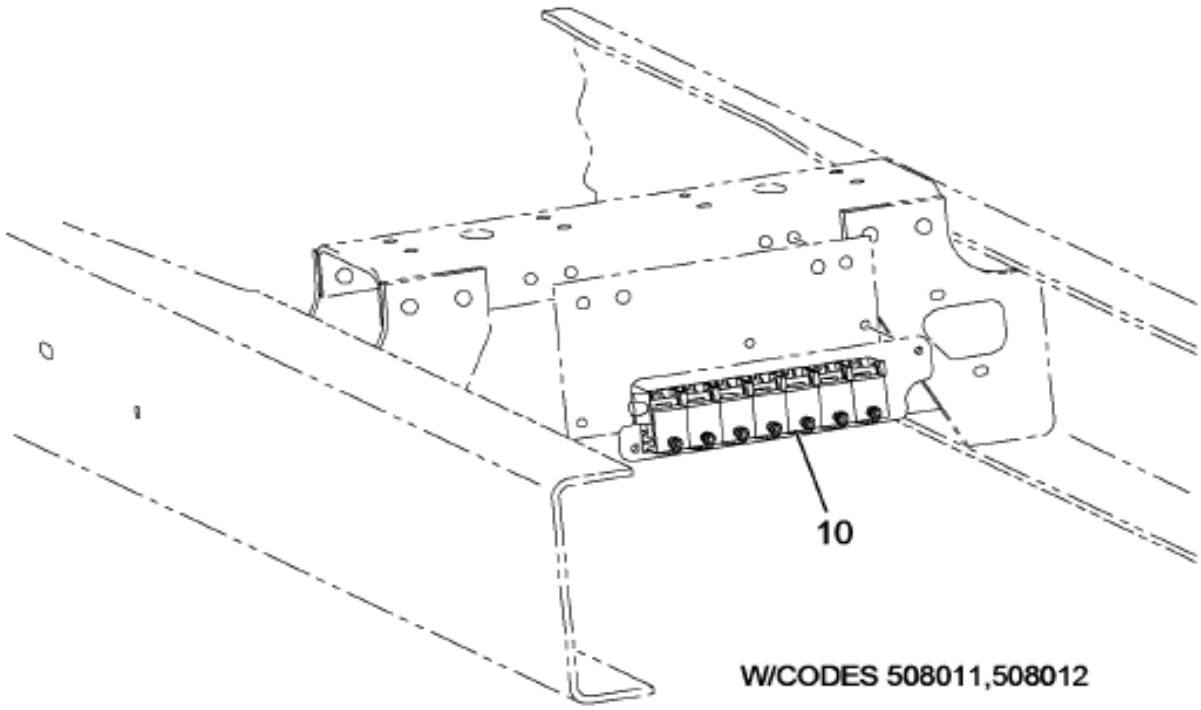

04-S02-0002-BA L09

Item	Part No.	Qty	Description	Kit	Var	Figure
10	3553365F93	1	VALVE,AIR CNTRL AIR HORN SLND		0CC2X	3553365F93

Grp 08

COPYRIGHT© 2011INTERNATIONAL TRUCK AND ENGINE CORP.

https://truckmanualshub.com/

Figure 3553365F93
VALVE,AIR CNTRL AIR HORN SLND

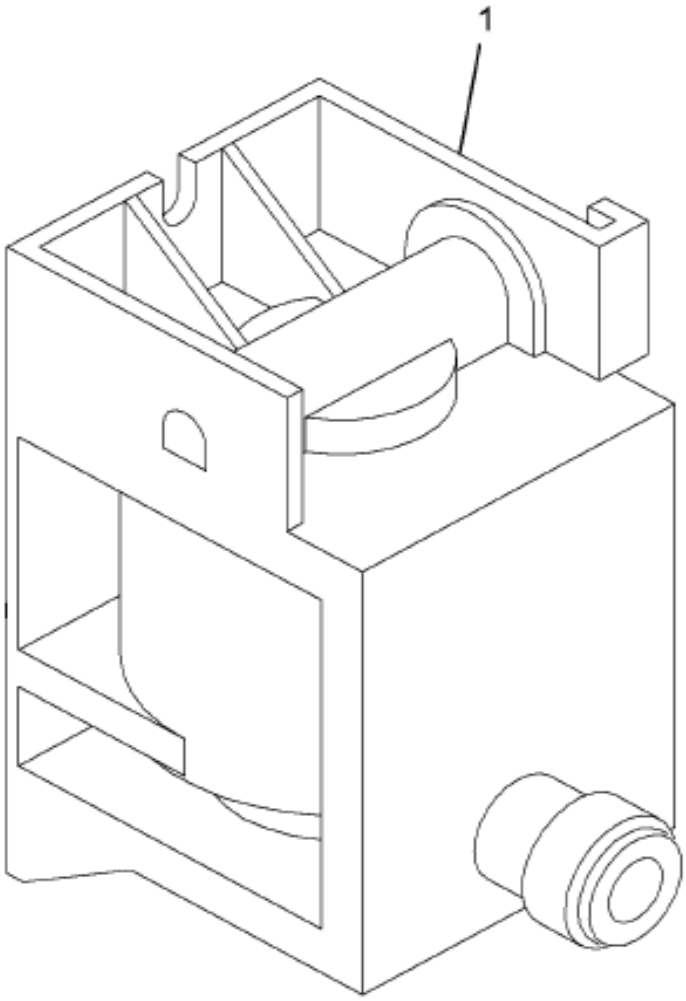

04-S02-0001-00 H05

Item	Part No.	Qty	Description	Kit	Var	Figure
1	3576679C1	1	VALVE,SOLENOID*AIR HORN CNTRL			
1	2020342C1	1	PLUG,FAST CONNECT 1/4 TUBE			
880		RF	NOTE: ASM BELOW COMPRISED OF ABOVE COMPONENTS			
881	3553365F93	RF	VALVE,AIR CNTRL AIR HORN SLND			

COPYRIGHT© 2011INTERNATIONAL TRUCK AND ENGINE CORP.

https://truckmanualshub.com/

Figure 0CB1W

VALVE, AIR SOLENOID; POWER DIVIDER LOCK

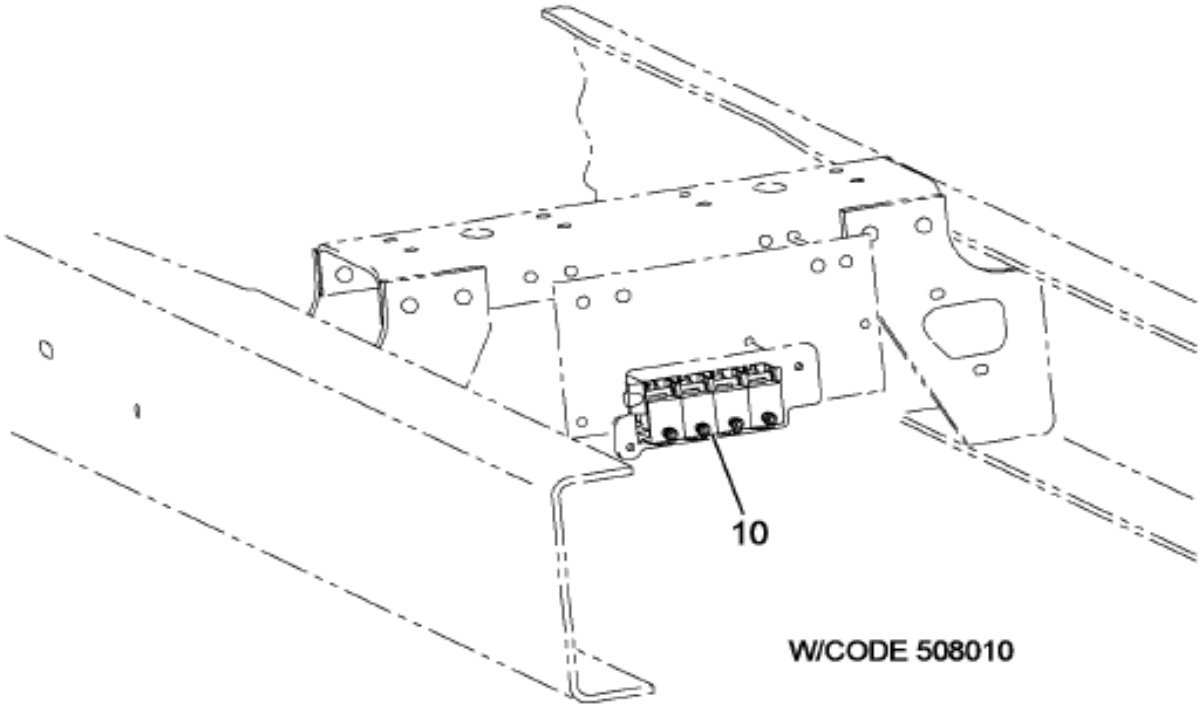

W/CODE 508010

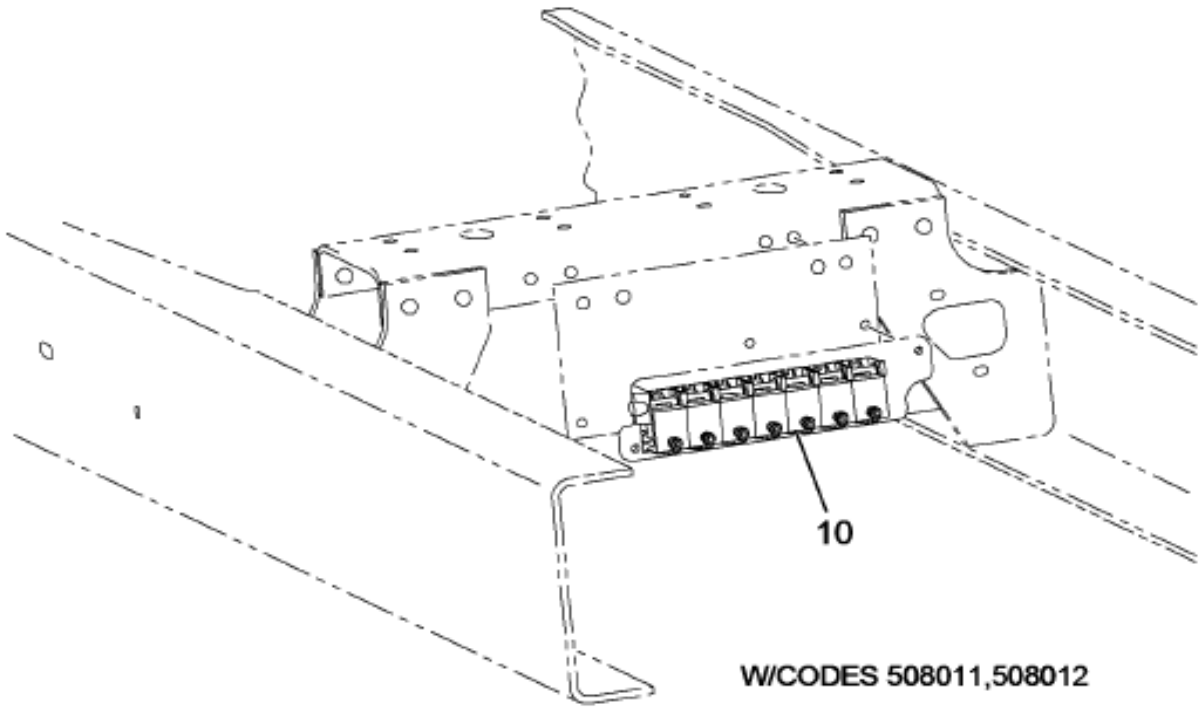

W/CODES 508011,508012

04-S02-0002-BA L09

Item	Part No.	Qty	Description	Kit	Var	Figure
10	3553350F91	1	VALVE,SOLENOID*NC PDL CONTROL		0CC25	3553350F91

Grp 08

COPYRIGHT© 2011INTERNATIONAL TRUCK AND ENGINE CORP.

https://truckmanualshub.com/

Figure 3553350F91
VALVE,SOLENOID*NC PDL CONTROL

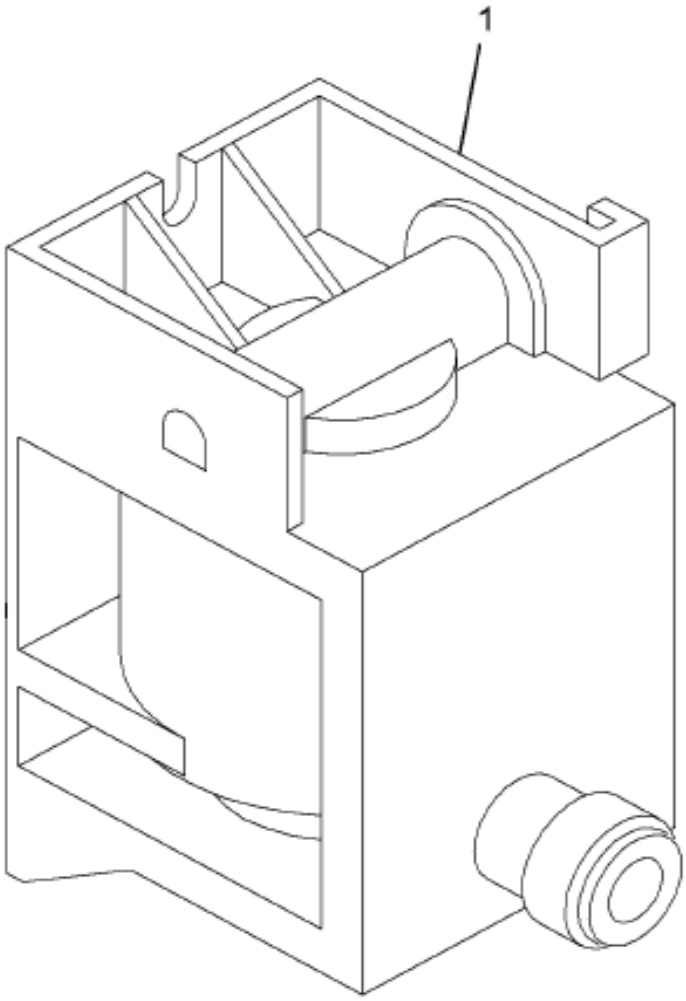

04-S02-0001-00 H05

Item	Part No.	Qty	Description	Kit	Var	Figure
1	2505591C1	1	VALVE,SOLENOID*N.C. AIR			
880		RF	NOTE: ASM BELOW COMPRISED OF ABOVE COMPONENTS			
881	3553350F91	RF	VALVE,SOLENOID*NC PDL CONTROL			

COPYRIGHT© 2011INTERNATIONAL TRUCK AND ENGINE CORP.

https://truckmanualshub.com/

Figure 0GVJ5

WORK LIGHT INSTL; CUSTOMER FURNISHED

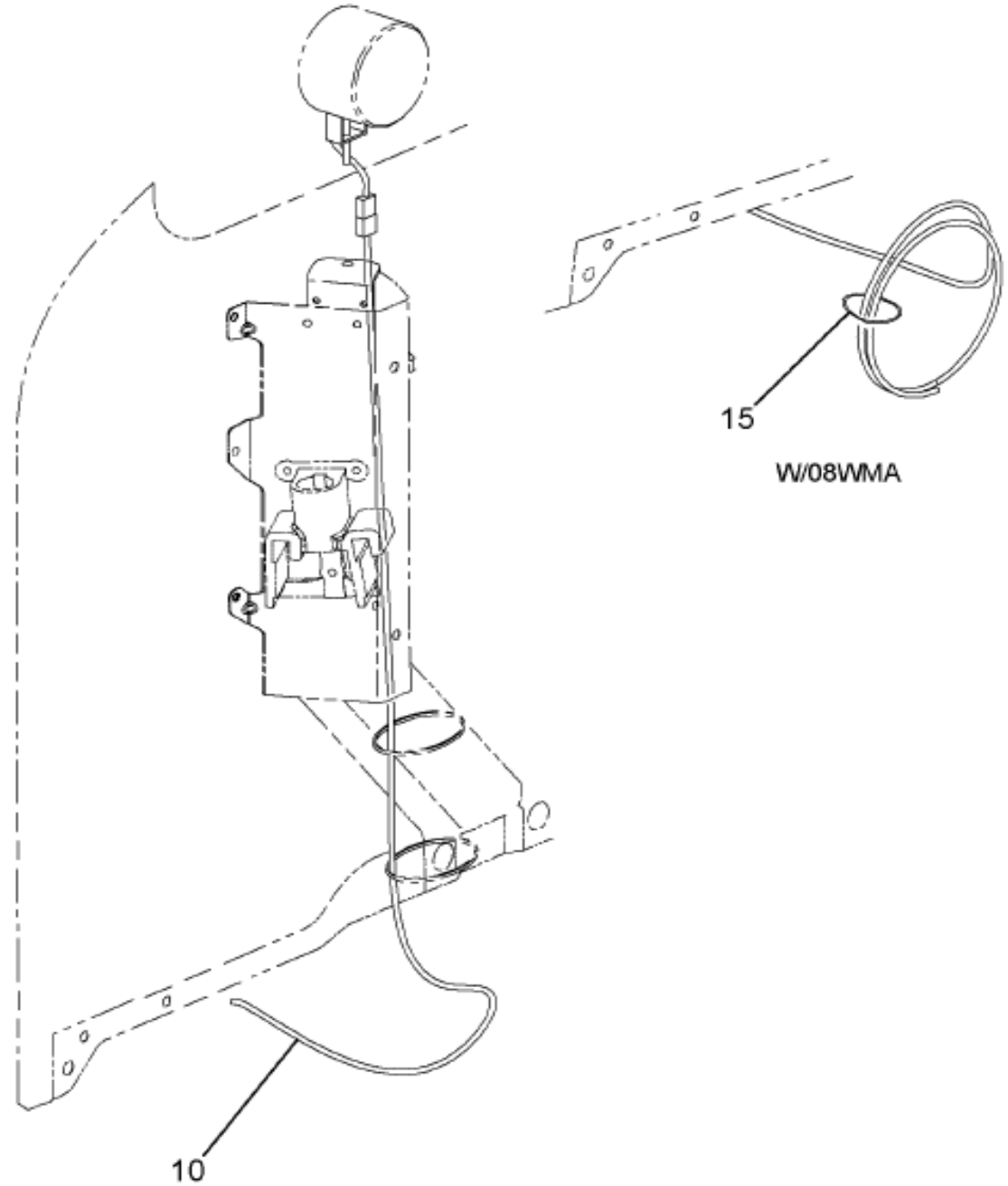

Grp 08

Item	Part No.	Qty	Description	Kit	Var	Figure
10	3573089C91	1	CABLE,ASM WORK LGT,BACK OF CAB		0GVJ5	
15	306132C1	1	STRAP,CABLE LOCK		0GVJ5	

COPYRIGHT© 2011INTERNATIONAL TRUCK AND ENGINE CORP.

https://truckmanualshub.com/

MANUAL NOTES

COPYRIGHT© 2011INTERNATIONAL TRUCK AND ENGINE CORP.

https://truckmanualshub.com/

Group 09
Front Sheet Metal

COPYRIGHT© 2011INTERNATIONAL TRUCK AND ENGINE CORP.

https://truckmanualshub.com/

Figure 01B01

FENDER EXTENSION INSTL

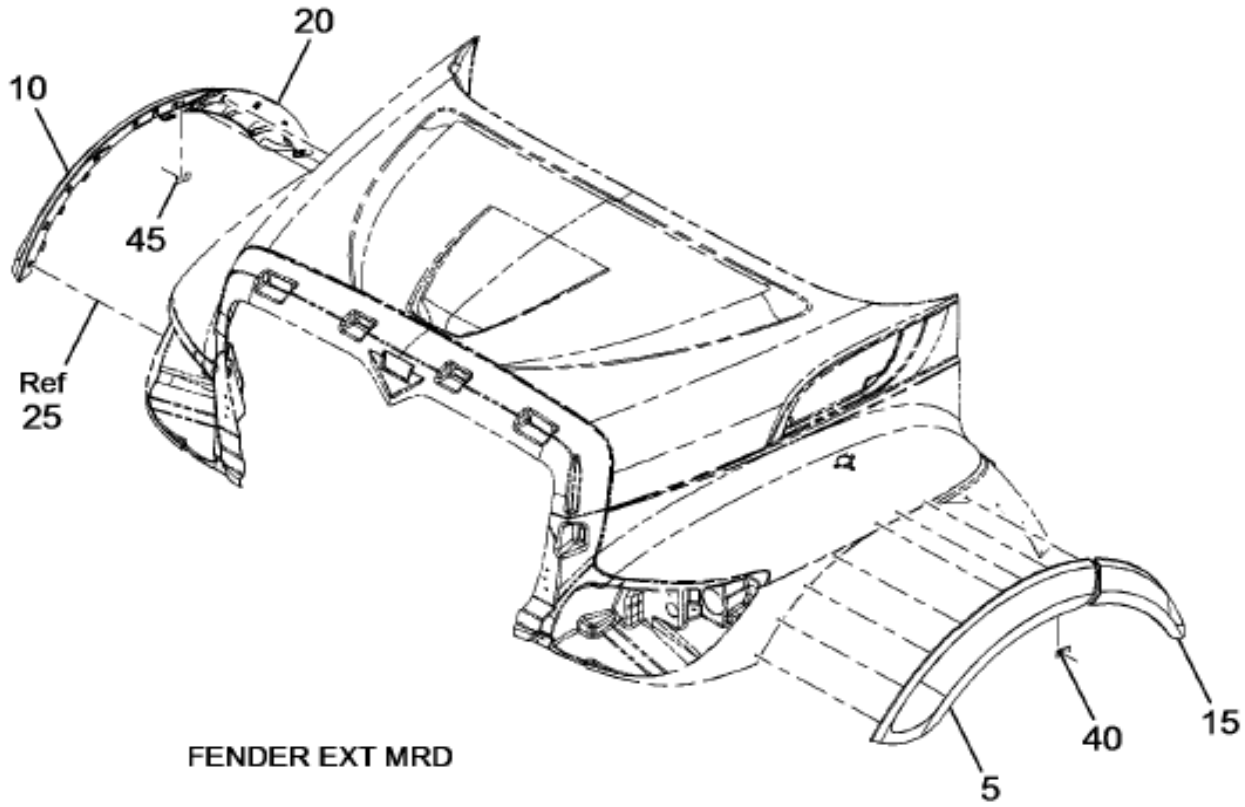

FENDER EXT MRD

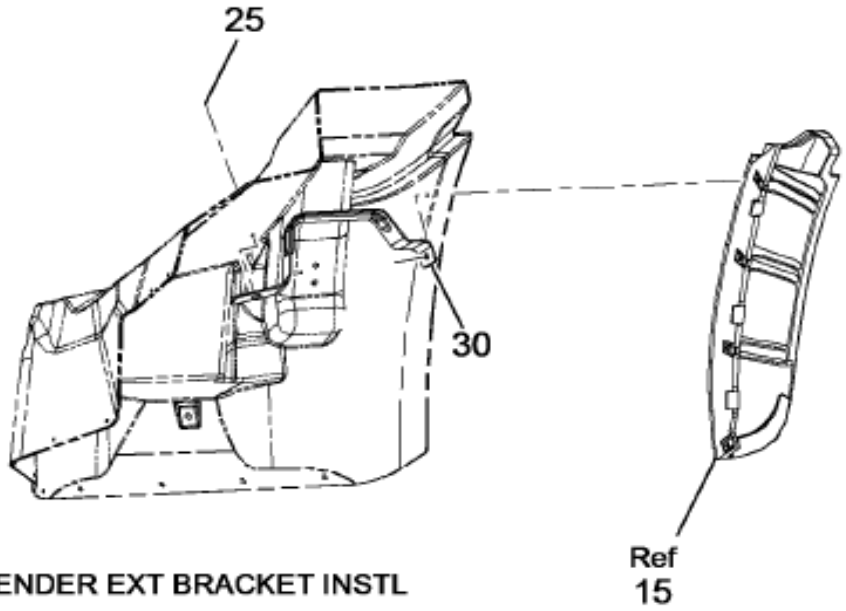

FENDER EXT BRACKET INSTL

09-741-0018-01 A09

Item	Part No.	Qty	Description	Kit	Var	Figure
5	3610428C93	1	EXTENSION,ASSY SBA HDD FRT LH		0TB0Y	3610428C93
10	3610429C93	1	EXTENSION,ASSY SBA HDD FRT RH		0TB0Y	3610429C93
15	3610420C92	1	EXTENSION,ASSY SBA REAR LH		0TB0Y	3610420C92
20	3610421C92	1	EXTENSION,ASSY SBA REAR RH		0TB0Y	3610421C92
25	40078R1	13	BOLT,, M6 X 25 HEX HEAD SST BO		0TB0Y	
25	178474	13	WASHER,FLAT 1/4 SST (.281X.625		0TB0Y	

COPYRIGHT© 2011INTERNATIONAL TRUCK AND ENGINE CORP.

https://truckmanualshub.com/

Figure 01B01

FENDER EXTENSION INSTL

Item	Part No.	Qty	Description	Kit	Var	Figure
25	40078R1	13	BOLT,, M6 X 25 HEX HEAD SST BO		0TB0Y	
25	178474	13	WASHER,FLAT 1/4 SST (.281X.625		0TB0Y	
30	3811111C1	1	BRACE,ASSY FNDR BRKT SBA LH		0TB0Y	
30	3811112C1	1	BRACE,ASSY FNDR BRKT SBA RH		0TB0Y	
40	3819464C1	1	BRACE,ASSY FENDER BRKT LH		0TB0Y	3819464C1
45	3819465C1	1	BRACE,ASSY FENDER BRKT RH		0TB0Y	3819465C1

COPYRIGHT© 2011INTERNATIONAL TRUCK AND ENGINE CORP.

https://truckmanualshub.com/

Figure 3819464C1

BRACE,ASSY FENDER BRKT LH

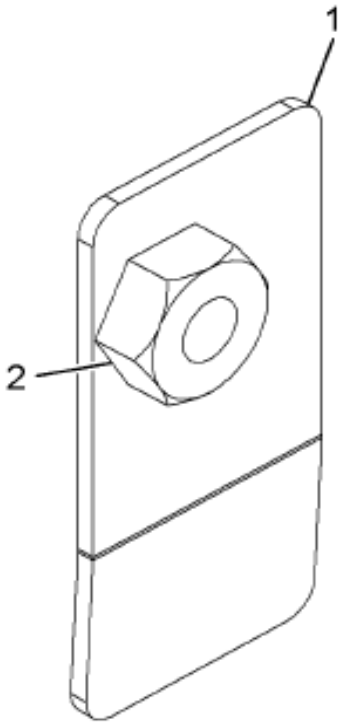

LEFT HAND SHOWN
RIGHT HAND OPPOSITE

09-D74-M011-01 C10

Item	Part No.	Qty	Description	Kit	Var	Figure
1	3819462C1	1	BRACE,FENDER BRKT,			
2	30700R1	1	NUT, M6 PLN PJTN WELD PILOT			
880		RF	NOTE: ASM BELOW COMPRISED OF ABOVE COMPONENTS			
881	3819464C1	RF	BRACE,ASSY FENDER BRKT LH			

COPYRIGHT© 2011INTERNATIONAL TRUCK AND ENGINE CORP.

https://truckmanualshub.com/

Figure 3819465C1
BRACE,ASSY FENDER BRKT RH

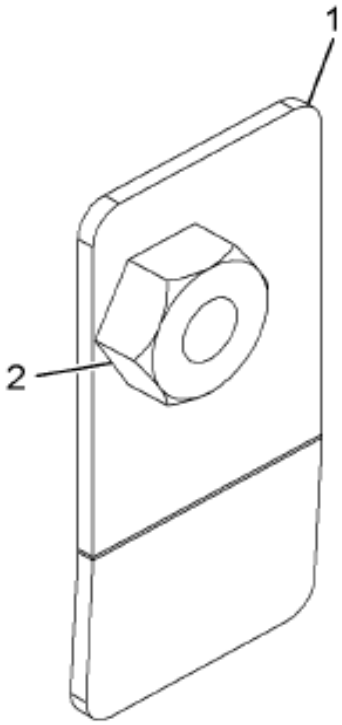

LEFT HAND SHOWN
RIGHT HAND OPPOSITE

09-D74-M011-01 C10

Item	Part No.	Qty	Description	Kit	Var	Figure
1	3819463C1	1	BRACE,FENDER BRKT,			
2	30700R1	1	NUT, M6 PLN PJTN WELD PILOT			
880		RF	NOTE: ASM BELOW COMPRISED OF ABOVE COMPONENTS			
881	3819465C1	RF	BRACE,ASSY FENDER BRKT RH			

COPYRIGHT© 2011INTERNATIONAL TRUCK AND ENGINE CORP.

https://truckmanualshub.com/

Figure 3610428C93

EXTENSION,ASSY SBA HDD FRT LH

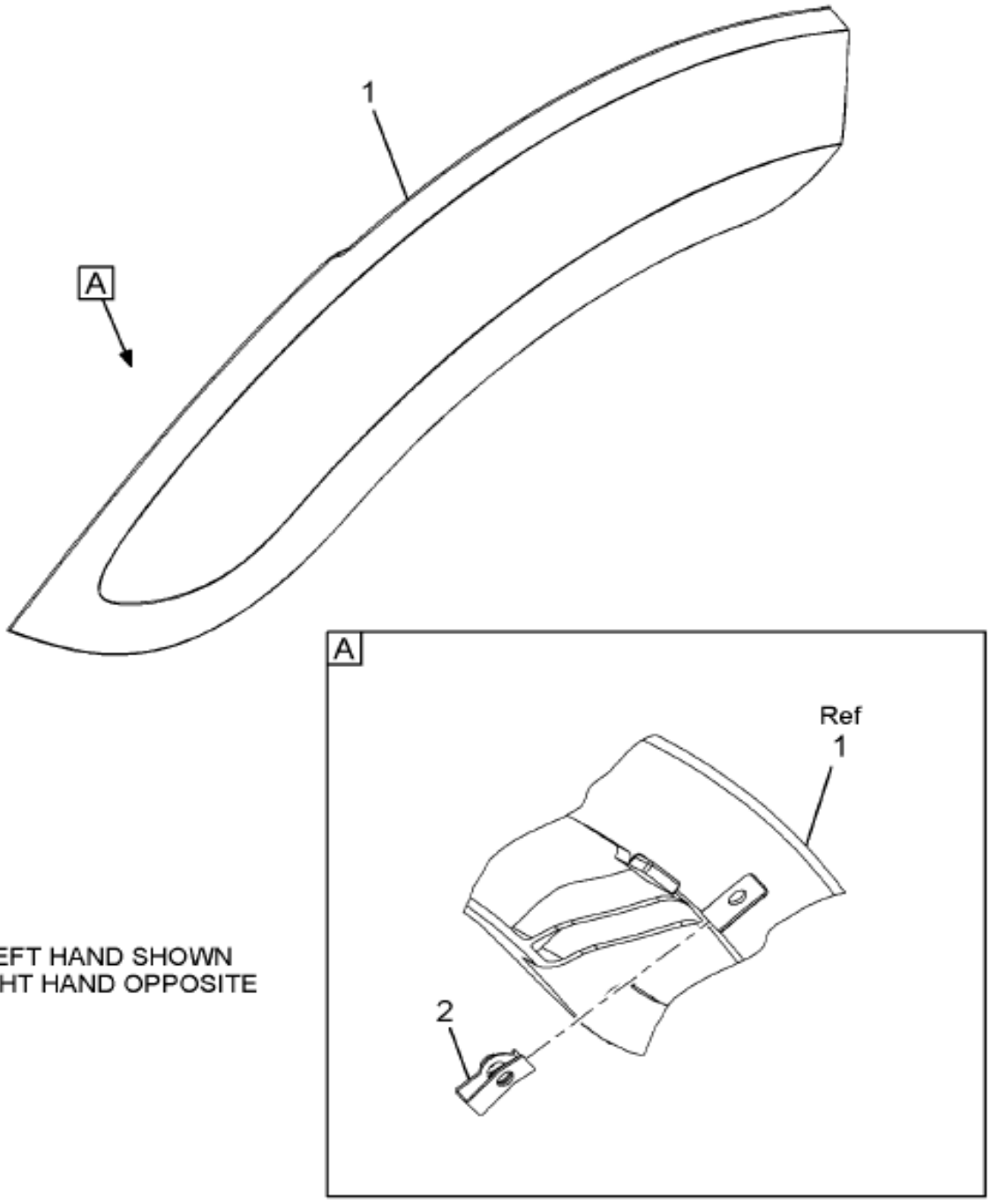

09-741-0012-01 K06

Item	Part No.	Qty	Description	Kit	Var	Figure
1	3608492C3	1	EXTENSION, SBA - HDD FRONT LH			
1		RF	LEFT			
2	3625310C1	7	NUT,SPEED M6X1.0,LOCKING,SPECL			
880		RF	NOTE: ASM BELOW COMPRISED OF ABOVE COMPONENTS			
881	3610428C93	RF	EXTENSION,ASSY SBA HDD FRT LH			

COPYRIGHT© 2011INTERNATIONAL TRUCK AND ENGINE CORP.

https://truckmanualshub.com/

Figure 3610429C93
EXTENSION,ASSY SBA HDD FRT RH

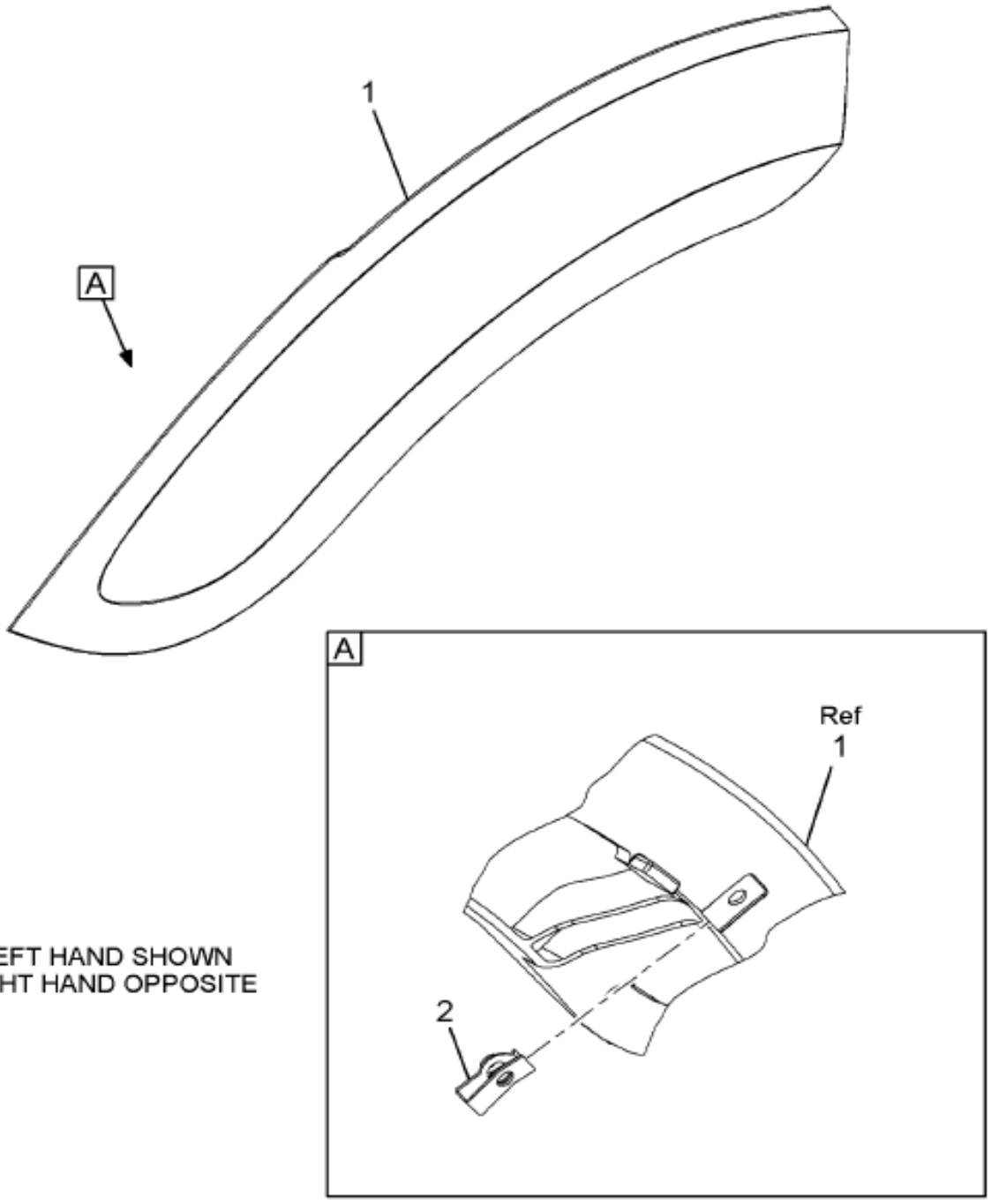

09-741-0012-01 K06

Item	Part No.	Qty	Description	Kit	Var	Figure
1	3608493C3	1	EXTENSION, SBA - HDD FRONT LH			
1		RF	RIGHT			
2	3625310C1	7	NUT,SPEED M6X1.0,LOCKING,SPECL			
880		RF	NOTE: ASM BELOW COMPRISED OF ABOVE COMPONENTS			
881	3610429C93	RF	EXTENSION,ASSY SBA HDD FRT RH			

COPYRIGHT© 2011INTERNATIONAL TRUCK AND ENGINE CORP.

https://truckmanualshub.com/

Figure 3610420C92

EXTENSION,ASSY SBA REAR LH

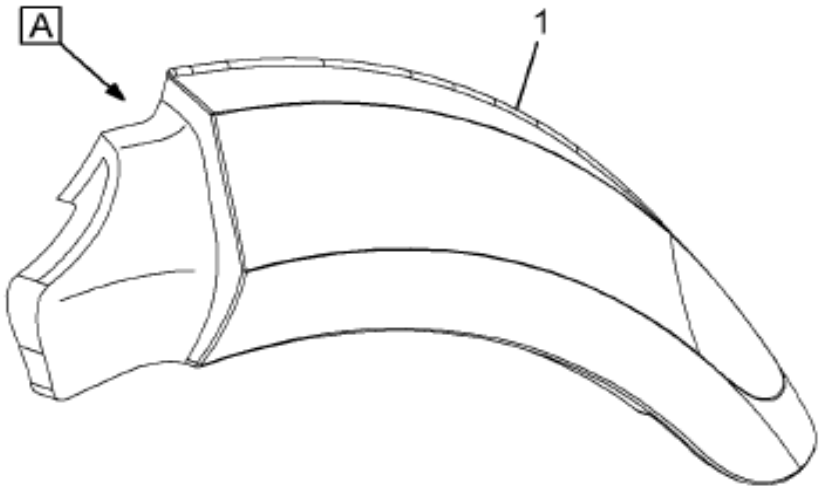

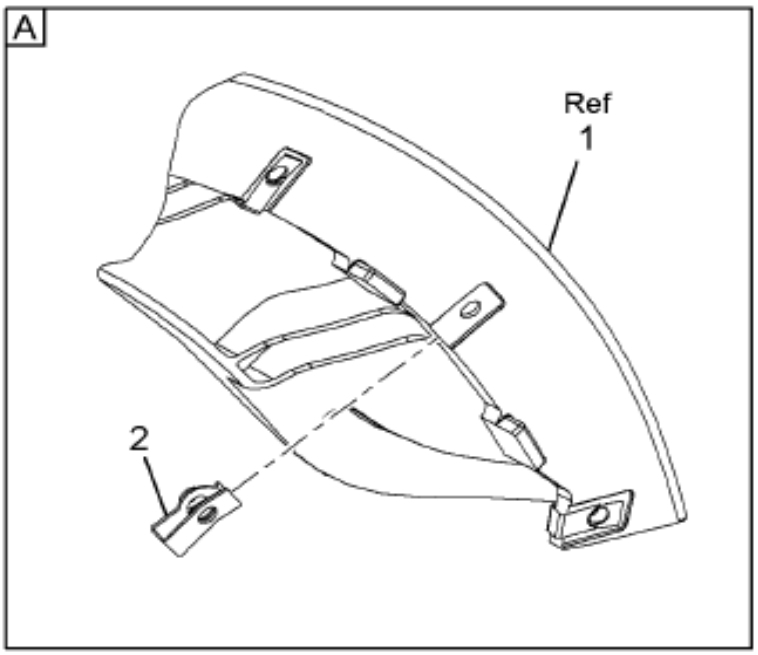

LEFT HAND SHOWN
RIGHT HAND OPPOSITE

09-741-0008-01 K06

Item	Part No.	Qty	Description	Kit	Var	Figure
1	3608484C2	1	EXTENSION,, SBA - REAR LH			
1		RF	LEFT			
2	3625310C1	4	NUT,SPEED M6X1.0,LOCKING,SPECL			
880		RF	NOTE: ASM BELOW COMPRISED OF ABOVE COMPONENTS			
881	3610420C92	RF	EXTENSION,ASSY SBA REAR LH			

COPYRIGHT© 2011INTERNATIONAL TRUCK AND ENGINE CORP.

https://truckmanualshub.com/

Figure 3610421C92
EXTENSION,ASSY SBA REAR RH

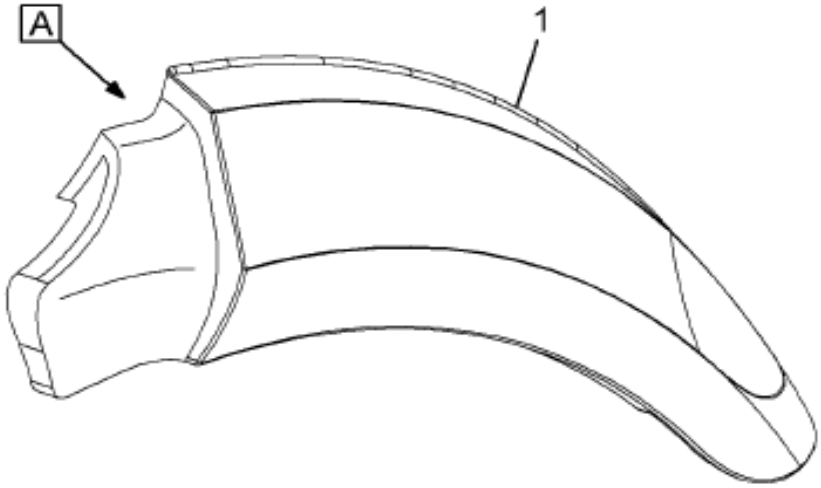

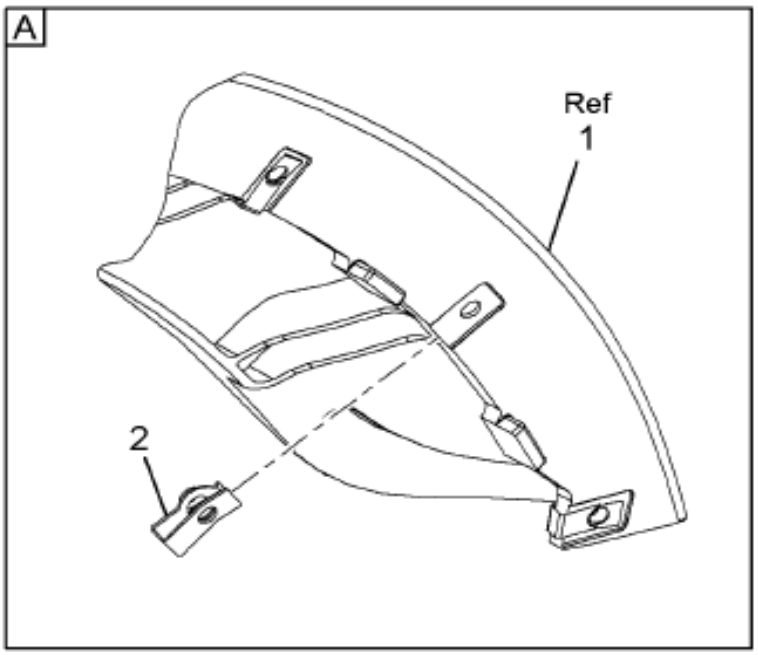

LEFT HAND SHOWN
RIGHT HAND OPPOSITE

09-741-0008-01 K06

Item	Part No.	Qty	Description	Kit	Var	Figure
1	3608485C2	1	EXTENSION,, SBA - REAR RH			
1		RF	RIGHT			
2	3625310C1	4	NUT,SPEED M6X1.0,LOCKING,SPECL			
880		RF	NOTE: ASM BELOW COMPRISED OF ABOVE COMPONENTS			
881	3610421C92	RF	EXTENSION,ASSY SBA REAR RH			

COPYRIGHT© 2011INTERNATIONAL TRUCK AND ENGINE CORP.

https://truckmanualshub.com/

Figure 0JCHB

FENDER EXTENSIONS; FRONT END

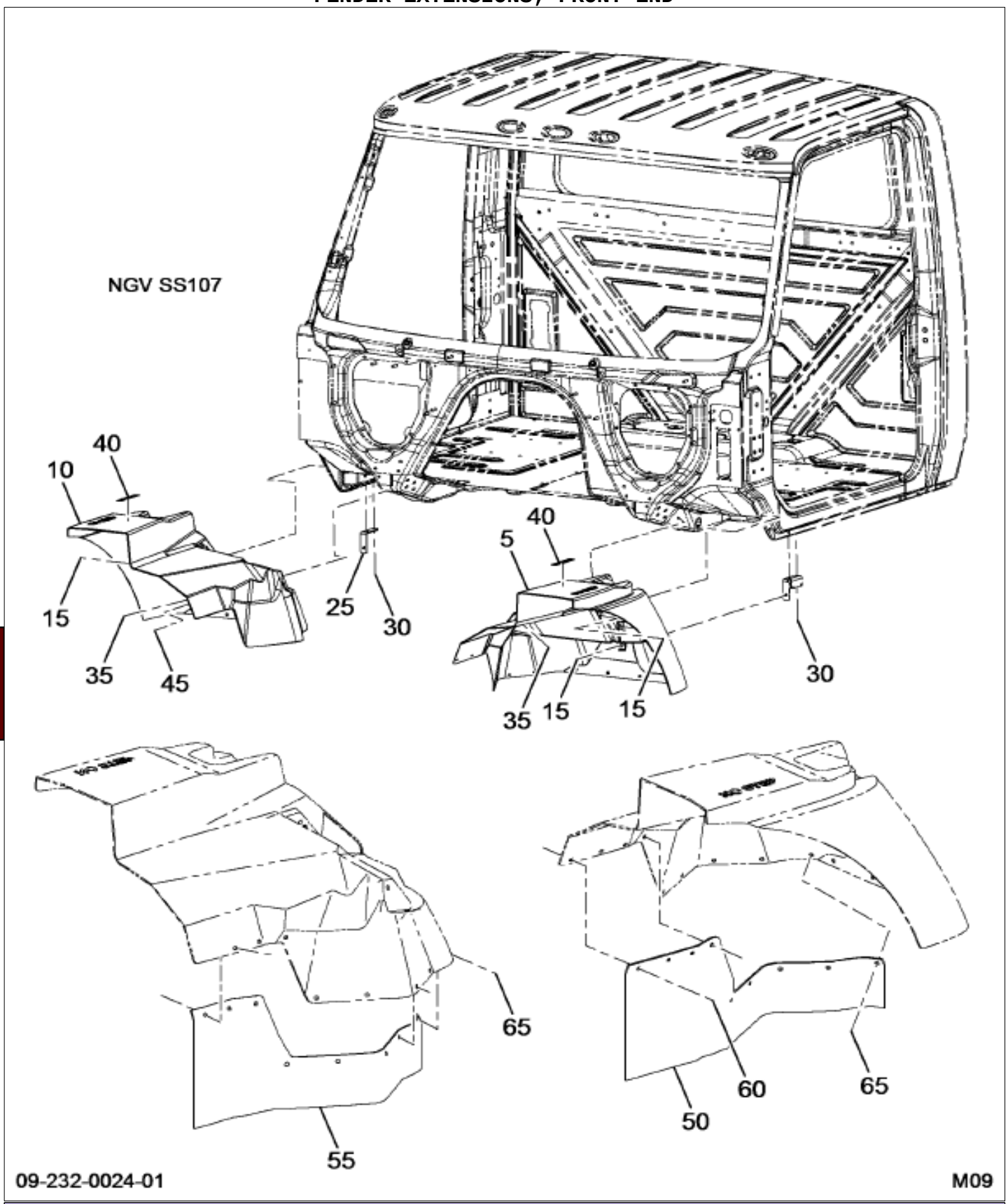

Item	Part No.	Qty	Description	Kit	Var	Figure
5	3571824C8	1	EXTENSION, FRONT FENDER SBA -		0JG1F	3571824C8
10	3571825C8	1	EXTENSION, FRONT FENDER SBA -		0JG1F	3571825C8
15	3571500C1	2	BOLT SEMS M8 X 1.25 - 30 MM H		0JCHB	
25	3549689C1	1	BRACKET,FENDER EXT TO SILL ASM		0JCHC	
30	3535316C1	2	BOLT LATCH OR CATCH M6X1-20		0JCHC	
30	3510918C1	2	INSERT,THREADED M6 OPEN END		0JCHC	

COPYRIGHT© 2011INTERNATIONAL TRUCK AND ENGINE CORP.

https://truckmanualshub.com/

Figure 0JCHB

FENDER EXTENSIONS; FRONT END

Item	Part No.	Qty	Description	Kit	Var	Figure
35	3535162C1	2	NUT,HEX METRIC PREV. TORQ*M8 X		0JCHB	
45	3564070C1	2	BOLT,SEMS M8 X 1.25 - 30 MM HE		0JCHB	
50	3584572C1	1	DEFLECTOR,SPLSH FNDR EXTNSN LH		0JJXG	
55	3584573C1	1	DEFLECTOR,SPLSH FNDR EXTNSN RH		0JJXG	
60	2006158C1	15	RETAINER BODY SPLASH SHIELD		0JJXG	
65	3564251C1	2	FASTENER TRIM PINE TREE		0JJXG	

COPYRIGHT© 2011INTERNATIONAL TRUCK AND ENGINE CORP.

https://truckmanualshub.com/

Figure 3811084C3
BRACE,FENDER BRKT, LH ASSY

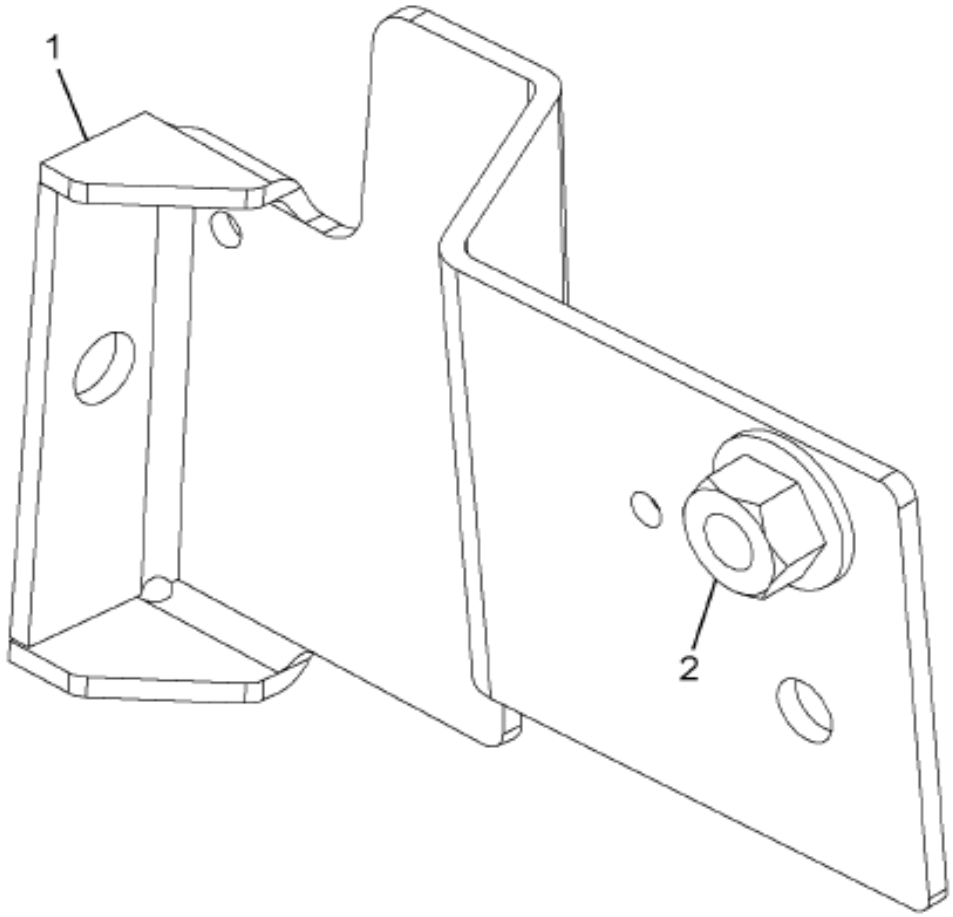

09-232-0056-01 D10

Item	Part No.	Qty	Description	Kit	Var	Figure
1	3811187C3	1	BRACE,FENDER BRKT, LH			
1		RF	LEFT			
2	3548808C1	1	NUT,WELD FLANGED M8 X 1.25			
880		RF	NOTE: ASM BELOW COMPRISED OF ABOVE COMPONENTS			
881	3811084C3	RF	BRACE,FENDER BRKT, LH ASSY			

COPYRIGHT© 2011INTERNATIONAL TRUCK AND ENGINE CORP.

https://truckmanualshub.com/

Figure 3811085C3
BRACE,FENDER BRKT, RH ASSY

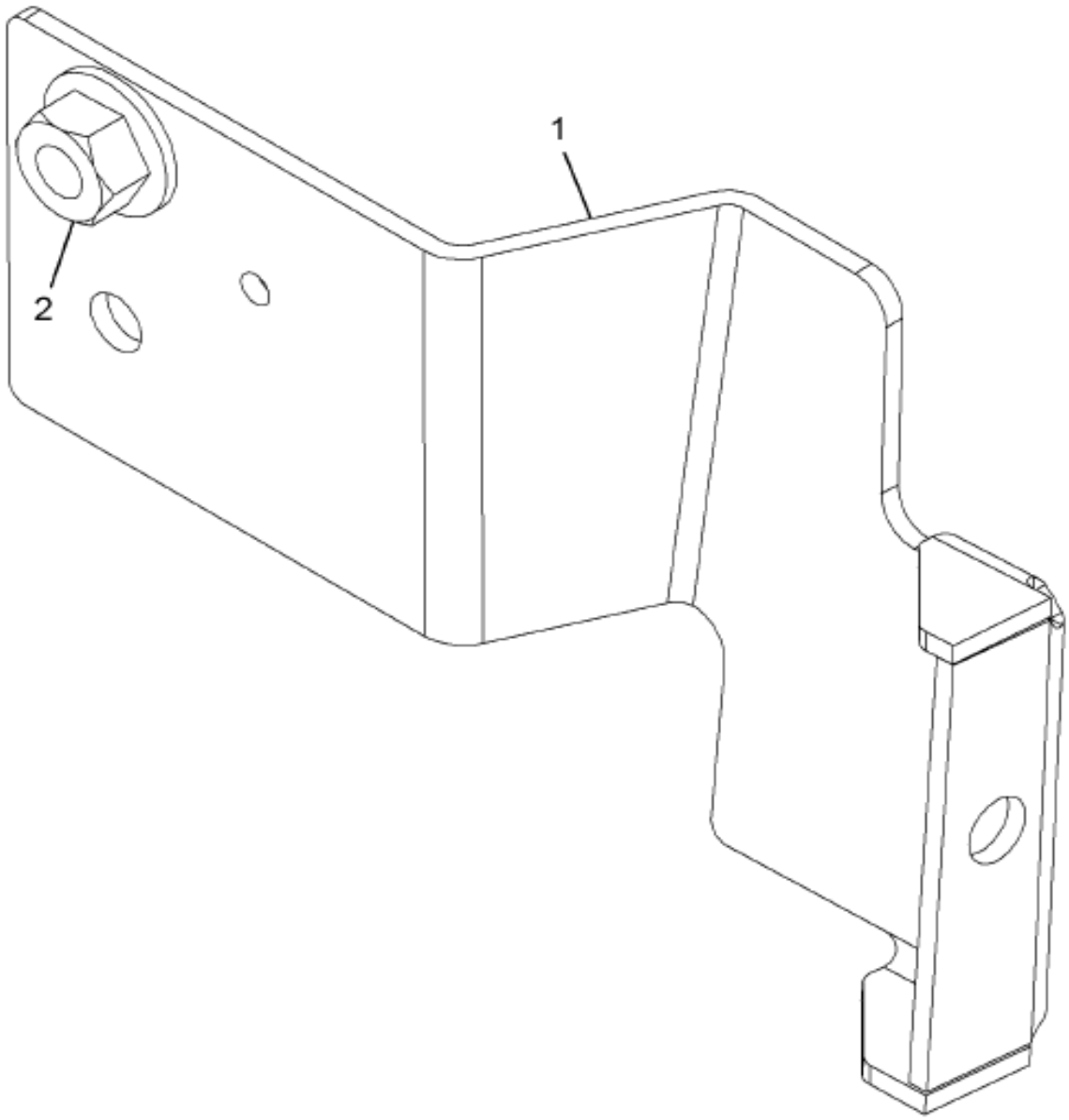

09-D74-M017-01 D10

Item	Part No.	Qty	Description	Kit	Var	Figure
1	3811188C3	1	BRACE,FENDER BRKT, RH			
1		RF	RIGHT			
2	3548808C1	1	NUT,WELD FLANGED M8 X 1.25			
880		RF	NOTE: ASM BELOW COMPRISED OF ABOVE COMPONENTS			
881	3811085C3	RF	BRACE,FENDER BRKT, RH ASSY			

COPYRIGHT© 2011INTERNATIONAL TRUCK AND ENGINE CORP.

https://truckmanualshub.com/

Figure 3571824C8

EXTENSION, FRONT FENDER SBA -

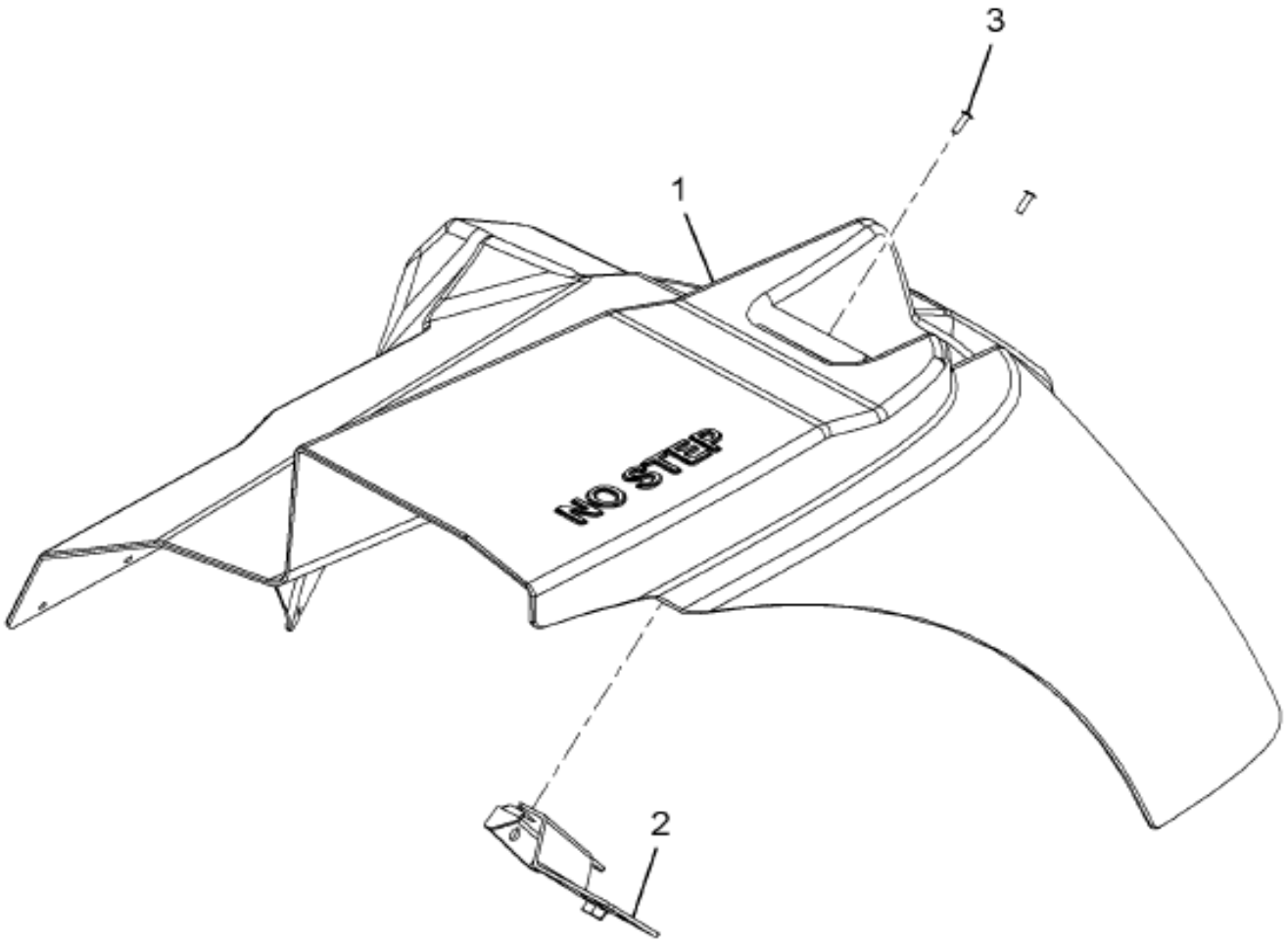

09-232-0055-01 D10

Item	Part No.	Qty	Description	Kit	Var	Figure
1	3537862C5	1	EXTENSION, FRONT FENDER SBA -			
1		RF	LEFT			
2	3811084C3	1	BRACE,FENDER BRKT, LH ASSY			3811084C3
2		RF	LEFT			
3	575359C1	2	RIVET,SPLIT SPECIAL			
880		RF	NOTE: ASM BELOW COMPRISED OF ABOVE			

COPYRIGHT© 2011INTERNATIONAL TRUCK AND ENGINE CORP.

https://truckmanualshub.com/

Figure 3571824C8

EXTENSION, FRONT FENDER SBA -

Item	Part No.	Qty	Description	Kit	Var	Figure
			COMPONENTS			
881	3571824C8	RF	EXTENSION, FRONT FENDER SBA -			

COPYRIGHT© 2011INTERNATIONAL TRUCK AND ENGINE CORP.

https://truckmanualshub.com/

Figure 3571825C8

EXTENSION, FRONT FENDER SBA -

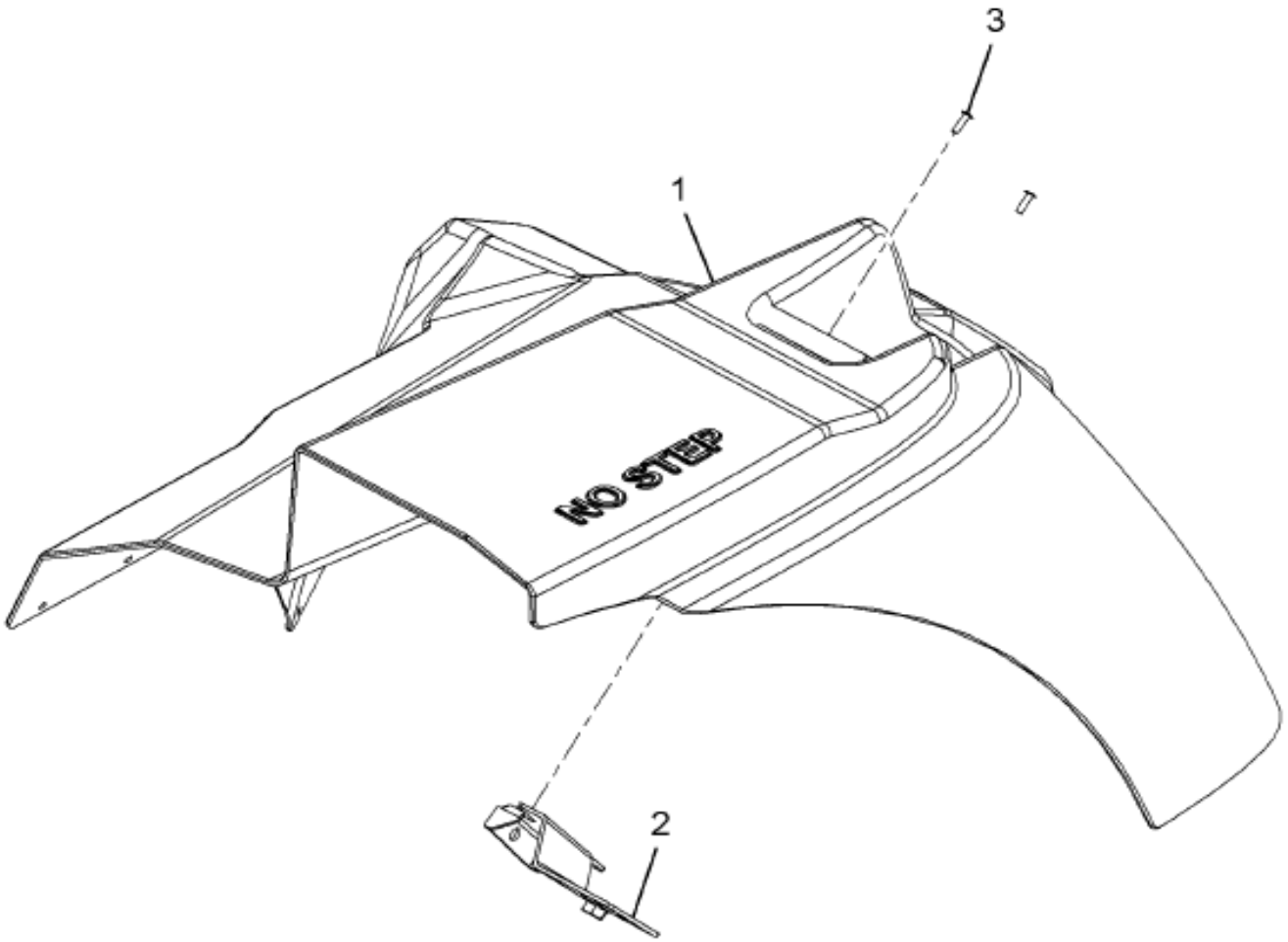

09-232-0055-01 D10

Item	Part No.	Qty	Description	Kit	Var	Figure
1	3537863C5	1	EXTENSION, FRONT FENDER SBA -			
1		RF	RIGHT			
2	3811085C3	1	BRACE,FENDER BRKT, RH ASSY			3811085C3
2		RF	RIGHT			
3	575359C1	2	RIVET,SPLIT SPECIAL			
880		RF	NOTE: ASM BELOW COMPRISED OF ABOVE			

COPYRIGHT© 2011INTERNATIONAL TRUCK AND ENGINE CORP.

https://truckmanualshub.com/

Figure 3571825C8

EXTENSION, FRONT FENDER SBA -

Item	Part No.	Qty	Description	Kit	Var	Figure
			COMPONENTS			
881	3571825C8	RF	EXTENSION, FRONT FENDER SBA -			

COPYRIGHT© 2011INTERNATIONAL TRUCK AND ENGINE CORP.

https://truckmanualshub.com/

Figure 011X7F
FRONT END ASM; HOOD

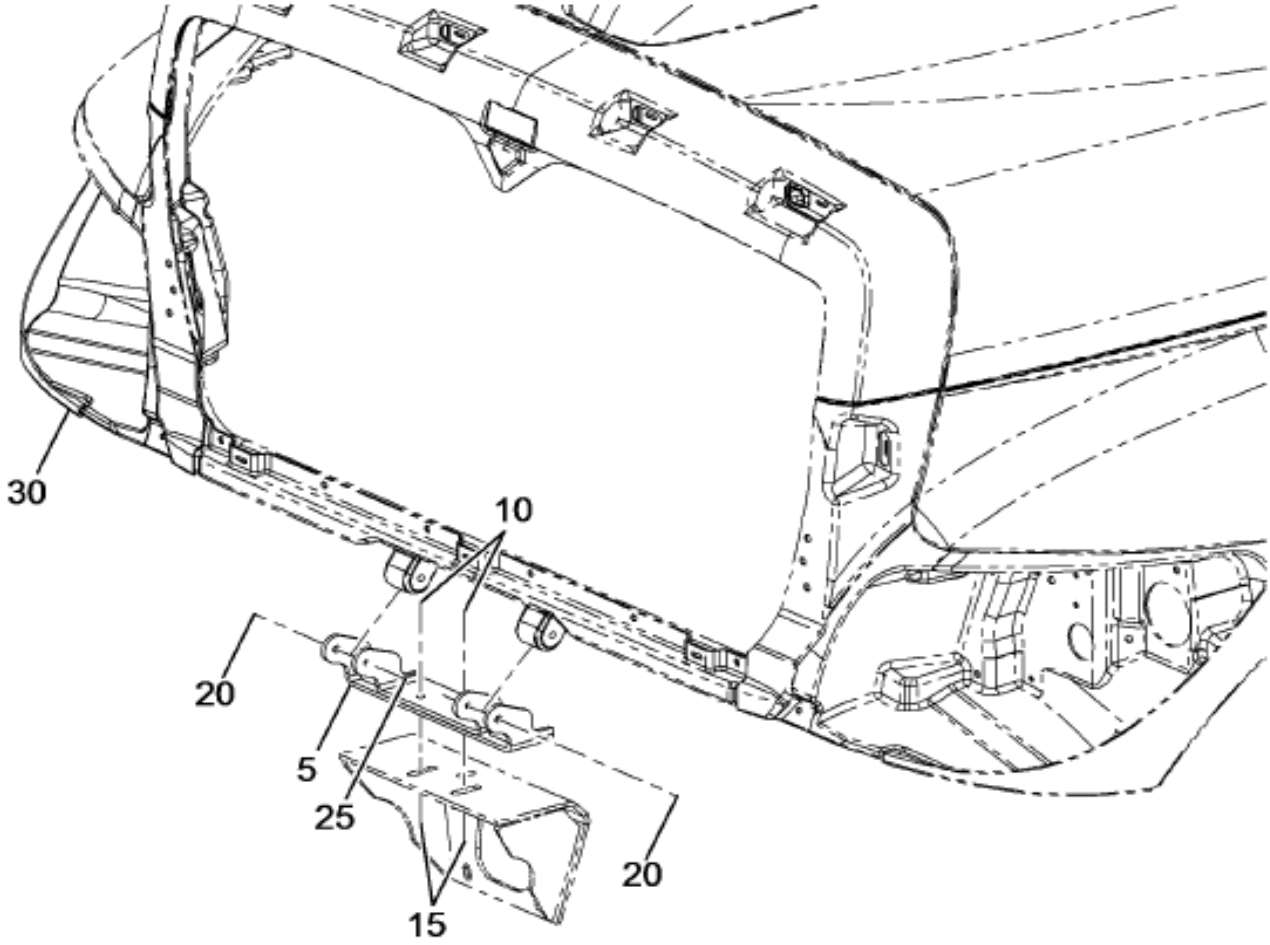

09-227-0714-01 F11

Item	Part No.	Qty	Description	Kit	Var	Figure
5	3836993C1	1	HINGE,HOOD, SUPPORT ASSY		0TX7F	3836993C1
5	3836993C2	1	HINGE,HOOD SUPPORT ASSY		0TX7F	
10	3554703C1	3	BOLT,HEX FLG HD METRIC*M10 X 4		0TX7F	
15	3535556C1	3	NUT,HEX METRIC PREV. TORQ*M10		0TX7F	
20	3588682C1	2	BOLT HOOD HINGE M10 FLG HD & S		0TX7F	
25	3544379C1	2	NUT,HEX FLG M8 METRIC		0TX7F	

COPYRIGHT© 2011INTERNATIONAL TRUCK AND ENGINE CORP.

https://truckmanualshub.com/

Figure 01X7F

FRONT END ASM; HOOD

Item	Part No.	Qty	Description	Kit	Var	Figure
30	3613765C94	1	HOOD, ASM, N/ACCESS HATCH		0TX7H	
30	3613765C96	1	HOOD, ASM, N/ACCESS HATCH		0TX7H	3613765C96

COPYRIGHT© 2011INTERNATIONAL TRUCK AND ENGINE CORP.

https://truckmanualshub.com/

Figure 3836993C1

HINGE,HOOD, SUPPORT ASSY

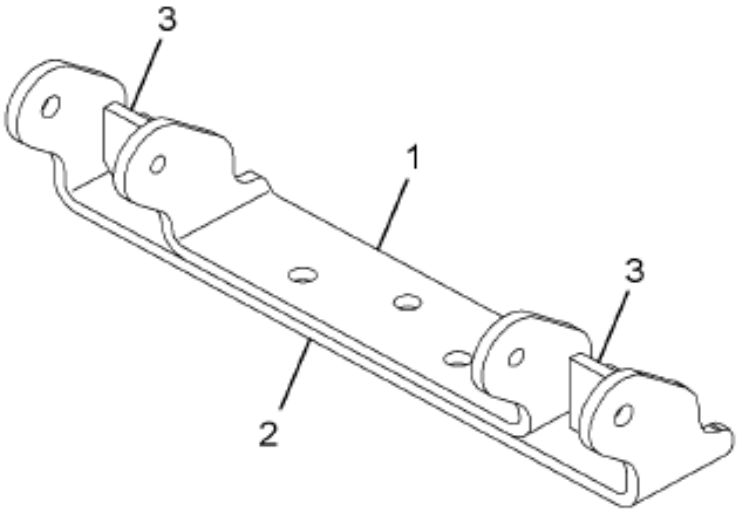

09-227-0853-01 A10

Item	Part No.	Qty	Description	Kit	Var	Figure
1	3836989C1	1	BRACE, HINGE SUPT, INNER			
2	3836992C1	1	BRACE, HINGE SUPT, OUTER			
3	3580070C1	2	PLATE,REINF HINGE SUPPORT			
880		RF	NOTE: ASM BELOW COMPRISED OF ABOVE COMPONENTS			
881	3836993C1	RF	HINGE,HOOD, SUPPORT ASSY			

COPYRIGHT© 2011INTERNATIONAL TRUCK AND ENGINE CORP.

https://truckmanualshub.com/

Figure 3613765C96
HOOD, ASM, N/ACCESS HATCH

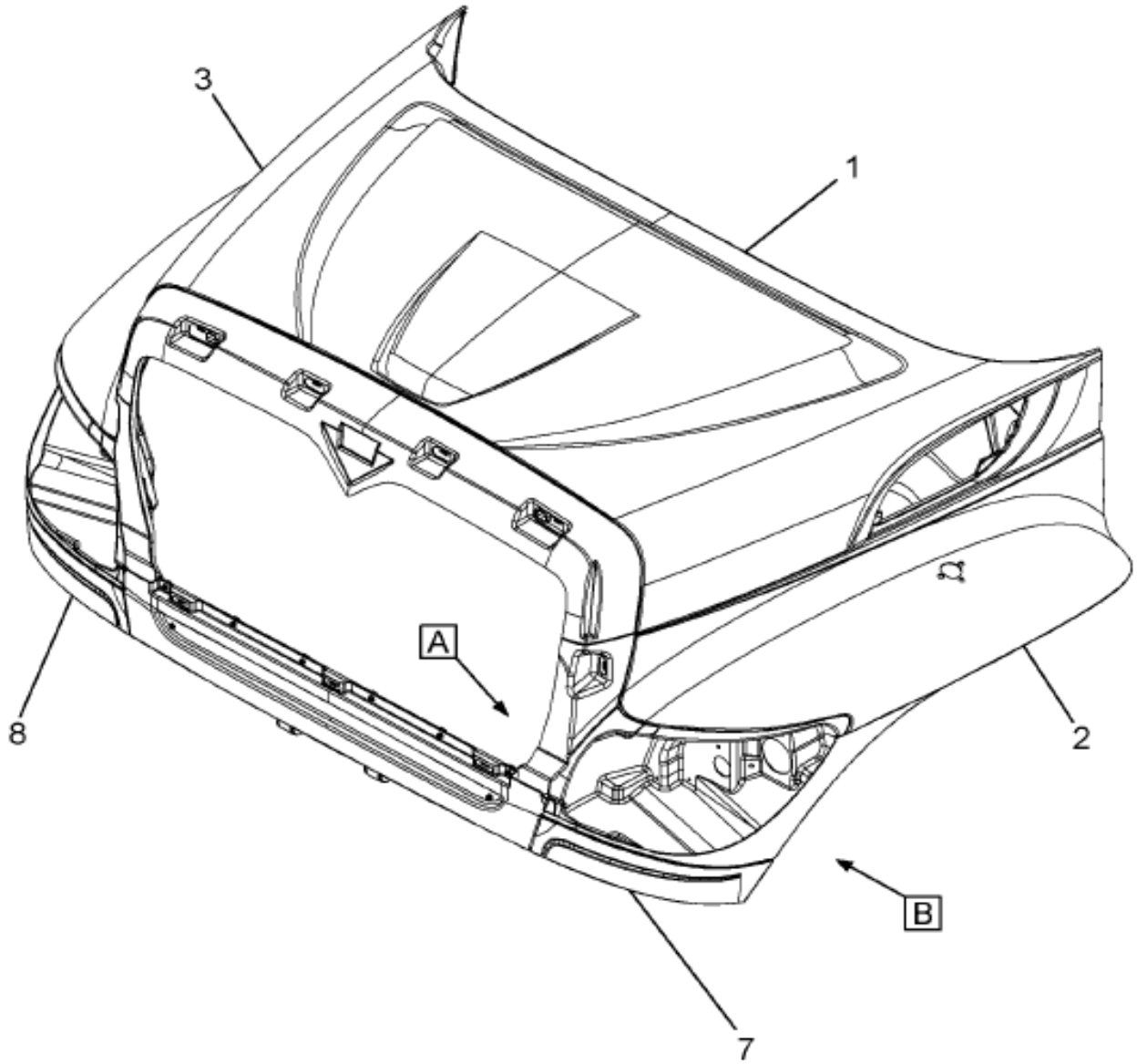

Grp 09

Figure 1 of 3

COPYRIGHT© 2011INTERNATIONAL TRUCK AND ENGINE CORP.

https://truckmanualshub.com/

Figure 3613765C96
HOOD, ASM, N/ACCESS HATCH

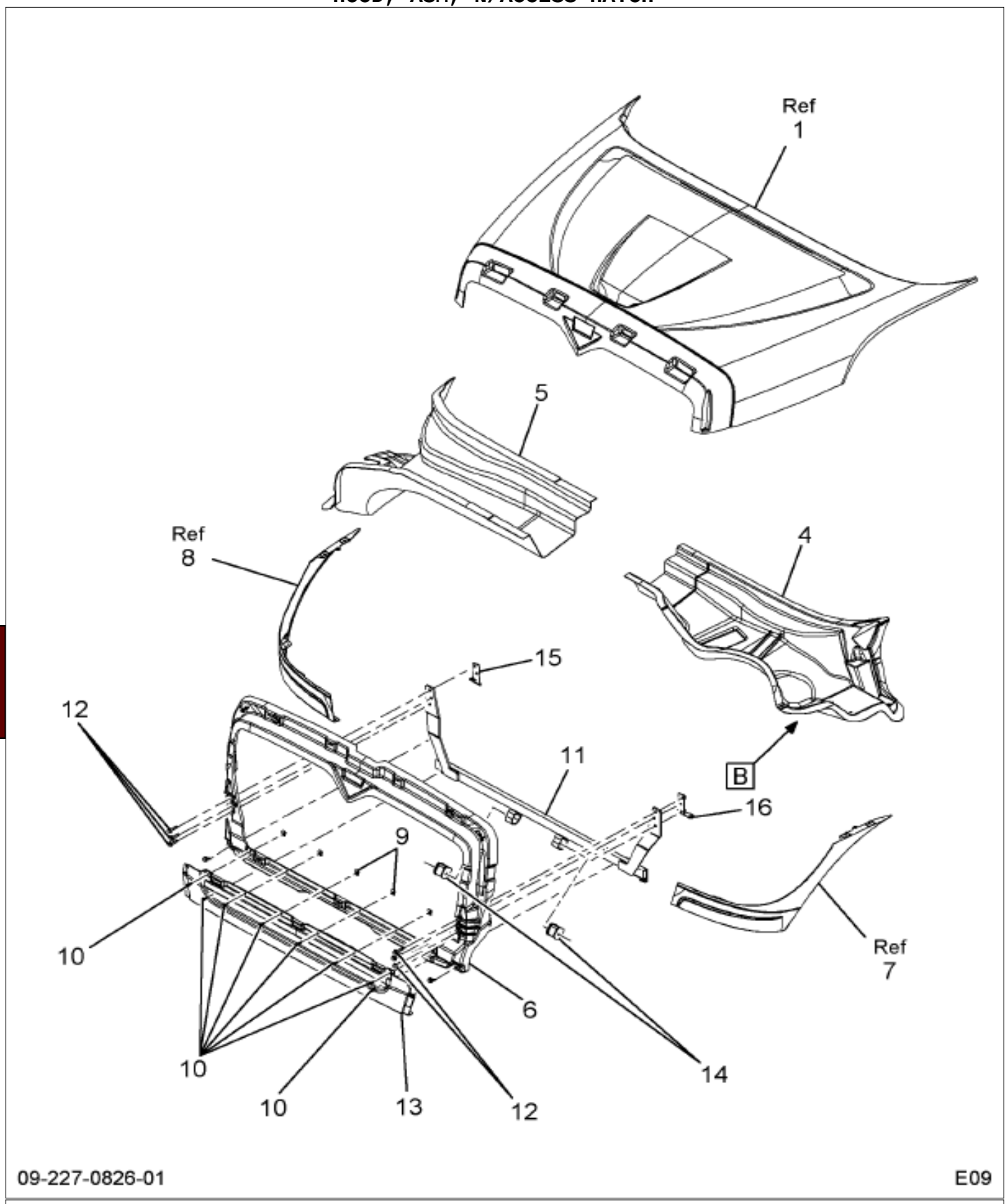

Figure 2 of 3

COPYRIGHT© 2011INTERNATIONAL TRUCK AND ENGINE CORP.

https://truckmanualshub.com/

Figure 3613765C96

HOOD, ASM, N/ACCESS HATCH

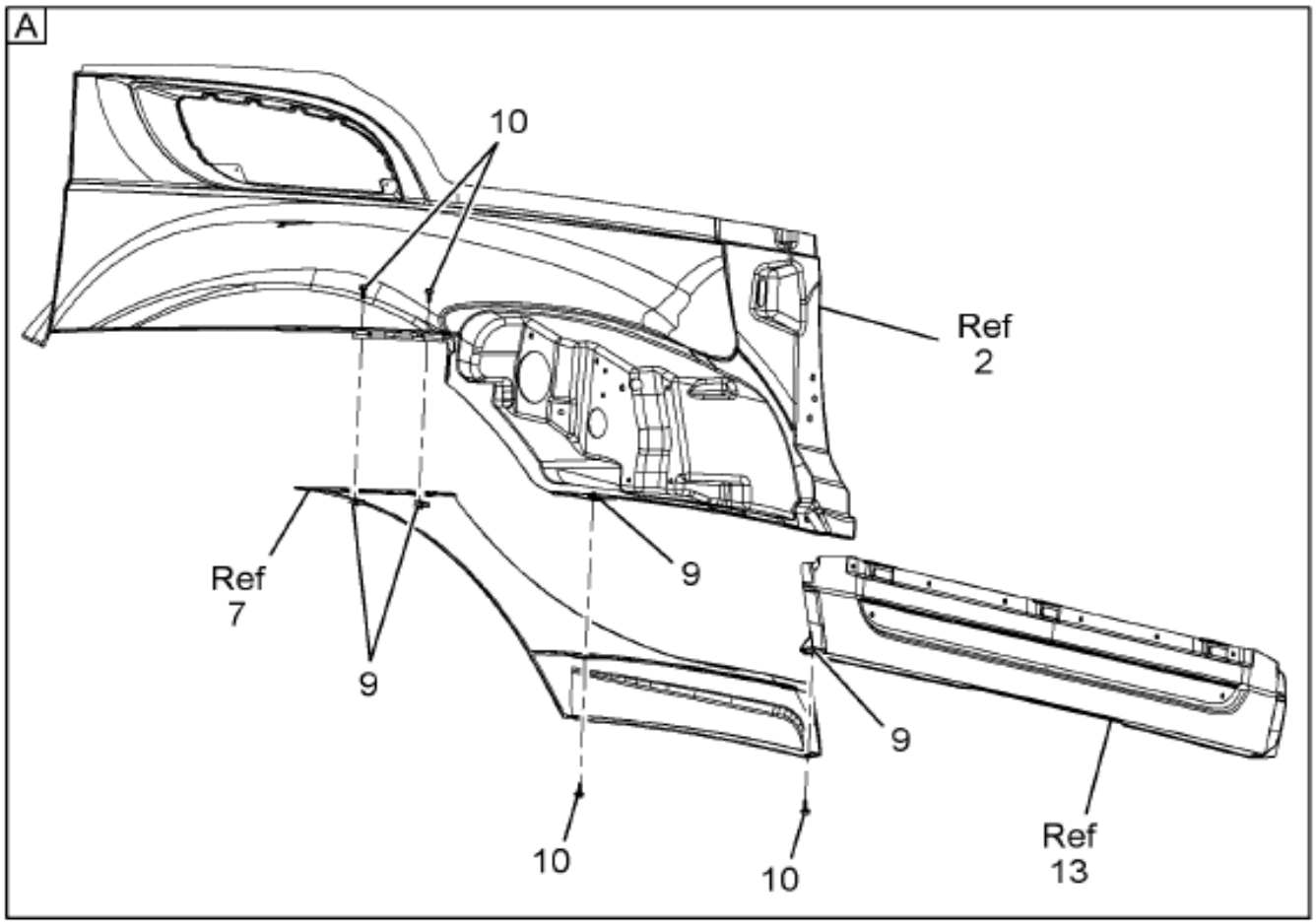

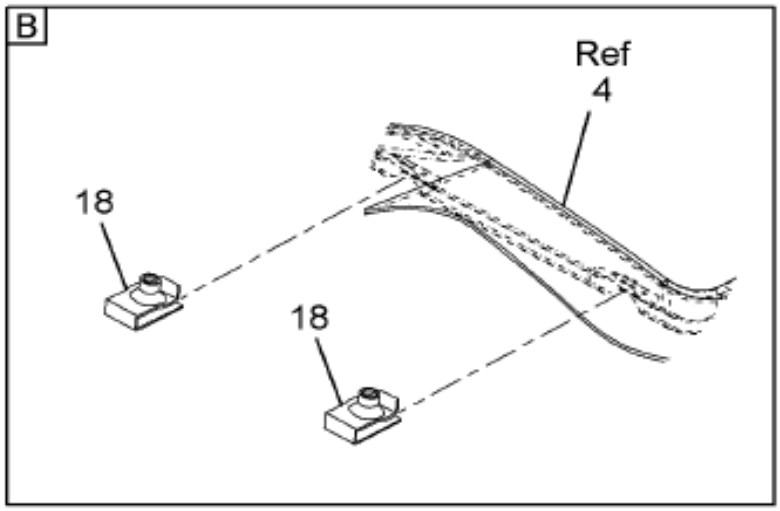

09-227-0728-01 M06

Item	Part No.	Qty	Description	Kit	Var	Figure
1	3613759C1	1	PANEL,, HOOD TOP			
2	3613757C2	1	PANEL,HOOD SIDE LH			
2		RF	LEFT			
3	3613758C2	1	PANEL,, HOOD SIDE RH			
3		RF	RIGHT			
4	3613755C92	1	REINFORCEMENT,HOOD REAR ASY LH			3613755C92

Grp 09

COPYRIGHT© 2011INTERNATIONAL TRUCK AND ENGINE CORP.

https://truckmanualshub.com/

Figure 3613765C96

HOOD, ASM, N/ACCESS HATCH

Item	Part No.	Qty	Description	Kit	Var	Figure
4		RF	LEFT			
5	3613756C91	1	REINFORCEMENT,HOOD REAR ASY,RH			3613756C91
5		RF	RIGHT			
6	3613752C93	1	REINFORCEMENT, HOOD FRONT ASSY			3613752C93
7	3613748C2	1	PANEL,FRNT FNDR,LH,LITE VALANC			
7		RF	LEFT			
8	3613749C2	1	PANEL,FRNT FNDR,RH,LITE VALANC			
8		RF	RIGHT			
9	3569643C1	16	NUT SPECIAL M6 MULTI-THREAD.			
10	3571282C1	18	BOLT,SEMS ALL M6 X 1.0 - 19.5M			
11	3842320C1	1	HINGE,HOOD, HINGE, HOOD, CTR R			
12	30866R2	6	BOLT, M10 X 40MM PHC FLG CLASS			
13	3613750C2	1	PANEL,FRT HOOD&FENDR,CTR VALNC			
14	3839700C1	2	INSULATOR,HOOD MTG, D-STYLE IS			
15	3613733C1	1	SUPPORT,HOOD,ASSIST MOUNTNG,LH			
15		RF	LEFT			
16	3613734C1	1	SUPPORT,HOOD,ASSIST MOUNTNG,RH			
16		RF	RIGHT			
18	3551059C1	3	NUT,SPEED M8X1.25 U-NUT			
880		RF	NOTE: ASM BELOW COMPRISED OF ABOVE COMPONENTS			
881	3613765C96	RF	HOOD, ASM, N/ACCESS HATCH			

COPYRIGHT© 2011INTERNATIONAL TRUCK AND ENGINE CORP.

https://truckmanualshub.com/

Figure 3613752C93

REINFORCEMENT, HOOD FRONT ASSY

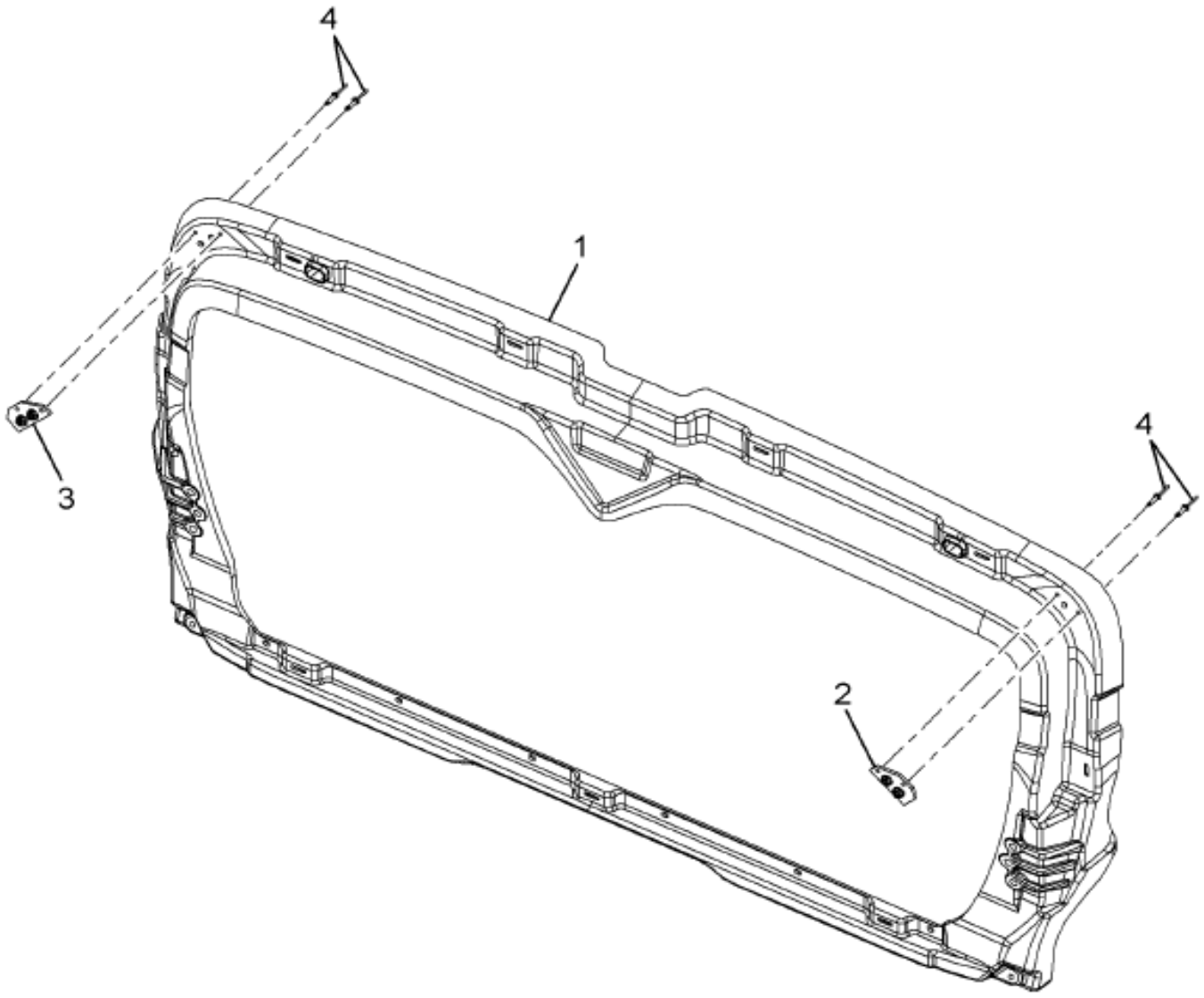

Item	Part No.	Qty	Description	Kit	Var	Figure
1	3613751C3	1	REINFORCEMENT, HOOD FRONT			
2	3613729C1	1	PLATE,TAPPING ASY,HOOD STOP,LH			
2		RF	LEFT			
3	3613730C1	1	PLATE,TAPPING ASY,HOOD STOP,RH			
3		RF	RIGHT			
4	493415C1	4	RIVET, 4.8 X 17.8 MM BREAK MAN			

COPYRIGHT© 2011INTERNATIONAL TRUCK AND ENGINE CORP.

https://truckmanualshub.com/

Figure 3613752C93

REINFORCEMENT, HOOD FRONT ASSY

Item	Part No.	Qty	Description	Kit	Var	Figure
800		RF	NOTE: THE FOLLOWING PARTS ARE NON-ILLUSTRATED			
801	552870C1	4	RIVET,BLIND			
880		RF	NOTE: ASM BELOW COMPRISED OF ABOVE COMPONENTS			
881	3613752C93	RF	REINFORCEMENT, HOOD FRONT ASSY			

COPYRIGHT© 2011INTERNATIONAL TRUCK AND ENGINE CORP.

https://truckmanualshub.com/

Figure 3613754C1
REINFORCEMENT,, HOOD REAR RH

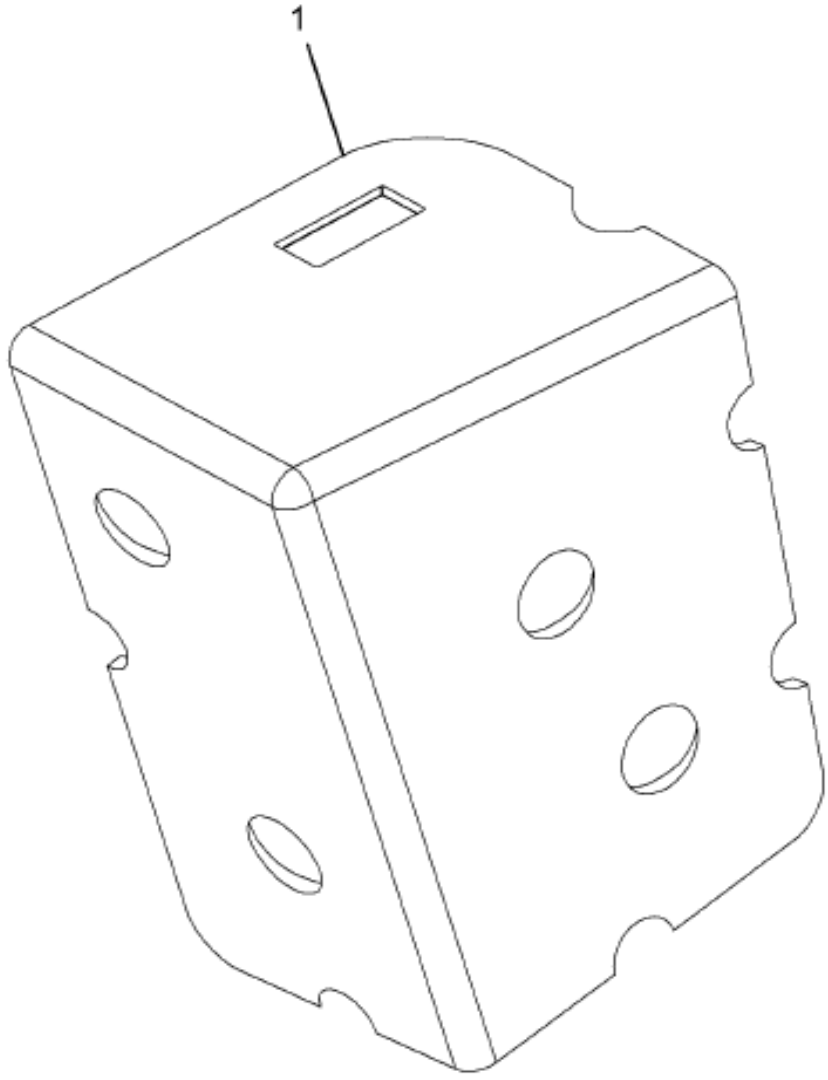

LEFT HAND SHOWN
RIGHT HAND OPPOSITE

09-227-0664-01 C06

Grp 09

Item	Part No.	Qty	Description	Kit	Var	Figure
1	3577056C1	1	GUIDE,HOOD PLATE RH			
880		RF	NOTE: ASM BELOW COMPRISED OF ABOVE COMPONENTS			
881	3613754C1	RF	REINFORCEMENT,, HOOD REAR RH			

COPYRIGHT© 2011INTERNATIONAL TRUCK AND ENGINE CORP.

https://truckmanualshub.com/

Figure 3613753C92

REINFORCEMENT,HOOD REAR ASY LH

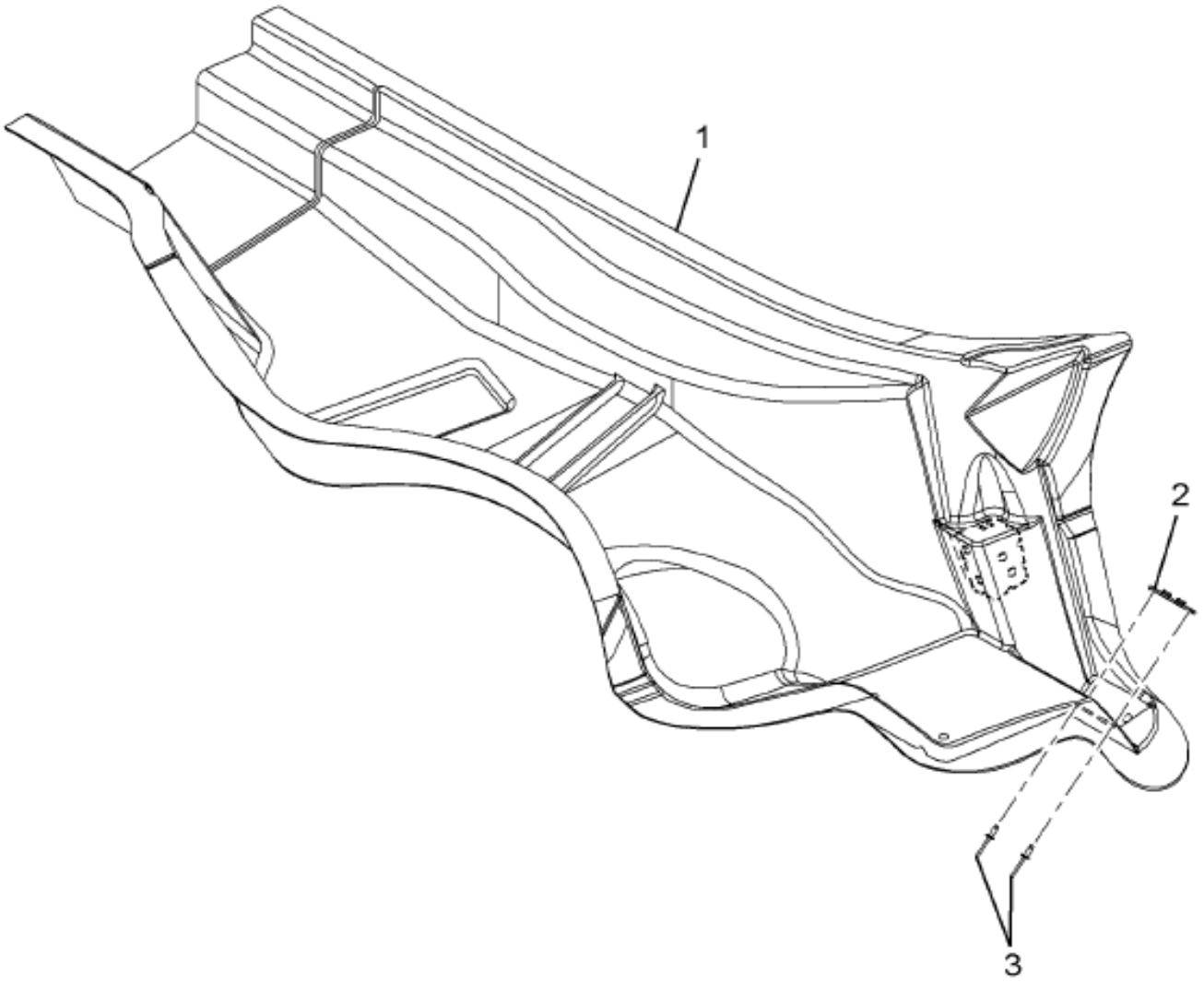

09-227-0700-01 J06

Item	Part No.	Qty	Description	Kit	Var	Figure
1	3613753C2	1	REINFORCEMENT,, HOOD REAR LH			
1		RF	LEFT			
2	3575216C1	1	PLATE,TAPPING LATCH			
3	769578C1	2	RIVET,4.8 X 11.5MM BREAK MAND			
880		RF	NOTE: ASM BELOW COMPRISED OF ABOVE COMPONENTS			

COPYRIGHT© 2011INTERNATIONAL TRUCK AND ENGINE CORP.

https://truckmanualshub.com/

Figure 3613755C92

REINFORCEMENT,HOOD REAR ASY LH

Item	Part No.	Qty	Description	Kit	Var	Figure
881	3613755C92	RF	REINFORCEMENT,HOOD REAR ASY LH			

COPYRIGHT© 2011INTERNATIONAL TRUCK AND ENGINE CORP.

https://truckmanualshub.com/

Figure 3613756C91
REINFORCEMENT,HOOD REAR ASY,RH

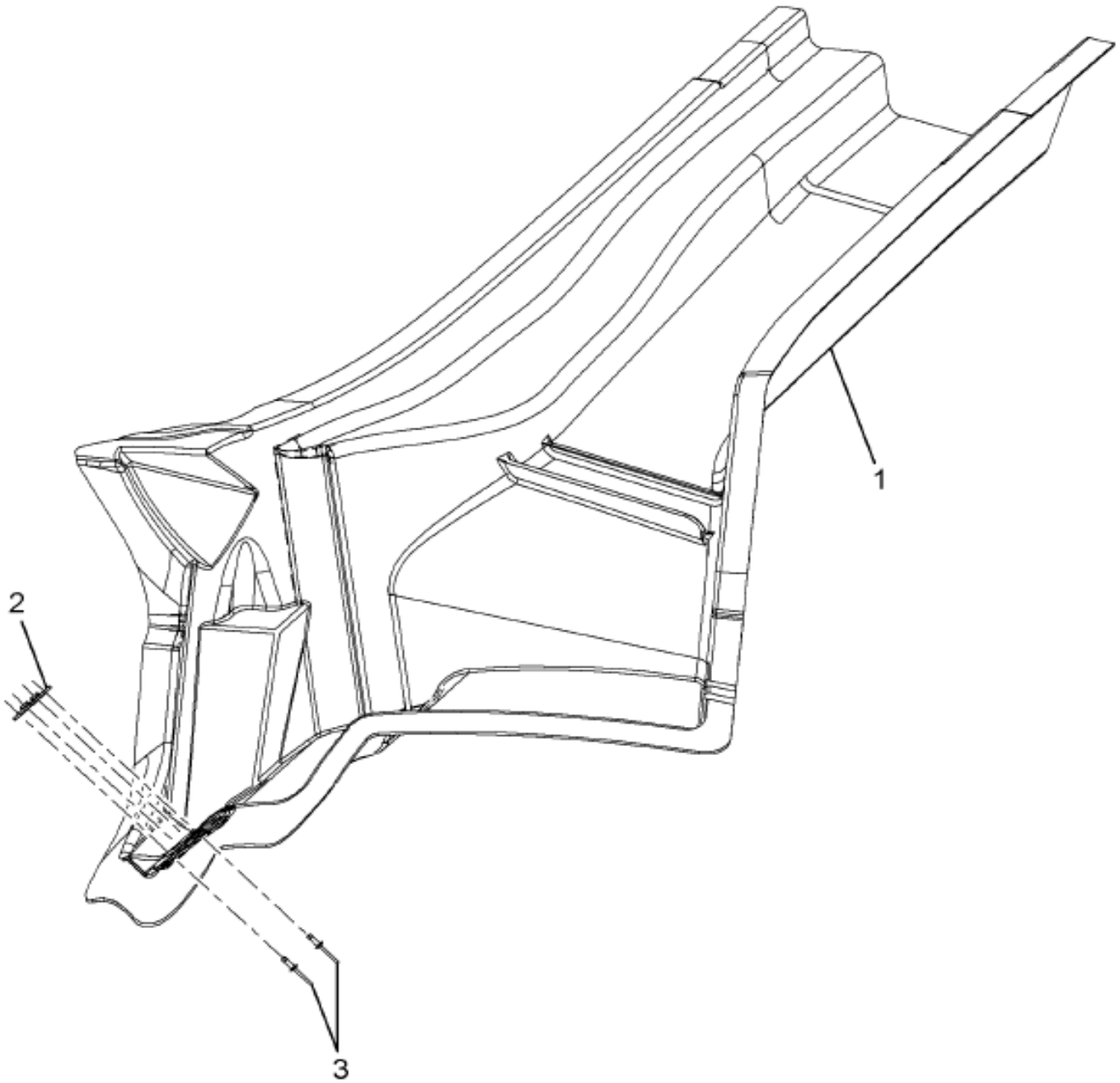

Item	Part No.	Qty	Description	Kit	Var	Figure
1	3613754C1	1	REINFORCEMENT,, HOOD REAR RH			3613754C1
1		RF	RIGHT			
2	3575216C1	1	PLATE,TAPPING LATCH			
3	769578C1	2	RIVET,4.8 X 11.5MM BREAK MAND			
880		RF	NOTE: ASM BELOW COMPRISED OF ABOVE COMPONENTS			

COPYRIGHT© 2011INTERNATIONAL TRUCK AND ENGINE CORP.

https://truckmanualshub.com/

Figure 3613756C91

REINFORCEMENT,HOOD REAR ASY,RH

Item	Part No.	Qty	Description	Kit	Var	Figure
881	3613756C91	RF	REINFORCEMENT,HOOD REAR ASY,RH			

COPYRIGHT© 2011INTERNATIONAL TRUCK AND ENGINE CORP.

https://truckmanualshub.com/

Figure 0M7VR

FRT GRILLE INSTL; CHROME SURROUND

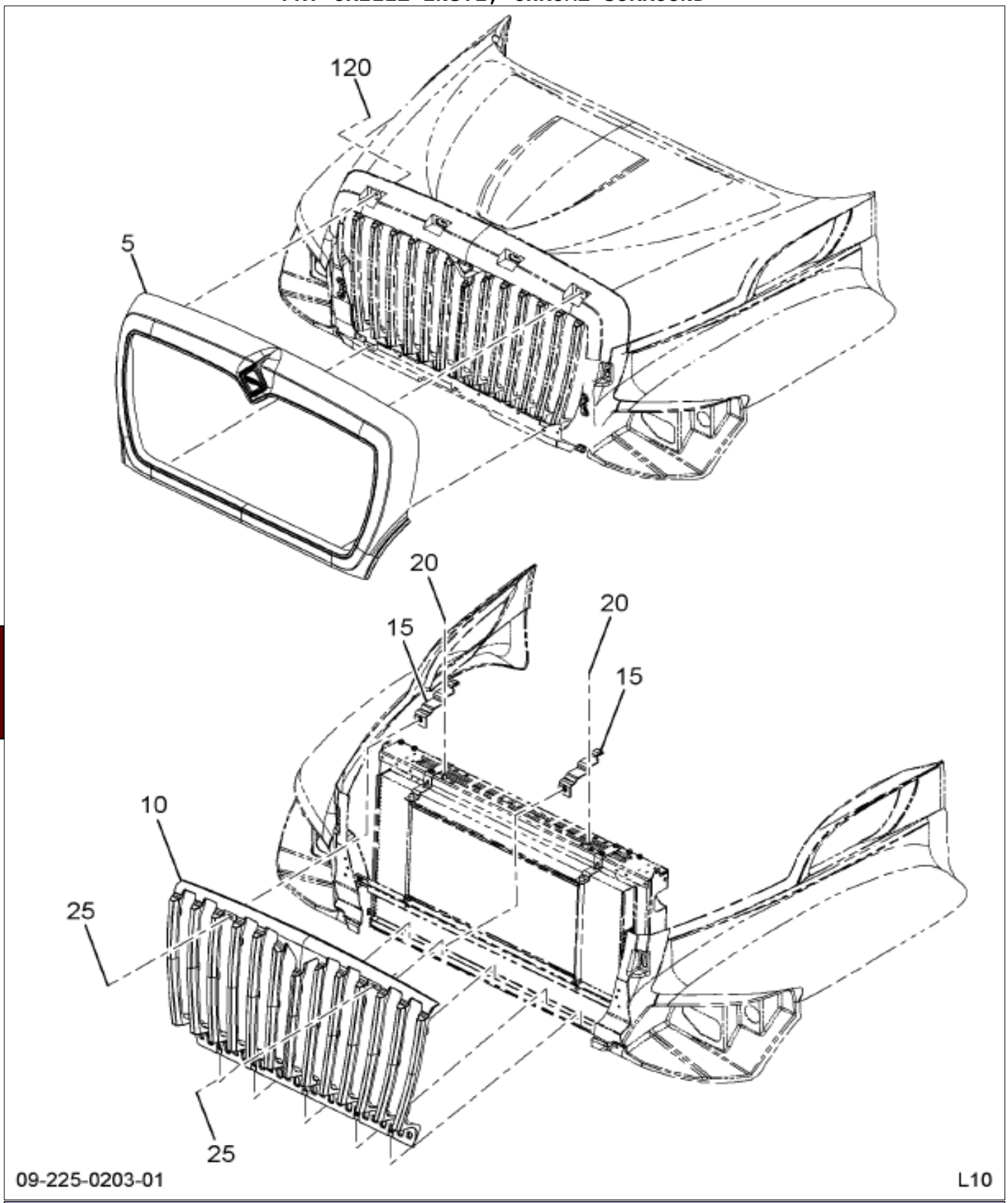

Item	Part No.	Qty	Description	Kit	Var	Figure
5	3613675C93	1	GRILLE,SURROUND ASSY, CHROME		0M7VR	3613675C93
10	3613683C91	1	GRILLE,ASY,CHROME,FXD W/SCREEN		0M7VX	3613683C91
15	3613687C92	1	SUPPORT, GRILLE MOUNTING ASSY		0M7VX	3613687C92
20	3534873C2	1	NUT,HEX*M8 X 1.25 W/CAPTURE WA		0M7VX	
25	3804756C1	1	BOLT SEMS M8-1.25X35 TORX SST		0M7VX	

COPYRIGHT© 2011INTERNATIONAL TRUCK AND ENGINE CORP.

https://truckmanualshub.com/

Figure 3613663C91
GRILLE,ASY,CHROME,FXD W/SCREEN

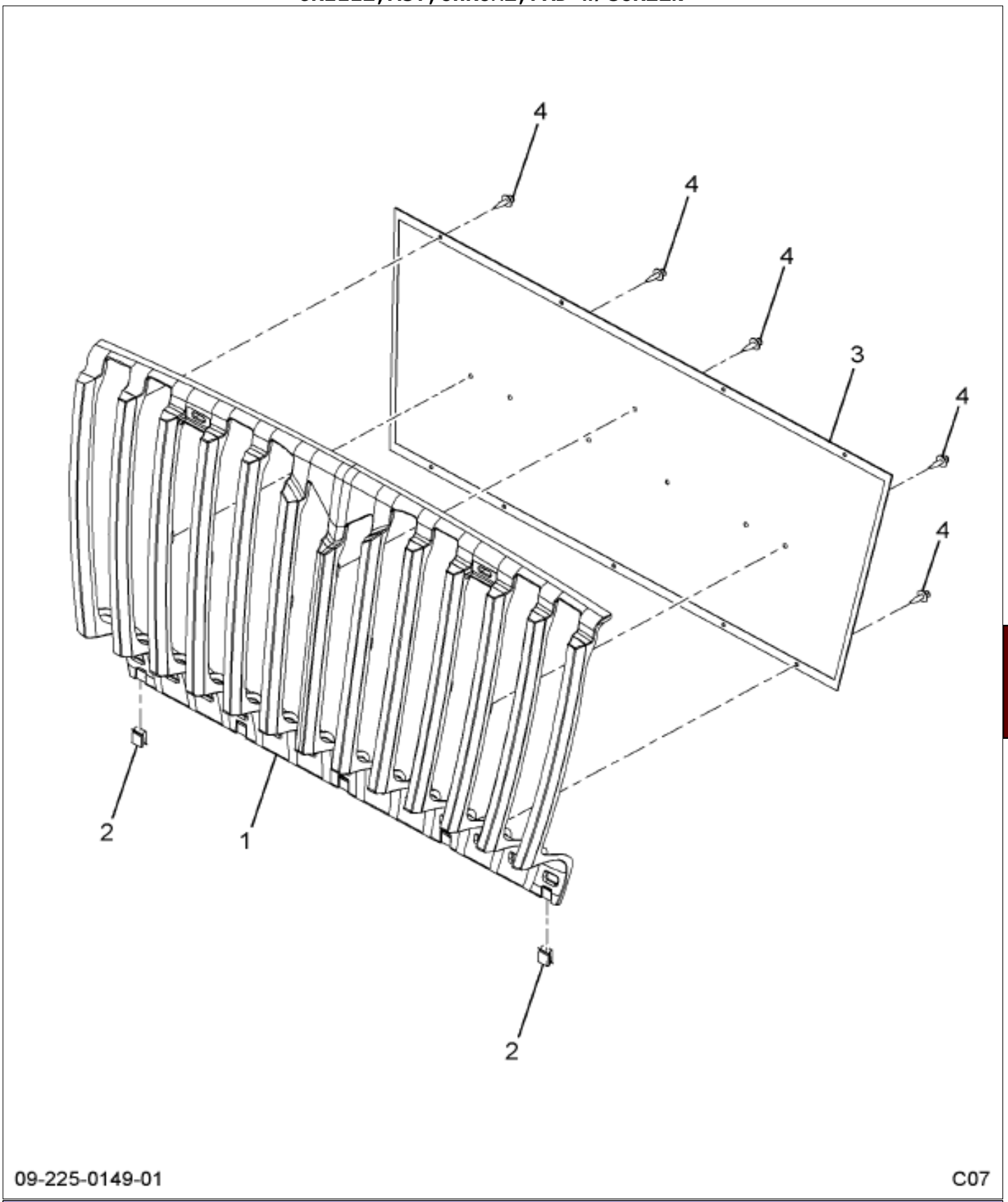

Item	Part No.	Qty	Description	Kit	Var	Figure
1	3613681C1	1	GRILLE,, CHROME, FIXED			
2	3605888C1	5	CLIP,, SPRING CLIP, S-TYPE			
2	3605888C2	5	CLIP,, SPRING CLIP, S-TYPE - ,			
3	3613685C1	1	SCREEN,BUG,ALUMINUM,FRNT GRILL			
4	2007850C1	16	FASTENER,TRIM (BLACK)			
880		RF	NOTE: ASM BELOW COMPRISED OF ABOVE			

COPYRIGHT© 2011INTERNATIONAL TRUCK AND ENGINE CORP.

https://truckmanualshub.com/

Figure 3613683C91

GRILLE,ASY,CHROME,FXD W/SCREEN

Item	Part No.	Qty	Description	Kit	Var	Figure
			COMPONENTS			
881	3613683C91	RF	GRILLE,ASY,CHROME,FXD W/SCREEN			

COPYRIGHT© 2011INTERNATIONAL TRUCK AND ENGINE CORP.

https://truckmanualshub.com/

Figure 3613675C93

GRILLE,SURROUND ASSY, CHROME

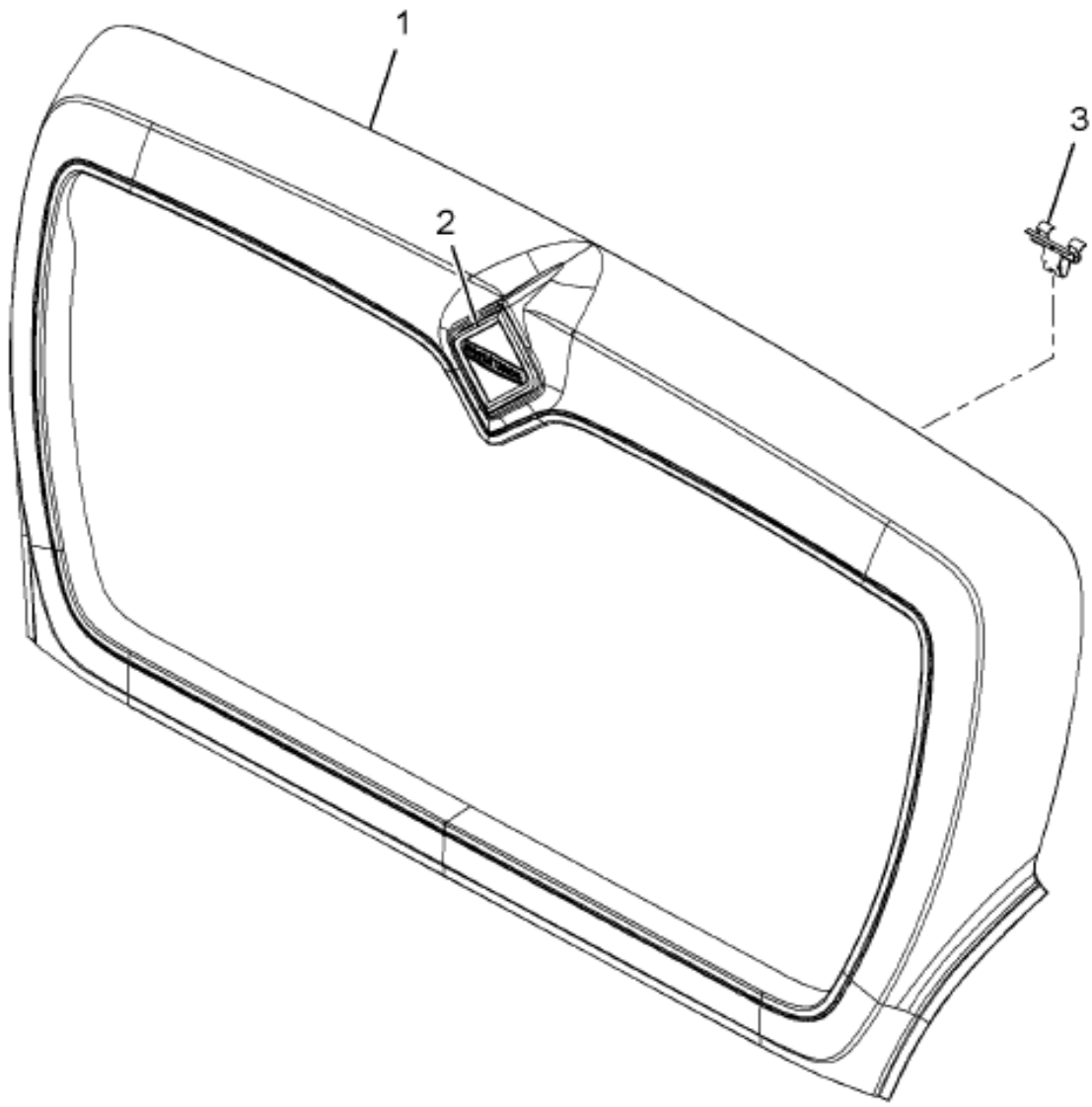

09-225-0135-01 J06

Item	Part No.	Qty	Description	Kit	Var	Figure
1	3613677C3	1	GRILLE, SURROUND, CHROME			
2	3550901C1	1	PRODUCT GRAPHICS ORNAMENT HOOD			
3	3558816C1	9	CLIP,GRILLE MOULDING MTG			
880		RF	NOTE: ASM BELOW COMPRISED OF ABOVE COMPONENTS			
881	3613675C93	RF	GRILLE,SURROUND ASSY, CHROME			

COPYRIGHT© 2011INTERNATIONAL TRUCK AND ENGINE CORP.

https://truckmanualshub.com/

Figure 3613687C92

SUPPORT, GRILLE MOUNTING ASSY

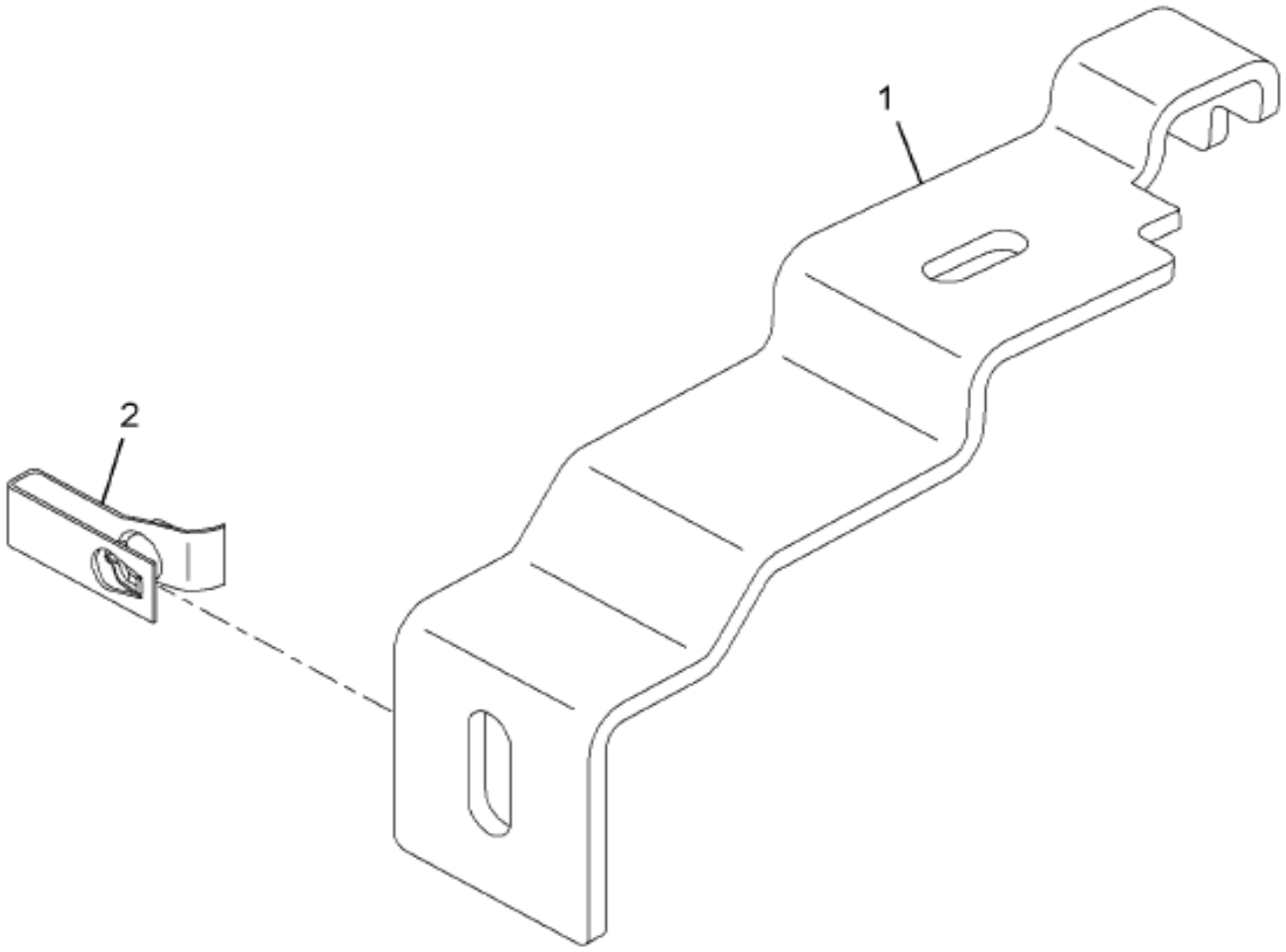

09-225-0138-01 G06

Item	Part No.	Qty	Description	Kit	Var	Figure
1	3613686C2	1	SUPPORT, GRILLE MOUNTING			
2	3551059C1	1	NUT,SPEED M8X1.25 U-NUT			
880		RF	NOTE: ASM BELOW COMPRISED OF ABOVE COMPONENTS			
881	3613687C92	RF	SUPPORT, GRILLE MOUNTING ASSY			

COPYRIGHT© 2011INTERNATIONAL TRUCK AND ENGINE CORP.

https://truckmanualshub.com/

Figure 0MFHH

GRILLE INSTL, AIR INTAKE

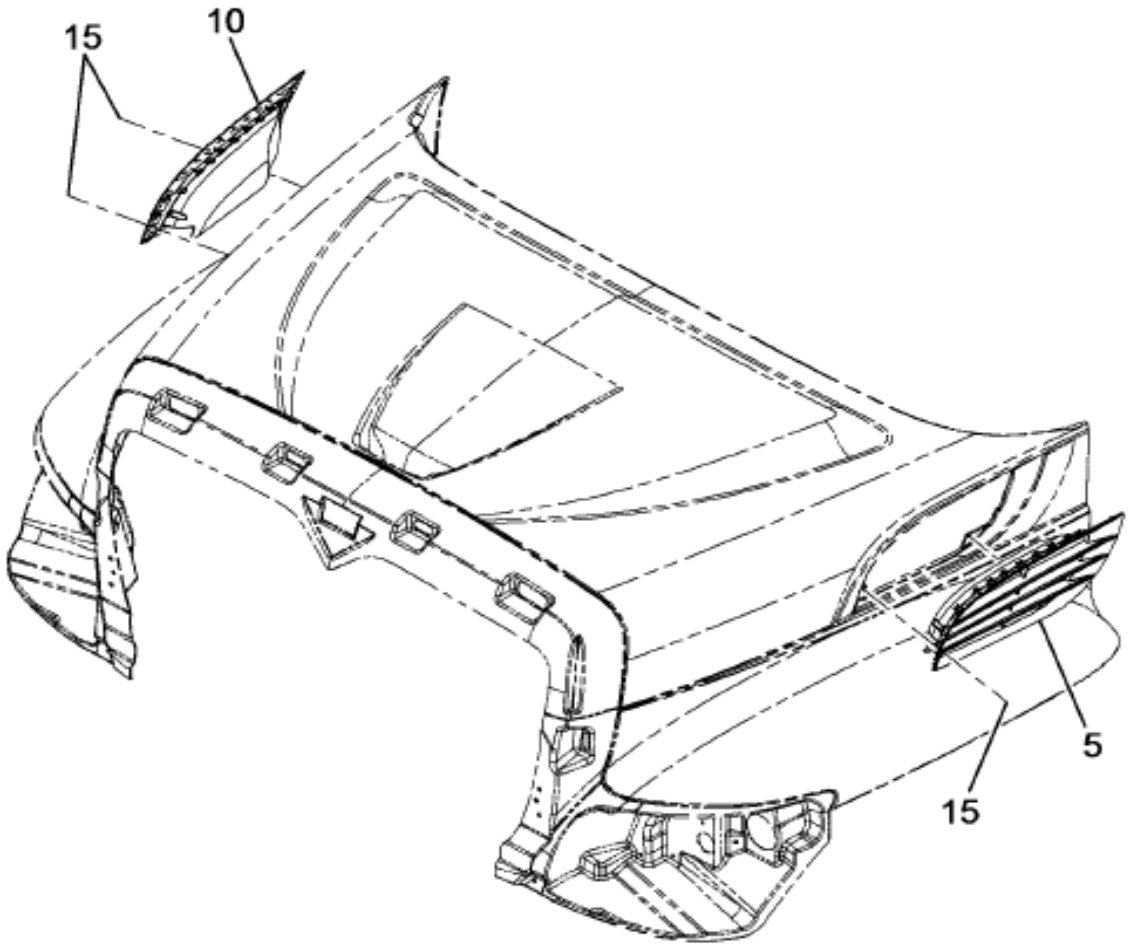

09-804-0007-01 K09

Item	Part No.	Qty	Description	Kit	Var	Figure
5	3622627C1	1	GRILLE,ASSY, AIR INTAKE, LH		0NK0K	3622627C1
10	3622628C1	1	GRILLE,ASSY, AIR INTAKE, RH		0NK0K	3622628C1
15	3565527C1	4	SCREW, *K50 X 2.24 X 16MM TORX		0MFHH	

COPYRIGHT© 2011INTERNATIONAL TRUCK AND ENGINE CORP.

https://truckmanualshub.com/

Figure 3622627C1

GRILLE,ASSY, AIR INTAKE, LH

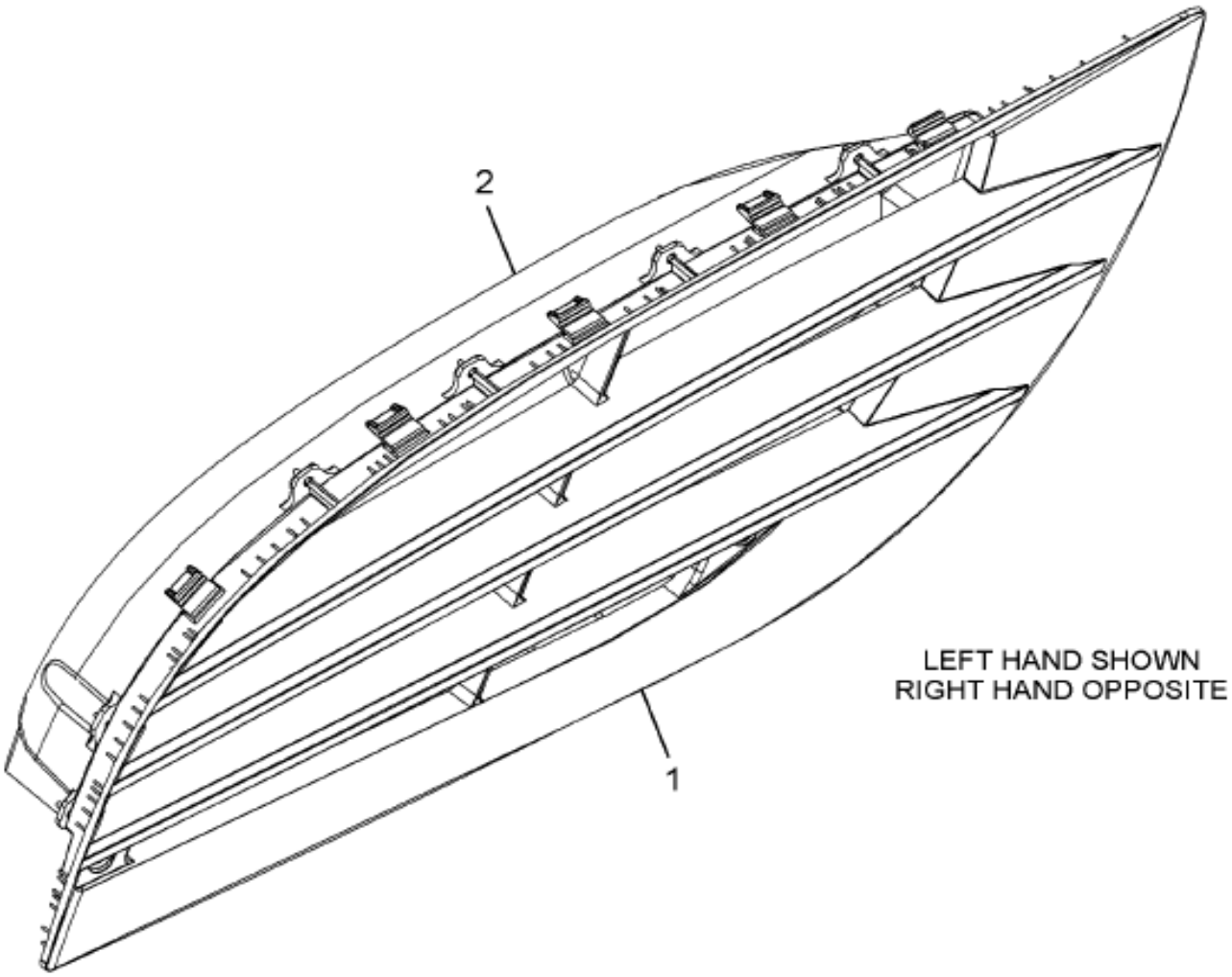

09-D74-M015-01 D10

Item	Part No.	Qty	Description	Kit	Var	Figure
1	3622622C1	1	GRILLE,AIR INTAKE LH			
2	3622624C1	1	BAFFLE,HOOD, AIR INTAKE LH			
880		RF	NOTE: ASM BELOW COMPRISED OF ABOVE COMPONENTS			
881	3622627C1	RF	GRILLE,ASSY, AIR INTAKE, LH			

COPYRIGHT© 2011INTERNATIONAL TRUCK AND ENGINE CORP.

https://truckmanualshub.com/

Figure 3622628C1

GRILLE,ASSY, AIR INTAKE, RH

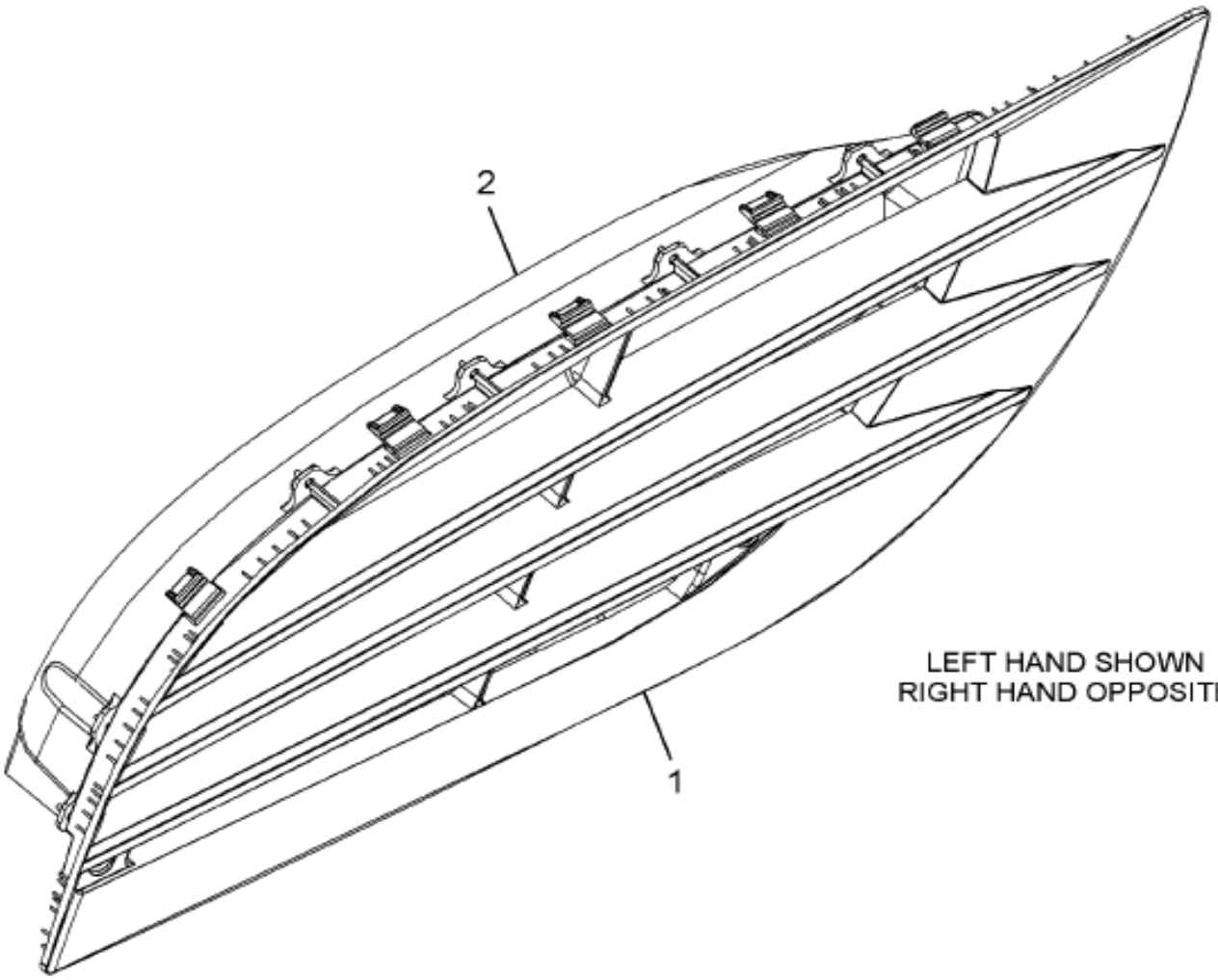

09-D74-M015-01 D10

Item	Part No.	Qty	Description	Kit	Var	Figure
1	3622623C1	1	GRILLE,AIR INTAKE RH			
2	3622625C1	1	BAFFLE,HOOD, AIR INTAKE RH			
880		RF	NOTE: ASM BELOW COMPRISED OF ABOVE COMPONENTS			
881	3622628C1	RF	GRILLE,ASSY, AIR INTAKE, RH			

Grp 09

COPYRIGHT© 2011INTERNATIONAL TRUCK AND ENGINE CORP.

https://truckmanualshub.com/

Figure 0NT98

HOOD ASSIST INSTL

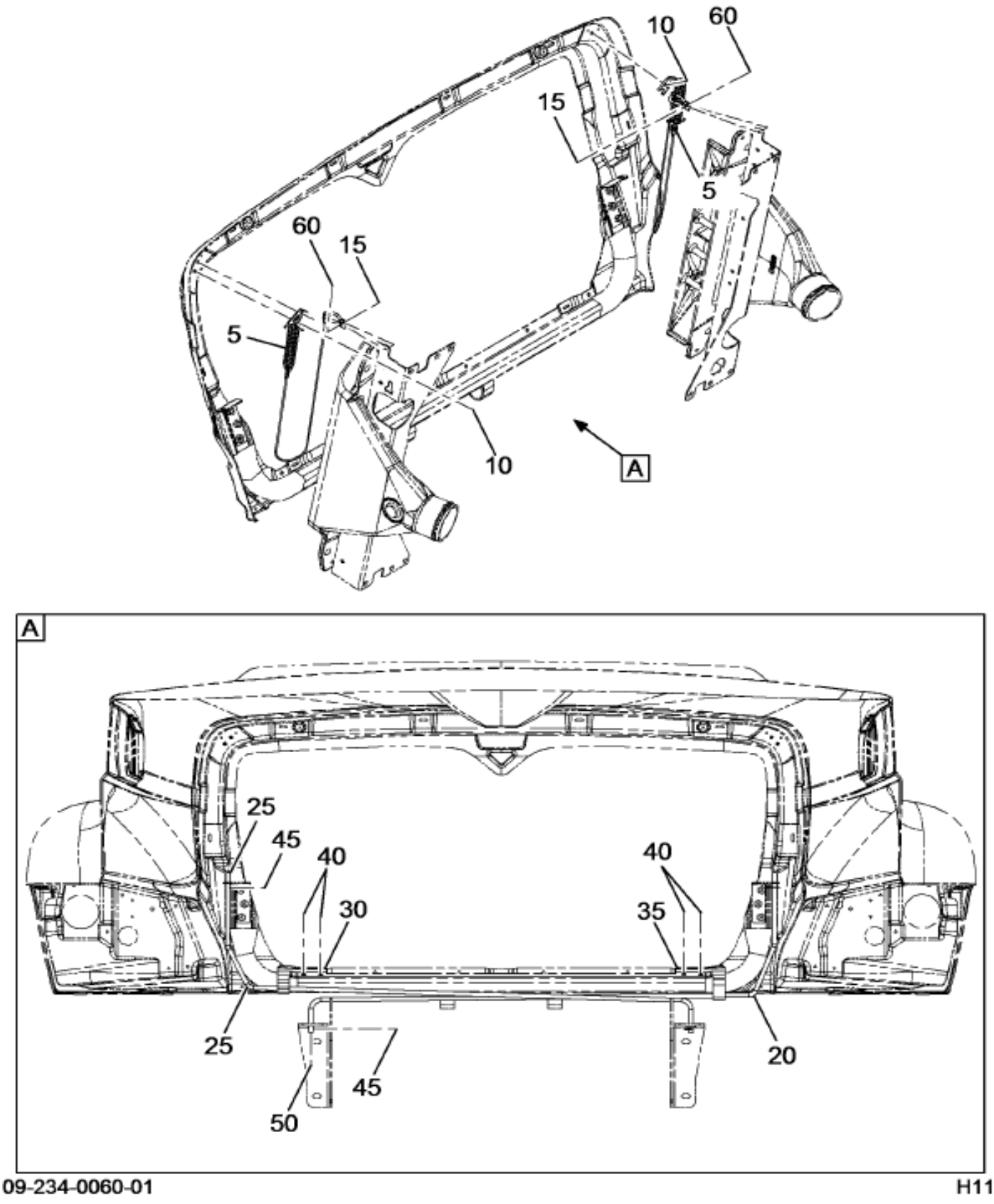

09-234-0060-01 H11

Item	Part No.	Qty	Description	Kit	Var	Figure
5	3625938C93	1	CABLE,HOOD SAFETY, ASSY - ,		0NT98	3625938C93
10	3552493C1	2	BOLT,SEMS M6X1.0-25 SST BLK OX		0NT98	
15	138083	1	PIN, 1/4 X .770 CLEVIS		0NT98	
15	30325R1	1	WASHER,6.4ID X 12.5OD X2MM THK		0NT98	
15	138083	1	PIN, 1/4 X .770 CLEVIS		0NT98	
15	30325R1	1	WASHER,6.4ID X 12.5OD X2MM THK		0NT98	

COPYRIGHT© 2011INTERNATIONAL TRUCK AND ENGINE CORP.

https://truckmanualshub.com/

Figure 0N198

HOOD ASSIST INSTL

Item	Part No.	Qty	Description	Kit	Var	Figure
20	3605060C3	1	BAR, TORSION, HOOD ASSIST, RH		0PP9K	
25	3842891C1	1	BAR, TORSION, HOOD ASSIST, LH		0PP9K	
45	2024771C1	1	CLIP,SPRING TYPE		0PP9K	
50	30328R1	1	WASHER,13.3 X 24 X 3MM		0PP9K	
60	103363	1	PIN, 1/16 X 1 PLN COT		0NT98	

COPYRIGHT© 2011INTERNATIONAL TRUCK AND ENGINE CORP.

https://truckmanualshub.com/

Figure 3625936C93

CABLE,HOOD SAFETY, ASSY - ,

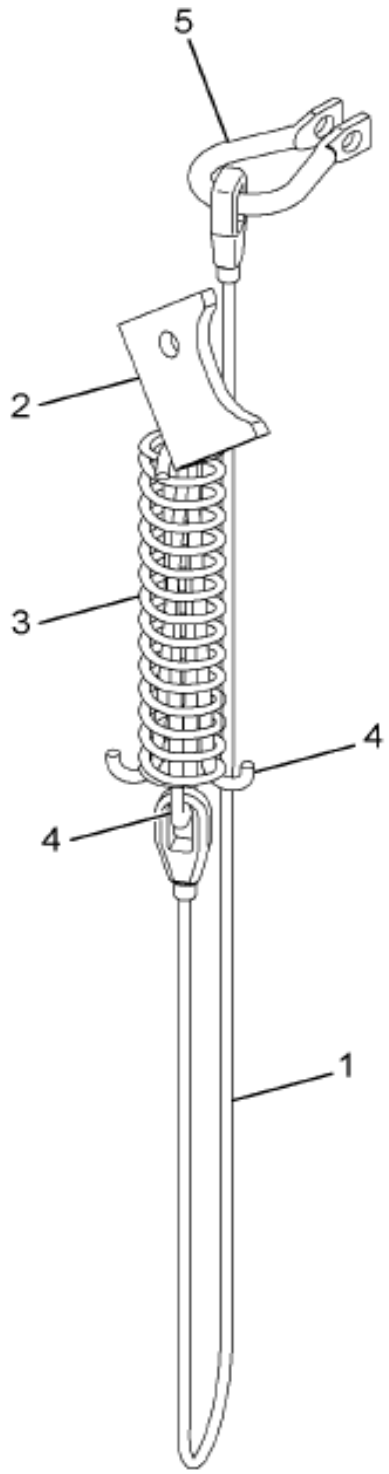

09-234-0061-01 C07

Item	Part No.	Qty	Description	Kit	Var	Figure
1	3625857C1	1	CABLE,HOOD SAFETY STOP			
2	3625937C2	1	SUPPORT, HOOD SAFETY CABLE - ,			
3	590280C2	1	SPRING HOOD CABLE			
4	590279C2	2	SPRING,HOOD CABLE			
5	3817010C1	1	CLEVIS,RING ROD END			
880		RF	NOTE: ASM BELOW COMPRISED OF ABOVE			

COPYRIGHT© 2011INTERNATIONAL TRUCK AND ENGINE CORP.

https://truckmanualshub.com/

Figure 3625938C93

CABLE,HOOD SAFETY, ASSY - ,

Item	Part No.	Qty	Description	Kit	Var	Figure
			COMPONENTS			
881	3625938C93	RF	CABLE,HOOD SAFETY, ASSY - ,			

COPYRIGHT© 2011INTERNATIONAL TRUCK AND ENGINE CORP.

https://truckmanualshub.com/

Figure 0ME11
HOOD LATCH INSTL

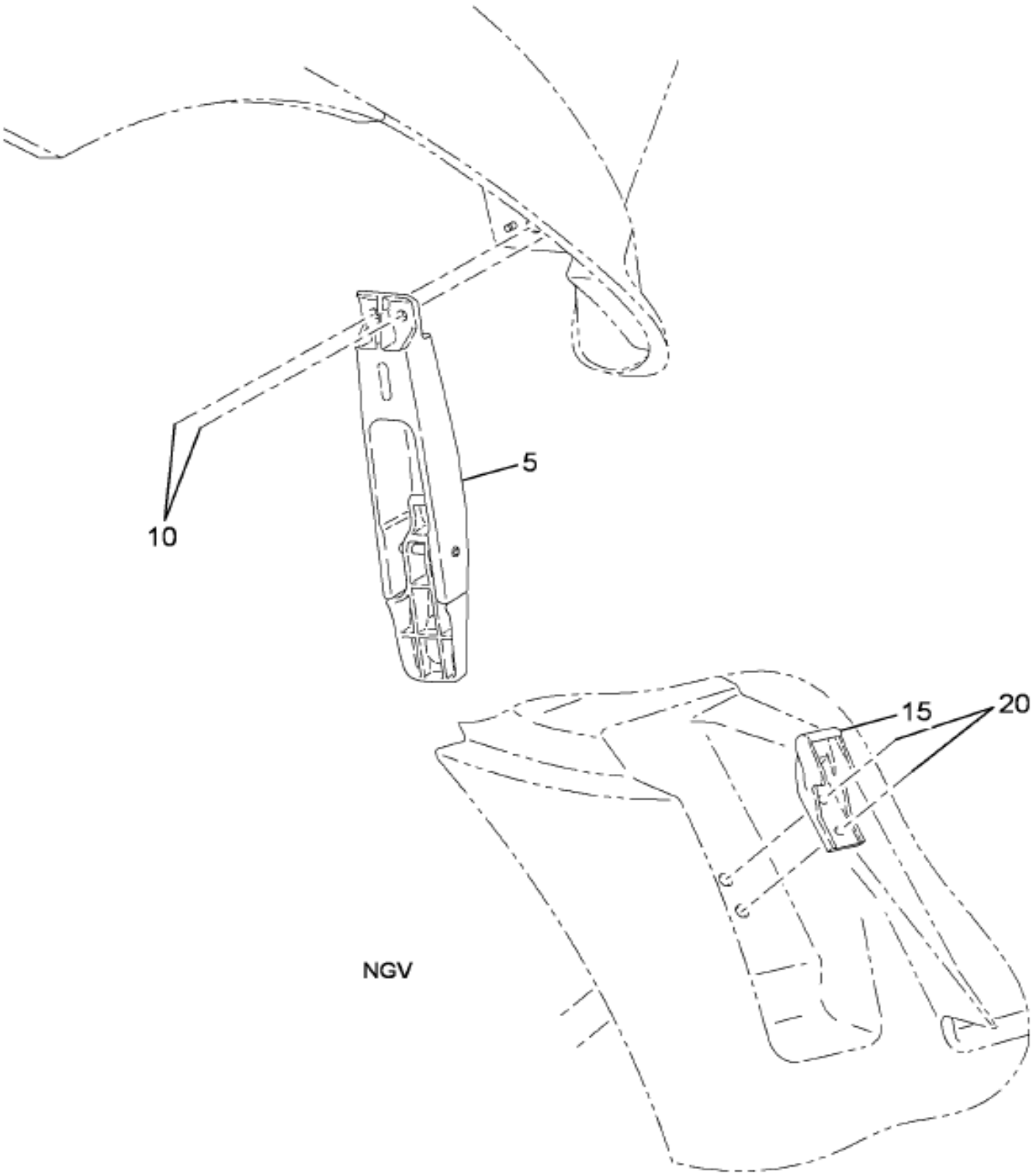

Figure 1 of 2

COPYRIGHT© 2011INTERNATIONAL TRUCK AND ENGINE CORP.

https://truckmanualshub.com/

Figure 0ML1Y
HOOD LATCH INSTL

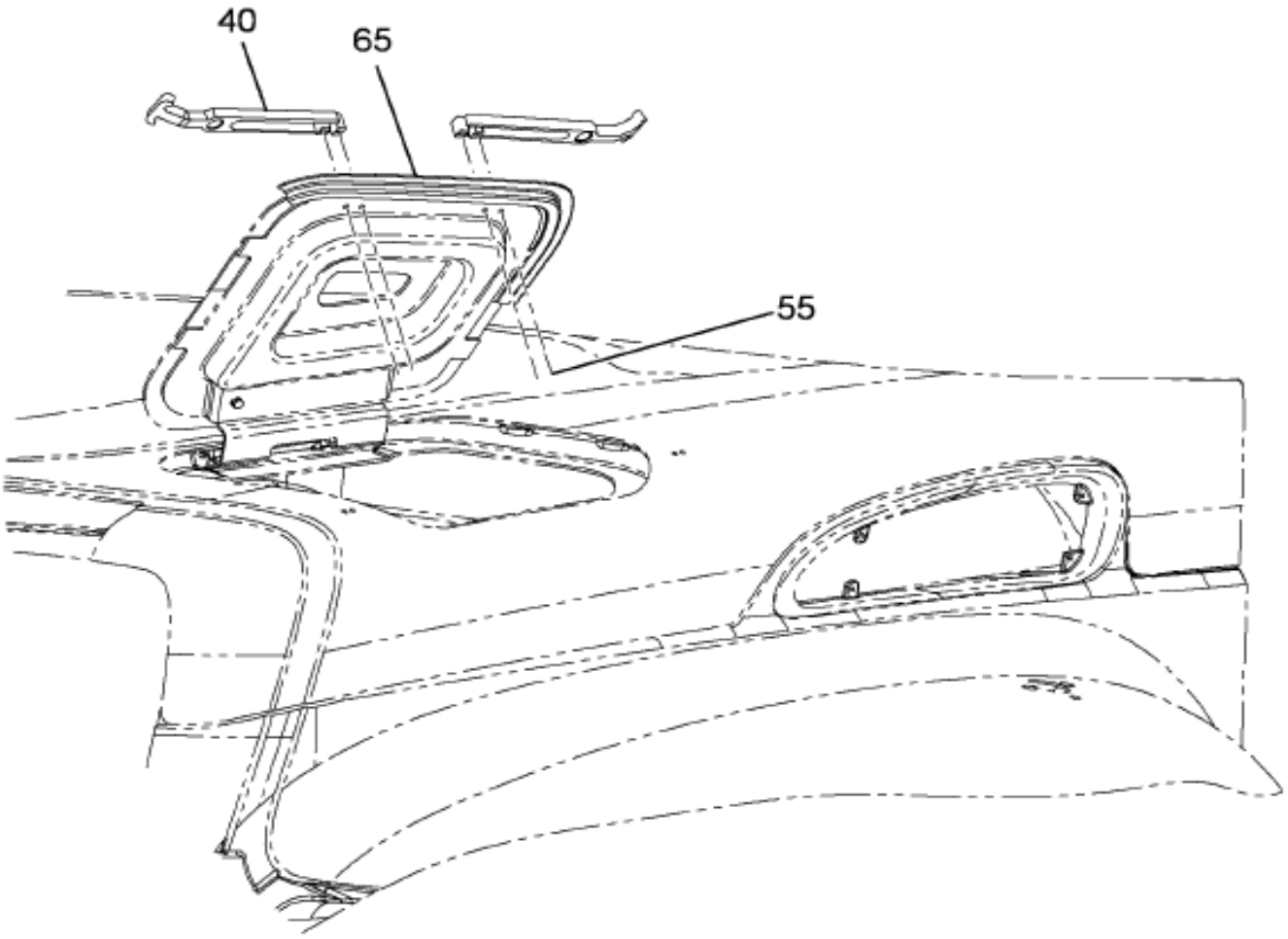

W/LEFT ACCESS DOOR

09-235-0016-AC G09

Item	Part No.	Qty	Description	Kit	Var	Figure
5	3544924C1	2	LATCH,HOOD STRAP		0ML1Y	
10	3566930C1	4	BOLT,SEMS ALL M8 X 1.25-35 M		0ML1Y	
15	3544925C2	2	CATCH,HOOD LATCH		0ML1Y	
20	3566930C1	2	BOLT,SEMS ALL M8 X 1.25-35 M		0ML1Y	

COPYRIGHT© 2011INTERNATIONAL TRUCK AND ENGINE CORP.

https://truckmanualshub.com/

Figure 0ML1Z
HOOD SUPPORT INSTL

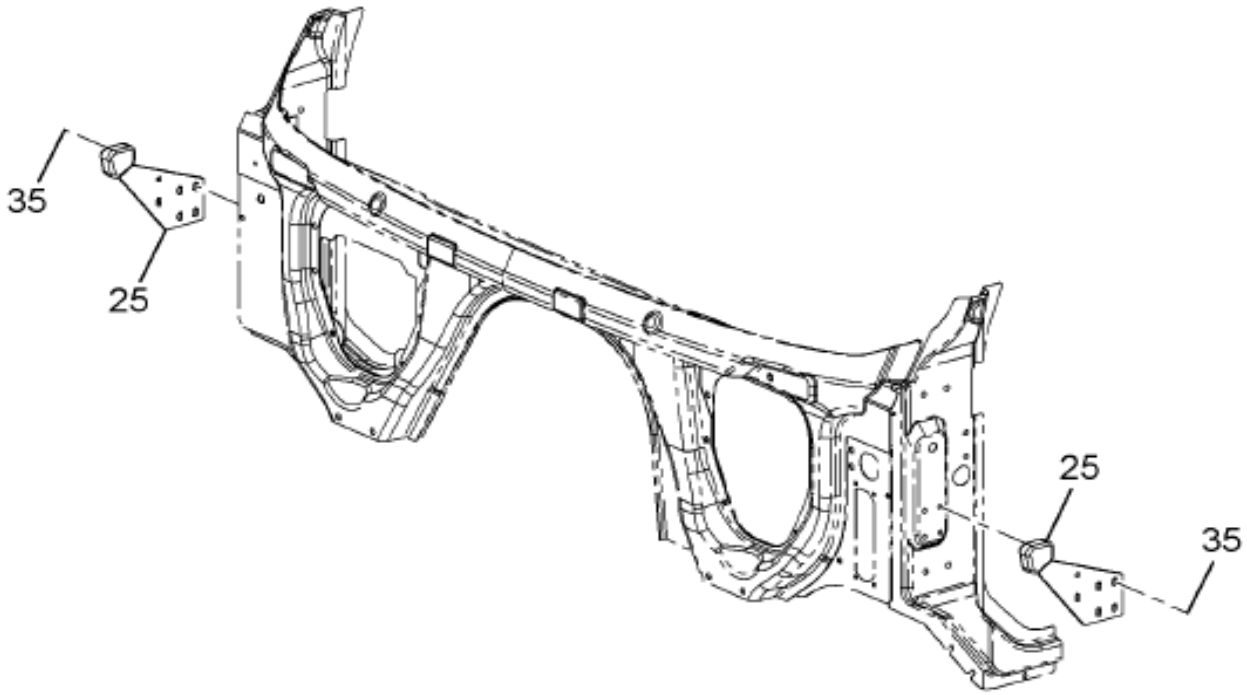

NGV 4000 &
NGV 7000

09-229-0065-01 A11

Item	Part No.	Qty	Description	Kit	Var	Figure
25	3548892C3	2	SUPPORT,ASSY HOOD BRKT		0ML1Z	
35	3530018C1	8	BOLT SEMS ALL M10 X 1.50 35 MM		0ML1Z	

COPYRIGHT© 2011INTERNATIONAL TRUCK AND ENGINE CORP.

https://truckmanualshub.com/

Figure 0F448

MUD GUARD INSTL; NO FBC VEHICLES

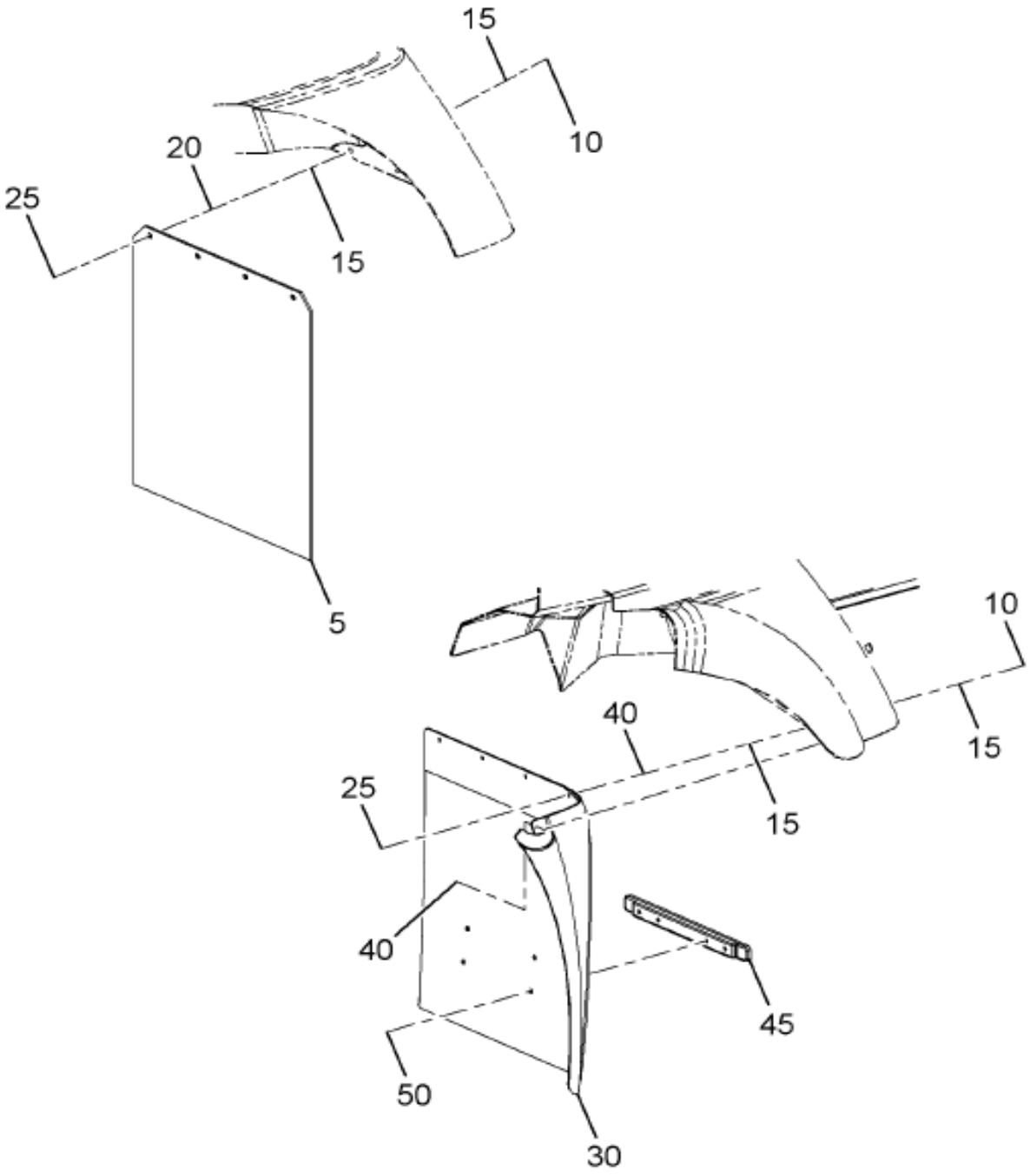

09-224-0022-01 H04

Item	Part No.	Qty	Description	Kit	Var	Figure
10	3588152C1	8	BOLT,SPL M8-1.25X30 T-40 SST		0F448	
15	3542142C1	16	WASHER,GRAB HNDL MTG M8		0F448	
20	3553000C1	8	WASHER FENDER MTG LOCK FLAT		0F448	
25	40081R1	8	NUT,HEX METRIC REG.*M8-1.25 SS		0F448	
30	3584128C5	1	GUARD,FRT FENDER, HDD SBA LH		0K4QL	
30	3584129C5	1	GUARD,FRT FENDER, HDD SBA RH		0K4QL	

Grp 09

COPYRIGHT© 2011INTERNATIONAL TRUCK AND ENGINE CORP.

https://truckmanualshub.com/

Figure 01-448

MUD GUARD INSTL; NO FBC VEHICLES

Item	Part No.	Qty	Description	Kit	Var	Figure
40	3542142C1	2	WASHER,GRAB HNDL MTG M8		0K4QL	
45	3823012C1	1	SUPPORT, FENDER EXTENSION MUD		0SGT4	
45	3823012C1	1	SUPPORT, FENDER EXTENSION MUD		0SGWH	
50	3616238C1	2	BOLT,SEMS M8X1.25X24 T40 TORX		0SGT4	
50	3616238C1	2	BOLT,SEMS M8X1.25X24 T40 TORX		0SGWH	
50	3536393C1	2	NUT,SPECIAL*U-NUT FOR STEP MOU		0SGT4	
50	3536393C1	2	NUT,SPECIAL*U-NUT FOR STEP MOU		0SGWH	

COPYRIGHT© 2011INTERNATIONAL TRUCK AND ENGINE CORP.

https://truckmanualshub.com/

Figure 0MC05

SPLASH PANEL INSTL; (FRONT END)

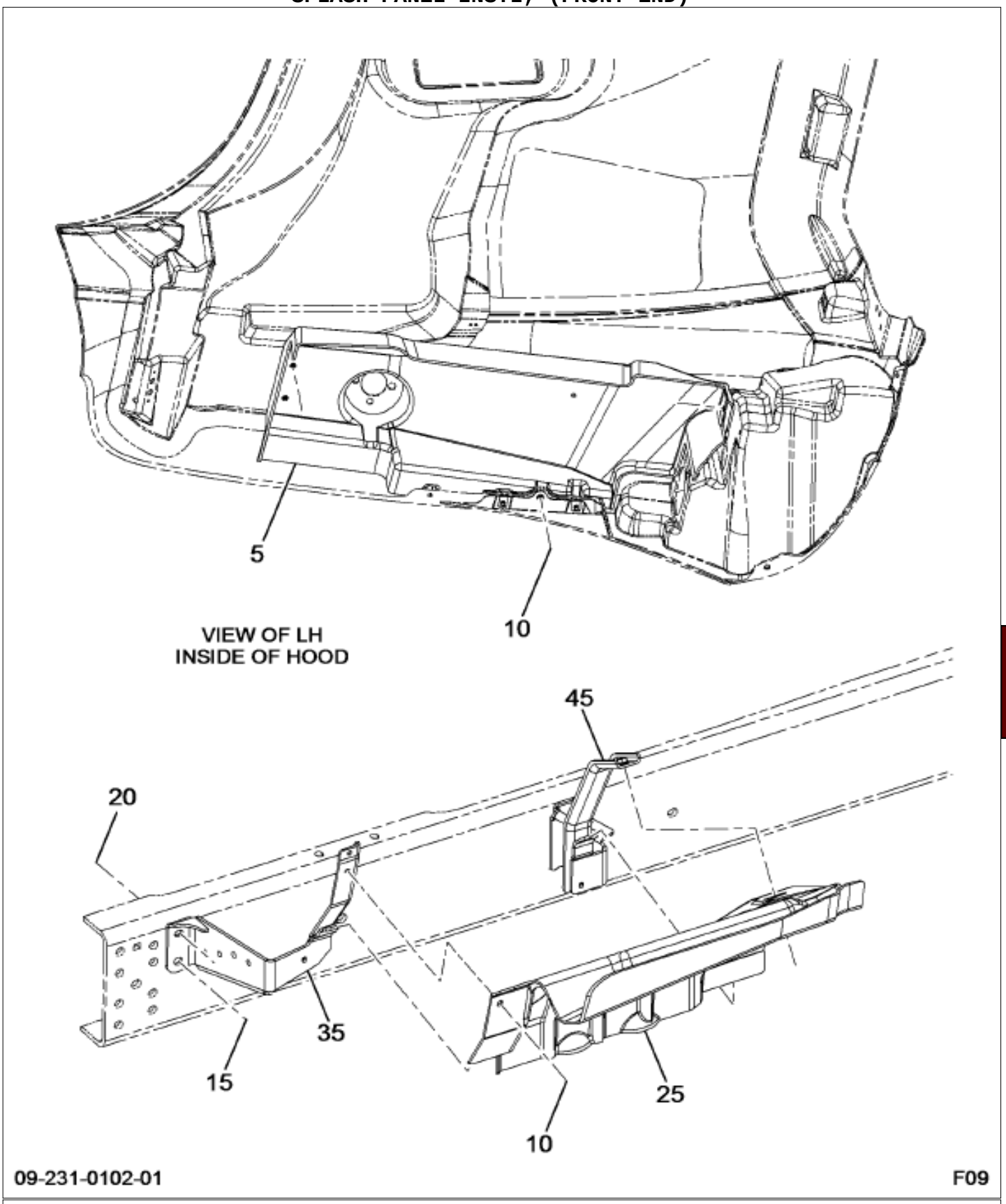

Grp 09

Figure 1 of 2

COPYRIGHT© 2011INTERNATIONAL TRUCK AND ENGINE CORP.

https://truckmanualshub.com/

Figure 0MC05

SPLASH PANEL INSTL; (FRONT END)

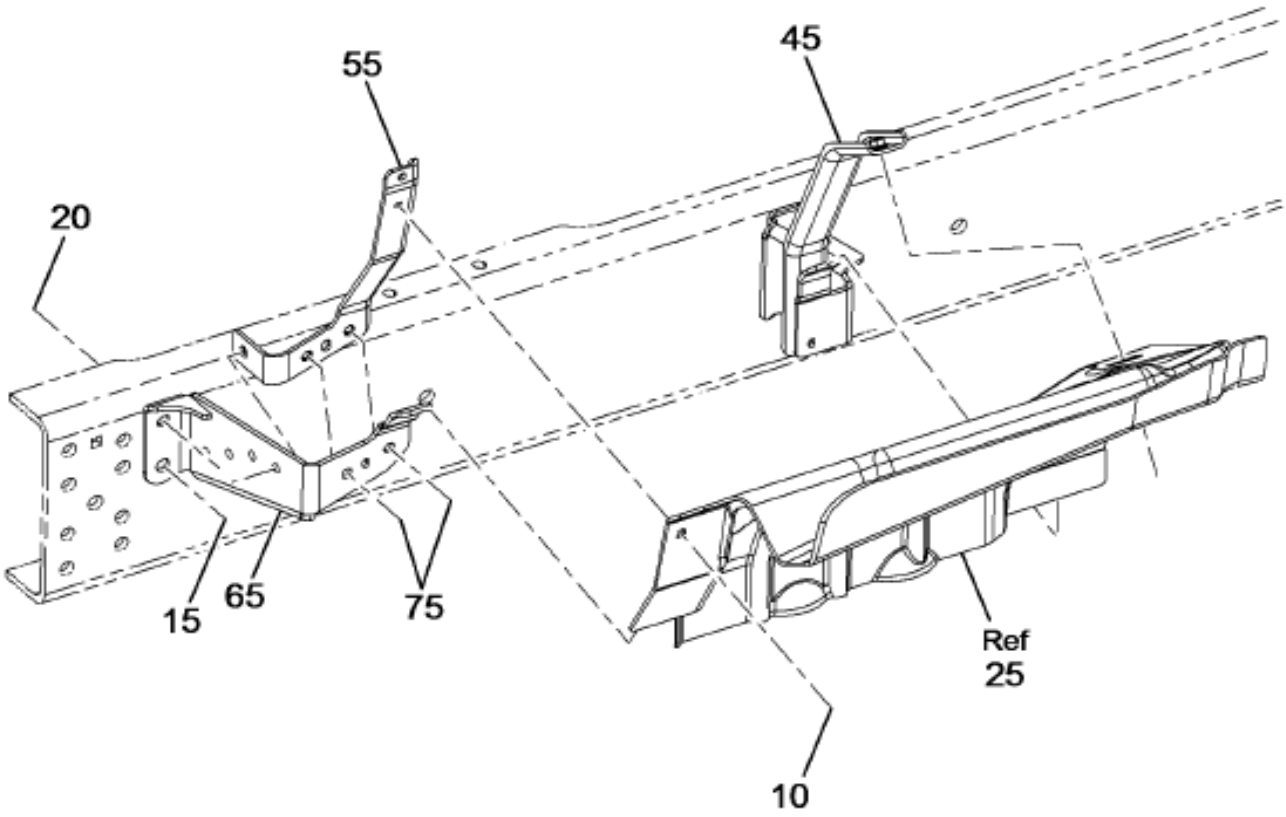

09-231-0118-01 F09

Item	Part No.	Qty	Description	Kit	Var	Figure
5	3622632C92	1	PANEL,ASSY UPR SPLASH LH		0MC0S	3622632C92
10	3564940C1	6	BOLT SEMS M8 X 1.25 X 35 MM HE		0MC0S	
10	3564940C1	2	BOLT SEMS M8 X 1.25 X 35 MM HE		0MC0S	
15	30748R2	4	BOLT M12 X 50MM PHC FLG CLASS		0MC0Y	
20	30755R1	4	NUT,HEX M12 FLANGED		0MC0Y	
25	3622634C2	1	PANEL,SPLASH LWR LH HDD		0MC0Y	

COPYRIGHT© 2011INTERNATIONAL TRUCK AND ENGINE CORP.

https://truckmanualshub.com/

Figure 0MC05

SPLASH PANEL INSTL; (FRONT END)

Item	Part No.	Qty	Description	Kit	Var	Figure
25	3622636C2	1	PANEL,SPLASH RH HDD		0MC0Y	
45	3626358C2	1	BRACE,ASM SPLSH SHLD RR LH HDD		0MC0Y	3626358C2
45	3626359C2	1	BRACE,ASM SPLSH SHLD RR RH HDD		0MC0Y	3626359C2
55	3811081C2	1	BRACE,ASM SPLSH SHLD LH FRT HD		0MC0Y	3811081C2
55	3811082C2	1	BRACE,ASM SPLSH SHLD RH FRT HD		0MC0Y	3811082C2
65	3842837C2	1	BRACE,SPLASH SHIELD,		0MC0Y	
65	3842838C2	1	BRACE,SPLASH SHIELD,		0MC0Y	
75	3549305C1	3	BOLT,HEX FLG HD METRIC*M10 X 3		0MC0Y	

Grp 09

COPYRIGHT© 2011INTERNATIONAL TRUCK AND ENGINE CORP.

https://truckmanualshub.com/

Figure 3811081C2
BRACE,ASM SPLSH SHLD LH FRT HD

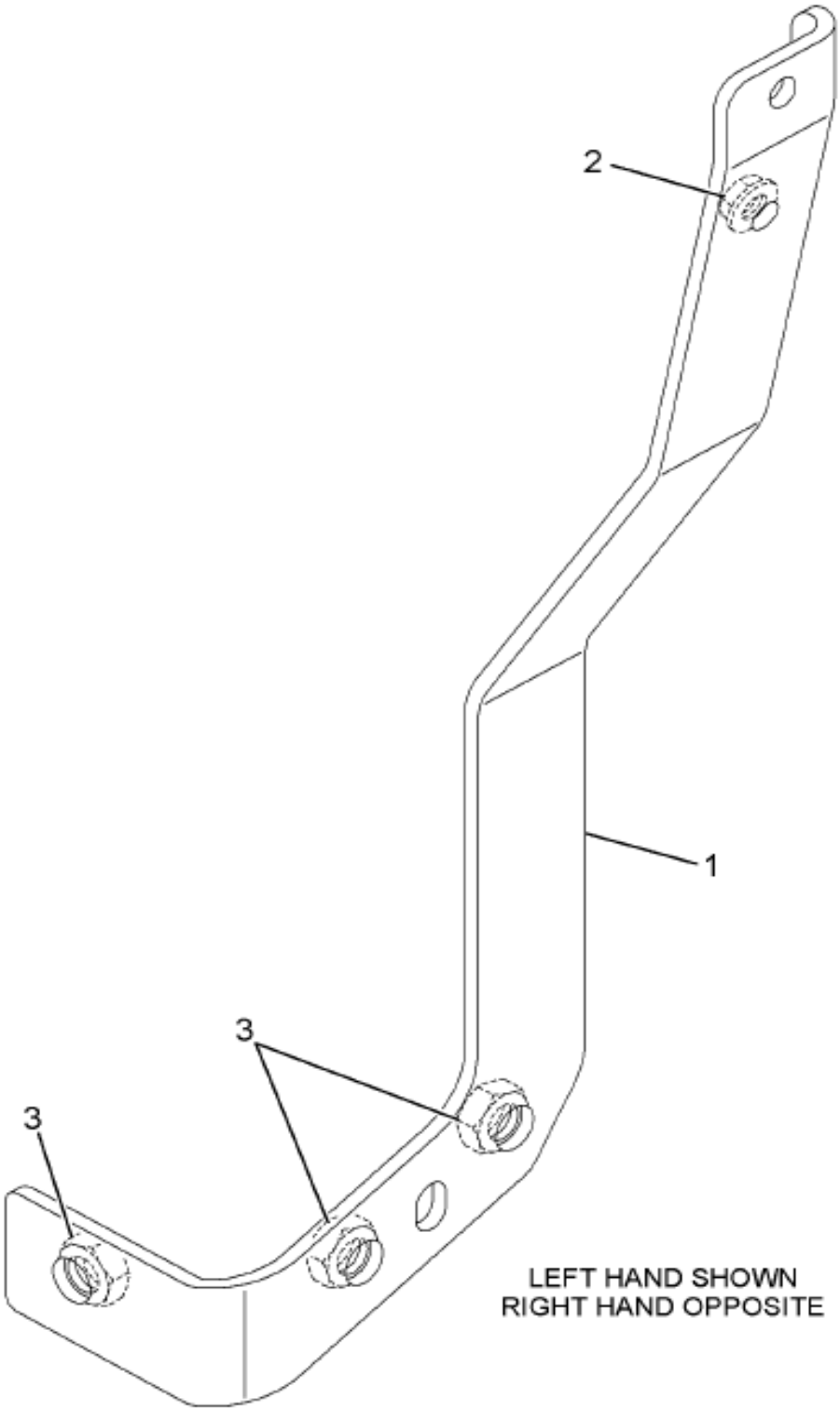

09-231-0101-01 C07

Item	Part No.	Qty	Description	Kit	Var	Figure
1	3626342C3	1	BRACE,SPLASH SHIELD, UPPER SU			
1		RF	LEFT			
2	3548808C1	1	NUT,WELD FLANGED M8 X 1.25			
3	30702R1	3	NUT,WELD,HEX METRIC M10 X 1.5			
880		RF	NOTE: ASM BELOW COMPRISED OF ABOVE COMPONENTS			

COPYRIGHT© 2011INTERNATIONAL TRUCK AND ENGINE CORP.

https://truckmanualshub.com/

Figure 3811081C2

BRACE,ASM SPLSH SHLD LH FRT HD

Item	Part No.	Qty	Description	Kit	Var	Figure
881	3811081C2	RF	BRACE,ASM SPLSH SHLD LH FRT HD			

COPYRIGHT© 2011INTERNATIONAL TRUCK AND ENGINE CORP.

https://truckmanualshub.com/

Figure 3811082C2

BRACE,ASM SPLSH SHLD RH FRT HD

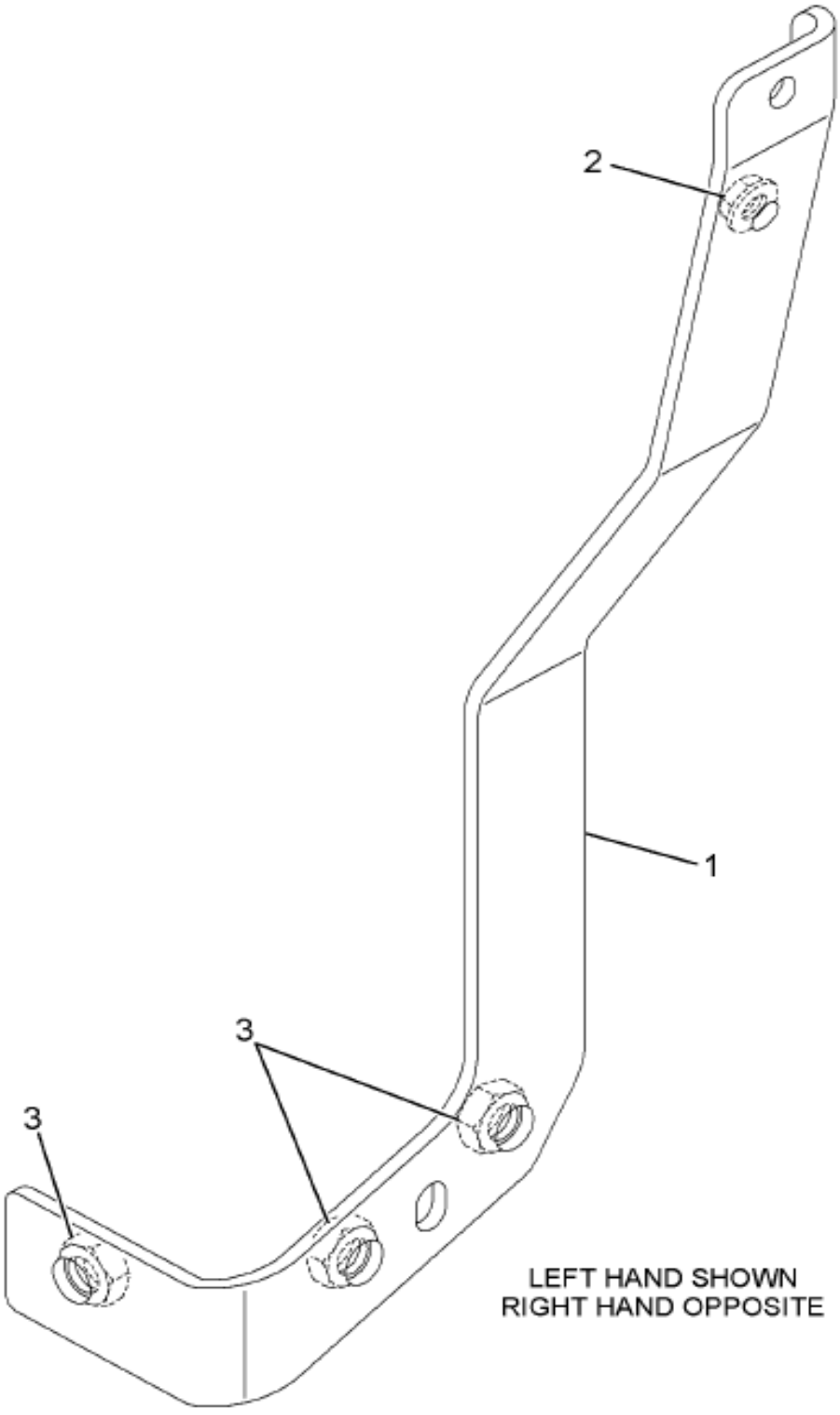

Item	Part No.	Qty	Description	Kit	Var	Figure
1	3626343C3	1	BRACE,SPLASH SHIELD, UPPER SU			
1		RF	RIGHT			
2	3548808C1	1	NUT,WELD FLANGED M8 X 1.25			
3	30702R1	3	NUT,WELD,HEX METRIC M10 X 1.5			
880		RF	NOTE: ASM BELOW COMPRISED OF ABOVE COMPONENTS			

COPYRIGHT© 2011INTERNATIONAL TRUCK AND ENGINE CORP.

https://truckmanualshub.com/

Figure 3811082C2

BRACE,ASM SPLSH SHLD RH FRT HD

Item	Part No.	Qty	Description	Kit	Var	Figure
881	3811082C2	RF	BRACE,ASM SPLSH SHLD RH FRT HD			

COPYRIGHT© 2011INTERNATIONAL TRUCK AND ENGINE CORP.

https://truckmanualshub.com/

Figure 3626338C2

BRACE,ASM SPLSH SHLD RR LH HDD

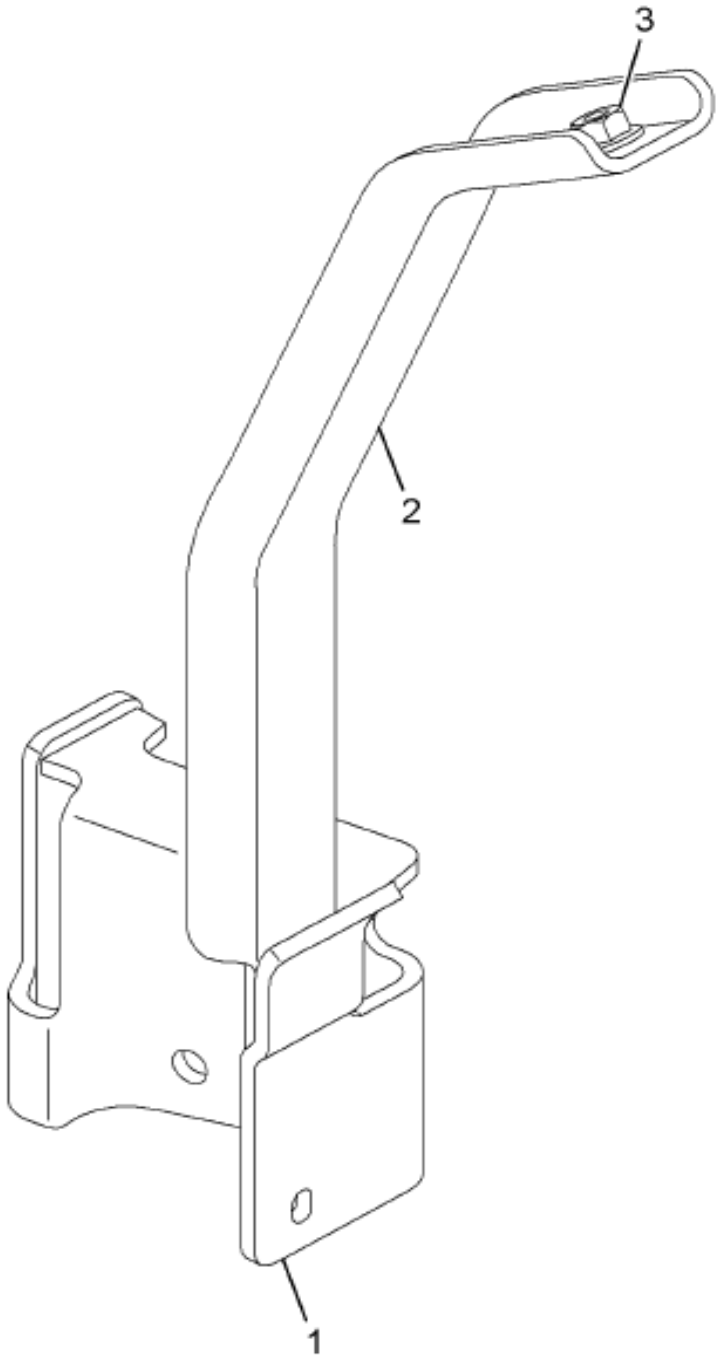

09-231-0091-01 K06

Item	Part No.	Qty	Description	Kit	Var	Figure
1	3626338C2	1	BRACE,SPLSH SHLD LWR RR LH			
1		RF	LEFT			
2	3626348C2	1	BRACE,SPLASH SHIELD, UPPER ,			
2		RF	LEFT			
3	3548808C1	1	NUT,WELD FLANGED M8 X 1.25			
880		RF	NOTE: ASM BELOW COMPRISED OF ABOVE			

COPYRIGHT© 2011INTERNATIONAL TRUCK AND ENGINE CORP.

https://truckmanualshub.com/

Figure 3626358C2

BRACE,ASM SPLSH SHLD RR LH HDD

Item	Part No.	Qty	Description	Kit	Var	Figure
			COMPONENTS			
881	3626358C2	RF	BRACE,ASM SPLSH SHLD RR LH HDD			

COPYRIGHT© 2011INTERNATIONAL TRUCK AND ENGINE CORP.

https://truckmanualshub.com/

Figure 3626339C2

BRACE,ASM SPLSH SHLD RR RH HDD

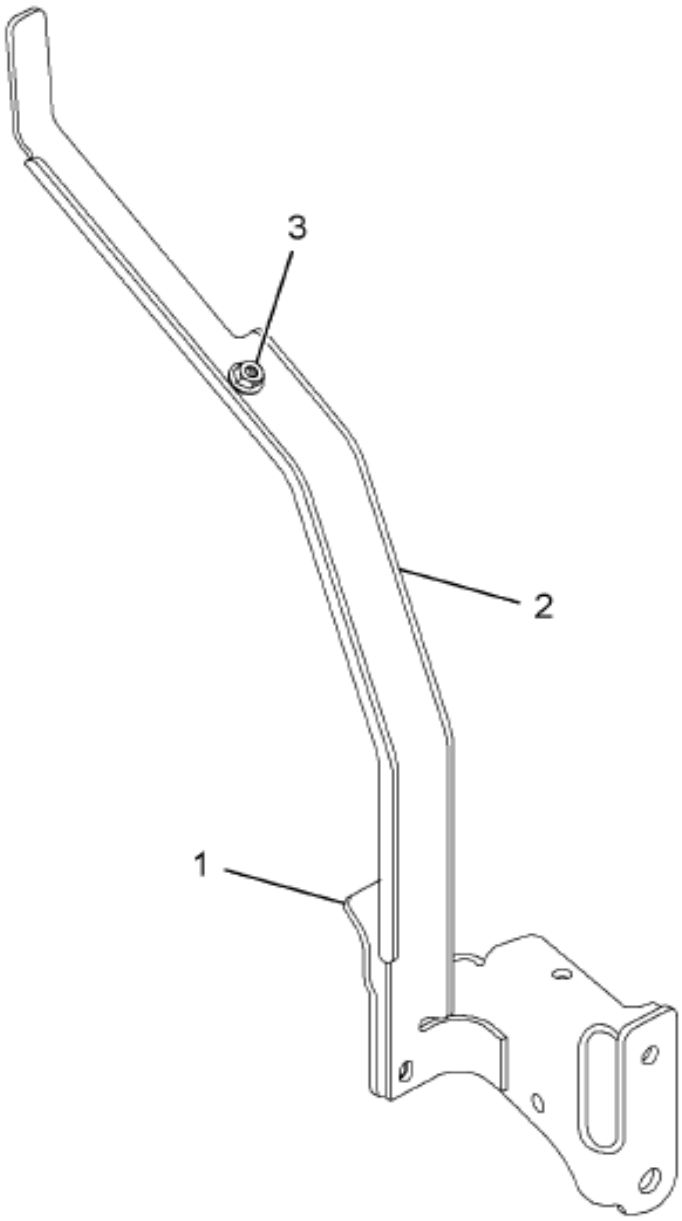

09-231-0092-01 K06

Item	Part No.	Qty	Description	Kit	Var	Figure
1	3626339C2	1	BRACE,SPLASH SHIELD, LOWER ,			
1		RF	RIGHT			
2	3626349C2	1	BRACE,SPLASH SHIELD, UPPER ,			
2		RF	RIGHT			
3	3548808C1	1	NUT,WELD FLANGED M8 X 1.25			
880		RF	NOTE: ASM BELOW COMPRISED OF ABOVE			

COPYRIGHT© 2011INTERNATIONAL TRUCK AND ENGINE CORP.

https://truckmanualshub.com/

Figure 3626359C2

BRACE,ASM SPLSH SHLD RR RH HDD

Item	Part No.	Qty	Description	Kit	Var	Figure
			COMPONENTS			
881	3626359C2	RF	BRACE,ASM SPLSH SHLD RR RH HDD			

COPYRIGHT© 2011INTERNATIONAL TRUCK AND ENGINE CORP.

https://truckmanualshub.com/

Figure 3622632C92
PANEL,ASSY UPR SPLASH LH

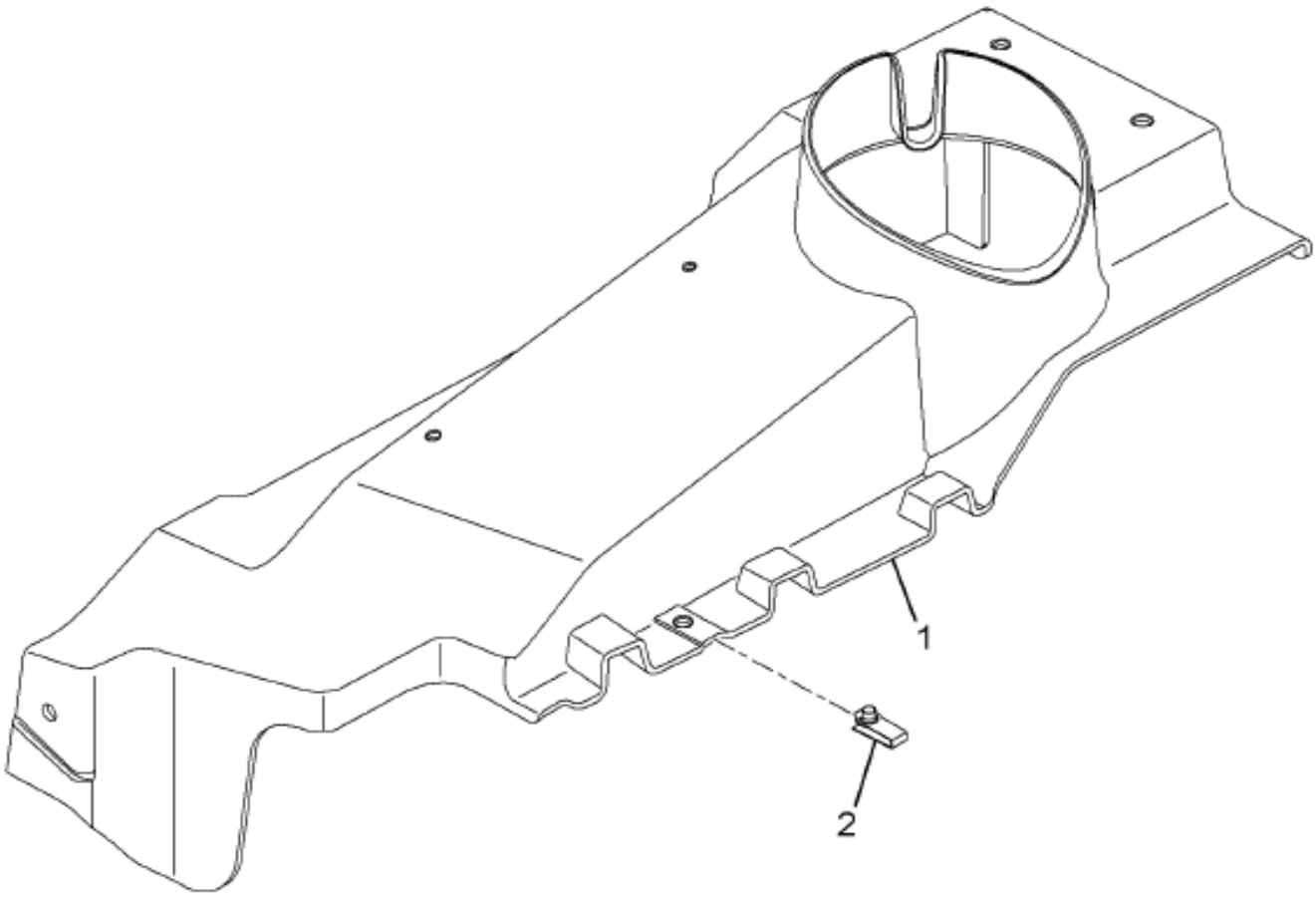

09-231-0093-01 K06

Item	Part No.	Qty	Description	Kit	Var	Figure
1	3622631C2	1	PANEL,, UPPER SPLASH LH - ,			
1		RF	LEFT			
2	3551059C1	1	NUT,SPEED M8X1.25 U-NUT			
880		RF	NOTE: ASM BELOW COMPRISED OF ABOVE COMPONENTS			
881	3622632C92	RF	PANEL,ASSY UPR SPLASH LH			

COPYRIGHT© 2011INTERNATIONAL TRUCK AND ENGINE CORP.

https://truckmanualshub.com/

Group 10
Miscellaneous

COPYRIGHT© 2011INTERNATIONAL TRUCK AND ENGINE CORP.

https://truckmanualshub.com/

Figure 0MRQC

BULK MATERIAL; ESCOBEDO, SEVERE SERVICE

Item	Part No.	Qty	Description	Kit	Var	Figure
5	2643012R1	34	FLUID GREASE LUB MMLTPRPS 251		0TZML	
5	2645294R1	24	SEALANT,CAB SLNG 300 ML CRTRDG		0RPRH	
5	3518910C2	4	PRODUCT GRAPHICS,*BLANK LABEL		0TLHS	
5	3524686C1	10	SEALANT,*SEAM SEALER		0RY1M	
5	2643028R1	50	TAPE		0MRQC	
95	2643130R1	1100	TAPE,PLASTIC 3/4" WIDE		0MRQC	
500	2643099R3	1	FLUID LUBRICANT GRAFFO 112X		0MRQC	
500	3812937R1	1	FLUID,BULK TECTYL 518, 1 GAL		0MRQC	
500	2645513R1	1	FLUID,W/S, DILUTED		0MRQC	
500	3551590R1	2	SEALANT, CAB SEALING, EXPANDIN		0MRQC	
500	3551591R1	2	SEALANT, CAB SEALING STRUCTUR		0MRQC	
500	1258311R1	6	TAPE,MYSTIC LABEL 2-PLY		0MRQC	
505	2644032R1	3	FLUID,REFRGERANT GAS (134A)		0MRQG	
505	2643016R1	1	FLUID,A/C		0MRQG	
510	3000121C1	10	FLUID,DIESEL GRD #1		0MRQK	
525	2643576R1	4	FLUID,LUB OIL 15W40		0MRR4	
545	3527315R2	5	ANTIFREEZE,, CONCENTRATE		0NN8J	

COPYRIGHT© 2011INTERNATIONAL TRUCK AND ENGINE CORP.

https://truckmanualshub.com/

Figure 0F7JY

LUG WRENCH & HANDLE; TOOL KIT

Item	Part No.	Qty	Description	Kit	Var	Figure
5	3526998C91	1	KIT,TOOLS*WRENCH WHEEL		0F7JY	3526998C91
			NON-ILLUSTRATED REFERENCE FIGURE 3526998C91			
1	1200390R91	1	CONTAINER,TOOL BAG			
2	3000067C1	1	HANDLE,WRENCH			
3	3000137C1	1	TOOL,WRENCH WHEEL BOLT NUT GIV			
880		RF	NOTE: ASM BELOW COMPRISED OF ABOVE COMPONENTS			
881	3526998C91	RF	KIT,TOOLS*WRENCH WHEEL			

COPYRIGHT© 2011INTERNATIONAL TRUCK AND ENGINE CORP.

https://truckmanualshub.com/

Figure 0MRV3

OWNER/OPERATOR MANUAL; NGV 7000 SERIES

Item	Part No.	Qty	Description	Kit	Var	Figure
5	3539134R91	1	AXLE ASM, FRT SPL COST CODE		0N5HH	
5	3539179R91	1	AXLE ASM, RR SPL COST CODE		0RSLY	
5	3557198C1	2	BAR, *BAR, WOOD SEAT SUPPORT		0RLQH	
20	1078152R2	1	PACKAGE,POLY BAG		0MRV3	
20	3527240R1	1	PRODUCT GRAPHIC,PL IDENT*CAB S		0MRV3	
20	3595349R2	1	MANUAL,OWNERS/OPERATORS,SPANSH		0MRVX	
50	3572282C1	50	STRAP,BINDING 3/4X.023 ESCOBED		0N0W6	
100	1385332R1	2	CLIP,BATT BANDING CLAMP		0N0W6	

COPYRIGHT© 2011INTERNATIONAL TRUCK AND ENGINE CORP.

https://truckmanualshub.com/

Figure 0N5Z1

PAINT, CAB & HOOD; SINGLE COLOR

Item	Part No.	Qty	Description	Kit	Var	Figure
5	3310000501	2	PAINT,ENAMEL OVENBAKE		0RBW6	
10	3310000017	1	SEALANT CLR CT URETHANEN		0RBW6	
15	3310000505	1	PAINT GAL		0RBW6	
20	3670552C1	1	PAINT, PRIMER, FIXODINE-ZN		0RCS2	
25	3670553C1	1	PAINT, PRIMER, BONDERITE 958 R		0RCS2	
30	3670554C1	1	PAINT, PRIMER, ACELERATOR 131		0RCS2	
35	3670555C1	1	PAINT, PRIMER, PARCOLENE 90 A		0RCS2	
40	U32CD033N	2	PAINT, PRIMER*		0RCS2	
45	U32AD290N	1	PAINT, PRIMER*		0RCS2	

COPYRIGHT© 2011INTERNATIONAL TRUCK AND ENGINE CORP.

https://truckmanualshub.com/

Figure 0KD5K

PRODUCT GRAPHIC; FRAME DRILLING & WELDING

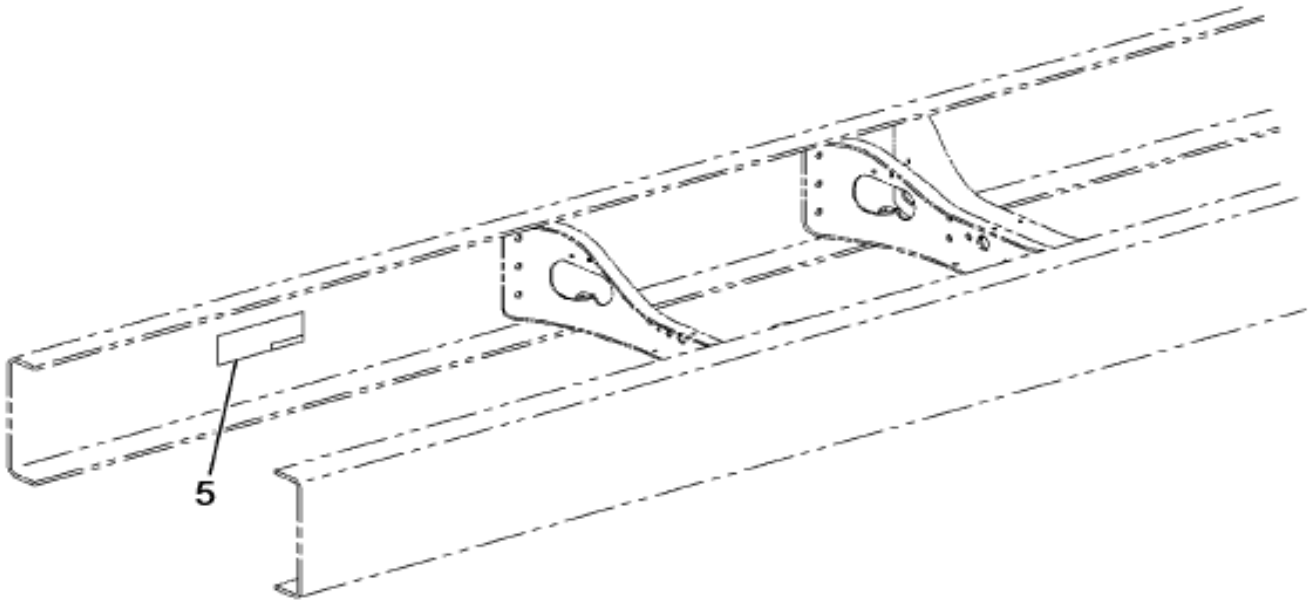

M-NGV
FRAME DRILLING
AND WELDING

10-534-0002-AA C09

Item	Part No.	Qty	Description	Kit	Var	Figure
5	3000069C2	1	PRODUCT GRAPHICS FR DRILL&WELD		0KD5M	

COPYRIGHT© 2011INTERNATIONAL TRUCK AND ENGINE CORP.

https://truckmanualshub.com/

Group 11
Clutch

COPYRIGHT© 2011INTERNATIONAL TRUCK AND ENGINE CORP.

https://truckmanualshub.com/

Figure 06VKP

CLUTCH CONTROLS MTG; HORIZONTAL LINK

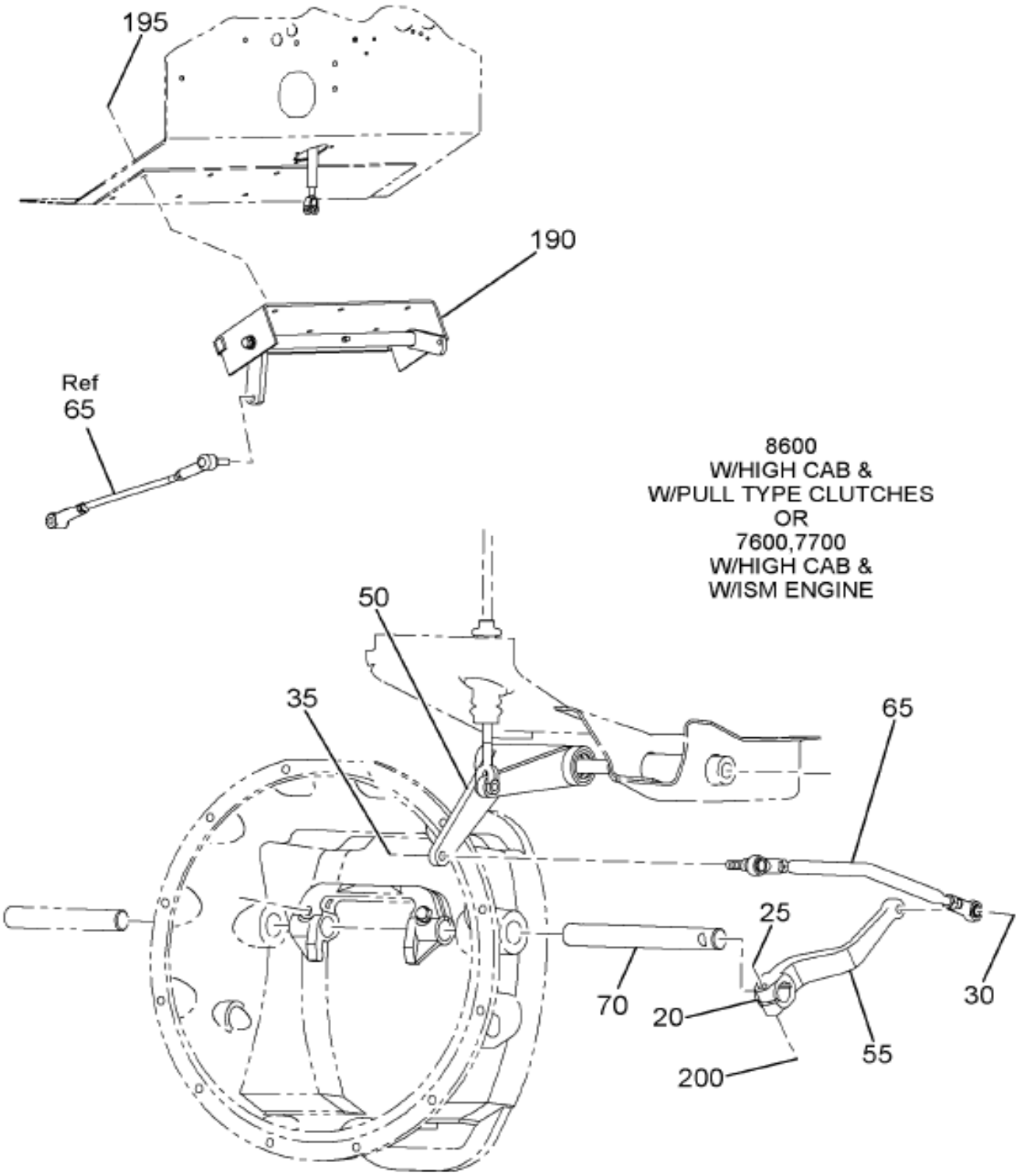

Item	Part No.	Qty	Description	Kit	Var	Figure
20	124553	1	KEY, 1/4 X 1 SAE 15 WOODRUFF		0G9BF	
25	30023R1	1	BOLT, M10 X 40 PHC CLASS 10.9		0G9BF	
25	933965R1	1	WASHER,LOCK 10MM		0G9BF	
30	30022R1	1	BOLT, M10 X 35 PHC CLASS 10.9		0G9BF	
30	933965R1	1	WASHER,LOCK 10MM		0G9BF	
35	30224R1	1	BOLT, M10 X 30 PHC P/T CLASS 1		0G9BF	

COPYRIGHT© 2011INTERNATIONAL TRUCK AND ENGINE CORP.

https://truckmanualshub.com/

Figure 06VKP

CLUTCH CONTROLS MTG; HORIZONTAL LINK

Item	Part No.	Qty	Description	Kit	Var	Figure
55	3532867C1	1	LEVER,CLUTCH RELEASE FORK SHAF		0G9BF	
65	3581044C91	1	ROD,CLUTCH CONTROL*LOWER ROD A		0G9BF	3581044C91

COPYRIGHT© 2011INTERNATIONAL TRUCK AND ENGINE CORP.

https://truckmanualshub.com/

Figure 3581044C91
ROD,CLUTCH CONTROL*LOWER ROD A

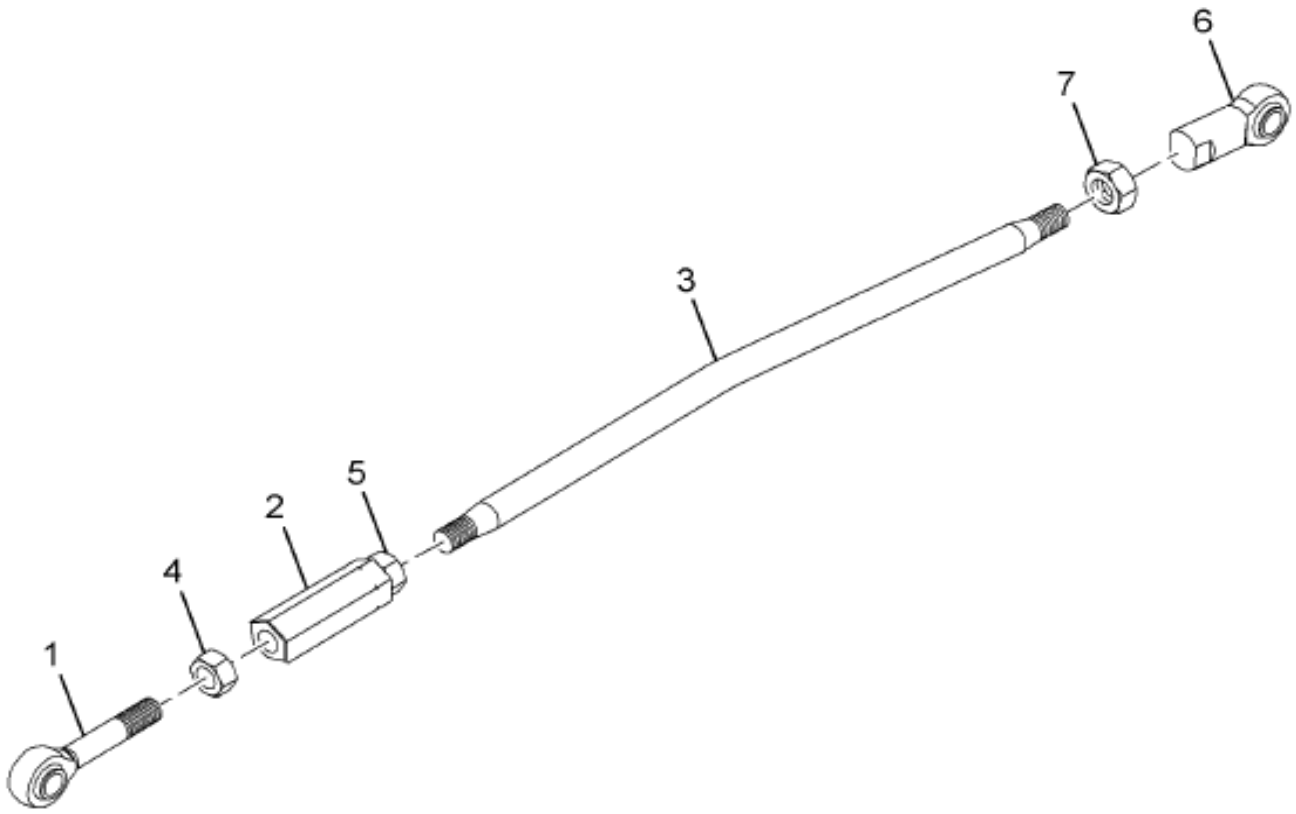

11-V05-0018-01 E06

Item	Part No.	Qty	Description	Kit	Var	Figure
1	3544399C1	1	JOINT,BALL*W/ MALE ROD END			
2	3544397C1	1	TURNBUCKLE CLUTCH CONTROL ROD*			
3	3581038C1	1	ROD,CLUTCH CONTROL*			
4	3532853C1	1	NUT,LOCK CLUTCH ADJ *M10X1.5 Z			
5	3532841C1	1	NUT,LOCK CLUTCH ADJ *LEFT HAND			
6	3532861C1	1	JOINT,BALL*W/O STUD			

COPYRIGHT© 2011INTERNATIONAL TRUCK AND ENGINE CORP.

https://truckmanualshub.com/

Figure 3581044C91

ROD,CLUTCH CONTROL*LOWER ROD A

Item	Part No.	Qty	Description	Kit	Var	Figure
7	30168R1	1	NUT, M10 PHC CLASS 10			
880		RF	NOTE: ASM BELOW COMPRISED OF ABOVE COMPONENTS			
881	3581044C91	RF	ROD,CLUTCH CONTROL*LOWER ROD A			

COPYRIGHT© 2011INTERNATIONAL TRUCK AND ENGINE CORP.

https://truckmanualshub.com/

Figure 06MG9
CLUTCH INSTL; DANA

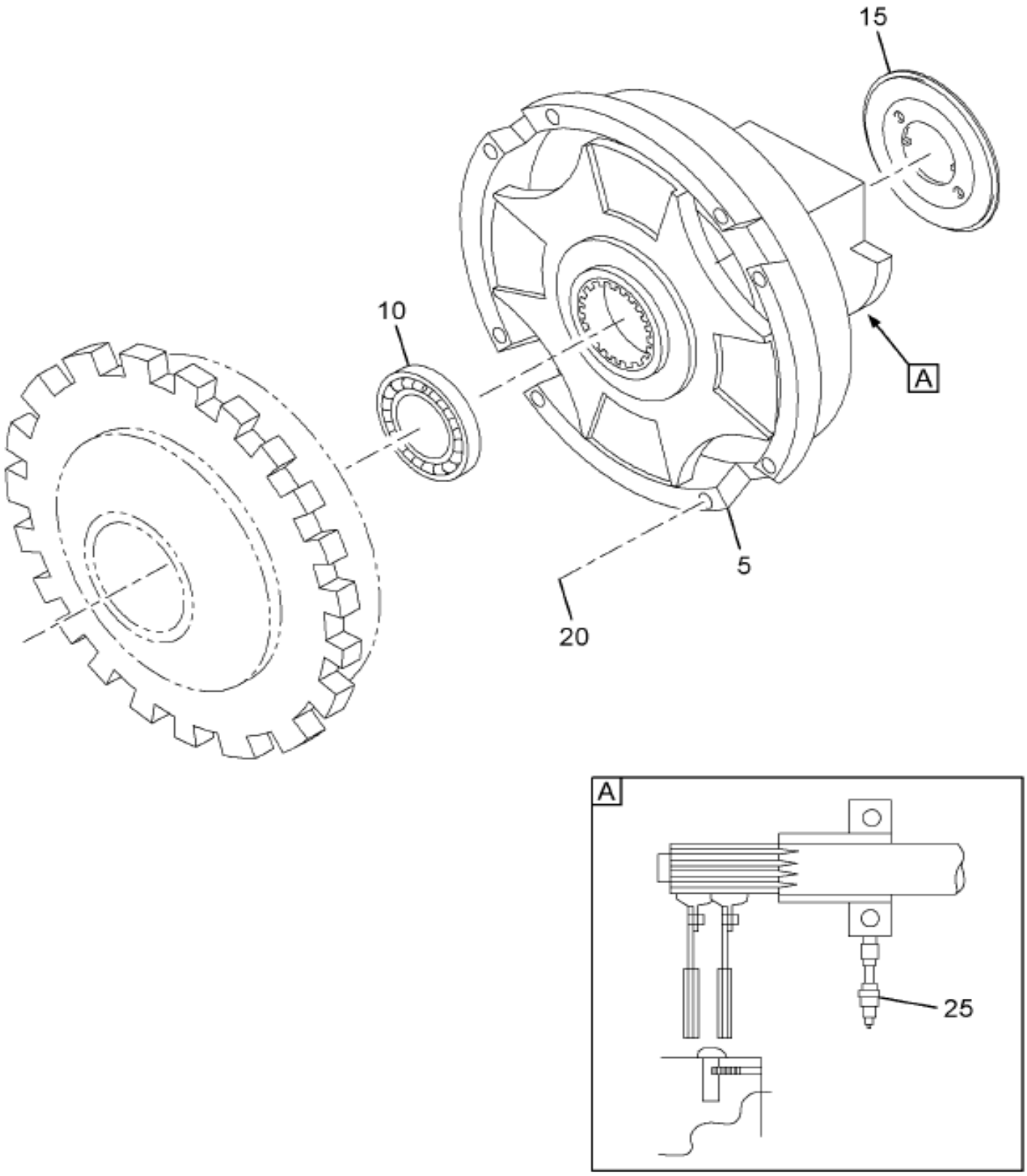

11-242-0015-01 K08

Item	Part No.	Qty	Description	Kit	Var	Figure
5	3893633C91	1	CLUTCH ASSY 15.5 EASY PEDAL		0YYGK	
10	3669091C1	1	BEARING,BALL, 1.18 X 2.83 DIA		0DGR1	
15	797700C1	1	DISC-CL BRK		07Q91	
20	24853R1	8	BOLT HH 7/16 X 2-1/2 PHC TYPE		07QD7	
20	120383	8	WASHER,LOCK 7/16",REG,STL/ZNC		07QD7	
25	586529C1	1	HOSE,FLEXIBLE GREASE		07Q92	

COPYRIGHT© 2011INTERNATIONAL TRUCK AND ENGINE CORP.

https://truckmanualshub.com/

Figure 06MG5

CLUTCH INSTL; DANA

Item	Part No.	Qty	Description	Kit	Var	Figure
25	3420H	1	WASHER,FLAT		07Q92	
25	581873R1	1	NUT,HEAD CLUTCH MAS CYL		07Q92	

COPYRIGHT© 2011INTERNATIONAL TRUCK AND ENGINE CORP.

https://truckmanualshub.com/

Figure 06LQ5

CLUTCH PEDAL & SHAFT INSTL; W/ OR W/O PEDAL

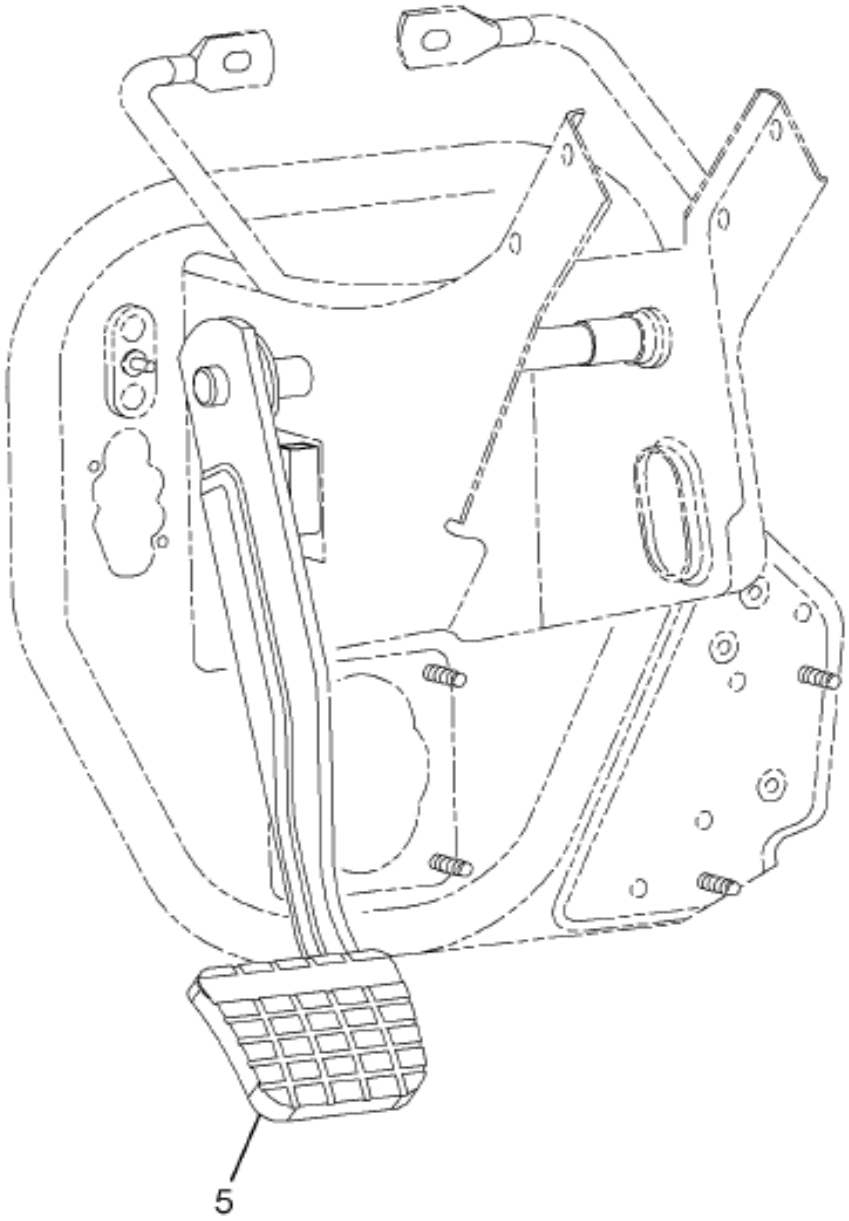

16-C12-0004-AA C10

Item	Part No.	Qty	Description	Kit	Var	Figure
5	3871566F91	1	PEDAL,CLUTCH (DCM)		0YNVG	3871566F91

COPYRIGHT© 2011INTERNATIONAL TRUCK AND ENGINE CORP.

https://truckmanualshub.com/

Figure 3871566F91
PEDAL,CLUTCH (DCM)

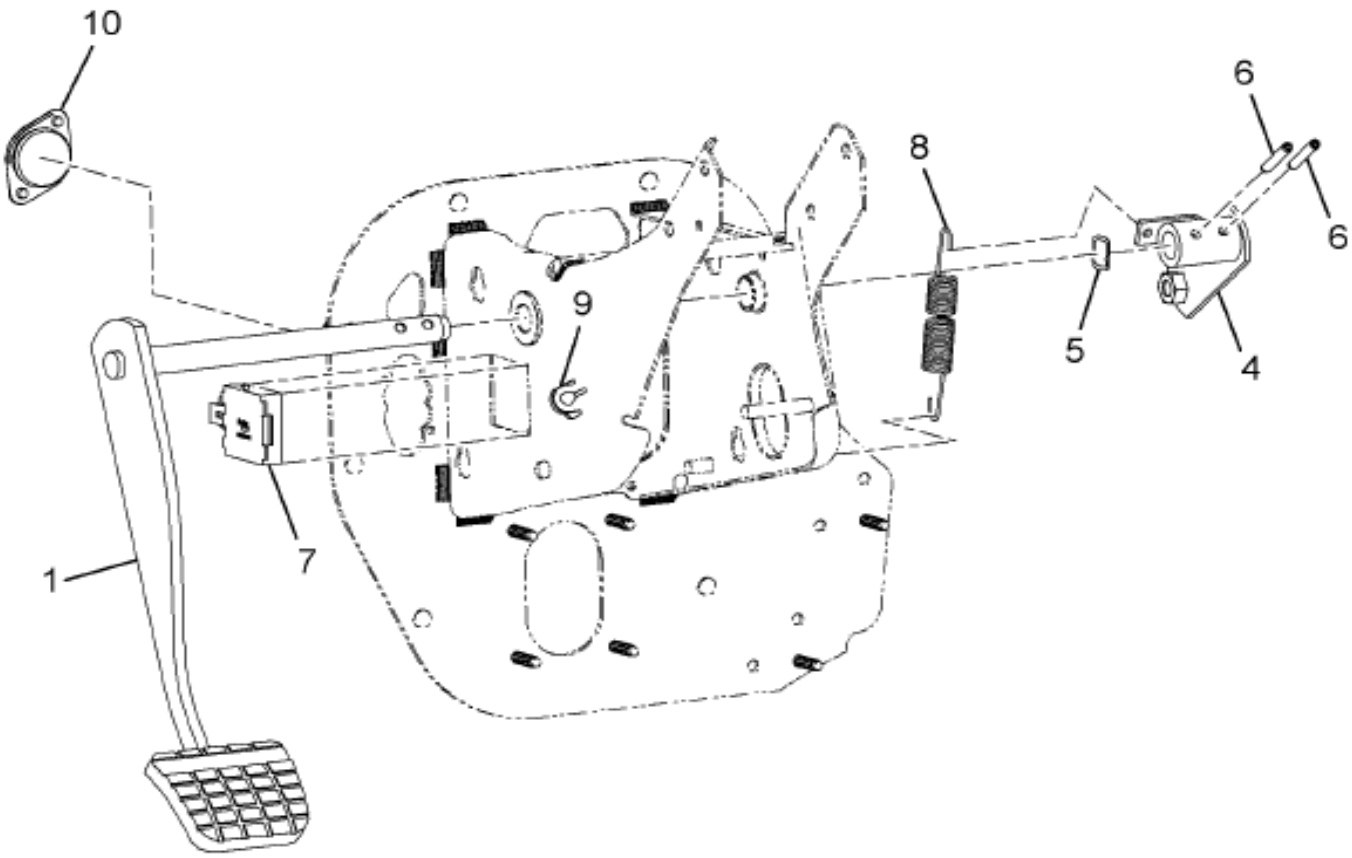

16-C12-0009-01 C10

Item	Part No.	Qty	Description	Kit	Var	Figure
1	2591704C1	1	PEDAL,CLUTCH			
4	2593309C1	1	BRACKET,CLU RELAY (BELLCRANK)			
5		1	WASHER,CLUTCH PEDAL SHAFT BRKT			
6	2593310C1	2	PIN,ROLL 1/4"OD X 1.5"			
7	3534031C1	1	SWITCH,CRUISE CLUTCH			
8	2505696C1	1	SPRING,PEDAL RETURN			

Grp 11

COPYRIGHT© 2011INTERNATIONAL TRUCK AND ENGINE CORP.

https://truckmanualshub.com/

Figure 3871566F91

PEDAL,CLUTCH (DCM)

Item	Part No.	Qty	Description	Kit	Var	Figure
9	2505694C1	1	BUMPER,PEDAL STOP			
10	2604385C1	1	GROMMET			
880		RF	NOTE: ASM BELOW COMPRISED OF ABOVE COMPONENTS			
881	3871566F91	RF	PEDAL,CLUTCH (DCM)			

COPYRIGHT© 2011INTERNATIONAL TRUCK AND ENGINE CORP.

https://truckmanualshub.com/

Figure 00VKH
INTMD CLUTCH CONTROLS; (LHD)

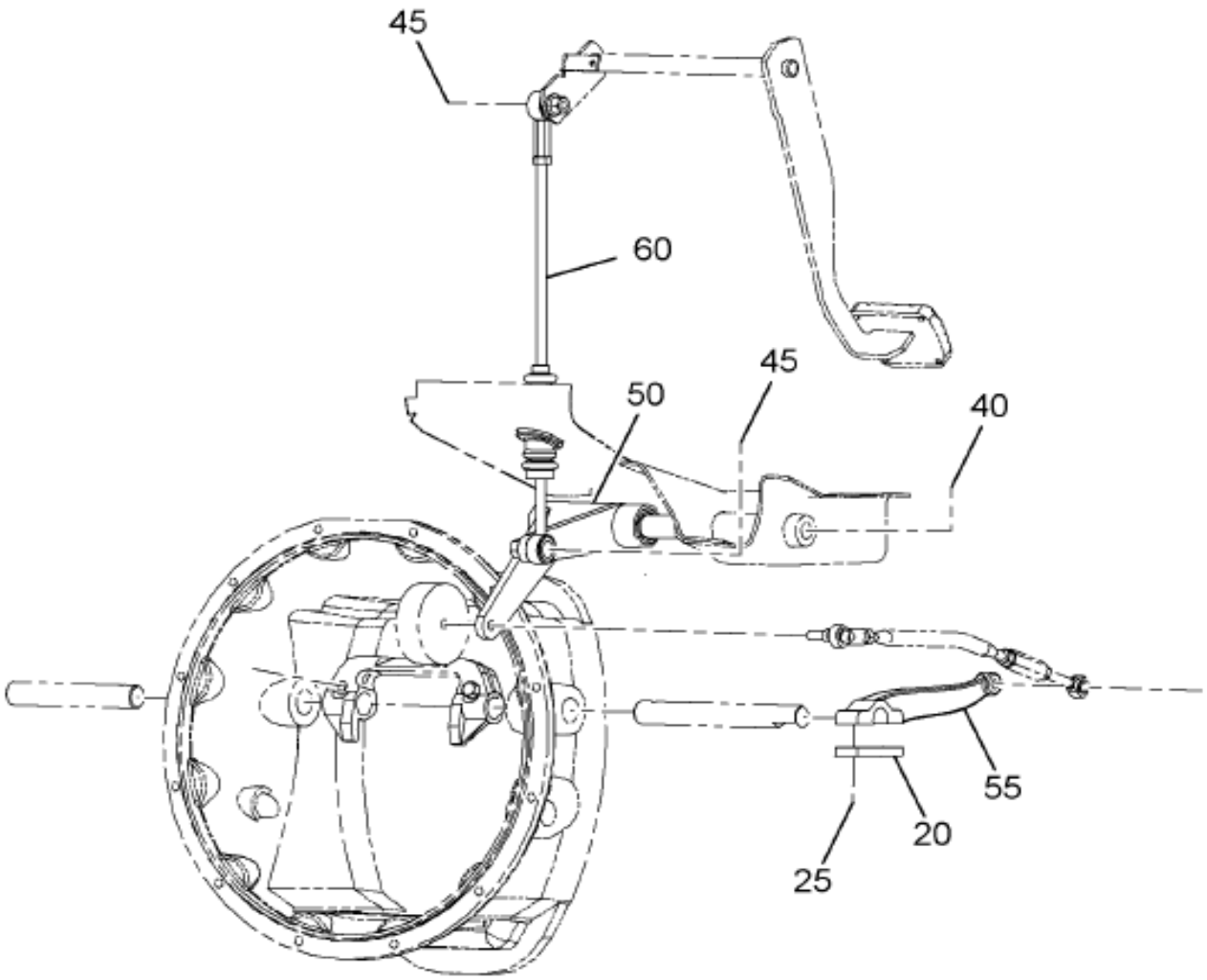

W/M-NGV
W/CAB-HGHT = L
CAB-HGHT = M

11-V04-0002-AB M10

Grp 11

Figure 1 of 2

COPYRIGHT© 2011INTERNATIONAL TRUCK AND ENGINE CORP.

https://truckmanualshub.com/

Figure 00VKH

INTMD CLUTCH CONTROLS; (LHD)

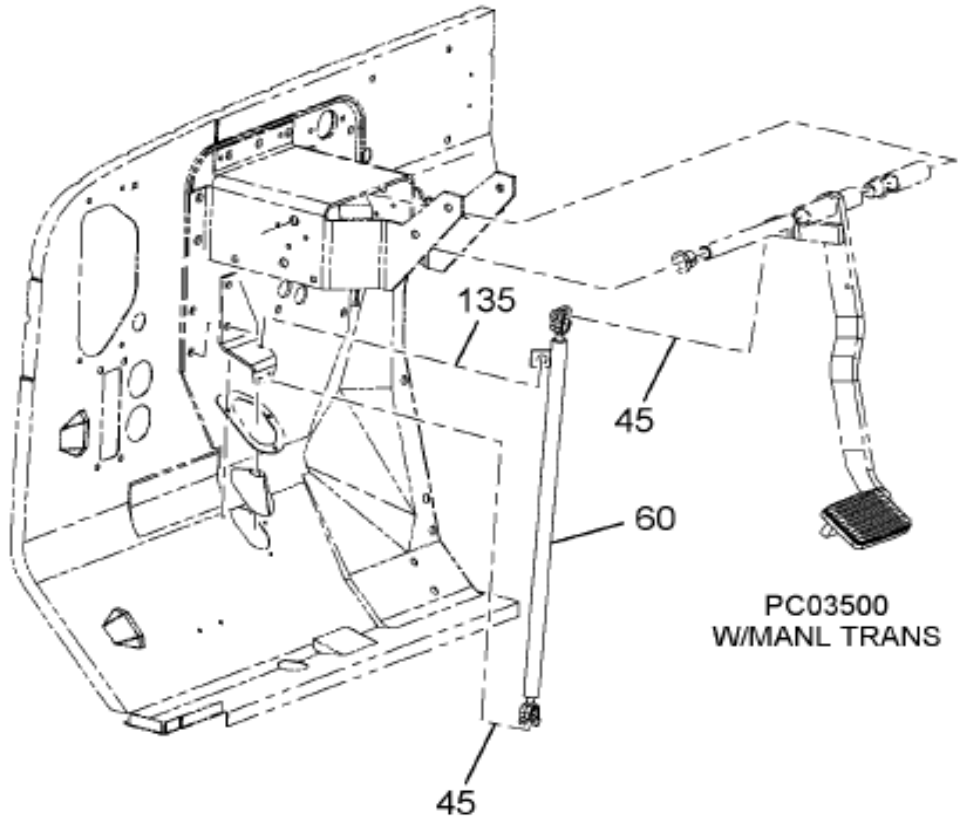

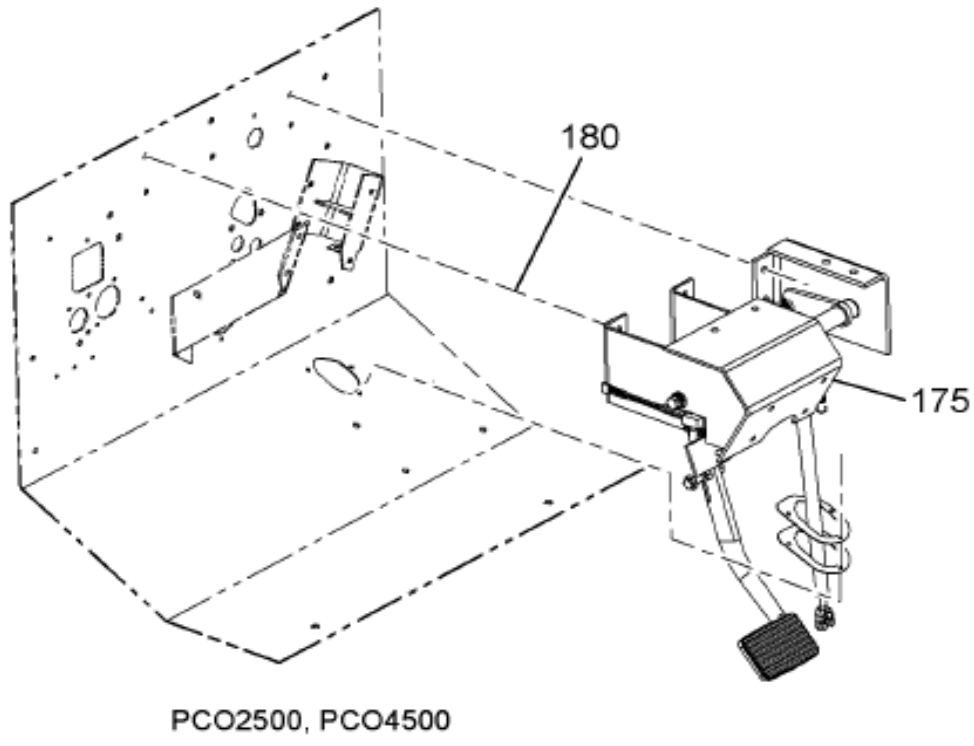

PCO2500, PCO4500

11-V04-0002-02 M10

Item	Part No.	Qty	Description	Kit	Var	Figure
40	30081R1	1	BOLT M16 X 160 PHC CLASS 10.9		0FXJW	
40	934185R1	1	WASHER, 16MM LOCK		0FXJW	
40	30329R1	1	WASHER, 17.3 X 30 X 4MM		0FXJW	
45	3545813C1	2	BOLT SHOULDER*18MM SHLD X 18MM		0FXJW	
50	3582272C91	1	LEVER,BELLCRANK CLUTCH CONT*AS		0FXJW	3582272C91
60	3544408C92	1	ROD, CLUTCH CONTROL ASSY		0FXJW	3544408C92

COPYRIGHT© 2011INTERNATIONAL TRUCK AND ENGINE CORP.

https://truckmanualshub.com/

Figure 3582272C91
LEVER,BELLCRANK CLUTCH CONT*AS

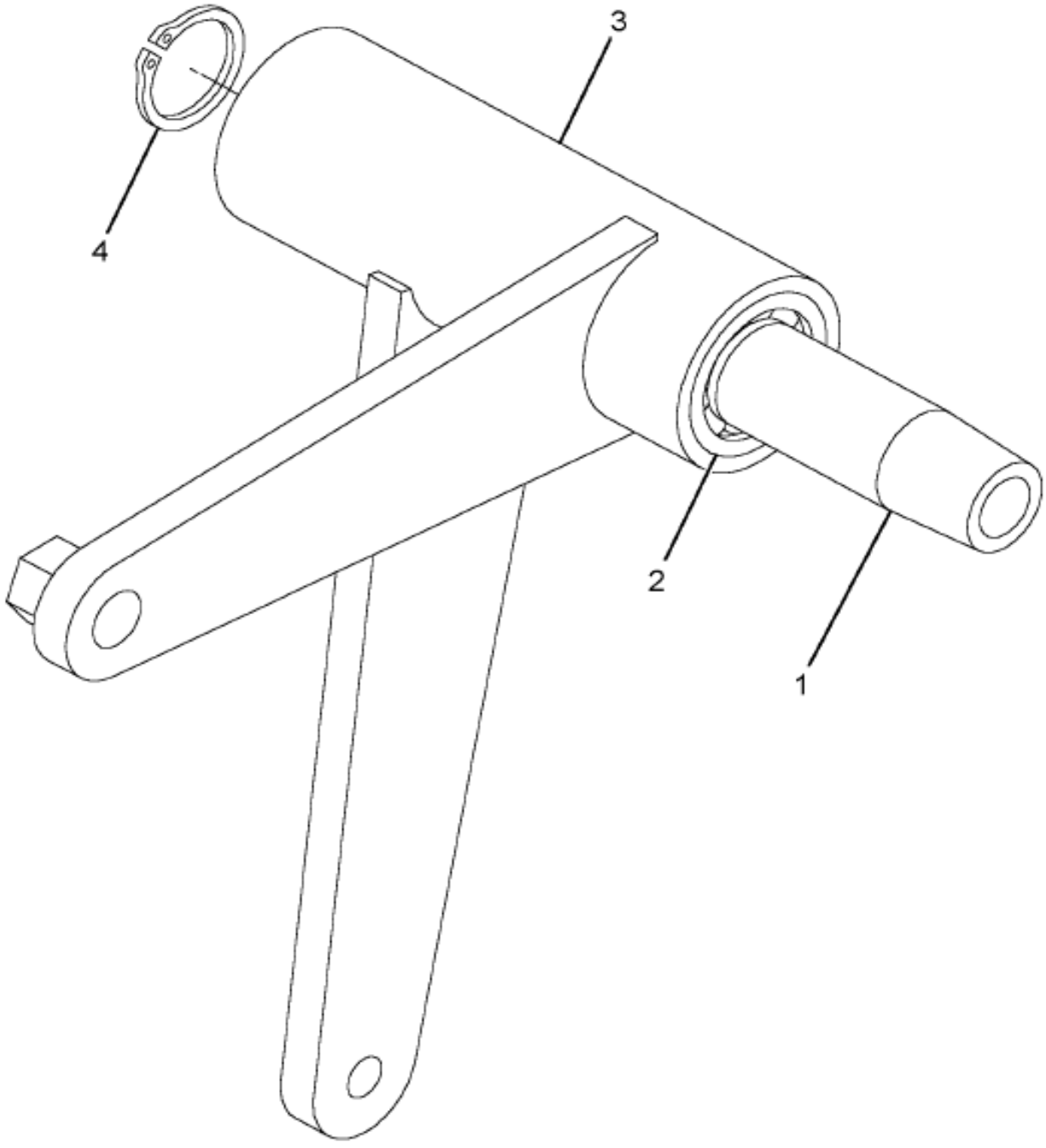

11-V04-0006-01 E03

Item	Part No.	Qty	Description	Kit	Var	Figure
1	3532849C1	1	SHAFT,CLUTCH RELAY LEVER*			
2	3532850C1	2	BEARING,BALL*			
3	3582292C1	1	TUBE,CLUTCH CONT LINK*ASSY			
4	934424R1	1	RING RTNG EXTERNAL*STD			
880		RF	NOTE: ASM BELOW COMPRISED OF ABOVE COMPONENTS			

Grp 11

COPYRIGHT© 2011INTERNATIONAL TRUCK AND ENGINE CORP.

https://truckmanualshub.com/

Figure 3582272C91

LEVER,BELLCRANK CLUTCH CONT*AS

Item	Part No.	Qty	Description	Kit	Var	Figure
881	3582272C91	RF	LEVER,BELLCRANK CLUTCH CONT*AS			

COPYRIGHT© 2011INTERNATIONAL TRUCK AND ENGINE CORP.

https://truckmanualshub.com/

Figure 3544408C92

ROD, CLUTCH CONTROL ASSY

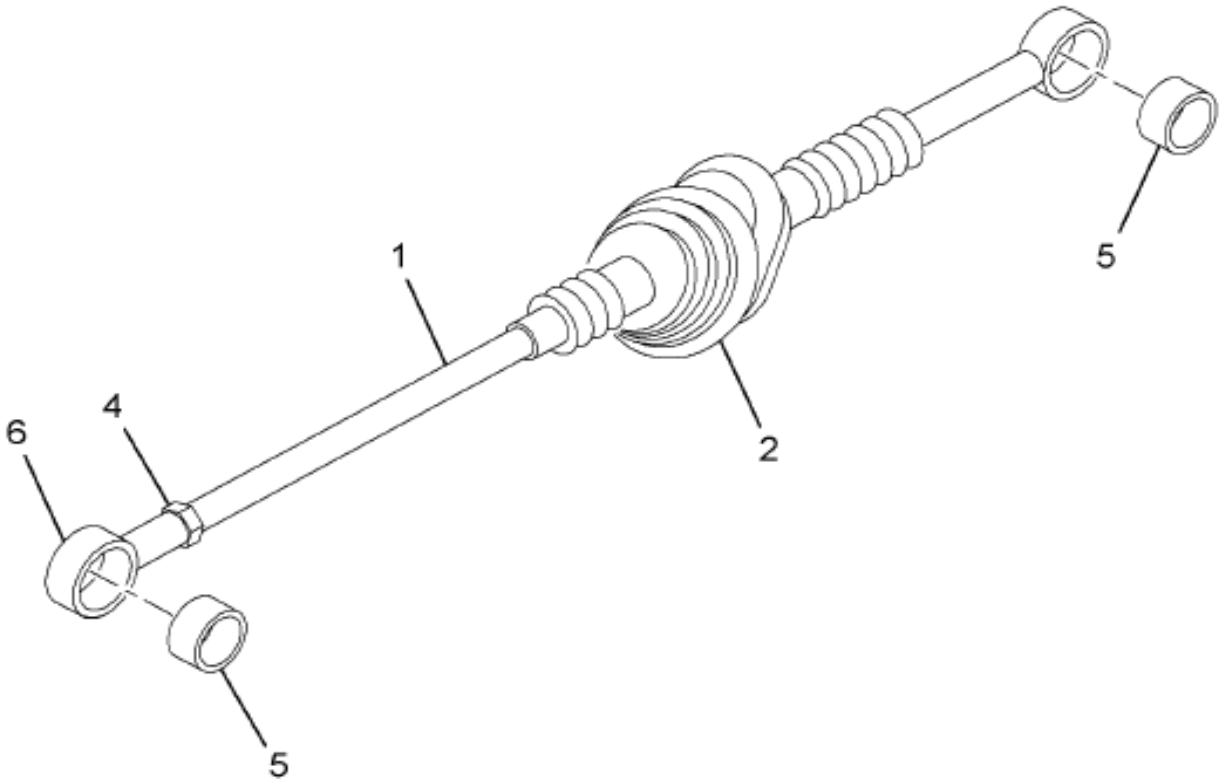

11-V04-0047-01 K11

Item	Part No.	Qty	Description	Kit	Var	Figure
1	3890242C1	1	ROD, CLUTCH CONTROL			
2	3536316C91	1	BOOT,CLUTCH ROD*ASSY			
4	3532853C1	1	NUT,LOCK CLUTCH ADJ *M10X1.5 Z			
5	3545812C1	2	BUSHING,CLUTCH RELAY LEVER*18M			
6	3544407C1	1	LINK,CLUTCH CONTROL*			
6	3890238C1	1	LINK,CLUTCH CONTROL,			

Grp 11

COPYRIGHT© 2011INTERNATIONAL TRUCK AND ENGINE CORP.

https://truckmanualshub.com/

Figure 3544408C92

ROD, CLUTCH CONTROL ASSY

Item	Part No.	Qty	Description	Kit	Var	Figure
880		RF	NOTE: ASM BELOW COMPRISED OF ABOVE COMPONENTS			
881	3544408C92	RF	ROD, CLUTCH CONTROL ASSY			

COPYRIGHT© 2011INTERNATIONAL TRUCK AND ENGINE CORP.

https://truckmanualshub.com/

Figure 06VL3

LOWER CLUTCH CONTROL INSTL

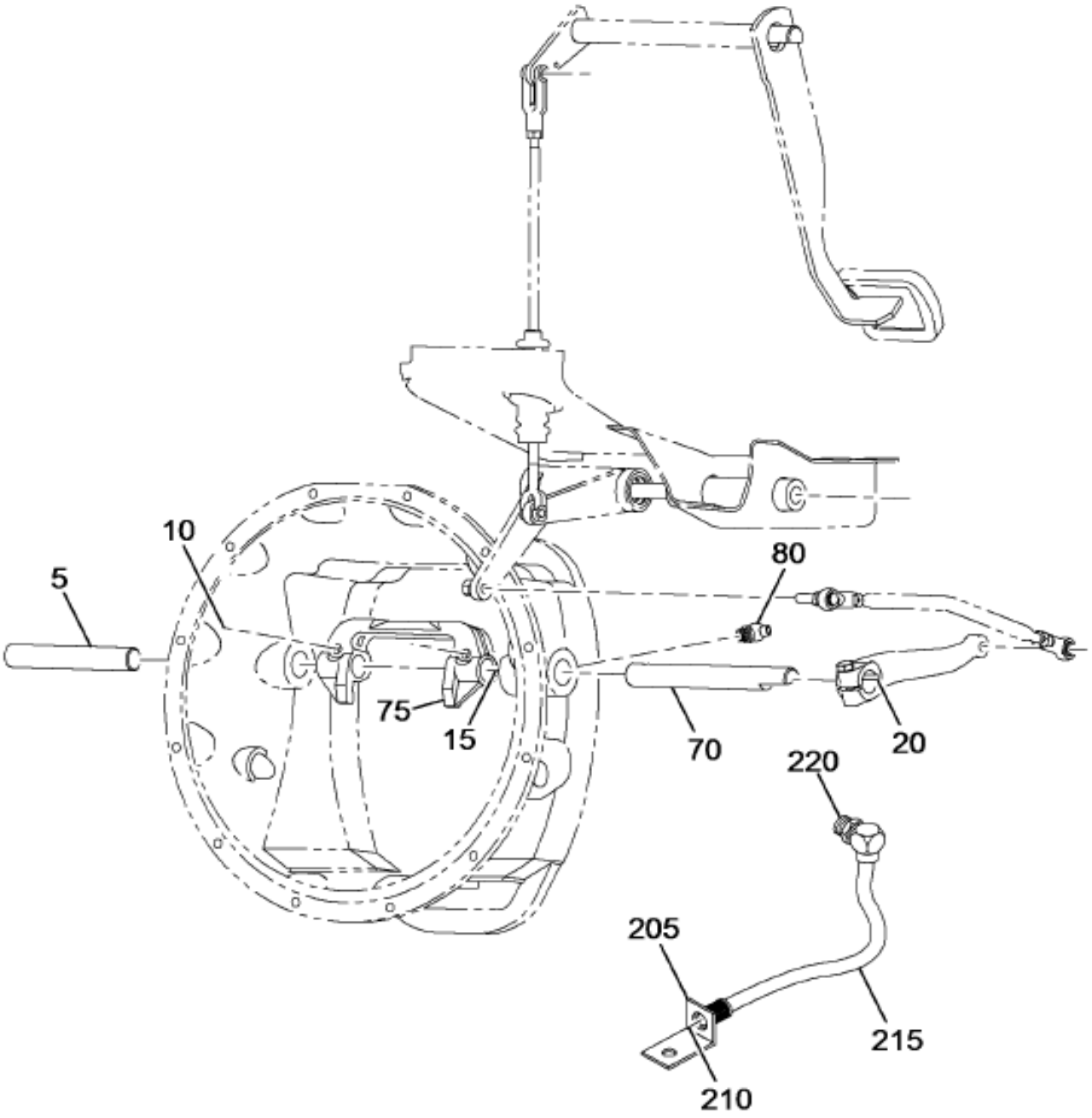

Grp 11

Figure 1 of 2

COPYRIGHT© 2011INTERNATIONAL TRUCK AND ENGINE CORP.

https://truckmanualshub.com/

Figure 06VL3

LOWER CLUTCH CONTROL INSTL

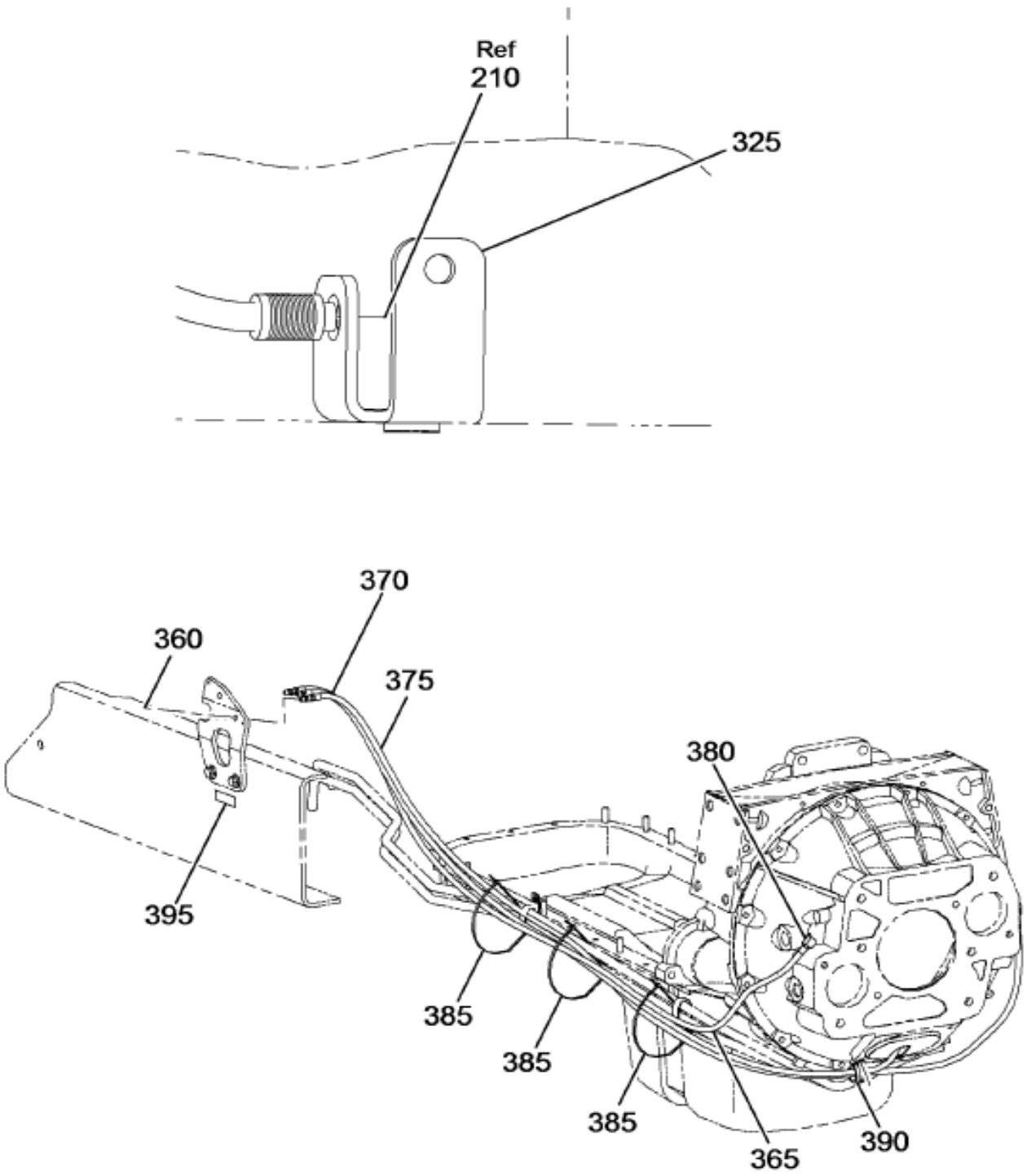

11-244-0044-01 M08

Item	Part No.	Qty	Description	Kit	Var	Figure
5	309129C1	1	SHAFT,CLUTCH REL FORK		0G9BV	
10	70427R1	2	BOLT 7/16 X 1-1/4 PHC TYPE 8		0G9BV	
15	32796VA	1	WASHER,SPECIAL KEY FOR TRANS		0G9BV	
70	3532871C1	1	SHAFT,CLUTCH REL FORK*		0G9BV	
75	697924R6	1	FORK,CLUTCH RELEASE		0DRS1	
80	126152	2	LUBRICATOR, 1/8 PTF SHORT 45D		0GGX1	

COPYRIGHT© 2011INTERNATIONAL TRUCK AND ENGINE CORP.

https://truckmanualshub.com/

Group 12
Engines

COPYRIGHT© 2011INTERNATIONAL TRUCK AND ENGINE CORP.

https://truckmanualshub.com/

Figure 0WW1M
ACCEL PEDAL ASM

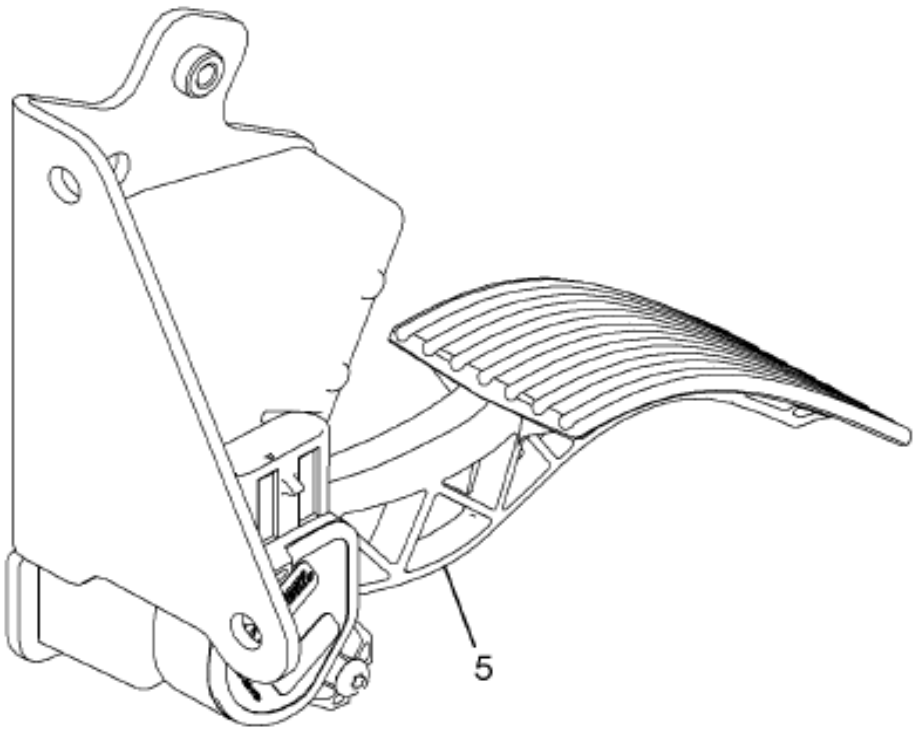

16-C11-0006-01 A09

Item	Part No.	Qty	Description	Kit	Var	Figure
5	3592631F93	1	PEDAL,ELECTRONIC ACCEL		0WW1M	3592631F93

COPYRIGHT© 2011INTERNATIONAL TRUCK AND ENGINE CORP.

https://truckmanualshub.com/

Figure 2596214C91
KIT,ACCEL PEDAL ASSY

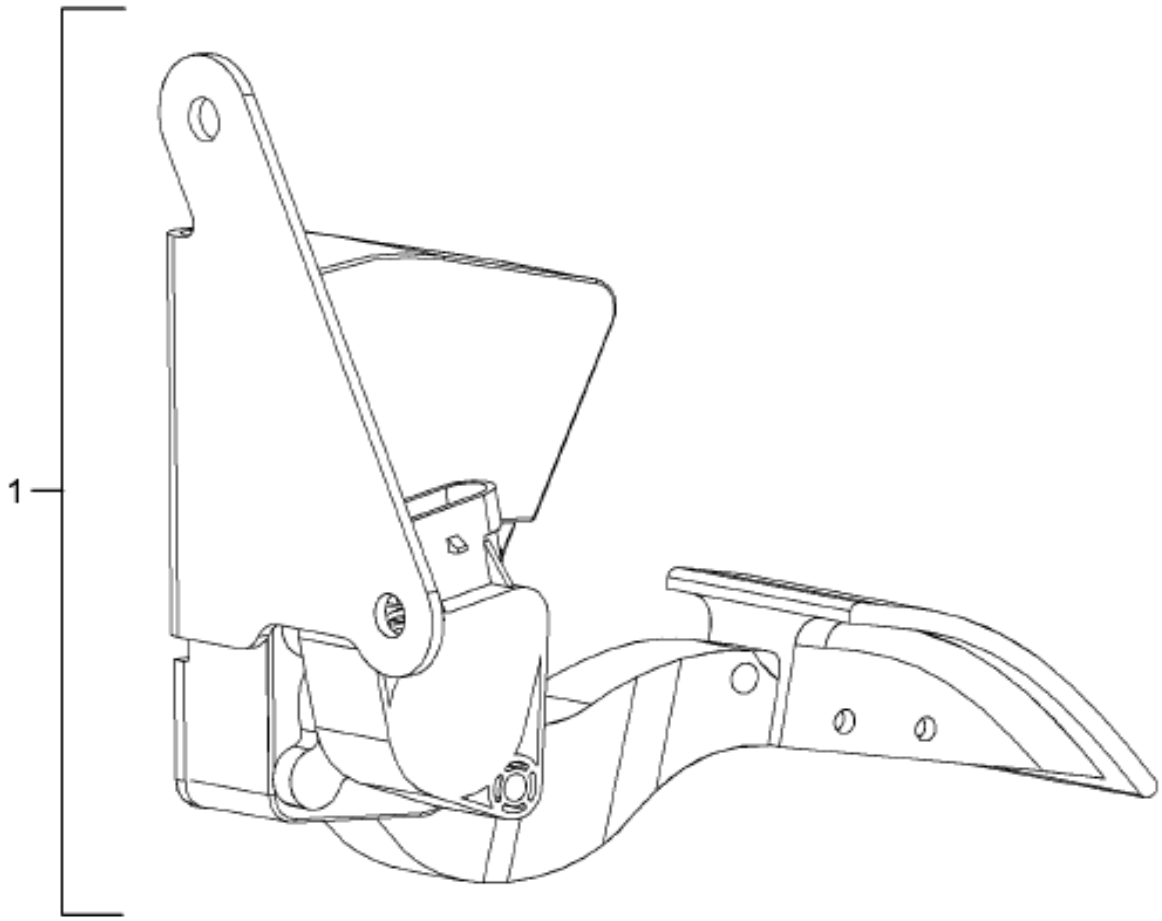

12-C11-0004-01 C05

Item	Part No.	Qty	Description	Kit	Var	Figure
1	2586248C91	KT	KIT,ACCEL SENSOR			
880		RF	NOTE: ASM BELOW COMPRISED OF ABOVE COMPONENTS			
881	2596214C91	RF	KIT,ACCEL PEDAL ASSY			

Grp 12

COPYRIGHT© 2011INTERNATIONAL TRUCK AND ENGINE CORP.

https://truckmanualshub.com/

Figure 3592631F93
PEDAL,ELECTRONIC ACCEL

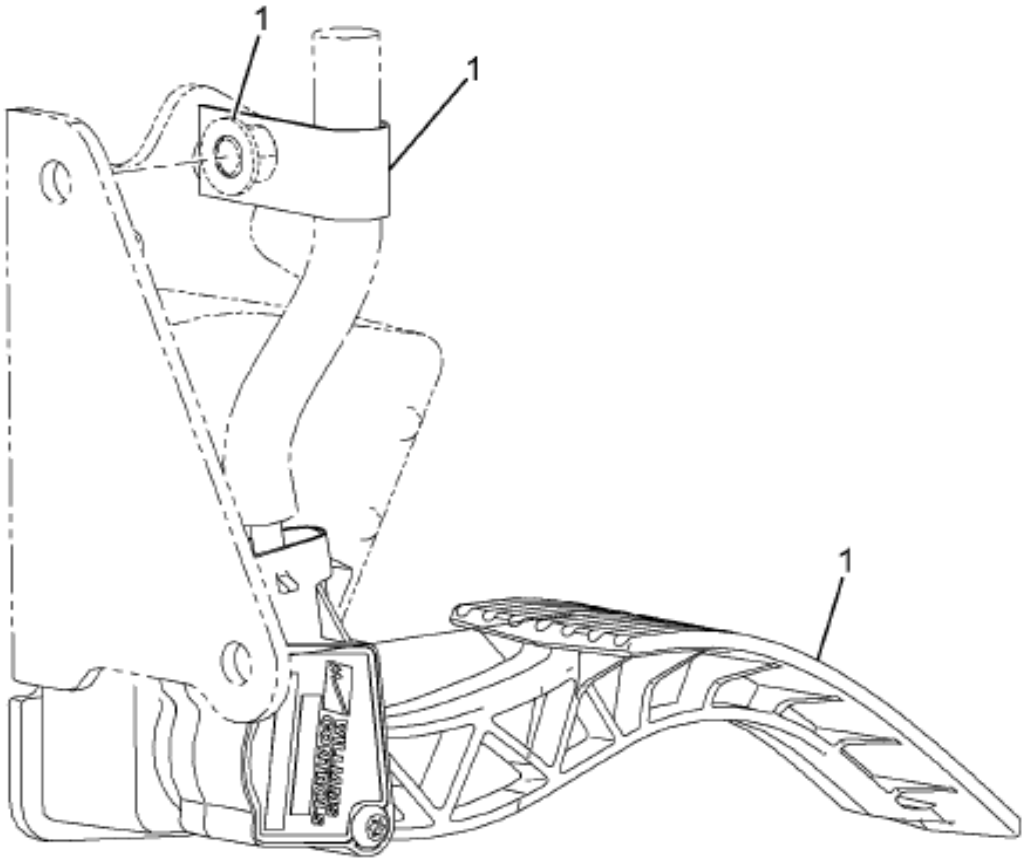

16-C11-0003-01 J07

Item	Part No.	Qty	Description	Kit	Var	Figure
1	2596214C91	KT	KIT,ACCEL PEDAL ASSY			2596214C91
880		RF	NOTE: ASM BELOW COMPRISED OF ABOVE COMPONENTS			
881	3592631F93	RF	PEDAL,ELECTRONIC ACCEL			

COPYRIGHT© 2011INTERNATIONAL TRUCK AND ENGINE CORP.

https://truckmanualshub.com/

Figure 0RRLX

AIR CLEANER INSTL

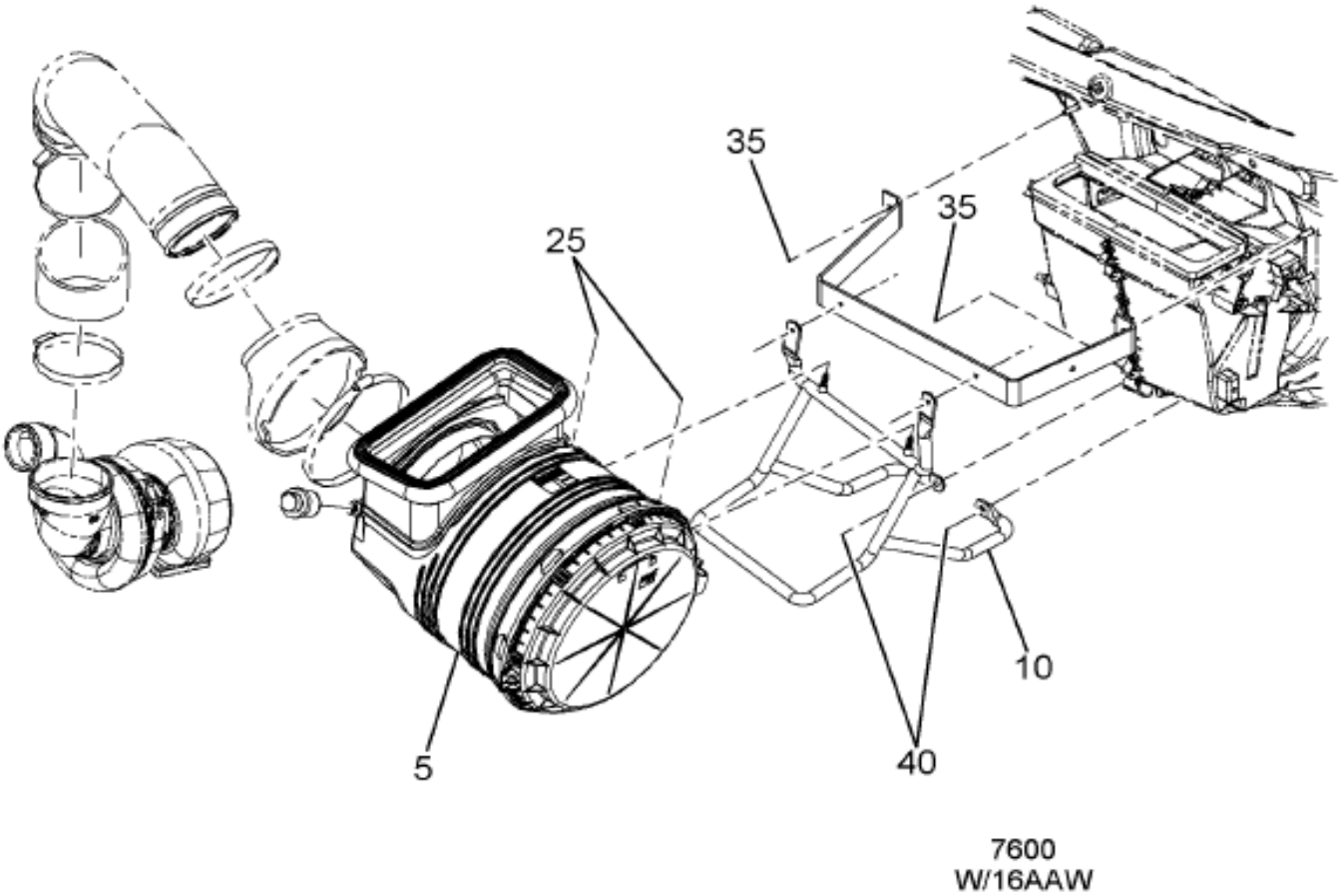

12-636-0144-01 C09

Item	Part No.	Qty	Description	Kit	Var	Figure
5	3605668C91	1	CLEANER ASM AIR DRY TYPE W/PR		0RRML	3605668C91
10	3674350C1	1	SUPPORT, ASSY,AIR CLEANER		0RRLX	
25	3535162C1	2	NUT,HEX METRIC PREV. TORQ*M8 X		0RRLX	
35	3535162C1	2	NUT,HEX METRIC PREV. TORQ*M8 X		0RRLX	
40	31054R1	2	BOLT, M8 X 20 PHC CL 8.8 FLG/H		0RRLX	

Grp 12

COPYRIGHT© 2011INTERNATIONAL TRUCK AND ENGINE CORP.

https://truckmanualshub.com/

Figure 3605668C91
CLEANER ASM AIR DRY TYPE W/PR

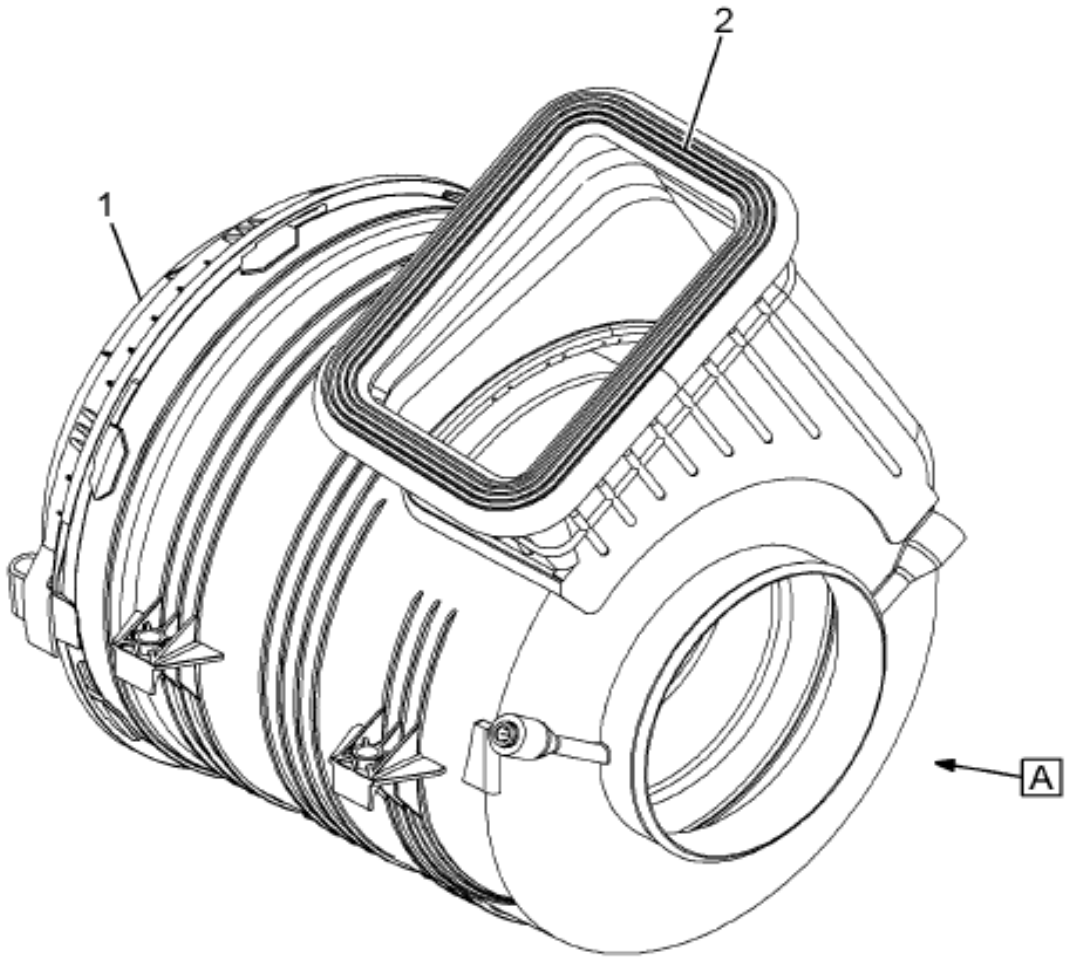

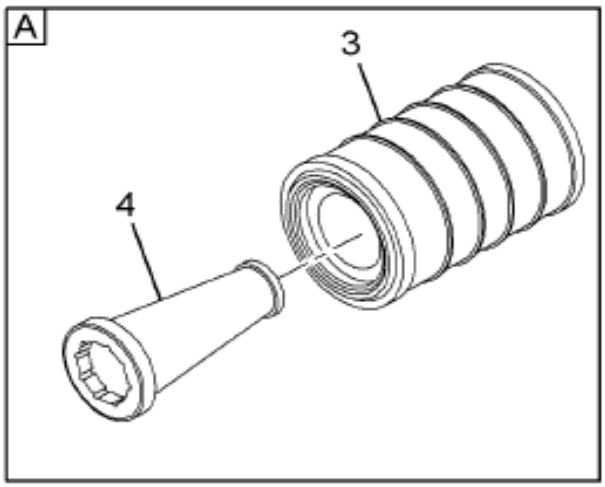

12-636-0103-01 M06

Item	Part No.	Qty	Description	Kit	Var	Figure
1	2589518C1	1	COVER,AIR CLEANER W/DEV			
2	2589517C1	1	SEAL INLET AIR CLEANER			
3	3551816C1	1	ELEMENT,AIR CLEANER PRIMARY W/			
4	3551815C1	1	ELEMENT,AIR CLEANER			
880		RF	NOTE: ASM BELOW COMPRISED OF ABOVE COMPONENTS			

COPYRIGHT© 2011INTERNATIONAL TRUCK AND ENGINE CORP.

https://truckmanualshub.com/

Figure 3605668C91
CLEANER ASM AIR DRY TYPE W/PR

Item	Part No.	Qty	Description	Kit	Var	Figure
881	3605668C91	RF	CLEANER ASM AIR DRY TYPE W/PR			

COPYRIGHT© 2011INTERNATIONAL TRUCK AND ENGINE CORP.

https://truckmanualshub.com/

Figure 0RREV

AIR CLEANER PIPING INSTL; CLEAN AIR DUCT W/CAT & ISM EXP ENG

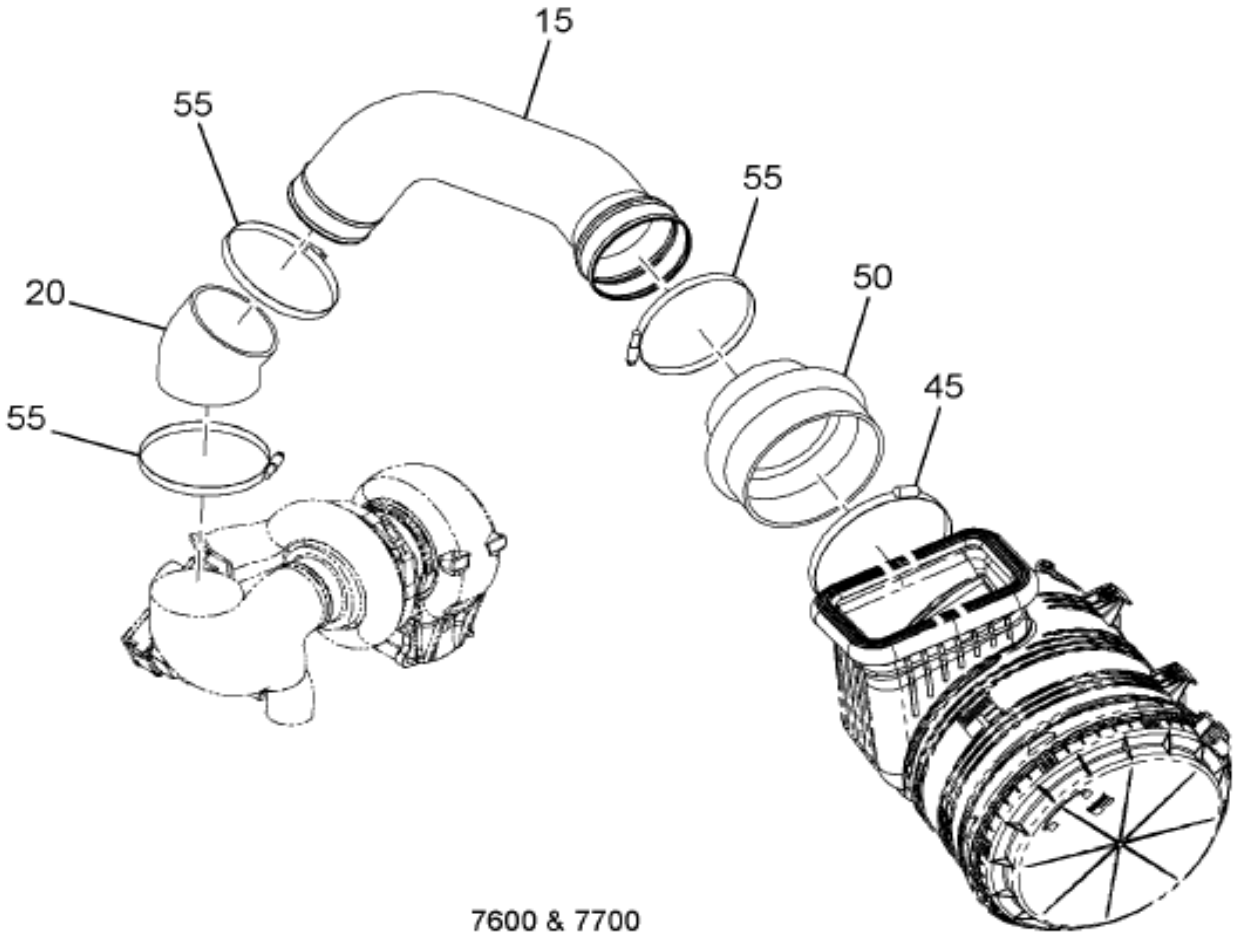

7600 & 7700
W/F-2007-ACERT-C11-ENG
F-2007-ACERT-C13-ENG

12-251-0228-01 E08

Item	Part No.	Qty	Description	Kit	Var	Figure
15	3672937C1	1	PIPE,AIR, CLEAN AIR PIPE		0RRM0	
20	3626313C1	1	HOSE,AIR CLEANER, ELBOW, 90 DE		0RRM0	
45	576183C1	1	CLAMP,HOSE,HI-TORQUE		0RRM0	
50	542233C1	1	HOSE,HUMP REDUCER		0RRM0	
55	2002612C1	3	CLAMP,AIR CLEANER TUBE OR PIPE		0RRM0	

COPYRIGHT© 2011INTERNATIONAL TRUCK AND ENGINE CORP.

https://truckmanualshub.com/

Figure 0M9RN

AIR RECIRC SEALS; RADIATOR, (ABR#6)

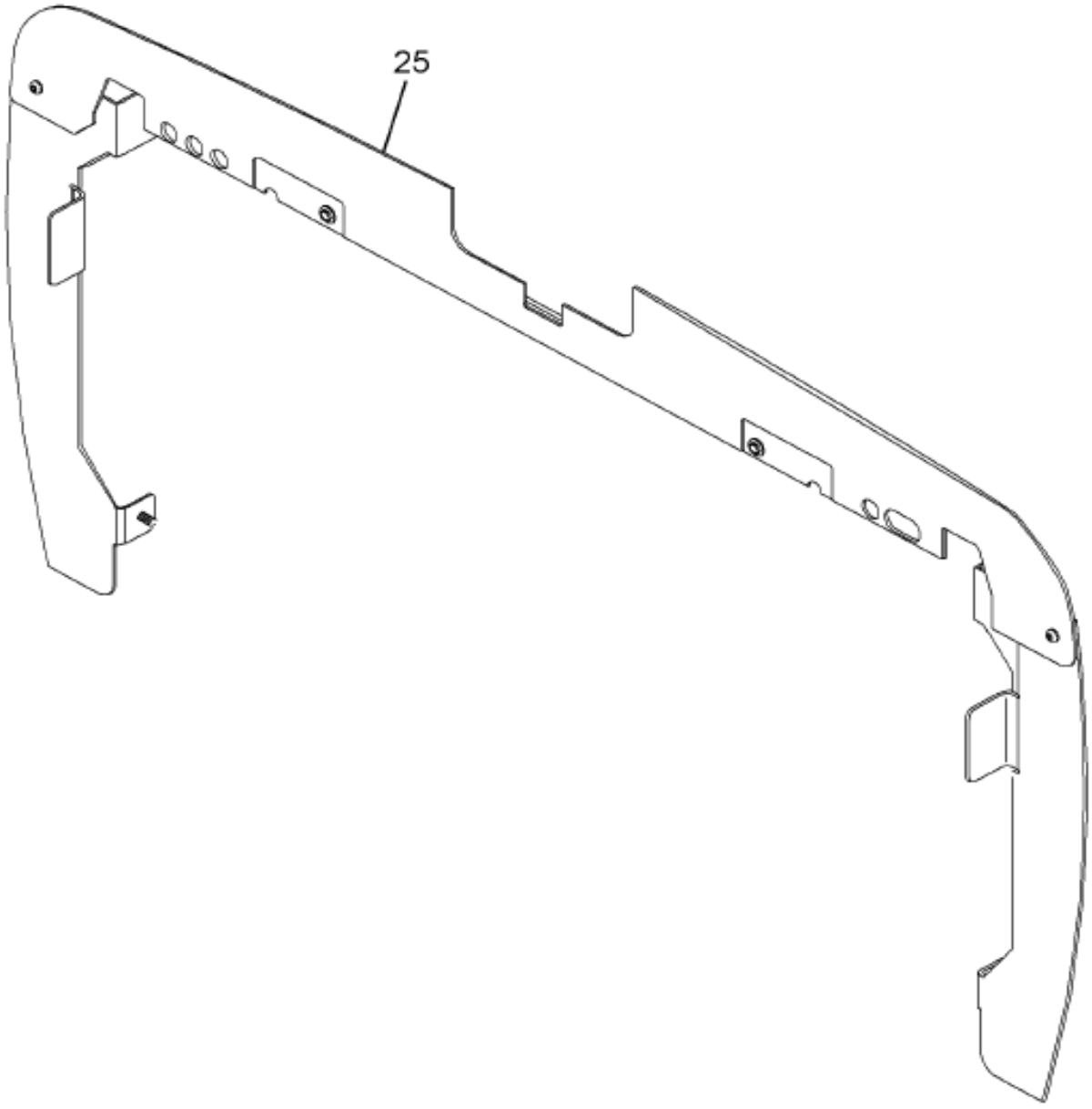

12-C06-0065-01 L06

Item	Part No.	Qty	Description	Kit	Var	Figure
25	3605576F94	1	RADIATOR, RECIRCULATION SEA		0M9VK	

COPYRIGHT© 2011INTERNATIONAL TRUCK AND ENGINE CORP.

https://truckmanualshub.com/

Figure 0RRLW
AIR RESTRICTION GAUGE INSTL

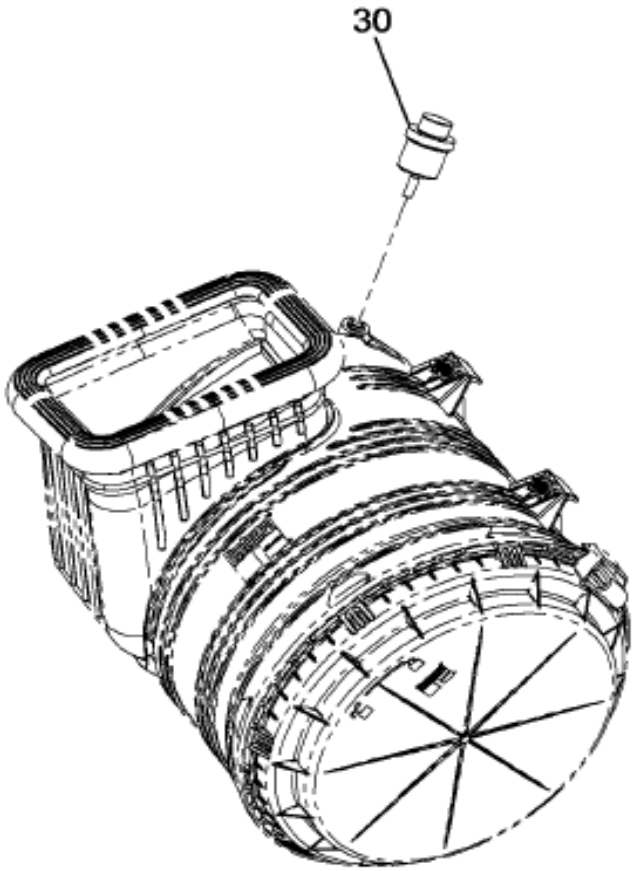

7600 & 7700
W/INTL 16 HD ENG

12-252-0070-01 C08

Figure 1 of 2

COPYRIGHT© 2011INTERNATIONAL TRUCK AND ENGINE CORP.

https://truckmanualshub.com/

Figure 0RRLW

AIR RESTRICTION GAUGE INSTL

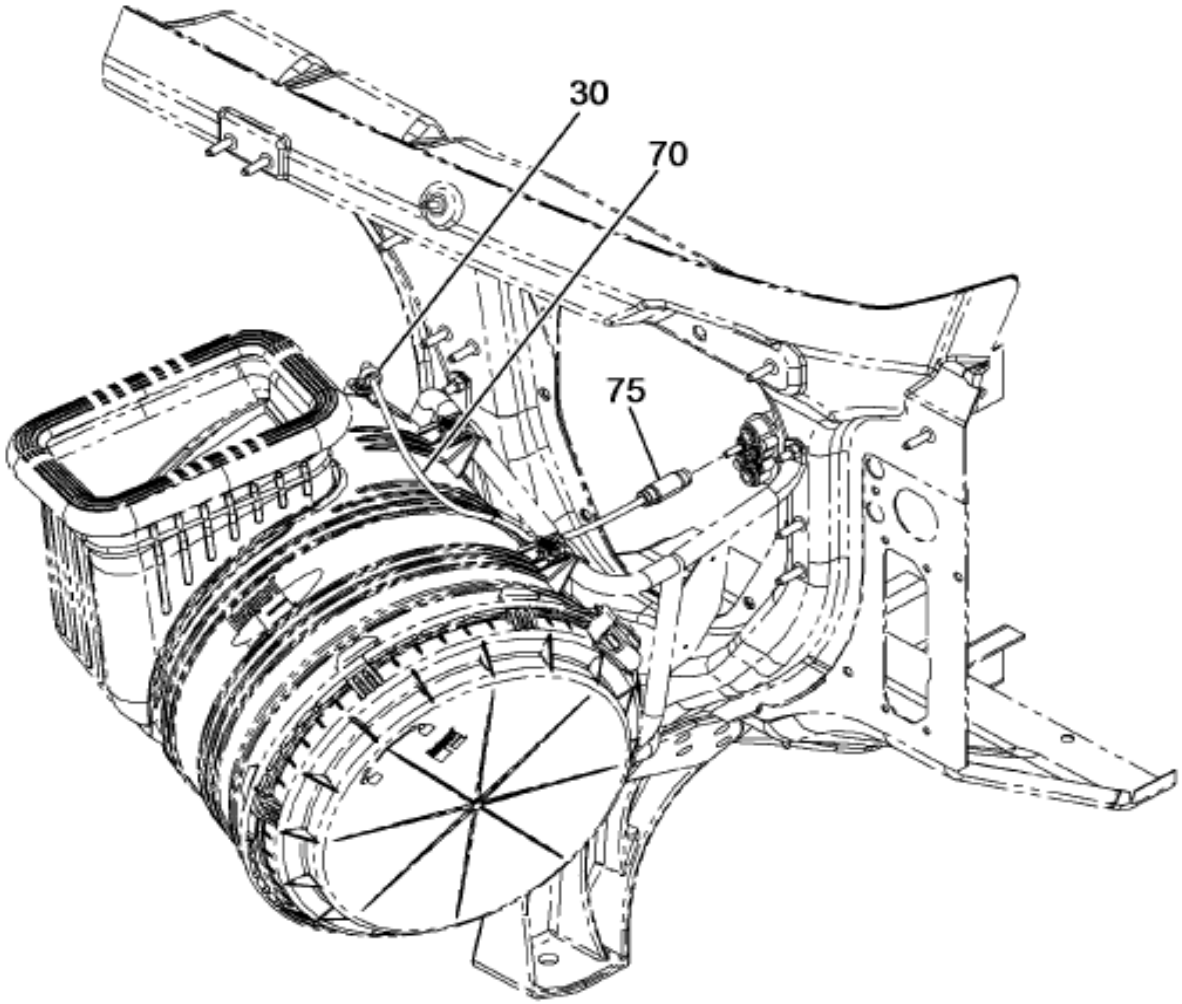

M-NGV-SS-HDD
W/0016HHE, 0016HHG

12-252-0076-01 E09

Item	Part No.	Qty	Description	Kit	Var	Figure
30	2024445C1	1	ELBOW,PUSH TO CONNECT*		0RRM3	
70	417196C3		TUBE,NYLON BULK 1/4 OD BLACK		0RRM3	
75	3843825C1	1	COUPLING,1/4" QUALITY CONNECT		0RRM3	

Grp 12

COPYRIGHT© 2011INTERNATIONAL TRUCK AND ENGINE CORP.

https://truckmanualshub.com/

Figure 0MBR3

CAC PIPING INSTL; CUM ISM ENG

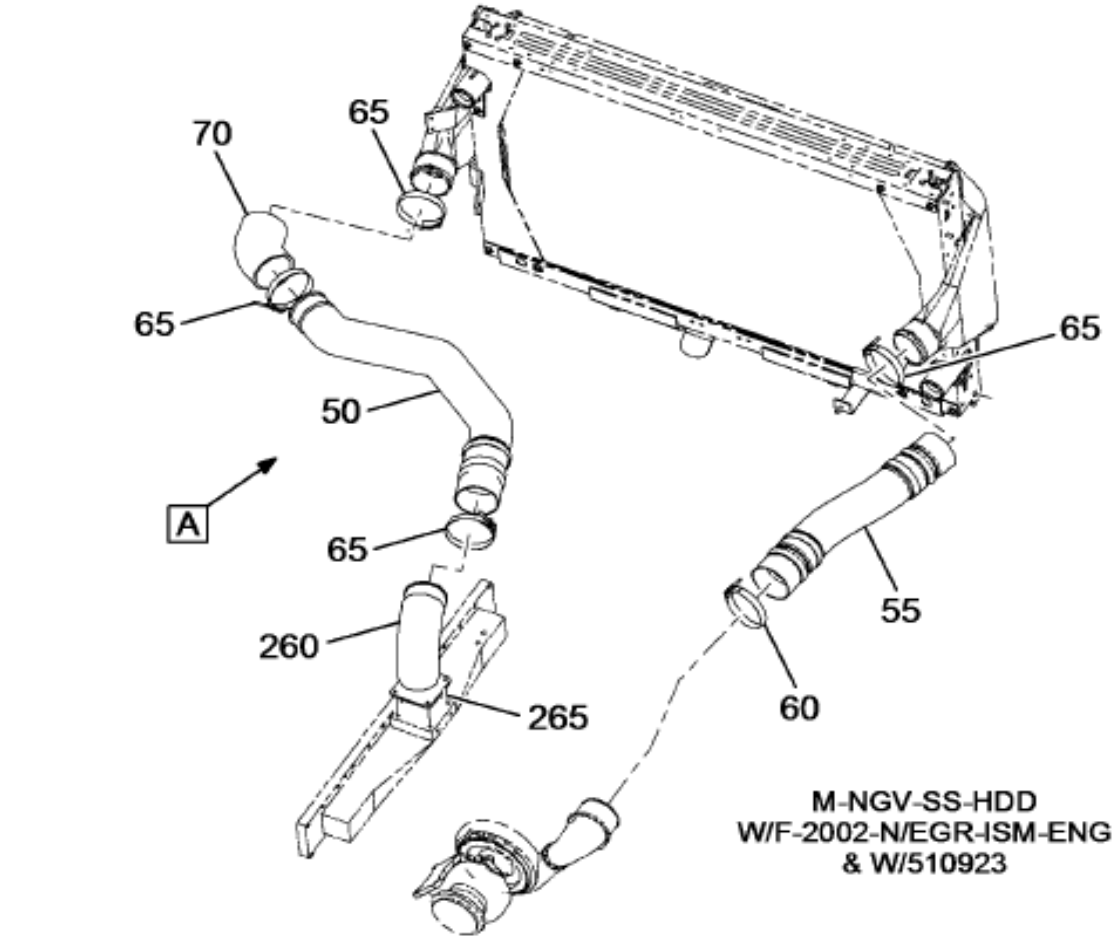

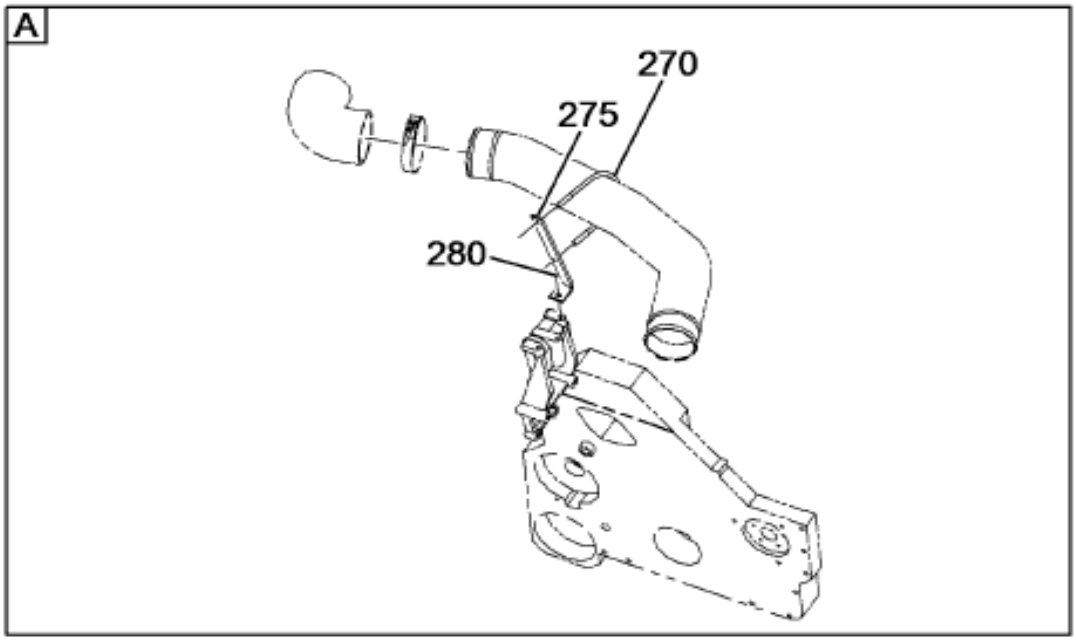

12-719-0537-01 F11

Item	Part No.	Qty	Description	Kit	Var	Figure
50	3674477C91	1	PIPE,AIR, CAC COLD SIDE, ASSY		0RNC3	3674477C91
55	3674177C91	1	PIPE,AIR, CAC HOT SIDE, ASSY		0RNC3	3674177C91
60	3557858C1	2	CLAMP HEAT EXCHANGER		0RNC3	
65	2005763C91	3	CLAMP,CAC HOSE		0RNC3	
70	2037238C1	1	HOSE,AIR CLEANER		0RNC3	
260	3672621C1	1	PIPE,AIR, COOLER TO MANIFOLD		0RNC3	

COPYRIGHT© 2011INTERNATIONAL TRUCK AND ENGINE CORP.

https://truckmanualshub.com/

Figure 0MBR3

CAC PIPING INSTL; CUM ISM ENG

Item	Part No.	Qty	Description	Kit	Var	Figure
265	30020R1	4	BOLT, M10 X 25 PHC CLASS 10.9		0RNC3	
265	25846R1	4	WASHER,FLAT 7/16		0RNC3	
265	120383	4	WASHER,LOCK 7/16",REG,STL/ZNC		0RNC3	

COPYRIGHT© 2011INTERNATIONAL TRUCK AND ENGINE CORP.

https://truckmanualshub.com/

Figure 3674477C91
PIPE,AIR, CAC COLD SIDE, ASSY

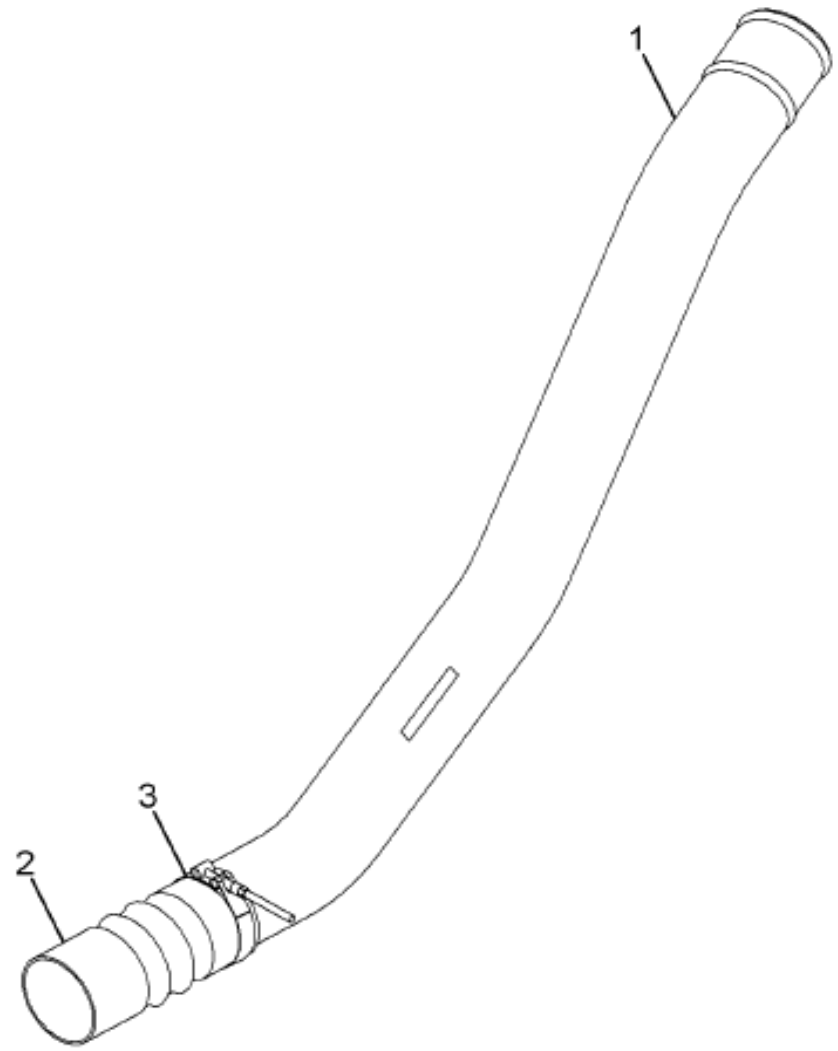

12-719-0442-01 E08

Item	Part No.	Qty	Description	Kit	Var	Figure
1	3674476C1	1	PIPE,AIR, CAC COLD SIDE			
2	3582899C2	1	HOSE,TURBO CHARGER, 4" DIA. G			
3	1517672C91	1	CLAMP,AIR DUCT HOSE (T-BOLT)			
880		RF	NOTE: ASM BELOW COMPRISED OF ABOVE COMPONENTS			
881	3674477C91	RF	PIPE,AIR, CAC COLD SIDE, ASSY			

COPYRIGHT© 2011INTERNATIONAL TRUCK AND ENGINE CORP.

https://truckmanualshub.com/

Figure 3674177C91
PIPE,AIR, CAC HOT SIDE, ASSY

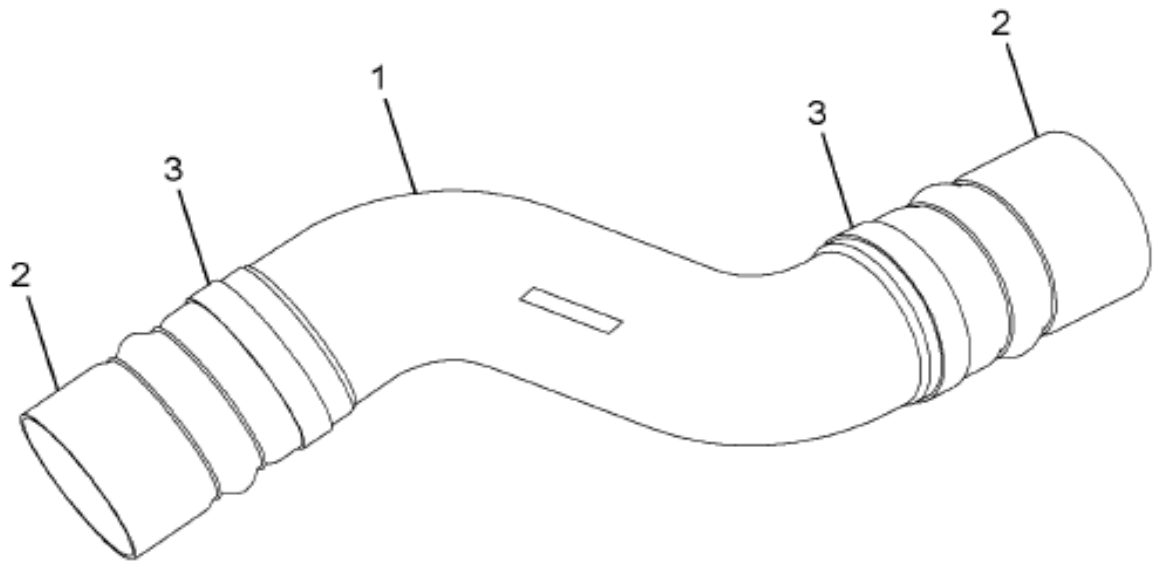

12-719-0441-01 E08

Item	Part No.	Qty	Description	Kit	Var	Figure
1	3672939C1	1	PIPE,RADIATOR, PIPE, HOT CAC			
2	3558834C2	2	HOSE,FLEXIBLE AIR, 4" DIA, GR			
3	1517672C91	2	CLAMP,AIR DUCT HOSE (T-BOLT)			
880		RF	NOTE: ASM BELOW COMPRISED OF ABOVE COMPONENTS			
881	3674177C91	RF	PIPE,AIR, CAC HOT SIDE, ASSY			

Grp 12

COPYRIGHT© 2011INTERNATIONAL TRUCK AND ENGINE CORP.

https://truckmanualshub.com/

Figure 0M9RM

COOLING PACKAGE; A/C CONDENSER,(ABR#5)

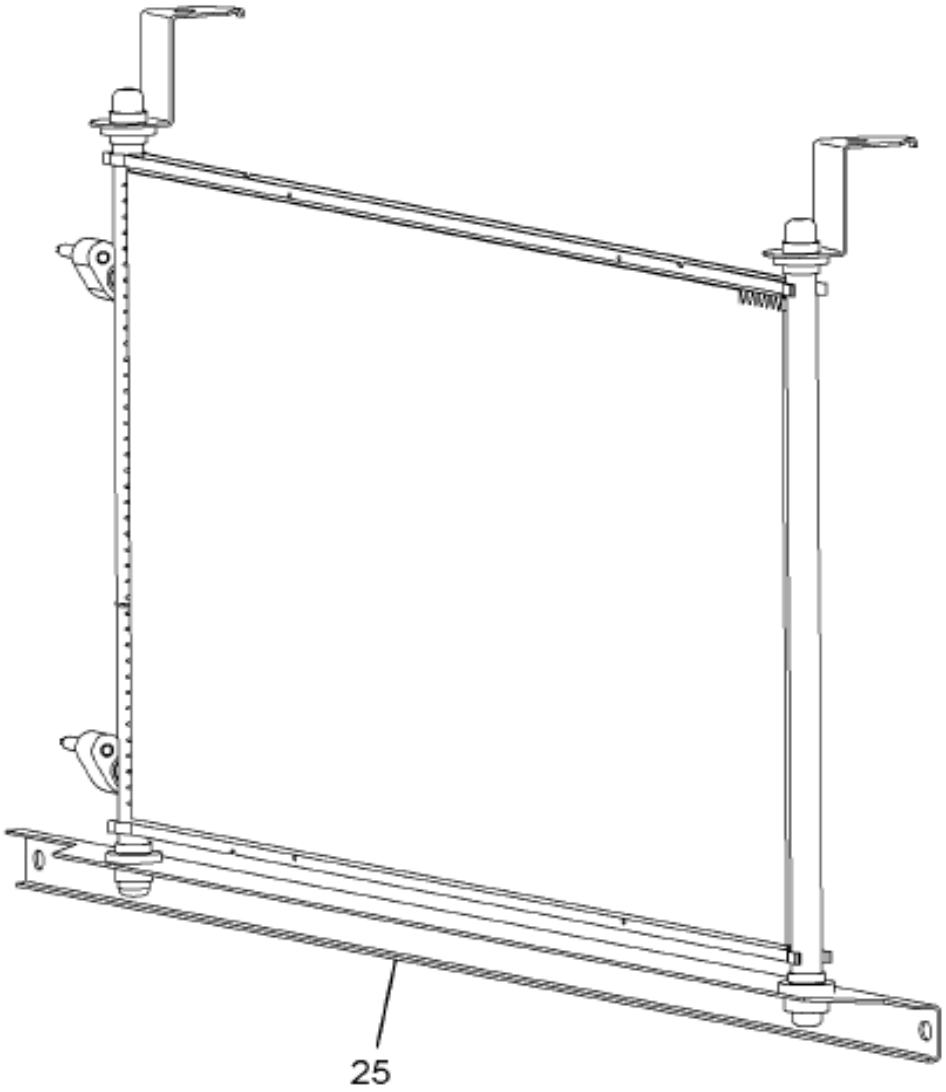

12-C05-0028-01 G06

Item	Part No.	Qty	Description	Kit	Var	Figure
25	3605574F92	1	RADIATOR, CONDENSER		0M9VF	3605574F92

COPYRIGHT© 2011INTERNATIONAL TRUCK AND ENGINE CORP.

https://truckmanualshub.com/

Figure 2591831C91
KIT,HARDWARE REPAIR CONDENSER

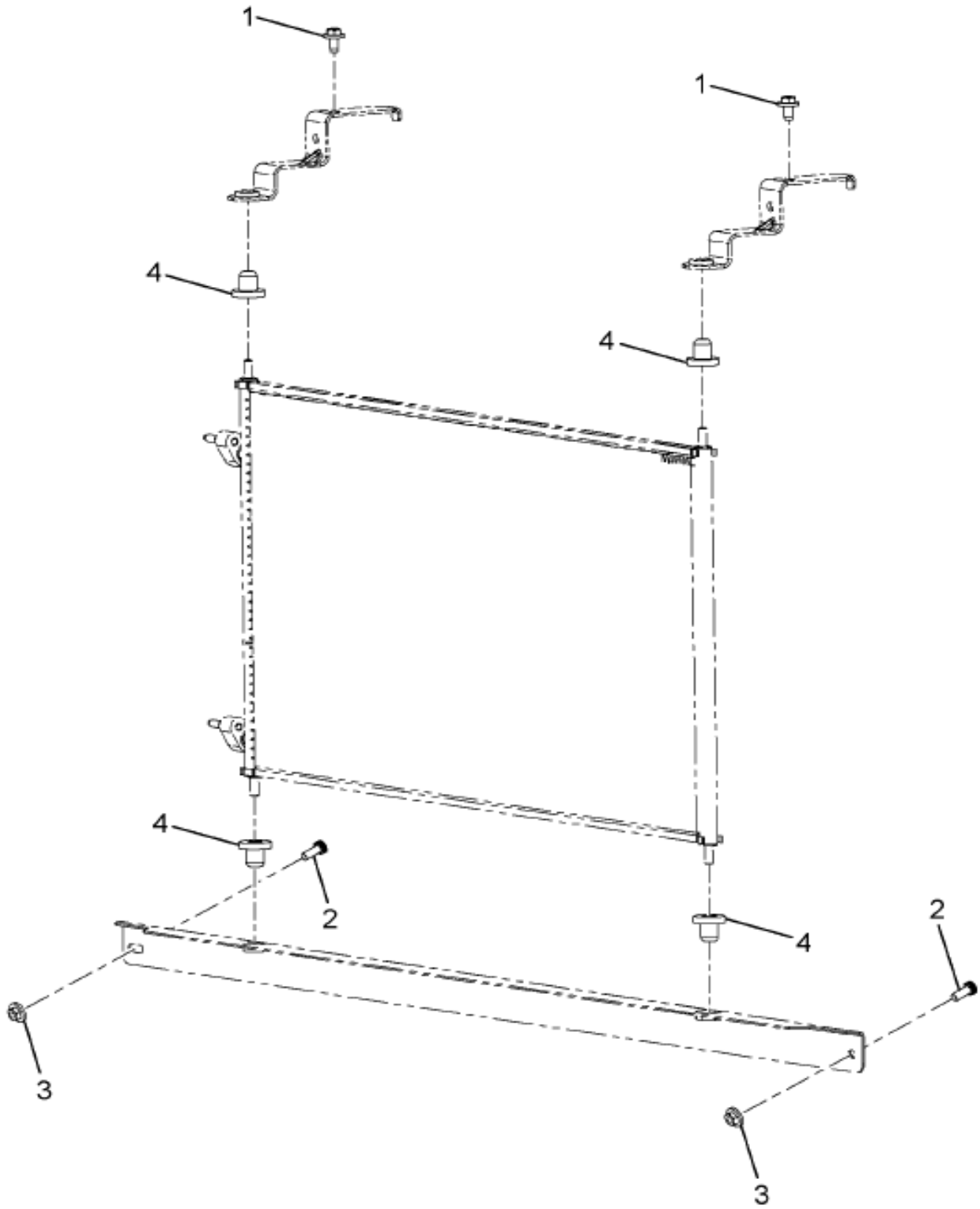

Item	Part No.	Qty	Description	Kit	Var	Figure
1	2504909C1	2	SCREW, M8X1.25X16L			
2		2	SCREW M8X1.25X20L			
3	2504917C1	2	NUT,HEX FLG M8X1.25-6H			
4		4	ISOLATOR			
880		RF	NOTE: ASM BELOW COMPRISED OF ABOVE COMPONENTS			

Grp 12

COPYRIGHT© 2011INTERNATIONAL TRUCK AND ENGINE CORP.

https://truckmanualshub.com/

Figure 2591831C91

KIT,HARDWARE REPAIR CONDENSER

Item	Part No.	Qty	Description	Kit	Var	Figure
881	2591831C91	RF	KIT,HARDWARE REPAIR CONDENSER			

COPYRIGHT© 2011INTERNATIONAL TRUCK AND ENGINE CORP.

https://truckmanualshub.com/

Figure 3603574F92
RADIATOR, CONDENSER

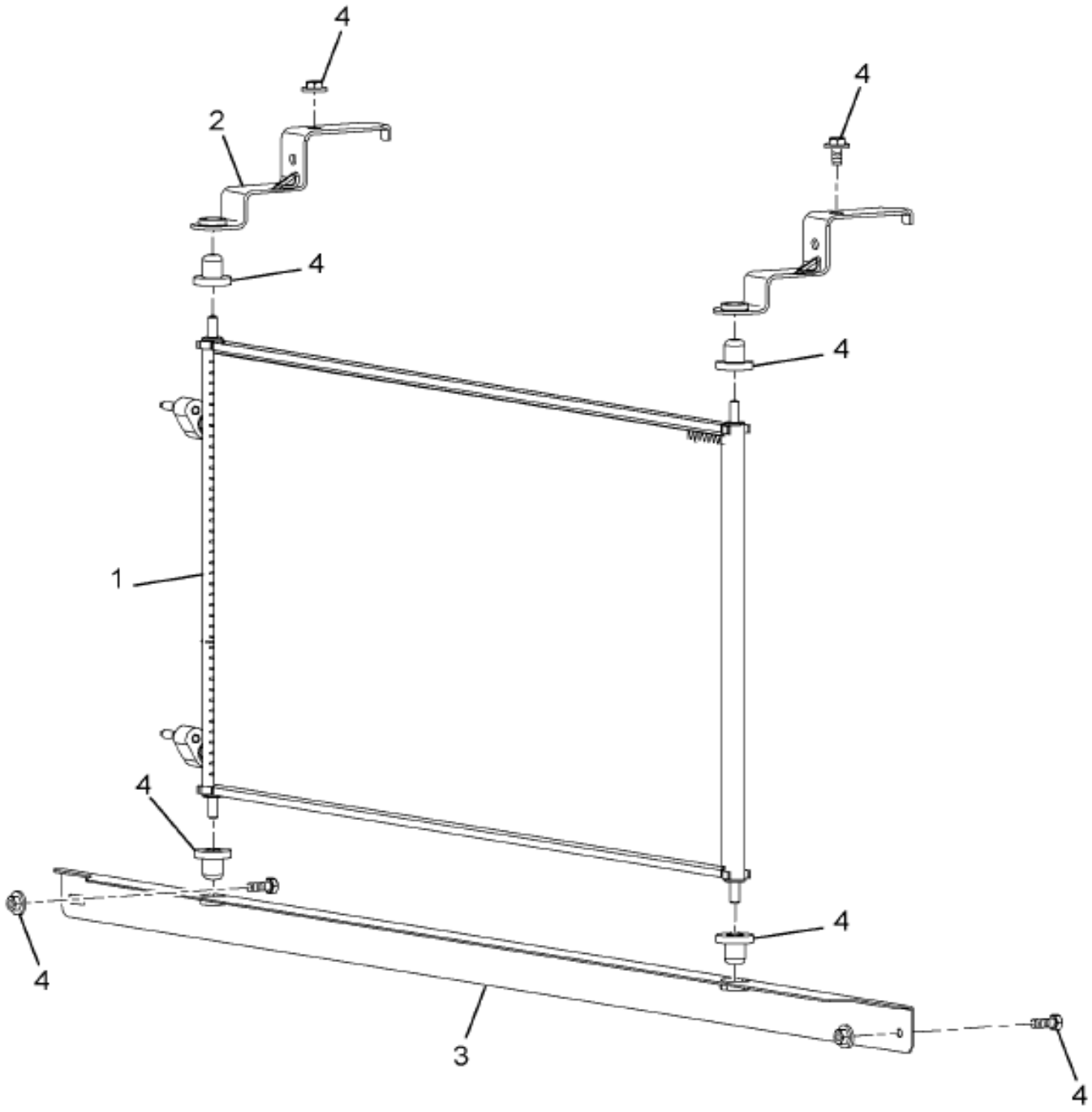

Item	Part No.	Qty	Description	Kit	Var	Figure
1	2591621C91	1	CONDENSER ASM			
2	2591819C1	1	BRACKET,AIR COND MOUNTING			
3	2591820C1	1	BRACKET,AIR COND MOUNTING			
4	2591831C91	KT	KIT,HARDWARE REPAIR CONDENSER			2591831C91
880		RF	NOTE: ASM BELOW COMPRISED OF ABOVE COMPONENTS			

Grp 12

COPYRIGHT© 2011INTERNATIONAL TRUCK AND ENGINE CORP.

https://truckmanualshub.com/

Figure 3605574F92

RADIATOR, CONDENSER

Item	Part No.	Qty	Description	Kit	Var	Figure
881	3605574F92	RF	RADIATOR, CONDENSER			

COPYRIGHT© 2011INTERNATIONAL TRUCK AND ENGINE CORP.

https://truckmanualshub.com/

Figure 0M9RR

COOLING PKG MTG; RADIATOR

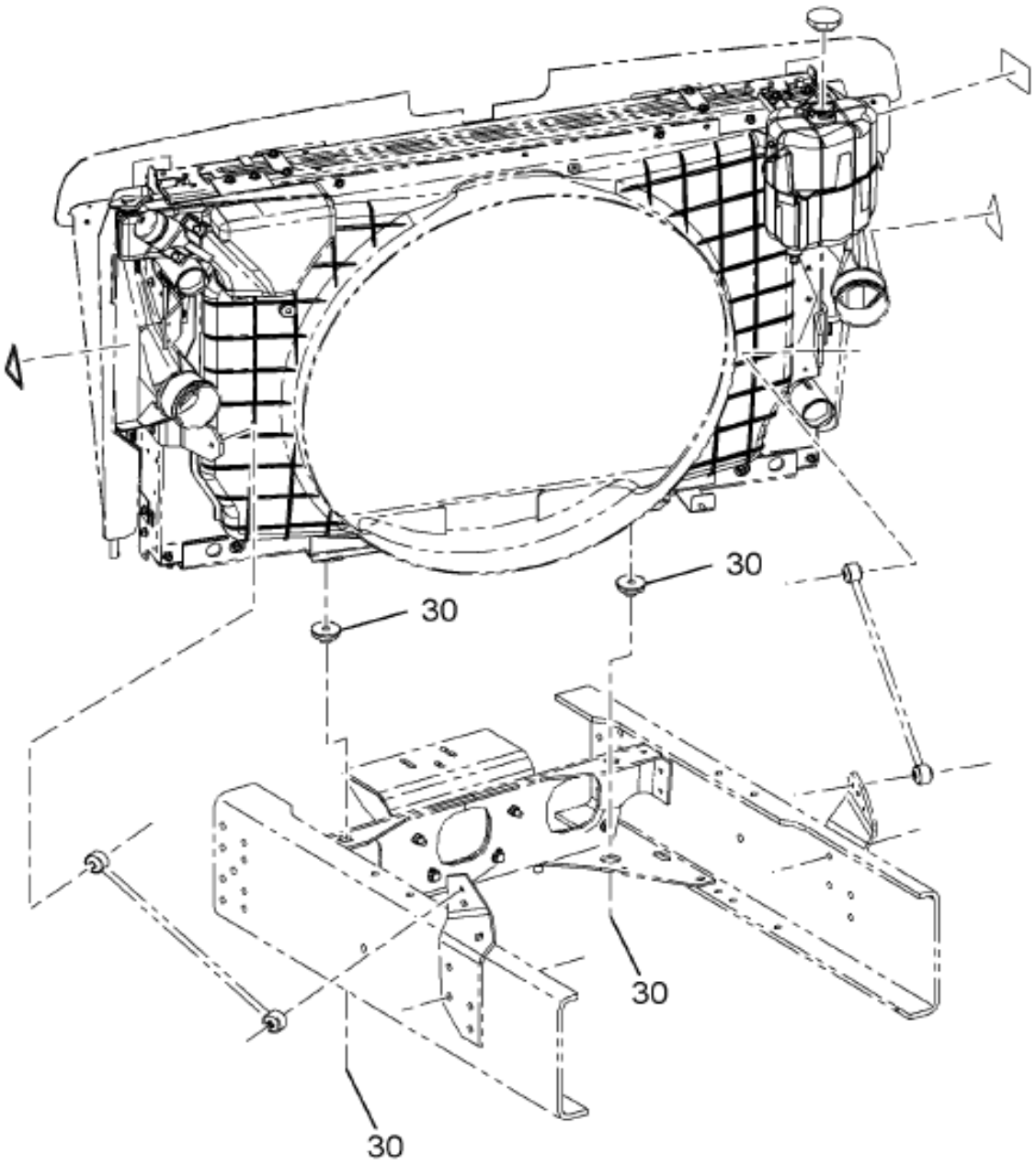

M-NGV-SS-HDD

12-V01-0021-01 E11

Item	Part No.	Qty	Description	Kit	Var	Figure
30	3560217C1	2	INSULATOR,RAD MTG		0M9RR	
30	40270R1	2	BOLT M12 X 60 NO CLASS 10.9		0M9RR	

Grp 12

COPYRIGHT© 2011INTERNATIONAL TRUCK AND ENGINE CORP.

https://truckmanualshub.com/

Figure 0MBYJ

DEARTN HOSING INSTL; (CUM ISM ENG)

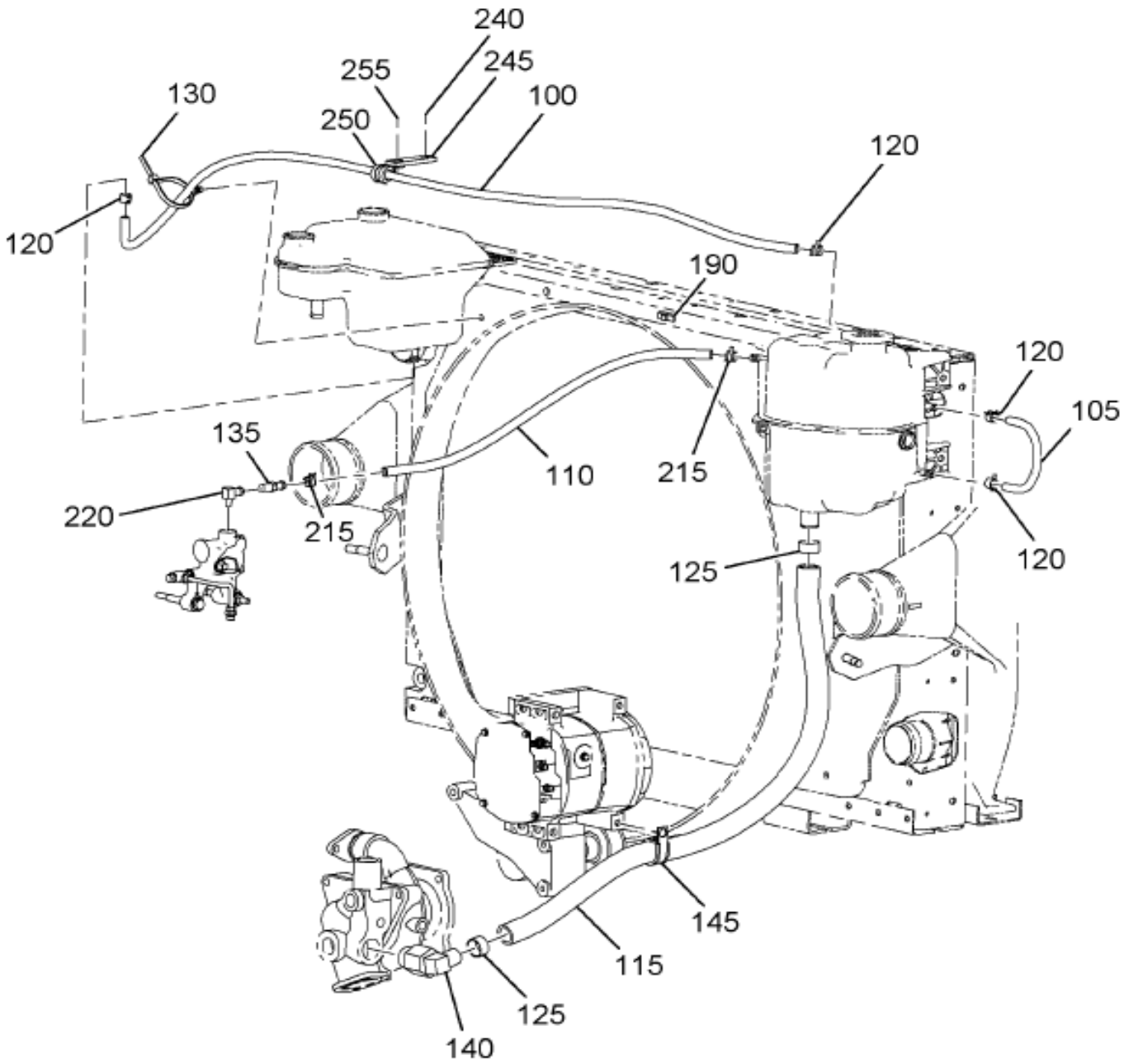

Item	Part No.	Qty	Description	Kit	Var	Figure
100	2643504R1	1112	HOSE,HEATER BULK 3/8" ID		0MBYK	
105	2643504R1	86	HOSE,HEATER BULK 3/8" ID		0MBYK	
110	2643504R1	92	HOSE,HEATER BULK 3/8" ID		0MBYK	
115	2643493R1	91	HOSE,HEATER PREMIUM*1"ID		0MBYK	
120	3523434C1	6	CLAMP,HEAT EXCHANGER*MUBEA, FO		0MBYJ	
125	3523435C1	2	CLAMP,34MM DIA X15MM WD,1"HOSE		0MBYJ	

COPYRIGHT© 2011INTERNATIONAL TRUCK AND ENGINE CORP.

https://truckmanualshub.com/

Figure 0MBYJ

DEARTN HOSING INSTL; (CUM ISM ENG)

Item	Part No.	Qty	Description	Kit	Var	Figure
130	3551710C2	1	GUIDE,BRK HOSE & CABLE*SADDLE		0MBYJ	
130	3551709C1	1	STRAP,CABLE LOCK*CABLE LOCK 9"		0MBYJ	
135	433044C1	1	NIPPLE,PIPE		0MBYJ	
140	481793C1	1	ELBOW,90 DEG HOSE		0MBYJ	
145	373742C1	1	CLAMP RUBBER CUSHION		0MBYJ	
190	3554883C1	1	CLAMP,PIPE SINGLE 19 MM		0MBYJ	
220	444040	1	ELBOW,1/4-18 PLN AUTO 90D PIP		0MBYJ	
240	30167R1	1	NUT,M8 PHC CLASS 10		0MBYJ	
245	211205R1	1	EXTENSION,CLIP		0MBYJ	
250	446075R91	1	CLAMP,CABLE CLOSED		0MBYJ	
255	30019R1	1	BOLT, M10 X 20 PHC CLASS 10.9		0MBYJ	
255	30168R1	1	NUT, M10 PHC CLASS 10		0MBYJ	

COPYRIGHT© 2011INTERNATIONAL TRUCK AND ENGINE CORP.

Figure 0M333

DEARTN/SURGE TANK DECAL INSTL

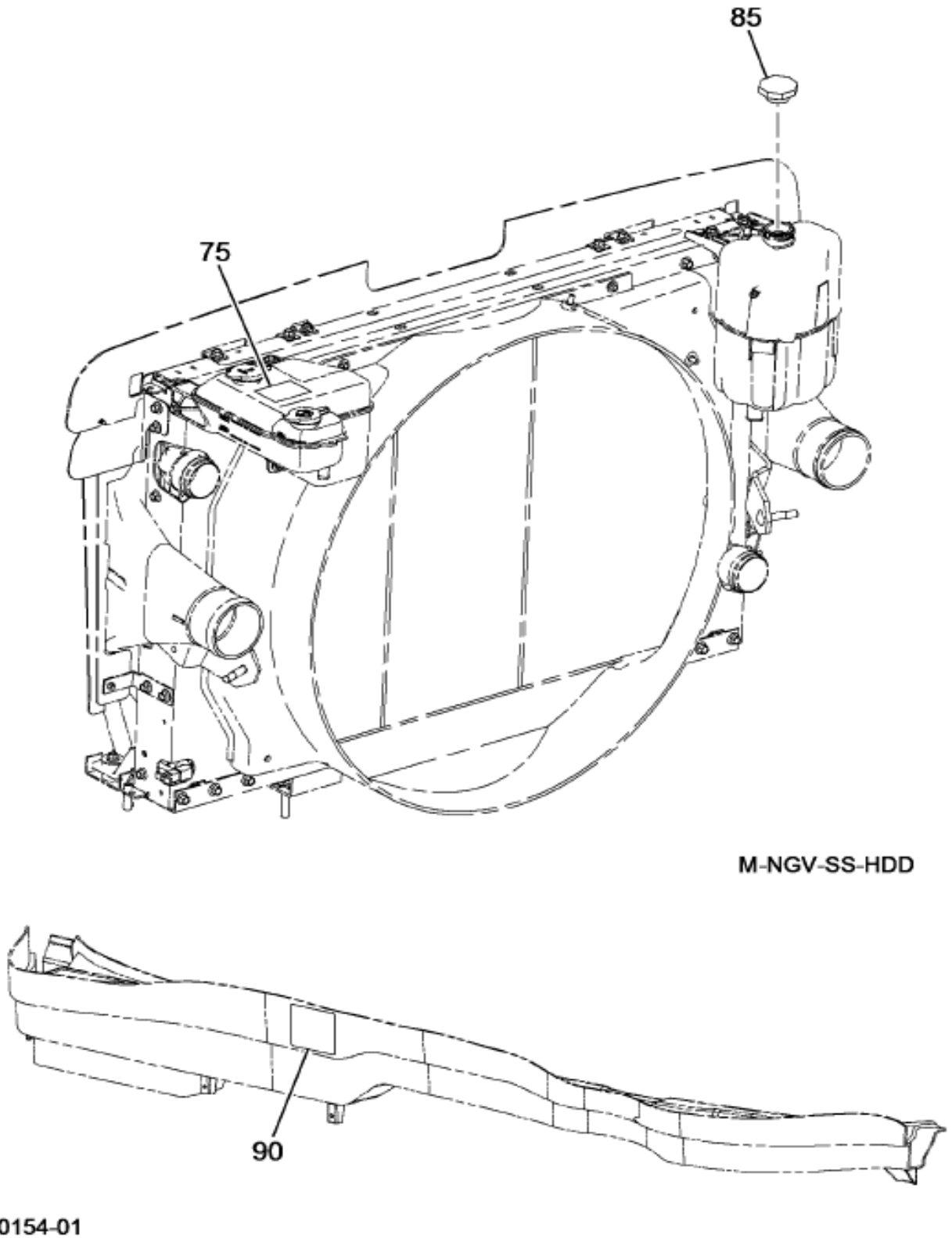

Item	Part No.	Qty	Description	Kit	Var	Figure
75	3540531C3	1	PRODUCT GRAPHICS,DECAL ANTI FR		0SPP6	
85	3589278C3	1	CAP, RAD SURGE TANK		0QVGF	
90	3830045C1	1	PRODUCT GRAPHIC ANTIFREEZE FI		0SPP6	

COPYRIGHT© 2011INTERNATIONAL TRUCK AND ENGINE CORP.

https://truckmanualshub.com/

Figure 0G55C

ENG MTG INSTL; FRONT & REAR

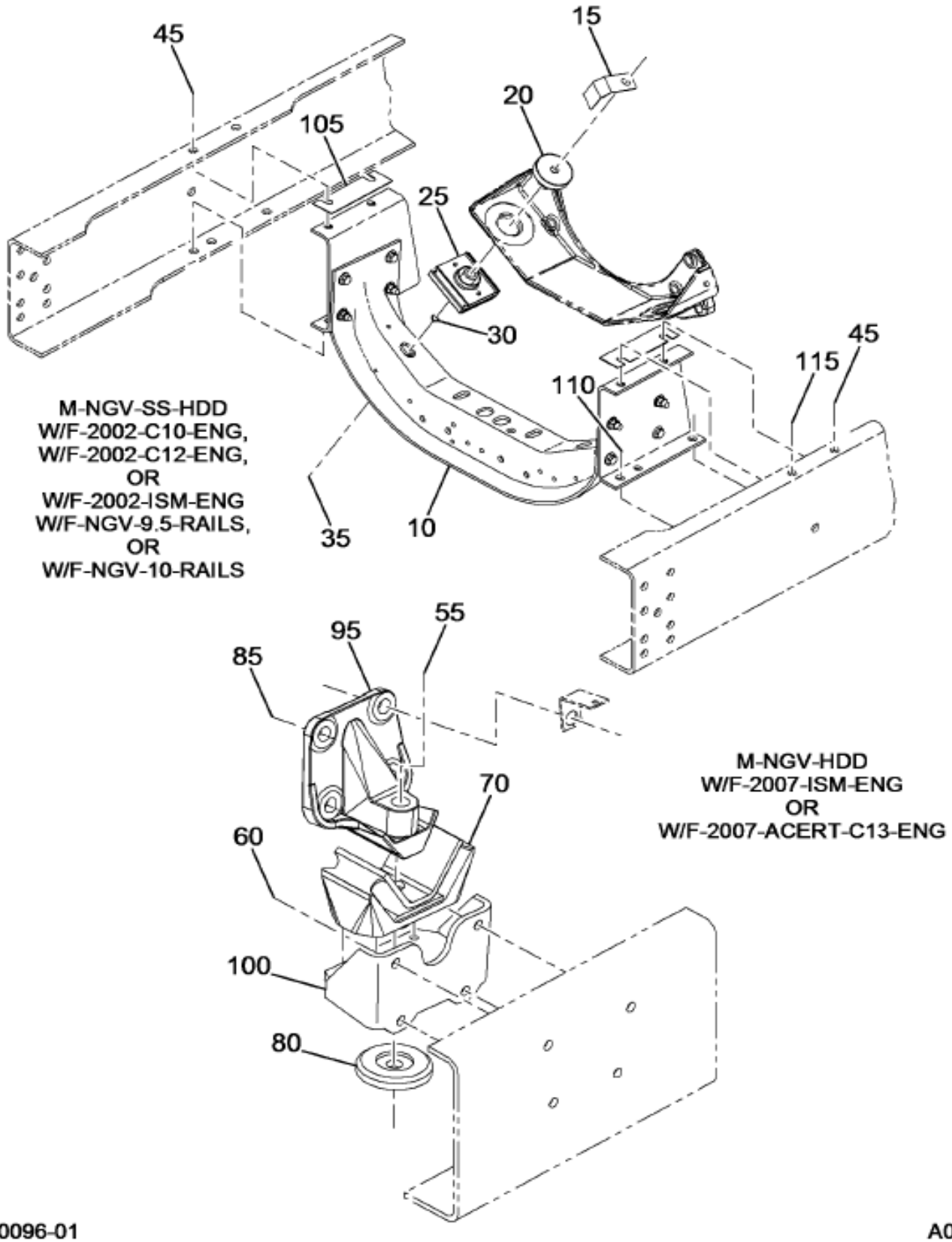

Item	Part No.	Qty	Description	Kit	Var	Figure
10	3581681C92	1	CROSSMEMBER ENGINE MTG ASSEMB		0J6FF	3581681C92
15	31077R1	2	BOLT, M16 X 100 PHC CL 10.9 FL		0G55C	
20	1664726C2	2	INSULATOR SNUBBER ENG MTG		0G55C	
25	1664723C3	2	INSULATOR,ENG FRT MTG		0G55C	
30	875522C1	2	RING,O 7/16 X 5/8 CLASS 3		0G55C	
35	30756R1	2	NUT,HEX M16 PRVTRQ		0G55C	

Grp 12

COPYRIGHT© 2011INTERNATIONAL TRUCK AND ENGINE CORP.

https://truckmanualshub.com/

Figure 0G55C

ENG MTG INSTL; FRONT & REAR

Item	Part No.	Qty	Description	Kit	Var	Figure
35	3564182C1	2	WASHER,ENG MTG BOLT		0G55C	
45	30748R2	3	BOLT M12 X 50MM PHC FLG CLASS		0GJH6	
45	30748R2	4	BOLT M12 X 50MM PHC FLG CLASS		0J6FF	
45	30755R1	4	NUT,HEX M12 FLANGED		0GJH6	
45	30755R1	4	NUT,HEX M12 FLANGED		0J6FF	
55	1663980C1	2	BOLT HH FLANGE 3/4NFX 6-1/4		0G55R	
55	416743C1	2	NUT,FLG HEX LOCK 3/4-16		0G55R	
60	30747R2	8	BOLT,HEX FLG HD METRIC M12X45		0GJH6	
60	30755R1	8	NUT,HEX M12 FLANGED		0GJH6	
70	1664729C7	2	INSULATOR,ENG REAR MTG,		0G55R	
70	26311R1	8	BOLT,HH 3/8-16UNC X 1.25"		0G55R	
70	25709R1	8	WASHER-.406X.812X.089HDN		0G55R	
80	1664730C7	2	INSULATOR,SNUBBER, ENG RR MTG		0G55R	
85	27356R1	8	BOLT HH 3/4 X 2 PHC P/T TYPE		0G55R	
85	25712R1	8	WASHER,.812X1.500X.179 H		0G55R	
95	1664755C3	2	BRACKET,ENG MTG RR		0G55R	
100	3606309C1	2	SUPPORT,, BRACKET, ENGINE MOU		0G55R	
105	3573965C1	4	SHIM,CROSSMEMBER ENGINE		0G55C	
110	3691077C1	4	BOLT, HUCK-SPIN 1/2 DIA -12		0G55C	
110	3691074C1	6	NUT, HUCK SPIN COLLAR 1/2 DIA		0G55C	
110	3691079C1	2	BOLT, HUCK-SPIN 1/2 DIA -20		0G55C	
115	31070R1	1	BOLT, M12 X 80 PHC CL 10.9 FLG		0GJH6	

COPYRIGHT© 2011INTERNATIONAL TRUCK AND ENGINE CORP.

https://truckmanualshub.com/

Figure 3581661C92 CROSSMEMBER ENGINE MTG ASSEMB

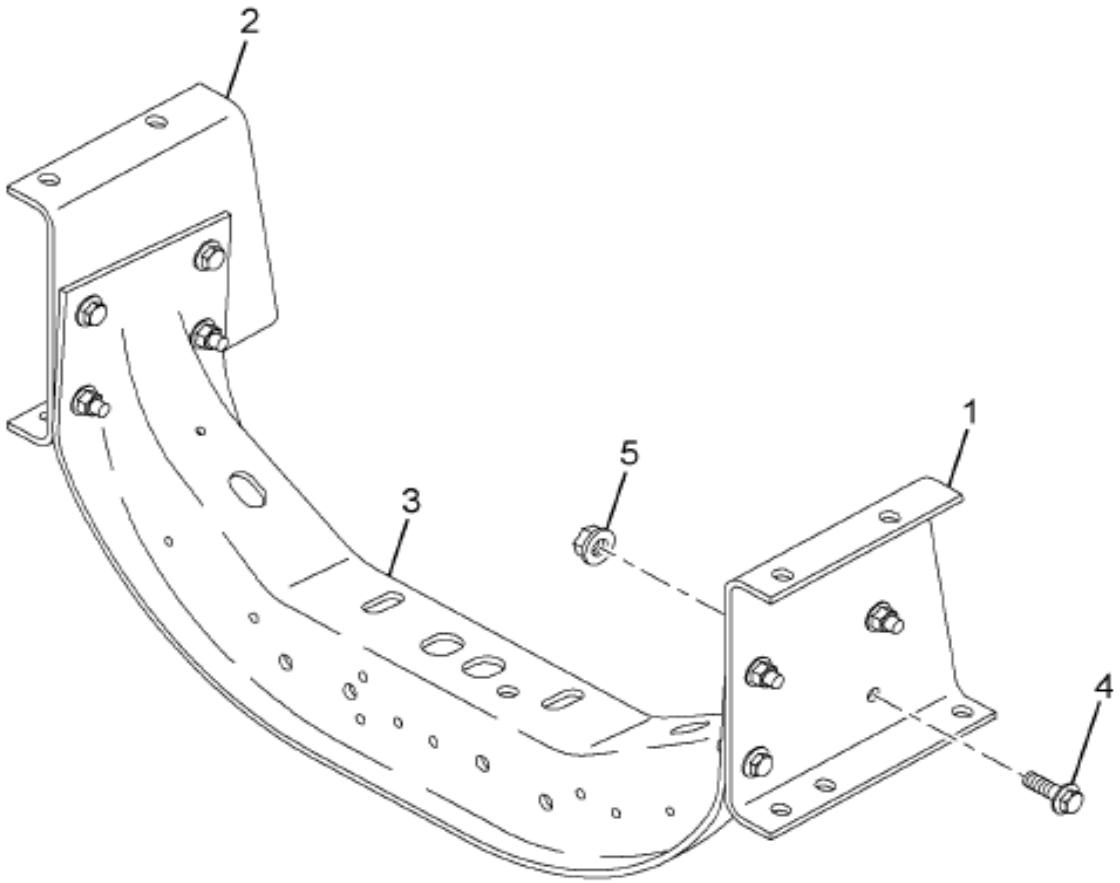

12-263-0178-01 L06

Item	Part No.	Qty	Description	Kit	Var	Figure
1	3581653C1	1	BRACKET,ENG MTG FRONT*LEFT			
1		RF	LEFT			
2	3581654C1	1	BRACKET,ENG MTG FRONT*RIGHT			
2		RF	RIGHT			
3	3508218C2	1	CROSSMEMBER,ENGINE MTG,			
4	30745R2	8	BOLT M12 X 35 HEX FLG HD			

Grp 12

COPYRIGHT© 2011INTERNATIONAL TRUCK AND ENGINE CORP.

https://truckmanualshub.com/

Figure 3581681C92

CROSSMEMBER ENGINE MTG ASSEMB

Item	Part No.	Qty	Description	Kit	Var	Figure
5	30755R1	8	NUT,HEX M12 FLANGED			
880		RF	NOTE: ASM BELOW COMPRISED OF ABOVE COMPONENTS			
881	3581681C92	RF	CROSSMEMBER ENGINE MTG ASSEMB			

COPYRIGHT© 2011INTERNATIONAL TRUCK AND ENGINE CORP.

https://truckmanualshub.com/

Figure 0K338

ENGINE HARNESS; W/CUMMINS ISM ENG

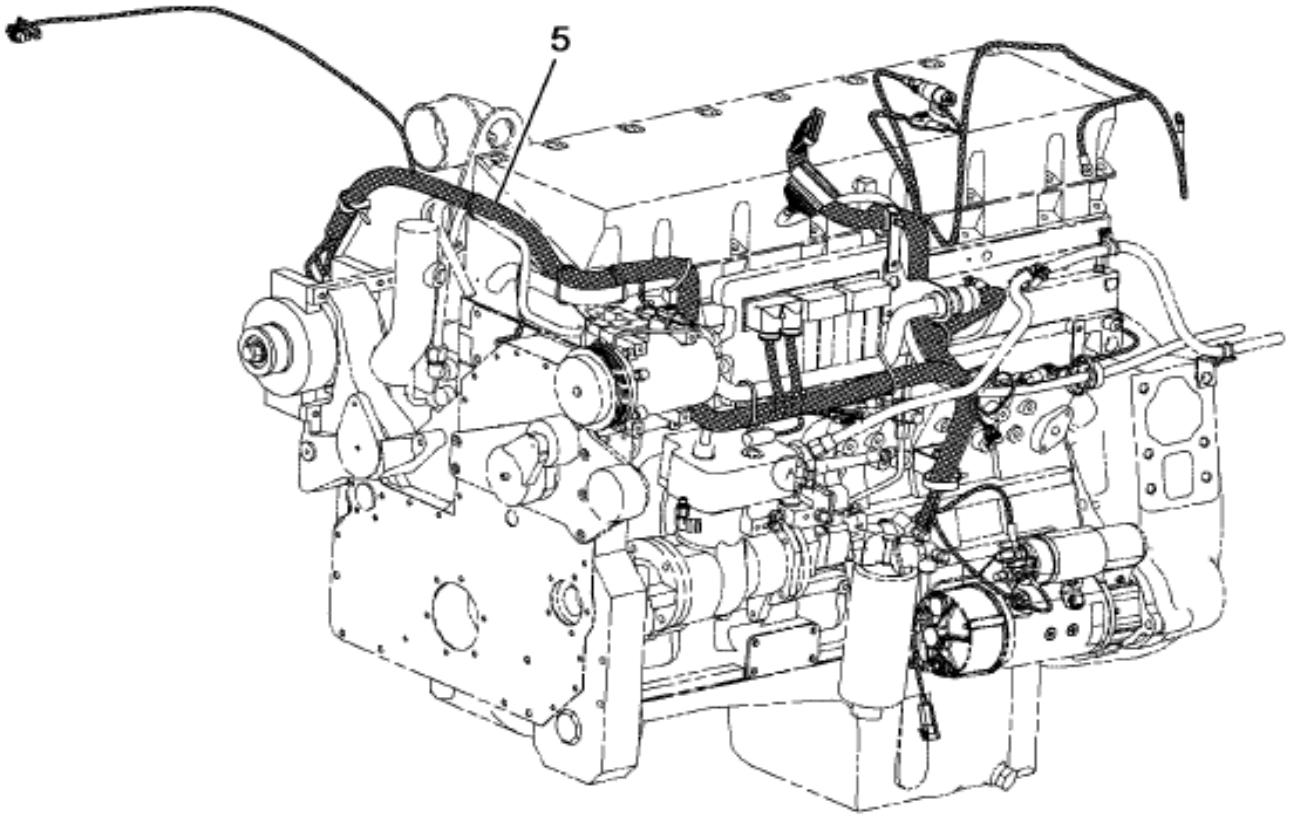

CUMMINS 2002
N/EGR ISM

08-749-0014-01 E09

Item	Part No.	Qty	Description	Kit	Var	Figure
5	3588052C93	1	HARN,ENG,CUMMINS 4GA CHG CKT		0TPRM	

COPYRIGHT© 2011INTERNATIONAL TRUCK AND ENGINE CORP.

https://truckmanualshub.com/

Figure 0K337

ENGINE WIRING INSTL; CUMMINS ISM ENGINE, N/EGR

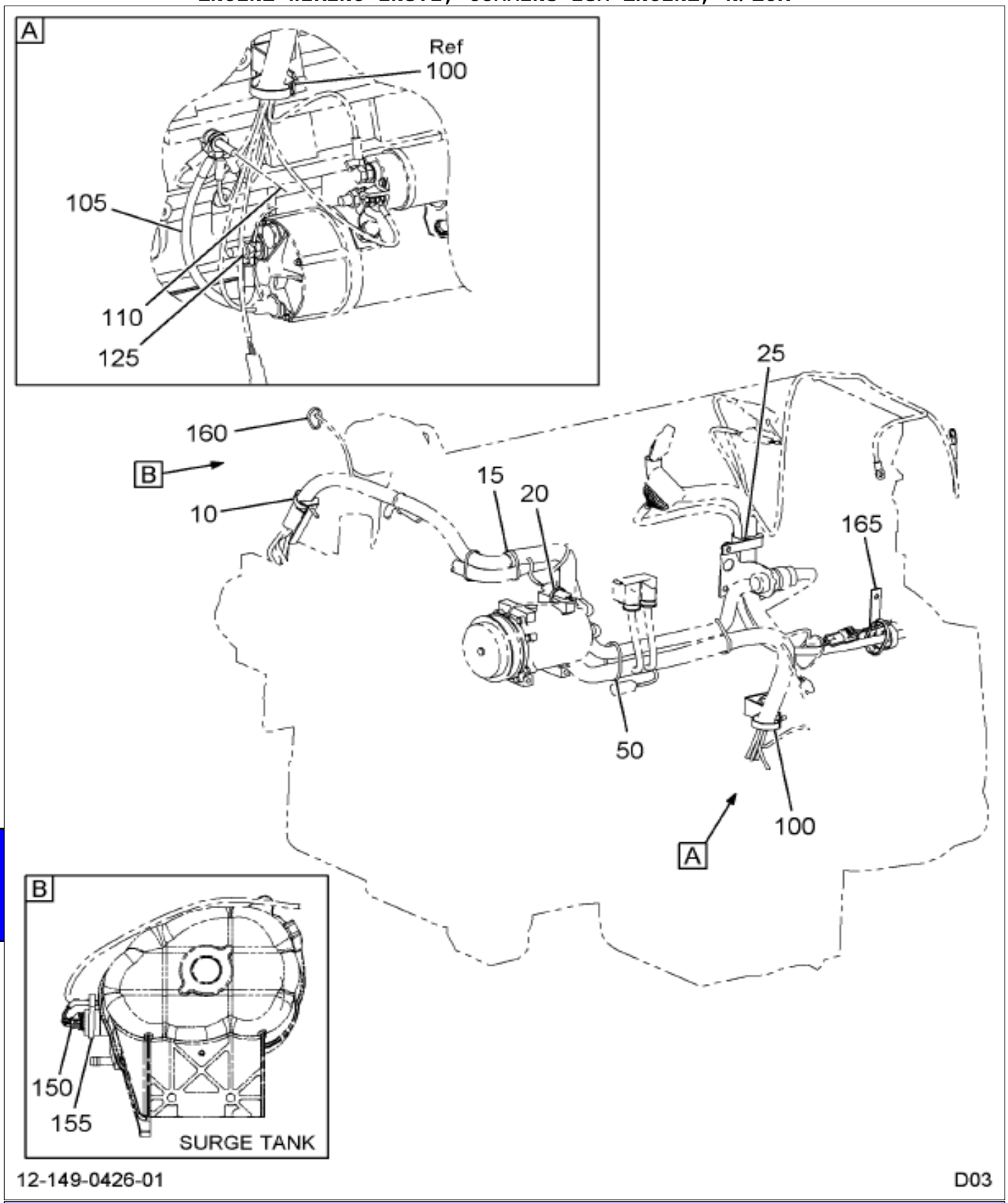

Item	Part No.	Qty	Description	Kit	Var	Figure
10	2041341C1	1	SADDLE,CLAMP CABLE LOCK MT 1/4		0K337	
10	25483R1	1	BOLT 1/4 X 1 PHC TYPE 8		0K337	
10	25519R1	1	NUT,1/4 NC TYPE 8		0K337	
10	120380	1	WASHER LOCK 1/4",REG,STL/ZNC		0K337	
10	306132C1	1	STRAP,CABLE LOCK		0K337	
15	306132C1	5	STRAP,CABLE LOCK		0K337	

COPYRIGHT© 2011INTERNATIONAL TRUCK AND ENGINE CORP.

https://truckmanualshub.com/

Figure 0K337

ENGINE WIRING INSTL; CUMMINS ISM ENGINE, N/EGR

Item	Part No.	Qty	Description	Kit	Var	Figure
20	289862C1	1	STRAP,CABLE LOCK		0K337	
25	314057C1	1	EXTENSION CLIP		0K337	
25	2041341C1	1	SADDLE,CLAMP CABLE LOCK MT 1/4		0K337	
25	25483R1	1	BOLT 1/4 X 1 PHC TYPE 8		0K337	
25	25519R1	1	NUT,1/4 NC TYPE 8		0K337	
25	120380	1	WASHER LOCK 1/4",REG,STL/ZNC		0K337	
25	306132C1	1	STRAP,CABLE LOCK		0K337	
50	306132C1	3	STRAP,CABLE LOCK		0K337	
100	500781C1	1	EXTENSION,CLIP		0K337	
100	30020R1	1	BOLT, M10 X 25 PHC CLASS 10.9		0K337	
100	933965R1	1	WASHER,LOCK 10MM		0K337	
100	2041341C1	1	SADDLE,CLAMP CABLE LOCK MT 1/4		0K337	
100	25483R1	1	BOLT 1/4 X 1 PHC TYPE 8		0K337	
100	25519R1	1	NUT,1/4 NC TYPE 8		0K337	
100	120380	1	WASHER LOCK 1/4",REG,STL/ZNC		0K337	
100	306132C1	1	STRAP,CABLE LOCK		0K337	
105	K021402028	1	CABLE,BATTERY ENG TO STRTR GND		0K337	
110	30168R1	1	NUT, M10 PHC CLASS 10		0K337	
110	30327R1	1	WASHER 10.8 X 21 X 2.5MM		0K337	
125	933966R1	1	WASHER,LOCK 12MM		0K337	
150	1673785C92	1	GAUGE,LOW COOLANT SENDER		0K337	
155	289862C1	1	STRAP,CABLE LOCK		0K337	
160	289862C1	2	STRAP,CABLE LOCK		0K337	
165	314057C1	1	EXTENSION CLIP		0K337	
165	2041341C1	1	SADDLE,CLAMP CABLE LOCK MT 1/4		0K337	
165	25483R1	1	BOLT 1/4 X 1 PHC TYPE 8		0K337	
165	25519R1	1	NUT,1/4 NC TYPE 8		0K337	
165	120380	1	WASHER LOCK 1/4",REG,STL/ZNC		0K337	
165	306132C1	1	STRAP,CABLE LOCK		0K337	
165	30019R1	1	BOLT, M10 X 20 PHC CLASS 10.9		0K337	
165	933965R1	1	WASHER,LOCK 10MM		0K337	

COPYRIGHT© 2011INTERNATIONAL TRUCK AND ENGINE CORP.

https://truckmanualshub.com/

Figure 01 X8L

FAN DRIVE HOSING INSTL; W/7600, 8600, W/CAT C10,C12 ENG

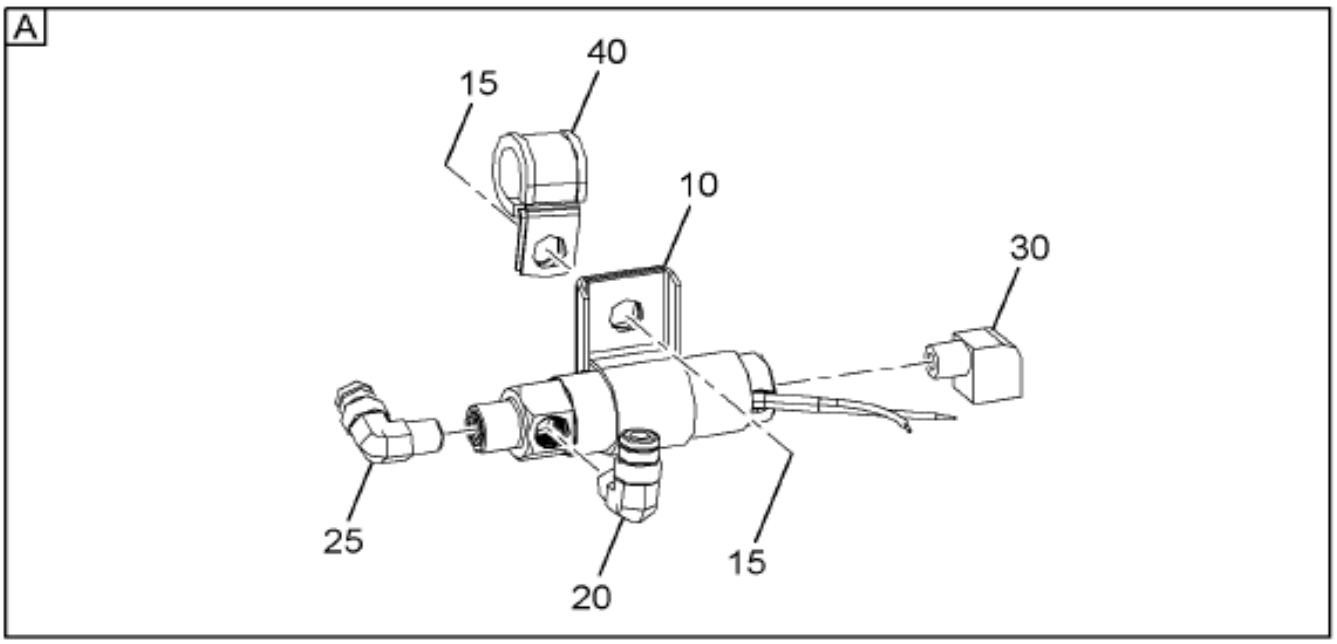

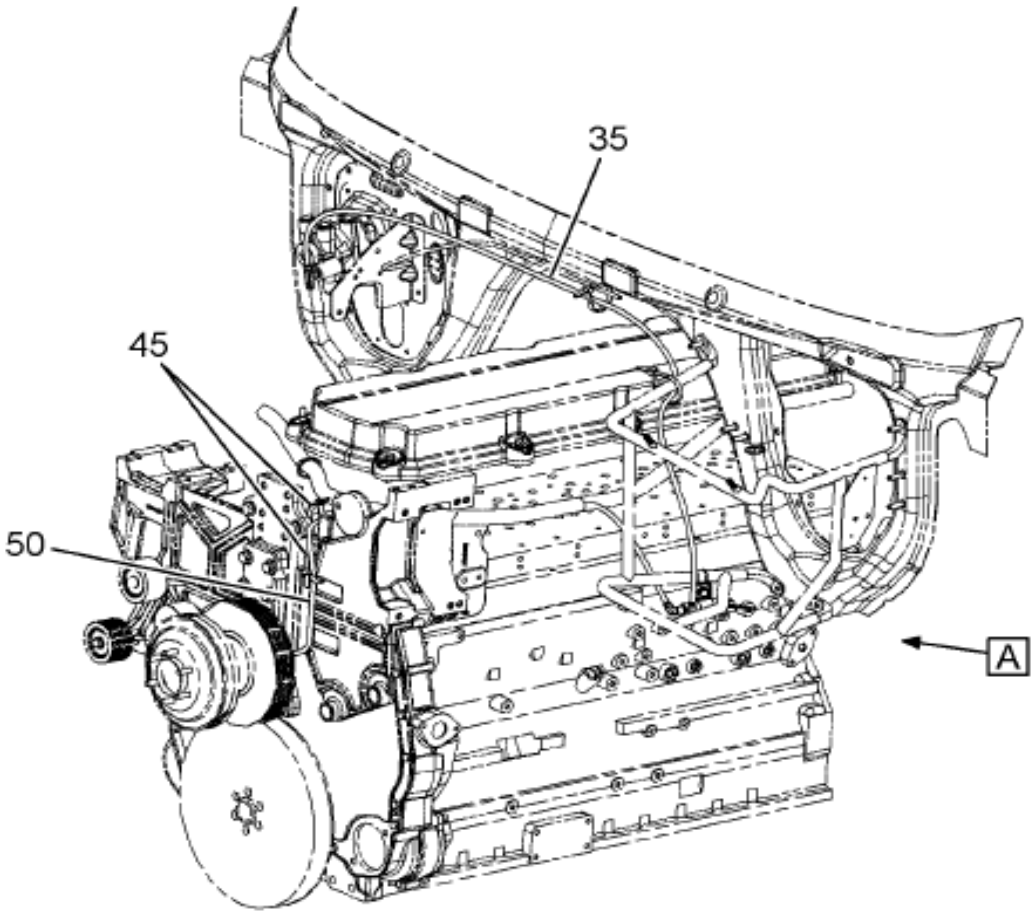

12-478-0017-01 C10

Figure 1 of 2

COPYRIGHT© 2011INTERNATIONAL TRUCK AND ENGINE CORP.

https://truckmanualshub.com/

Figure 0FX8E

FAN DRIVE HOSING INSTL; W/7600, 8600, W/CAT C10,C12 ENG

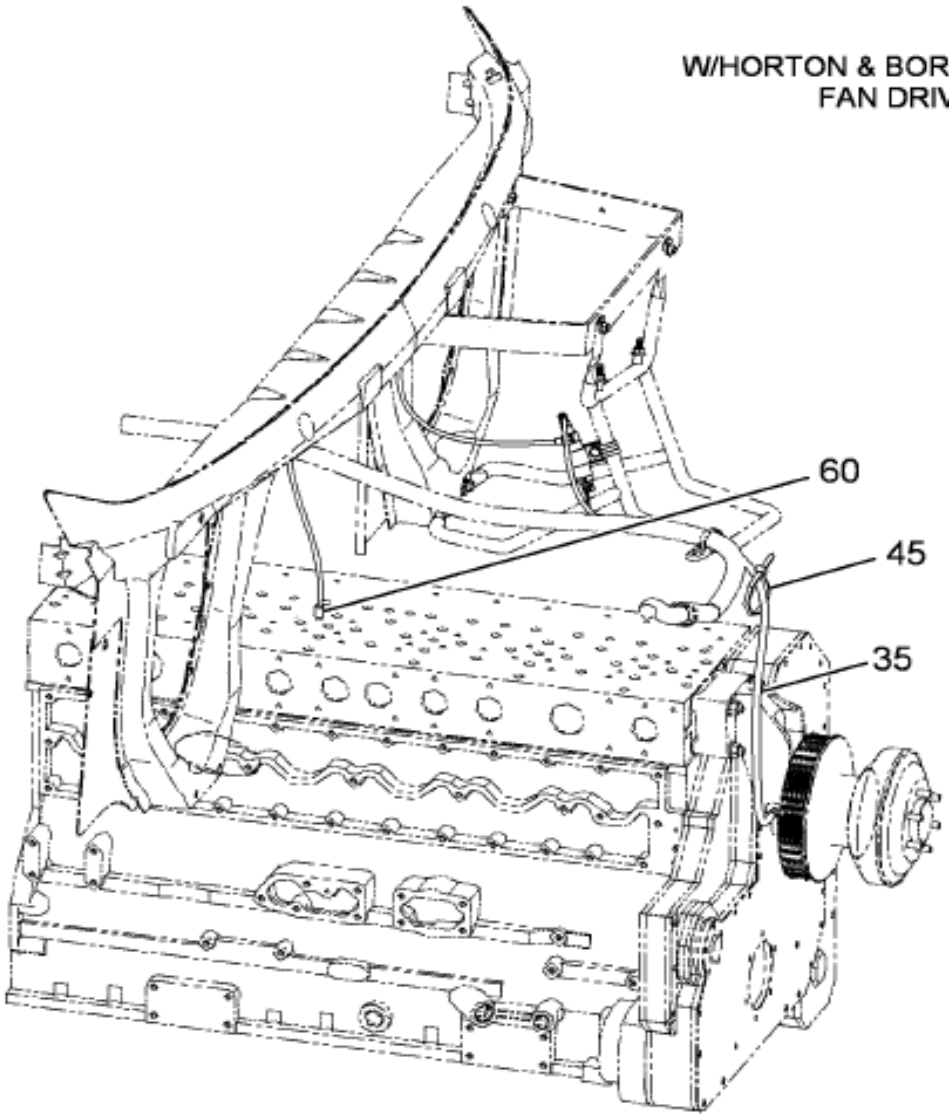

W/F-2002-N/EGR-ISM-ENG
F-ISM-EPA-04-ENG
W/0012THJ, 0012TKS
0012THT
W/0010RHD
N/0012WYR

12-478-0107-01 D10

Item	Part No.	Qty	Description	Kit	Var	Figure
10	3551298C92	1	VALVE,SOLENOID AIR COND		0FX8M	
15	3535162C1	1	NUT,HEX METRIC PREV. TORQ*M8 X		0FX8M	
20	2017508C2	1	ELBOW, 90 DEG 1/8 MPT X 1/4 PT		0FX8M	
25	2017481C1	1	CONNECTOR,PUSH TO CONNECT*		0FX8M	
30	9409931	1	ELBOW,PIPE 90D 1/8MPTX1/8FPT		0FX8M	
35	417196C3		TUBE,NYLON BULK 1/4 OD BLACK		0FX8M	

COPYRIGHT© 2011INTERNATIONAL TRUCK AND ENGINE CORP.

https://truckmanualshub.com/

Figure 0FX8L

FAN DRIVE HOSING INSTL; W/7600, 8600, W/CAT C10,C12 ENG

Item	Part No.	Qty	Description	Kit	Var	Figure
40	366704C1	1	STRAP,CABLE LOCK		0FX8M	

COPYRIGHT© 2011INTERNATIONAL TRUCK AND ENGINE CORP.

https://truckmanualshub.com/

Figure 0PVQG
FAN DRIVE INSTL; SS HDD W/HORTON & BORG WARNER

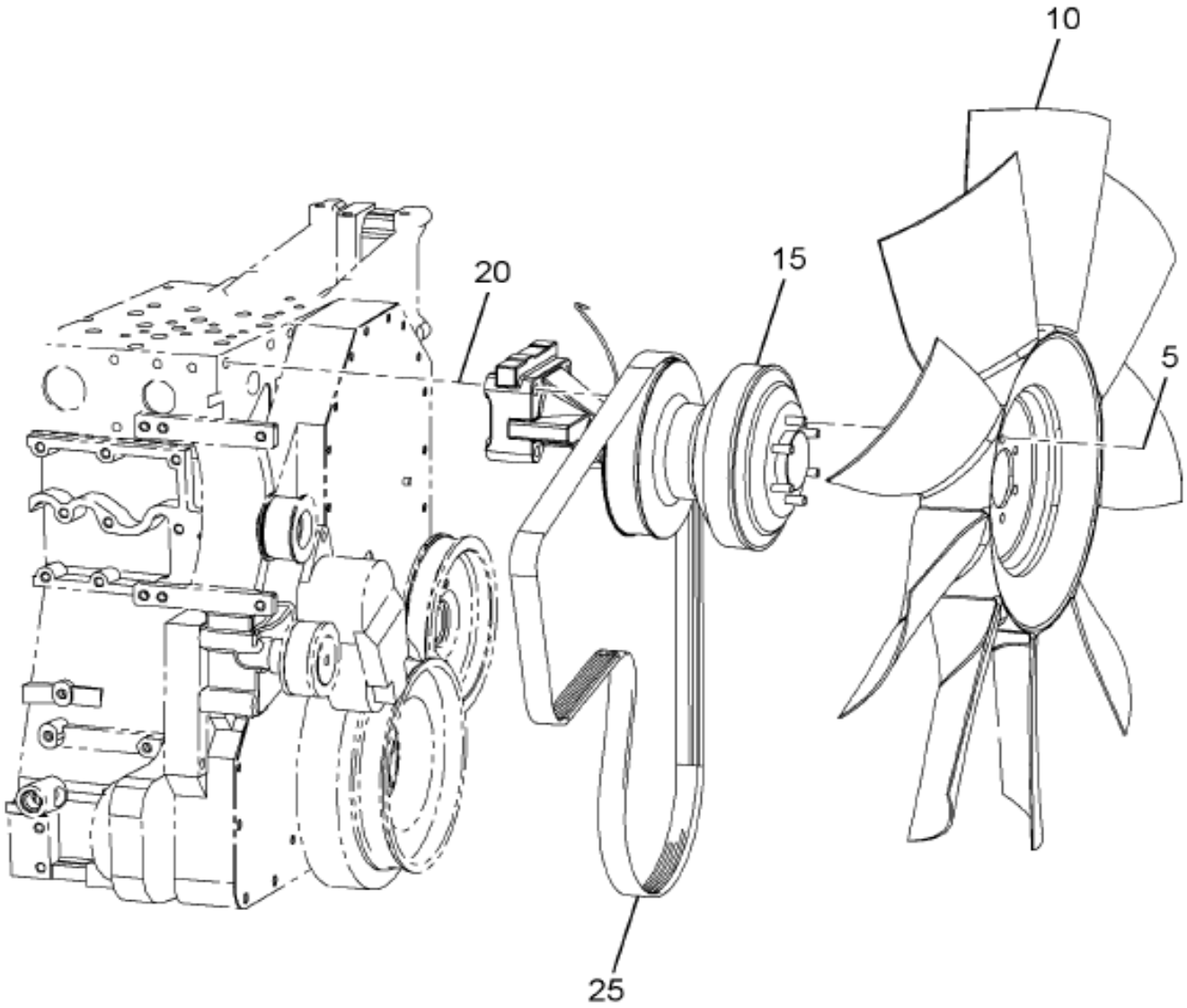

W/M-5000i
W/M-9000i
W/F-2002-ISM-ENG
W/0012TKS, 0012THJ

12-268-0118-01 G08

Item	Part No.	Qty	Description	Kit	Var	Figure
5	25709R1	6	WASHER-.406X.812X.089HDN		0PVQG	
5	120382	6	WASHER,LOCK 3/8 ZINC PLATED		0PVQG	
5	120369	6	NUT 3/8-NF TYPE 5		0PVQG	
10	3625639C1	1	FAN,ENG COOLING, 32" DIA 2.56"		0WNNX	
15	3605645C92	1	DRIVE,FAN & MTG ASM, 12TKS 21		0WNNX	3605645C92
20	1673923C2	3	STUD,FAN DRIVE MTG		0WNNX	

Grp 12

COPYRIGHT© 2011INTERNATIONAL TRUCK AND ENGINE CORP.

https://truckmanualshub.com/

Figure 0PVQG
FAN DRIVE INSTL; SS HDD W/HORTON & BORG WARNER

Item	Part No.	Qty	Description	Kit	Var	Figure
20	30755R1	3	NUT,HEX M12 FLANGED		0WNNX	
25	3605646C1	1	BELT,FAN, 8PK 2070 ISM 21" FAN		0WNNX	

COPYRIGHT© 2011INTERNATIONAL TRUCK AND ENGINE CORP.

https://truckmanualshub.com/

Figure 3605645C92

DRIVE,FAN & MTG ASM, 12TKS 21

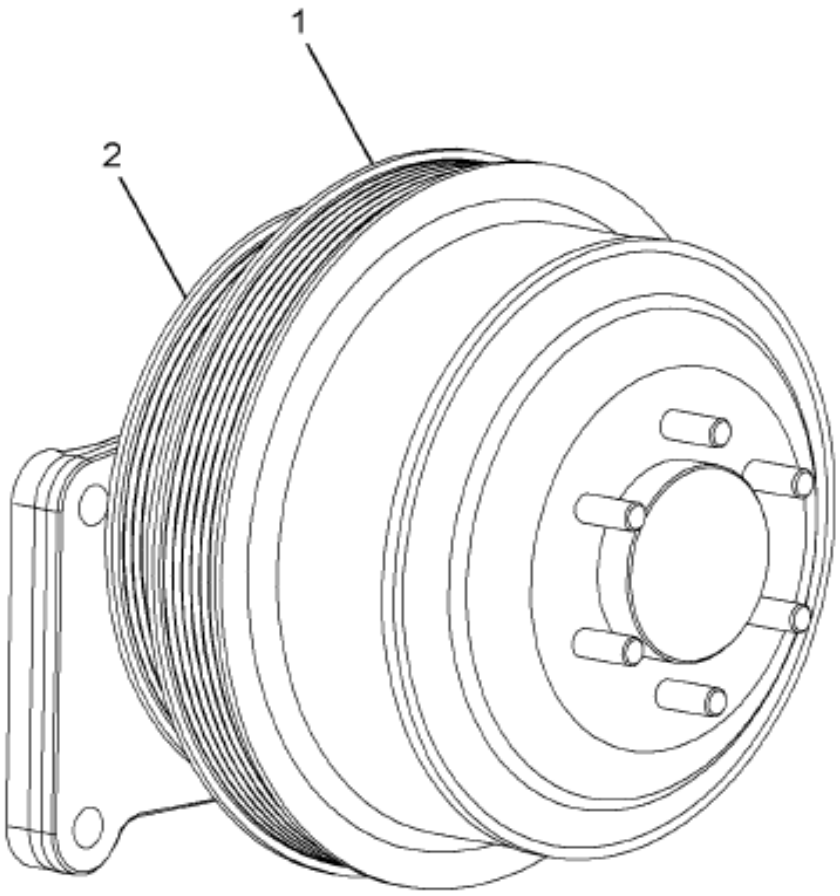

12-268-0171-01 A05

Item	Part No.	Qty	Description	Kit	Var	Figure
1	2589433C91	1	HUB,FAN DRIVE PULLEY			
2	2602141C91	1	FAN CLUTCH K30			
880		RF	NOTE: ASM BELOW COMPRISED OF ABOVE COMPONENTS			
881	3605645C92	RF	DRIVE,FAN & MTG ASM, 12TKS 21			

Grp 12

COPYRIGHT© 2011INTERNATIONAL TRUCK AND ENGINE CORP.

https://truckmanualshub.com/

Figure 0M5RR

FAN SHROUD INSTL; COOLING PKG, 32"

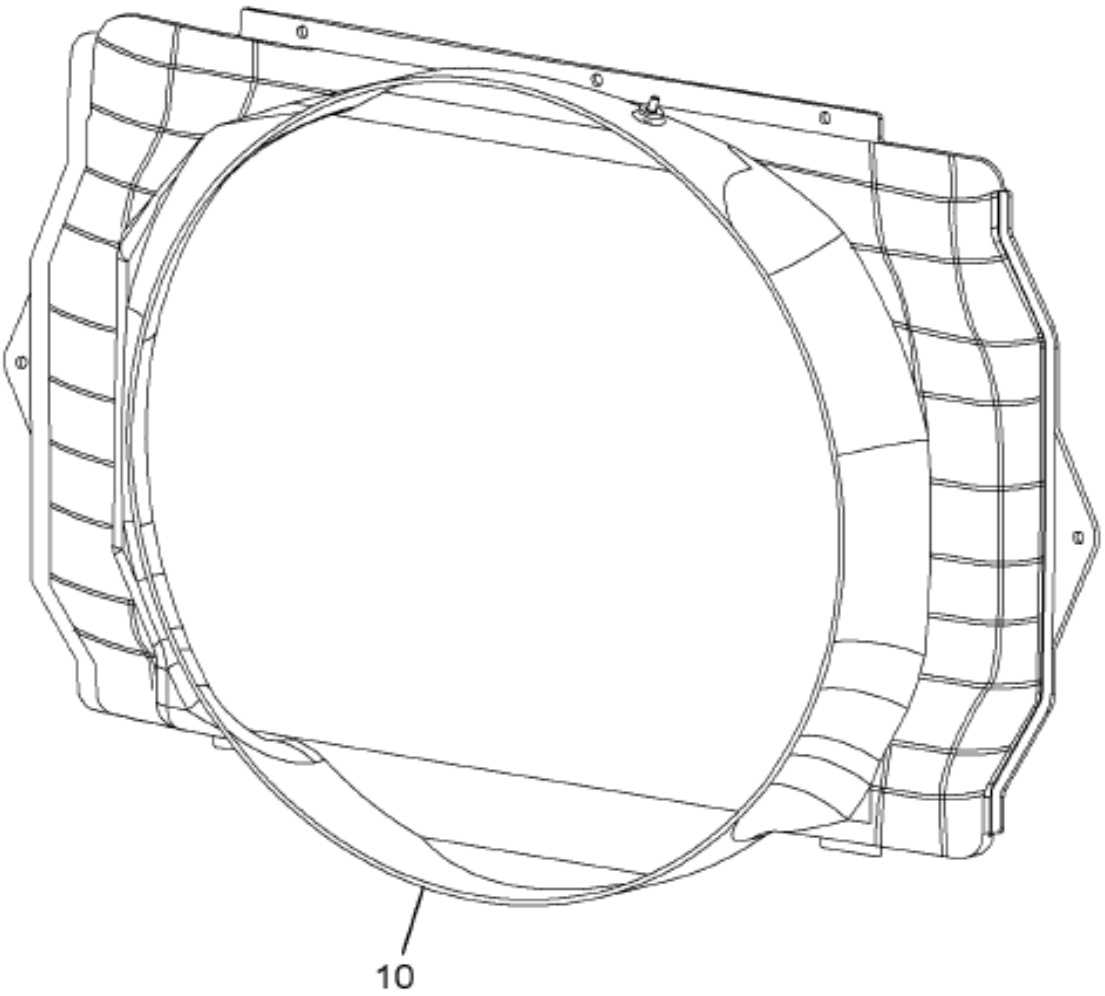

12-C02-0041-01 L06

Item	Part No.	Qty	Description	Kit	Var	Figure
10	3605572F92	1	SHROUD,FAN		0M9V5	3605572F92

COPYRIGHT© 2011INTERNATIONAL TRUCK AND ENGINE CORP.

https://truckmanualshub.com/

Figure 2591782C91

KIT,HARDWARE FAN SHROUD REPAIR

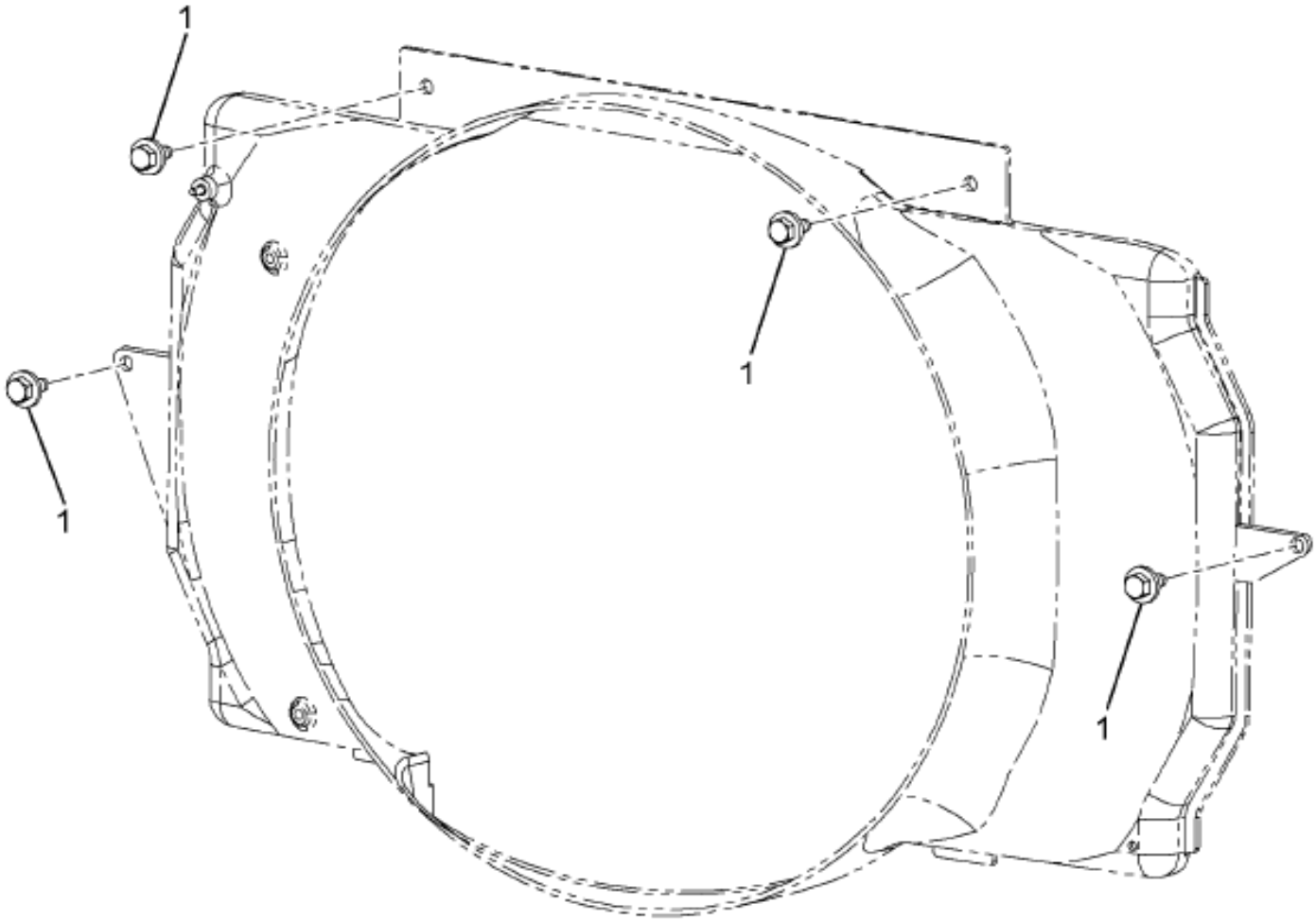

Item	Part No.	Qty	Description	Kit	Var	Figure
1	2504909C1	5	SCREW, M8X1.25X16L			
880		RF	NOTE: ASM BELOW COMPRISED OF ABOVE COMPONENTS			
881	2591782C91	RF	KIT,HARDWARE FAN SHROUD REPAIR			

Grp 12

COPYRIGHT© 2011INTERNATIONAL TRUCK AND ENGINE CORP.

https://truckmanualshub.com/

Figure 3603572F92
SHROUD, FAN

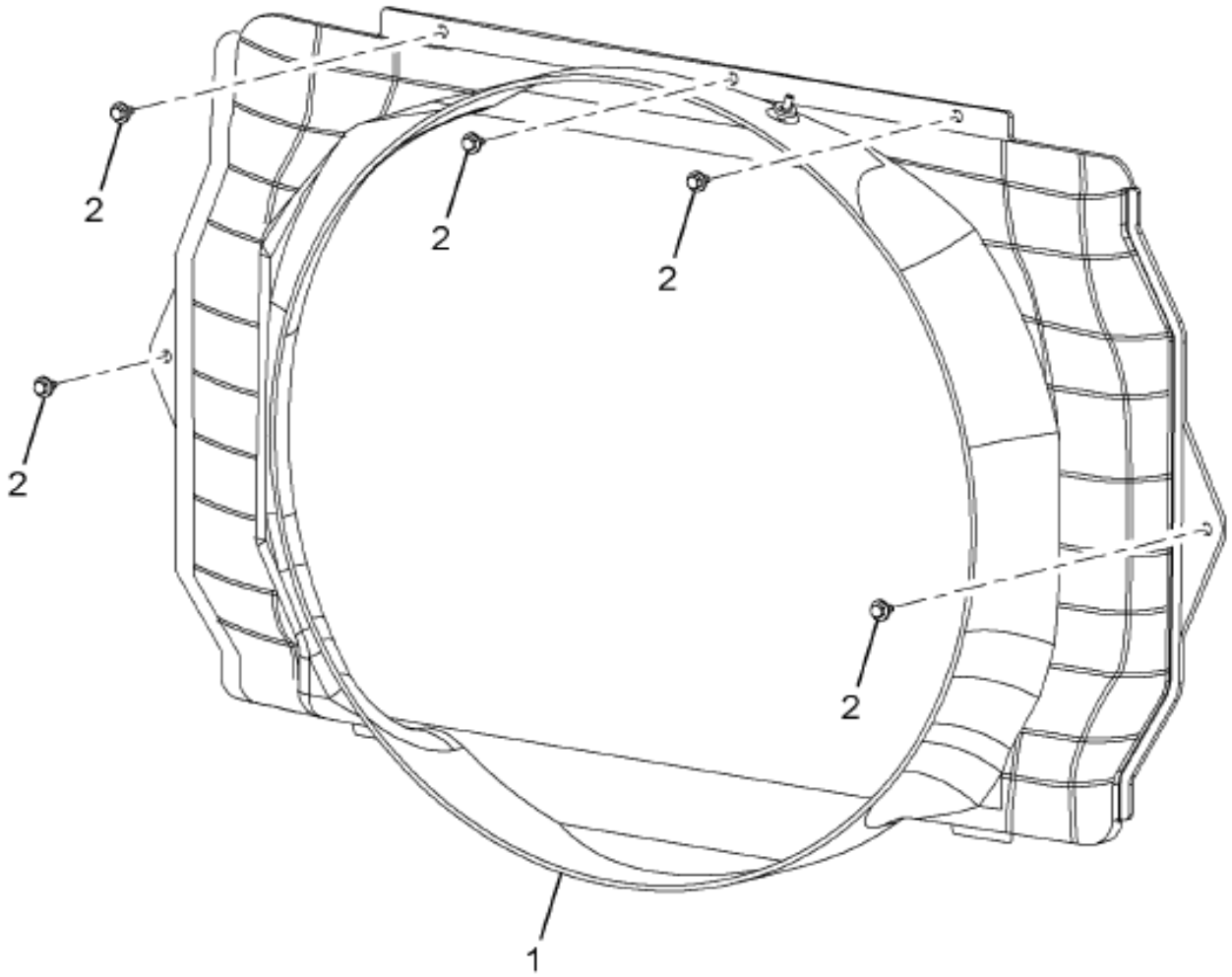

12-C02-0032-01 J06

Item	Part No.	Qty	Description	Kit	Var	Figure
1	2592322C91	1	SHROUD,FAN 32"			
2		5	SCREW, M8X1.25X16L	A		
800		RF	NOTE: THE FOLLOWING PARTS ARE			
			NON-ILLUSTRATED			
801	2591782C91	KT	KIT,HARDWARE FAN SHROUD REPAIR			2591782C91
801		RF	(CONSISTS OF PARTS DENOTED BY A)			

COPYRIGHT© 2011INTERNATIONAL TRUCK AND ENGINE CORP.

https://truckmanualshub.com/

Figure 3605572F92
SHROUD,FAN

Item	Part No.	Qty	Description	Kit	Var	Figure
880		RF	NOTE: ASM BELOW COMPRISED OF ABOVE COMPONENTS			
881	3605572F92	RF	SHROUD,FAN			

COPYRIGHT© 2011INTERNATIONAL TRUCK AND ENGINE CORP.

https://truckmanualshub.com/

Figure 0FKZG

MAJOR COMPONENT LUBRICATION; MANUAL TRANSMISSION OIL

Item	Part No.	Qty	Description	Kit	Var	Figure
5	2643022R1	2	FLUID,GEAR LUB 80W-90W		0PV7K	
5	2643022R1	11	FLUID,GEAR LUB 80W-90W		0FL00	

COPYRIGHT© 2011INTERNATIONAL TRUCK AND ENGINE CORP.

https://truckmanualshub.com/
Figure 01X18

MAJOR COMPONENT LUBRICATION; OIL FOR LARGE BORE ENGINES

Item	Part No.	Qty	Description	Kit	Var	Figure
5	2643576R1	36	FLUID,LUB OIL 15W40		0K3ML	

COPYRIGHT© 2011INTERNATIONAL TRUCK AND ENGINE CORP.

https://truckmanualshub.com/

Figure 06W YK

MAJOR COMPONENT LUBRICATION; OIL FOR REAR AXLES

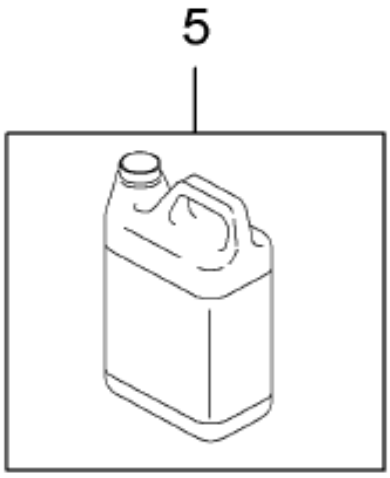

10-927-0005-01 H11

Item	Part No.	Qty	Description	Kit	Var	Figure
5	2643454R1	39	FLUID,GEAR LUB 85W-140		0KC5B	
5	2643454R1	34	FLUID,GEAR LUB 85W-140		0KC5B	

COPYRIGHT© 2011INTERNATIONAL TRUCK AND ENGINE CORP.

https://truckmanualshub.com/

Figure 0RQWV
OIL FILL/GAUGE INSTL; 7600, W/ISM EXPORT, W/2007 COOLING

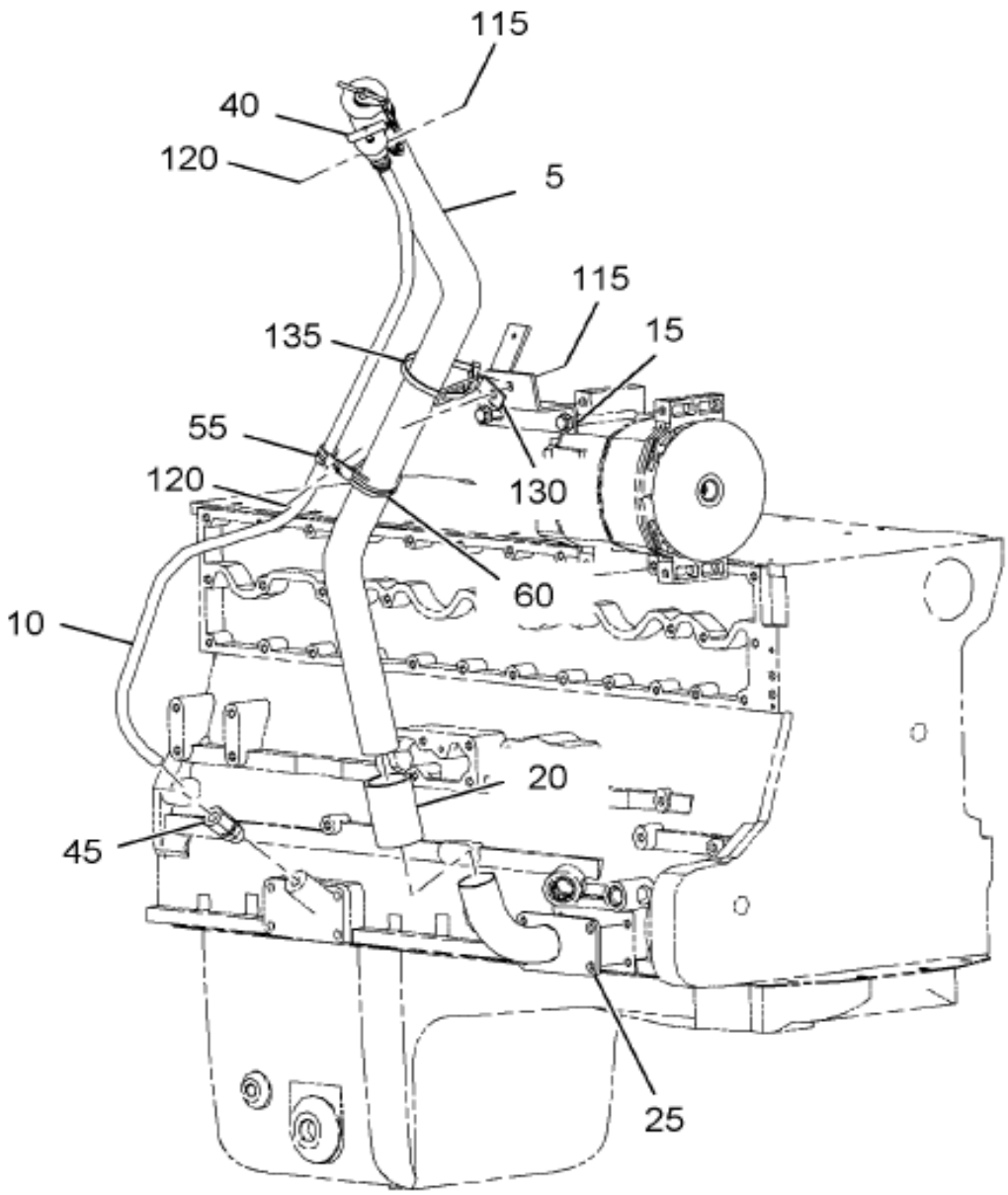

M-NGV-SS-7600
W/F-2002-N/EGR-ISM-ENG
W/510923
N/HOOD HATCHES

12-275-0277-01 L10

Item	Part No.	Qty	Description	Kit	Var	Figure
5	3674933C1	1	PIPE,OIL FILLER, ASSY		0RQWW	3674933C1
10	3674935C1	1	TUBE, ASSY		0RQWW	
15	3589308C1	1	BRACE,OIL LEVEL GA TUBE*76-770		0RQWW	
20	572010C1	1	HOSE,OIL FILLER BODY		0RQWW	
20	279027R91	2	CLAMP NO. 28 TYPE F HOSE		0RQWW	
25	1669087C1	1	TUBE,OIL FILLER		0RQWW	

Grp 12

COPYRIGHT© 2011INTERNATIONAL TRUCK AND ENGINE CORP.

https://truckmanualshub.com/

Figure 0RQWV

OIL FILL/GAUGE INSTL; 7600, W/ISM EXPORT, W/2007 COOLING

Item	Part No.	Qty	Description	Kit	Var	Figure
25	588084C3	1	GASKET,OIL FILLER BODY MTG, GA		0RQWW	
40	3675119C3	1	GAUGE,OIL LEVEL DIP STICK,		0RQWW	
45	299501C91	1	CONNECTOR,TUBE		0RQWW	
55	446075R91	2	CLAMP,CABLE CLOSED		0RQWW	
60	299276C91	2	CLAMP,RUBBER CUSHIONED		0RQWW	
115	3535556C1	3	NUT,HEX METRIC PREV. TORQ*M10		0RQWW	
120	40218R1	3	BOLT,HEX FLG HD METRIC*M10X25,		0RQWW	
130	3830510C1	1	EXTENSION, LADDER BRACKET		0RQWW	
135	306132C1	1	STRAP,CABLE LOCK		0RQWW	

COPYRIGHT© 2011INTERNATIONAL TRUCK AND ENGINE CORP.

https://truckmanualshub.com/

Figure 3674933C1
PIPE,OIL FILLER, ASSY

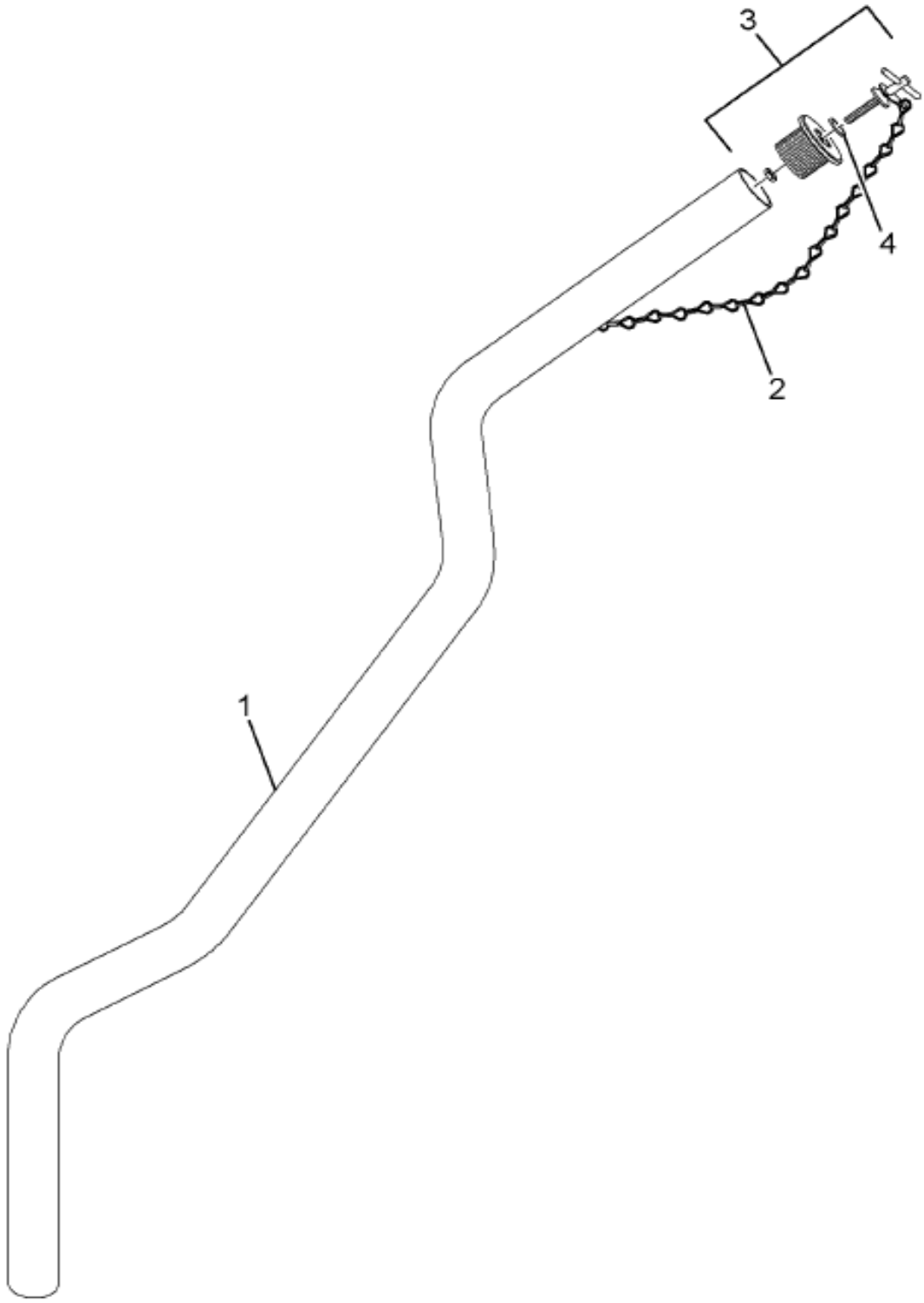

12-275-0159-01 E08

Item	Part No.	Qty	Description	Kit	Var	Figure
1	3674932C1	1	PIPE,OIL FILLER,			
2	288079C1	1	CHAIN,SAFETY FILLER CAP			
3	336079R91	1	CAP,OIL FILLER			
4	288078C1	1	RING,OIL FILL PIPE			
880		RF	NOTE: ASM BELOW COMPRISED OF ABOVE COMPONENTS			

Grp 12

COPYRIGHT© 2011INTERNATIONAL TRUCK AND ENGINE CORP.

https://truckmanualshub.com/

Figure 3674933C1

PIPE,OIL FILLER, ASSY

Item	Part No.	Qty	Description	Kit	Var	Figure
881	3674933C1	RF	PIPE,OIL FILLER, ASSY			

COPYRIGHT© 2011INTERNATIONAL TRUCK AND ENGINE CORP.

https://truckmanualshub.com/
Figure 01 of 16

OPERATION/MAINTENANCE MANUAL; CUMMINS

Item	Part No.	Qty	Description	Kit	Var	Figure
5	3815019R1	1	MANUAL,OWN/OP,CUMM ISM SPANISH		0KDV3	

COPYRIGHT© 2011INTERNATIONAL TRUCK AND ENGINE CORP.

https://truckmanualshub.com/

Figure 0G5H6

PRODUCT GRAPHIC; ENGINE OIL

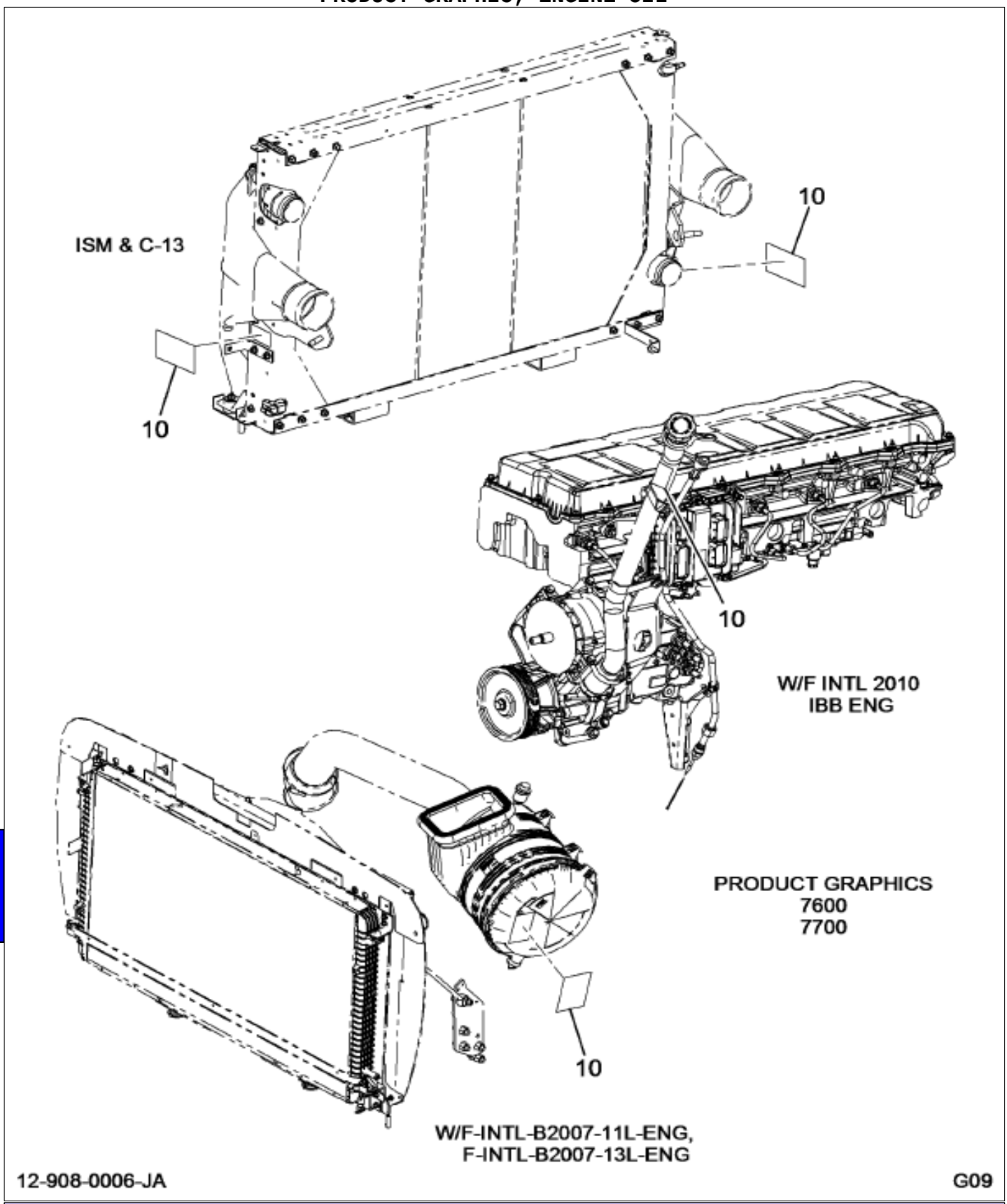

Item	Part No.	Qty	Description	Kit	Var	Figure
10	3557283C2	2	PRODUCT GRAPHICS,LABEL INFO*EN		0G6BB	

COPYRIGHT© 2011INTERNATIONAL TRUCK AND ENGINE CORP.

https://truckmanualshub.com/

Figure 0M9RT

PRODUCT GRAPHIC; FAN DRIVE

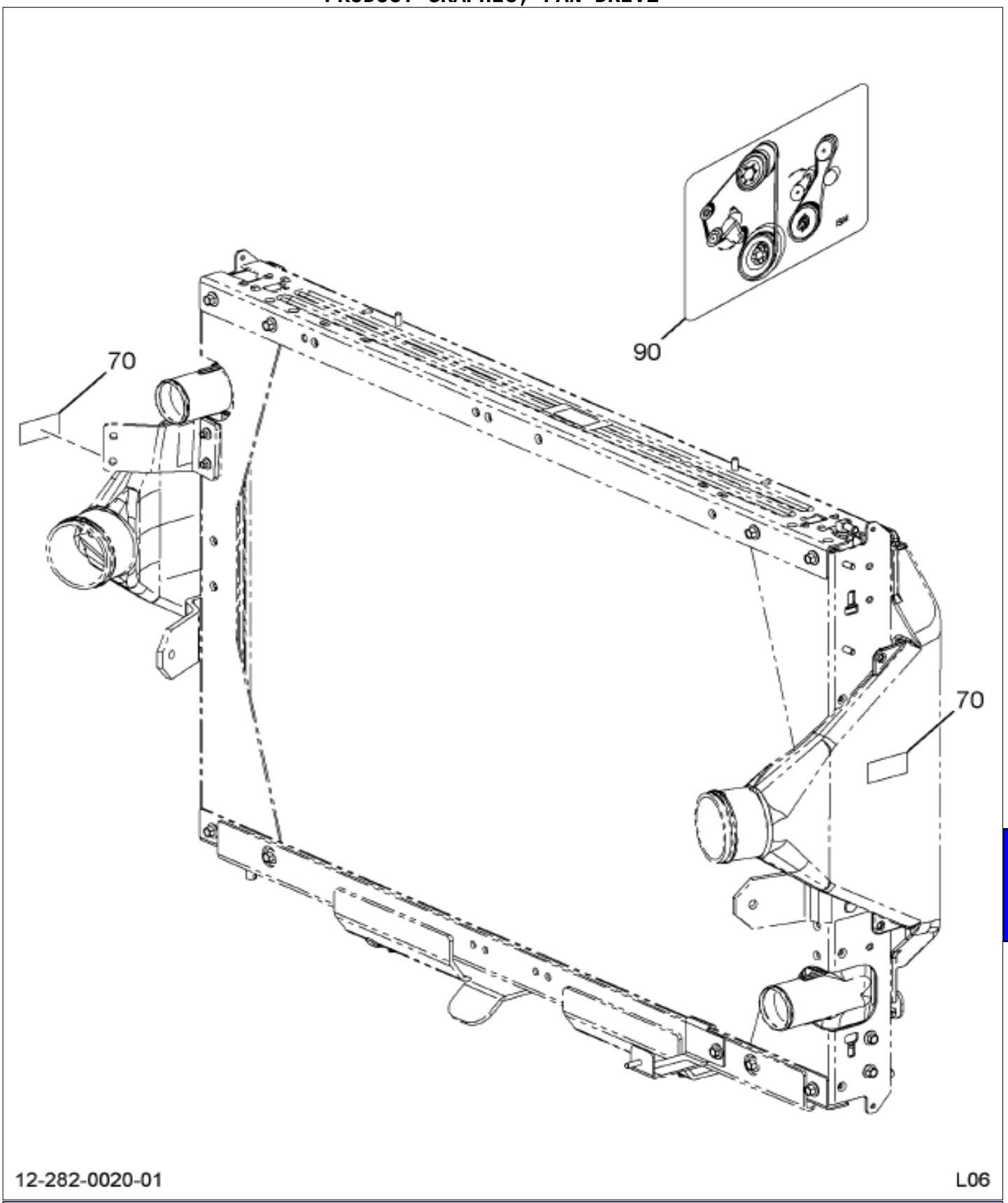

Item	Part No.	Qty	Description	Kit	Var	Figure
70	3625401C3	2	PRODUCT GRAPHIC LABEL CAUTION		0M9RT	
90	3605656C1	1	PRODUCT GRAPHICS LABEL INSTL		0MFBM	

Grp 12

COPYRIGHT© 2011INTERNATIONAL TRUCK AND ENGINE CORP.

https://truckmanualshub.com/

Figure 0MBRC
RAD HOSING INSTL; (CUM ISM)

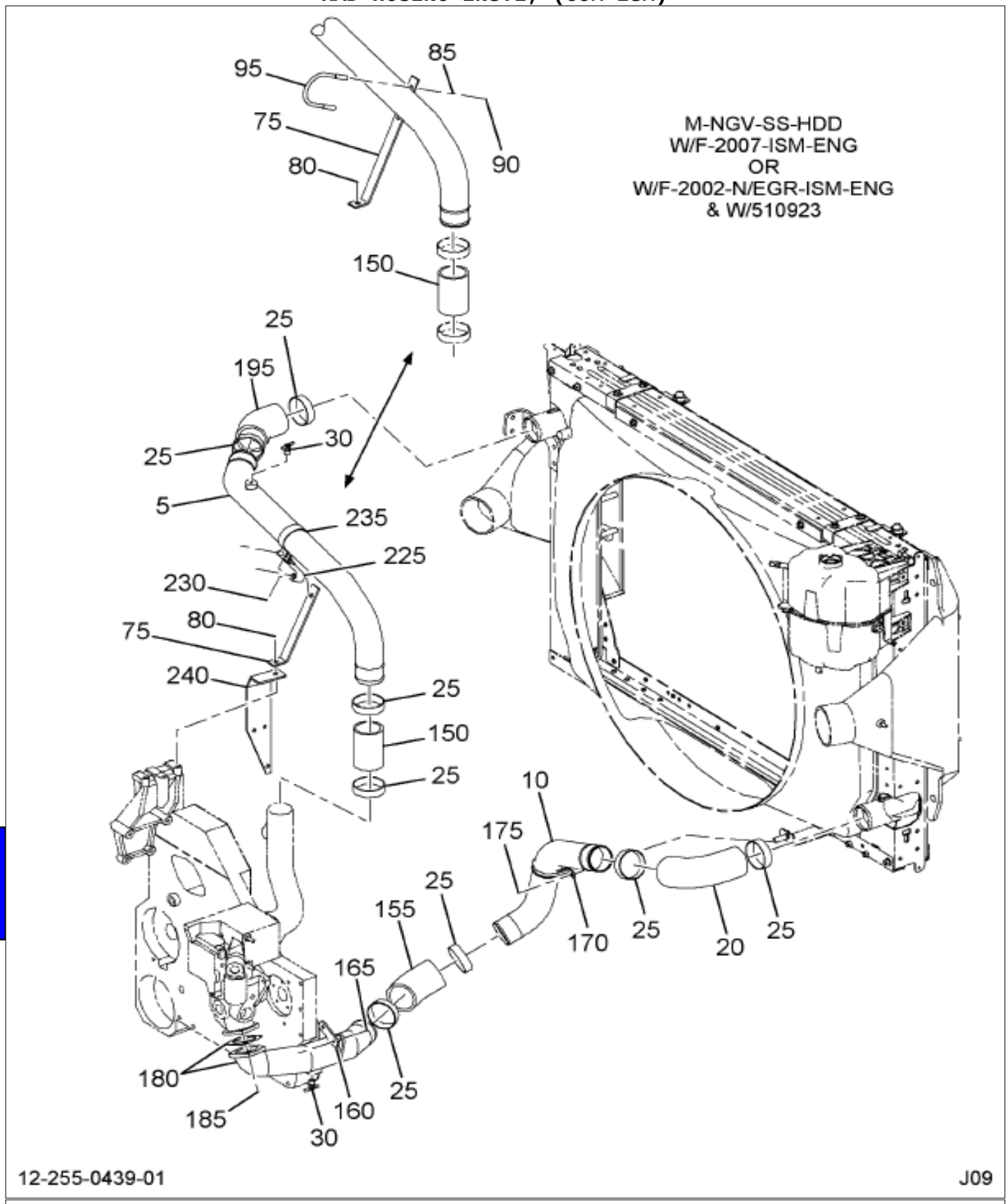

Figure 1 of 2

COPYRIGHT© 2011INTERNATIONAL TRUCK AND ENGINE CORP.

https://truckmanualshub.com/

Figure 0MBRC
RAD HOSING INSTL; (CUM ISM)

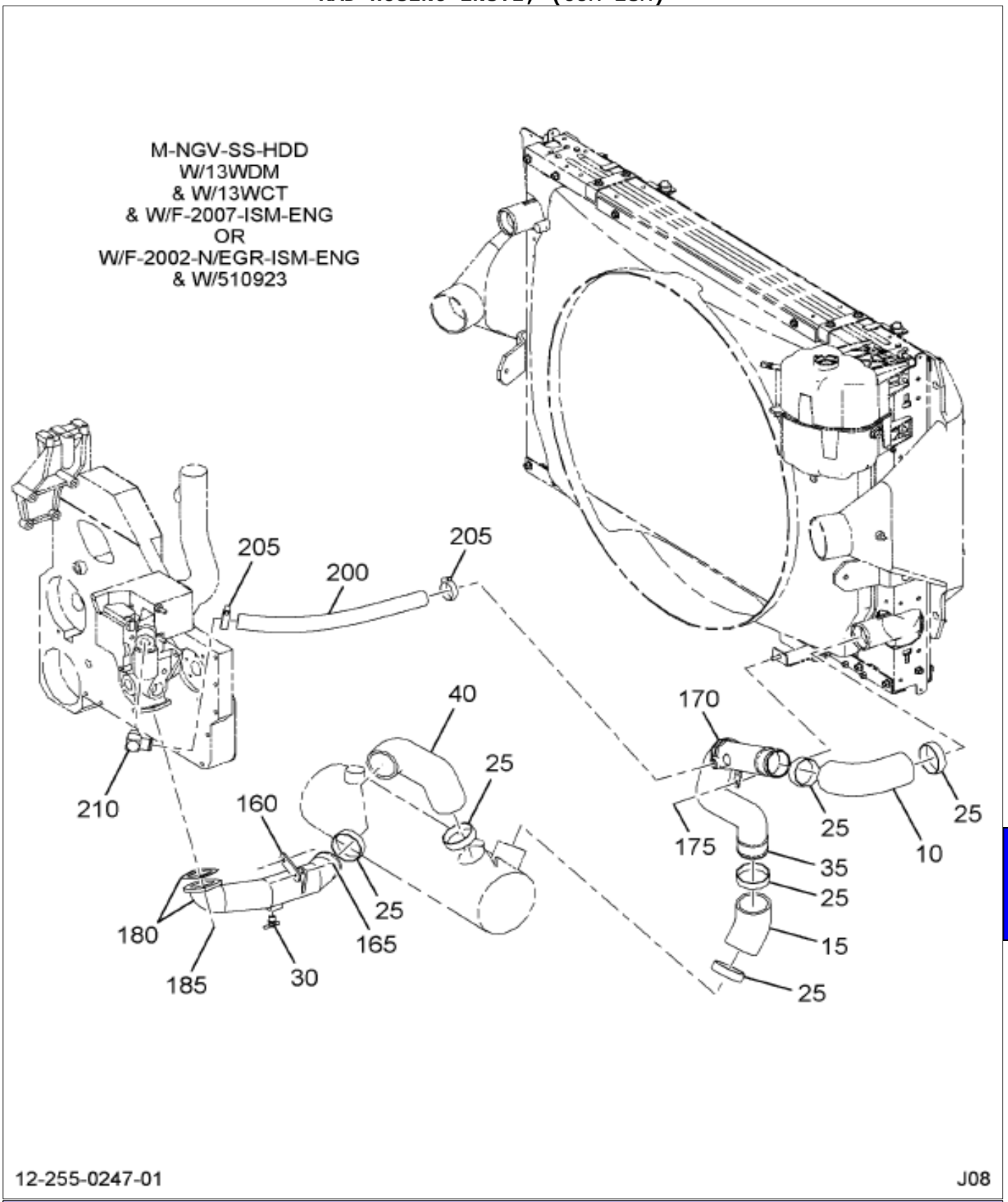

Item	Part No.	Qty	Description	Kit	Var	Figure
5	3605670C2	1	PIPE,RADIATOR, ASSY,UPPER		0VY26	3605670C2
10	3605672C1	1	PIPE RADIATOR LOWER		0MBRD	
20	3558668C2	1	ELBOW, HOSE, 63.5 M DIA X 115		0MBRD	
25	3535084R1	2	CLAMP RAD OUTLET PIPE		0MBRC	
25	3535084R1	4	CLAMP RAD OUTLET PIPE		0VY26	
25	3535084R1	2	CLAMP RAD OUTLET PIPE		0MBRD	

COPYRIGHT© 2011INTERNATIONAL TRUCK AND ENGINE CORP.

https://truckmanualshub.com/

Figure 0MBRC

RAD HOSING INSTL; (CUM ISM)

Item	Part No.	Qty	Description	Kit	Var	Figure
30	103647	1	VALVE, DRAIN COCK 1/4 NPT		0MBRC	
30	103647	1	VALVE, DRAIN COCK 1/4 NPT		0VY26	
75	3820312C1	1	EXTENSION,		0RNCC	
80	30848R2	1	BOLT, M10 X 20MM PHC FLG CLASS		0RNCC	
150	571608C1	1	HOSE,RAD OUTLET 2 1/2 ID X 4"		0MBRD	
155	485794C2	1	HOSE,RAD INLET, 2 1/2" I.D.		0MBRD	
160	1673787C3	1	BRACKET,WATER PIPE		0MBRC	
165	30194R1	1	BOLT, M6 X 25 PHC CLS 10.9		0MBRC	
165	30208R1	1	NUT, M6 PHC CLASS 10		0MBRC	
165	933833R1	1	WASHER,6MM LOCK		0MBRC	
170	1677372C1	1	CLAMP,RUBBER CUSHIONED		0MBRC	
175	30986R1	1	NUT,M8 CLASS 8 H/FLG		0MBRC	
180	1673859C3	1	PIPE,WATER		0MBRC	
180	1673885C1	1	GASKET,FLANGE PIPE		0MBRC	
185	30021R1	2	BOLT M10 X 30 PHC CLASS 10.9		0MBRC	
185	996593C1	2	WASHER LOCK M10		0MBRC	
195	3605681C2	1	HOSE,RAD INLET, 2.5"I.D.		0MBRD	
225	3819158C1	1	ISOLATOR,UPPER RADIATOR PIPE		0RNCC	
225	30024R1	1	BOLT,HH M10 X 45 PHC CLS 10.		0RNCC	
225	30176R1	1	WASHER,LOCK 10.8 X 21 X 2.5MM		0RNCC	
225	30727R1	1	NUT,HEX FLG METRIC-M10 ZND FI		0RNCC	
230	30007R1	1	BOLT, M8 X 45 PHC CLASS 10.9		0RNCC	
230	30175R1	1	WASHER, 8.8 X 17 X 2MM PHC		0RNCC	
230	40066R1	1	NUT, M8 - HF LOCK		0RNCC	
235	2000005C1	1	CLAMP PIPE		0RNCC	
235	30021R1	1	BOLT M10 X 30 PHC CLASS 10.9		0RNCC	
235	30727R1	1	NUT,HEX FLG METRIC-M10 ZND FI		0RNCC	
235	30176R1	1	WASHER,LOCK 10.8 X 21 X 2.5MM		0RNCC	

COPYRIGHT© 2011INTERNATIONAL TRUCK AND ENGINE CORP.

https://truckmanualshub.com/

Figure 3605670C2
PIPE,RADIATOR, ASSY,UPPER

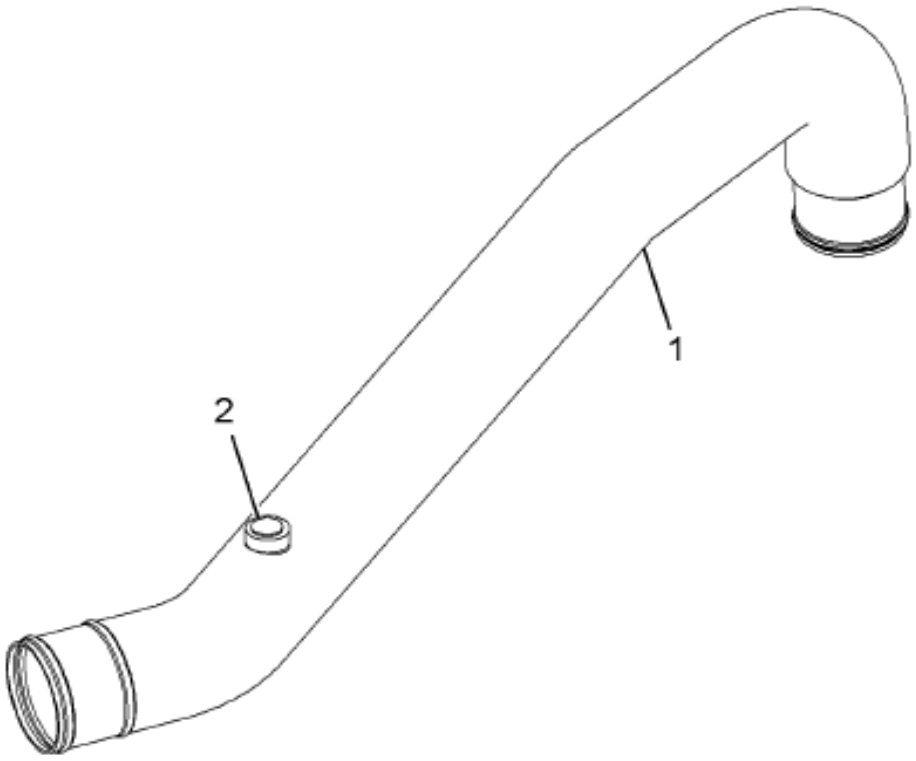

12-251-0168-01 J06

Item	Part No.	Qty	Description	Kit	Var	Figure
1	3605671C2	1	PIPE,RADIATOR, UPPER			
2	182644R1	1	FERRULE,AIR TANK 1&4 P			
880		RF	NOTE: ASM BELOW COMPRISED OF ABOVE COMPONENTS			
881	3605670C2	RF	PIPE,RADIATOR, ASSY,UPPER			

Grp 12

COPYRIGHT© 2011INTERNATIONAL TRUCK AND ENGINE CORP.

https://truckmanualshub.com/

Figure 0M9RS

RAD STAY ROD INSTL; LOWER

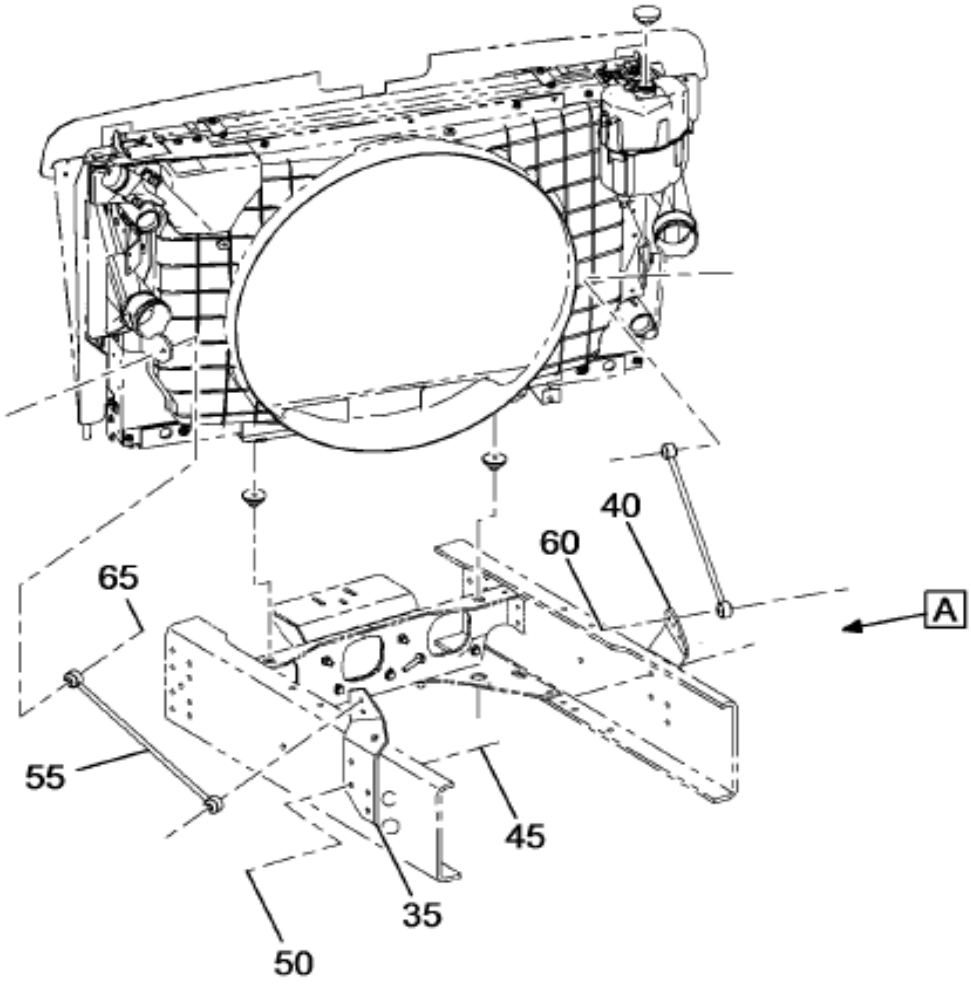

M-NGV-SS-HDD

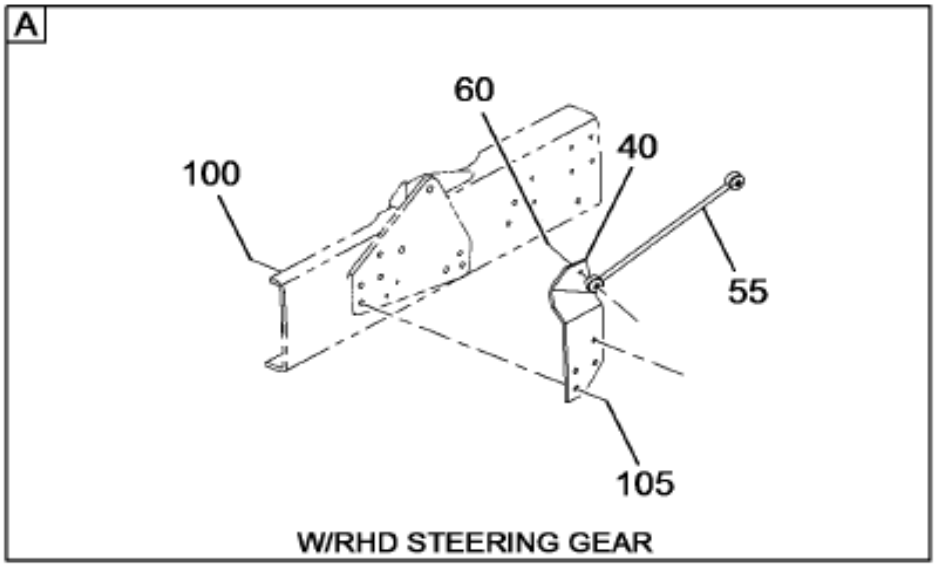

W/RHD STEERING GEAR

12-287-0059-01 D11

Item	Part No.	Qty	Description	Kit	Var	Figure
35	3605648C3	1	SUPPORT, RADIATOR ROD, LEFT		0M9W1	
40	3605647C2	1	SUPPORT, RADIATOR ROD, RIGHT		0M9W1	
45	30751R2	4	BOLT,HEX FLG HD METRIC*M16 X 4		0M9W1	
50	30756R1	4	NUT,HEX M16 PRVTRQ		0M9W1	
55	3605649C2	2	ROD RADIATOR SUPPORT -		0M9W1	
60	40270R1	2	BOLT M12 X 60 NO CLASS 10.9		0M9W1	

COPYRIGHT© 2011INTERNATIONAL TRUCK AND ENGINE CORP.

https://truckmanualshub.com/

Figure 0M9RS

RAD STAY ROD INSTL; LOWER

Item	Part No.	Qty	Description	Kit	Var	Figure
60	3535859C1	2	NUT,HEX METRIC PREV. TORQ*M12		0M9W1	
60	25710R1	2	WASHER,FLAT 1/2 (.531X1.062X.1		0M9W1	
65	40275R1	2	BOLT,M12 X 70 NO CLASS 10.9		0M9W1	
65	3535859C1	2	NUT,HEX METRIC PREV. TORQ*M12		0M9W1	
65	25710R1	2	WASHER,FLAT 1/2 (.531X1.062X.1		0M9W1	

COPYRIGHT© 2011INTERNATIONAL TRUCK AND ENGINE CORP.

https://truckmanualshub.com/

Figure 0M9RJ
RADIATOR ASM; RAD/CAC

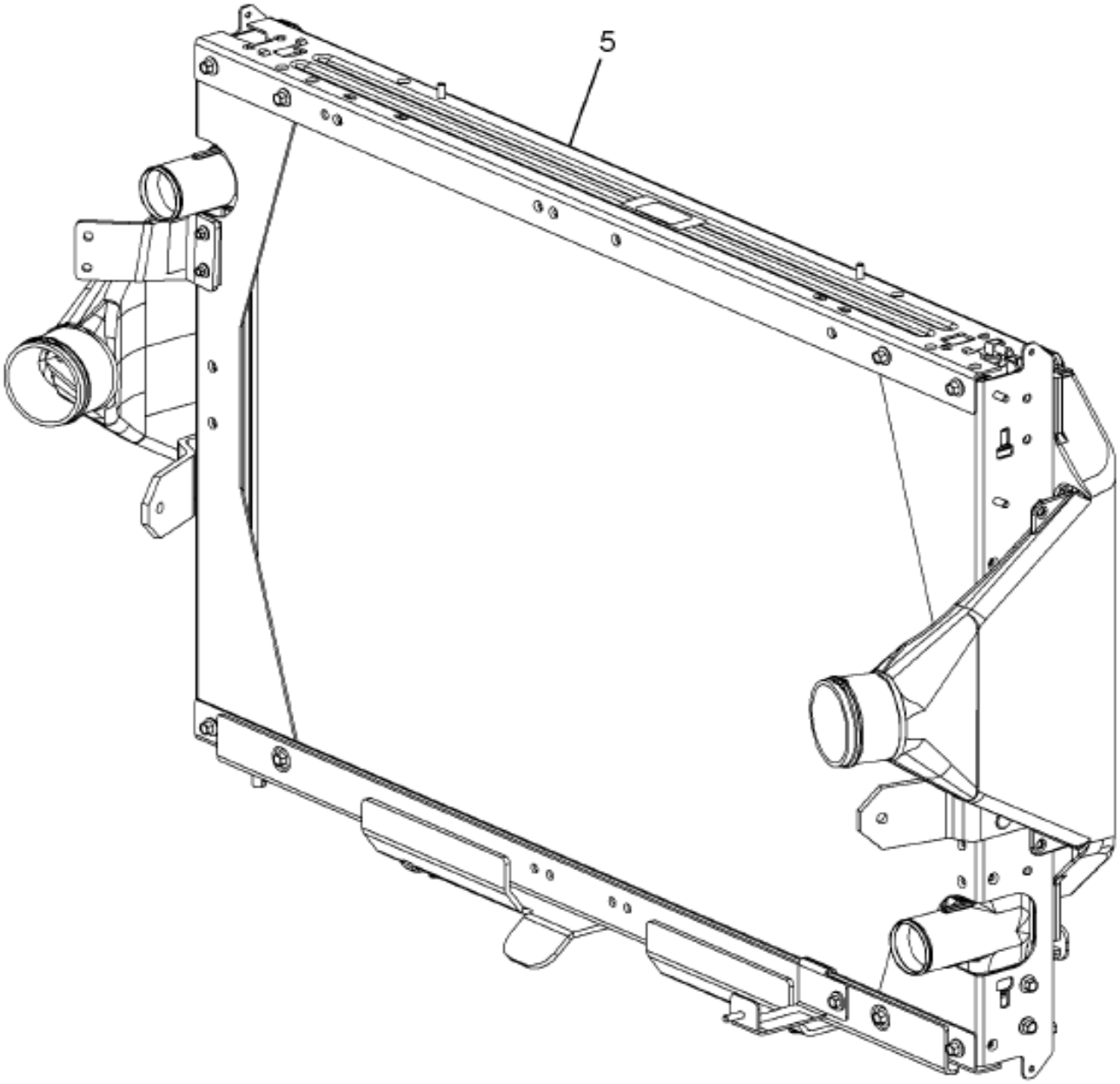

12-C01-0113-01 L06

Item	Part No.	Qty	Description	Kit	Var	Figure
5	3605571F95	1	RADIATOR, ALUMINUM RAD/CAC		0M9TL	3605571F95

COPYRIGHT© 2011INTERNATIONAL TRUCK AND ENGINE CORP.

https://truckmanualshub.com/

Figure 2591778C91
KIT,RAD CAC REPAIR

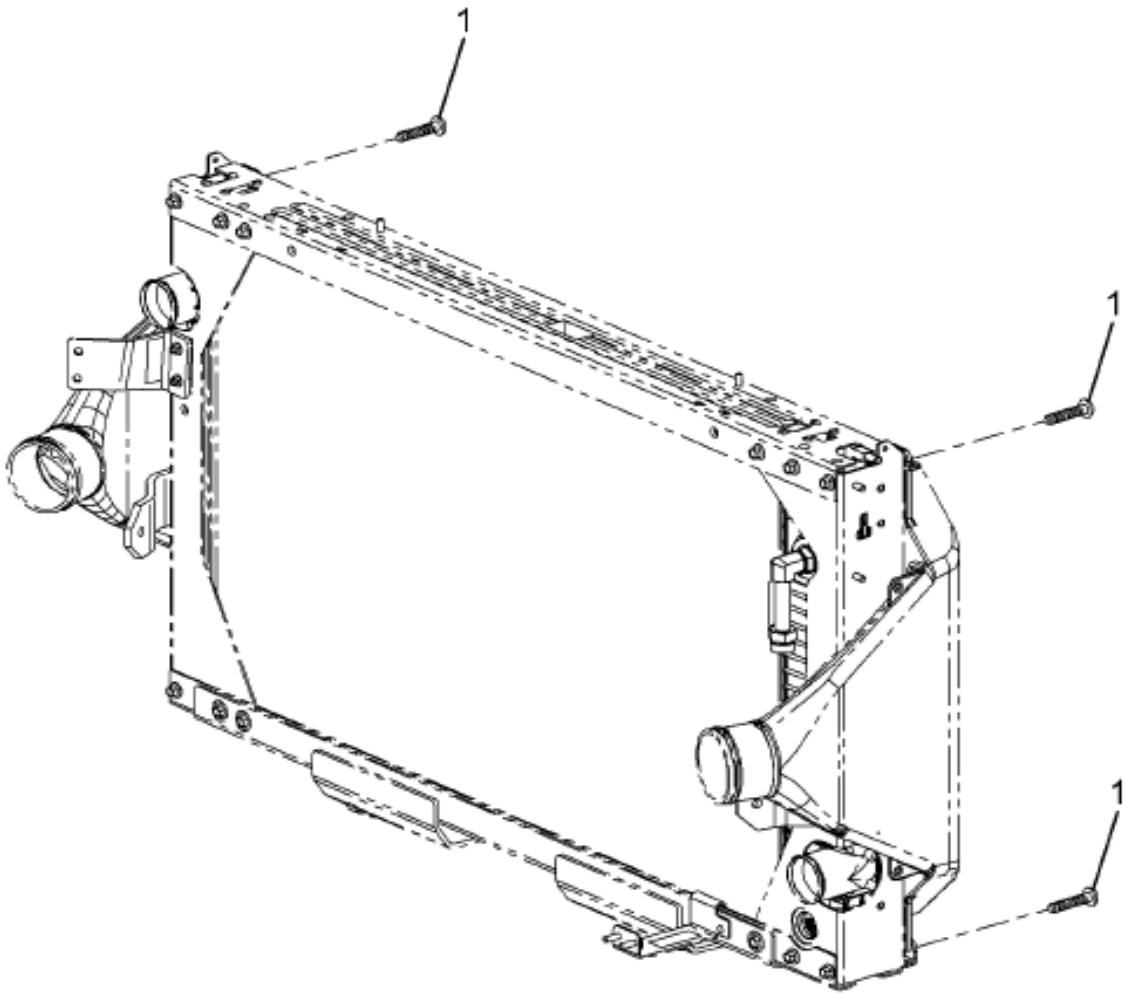

12-C01-0097-01 J06

Item	Part No.	Qty	Description	Kit	Var	Figure
1		4	SCREW M10X1.5X27L			
880		RF	NOTE: ASM BELOW COMPRISED OF ABOVE COMPONENTS			
881	2591778C91	RF	KIT,RAD CAC REPAIR			

Grp 12

COPYRIGHT© 2011INTERNATIONAL TRUCK AND ENGINE CORP.

https://truckmanualshub.com/

Figure 2391821C91
KIT,RADIATOR GROUND CABLE

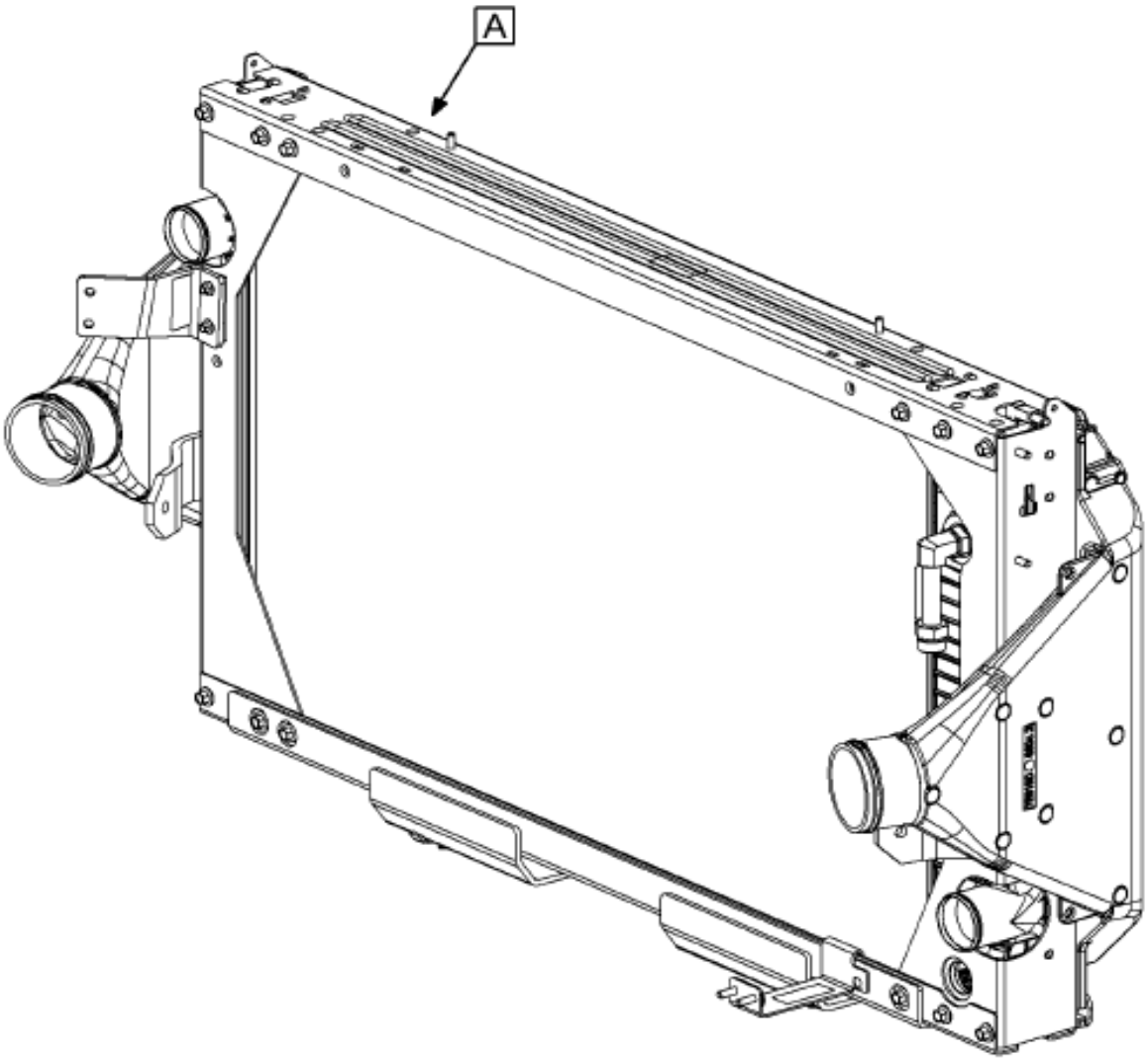

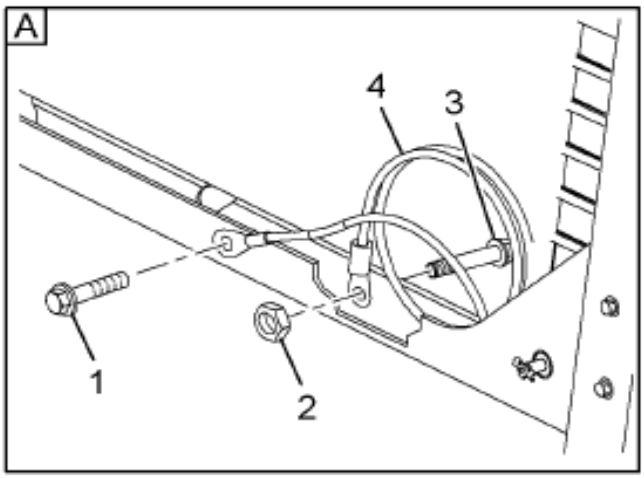

12-D71-M009-01 H09

Item	Part No.	Qty	Description	Kit	Var	Figure
1		1	SCREW M6X1.0-6G			
2		1	NUT, FLANGE M6X1.0-6H			
3		1	SCREW,M8X1.25-6G			
4		1	CABLE, GROUND			
880		RF	NOTE: ASM BELOW COMPRISED OF ABOVE COMPONENTS			

COPYRIGHT© 2011INTERNATIONAL TRUCK AND ENGINE CORP.

https://truckmanualshub.com/

Figure 2591821C91

KIT,RADIATOR GROUND CABLE

Item	Part No.	Qty	Description	Kit	Var	Figure
881	2591821C91	RF	KIT,RADIATOR GROUND CABLE			

COPYRIGHT© 2011INTERNATIONAL TRUCK AND ENGINE CORP.

Figure 2592329C92
RADIATOR

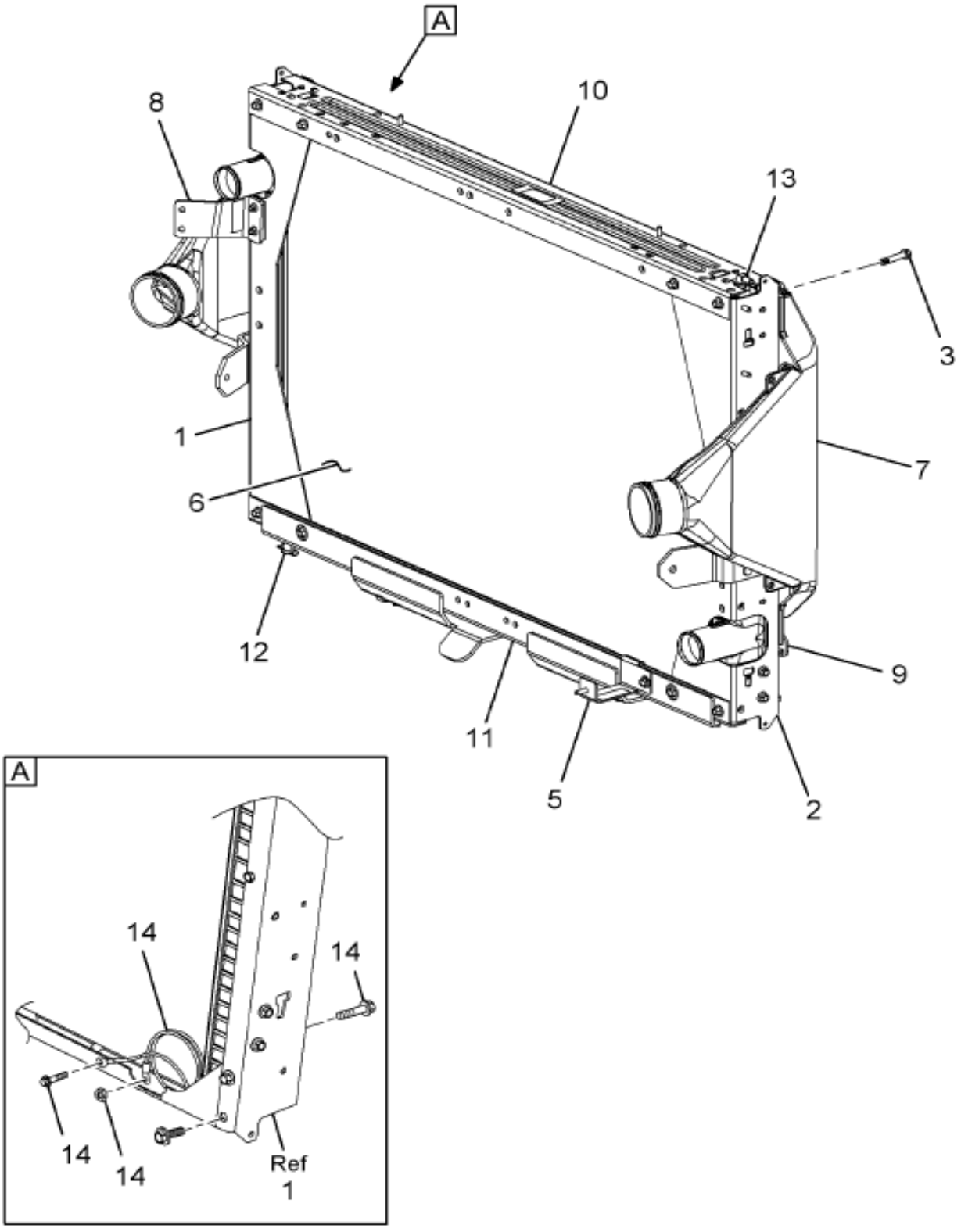

12-C01-0118-01 M06

Item	Part No.	Qty	Description	Kit	Var	Figure
1	2592333C91	KT	KIT,RAD SUPPORT LH REAR			
1		RF	LEFT			
2	2592334C91	KT	KIT,RAD SUPPORT RH REAR			
2		RF	RIGHT			
3	2591778C91	KT	KIT,RAD CAC REPAIR			2591778C91
5	2592338C1	1	BRACKET,HOSE RADIATOR SUPPORT			

COPYRIGHT© 2011INTERNATIONAL TRUCK AND ENGINE CORP.

https://truckmanualshub.com/

Figure 2592329C92
RADIATOR

Item	Part No.	Qty	Description	Kit	Var	Figure
6	2592331C91	1	RADIATOR,ASM			
7	2591777C91	1	COOLER,CHARGE AIR ASM			
8	2591823C1	1	BRACKET,PWR STRG			
9	2592339C1	1	BRACKET, GRILLE MOUNTING			
10	2592335C92	KT	KIT,RAD TOP FRM ASSY W/ISO			
11	2592336C92	KT	KIT,RAD BOT FRM ASSY W/ISOLA			
12	2506271C1	1	PLUG,DRAIN COCK			
13	2591763C1	1	VENT, ASSY			
14	2591821C91	KT	KIT,RADIATOR GROUND CABLE			2591821C91
800		RF	NOTE: THE FOLLOWING PARTS ARE			
			NON-ILLUSTRATED			
801	2591769C91	KT	KIT,RAD LH/RH SIDE REPAIR			2591769C91
802	2591773C91	KT	KIT,RAD TOP/BOTTOM CHNL REPAIR			2591773C91
803	2592332C91	KT	KIT,RAD SUPPORT			
804	2592340C1	1	BRACKET, TOC MOUNTING			
880		RF	NOTE: ASM BELOW COMPRISED OF ABOVE			
			COMPONENTS			
881	2592329C92	RF	RADIATOR			
			NON-ILLUSTRATED REFERENCE FIGURE 2591769C91			
1		10	M8X1.25X14L			
880		RF	NOTE: ASM BELOW COMPRISED OF ABOVE			
			COMPONENTS			
881	2591769C91	RF	KIT,RAD LH/RH SIDE REPAIR			
			NON-ILLUSTRATED REFERENCE FIGURE 2591773C91			
1		24	M10X1.5-6GX14L			
880		RF	NOTE: ASM BELOW COMPRISED OF ABOVE			
			COMPONENTS			
881	2591773C91	RF	KIT,RAD TOP/BOTTOM CHNL REPAIR			

COPYRIGHT© 2011INTERNATIONAL TRUCK AND ENGINE CORP.

https://truckmanualshub.com/

Figure 3605571F95
RADIATOR, ALUMINUM RAD/CAC

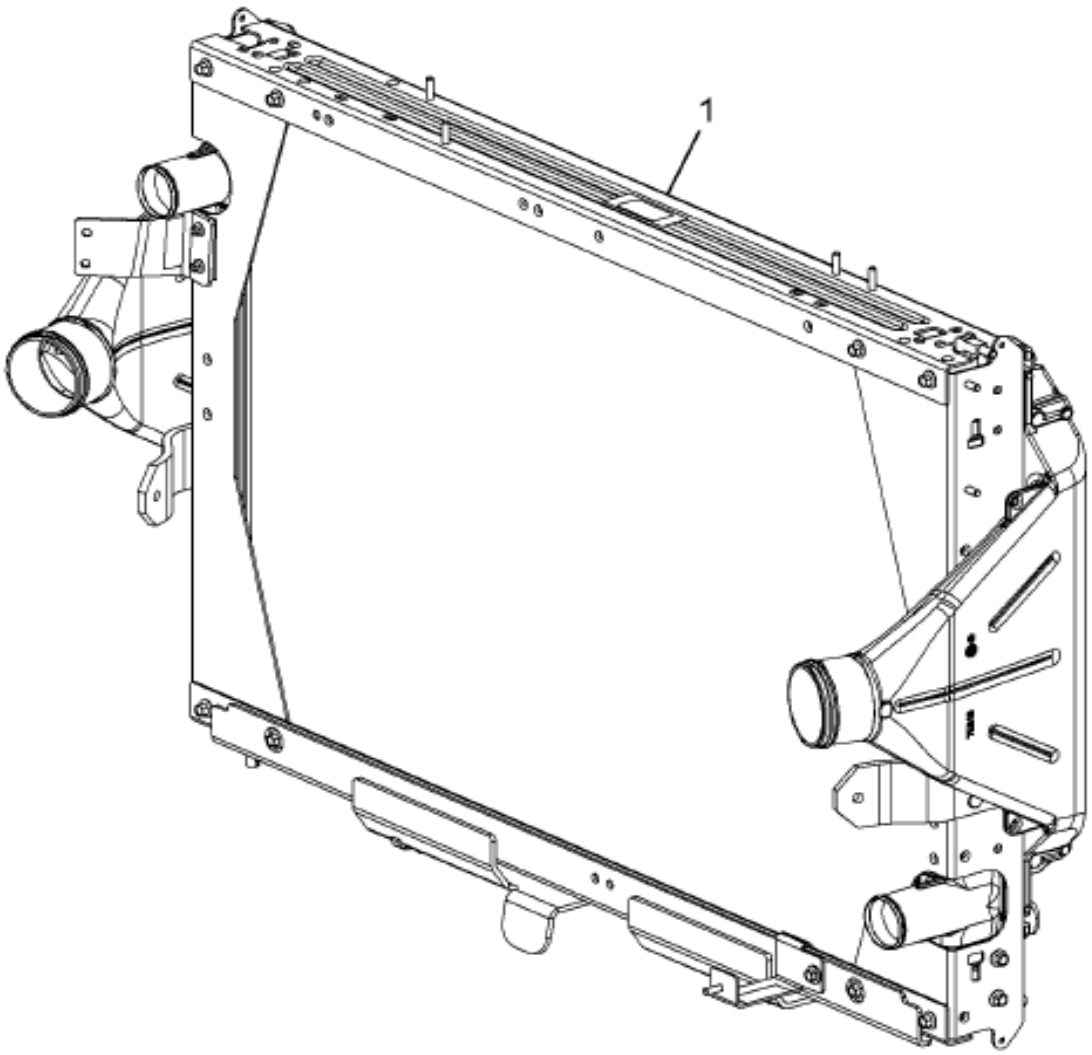

12-C01-0171-01 E08

Item	Part No.	Qty	Description	Kit	Var	Figure
1	2592329C92	1	RADIATOR			2592329C92
880		RF	NOTE: ASM BELOW COMPRISED OF ABOVE COMPONENTS			
881	3605571F95	RF	RADIATOR, ALUMINUM RAD/CAC			

COPYRIGHT© 2011INTERNATIONAL TRUCK AND ENGINE CORP.

https://truckmanualshub.com/
Figure 0F51H
STARTING MOTOR INSTL; W/CAT C10,C11,C12,C13 ISM ENG

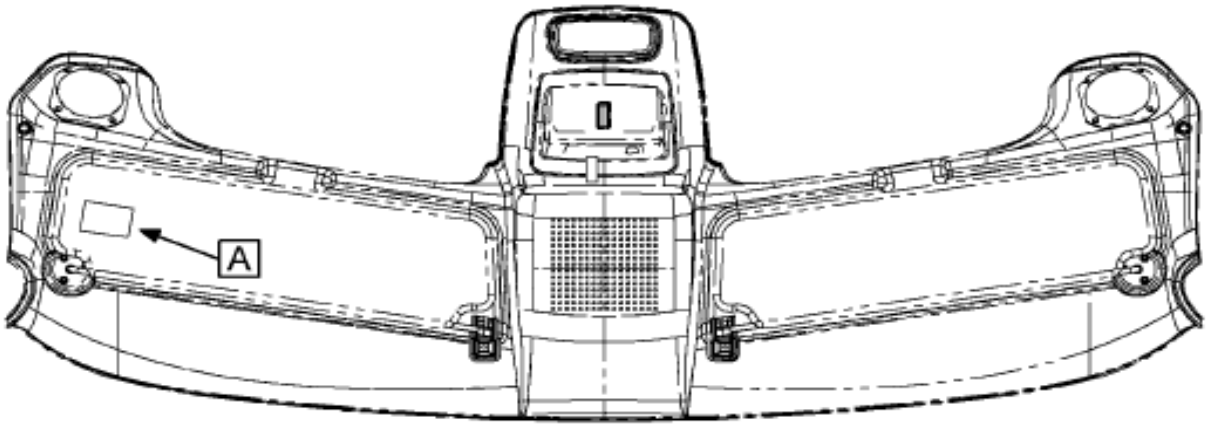

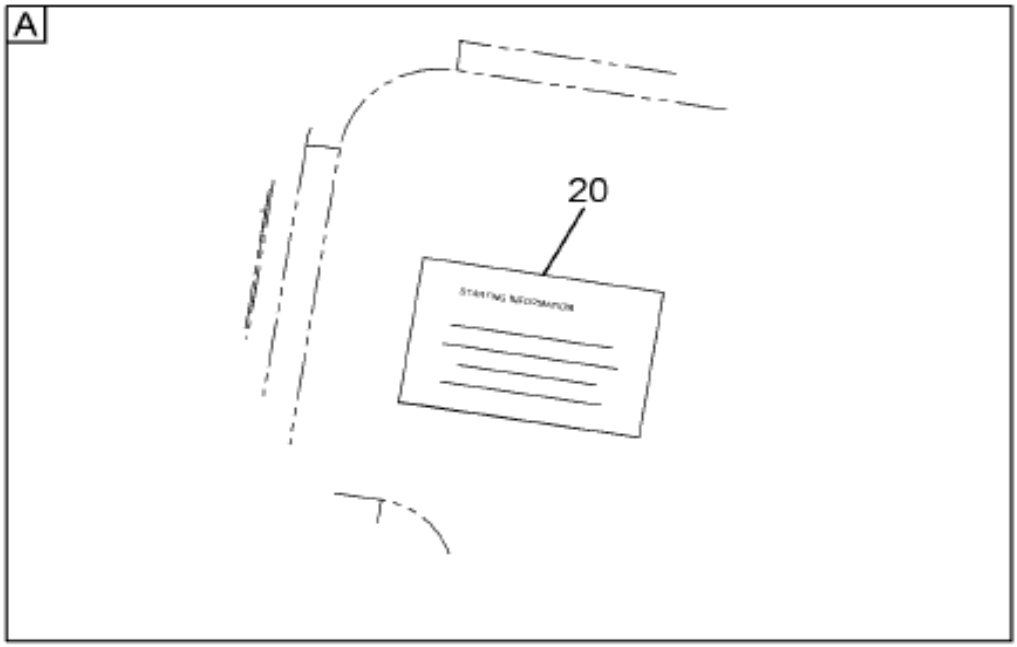

12-192-0098-01 L10

Figure 1 of 5

COPYRIGHT© 2011INTERNATIONAL TRUCK AND ENGINE CORP.

https://truckmanualshub.com/
Figure 0F5111
STARTING MOTOR INSTL; W/CAT C10,C11,C12,C13 ISM ENG

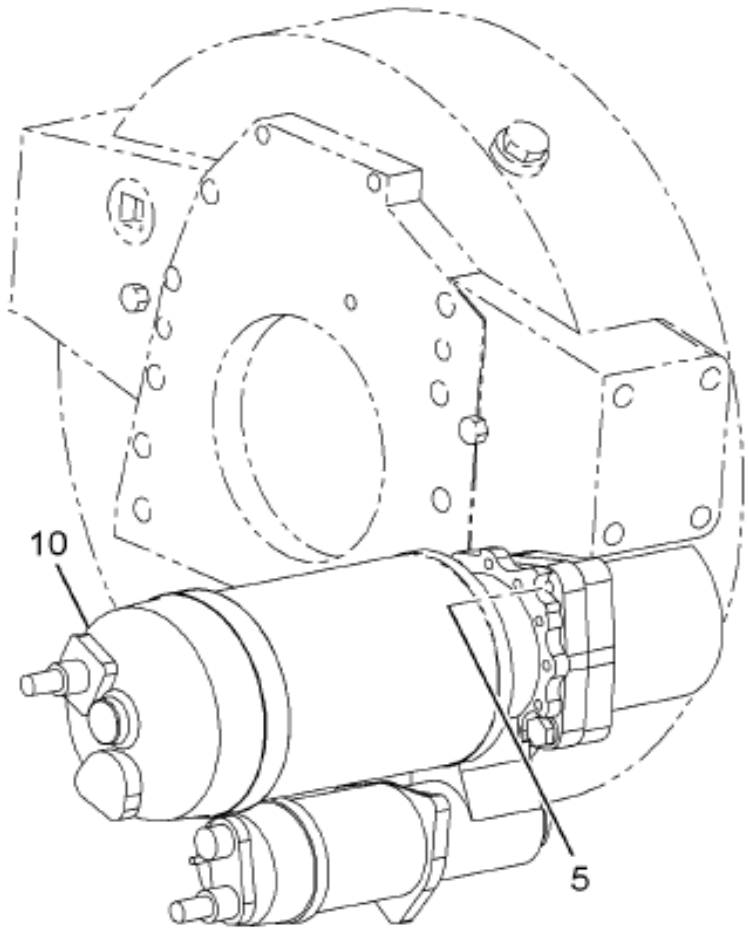

M-JVCC, M-F6/750-EPA07
W/F-FORD-JV-3126E-ENG,
W/F-FORD-C7-ACERT,
W/F-2007-ACERT-C7-ENG
W/08WTE,08WWL

12-192-0044-01 L10

Figure 2 of 5

COPYRIGHT© 2011INTERNATIONAL TRUCK AND ENGINE CORP.

https://truckmanualshub.com/
Figure 0FS1H
STARTING MOTOR INSTL; W/CAT C10,C11,C12,C13 ISM ENG

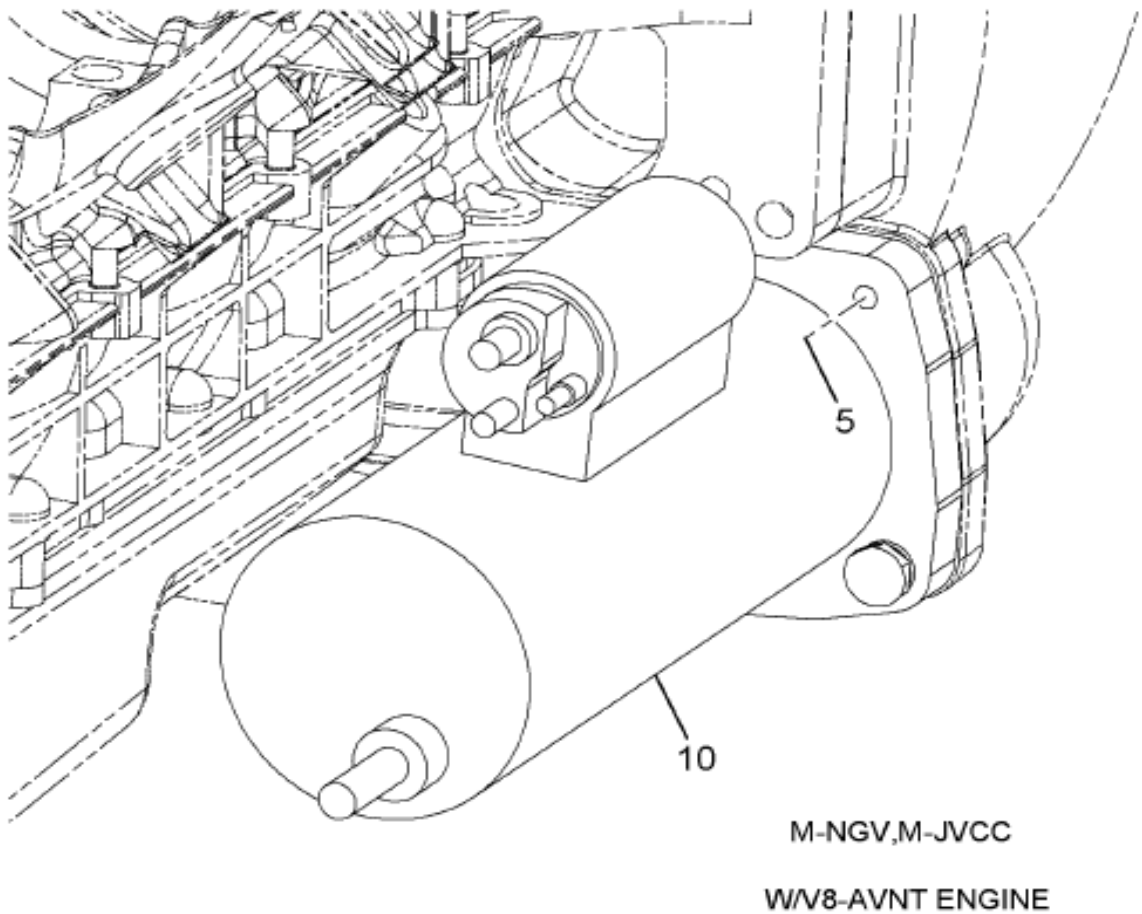

12-192-0045-01 L10

Grp 12

Figure 3 of 5

COPYRIGHT© 2011INTERNATIONAL TRUCK AND ENGINE CORP.

https://truckmanualshub.com/
Figure 0f 5H
STARTING MOTOR INSTL; W/CAT C10,C11,C12,C13 ISM ENG

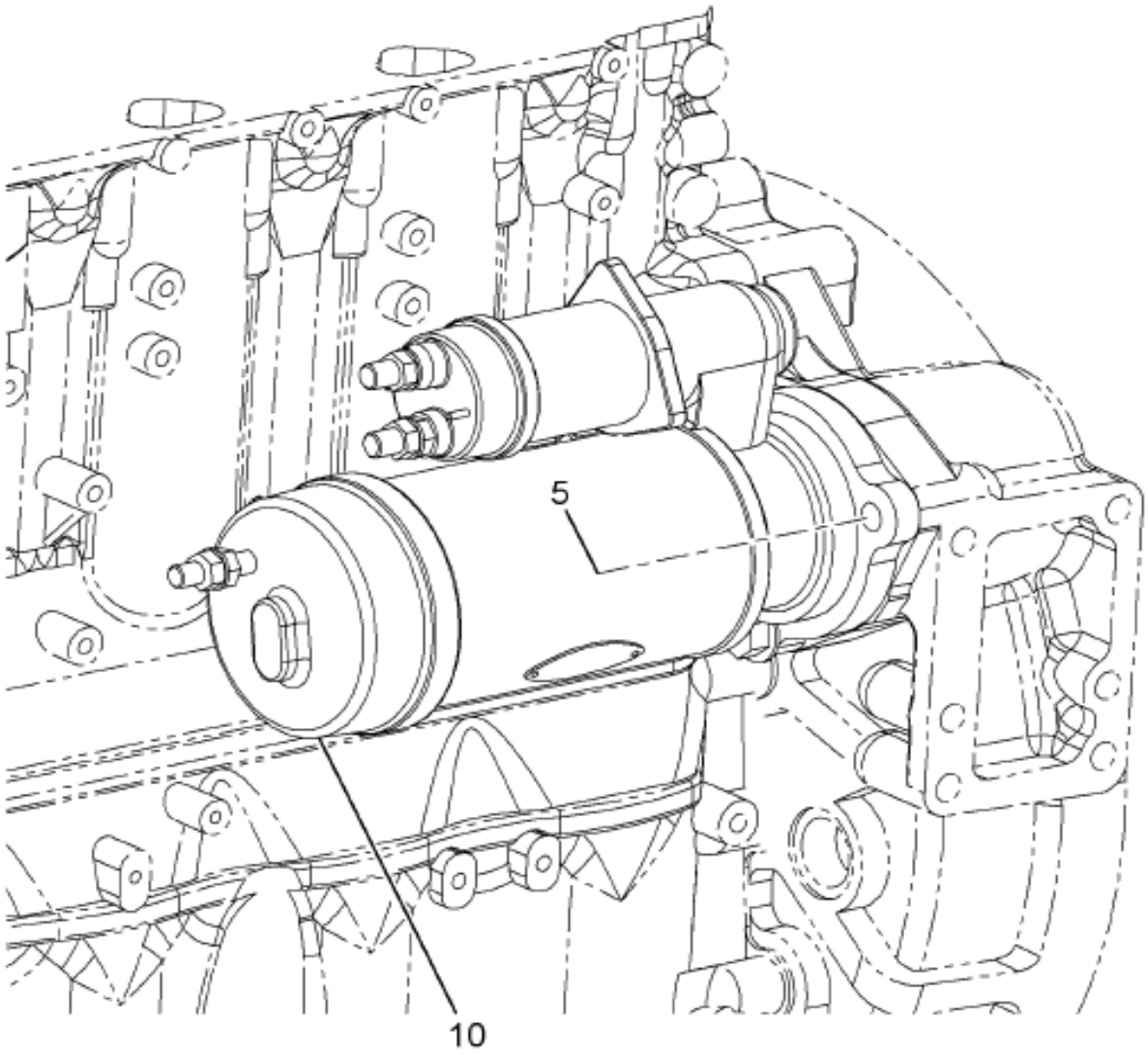

SS/RH

12-192-0046-01 L10

Figure 4 of 5

COPYRIGHT© 2011INTERNATIONAL TRUCK AND ENGINE CORP.

https://truckmanualshub.com/

Figure 0FS1H

STARTING MOTOR INSTL; W/CAT C10,C11,C12,C13 ISM ENG

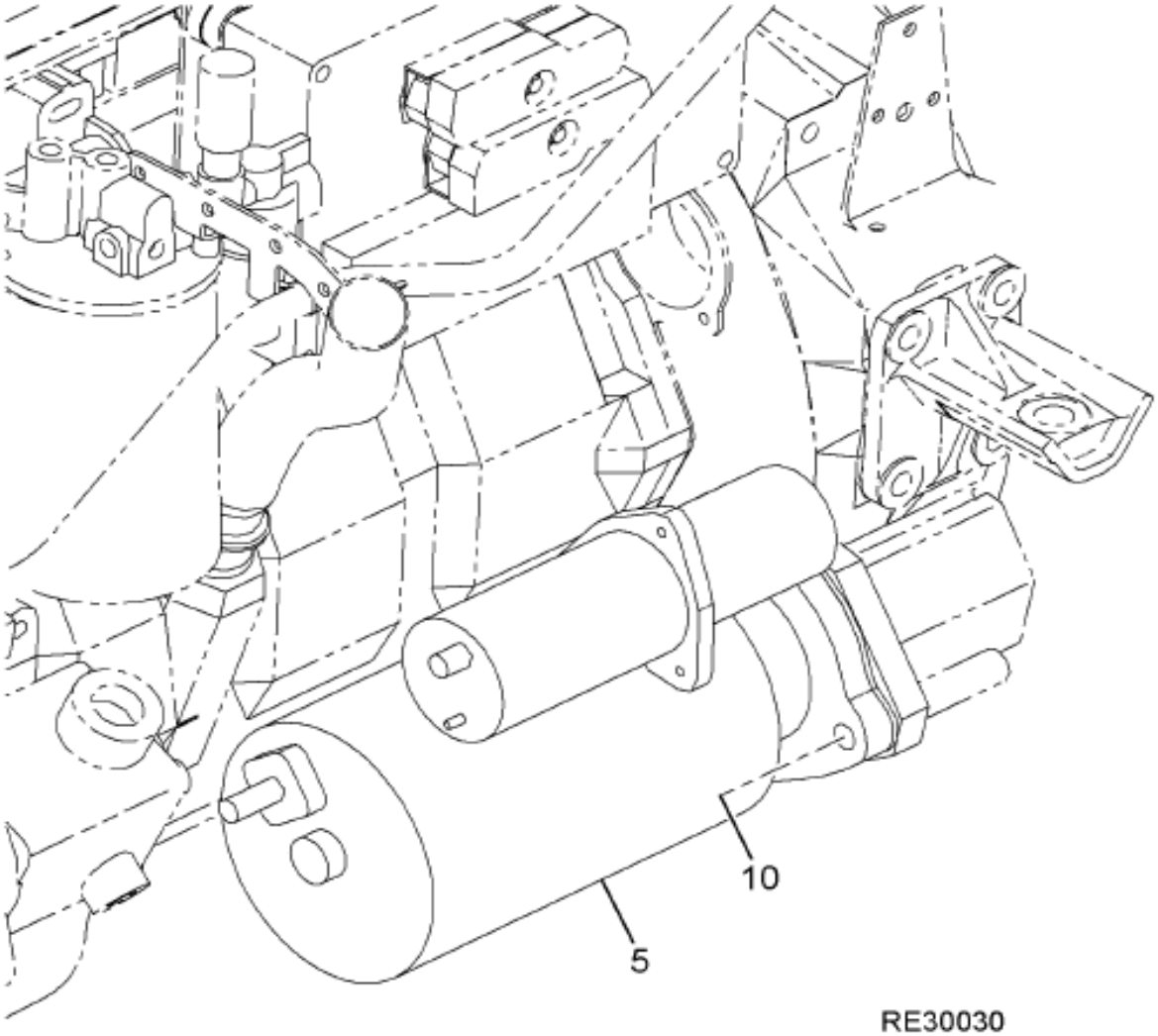

12-192-0047-01 L10

Item	Part No.	Qty	Description	Kit	Var	Figure
5	27578R1	3	SCREW 5/8X2.000 PHC AST 12PT		0FS1H	
5	121574	3	WASHER,5/8 LOCK,REG,STL/ZNC		0FS1H	
10	1615186C91	1	MOTOR,STARTING 12V		0FS3W	

Grp 12

COPYRIGHT© 2011INTERNATIONAL TRUCK AND ENGINE CORP.

https://truckmanualshub.com/

Figure 0M5RL

SURGE TANK & MTG; DEAERATION

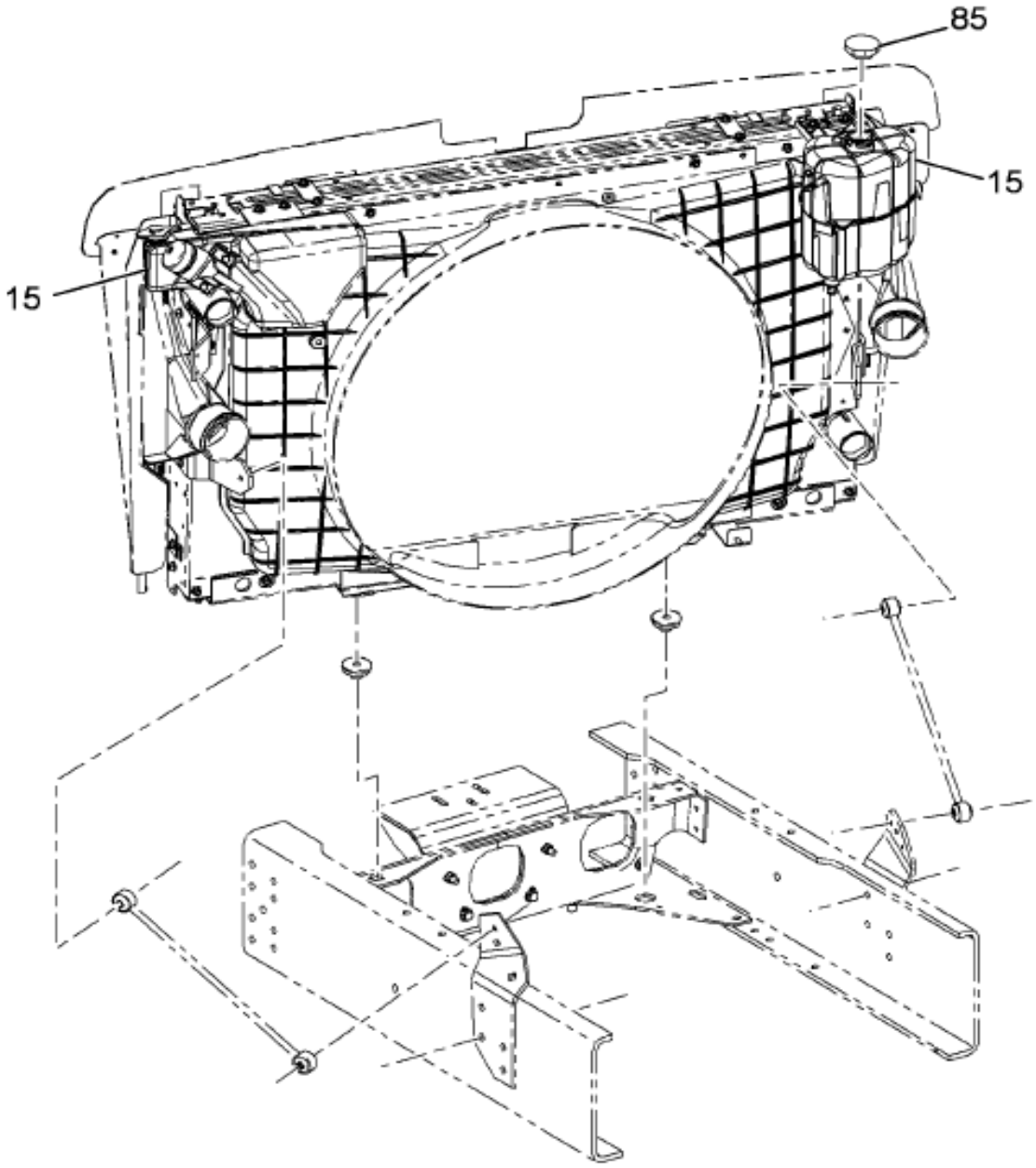

12-C03-0038-01 B11

Item	Part No.	Qty	Description	Kit	Var	Figure
15	3605573F92	1	RADIATOR, SURGE TANK SYSTEM		0QVGB	3605573F92

COPYRIGHT© 2011INTERNATIONAL TRUCK AND ENGINE CORP.

https://truckmanualshub.com/

Figure 2391791C91

KIT, SURGE TANK REPAIR

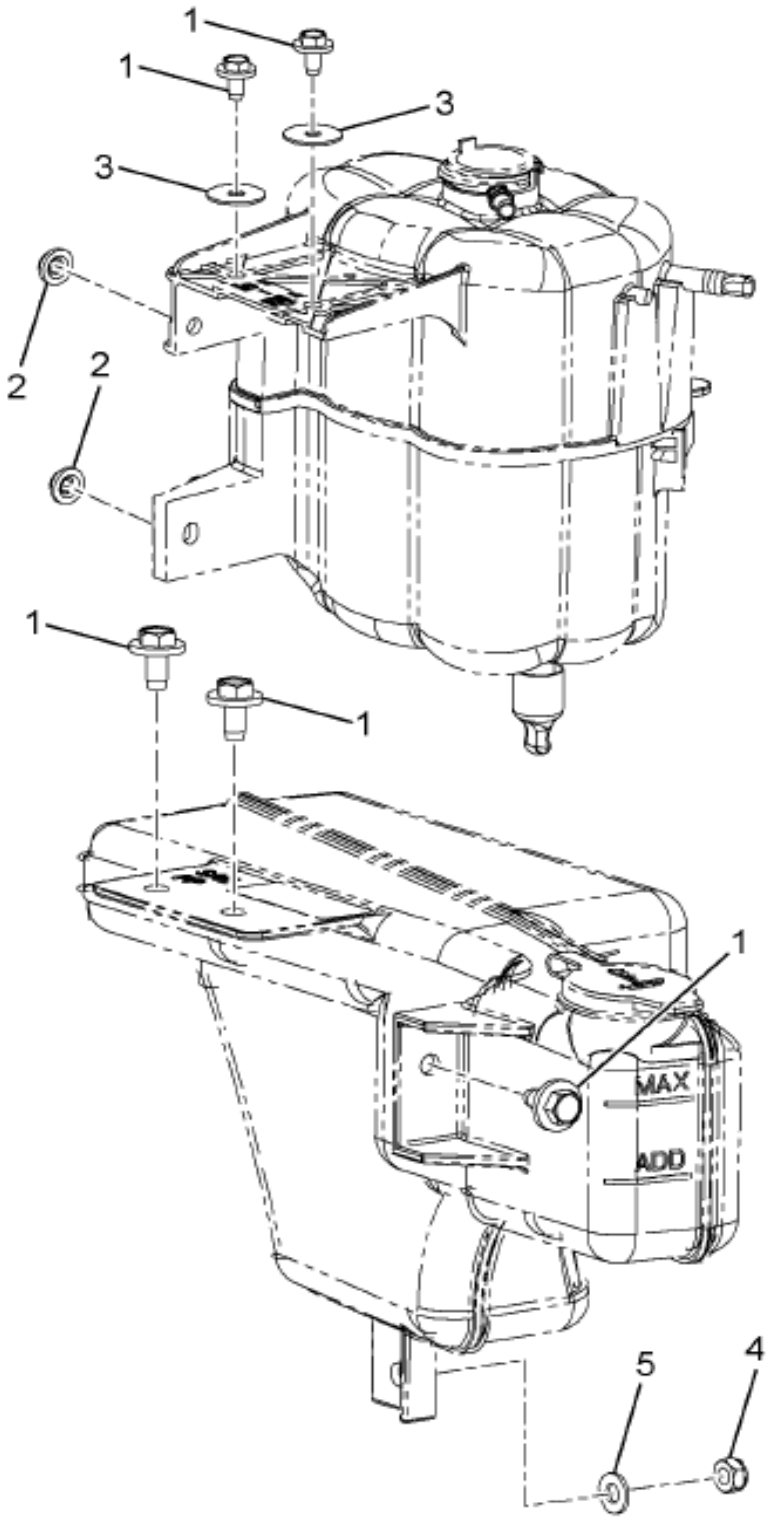

12-C03-0031-01 J06

Item	Part No.	Qty	Description	Kit	Var	Figure
1	2504909C1	5	SCREW, M8X1.25X16L			
2	2504917C1	2	NUT,HEX FLG M8X1.25-6H			
3		2	WASHER M8			
4		1	LOCKNUT, M8			
5		1	WASHER, M8			
880		RF	NOTE: ASM BELOW COMPRISED OF ABOVE			

Grp 12

COPYRIGHT© 2011INTERNATIONAL TRUCK AND ENGINE CORP.

https://truckmanualshub.com/

Figure 2591791C91

KIT, SURGE TANK REPAIR

Item	Part No.	Qty	Description	Kit	Var	Figure
			COMPONENTS			
881	2591791C91	RF	KIT, SURGE TANK REPAIR			

COPYRIGHT© 2011INTERNATIONAL TRUCK AND ENGINE CORP.

https://truckmanualshub.com/

Figure 3605573F92

RADIATOR, SURGE TANK SYSTEM

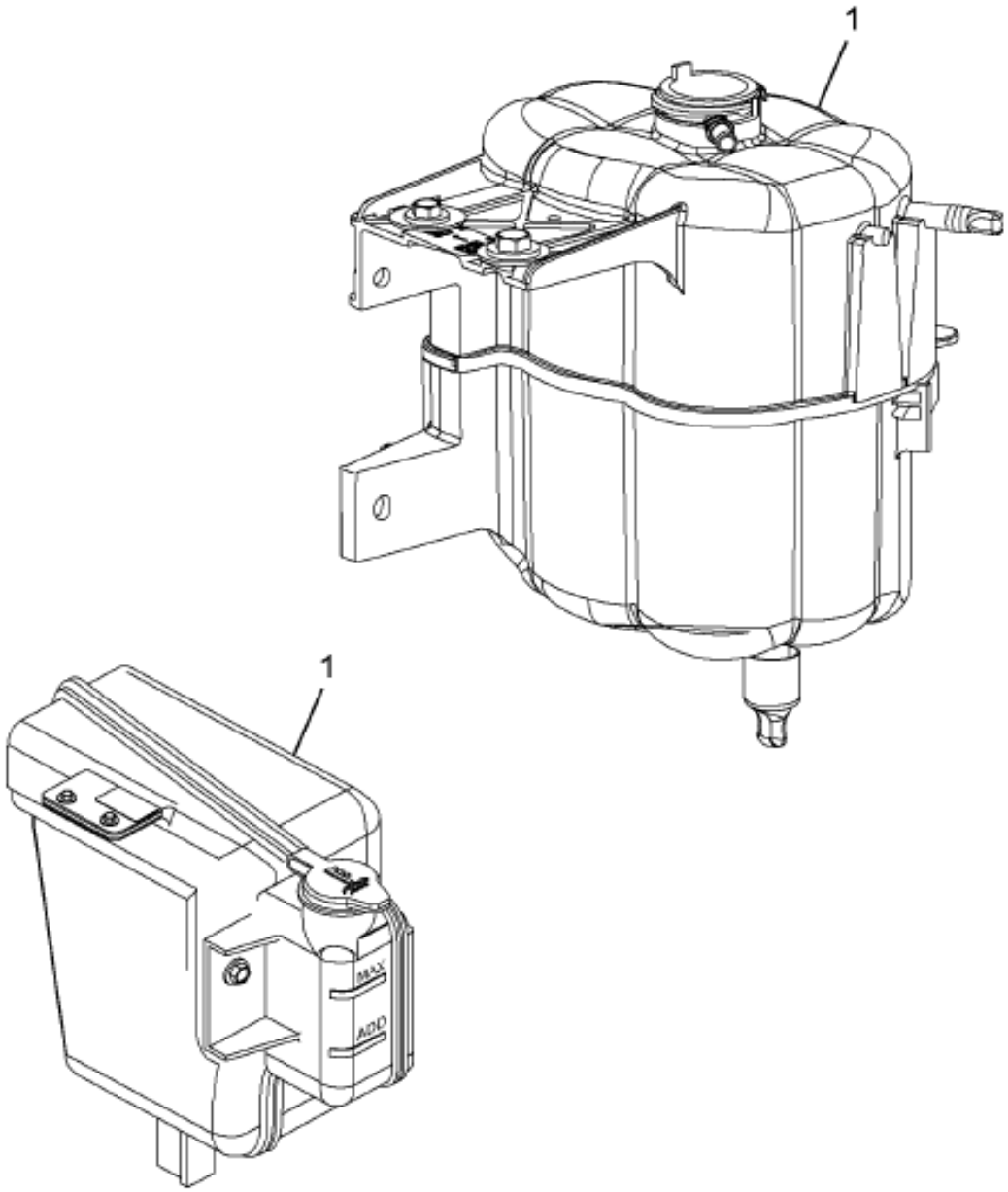

12-C03-0056-01 D11

Item	Part No.	Qty	Description	Kit	Var	Figure
1	2594379C91	1	TANK,RAD SURGE			2594379C91
880		RF	NOTE: ASM BELOW COMPRISED OF ABOVE COMPONENTS			
881	3605573F92	RF	RADIATOR, SURGE TANK SYSTEM			

Grp 12

COPYRIGHT© 2011INTERNATIONAL TRUCK AND ENGINE CORP.

https://truckmanualshub.com/

Figure 2594379C91
TANK,RAD SURGE

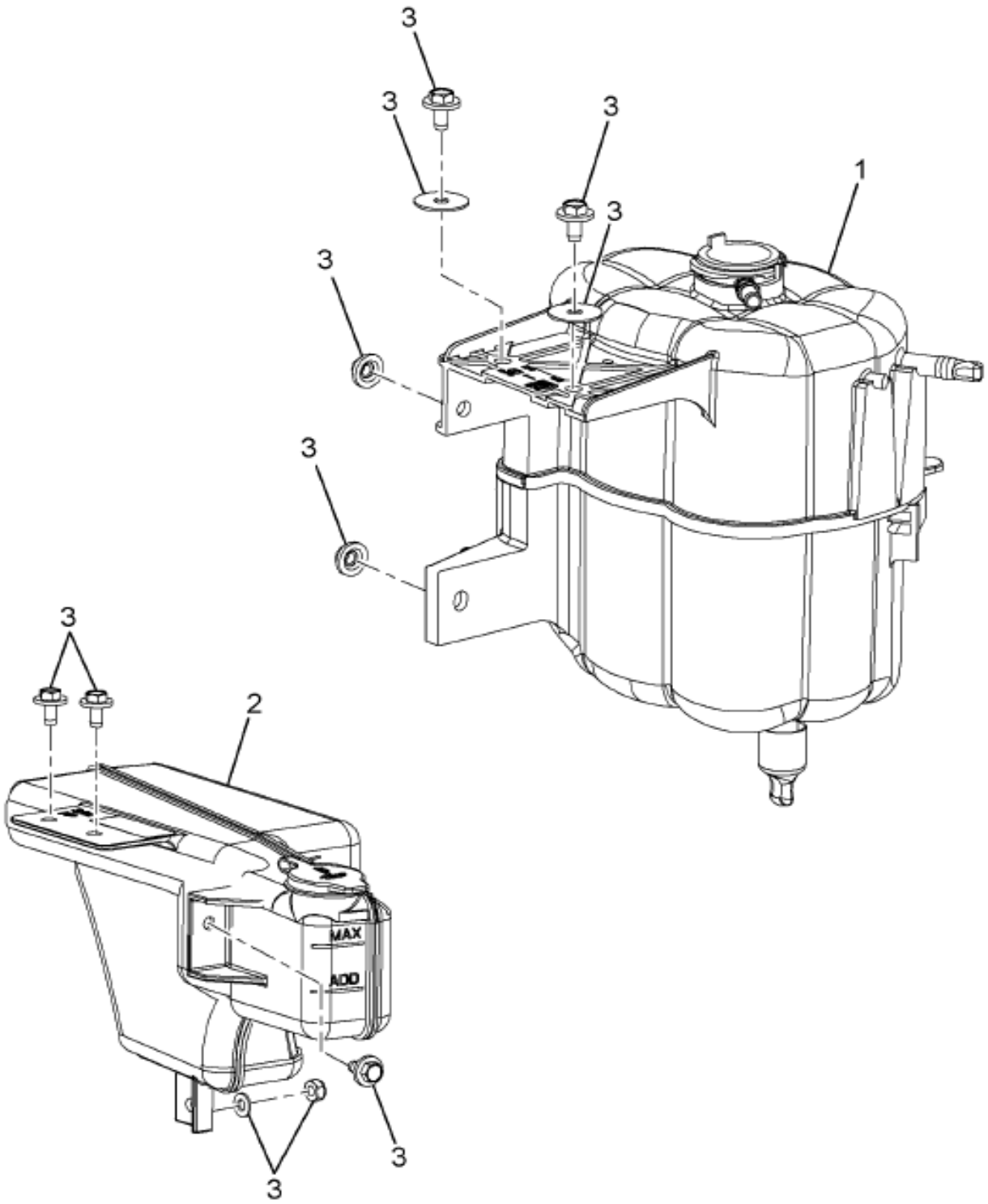

12-C03-0030-011 J06

Item	Part No.	Qty	Description	Kit	Var	Figure
1	2594380C1	1	TANK DEAERATION			
2	2591790C1	1	TANK,RAD SURGE OVERFLOW			
3	2591791C91	KT	KIT, SURGE TANK REPAIR			2591791C91
800		RF	NOTE: THE FOLLOWING PARTS ARE			
			NON-ILLUSTRATED			
870	2507479C91	KT	KIT,CAPS(2)			

COPYRIGHT© 2011INTERNATIONAL TRUCK AND ENGINE CORP.

https://truckmanualshub.com/

Figure 2594379C91
TANK,RAD SURGE

Item	Part No.	Qty	Description	Kit	Var	Figure
880		RF	NOTE: ASM BELOW COMPRISED OF ABOVE COMPONENTS			
881	2594379C91	RF	TANK,RAD SURGE			

COPYRIGHT© 2011INTERNATIONAL TRUCK AND ENGINE CORP.

https://truckmanualshub.com/

Figure 0M9W6

TRANS OIL COOLER; (ABR#7)

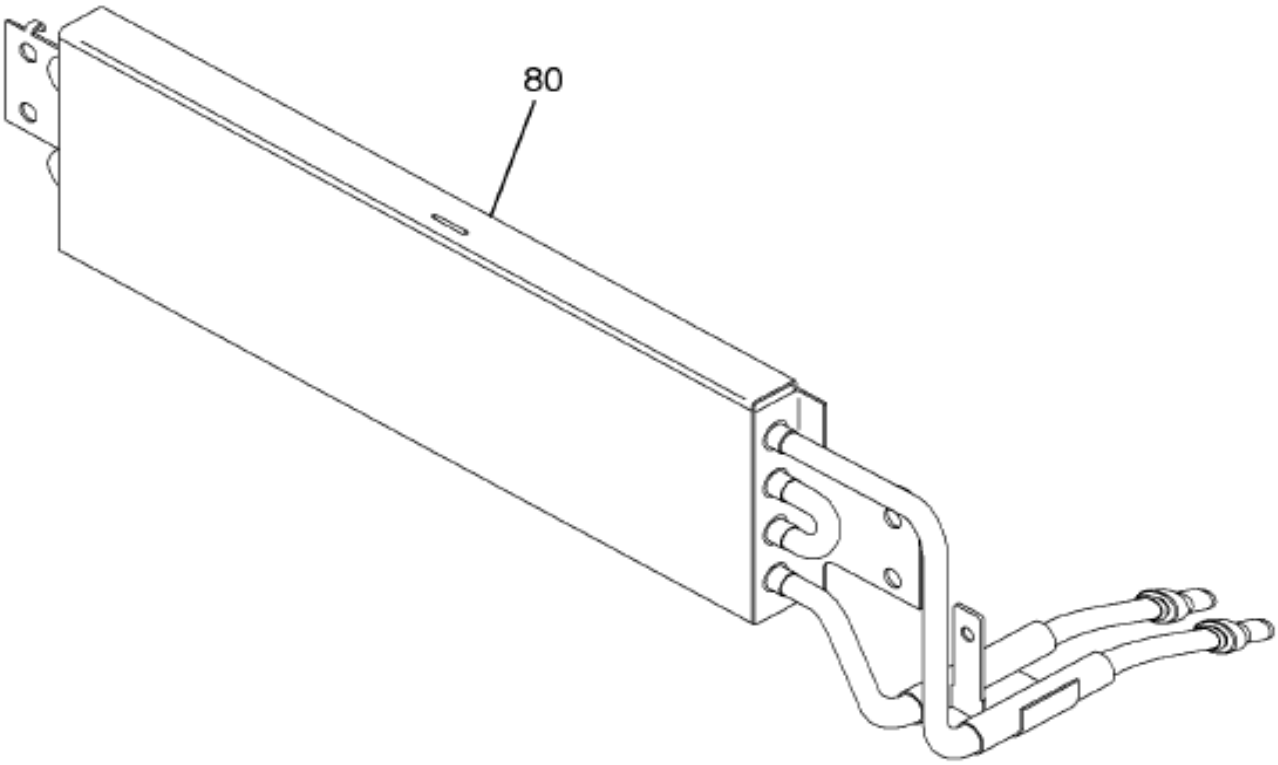

12-C07-0025-01 L06

Item	Part No.	Qty	Description	Kit	Var	Figure
80	3695846F91	1	RADIATOR, COOLER, XMSN OIL		0M9W3	3695846F91

COPYRIGHT© 2011INTERNATIONAL TRUCK AND ENGINE CORP.

https://truckmanualshub.com/

Figure 2592324C91
KIT,OIL COOLER

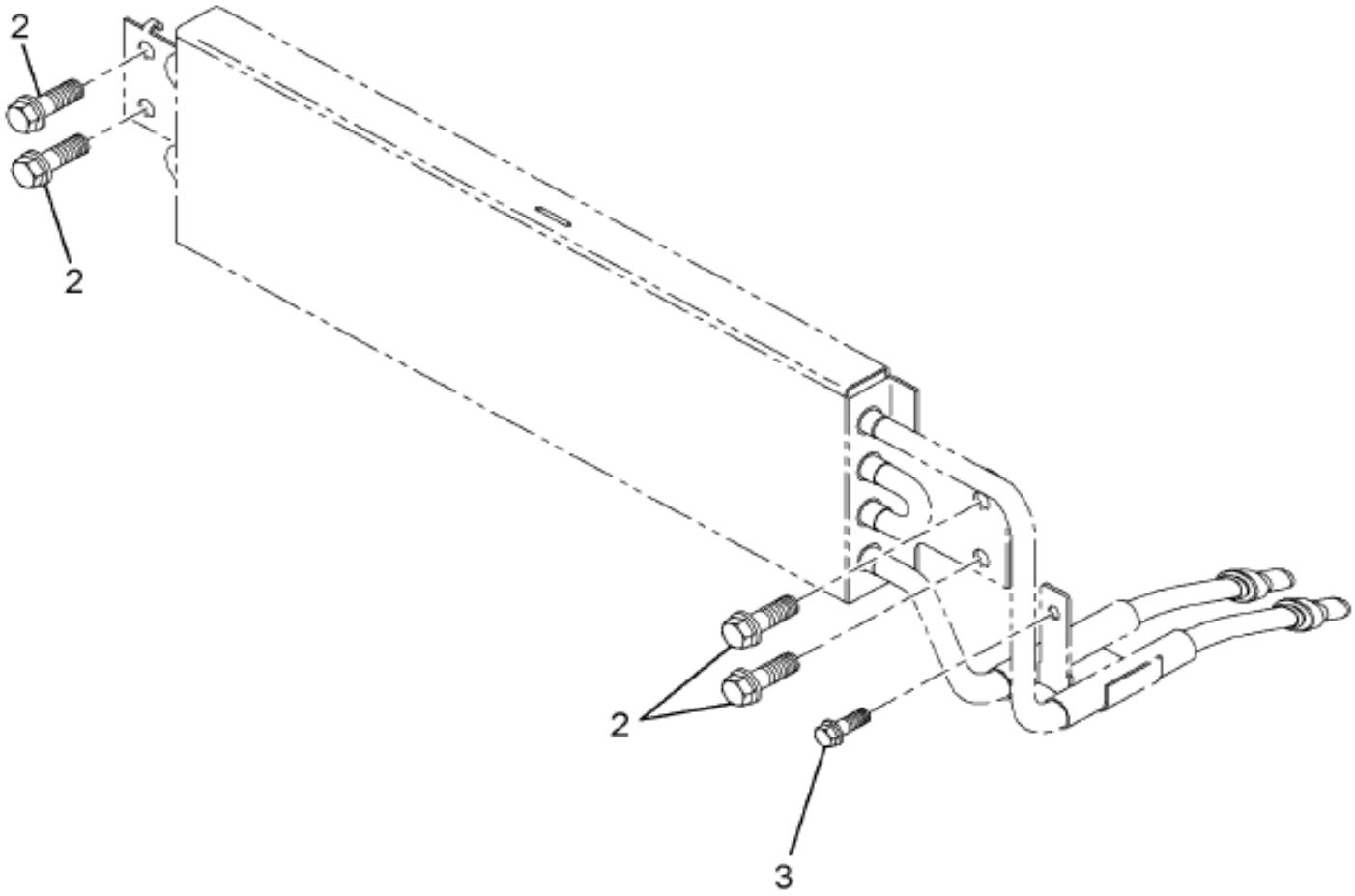

12-C07-0020-01 K06

Item	Part No.	Qty	Description	Kit	Var	Figure
2		4	SCREW, M8X1.25X16L			
3		4	SCREW, M8X1.25X20L			
880		RF	NOTE: ASM BELOW COMPRISED OF ABOVE COMPONENTS			
881	2592324C91	RF	KIT,OIL COOLER			

Grp 12

COPYRIGHT© 2011INTERNATIONAL TRUCK AND ENGINE CORP.

https://truckmanualshub.com/

Figure 2603229C91

RADIATOR COOLER, XMSN OIL

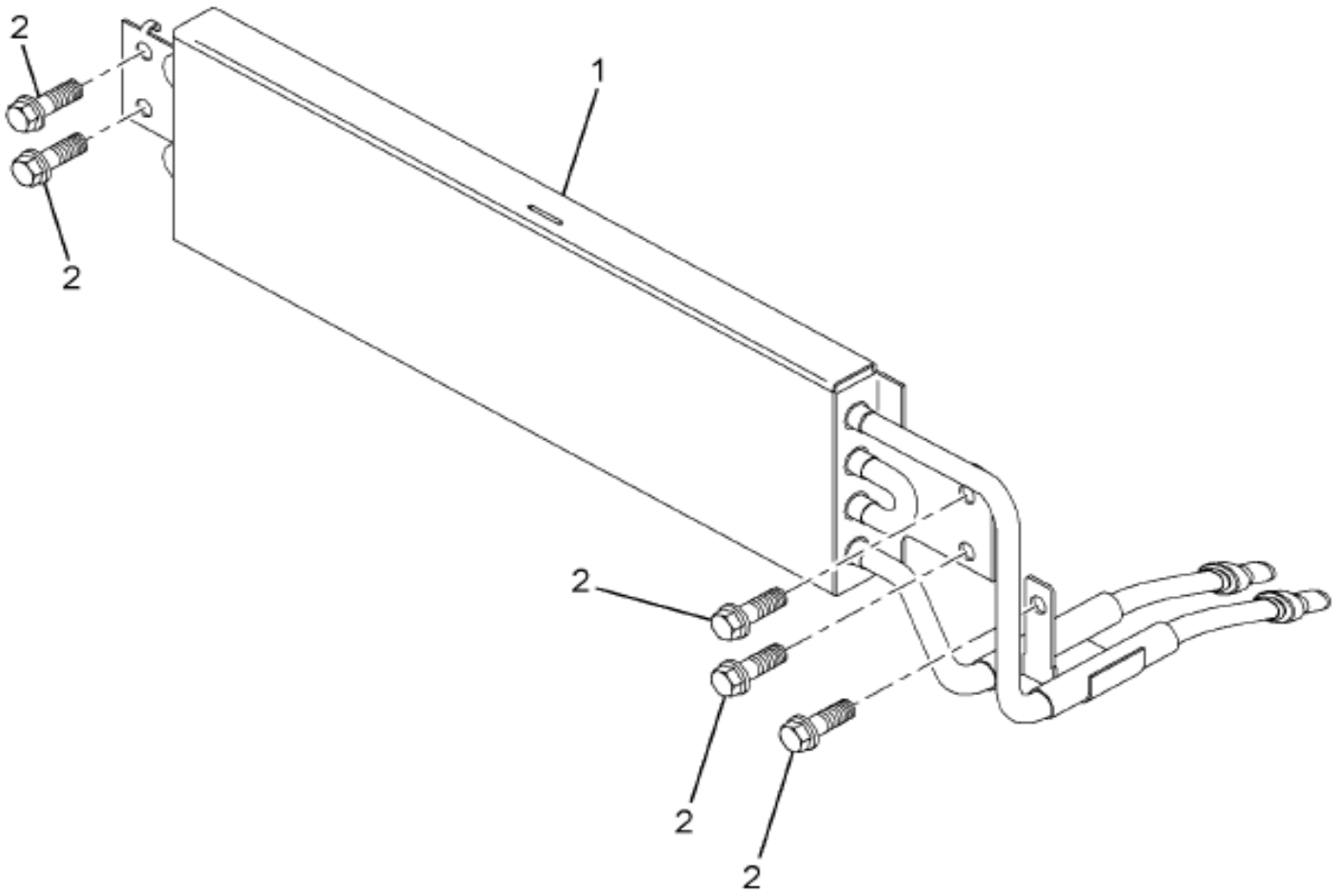

12-C07-0021-01 K06

Item	Part No.	Qty	Description	Kit	Var	Figure
1	2590756C92	1	COOLER,ASM OIL			
2	2592324C91	KT	KIT,OIL COOLER			2592324C91
880		RF	NOTE: ASM BELOW COMPRISED OF ABOVE COMPONENTS			
881	2603229C91	RF	RADIATOR COOLER, XMSN OIL			

COPYRIGHT© 2011INTERNATIONAL TRUCK AND ENGINE CORP.

https://truckmanualshub.com/

Figure 3695846F91

RADIATOR, COOLER, XMSN OIL

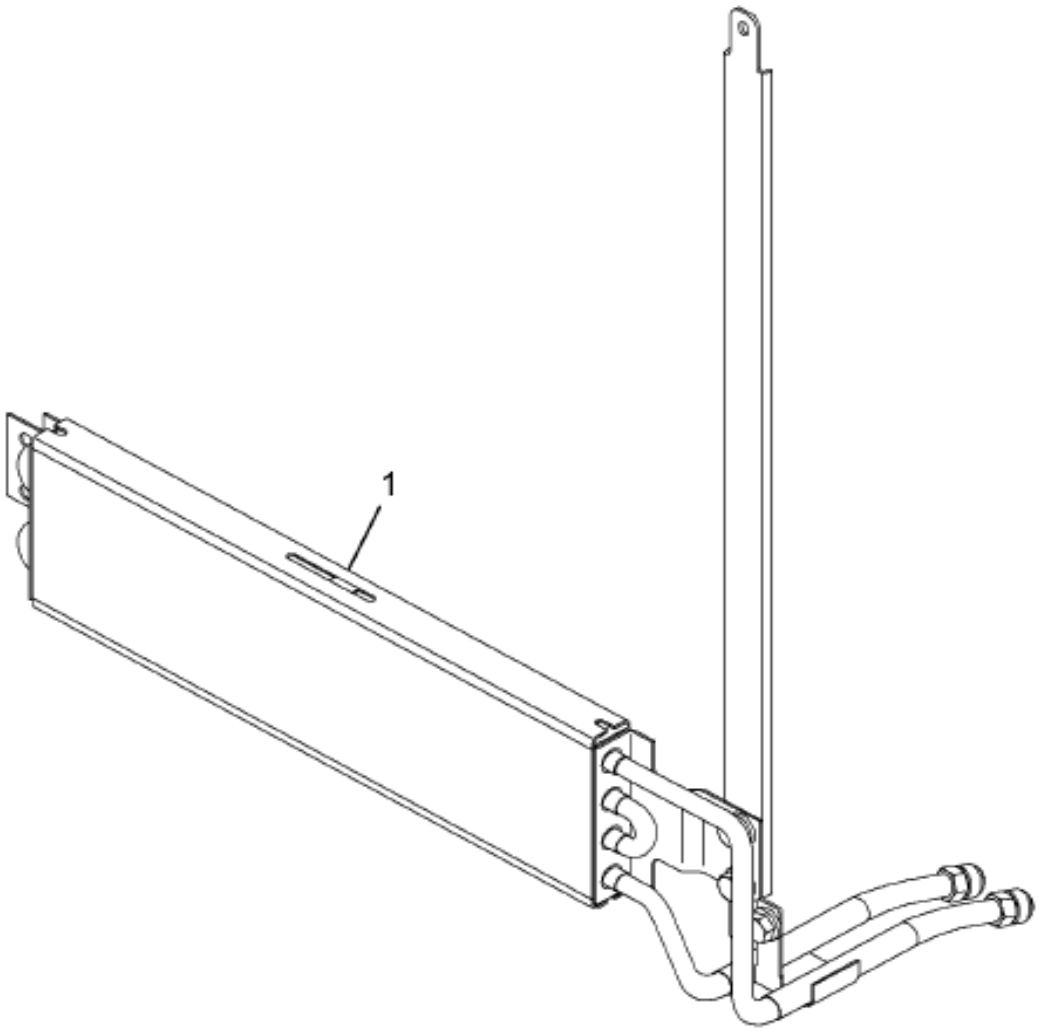

12-C07-0075-01 D10

Item	Part No.	Qty	Description	Kit	Var	Figure
1	2603229C91	1	RADIATOR COOLER, XMSN OIL			2603229C91
880		RF	NOTE: ASM BELOW COMPRISED OF ABOVE COMPONENTS			
881	3695846F91	RF	RADIATOR, COOLER, XMSN OIL			

Grp 12

COPYRIGHT© 2011INTERNATIONAL TRUCK AND ENGINE CORP.

https://truckmanualshub.com/

MANUAL NOTES

COPYRIGHT© 2011INTERNATIONAL TRUCK AND ENGINE CORP.

https://truckmanualshub.com/

Group 13
Transmission

COPYRIGHT© 2011INTERNATIONAL TRUCK AND ENGINE CORP.

https://truckmanualshub.com/

Figure 0FK2V

CLUTCH HSG INSTL; W/FULLER, SPICER & MERITOR TRANS

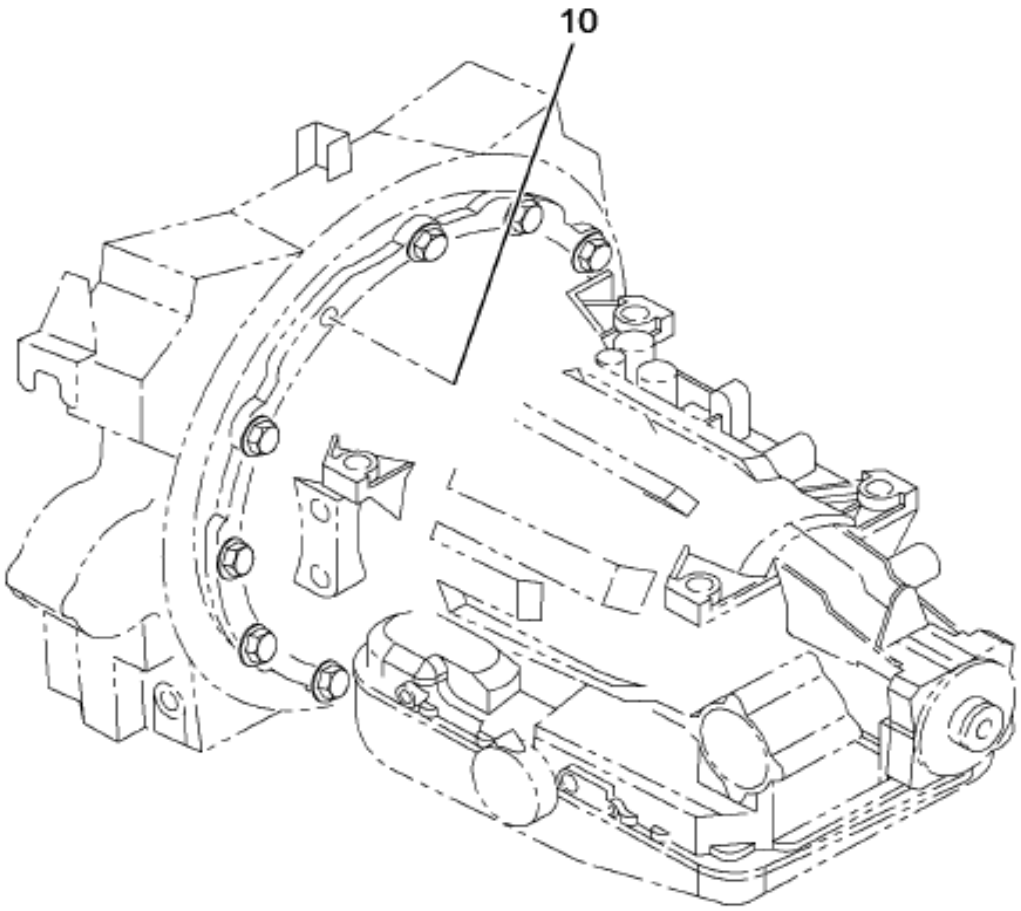

11-245-0001-AA H09

Item	Part No.	Qty	Description	Kit	Var	Figure
10	26974R1	11	BOLT HH 7/16 X 1-1/2 PHC P/T T		0GP7W	
10	27411R1	1	BOLT,HH 7/16 X 2 PHC P/T TYPE		0GP7W	
10	575843C1	12	WASHER,FLAT HARD 7/16		0GP7W	

COPYRIGHT© 2011INTERNATIONAL TRUCK AND ENGINE CORP.

https://truckmanualshub.com/

Figure 0P6CN

CLUTCH HSG; FULLER FR(O)-X210B(C)

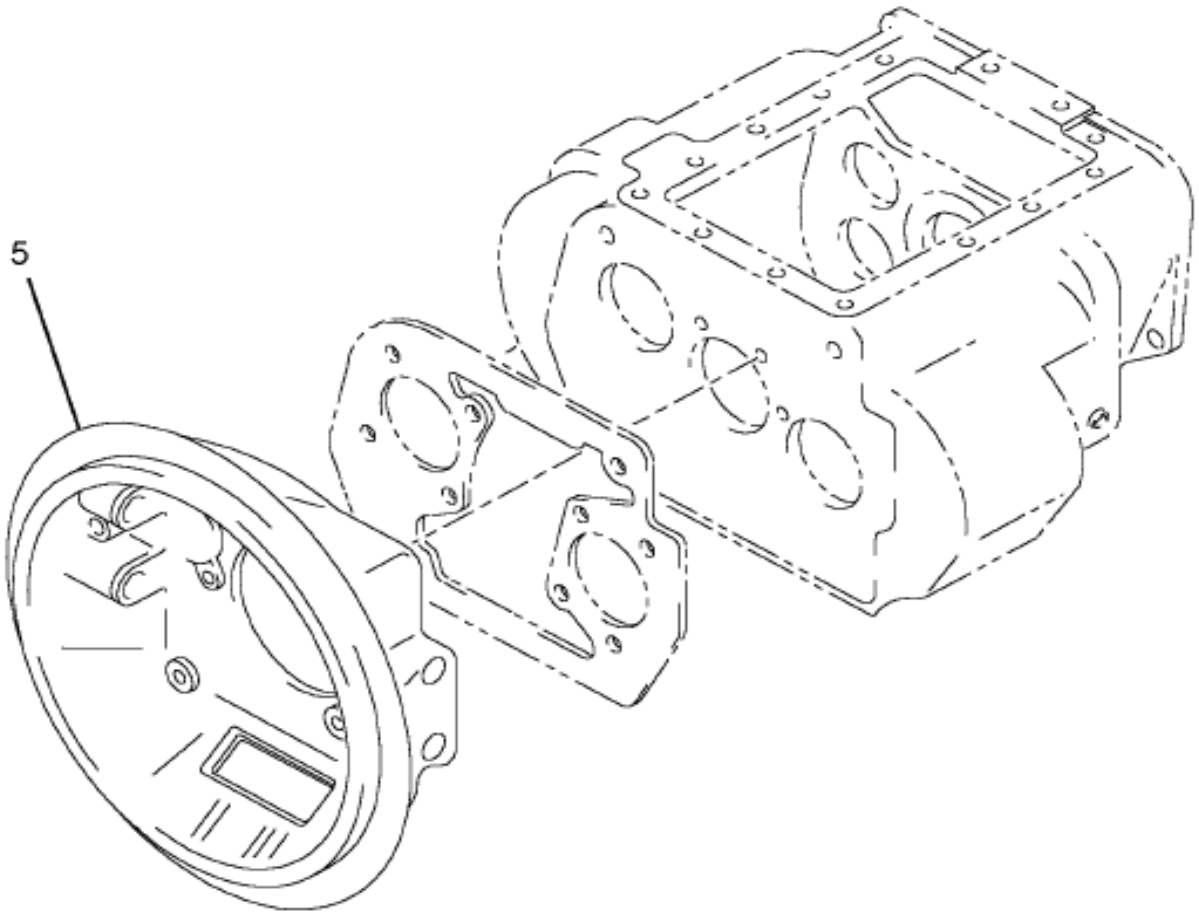

13-C50-0016-BA G04

Item	Part No.	Qty	Description	Kit	Var	Figure
5	3567118F91	1	HOUSING,XMSH BELL ALSO FOR CLU		0P6CR	3567118F91

Grp 13

COPYRIGHT© 2011INTERNATIONAL TRUCK AND ENGINE CORP.

https://truckmanualshub.com/

Figure 3307118F91

HOUSING,XMSH BELL ALSO FOR CLU

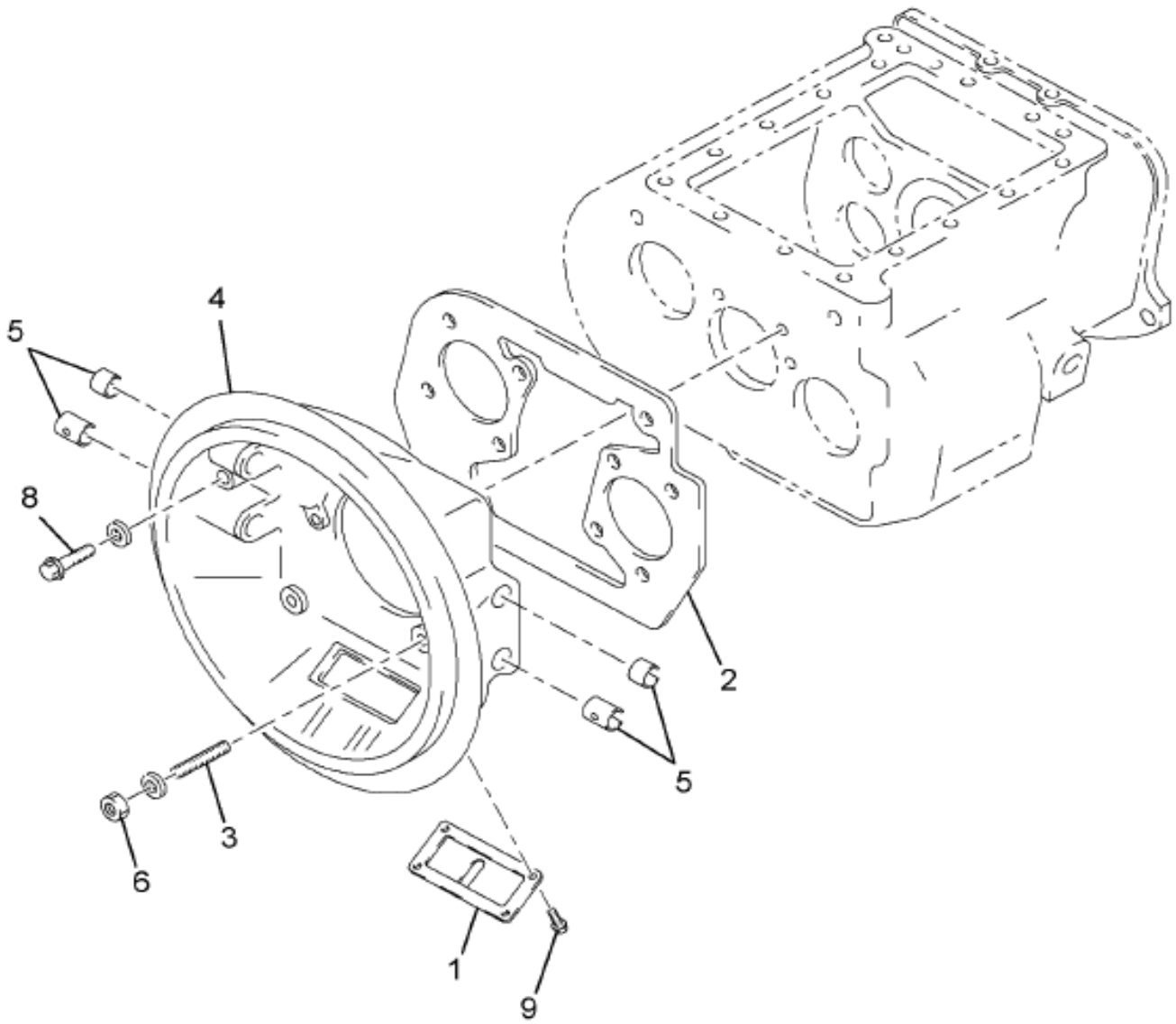

MAIN HOUSING
ASSEMBLY

13-C50-0013-00 K05

Item	Part No.	Qty	Description	Kit	Var	Figure
1	FUL11453	1	COVER,HAND HOLE			
2	FUL4302314	1	GASKET,TRAN CLUTCH HSG			
3	FUL5577503	6	STUD,TRANS CLUTCH HSG			
4	FULA3713	1	HOUSING,TRANS BELL ALSO USE FO			
5	FUL12815	4	BUSHING,CLUTCH RELEASE FORK SH			
6	FULX11605M	6	NUT,SPECIAL (MULTIPACK 10)			

COPYRIGHT© 2011INTERNATIONAL TRUCK AND ENGINE CORP.

https://truckmanualshub.com/

Figure 3567118F91

HOUSING,XMSH BELL ALSO FOR CLU

Item	Part No.	Qty	Description	Kit	Var	Figure
8	FULX8C1204M	2	SCREW M12X1.75 X 35MM			
8	FULX8C1203M	2	SCREW M12X1.75 X 90MM			
9	FULX8L509	4	BOLT,W/LOCK WASHER			
880		RF	NOTE: ASM BELOW COMPRISED OF ABOVE COMPONENTS			
881	3567118F91	RF	HOUSING,XMSH BELL ALSO FOR CLU			

COPYRIGHT© 2011INTERNATIONAL TRUCK AND ENGINE CORP.

https://truckmanualshub.com/

Figure 0RK18

PRODUCT GRAPHIC, XMSN LABEL; SHIFT, SPANISH

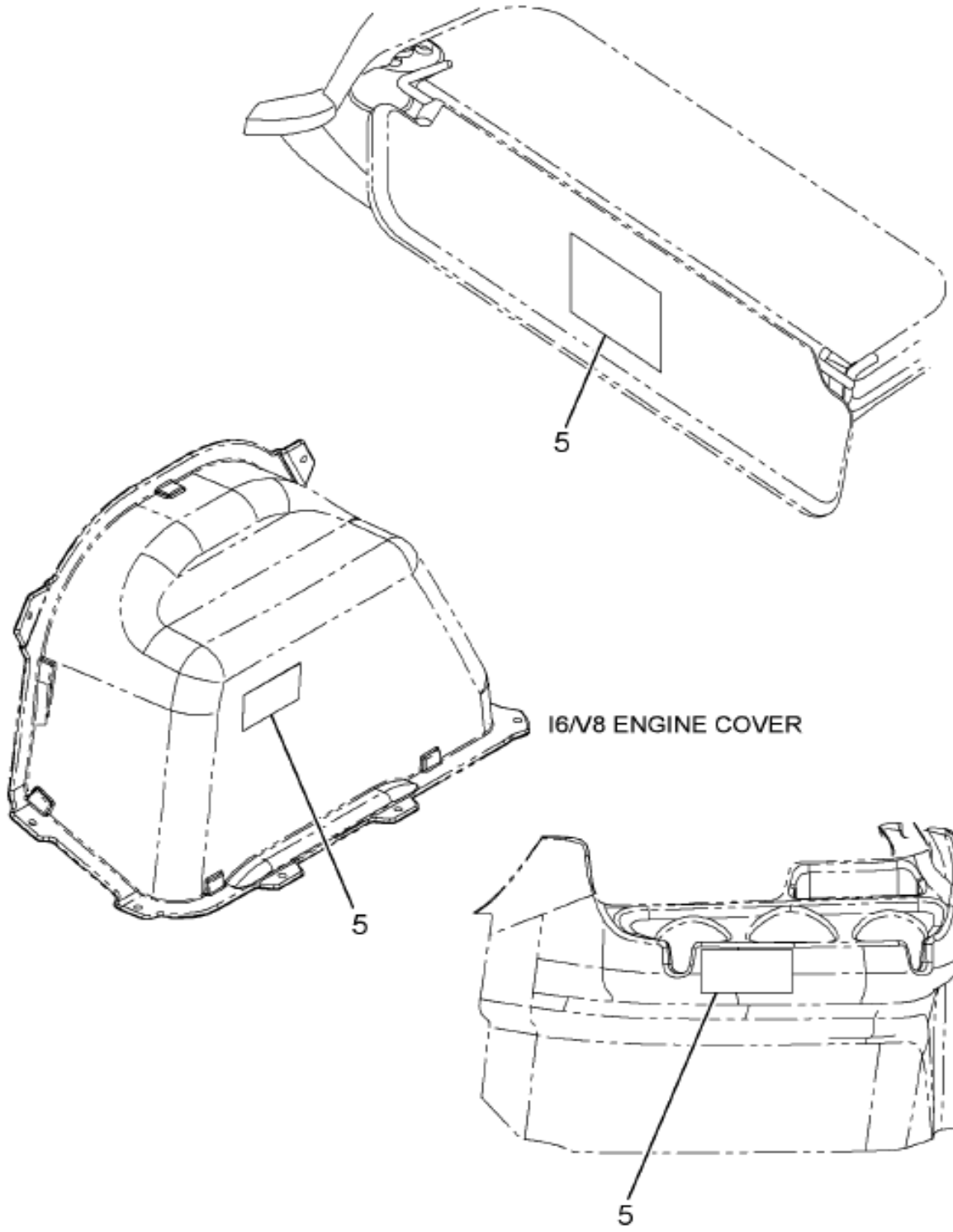

13-308-0028-01 B10

Item	Part No.	Qty	Description	Kit	Var	Figure
5	3674411C1	1	PRODUCT GRAPHIC,LABEL SHIFT, D		0RPB6	

COPYRIGHT© 2011INTERNATIONAL TRUCK AND ENGINE CORP.

https://truckmanualshub.com/

Figure 0P6CF

RR BEARING RETAINER; FULLER FR(O)-X210B(C)

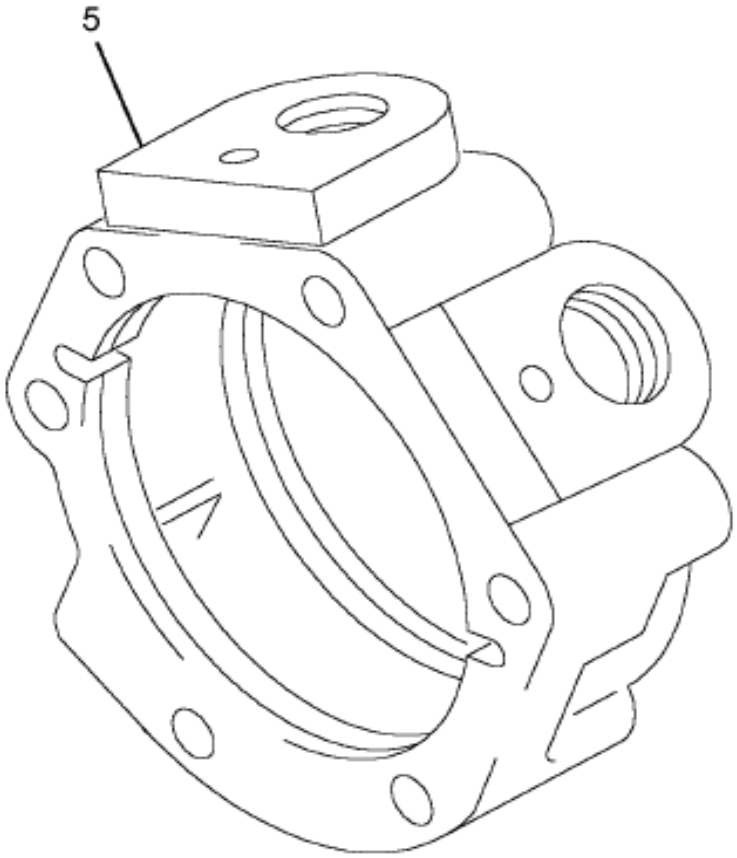

13-C37-0009-FA E04

Item	Part No.	Qty	Description	Kit	Var	Figure
5	3567114F91	1	RETAINER MASHFT REAR BRG*RR BR		0P6CG	3567114F91

COPYRIGHT© 2011INTERNATIONAL TRUCK AND ENGINE CORP.

https://truckmanualshub.com/

Figure 3307114F91

RETAINER MASHFT REAR BRG*RR BR

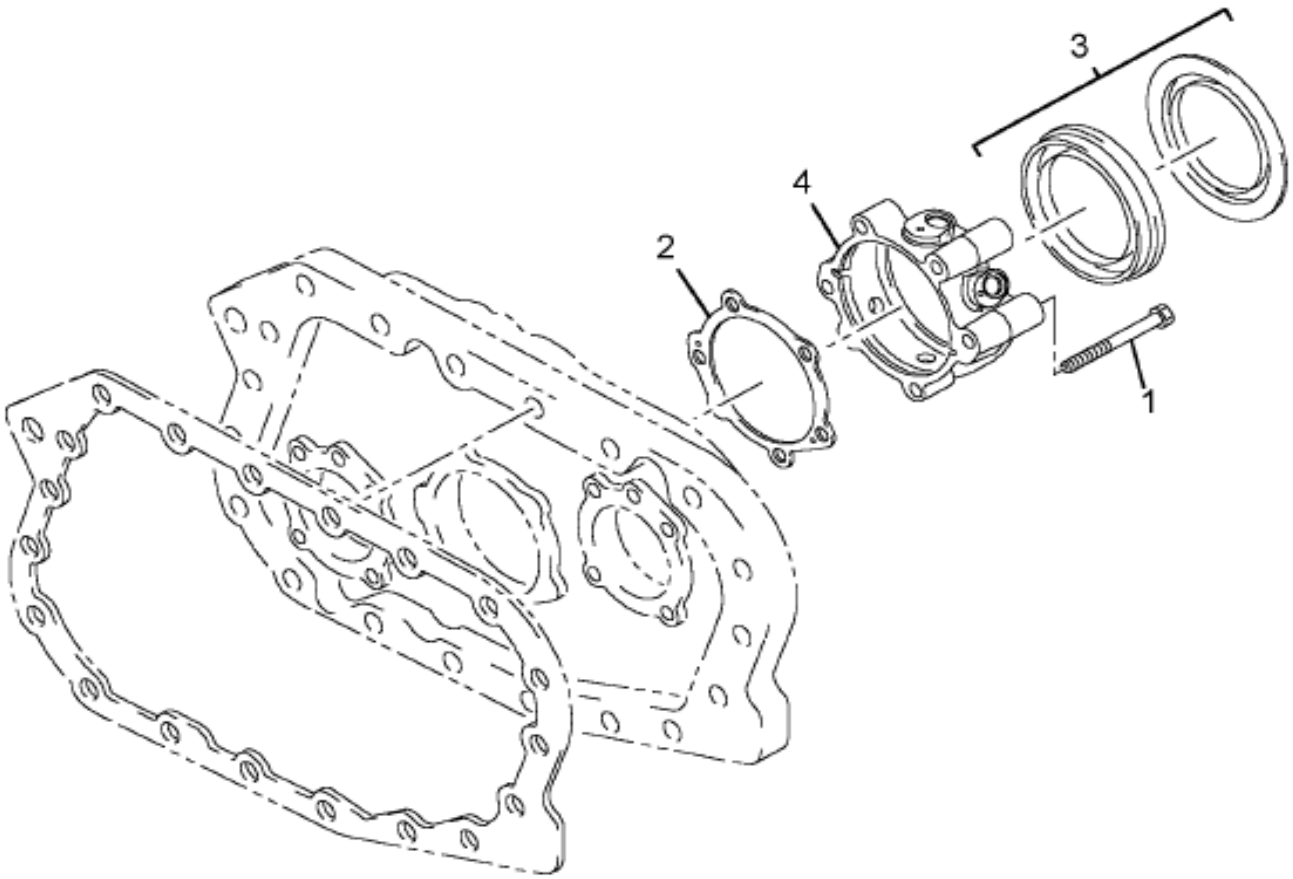

AUXILIARY CASE ASSEMBLY

13-C37-0006-00 L02

Item	Part No.	Qty	Description	Kit	Var	Figure
1	FULX81009M	6	SCREW M10X1.5 X 50MM			
2	FUL4302247	1	GASKET,MASHFT BRG RET			
3		KT	OIL SEAL W/SLINGER	A		
4	FULS2809	1	COVER,REAR BRG			
801	FULK2918	KT	KIT,OIL SEAL			
801		RF	(CONSISTS OF PARTS DENOTED BY A)			

COPYRIGHT© 2011INTERNATIONAL TRUCK AND ENGINE CORP.

https://truckmanualshub.com/

Figure 3567114F91

RETAINER MASHFT REAR BRG*RR BR

Item	Part No.	Qty	Description	Kit	Var	Figure
880		RF	NOTE: ASM BELOW COMPRISED OF ABOVE COMPONENTS			
881	3567114F91	RF	RETAINER MASHFT REAR BRG*RR BR			

COPYRIGHT© 2011INTERNATIONAL TRUCK AND ENGINE CORP.

https://truckmanualshub.com/

Figure 0P6C2

SHIFT BAR HSG ASM; FULLER FR(O)-X210B(C)

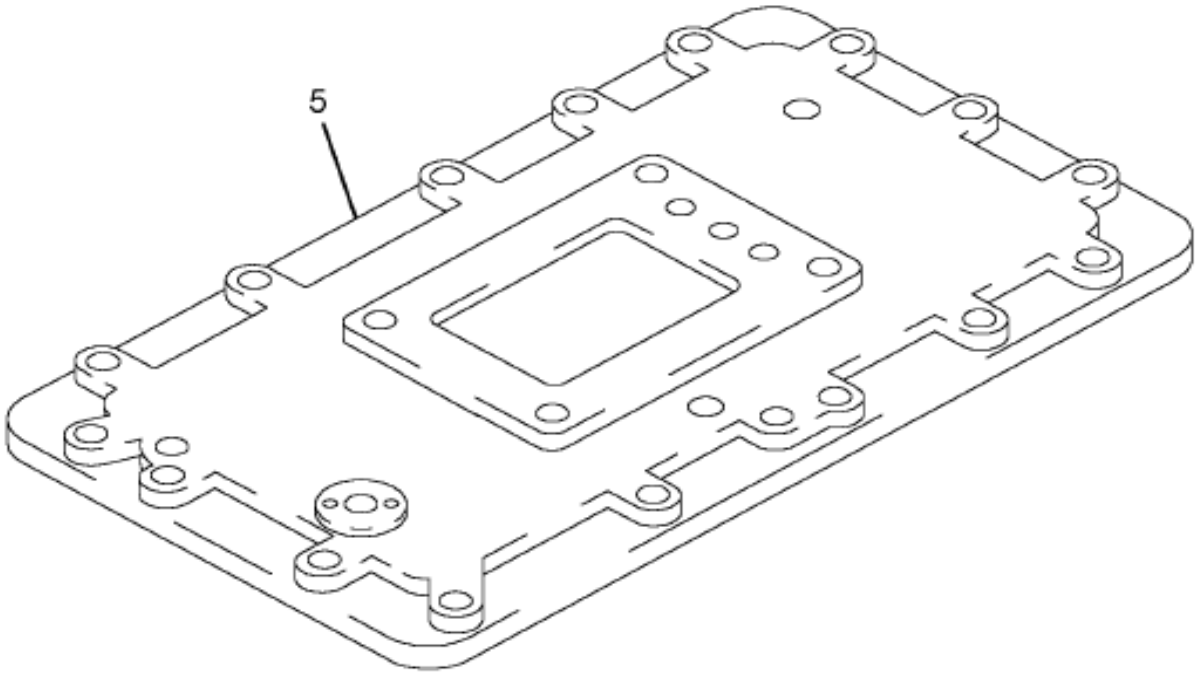

13-C31-0022-CA E04

Item	Part No.	Qty	Description	Kit	Var	Figure
5	3567093F91	1	HOUSING SHIFT BAR*FORWARD SHIF		0P6C3	3567093F91

COPYRIGHT© 2011INTERNATIONAL TRUCK AND ENGINE CORP.

https://truckmanualshub.com/

Figure 3367033F91
HOUSING SHIFT BAR*FORWARD SHIF

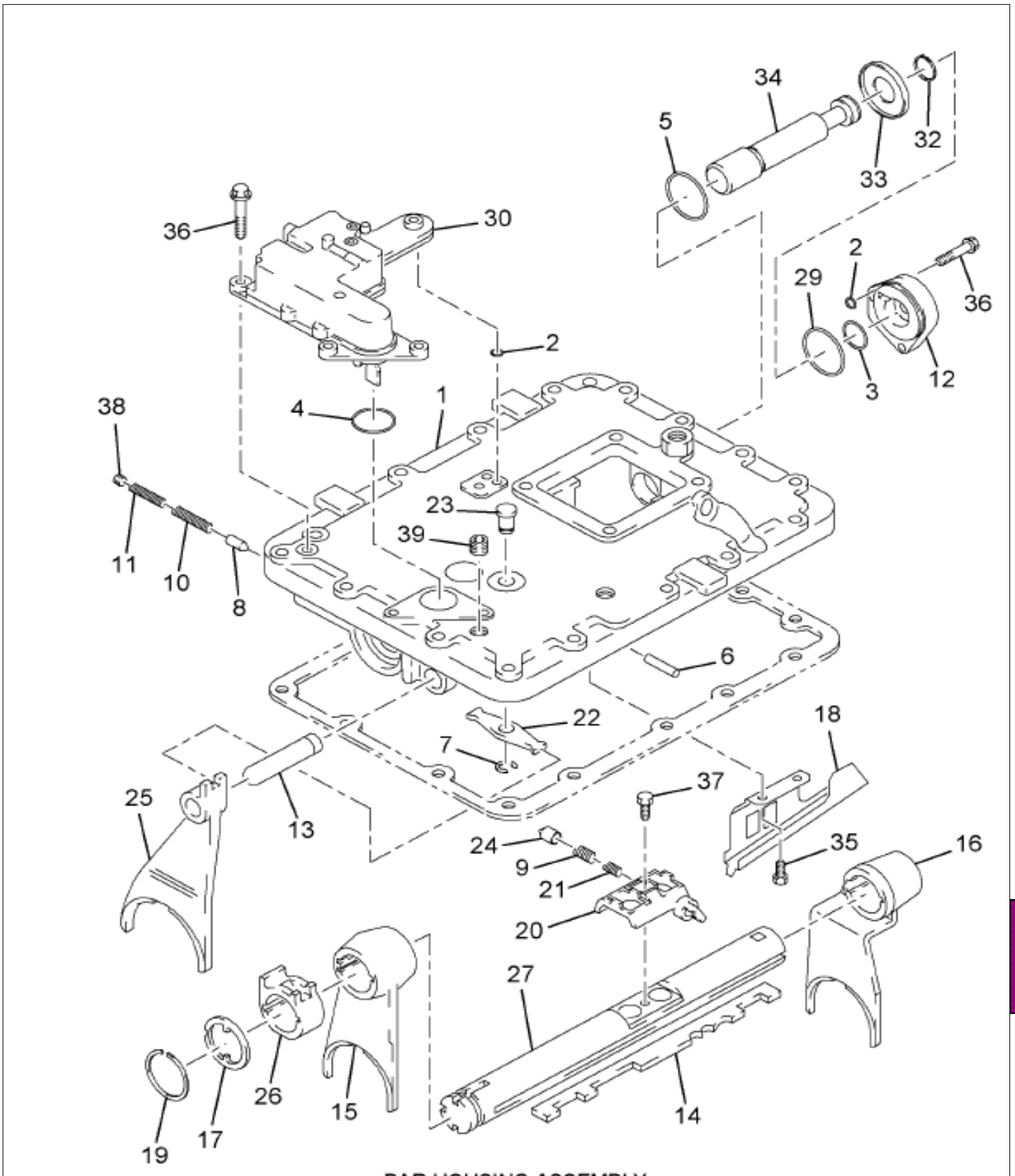

13-C31-0010-00 BAR HOUSING ASSEMBLY F06

Item	Part No.	Qty	Description	Kit	Var	Figure
1	FULS2843	1	HOUSING,SHIFT BAR ASSY			
2	FUL14197	3	RING,O AUTOSHIFT ASSY HSG.	D		
3	FUL14765	1	RING O FOR GROOVED PLUG			
4	FUL15569	1	RING,O	D		
5	FUL20423	1	RING,O			
6	FUL62516	1	PIN,ROLL			

Grp 13

COPYRIGHT© 2011INTERNATIONAL TRUCK AND ENGINE CORP.

https://truckmanualshub.com/

Figure 3567093F91

HOUSING SHIFT BAR*FORWARD SHIF

Item	Part No.	Qty	Description	Kit	Var	Figure
7	FUL4302070	1	RING,SNAP	A		
8	FUL4302133	1	PLUNGER,SHIFT BLOCK			
9	FUL4302134	1	SPRING,CONTROL LEVER			
10	FUL4302138	1	SPRING,CONTROL LEVER			
11	FUL4302139	1	SPRING,CONTROL LEVER			
12	FUL4302140	1	COVER,RANGE CYL			
13	FUL4302155	1	BAR,SHIFT 1ST/REV			
14	FUL4302159	1	KEY,INTERLOCK			
15	FUL4302166	1	YOKE,TRANS SHIFT			
16	FUL4302168	1	YOKE,TRANS SHIFT			
17	FUL4302172	1	PLATE,AUX TRANS REAR SUPT			
18	FUL4302175	1	TROUGH,OIL			
19	FUL4302183	1	RING,SNAP			
20	FUL4303039	1	BLOCK,SHIFT			
21	FUL4303135	1	SPRING,COMP			
22	FUL4303225	1	YOKE,ACTUATOR			
23		RF	PIN, ACTUATING	A		
24	FUL4304138	1	PLUNGER,SHIFT BLOCK			
25	FUL4304438	1	YOKE,TRANS SHIFT			
26	FUL4304464	1	BLOCK,SHIFT			
27	FUL4305078	1	SHAFT,SHIFT			
29	FUL5568507	1	RING,O			
30		RF	MODULE ASM, AIR	D		
32	FUL4302080	1	RING,SNAP	BC		
33		RF	PISTON ASM, W/SNAPRING	B		
34		RF	BAR ASM, W/RING	C		
35	FULX80801M	2	SCREW,SET SHIFT FORK			
36	FULX80804M	6	SCREW,SET SHIFT FORK			
37	FULX81013M	1	SCREW,M10 X1.5 X 20MM			
38	FULX12208	1	PLUG,EXPANSION			
39	FULX12603	1	PLUG,SPECIAL TRANS HOLES PIPE			
801	FULK3104	KT	PIN,ACTUATOR PIVOT			
801		RF	(CONSISTS OF PARTS DENOTED BY A)			
802	FULK3128	KT	KIT,PISTON			
802		RF	(CONSISTS OF PARTS DENOTED BY B)			
803	FULK3129	KT	KIT,BAR & RING			
803		RF	(CONSISTS OF PARTS DENOTED BY C)			
804	FULK3245	KT	KIT,AIR MODULE ASSY			
804		RF	(CONSISTS OF PARTS DENOTED BY D)			
805	FUL5561505	2	PLUG,CAP			
806	FULA6511	1	PISTON,ASSY RANGE			
880		RF	NOTE: ASM BELOW COMPRISED OF ABOVE COMPONENTS			
881	3567093F91	RF	HOUSING SHIFT BAR*FORWARD SHIF			

COPYRIGHT© 2011INTERNATIONAL TRUCK AND ENGINE CORP.

https://truckmanualshub.com/

Figure 0P6BD

XMSN BASE ASM; FULLER FR(O)-X210B(C

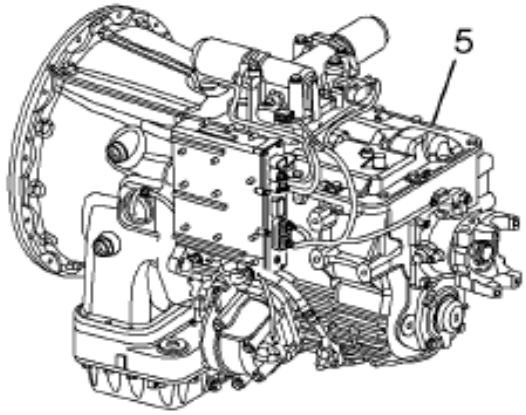

EATON AUTOSHIFT

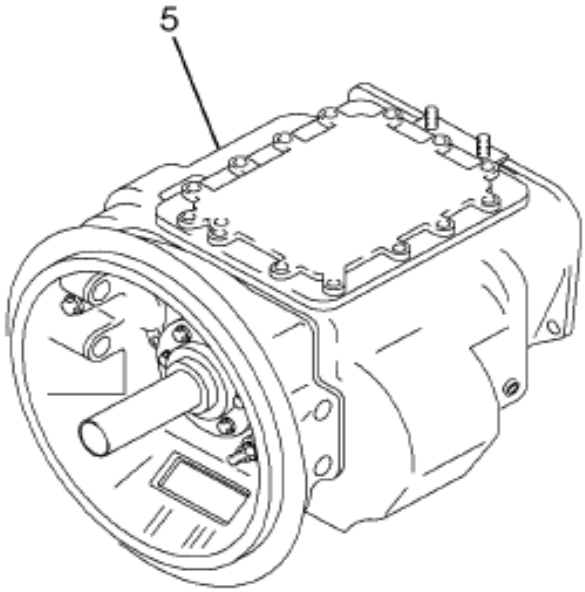

FULLER T SERIES

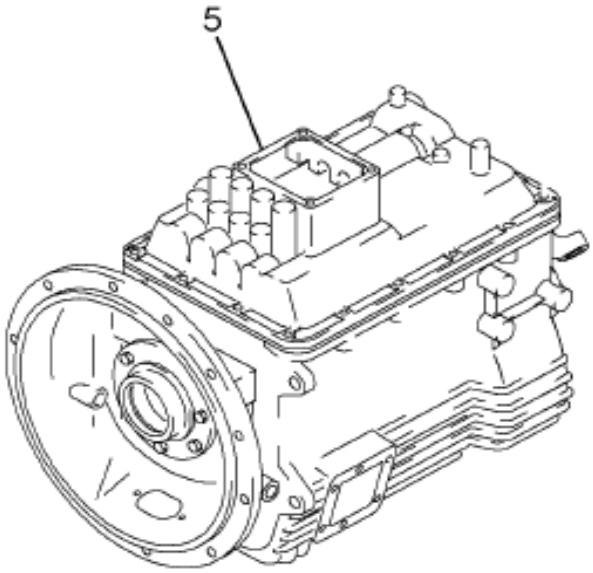

FULLER FS SERIES

13-F01-0003-01 K04

Item	Part No.	Qty	Description	Kit	Var	Figure
5	3567054F91	1	TRANSMISSION L/HSG*EATON FR0(F		0P6BQ	3567054F91

Grp 13

COPYRIGHT© 2011INTERNATIONAL TRUCK AND ENGINE CORP.

https://truckmanualshub.com/

Figure 2507195C91
SHAFT,TRANS MAIN

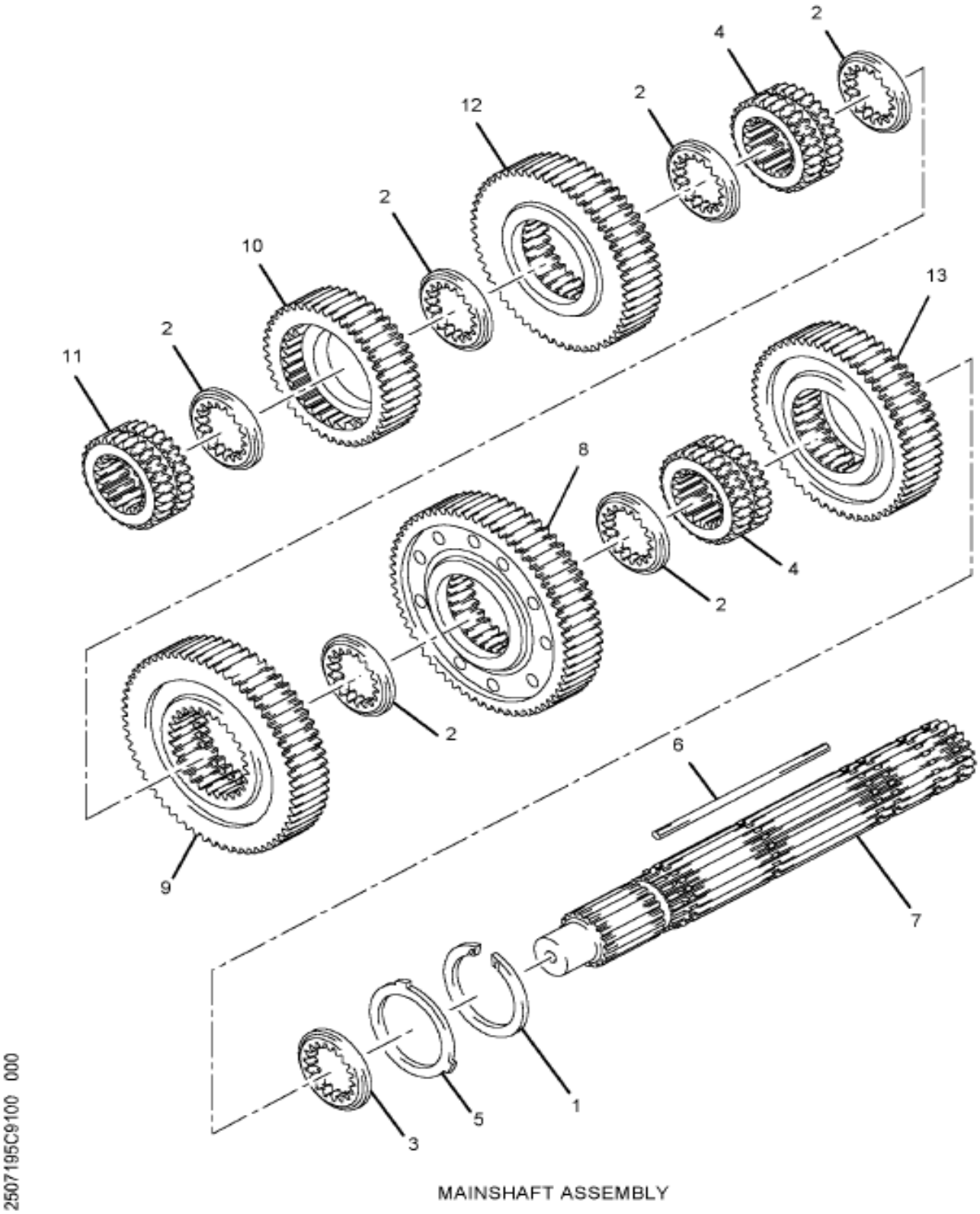

MAINSHAFT ASSEMBLY

Item	Part No.	Qty	Description	Kit	Var	Figure
1	FUL4302184	1	RING,SNAP			
2	FUL4302258	6	WASHER M/S THRUST O.D. 1ST			
3	FUL4302259	1	WASHER M/S THRUST REV GR			
4	FUL4302265	2	CLUTCH,TRANS M/S 1ST, 2ND &			
5	FUL4302312	1	SPACER,TRANS M/S REV GEAR			
6	FUL4302316	1	KEY,MASHFT GEAR WASHER			

COPYRIGHT© 2011INTERNATIONAL TRUCK AND ENGINE CORP.

https://truckmanualshub.com/

Figure 2507195C91
SHAFT,TRANS MAIN

Item	Part No.	Qty	Description	Kit	Var	Figure
7	FUL4302318	1	SHAFT,TRANS MAIN			
8	FUL4302411	1	GEAR,MASHFT 1ST SPEED			
9	FUL4302421	1	GEAR,MASHFT 2ND SPEED			
10	FUL4304013	1	GEAR,MASHFT			
11	FUL4304014	1	CLUTCH,TRANS SLIDING			
12	FUL4302506	1	GEAR,MASHFT			
13	FUL4303033	1	GEAR,MAINSHAFT			
880		RF	NOTE: ASM BELOW COMPRISED OF ABOVE COMPONENTS			
881	2507195C91	RF	SHAFT,TRANS MAIN			

COPYRIGHT© 2011INTERNATIONAL TRUCK AND ENGINE CORP.

https://truckmanualshub.com/
Figure 3567054F91
TRANSMISSION L/HSG*EATON FR0(F

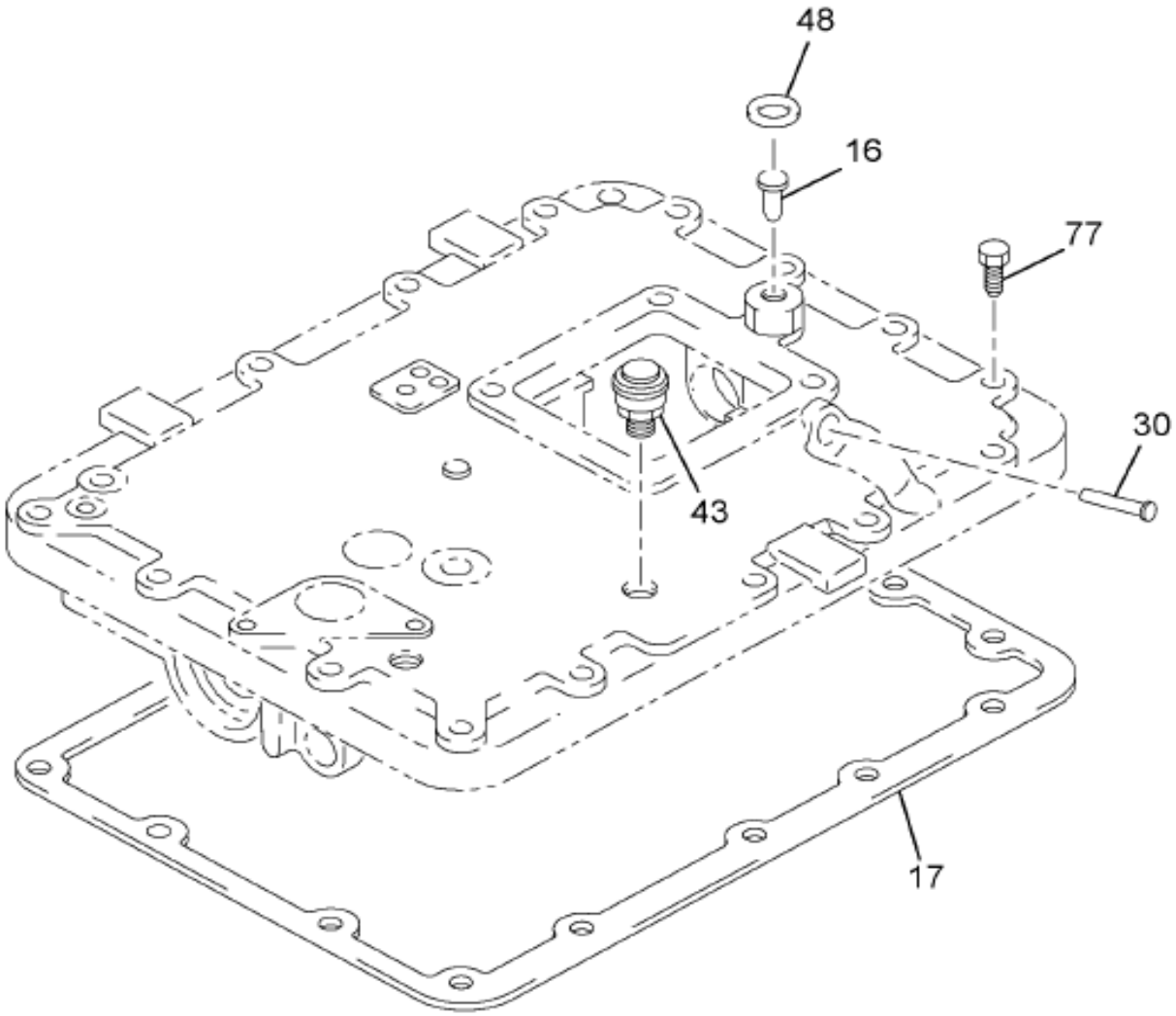

SHIFT BAR HOUSING ASSEMBLY

13-C30-0208-00 K05

Figure 1 of 6

COPYRIGHT© 2011INTERNATIONAL TRUCK AND ENGINE CORP.

https://truckmanualshub.com/

Figure 3307054F91
TRANSMISSION L/HSG*EATON FR0(F

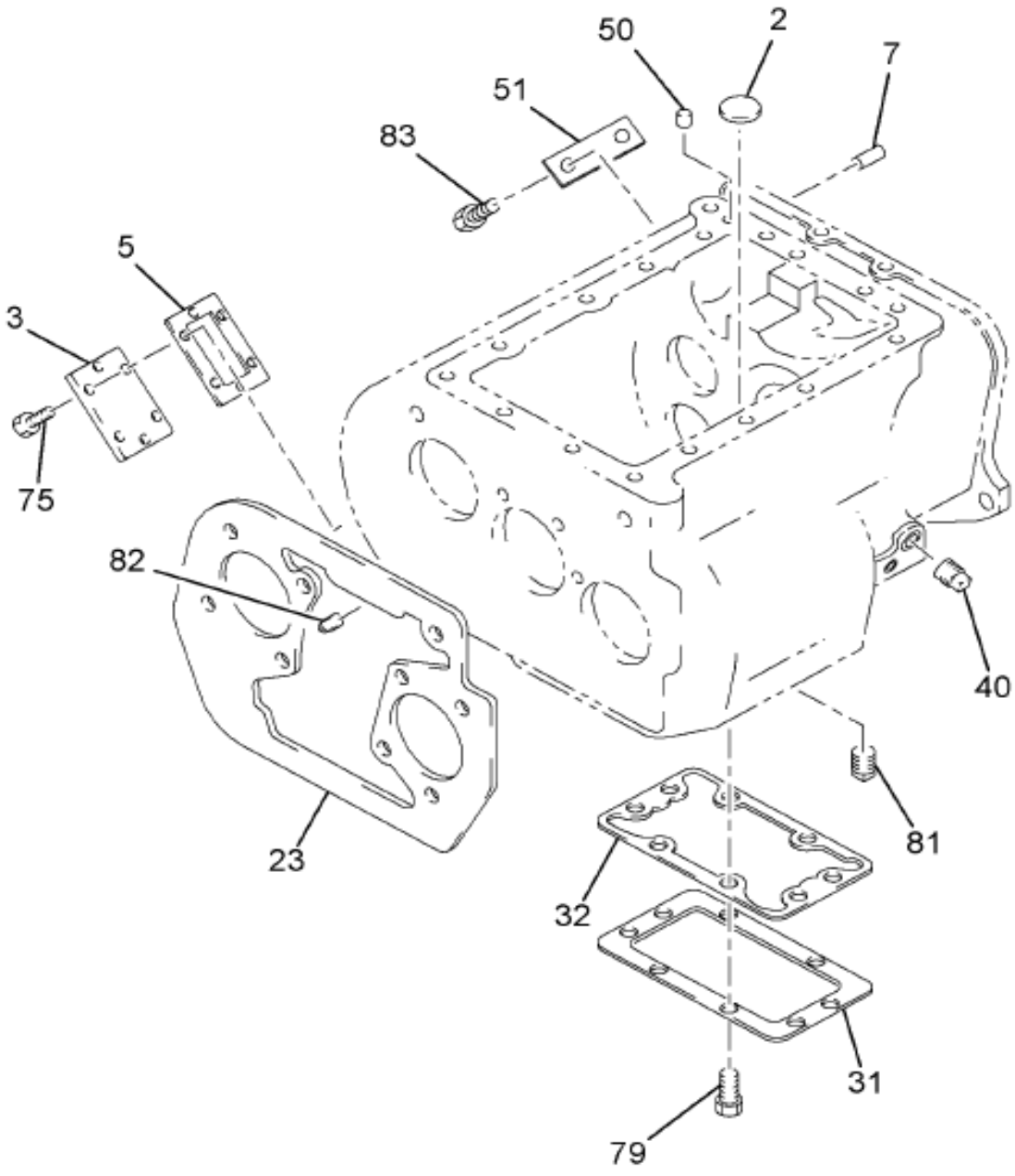

MAIN HOUSING
ASSEMBLY

13-C30-0209-01 K05

Grp 13

Figure 2 of 6

COPYRIGHT© 2011INTERNATIONAL TRUCK AND ENGINE CORP.

https://truckmanualshub.com/

Figure 3367054F91
TRANSMISSION L/HSG*EATON FR0(F

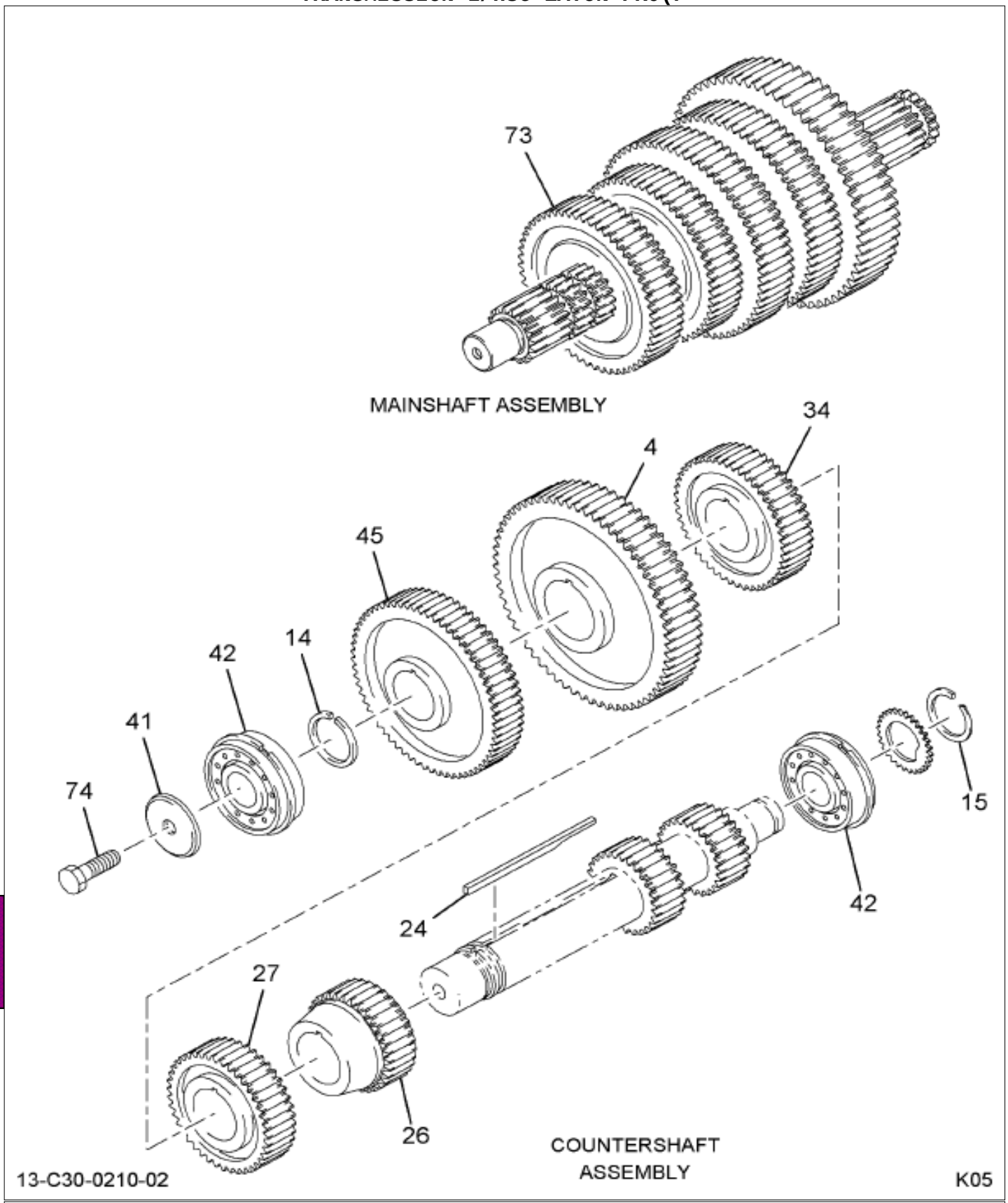

Figure 3 of 6

COPYRIGHT© 2011INTERNATIONAL TRUCK AND ENGINE CORP.

https://truckmanualshub.com/

Figure 336705451

TRANSMISSION L/HSG*EATON FR0(F

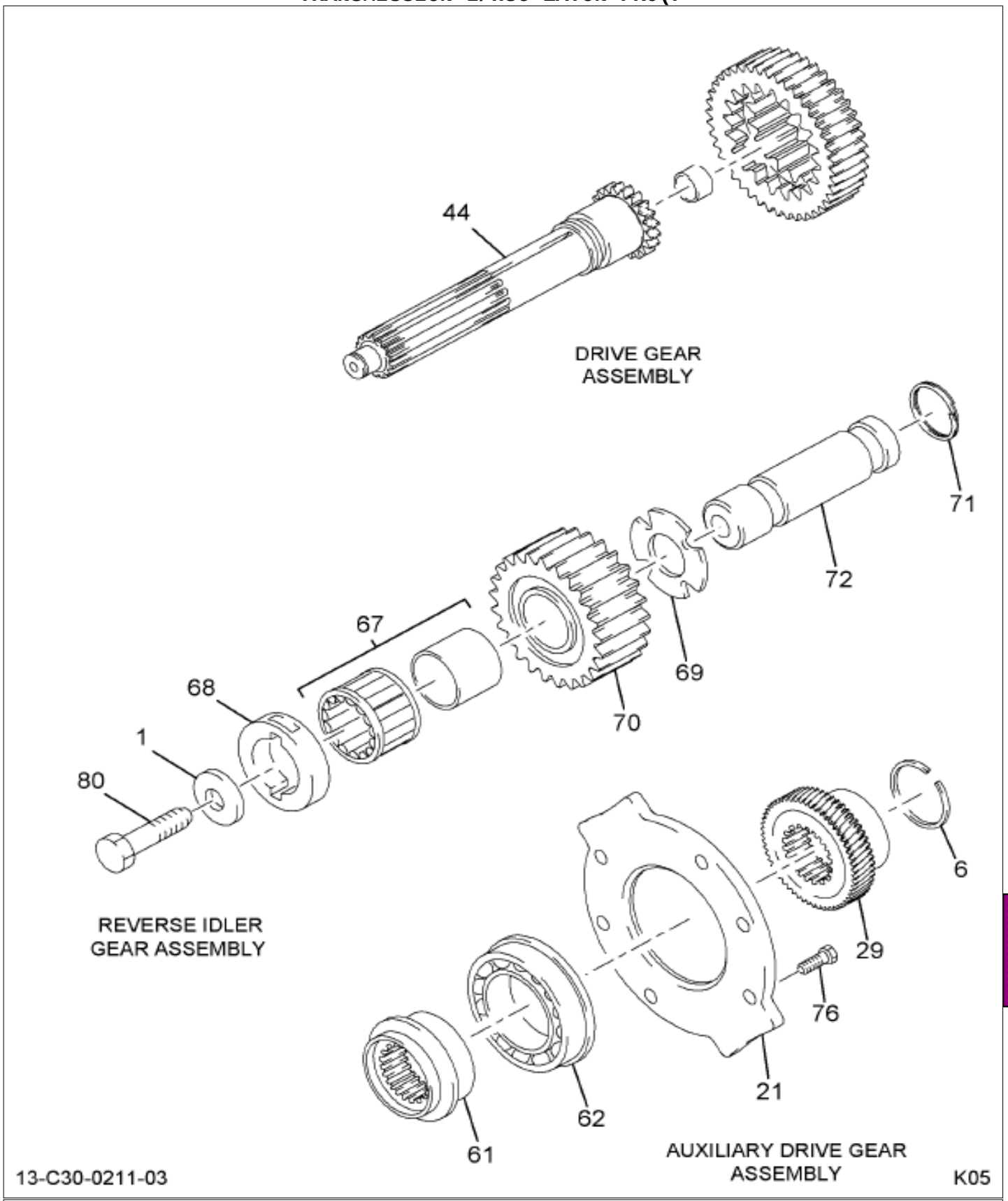

Grp 13

Figure 4 of 6

COPYRIGHT© 2011INTERNATIONAL TRUCK AND ENGINE CORP.

https://truckmanualshub.com/

Figure 3307054F91
TRANSMISSION L/HSG*EATON FR0(F

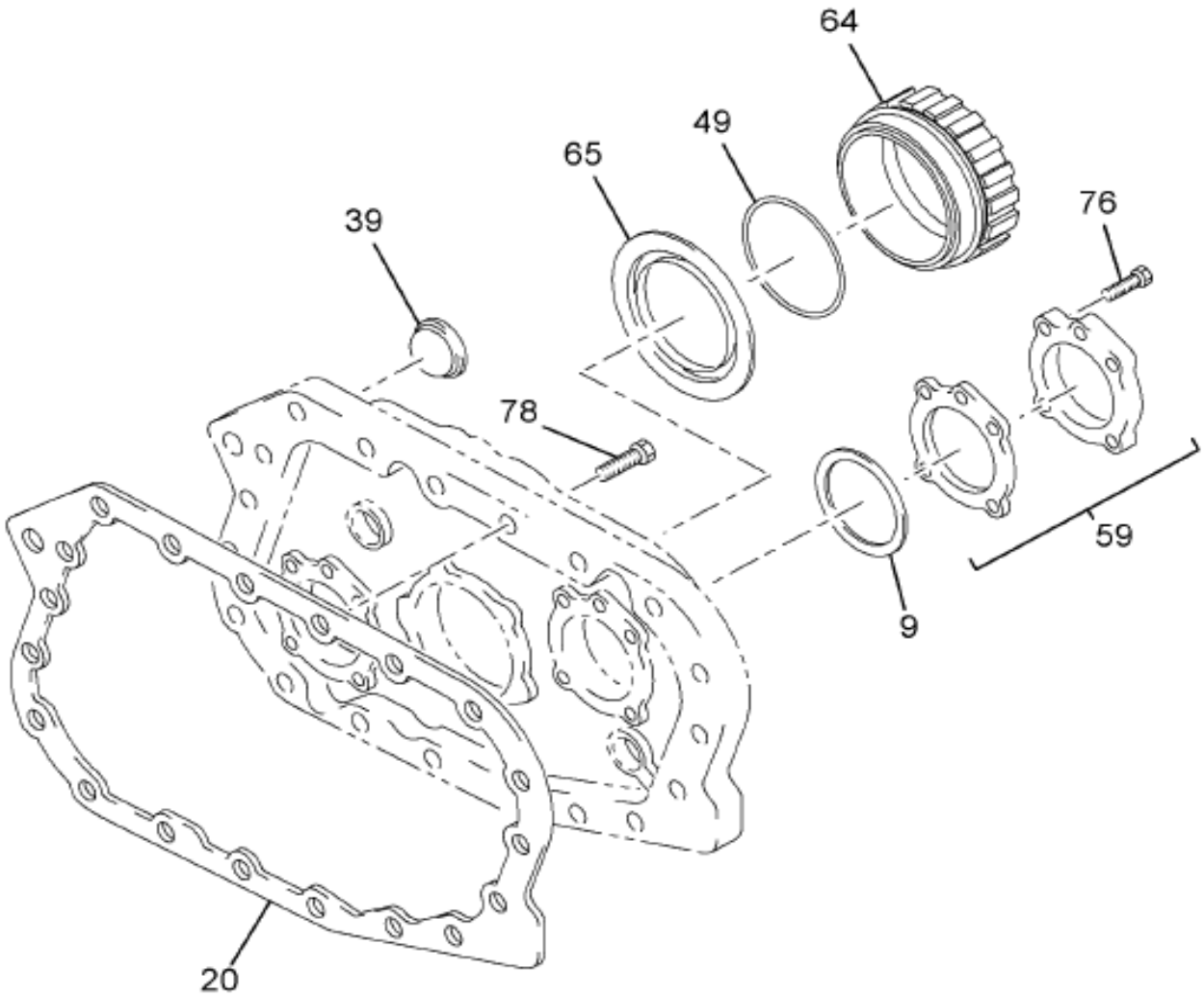

AUXILIARY HOUSING ASSEMBLY

13-C30-0212-04 K05

Figure 5 of 6

COPYRIGHT© 2011INTERNATIONAL TRUCK AND ENGINE CORP.

https://truckmanualshub.com/

Figure 3307054F91

TRANSMISSION L/HSG*EATON FR0(F

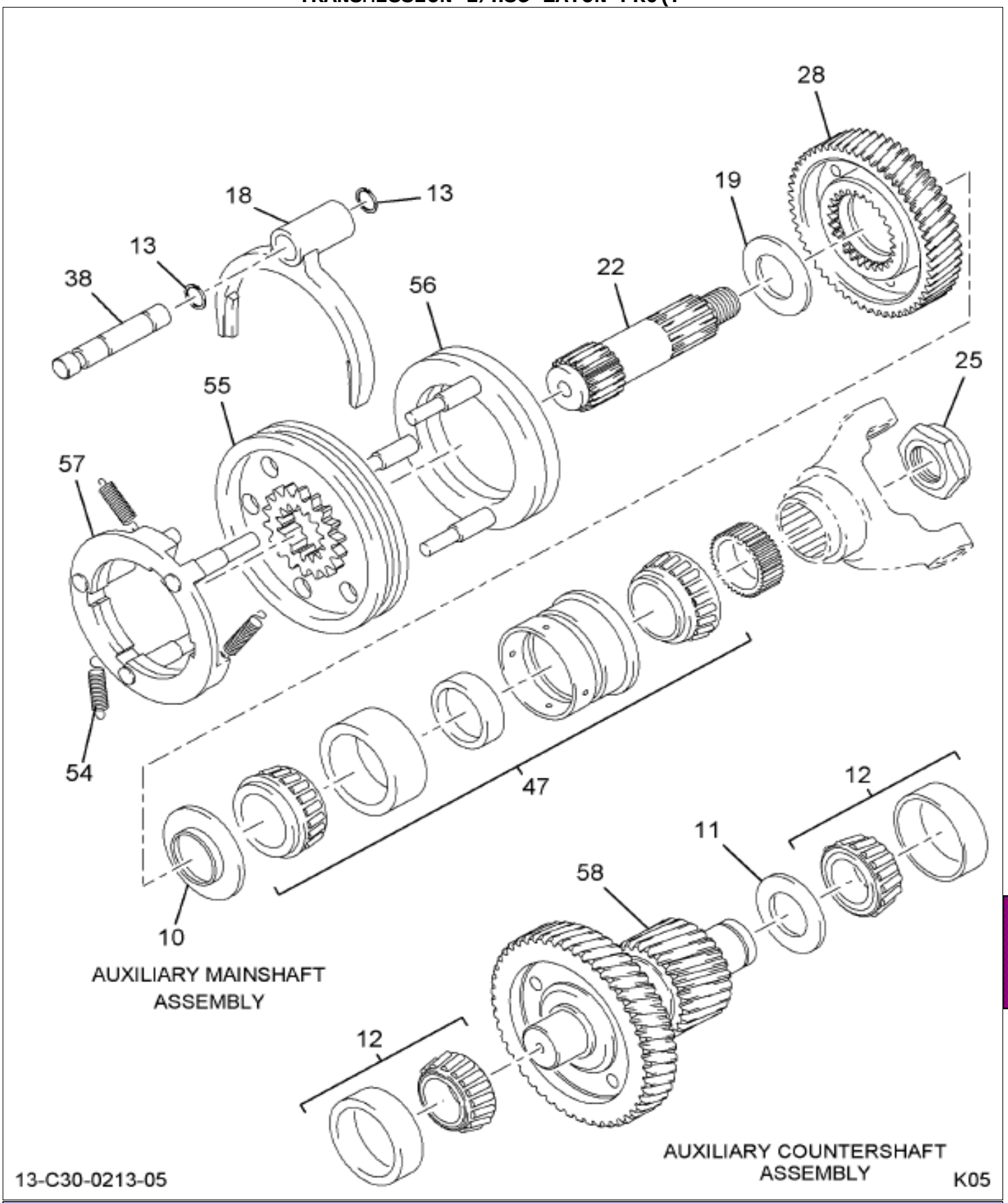

Item	Part No.	Qty	Description	Kit	Var	Figure
1	FUL14283	2	PLATE,IDLER			
2	FUL14373	3	MAGNET,ASSY			
3	FUL14575	1	COVER,PTO OPENING PAD			
4	FUL15953	1	GEAR C/S PTO LT			
4	FUL20840	1	GEAR, TRANS COUNTERSHAFT PTO			
5	FUL1684	1	GASKET,PTO OPNG	D		

Grp 13

COPYRIGHT© 2011INTERNATIONAL TRUCK AND ENGINE CORP.

https://truckmanualshub.com/

Figure 3307054F91

TRANSMISSION L/HSG*EATON FR0(F

Item	Part No.	Qty	Description	Kit	Var	Figure
6	FUL17399	1	RING,SNAP	B		
7	FUL18128	2	PIN,DOWEL TRANS CASE			
9		RF	SHIM, BRG	A		
10	FUL22898	1	SPACER,AUX MAIN DR GEAR BRG	B		
11	FUL22903	2	SPACER,AUX CTSHFT BRG	B		
12	FUL4302074	4	BEARING,ROLLER ASM			
13	FUL4302080	2	RING,SNAP	FG		
14	FUL4302081	2	RING,SNAP			
15	FUL4302082	2	RING,SNAP			
16	FUL4302153	1	PIN,CONTROL LEVER PIVOT			
17	FUL4302156	1	GASKET,CONTROL LEVER HSG	D		
18		RF	YOKE, SHIFT AUX MASHFT	F		
19	FUL4302243	1	WASHER,SPECIAL	B		
20	FUL4302248	1	GASKET,TRANS CASE REAR HSG	D		
21	FUL4302257	1	RETAINER,BRG AUX DR GR			
22	FUL4302276	1	SHAFT,AUX TRANS MAIN			
23	FUL4302314	1	GASKET,TRAN CLUTCH HSG	D		
24	FUL4302317	2	KEY SQUARE C/S GEARS			
25	FUL4302321	1	NUT,SPECIA FLANGE HEX			
26	FUL4302420	2	GEAR,CTSHFT			
27	FUL4302422	2	GEAR,TRANS CTSHFT 3RD SPEED			
28	FUL4302427	1	GEAR,AUX MASHFT REDUCTION			
29	FUL4302435	1	GEAR,AUX MAIN DRIVE			
30	FUL4302713	1	PIN,CONTROL LEVER PIVOT			
31	FUL4302809	1	COVER,PTO OPENING			
32	FUL4302810	1	GASKET,PTO OPENING COVER	D		
34	FUL4303184	2	GEAR,TRANS CTSHFT OD			
38		RF	BAR ASM, W/RING	G		
39		RF	PLUG, EXPANSION AUX CASE	H		
40	FUL4304023	1	PLUG,CASE FILLER OPNG (2/PK)			
41	FUL4304024	2	RETAINER,BEARING			
42	FUL4304080	4	BEARING,ROLLER ASM			
43	FUL4304602	1	BREATHER,TRANS			
44	FUL4304641	1	GEAR,TRANS MAINDRIVE			
45	FUL4303120	2	GEAR,CTSHFT DRIVE			
47	FUL5556503	1	BEARING,ROLLER ASM			
48	FUL5568510	1	RING,O			
49	FUL5568511	1	RING,O	C		
50	FUL5575503	2	PIN,DOWEL			
51	FUL57000	1	PLATE,TRANS CASE REAR			
54	FUL14897	3	SPRING,CONTROL LEVER	BE		
55	FUL4300924	1	CLUTCH,AUX MASHFT SLIDING	E		
56	FULA7254	1	SYNCHRONIZER,TRANS			
57	FULA5917	1	PLATE,SYNCHRO W/PINS, DIRECT	E		
58	FULA6436	2	SHAFT,AUX TRANS COUNTER			
59	FULA6453	2	COVER,ASSY AUX CTRSHAFT			
61	FUL4302313	1	SPACER,AUX MAIN DR GEAR BRG			
62	FUL5566507	1	BEARING,BALL			
64	FULS2501	1	ROTOR, SPEEDO			
65		RF	SLINGER	C		
67	FUL14287	2	BEARING,ASSY ROLLER (NEEDLE)			
68	FUL4302241	2	WASHER THRUST REV IDLER GEAR			
69	FUL4302982	2	WASHER REV IDLER GEAR			
70	FUL4303117	2	GEAR,REV IDLER			
71	FUL4303336	2	RING,RETAINING			
72	FUL4303503	2	SHAFT,REV IDLER GEAR			
73	2507195C91	1	SHAFT,TRANS MAIN			2507195C91
74	25334R1	2	BOLT 5/8-NF X 1-3/4 PHC TYPE			

COPYRIGHT© 2011INTERNATIONAL TRUCK AND ENGINE CORP.

https://truckmanualshub.com/

Figure 3567054F91

TRANSMISSION L/HSG*EATON FR0(F

Item	Part No.	Qty	Description	Kit	Var	Figure
75	FULX81002M	6	SCREW,SET SHIFT FORK			
76	FULX81003M	14	SCREW,SET SHIFT FORK			
77	FULX81005M	16	SCREW,SET SHIFT FORK			
78	FULX81006M	2	SCREW CASE REAR HSG DOWEL PIN			
78	FULX81005M	17	SCREW,SET SHIFT FORK			
79	FULX81200M	8	SCREW 8-BOLT P.T.O. COVER			
80	FULX81600M	2	SCREW,M16 X 2 X 30MM			
81	FULX121207	1	PLUG PIPE 3/4 MAGD			
82	FULX12802	1	PLUG PIPE 1/2			
83	FULX13206	2	SCREW TAPPING			
800		RF	NOTE: THE FOLLOWING PARTS ARE			
			NON-ILLUSTRATED			
801	FUL4302931	2	PLUG,STR M16 X 2 X 20MM			
802	FUL4303413	8	SCREW,DRIVE			
803	FUL4303431	1	GASKET,SHIFT TOWER	D		
804	FUL5554902	2	ELBOW,COMP OR FLEX TUBE			
805	FULK2805	KT	KIT,SHIM TRANSMISSION			
805		RF	(CONSISTS OF PARTS DENOTED BY A)			
806	FULK2917	KT	KIT,TRANS SMALL PARTS			
806		RF	(CONSISTS OF PARTS DENOTED BY B)			
807	FULK2918	KT	KIT,OIL SEAL			
807		RF	(CONSISTS OF PARTS DENOTED BY C)			
807	FULK2921	KT	KIT,GASKET			
807		RF	(CONSISTS OF PARTS DENOTED BY D)			
807	FULK2922	KT	KIT,SYNCHRONIZER/SLIDING CLU			
807		RF	(CONSISTS OF PARTS DENOTED BY E)			
808	FULK3130	KT	KIT, TRANSMISSION YOKE BAR			
808		RF	(CONSISTS OF PARTS DENOTED BY F)			
809	FULK3131	KT	KIT, TRANS YOKE BAR			
809		RF	(CONSISTS OF PARTS DENOTED BY G)			
810	FULK3300	KT	KIT,EXPANSION PLUG			
810		RF	(CONSISTS OF PARTS DENOTED BY H)			
811	FULK3215	KT	KIT,SHIFT BAR HSG CVR ASSY			
812	FULK2805	1	KIT,SHIM TRANSMISSION			
813	FULK2918	1	KIT,OIL SEAL			
814	FULTAD5112X	1	TRANSMISSION,L/HSG (EXCHANGE)			
880		RF	NOTE: ASM BELOW COMPRISED OF ABOVE			
			COMPONENTS			
881	3567054F91	RF	TRANSMISSION L/HSG*EATON FR0(F			

COPYRIGHT© 2011INTERNATIONAL TRUCK AND ENGINE CORP.

https://truckmanualshub.com/

Figure 0G9L7

XMSN CONTROLS; AIR SUPPLY, XMSN, NGV

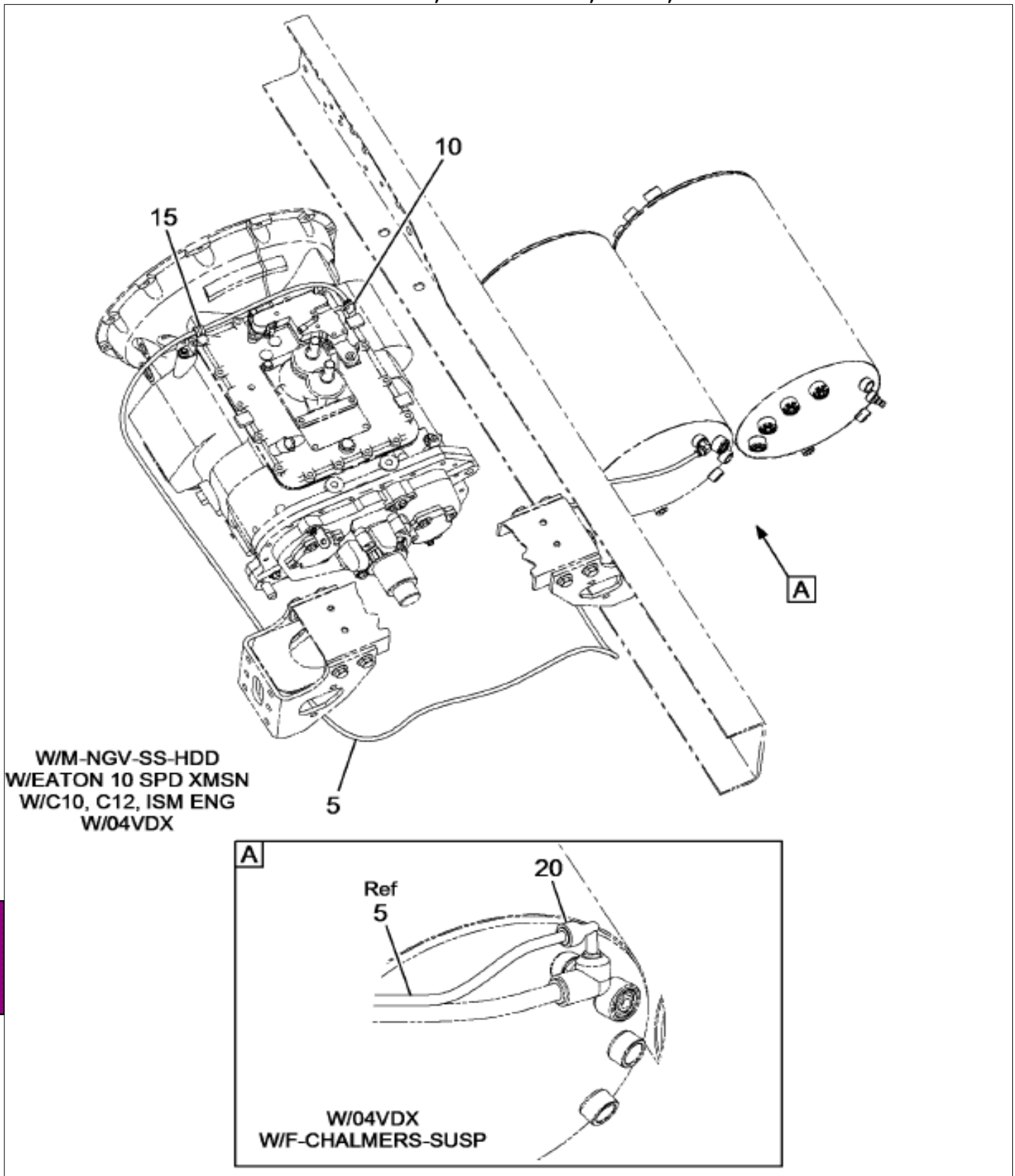

13-733-0053-01 H09

Item	Part No.	Qty	Description	Kit	Var	Figure
5	417199C3	1100	TUBE,NYLON BULK 3/8 OD BLACK		0G9M4	
10	2017514C2	1	ELBOW, 90 DEG 3/8 MPT X 3/8 PT		0G9L7	

COPYRIGHT© 2011INTERNATIONAL TRUCK AND ENGINE CORP.

https://truckmanualshub.com/

Figure 0J23M

XMSN CONTROLS; MANUAL, W/M-NGV-SS-HDD & W/CAT ENGINE

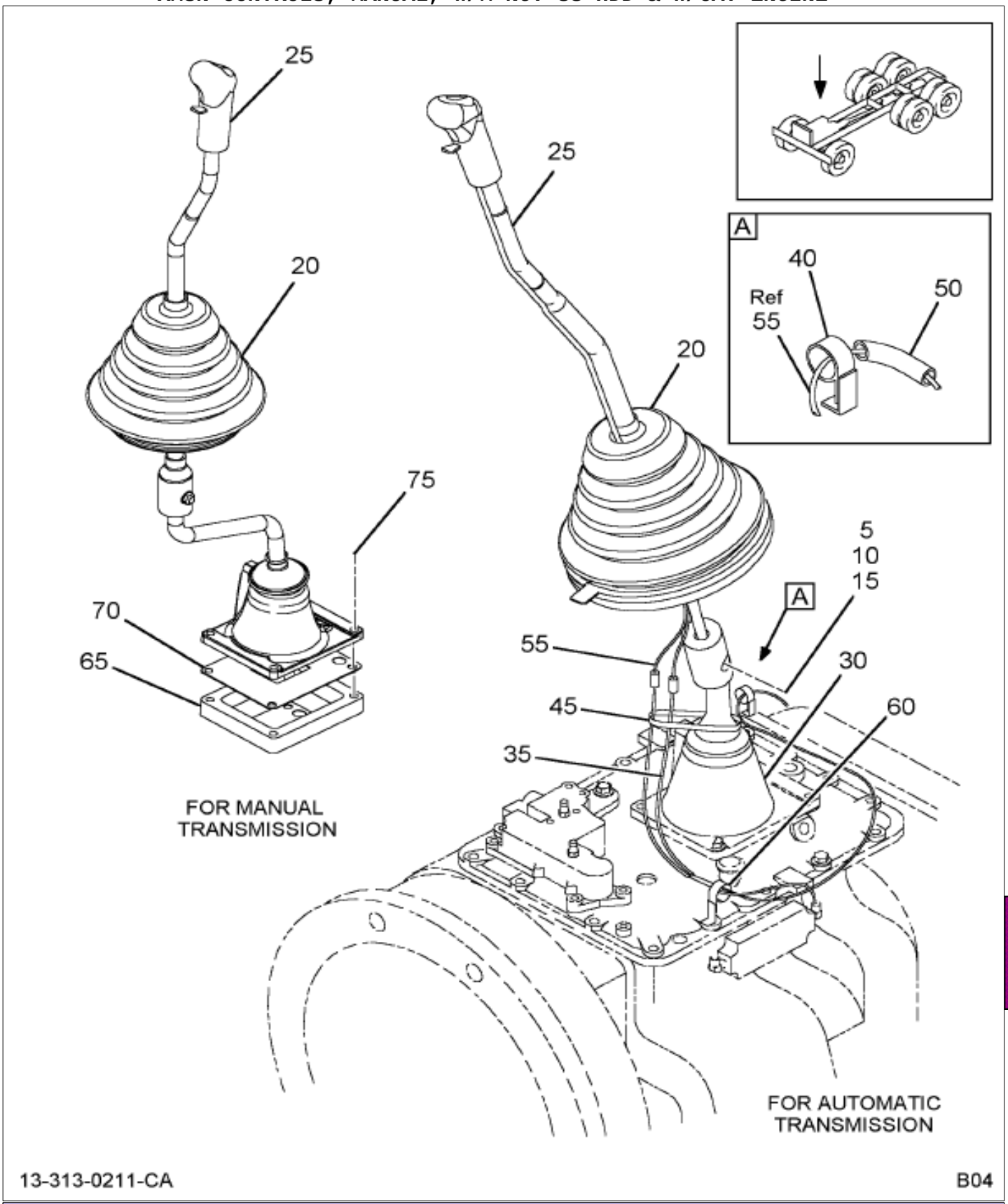

Item	Part No.	Qty	Description	Kit	Var	Figure
5	2034718C1	1	BOLT,SHOULDER		0J23Q	
10	1646655C1	2	BUSHING,PIN GEAR SHIFT		0J23Q	
15	9413977	1	NUT,HEX LK 5/16NC		0J23Q	
20	3675966C1	1	BOOT,GEAR SHIFT LEVER, LOWER S		0J23M	
25	3558940C95	1	LEVER,XMSN*SHIFTER LEVER ASSY		0J23Q	3558940C95
30	3574829C91	1	HOUSING,CONTROL W/LEVER*CONTRO		0J23Q	3574829C91

Grp 13

COPYRIGHT© 2011INTERNATIONAL TRUCK AND ENGINE CORP.

https://truckmanualshub.com/

Figure 0J23M

XMSN CONTROLS; MANUAL, W/M-NGV-SS-HDD & W/CAT ENGINE

Item	Part No.	Qty	Description	Kit	Var	Figure
35	2643664R2	25	HARNESS,NYLON TUBE ASSY		0J23Q	
45	289862C1	1	STRAP,CABLE LOCK		0J23Q	

COPYRIGHT© 2011INTERNATIONAL TRUCK AND ENGINE CORP.

https://truckmanualshub.com/

Figure 3574829C91
HOUSING,CONTROL W/LEVER*CONTRO

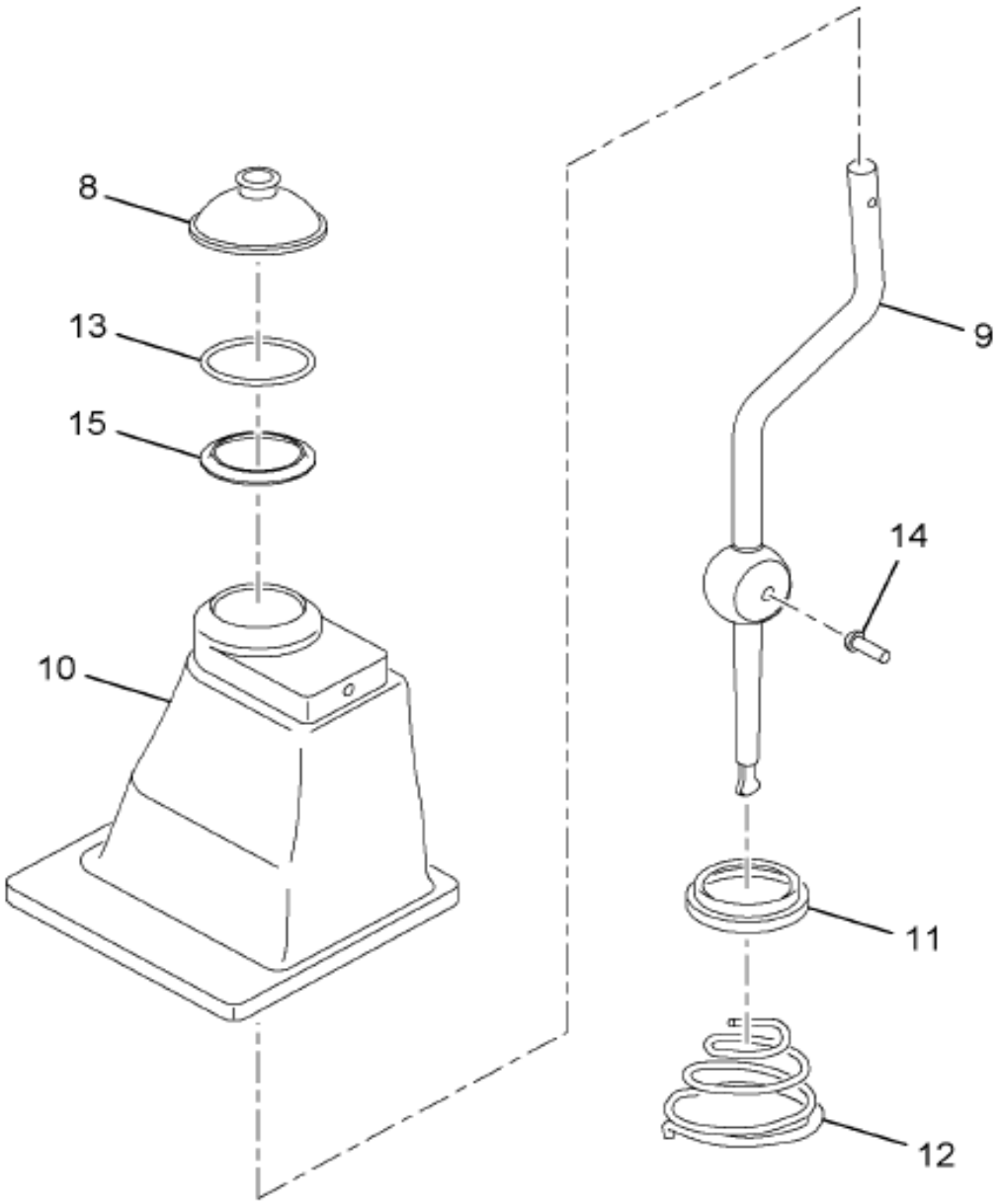

13-313-0133-00 K04

Item	Part No.	Qty	Description	Kit	Var	Figure
8	140928R1	1	BOOT,TRANS GEAR SHIFT LEVER			
9	3574596C1	1	LEVER,XMSN*LEVER SHIFT, STUB			
10	3574830C1	1	HOUSING,CONTROL LEVER*GEAR SHI			
11	41084V	1	RETAINER,CONTROL LEVER SPG			
12	44028HA	1	SPRING,CONTROL LEVER			
13	443386C1	1	RING,O GR SHIFT LEVER ISOLATOR			

Grp 13

COPYRIGHT© 2011INTERNATIONAL TRUCK AND ENGINE CORP.

https://truckmanualshub.com/

Figure 3574829C91

HOUSING,CONTROL W/LEVER*CONTRO

Item	Part No.	Qty	Description	Kit	Var	Figure
14	476982C1	1	PIN,PIVOT			
15	3581650C1	1	RETAINER,GEAR SHIFT LEVER SEAL			
880		RF	NOTE: ASM BELOW COMPRISED OF ABOVE COMPONENTS			
881	3574829C91	RF	HOUSING,CONTROL W/LEVER*CONTRO			

COPYRIGHT© 2011INTERNATIONAL TRUCK AND ENGINE CORP.

https://truckmanualshub.com/

Figure 3338940C93
LEVER,XMSN*SHIFTER LEVER ASSY

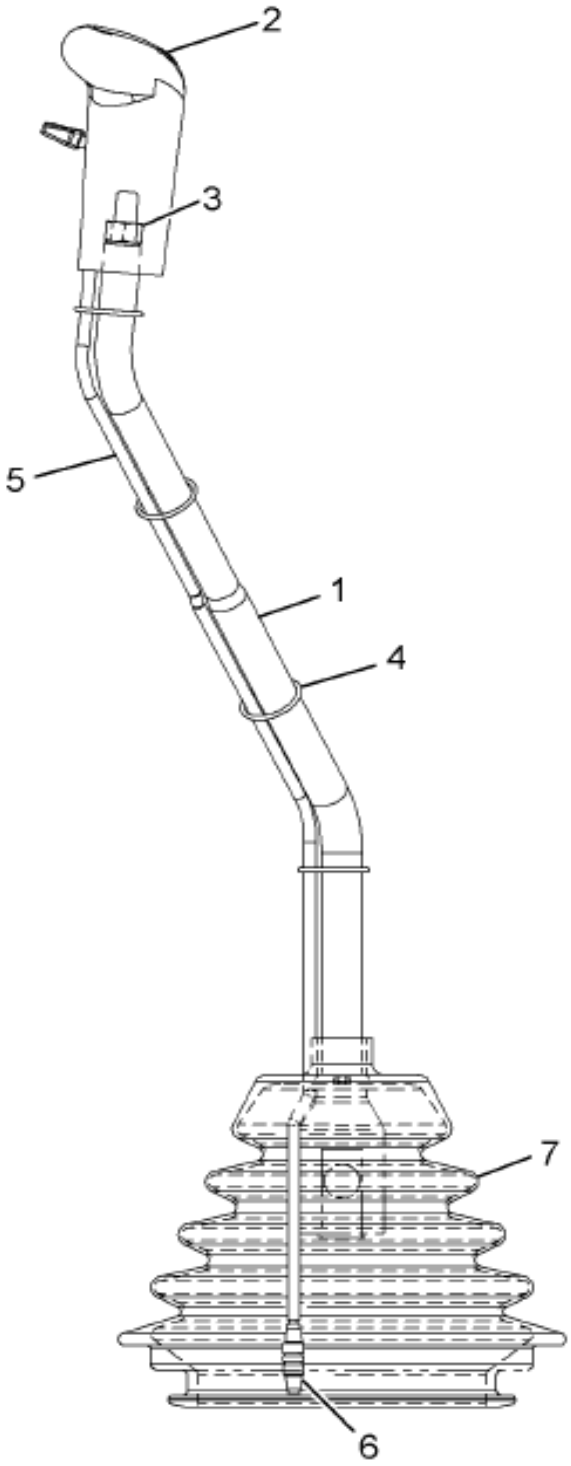

13-313-0270-01 G04

Item	Part No.	Qty	Description	Kit	Var	Figure
1	3559384C3	1	LEVER,XMSN*SHIFTER LEVER			
2	1659993C91	1	VALVE,ASSY XMSN SHIFT CONTROL			
3	25526R1	1	NUT,HEX 1/2 NC TYPE 8			
4	875524C1	4	RING,O 3/4 X 15/16 CLASS 3			
5	2643664R2	AR	HARNESS,NYLON TUBE ASSY			
6	1689950C1	2	CONNECTOR,COMP OR FLEX TUBE			

COPYRIGHT© 2011INTERNATIONAL TRUCK AND ENGINE CORP.

https://truckmanualshub.com/

Figure 3558940C95

LEVER,XMSN*SHIFTER LEVER ASSY

Item	Part No.	Qty	Description	Kit	Var	Figure
7	3531768C2	1	BOOT,XMSN GEAR SHIFT LEVER*SHI			
880		RF	NOTE: ASM BELOW COMPRISED OF ABOVE COMPONENTS			
881	3558940C95	RF	LEVER,XMSN*SHIFTER LEVER ASSY			

COPYRIGHT© 2011INTERNATIONAL TRUCK AND ENGINE CORP.

https://truckmanualshub.com/

Figure 0P6CW

XMSN INPUT SHAFT; FULLER FR(O)-X210B(C)

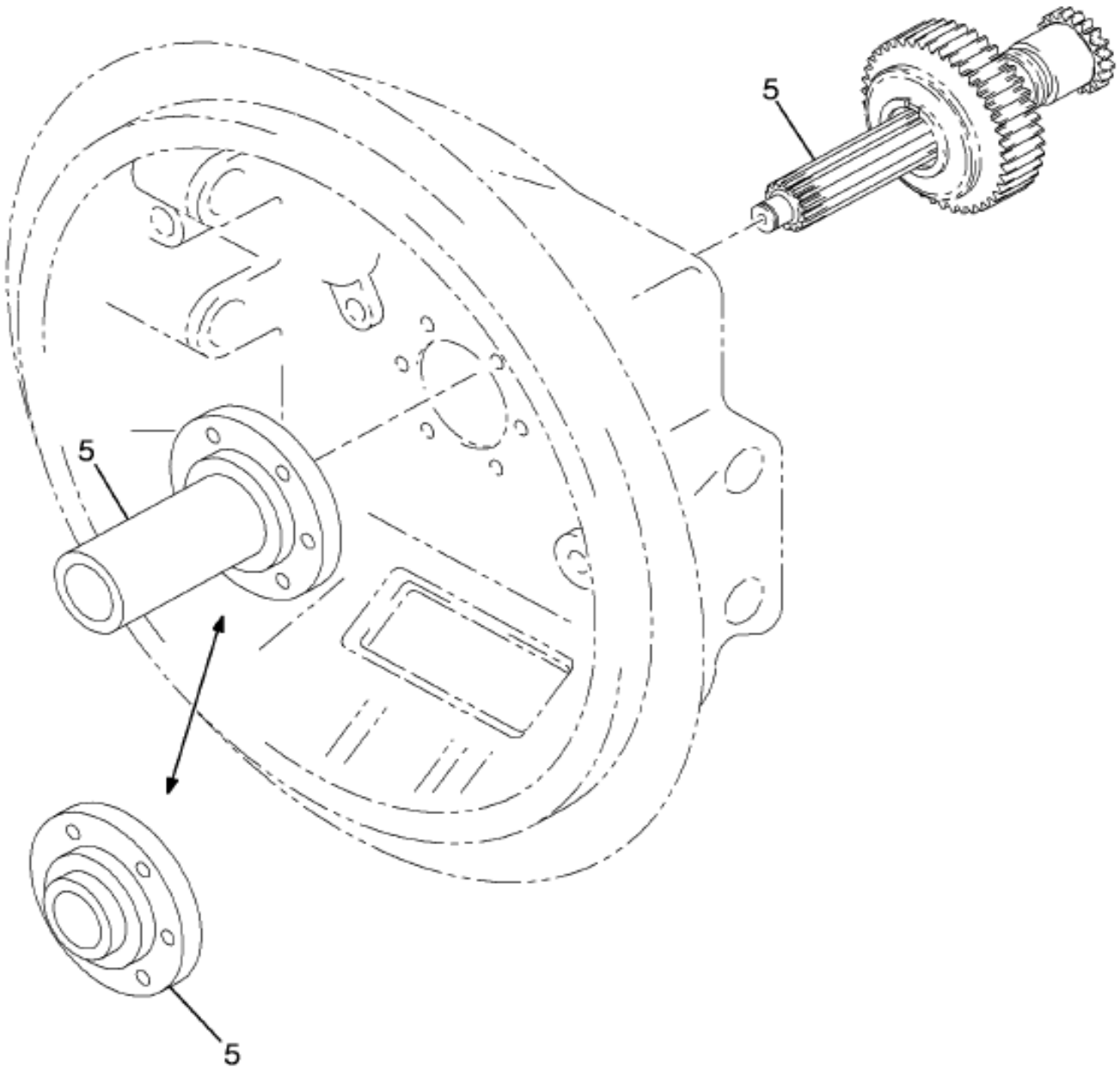

13-C51-0013-AA E09

Item	Part No.	Qty	Description	Kit	Var	Figure
5	3567122F91	1	SHAFT CLUTCH INPUT*2.00" INPT		0P6CY	3567122F91

COPYRIGHT© 2011INTERNATIONAL TRUCK AND ENGINE CORP.

https://truckmanualshub.com/

Figure 3307122F91

SHAFT CLUTCH INPUT*2.00" INPT

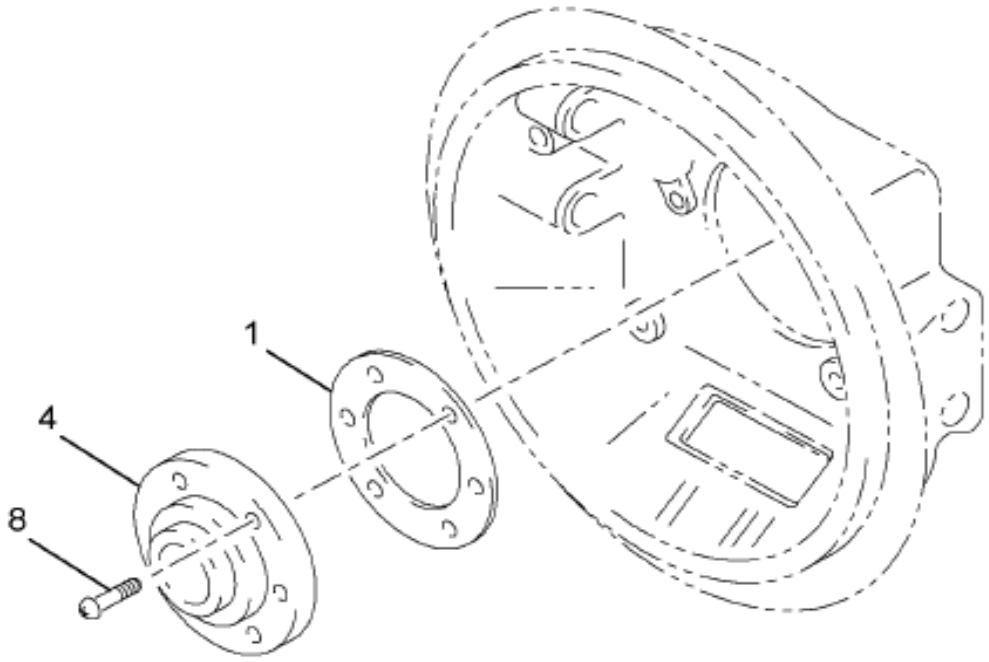

MAIN HOUSING ASSEMBLY

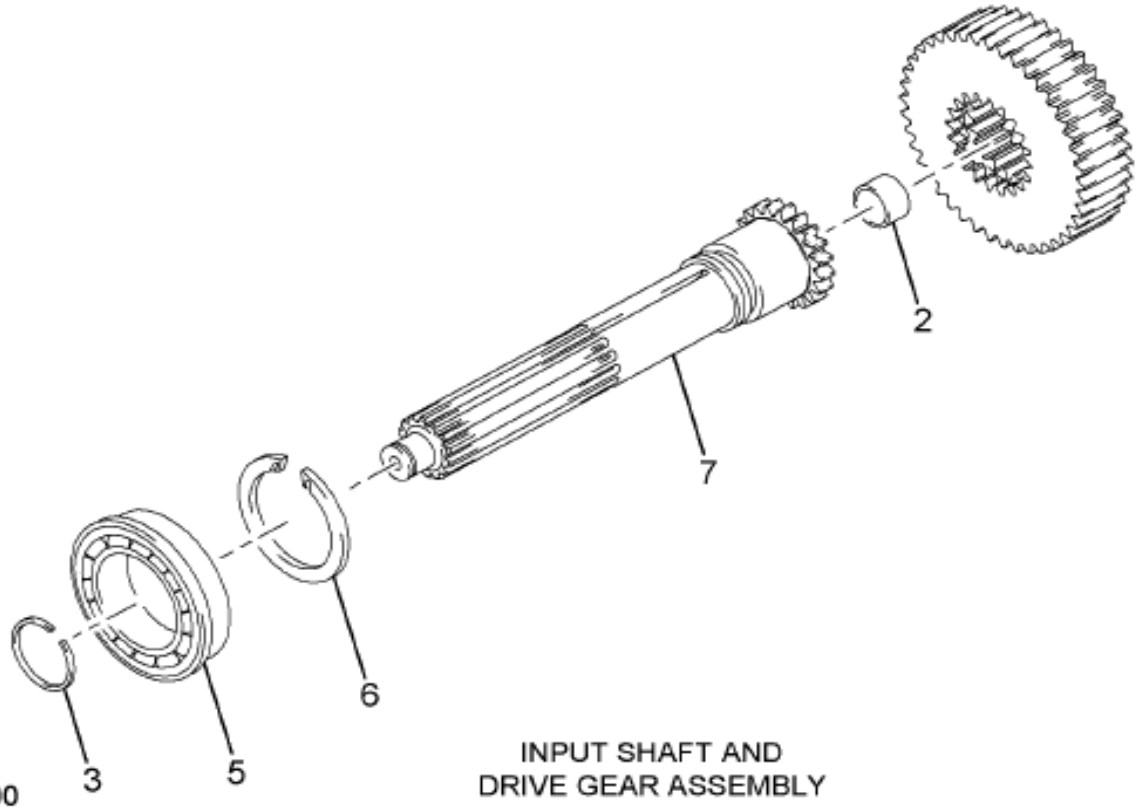

INPUT SHAFT AND DRIVE GEAR ASSEMBLY

13-C51-0008-00 K05

Item	Part No.	Qty	Description	Kit	Var	Figure
1	FUL14311	1	GASKET,FRONT BRG COVER			
2	FUL16566	1	BUSHING, INPUT SHAFT			
3	FUL16980	1	RING,SNAP DR GR RETAINING			
4	FUL20550	1	RETAINER,MAIN DRIVE GEAR BRG			
5	FUL4301417	1	BEARING,BALL			
6	FUL4303362	1	RING,SNAP (MULTI PAK 10)			

COPYRIGHT© 2011INTERNATIONAL TRUCK AND ENGINE CORP.

https://truckmanualshub.com/

Figure 3567122F91

SHAFT CLUTCH INPUT*2.00" INPT

Item	Part No.	Qty	Description	Kit	Var	Figure
7	FULS2822	1	SHAFT,ASSY INPUT			
8	FULX81004M	6	SCREW,SET SHIFT FORK			
880		RF	NOTE: ASM BELOW COMPRISED OF ABOVE COMPONENTS			
881	3567122F91	RF	SHAFT CLUTCH INPUT*2.00" INPT			

COPYRIGHT© 2011INTERNATIONAL TRUCK AND ENGINE CORP.

https://truckmanualshub.com/

Figure 0MBMG

XMSN OIL COOLER HOSING INSTL; 76/7700 TOC W/ C2000

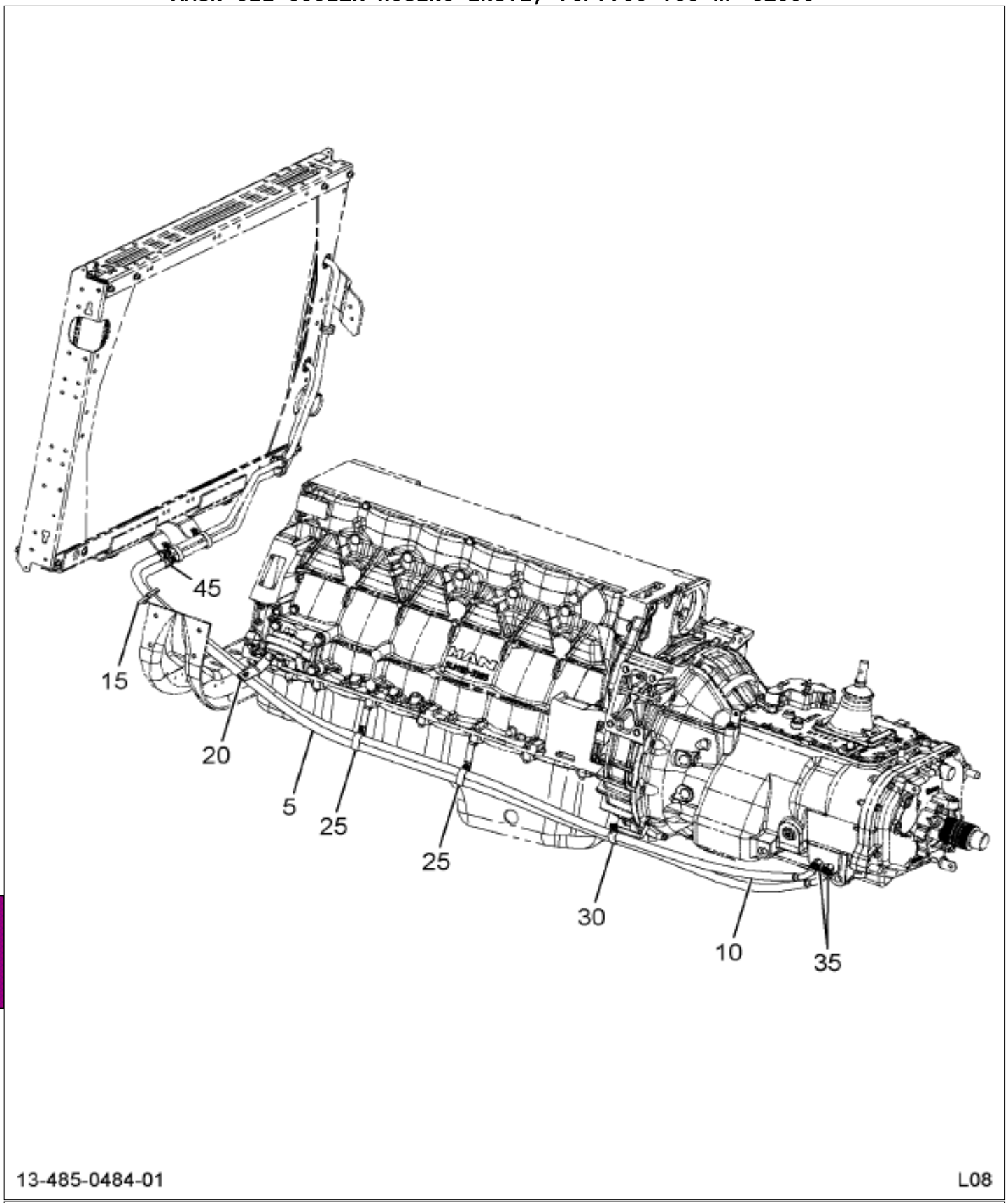

Figure 1 of 2

COPYRIGHT© 2011INTERNATIONAL TRUCK AND ENGINE CORP.

https://truckmanualshub.com/

Figure 0MBMG

XMSN OIL COOLER HOSING INSTL; 76/7700 TOC W/ C2000

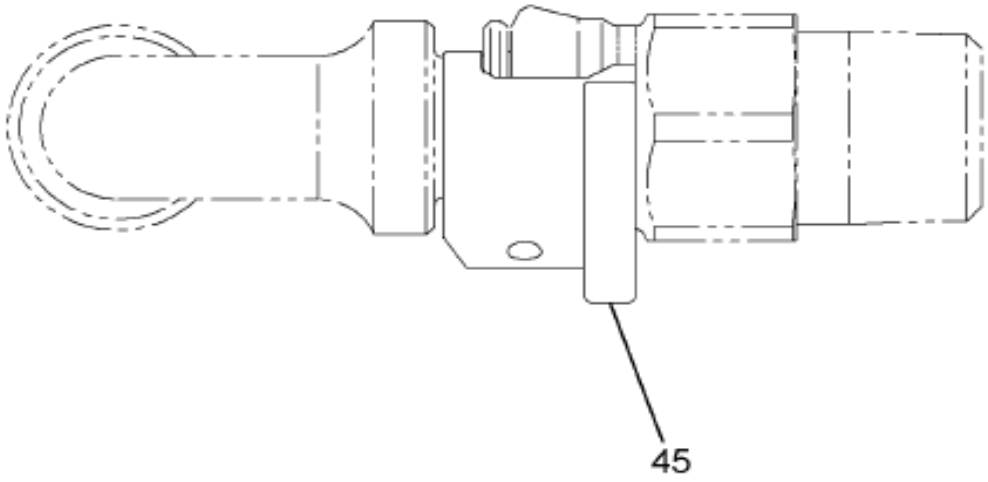

13-485-0442-01 E09

Item	Part No.	Qty	Description	Kit	Var	Figure
5	M10AH00092	1	HOSE, ASSY,XMSN OIL COOLER		0MBMH	M10AH00092
10	M10AH00092	1	HOSE, ASSY,XMSN OIL COOLER		0MBMH	M10AH00092
15	493573C1	1	CLAMP PIPE TEE ETC		0MBMG	
15	101984R1	1	CLIP,CABLE RUBBER COVERED		0MBMG	
15	3561048C1	1	BOLT,HH FLG HD M8 X 30 METRIC		0MBMG	
15	3552155C1	1	BOLT,HEX FLG HD METRIC*M6 X 20		0MBMG	

COPYRIGHT© 2011INTERNATIONAL TRUCK AND ENGINE CORP.

https://truckmanualshub.com/

Figure 0MBMG

XMSN OIL COOLER HOSING INSTL; 76/7700 TOC W/ C2000

Item	Part No.	Qty	Description	Kit	Var	Figure
15	3544378C1	1	NUT,HEX METRIC PREV. TORQ*M6 H		0MBMG	
15	3544379C1	1	NUT,HEX FLG M8 METRIC		0MBMG	
20	3544379C1	1	NUT,HEX FLG M8 METRIC		0MBMG	
20	3544378C1	1	NUT,HEX METRIC PREV. TORQ*M6 H		0MBMG	
20	3552155C1	1	BOLT,HEX FLG HD METRIC*M6 X 20		0MBMG	
20	423203C1	1	EXTENSION,CLIP		0MBMG	
20	493573C1	1	CLAMP PIPE TEE ETC		0MBMG	
25	493573C1	2	CLAMP PIPE TEE ETC		0MBMG	
25	300790C1	2	EXTENSION,		0MBMG	
25	3552155C1	2	BOLT,HEX FLG HD METRIC*M6 X 20		0MBMG	
25	3544378C1	2	NUT,HEX METRIC PREV. TORQ*M6 H		0MBMG	
25	3544379C1	2	NUT,HEX FLG M8 METRIC		0MBMG	
30	3544378C1	1	NUT,HEX METRIC PREV. TORQ*M6 H		0MBMH	
30	3552155C1	1	BOLT,HEX FLG HD METRIC*M6 X 20		0MBMH	
30	466369C1	1	EXTENSION CLIP		0MBMH	
30	493573C1	1	CLAMP PIPE TEE ETC		0MBMH	
35	9402710	2	CONNECTOR, 5/8 C-Z HYD FLARED		0MBMH	

COPYRIGHT© 2011INTERNATIONAL TRUCK AND ENGINE CORP.

https://truckmanualshub.com/

Figure M10AH100092

HOSE, ASSY,XMSN OIL COOLER

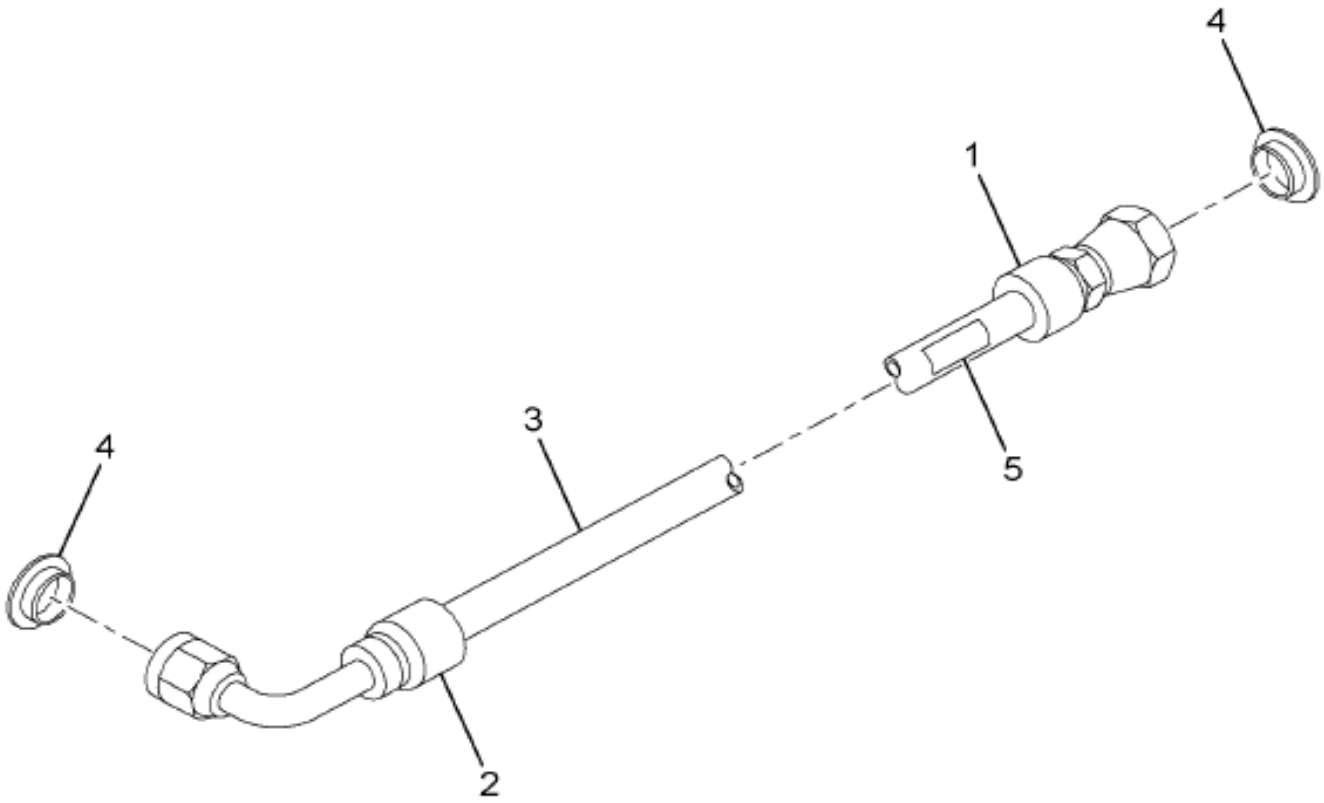

13-485-0501-01 E09

Item	Part No.	Qty	Description	Kit	Var	Figure
1	3558965C1	1	FITTING,HOSE SWIVEL*37 DEG CRI			
2	3572604C1	1	CONNECTOR,COMP TUBE*CRIMPED 90			
2	3572604C2	1	CONNECTOR,FLARED TUBE, CRIMPED			
3	2644103R1	AR	HOSE,FLEX AIR OR OIL			
4	1017960R1	2	PLUG,PLASTIC HOSE CLOSURE			
5	1258024R91	1	PRODUCT GRAPHICS			

Grp 13

COPYRIGHT© 2011INTERNATIONAL TRUCK AND ENGINE CORP.

https://truckmanualshub.com/

Figure M10AH00092

HOSE, ASSY,XMSN OIL COOLER

Item	Part No.	Qty	Description	Kit	Var	Figure
880		RF	NOTE: ASM BELOW COMPRISED OF ABOVE COMPONENTS			
881	M10AH00092	RF	HOSE, ASSY,XMSN OIL COOLER			

COPYRIGHT© 2011INTERNATIONAL TRUCK AND ENGINE CORP.

https://truckmanualshub.com/

Figure 0P6CK
XMSN OIL PUMP; FULLER FR(O)-X210B(C)

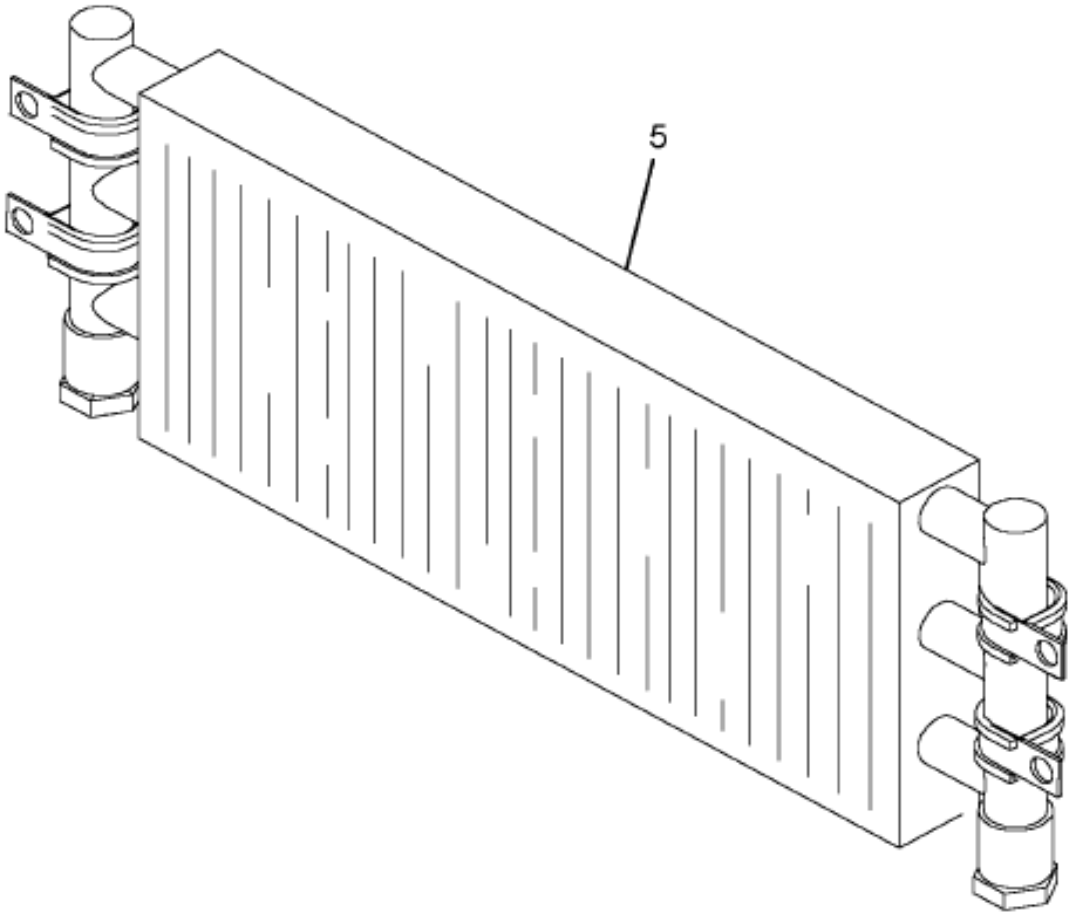

13-C42-0012-JA E04

Item	Part No.	Qty	Description	Kit	Var	Figure
5	3567120F91	1	COOLER OIL XMSN*LUBE PUMP-EATO		0P6CM	3567120F91

Grp 13

COPYRIGHT© 2011INTERNATIONAL TRUCK AND ENGINE CORP.

https://truckmanualshub.com/

Figure 3307120F91

COOLER OIL XMSN*LUBE PUMP-EATO

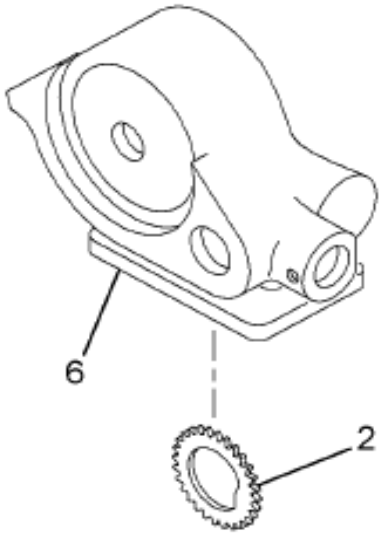

INTEGRAL OIL
PUMP ASSEMBLY

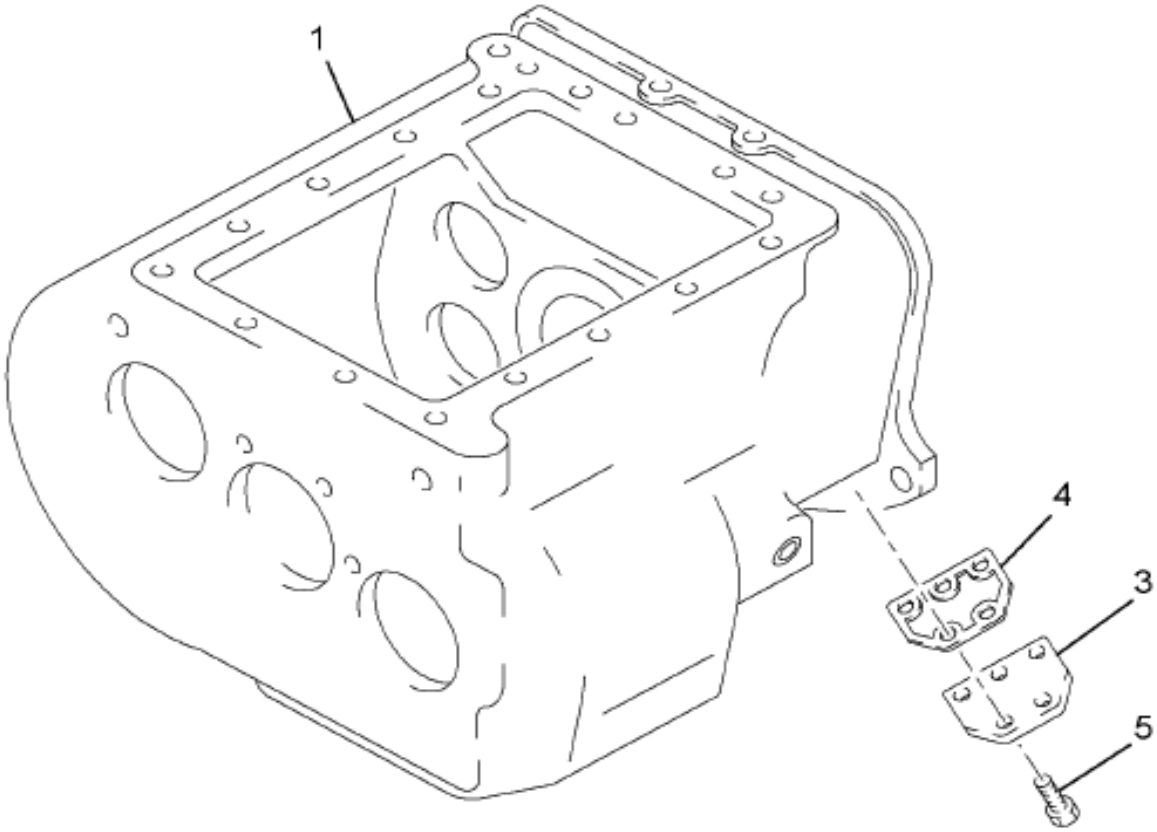

MAIN HOUSING
ASSEMBLY

13-C42-0009-00 K05

Item	Part No.	Qty	Description	Kit	Var	Figure
1	FULS2347	1	CASE ASSY, TRANS			
2	FUL4302792	1	GEAR,TRANS OIL PUMP DRIVING			
3		RF	COVER, OIL PUMP	A		
4	FUL4302864	1	GASKET,CONTROL LEVER HSG	A		
5	FULX80603M	5	SCREW M6X1 X 20MM	A		
6	FULA6473	1	PUMP ASSY, INTEGRAL			

COPYRIGHT© 2011INTERNATIONAL TRUCK AND ENGINE CORP.

https://truckmanualshub.com/

Figure 3567120F91

COOLER OIL XMSN*LUBE PUMP-EATO

Item	Part No.	Qty	Description	Kit	Var	Figure
801	FULK2910	KT	KIT,COVER			
801		RF	(CONSISTS OF PARTS DENOTED BY A)			
880		RF	NOTE: ASM BELOW COMPRISED OF ABOVE COMPONENTS			
881	3567120F91	RF	COOLER OIL XMSN*LUBE PUMP-EATO			

COPYRIGHT© 2011INTERNATIONAL TRUCK AND ENGINE CORP.

https://truckmanualshub.com/

Figure 0JG9H

XMSN OPERATORS MANUAL; FULLER, SPANISH

Item	Part No.	Qty	Description	Kit	Var	Figure
5	3580456R1	1	MANUAL,OPERATORS-SPANISH LANG		0JGH9	

COPYRIGHT© 2011INTERNATIONAL TRUCK AND ENGINE CORP.

https://truckmanualshub.com/

Figure 0P6CZ
XMSN PTO; FULLER FR(O)-X210B(C)

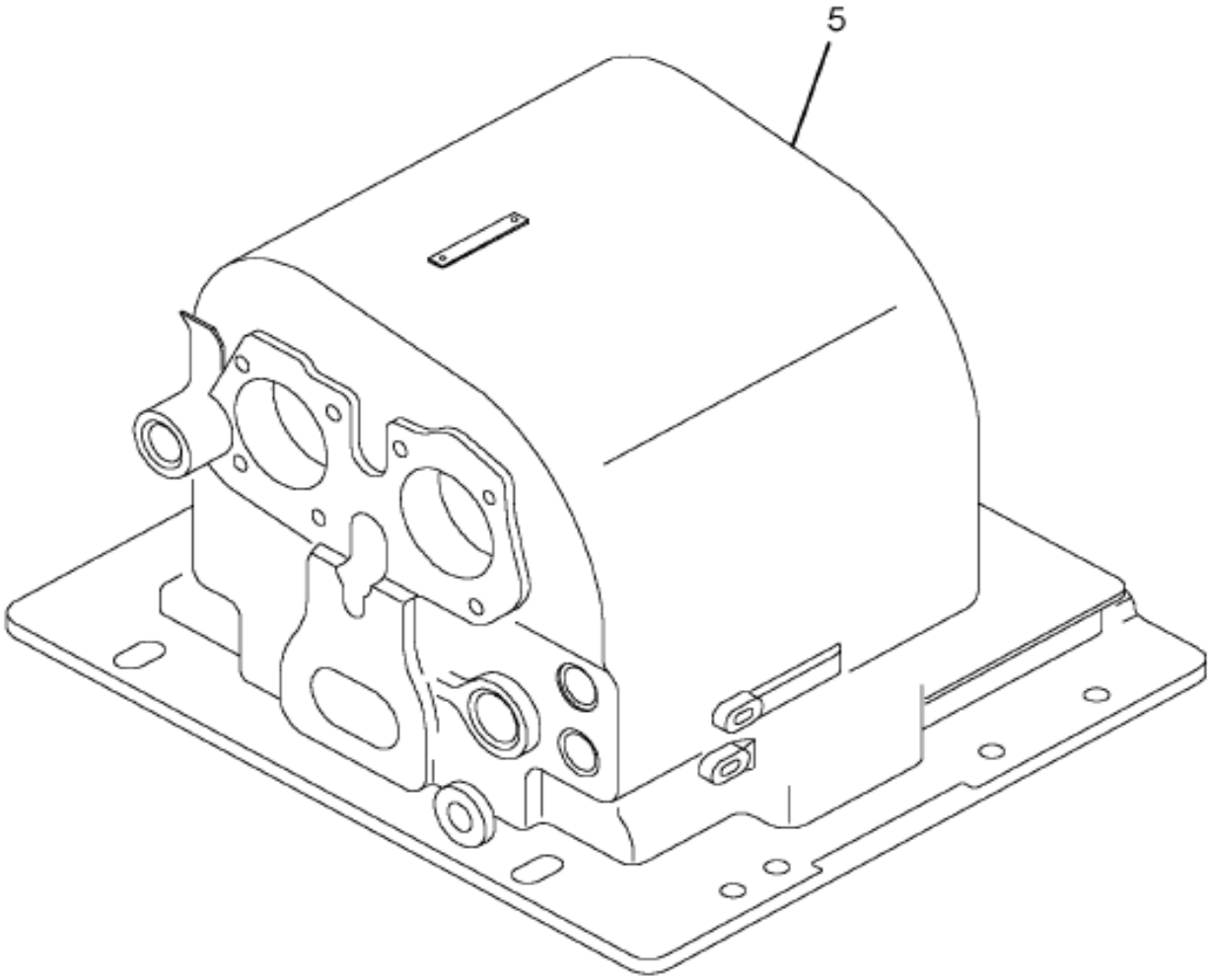

13-C45-0006-AA E04

Item	Part No.	Qty	Description	Kit	Var	Figure
5	3567136F91	1	CTRSHAFT,W/O THRU-SHAFT PTO		0P6D7	3567136F91

COPYRIGHT© 2011INTERNATIONAL TRUCK AND ENGINE CORP.

https://truckmanualshub.com/

Figure 3307136F91
CTRSHAFT,W/O THRU-SHAFT PTO

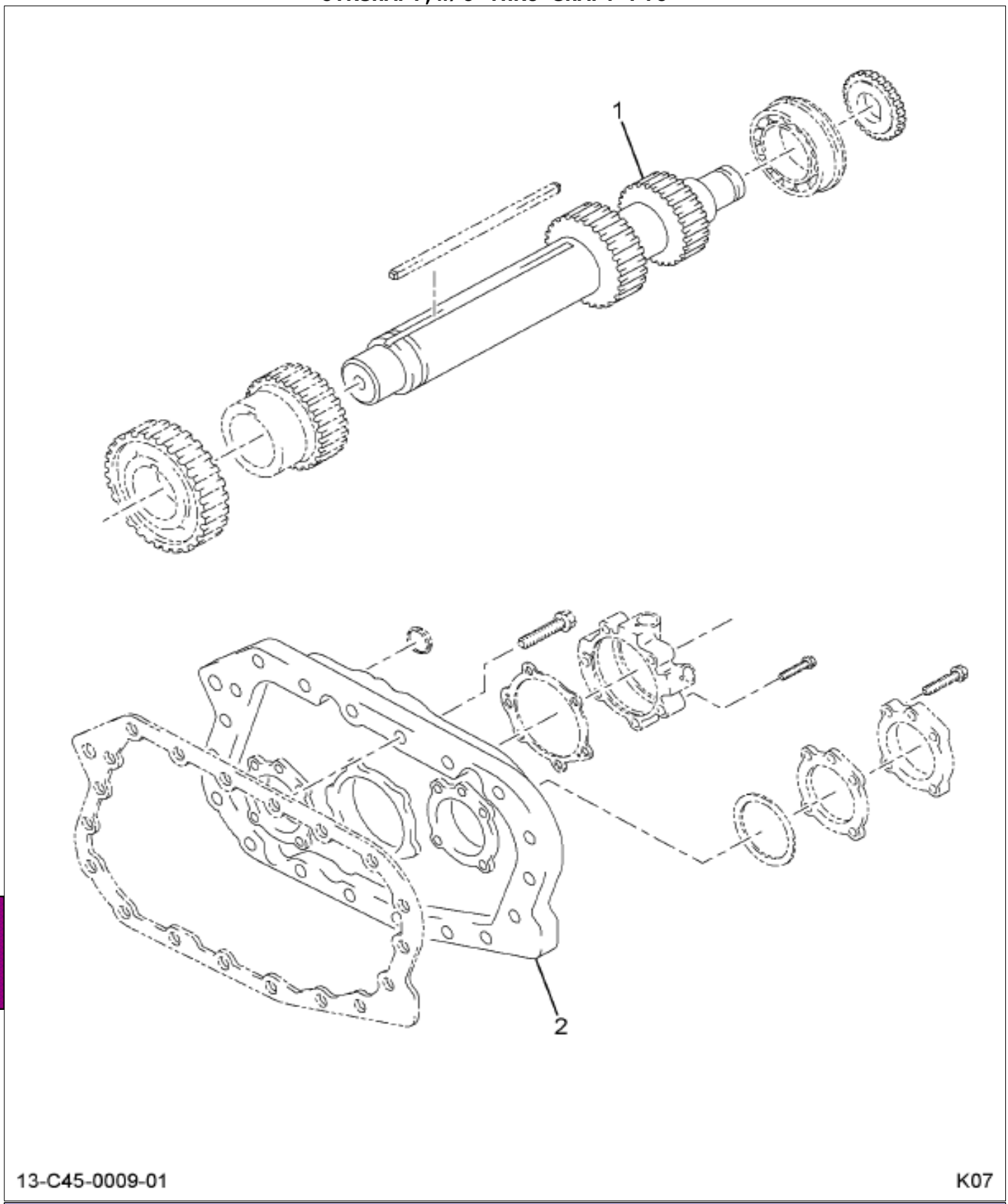

Item	Part No.	Qty	Description	Kit	Var	Figure
1	FUL4303119	1	SHAFT,TRANS COUNTER RT	A		
1		RF	RIGHT			
1	FUL4303123	1	SHAFT,TRANS COUNTER LT	B		
1		RF	LEFT			
2	FUL4303750	1	HOUSING,TRANS CASE RR			
2	FULS2691	1	HOUSING,ASSY REAR			

COPYRIGHT© 2011INTERNATIONAL TRUCK AND ENGINE CORP.

https://truckmanualshub.com/

Figure 3567136F91

CTRSHAFT,W/O THRU-SHAFT PTO

Item	Part No.	Qty	Description	Kit	Var	Figure
800		RF	NOTE: THE FOLLOWING PARTS ARE NON-ILLUSTRATED			
801	FULK3262	KT	KIT,CTRSHAFT			
801		RF	(CONSISTS OF PARTS DENOTED BY A)			
802	FULK3264	KT	KIT,CTRSHAFT			
802		RF	(CONSISTS OF PARTS DENOTED BY B)			
880		RF	NOTE: ASM BELOW COMPRISED OF ABOVE COMPONENTS			
881	3567136F91	RF	CTRSHAFT,W/O THRU-SHAFT PTO			

COPYRIGHT© 2011INTERNATIONAL TRUCK AND ENGINE CORP.

https://truckmanualshub.com/

Figure 0NCY3
XMSN WIRING INSTL; NGV

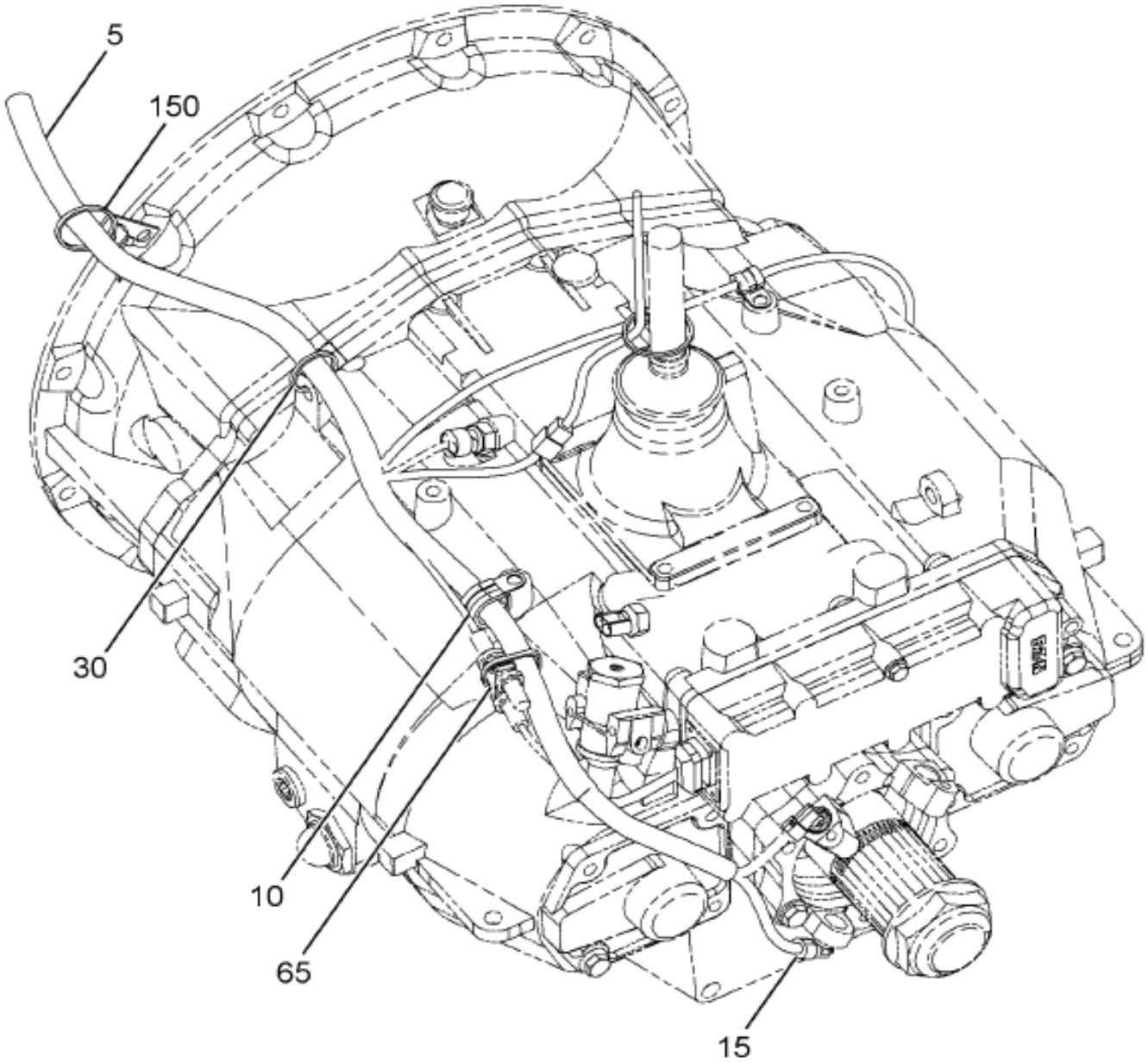

08-649-0155-01 A06

Figure 1 of 3

COPYRIGHT© 2011INTERNATIONAL TRUCK AND ENGINE CORP.

https://truckmanualshub.com/

Figure 0NC13
XMSN WIRING INSTL; NGV

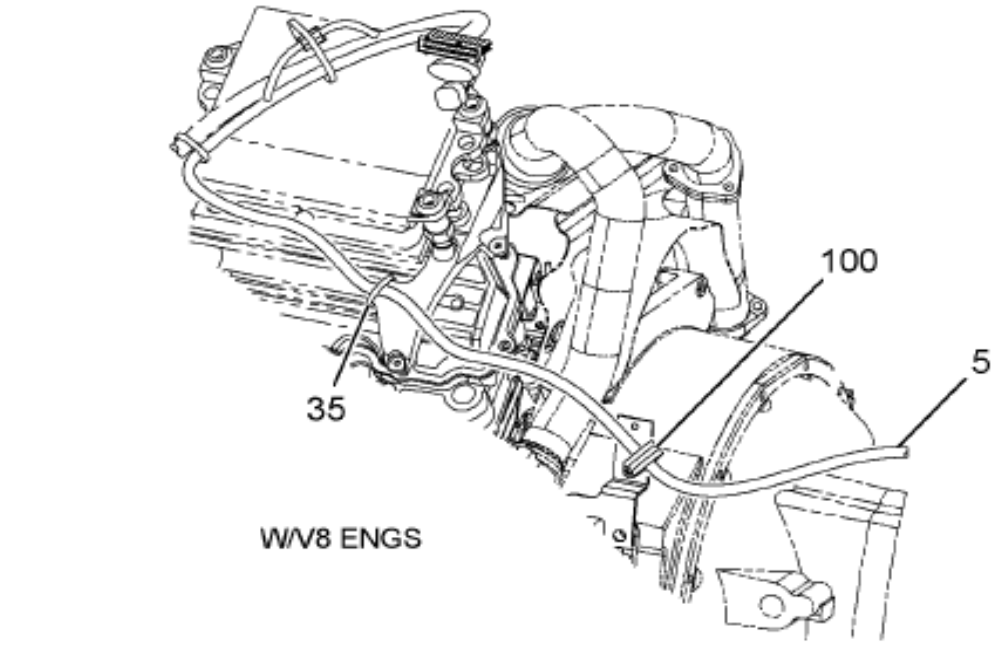

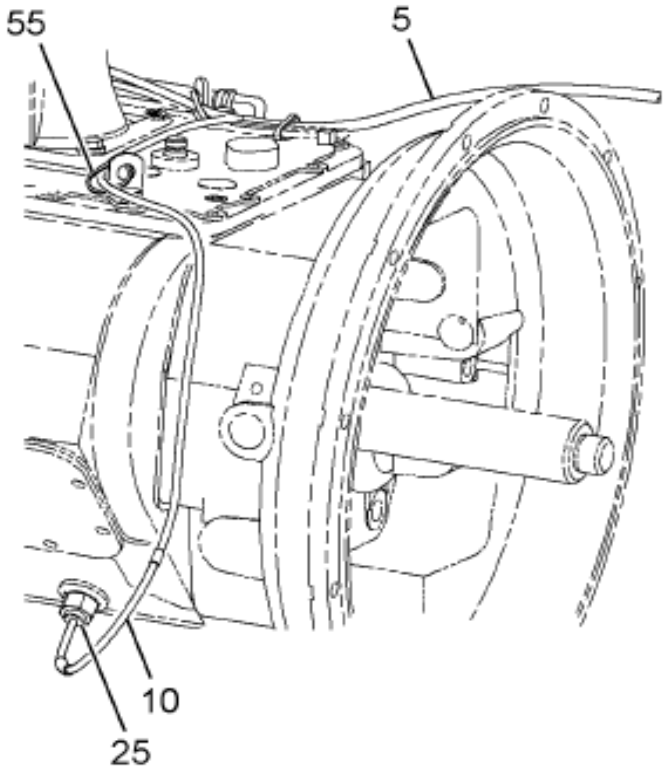

W/OIL TEMP GAUGE 16HGJ
W/13296, 13297, 13GAH,
13GGK, 13GGL, 13GGM,
13GGT, 13GGU, 13GGV,
13GHA, 13GHB, 13GHC,
13GHK, 13GHL, 13GHJ,
13GHP, 13GHV, 13GHW,
13GHX, 13GJB, 13GJC,
13GJP, 13GJR, 13GKG,
13GKH, 13GKK, 13GKL,
13GKS, 13GMY, 13GMZ,
13GNE TRANSMISSIONS

Grp 13

08-649-0155-02 A06

Figure 2 of 3

COPYRIGHT© 2011INTERNATIONAL TRUCK AND ENGINE CORP.

https://truckmanualshub.com/

Figure 0NCY5
XMSN WIRING INSTL; NGV

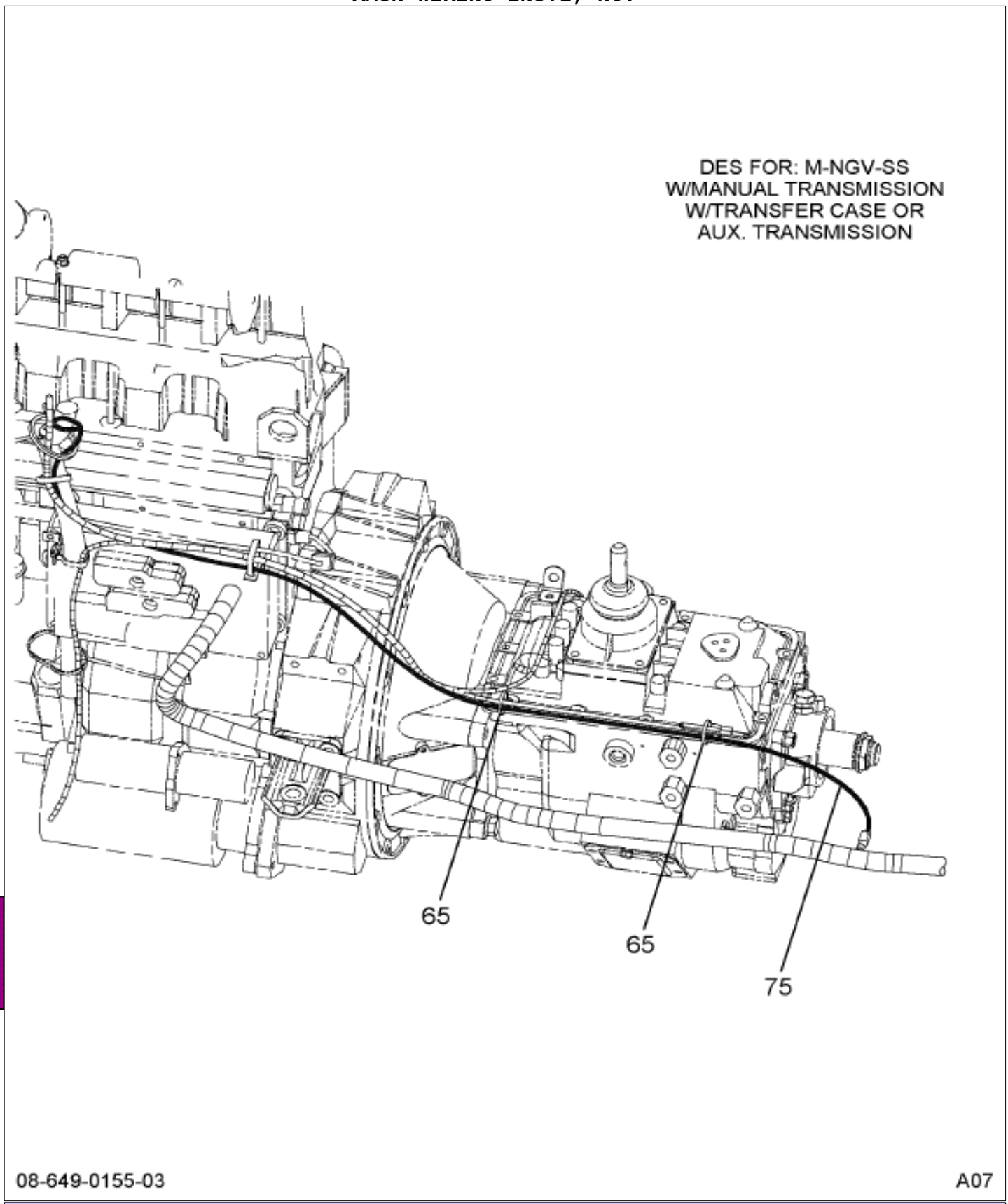

Item	Part No.	Qty	Description	Kit	Var	Figure
5	3573258C91	1	HARNESS,XMSN,ENG,MANL STD HARN		0NCYM	
10	3515761C1	1	SWITCH,LIGHT BACK UP LAMP		0NCYD	
15	3541990C91	1	TRANSMITTER,ELEC SPEEDO*MANUA		0NCY5	
25	444034	1	ADAPTER,AUTO PIPE 1/2 TO 3/8 P		0NCY6	
25	3536822C1	1	GAUGE,TEMP SENDER*OIL-XMSN,AXL		0NCY6	
30	306132C1	2	STRAP,CABLE LOCK		0NCYM	

COPYRIGHT© 2011INTERNATIONAL TRUCK AND ENGINE CORP.

https://truckmanualshub.com/

Figure 0NCY3

XMSN WIRING INSTL; NGV

Item	Part No.	Qty	Description	Kit	Var	Figure
55	306132C1	1	STRAP,CABLE LOCK		0NCYC	
65	306132C1	4	STRAP,CABLE LOCK		0NCY3	
150	523899C1	1	EXTENSION,CLIP		0NCYR	
150	3530605C2	1	STRAP,CABLE LOCK, BUTTON STRAP		0NCYR	

COPYRIGHT© 2011INTERNATIONAL TRUCK AND ENGINE CORP.

https://truckmanualshub.com/

MANUAL NOTES

COPYRIGHT© 2011INTERNATIONAL TRUCK AND ENGINE CORP.

https://truckmanualshub.com/

Group 14
Rear Axle

COPYRIGHT© 2011INTERNATIONAL TRUCK AND ENGINE CORP.

https://truckmanualshub.com/

Figure 0GRR3

AIR BRK TUBING INSTL; PDL CONTROL, W/DANA OR MERITOR TANDEM

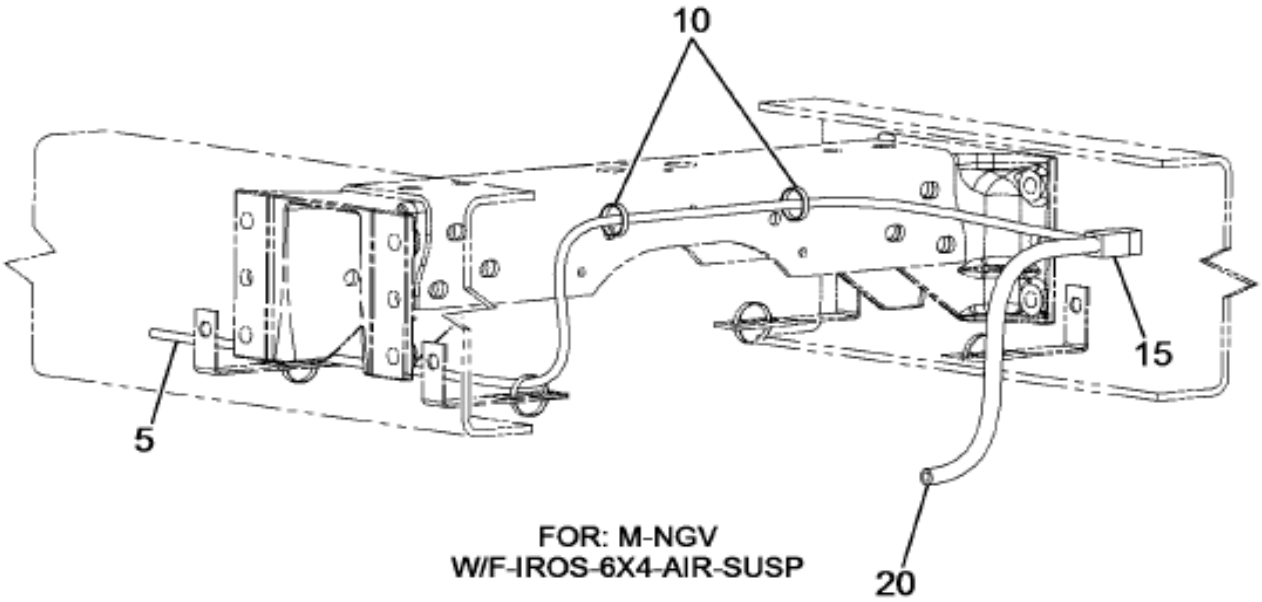

FOR: M-NGV
W/F-IROS-6X4-AIR-SUSP

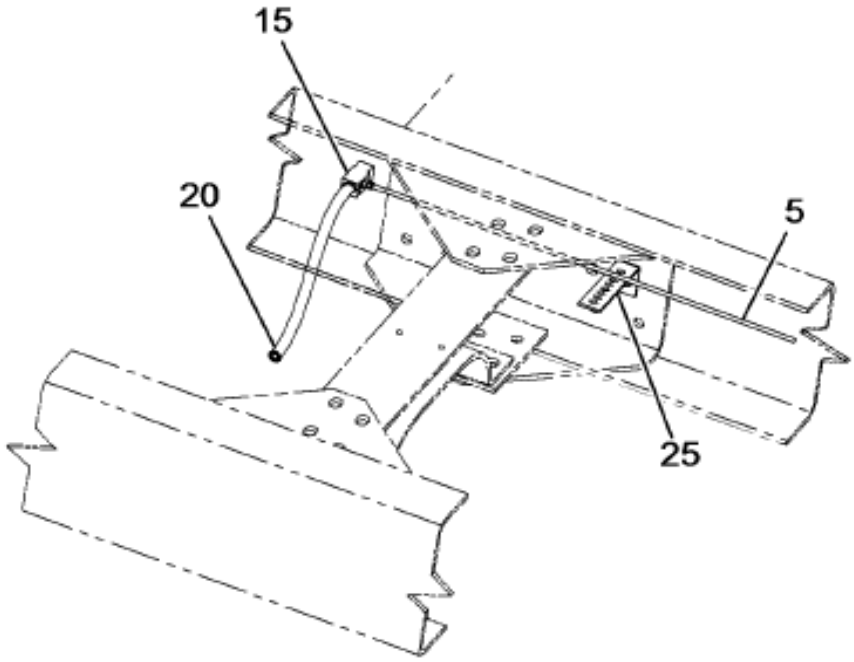

M-NGV
W/F-HEND-AIR-SUSP
W/MERITOR 14X TANDEM AXLES

14-053-0024-AA D11

Figure 1 of 4

COPYRIGHT© 2011INTERNATIONAL TRUCK AND ENGINE CORP.

https://truckmanualshub.com/

Figure 0GRR3

AIR BRK TUBING INSTL; PDL CONTROL, W/DANA OR MERITOR TANDEM

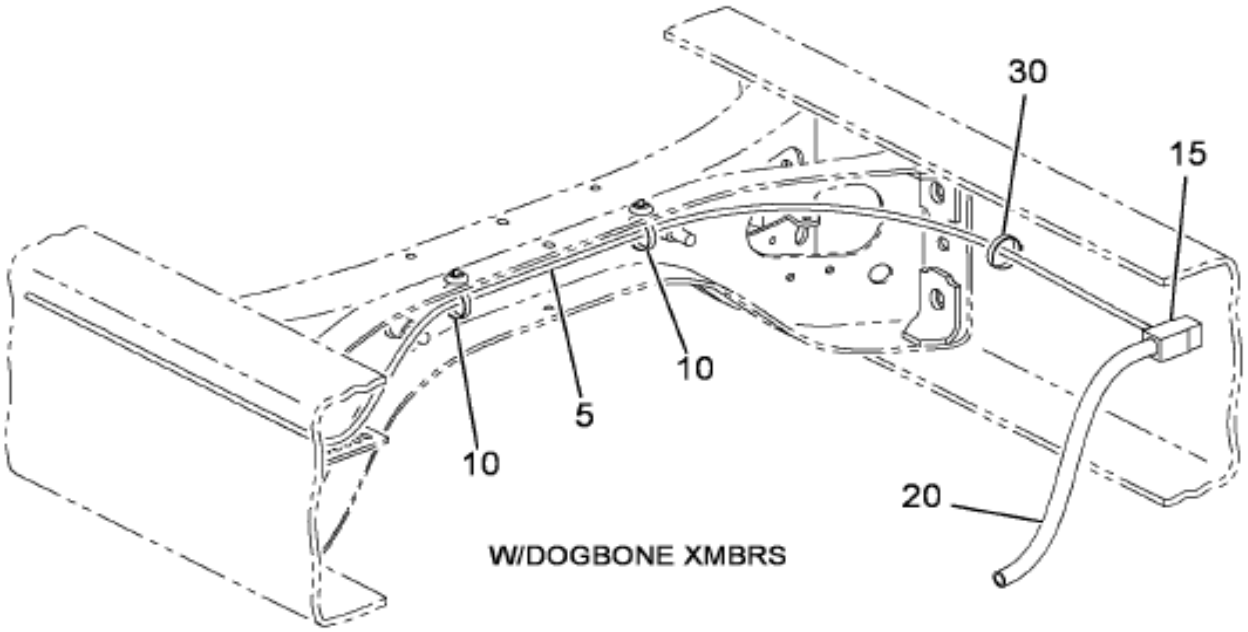

W/DOGBONE XMBRS

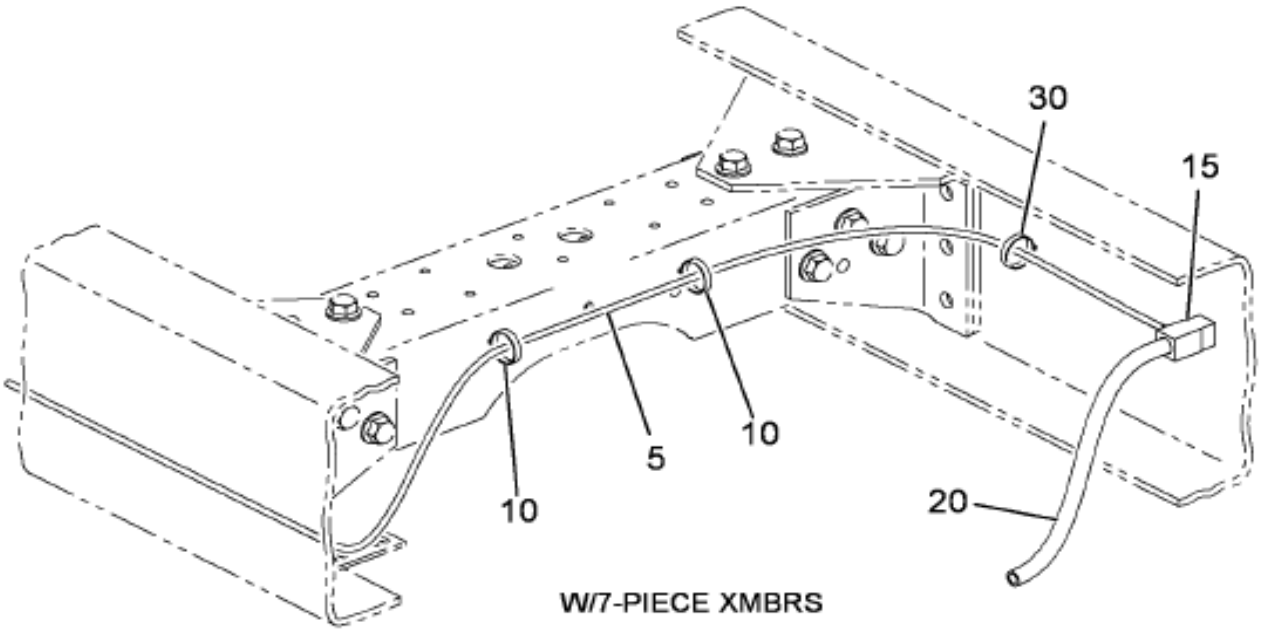

W/7-PIECE XMBRS

14-053-0025-AB E09

Grp 14

Figure 2 of 4

COPYRIGHT© 2011INTERNATIONAL TRUCK AND ENGINE CORP.

https://truckmanualshub.com/

Figure 0GRR3

AIR BRK TUBING INSTL; PDL CONTROL, W/DANA OR MERITOR TANDEM

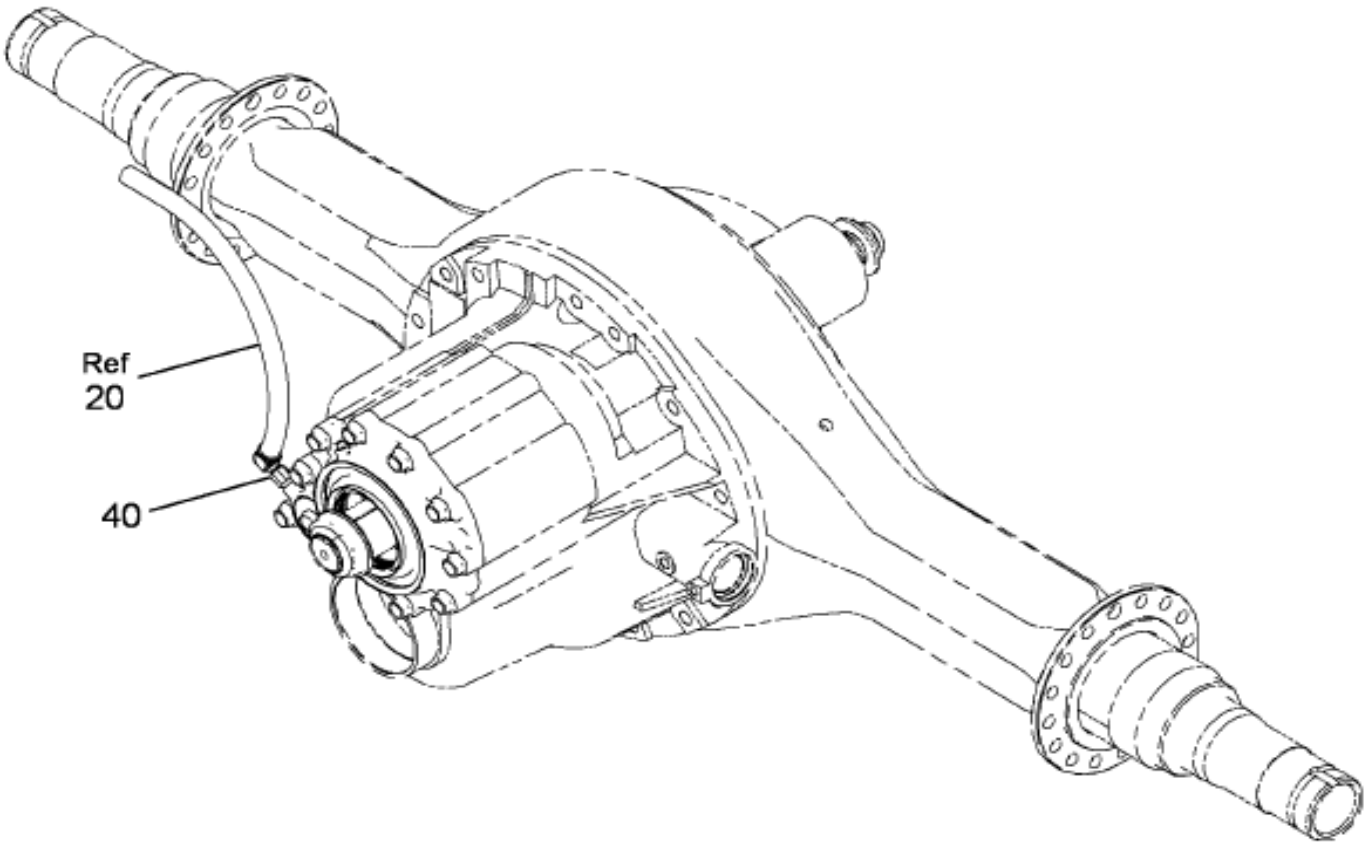

FOR: M-NGV
& W/AXLE CONFIG=6X4,6x6
W/14GJH,14GJJ,14GJK,14GJL,14GJM,
14GJN,14GJT,14GJY

14-053-0025-01 E09

Figure 3 of 4

COPYRIGHT© 2011INTERNATIONAL TRUCK AND ENGINE CORP.

https://truckmanualshub.com/

Figure 0GRR5

AIR BRK TUBING INSTL; PDL CONTROL, W/DANA OR MERITOR TANDEM

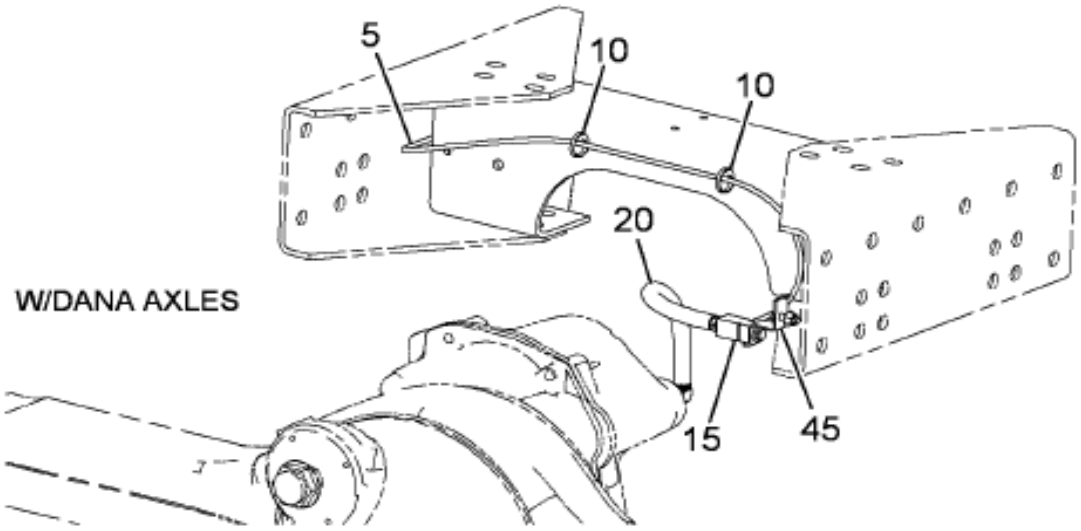

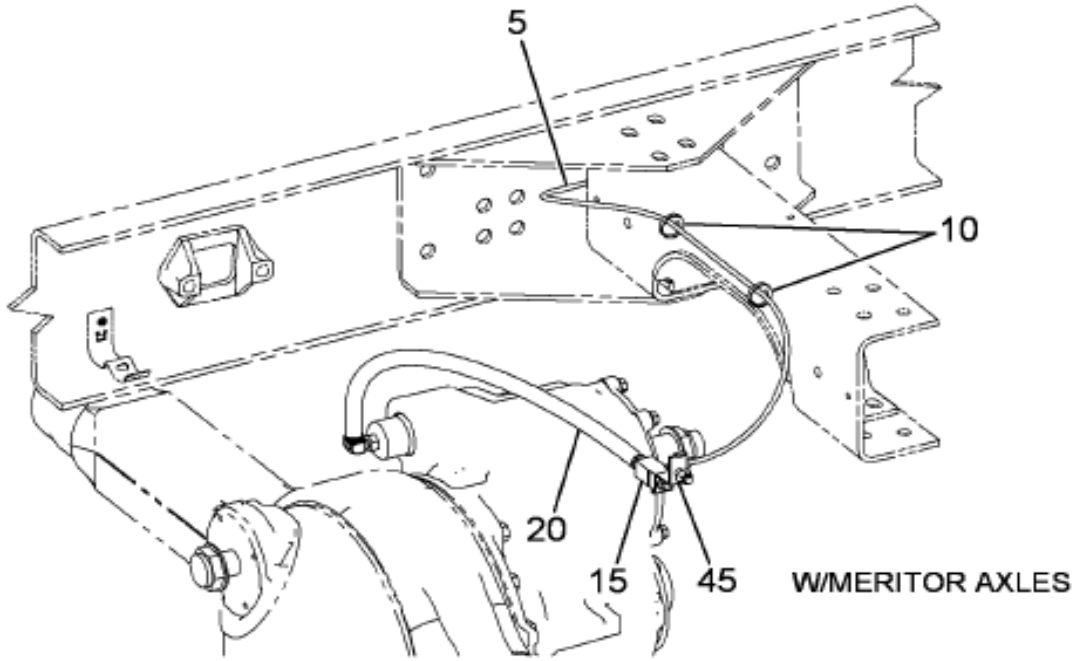

FOR:
M-NGV-SS
W/PRIMAAX SUSP

14-053-0025-02 E09

Grp 14

Item	Part No.	Qty	Description	Kit	Var	Figure
5	2643501R2	3300	TUBE,NYLON BULK 1/4 SILVER		0MR1W	
10	3530605C2	2	STRAP,CABLE LOCK, BUTTON STRAP		0MR1W	
15	3566174C1	1	ELBOW, QUALITY CONNECT*SPECIAL		0GRRS	
15	3551579C1	1	BOLT,HEX FLG HD METRIC*HVY, M1		0GRVJ	
15	933965R1	1	WASHER,LOCK 10MM		0GRVJ	
20	159601R92	1	HOSE,AIR		0MR2T	

COPYRIGHT© 2011INTERNATIONAL TRUCK AND ENGINE CORP.

https://truckmanualshub.com/

Figure 0GRRS

AIR BRK TUBING INSTL; PDL CONTROL, W/DANA OR MERITOR TANDEM

Item	Part No.	Qty	Description	Kit	Var	Figure
30	3530605C2	1	STRAP,CABLE LOCK, BUTTON STRAP		0MR1W	
45	471668C1	2	CLIP HOSE		0GRRS	

COPYRIGHT© 2011INTERNATIONAL TRUCK AND ENGINE CORP.

https://truckmanualshub.com/

Figure 0GNXX

AXLE CONTROLS INSTL; HEND WALKING BEAM, N/IND CNTRLS

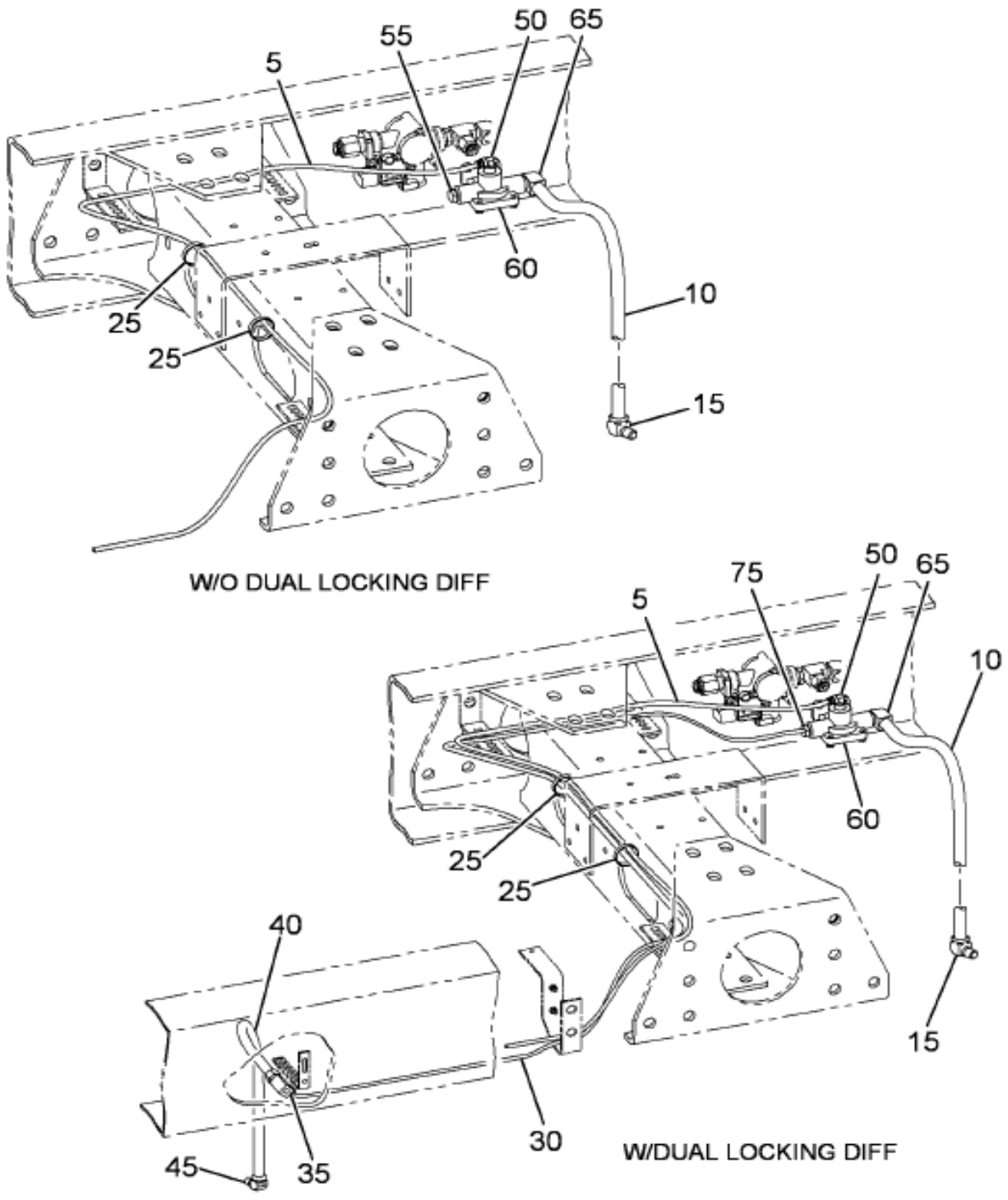

Grp 14

Figure 1 of 3

COPYRIGHT© 2011INTERNATIONAL TRUCK AND ENGINE CORP.

https://truckmanualshub.com/

Figure 0GNXX

AXLE CONTROLS INSTL; HEND WALKING BEAM, N/IND CNTRLS

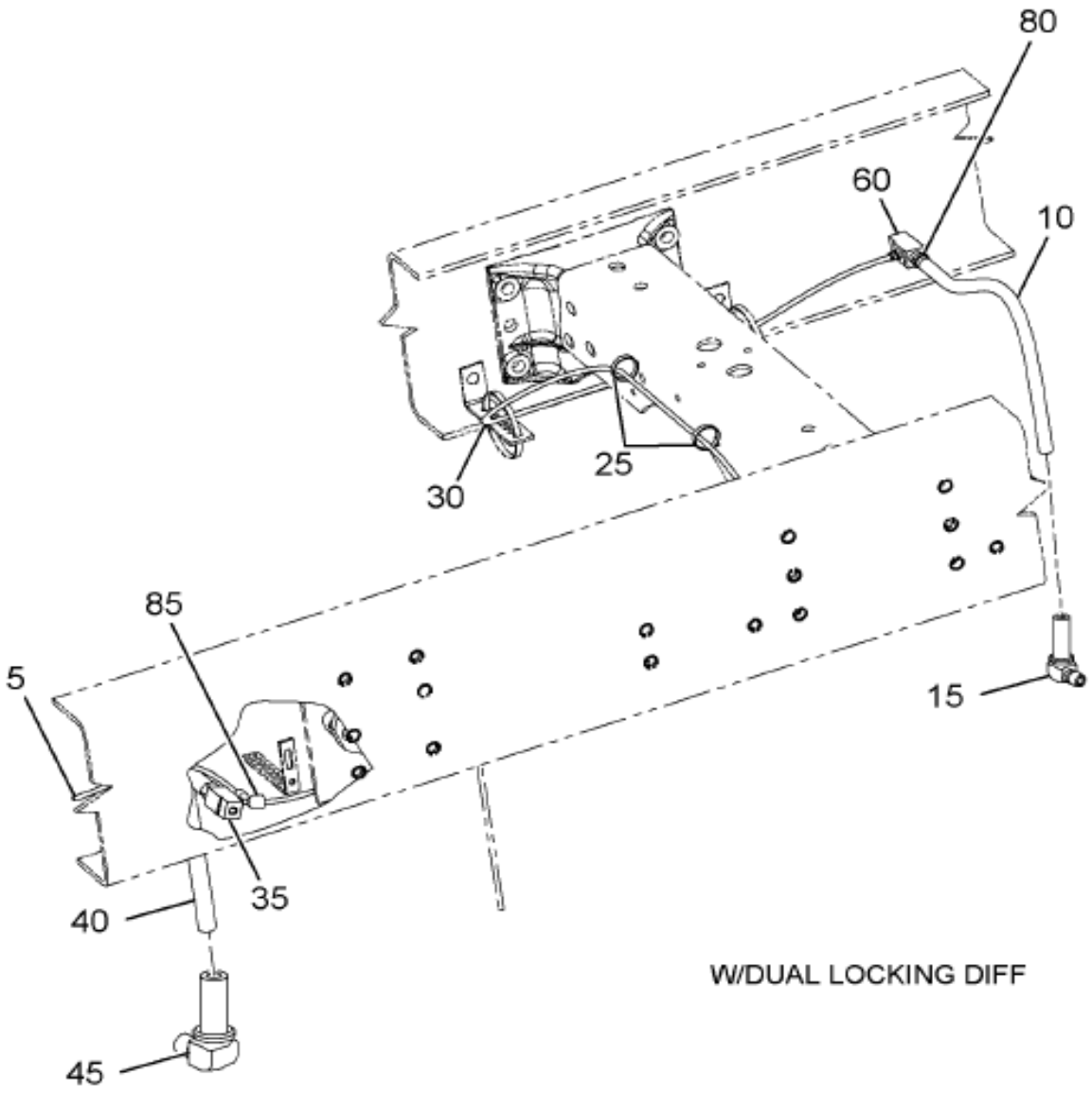

M-NGV
W/6X4 IROS
N/14WBN, 14GGS, 14GGX,
14GGR

14-668-0114-BB C11

Figure 2 of 3

COPYRIGHT© 2011INTERNATIONAL TRUCK AND ENGINE CORP.

https://truckmanualshub.com/

Figure 0GNXX

AXLE CONTROLS INSTL; HEND WALKING BEAM, N/IND CNTRLS

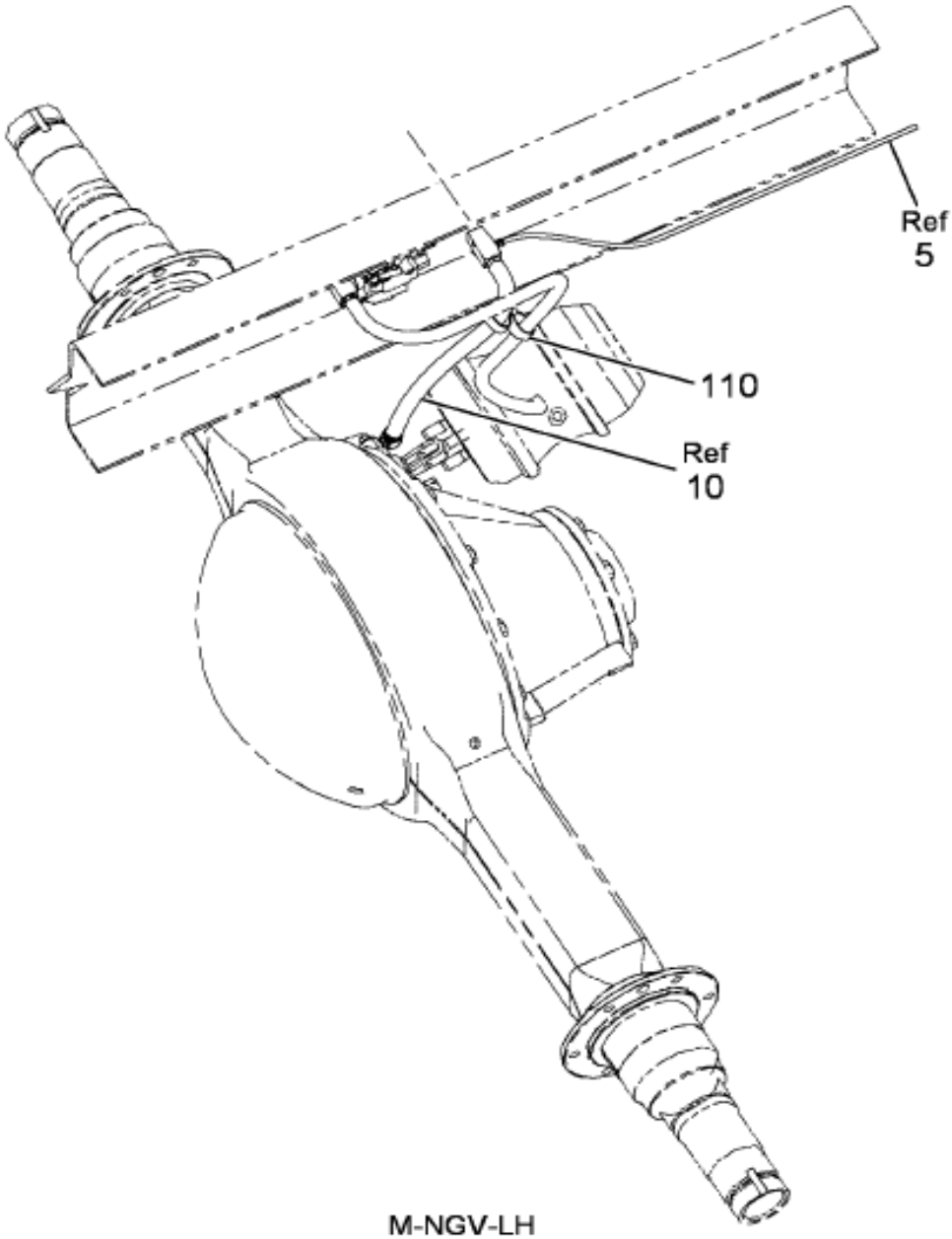

M-NGV-LH
W/4X2 IROS SUSP

W/14AGJ, 14AEL
14AGV, 14AGU

14-668-0197-01 C10

Grp 14

Item	Part No.	Qty	Description	Kit	Var	Figure
5	3520529C2	2200	TUBE,NYLON BULK 1/4 OD TAN		0MSKQ	
10	3572290C1	1	HOSE,FLEX AIR*AIR 1/2 ID X 7/8		0GP56	
15	3564894C1	1	ELBOW,REDUCING 90DEG*1/4MX3/8F		0H2VK	
25	3530605C2	1	STRAP,CABLE LOCK, BUTTON STRAP		0GNXX	
30	3520529C2	2250	TUBE,NYLON BULK 1/4 OD TAN		0HXZP	
35	3566174C1	1	ELBOW, QUALITY CONNECT*SPECIAL		0MSFG	

COPYRIGHT© 2011INTERNATIONAL TRUCK AND ENGINE CORP.

https://truckmanualshub.com/

Figure 0GNXX

AXLE CONTROLS INSTL; HEND WALKING BEAM, N/IND CNTRLS

Item	Part No.	Qty	Description	Kit	Var	Figure
35	3551579C1	1	BOLT,HEX FLG HD METRIC*HVY, M1		0GQ9Q	
35	933965R1	1	WASHER,LOCK 10MM		0GQ9Q	
40	3572290C1	1	HOSE,FLEX AIR*AIR 1/2 ID X 7/8		0MSFG	
45	3564894C1	1	ELBOW,REDUCING 90DEG*1/4MX3/8F		0H2VP	
60	3566174C1	1	ELBOW, QUALITY CONNECT*SPECIAL		0GNXX	
60	3551579C1	1	BOLT,HEX FLG HD METRIC*HVY, M1		0HY0C	
60	933965R1	1	WASHER,LOCK 10MM		0HY0C	
80	3572104C1	1	FITTING,SPECIAL*3/8PT X 3/4ST		0GNXX	
80	3572104C1	1	FITTING,SPECIAL*3/8PT X 3/4ST		0MSFG	
85	2024453C1	1	TEE,PUSH TO CONNECT*		0MSFG	
110	3535872C1	1	STRAP,CABLE LOCK*DUAL CLAMP TI		0GP56	
110	3535872C1	1	STRAP,CABLE LOCK*DUAL CLAMP TI		0MSFG	

COPYRIGHT© 2011INTERNATIONAL TRUCK AND ENGINE CORP.

https://truckmanualshub.com/

Figure 0VFKJ

AXLE HSG; FWD RR

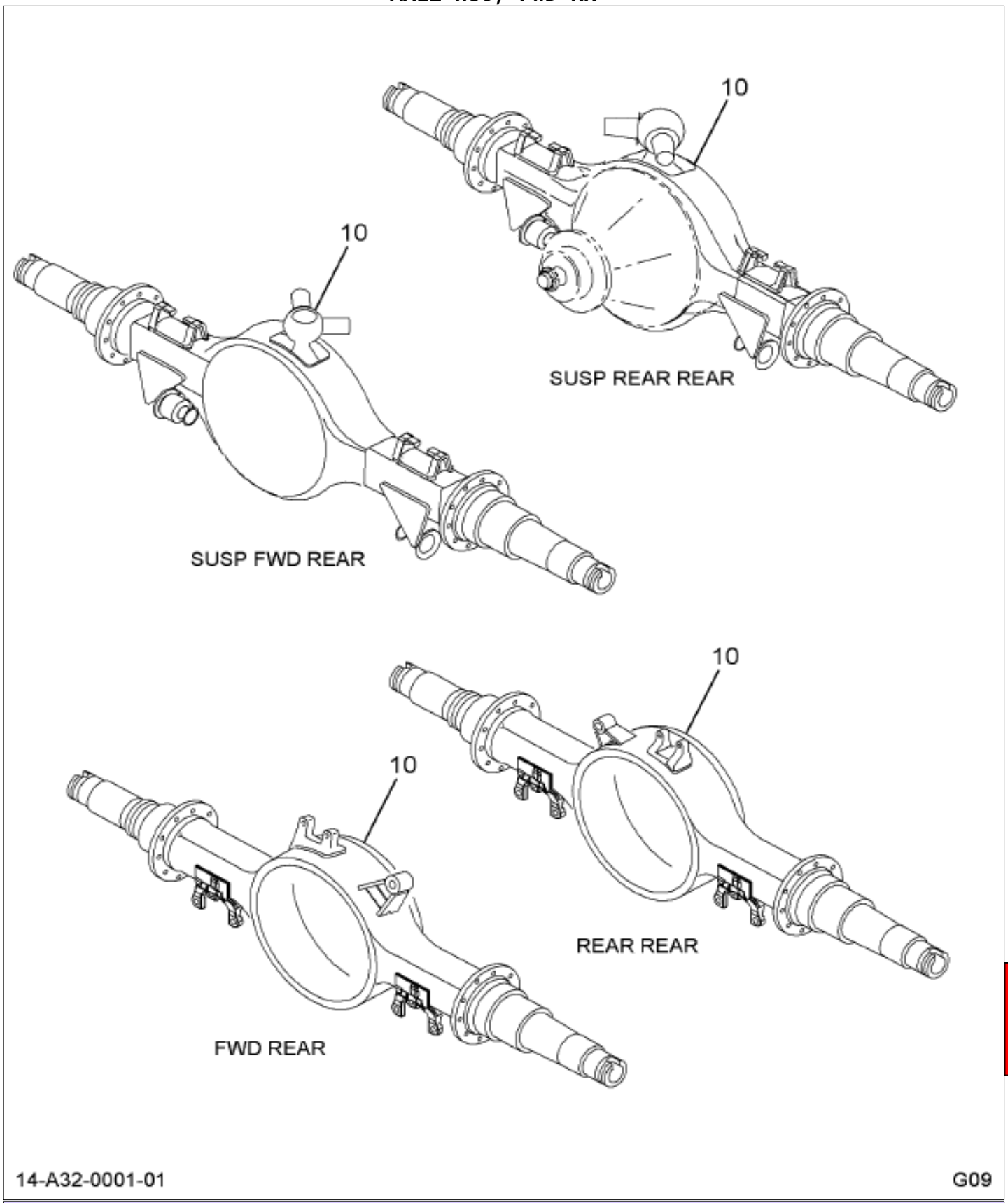

Item	Part No.	Qty	Description	Kit	Var	Figure
10	3707298F91	1	HOUSING,F/R AXLE HND 2X2 N/ABS		0VFKY	3707298F91

Grp 14

COPYRIGHT© 2011INTERNATIONAL TRUCK AND ENGINE CORP.

https://truckmanualshub.com/

Figure 3707250F91

HOUSING,F/R AXLE HND 2X2 N/ABS

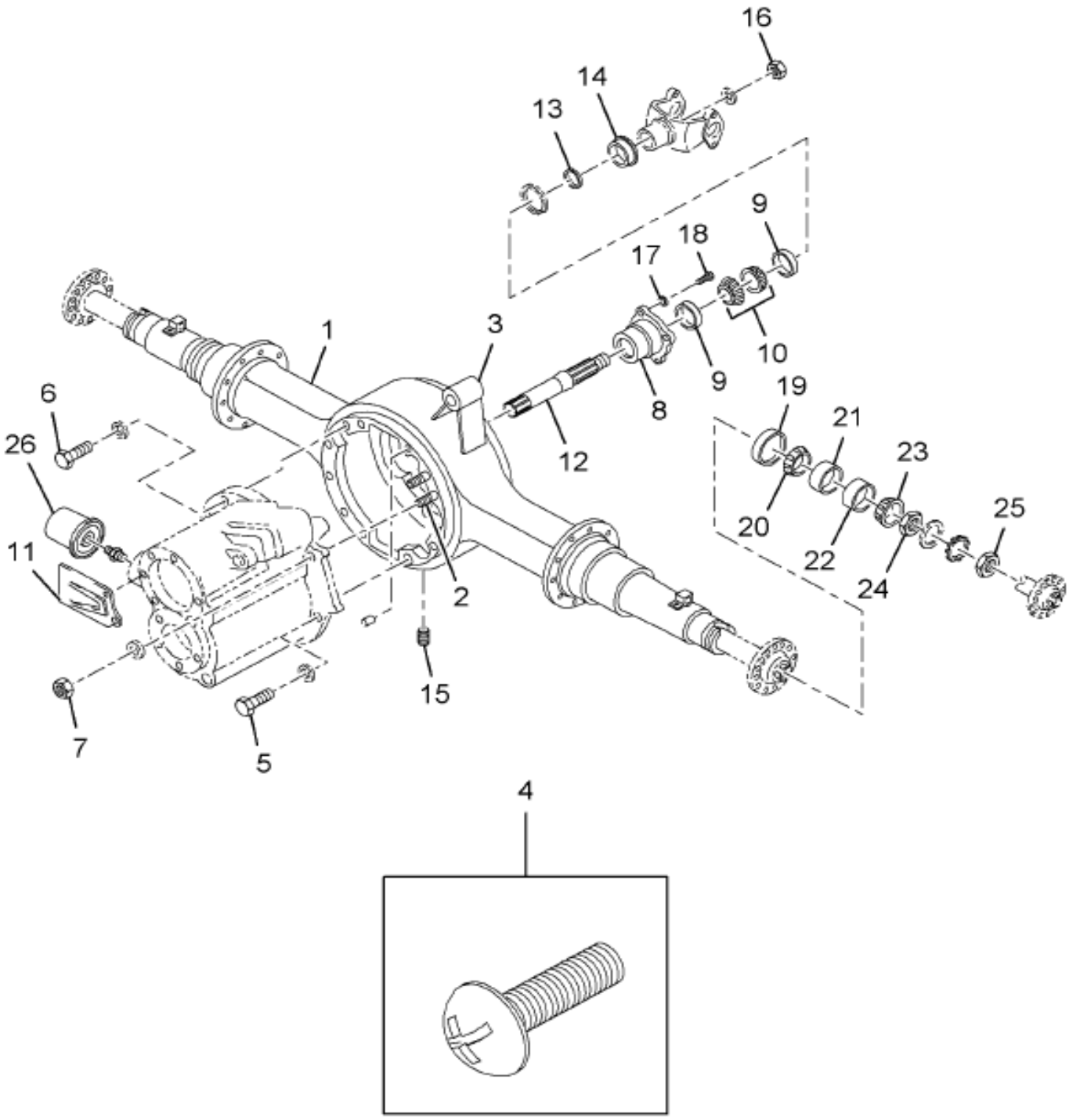

14-A31-0046-01 J10

Item	Part No.	Qty	Description	Kit	Var	Figure
1	2500264C1	1	HOUSING,F/R 14GTM,N,P,R HEND			
2	2592670C1	1	STUD,DIFF TO HOUSING			
2	2592671C1	2	STUD,DIFF TO HOUSING			
3	3150Y1429	1	BRACKET-TOR ROD			
4	21327R1	8	SCREW, 5/16 X 1-1/4 H/SHD CAP			
5	1694729C1	4	BOLT,DIFF CARR TO HSG			

COPYRIGHT© 2011INTERNATIONAL TRUCK AND ENGINE CORP.

https://truckmanualshub.com/

Figure 3707298F91

HOUSING,F/R AXLE HND 2X2 N/ABS

Item	Part No.	Qty	Description	Kit	Var	Figure
5	1695182C1	5	BOLT,DIFF CARR TO HSG SHORT			
6	1695839C1	3	BOLT,DIFF CARR TO HSG MED *			
7	25950R1	3	NUT,5/8-18NF PHC JAM TYPE 8			
8	1670261C91	1	CAGE,PINION DRIVE GEAR BRG			
9	TMJLM104910	2	BEARING,CUP			
10	TMLM104949	2	BEARING,CONE			
11	1668809C1	1	SHIELD,OIL FILTER (DIFF)			
12	3297V1010	1	THRU SHAFT			
13	1670500C1	1	RING SNAP OUTPUT BRG SPACER			
14	2589851C91	KT	KIT,OIL SEAL			
15	ETN0054254	1	PLUG-DIFF FILL			
16	2000231C1	1	NUT,LOCK INPUT/OUTPUT SHAFT			
17	1824866C1	4	WASHER,NEOPREME LUBERFINER			
18	698786R1	4	BOLT,DIFF THRU SHAFT BRG RET			
19	CR47697	2	SEAL-OIL WHEEL			
20	TM594A	2	BEARING,CONE OUTER			
21	TM592A	2	BEARING,CUP			
22	TM572	2	BEARING,CUP			
23	TM580	2	BEARING,CONE			
24	236841R1	2	NUT,R WHEEL BRG ADJ INNER			
25	R002305	2	NUT, OUTER			
26	1685141C1	1	ELEMENT,OIL FILTER			
800		RF	NOTE: THE FOLLOWING PARTS ARE NON-ILLUSTRATED			
801	2589978C1	1	BRACKET,BEAM HANGER ON AXLE HS			
802	2589977C1	1	BRACKET,BEAM HANGER ON AXLE HS			
870	KIT2637	KT	KIT,INPUT NUT AND WASHER			
871	KIT576	KT	SET,SHIM PIN CAGE RT34145			
880		RF	NOTE: ASM BELOW COMPRISED OF ABOVE COMPONENTS			
881	3707298F91	RF	HOUSING,F/R AXLE HND 2X2 N/ABS			

Grp 14

COPYRIGHT© 2011INTERNATIONAL TRUCK AND ENGINE CORP.

https://truckmanualshub.com/

Figure 0VFL4

AXLE HSG; RR RR

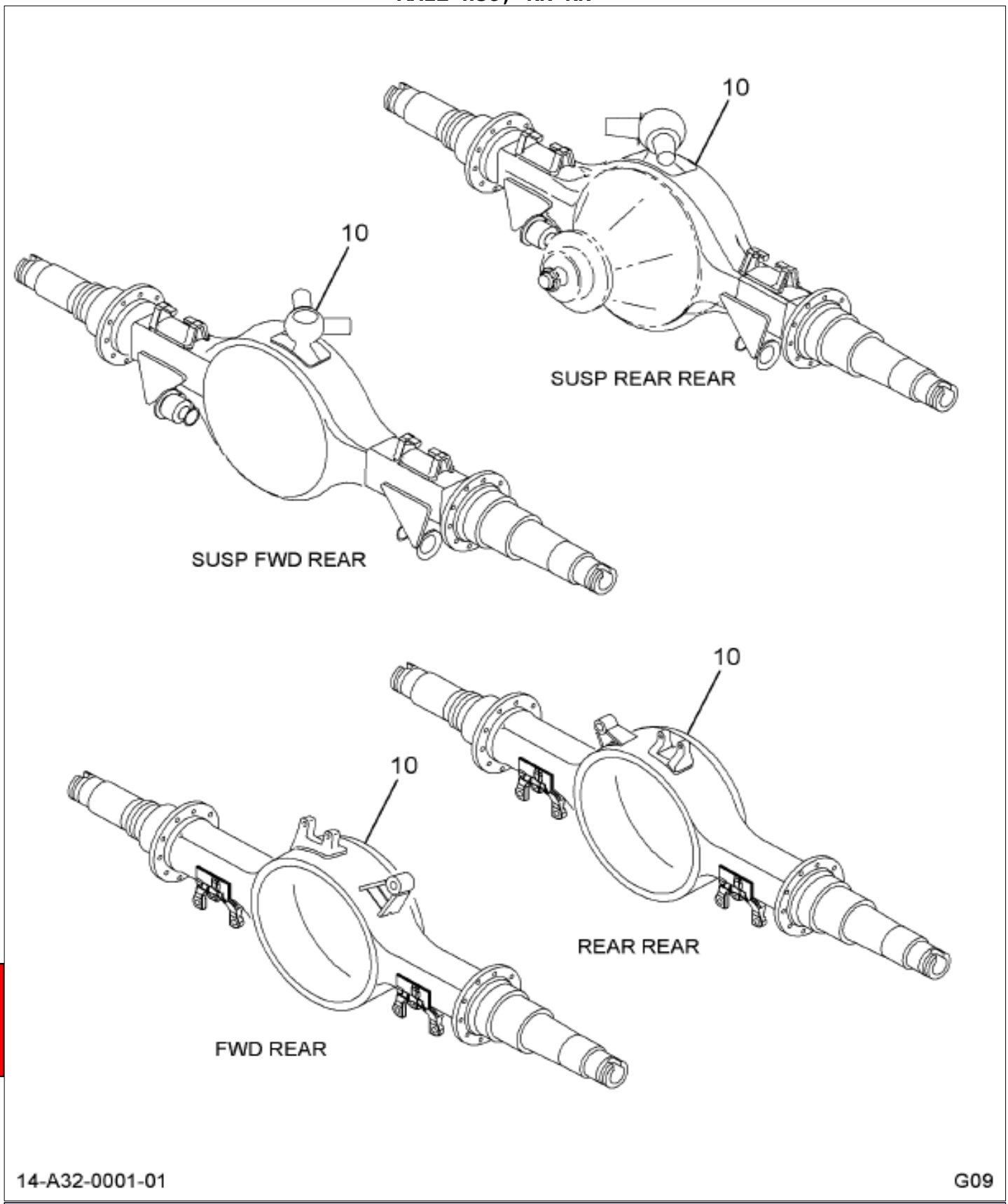

Item	Part No.	Qty	Description	Kit	Var	Figure
10	3707384F91	1	HOUSING,R/R AXLE HND 2X2 W/ABS		0VFLH	3707384F91

COPYRIGHT© 2011INTERNATIONAL TRUCK AND ENGINE CORP.

https://truckmanualshub.com/

Figure 3707364F91

HOUSING,R/R AXLE HND 2X2 W/ABS

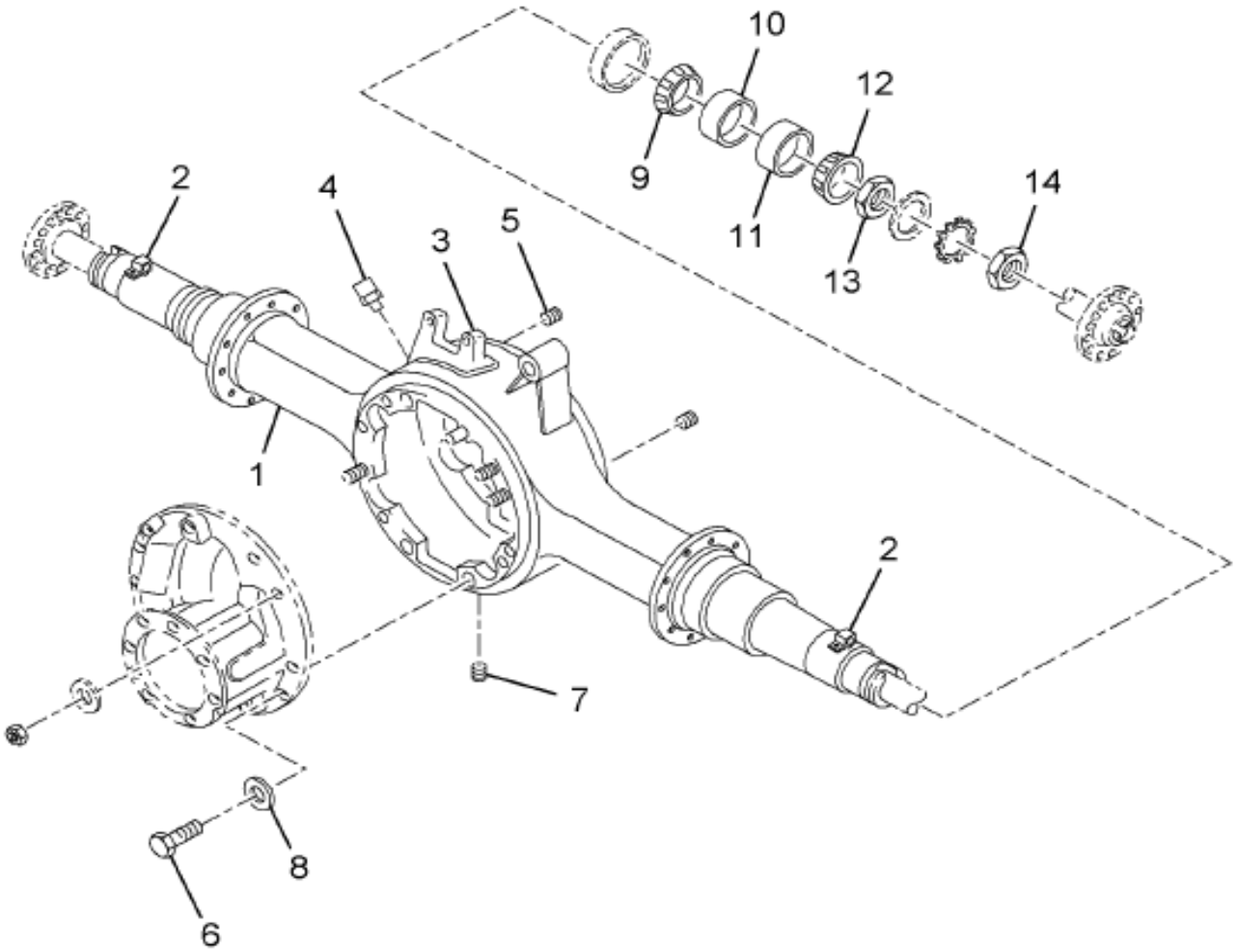

14-A41-0034-01 A11

Item	Part No.	Qty	Description	Kit	Var	Figure
1	2591001C1	1	HOUSING,R/R AXLE 14HRC ABS HEN			
2	2255A1145	2	SENSOR BLOCK			
3	3150Y1429	1	BRACKET-TOR ROD			
4	91916R91	1	BREATHER,TRANS 3/8 PTF SHORT			
5	445751	1	PLUG,1/2-14 PLN SQ/SKT AUTO P			
6	1694729C1	3	BOLT,DIFF CARR TO HSG			

Grp 14

COPYRIGHT© 2011INTERNATIONAL TRUCK AND ENGINE CORP.

https://truckmanualshub.com/

Figure 3707384F91

HOUSING,R/R AXLE HND 2X2 W/ABS

Item	Part No.	Qty	Description	Kit	Var	Figure
6	1695182C1	5	BOLT,DIFF CARR TO HSG SHORT			
6	1695795C1	3	BOLT,DIFF CARR TO HSG LONG			
6	21327R1	8	SCREW, 5/16 X 1-1/4 H/SHD CAP			
7	ETN0054254	1	PLUG-DIFF FILL			
8	226846R1	12	WASHER,CARRIER TO HSG BOLT			
9	TM594A	2	BEARING,CONE OUTER			
10	TM592A	2	BEARING,CUP			
11	TM572	2	BEARING,CUP			
12	TM580	2	BEARING,CONE			
13	236841R1	2	NUT,R WHEEL BRG ADJ INNER			
14	R002305	2	NUT, OUTER			
800		RF	NOTE: THE FOLLOWING PARTS ARE NON-ILLUSTRATED			
801	2589977C1	1	BRACKET,BEAM HANGER ON AXLE HS			
801		RF	RIGHT			
802	2589978C1	1	BRACKET,BEAM HANGER ON AXLE HS			
802		RF	LEFT			
880		RF	NOTE: ASM BELOW COMPRISED OF ABOVE COMPONENTS			
881	3707384F91	RF	HOUSING,R/R AXLE HND 2X2 W/ABS			

COPYRIGHT© 2011INTERNATIONAL TRUCK AND ENGINE CORP.

https://truckmanualshub.com/

Figure 0VJGR

AXLE SHAFT HSG; FWD RR

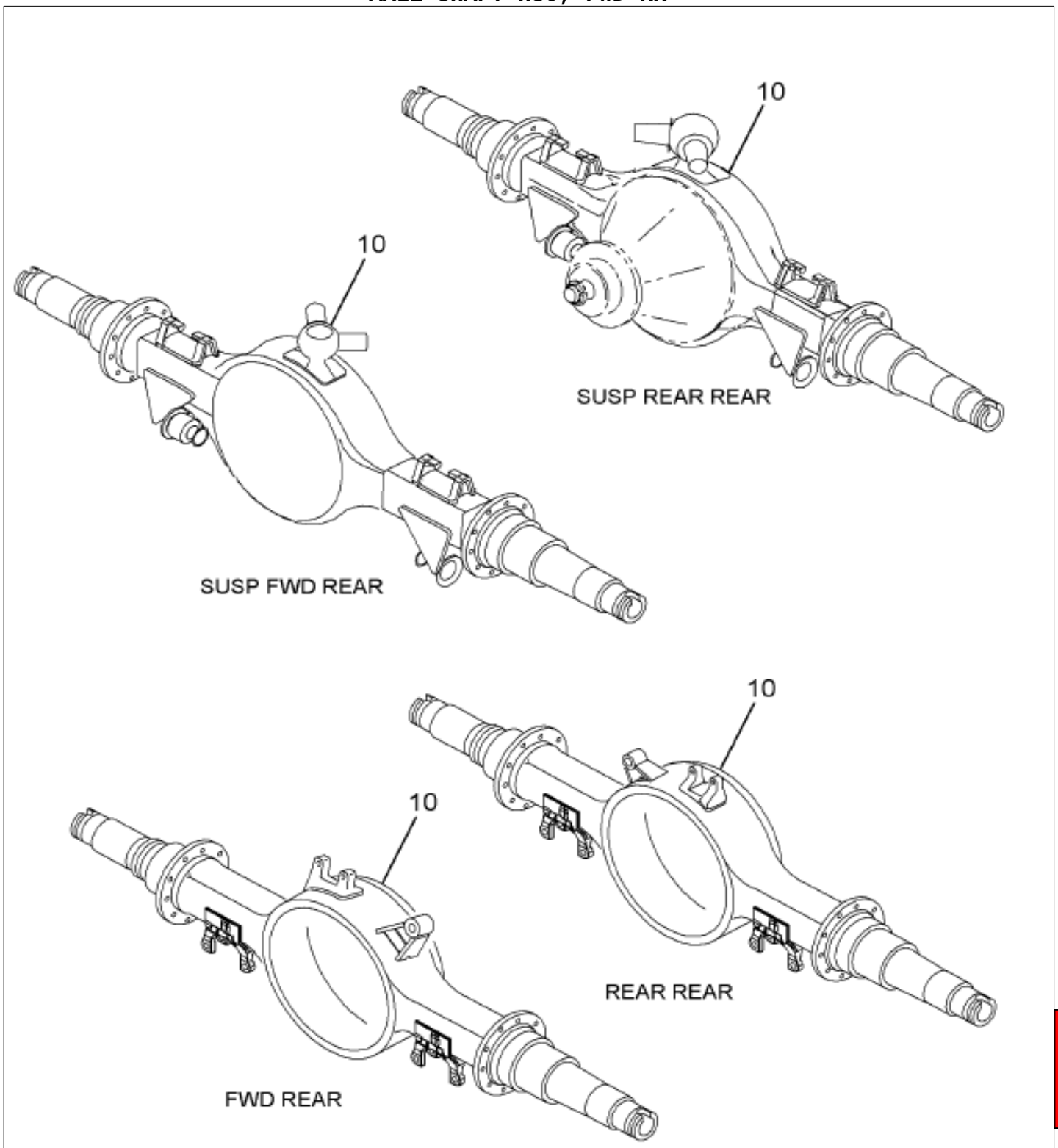

Item	Part No.	Qty	Description	Kit	Var	Figure
10	3707312F91	1	SHAFT,F/R AXLE LH&RH DCDL 160		0VJGP	3707312F91

Grp 14

COPYRIGHT© 2011INTERNATIONAL TRUCK AND ENGINE CORP.

https://truckmanualshub.com/

Figure 3707312F91
SHAFT,F/R AXLE LH&RH DCDL 160

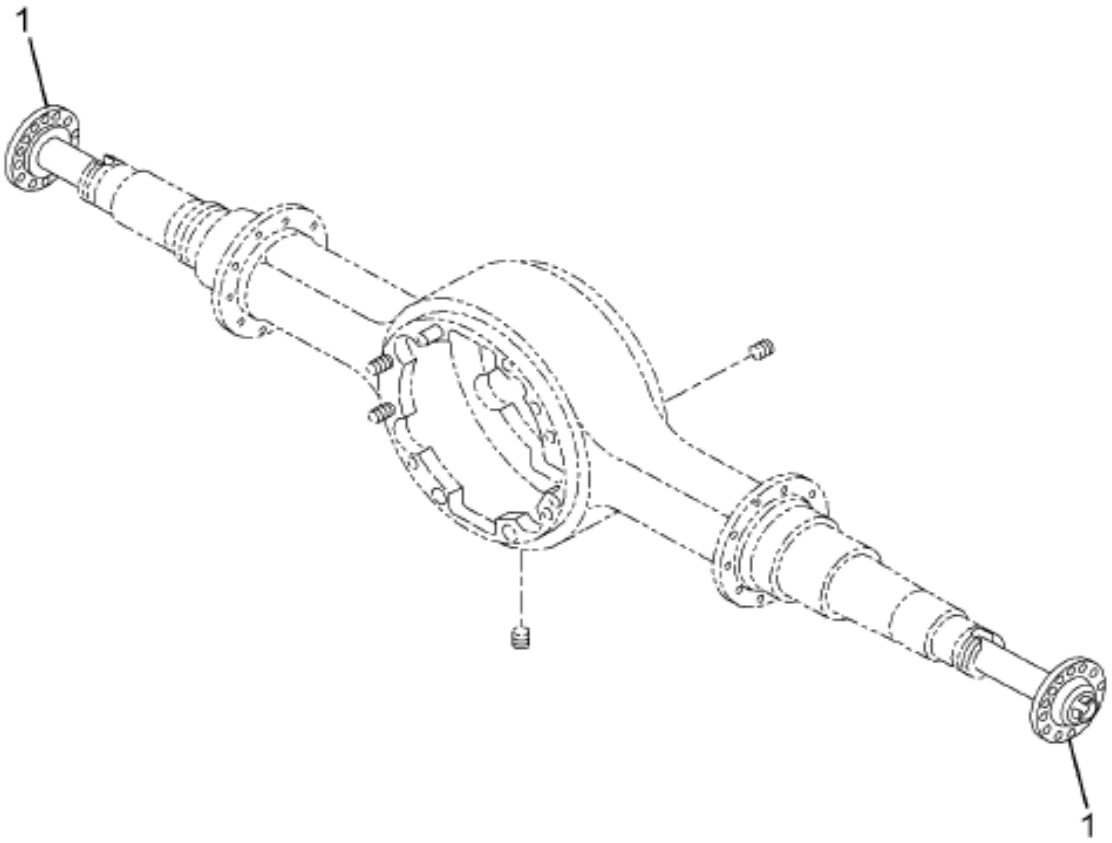

14-A44-0001-01 F09

Item	Part No.	Qty	Description	Kit	Var	Figure
1	1660760C1	1	SHAFT,RR AXLE 43.07 IN			
1	1665498C1	1	SHAFT,RR AXLE 36.57 IN			
880		RF	NOTE: ASM BELOW COMPRISED OF ABOVE COMPONENTS			
881	3707312F91	RF	SHAFT,F/R AXLE LH&RH DCDL 160			

COPYRIGHT© 2011INTERNATIONAL TRUCK AND ENGINE CORP.

https://truckmanualshub.com/

Figure 0VJD3

AXLE SHAFT; RR RR

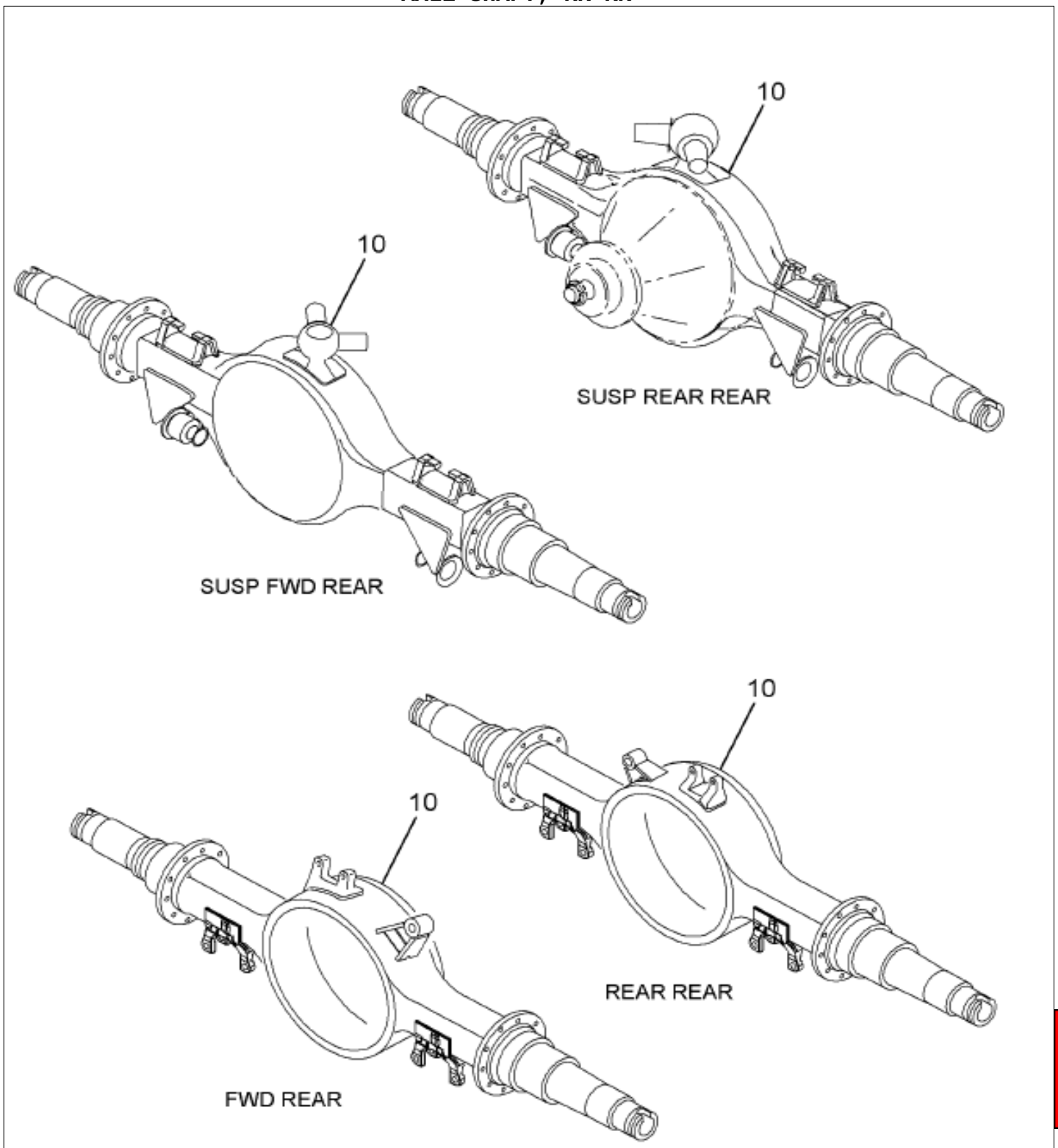

Item	Part No.	Qty	Description	Kit	Var	Figure
10	3707305F91	1	SHAFT,RR AXLE RT160 LH&RH		0VJPD	3707305F91

Grp 14

COPYRIGHT© 2011INTERNATIONAL TRUCK AND ENGINE CORP.

https://truckmanualshub.com/

Figure 3707305F91
SHAFT,RR AXLE RT160 LH&RH

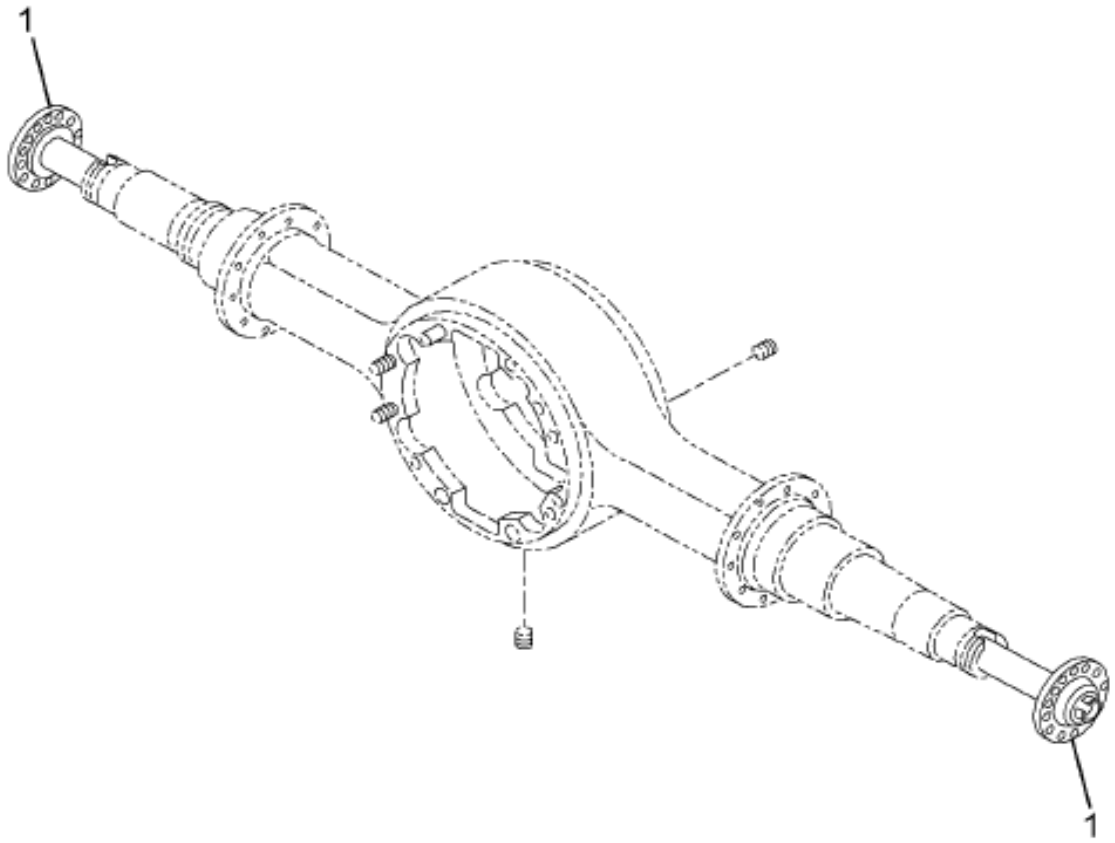

14-A44-0001-01 F09

Item	Part No.	Qty	Description	Kit	Var	Figure
1	1665498C1	1	SHAFT,RR AXLE 36.57 IN			
1	1660760C1	1	SHAFT,RR AXLE 43.07 IN			
880		RF	NOTE: ASM BELOW COMPRISED OF ABOVE COMPONENTS			
881	3707305F91	RF	SHAFT,RR AXLE RT160 LH&RH			

COPYRIGHT© 2011INTERNATIONAL TRUCK AND ENGINE CORP.

https://truckmanualshub.com/

Figure 07KYX

AXLE STOP & MTG; REAR, W/HEND RT, RTE SUSP

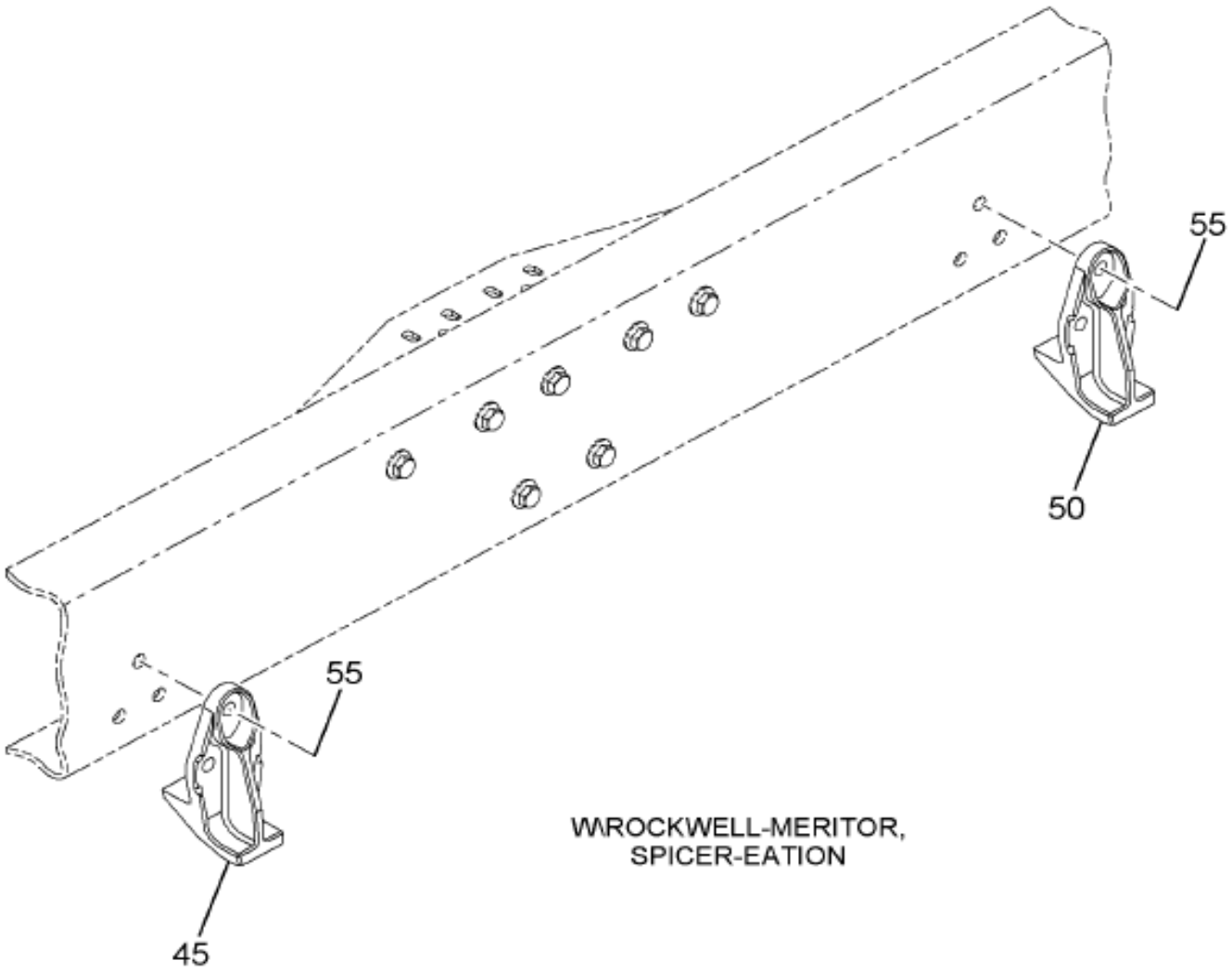

14-635-0031-03 E09

Item	Part No.	Qty	Description	Kit	Var	Figure
45	3594986C1	2	STOP,RR AXLE AXLE 3.50		0NQN5	
45	3691089C1	6	BOLT, HUCK-SPIN 5/8 DIA -20		0NQN5	
45	3691083C1	6	NUT, HUCK SPIN COLLAR 5/8 DIA		0NQN5	
50	3594986C1	2	STOP,RR AXLE AXLE 3.50		0NQN5	
50	3691089C1	6	BOLT, HUCK-SPIN 5/8 DIA -20		0NQN5	
50	3691083C1	6	NUT, HUCK SPIN COLLAR 5/8 DIA		0NQN5	

Grp 14

COPYRIGHT© 2011INTERNATIONAL TRUCK AND ENGINE CORP.

https://truckmanualshub.com/

Figure 0W7D7

BREATHER COVER INSTL; ALL ARVIN MERITOR & DIRONA AXLES

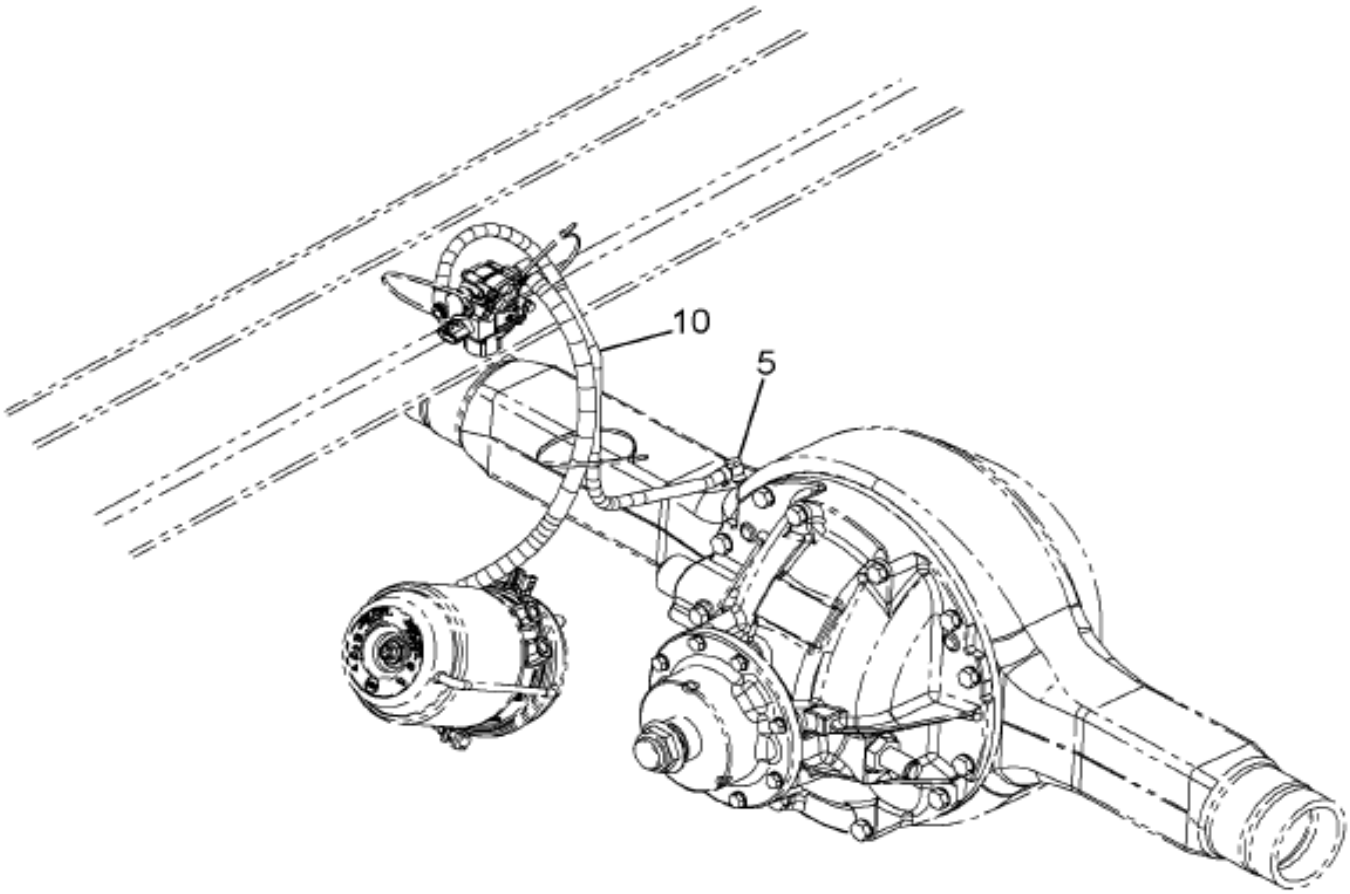

14-633-0016-01 E09

Item	Part No.	Qty	Description	Kit	Var	Figure
5	3712178C1	2	BREATHER,AXLE,		0W7D9	
10	3712176C91	2	BREATHER,HOSE FLEX AIR (W/TUBE		0W7D9	

COPYRIGHT© 2011INTERNATIONAL TRUCK AND ENGINE CORP.

https://truckmanualshub.com/

Figure 0VJCP

DIFF CARRIER; FWD RR AXLE

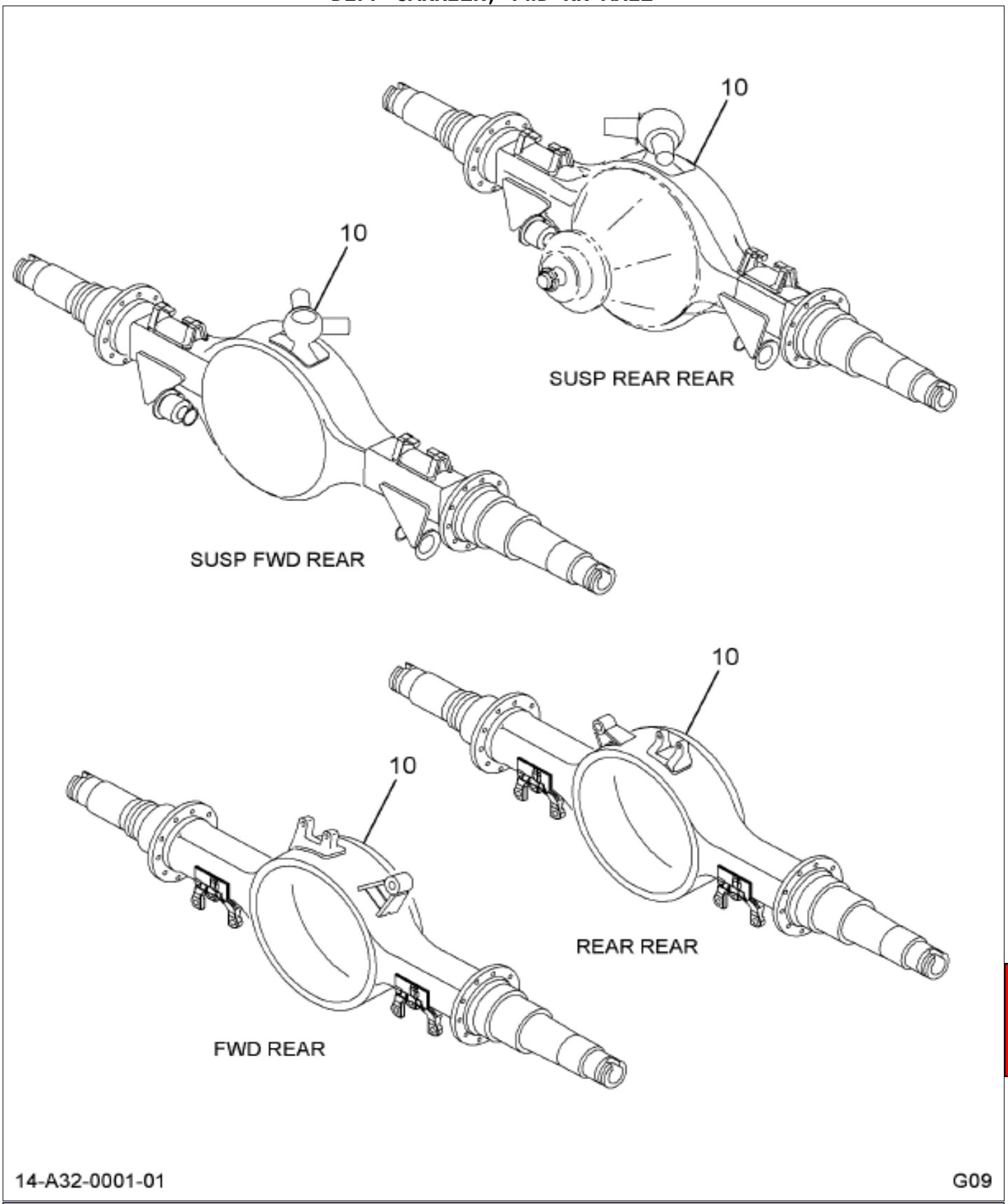

Item	Part No.	Qty	Description	Kit	Var	Figure
10	3707398F91	1	DIFFERENTIAL,F/R AXLE RT164P D		0VJFT	

Grp 14

COPYRIGHT© 2011INTERNATIONAL TRUCK AND ENGINE CORP.

https://truckmanualshub.com/

Figure 0VJDP

DIFF CARRIER; RR RR AXLE

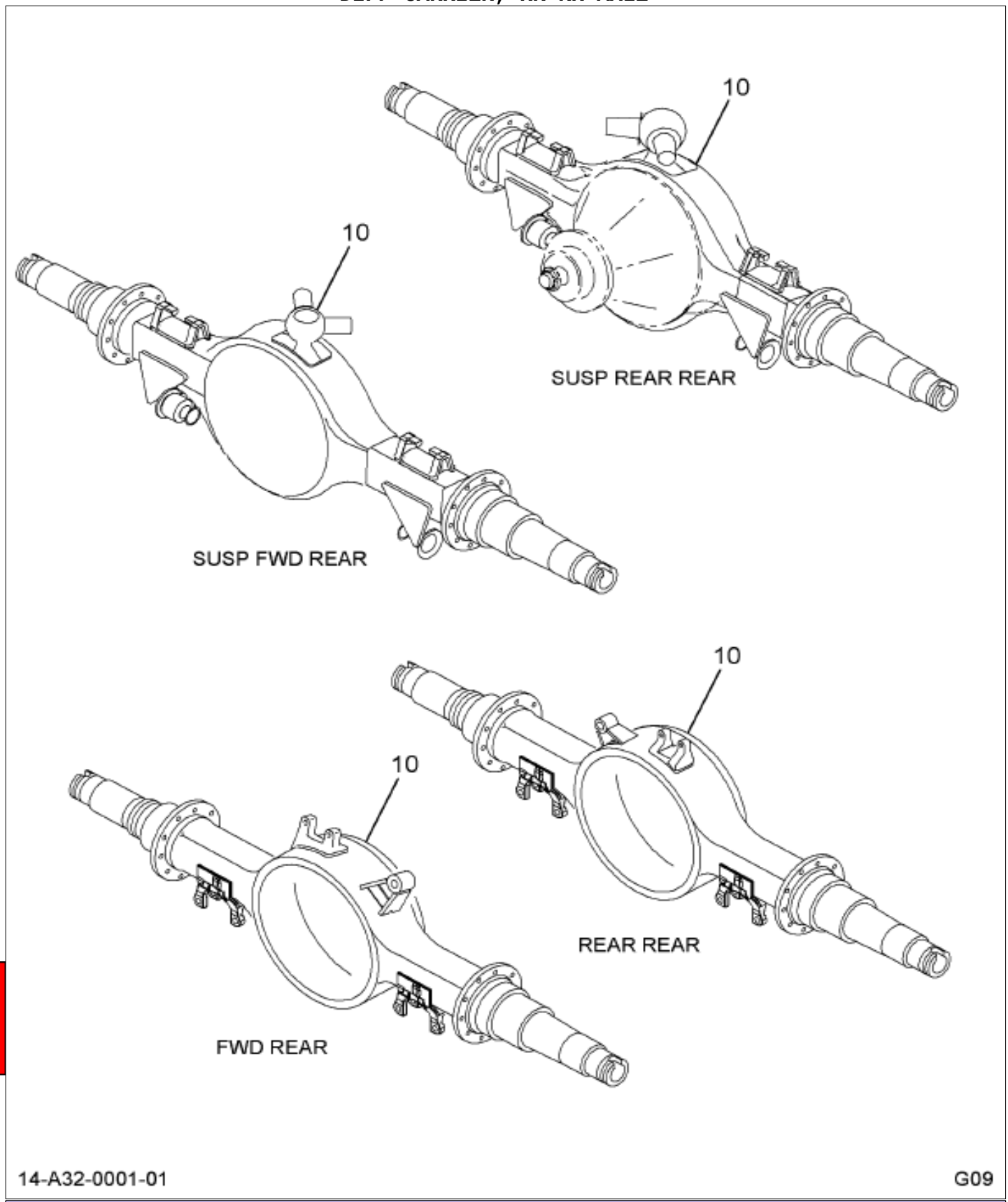

Item	Part No.	Qty	Description	Kit	Var	Figure
10	3707403F91	1	DIFF,CARR RT164 STD HYP N/SPN		0VJML	

COPYRIGHT© 2011INTERNATIONAL TRUCK AND ENGINE CORP.

https://truckmanualshub.com/

Figure 0VJCQ
DIFF RATIO; FWD RR AXLE

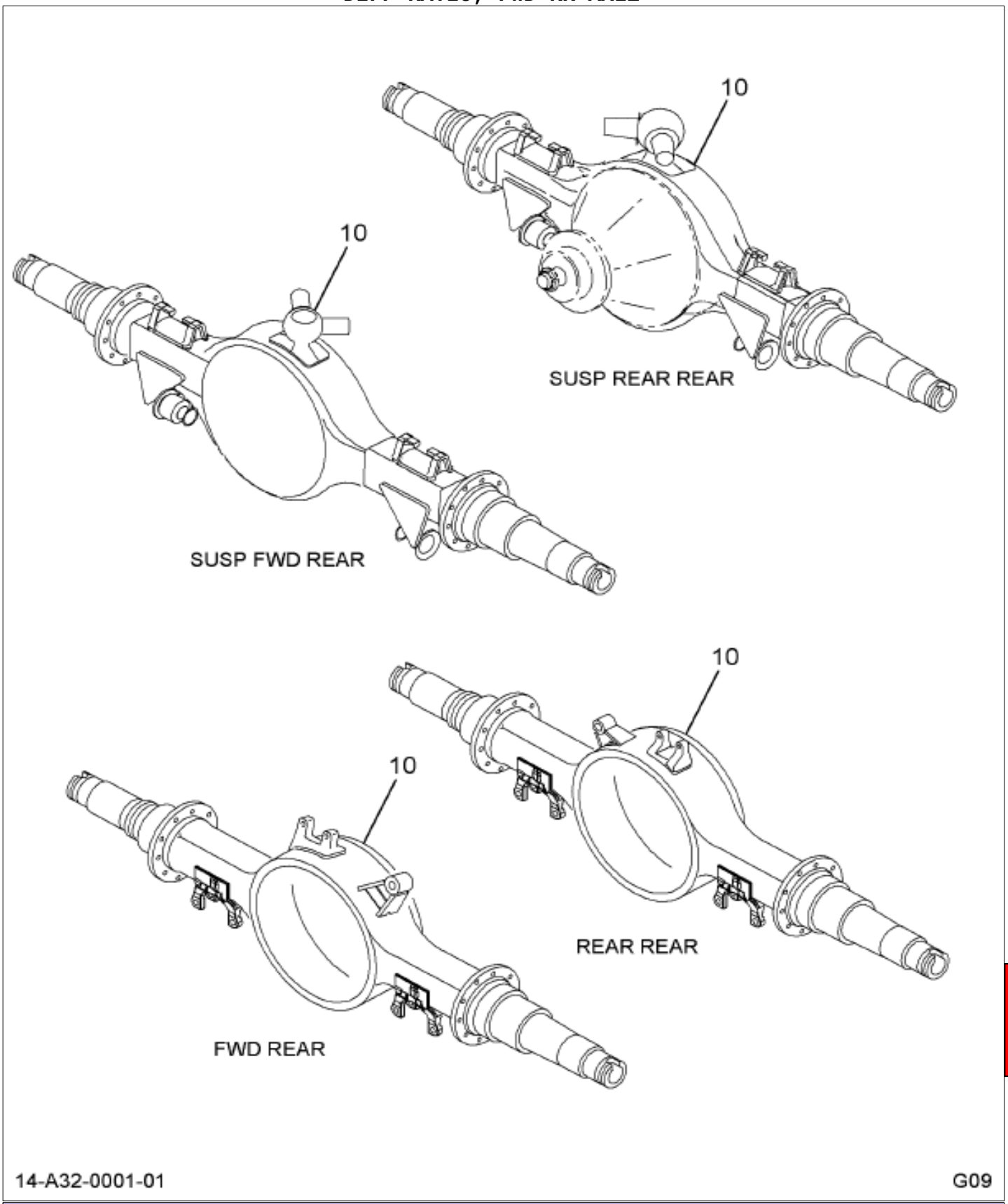

Item	Part No.	Qty	Description	Kit	Var	Figure
10	3705281F91	1	GEAR SET,F/R AXLE 5.38 RT160		0VJG4	3705281F91

Grp 14

COPYRIGHT© 2011INTERNATIONAL TRUCK AND ENGINE CORP.

https://truckmanualshub.com/

Figure 2589438C91

GEAR SET,DIFF R/P 5.38

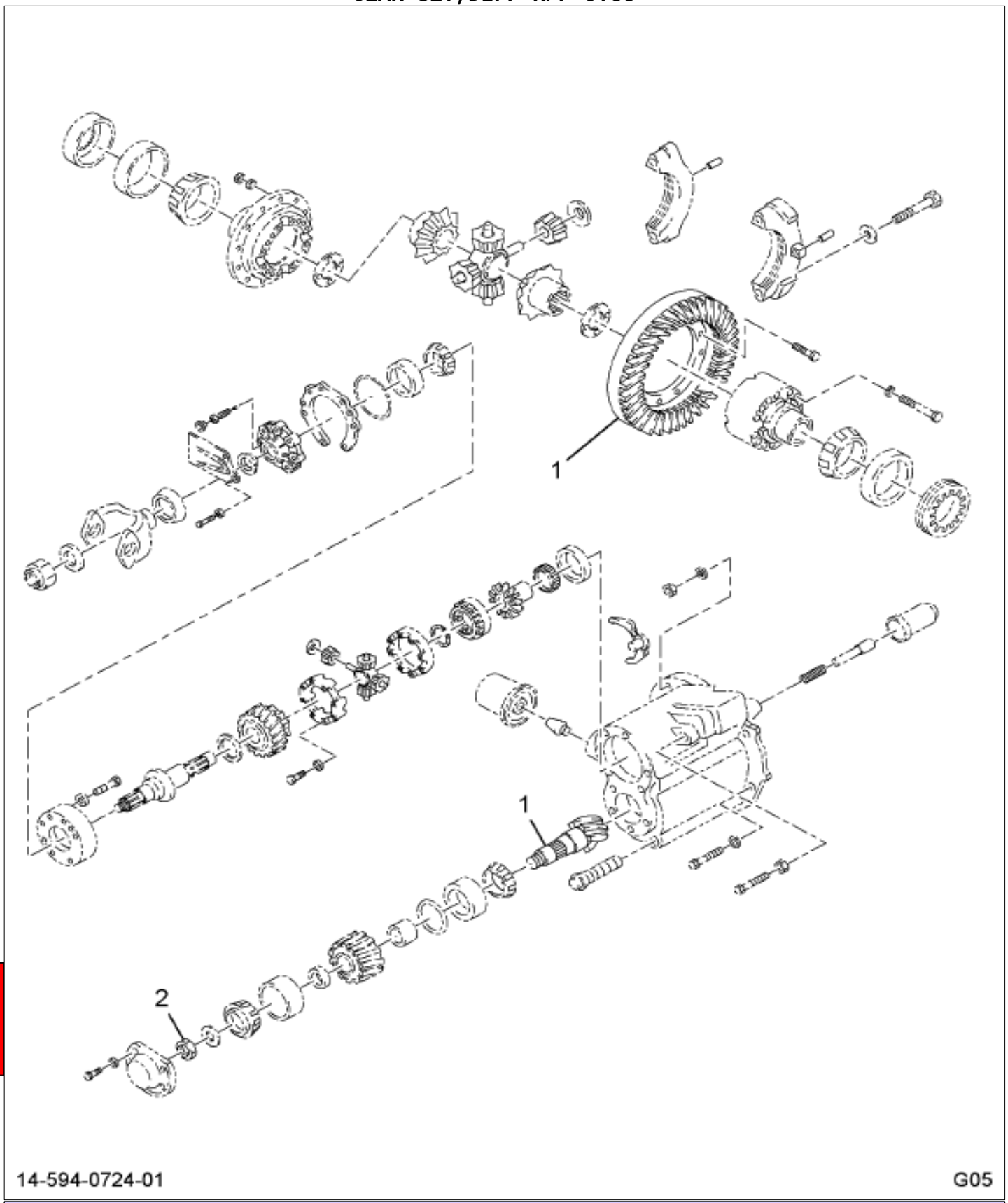

Item	Part No.	Qty	Description	Kit	Var	Figure
1	2589439C1	1	GEARSET,DIFF RATIO 5.38			
2	1670303C1	1	NUT,COMP FLANGE MTG			
880		RF	NOTE: ASM BELOW COMPRISED OF ABOVE COMPONENTS			
881	2589438C91	RF	GEAR SET,DIFF R/P 5.38			

COPYRIGHT© 2011INTERNATIONAL TRUCK AND ENGINE CORP.

https://truckmanualshub.com/

Figure 3705281F91

GEAR SET,F/R AXLE 5.38 RT160

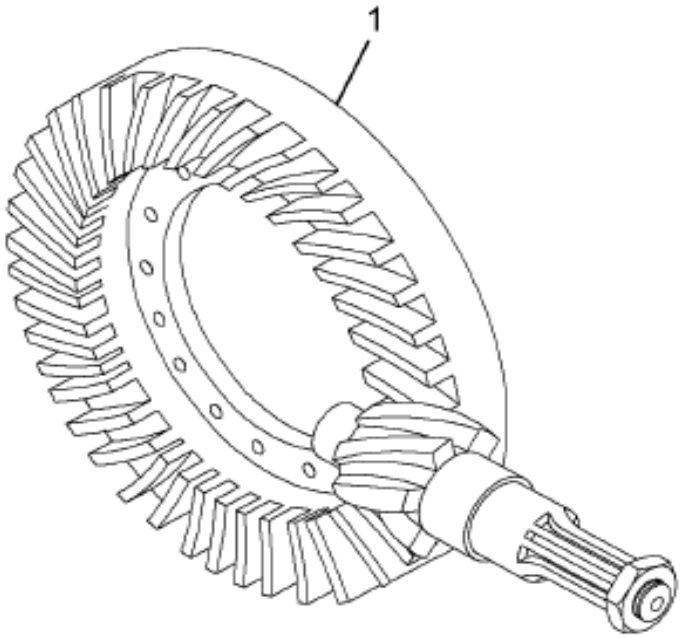

14-594-1032-01 J10

Item	Part No.	Qty	Description	Kit	Var	Figure
1	2589438C91	1	GEAR SET,DIFF R/P 5.38			2589438C91
880		RF	NOTE: ASM BELOW COMPRISED OF ABOVE COMPONENTS			
881	3705281F91	RF	GEAR SET,F/R AXLE 5.38 RT160			

Grp 14

COPYRIGHT© 2011INTERNATIONAL TRUCK AND ENGINE CORP.

https://truckmanualshub.com/

Figure 0VJDQ
DIFF RATIO; RR RR AXLE

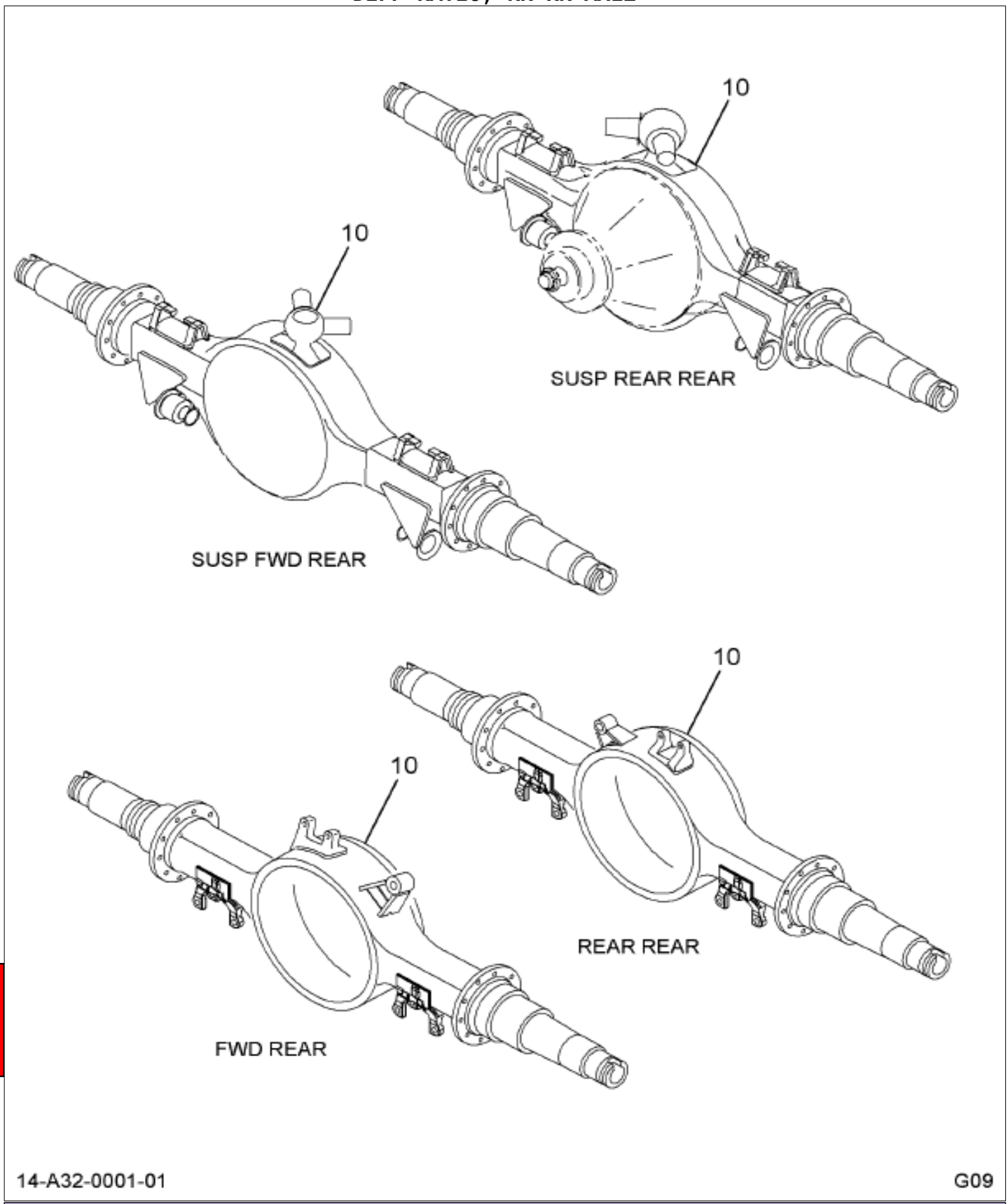

Item	Part No.	Qty	Description	Kit	Var	Figure
10	3707354F91	1	GEAR SET,R/R AXLE 5.38 RT160		0VJNR	3707354F91

COPYRIGHT© 2011INTERNATIONAL TRUCK AND ENGINE CORP.

https://truckmanualshub.com/

Figure 3707354F91
GEAR SET,R/R AXLE 5.38 RT160

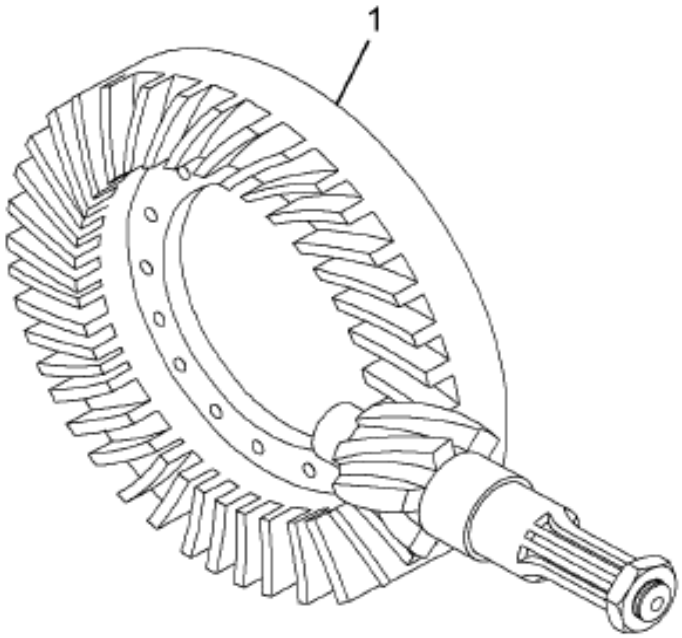

14-594-1032-01 J10

Item	Part No.	Qty	Description	Kit	Var	Figure
1	2603162C91	1	GEAR SET,R/R AXLE R&P 5.38 RT1			
880		RF	NOTE: ASM BELOW COMPRISED OF ABOVE COMPONENTS			
881	3707354F91	RF	GEAR SET,R/R AXLE 5.38 RT160			

Grp 14

COPYRIGHT© 2011INTERNATIONAL TRUCK AND ENGINE CORP.

https://truckmanualshub.com/

Figure 0GRRV

FITTING, ELBOW; PDL CONTROL

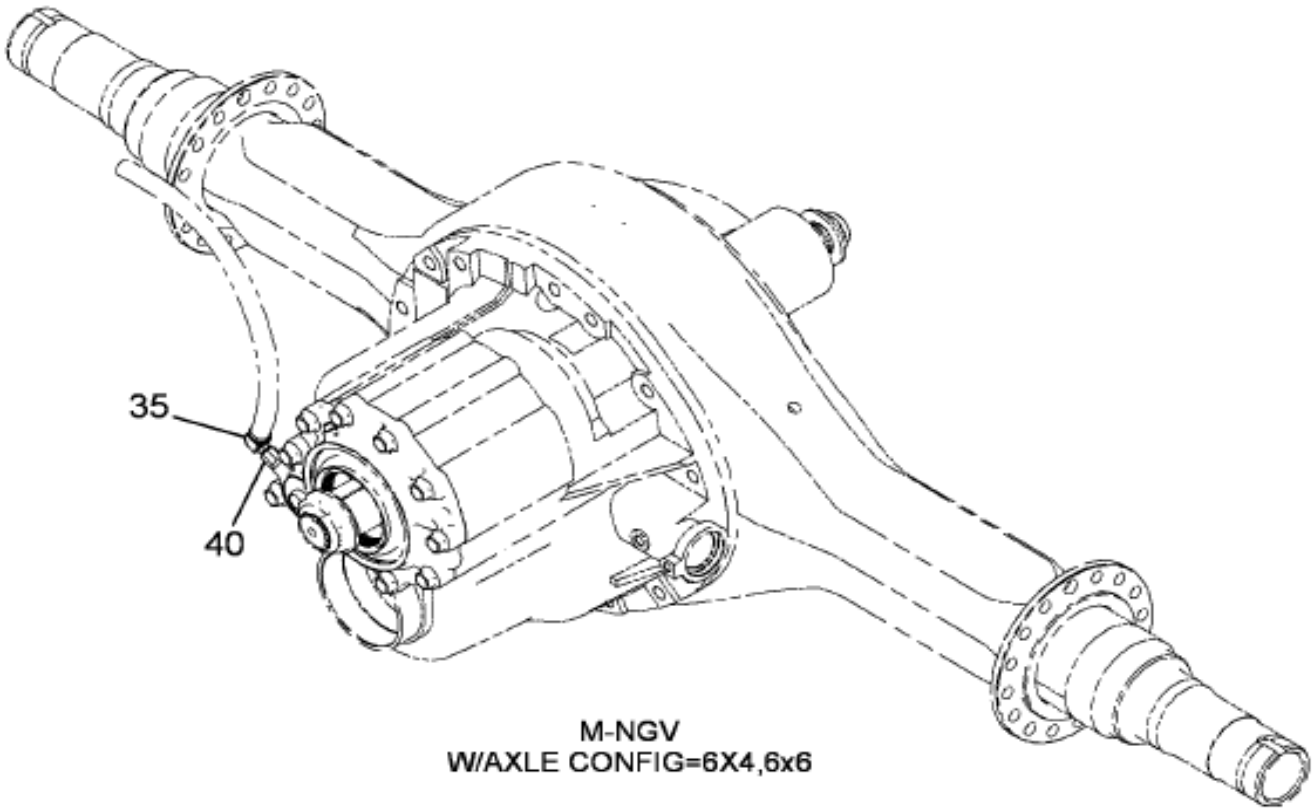

04-068-0006-01 K10

Item	Part No.	Qty	Description	Kit	Var	Figure
35	444040	1	ELBOW,1/4-18 PLN AUTO 90D PIP		0YPWZ	
35	444014	1	ADAPTER, 3/8 TO 1/4 PLN AUTO P		0YPWZ	

COPYRIGHT© 2011INTERNATIONAL TRUCK AND ENGINE CORP.

https://truckmanualshub.com/

Figure 0VJC3

INPUT YOKE; FWD RR AXLE

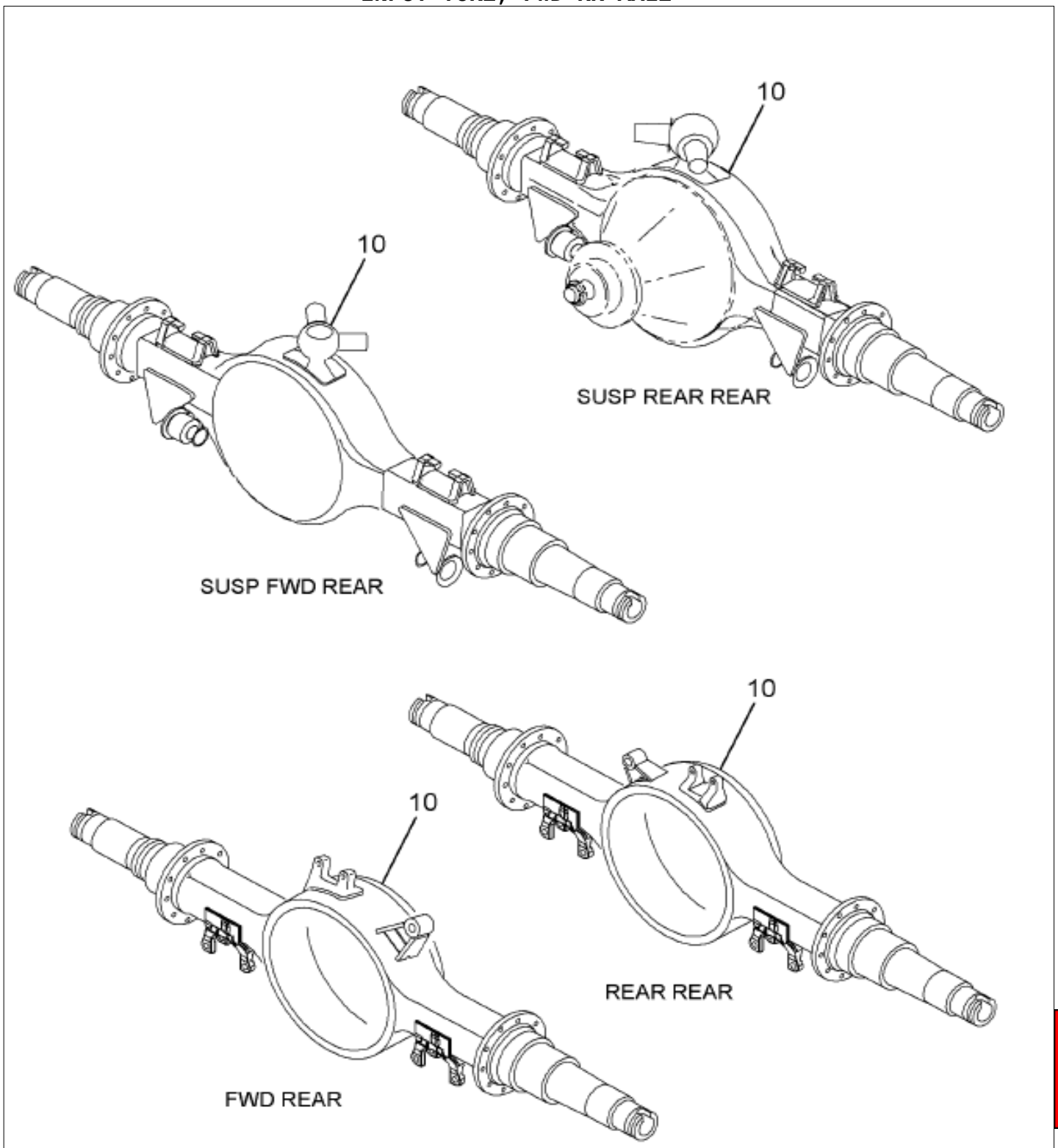

Item	Part No.	Qty	Description	Kit	Var	Figure
10	3705291F91	1	SHAFT,F/R AXLE INTPU YOKE 1810		0VJH9	3705291F91

Grp 14

COPYRIGHT© 2011INTERNATIONAL TRUCK AND ENGINE CORP.

https://truckmanualshub.com/

Figure 3705291F91

SHAFT,F/R AXLE INTPU YOKE 1810

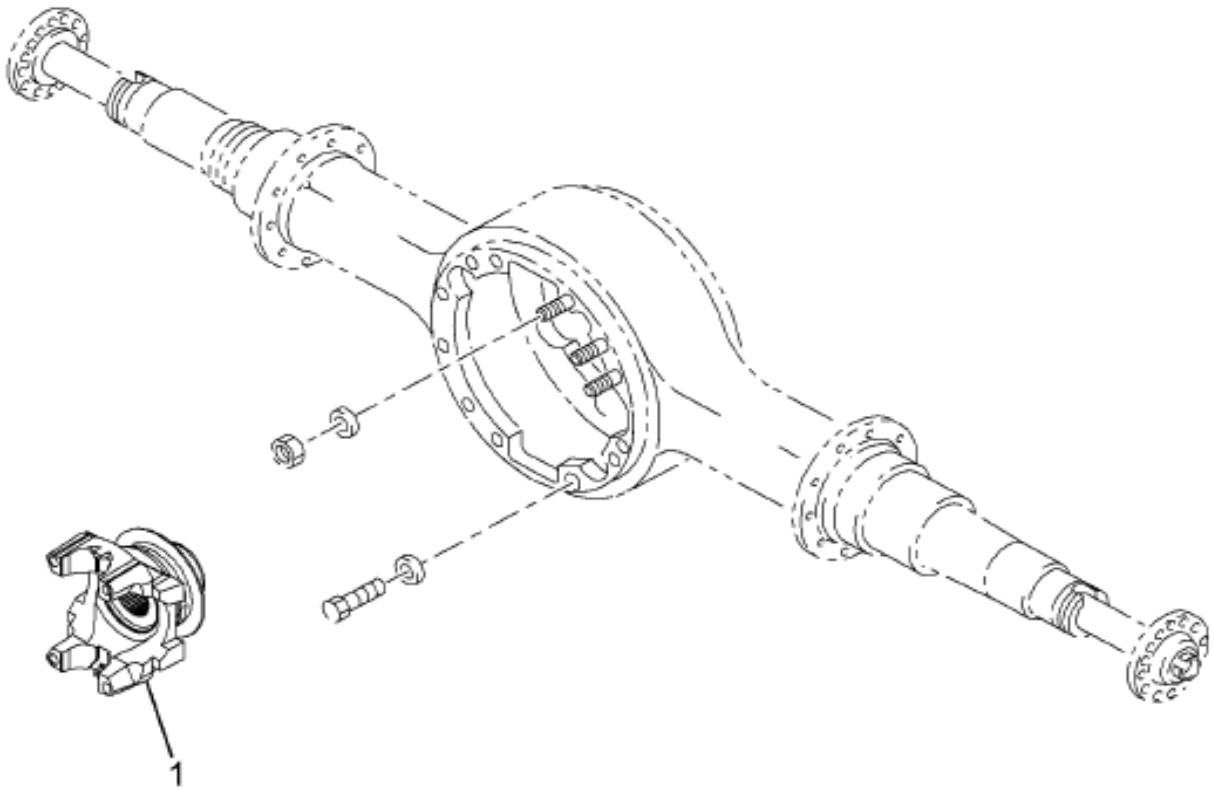

14-A45-0001-01 C09

Item	Part No.	Qty	Description	Kit	Var	Figure
1	3595283C91	1	FLANGE,TRUNNION W/SLINGER 1810			
880		RF	NOTE: ASM BELOW COMPRISED OF ABOVE COMPONENTS			
881	3705291F91	RF	SHAFT,F/R AXLE INTPU YOKE 1810			

COPYRIGHT© 2011INTERNATIONAL TRUCK AND ENGINE CORP.

https://truckmanualshub.com/

Figure 0GGDZ

LIFT AXLE CONTROLS; GROMMET, CAB FLOOR

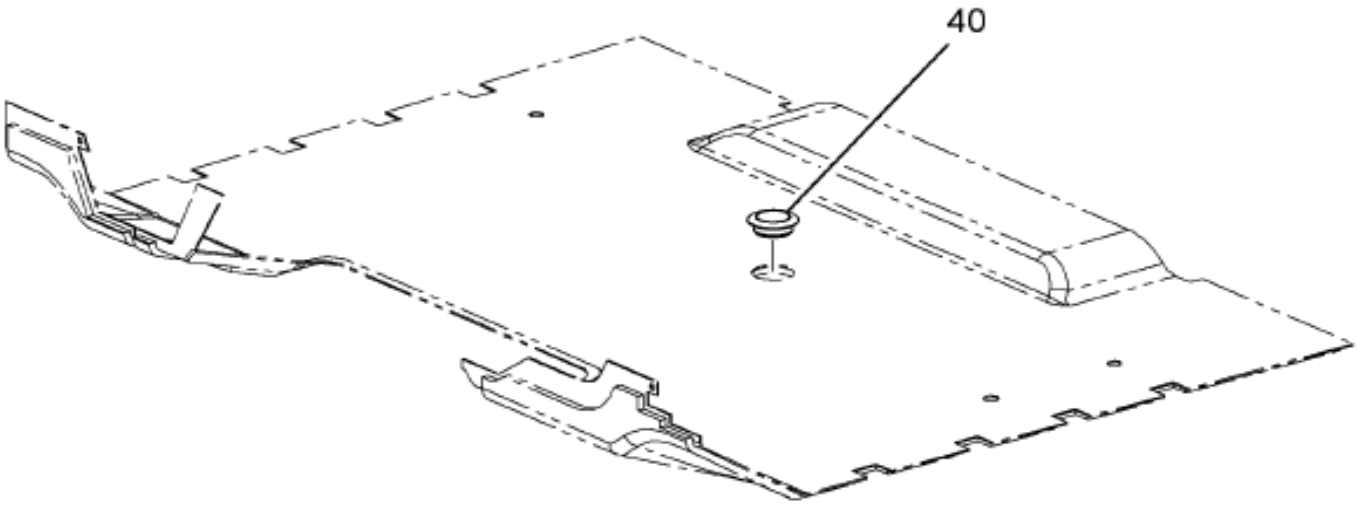

14-588-0014-CA H04

Item	Part No.	Qty	Description	Kit	Var	Figure
40	3565125C1	1	GROMMET,RUBBER PIPE CABLE ETC		0GGDZ	

Grp 14

COPYRIGHT© 2011INTERNATIONAL TRUCK AND ENGINE CORP.

https://truckmanualshub.com/

Figure 0VJC1

OUTPUT YOKE; FWD RR AXLE

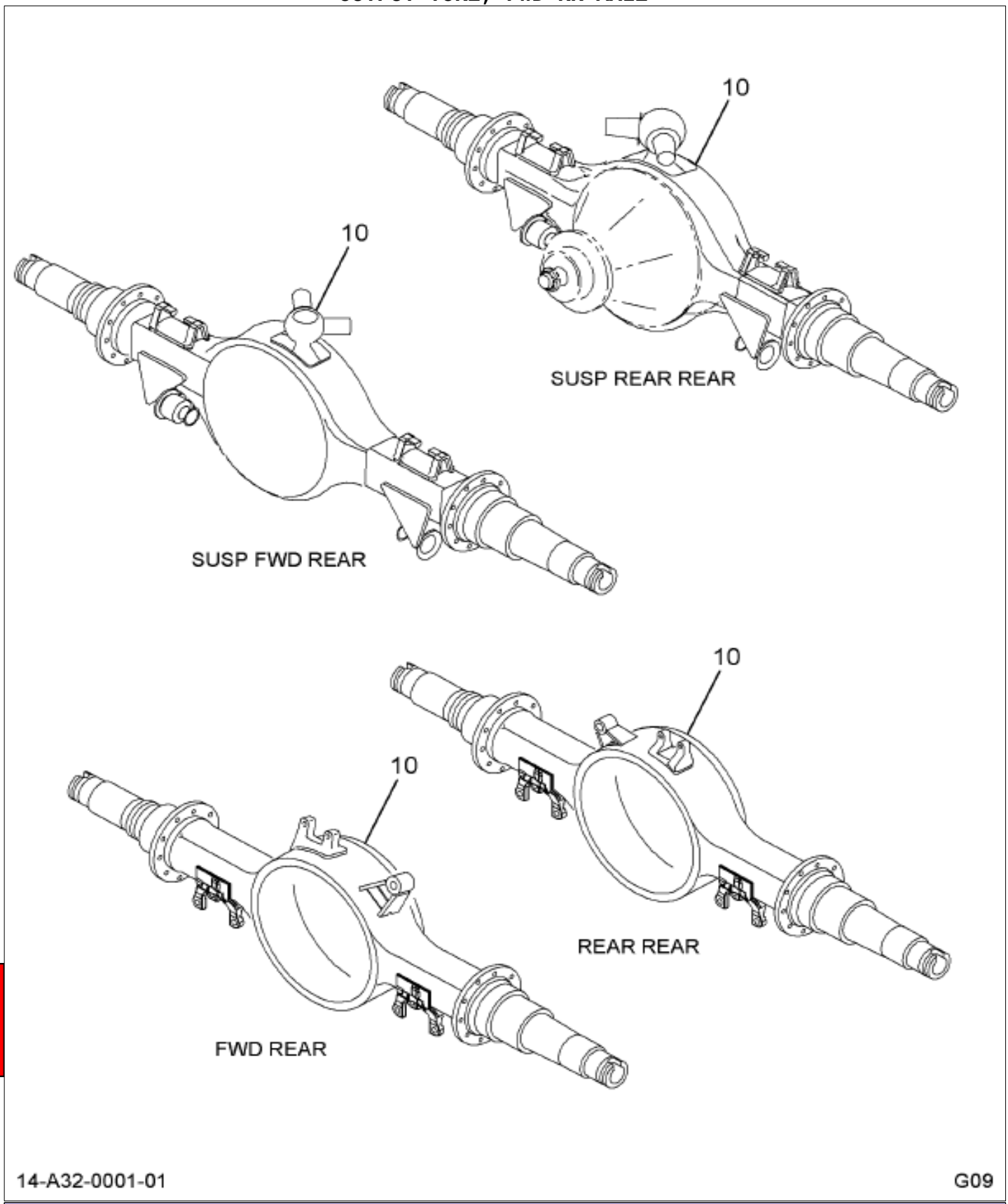

Item	Part No.	Qty	Description	Kit	Var	Figure
10	3705295F91	1	SHAFT,F/R AXLE OUTPUT YK 1710		0VJHG	3705295F91

COPYRIGHT© 2011INTERNATIONAL TRUCK AND ENGINE CORP.

https://truckmanualshub.com/

Figure 3705295F91

SHAFT,F/R AXLE OUTPUT YK 1710

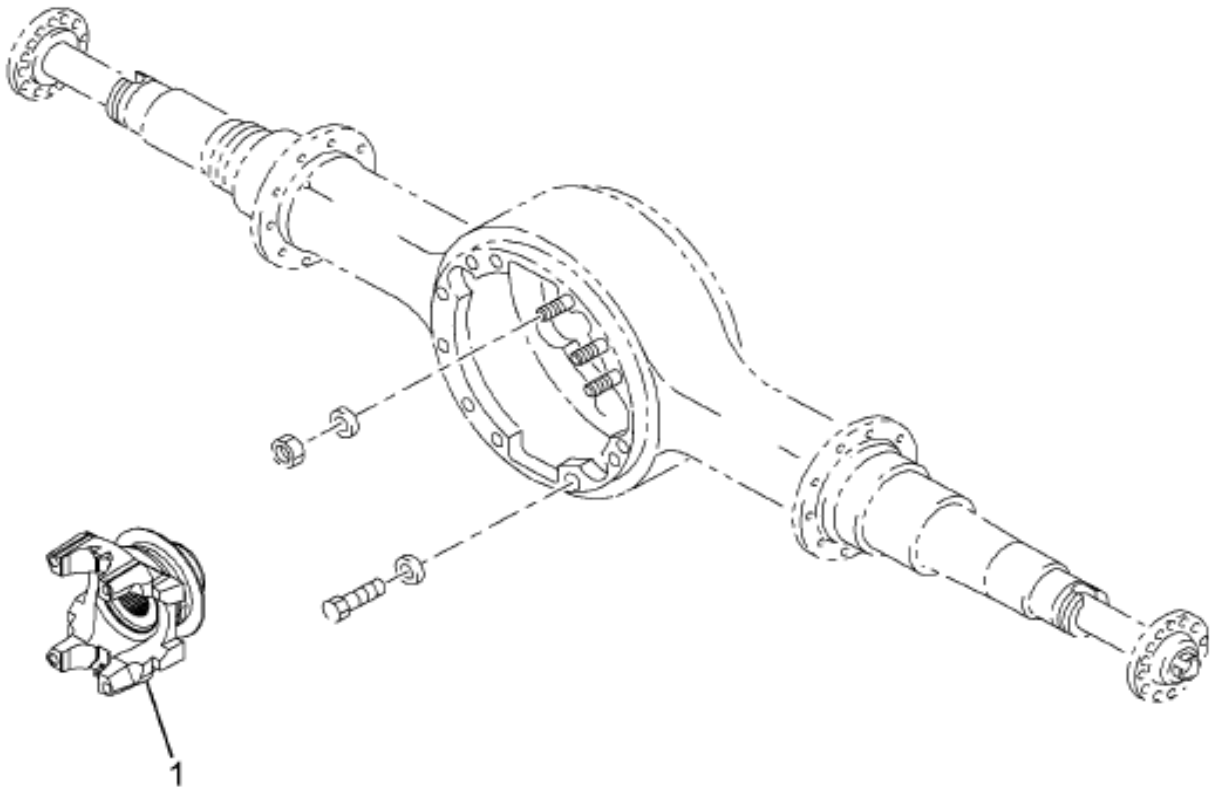

14-A45-0001-01 C09

Item	Part No.	Qty	Description	Kit	Var	Figure
1	2013006C1	1	FLANGE,TRUNNION 1710			
880		RF	NOTE: ASM BELOW COMPRISED OF ABOVE COMPONENTS			
881	3705295F91	RF	SHAFT,F/R AXLE OUTPUT YK 1710			

Grp 14

COPYRIGHT© 2011INTERNATIONAL TRUCK AND ENGINE CORP.

https://truckmanualshub.com/

Figure 0VJFG

REAR AXLE INFO KIT

Item	Part No.	Qty	Description	Kit	Var	Figure
155	1651215C91	1	PRODUCT GRAPHICS,LABEL CAUTION		0VJQ1	1651215C91

COPYRIGHT© 2011INTERNATIONAL TRUCK AND ENGINE CORP.

https://truckmanualshub.com/

Figure 1651215C91
PRODUCT GRAPHICS,LABEL CAUTION

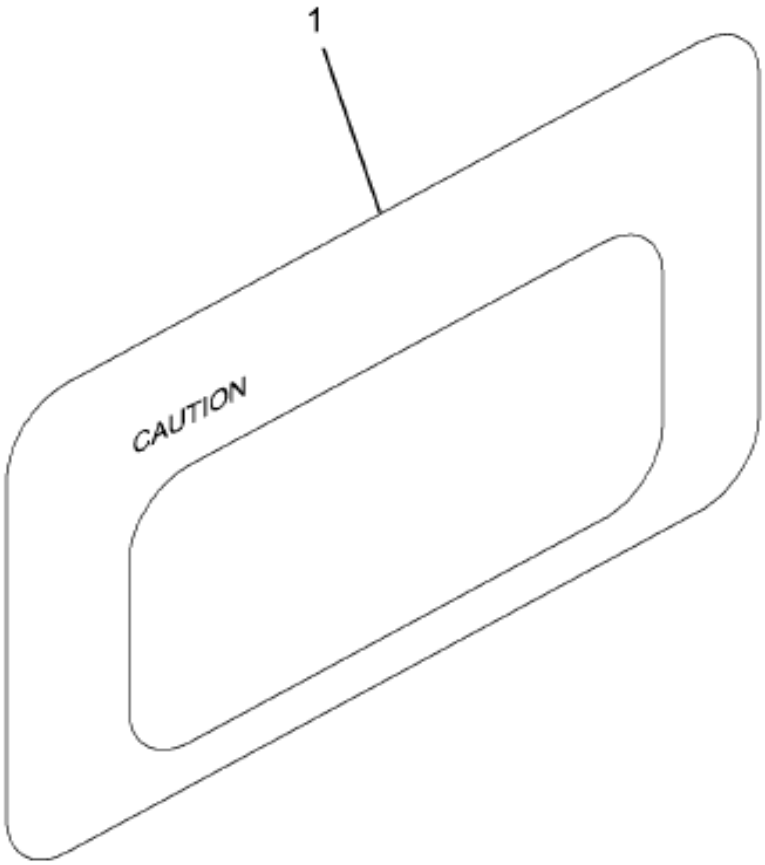

16-768-0027-01 A05

Item	Part No.	Qty	Description	Kit	Var	Figure
1	1653789C1	1	PRODUCT GRAPHIC			1653789C1
880		RF	NOTE: ASM BELOW COMPRISED OF ABOVE COMPONENTS			
881	1651215C91	RF	PRODUCT GRAPHICS,LABEL CAUTION			

Grp 14

COPYRIGHT© 2011INTERNATIONAL TRUCK AND ENGINE CORP.

https://truckmanualshub.com/

Figure 06WX8

RR AXLE PLUG CHART

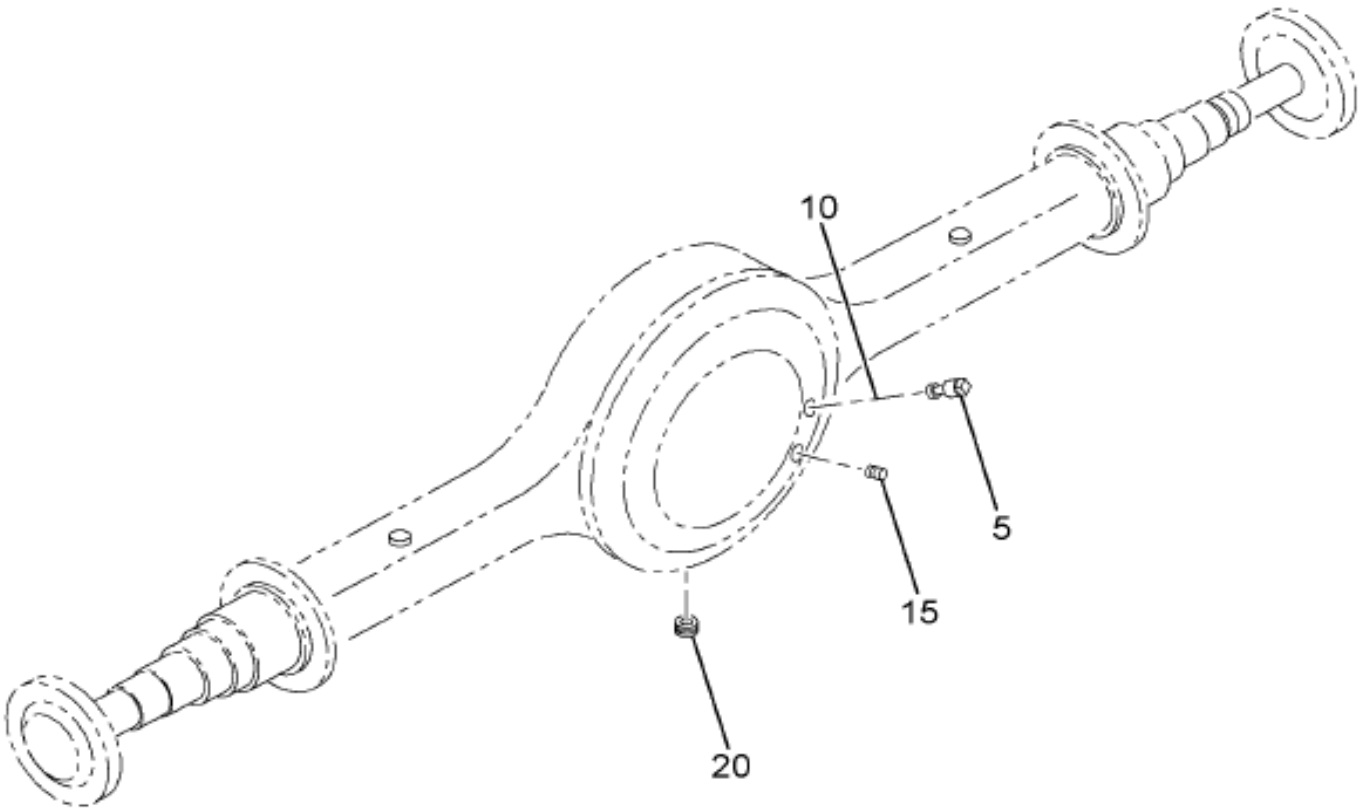

10-517-0002-A0 E09

Item	Part No.	Qty	Description	Kit	Var	Figure
5	586045C1	2	PLUG,SPECIAL 3/4-14 NPTF		0V5HL	
15	586048C1	2	PLUG,SPECIAL 1/2-14 NPTF		06XB0	
20	586049C1	2	PLUG,MAGNETIC DRAIN 3/4NF		06XGT	

COPYRIGHT© 2011INTERNATIONAL TRUCK AND ENGINE CORP.

https://truckmanualshub.com/

Figure 0P715

RR AXLE SHAFT MTG HDWE

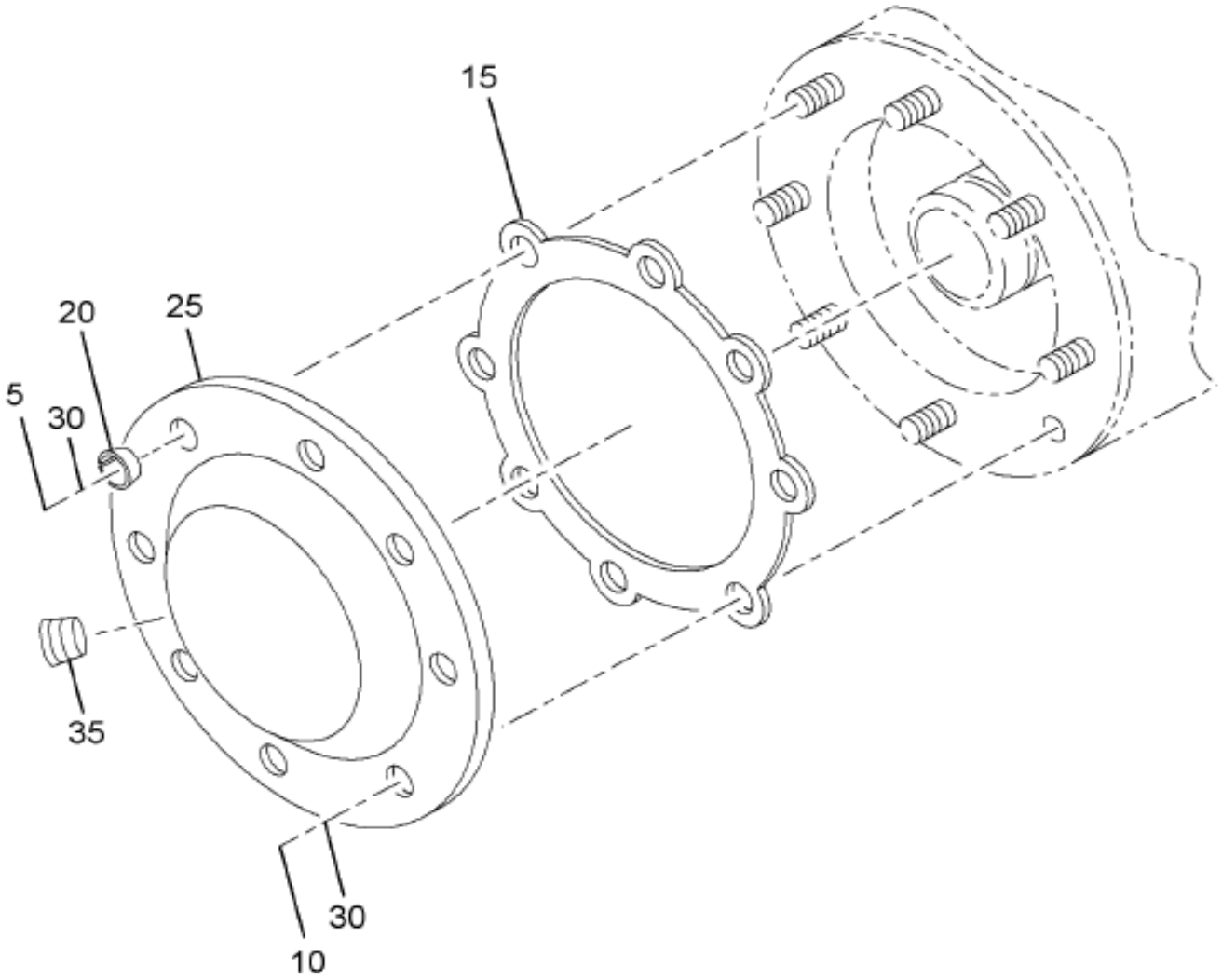

14-739-0005-01 D09

Item	Part No.	Qty	Description	Kit	Var	Figure
5	9412368	14	NUT,HEX LK 3/4NF		0P71X	
5	9412368	14	NUT,HEX LK 3/4NF		0P726	
10	2017187C1	2	BOLT,AXLE SHAFT FLG*3/4NC-2.0		0P71X	
10	2017187C1	2	BOLT,AXLE SHAFT FLG*3/4NC-2.0		0P726	
15	3566160C1	2	GASKET,AXLE SHAFT FLG 200 WE		0P71X	
15	3566160C1	2	GASKET,AXLE SHAFT FLG 200 WE		0P726	

Grp 14

COPYRIGHT© 2011INTERNATIONAL TRUCK AND ENGINE CORP.

https://truckmanualshub.com/

Figure 0P715

RR AXLE SHAFT MTG HDWE

Item	Part No.	Qty	Description	Kit	Var	Figure
30	3620312C1	16	WASHER,FLAT SPECIAL,ZINC,3.4MM		0P71X	
30	3620312C1	16	WASHER,FLAT SPECIAL,ZINC,3.4MM		0P726	

COPYRIGHT© 2011INTERNATIONAL TRUCK AND ENGINE CORP.

https://truckmanualshub.com/

Figure 076FG

RR SPRING SUSP INSTL

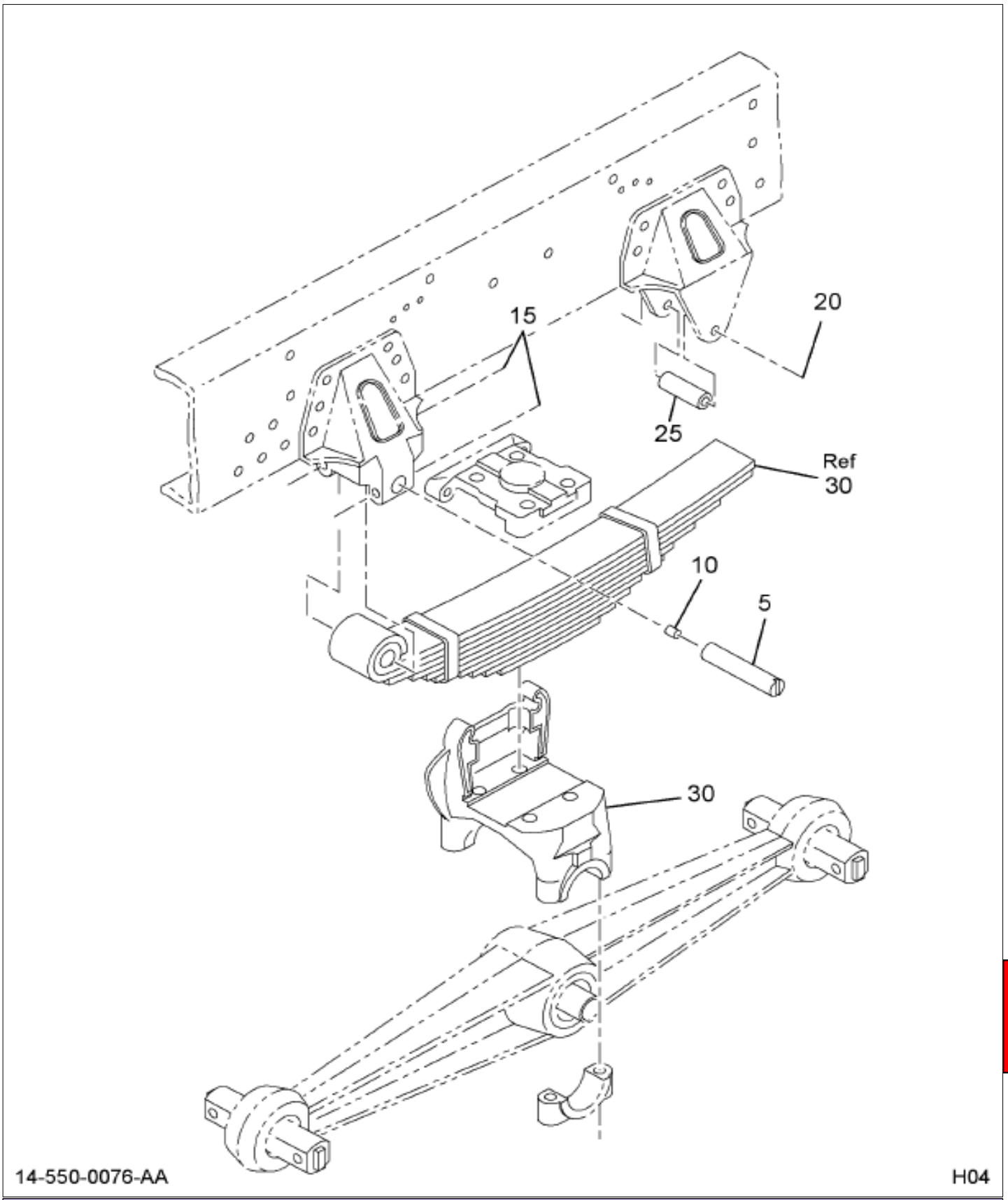

Item	Part No.	Qty	Description	Kit	Var	Figure
5	1611848C1	2	PIN,SPG HANGER		076FG	
10	109460	2	FITTING, 1/8 PTF SHORT 65D LUB		076FG	
15	24868R1	4	BOLT, 1/2 X 4 PHC TYPE 8		076FG	
15	25710R1	8	WASHER,FLAT 1/2 (.531X1.062X.1		076FG	
15	9412230	4	NUT HEX LOCK 1/2 NC		076FG	
20	25296R1	2	BOLT, 1/2 X 6-1/2 PHC TYPE 8		076FG	

Grp 14

COPYRIGHT© 2011INTERNATIONAL TRUCK AND ENGINE CORP.

https://truckmanualshub.com/

Figure 076FG

RR SPRING SUSP INSTL

Item	Part No.	Qty	Description	Kit	Var	Figure
20	9412230	2	NUT HEX LOCK 1/2 NC		076FG	
25	3505524C1	2	SPACER,REBOUND BOLT		076FG	
30	598909C92	1	SPRING & SADDLE ASSY RT440,460		076FX	598909C92
30	598910C92	1	SPRING & SADDLE ASSY RT440,460		076FX	598910C92

COPYRIGHT© 2011INTERNATIONAL TRUCK AND ENGINE CORP.

https://truckmanualshub.com/

Figure 598509C92

SPRING & SADDLE ASSY RT440,460

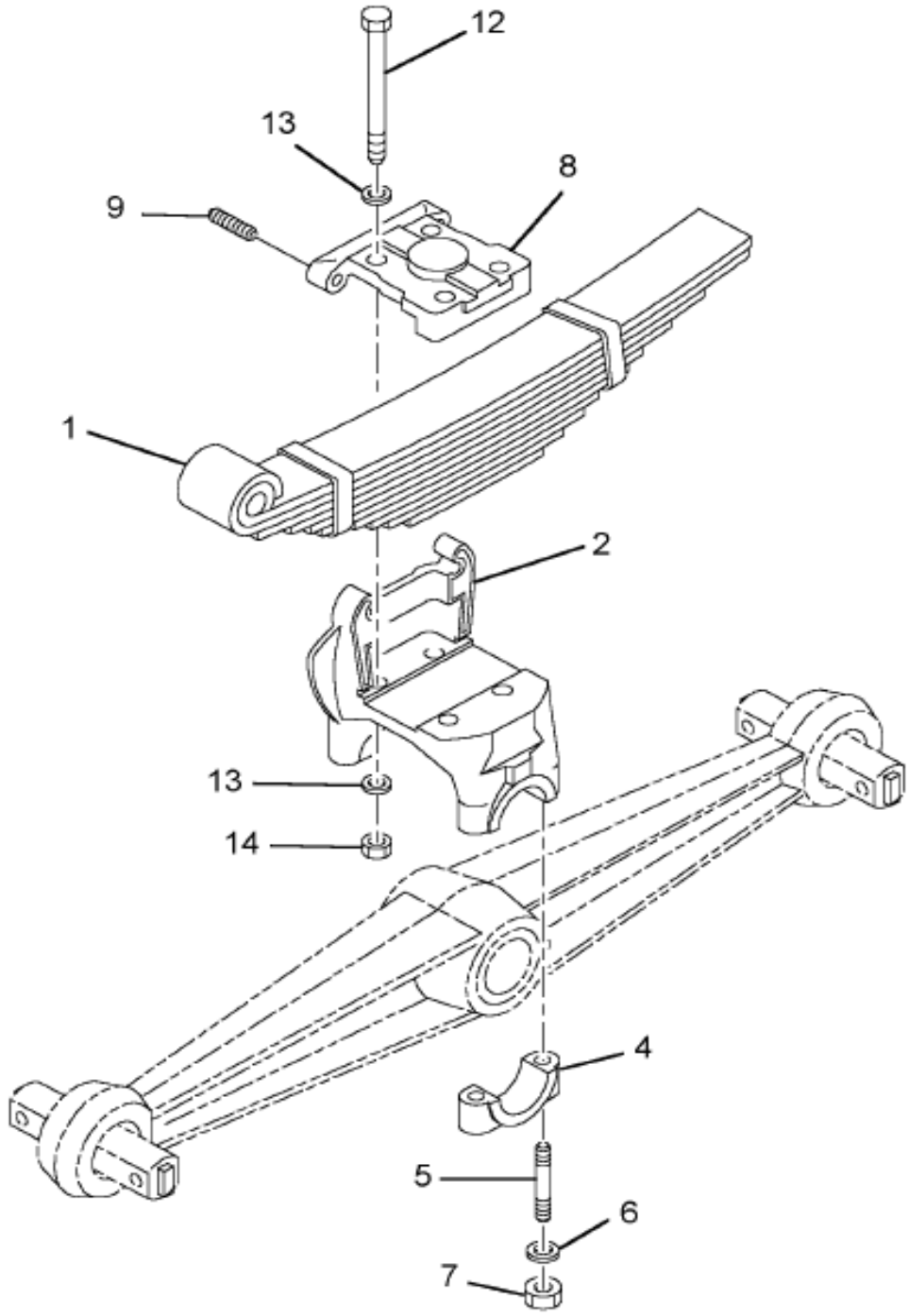

14-550-0032-00 A03

Item	Part No.	Qty	Description	Kit	Var	Figure
1	1610920C91	1	SPRING,ASSY. REAR			
2	423526C91	1	SADDLE,ASSY			
2	332548C1	1	SADDLE,SPRING BEAM			
4	124891R1	2	CAP,SPRING SADDLE			
5	130559R1	4	STUD,SPRING SADDLE CAP			
6	332547C1	4	WASHER,SPECIAL			

Grp 14

COPYRIGHT© 2011INTERNATIONAL TRUCK AND ENGINE CORP.

https://truckmanualshub.com/

Figure 598909C92

SPRING & SADDLE ASSY RT440,460

Item	Part No.	Qty	Description	Kit	Var	Figure
7	130564R1	4	NUT,SPG SADDLE CAP STUD			
8	443904C1	1	PAD,RR SPRING TOP			
9	12436R1	2	SCREW, 3/4X3-1/4 PHC SQ/HD C/P			
9	25529R1	2	NUT, 3/4 PHC TYPE 8			
9	131046	2	WASHER,LOCK 3/4 (ZINC PLATED)			
12	407955C1	4	BOLT,SPECIAL			
13	304645C1	8	WASHER,SPECIAL SADDLE STUD			
14	359798C1	4	NUT, 1-NF CAD P/T LOCK TYPE 8			
880		RF	NOTE: ASM BELOW COMPRISED OF ABOVE COMPONENTS			
881	598909C92	RF	SPRING & SADDLE ASSY RT440,460			

COPYRIGHT© 2011INTERNATIONAL TRUCK AND ENGINE CORP.

https://truckmanualshub.com/

Figure 598510C92

SPRING & SADDLE ASSY RT440,460

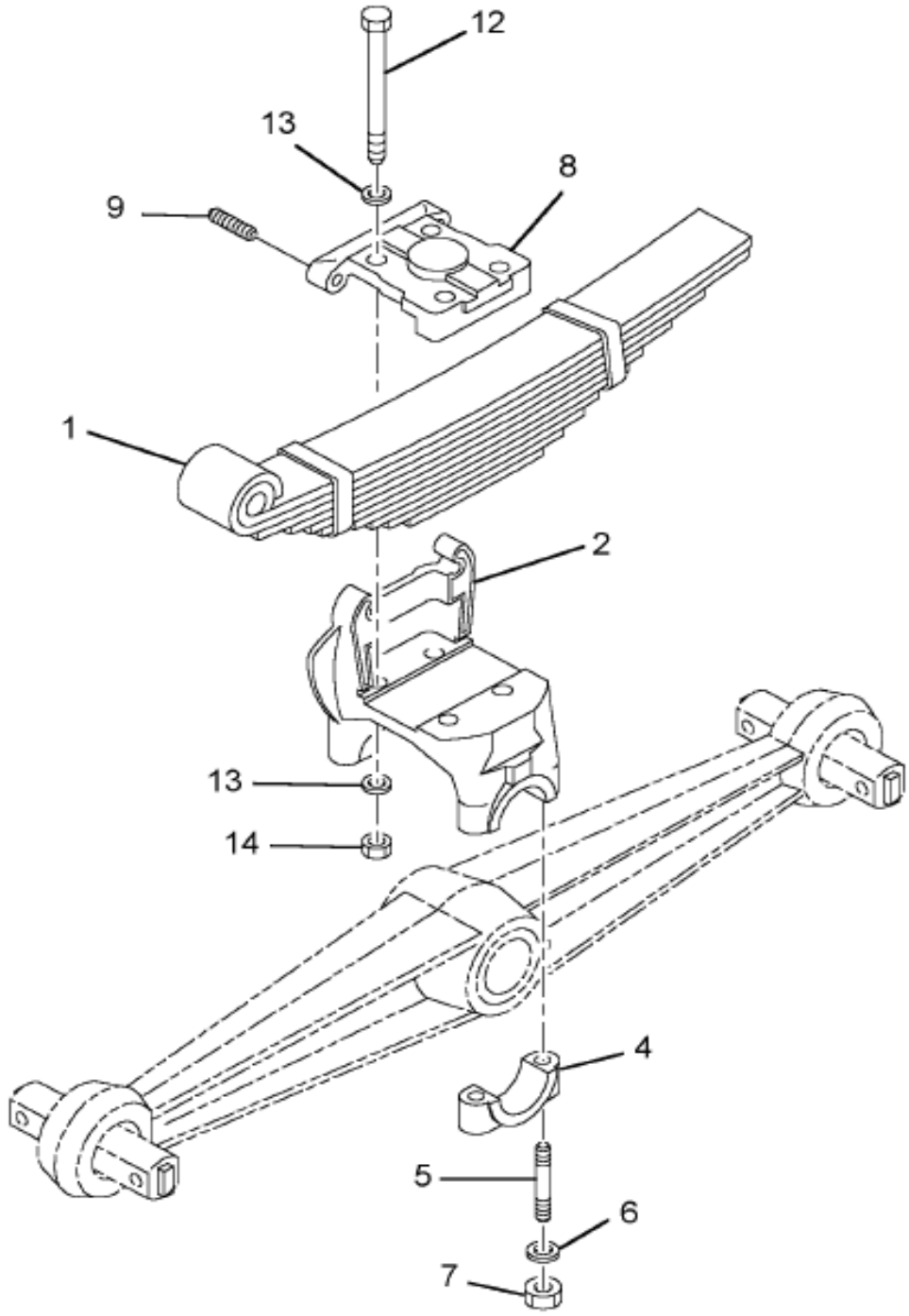

14-550-0032-00 A03

Item	Part No.	Qty	Description	Kit	Var	Figure
1	1610920C91	1	SPRING,ASSY. REAR			
2	423526C91	1	SADDLE,ASSY			
2	332548C1	1	SADDLE,SPRING BEAM			
4	124891R1	2	CAP,SPRING SADDLE			
5	130559R1	4	STUD,SPRING SADDLE CAP			
6	332547C1	4	WASHER,SPECIAL			

Grp 14

COPYRIGHT© 2011INTERNATIONAL TRUCK AND ENGINE CORP.

https://truckmanualshub.com/

Figure 598910C92

SPRING & SADDLE ASSY RT440,460

Item	Part No.	Qty	Description	Kit	Var	Figure
7	130564R1	4	NUT,SPG SADDLE CAP STUD			
8	443904C1	1	PAD,RR SPRING TOP			
9	12436R1	2	SCREW, 3/4X3-1/4 PHC SQ/HD C/P			
9	25529R1	2	NUT, 3/4 PHC TYPE 8			
9	131046	2	WASHER,LOCK 3/4 (ZINC PLATED)			
12	407955C1	4	BOLT,SPECIAL			
13	304645C1	8	WASHER,SPECIAL SADDLE STUD			
14	359798C1	4	NUT, 1-NF CAD P/T LOCK TYPE 8			
880		RF	NOTE: ASM BELOW COMPRISED OF ABOVE COMPONENTS			
881	598910C92	RF	SPRING & SADDLE ASSY RT440,460			

COPYRIGHT© 2011INTERNATIONAL TRUCK AND ENGINE CORP.

https://truckmanualshub.com/

Figure 0FVCQ
RR SUSP PARTS; TORQUE ROD ASM, FWD/RR; 23 3/4"

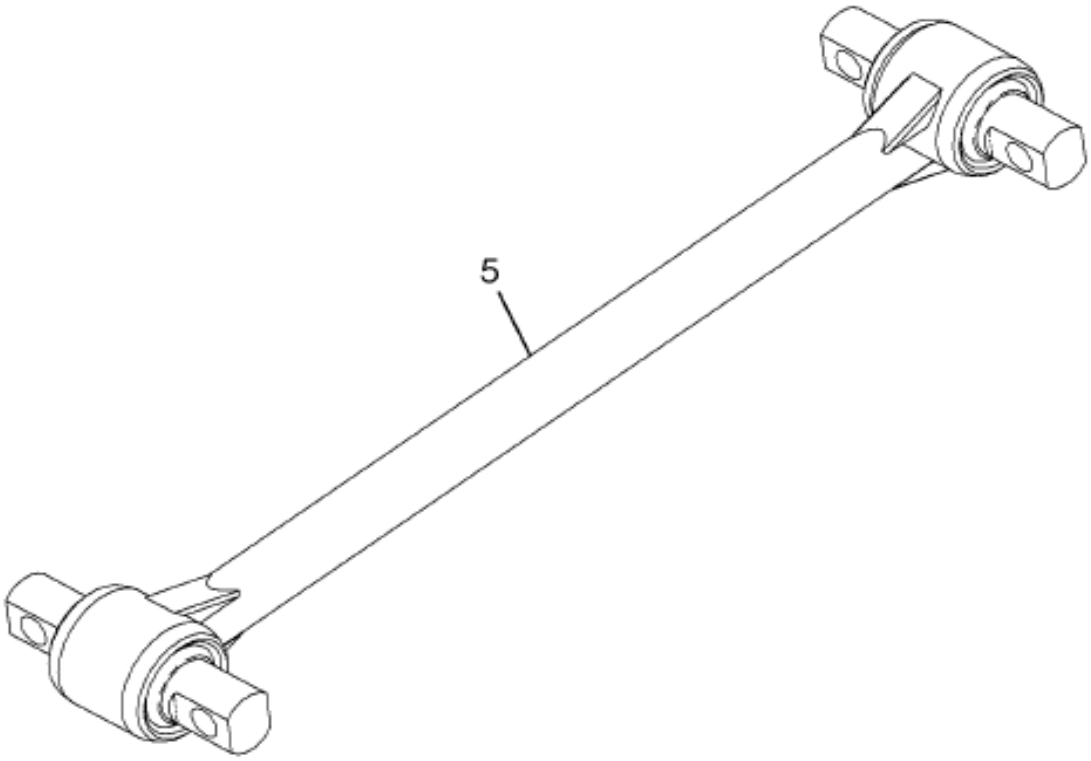

14-758-0003-01 H11

Item	Part No.	Qty	Description	Kit	Var	Figure
5	1516350C92	1	ROD, ASSY, TORQUE, LENGTH 23.7		0FVCQ	

COPYRIGHT© 2011INTERNATIONAL TRUCK AND ENGINE CORP.

https://truckmanualshub.com/

Figure 0FVR5

RR SUSP PARTS; TORQUE ROD ASM, RR/RR; 29"

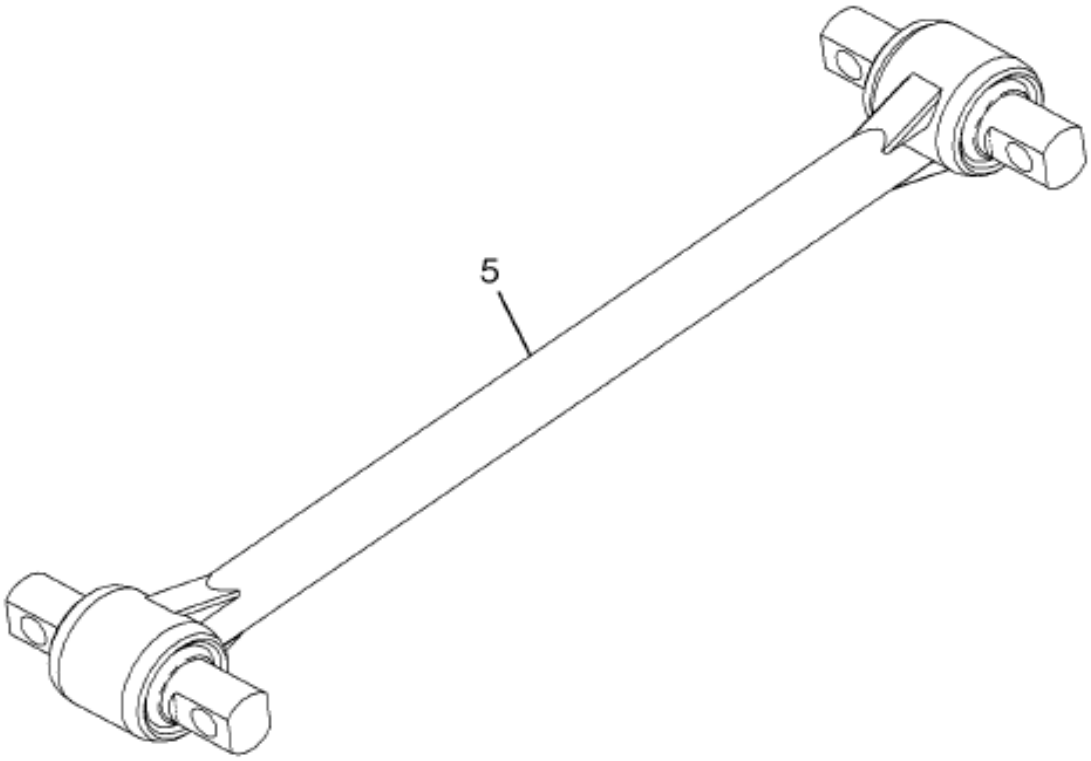

14-758-0003-01 H11

Item	Part No.	Qty	Description	Kit	Var	Figure
5	1661935C92	1	ROD, ASSY, TORQUE, LENGTH 29 I		0FVR5	

COPYRIGHT© 2011INTERNATIONAL TRUCK AND ENGINE CORP.

https://truckmanualshub.com/

Figure 076X5
SUSP BEAM INSTL; REAR, HENDRICKSON

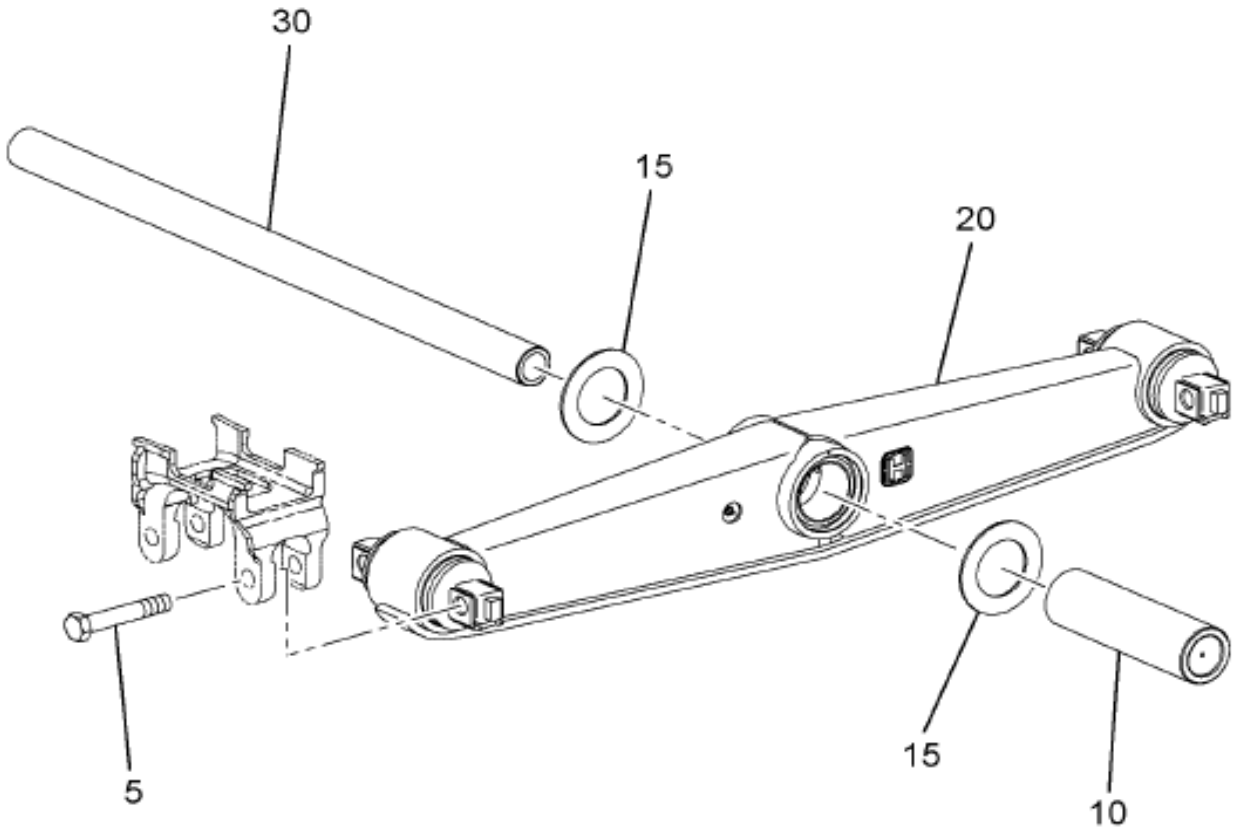

14-323-0026-AA K02

Item	Part No.	Qty	Description	Kit	Var	Figure
5	25996R1	8	BOLT 1 X 6 PHC TYPE 8		0FSGB	
5	390312C1	16	WASHER, 1.062 X 2.000 X .134 H		0FSGB	
5	9413986	8	NUT HEX LOCK 1"-8 NC		0FSGB	
20	3536528C91	2	BEAM,EQUAL W/RUBR BUSH 54" 46K		0FSGB	3536528C91
30	124896R2	1	TUBE,EQUAL BEAM CROSS		0FSGB	

Grp 14

COPYRIGHT© 2011INTERNATIONAL TRUCK AND ENGINE CORP.

https://truckmanualshub.com/

Figure 3330528C91
BEAM,EQUAL W/RUBR BUSH 54" 46K

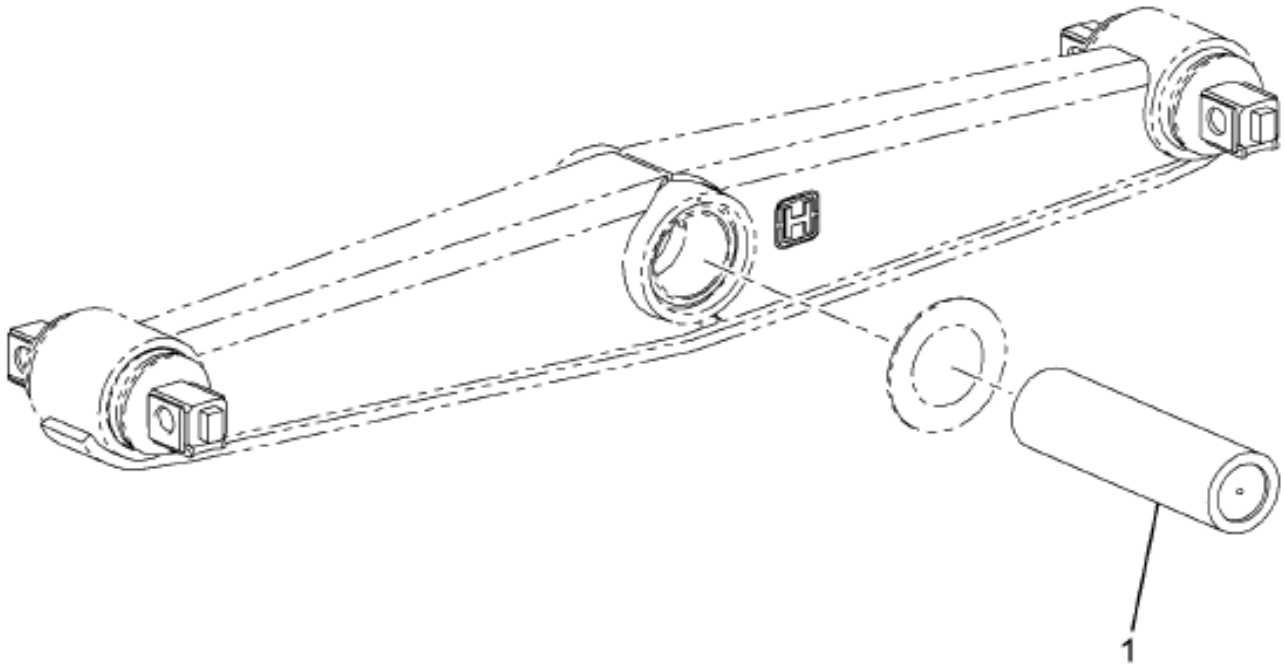

14-323-0017-00 H04

Item	Part No.	Qty	Description	Kit	Var	Figure
1	ZAK294835L	1	BUSHING,EQUAL BEAM CTR			
800		RF	NOTE: THE FOLLOWING PARTS ARE			
			NON-ILLUSTRATED			
801	1691140C91	KT	KIT,BEAM END BUSH RUBR 34-52K			
880		RF	NOTE: ASM BELOW COMPRISED OF ABOVE			
			COMPONENTS			

COPYRIGHT© 2011INTERNATIONAL TRUCK AND ENGINE CORP.

https://truckmanualshub.com/

Figure 3536528C91

BEAM,EQUAL W/RUBR BUSH 54" 46K

Item	Part No.	Qty	Description	Kit	Var	Figure
881	3536528C91	RF	BEAM,EQUAL W/RUBR BUSH 54" 46K			

COPYRIGHT© 2011INTERNATIONAL TRUCK AND ENGINE CORP.

https://truckmanualshub.com/

Figure 0V3F3

SUSP BRKT INSTL; TRANSVERSE TORQUE ROD

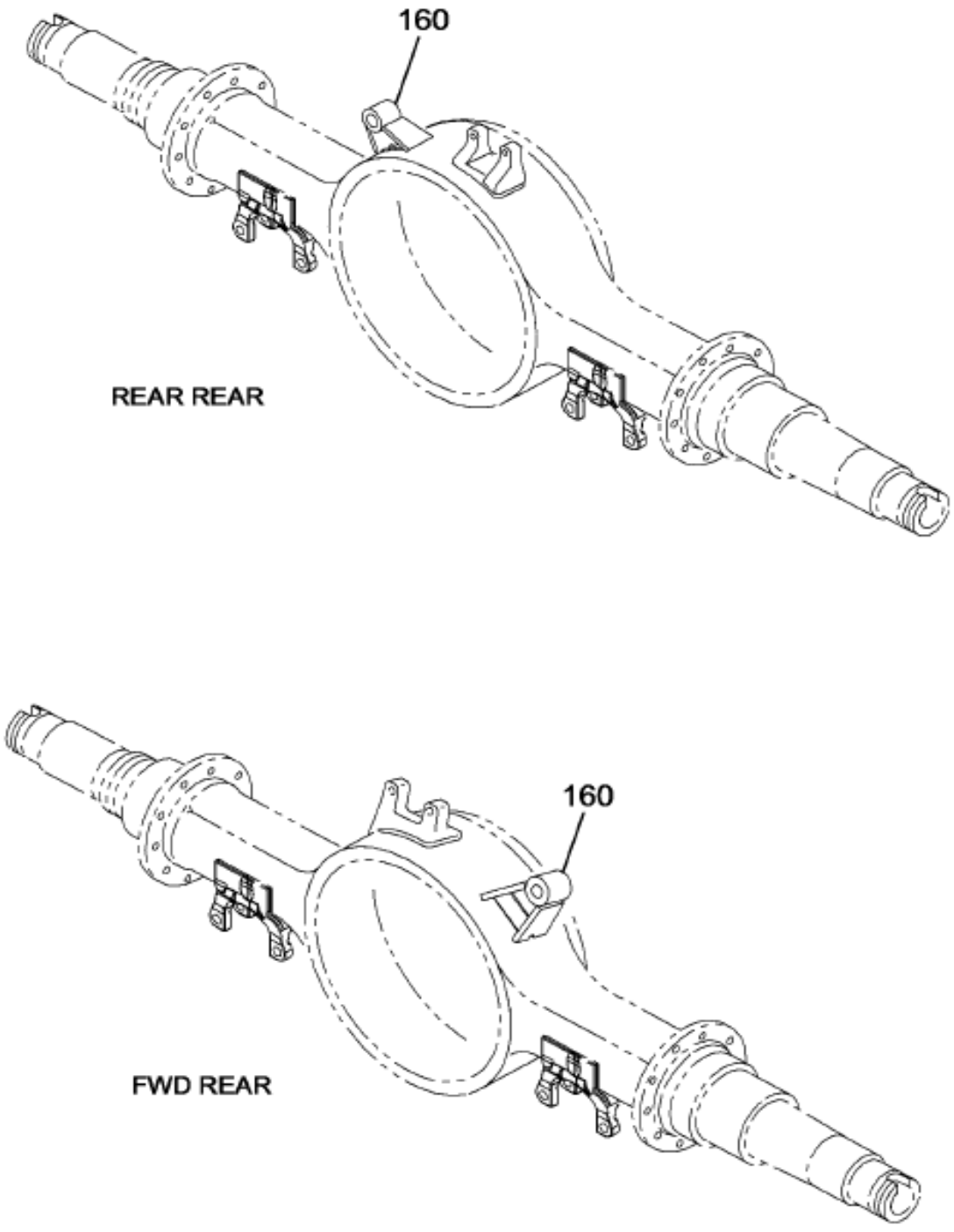

Figure 1 of 2

COPYRIGHT© 2011INTERNATIONAL TRUCK AND ENGINE CORP.

https://truckmanualshub.com/

Figure 0V3F3

SUSP BRKT INSTL; TRANSVERSE TORQUE ROD

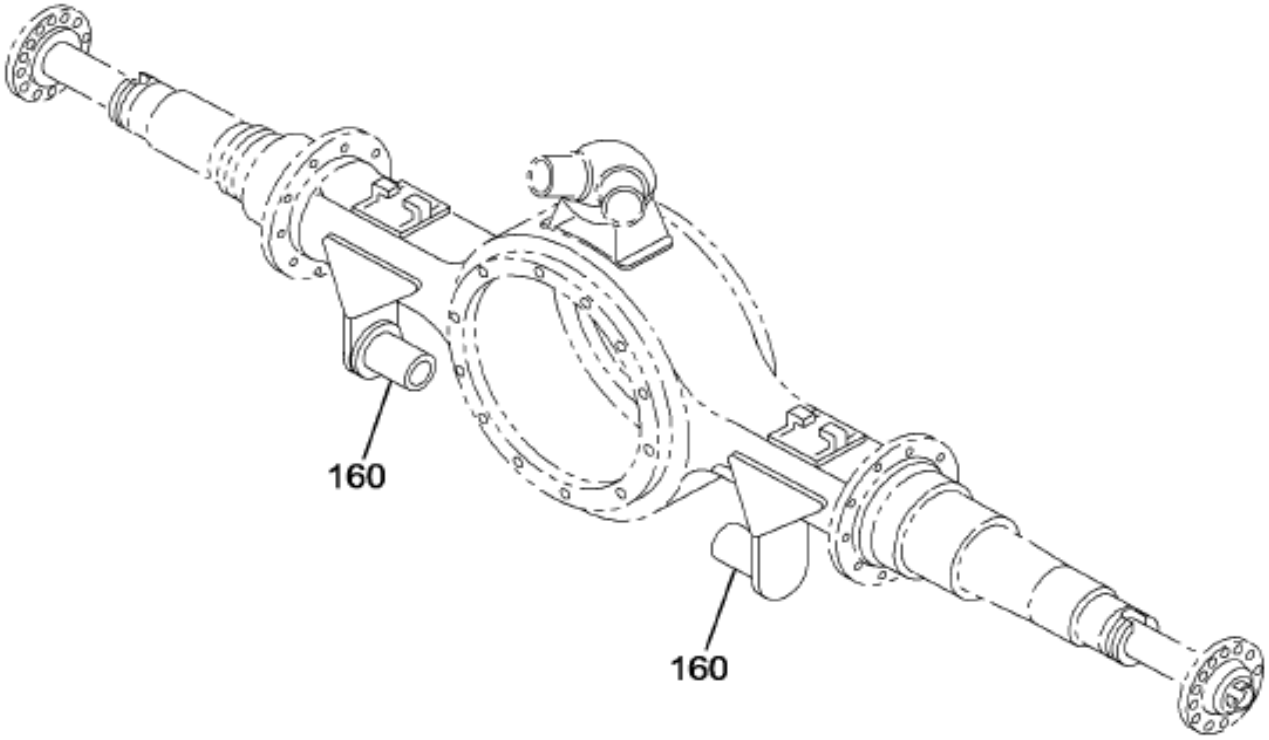

14-598-0003-01 H09

Item	Part No.	Qty	Description	Kit	Var	Figure
160	1668798C1	2	BRACKET,TORQUE ROD TRANSVERSE		0VJQ5	

Grp 14

COPYRIGHT© 2011INTERNATIONAL TRUCK AND ENGINE CORP.

https://truckmanualshub.com/

Figure 07K1W

TORQUE ROD INSTL; LONGITUDINAL, W/HEND RT SUSP

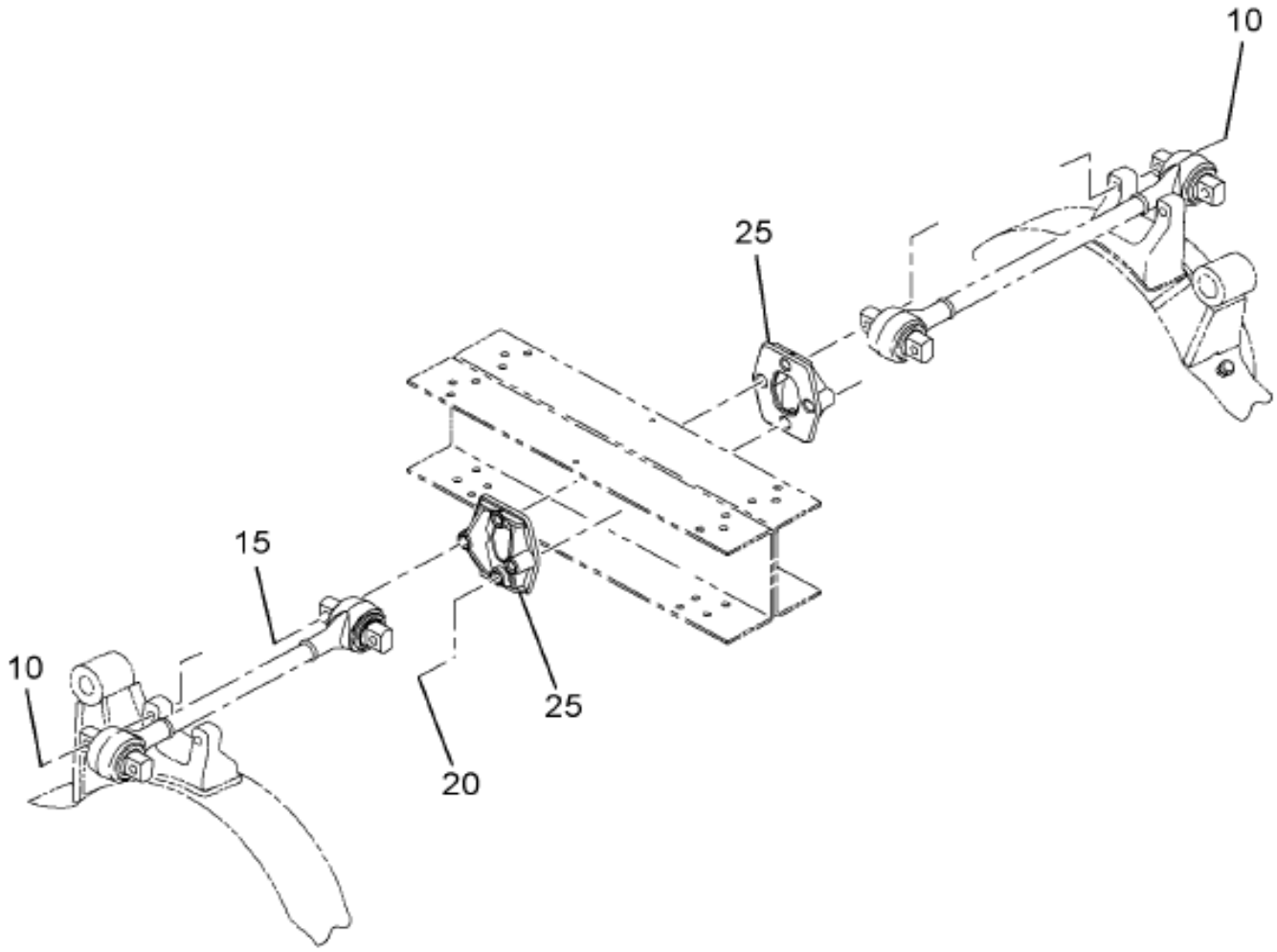

14-552-0043-02 H04

Item	Part No.	Qty	Description	Kit	Var	Figure
10	31077R1	4	BOLT, M16 X 100 PHC CL 10.9 FL		0LFDG	
10	30756R1	4	NUT,HEX M16 PRVTRQ		0LFDG	
15	576187C1	2	BOLT,FLGD HEX HEAD 5/8-18		0LFDG	
15	414089C1	2	NUT, FLG HD LK 5/8 NF		0LFDG	
25	752999C1	2	BRACKET,TORQUE ROD FRAME		0LFDG	

COPYRIGHT© 2011INTERNATIONAL TRUCK AND ENGINE CORP.

https://truckmanualshub.com/

Figure 07KYK

TRANSVERSE TORQUE ROD INSTL; W/HEND RT SUSP

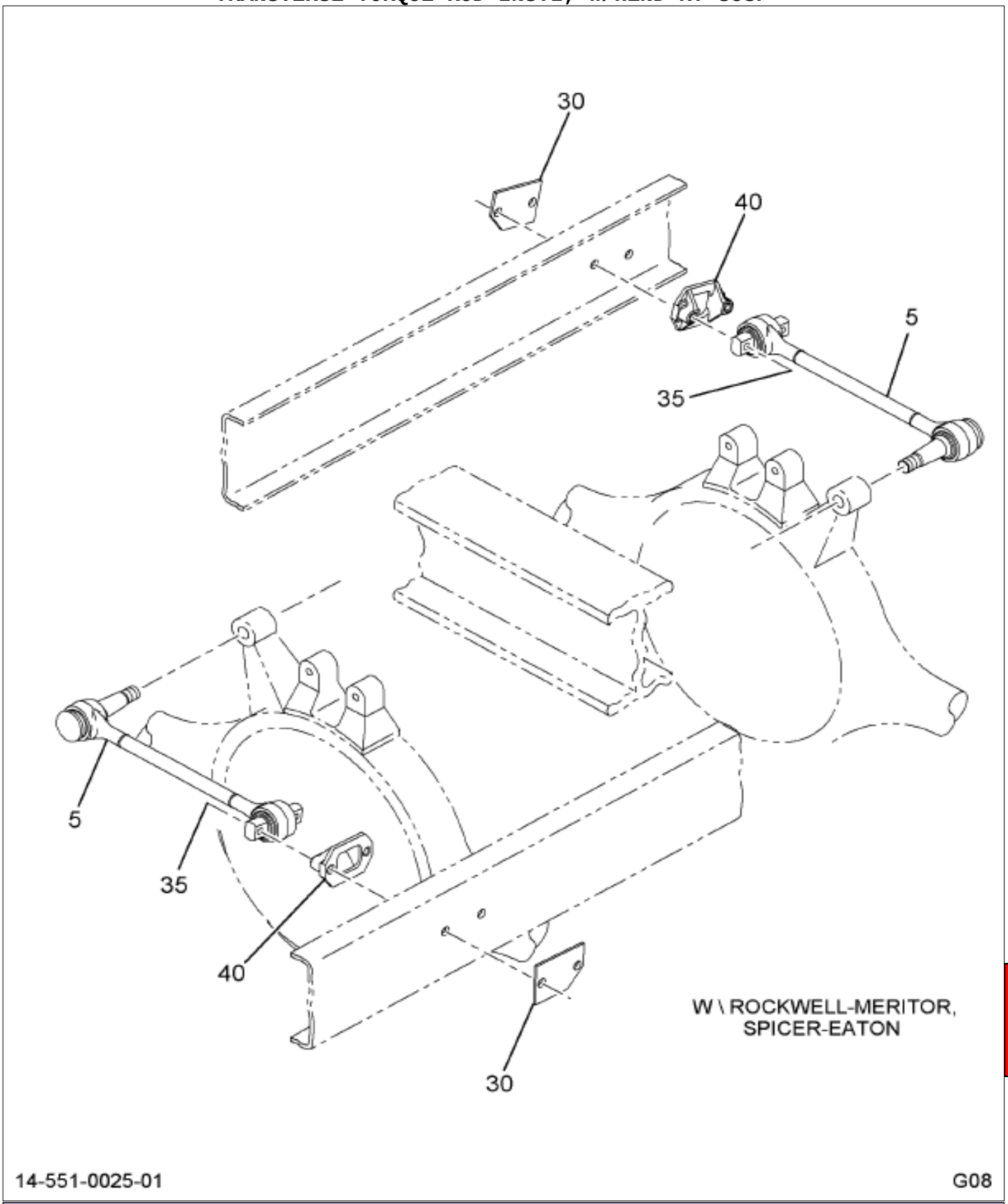

Item	Part No.	Qty	Description	Kit	Var	Figure
5	3581270C1	2	ROD,TORQUE SOLID ROD - 610MM L		07KYK	
5		REF	WASHER, 1.312X2.750X.134 P		07KYK	
5		REF	NUT, 1-1/4-NF P/T LOCK TYPE 8		07KYK	
30	1514921C1	2	BAR,TORQUE ROD BRKT		07KYK	
35	31078R1	4	BOLT, M16 X 120 PHC CL 10.9 FL		07KYK	
35	30756R1	4	NUT,HEX M16 PRVTRQ		07KYK	

Grp 14

COPYRIGHT© 2011INTERNATIONAL TRUCK AND ENGINE CORP.

https://truckmanualshub.com/

Figure 07KYK

TRANSVERSE TORQUE ROD INSTL; W/HEND RT SUSP

Item	Part No.	Qty	Description	Kit	Var	Figure
40	752999C1	2	BRACKET,TORQUE ROD FRAME		07KYK	

COPYRIGHT© 2011INTERNATIONAL TRUCK AND ENGINE CORP.

https://truckmanualshub.com/

Figure 0VJDX

WEIGHT CAPACITY RATING; RR RR AXLE

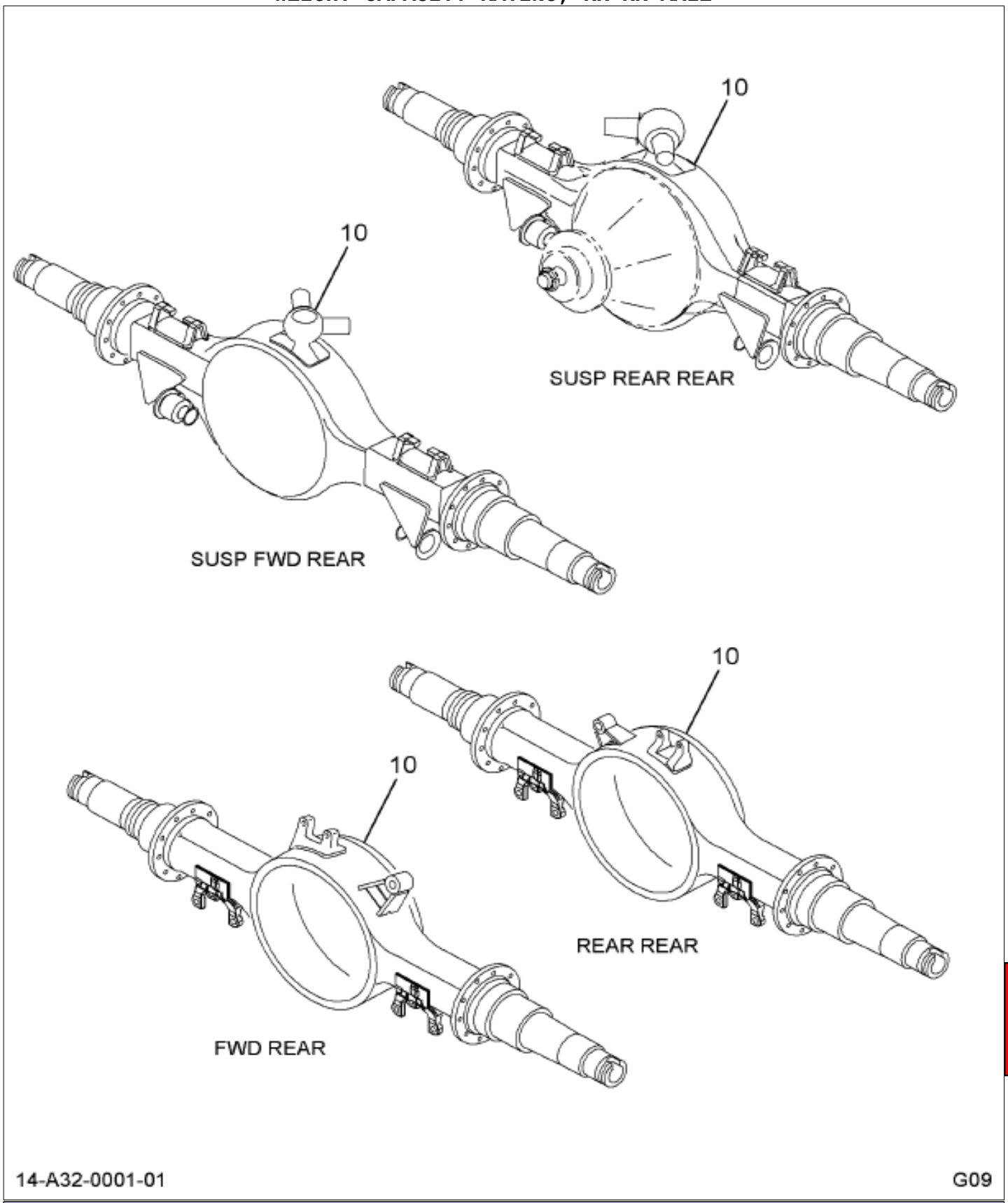

Item	Part No.	Qty	Description	Kit	Var	Figure
10	3705303F91	1	R/R AXLE,46K WT CAPACITY		0VJPZ	

Grp 14

COPYRIGHT© 2011INTERNATIONAL TRUCK AND ENGINE CORP.

https://truckmanualshub.com/

Figure 06ZMP
XMBR SUSP BRKT; SEVERE SERVICE

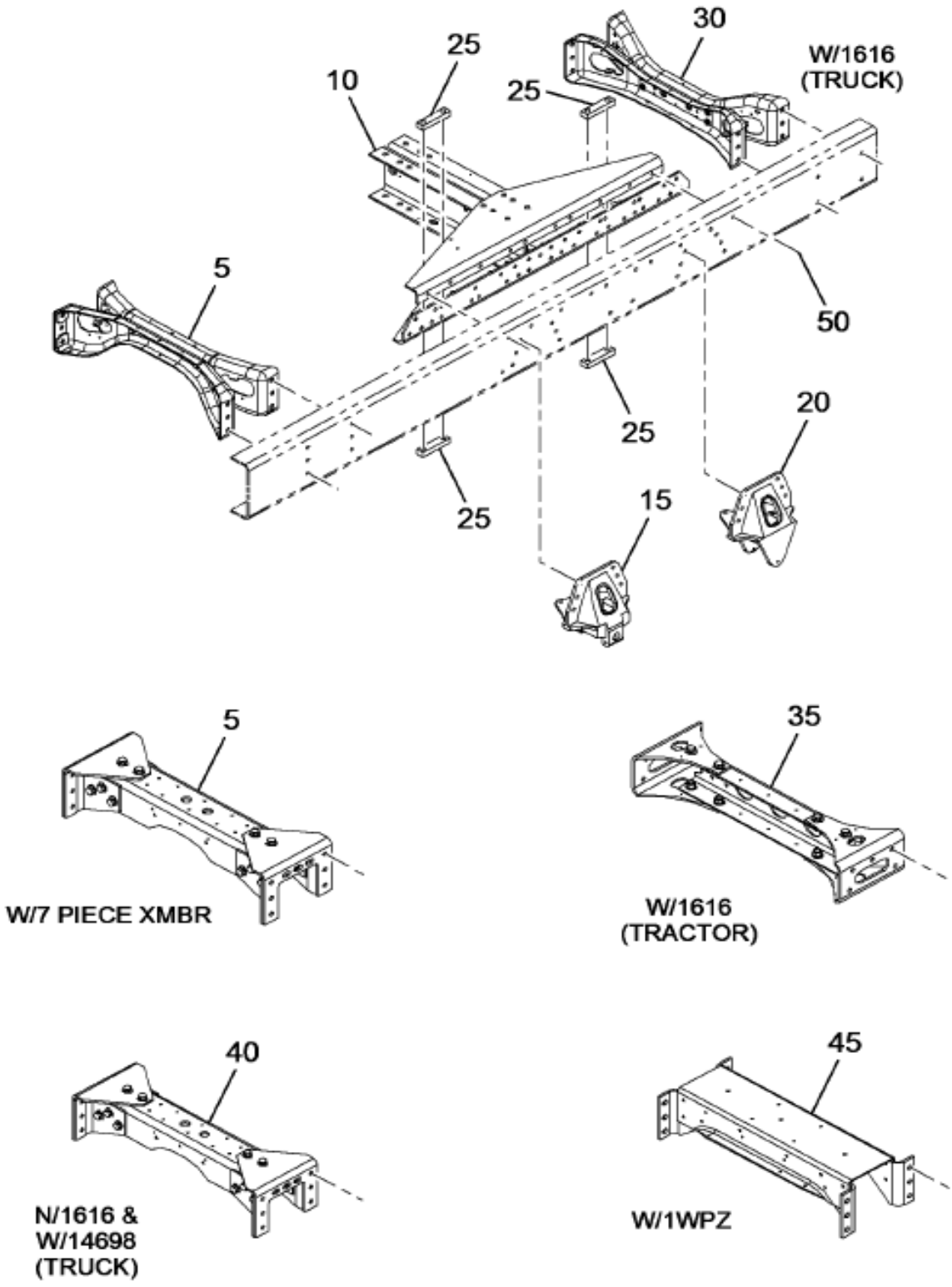

Item	Part No.	Qty	Description	Kit	Var	Figure
5	1670010C94	1	CROSSMEMBER,SUSPENSION 7 PIECE		06ZMP	1670010C94
5	3691088C1	8	BOLT, HUCK-SPIN 5/8 DIA -16		06ZMP	
5	3691083C1	8	NUT, HUCK SPIN COLLAR 5/8 DIA		06ZMP	
10	3594985C1	2	CROSSMEMBER, BOGIE		0LF9H	
10	31086R1	24	BOLT, M20 X 50 PHC CL 10.9 FLG		06ZMF	
10	40204R1	24	NUT,HEX METRIC PREV. (SPR)		06ZMF	

COPYRIGHT© 2011INTERNATIONAL TRUCK AND ENGINE CORP.

https://truckmanualshub.com/

Figure 06ZMF
XMBR SUSP BRKT; SEVERE SERVICE

Item	Part No.	Qty	Description	Kit	Var	Figure
10	3594748C1	2	GUSSET,UPPER BOGIE		06ZMF	
10	3691086C1	2	BOLT, HUCK-SPIN 5/8 DIA -12		0M2BP	
10	3691086C1	18	BOLT, HUCK-SPIN 5/8 DIA -12		06ZMF	
10	3691083C1	2	NUT, HUCK SPIN COLLAR 5/8 DIA		0M2BP	
10	3691083C1	18	NUT, HUCK SPIN COLLAR 5/8 DIA		06ZMF	
10	3594750C3	1	GUSSET,, LOWER BOGIE LH		06ZMF	
10	3594751C3	1	GUSSET,, LOWER BOGIE RH		06ZMF	
15	1516195C1	2	BRACKET,RR SPG F/R R400/460		06ZP2	
15	3691089C1	12	BOLT, HUCK-SPIN 5/8 DIA -20		06ZP2	
15	3691083C1	12	NUT, HUCK SPIN COLLAR 5/8 DIA		06ZP2	
20	2023480C1	2	BRACKET,REAR SPRING		06ZP2	
20	3691089C1	12	BOLT, HUCK-SPIN 5/8 DIA -20		06ZP2	
20	3691083C1	12	NUT, HUCK SPIN COLLAR 5/8 DIA		06ZP2	
25	2038387C2	8	BAR,SPACER BRKT MTG ETC		06ZMF	
25	30756R1	8	NUT,HEX M16 PRVTRQ		06ZMF	
25	31077R1	8	BOLT, M16 X 100 PHC CL 10.9 FL		06ZMF	
30	1664559C93	1	CROSSMEMBER, ASSY		0FVX7	1664559C93
30	3691086C1	8	BOLT, HUCK-SPIN 5/8 DIA -12		0FVX7	
30	3691083C1	8	NUT, HUCK SPIN COLLAR 5/8 DIA		0FVX7	

COPYRIGHT© 2011INTERNATIONAL TRUCK AND ENGINE CORP.

https://truckmanualshub.com/

Figure 1664559C93
CROSSMEMBER, ASSY

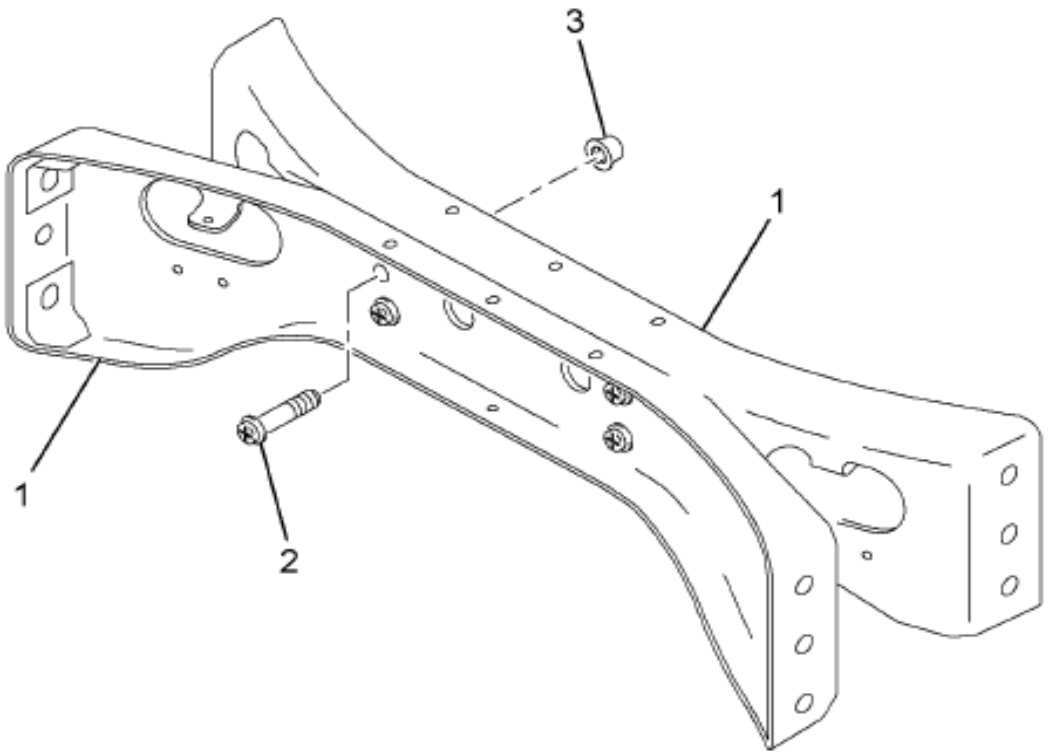

01-004-0099-00 C05

Item	Part No.	Qty	Description	Kit	Var	Figure
1	1660091C2	2	C MEMBER			
2	3691076C1	4	BOLT, HUCK-SPIN 1/2 DIA -8			
3	3691074C1	4	NUT, HUCK SPIN COLLAR 1/2 DIA			
880		RF	NOTE: ASM BELOW COMPRISED OF ABOVE COMPONENTS			
881	1664559C93	RF	CROSSMEMBER, ASSY			

COPYRIGHT© 2011INTERNATIONAL TRUCK AND ENGINE CORP.

https://truckmanualshub.com/

Figure 1670010C94
CROSSMEMBER,SUSPENSION 7 PIECE

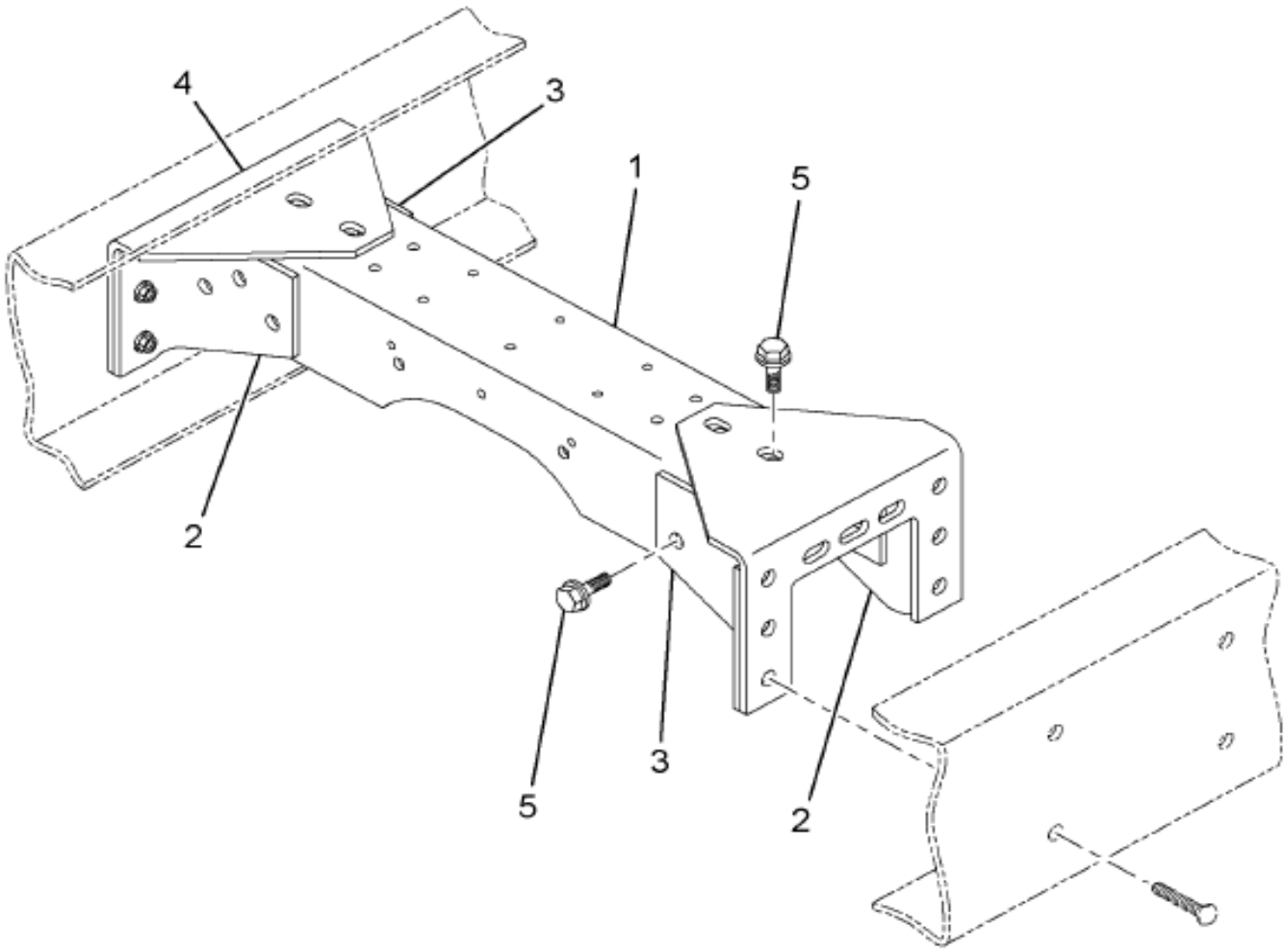

01-004-0241-01 G04

Item	Part No.	Qty	Description	Kit	Var	Figure
1	556936C2	1	CROSSMEMBER,INTERMEDIATE			
1	556936C3	1	CROSSMEMBER,INTMD			
2	556938C3	2	BRACKET,XMBR LHF/RHR			
3	556939C3	2	BRACKET,XMBR RHF/LHR			
4	556940C3	2	GUSSET INTMD XMBR			
4	556940C4	2	GUSSET,FRAME XMBR LT & RT			

Grp 14

COPYRIGHT© 2011INTERNATIONAL TRUCK AND ENGINE CORP.

https://truckmanualshub.com/

Figure 1670010C94

CROSSMEMBER,SUSPENSION 7 PIECE

Item	Part No.	Qty	Description	Kit	Var	Figure
5	414078C1	16	BOLT HH FLANGE*5/8-18UNRFX2.0			
5	414089C1	16	NUT, FLG HD LK 5/8 NF			
880		RF	NOTE: ASM BELOW COMPRISED OF ABOVE COMPONENTS			
881	1670010C94	RF	CROSSMEMBER,SUSPENSION 7 PIECE			

COPYRIGHT© 2011INTERNATIONAL TRUCK AND ENGINE CORP.

https://truckmanualshub.com/

Group 15
Fuel Tanks

COPYRIGHT© 2011INTERNATIONAL TRUCK AND ENGINE CORP.

https://truckmanualshub.com/
Figure 0KHQ8
FUEL HOSING INSTL; W/CUM ISM ENG & W/LSM & DUAL UC TANKS

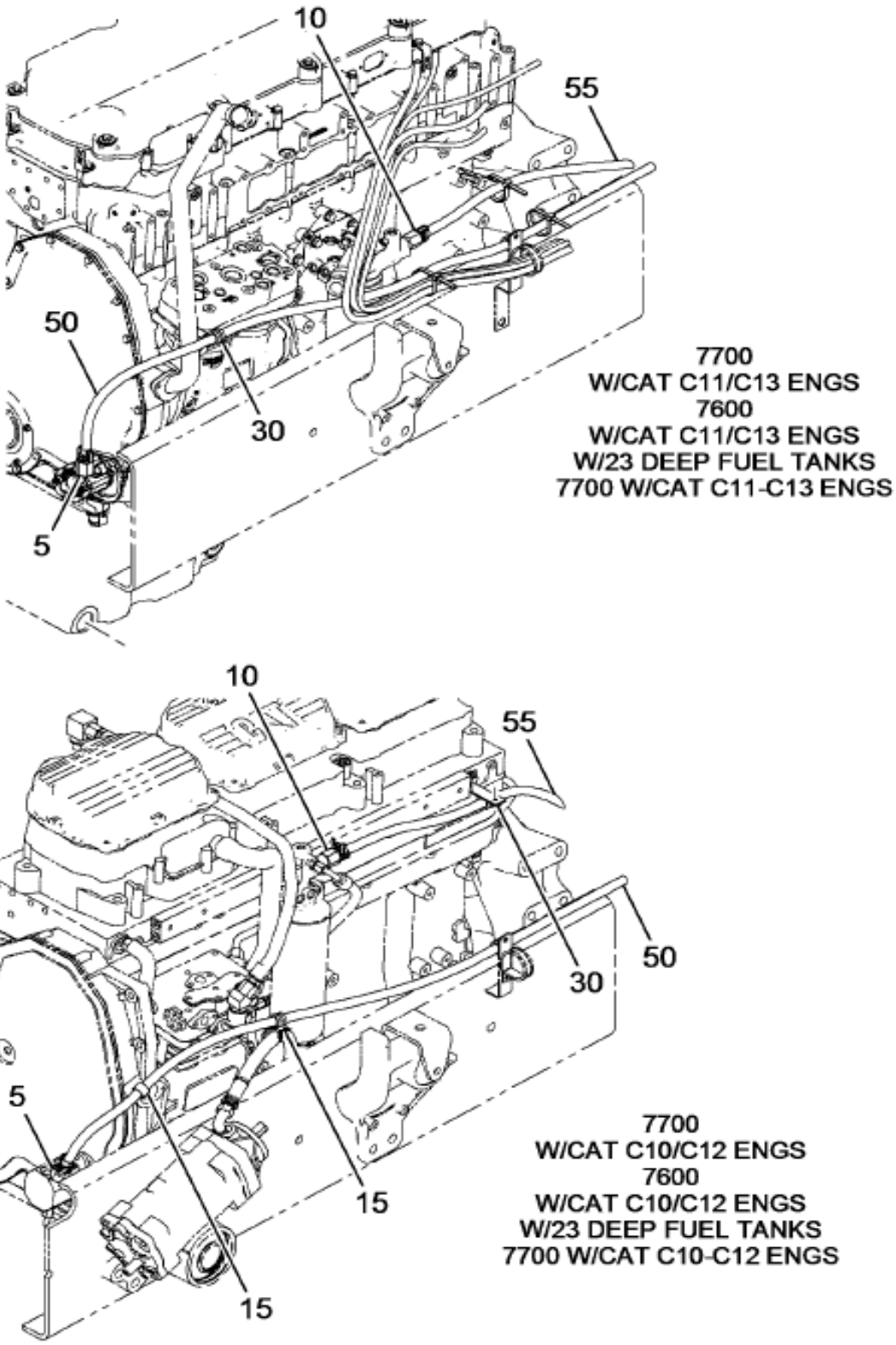

15-336-0176-01 F11

Figure 1 of 6

COPYRIGHT© 2011INTERNATIONAL TRUCK AND ENGINE CORP.

https://truckmanualshub.com/

Figure 0KHQ8

FUEL HOSING INSTL; W/CUM ISM ENG & W/LSM & DUAL UC TANKS

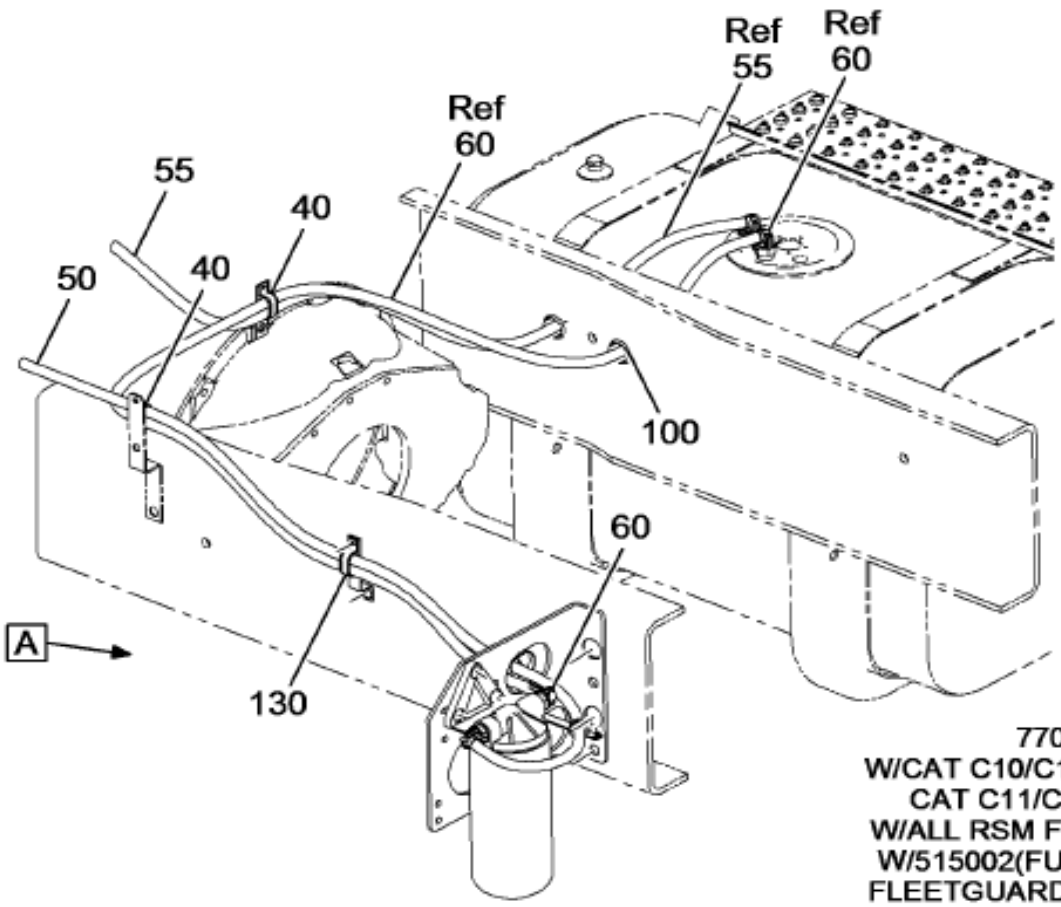

7700
W/CAT C10/C12 ENGS OR
CAT C11/C13 ENGS
W/ALL RSM FUEL TANKS
W/515002(FUEL FILTER,
FLEETGUARD)MOUNTED
OUTSIDE LEFT RAIL

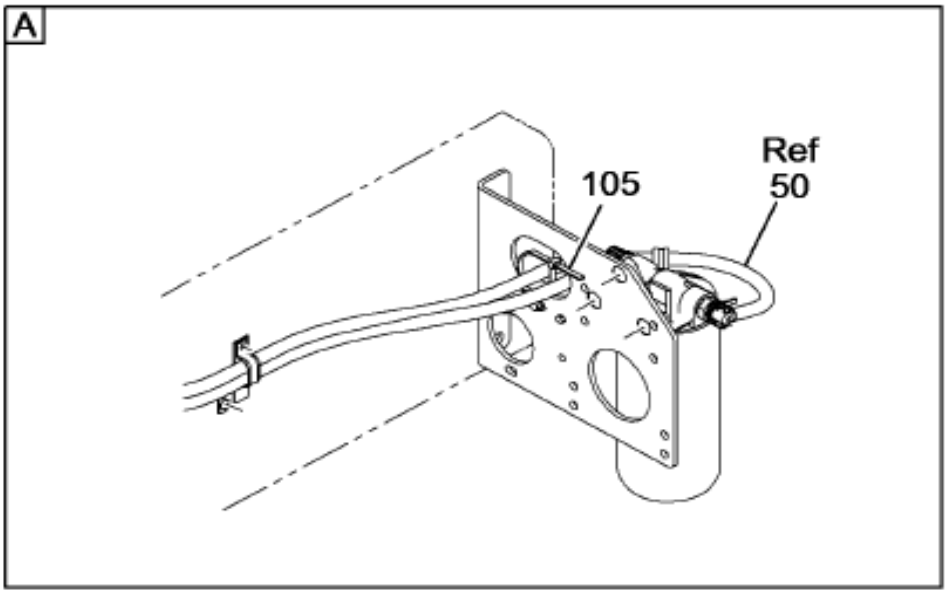

15-336-0705-01 F11

Grp 15

Figure 2 of 6

COPYRIGHT© 2011INTERNATIONAL TRUCK AND ENGINE CORP.

https://truckmanualshub.com/
Figure 0KHQ8
FUEL HOSING INSTL; W/CUM ISM ENG & W/LSM & DUAL UC TANKS

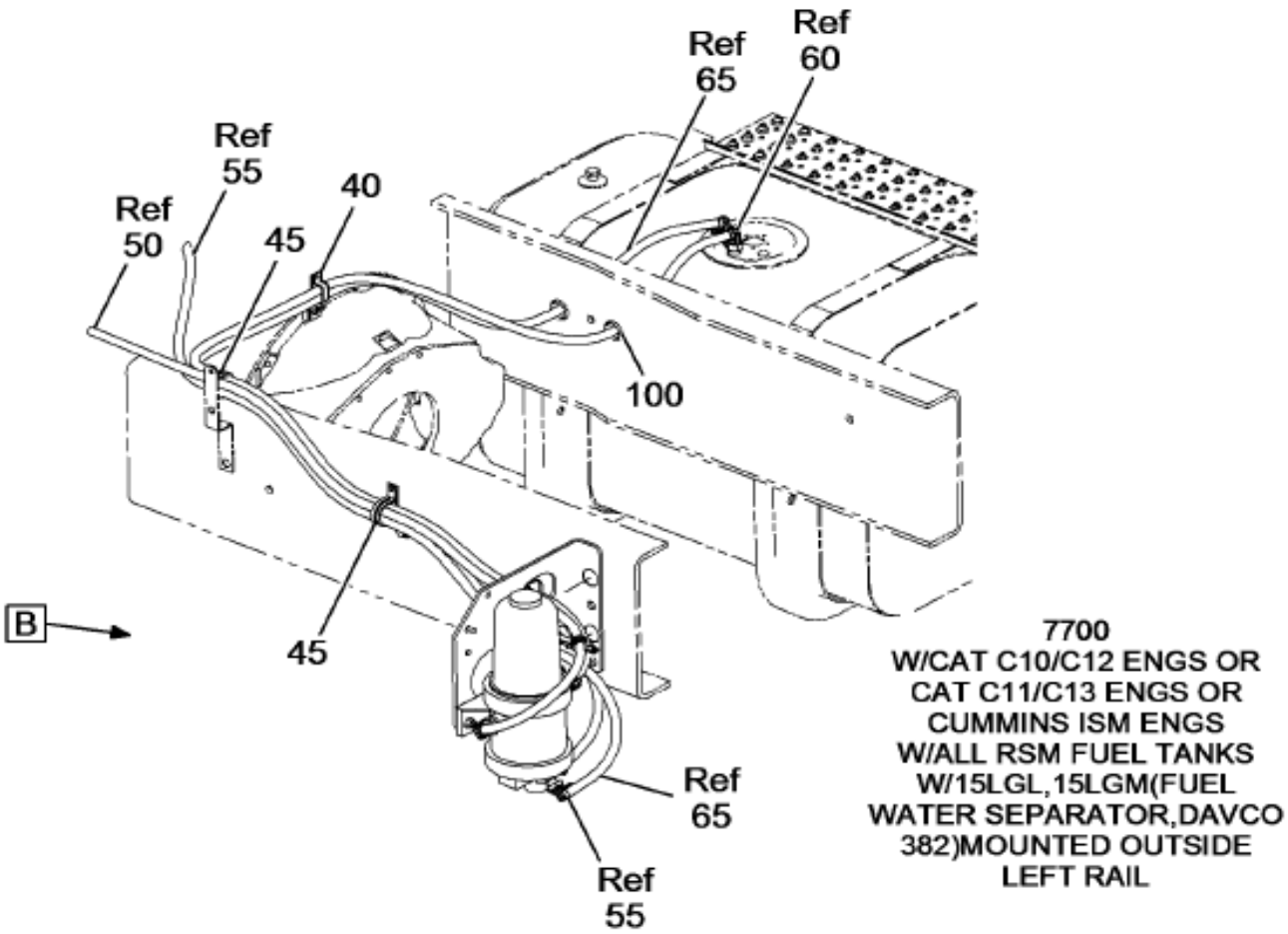

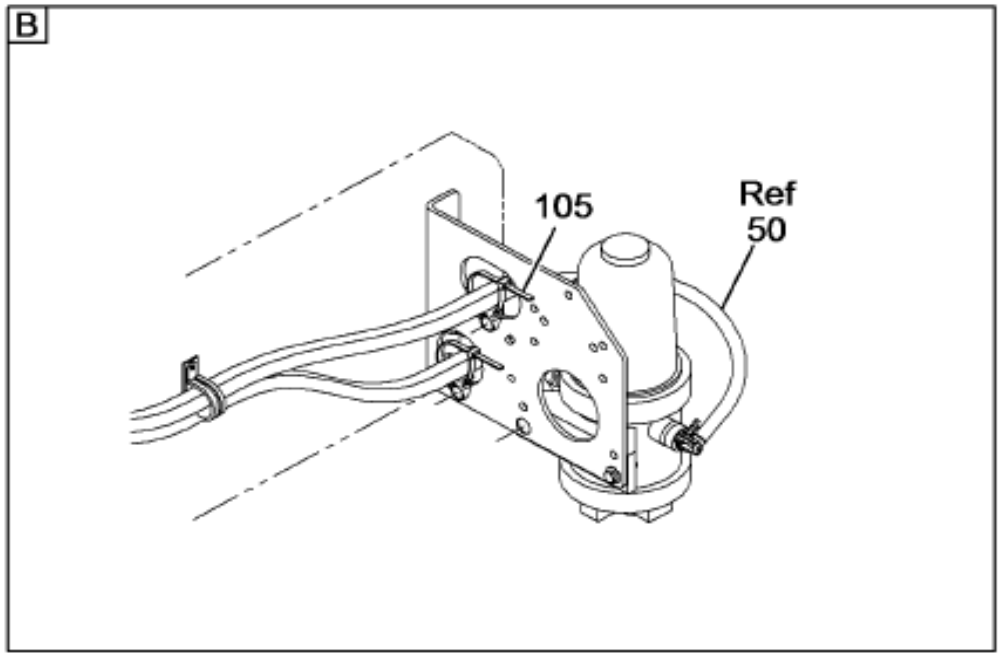

15-336-0705-02 F11

Figure 3 of 6

COPYRIGHT© 2011INTERNATIONAL TRUCK AND ENGINE CORP.

https://truckmanualshub.com/
Figure 0KHQ8
FUEL HOSING INSTL; W/CUM ISM ENG & W/LSM & DUAL UC TANKS

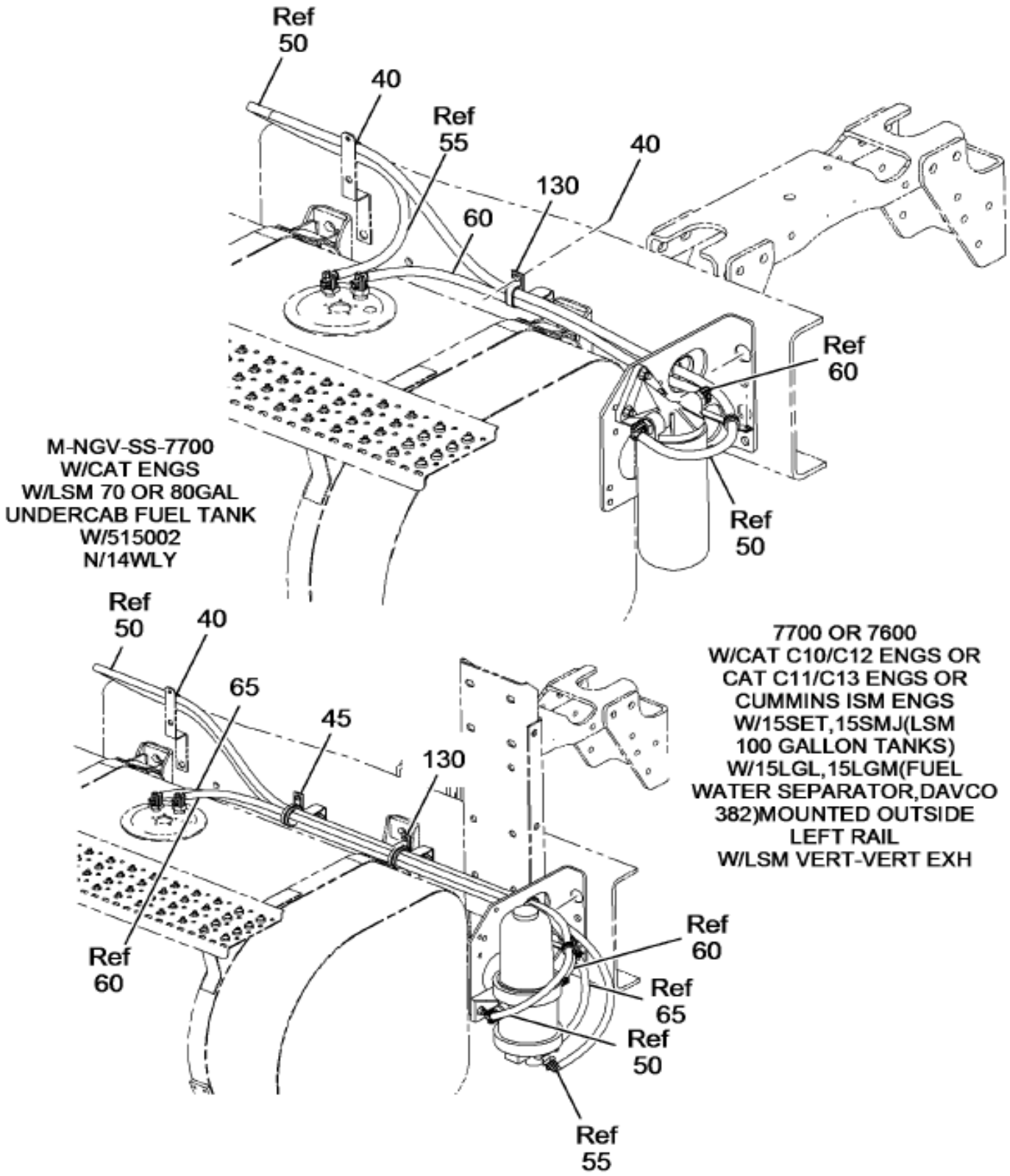

Grp 15

Figure 4 of 6

COPYRIGHT© 2011INTERNATIONAL TRUCK AND ENGINE CORP.

https://truckmanualshub.com/

Figure 0KHQ8

FUEL HOSING INSTL; W/CUM ISM ENG & W/LSM & DUAL UC TANKS

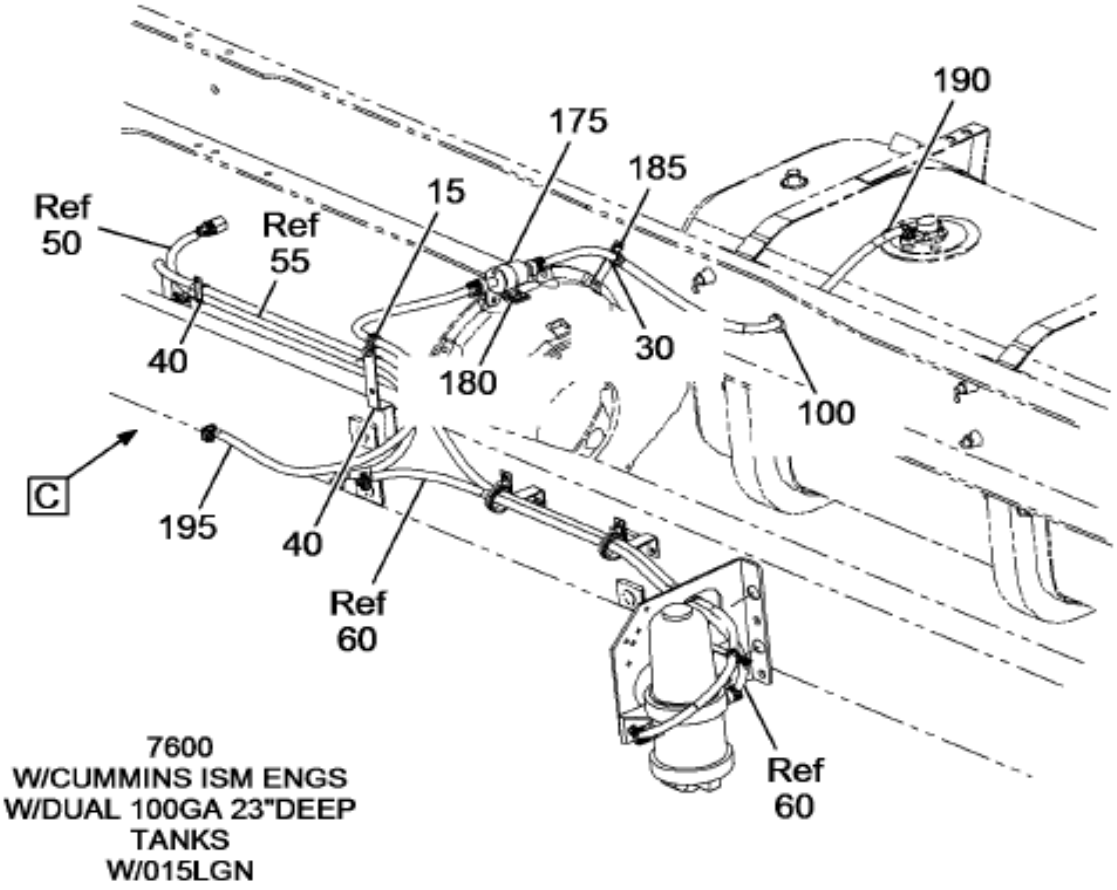

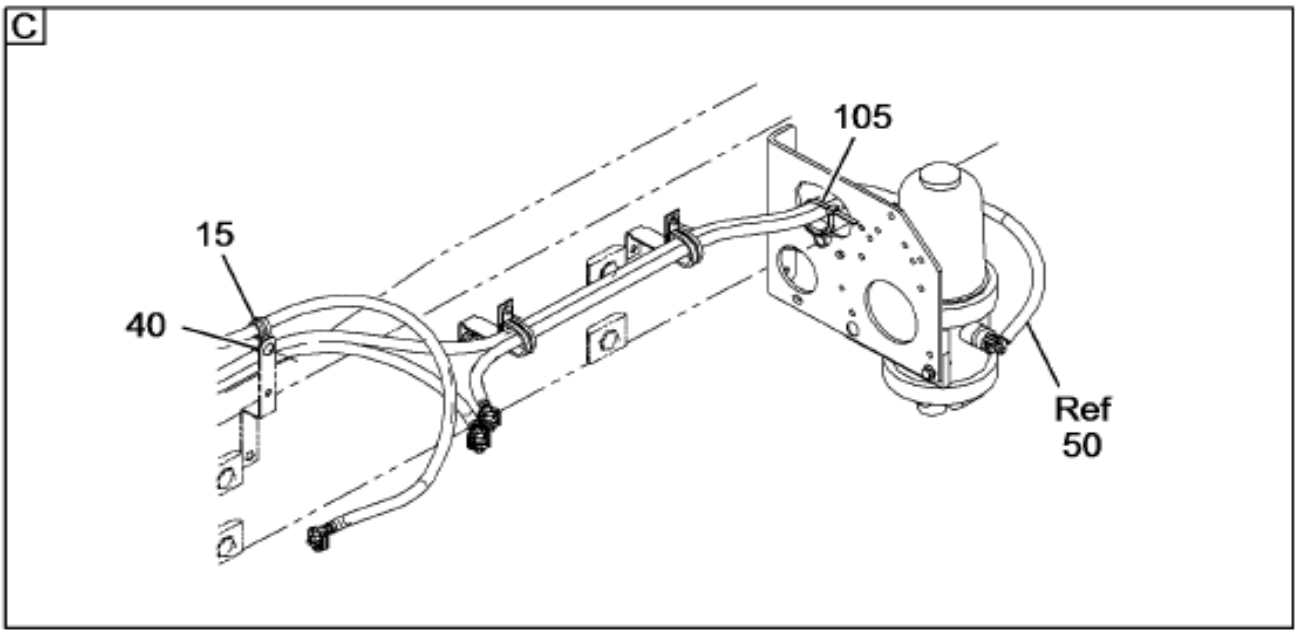

15-336-0444-01 G11

Figure 5 of 6

COPYRIGHT© 2011INTERNATIONAL TRUCK AND ENGINE CORP.

https://truckmanualshub.com/

Figure 0KHQ8

FUEL HOSING INSTL; W/CUM ISM ENG & W/LSM & DUAL UC TANKS

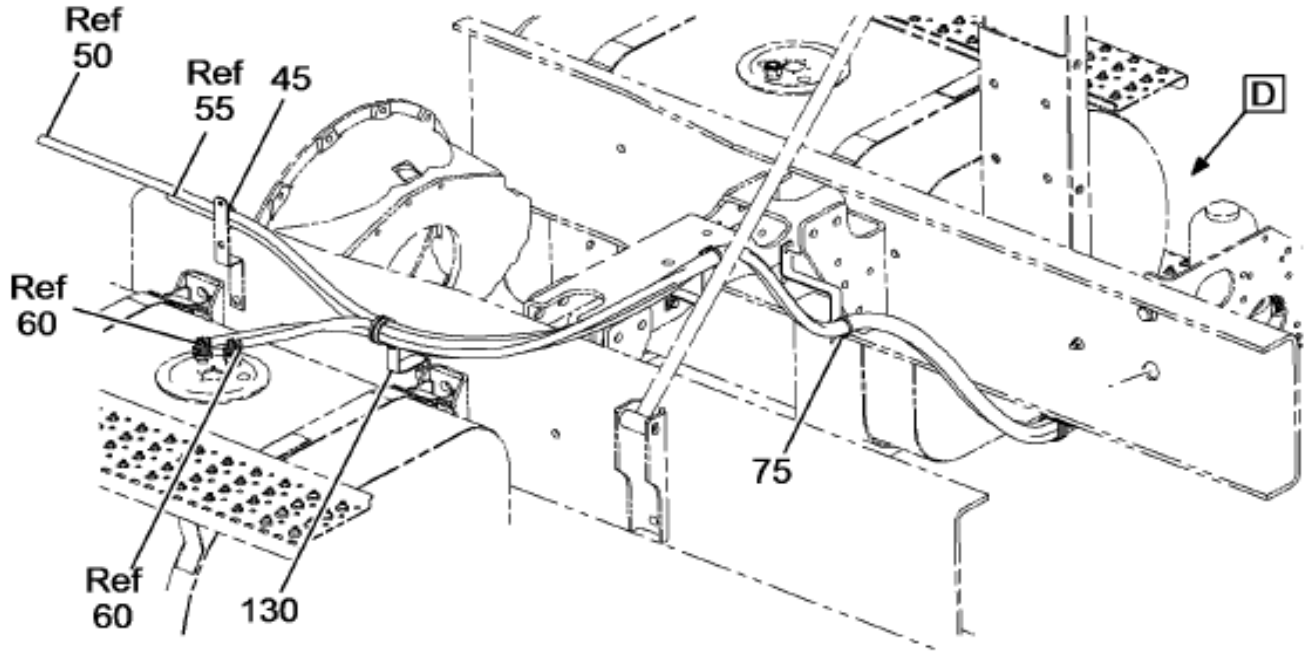

7700
W/DUAL UNDERCAB FUEL TANKS
W/15LGL,15LGM(FUEL WATER SEPARATOR,DAVCO 382)MOUNTED OUTSIDE RIGHT RAIL

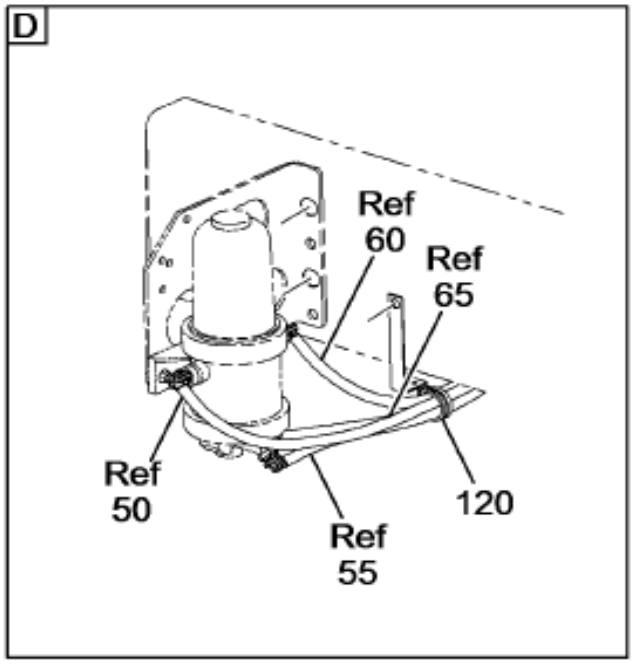

M-NGV-SS-7700
W/CAT C10/C12 ENG
CAT C11/C13 ENG
CUMMINS ISM ENG
W/15SES,15SET,15SKU
15SMJ
W/15LGL,15LGM
W/14WLY
W/WB 6800

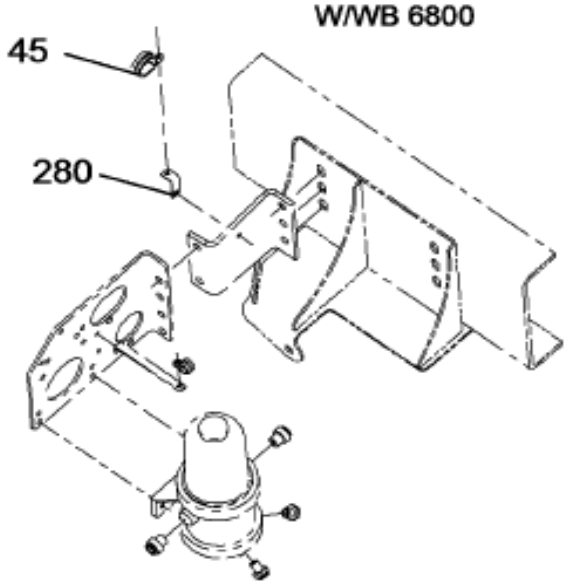

15-336-0509-01 G11

Item	Part No.	Qty	Description	Kit	Var	Figure
5	3680930C1	1	ADAPTER, QUICK CONNECT 7/8-14		0KHQ8	
10	3680929C1	1	ADAPTER, QUICK CONNECT 3/4-16		0KHQ8	
40	464658C1	2	CLAMP,RUBBER CUSHIONED		0KHQ8	
40	3552155C1	2	BOLT,HEX FLG HD METRIC*M6 X 20		0KHQ8	
40	3544378C1	2	NUT,HEX METRIC PREV. TORQ*M6 H		0KHQ8	
45	505220C1	2	CLAMP,PIPE		0KHWH	

COPYRIGHT© 2011INTERNATIONAL TRUCK AND ENGINE CORP.

https://truckmanualshub.com/

Figure 0KHQ8

FUEL HOSING INSTL; W/CUM ISM ENG & W/LSM & DUAL UC TANKS

Item	Part No.	Qty	Description	Kit	Var	Figure
45	3552155C1	2	BOLT,HEX FLG HD METRIC*M6 X 20		0KHWH	
45	3544378C1	2	NUT,HEX METRIC PREV. TORQ*M6 H		0KHWH	
50	RAC0002350	1	TUBE,, ASSY 5/8" OD BLACK		0KHWH	RAC0002350
55	SBA0002300	1	TUBE,ASSY 5/8" OD SILVER		0KHWH	SBA0002300
60	RAA0001050	1	TUBE		0KHWH	
65	SAC0001300	1	TUBE*NYLON FUEL LINE ASSY 5/8"		0KHWH	SAC0001300
105	3551709C1	1	STRAP,CABLE LOCK*CABLE LOCK 9"		0KHWH	
130	1659043C2	2	EXTENSION,CLIP		0KHWH	
130	30745R2	1	BOLT M12 X 35 HEX FLG HD		0KHWH	
130	30755R1	1	NUT,HEX M12 FLANGED		0KHWH	
			NON-ILLUSTRATED REFERENCE FIGURE RAC0002350			
	RA00000000	1	TUBE, FUEL LINE			RA00000000
			NON-ILLUSTRATED REFERENCE FIGURE SAC0001300			
	SA00000000	1	TUBE ASM, FUEL LINE			SA00000000
			NON-ILLUSTRATED REFERENCE FIGURE SBA0002300			
	SB00000000	1	TUBE, FUEL LINE			SB00000000

COPYRIGHT© 2011INTERNATIONAL TRUCK AND ENGINE CORP.

https://truckmanualshub.com/

Figure SA00000000

TUBE ASM, FUEL LINE

EXPLANATION OF 10-DIGIT CODE (Example: SAC0B30300)

The following example explains the make-up of the 10-digit code. In this example, the first position of the part # "S" represents the tube part # 3571315C1 (TMS 7134, TYPE C, 5/8 OD, Silver .) The second position of the part # "A" consists of two fittings part #, 3559213C2 (90 DEG). The third position of the part # "C" indicates that it has a label of FILTER OUT located at FTG #1. The fourth position of the part # "0" indicates that the fittings are at the default orientation. The fifth position of the part # "B" represents the heat shield part # 3577746C1 which is located at 20% of cutoff length from FTG #1. The sixth position of the part # "3" indicates the heat shield is 30% of the cutoff length. The remaining positions of the part # "0300" represents the cutoff length which is 300mm.

S — TUBE MATERIAL, SIZE, COLOR

3571315C1
TMS 7134,
TYPE C, 5/8 OD,
SILVER

A — FITTING COMBINATIONS

Fitting #1	Fitting #2
3559213C2 90 Deg	3559213C2 90 Deg

C — TUBE CODE/ LABEL & LOCATION

0 - No tube code/label
A - FILTER IN. At FTG #1
B - FILTER IN. At FTG #2
C - FILTER OUT. At FTG #1
D - FILTER OUT. At FTG #2

All tube codes to be printed on or label attached to tube within 50mm of cutoff.

0 — FITTING ORIENTATION

0 - Default Orientation
A - ROTATE 90 DEG
B - ROTATE 180 DEG
C - ROTATE 270 DEG

Angle tolerance +/- 10 DEG. To rotate, start at FTG #1 and use the "right hand" rule going towards FTG #2 and always rotate FTG #2.

B — TUBE SHIELD& LOCATION

0 - No tube shield
A - 3577746C1 HEAT SHIELD - 10% of cutoff from FTG #1
B - 3577746C1 HEAT SHIELD - 20% of cutoff from FTG #1
C - 3577746C1 HEAT SHIELD - 30% of cutoff from FTG #1
D - 3577746C1 HEAT SHIELD - 40% of cutoff from FTG #1
E - 3577746C1 HEAT SHIELD - 50% of cutoff from FTG #1
F - 3577746C1 HEAT SHIELD - 60% of cutoff from FTG #1
G - 3577746C1 HEAT SHIELD - 70% of cutoff from FTG #1
H - 3577746C1 HEAT SHIELD - 80% of cutoff from FTG #1
J - 3577746C1 HEAT SHIELD - 90% of cutoff from FTG #1
K - 3577746C1 HEAT SHIELD - Centered
L - 445171C1 CONDUIT - 10% of cutoff from FTG #1
M - 445171C1 CONDUIT - 20% of cutoff from FTG #1
N - 445171C1 CONDUIT - 30% of cutoff from FTG #1
P - 445171C1 CONDUIT - 40% of cutoff from FTG #1
R - 445171C1 CONDUIT - 50% of cutoff from FTG #1
S - 445171C1 CONDUIT - 60% of cutoff from FTG #1
T - 445171C1 CONDUIT - 70% of cutoff from FTG #1
U - 445171C1 CONDUIT - 80% of cutoff from FTG #1
V - 445171C1 CONDUIT - 90% of cutoff from FTG #1
W - 445171C1 CONDUIT - Centered

Tube shield length not to be closer than 50mm to the ends of the tube. Tube shield must be secured to tube at one end only.

3 — TUBE SHIELD LENGTH

0 - No tube shield
1 - 10% of cutoff length
2 - 20% of cutoff length
3 - 30% of cutoff length
4 - 40% of cutoff length
5 - 50% of cutoff length
6 - 60% of cutoff length
7 - 70% of cutoff length
8 - 80% of cutoff length
9 - 90% of cutoff length
A - Full length tube shield*
* Starts 50mm from each end

0300 — CUTOFF LENGTH (MM)

To be specified in whole millimeters and rounded to the next highest 50mm length increment. Minimum cutoff length = 150mm

10-CHT-0043-01 H05

Item	Part No.	Qty	Description	Kit	Var	Figure
800		RF	NOTE: THE FOLLOWING PARTS ARE NON-ILLUSTRATED			
801	3571315C1	1	TUBE,NYLON BULK SILVER 5/8 OD			
802	3559213C2	2	FITTING FUEL OUTLET*90 DEG VOS			
804	3577746C1	AR	INSULATOR,HOSE .750" ID TO BE*			
805	445171C1	AR	CONDUIT,CABLE ELEC			

COPYRIGHT© 2011INTERNATIONAL TRUCK AND ENGINE CORP.

https://truckmanualshub.com/

Figure SA00000000

TUBE ASM, FUEL LINE

Item	Part No.	Qty	Description	Kit	Var	Figure
880		RF	NOTE: ASM BELOW COMPRISED OF ABOVE COMPONENTS			
881	SA00000000	RF	TUBE ASM, FUEL LINE			

COPYRIGHT© 2011INTERNATIONAL TRUCK AND ENGINE CORP.

https://truckmanualshub.com/

Figure RA0000000

TUBE, FUEL LINE

EXPLANATION OF 10-DIGIT CODE (Example: RAC0B30300)

The following example explains the make-up of the 10-digit code. In this example, the first position of the part # "R" represents the tube part # 3571312C1 (TMS 7134, TYPE C, 5/8 OD, Black .) The second position of the part # "A" consists of two fittings part #, 3559213C2 (90 DEG). The third position of the part # "C" indicates that it has a label of FILTER OUT located at FTG #1. The fourth position of the part # "0" indicates that the fittings are at the default orientation. The fifth position of the part # "B" represents the heat shield part # 3577746C1 which is located at 20% of cutoff length from FTG #1. The sixth position of the part # "3" indicates the heat shield is 30% of the cutoff length. The remaining positions of the part # "0300" represents the cutoff length which is 300mm.

R — TUBE MATERIAL, SIZE, COLOR

3571312C1
TMS 7134,
TYPE C, 5/8 OD,
BLACK

A — FITTING COMBINATIONS

Fitting #1	Fitting #2
3559213C2 90 Deg	3559213C2 90 Deg

C — TUBE CODE/ LABEL & LOCATION

0 - No tube code/label
A - FILTER IN. At FTG #1
B - FILTER IN. At FTG #2
C - FILTER OUT. At FTG #1
D - FILTER OUT. At FTG #2

All tube codes to be printed on or label attached to tube within 50mm of cutoff.

0 — FITTING ORIENTATION

0 - Default Orientation
A - ROTATE 90 DEG
B - ROTATE 180 DEG
C - ROTATE 270 DEG

Angle tolerance +/- 10 DEG. To rotate, start at FTG #1 and use the "right hand" rule going towards FTG #2 and always rotate FTG #2.

B — TUBE SHIELD& LOCATION

0 - No tube shield
A - 3577746C1 HEAT SHIELD - 10% of cutoff from FTG #1
B - 3577746C1 HEAT SHIELD - 20% of cutoff from FTG #1
C - 3577746C1 HEAT SHIELD - 30% of cutoff from FTG #1
D - 3577746C1 HEAT SHIELD - 40% of cutoff from FTG #1
E - 3577746C1 HEAT SHIELD - 50% of cutoff from FTG #1
F - 3577746C1 HEAT SHIELD - 60% of cutoff from FTG #1
G - 3577746C1 HEAT SHIELD - 70% of cutoff from FTG #1
H - 3577746C1 HEAT SHIELD - 80% of cutoff from FTG #1
J - 3577746C1 HEAT SHIELD - 90% of cutoff from FTG #1
K - 3577746C1 HEAT SHIELD - Centered
L - 445171C1 CONDUIT - 10% of cutoff from FTG #1
M - 445171C1 CONDUIT - 20% of cutoff from FTG #1
N - 445171C1 CONDUIT - 30% of cutoff from FTG #1
P - 445171C1 CONDUIT - 40% of cutoff from FTG #1
R - 445171C1 CONDUIT - 50% of cutoff from FTG #1
S - 445171C1 CONDUIT - 60% of cutoff from FTG #1
T - 445171C1 CONDUIT - 70% of cutoff from FTG #1
U - 445171C1 CONDUIT - 80% of cutoff from FTG #1
V - 445171C1 CONDUIT - 90% of cutoff from FTG #1
W - 445171C1 CONDUIT - Centered

Tube shield length not to be closer than 50mm to the ends of the tube. Tube shield must be secured to tube at one end only.

3 — TUBE SHIELD LENGTH

0 - No tube shield
1 - 10% of cutoff length
2 - 20% of cutoff length
3 - 30% of cutoff length
4 - 40% of cutoff length
5 - 50% of cutoff length
6 - 60% of cutoff length
7 - 70% of cutoff length
8 - 80% of cutoff length
9 - 90% of cutoff length
A - Full length tube shield*
* Starts 50mm from each end

0300 — CUTOFF LENGTH (MM)

To be specified in whole millimeters and rounded to the next highest 50mm length increment. Minimum cutoff length = 150mm

10-CHT-0037-01 H05

Item	Part No.	Qty	Description	Kit	Var	Figure
800		RF	NOTE: THE FOLLOWING PARTS ARE NON-ILLUSTRATED			
801	3571312C1	1	TUBE,NYLON BULK BLACK 5/8 OD -			
802	3559213C2	2	FITTING FUEL OUTLET*90 DEG VOS			
804	3577746C1	AR	INSULATOR,HOSE .750" ID TO BE*			
805	445171C1	AR	CONDUIT,CABLE ELEC			

Grp 15

COPYRIGHT© 2011INTERNATIONAL TRUCK AND ENGINE CORP.

https://truckmanualshub.com/

Figure RA00000000

TUBE, FUEL LINE

Item	Part No.	Qty	Description	Kit	Var	Figure
880		RF	NOTE: ASM BELOW COMPRISED OF ABOVE COMPONENTS			
881	RA00000000	RF	TUBE, FUEL LINE			

COPYRIGHT© 2011INTERNATIONAL TRUCK AND ENGINE CORP.

https://truckmanualshub.com/

Figure SB00000000

TUBE, FUEL LINE

EXPLANATION OF 10-DIGIT CODE (Example: SBC0B30300)

The following example explains the make-up of the 10-digit code. In this example, the first position of the part # "S" represents the tube part # 3571315C1 (TMS 7134, TYPE C, 5/8 OD, Silver.) The second position of the part # "B" consists of the fitting part #s, 3559213C2 (90 DEG) and 3559214C2 (Straight). The third position of the part # "C" indicates that it has a label of FILTER OUT located at FTG #1. The fourth position of the part # "0" indicates that the fittings are at the default orientation. The fifth position of the part # "B" represents the heat shield part # 3577746C1 which is located at 20% of cutoff length from FTG #1. The sixth position of the part # "3" indicates the heat shield is 30% of the cutoff length. The remaining positions of the part # "0300" represents the cutoff length which is 300mm.

S — TUBE MATERIAL, SIZE, COLOR

3571315C1
TMS 7134,
TYPE C, 5/8 OD,
SILVER

B — FITTING COMBINATIONS

Fitting #1	Fitting #2
3559213C2 90 Deg	3559214C2 Straight

C — TUBE CODE/ LABEL & LOCATION

0 - No tube code/label
A - FILTER IN. At FTG #1
B - FILTER IN. At FTG #2
C - FILTER OUT. At FTG #1
D - FILTER OUT. At FTG #2

All tube codes to be printed on or label attached to tube within 50mm of cutoff.

0 — FITTING ORIENTATION

0 - Default Orientation
A - ROTATE 90 DEG
B - ROTATE 180 DEG
C - ROTATE 270 DEG

Angle tolerance +/- 10 DEG. To rotate, start at FTG #1 and use the "right hand" rule going towards FTG #2 and always rotate FTG #2.

B — TUBE SHIELD& LOCATION

0 - No tube shield
A - 3577746C1 HEAT SHIELD - 10% of cutoff from FTG #1
B - 3577746C1 HEAT SHIELD - 20% of cutoff from FTG #1
C - 3577746C1 HEAT SHIELD - 30% of cutoff from FTG #1
D - 3577746C1 HEAT SHIELD - 40% of cutoff from FTG #1
E - 3577746C1 HEAT SHIELD - 50% of cutoff from FTG #1
F - 3577746C1 HEAT SHIELD - 60% of cutoff from FTG #1
G - 3577746C1 HEAT SHIELD - 70% of cutoff from FTG #1
H - 3577746C1 HEAT SHIELD - 80% of cutoff from FTG #1
J - 3577746C1 HEAT SHIELD - 90% of cutoff from FTG #1
K - 3577746C1 HEAT SHIELD - Centered
L - 445171C1 CONDUIT - 10% of cutoff from FTG #1
M - 445171C1 CONDUIT - 20% of cutoff from FTG #1
N - 445171C1 CONDUIT - 30% of cutoff from FTG #1
P - 445171C1 CONDUIT - 40% of cutoff from FTG #1
R - 445171C1 CONDUIT - 50% of cutoff from FTG #1
S - 445171C1 CONDUIT - 60% of cutoff from FTG #1
T - 445171C1 CONDUIT - 70% of cutoff from FTG #1
U - 445171C1 CONDUIT - 80% of cutoff from FTG #1
V - 445171C1 CONDUIT - 90% of cutoff from FTG #1
W - 445171C1 CONDUIT - Centered

Tube shield length not to be closer than 50mm to the ends of the tube. Tube shield must be secured to tube at one end only.

3 — TUBE SHIELD LENGTH

0 - No tube shield
1 - 10% of cutoff length
2 - 20% of cutoff length
3 - 30% of cutoff length
4 - 40% of cutoff length
5 - 50% of cutoff length
6 - 60% of cutoff length
7 - 70% of cutoff length
8 - 80% of cutoff length
9 - 90% of cutoff length
A - Full length tube shield*
* Starts 50mm from each end

0300 — CUTOFF LENGTH (MM)

To be specified in whole millimeters and rounded to the next highest 50mm length increment. Minimum cutoff length = 150mm

10-CHT-0044-01 H05

Item	Part No.	Qty	Description	Kit	Var	Figure
800		RF	NOTE: THE FOLLOWING PARTS ARE NON-ILLUSTRATED			
801	3571315C1	1	TUBE,NYLON BULK SILVER 5/8 OD			
802	3559213C2	1	FITTING FUEL OUTLET*90 DEG VOS			
803	3559214C2	1	FITTING,FUEL OUTLET*STRAIGHT V			
804	3577746C1	AR	INSULATOR,HOSE .750" ID TO BE*			

COPYRIGHT© 2011INTERNATIONAL TRUCK AND ENGINE CORP.

https://truckmanualshub.com/

Figure SB00000000

TUBE, FUEL LINE

Item	Part No.	Qty	Description	Kit	Var	Figure
805	445171C1	AR	CONDUIT,CABLE ELEC			
880		RF	NOTE: ASM BELOW COMPRISED OF ABOVE COMPONENTS			
881	SB00000000	RF	TUBE, FUEL LINE			

COPYRIGHT© 2011INTERNATIONAL TRUCK AND ENGINE CORP.

https://truckmanualshub.com/

Figure 0V091
FUEL TANK MODULE; LT SIDE CAP, (ABR#10)

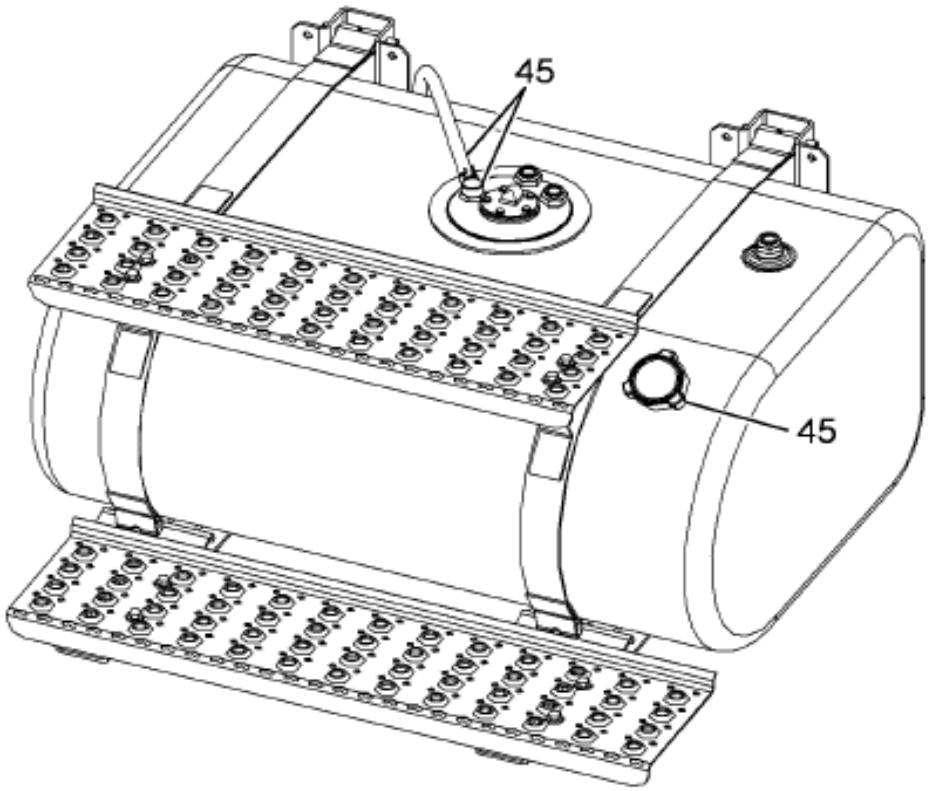

FUEL TANK TRIMMINGS
RIGHT SIDE TANKS
FOR SINGLE OR DUEL CONFIGURATIONS

Grp 15

15-L29-0042-01 F09

Item	Part No.	Qty	Description	Kit	Var	Figure
45	3548221C1	1	CAP,FUEL TANK FILLER NON LOCKI		0V091	3548221C1
45	3605000F92	1	FUEL TANK, VENT & HOSE,DUAL		0V093	3605000F92
			NON-ILLUSTRATED REFERENCE FIGURE 3548221C1			
1	2599087C1	1	GASKET,FILL NECK 2" CAP			
880		RF	NOTE: ASM BELOW COMPRISED OF ABOVE			

COPYRIGHT© 2011INTERNATIONAL TRUCK AND ENGINE CORP.

https://truckmanualshub.com/

Figure 0V091

FUEL TANK MODULE; LT SIDE CAP, (ABR#10)

Item	Part No.	Qty	Description	Kit	Var	Figure
			COMPONENTS			
881	3548221C1	RF	CAP,FUEL TANK FILLER NON LOCKI			

COPYRIGHT© 2011INTERNATIONAL TRUCK AND ENGINE CORP.

https://truckmanualshub.com/

Figure 3603000F92

FUEL TANK, VENT & HOSE,DUAL

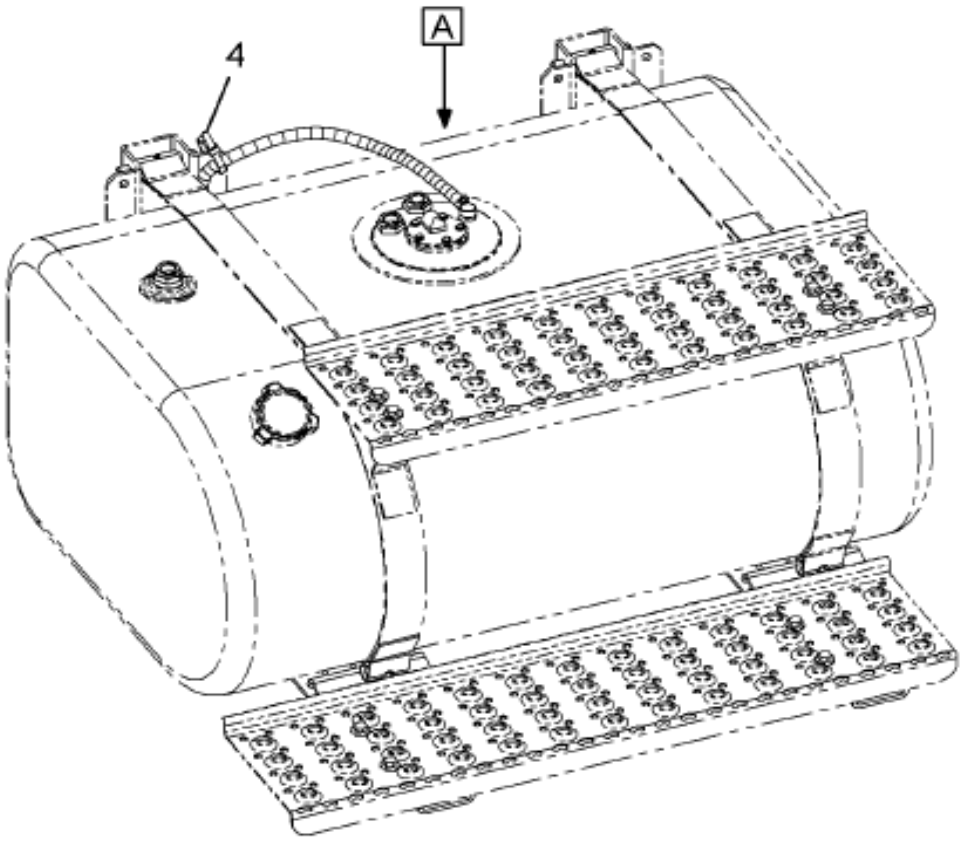

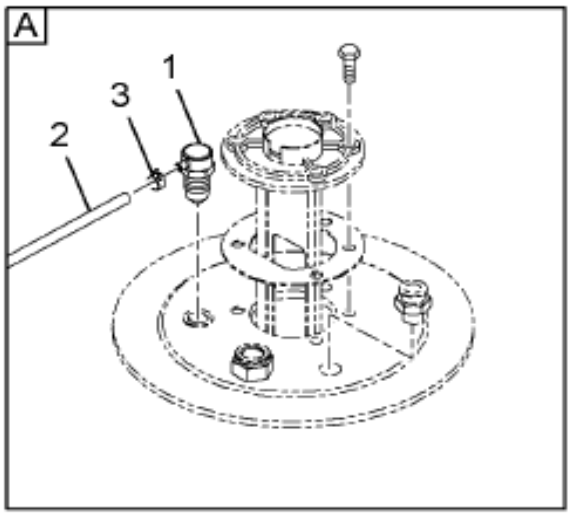

15-L29-0051-01 C10

Item	Part No.	Qty	Description	Kit	Var	Figure
1	3548222C1	1	VENTILATOR,FUEL*FULL FUNCTION			
2	2643544R1	AR	HOSE,FUEL & OIL 5/16			
3	406340C1	1	CLAMP 9/16 DIA HOSE			
4	289862C1	1	STRAP,CABLE LOCK			
880		RF	NOTE: ASM BELOW COMPRISED OF ABOVE COMPONENTS			

Grp 15

COPYRIGHT© 2011INTERNATIONAL TRUCK AND ENGINE CORP.

https://truckmanualshub.com/

Figure 3605000F92

FUEL TANK, VENT & HOSE,DUAL

Item	Part No.	Qty	Description	Kit	Var	Figure
881	3605000F92	RF	FUEL TANK, VENT & HOSE,DUAL			

COPYRIGHT© 2011INTERNATIONAL TRUCK AND ENGINE CORP.

https://truckmanualshub.com/

Figure 01 TQK

FUEL TANK MODULE; LT SIDE DRAW TUBES, (ABR#14)

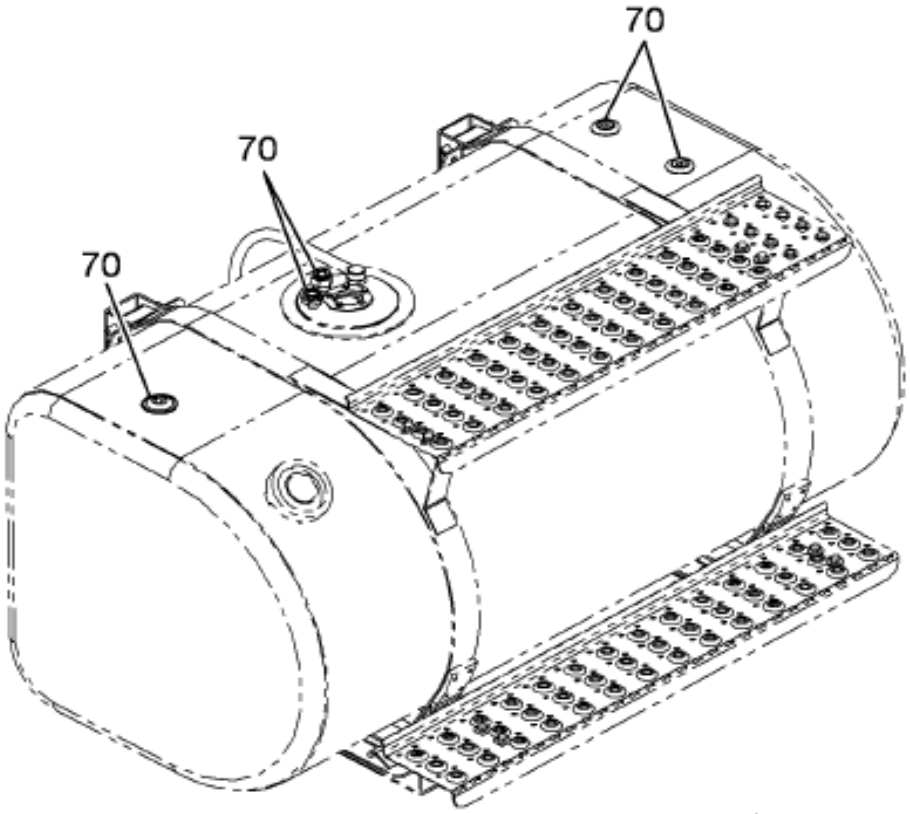

FUEL TANK TRIMMINGS
23" DEEP LEFT SIDE TANK
FOR SINGLE CONFIGURATION
W/DUAL SUPPLY LINES ONLY

A

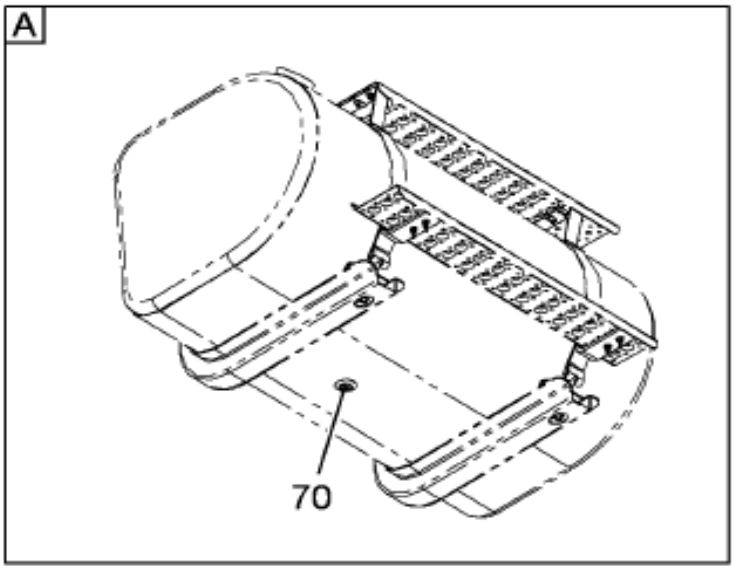

15-L33-0006-01 B09

Item	Part No.	Qty	Description	Kit	Var	Figure
70	3589948F92	1	FUEL TANK, FITTINGS, 23" D-		0L414	3589948F92

Grp 15

COPYRIGHT© 2011INTERNATIONAL TRUCK AND ENGINE CORP.

https://truckmanualshub.com/

Figure 3389348F92
FUEL TANK, FITTINGS, 23" D-

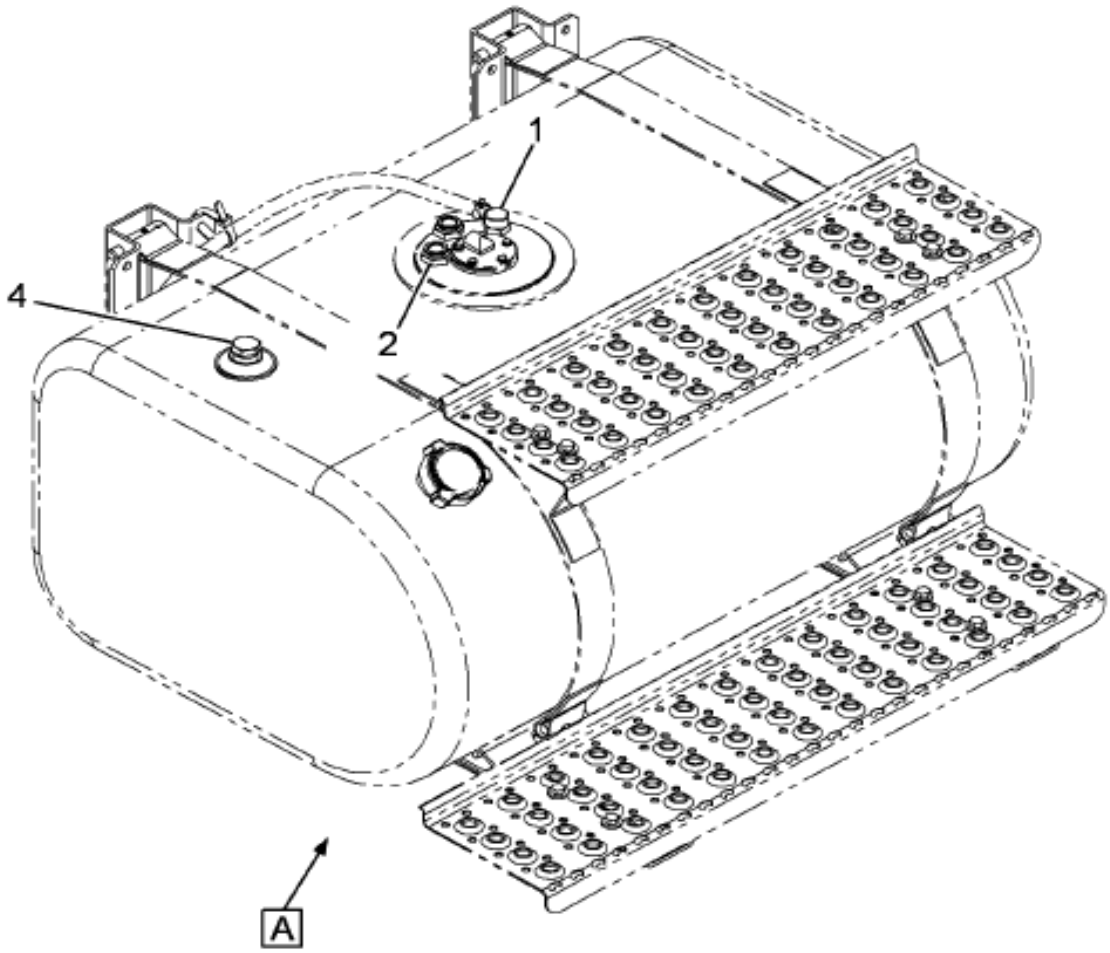

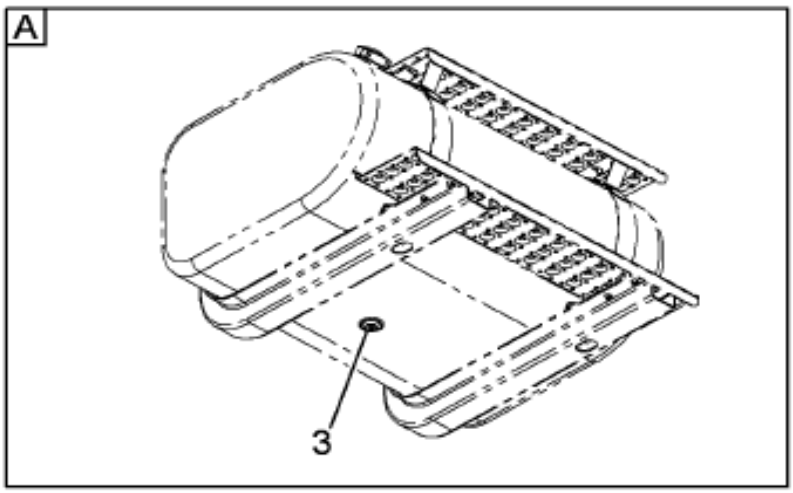

15-L33-0043-01 D09

Item	Part No.	Qty	Description	Kit	Var	Figure
1	3559217C2	1	OUTLET,FUEL TANK, TUBE, FUEL T			3559217C2
2	3680922C1	1	CAP, QUICK CONNECT 3/8 NPTF ST			
3	444705	1	PLUG, 1/2-14 PLN HEX/SKT AUTO			
4	444632	1	PLUG, 1/2-14 PLN H/HD PIPE			
880		RF	NOTE: ASM BELOW COMPRISED OF ABOVE COMPONENTS			

COPYRIGHT© 2011INTERNATIONAL TRUCK AND ENGINE CORP.

https://truckmanualshub.com/

Figure 3589948F92

FUEL TANK, FITTINGS, 23" D-

Item	Part No.	Qty	Description	Kit	Var	Figure
881	3589948F92	RF	FUEL TANK, FITTINGS, 23" D-			

COPYRIGHT© 2011INTERNATIONAL TRUCK AND ENGINE CORP.

https://truckmanualshub.com/

Figure 3559217C2
OUTLET,FUEL TANK, TUBE, FUEL T

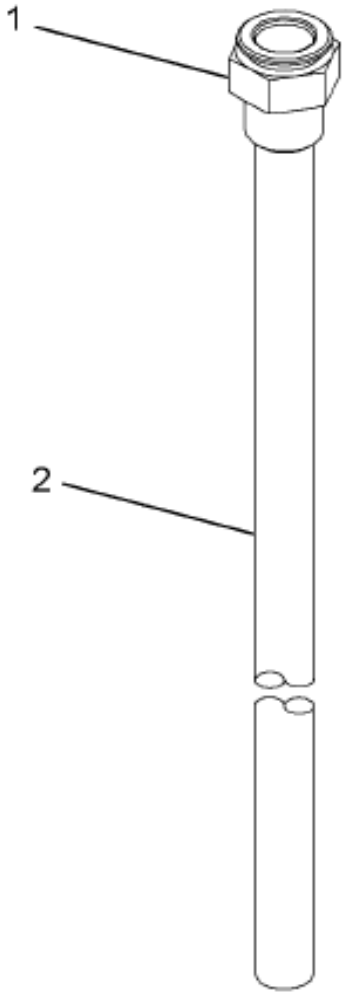

15-L32-0016-01 C05

Item	Part No.	Qty	Description	Kit	Var	Figure
1	3680925C1	1	ADAPTER, QUICK CONNECT 5/8 TUB			
2	3559216C1	1	TUBE,FUEL LINE (PLASTIC OR NYL			
880		RF	NOTE: ASM BELOW COMPRISED OF ABOVE COMPONENTS			
881	3559217C2	RF	OUTLET,FUEL TANK, TUBE, FUEL T			

COPYRIGHT© 2011INTERNATIONAL TRUCK AND ENGINE CORP.

https://truckmanualshub.com/

Figure 01 FGW

FUEL TANK MODULE; LT SIDE MTD TANK, (ABR #2)

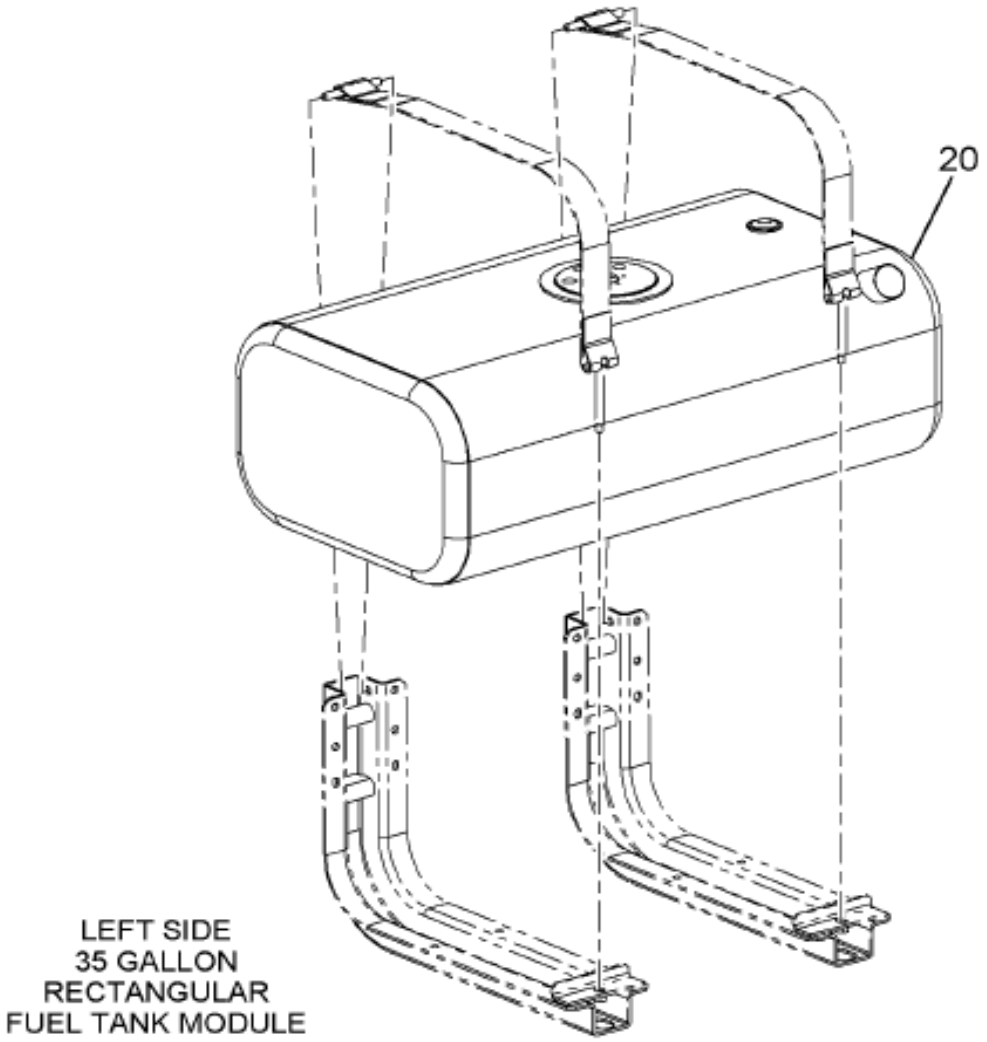

15-L23-0052-01 E09

Item	Part No.	Qty	Description	Kit	Var	Figure
20	3589922F92	1	FUEL TANK*100 GAL N/P AL D-		0KCX9	3589922F92

Grp 15

COPYRIGHT© 2011INTERNATIONAL TRUCK AND ENGINE CORP.

https://truckmanualshub.com/

Figure 3589922F92
FUEL TANK*100 GAL N/P AL D-

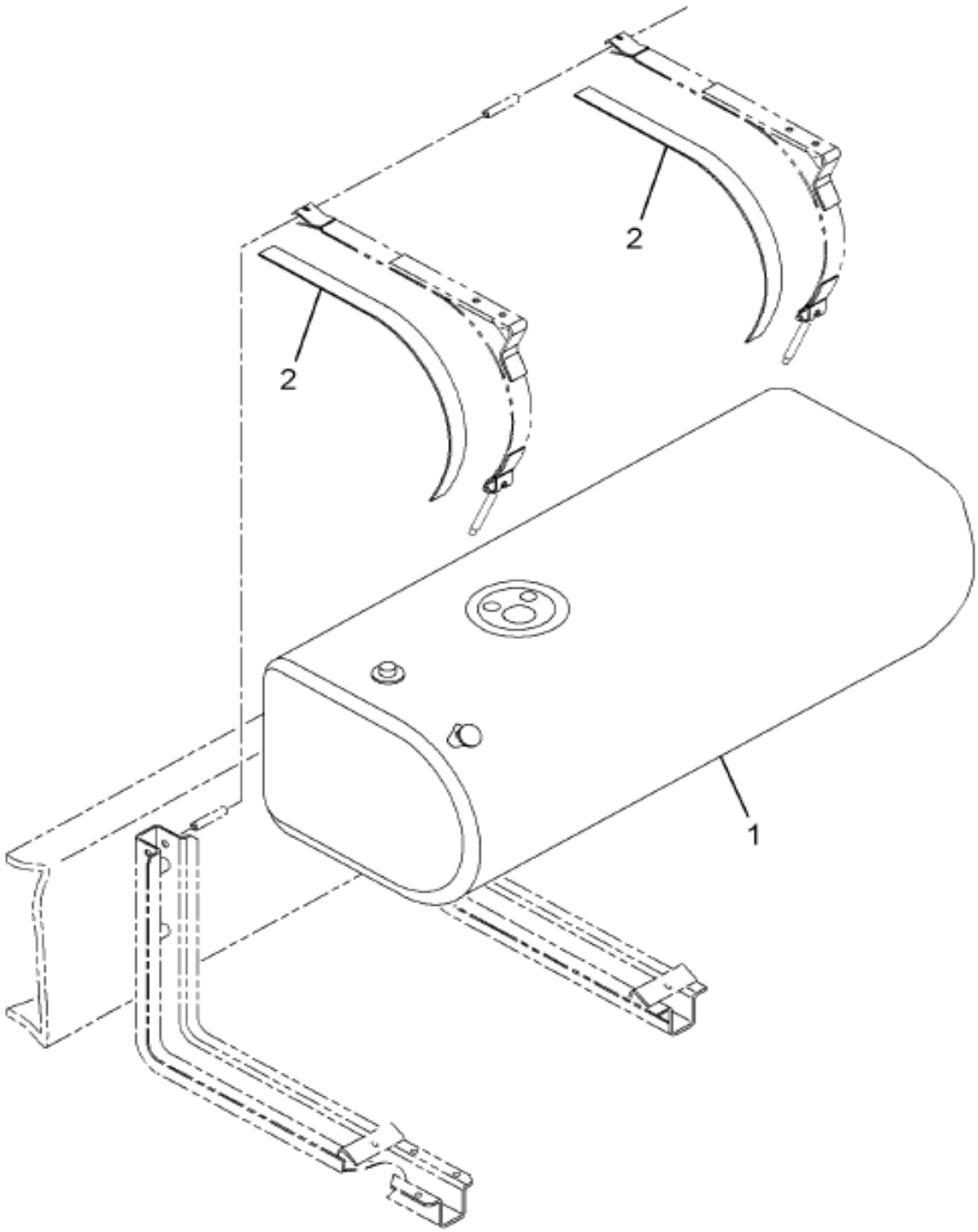

Item	Part No.	Qty	Description	Kit	Var	Figure
1	3589906C92	1	TANK,FUEL*100G LSM 23" D-TK N/			
2	3547711C1	4	LINING,FUEL TANK STRAP OR SUPT			
880		RF	NOTE: ASM BELOW COMPRISED OF ABOVE COMPONENTS			
881	3589922F92	RF	FUEL TANK*100 GAL N/P AL D-			

COPYRIGHT© 2011INTERNATIONAL TRUCK AND ENGINE CORP.

https://truckmanualshub.com/

FUEL TANK MODULE; LT SIDE SENDER, (ABR#12)

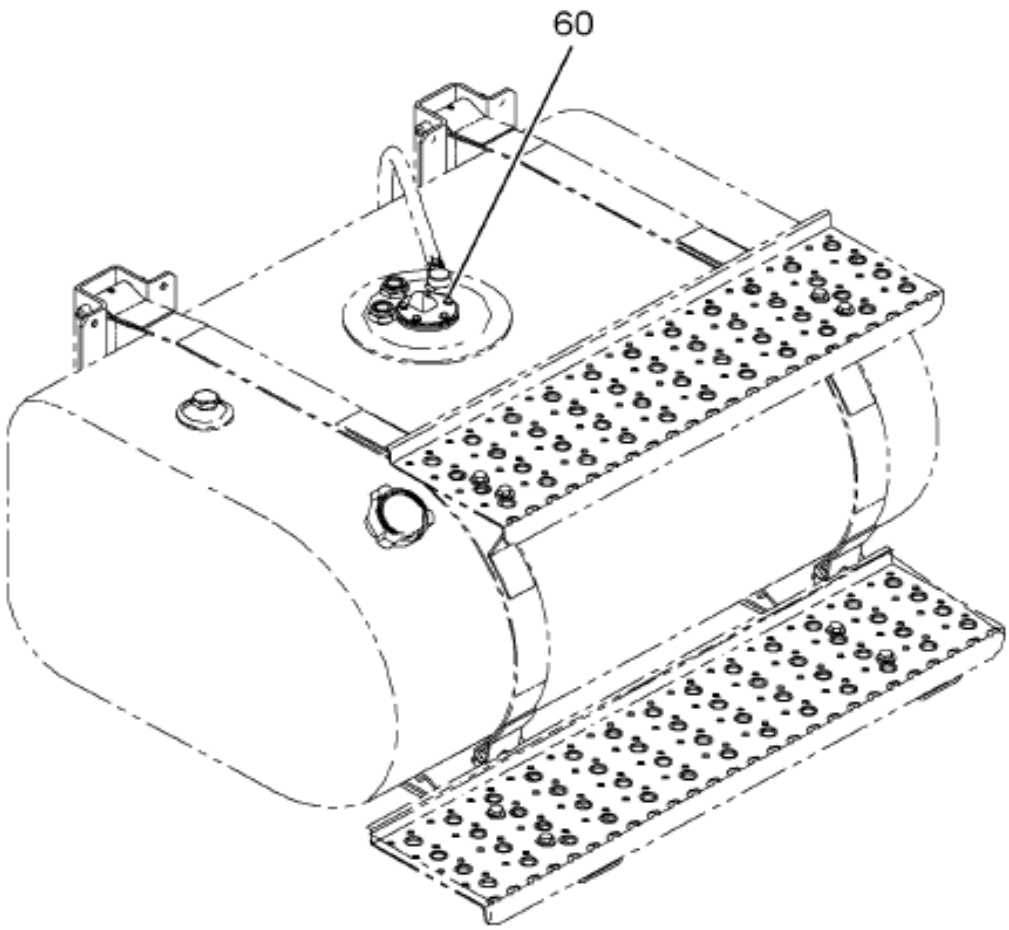

FUEL TANK TRIMMINGS
LEFT SIDE TANKS
FOR SINGLE OR DUAL

Grp 15

15-L31-0003-FD D10

Item	Part No.	Qty	Description	Kit	Var	Figure
60	3869200F91	1	FUEL TANK FUEL SENDER 23		0H6G4	3869200F91

COPYRIGHT© 2011INTERNATIONAL TRUCK AND ENGINE CORP.

https://truckmanualshub.com/

Figure 3869200F91
FUEL TANK FUEL SENDER 23

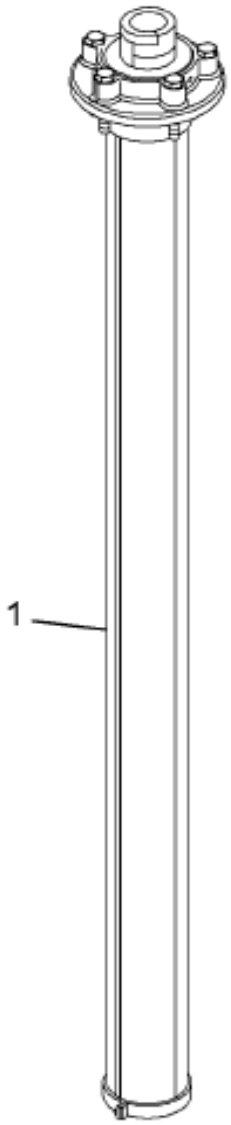

15-L31-0029-01 D10

Item	Part No.	Qty	Description	Kit	Var	Figure
1	3864397C91	1	GAUGE,FUEL SENDER, 23 INCH, 33			
880		RF	NOTE: ASM BELOW COMPRISED OF ABOVE COMPONENTS			
881	3869200F91	RF	FUEL TANK FUEL SENDER 23			

COPYRIGHT© 2011INTERNATIONAL TRUCK AND ENGINE CORP.

https://truckmanualshub.com/

Figure 0GLNF

FUEL TANK MODULE; LT SIDE STEPS, (ABR#08)

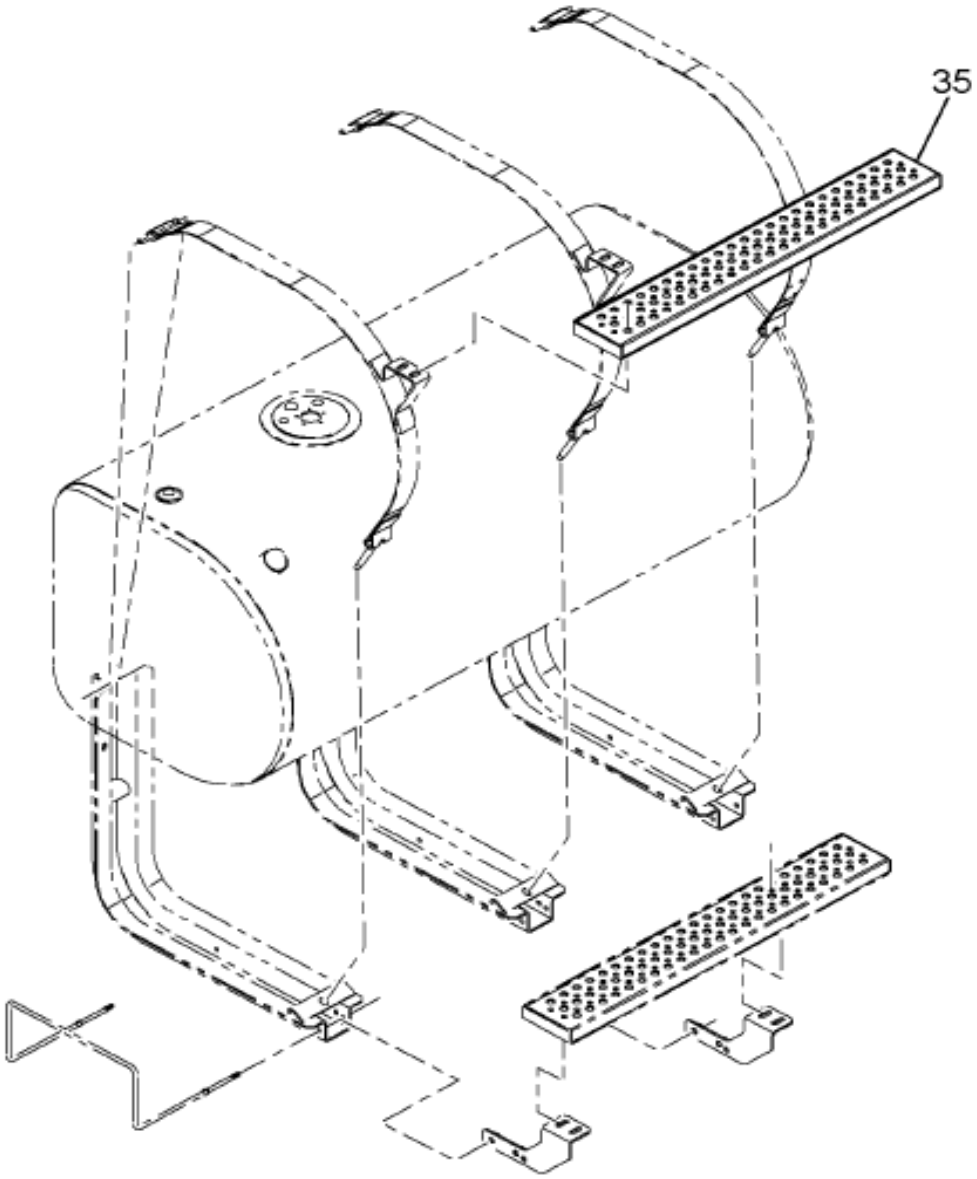

M-NGV-SS
& W/120 GAL/80-40G 23"
D-TANKS
& W/16XTL

15-L27-0112-01 L10

Grp 15

Figure 1 of 2

COPYRIGHT© 2011INTERNATIONAL TRUCK AND ENGINE CORP.

https://truckmanualshub.com/

Figure 0GLNF

FUEL TANK MODULE; LT SIDE STEPS, (ABR#08)

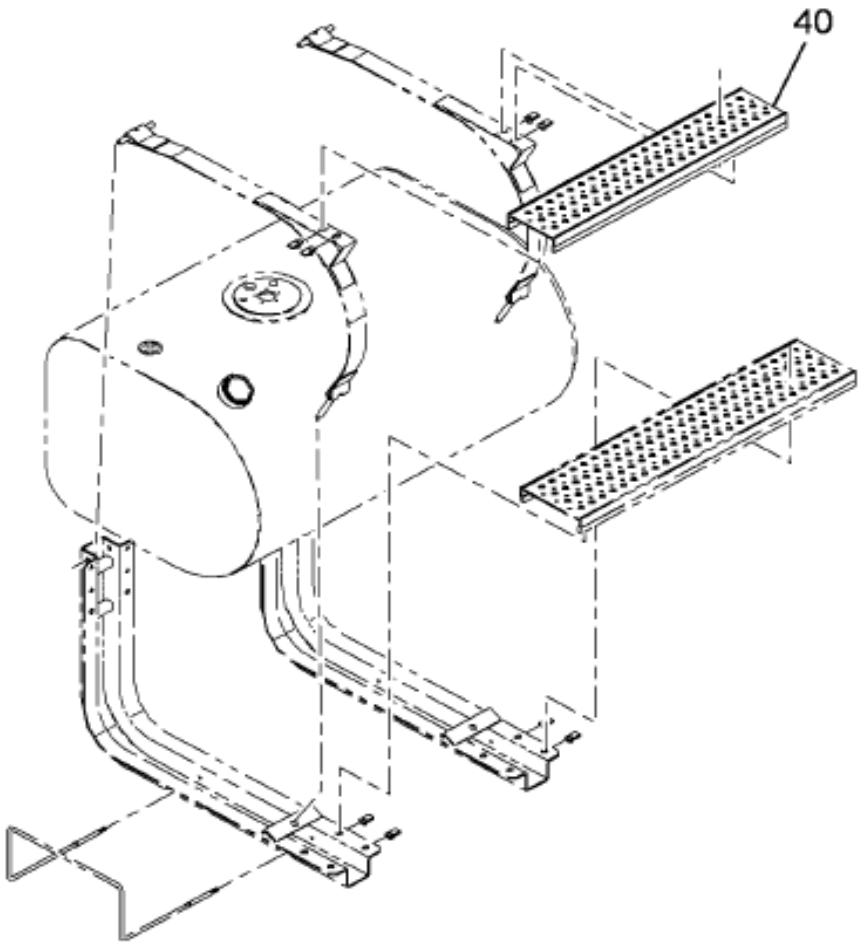

M-NGV-SS
W/70 GAL 19" D-TANKS
W/16XTK

15-L27-0114-01 A11

Item	Part No.	Qty	Description	Kit	Var	Figure
35	3580022F93	1	FUEL TANK STEPS LSM		0HP78	3580022F93

COPYRIGHT© 2011INTERNATIONAL TRUCK AND ENGINE CORP.

https://truckmanualshub.com/

Figure 3380022F93

FUEL TANK STEPS LSM

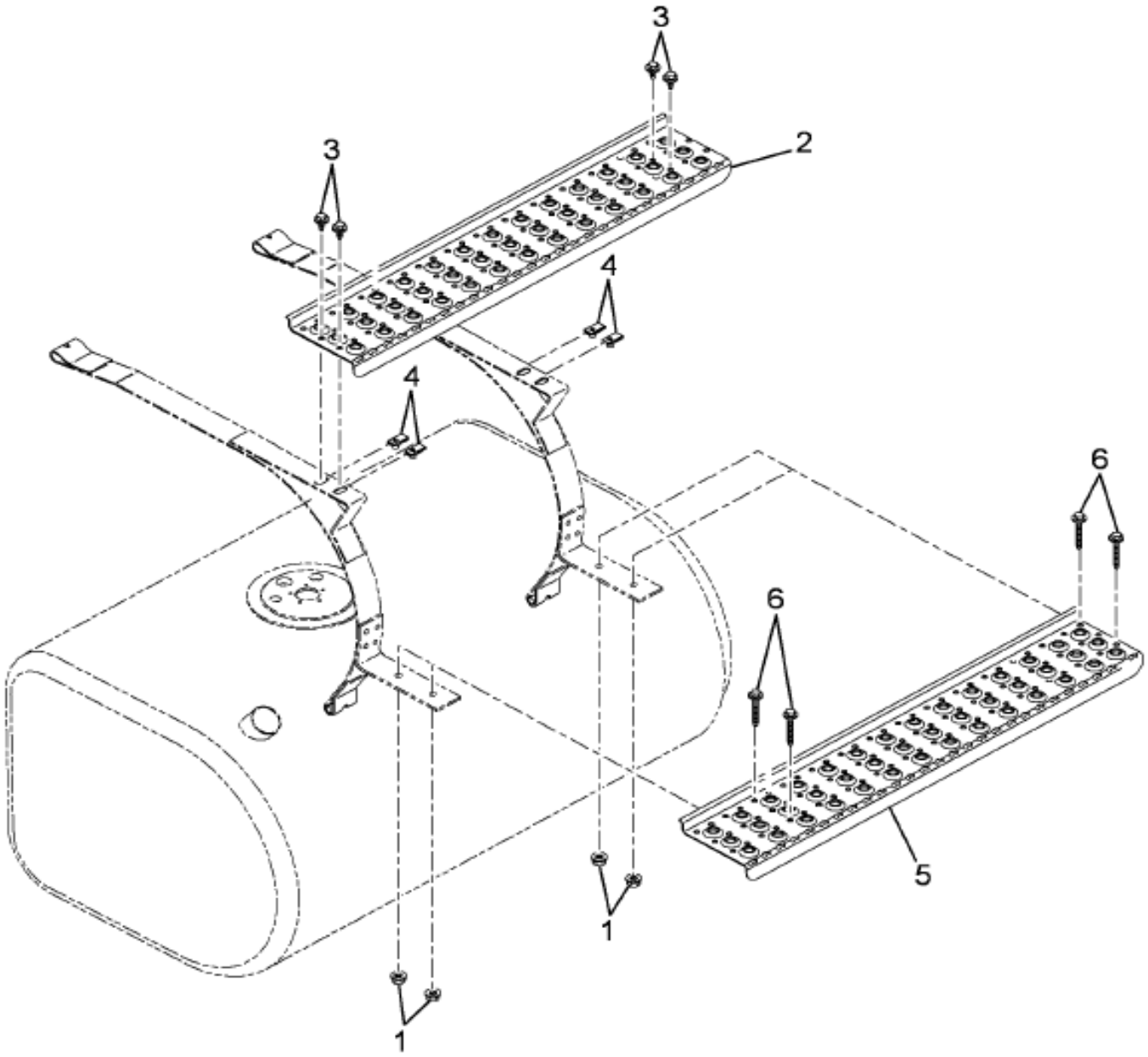

15-L27-0077-01 E09

Item	Part No.	Qty	Description	Kit	Var	Figure
1	3544379C1	4	NUT,HEX FLG M8 METRIC			
2	3578201C1	1	STEP,FUEL TANK*832MM X 150MM			
3	3541322C1	4	BOLT,SPECIAL*M8 X 1.25 - 25 MM			
4	3541323C1	4	NUT,SPECIAL*M8 X 1.25 U-NUT (L			
5	3571060C1	1	STEP,FUEL TANK*896 MM STEP X 1			
6	3571199C1	4	BOLT,SEMS M8X1.25-50 HEX W. TH			

Grp 15

COPYRIGHT© 2011INTERNATIONAL TRUCK AND ENGINE CORP.

https://truckmanualshub.com/

Figure 3580022F93

FUEL TANK STEPS LSM

Item	Part No.	Qty	Description	Kit	Var	Figure
880		RF	NOTE: ASM BELOW COMPRISED OF ABOVE COMPONENTS			
881	3580022F93	RF	FUEL TANK STEPS LSM			

COPYRIGHT© 2011INTERNATIONAL TRUCK AND ENGINE CORP.

https://truckmanualshub.com/

Figure 01 1H5

FUEL TANK MODULE; LT SIDE STRAPS, (ABR#6)

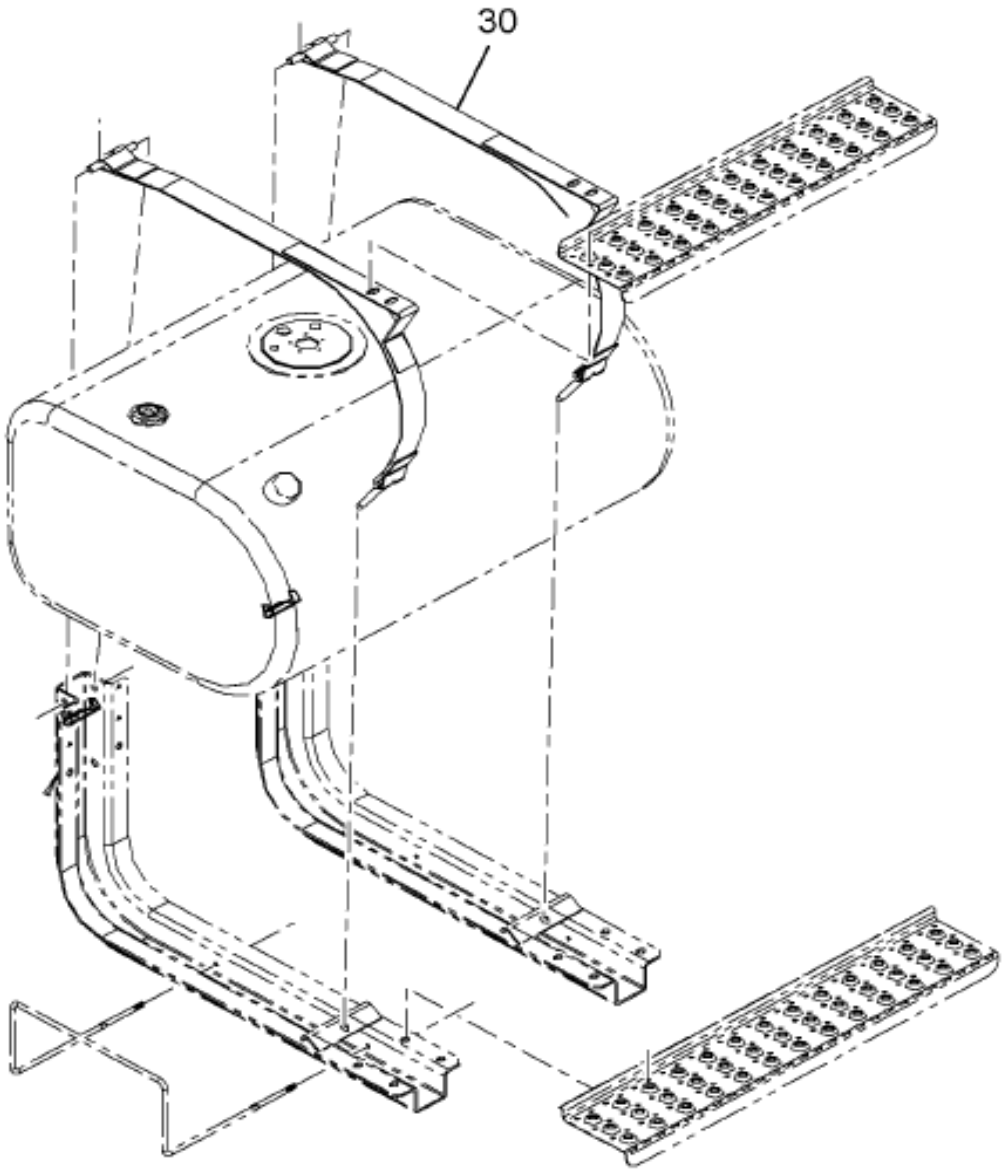

15-L25-0092-01 D10

Item	Part No.	Qty	Description	Kit	Var	Figure
30	3577265F94	1	FUEL TK*LEFT SIDE 23" DEEP		0HP5C	3577265F94

COPYRIGHT© 2011INTERNATIONAL TRUCK AND ENGINE CORP.

https://truckmanualshub.com/

Figure 3577263F94

FUEL TK*LEFT SIDE 23" DEEP

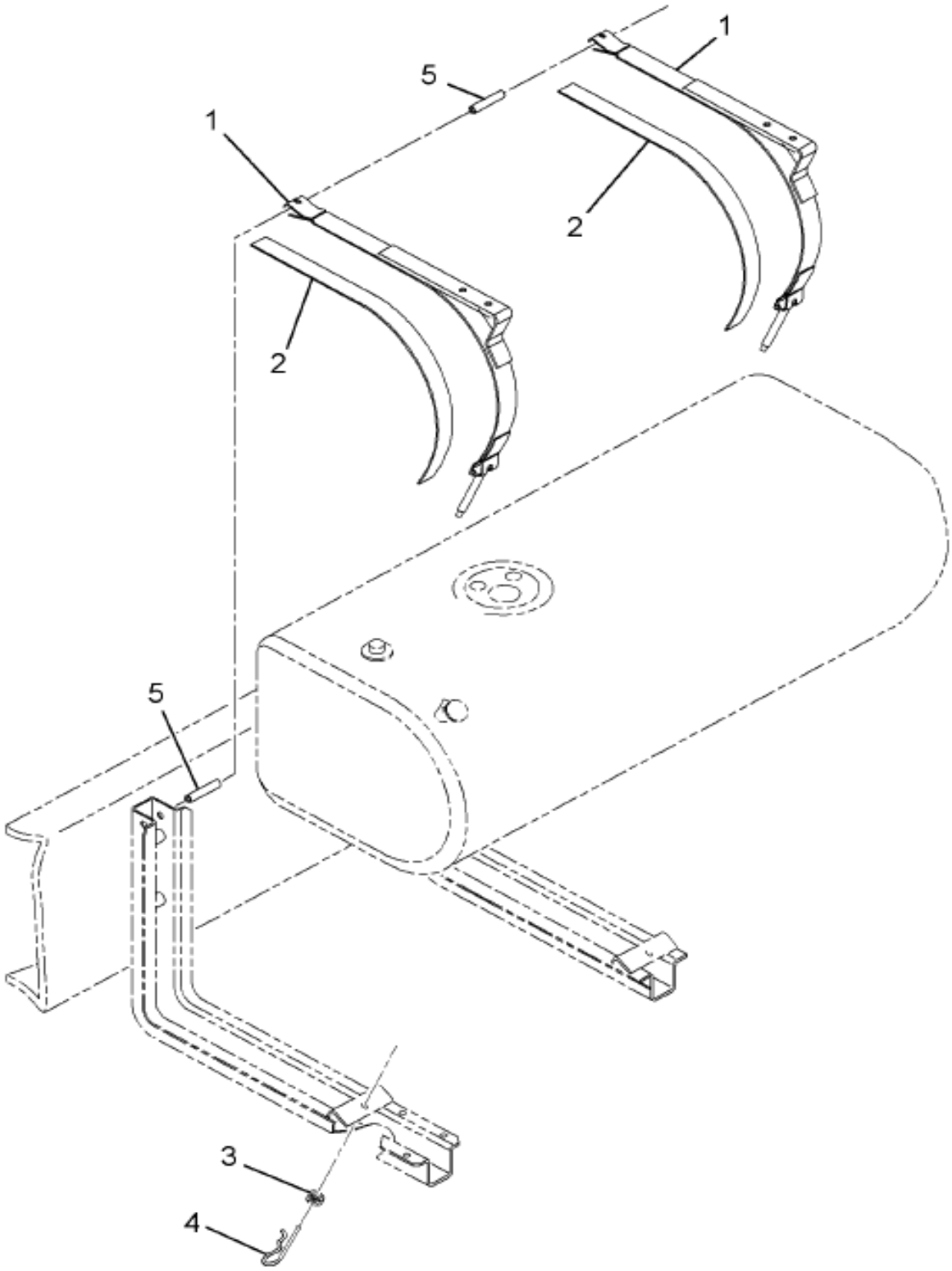

Item	Part No.	Qty	Description	Kit	Var	Figure
1	3559012C5	2	STRAP,FUEL TANK MTG*STRAP ASSY			3559012C5
2	2643614R1	AR	LINING,FUEL TANK STRAP OR SUPT			
3	30755R1	2	NUT,HEX M12 FLANGED			
4	103375	2	PIN,3/32 X 1/4 PLN COTTER			
5	3586802C1	2	PIN,FUEL TANK STRAP*LOCATING P			
880		RF	NOTE: ASM BELOW COMPRISED OF ABOVE			

COPYRIGHT© 2011INTERNATIONAL TRUCK AND ENGINE CORP.

https://truckmanualshub.com/

Figure 3577265F94

FUEL TK*LEFT SIDE 23" DEEP

Item	Part No.	Qty	Description	Kit	Var	Figure
			COMPONENTS			
881	3577265F94	RF	FUEL TK*LEFT SIDE 23" DEEP			

COPYRIGHT© 2011INTERNATIONAL TRUCK AND ENGINE CORP.

https://truckmanualshub.com/

Figure 3559012C3

STRAP,FUEL TANK MTG*STRAP ASSY

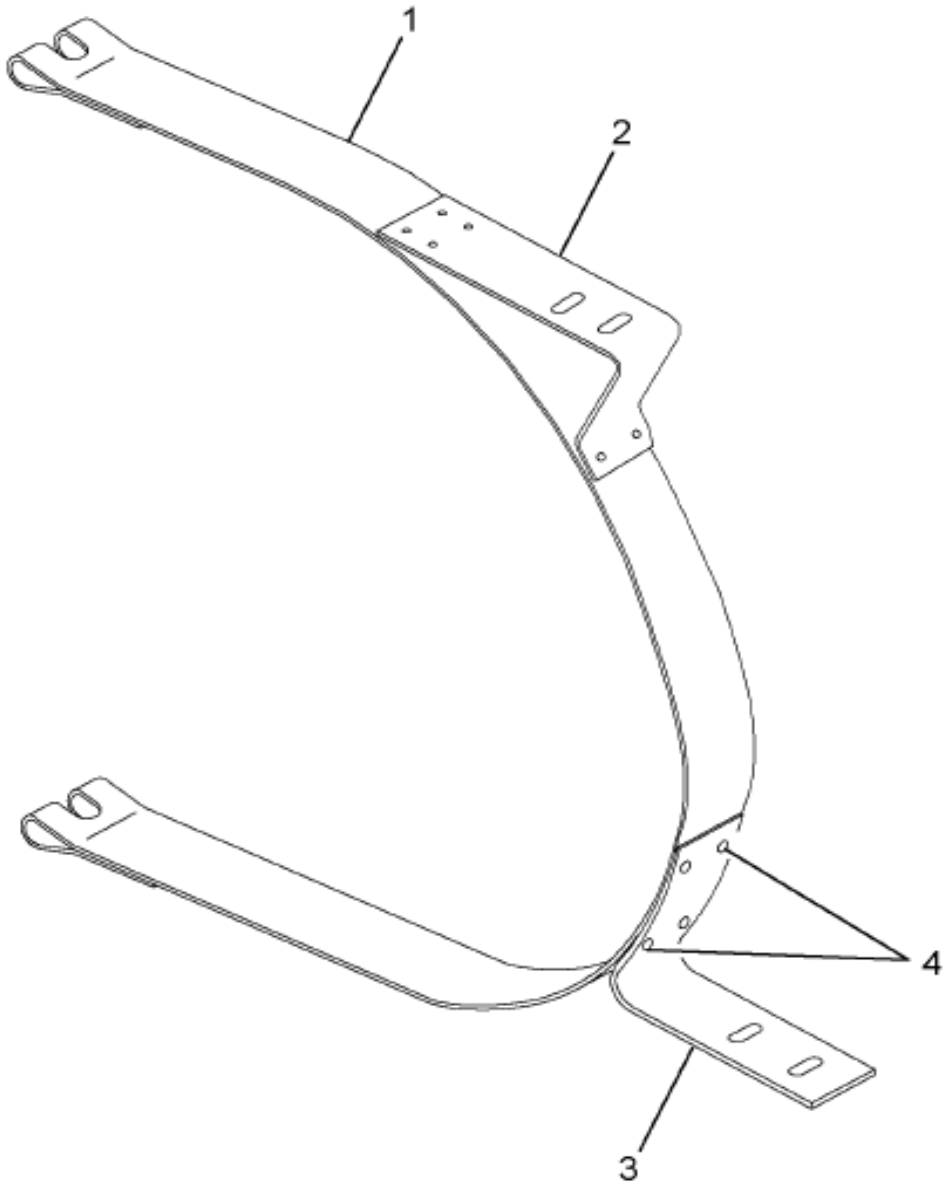

15-593-0345-01 M04

Item	Part No.	Qty	Description	Kit	Var	Figure
1	3559010C5	1	STRAP,FUEL TANK MTG*STRAP ASSY			
2	3559011C1	1	BRACKET,FUEL TANK STRAP*BRACKE			
3	3569641C1	1	BRACKET,FUEL TANK STEP*FUEL TA			
4	118066	4	RIVET, 1/4 X 13/16 PLN F/HD SO			
880		RF	NOTE: ASM BELOW COMPRISED OF ABOVE COMPONENTS			

COPYRIGHT© 2011INTERNATIONAL TRUCK AND ENGINE CORP.

https://truckmanualshub.com/

Figure 3559012C5

STRAP,FUEL TANK MTG*STRAP ASSY

Item	Part No.	Qty	Description	Kit	Var	Figure
881	3559012C5	RF	STRAP,FUEL TANK MTG*STRAP ASSY			

COPYRIGHT© 2011INTERNATIONAL TRUCK AND ENGINE CORP.

https://truckmanualshub.com/

Figure 0F1H3

FUEL TANK MODULE; LT SIDE SUPPORTS,(ABR#4)

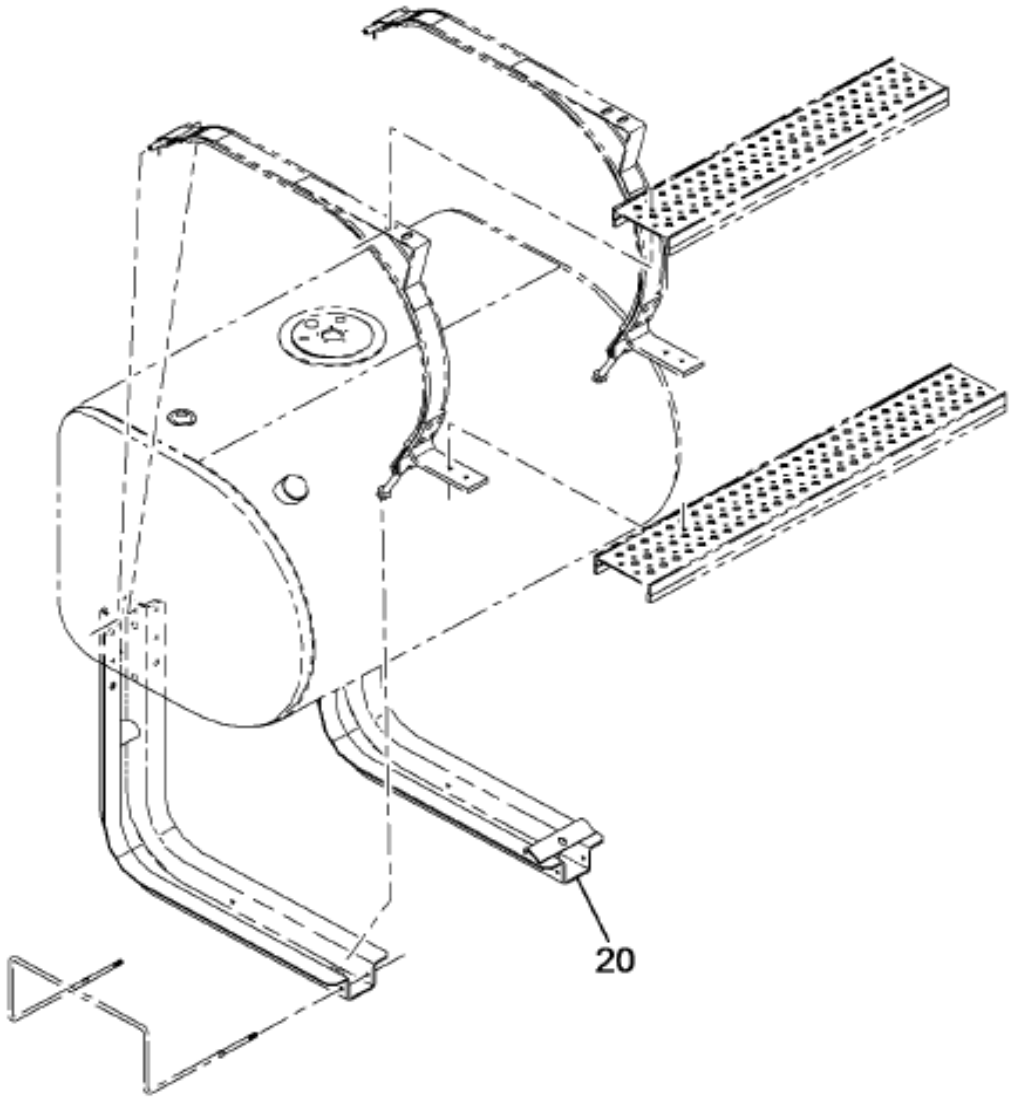

M-NGV-SS
W/80 GAL 23" D-TANKS
W/16XTM

15-L23-0106-01 L10

Item	Part No.	Qty	Description	Kit	Var	Figure
20	3577264F93	1	FUEL TK*SUPT FL TK FOR LSM		0KV3W	3577264F93

COPYRIGHT© 2011INTERNATIONAL TRUCK AND ENGINE CORP.

https://truckmanualshub.com/

Figure 3577264F93
FUEL TK*SUPT FL TK FOR LSM

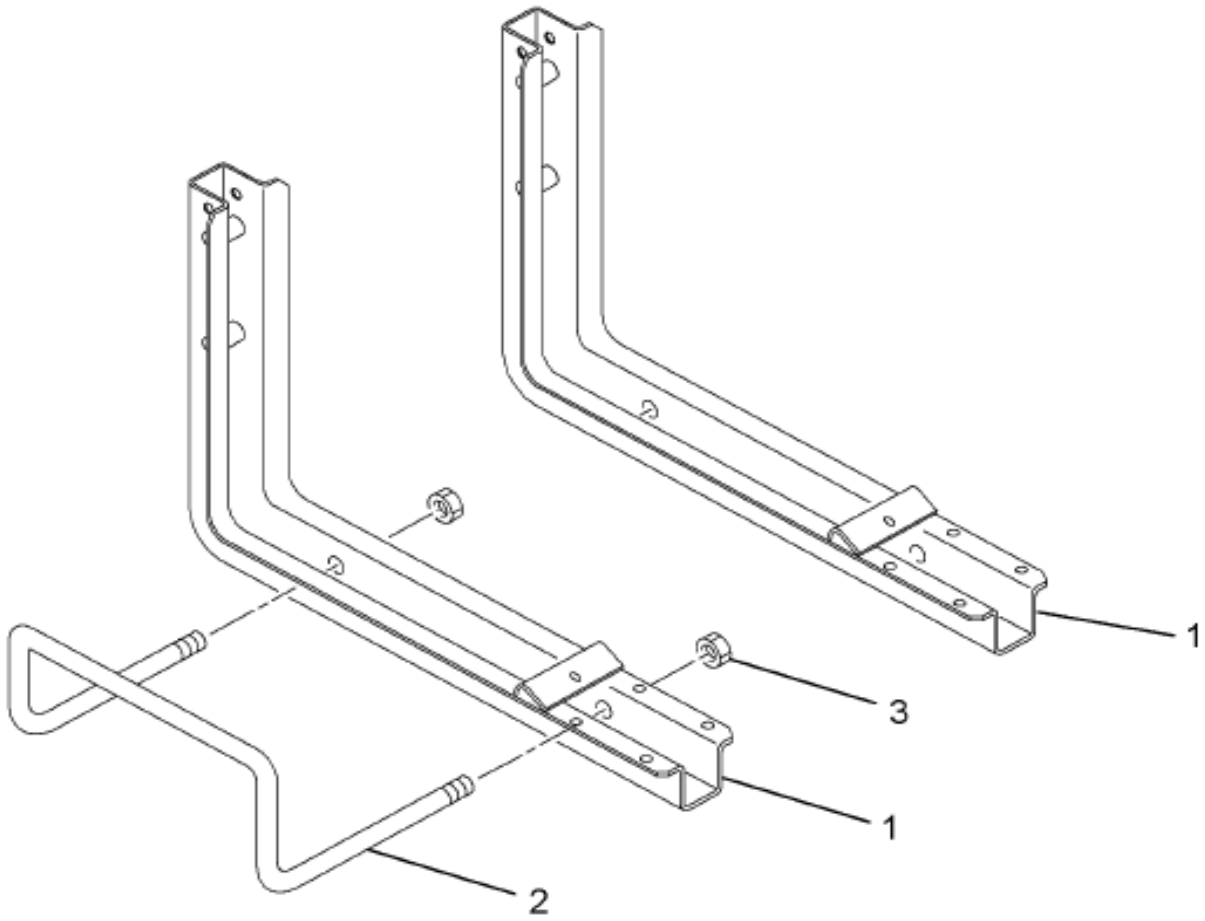

15-L22-0019-01 B05

Item	Part No.	Qty	Description	Kit	Var	Figure
1	3589340C1	2	SUPPORT,FUEL TANK*FOR SS 23IN			3589340C1
2	3558300C1	1	BRACKET,MUD FLAP GUARD			
3	40066R1	2	NUT, M8 - HF LOCK			
880		RF	NOTE: ASM BELOW COMPRISED OF ABOVE COMPONENTS			
881	3577264F93	RF	FUEL TK*SUPT FL TK FOR LSM			

Grp 15

COPYRIGHT© 2011INTERNATIONAL TRUCK AND ENGINE CORP.

https://truckmanualshub.com/

Figure 3589340C1
SUPPORT,FUEL TANK*FOR SS 23IN

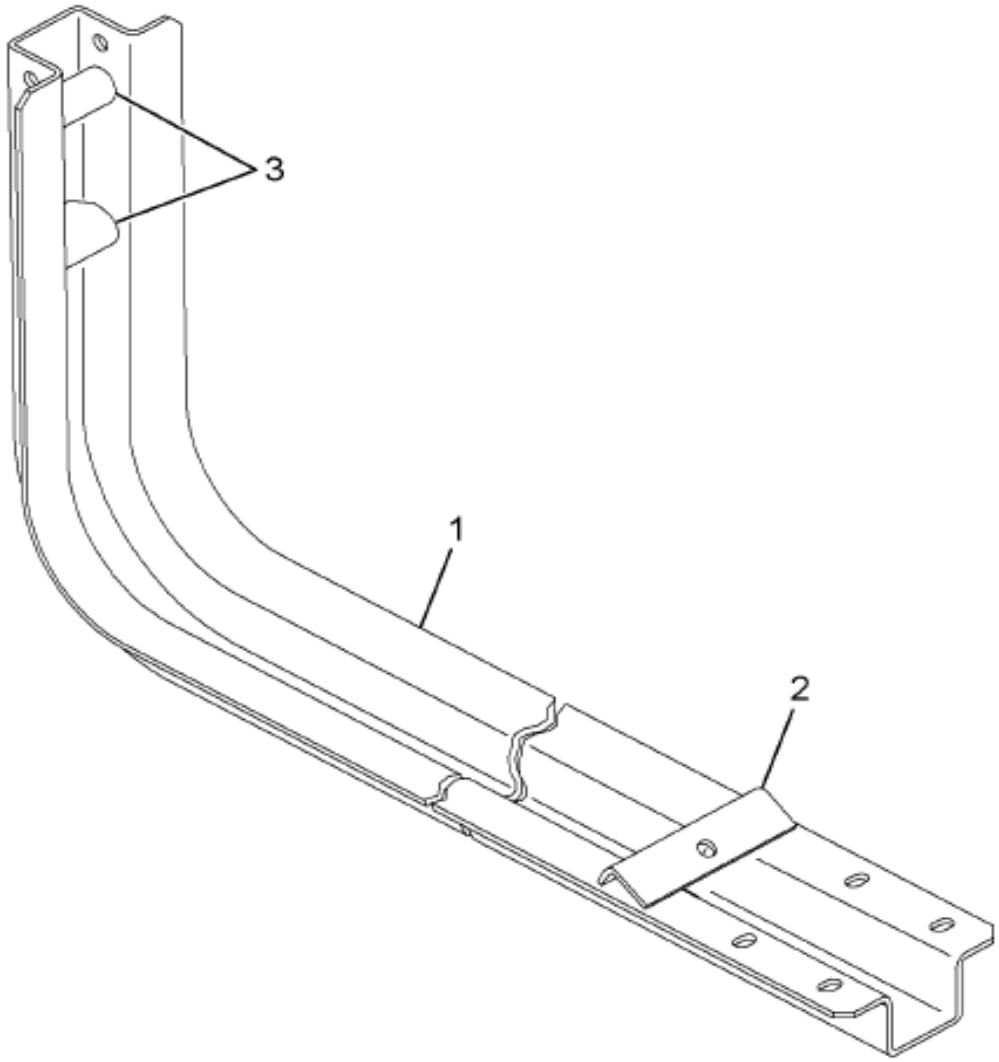

15-L22-0025-01 A05

Item	Part No.	Qty	Description	Kit	Var	Figure
1	3524667C1	2	SPACER,FUEL TANK SUPT OR BRKT*			
2	3533100C3	1	ANGLE,FUEL TANK MTG*			
3	3589339C1	1	SUPPORT,FUEL TANK*FOR SS 23IN			
880		RF	NOTE: ASM BELOW COMPRISED OF ABOVE COMPONENTS			
881	3589340C1	RF	SUPPORT,FUEL TANK*FOR SS 23IN			

COPYRIGHT© 2011INTERNATIONAL TRUCK AND ENGINE CORP.

https://truckmanualshub.com/

Figure 0KHR7

FUEL/WATER SEPARATOR INSTL

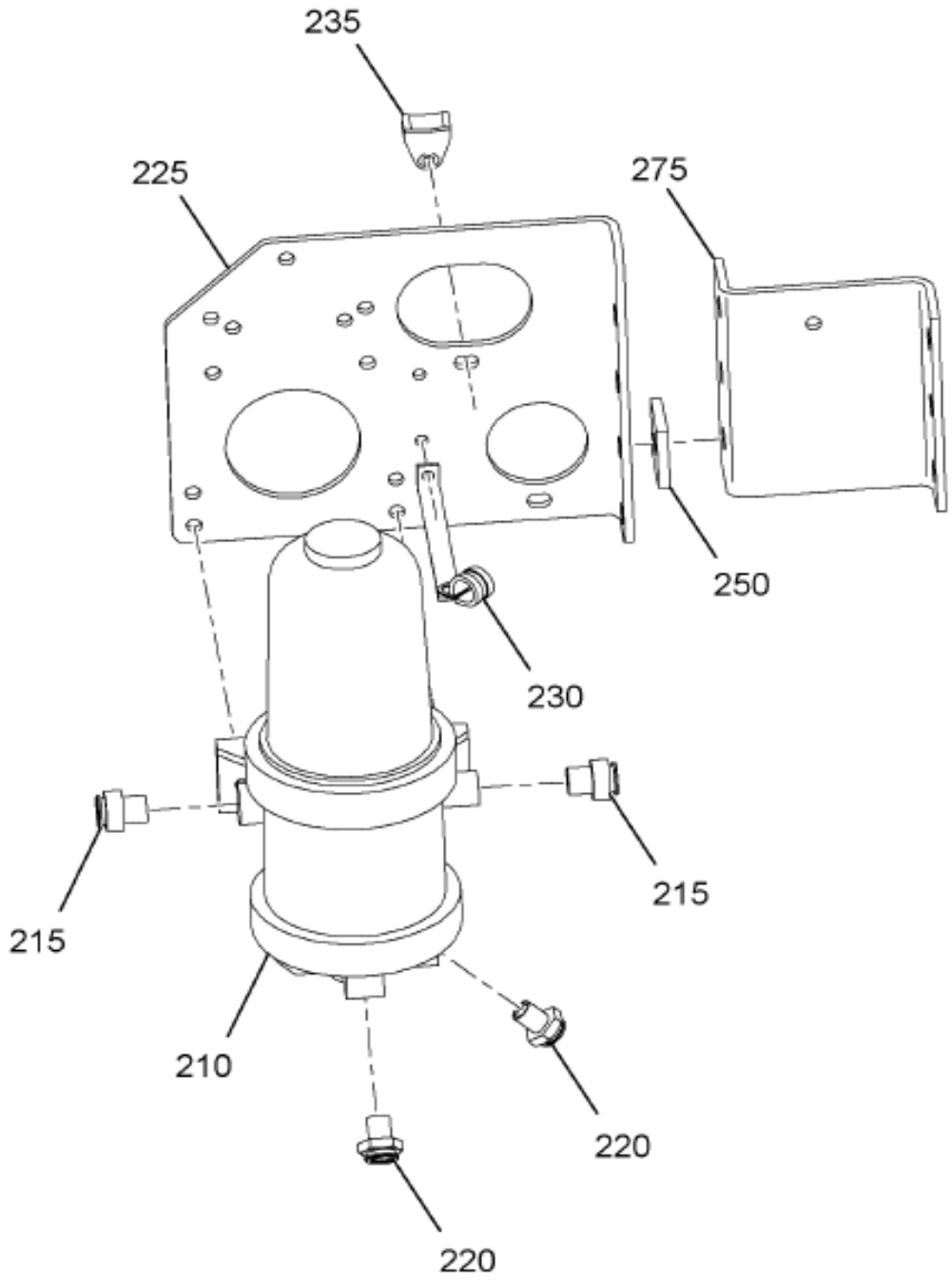

Item	Part No.	Qty	Description	Kit	Var	Figure
210	3588508C93	1	FILTER,FUEL, DAVCO		0KHR7	
210	3551579C1	2	BOLT,HEX FLG HD METRIC*HVY, M1		0KHR7	
210	3535556C1	2	NUT,HEX METRIC PREV. TORQ*M10		0KHR7	
215	3680923C1	2	ADAPTER, QUICK CONNECT 1/2 NPT		0KHR7	
220	3680922C1	2	CAP, QUICK CONNECT 3/8 NPTF ST		0KHR7	
225	3572909C3	1	SUPPORT,, FUEL FILTER MTG		0KHR7	

Grp 15

COPYRIGHT© 2011INTERNATIONAL TRUCK AND ENGINE CORP.

https://truckmanualshub.com/

Figure 0KHR7

FUEL/WATER SEPARATOR INSTL

Item	Part No.	Qty	Description	Kit	Var	Figure
225	30752R2	2	BOLT, M16 X 50MM PHC FLG CLASS		0KHR7	
225	30756R1	2	NUT,HEX M16 PRVTRQ		0KHR7	
230	1673778C1	1	EXTENSION CLIP		0KHR7	
230	299259C91	1	CLAMP RUBBER CUSHIONED		0KHR7	
230	3552155C1	2	BOLT,HEX FLG HD METRIC*M6 X 20		0KHR7	
230	3544378C1	2	NUT,HEX METRIC PREV. TORQ*M6 H		0KHR7	
235	3548585C1	1	GUIDE,BRK HOSE & CABLE*SADDLE		0KHR7	
235	31055R1	1	BOLT M8 X 25 PHC CL 8.8 FLG/H		0KHR7	
235	3544379C1	1	NUT,HEX FLG M8 METRIC		0KHR7	

COPYRIGHT© 2011INTERNATIONAL TRUCK AND ENGINE CORP.

https://truckmanualshub.com/

Figure 01V9D
LT SIDE FUEL TANK MTG

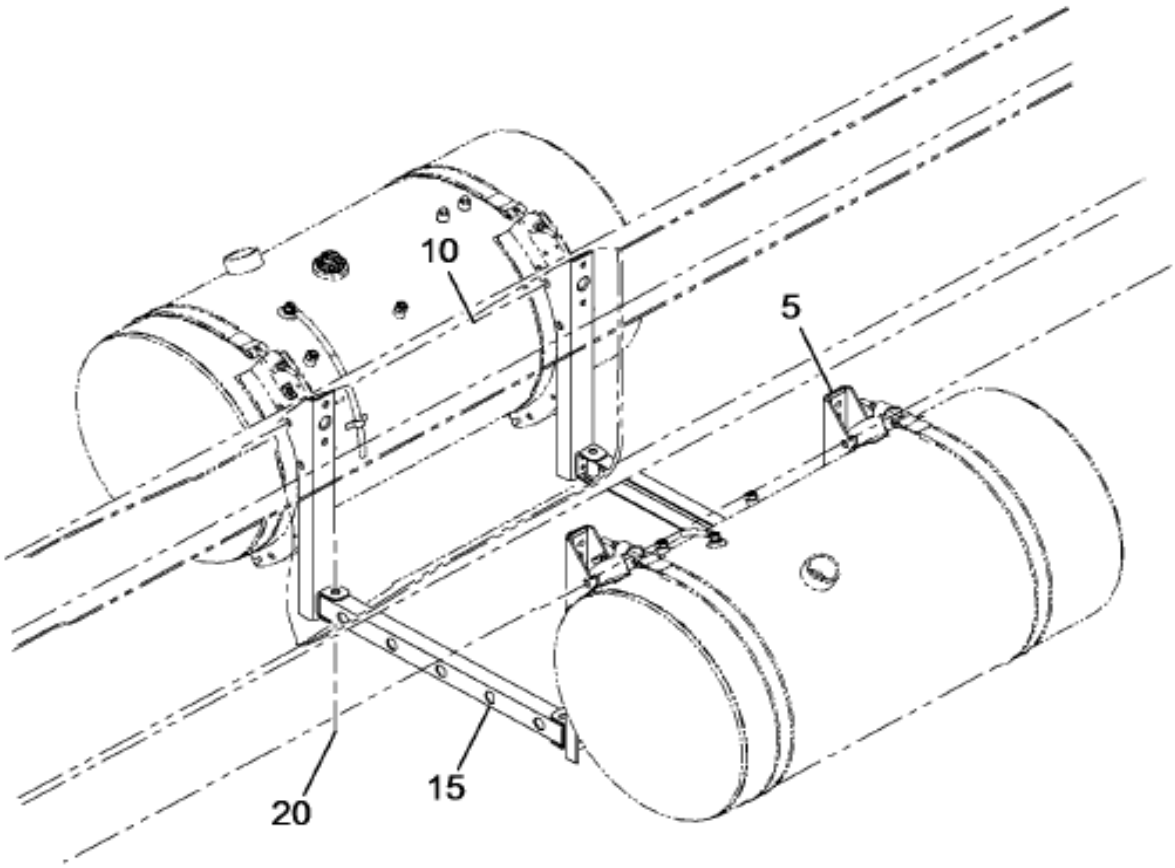

NGV-LH, LF51700
W/DUAL BOC 115 GAL TANKS

Grp 15

15-257-0004-01 J11

Figure 1 of 2

COPYRIGHT© 2011INTERNATIONAL TRUCK AND ENGINE CORP.

https://truckmanualshub.com/

Figure 0FV9D

LT SIDE FUEL TANK MTG

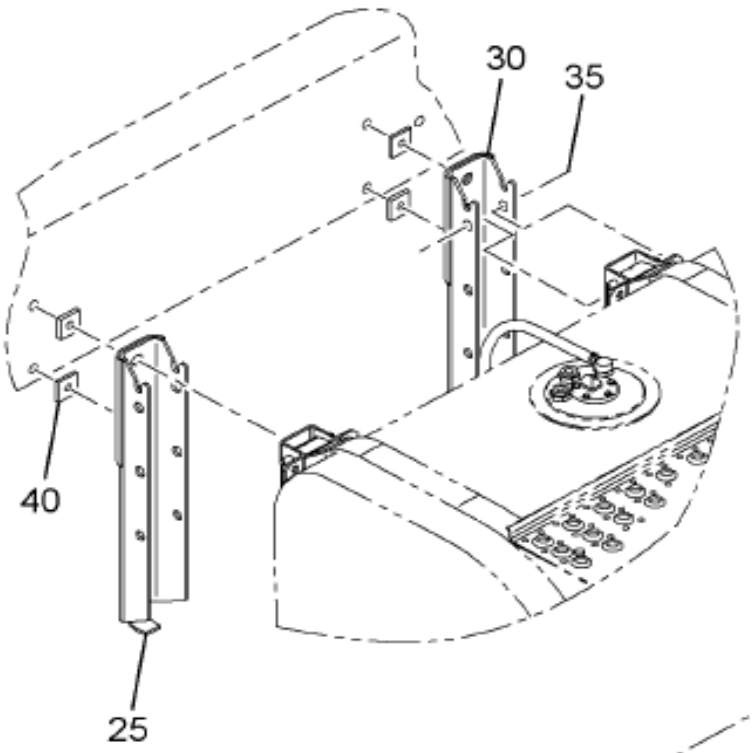

FUEL TANK MTG FOR:
100 GAL 23" DEEP
D-STYLE TANK FOR NGV-SS

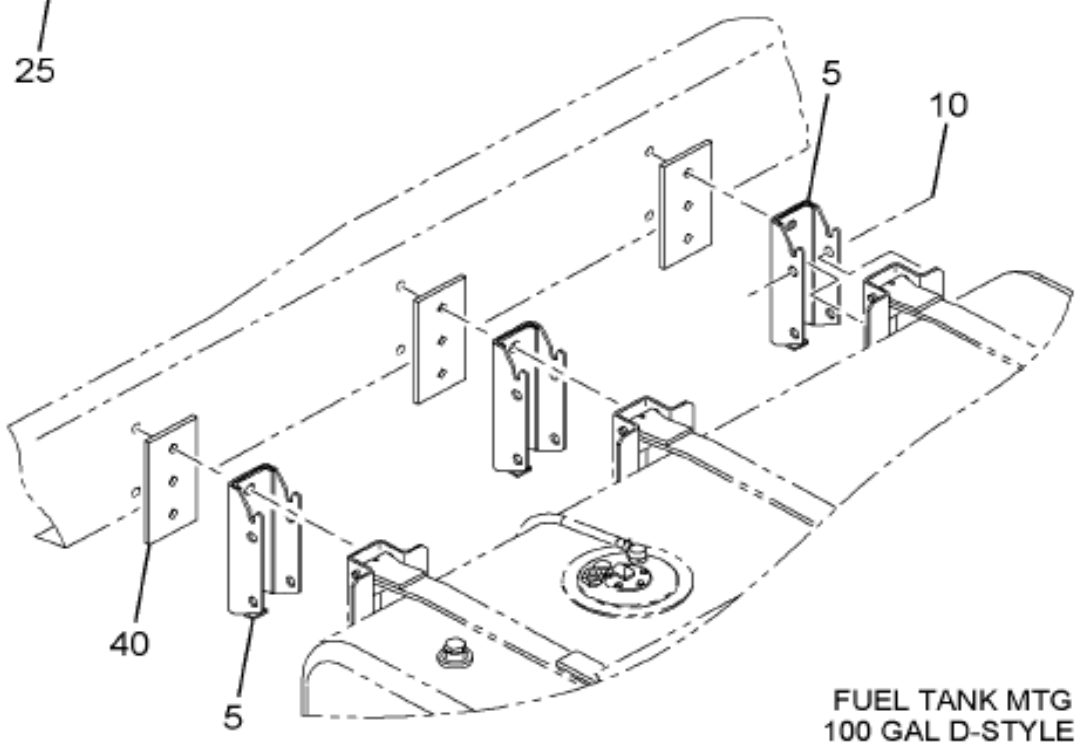

FUEL TANK MTG FOR:
100 GAL D-STYLE TANK
70/30 GAL COMBINATION
FUEL/HYDRAULIC TANK

15-257-0005-01 F04

Item	Part No.	Qty	Description	Kit	Var	Figure
25	3884386C1	2	SUPPORT, ASSY FOR 23" DEEP SS		0HNW6	3884386C1
25	3691086C1	4	BOLT, HUCK-SPIN 5/8 DIA -12		0HNW6	
25	3691083C1	4	NUT, HUCK SPIN COLLAR 5/8 DIA		0HNW6	
35	40250R1	4	BOLT,HEX FLG HD METRIC*M16 X 1		0HNW6	
35	3535554C1	4	NUT,HEX METRIC PREV. TORQ*M16		0HNW6	

COPYRIGHT© 2011INTERNATIONAL TRUCK AND ENGINE CORP.

https://truckmanualshub.com/

Figure 3884386C1

SUPPORT, ASSY FOR 23" DEEP SS

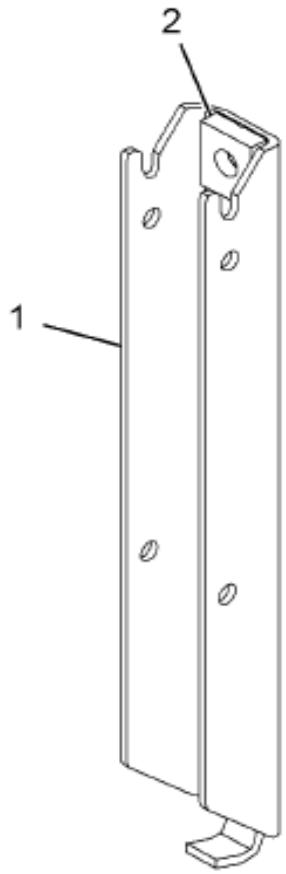

15-257-0043-01 K10

Item	Part No.	Qty	Description	Kit	Var	Figure
1	3570988C3	1	BRACKET,FUEL TANK MTG (15-8790			
2	3837689C1	2	REINFORCEMENT,FUEL TANK MTG			
880		RF	NOTE: ASM BELOW COMPRISED OF ABOVE COMPONENTS			
881	3884386C1	RF	SUPPORT, ASSY FOR 23" DEEP SS			

COPYRIGHT© 2011INTERNATIONAL TRUCK AND ENGINE CORP.

https://truckmanualshub.com/

MANUAL NOTES

COPYRIGHT© 2011INTERNATIONAL TRUCK AND ENGINE CORP.

Group 16
Cab

COPYRIGHT© 2011INTERNATIONAL TRUCK AND ENGINE CORP.

https://truckmanualshub.com/

Figure 0J53H

A/C COMPSR INSTL; W/CUM ISM ENG

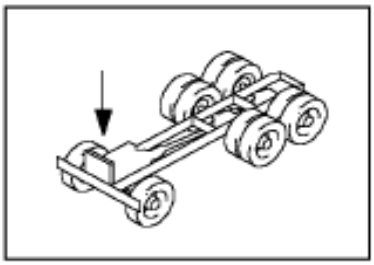

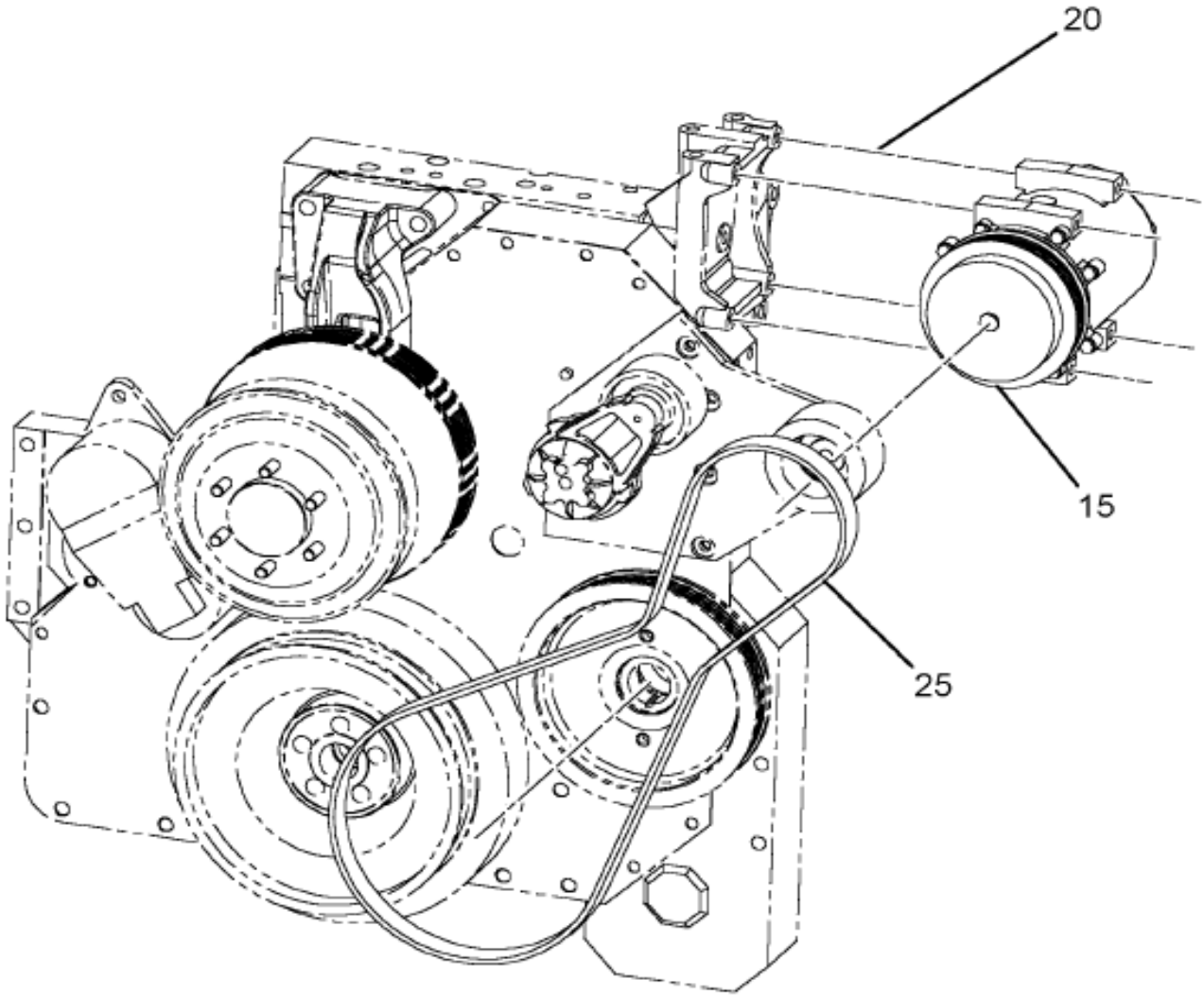

12-362-0001-01 M02

Item	Part No.	Qty	Description	Kit	Var	Figure
15	3628699C1	1	COMPRESSOR AIR COND		0J53H	3628699C1
20	1817962C1	4	BOLT M8 X 100 HEX FLANGE		0J53H	
25	3579001C1	1	BELT,FAN*		0J53H	

COPYRIGHT© 2011INTERNATIONAL TRUCK AND ENGINE CORP.

https://truckmanualshub.com/

Figure 3628699C1
COMPRESSOR AIR COND

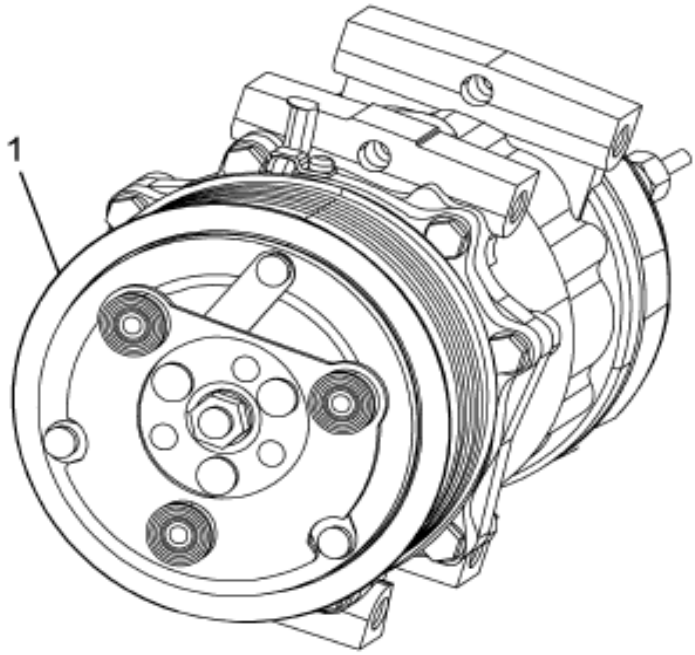

16-362-0068-01 K07

Grp 16

Item	Part No.	Qty	Description	Kit	Var	Figure
1	2593393C1	1	KIT,A/C CLUTCH,COMPRESSOR			
880		RF	NOTE: ASM BELOW COMPRISED OF ABOVE COMPONENTS			
881	3628699C1	RF	COMPRESSOR AIR COND			

COPYRIGHT© 2011INTERNATIONAL TRUCK AND ENGINE CORP.

https://truckmanualshub.com/

Figure 0P1WR

AIR HORN INSTL; MTD RIGHT FRAME RAIL

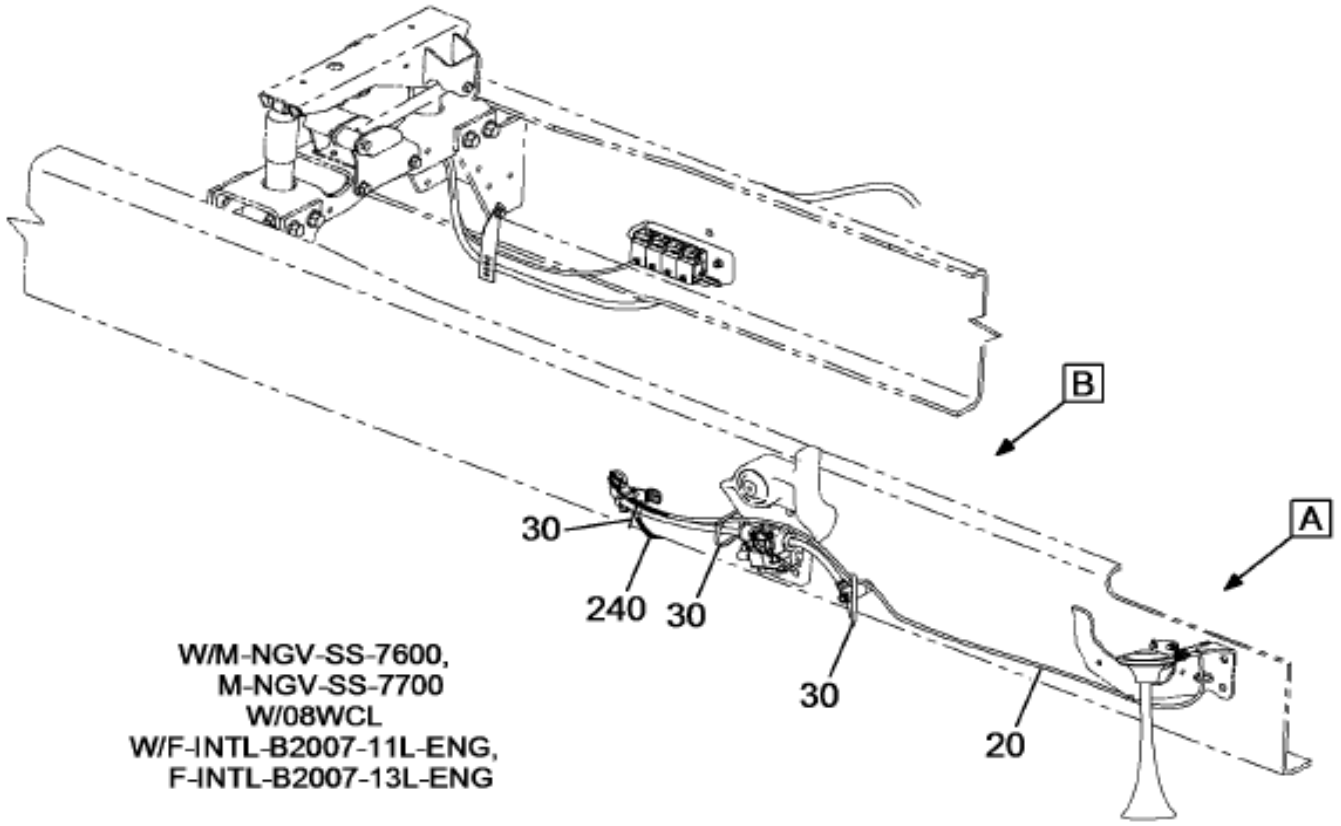

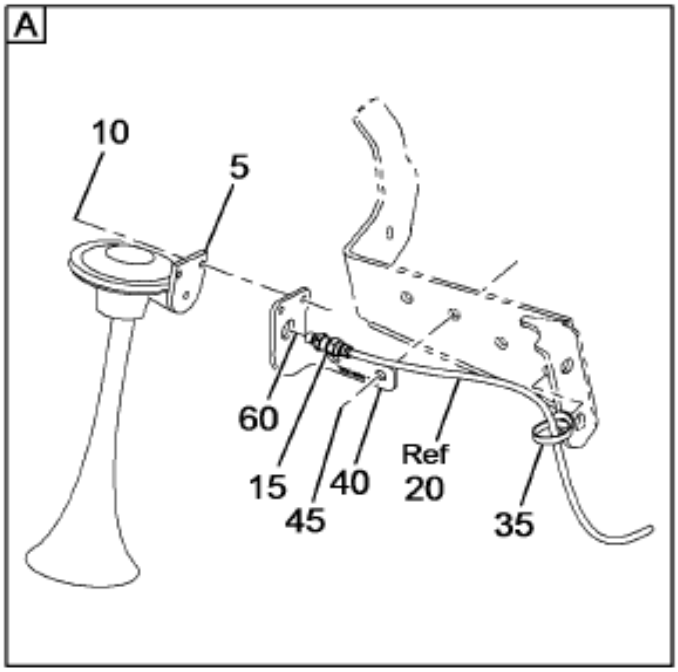

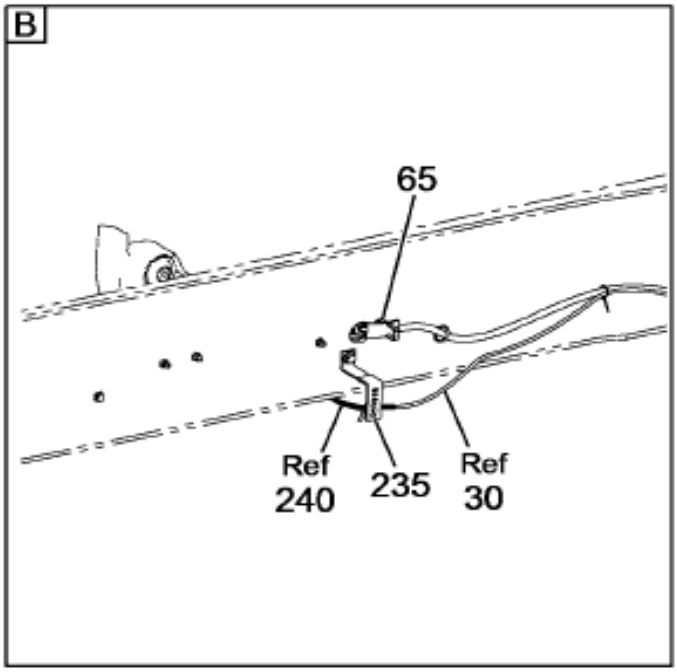

16-344-0087-01 K09

Item	Part No.	Qty	Description	Kit	Var	Figure
5	3791174C2	1	HORN,AIR,		0P1WR	
10	3544378C1	2	NUT,HEX METRIC PREV. TORQ*M6 H		0P1WR	
10	3552155C1	2	BOLT,HEX FLG HD METRIC*M6 X 20		0P1WR	
15	3606280C1	1	CONNECTOR,QC PMT ADAPTER		0P1WR	
20	417196C3	4400	TUBE,NYLON BULK 1/4 OD BLACK		0WHWJ	
30	869707C1	2	STRAP,CABLE LOCK		0P1WR	

COPYRIGHT© 2011INTERNATIONAL TRUCK AND ENGINE CORP.

https://truckmanualshub.com/

Figure 0P1WR

AIR HORN INSTL; MTD RIGHT FRAME RAIL

Item	Part No.	Qty	Description	Kit	Var	Figure
35	3530605C2	1	STRAP,CABLE LOCK, BUTTON STRAP		0WHWJ	
60	30328R1	1	WASHER,13.3 X 24 X 3MM		0P1WR	

COPYRIGHT© 2011INTERNATIONAL TRUCK AND ENGINE CORP.

https://truckmanualshub.com/

Figure 0HCPH
CAB ASM; NGV

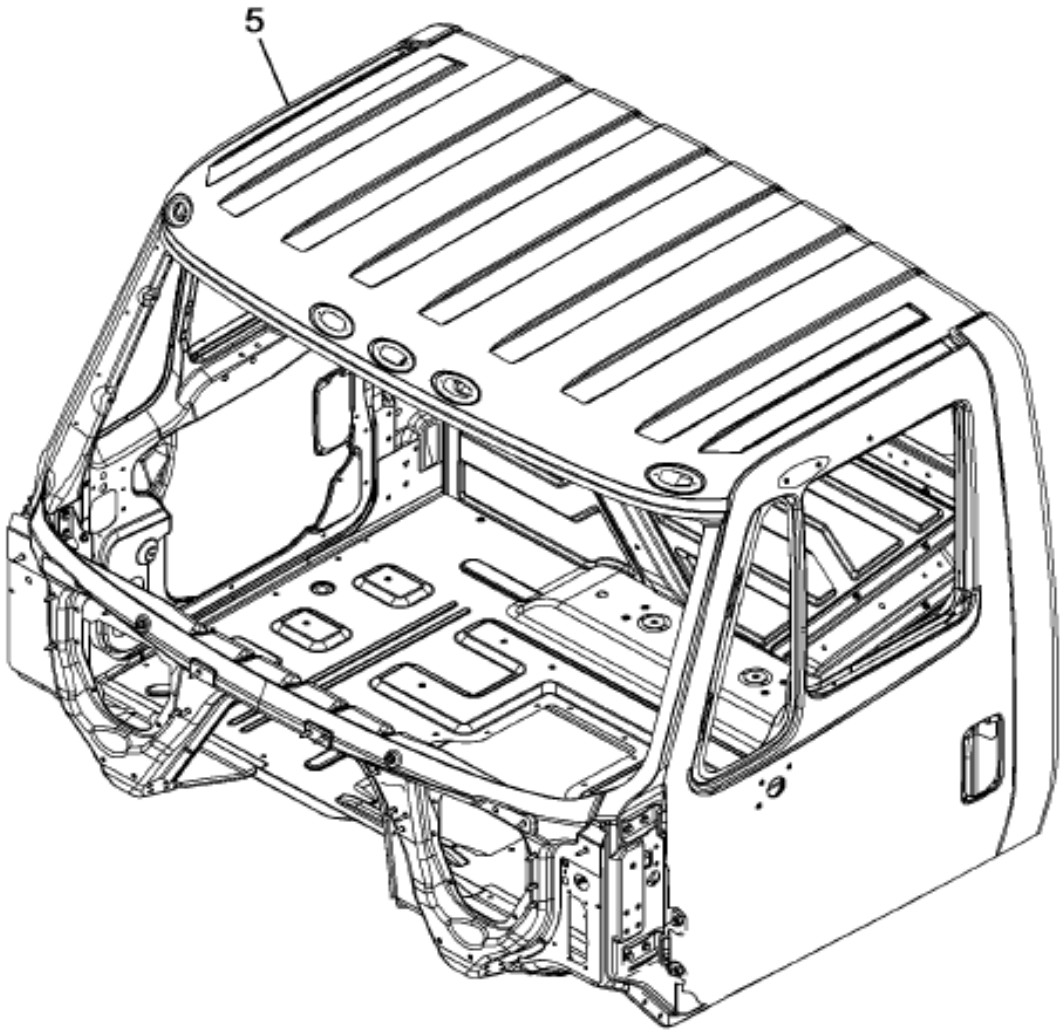

16-447-0409-01 A10

Item	Part No.	Qty	Description	Kit	Var	Figure
5	3863714C91	1	CAB,REGULAR,		0M35G	3863714C91
5	3602956C92	1	PANEL, DASH ASSY COMPLETE, LHD		0M35G	3602956C92
5	3579429C91	1	PANEL,SIDE BODY ASSY WLDD LH		0M35G	3579429C91
5	3579430C91	1	PANEL,SIDE BDY ASSY WLDD RH NG		0M35G	3579430C91
5	3511401C94	1	PANEL,ROOF ASSY WLDD W/O AERO		0M35G	3511401C94
5	3511399C96	1	PANEL,ASSY BACK WELDED		0M35G	3511399C96

COPYRIGHT© 2011INTERNATIONAL TRUCK AND ENGINE CORP.

https://truckmanualshub.com/

Figure 0HCPH

CAB ASM; NGV

Item	Part No.	Qty	Description	Kit	Var	Figure
5	3818932C91	1	UNDERBODY,ASM, CONV BB		0M35G	3818932C91
5	3687177C92	1	DOOR,CAB LT, ASSY WELDED		0M35G	3687177C92
5	3687178C92	1	DOOR,CAB RT, ASSY WELDED		0M35G	3687178C92
5	3510233C2	2	BRACKET,SPEAKER MTG LH		0M35G	
5	3532083C1	14	BOLT,LOCK 8 MM W/PATCH		0M35G	
5	3549259C1	4	HINGE,DOOR CAB 2-PC FRT DOOR		0M35G	
5	30167R1	8	NUT,M8 PHC CLASS 10		0M35G	
5	3509986C2	1	BRACKET,INSTR PANEL ASSY LH		0M35G	
5	3509987C2	1	BRACKET,INSTR PANEL ASSY RH		0M35G	
5	3806371C1	8	BOLT,M8 X 1.25-34MM HEX SEMS		0M35G	

Grp 16

COPYRIGHT© 2011INTERNATIONAL TRUCK AND ENGINE CORP.

https://truckmanualshub.com/

Figure 3863714C91
CAB,REGULAR,

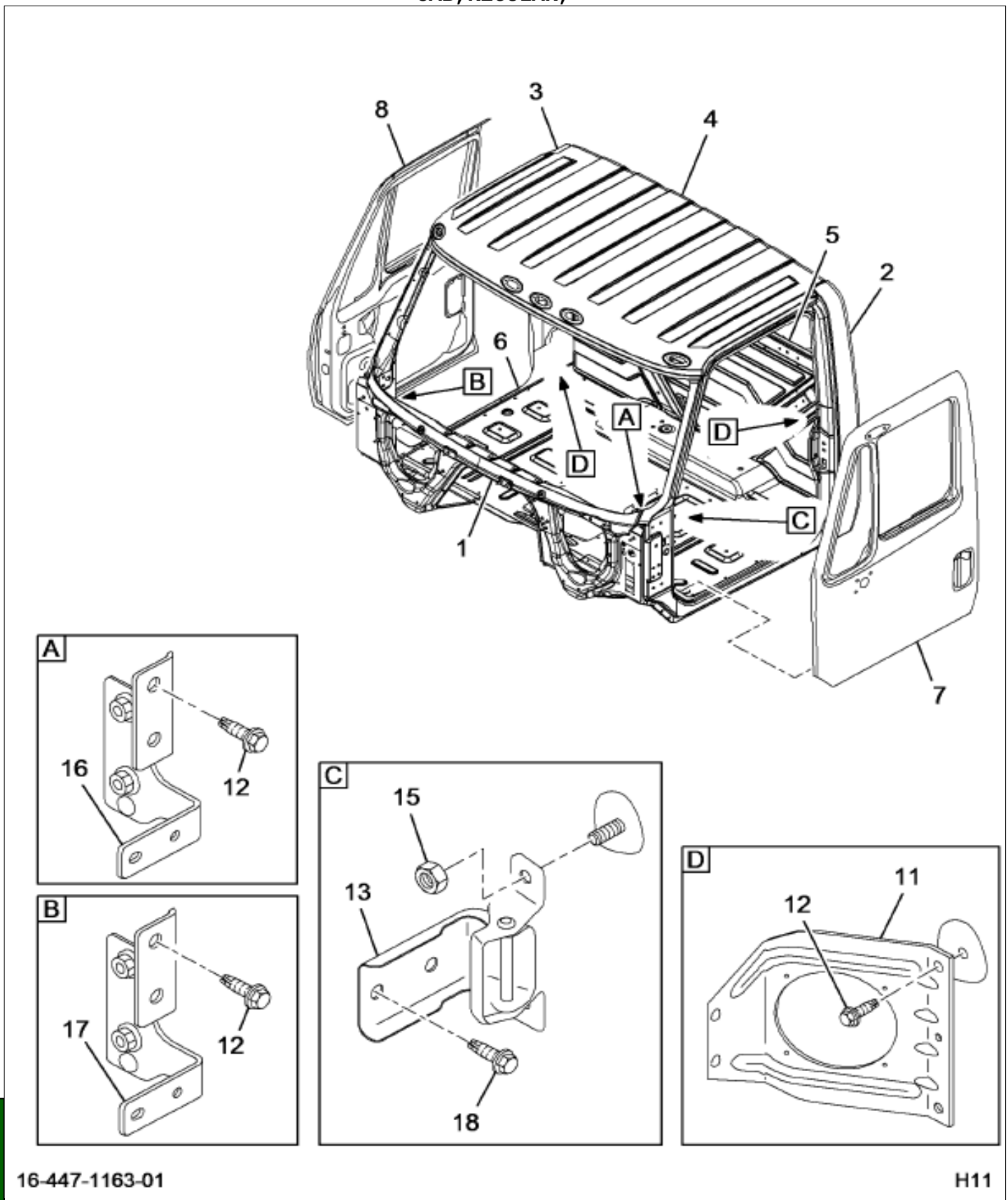

Item	Part No.	Qty	Description	Kit	Var	Figure
1	3602956C92	1	PANEL, DASH ASSY COMPLETE, LHD			3602956C92
1		RF	LEFT			
2	3579429C91	1	PANEL,SIDE BODY ASSY WLDD LH			3579429C91
2		RF	LEFT			
3	3579430C91	1	PANEL,SIDE BDY ASSY WLDD RH NG			3579430C91
3		RF	RIGHT			

COPYRIGHT© 2011INTERNATIONAL TRUCK AND ENGINE CORP.

https://truckmanualshub.com/

Figure 3863714C91
CAB,REGULAR,

Item	Part No.	Qty	Description	Kit	Var	Figure
4	3511401C94	1	PANEL,ROOF ASSY WLDD W/O AERO			3511401C94
5	3511399C98	1	PANEL, BACK ASSY WELDED CONV.			3511399C98
6	3818932C91	1	UNDERBODY,ASM, CONV BB			3818932C91
7	3687177C92	1	DOOR,CAB LT, ASSY WELDED			3687177C92
7		RF	LEFT			
8	3687178C92	1	DOOR,CAB RT, ASSY WELDED			3687178C92
8		RF	RIGHT			
11	3510233C2	2	BRACKET,SPEAKER MTG LH			
11		RF	LEFT			
12	3532083C1	14	BOLT,LOCK 8 MM W/PATCH			
13	3549259C1	4	HINGE,DOOR CAB 2-PC FRT DOOR			
15	30167R1	8	NUT,M8 PHC CLASS 10			
16	3509986C2	1	BRACKET,INSTR PANEL ASSY LH			
16		RF	LEFT			
17	3509987C2	1	BRACKET,INSTR PANEL ASSY RH			
17		RF	RIGHT			
18	3806371C1	8	BOLT,M8 X 1.25-34MM HEX SEMS			
880		RF	NOTE: ASM BELOW COMPRISED OF ABOVE COMPONENTS			
881	3863714C91	RF	CAB,REGULAR,			

COPYRIGHT© 2011INTERNATIONAL TRUCK AND ENGINE CORP.

https://truckmanualshub.com/

Figure 3687177C92

DOOR,CAB LT, ASSY WELDED

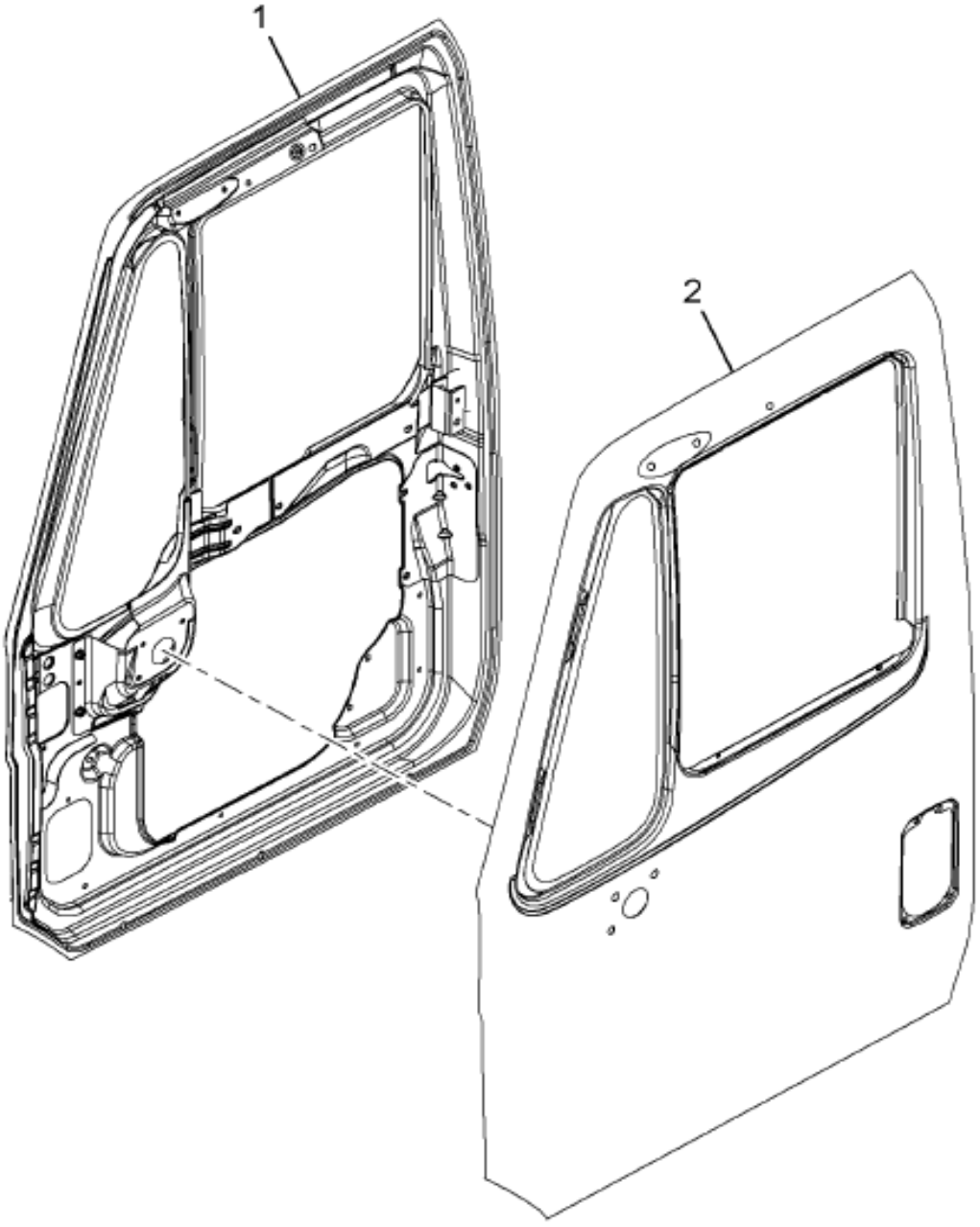

LEFT HAND SHOWN
RIGHT HAND OPPOSITE

16-447-1070-01 G11

Item	Part No.	Qty	Description	Kit	Var	Figure
1	3687175C92	1	DOOR,CAB LT, INNER ASSY			3687175C92
1		RF	LEFT			
2	3555091C91	1	DOOR,CAB LT OUTER ASSY			
2		RF	LEFT			
880		RF	NOTE: ASM BELOW COMPRISED OF ABOVE COMPONENTS			

COPYRIGHT© 2011INTERNATIONAL TRUCK AND ENGINE CORP.

https://truckmanualshub.com/

Figure 3687177C92

DOOR,CAB LT, ASSY WELDED

Item	Part No.	Qty	Description	Kit	Var	Figure
881	3687177C92	RF	DOOR,CAB LT, ASSY WELDED			

COPYRIGHT© 2011INTERNATIONAL TRUCK AND ENGINE CORP.

https://truckmanualshub.com/

Figure 3687175C92
DOOR,CAB LT, INNER ASSY

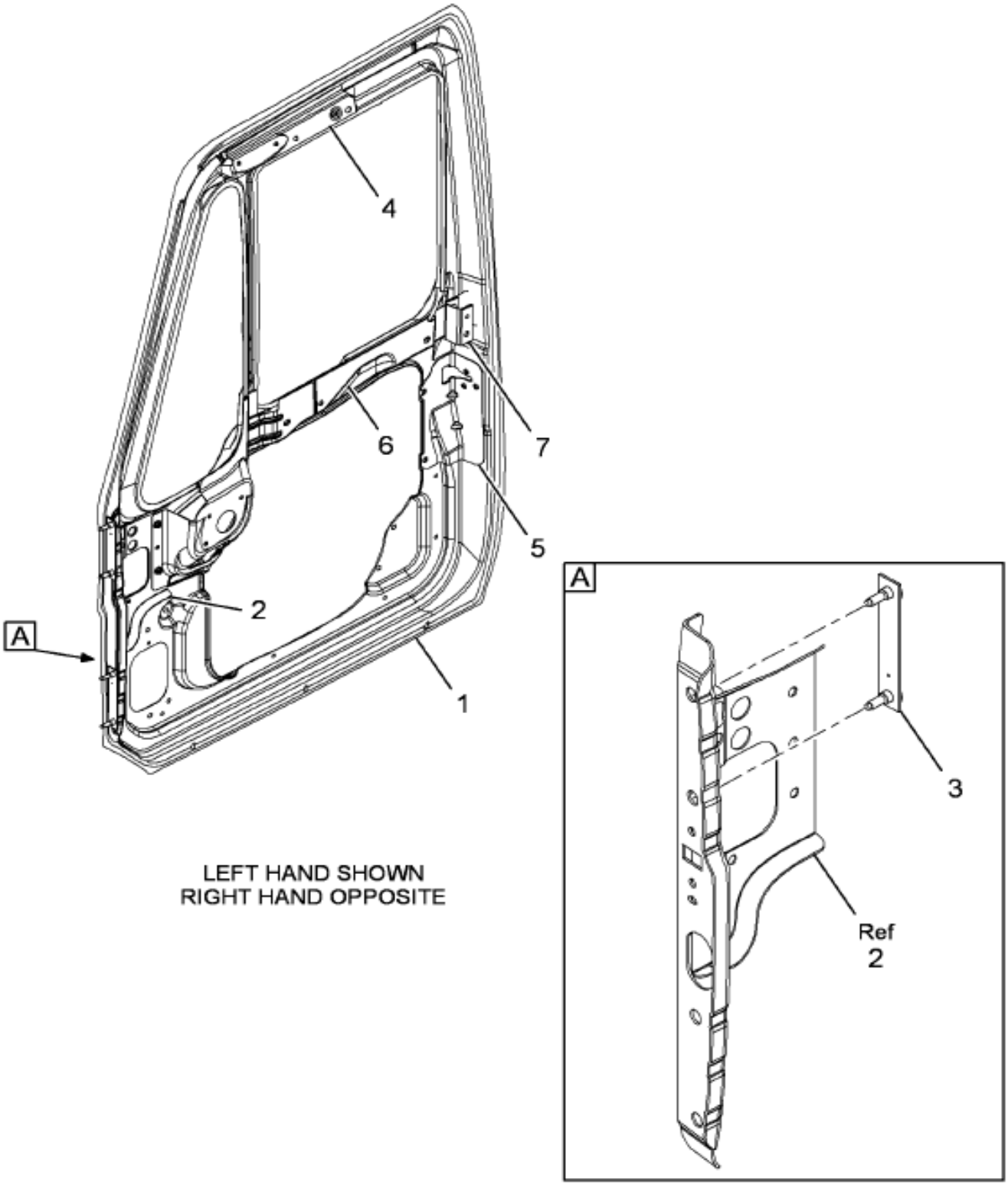

16-447-1156-01 L10

Item	Part No.	Qty	Description	Kit	Var	Figure
1	3560088C6	1	PANEL, ,DOOR LH CONV			
1		RF	LEFT			
2	3560054C5	1	REINFORCEMENT, DOOR HINGE ASSY			
3	3543337C3	2	PLATE,WELD STUD			
4	3555103C1	1	REINFORCEMENT,MIRROR BRACE LH			
4		RF	LEFT			

COPYRIGHT© 2011INTERNATIONAL TRUCK AND ENGINE CORP.

https://truckmanualshub.com/

Figure 3687175C92

DOOR,CAB LT, INNER ASSY

Item	Part No.	Qty	Description	Kit	Var	Figure
5	3511953C1	1	REINFORCEMENT,DR INR PNL LH			
5		RF	LEFT			
6	3560060C1	1	REINFORCEMENT,MIR BRC INR LH			
6		RF	LEFT			
7	3558798C1	1	REINFORCEMENT,DOOR PANEL			
880		RF	NOTE: ASM BELOW COMPRISED OF ABOVE COMPONENTS			
881	3687175C92	RF	DOOR,CAB LT, INNER ASSY			

Grp 16

COPYRIGHT© 2011INTERNATIONAL TRUCK AND ENGINE CORP.

https://truckmanualshub.com/

Figure 3687178C92

DOOR,CAB RT, ASSY WELDED

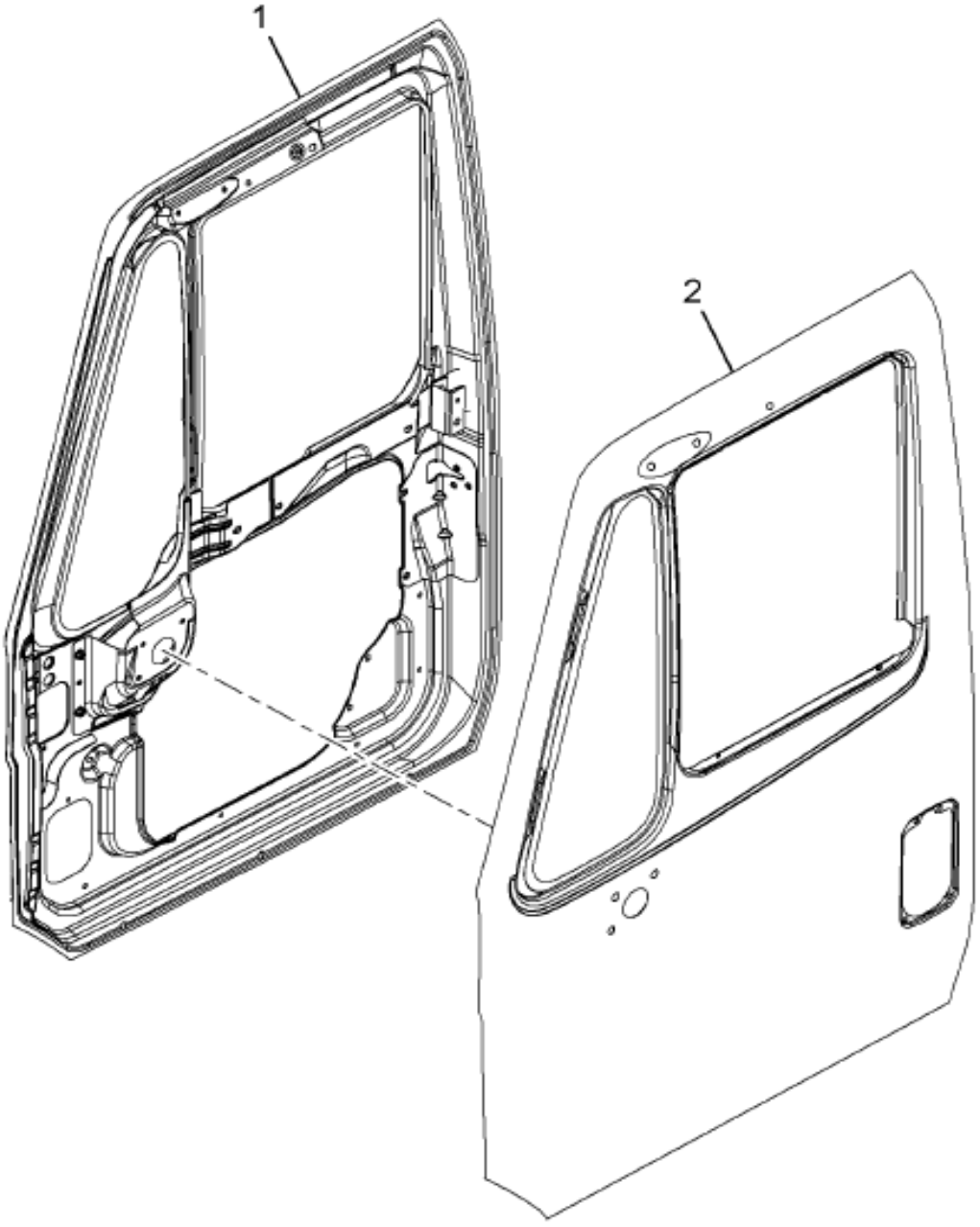

LEFT HAND SHOWN
RIGHT HAND OPPOSITE

16-447-1070-01 G11

Item	Part No.	Qty	Description	Kit	Var	Figure
1	3687176C92	1	DOOR,CAB RT, INNER ASSY			3687176C92
2	3555092C91	1	DOOR,CAB RT OUTER ASSY			
880		RF	NOTE: ASM BELOW COMPRISED OF ABOVE COMPONENTS			
881	3687178C92	RF	DOOR,CAB RT, ASSY WELDED			

COPYRIGHT© 2011INTERNATIONAL TRUCK AND ENGINE CORP.

https://truckmanualshub.com/

Figure 3687176C92

DOOR,CAB RT, INNER ASSY

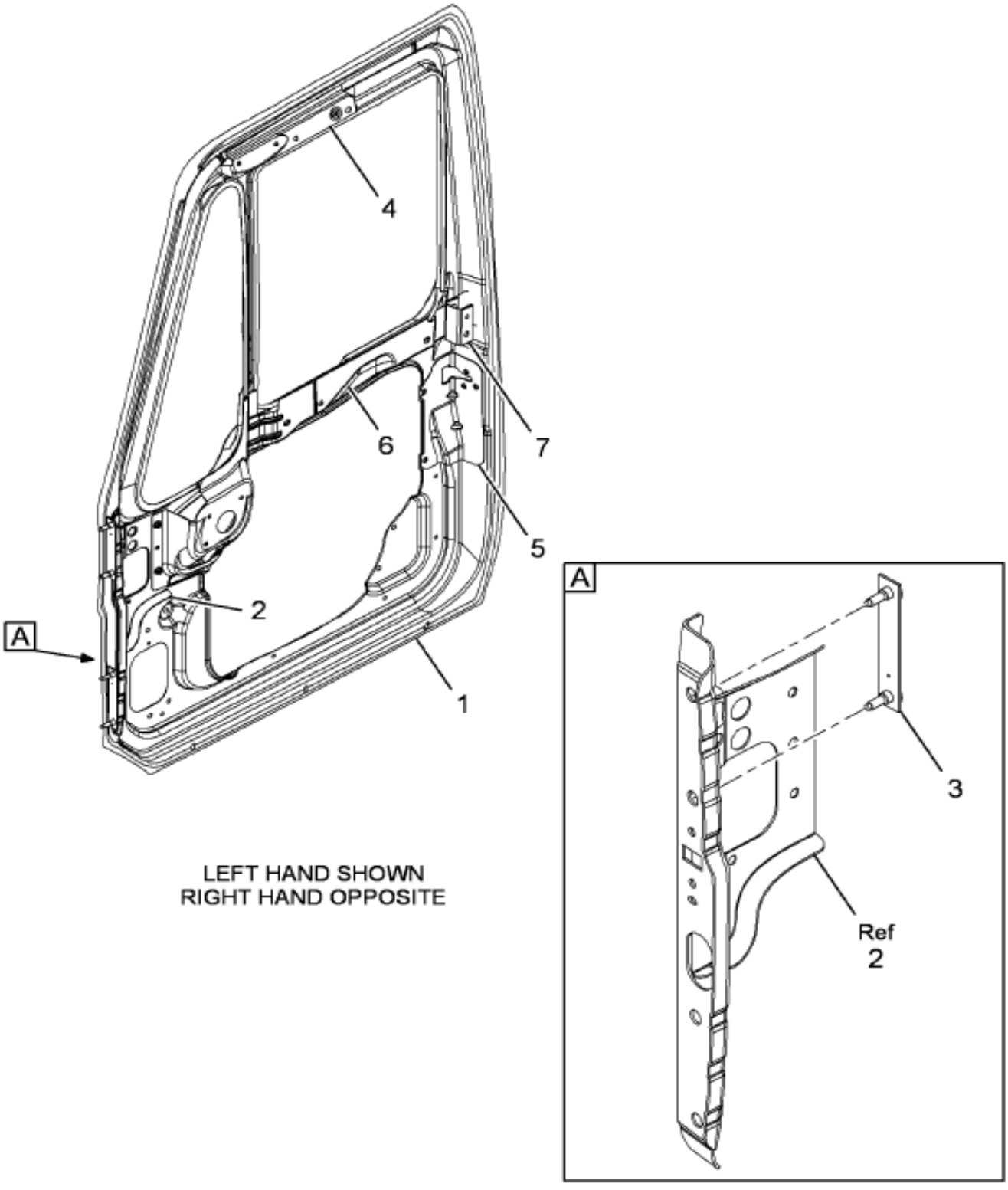

16-447-1156-01 L10

Item	Part No.	Qty	Description	Kit	Var	Figure
1	3560089C6	1	PANEL, ,DOOR RH CONV			3560089C6
1		RF	RIGHT			
2	3560055C5	1	REINFORCEMENT, DOOR HINGE ASSY			
3	3543337C3	2	PLATE,WELD STUD			
4	3555104C1	1	REINFORCEMENT,MIRROR BRACE RH			
4		RF	RIGHT			

Grp 16

COPYRIGHT© 2011INTERNATIONAL TRUCK AND ENGINE CORP.

https://truckmanualshub.com/

Figure 3687176C92

DOOR,CAB RT, INNER ASSY

Item	Part No.	Qty	Description	Kit	Var	Figure
5	3511954C1	1	REINFORCEMENT,DR IND PNL RH			
5		RF	RIGHT			
6	3560061C1	1	REINFORCEMENT,MIR BRC INR RH			
6		RF	RIGHT			
7	3558798C1	1	REINFORCEMENT,DOOR PANEL			
880		RF	NOTE: ASM BELOW COMPRISED OF ABOVE COMPONENTS			
881	3687176C92	RF	DOOR,CAB RT, INNER ASSY			
			NON-ILLUSTRATED REFERENCE FIGURE 3560089C6			
1	3560089B6	1	PANEL			
880		RF	NOTE: ASM BELOW COMPRISED OF ABOVE COMPONENTS			
881	3560089C6	RF	PANEL, ,DOOR RH CONV			

COPYRIGHT© 2011INTERNATIONAL TRUCK AND ENGINE CORP.

https://truckmanualshub.com/

Figure 3562415C3
FRAME,DOOR OPENING ASSY RH

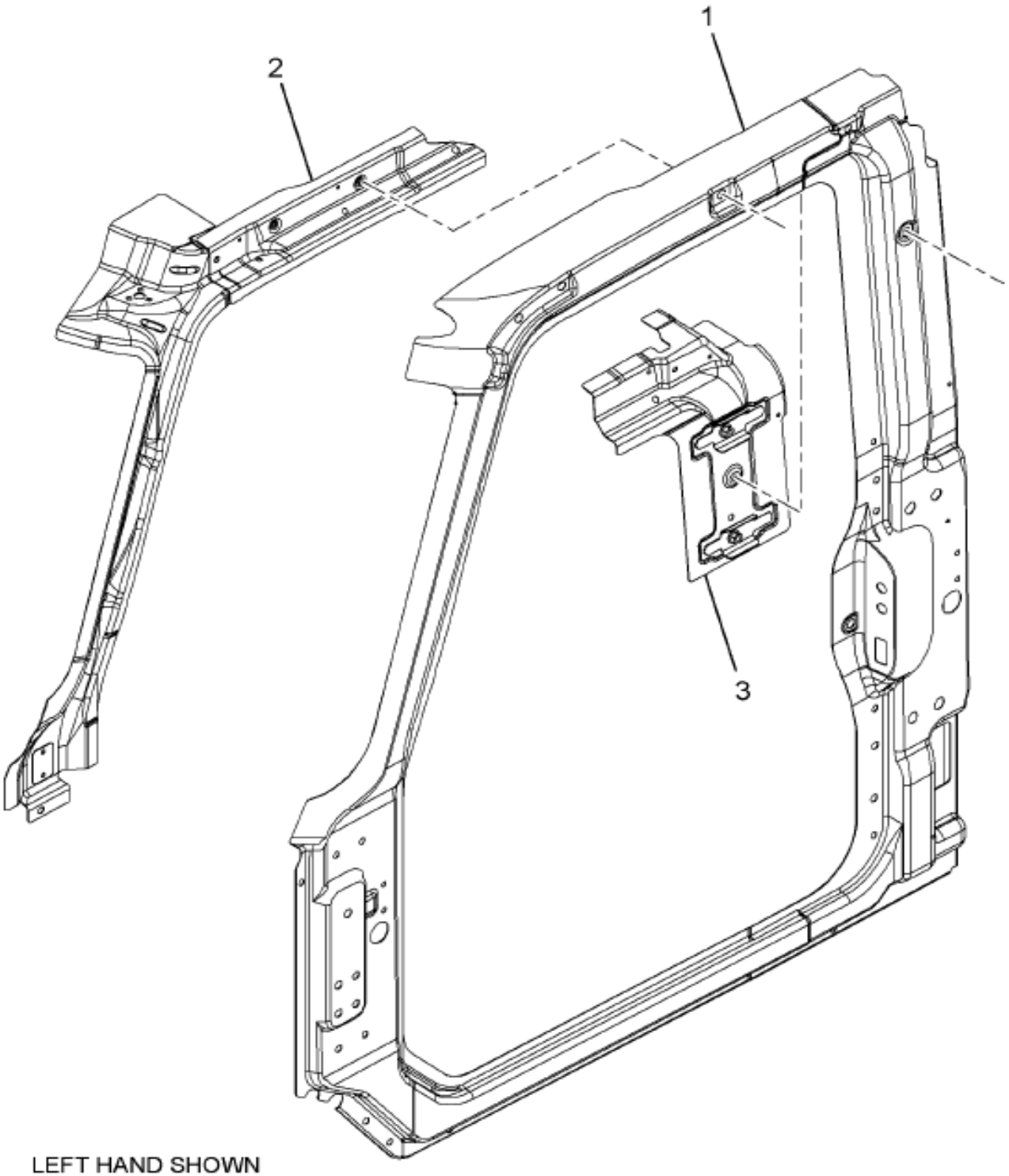

16-354-0107-01 B05

Grp 16

Item	Part No.	Qty	Description	Kit	Var	Figure
1	3546331C5	1	FRAME,DOOR OPNG SUB-ASSY RH			3546331C5
1		RF	RIGHT			
2	3549783C1	1	PILLAR,& INR PNL ASSY A-PLR RH			
2		RF	RIGHT			
3	3562417C1	1	HEADER,DOOR OPENING RR CRNR RH			3562417C1
3		RF	RIGHT			

COPYRIGHT© 2011INTERNATIONAL TRUCK AND ENGINE CORP.

https://truckmanualshub.com/

Figure 3562419C3

FRAME,DOOR OPENING ASSY RH

Item	Part No.	Qty	Description	Kit	Var	Figure
880		RF	NOTE: ASM BELOW COMPRISED OF ABOVE COMPONENTS			
881	3562419C3	RF	FRAME,DOOR OPENING ASSY RH			

COPYRIGHT© 2011INTERNATIONAL TRUCK AND ENGINE CORP.

https://truckmanualshub.com/

Figure 3546331C3
FRAME,DOOR OPNG SUB-ASSY RH

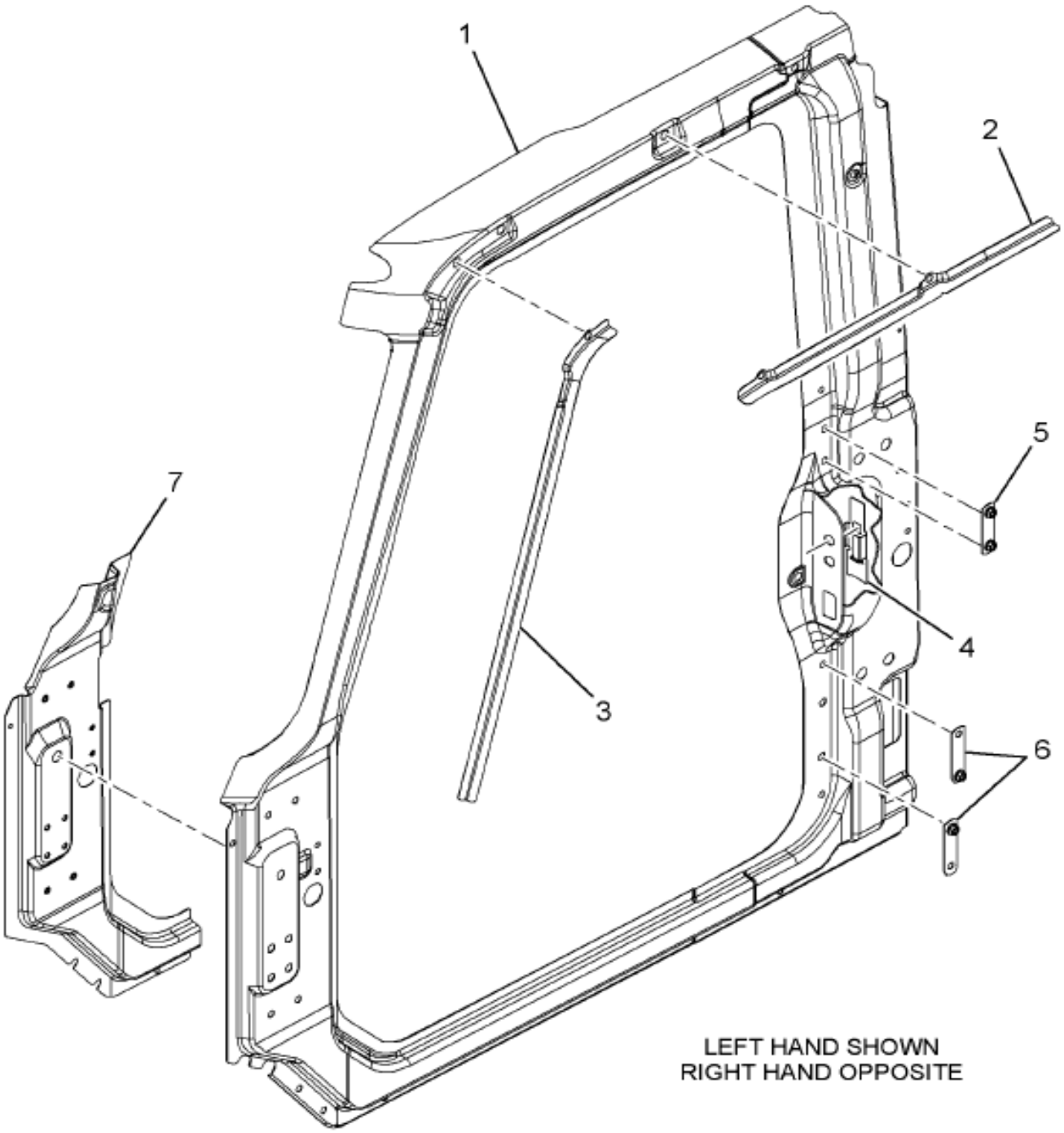

16-354-0103-01 B05

Grp 16

Item	Part No.	Qty	Description	Kit	Var	Figure
1	3546329C4	1	FRAME,DOOR OPENING RH			
1		RF	RIGHT			
2	3510036C1	1	RAIL,BODY SIDE DRIP RH			
2		RF	RIGHT			
3	3532264C1	1	RAIL,BODY SIDE A-PILLAR RH			
3		RF	RIGHT			

COPYRIGHT© 2011INTERNATIONAL TRUCK AND ENGINE CORP.

https://truckmanualshub.com/

Figure 3546331C5

FRAME,DOOR OPNG SUB-ASSY RH

Item	Part No.	Qty	Description	Kit	Var	Figure
4	3510043C1	1	RETAINER,TAPPING PLATE STRIKER			
5	3533582C2	1	PLATE,TAPPING ASSY REAR SPKR			
6	3543560C2	1	PLATE,TAPPING B-PLR GRB HNDL			
7	3546327C2	1	REINFORCEMENT,HGE PLR ASSY RH			
7		RF	RIGHT			
880		RF	NOTE: ASM BELOW COMPRISED OF ABOVE COMPONENTS			
881	3546331C5	RF	FRAME,DOOR OPNG SUB-ASSY RH			

COPYRIGHT© 2011INTERNATIONAL TRUCK AND ENGINE CORP.

https://truckmanualshub.com/

Figure 3562417C1
HEADER,DOOR OPENING RR CRNR RH

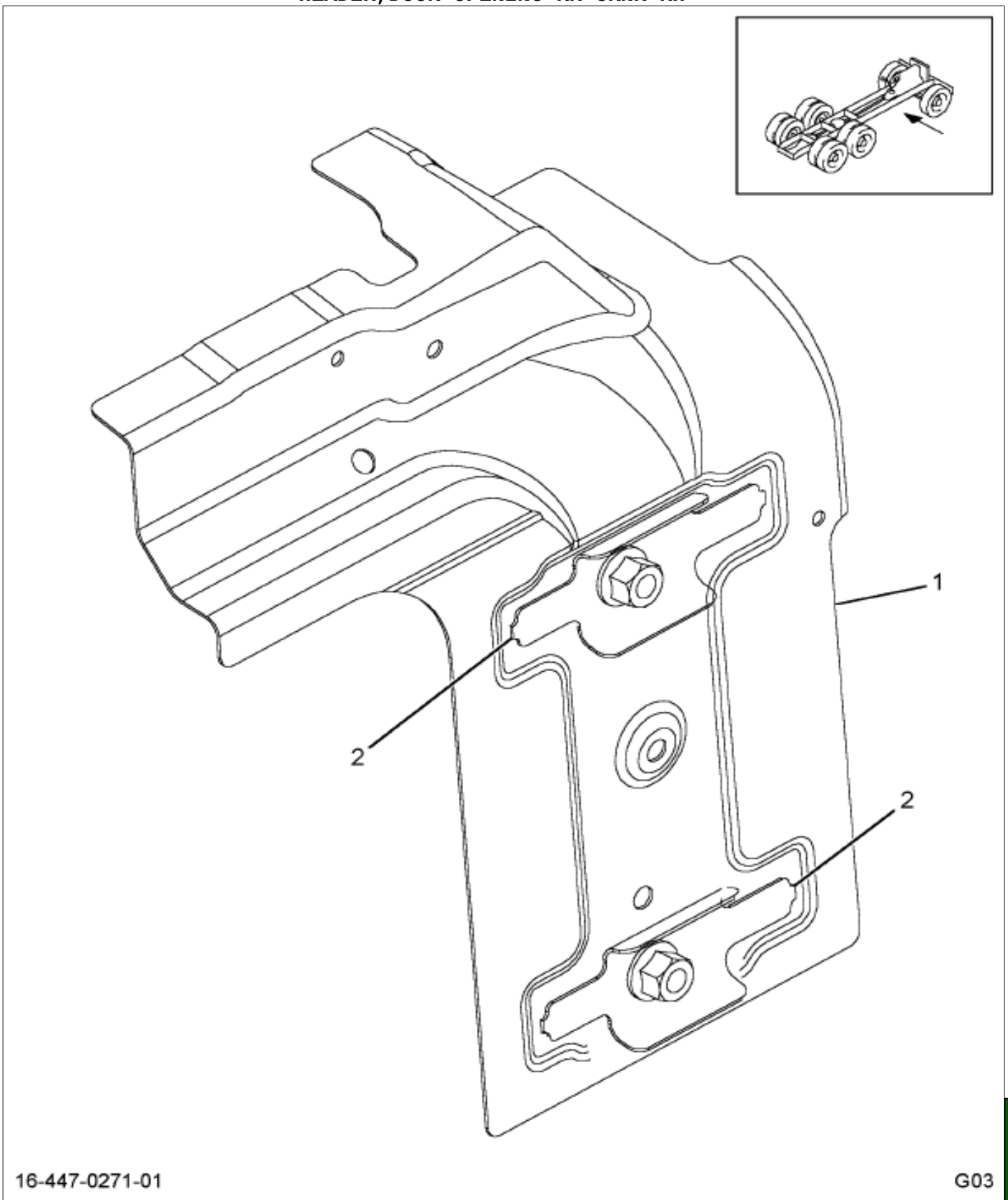

Item	Part No.	Qty	Description	Kit	Var	Figure
1	3531030C4	1	HEADER,DOOR OPNG RR CRNR RH			
1		RF	RIGHT			
2	3562415C1	2	PLATE,TAPPING ASSY "D" RING			
880		RF	NOTE: ASM BELOW COMPRISED OF ABOVE COMPONENTS			
881	3562417C1	RF	HEADER,DOOR OPENING RR CRNR RH			

Grp 16

COPYRIGHT© 2011INTERNATIONAL TRUCK AND ENGINE CORP.

https://truckmanualshub.com/

Figure 3511339C98

PANEL, BACK ASSY WELDED CONV.

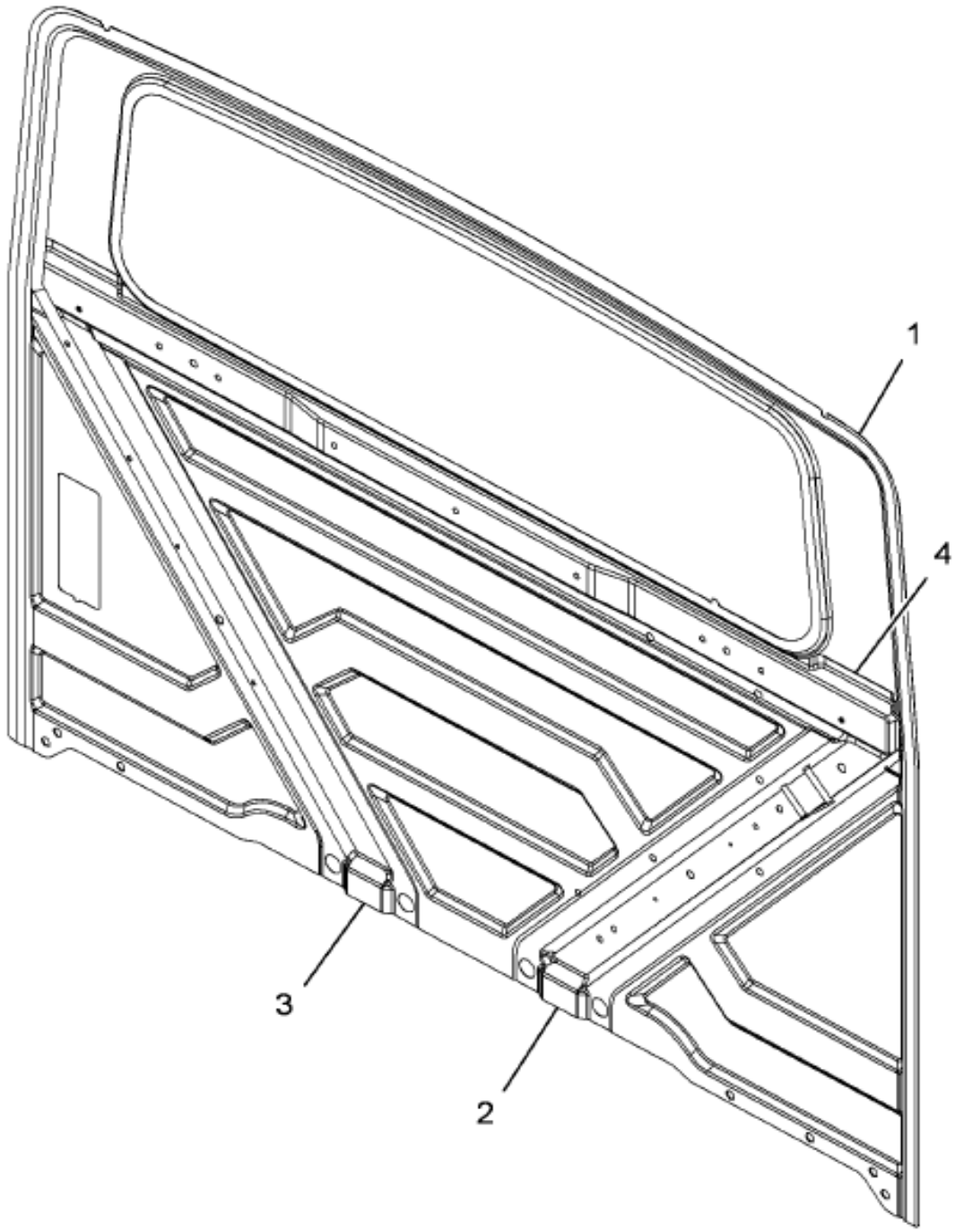

16-447-1131-01 L09

Item	Part No.	Qty	Description	Kit	Var	Figure
1	3508458C3	1	PANEL, BACK CAB OUTER			
2	3534376C5	1	REINFORCEMENT, CAB BACK PANEL,			3534376C5
2		RF	LEFT			
3	3534377C3	1	REINFORCEMENT,			3534377C3
3		RF	RIGHT			
4	3592808C2	1	REINFORCEMENT, CAB BACK PANEL,			3592808C2

COPYRIGHT© 2011INTERNATIONAL TRUCK AND ENGINE CORP.

https://truckmanualshub.com/

Figure 3511399C98

PANEL, BACK ASSY WELDED CONV.

Item	Part No.	Qty	Description	Kit	Var	Figure
880		RF	NOTE: ASM BELOW COMPRISED OF ABOVE COMPONENTS			
881	3511399C98	RF	PANEL, BACK ASSY WELDED CONV.			

COPYRIGHT© 2011INTERNATIONAL TRUCK AND ENGINE CORP.

https://truckmanualshub.com/

Figure 3602956C92
PANEL, DASH ASSY COMPLETE, LHD

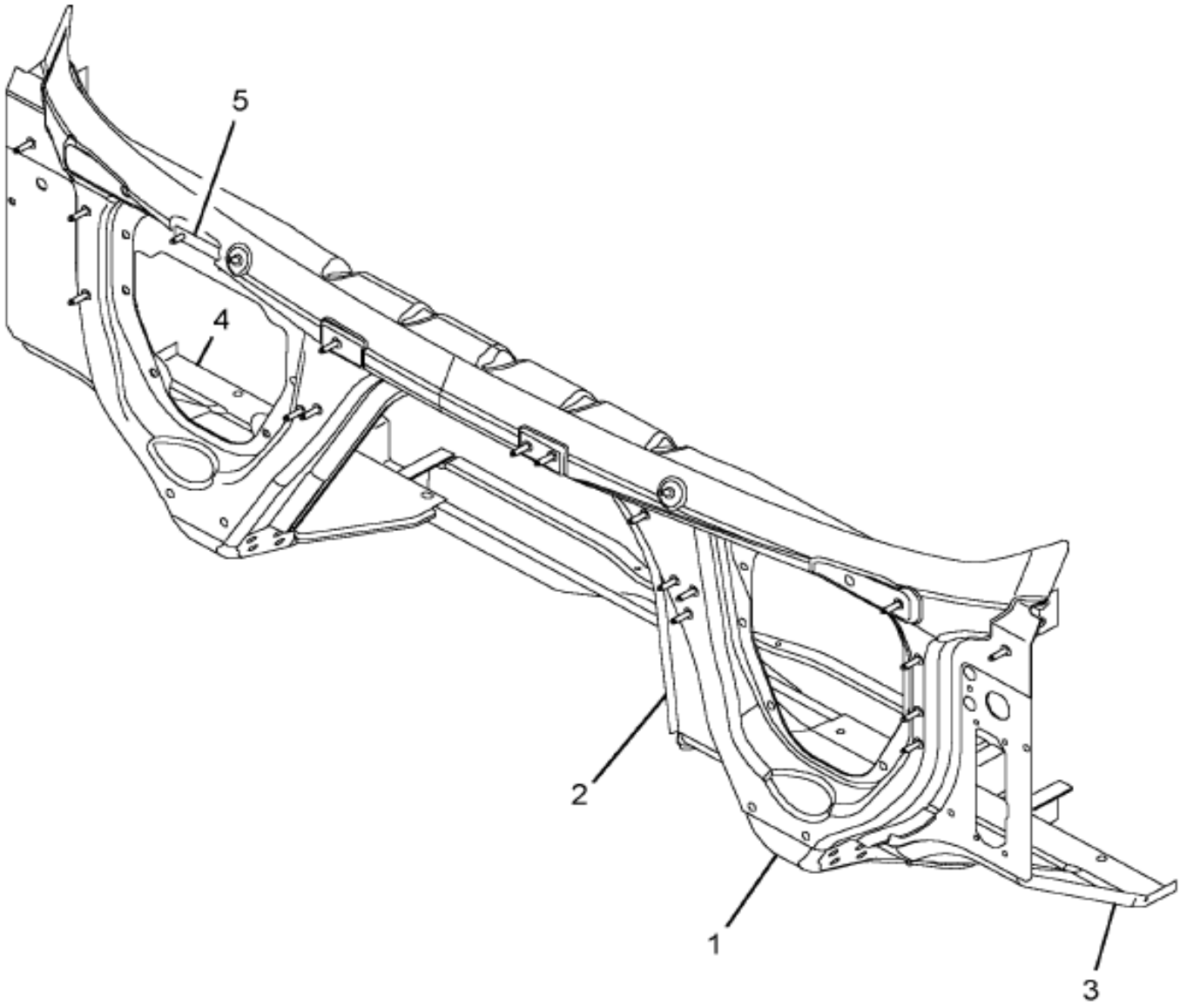

Item	Part No.	Qty	Description	Kit	Var	Figure
1	3602952C2	1	REINFORCEMENT, DASH PANEL ASSY			3602952C2
1		RF	LEFT			
2	3602948C1	1	PANEL,ASSY , DASH CONV LHD			
2		RF	LEFT			
3	3508373C1	1	PANEL,TOE BOARD LEFT SIDE LHD			
3		RF	LEFT			

COPYRIGHT© 2011INTERNATIONAL TRUCK AND ENGINE CORP.

https://truckmanualshub.com/

Figure 3602956C92

PANEL, DASH ASSY COMPLETE, LHD

Item	Part No.	Qty	Description	Kit	Var	Figure
4	3508375C2	1	PANEL,TOE BOARD RIGHT SIDE LHD			
4		RF	RIGHT			
5	3533843C1	1	PLATE,MOUNTING STUD ASSY			
880		RF	NOTE: ASM BELOW COMPRISED OF ABOVE COMPONENTS			
881	3602956C92	RF	PANEL, DASH ASSY COMPLETE, LHD			

COPYRIGHT© 2011INTERNATIONAL TRUCK AND ENGINE CORP.

https://truckmanualshub.com/

Figure 3511399C96

PANEL,ASSY BACK WELDED

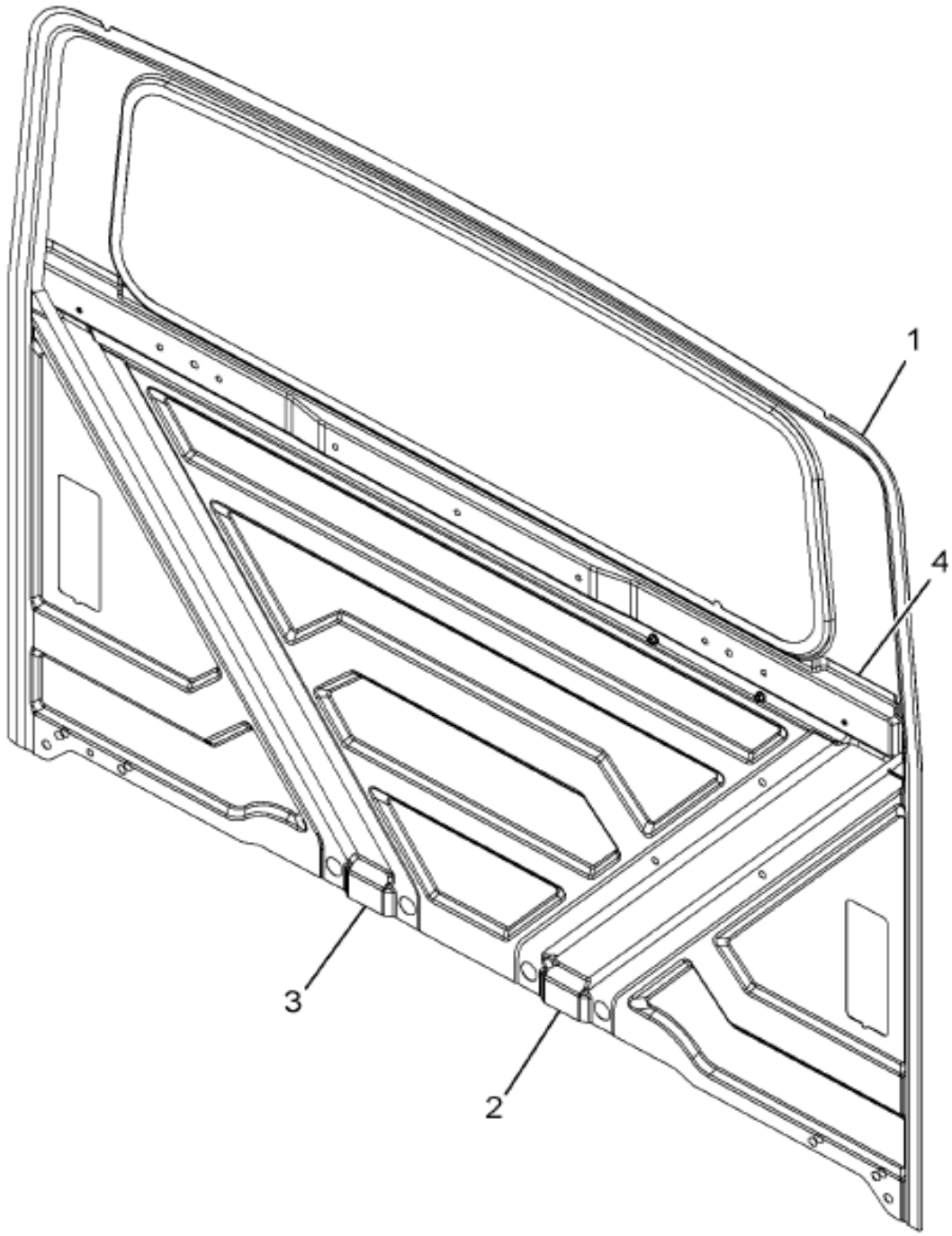

16-447-0640-01 B06

Item	Part No.	Qty	Description	Kit	Var	Figure
1	3508458C2	1	PANEL,, BACK CAB OUTER			
2	3534376C4	1	REINFORCEMENT,CAB BACK PNL LH			3534376C4
2		RF	LEFT			
3	3534377C2	1	REINFORCEMENT,CAB BACK PANEL			
3		RF	RIGHT			
4	3592808C1	1	REINFORCEMENT,CAB BACK PANEL			3592808C1

COPYRIGHT© 2011INTERNATIONAL TRUCK AND ENGINE CORP.

https://truckmanualshub.com/

Figure 3511399C96

PANEL,ASSY BACK WELDED

Item	Part No.	Qty	Description	Kit	Var	Figure
880		RF	NOTE: ASM BELOW COMPRISED OF ABOVE COMPONENTS			
881	3511399C96	RF	PANEL,ASSY BACK WELDED			

COPYRIGHT© 2011INTERNATIONAL TRUCK AND ENGINE CORP.

https://truckmanualshub.com/

Figure 3544952C3

PANEL,ASSY SIDE BODY COWL RH

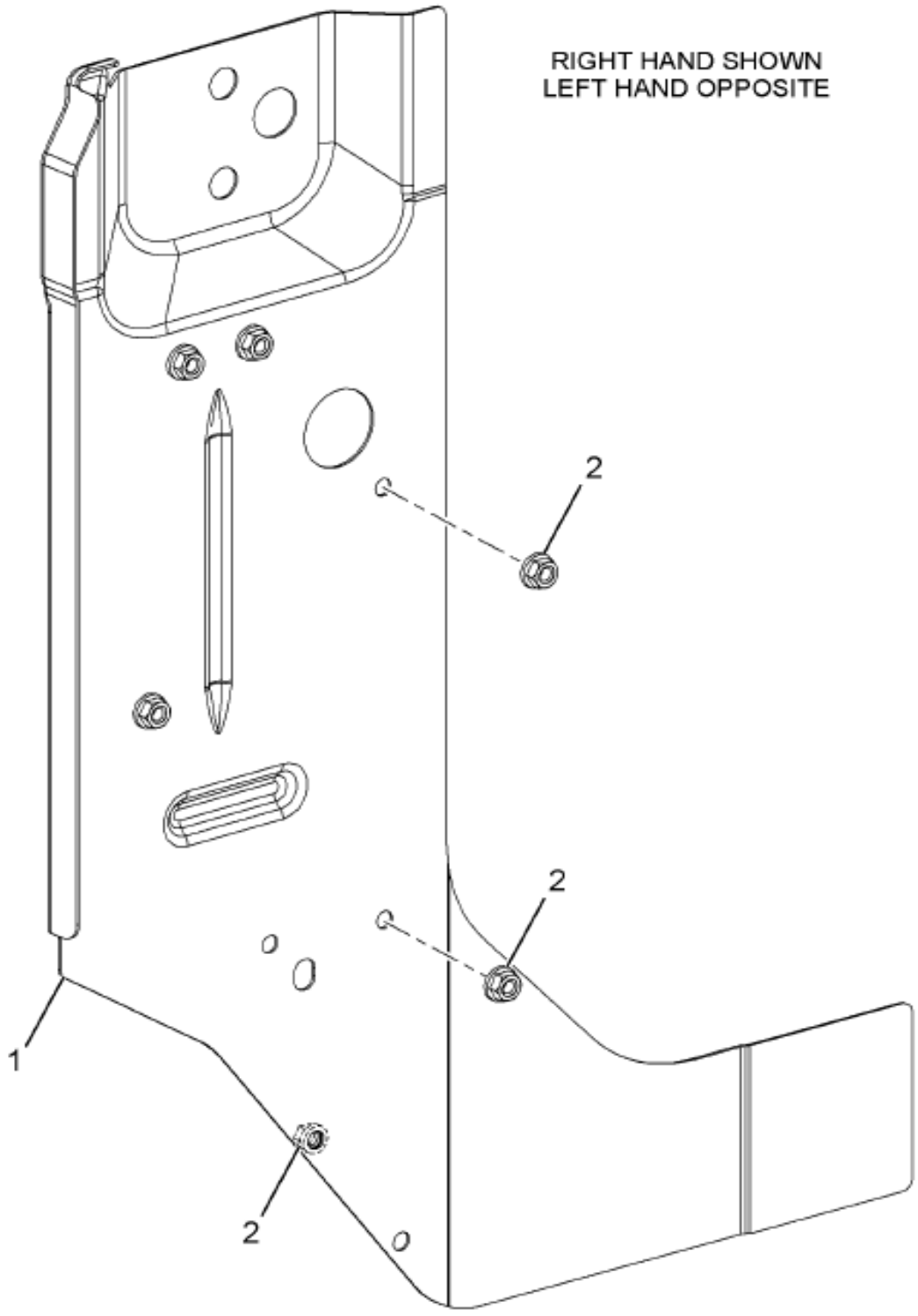

16-447-0540-01 E05

Item	Part No.	Qty	Description	Kit	Var	Figure
1	3544950C3	1	PANEL,, SIDE BODY INNER-RH			
1		RF	RIGHT			
2	3532732C1	5	NUT,WELD FLANGE M8 X 1.25			
880		RF	NOTE: ASM BELOW COMPRISED OF ABOVE COMPONENTS			
881	3544952C3	RF	PANEL,ASSY SIDE BODY COWL RH			

COPYRIGHT© 2011INTERNATIONAL TRUCK AND ENGINE CORP.

https://truckmanualshub.com/

Figure 3511401C94
PANEL,ROOF ASSY WLDD W/O AERO

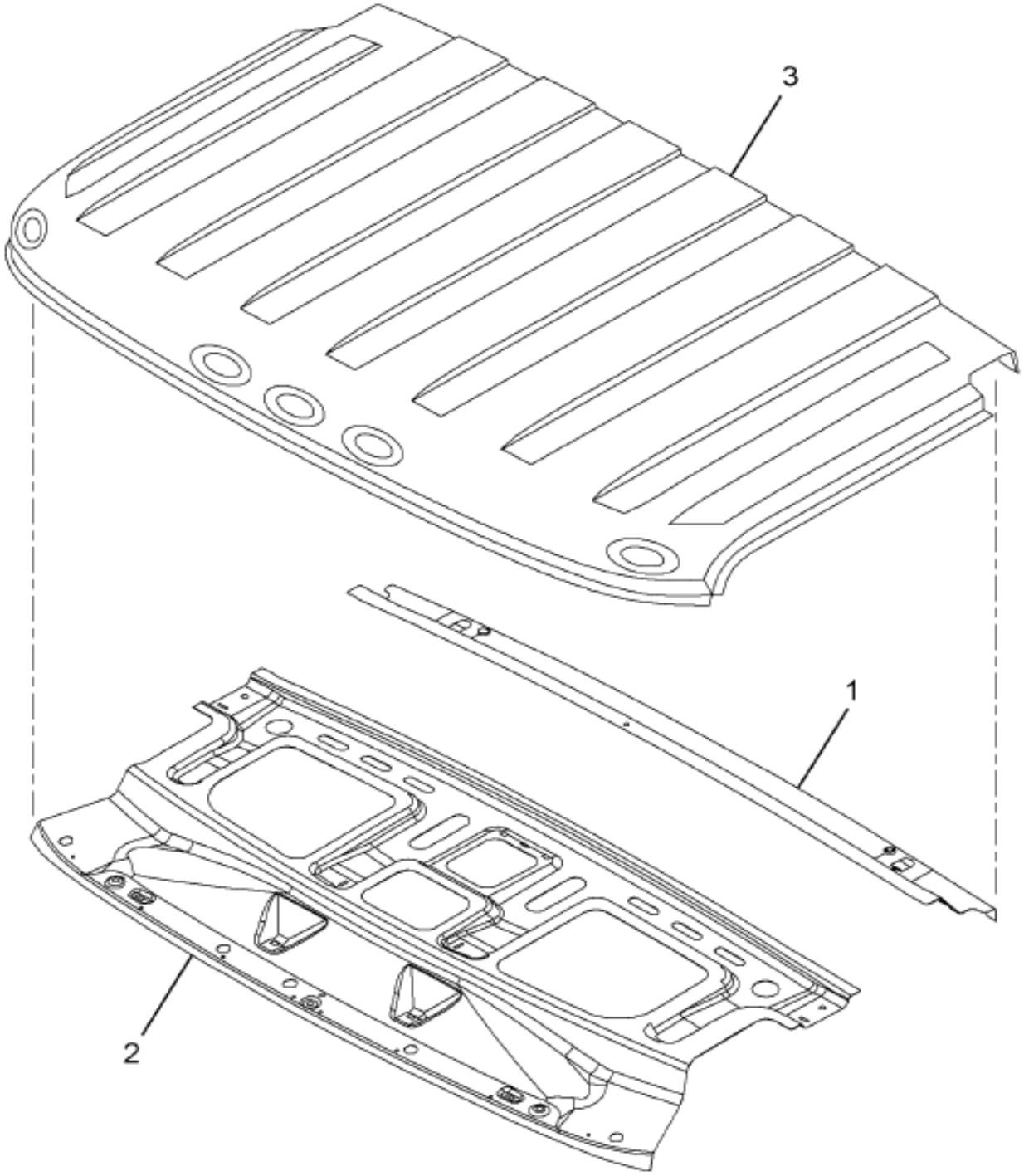

16-447-0514-01 C05

Item	Part No.	Qty	Description	Kit	Var	Figure
1	3510093C2	1	PANEL,HEADER REAR			
2	3508452C3	1	PANEL,ROOF CAB INNER			
3	3508457C1	1	PANEL,ROOF CAB OUTER			
880		RF	NOTE: ASM BELOW COMPRISED OF ABOVE COMPONENTS			
881	3511401C94	RF	PANEL,ROOF ASSY WLDD W/O AERO			

Grp 16

COPYRIGHT© 2011INTERNATIONAL TRUCK AND ENGINE CORP.

https://truckmanualshub.com/

Figure 3579430C91
PANEL,SIDE BDY ASSY WLDD RH NG

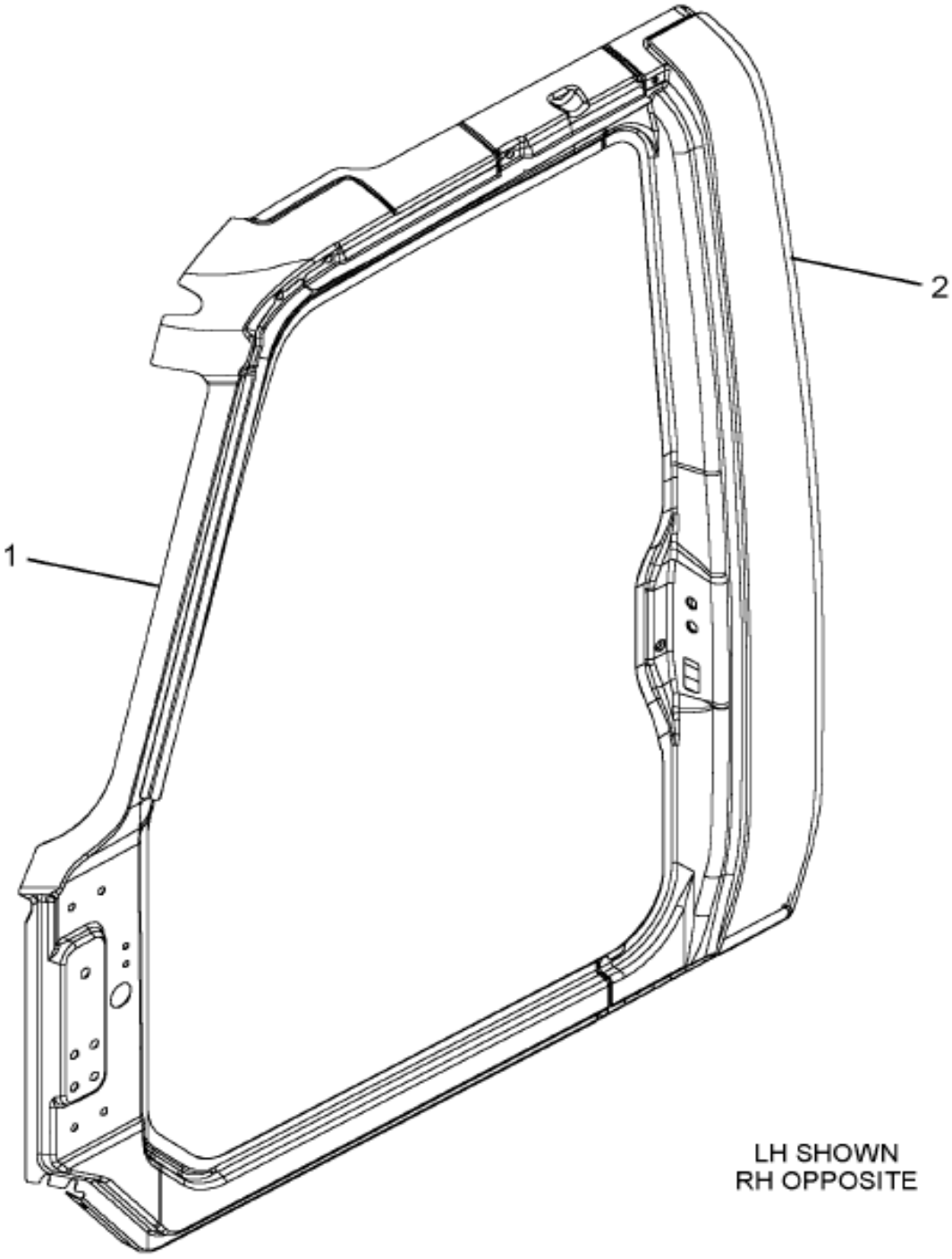

16-354-0087-01 K03

Item	Part No.	Qty	Description	Kit	Var	Figure
1	3562419C3	1	FRAME,DOOR OPENING ASSY RH			3562419C3
2	3579404C1	1	PANEL,PILLAR B-PILLAR CORNER O			
880		RF	NOTE: ASM BELOW COMPRISED OF ABOVE COMPONENTS			
881	3579430C91	RF	PANEL,SIDE BDY ASSY WLDD RH NG			

COPYRIGHT© 2011INTERNATIONAL TRUCK AND ENGINE CORP.

https://truckmanualshub.com/

Figure 3579429C91
PANEL,SIDE BODY ASSY WLDD LH

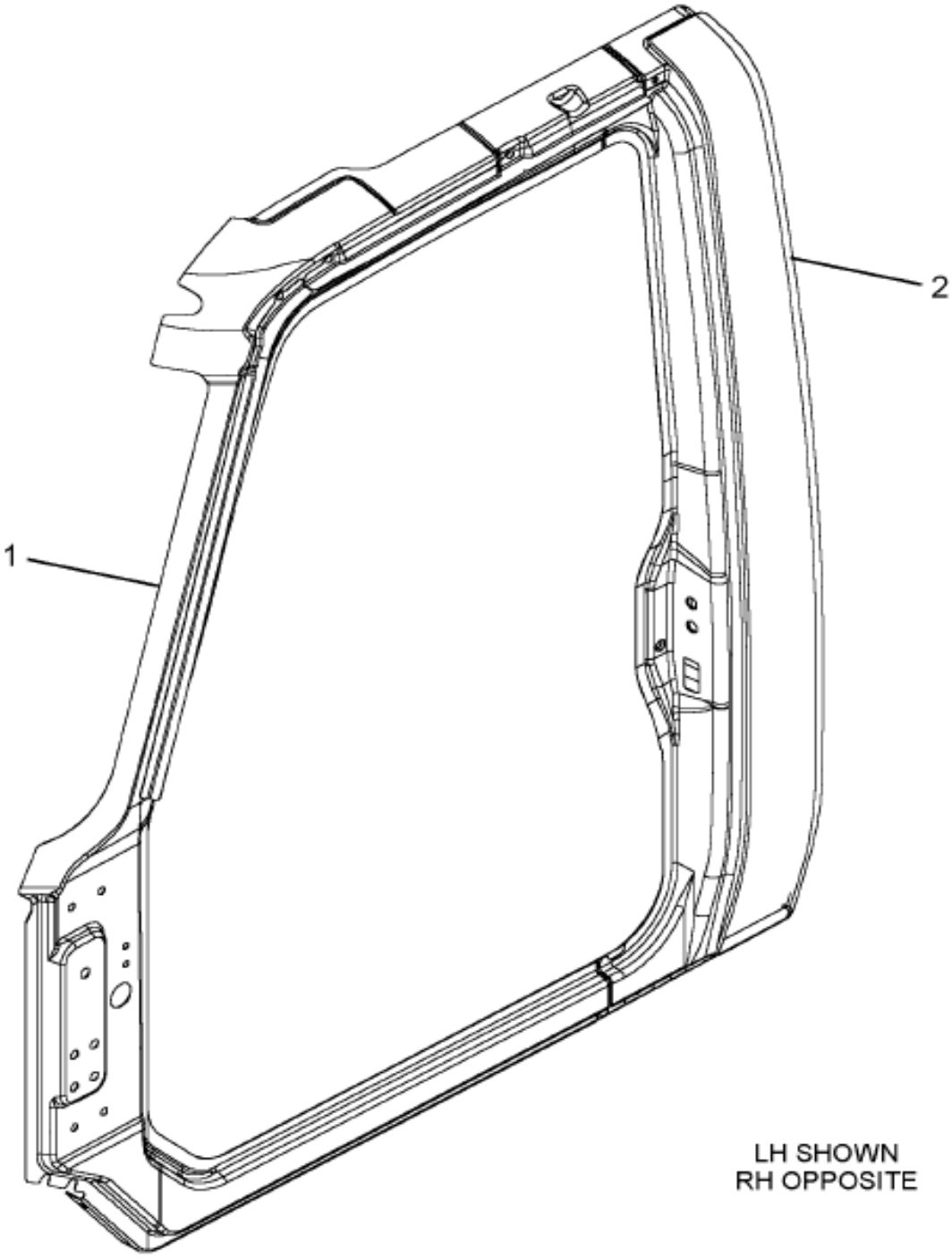

16-354-0087-01 K03

Item	Part No.	Qty	Description	Kit	Var	Figure
1	3562418C3	1	FRAME,DOOR OPENING ASSY LH			
2	3579403C1	1	PANEL,B-PILLAR CORNR OUTR LH			
880		RF	NOTE: ASM BELOW COMPRISED OF ABOVE COMPONENTS			
881	3579429C91	RF	PANEL,SIDE BODY ASSY WLDD LH			

COPYRIGHT© 2011INTERNATIONAL TRUCK AND ENGINE CORP.

https://truckmanualshub.com/

Figure 3544951C3
PANEL,SIDE BODY COWL LH

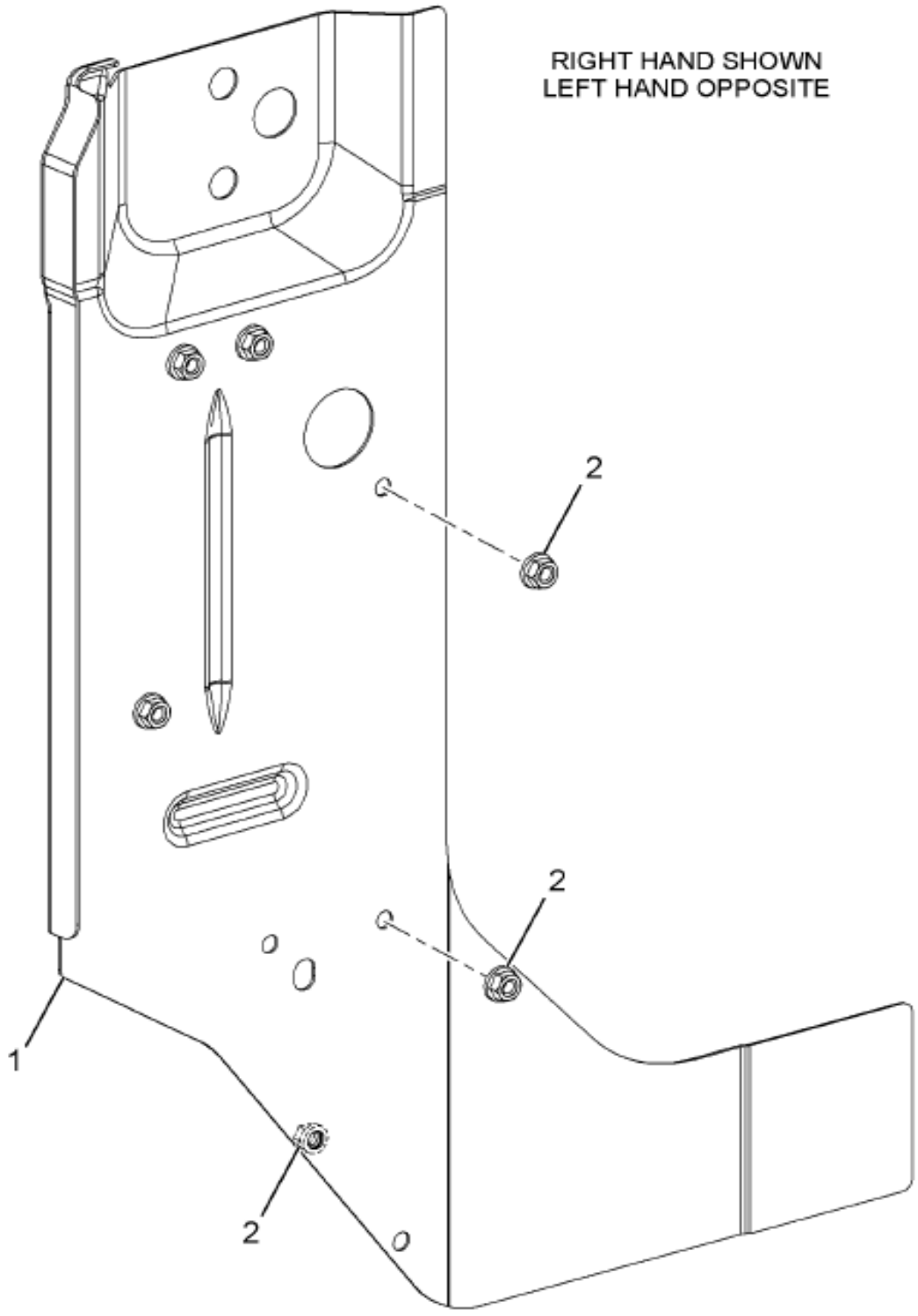

Item	Part No.	Qty	Description	Kit	Var	Figure
1	3544949C3	1	PANEL,, SIDE BODY INNER-LH			
1		RF	LEFT			
2	3532732C1	6	NUT,WELD FLANGE M8 X 1.25			
880		RF	NOTE: ASM BELOW COMPRISED OF ABOVE COMPONENTS			
881	3544951C3	RF	PANEL,SIDE BODY COWL LH			

COPYRIGHT© 2011INTERNATIONAL TRUCK AND ENGINE CORP.

https://truckmanualshub.com/

Figure 3534377C3
REINFORCEMENT,

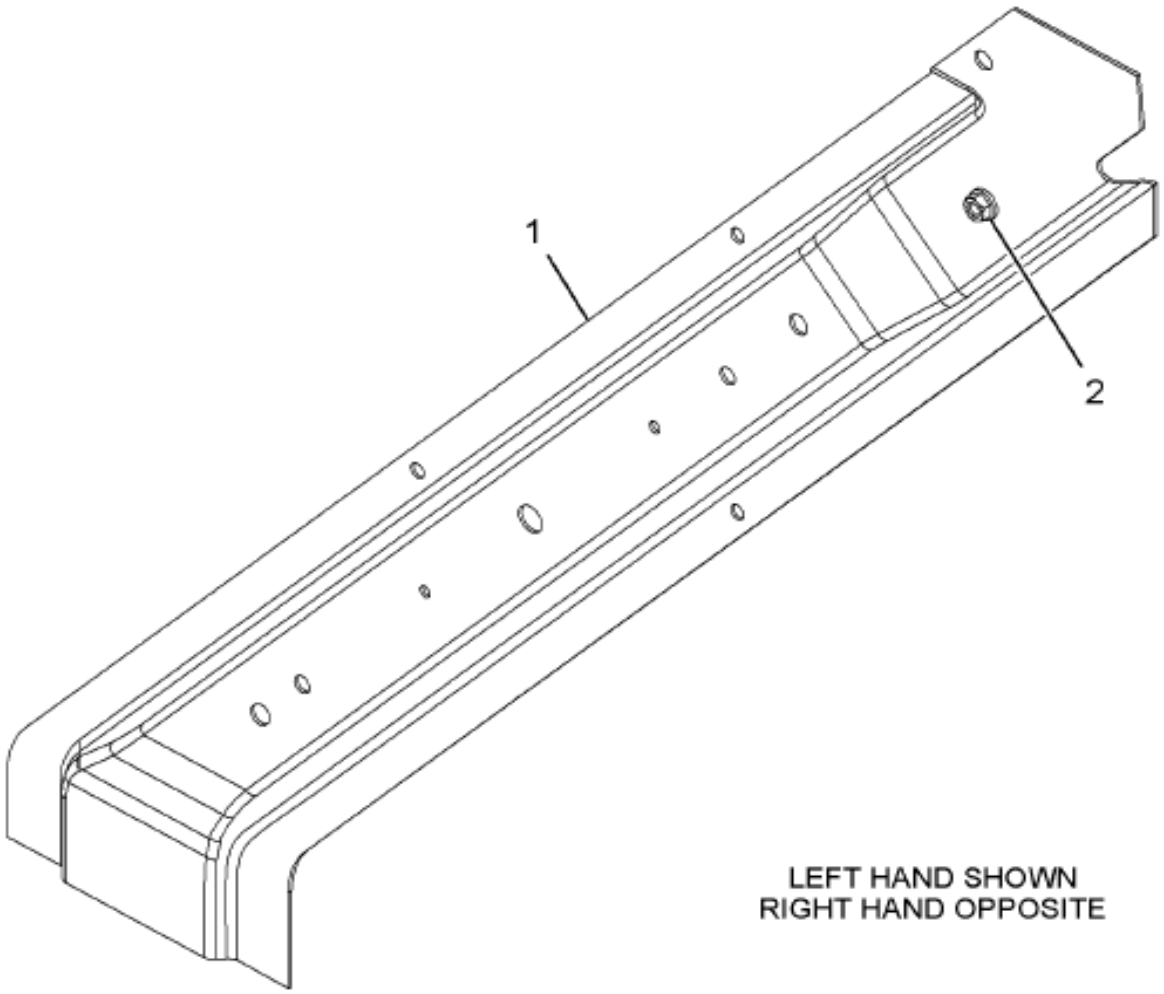

16-447-1132-01 L09

Grp 16

Item	Part No.	Qty	Description	Kit	Var	Figure
1	3509528C3	1	REINFORCEMENT,			
1		RF	RIGHT			
2	3532732C1	1	NUT,WELD FLANGE M8 X 1.25			
880		RF	NOTE: ASM BELOW COMPRISED OF ABOVE COMPONENTS			
881	3534377C3	RF	REINFORCEMENT,			

COPYRIGHT© 2011INTERNATIONAL TRUCK AND ENGINE CORP.

https://truckmanualshub.com/

Figure 3534376C5 REINFORCEMENT, CAB BACK PANEL,

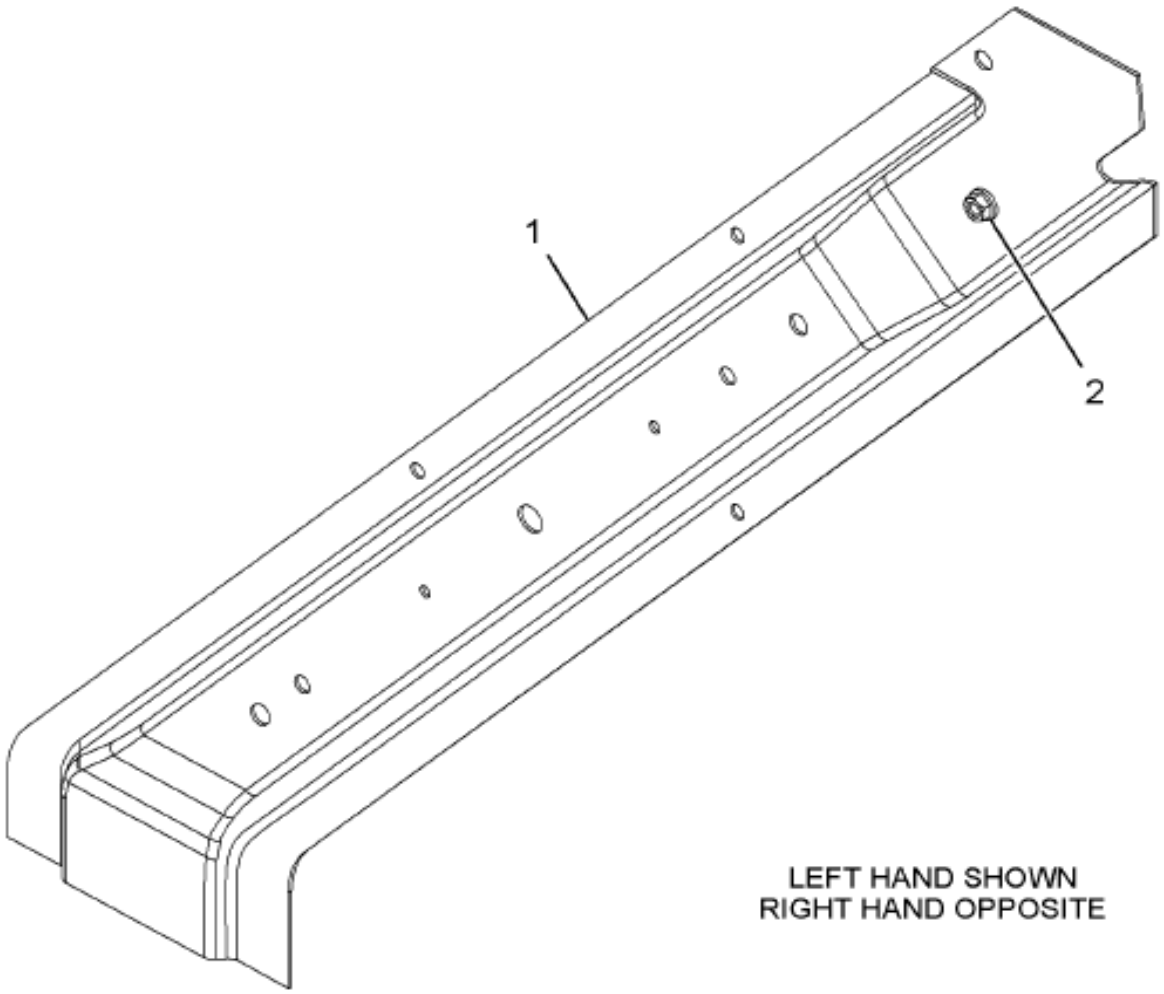

16-447-1132-01 L09

Item	Part No.	Qty	Description	Kit	Var	Figure
1	3509527C4	1	REINFORCEMENT,			
1		RF	LEFT			
2	3532732C1	1	NUT,WELD FLANGE M8 X 1.25			
880		RF	NOTE: ASM BELOW COMPRISED OF ABOVE COMPONENTS			
881	3534376C5	RF	REINFORCEMENT, CAB BACK PANEL,			

COPYRIGHT© 2011INTERNATIONAL TRUCK AND ENGINE CORP.

https://truckmanualshub.com/

Figure 3592808C2
REINFORCEMENT, CAB BACK PANEL,

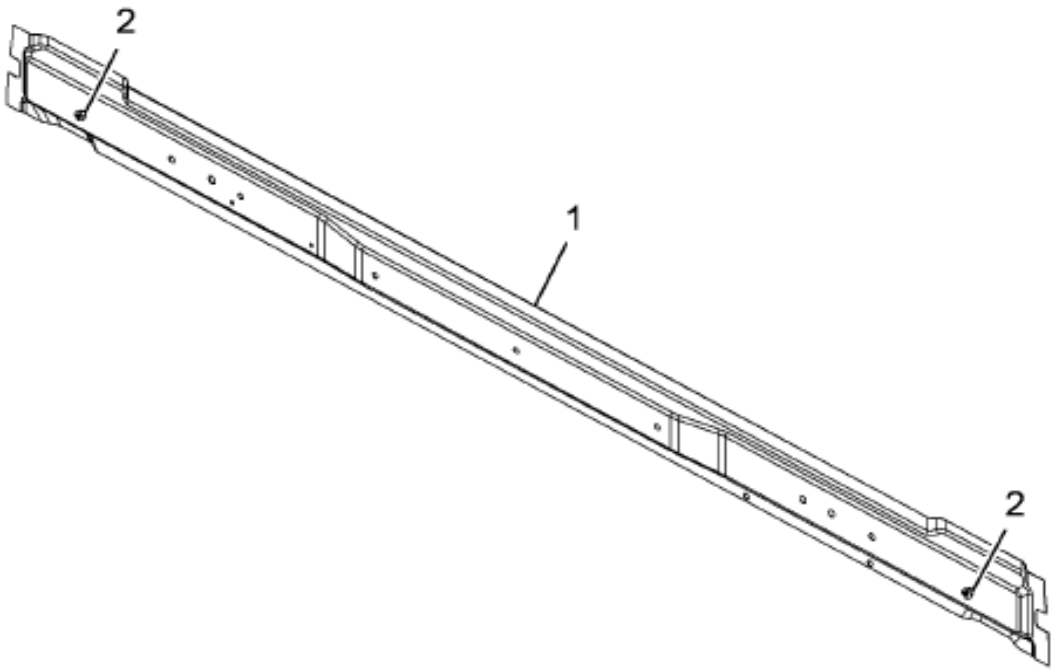

16-447-1133-01 L09

Grp 16

Item	Part No.	Qty	Description	Kit	Var	Figure
1	3509525C4	1	REINFORCEMENT, BK PNL,HORIZ			
2	3532732C1	2	NUT,WELD FLANGE M8 X 1.25			
880		RF	NOTE: ASM BELOW COMPRISED OF ABOVE COMPONENTS			
881	3592808C2	RF	REINFORCEMENT, CAB BACK PANEL,			

COPYRIGHT© 2011INTERNATIONAL TRUCK AND ENGINE CORP.

https://truckmanualshub.com/

Figure 3602952C2

REINFORCEMENT, DASH PANEL ASSY

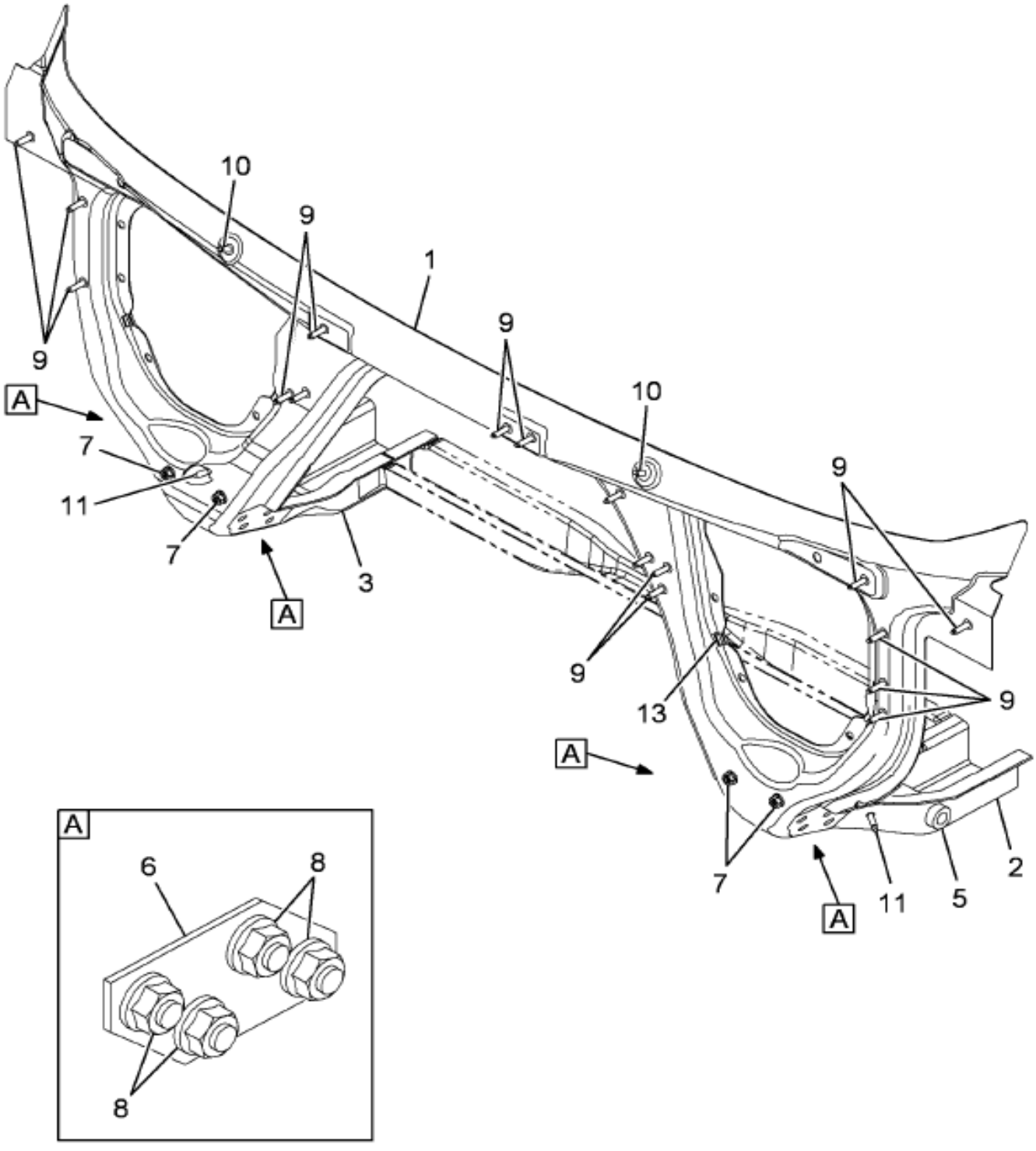

16-447-1105-01 D09

Item	Part No.	Qty	Description	Kit	Var	Figure
1	3602950C1	1	REINFORCEMENT,, , ,DASH PANEL			
2	3550719C1	1	REINFORCEMENT,CAB MTG LH SILL			
2		RF	LEFT			
3	3550720C1	1	REINFORCEMENT,CAB MTG RH SILL			
3		RF	RIGHT			
5	3532848C1	1	TUBE,CLUTCH RELAY SHAFT			

COPYRIGHT© 2011INTERNATIONAL TRUCK AND ENGINE CORP.

https://truckmanualshub.com/

Figure 3602952C2

REINFORCEMENT, DASH PANEL ASSY

Item	Part No.	Qty	Description	Kit	Var	Figure
6	3531057C1	4	PLATE,WELD NUT			
7	3548808C1	4	NUT,WELD FLANGED M8 X 1.25			
8	3532734C1	16	NUT,WELD FLANGED GRIPCO M12 WE			
9	3541995C1	17	STUD,SELF CLINCHING*			
10	3541996C1	2	STUD,SELF CLINCHING*			
11	3550661C1	2	STUD,SELF CLINCHING M8X1.25X30			
13	3821473C1	4	ASSY DASH - EXPANDABLE SEALANT			
880		RF	NOTE: ASM BELOW COMPRISED OF ABOVE COMPONENTS			
881	3602952C2	RF	REINFORCEMENT, DASH PANEL ASSY			

COPYRIGHT© 2011INTERNATIONAL TRUCK AND ENGINE CORP.

https://truckmanualshub.com/

Figure 3572053C2

REINFORCEMENT,, , FLOOR CENTER

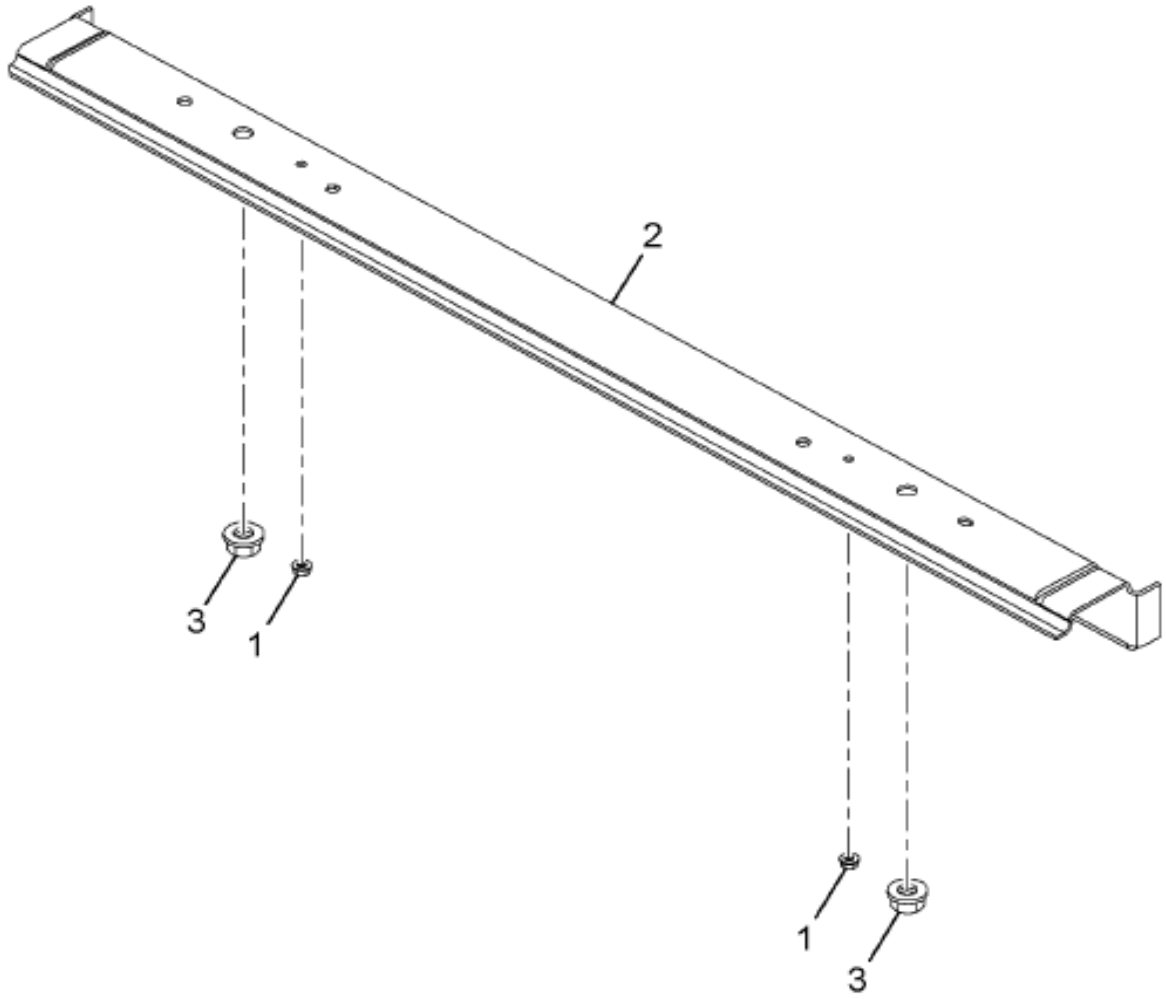

16-D75-M016-01 D09

Item	Part No.	Qty	Description	Kit	Var	Figure
1	3534518C1	2	NUT,WELD FLNG M6 X 10 6G/6H			
2	3572052C2	1	REINFORCEMENT,,			
3	3532734C1	2	NUT,WELD FLANGED GRIPCO M12 WE			
880		RF	NOTE: ASM BELOW COMPRISED OF ABOVE COMPONENTS			
881	3572053C2	RF	REINFORCEMENT,, , FLOOR CENTER			

COPYRIGHT© 2011INTERNATIONAL TRUCK AND ENGINE CORP.

https://truckmanualshub.com/

Figure 3592808C1
REINFORCEMENT,CAB BACK PANEL

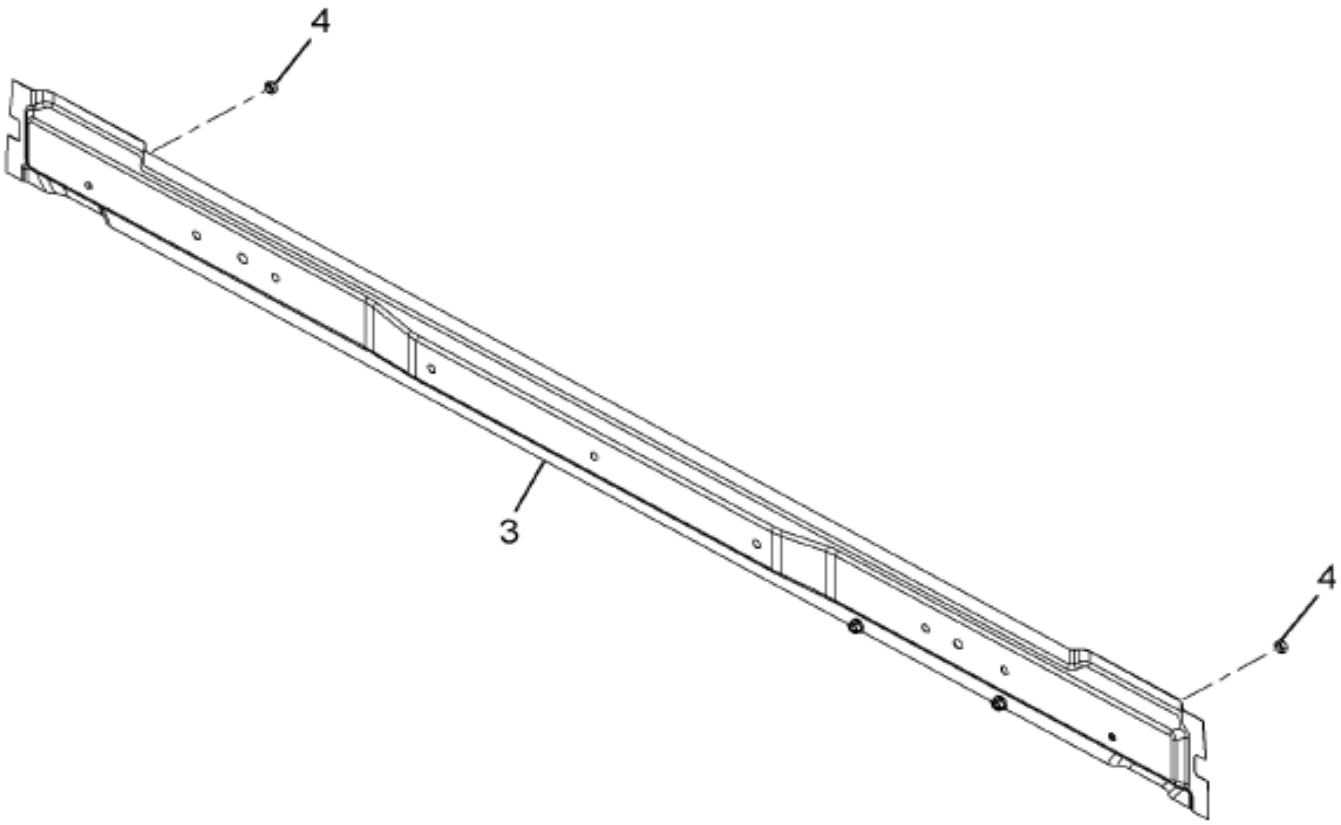

16-D75-M014-01 D09

Item	Part No.	Qty	Description	Kit	Var	Figure
3	3509525C3	1	REINFORCEMENT,CAB BACK PANEL			
4	3532732C1	2	NUT,WELD FLANGE M8 X 1.25			
880		RF	NOTE: ASM BELOW COMPRISED OF ABOVE COMPONENTS			
881	3592808C1	RF	REINFORCEMENT,CAB BACK PANEL			

Grp 16

COPYRIGHT© 2011INTERNATIONAL TRUCK AND ENGINE CORP.

https://truckmanualshub.com/

Figure 3534376C4

REINFORCEMENT,CAB BACK PNL LH

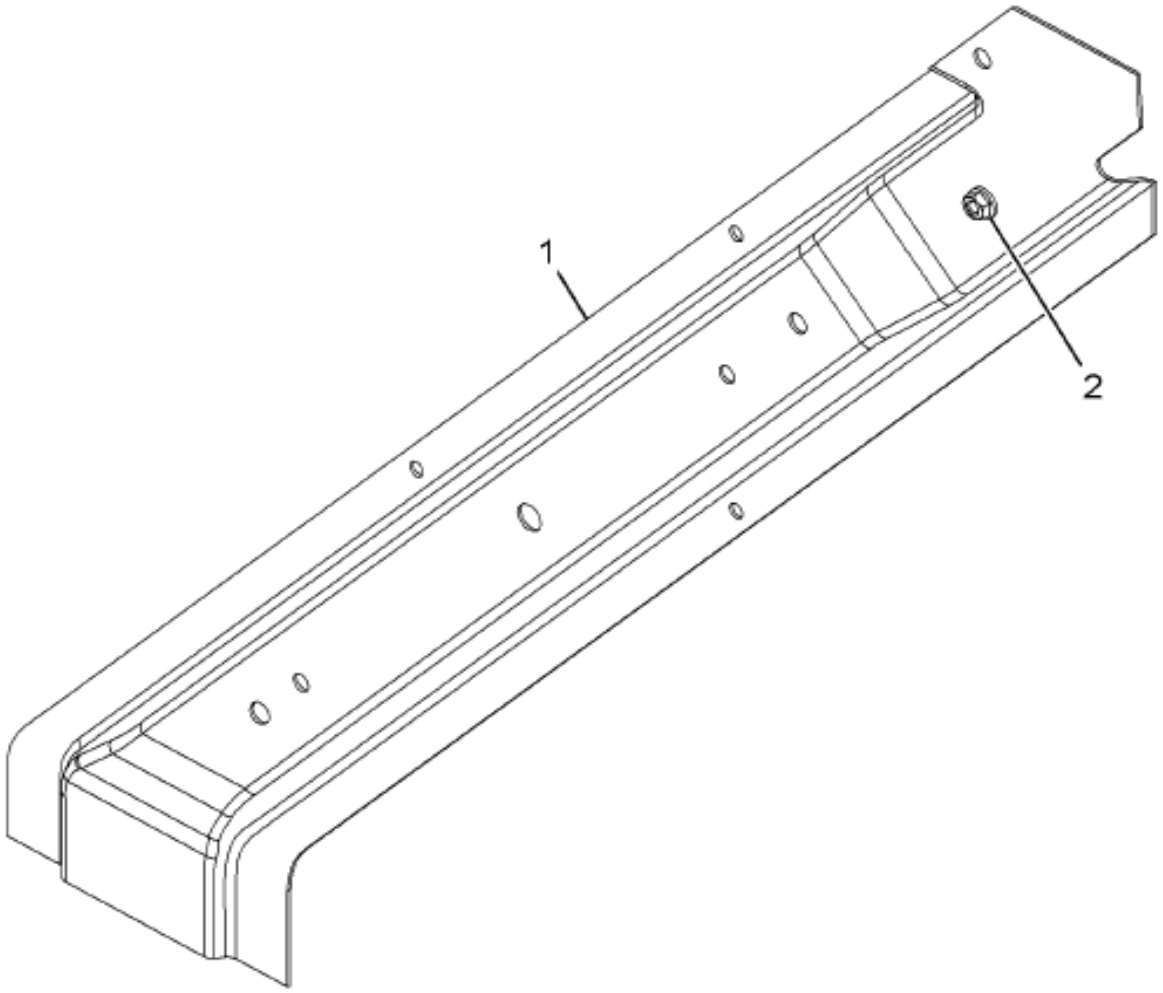

16-D75-M012-01 D09

Item	Part No.	Qty	Description	Kit	Var	Figure
1	3509527C3	1	REINFORCEMENT,CAB BACK PNL LH			
1		RF	LEFT			
2	3532732C1	1	NUT,WELD FLANGE M8 X 1.25			
880		RF	NOTE: ASM BELOW COMPRISED OF ABOVE COMPONENTS			
881	3534376C4	RF	REINFORCEMENT,CAB BACK PNL LH			

COPYRIGHT© 2011INTERNATIONAL TRUCK AND ENGINE CORP.

https://truckmanualshub.com/

Figure 3510126C2

REINFORCEMENT,SILL OR SUB SILL

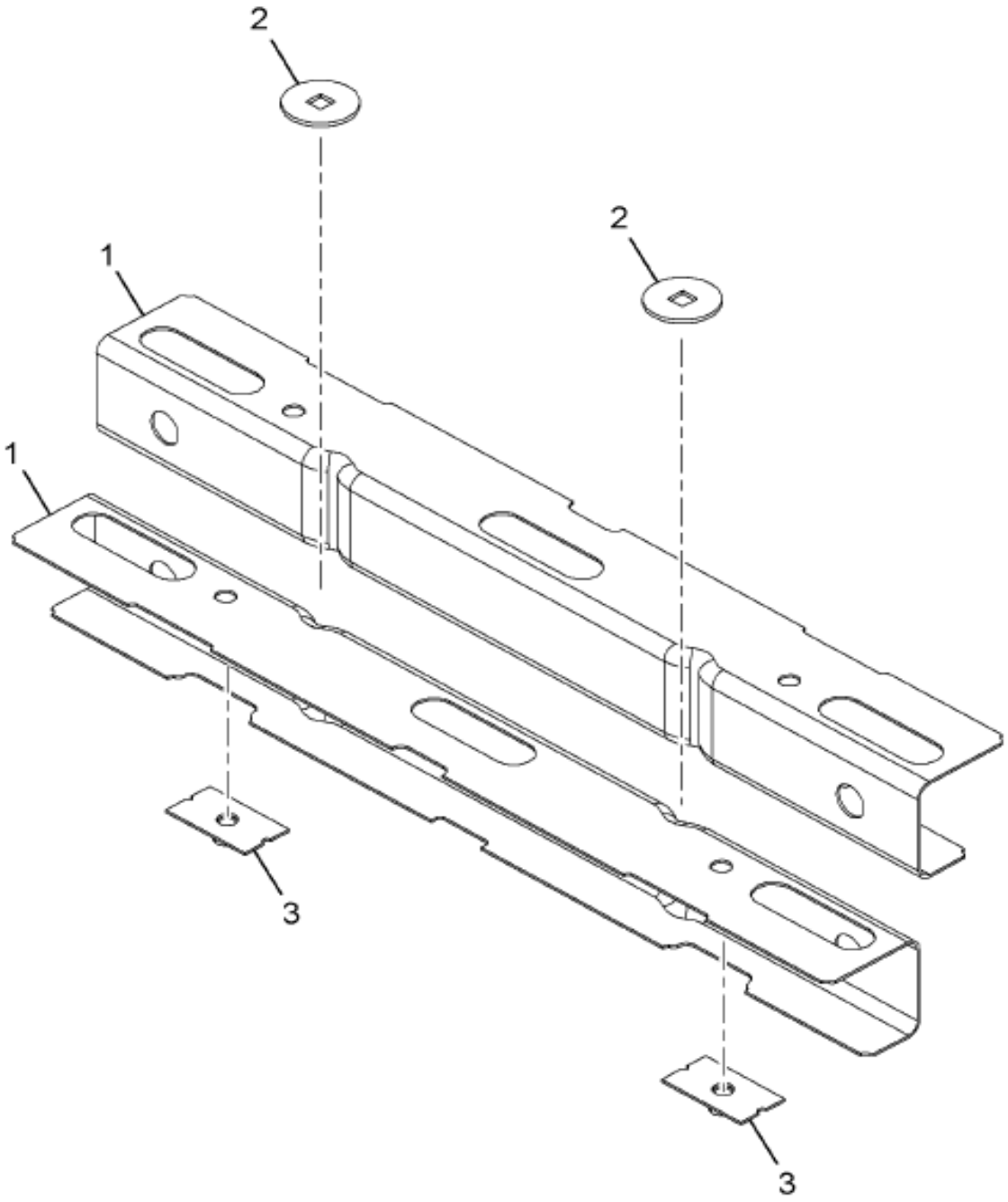

16-D75-M113-01 L09

Item	Part No.	Qty	Description	Kit	Var	Figure
1	3510125C1	2	REINFORCEMENT,SILL OR SUB SILL			
2	3513435C1	2	WASHER,SPECIAL FLAT			
3	3536638C1	2	PLATE,SEAT BELT ANCHOR			
880		RF	NOTE: ASM BELOW COMPRISED OF ABOVE COMPONENTS			
881	3510126C2	RF	REINFORCEMENT,SILL OR SUB SILL			

Grp 16

COPYRIGHT© 2011INTERNATIONAL TRUCK AND ENGINE CORP.

https://truckmanualshub.com/

Figure 3509307C3

SILL,ASSY, ASSY REAR

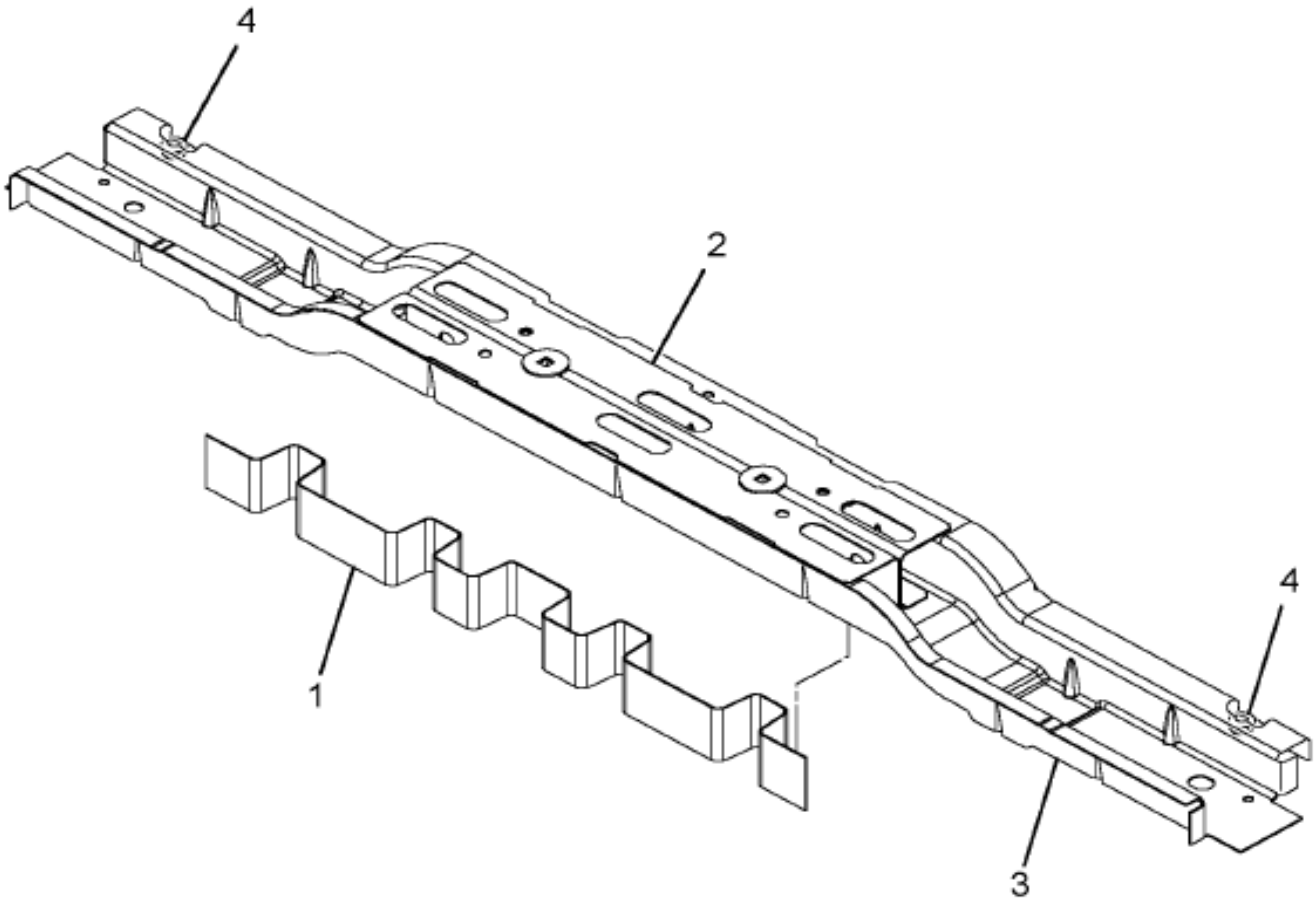

16-447-0287-01 J03

Item	Part No.	Qty	Description	Kit	Var	Figure
1	3513378C1	1	REINFORCEMENT,SILL OR SUB SILL			
2	3510126C2	1	REINFORCEMENT,SILL OR SUB SILL			3510126C2
3	3509306C4	1	SILL,ASSY, CAB FLOOR OR COWL,			
4	3532734C1	2	NUT,WELD FLANGED GRIPCO M12 WE			
880		RF	NOTE: ASM BELOW COMPRISED OF ABOVE COMPONENTS			

COPYRIGHT© 2011INTERNATIONAL TRUCK AND ENGINE CORP.

https://truckmanualshub.com/

Figure 3509307C5

SILL,ASSY, ASSY REAR

Item	Part No.	Qty	Description	Kit	Var	Figure
881	3509307C5	RF	SILL,ASSY, ASSY REAR			

COPYRIGHT© 2011INTERNATIONAL TRUCK AND ENGINE CORP.

https://truckmanualshub.com/

Figure 3818932C91
UNDERBODY,ASM, CONV BB

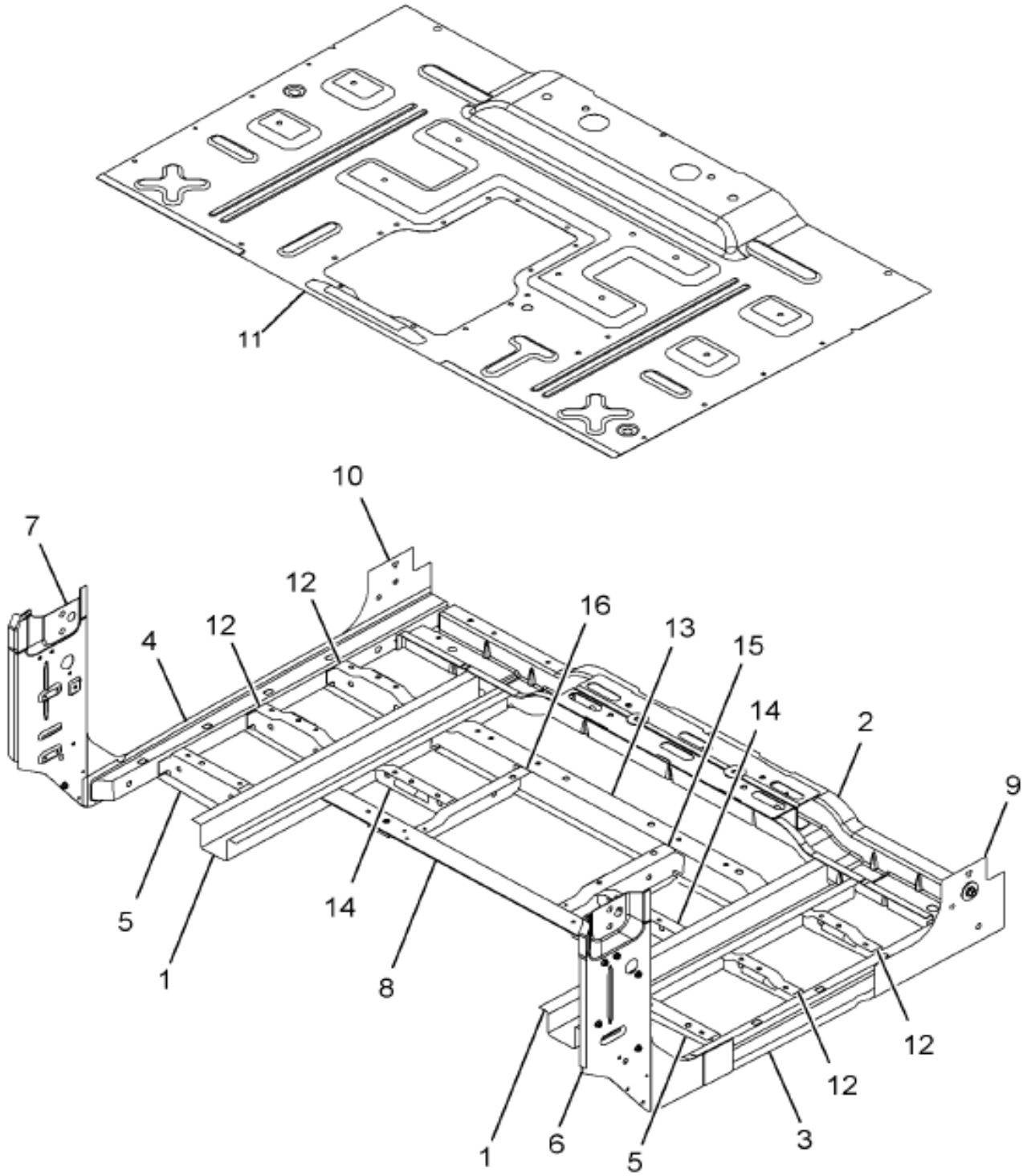

16-447-0865-01 K06

Item	Part No.	Qty	Description	Kit	Var	Figure
1	3544953C2	2	SILL,ASSY INNER CONV CAB			
2	3509307C5	1	SILL,ASSY, ASSY REAR			3509307C5
3	3547269C2	1	SILL, CAB OUTER SIDE - LH			
3		RF	LEFT			
4	3547270C2	1	SILL CAB OUTER SIDE - RH			
4		RF	RIGHT			

COPYRIGHT© 2011INTERNATIONAL TRUCK AND ENGINE CORP.

https://truckmanualshub.com/

Figure 3818932C91

UNDERBODY,ASM, CONV BB

Item	Part No.	Qty	Description	Kit	Var	Figure
5	3510121C1	2	REINFORCEMENT,FLOOR PNL SEAT			
6	3544951C3	1	PANEL,SIDE BODY COWL LH			3544951C3
6		RF	LEFT			
7	3544952C3	1	PANEL,ASSY SIDE BODY COWL RH			3544952C3
7		RF	RIGHT			
8	3572053C2	1	REINFORCEMENT,, , FLOOR CENTER			3572053C2
9	3544954C1	1	PLATE,SEAT BELT ANCHOR LH			
9		RF	LEFT			
10	3544955C1	1	PLATE,SEAT BELT ANCHOR RH			
10		RF	RIGHT			
11	3547268C4	1	PANEL,, FLOOR CONV, BIG BORE			
12	3539277C2	4	REINFORCEMENT,FLR PNL SEAT MTG			
13	3539284C1	1	REINFORCEMENT,FLR PNL SEAT TET			
14	3539286C2	2	REINFORCEMENT,FLR PNL FRT SEAT			
15	3542837C1	1	REINFORCEMENT,FLOOR PNL LH			
15		RF	LEFT			
16	3542838C1	1	REINFORCEMENT,FLOOR PNL RH			
16		RF	RIGHT			
880		RF	NOTE: ASM BELOW COMPRISED OF ABOVE COMPONENTS			
881	3818932C91	RF	UNDERBODY,ASM, CONV BB			

Grp 16

COPYRIGHT© 2011INTERNATIONAL TRUCK AND ENGINE CORP.

https://truckmanualshub.com/

Figure 0XQ3B

CAB DASH INTERIOR TRIM INSTL; INSULATION

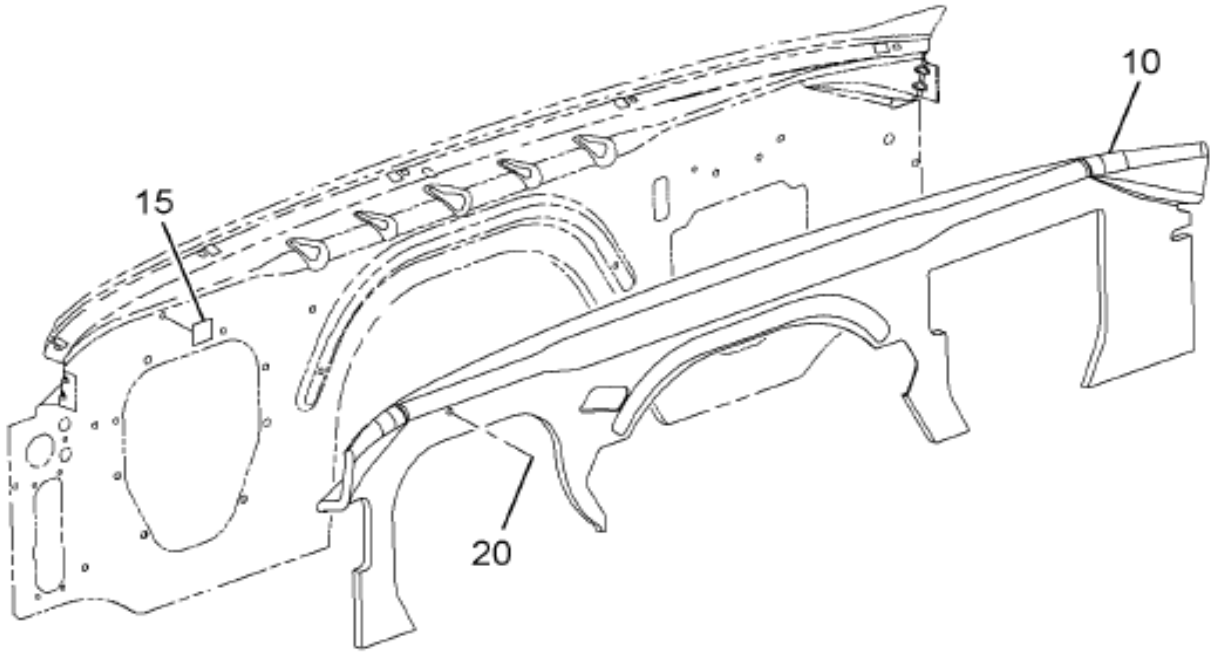

16-404-0022-00 F09

Item	Part No.	Qty	Description	Kit	Var	Figure
15	3689727C1	1	TAPE,INSULATING, SOUND		0XQ3D	

COPYRIGHT© 2011INTERNATIONAL TRUCK AND ENGINE CORP.

https://truckmanualshub.com/

Figure 0SXVH

CAB DOOR PANEL INSTL; FRONT LEFT DOOR TRIM

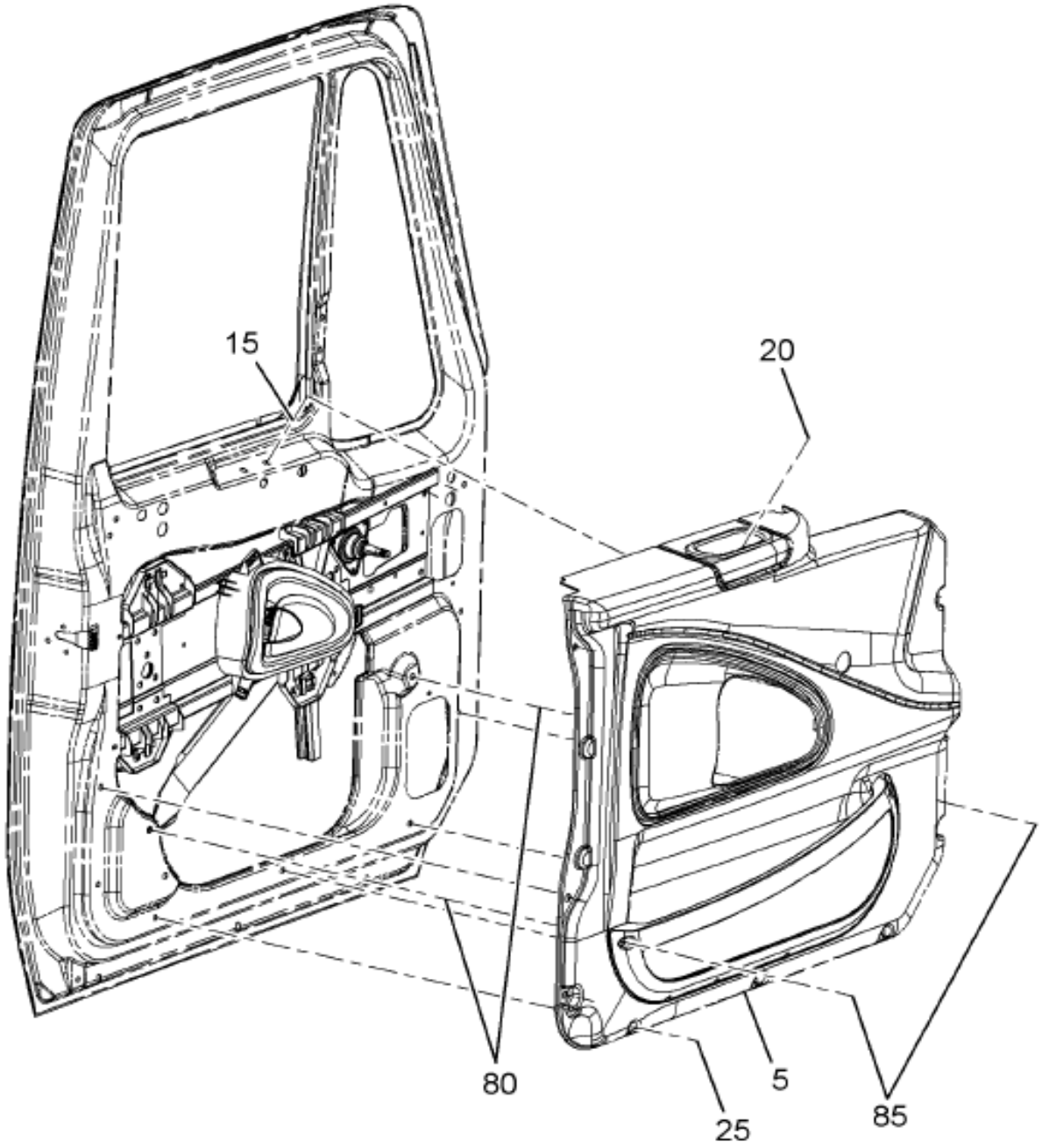

16-773-0160-01 B09

Item	Part No.	Qty	Description	Kit	Var	Figure
5	3533752C94	1	PANEL,DOOR TRM LH FRT STD MAN		0SXVJ	3533752C94
15	3548695C1	2	FASTENER,TRIM NYLON GROMMET		0SXVH	
20	3552454C1	2	SCREW,TAPPING M4.2 X 1.41-35MM		0SXVH	
25	3511058C2	9	FASTENER,TRM 2-STG RVT SMK GRY		0SXVH	
80	3510918C1	2	INSERT,THREADED M6 OPEN END		0SXVH	
85	3612354C1	2	BOLT,M6X1.0-40MM SST TORX PAN		0SXVH	

Grp 16

COPYRIGHT© 2011INTERNATIONAL TRUCK AND ENGINE CORP.

https://truckmanualshub.com/

Figure 3533752C94
PANEL,DOOR TRM LH FRT STD MAN

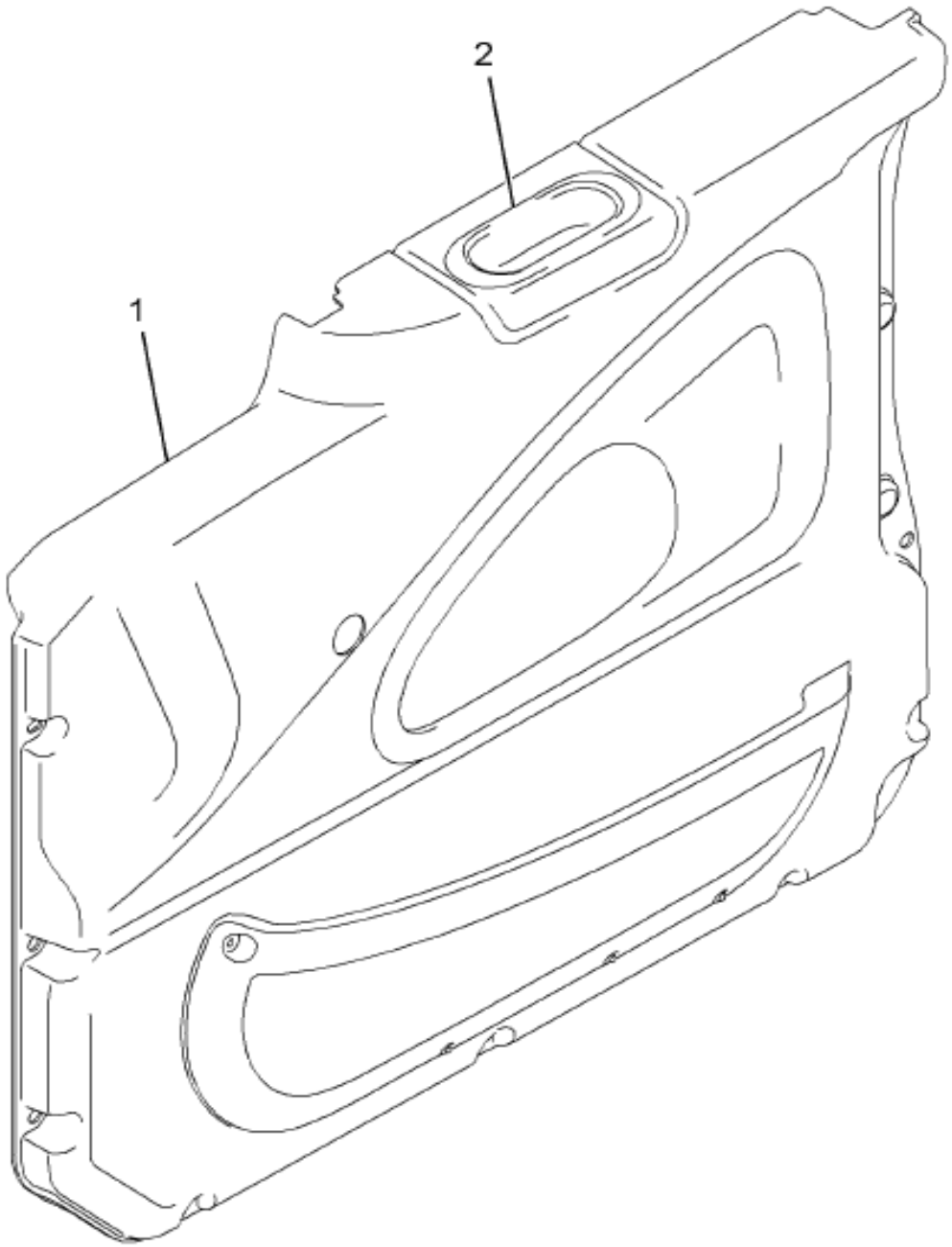

16-773-0051-01 C04

Item	Part No.	Qty	Description	Kit	Var	Figure
1	2505200C91	1	PANEL,DR TRM LH STD			
2	2505201C1	1	CONTAINER,PULL CUP			
801	2505202C91	KT	KIT,INTR TRM PCKT SMK GRY LH			
880		RF	NOTE: ASM BELOW COMPRISED OF ABOVE COMPONENTS			
881	3533752C94	RF	PANEL,DOOR TRM LH FRT STD MAN			

COPYRIGHT© 2011INTERNATIONAL TRUCK AND ENGINE CORP.

https://truckmanualshub.com/

Figure 0LEJR
CAB MTG; FRONT

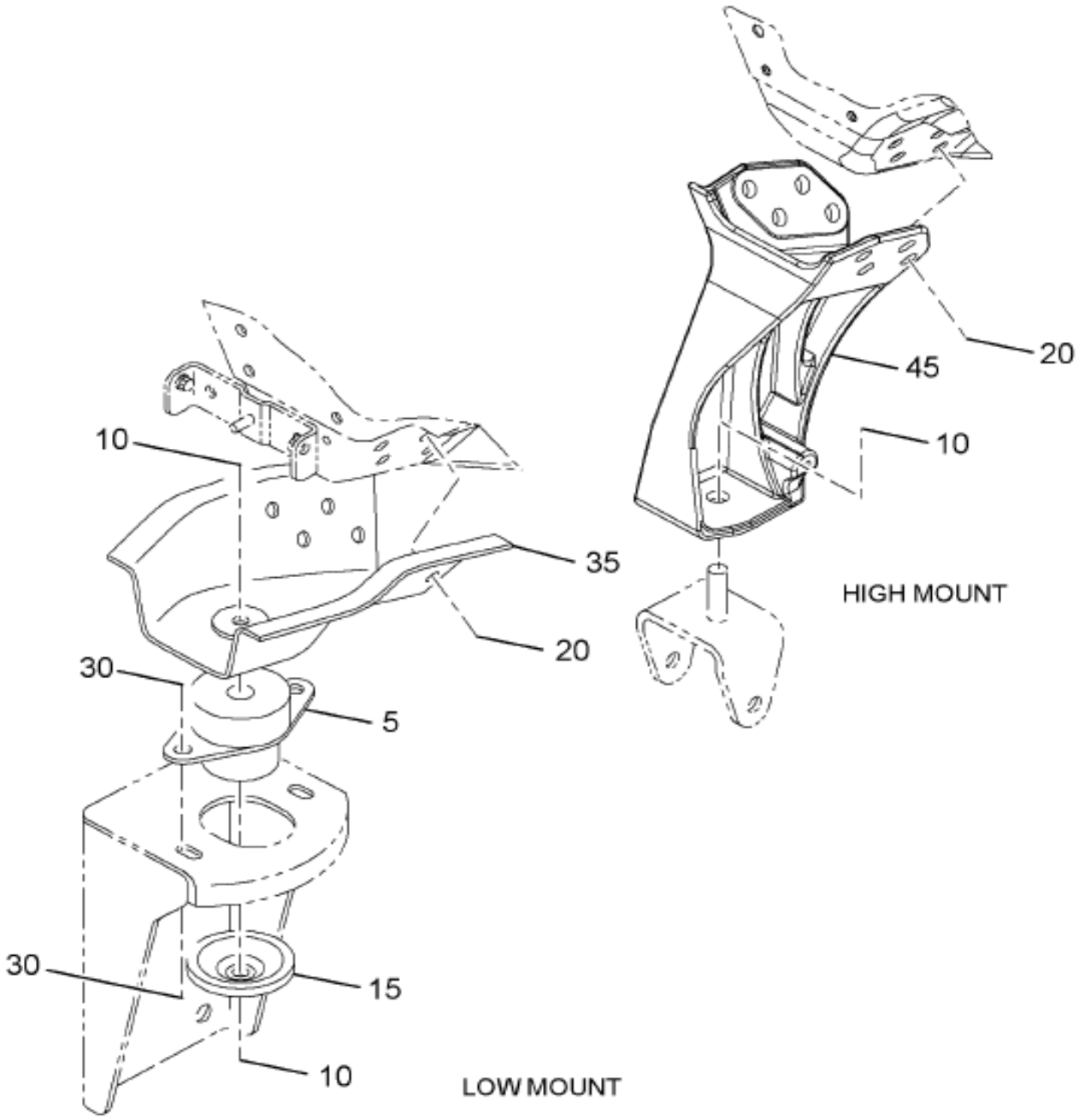

16-345-0094-01 J09

Grp 16

Figure 1 of 4

COPYRIGHT© 2011INTERNATIONAL TRUCK AND ENGINE CORP.

https://truckmanualshub.com/

Figure 0LEJR
CAB MTG; FRONT

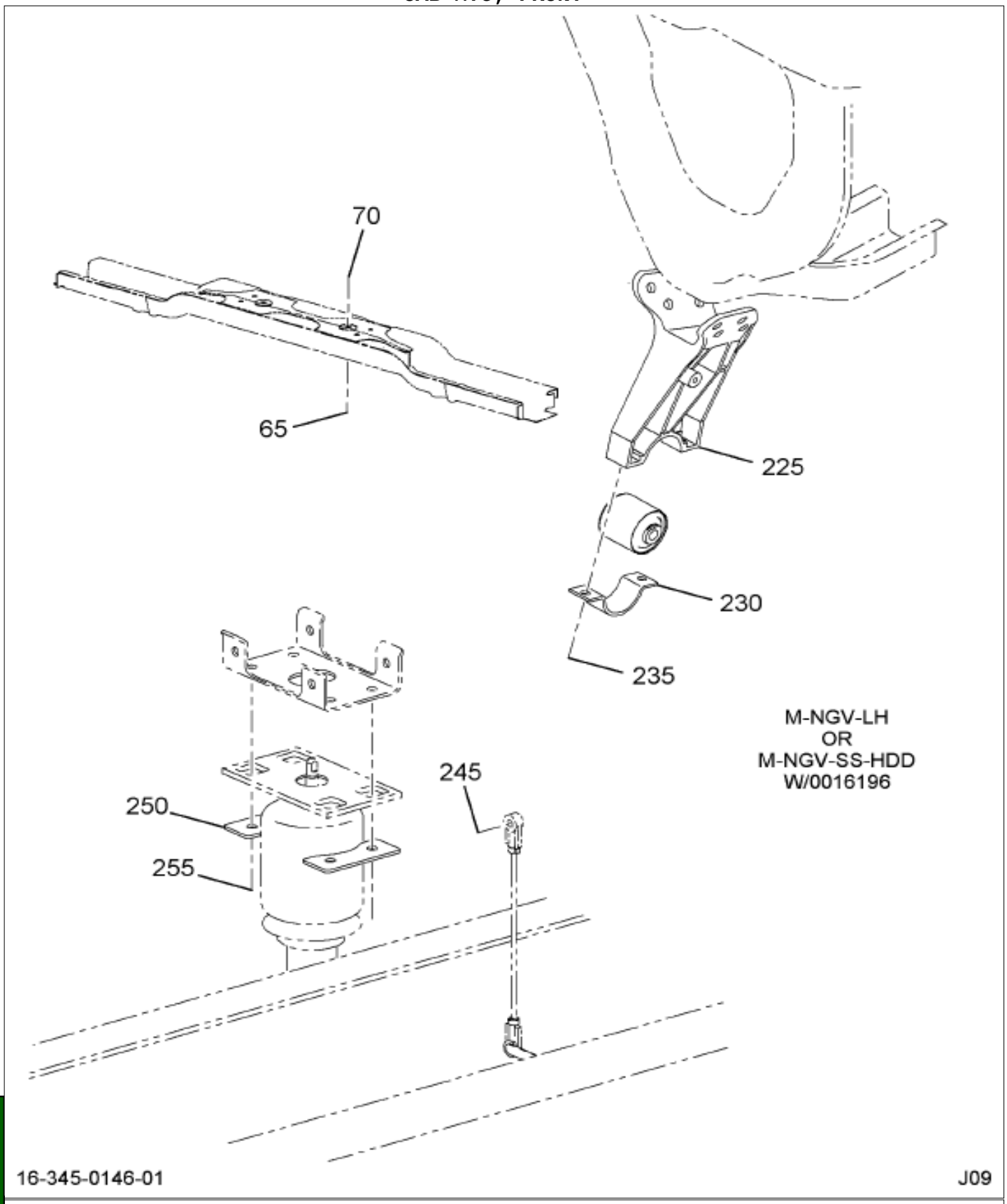

Figure 2 of 4

COPYRIGHT© 2011INTERNATIONAL TRUCK AND ENGINE CORP.

https://truckmanualshub.com/

Figure 0LEJR
CAB MTG; FRONT

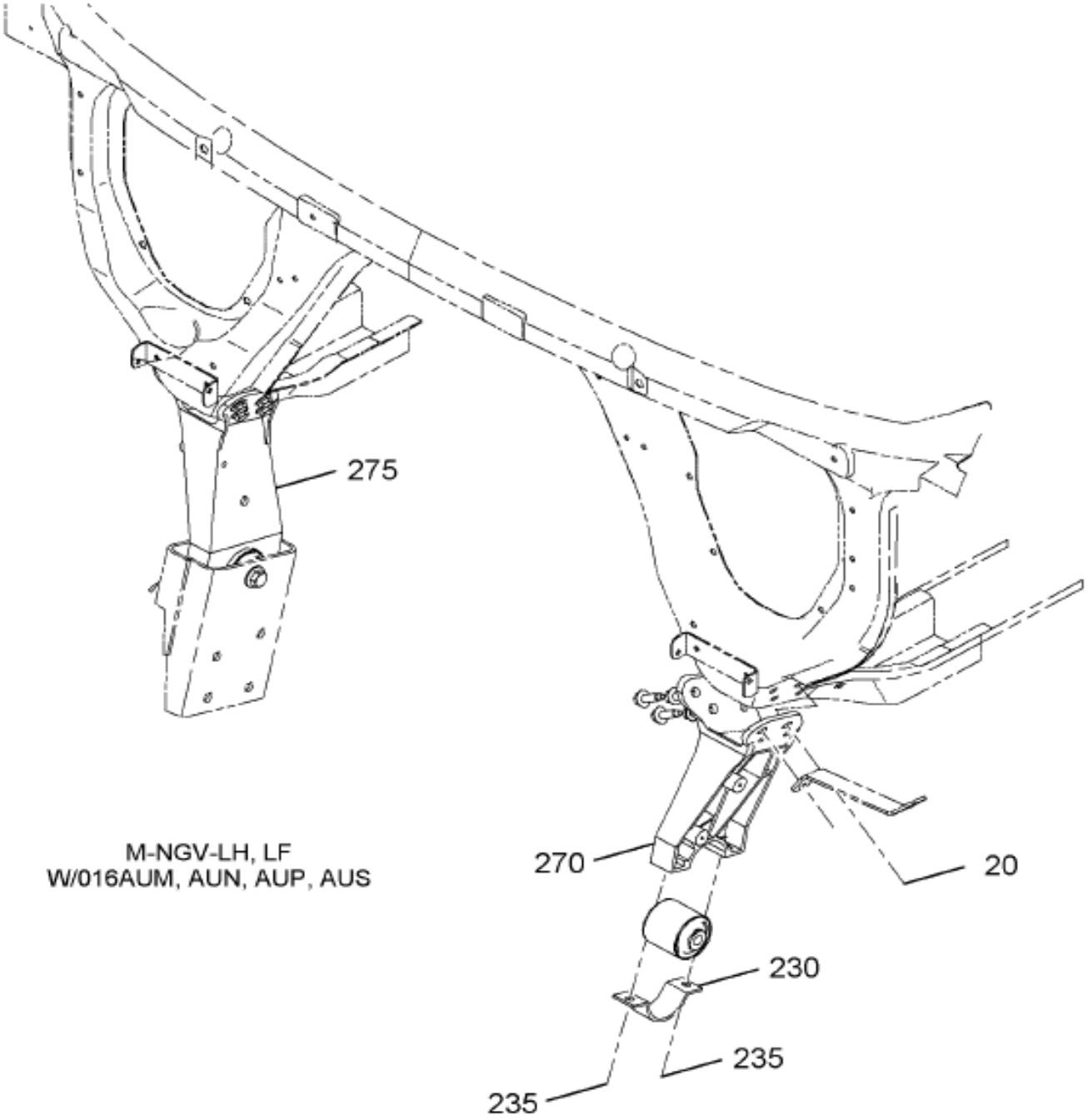

16-345-0152-01 F10

Grp 16

Figure 3 of 4

COPYRIGHT© 2011INTERNATIONAL TRUCK AND ENGINE CORP.

https://truckmanualshub.com/

Figure 0LLJR

CAB MTG; FRONT

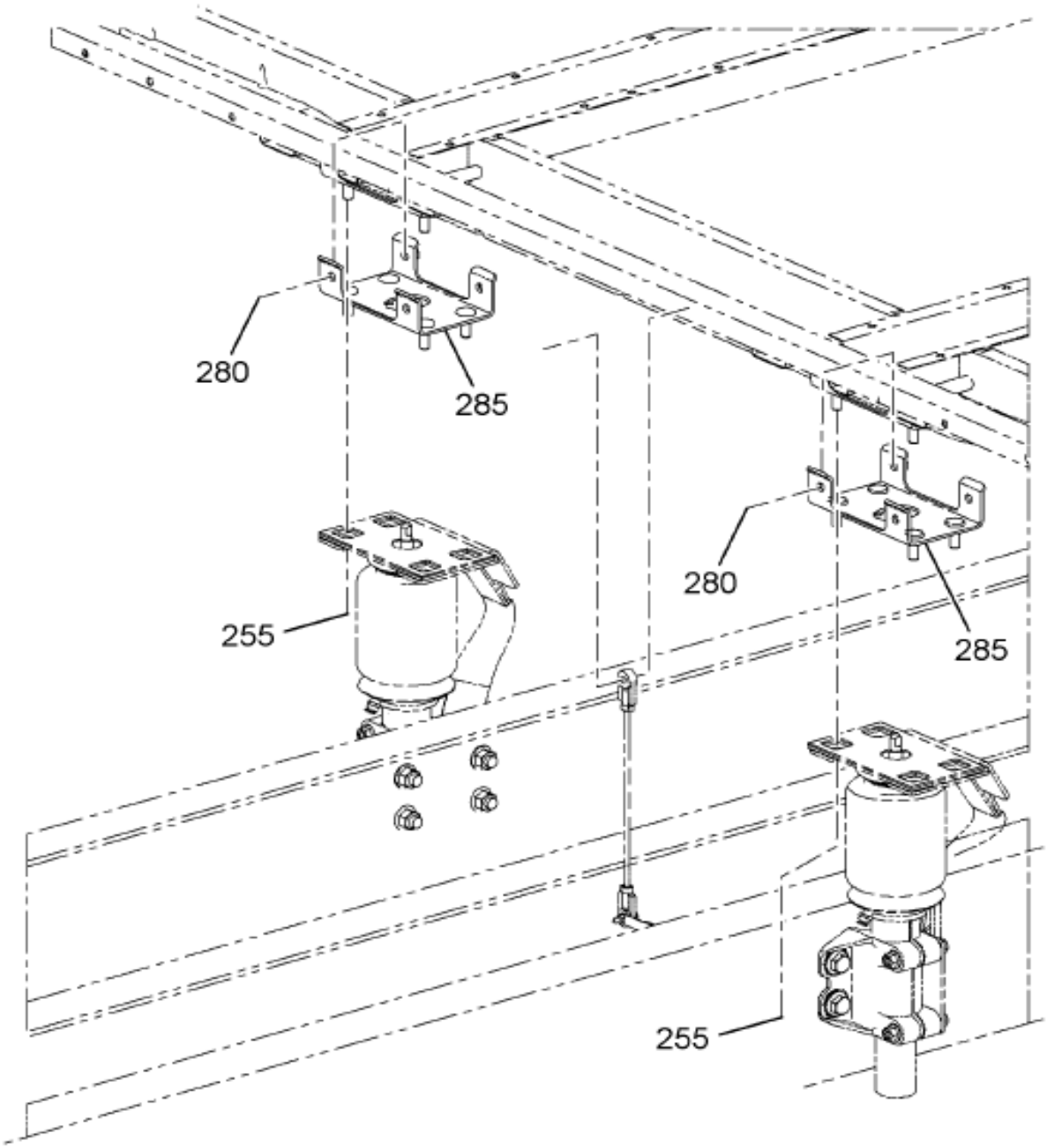

16-345-0152-02 F10

Item	Part No.	Qty	Description	Kit	Var	Figure
10	3535554C1	2	NUT,HEX METRIC PREV. TORQ*M16		0LLK9	
20		REF	BOLT CAB MTG M12X1.75 37MM		0LLK9	
45		REF	SUPPORT,HIGH CAB MOUNT		0LLK9	
45	3596416C91	1	BRACKET ASM,CAB FRONT MTG		0LLK9	3596416C91

COPYRIGHT© 2011INTERNATIONAL TRUCK AND ENGINE CORP.

https://truckmanualshub.com/

Figure 3596416C91

BRACKET ASM,CAB FRONT MTG

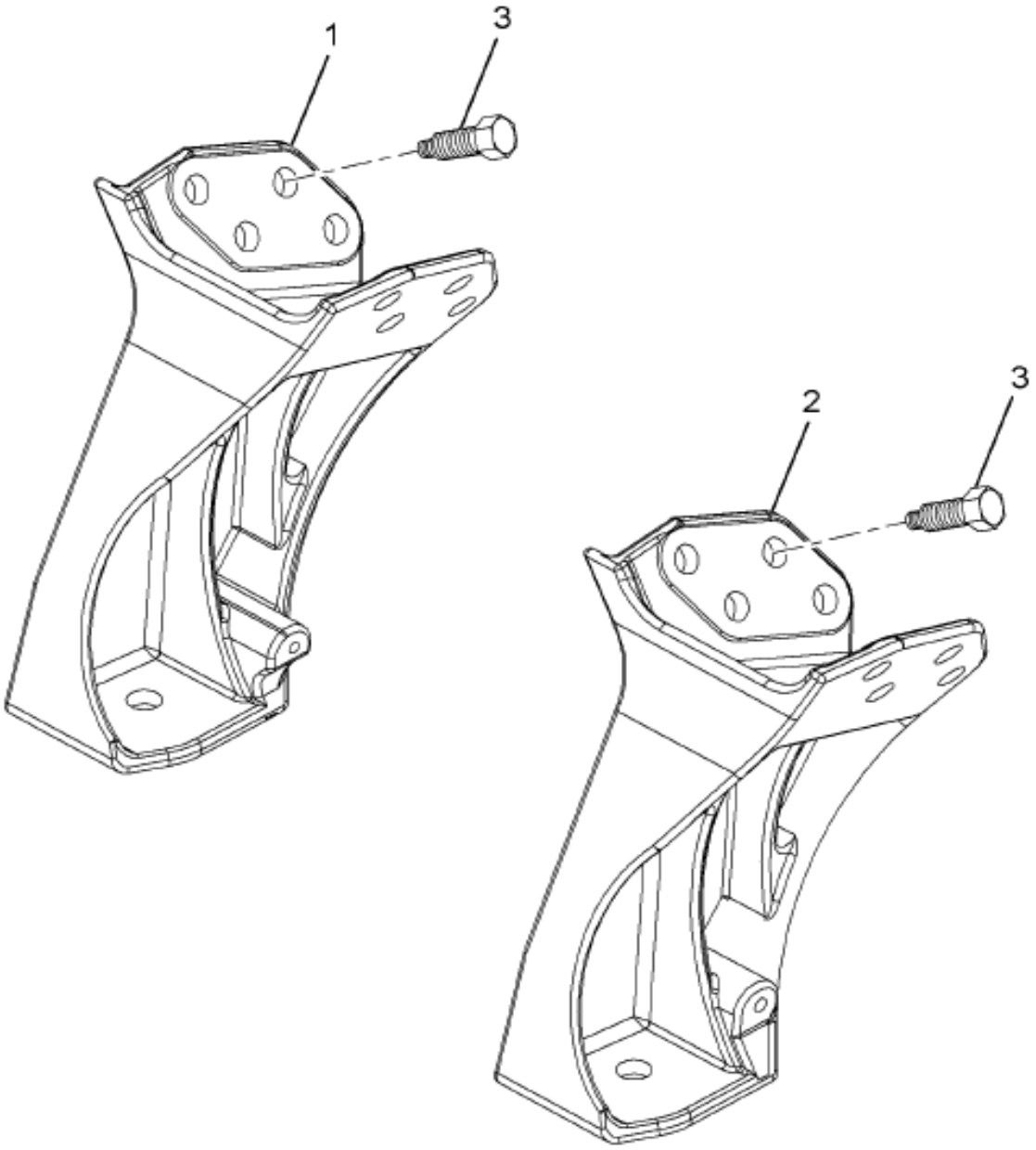

16-345-0106-01 A05

Grp 16

Item	Part No.	Qty	Description	Kit	Var	Figure
1	3547956C3	2	BRACKET,CAB FRT MTG HI CAB RH			
2	3594832C1	2	SUPPORT,HIGH CAB MOUNT			
3	3552011C1	16	BOLT CAB MTG M12X1.75 37MM			
880		RF	NOTE: ASM BELOW COMPRISED OF ABOVE COMPONENTS			
881	3596416C91	RF	BRACKET ASM,CAB FRONT MTG			

COPYRIGHT© 2011INTERNATIONAL TRUCK AND ENGINE CORP.

https://truckmanualshub.com/

Figure 0WK19
CAB MTG; FRT

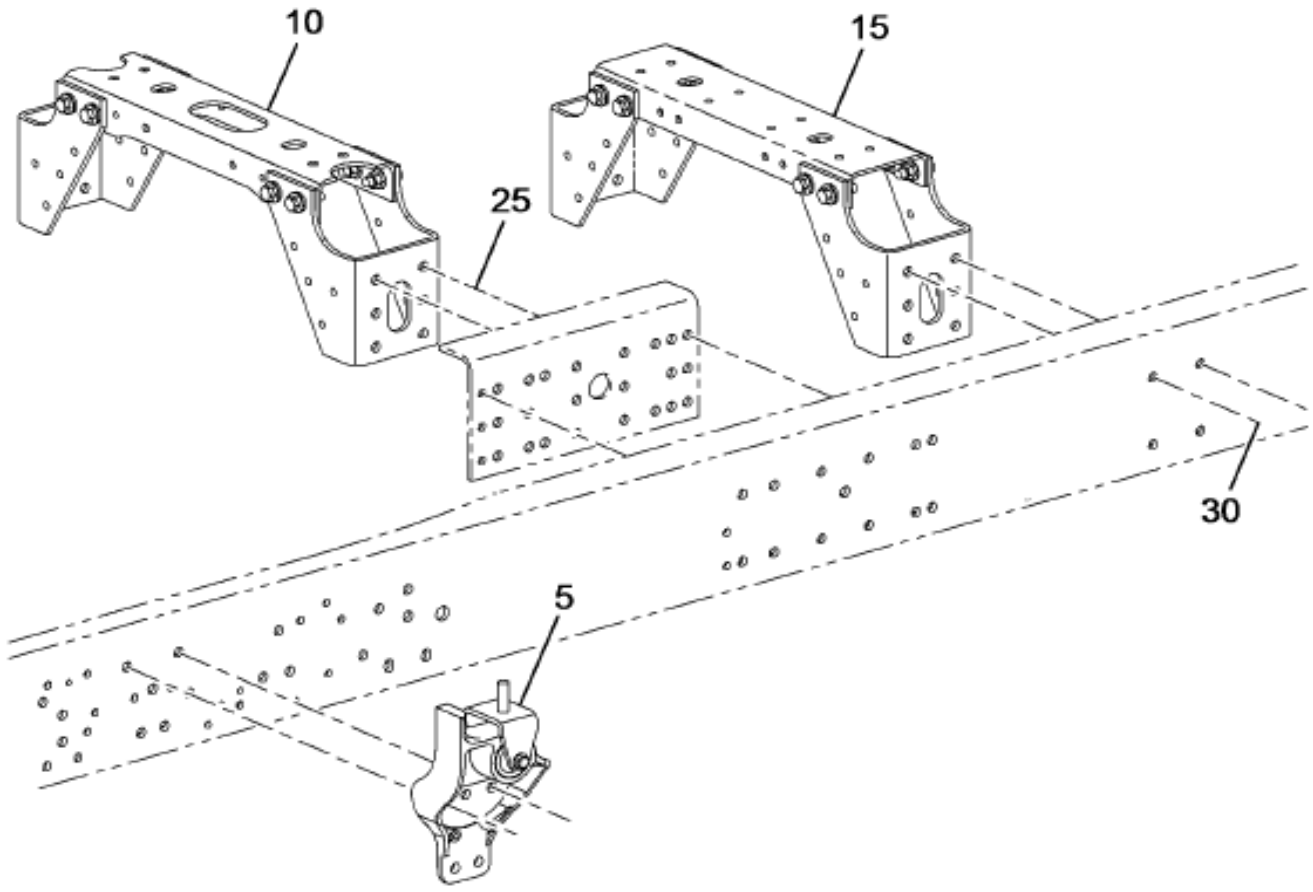

01-451-0215-01 C10

Item	Part No.	Qty	Description	Kit	Var	Figure
5	3582996C92	1	SUPPORT, RT, CT CAB		0WKTB	3582996C92
5	3691089C1	8	BOLT, HUCK-SPIN 5/8 DIA -20		0WKTL	
5	3589600C92	1	SUPPORT, LT, CT CAB, SLOTTED		0WKTB	3589600C92
5	3691083C1	8	NUT, HUCK SPIN COLLAR 5/8 DIA		0WKTL	
10	3567192C93	1	CROSSMEMBER,CAB REAR SUPT ASSY		0X1J1	3567192C93
25	30756R1	8	NUT,HEX M16 PRVTRQ		0X1J1	

COPYRIGHT© 2011INTERNATIONAL TRUCK AND ENGINE CORP.

https://truckmanualshub.com/

Figure 3567152C93
CROSSMEMBER,CAB REAR SUPT ASSY

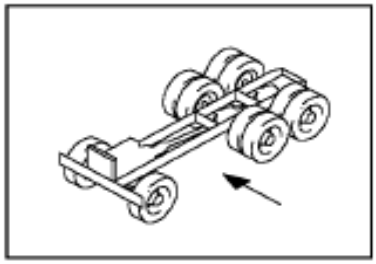

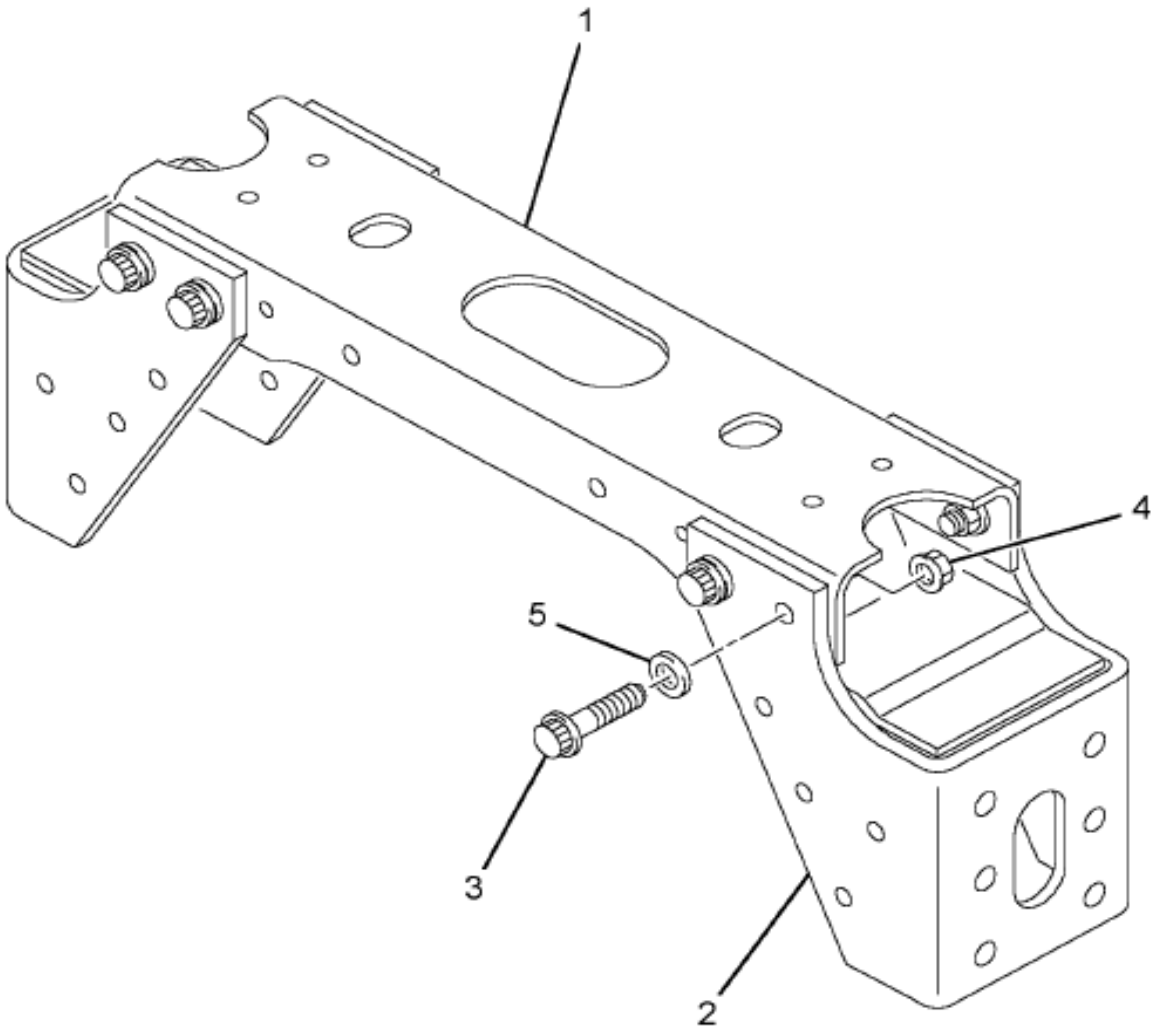

01-451-0091-01 H03

Item	Part No.	Qty	Description	Kit	Var	Figure
1	3565362C2	1	CHANNEL,XMBR CTR SEC			
2	3567111C2	2	BRACKET,CAB MTG XMBR REAR			
3	30751R2	8	BOLT,HEX FLG HD METRIC*M16 X 4			
4	30756R1	8	NUT,HEX M16 PRVTRQ			
5	30186R1	8	WASHER, 17.3 X 34 X 5MM PHC			
880		RF	NOTE: ASM BELOW COMPRISED OF ABOVE			

Grp 16

COPYRIGHT© 2011INTERNATIONAL TRUCK AND ENGINE CORP.

https://truckmanualshub.com/

Figure 3567192C93

CROSSMEMBER,CAB REAR SUPT ASSY

Item	Part No.	Qty	Description	Kit	Var	Figure
			COMPONENTS			
881	3567192C93	RF	CROSSMEMBER,CAB REAR SUPT ASSY			

COPYRIGHT© 2011INTERNATIONAL TRUCK AND ENGINE CORP.

https://truckmanualshub.com/

Figure 3585600C92

SUPPORT, LT, CT CAB, SLOTTED

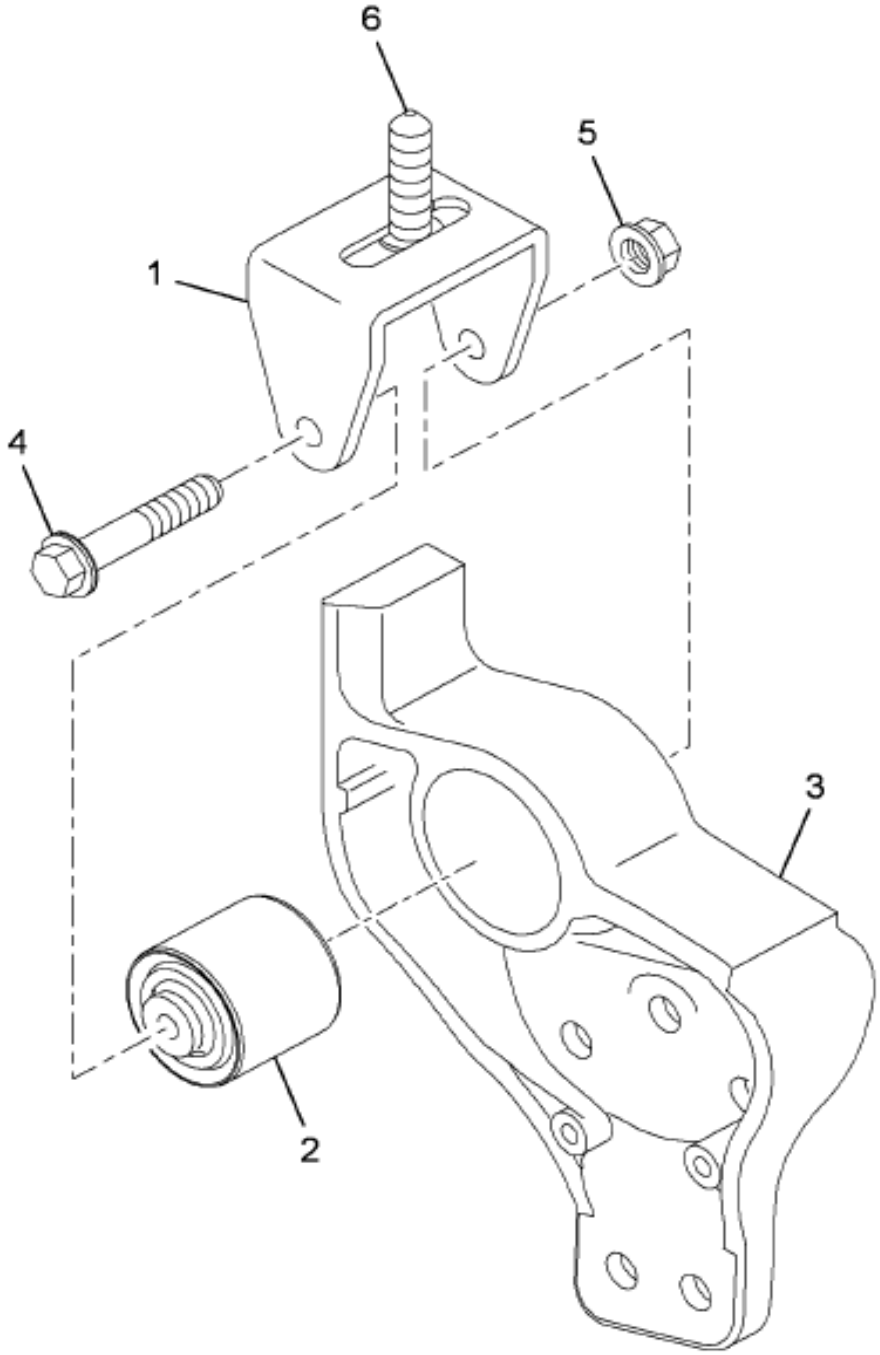

01-451-0228-01 B10

Item	Part No.	Qty	Description	Kit	Var	Figure
1	3574682C1	1	CLEVIS,ROD WELD ETC FRT CAB MO			
2	3574680C1	1	BUSHING,SPG SILENT BLOC 15-17-			
3	3582968C2	1	SUPPORT, LH, 5 HOLE			
3		RF	LEFT			
4	31072R1	1	BOLT, M12 X 120 PHC CL 10.9 FL			
5	30755R1	1	NUT,HEX M12 FLANGED			

Grp 16

COPYRIGHT© 2011INTERNATIONAL TRUCK AND ENGINE CORP.

https://truckmanualshub.com/

Figure 3589600C92

SUPPORT, LT, CT CAB, SLOTTED

Item	Part No.	Qty	Description	Kit	Var	Figure
6	3579031C1	1	BOLT,HEX FLG HD METRIC*M16X60			
880		RF	NOTE: ASM BELOW COMPRISED OF ABOVE COMPONENTS			
881	3589600C92	RF	SUPPORT, LT, CT CAB, SLOTTED			

COPYRIGHT© 2011INTERNATIONAL TRUCK AND ENGINE CORP.

https://truckmanualshub.com/

Figure 3582996C92

SUPPORT, RT, CT CAB

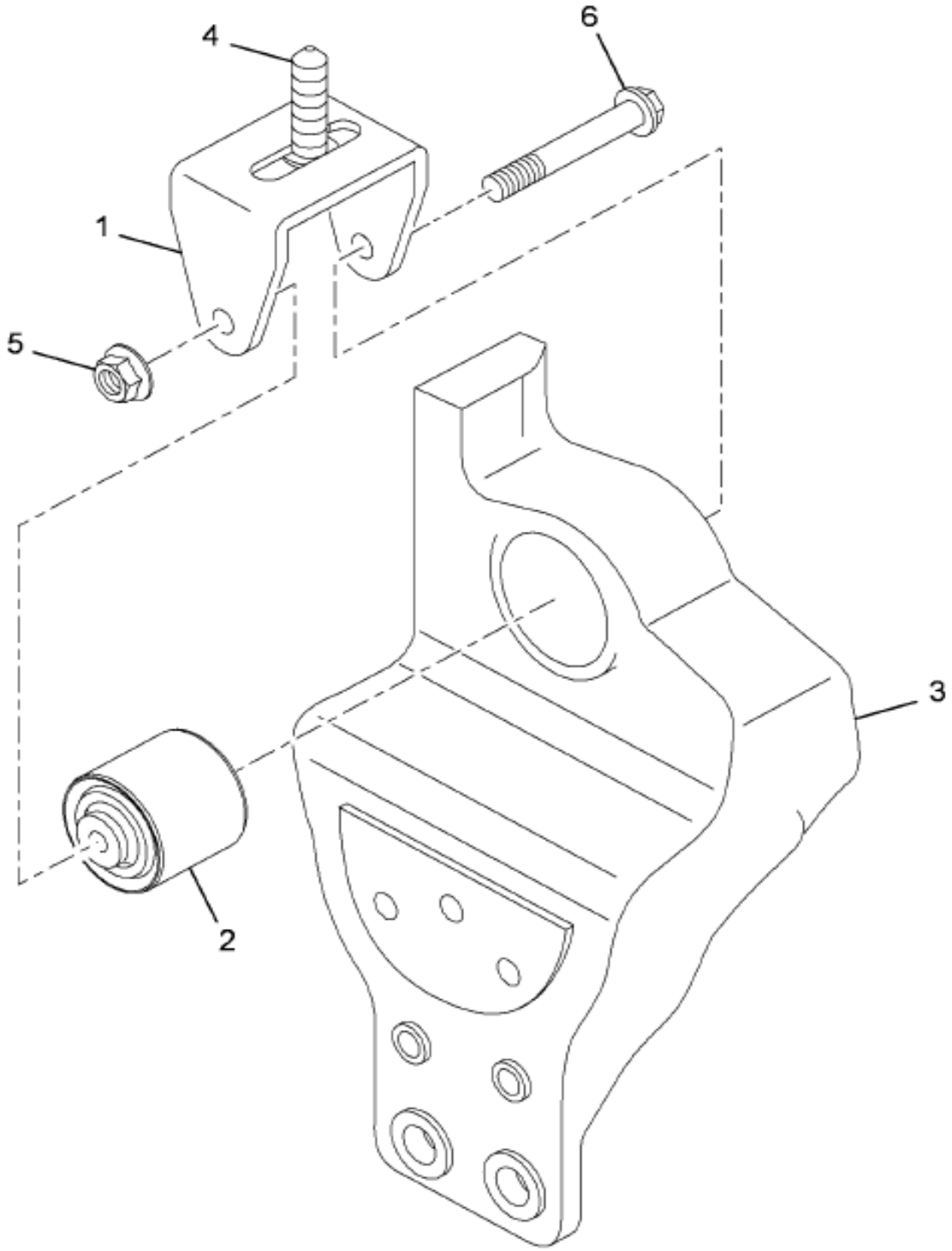

01-451-0226-01 B10

Item	Part No.	Qty	Description	Kit	Var	Figure
1	3574682C1	1	CLEVIS,ROD WELD ETC FRT CAB MO			
2	3574680C1	1	BUSHING,SPG SILENT BLOC 15-17-			
3	3582969C2	1	SUPPORT, RH, 5 HOLE			
3		RF	RIGHT			
4	3579029C1	1	BOLT,HEX FLG HD METRIC*M16X50			
5	30755R1	1	NUT,HEX M12 FLANGED			

Grp 16

COPYRIGHT© 2011INTERNATIONAL TRUCK AND ENGINE CORP.

https://truckmanualshub.com/

Figure 3582996C92

SUPPORT, RT, CT CAB

Item	Part No.	Qty	Description	Kit	Var	Figure
6	31072R1	1	BOLT, M12 X 120 PHC CL 10.9 FL			
880		RF	NOTE: ASM BELOW COMPRISED OF ABOVE COMPONENTS			
881	3582996C92	RF	SUPPORT, RT, CT CAB			

COPYRIGHT© 2011INTERNATIONAL TRUCK AND ENGINE CORP.

https://truckmanualshub.com/

Figure 06Q3E
CAB MTG; RR

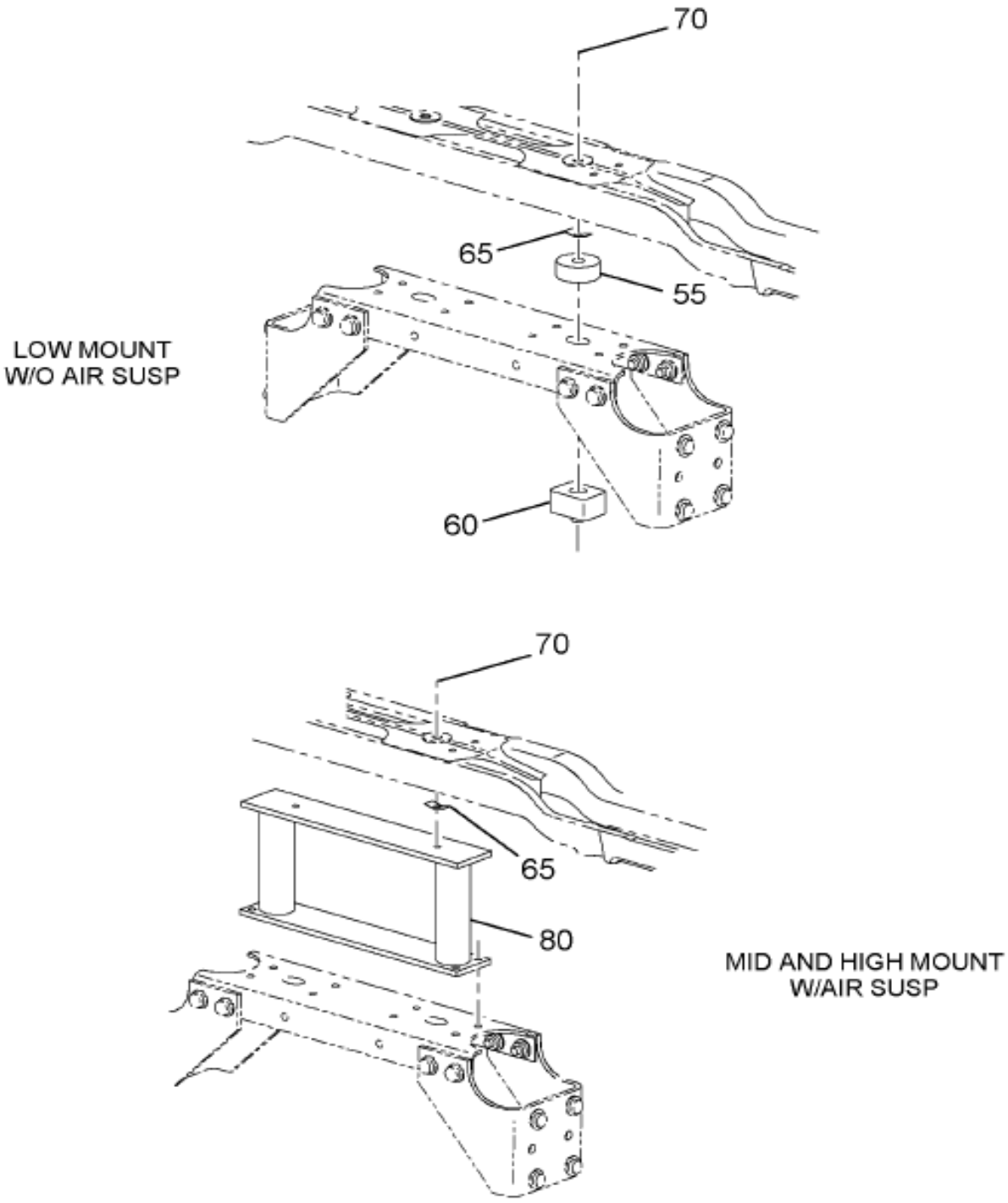

16-346-0007-A0 K11

Grp 16

Figure 1 of 2

COPYRIGHT© 2011INTERNATIONAL TRUCK AND ENGINE CORP.

https://truckmanualshub.com/

Figure 06QSL
CAB MTG; RR

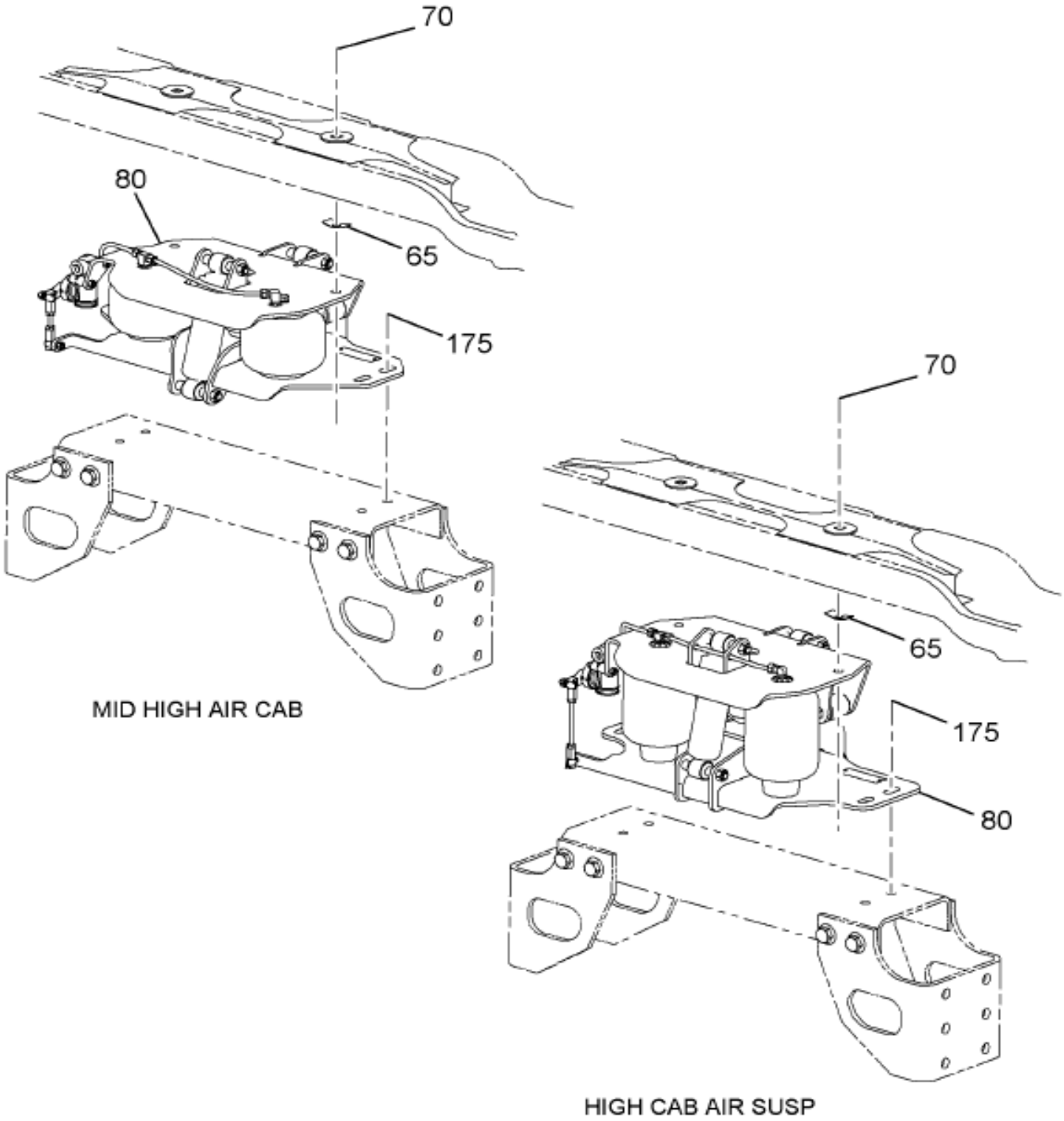

16-346-0008-AA C09

Item	Part No.	Qty	Description	Kit	Var	Figure
65	3539317C1	2	RETAINER,FSTNR RR CAB MNT BLT		06QSL	
70	3535371C1	2	BOLT,CAB MTG REAR		0JFJ5	
80	3563057C94	1	CAB AIR SUSPENSION HIGH		0JFJ5	3563057C94
175	30744R2	4	BOLT,HEX HD MET M12X30 PHC FLG		0JFJ5	
175	30755R1	6	NUT,HEX M12 FLANGED		0JFJ5	

COPYRIGHT© 2011INTERNATIONAL TRUCK AND ENGINE CORP.

https://truckmanualshub.com/

Figure 3363057C94

CAB AIR SUSPENSION HIGH

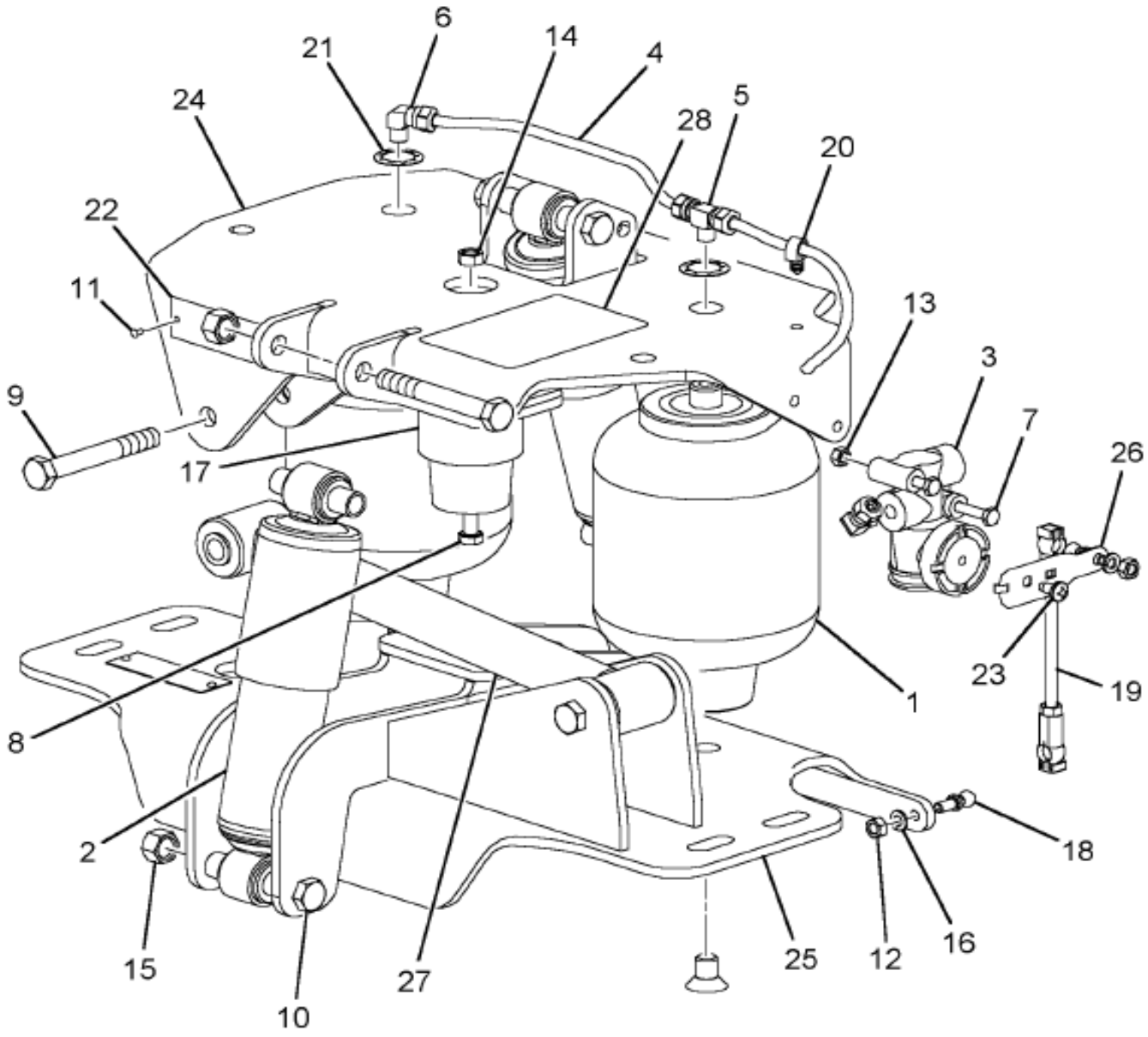

16-346-0014-01 J03

Item	Part No.	Qty	Description	Kit	Var	Figure
1	2507947C1	2	SPRING,AIR CAB MTG			
2	2509224C91	1	ABSORBER,SHOCK CAB AIR SUSP			
3	2508328C1	1	VALVE,HGHT CNTRL W/O VLV ARM			
4		RF	TUBE,PLASTIC 0.250 X 1.58"			
5	2507386C1	1	FITTING,SPL TEE 1/4 TB 1/8			
6	2502510C1	2	ELBOW,90 1/4 TB 1/8M-NPT DOT			

Grp 16

COPYRIGHT© 2011INTERNATIONAL TRUCK AND ENGINE CORP.

https://truckmanualshub.com/

Figure 3563057C94

CAB AIR SUSPENSION HIGH

Item	Part No.	Qty	Description	Kit	Var	Figure
7		RF	BOLT,HH M6 X 1 X 45 CLASS 8.8			
8		RF	BOLT,HH M8 X 1.25 X 40 CLS 8.8			
9		RF	BOLT,HH M12 X 1.25 X 80			
10		RF	BOLT,HH M12 X 1.75 X 90			
11		RF	SCREW,DRIVE #4 X 1/4			
12		RF	NUT,1/4 UNC			
13		RF	NUT,M6 X 1 CLASS 8			
14		RF	NUT,M8 X 1.25 CLASS 8			
15		RF	NUT,M12 X 1.25 CLASS 10			
16		RF	WASHER,1/4 LOCK			
17	2501303C1	1	BUMPER,CAB AIR SUSP RUBBER			
18	2501304C1	2	STUD,BALL PIVOT THREADED			
19	2586485C91	1	LINK,ASSY CAB AIR SUSP VALVE			
20		RF	CLIP,LATCHING			
21	2501307C1	2	RING,RETAINER 3/4			
22		RF	PLATE,IDENTIFICATION			
23		RF	SCREW,PHL PN HD TP 1/4-15X1/2			
24	2586486C1	1	BRACKET,CAB REAR MTG			
25	2586487C1	1	CROSSMEMBER,CAB REAR SUSP			
26	2503547C1	1	ARM,CAB SUSP			
27	2586470C1	1	ROD,CAB LATERAL CONTROL			
28		RF	DECAL,APPLICATION			
880		RF	NOTE: ASM BELOW COMPRISED OF ABOVE COMPONENTS			
881	3563057C94	RF	CAB AIR SUSPENSION HIGH			

COPYRIGHT© 2011INTERNATIONAL TRUCK AND ENGINE CORP.

https://truckmanualshub.com/
Figure 1 of 269
CAB SEALING INSTL

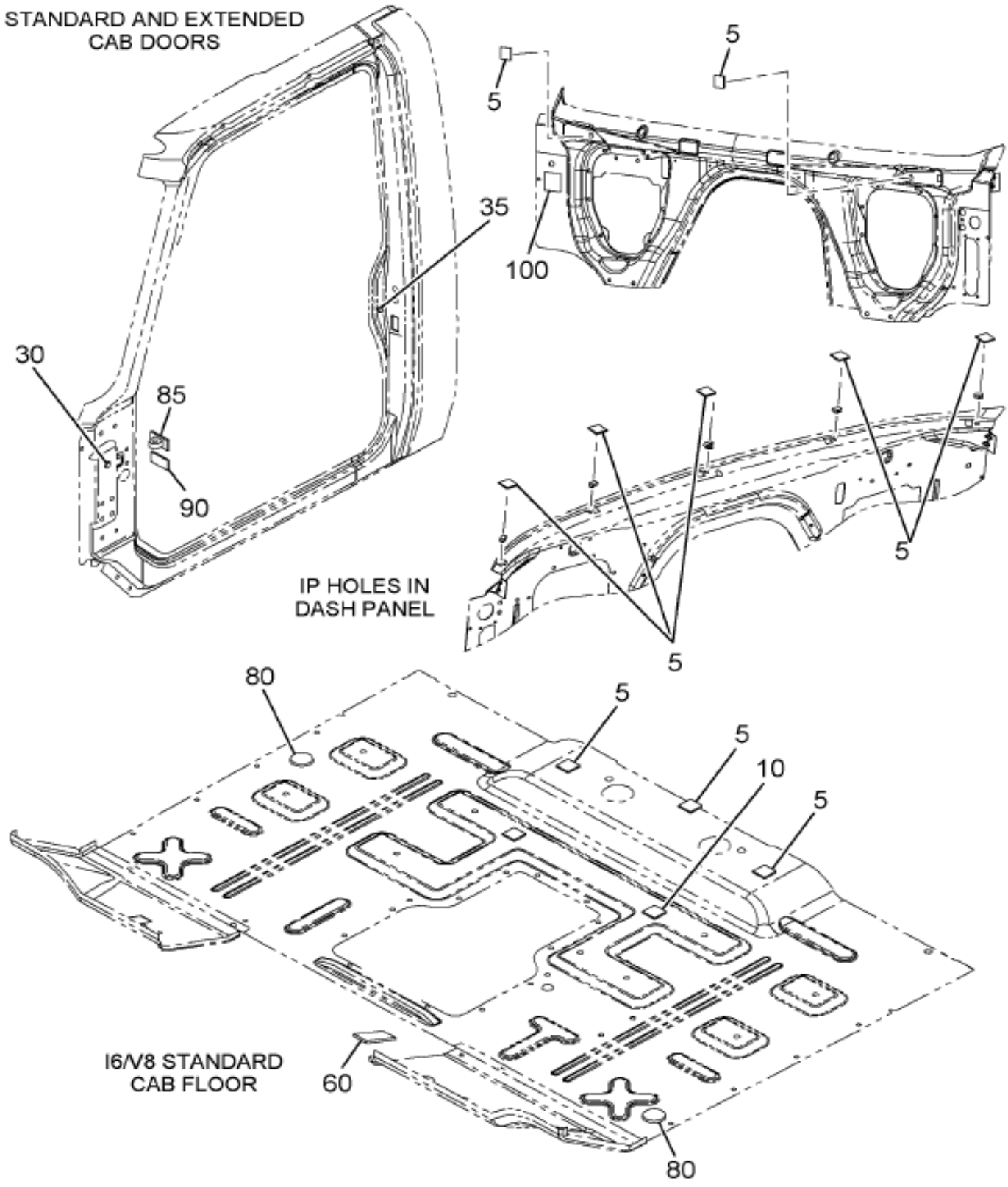

Grp 16

Figure 1 of 6

COPYRIGHT© 2011INTERNATIONAL TRUCK AND ENGINE CORP.

https://truckmanualshub.com/
Figure 0F269
CAB SEALING INSTL

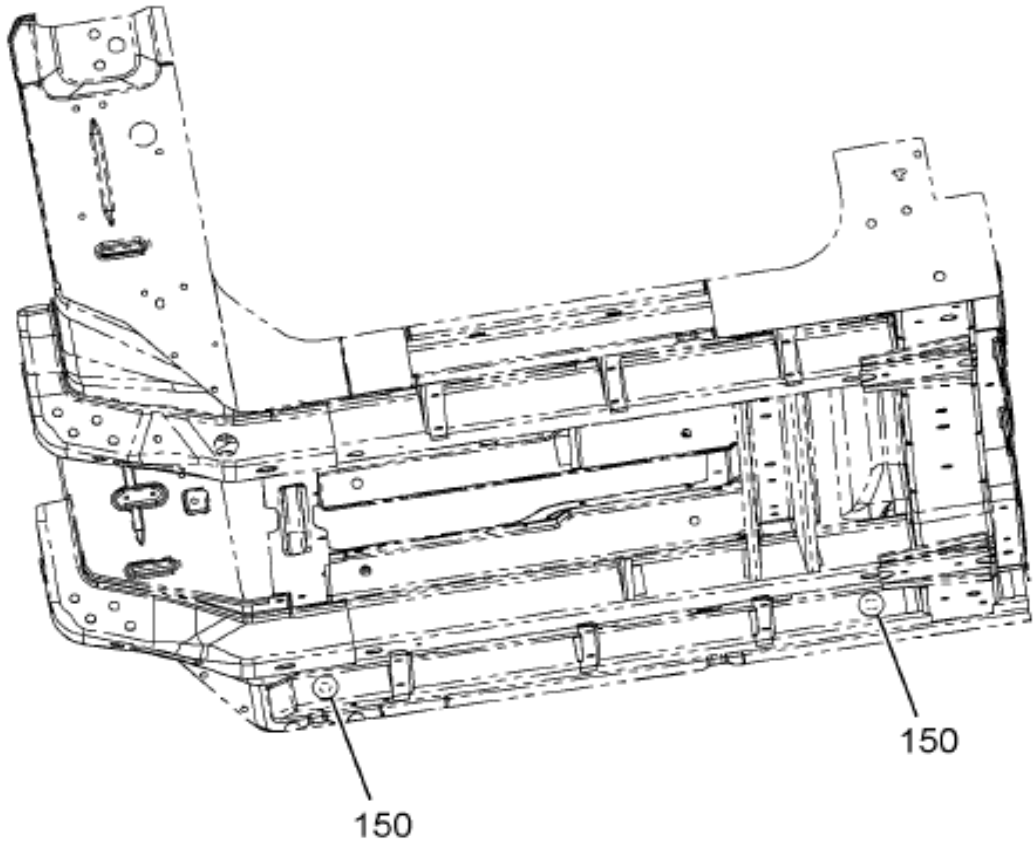

16-348-0019-01 K10

Figure 2 of 6

COPYRIGHT© 2011INTERNATIONAL TRUCK AND ENGINE CORP.

https://truckmanualshub.com/
Figure 0f 269
CAB SEALING INSTL

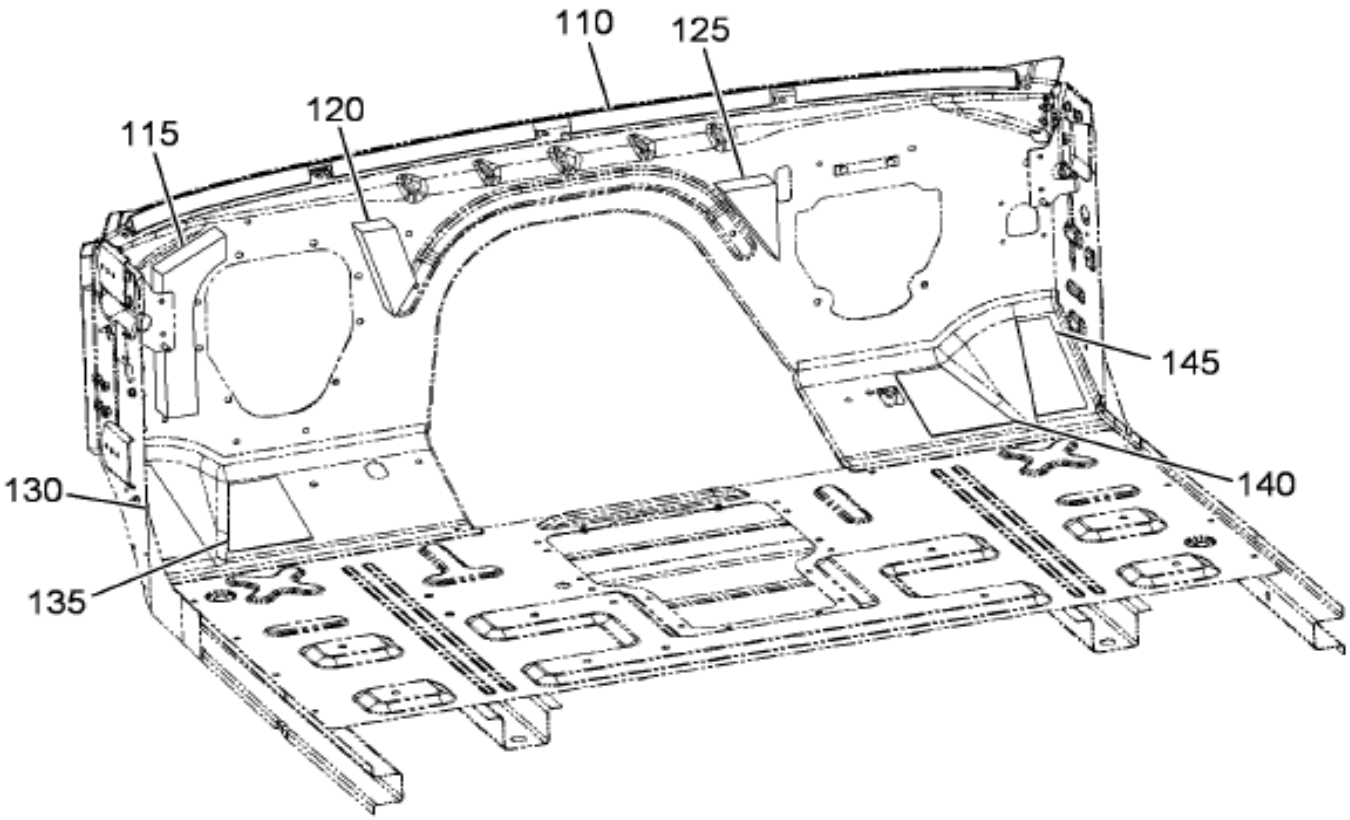

16-348-0019-02 A10

Grp 16

Figure 3 of 6

COPYRIGHT© 2011INTERNATIONAL TRUCK AND ENGINE CORP.

https://truckmanualshub.com/
Figure 0F269
CAB SEALING INSTL

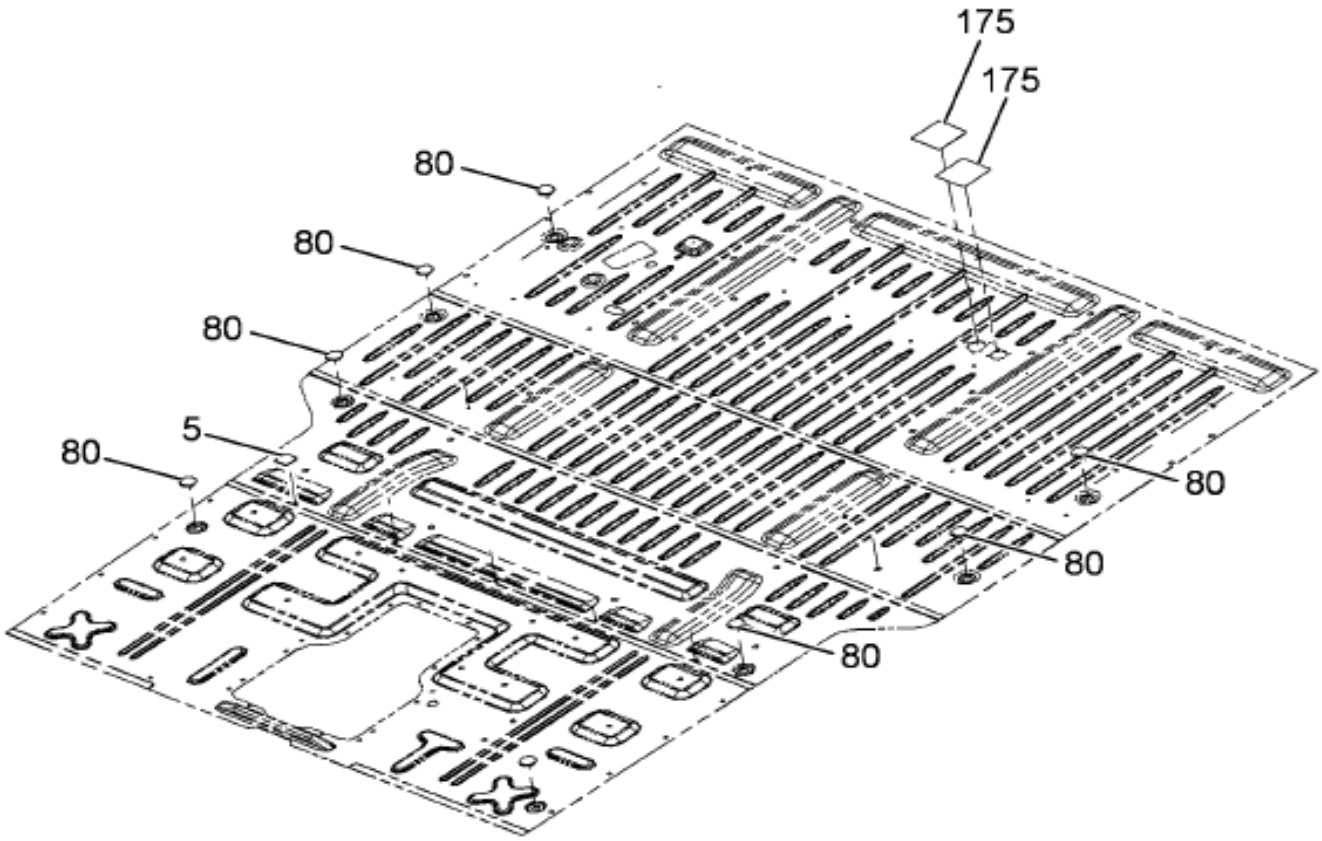

LH LONG SLEEPER

16-348-0020-01 A10

Figure 4 of 6

COPYRIGHT© 2011INTERNATIONAL TRUCK AND ENGINE CORP.

https://truckmanualshub.com/
Figure 0f 269
CAB SEALING INSTL

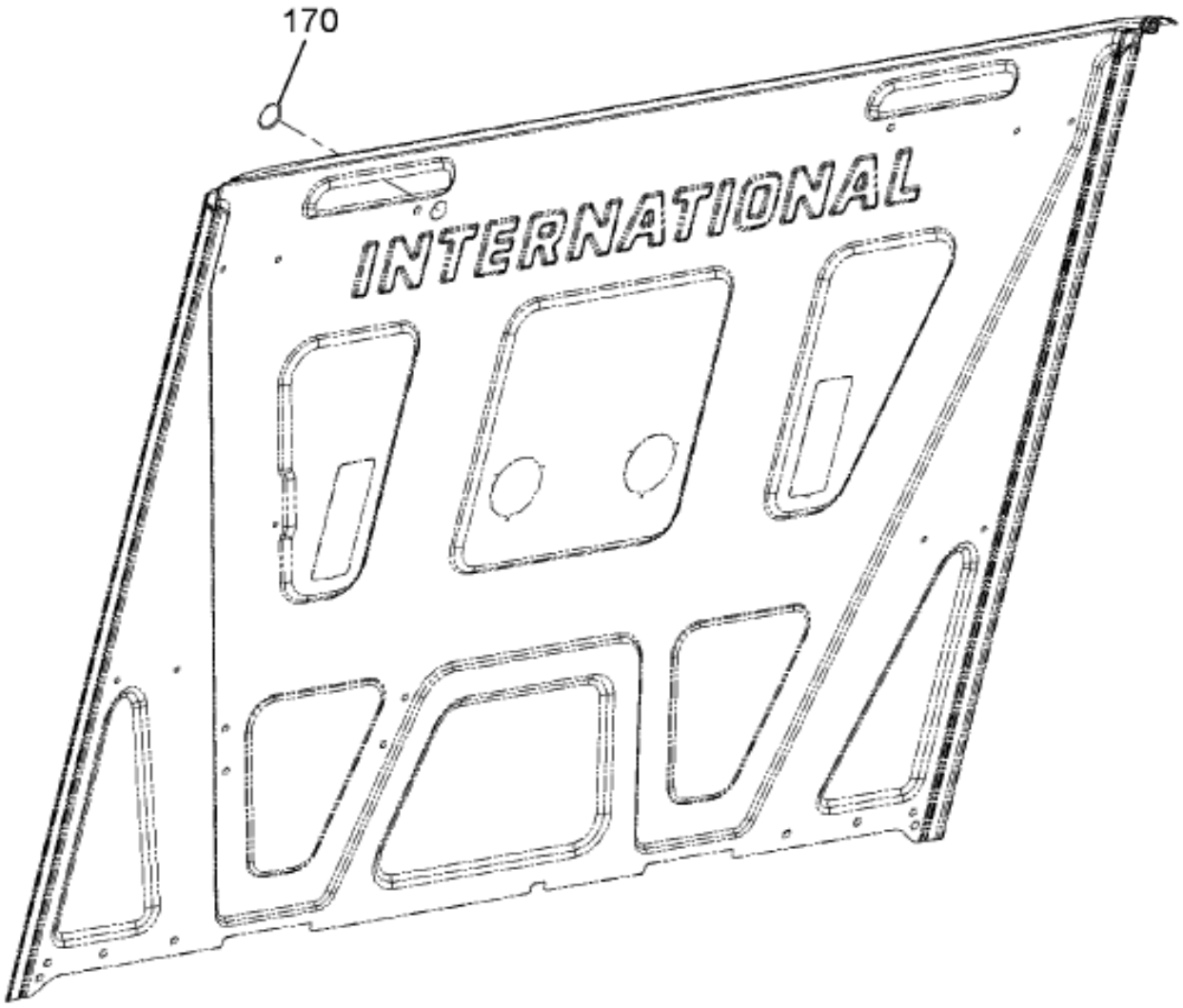

16-348-0021-01 A10

Grp 16

Figure 5 of 6

COPYRIGHT© 2011INTERNATIONAL TRUCK AND ENGINE CORP.

https://truckmanualshub.com/

Figure 0F26J

CAB SEALING INSTL

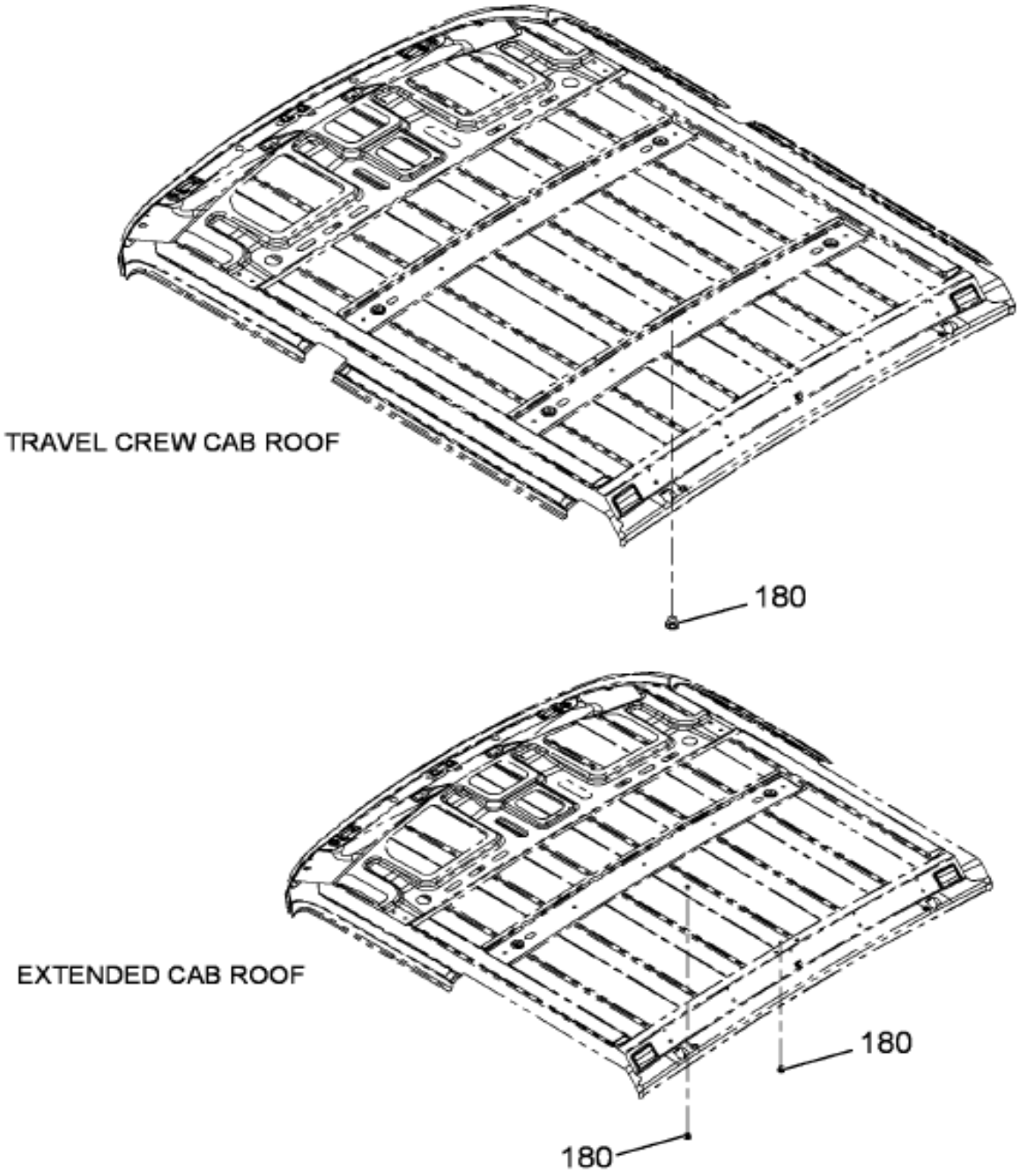

16-348-0022-01 A10

Item	Part No.	Qty	Description	Kit	Var	Figure
5	3689727C1	2	TAPE,INSULATING, SOUND		0F26J	
5	3689727C1	2	TAPE,INSULATING, SOUND		0QBJG	
5	3689727C1	3	TAPE,INSULATING, SOUND		0M897	
5	3689727C1	3	TAPE,INSULATING, SOUND		0YCK7	
5	3689727C1	5	TAPE,INSULATING, SOUND		0FVR2	
10	3689727C1	1	TAPE,INSULATING, SOUND		0M89B	

COPYRIGHT© 2011INTERNATIONAL TRUCK AND ENGINE CORP.

https://truckmanualshub.com/

Figure 0F26J

CAB SEALING INSTL

Item	Part No.	Qty	Description	Kit	Var	Figure
30	3558722C1	2	PLUG,BUTTON BUTTTON -5/8" DIA		0FVR4	
35	3565069C1	2	PLUG,BUTTON 18MM DIA PLASTIC		0FVR4	
80	3802022C1	2	PLUG,, FLOOR		0YCK7	
90	3571579C2	2	TAPE,SPECIAL PAINT PROTECTION		0YCK7	
150	3525274R1	4	SEAL,TOE BOARD SELF ADHERING		0YCK7	
8005		REF	SEALANT, CAB SEALING DOOR HEM		0F26J	
8005		REF	SEALANT, CAB SEALING STRUCTUR		0F26J	
8005		REF	SEALANT, CAB SEALING, EXPANDIN		0F26J	
8005		REF	SEALANT,*SEAM SEALER		0GQ3W	
8005	3626969C2	2	SEALANT, SIDE LOWER SILL		0YCK7	
8005		REF	SEALANT,*THUMB GRADE SEALER		0GQ3W	

Grp 16

COPYRIGHT© 2011INTERNATIONAL TRUCK AND ENGINE CORP.

https://truckmanualshub.com/

Figure 0111125

CENTER IP, GAUGE INSTL; SPEEDO & TACH (ABR #76)

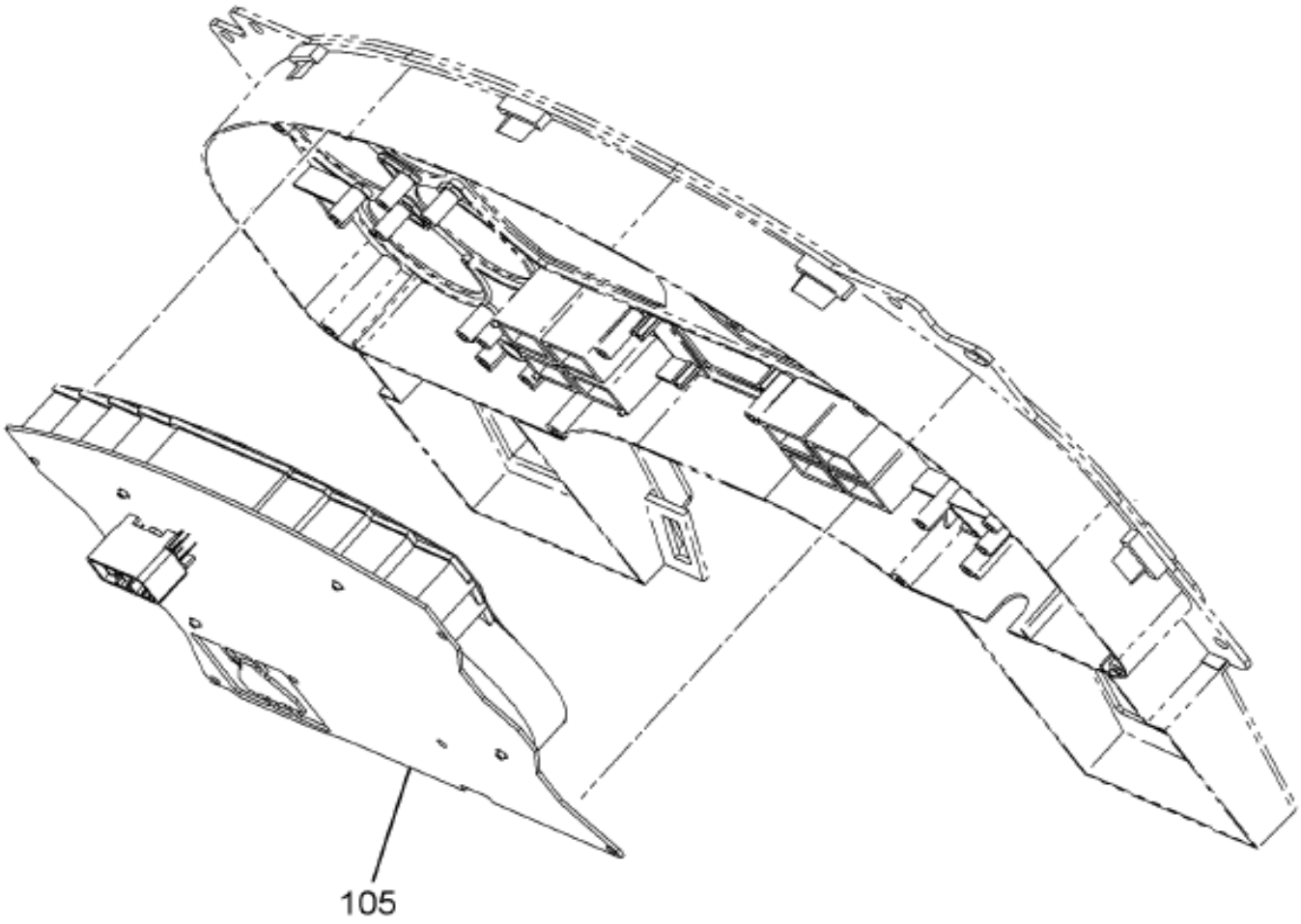

16-P76-0004-01 M02

Item	Part No.	Qty	Description	Kit	Var	Figure
105	3604607F92	1	IP, CENTER MODULE (METRIC)		0QHF6	3604607F92

COPYRIGHT© 2011INTERNATIONAL TRUCK AND ENGINE CORP.

https://truckmanualshub.com/

Figure 3604607F92

IP, CENTER MODULE (METRIC)

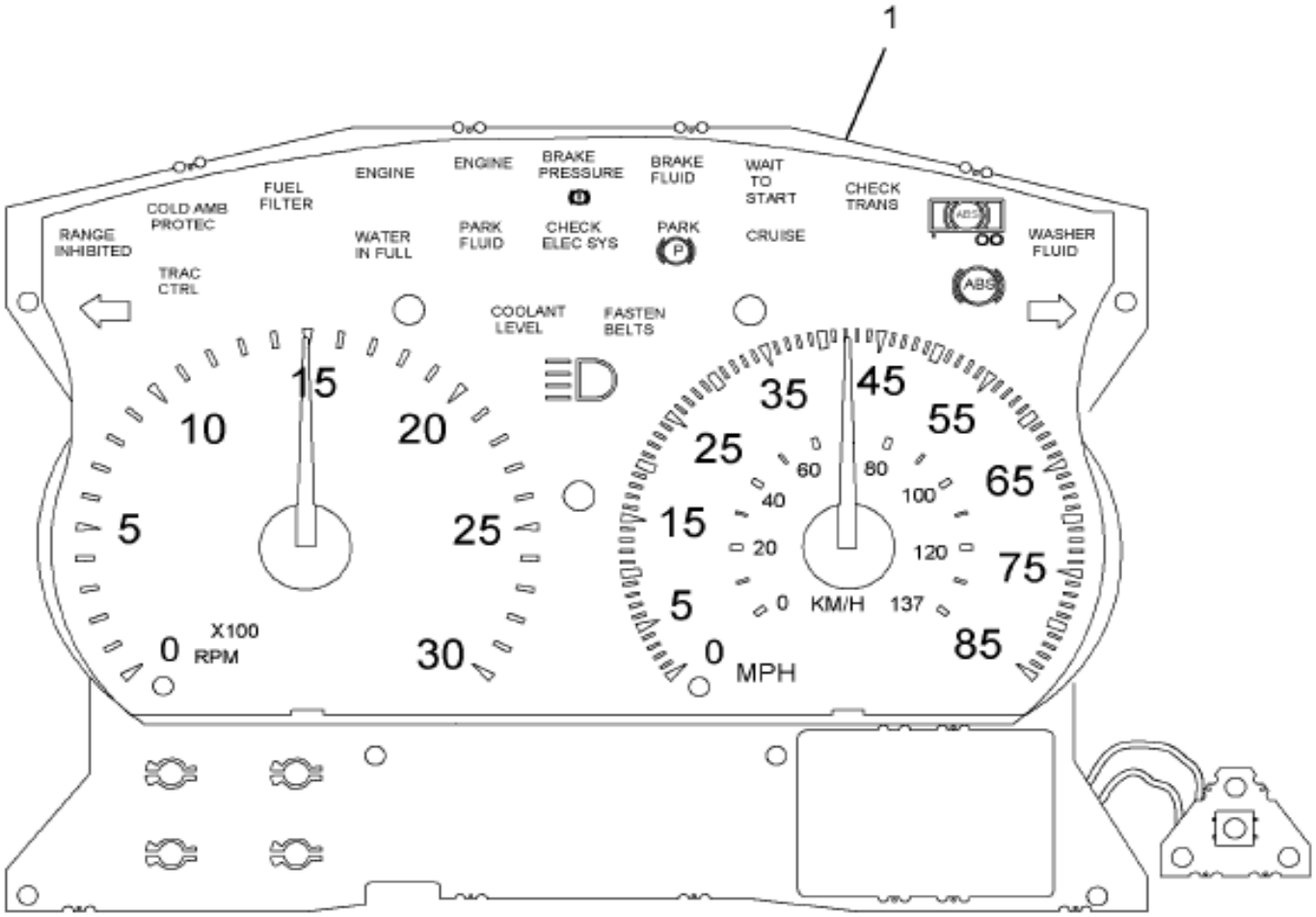

16-P76-0001-00 G05

Grp 16

Item	Part No.	Qty	Description	Kit	Var	Figure
1	3604599C92	1	SPEEDOMETER,& TACH HEAD ASM, C			3604599C92
880		RF	NOTE: ASM BELOW COMPRISED OF ABOVE COMPONENTS			
881	3604607F92	RF	IP, CENTER MODULE (METRIC)			

COPYRIGHT© 2011INTERNATIONAL TRUCK AND ENGINE CORP.

https://truckmanualshub.com/

Figure 3604559C92
SPEEDOMETER,& TACH HEAD ASM, C

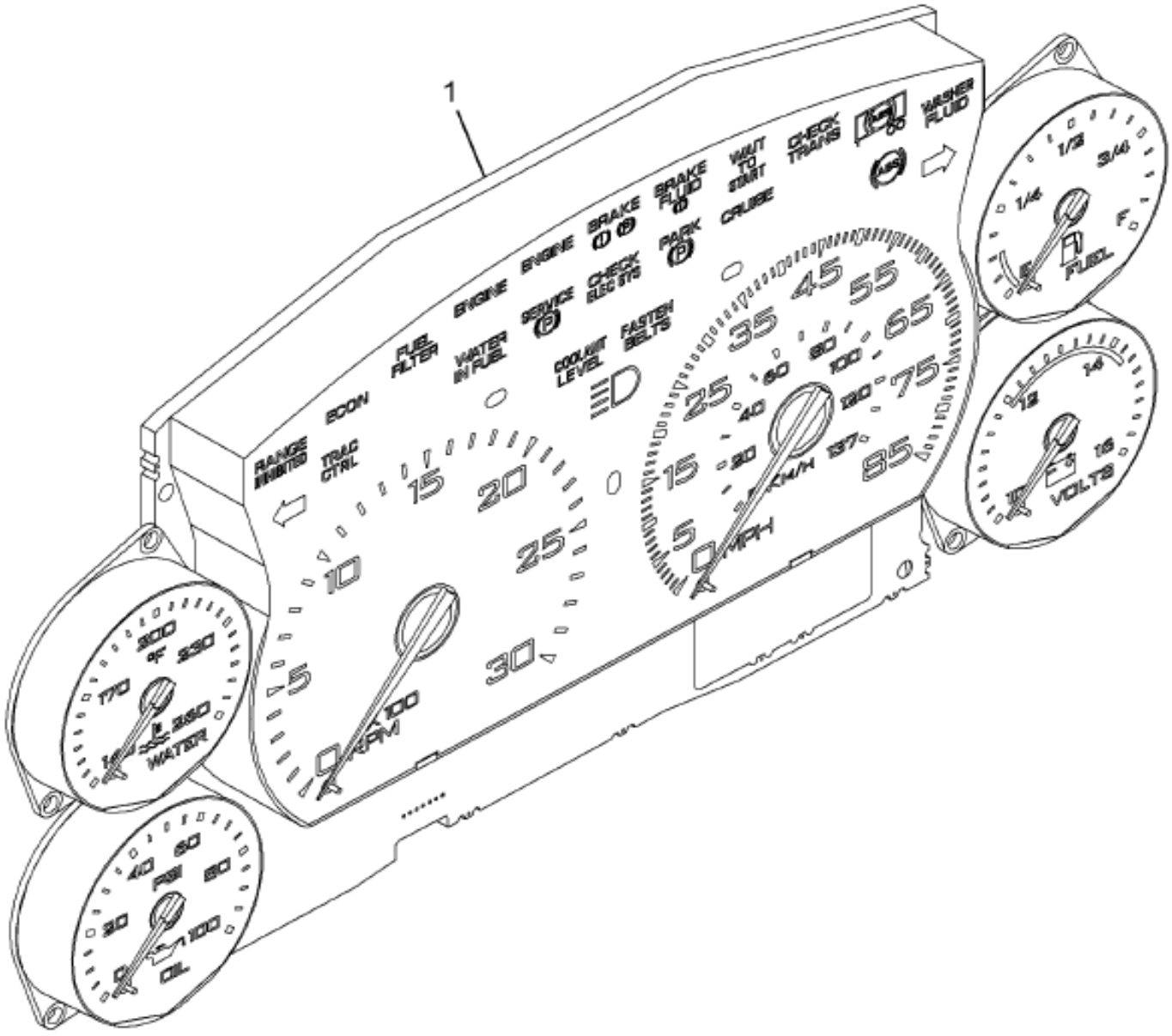

16-P76-0005-01 E05

Item	Part No.	Qty	Description	Kit	Var	Figure
1	2509518C91	1	BUZZER,SPEAKER ALARM-2 LAYER			
1	2506725C91	1	BUTTON,ODOMETR RESET L/SWITCH			
800		RF	NOTE: THE FOLLOWING PARTS ARE			
			NON-ILLUSTRATED			
801	2587206C91	1	SWITCH,ODMTR RESET W/HARN&BTN			
880		RF	NOTE: ASM BELOW COMPRISED OF ABOVE			

COPYRIGHT© 2011INTERNATIONAL TRUCK AND ENGINE CORP.

https://truckmanualshub.com/

Figure 3604599C92

SPEEDOMETER,& TACH HEAD ASM, C

Item	Part No.	Qty	Description	Kit	Var	Figure
			COMPONENTS			
881	3604599C92	RF	SPEEDOMETER,& TACH HEAD ASM, C			

COPYRIGHT© 2011INTERNATIONAL TRUCK AND ENGINE CORP.

https://truckmanualshub.com/

Figure 06V2B

CLEARANCE/MARKER LT WIRING INSTL

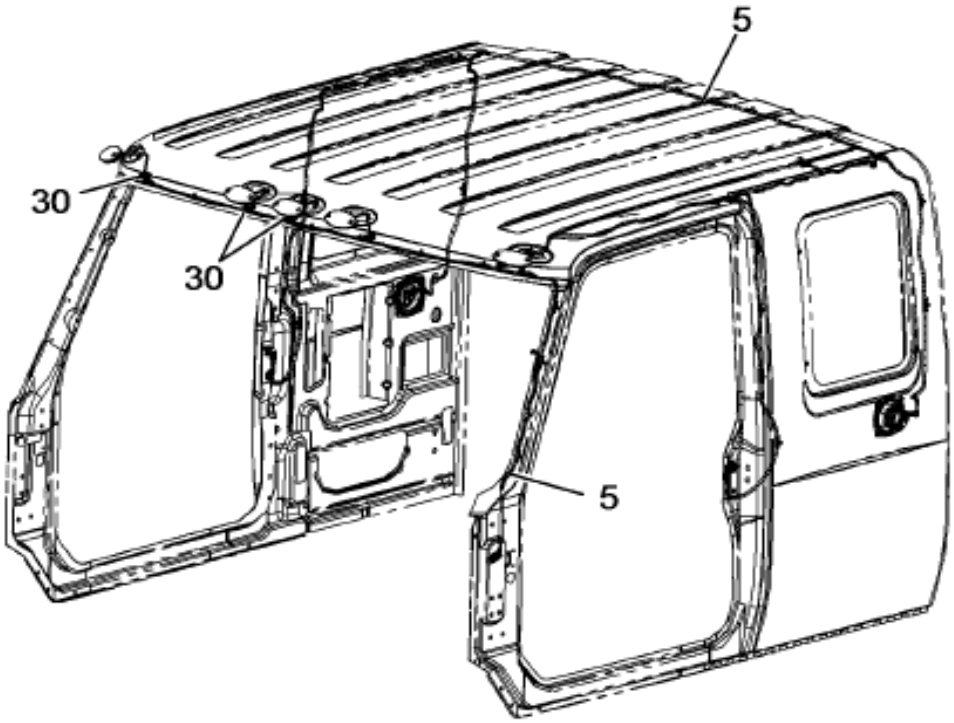

EXTENDED CAB
W/016CAB
W/EXPORT

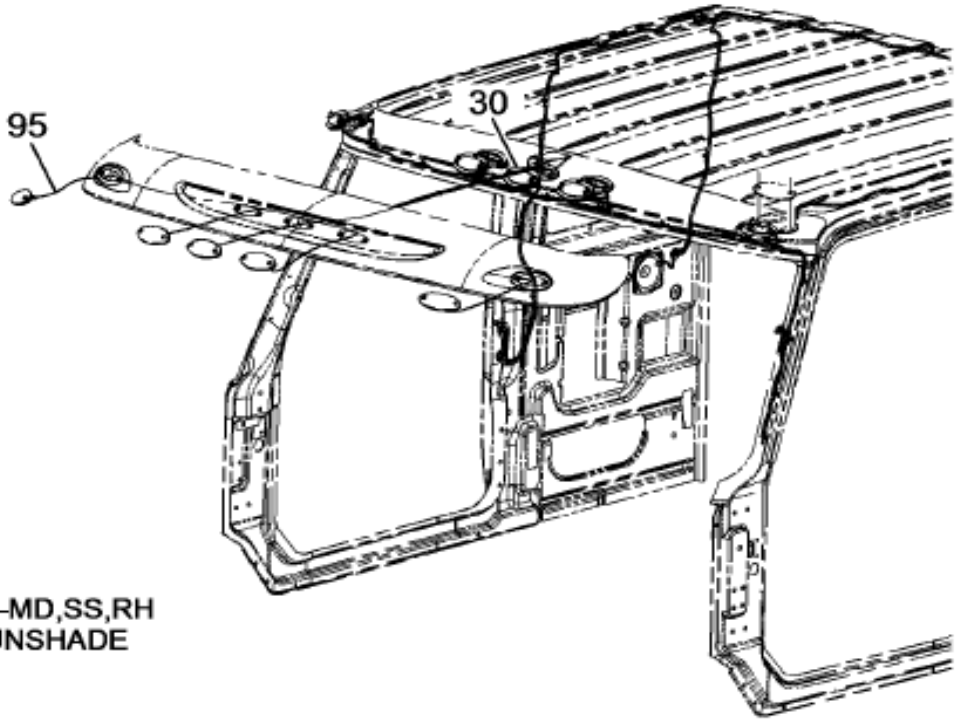

M-NGV-MD,SS,RH
W/SUNSHADE

08-V72-0012-01 K11

Item	Part No.	Qty	Description	Kit	Var	Figure
5	3524553C94	5	LIGHT,*INCANDESCENT AMBER		06VWS	3524553C94
30	117973	5	GROMMET, 5/16 X 1-3/8 X 1/4 D/		06VWS	
95	3582516C91	1	HARNESS,SUNSHADE CLEARANCE LTS		0GWDF	

COPYRIGHT© 2011INTERNATIONAL TRUCK AND ENGINE CORP.

https://truckmanualshub.com/

Figure 3524553C94
LIGHT,*INCANDESCENT AMBER

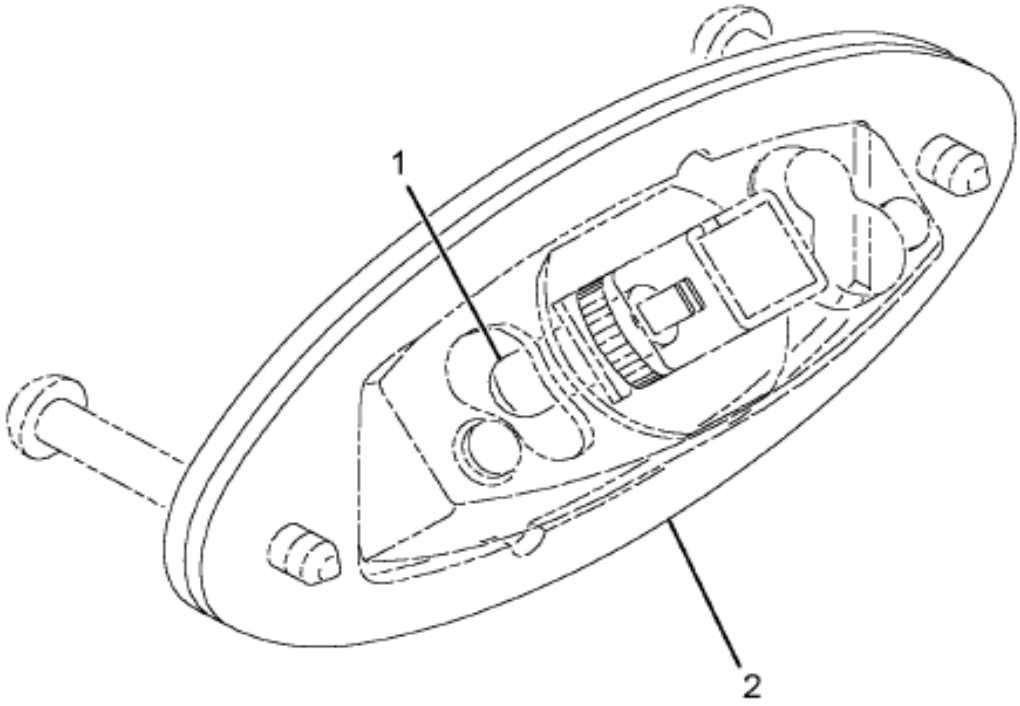

08-661-0008-00 E04

Grp 16

Item	Part No.	Qty	Description	Kit	Var	Figure
1	GE193	1	LAMP,INCANDESCENT 12V			
2	2504138C1	1	GASKET,MARKER LIGHT MTG			
880		RF	NOTE: ASM BELOW COMPRISED OF ABOVE COMPONENTS			
881	3524553C94	RF	LIGHT,*INCANDESCENT AMBER			

COPYRIGHT© 2011INTERNATIONAL TRUCK AND ENGINE CORP.

https://truckmanualshub.com/

Figure 0JCJ7

COAT HOOK INSTL INSTL

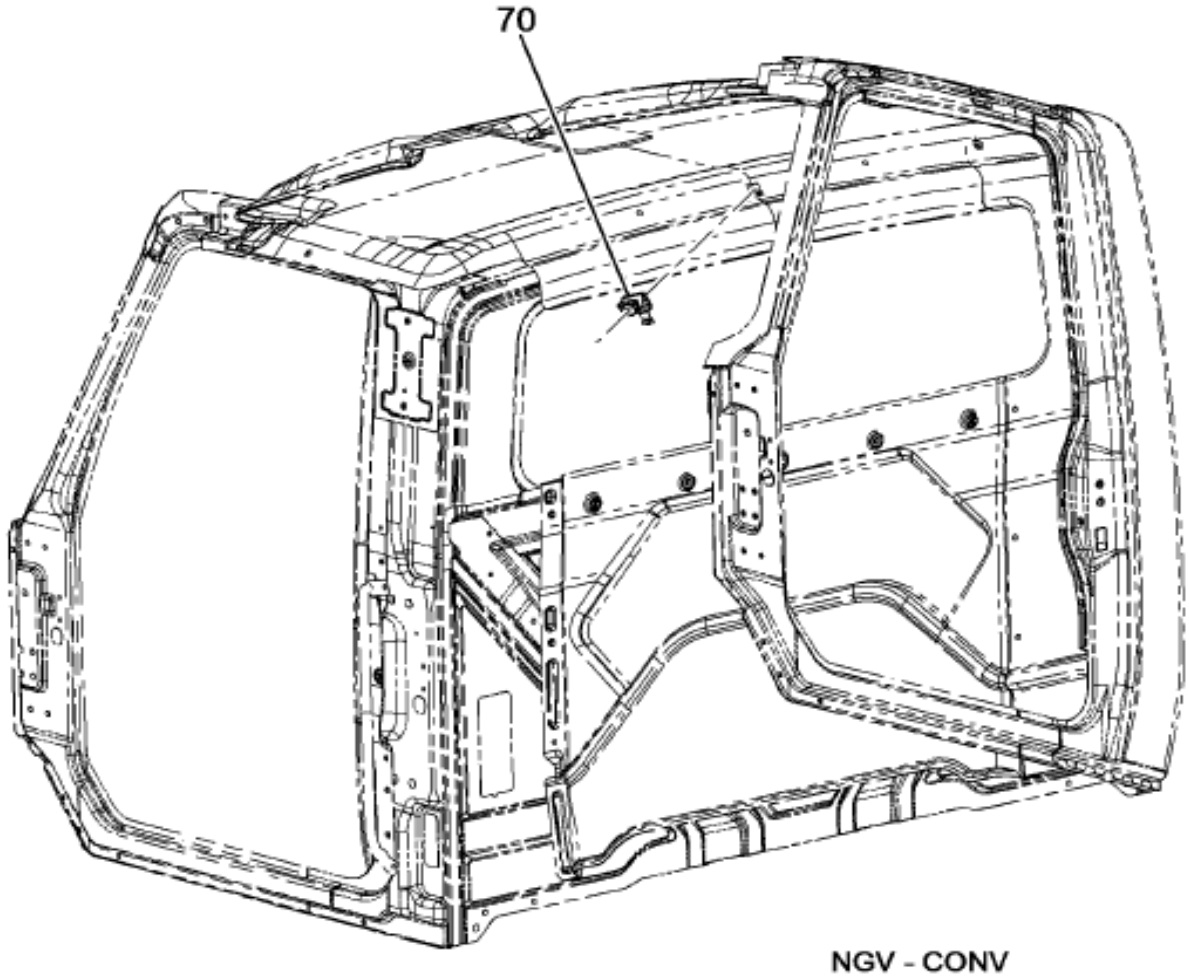

16-383-0010-01 E09

Item	Part No.	Qty	Description	Kit	Var	Figure
70	3546499C2	1	HOOK,COAT		0JCJ7	

COPYRIGHT© 2011INTERNATIONAL TRUCK AND ENGINE CORP.

https://truckmanualshub.com/

Figure 0WE50

COMPLETENESS; FLOOR MAT

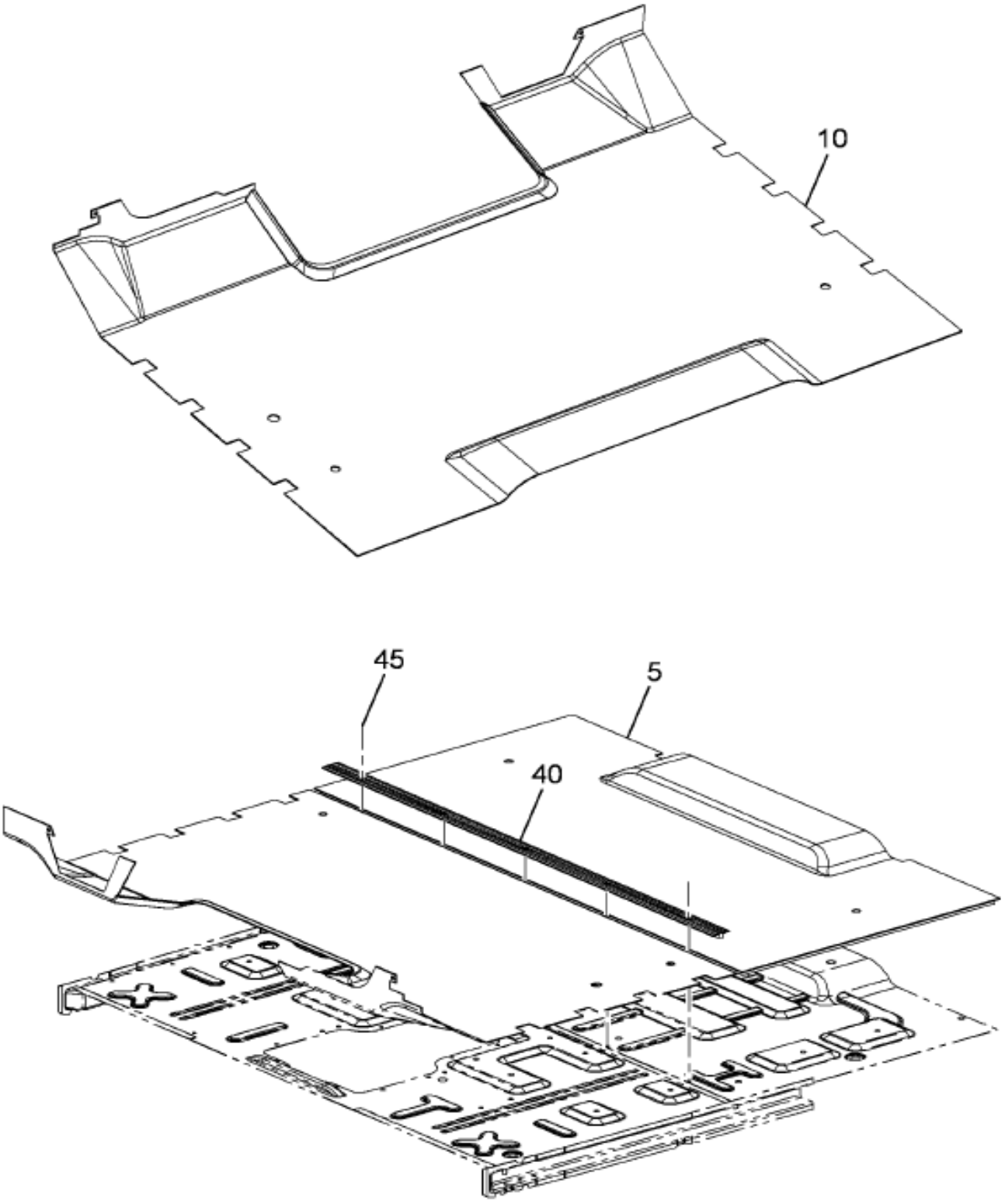

Item	Part No.	Qty	Description	Kit	Var	Figure
10	3881734C1	1	MAT,FLOOR,		0Y2N0	3881734C1

Grp 16

COPYRIGHT© 2011INTERNATIONAL TRUCK AND ENGINE CORP.

https://truckmanualshub.com/

Figure 3881754C1
MAT,FLOOR,

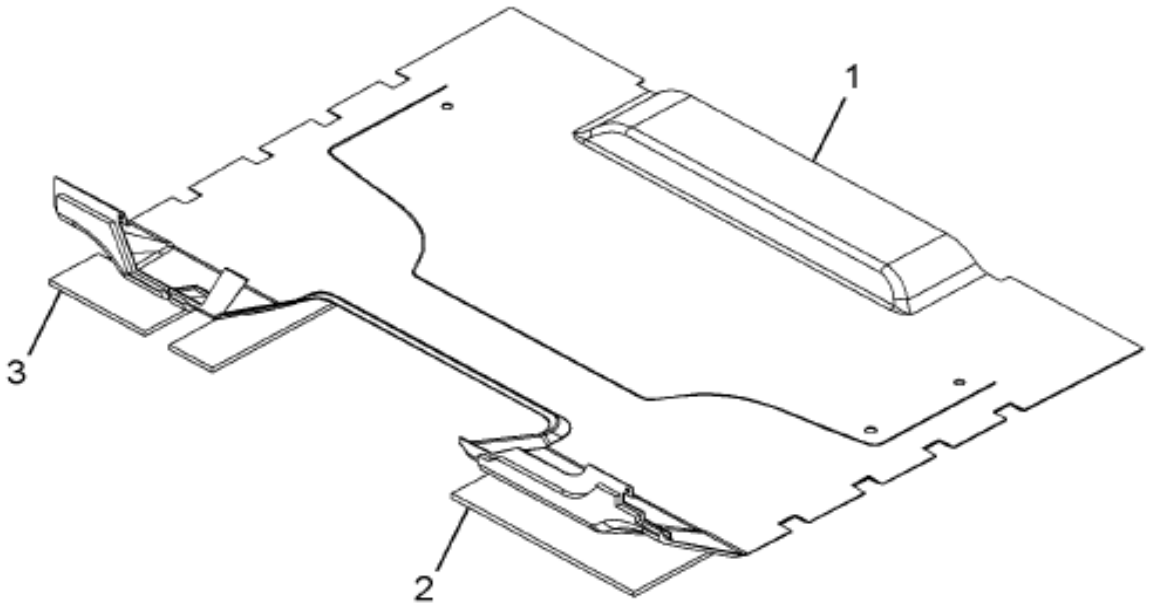

16-361-0088-01 D11

Item	Part No.	Qty	Description	Kit	Var	Figure
1	3565187C1	1	MAT,FLOOR PRECUT CONV CAB W/ H			
2	3828153C1	1	INSULATION, FLOOR MAT, LEFT			
2		RF	LEFT			
3	3828154C1	1	INSULATION, FLOOR MAT, RIGHT			
3		RF	RIGHT			
880		RF	NOTE: ASM BELOW COMPRISED OF ABOVE			

COPYRIGHT© 2011INTERNATIONAL TRUCK AND ENGINE CORP.

https://truckmanualshub.com/

Figure 3881734C1
MAT,FLOOR,

Item	Part No.	Qty	Description	Kit	Var	Figure
			COMPONENTS			
881	3881734C1	RF	MAT,FLOOR,			

COPYRIGHT© 2011INTERNATIONAL TRUCK AND ENGINE CORP.

https://truckmanualshub.com/

Figure 06EWF
DCM BASE PLATE ASM

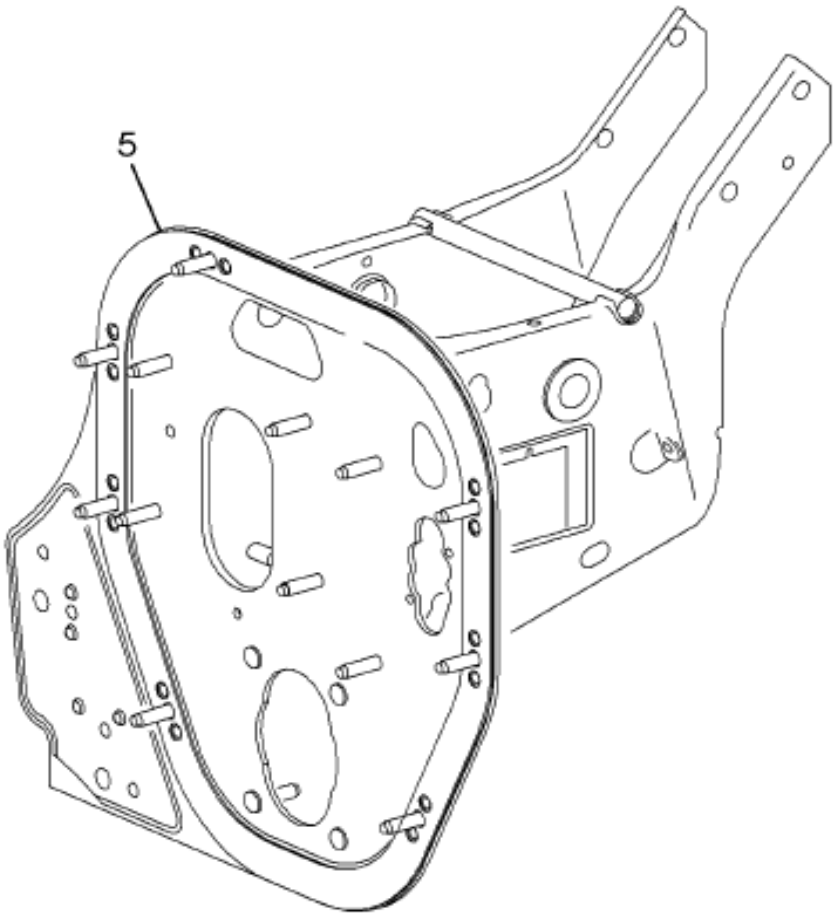

16-C10-0002-01 C10

Item	Part No.	Qty	Description	Kit	Var	Figure
5	3866692F92	1	STEERING,DCM MTG BASE		0YNVC	

COPYRIGHT© 2011INTERNATIONAL TRUCK AND ENGINE CORP.

https://truckmanualshub.com/

Figure 06Q53
DCM MOUNTING HARDWARE

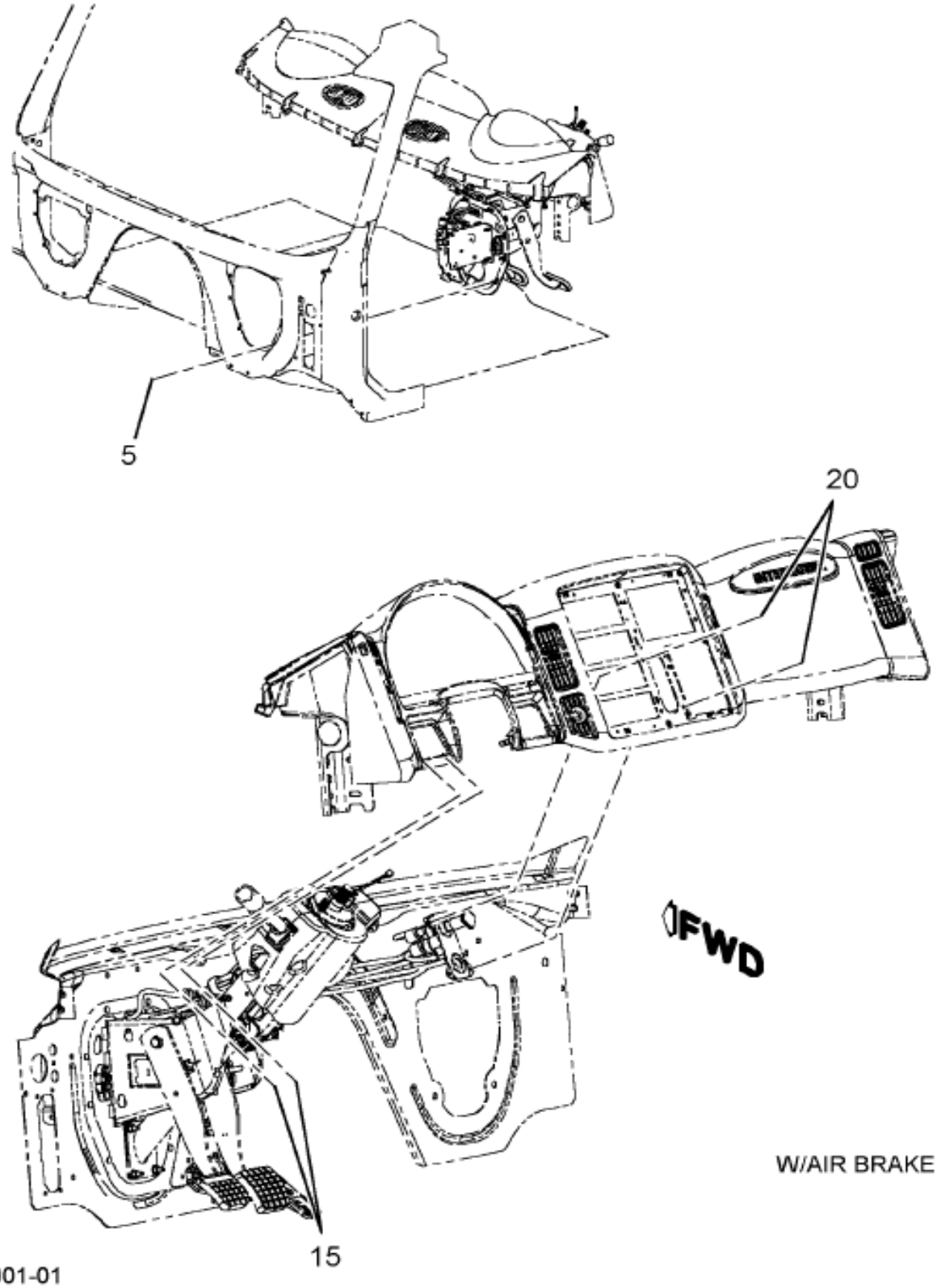

Grp 16

Figure 1 of 2

COPYRIGHT© 2011INTERNATIONAL TRUCK AND ENGINE CORP.

https://truckmanualshub.com/

Figure 06QS3

DCM MOUNTING HARDWARE

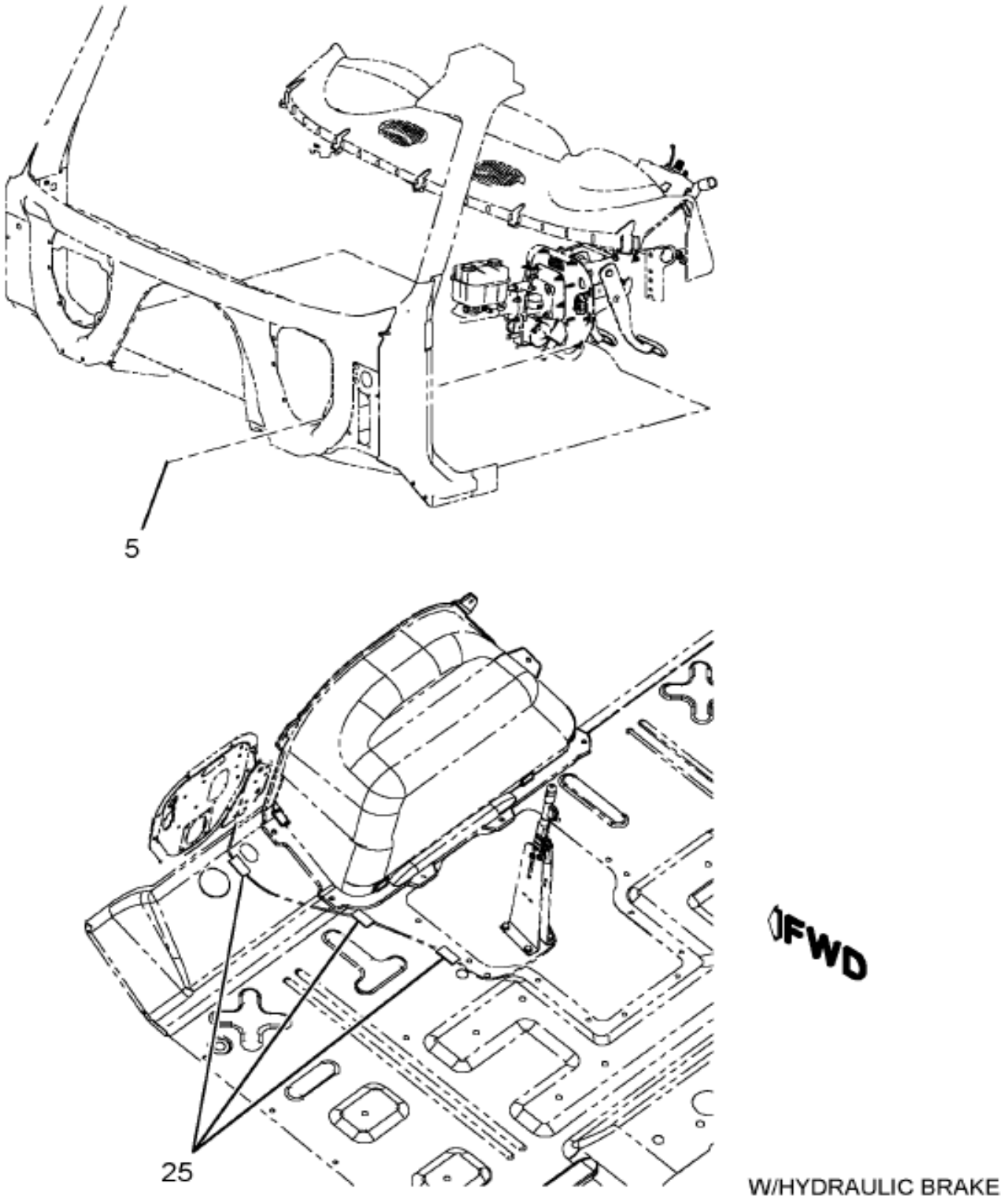

01-V40-0001-02 F04

Item	Part No.	Qty	Description	Kit	Var	Figure
5	3535162C1	8	NUT,HEX METRIC PREV. TORQ*M8 X		06QS3	
15	3535185C1	2	BOLT,SEMS ALL M8 X 1.25 75MM L		06QS3	
20	3535292C1	4	BOLT SEMS ALL 6MM X 15 TORX		06QS4	

COPYRIGHT© 2011INTERNATIONAL TRUCK AND ENGINE CORP.

https://truckmanualshub.com/

Figure 06M16

DOOR COMPONENT INSTL; CAB, W/VENT WINDOW

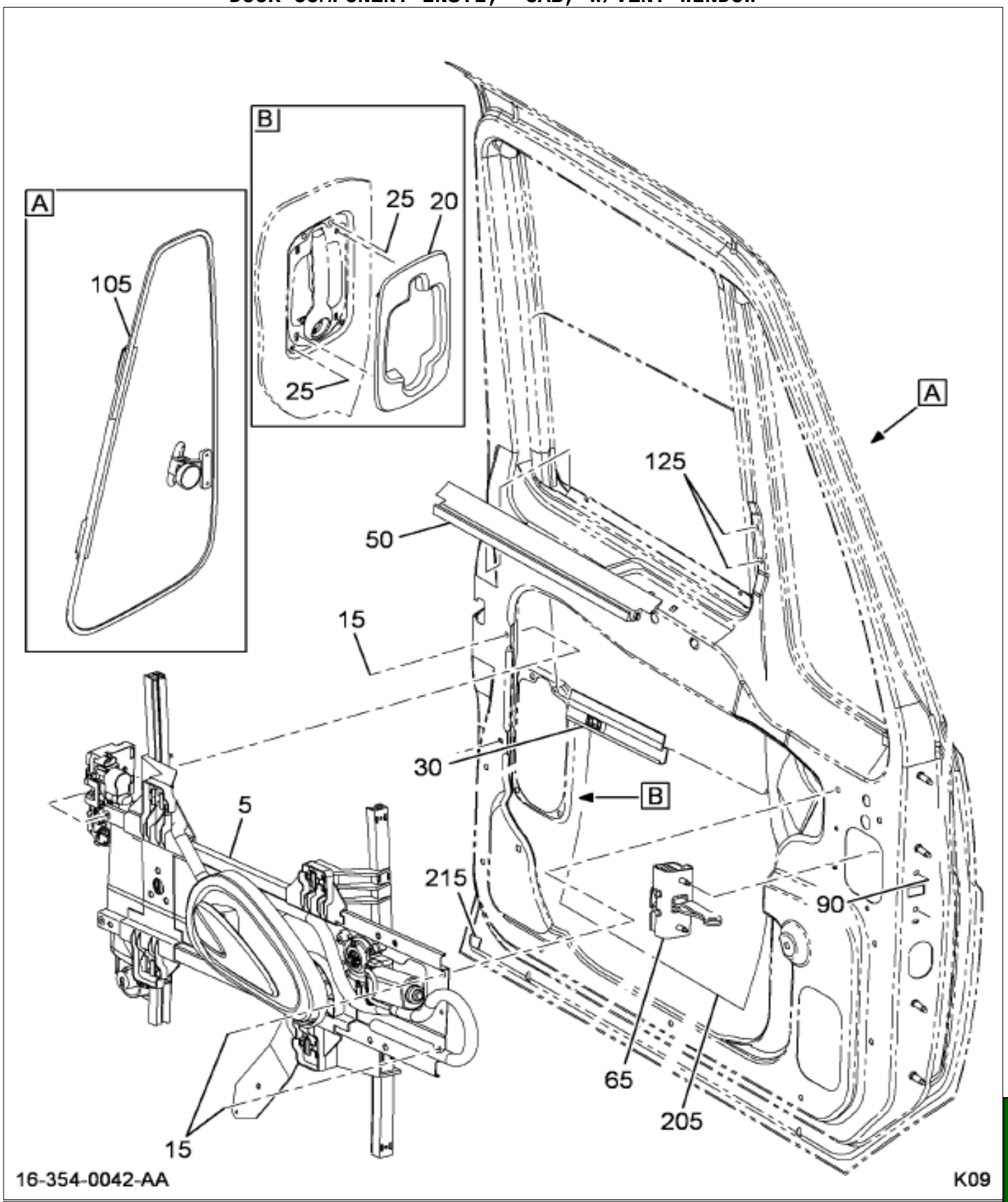

Grp 16

Figure 1 of 6

COPYRIGHT© 2011INTERNATIONAL TRUCK AND ENGINE CORP.

https://truckmanualshub.com/

Figure 06M10

DOOR COMPONENT INSTL; CAB, W/VENT WINDOW

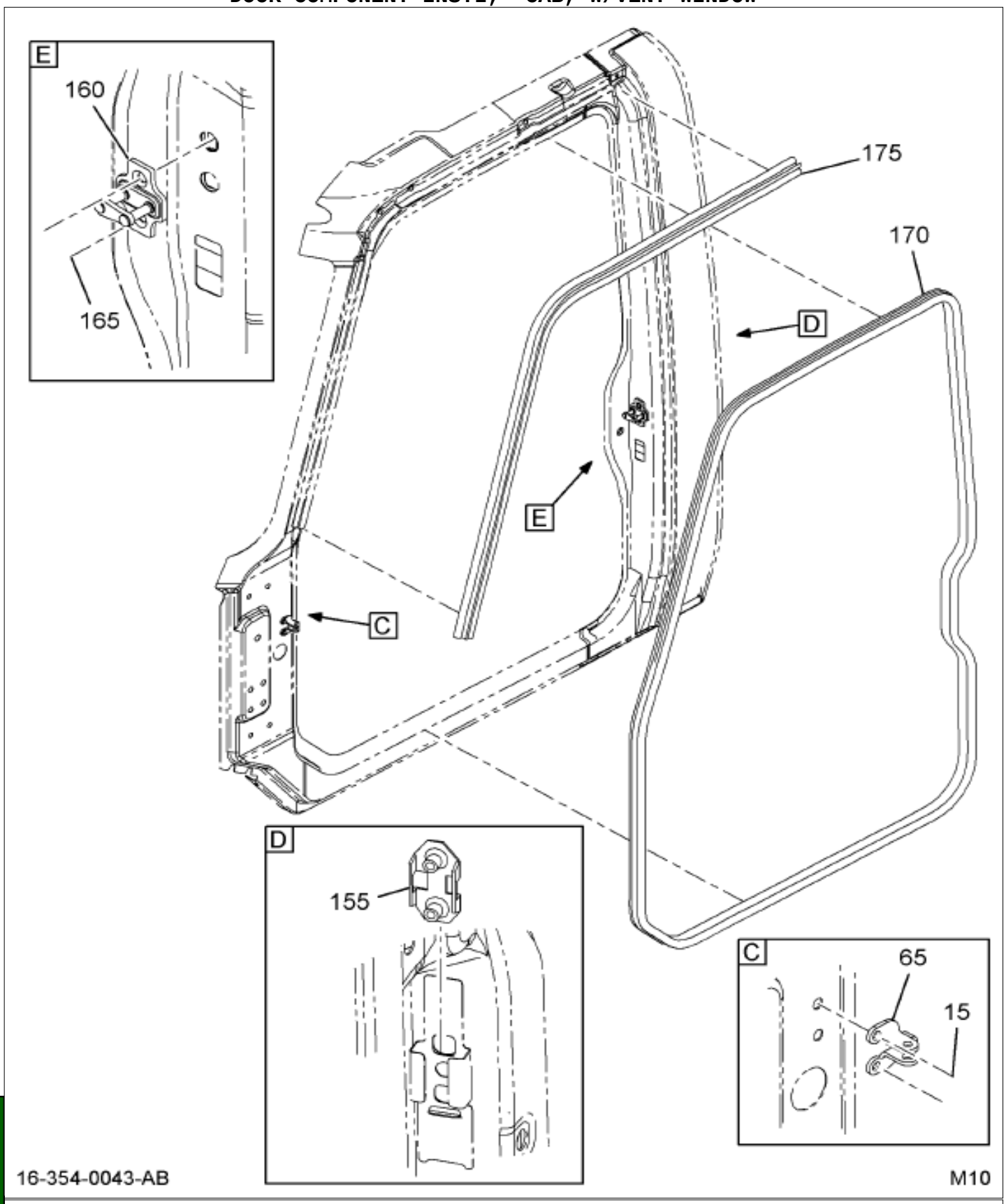

Figure 2 of 6

COPYRIGHT© 2011INTERNATIONAL TRUCK AND ENGINE CORP.

https://truckmanualshub.com/

Figure 06M16

DOOR COMPONENT INSTL; CAB, W/VENT WINDOW

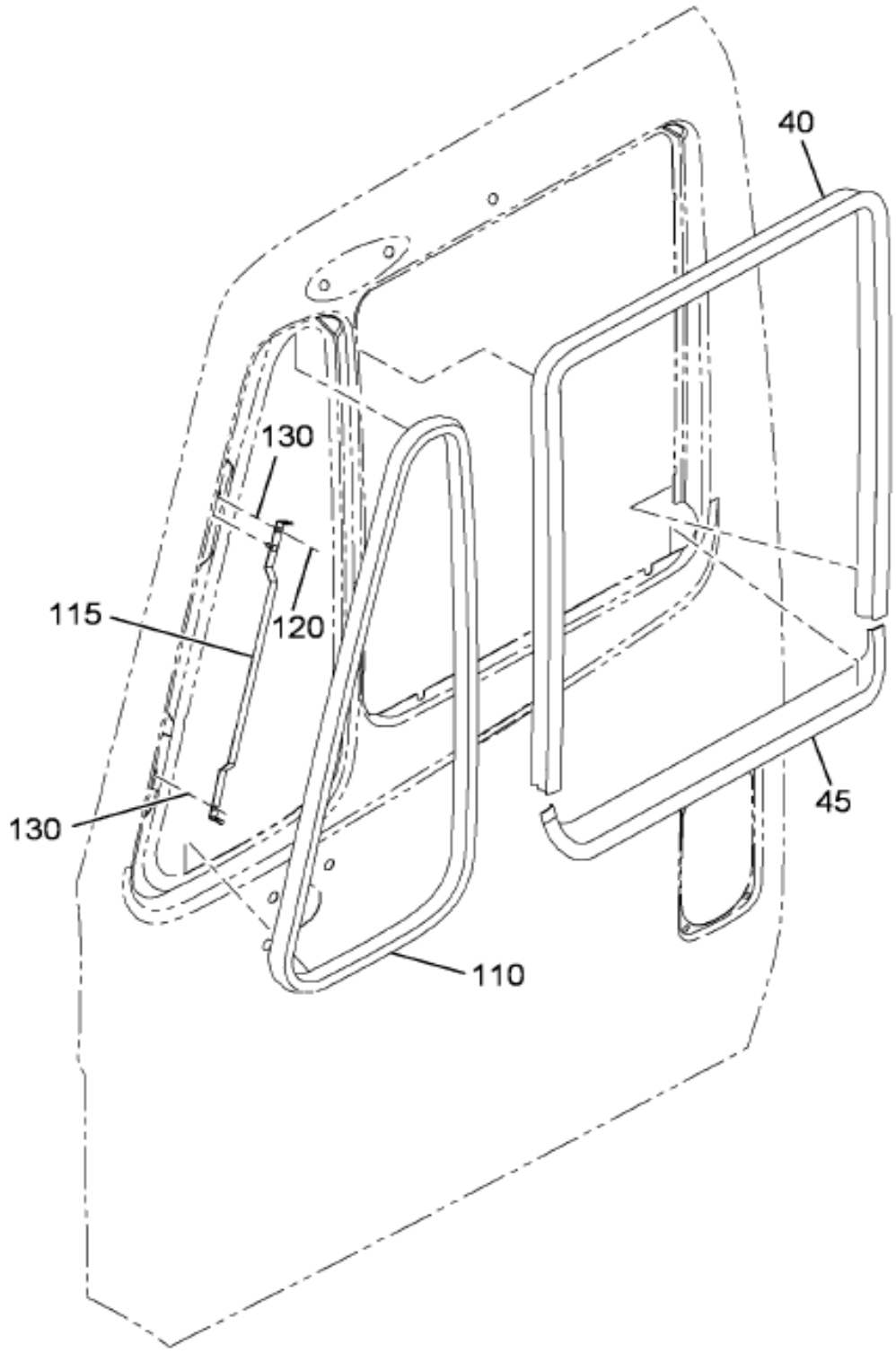

Grp 16

Figure 3 of 6

COPYRIGHT© 2011INTERNATIONAL TRUCK AND ENGINE CORP.

https://truckmanualshub.com/

Figure 06M16

DOOR COMPONENT INSTL; CAB, W/VENT WINDOW

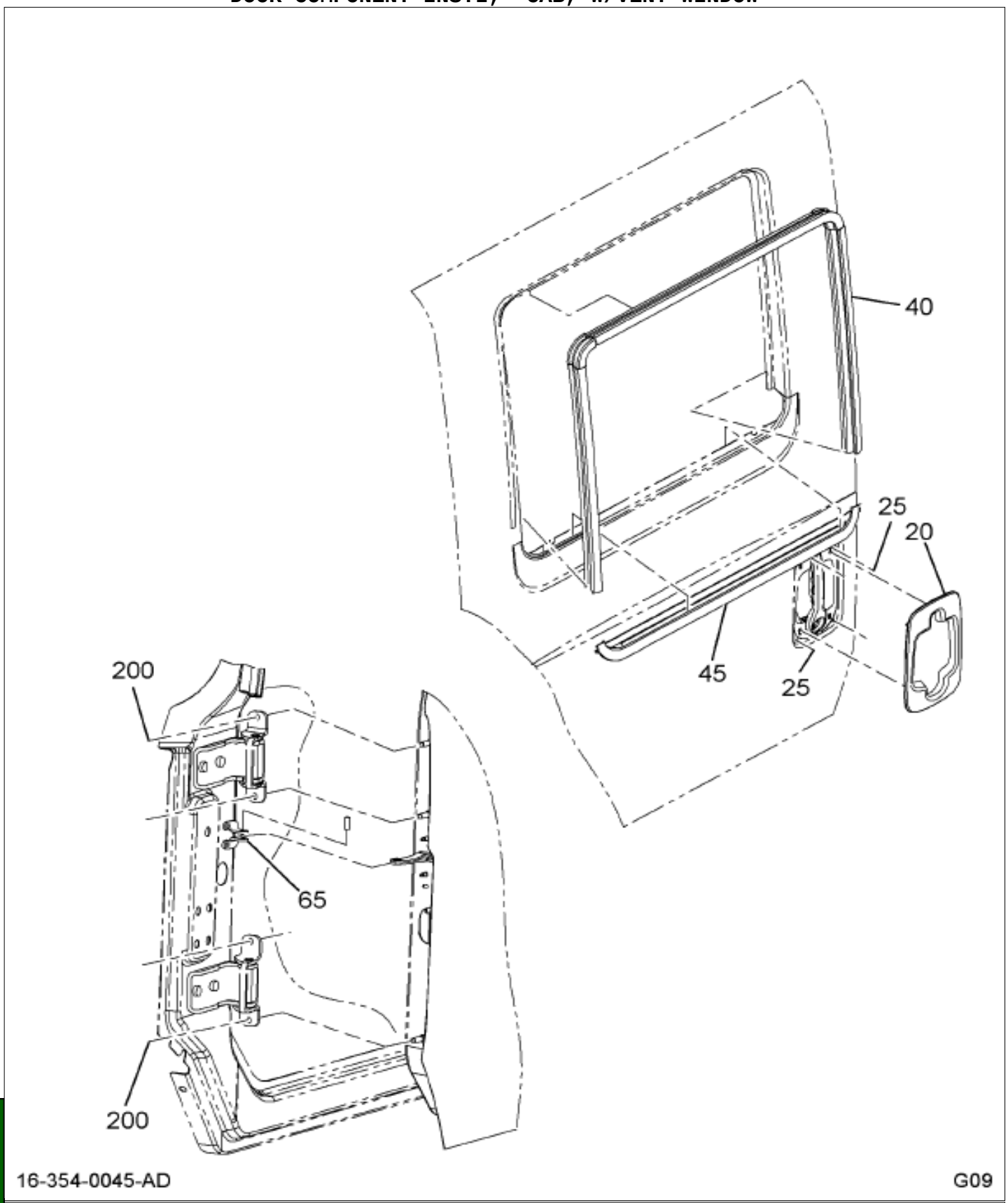

Figure 4 of 6

COPYRIGHT© 2011INTERNATIONAL TRUCK AND ENGINE CORP.

https://truckmanualshub.com/

Figure 06M16

DOOR COMPONENT INSTL; CAB, W/VENT WINDOW

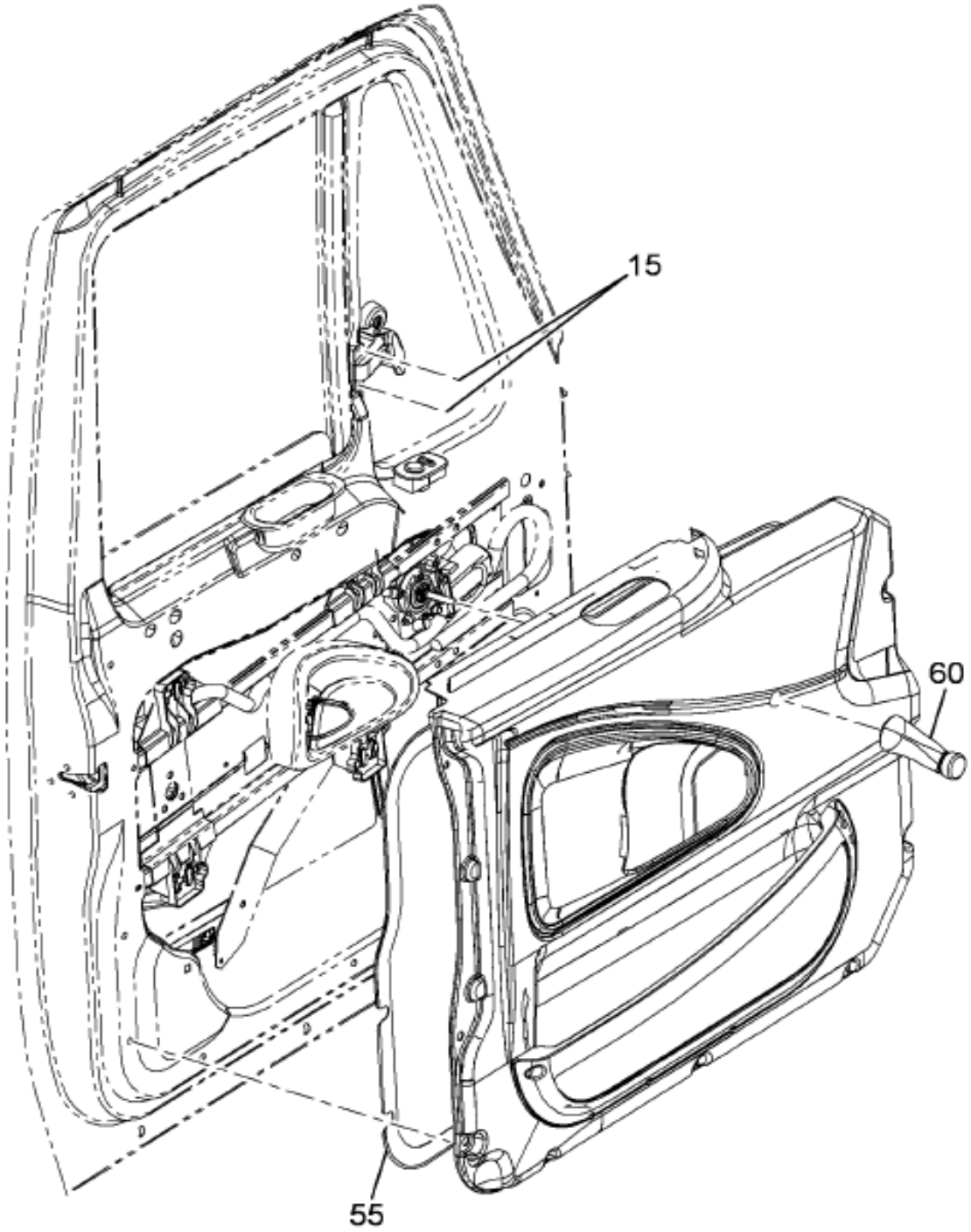

16-354-0048-AG K09

Grp 16

Figure 5 of 6

COPYRIGHT© 2011INTERNATIONAL TRUCK AND ENGINE CORP.

https://truckmanualshub.com/

Figure 06M18

DOOR COMPONENT INSTL; CAB, W/VENT WINDOW

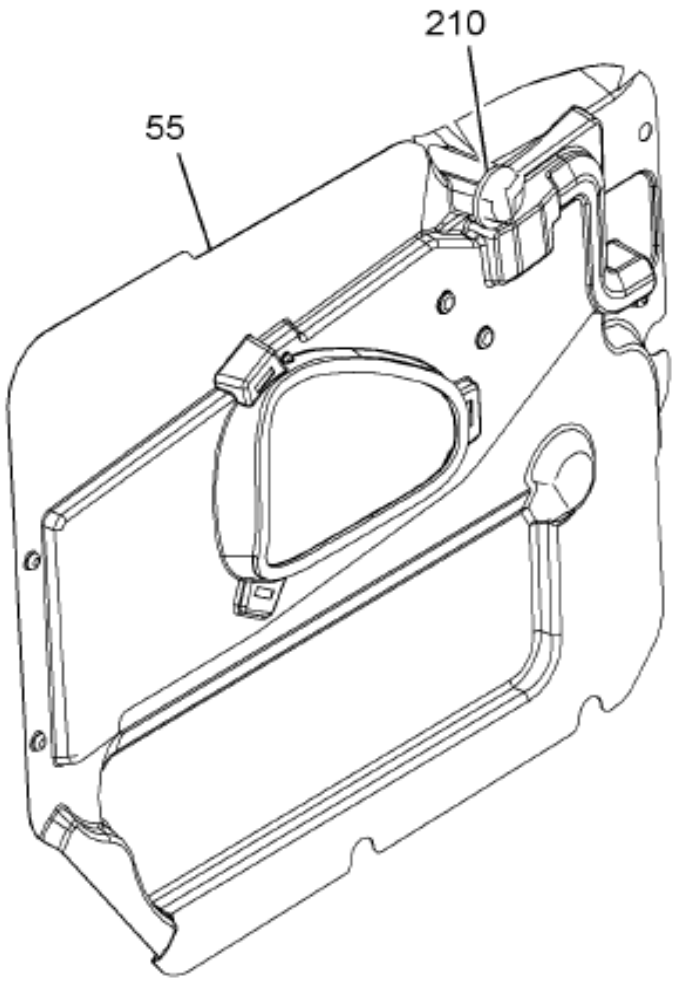

16-354-0051-AK G09

Item	Part No.	Qty	Description	Kit	Var	Figure
5	3556202C96	1	REGULATOR,DOOR GLASS LT, DOOR		0DCNN	3556202C96
5	3556203C96	1	REGULATOR,DOOR GLASS LT, DOOR		0DCNN	3556203C96
15	3535316C1	4	BOLT LATCH OR CATCH M6X1-20		06MT8	
15	3535316C1	6	BOLT LATCH OR CATCH M6X1-20		06MT8	
15	3535316C1	8	BOLT LATCH OR CATCH M6X1-20		06MT8	
15	3535316C1	4	BOLT LATCH OR CATCH M6X1-20		06MT8	

COPYRIGHT© 2011INTERNATIONAL TRUCK AND ENGINE CORP.

https://truckmanualshub.com/

Figure 06M16

DOOR COMPONENT INSTL; CAB, W/VENT WINDOW

Item	Part No.	Qty	Description	Kit	Var	Figure
20	3576482C2	1	BEZEL,TRIM,		06MT8	
20	3576483C2	1	BEZEL,TRIM,		06MT8	
25	3549198C2	8	SCREW,K60 X 2.69 X 20 MM TORX		06MT8	
30	3546062C1	1	GLASS,DOOR DROP FRT LH		06MT8	
30	3546063C1	1	GLASS,DOOR DROP FRT RH		06MT8	
40	3588772C1	2	SEAL,DOOR GLASS RUN CHNNL FRT		06MT8	
45	3557122C2	1	SEAL DOOR GLSS OTR BELT FRT LH		06MT8	
45	3557123C2	1	SEAL,DOOR GLSS OTR BELT FRT RH		06MT8	
50	3508968C3	2	SEAL,, DOOR GLASS, 476.6MM		06MT8	
55	3713536C2	1	SHIELD,WATER INNER DOOR PNL,		06N7H	
55	3713537C2	1	SHIELD,WATER INNER DOOR PNL, F		06N7H	
60	3508990C4	2	HANDLE,WINDOW REGULATOR MANUAL		0DCNN	3508990C4
65	3827600C1	2	CHECK,DOOR LT / RT,		06N7H	
65	3551557C2	2	SUPPORT,DOOR CHECK BODY SIDE		06N7H	
65	3552184C3	2	PIN,ROLL*SPECIAL,M8,DOOR CHECK		06N7H	
90	3535410C1	4	NUT HEX METRIC PREV. TORQ*M6 X		06MT8	
105	3567240C92	1	WINDOW,VENT LH		06MT8	3567240C92
105	3567241C92	1	WINDOW,VENT RH		06MT8	3567241C92
110	3508950C7	2	SEAL,VENT WINDOW GLASS		06MT8	
115	3546656C4	1	HINGE,WING WINDOW VENT, LH ASM		06MT8	
115	3546657C4	1	HINGE,WING WINDOW VENT, RH ASM		06MT8	3546657C4
120	3602979C1	4	RIVET,MNDRLL,PRTRD HD.196X.479		06MT8	
125	3510918C1	4	INSERT,THREADED M6 OPEN END		06MT8	
155	3511206C1	2	PLATE,TAPPING STRIKER MOUNT		06MT8	
160	3509094C1	2	PIN,LATCH STRICKER		06MT8	
165	3535317C1	4	BOLT,SPL STRIKER M8X1.25-35		06MT8	
170	3508972C6	2	SEAL,FRT DOOR		06N7H	
175	3508975C7	1	SEAL,DOOR SECONDARY FRT LH		06MT8	
175	3508976C7	1	SEAL,DOOR SECONDARY FRT RH		06MT8	
200	3535162C1	8	NUT,HEX METRIC PREV. TORQ*M8 X		06MT8	
210	289862C1	2	STRAP,CABLE LOCK		06N7H	
215	3790314C3	2	BUMPER CAB DOOR		06MT8	
8005	3607323C1	1	SHIM,STRIKER PLATE		0GVBQ	

Grp 16

COPYRIGHT© 2011INTERNATIONAL TRUCK AND ENGINE CORP.

https://truckmanualshub.com/

Figure 3508590C4

HANDLE,WINDOW REGULATOR MANUAL

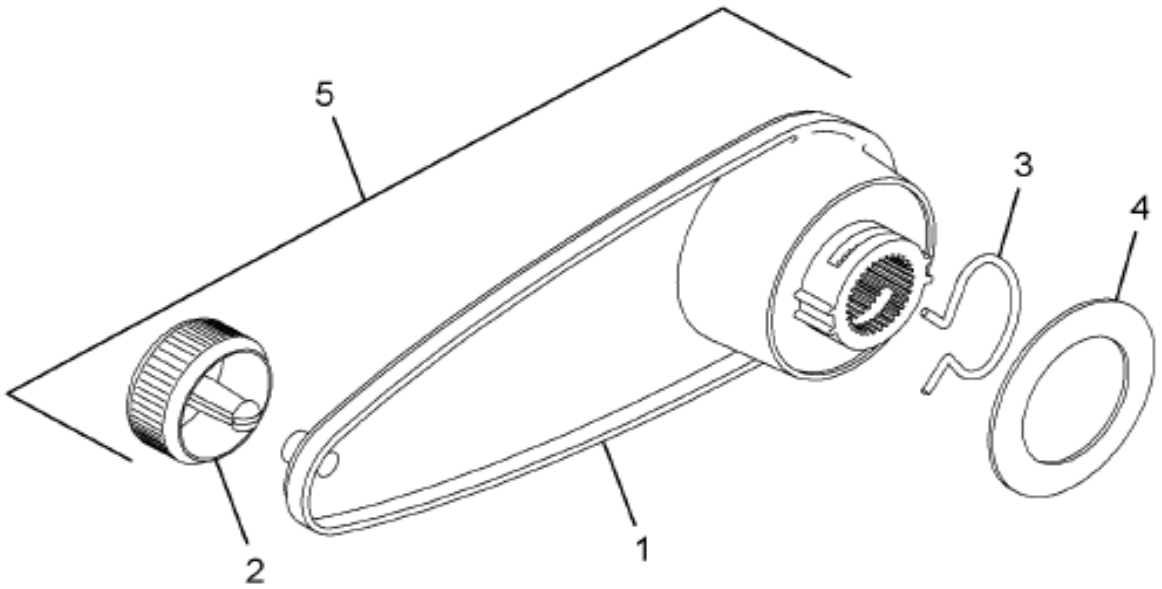

16-354-0118-01 E05

Item	Part No.	Qty	Description	Kit	Var	Figure
1		1	HANDLE,INSIDE CRANK			
2		1	KNOB,INSIDE CRANK HANDLE			
3	2507659C1	1	CLIP,RETAINING DR WNDW HNDL			
4	2507660C1	1	WASHER,DR INSIDE WNDW HNDL			
5		1	HANDLE,ASM INSIDE CRANK			
880		RF	NOTE: ASM BELOW COMPRISED OF ABOVE			

COPYRIGHT© 2011INTERNATIONAL TRUCK AND ENGINE CORP.

https://truckmanualshub.com/

Figure 3508990C4

HANDLE,WINDOW REGULATOR MANUAL

Item	Part No.	Qty	Description	Kit	Var	Figure
			COMPONENTS			
881	3508990C4	RF	HANDLE,WINDOW REGULATOR MANUAL			

COPYRIGHT© 2011INTERNATIONAL TRUCK AND ENGINE CORP.

https://truckmanualshub.com/

Figure 3546657C4

HINGE,WING WINDOW VENT, RH ASM

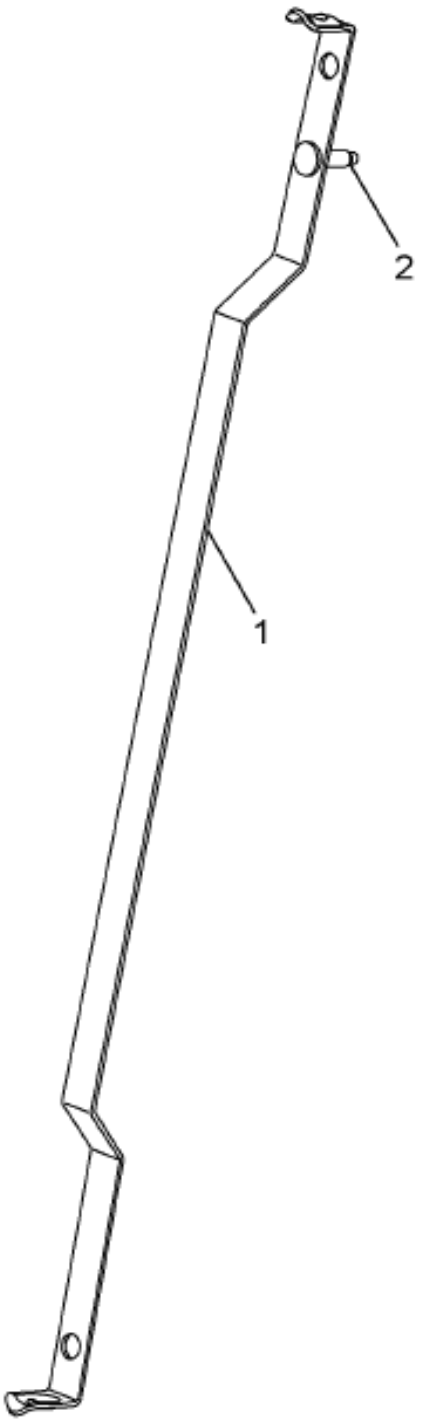

16-354-0094-01 K04

Item	Part No.	Qty	Description	Kit	Var	Figure
1	3549705C4	1	HINGE,WING WINDOW VENT, STRAP,			
2	3549642C2	1	PIN,STRAIGHT*VENT WINDOW HINGE			
880		RF	NOTE: ASM BELOW COMPRISED OF ABOVE COMPONENTS			
881	3546657C4	RF	HINGE,WING WINDOW VENT, RH ASM			

COPYRIGHT© 2011INTERNATIONAL TRUCK AND ENGINE CORP.

https://truckmanualshub.com/

Figure 3336202C96

REGULATOR,DOOR GLASS LT, DOOR

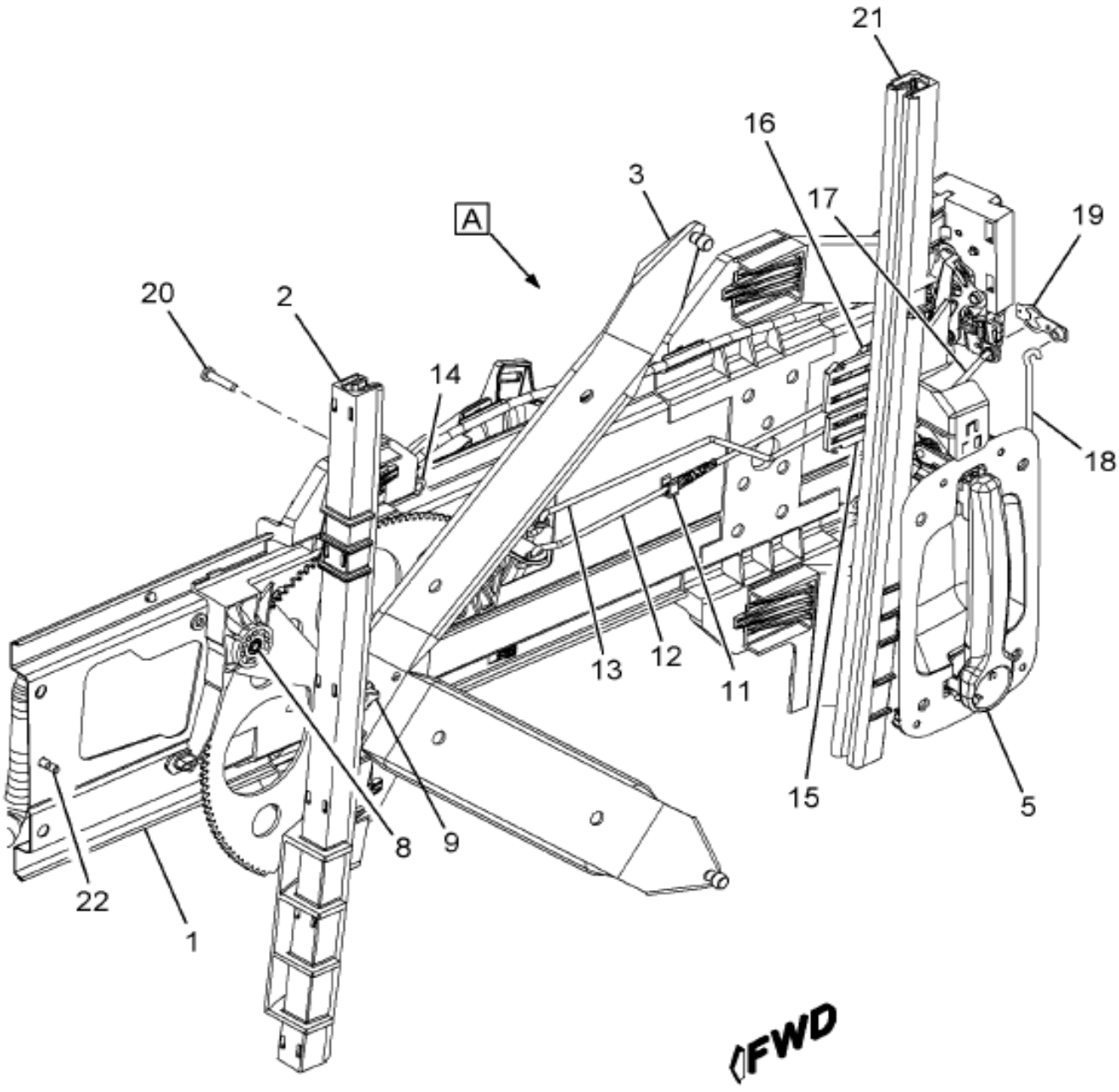

16-354-0024-00 L04

Grp 16

Figure 1 of 2

COPYRIGHT© 2011INTERNATIONAL TRUCK AND ENGINE CORP.

https://truckmanualshub.com/

Figure 3336202C96

REGULATOR,DOOR GLASS LT, DOOR

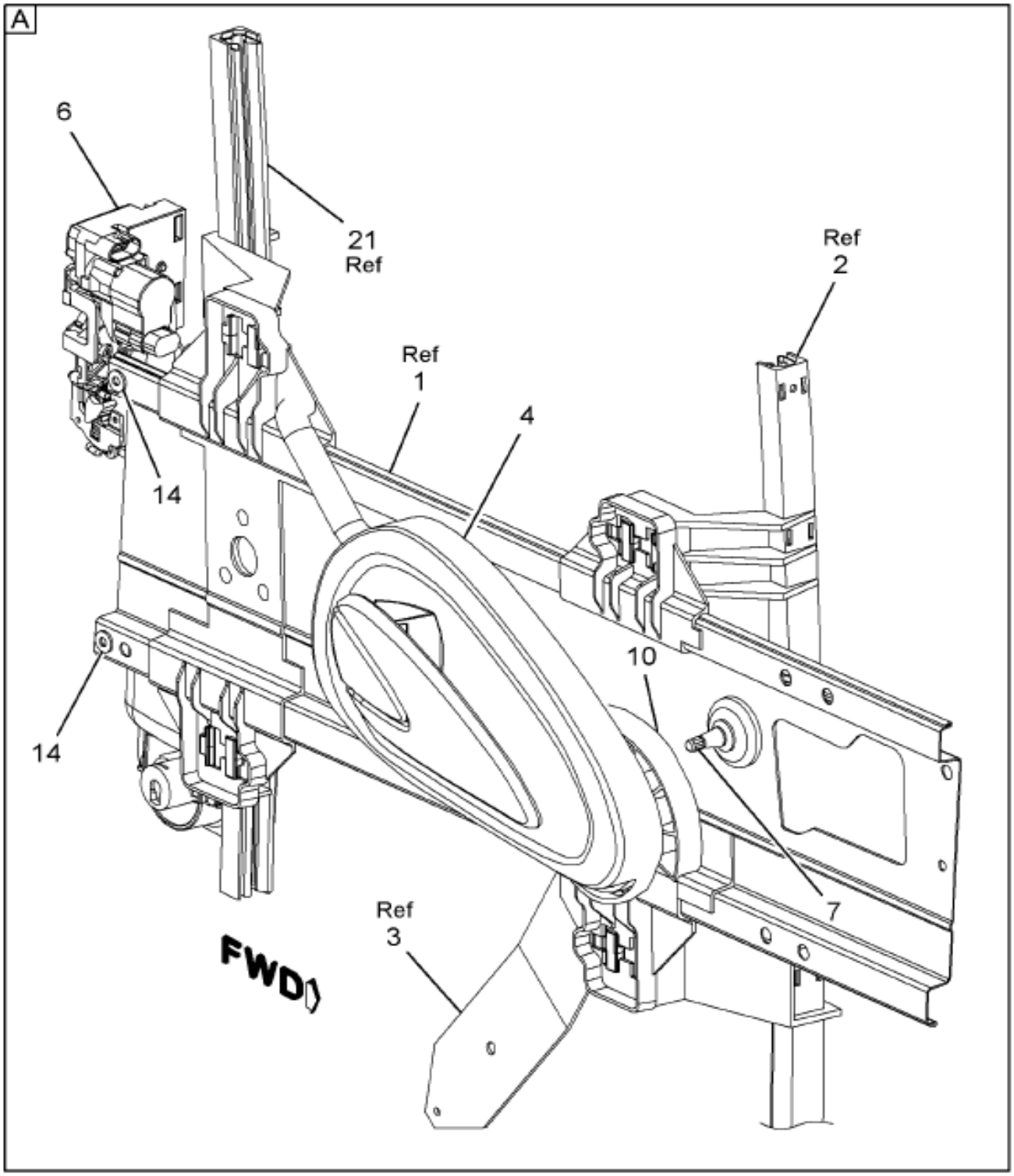

16-354-0025-01 L04

Item	Part No.	Qty	Description	Kit	Var	Figure
1	2506044C1	1	BEAM,STRUCTURAL DOOR LH			
1		RF	LEFT			
2	2506042C1	1	CHANNEL,GLSS RUN FRT DR FRT LH			
2		RF	LEFT			
3	2505433C1	1	REGULATOR,DOOR GLASS MNL LH			
3		RF	LEFT			

COPYRIGHT© 2011INTERNATIONAL TRUCK AND ENGINE CORP.

https://truckmanualshub.com/

Figure 3556202C96

REGULATOR,DOOR GLASS LT, DOOR

Item	Part No.	Qty	Description	Kit	Var	Figure
4	2505424C1	1	HANDLE,DOOR INSIDE LH			
4		RF	LEFT			
5	2587515C1	1	HANDLE,DOOR OUTSIDE LH			
5		RF	LEFT			
6	2505412C1	1	LATCH,DOOR MANUAL LH FRT			
6		RF	LEFT			
7	2506041C1	1	CASE,DOOR CLUTCH			
8	2506040C1	1	BUSHING,SPL DOOR PINION			
9	2506038C1	1	PIVOT,STUD TWIST LOCK LH DOOR			
9		RF	LEFT			
10	2505432C1	1	2PRING,DOOR COUNTER BALANCE			
11	2506037C1	1	CLIP,DOOR ROD GUIDE			
12	2506035C1	1	ROD,DOOR INSIDE HANDLE LH			
12		RF	LEFT			
13	2506033C1	1	ROD,DOOR LOCK BUTTON LH			
13		RF	LEFT			
14	2506032C1	3	NUT,SPECIAL M6 FLANGE			
15	2506030C1	1	RETAINER,DR OUTSIDE HNDL LH			
15		RF	LEFT			
16	2506028C1	1	RETAINER,DOOR LATCH LH			
16		RF	LEFT			
17	2593967C1	1	ROD,DOOR OUTSIDE HANDLE			
18	2506025C1	1	ROD,DOOR KEY CYL LH			
18		RF	LEFT			
19	2506024C1	1	LEVER,S/A KEY CYLINDER			
20	2506023C1	1	BOLT,SPL M6 X 1 TORX HD			
21	2506021C1	1	CHANNEL,GLASS RUN FRT DR RR LH			
21		RF	LEFT			
22	2506020C1	1	STUD,SPECIAL CLINCH GROOVED			
800		RF	NOTE: THE FOLLOWING PARTS ARE NON-ILLUSTRATED			
801	2595198C1	AR	RETAINER,DOOR RODS PLASTIC			
880		RF	NOTE: ASM BELOW COMPRISED OF ABOVE COMPONENTS			
881	3556202C96	RF	REGULATOR,DOOR GLASS LT, DOOR			

Grp 16

COPYRIGHT© 2011INTERNATIONAL TRUCK AND ENGINE CORP.

https://truckmanualshub.com/

Figure 3336203C96

REGULATOR,DOOR GLASS LT, DOOR

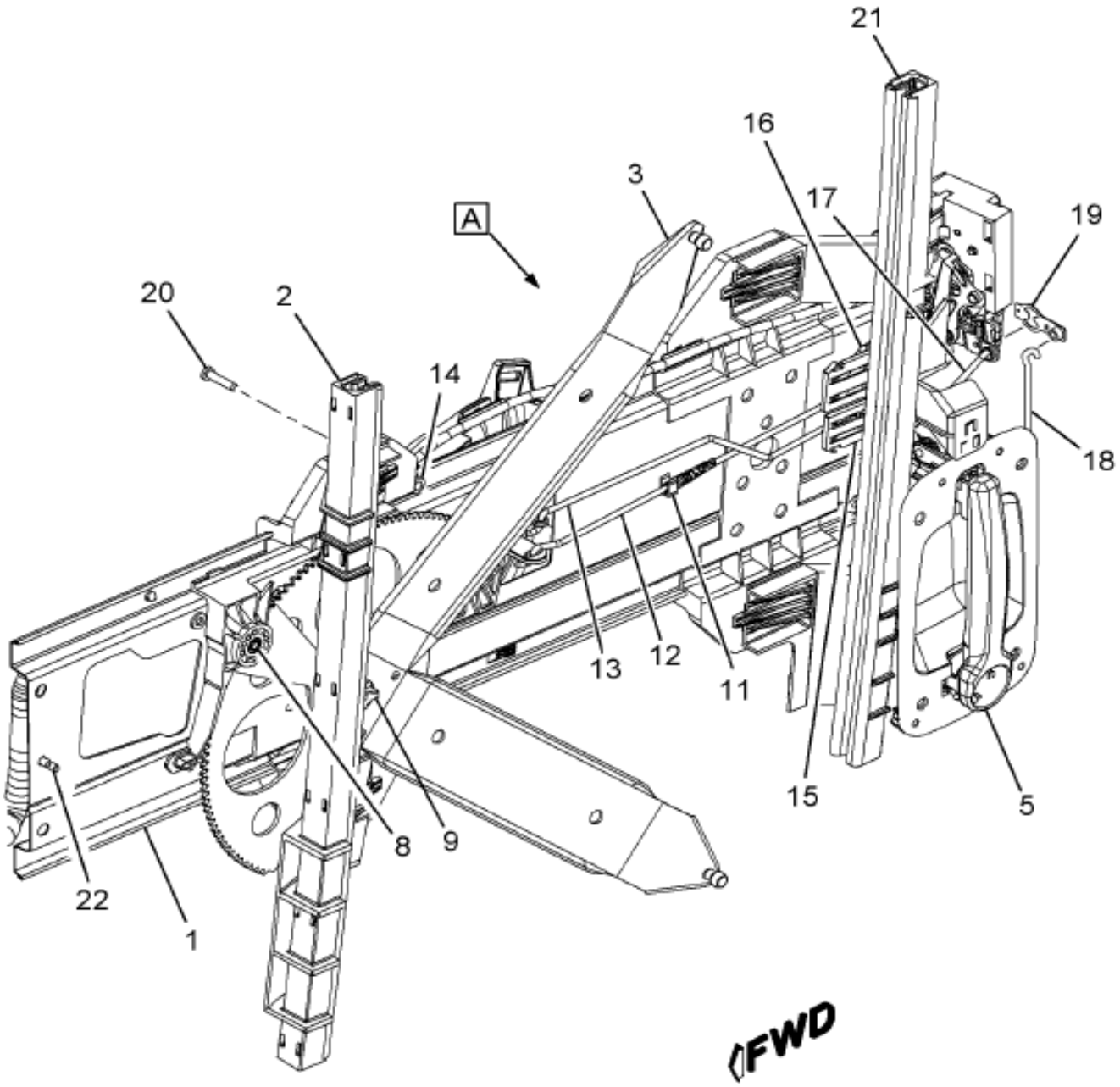

16-354-0024-00 L04

Figure 1 of 2

COPYRIGHT© 2011INTERNATIONAL TRUCK AND ENGINE CORP.

https://truckmanualshub.com/

Figure 3336203C96

REGULATOR,DOOR GLASS LT, DOOR

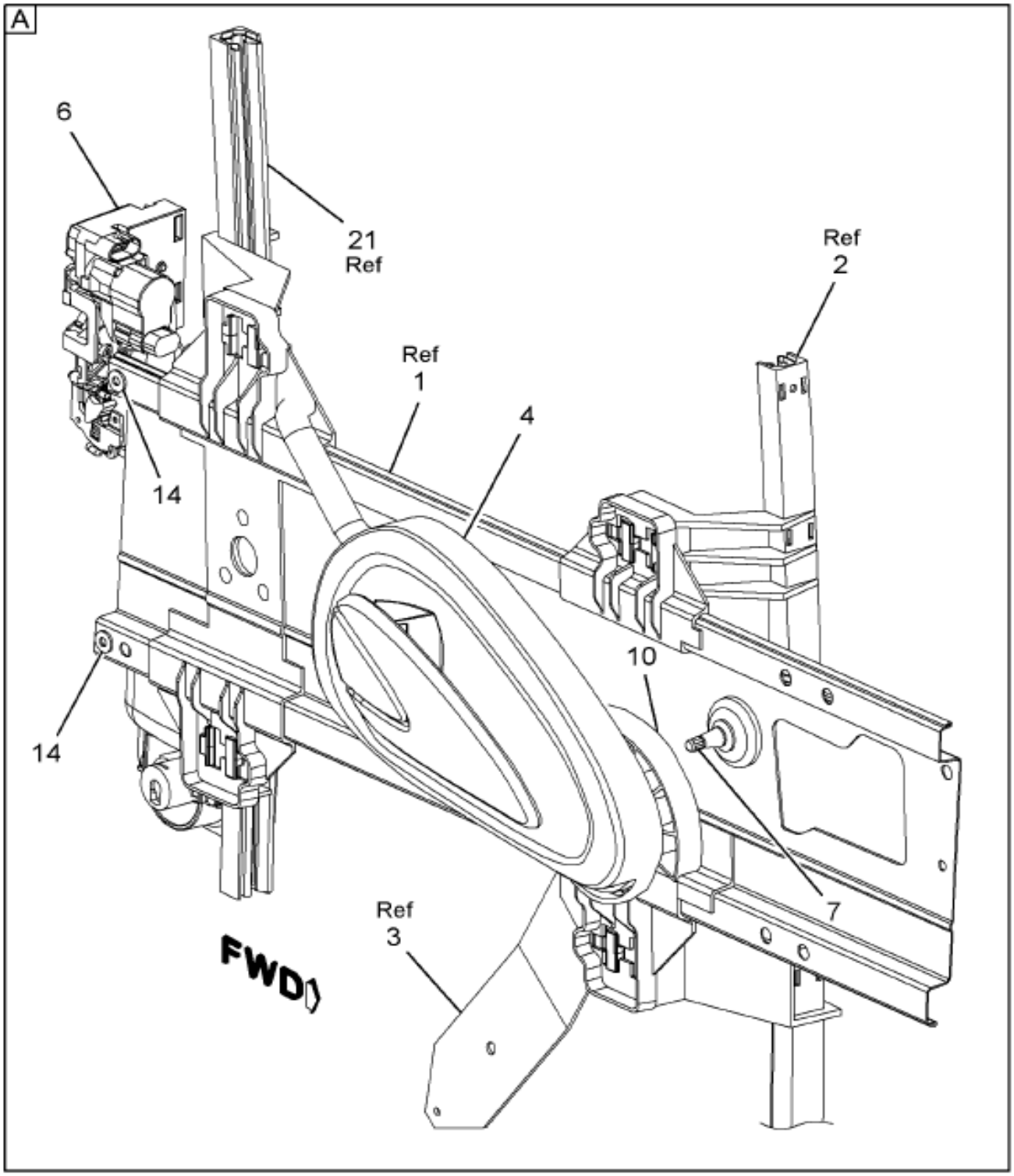

16-354-0025-01 L04

Grp 16

Item	Part No.	Qty	Description	Kit	Var	Figure
1	2506045C1	1	BEAM,STRUCTURAL DOOR RH			
1		RF	RIGHT			
2	2506043C1	1	CHANNEL,GLSS RUN FRT DR FRT RH			
2		RF	RIGHT			
3	2505434C1	1	REGULATOR,DOOR GLASS MNL RH			
3		RF	RIGHT			

COPYRIGHT© 2011INTERNATIONAL TRUCK AND ENGINE CORP.

https://truckmanualshub.com/

Figure 3556203C96

REGULATOR,DOOR GLASS LT, DOOR

Item	Part No.	Qty	Description	Kit	Var	Figure
4	2505425C1	1	HANDLE,DOOR INSIDE RH			
4		RF	RIGHT			
5	2505423C1	1	HANDLE,DOOR OUTSIDE RH			
5		RF	RIGHT			
6	2505413C1	1	LATCH,DOOR MANUAL RH FRT			
6		RF	RIGHT			
7	2506041C1	1	CASE,DOOR CLUTCH			
8	2506040C1	1	BUSHING,SPL DOOR PINION			
9	2506039C1	1	PIVOT,STUD TWIST LOCK RH DOOR			
9		RF	RIGHT			
10	2505432C1	1	2PRING,DOOR COUNTER BALANCE			
11	2506037C1	1	CLIP,DOOR ROD GUIDE			
12	2506036C1	1	ROD,DOOR INDIDE HANDLE RH			
12		RF	RIGHT			
13	2506034C1	1	ROD,DOOR LOCK BUTTON RH			
13		RF	RIGHT			
14	2506032C1	3	NUT,SPECIAL M6 FLANGE			
15	2506031C1	1	RETAINER,DR OUTSIDE HNDL RH			
15		RF	RIGHT			
16	2506029C1	1	RETAINER,DOOR LATCH RH			
16		RF	RIGHT			
17	2593967C1	1	ROD,DOOR OUTSIDE HANDLE			
18	2506026C1	1	ROD,DOOR KEY CYL RH			
18		RF	RIGHT			
19	2506024C1	1	LEVER,S/A KEY CYLINDER			
20	2506023C1	1	BOLT,SPL M6 X 1 TORX HD			
21	2506022C1	1	CHANNEL,GLASS RUN FRT DR RR RH			
21		RF	RIGHT			
22	2506020C1	1	STUD,SPECIAL CLINCH GROOVED			
800		RF	NOTE: THE FOLLOWING PARTS ARE NON-ILLUSTRATED			
801	2595198C1	AR	RETAINER,DOOR RODS PLASTIC			
880		RF	NOTE: ASM BELOW COMPRISED OF ABOVE COMPONENTS			
881	3556203C96	RF	REGULATOR,DOOR GLASS LT, DOOR			

COPYRIGHT© 2011INTERNATIONAL TRUCK AND ENGINE CORP.

https://truckmanualshub.com/

Figure 3367240C92
WINDOW,VENT LH

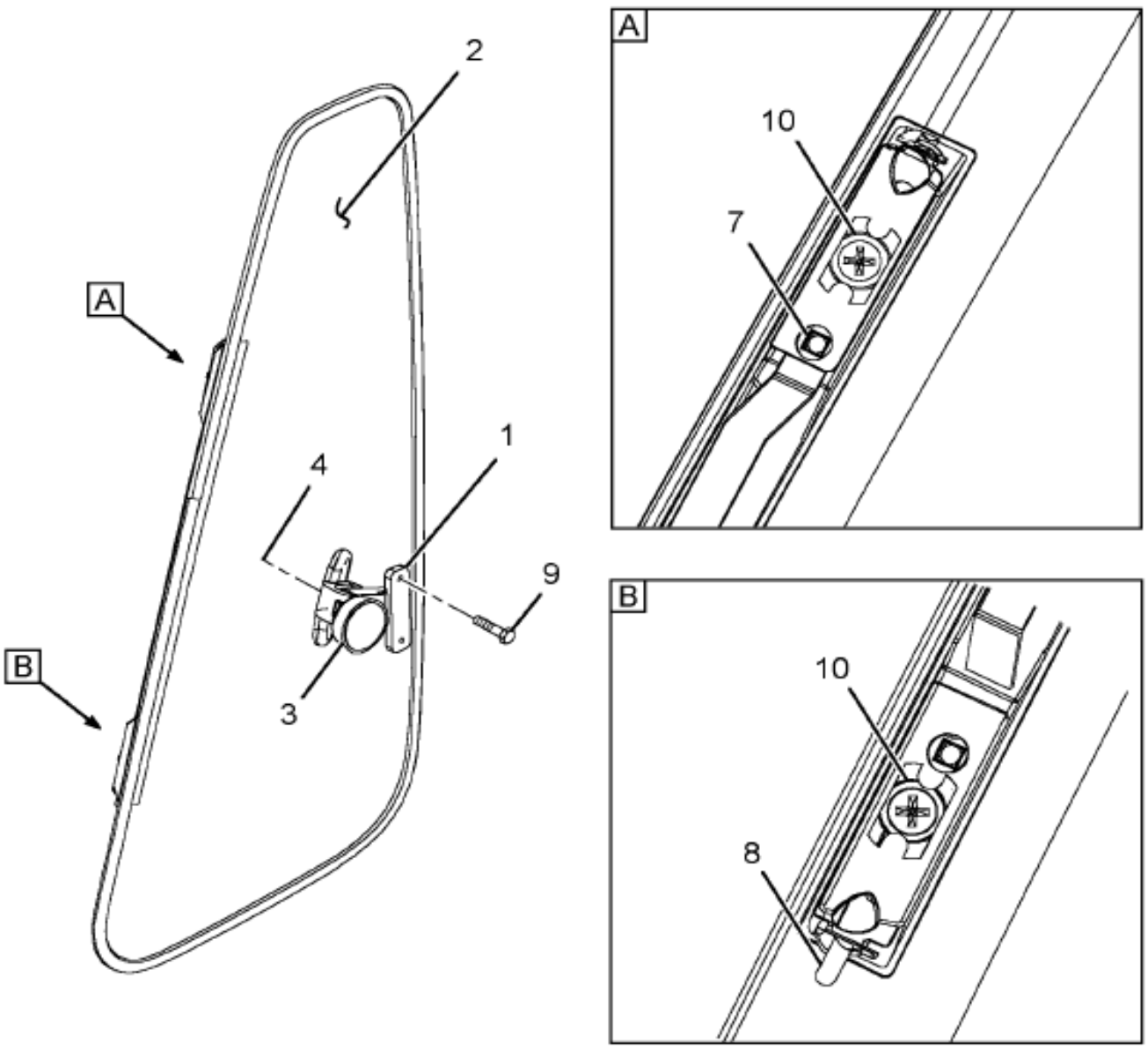

16-354-0090-01 B04

Grp 16

Item	Part No.	Qty	Description	Kit	Var	Figure
1	2505426C1	1	LATCH,VENT WINDOW LH			
1		RF	LEFT			
2		1	GLASS,VENT WINDOW LH			
2		RF	LEFT			
3	2591745C1	1	NUT,GLASS VENT WNDW LATCH MTG			
4	2591746C1	1	SCREW,SPL VENT WNDW LATCH MTG			

COPYRIGHT© 2011INTERNATIONAL TRUCK AND ENGINE CORP.

https://truckmanualshub.com/

Figure 3567240C92

WINDOW,VENT LH

Item	Part No.	Qty	Description	Kit	Var	Figure
7	2586426C1	1	PIN,HINGE UPR LH VENT WINDOW			
7		RF	LEFT			
8	2586424C1	1	PIN,HINGE LWR VENT WINDOW			
9	2505428C1	2	SCREW,VENT WINDOW LATCH BASE			
10		RF	NUT,BARREL			
800		RF	NOTE: THE FOLLOWING PARTS ARE NON-ILLUSTRATED			
801		AR	POLY			
802		AR	ISO			
880		RF	NOTE: ASM BELOW COMPRISED OF ABOVE COMPONENTS			
881	3567240C92	RF	WINDOW,VENT LH			

COPYRIGHT© 2011INTERNATIONAL TRUCK AND ENGINE CORP.

https://truckmanualshub.com/

Figure 3367241C92
WINDOW,VENT RH

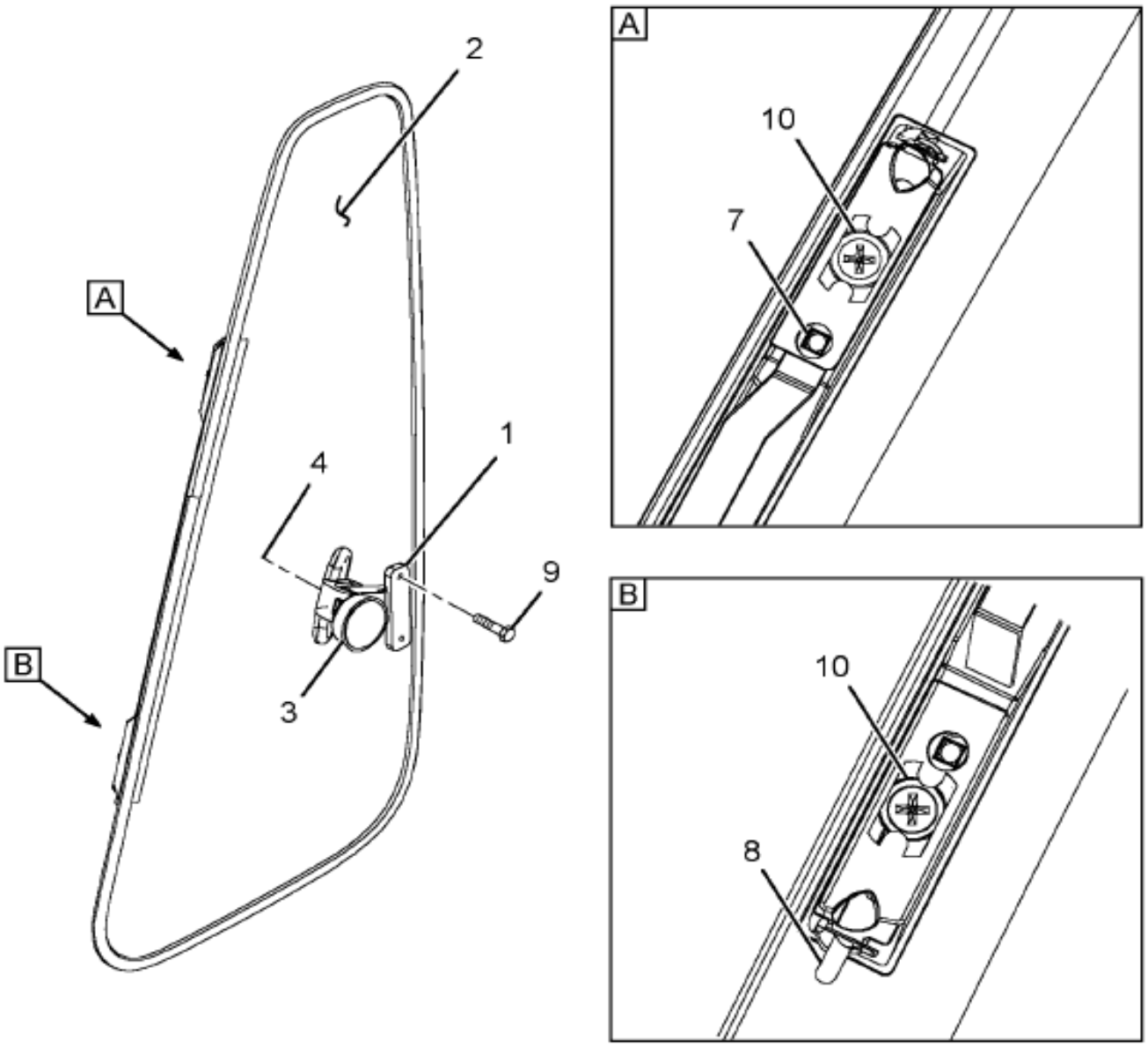

16-354-0090-01 B04

Grp 16

Item	Part No.	Qty	Description	Kit	Var	Figure
1	2505427C1	1	LATCH,VENT WINDOW RH			
1		RF	RIGHT			
2		1	GLASS,VENT WINDOW RH			
2		RF	RIGHT			
3	2591745C1	RF	NUT,GLASS VENT WNDW LATCH MTG			
4	2591746C1	RF	SCREW,SPL VENT WNDW LATCH MTG			

COPYRIGHT© 2011INTERNATIONAL TRUCK AND ENGINE CORP.

https://truckmanualshub.com/

Figure 3567241C92

WINDOW,VENT RH

Item	Part No.	Qty	Description	Kit	Var	Figure
7	2586427C1	1	PIN,HINGE UPR RH VENT WINDOW			
7		RF	RIGHT			
8	2586424C1	1	PIN,HINGE LWR VENT WINDOW			
9	2505428C1	2	SCREW,VENT WINDOW LATCH BASE			
10		2	NUT,BARREL			
800		RF	NOTE: THE FOLLOWING PARTS ARE NON-ILLUSTRATED			
801		AR	POLY			
802		AR	ISO			
880		RF	NOTE: ASM BELOW COMPRISED OF ABOVE COMPONENTS			
881	3567241C92	RF	WINDOW,VENT RH			

COPYRIGHT© 2011INTERNATIONAL TRUCK AND ENGINE CORP.

https://truckmanualshub.com/

Figure 01 VIN

DRIVERS SEAT INSTL; W/BELT, NATIONAL

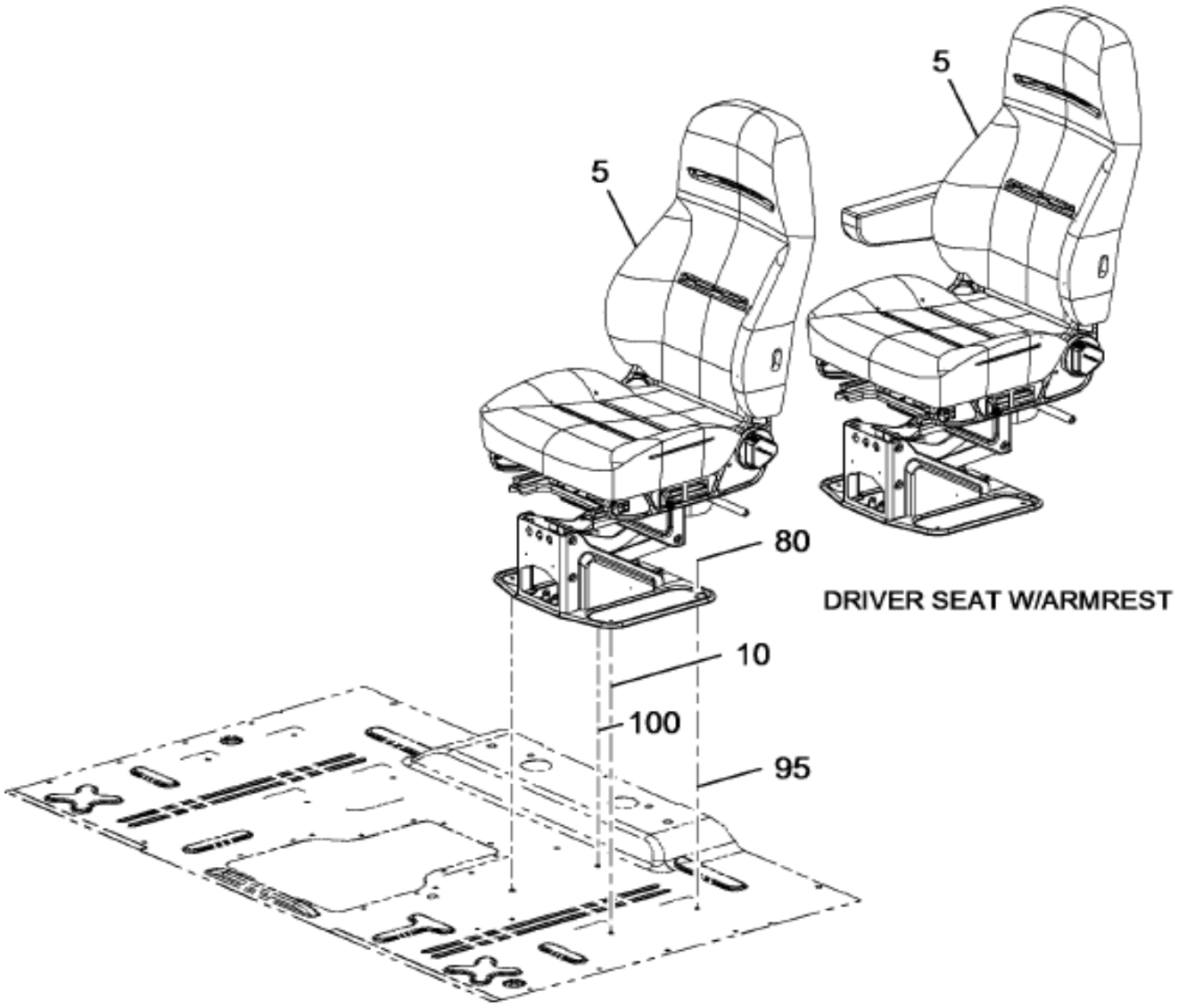

16-432-0694-01 E11

Grp 16

Figure 1 of 3

COPYRIGHT© 2011INTERNATIONAL TRUCK AND ENGINE CORP.

https://truckmanualshub.com/

Figure 0F V1N

DRIVERS SEAT INSTL; W/BELT, NATIONAL

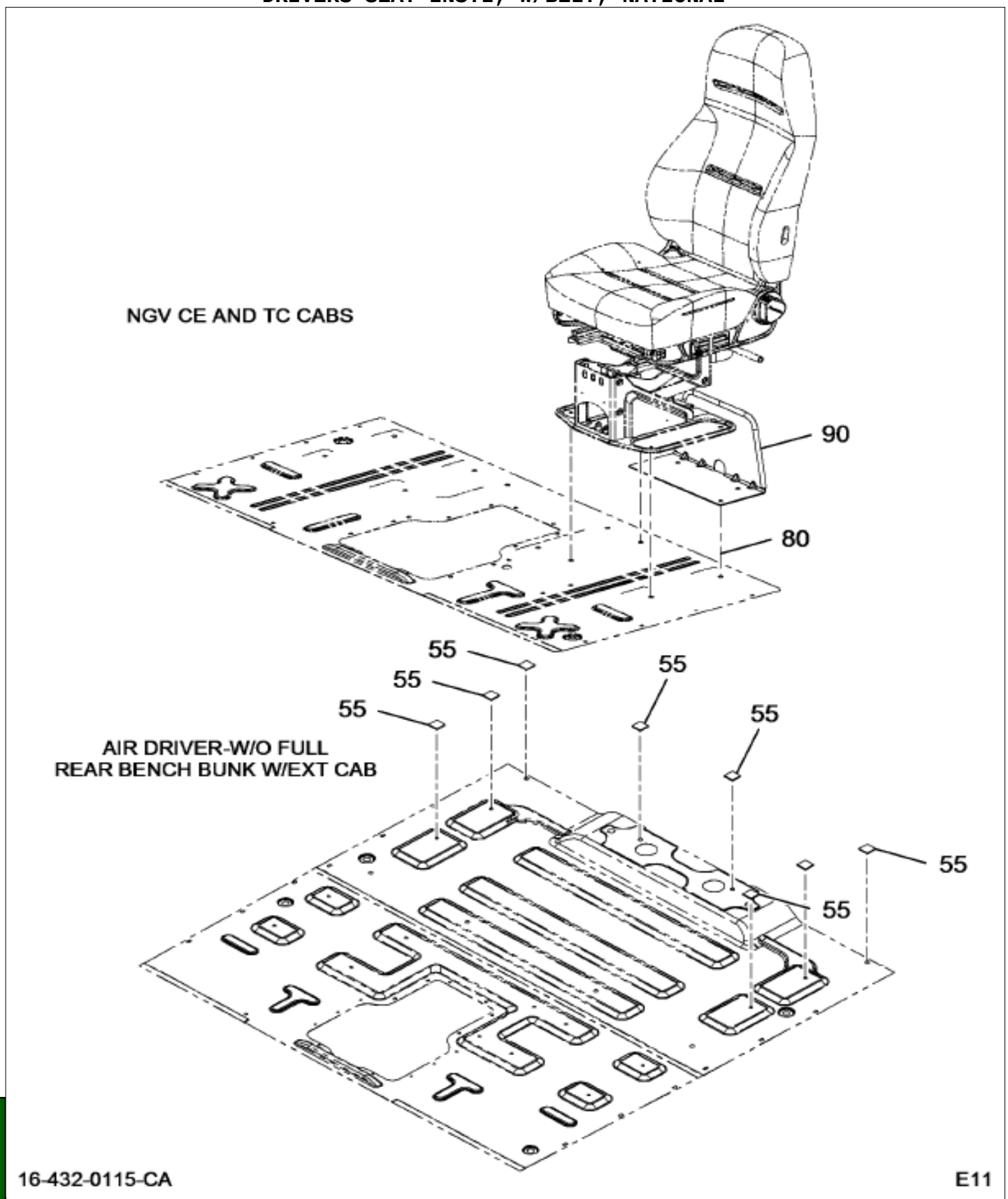

Figure 2 of 3

COPYRIGHT© 2011INTERNATIONAL TRUCK AND ENGINE CORP.

https://truckmanualshub.com/

Figure 0FVYN
DRIVERS SEAT INSTL; W/BELT, NATIONAL

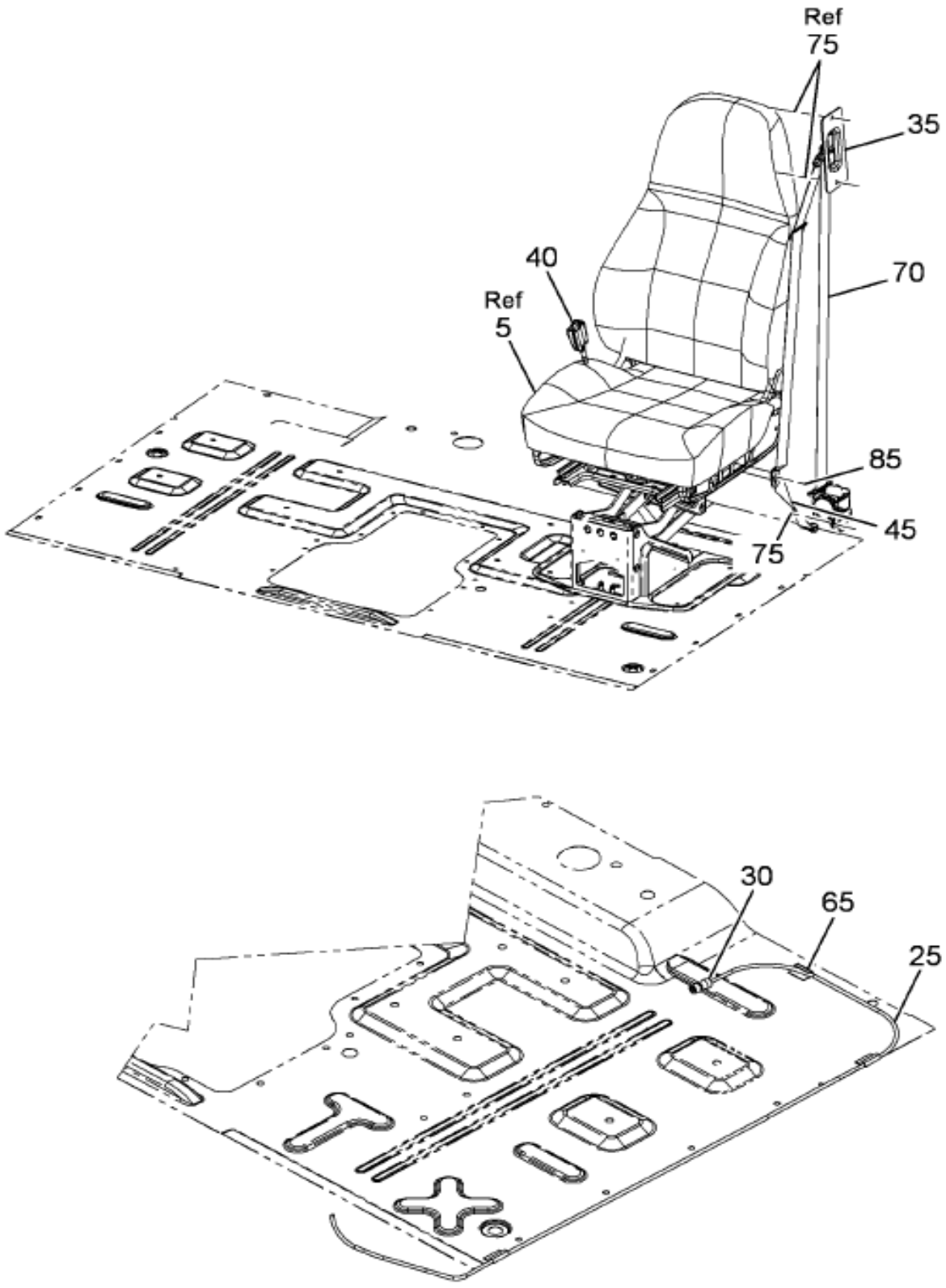

Item	Part No.	Qty	Description	Kit	Var	Figure
5	3558490C93	1	SEAT DRIVER HI AIR SUSP VINYL		0FVYT	3558490C93
10	3544442C1	4	BOLT,SEAT MTG STUD		0KYFW	
30	3843825C1	1	COUPLING,1/4" QUALITY CONNECT		0FVYN	
35	3562147C3	1	BRACKET,ASSY SEAT BELT ANCHOR		0FVYN	
40	3711355C91	1	BELT, BUCKLE, AIR SEAT W/TETHE		0KXGV	
45	3711389C1	1	BELT,TETHER, ASM		0LHW8	

Grp 16

COPYRIGHT© 2011INTERNATIONAL TRUCK AND ENGINE CORP.

https://truckmanualshub.com/

Figure 0FVYN

DRIVERS SEAT INSTL; W/BELT, NATIONAL

Item	Part No.	Qty	Description	Kit	Var	Figure
65	3555769C1	3	CLIP,HOSE 1/4"		0FVYN	
70	3711330C1	1	BELT,SAFETY,RETRACTOR ASSY,BLK		0KXGV	
75	3554364C2	3	BOLT,SPECIAL SEAT BELT ANCHOR		0KXGV	
80	3557057C1	4	NUT,HEX*M8 X 1.25 W/ CAPTURE		0FVYN	
85	3554369C1	1	BOLT,SPECIAL SEAT BELT ANCHOR		0KXGV	

COPYRIGHT© 2011INTERNATIONAL TRUCK AND ENGINE CORP.

https://truckmanualshub.com/

Figure 1660353C91

KIT, SEAT SHAFT ASSY W/BUSH

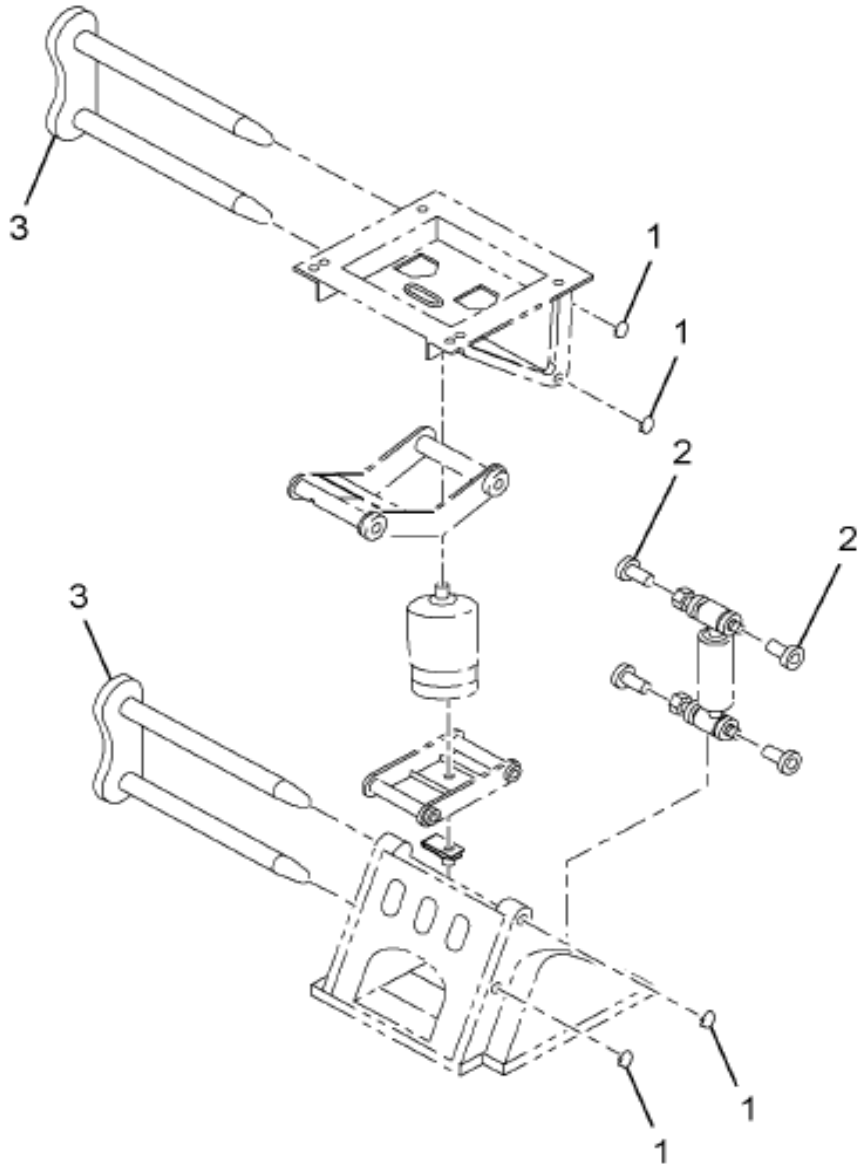

16-432-0801-01 J10

Grp 16

Item	Part No.	Qty	Description	Kit	Var	Figure
1	544968R1	4	RING			
2	574906C1	8	BUSHING, SEAT SHAFT			
3		2	S-SHAFT & LOCK TAB ASM			
800		RF	NOTE: THE FOLLOWING PARTS ARE			
			NON-ILLUSTRATED			
801		AR	CARTON, 3.75 X 3.75 X8			

COPYRIGHT© 2011INTERNATIONAL TRUCK AND ENGINE CORP.

https://truckmanualshub.com/

Figure 1660393C91

KIT, SEAT SHAFT ASSY W/BUSH

Item	Part No.	Qty	Description	Kit	Var	Figure
880		RF	NOTE: ASM BELOW COMPRISED OF ABOVE COMPONENTS			
881	1660393C91	RF	KIT, SEAT SHAFT ASSY W/BUSH			

COPYRIGHT© 2011INTERNATIONAL TRUCK AND ENGINE CORP.

https://truckmanualshub.com/

Figure 2393024C91
KIT,FRT SEAT CUSH ADJ REPAIR

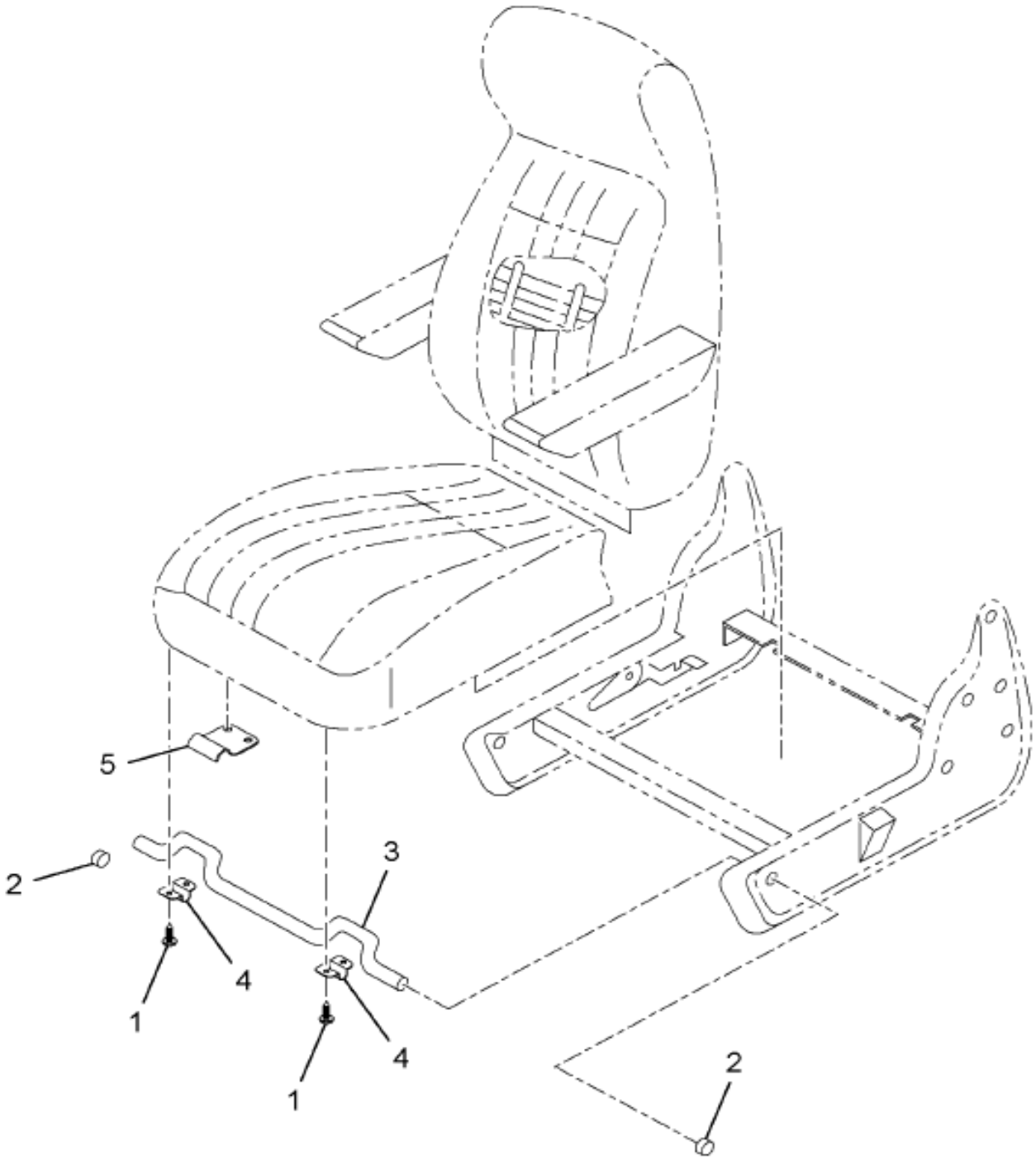

16-432-0804-01 J10

Item	Part No.	Qty	Description	Kit	Var	Figure
1		2	BOLT, HANDLE RET. #10 X 3/4			
2	2502265C1	2	CAP,CUSH ADJUSTER ROD			
3	1685443C1	1	ROD,CUSHION ADJ			
4	1685444C1	2	RETAINER,SEAT CUSHION ADJUSTER			
5	NS22754605	1	HANDLE-FRT CSH PULL-GREY PLS			
800		RF	NOTE: THE FOLLOWING PARTS ARE			

Grp 16

COPYRIGHT© 2011INTERNATIONAL TRUCK AND ENGINE CORP.

https://truckmanualshub.com/

Figure 2595024C91

KIT,FRT SEAT CUSH ADJ REPAIR

Item	Part No.	Qty	Description	Kit	Var	Figure
			NON-ILLUSTRATED			
801		4	SCREW, 1/4-14X3/4 #10 HX HD WAS			
880		RF	NOTE: ASM BELOW COMPRISED OF ABOVE COMPONENTS			
881	2595024C91	RF	KIT,FRT SEAT CUSH ADJ REPAIR			

COPYRIGHT© 2011INTERNATIONAL TRUCK AND ENGINE CORP.

https://truckmanualshub.com/

Figure 2303361C91

KIT,SEAT BCK FRM TO LWR FRM

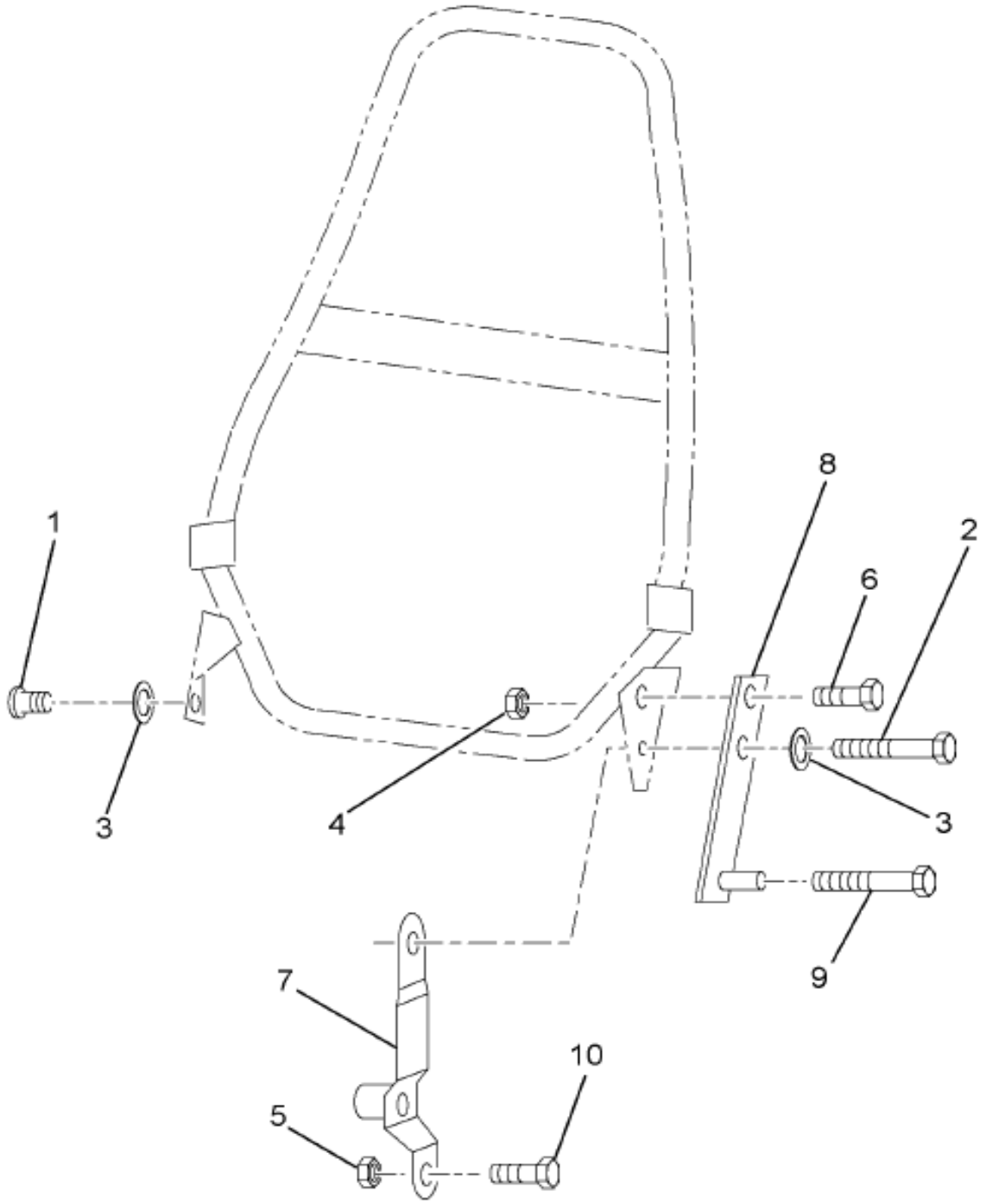

16-432-0737-01 D09

Item	Part No.	Qty	Description	Kit	Var	Figure
1		1	BOLT,SHOULDER			
2		1	BOLT,SHOULDER			
3		6	WASHER, WAVE 3/8			
4		1	NUT, 5/16-18 LOCK REG. .359"			
5		1	NUT, 5/16 LOCK HEVY LOCK			
6		1	BOLT,SHOULDER 3/8-16 X 1			

Grp 16

COPYRIGHT© 2011INTERNATIONAL TRUCK AND ENGINE CORP.

https://truckmanualshub.com/

Figure 2505361C91

KIT,SEAT BCK FRM TO LWR FRM

Item	Part No.	Qty	Description	Kit	Var	Figure
7		1	PLATE,ASM BACK			
8		1	BRACKET,SEAT RECLINE LIMITING			
8	2505006C1	1	BRACKET,SEAT RECLINE LIMITING			
9	1685452C1	1	BOLT,SPECIAL BACKREST ADJU KNO			
10		RF	BOLT SQ NECK 5/16X.68			
880		RF	NOTE: ASM BELOW COMPRISED OF ABOVE COMPONENTS			
881	2505361C91	RF	KIT,SEAT BCK FRM TO LWR FRM			

COPYRIGHT© 2011INTERNATIONAL TRUCK AND ENGINE CORP.

https://truckmanualshub.com/

Figure 1698197C91
KIT,SEAT CHUGGER

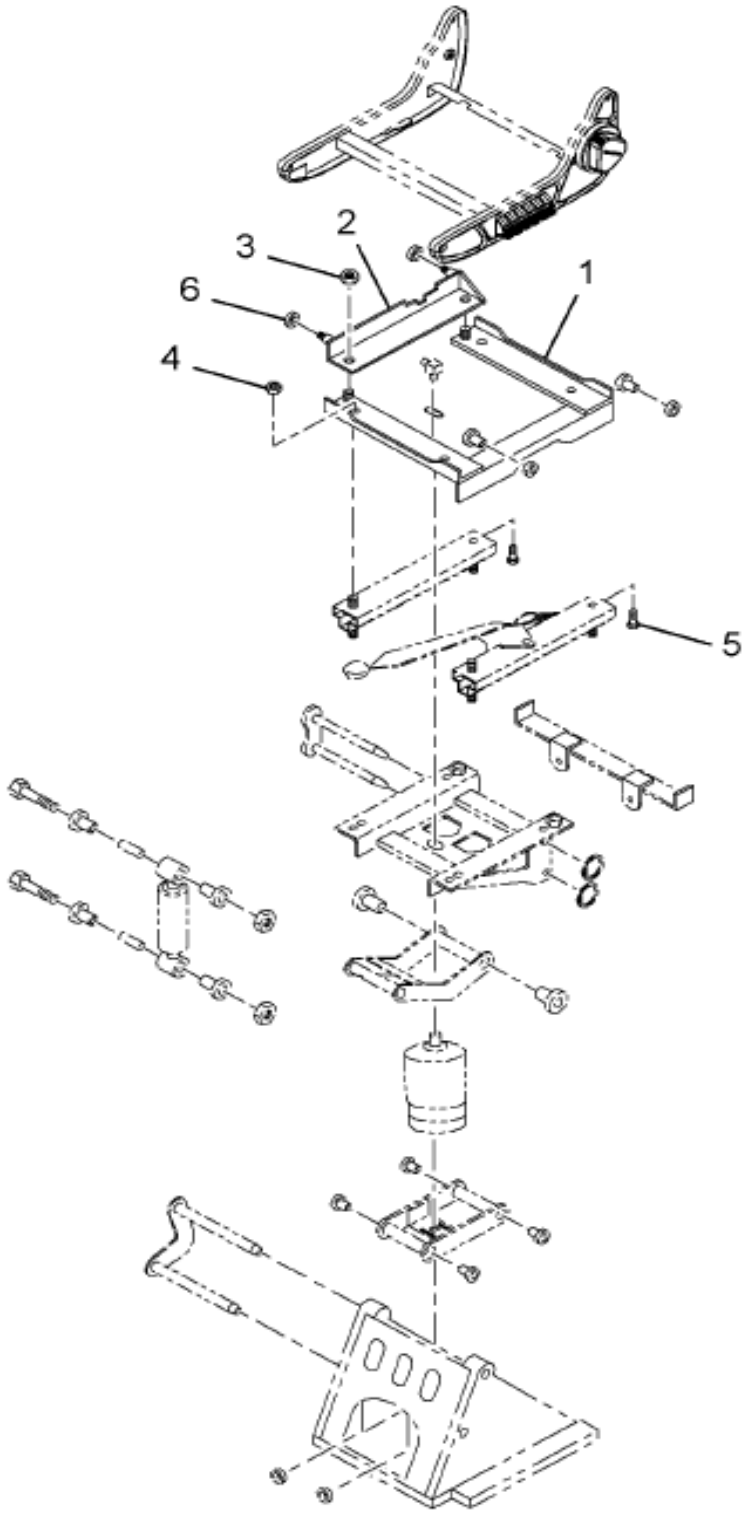

16-432-0738-01 G10

Item	Part No.	Qty	Description	Kit	Var	Figure
1		1	SUPPORT, CHUGGER			
2		1	SUPPORT,ASM BEARING			
3		2	NUT & WASHER ASM, 5/16-18			
4		4	NUT, 5/16-18 LOCK REG. .359"			
5	2502303C1	4	BOLT,SPL SQ NECK TRACK STUD			
6	1685465C1	4	BEARING,ROLLER ASM CHUGGER SEA			

Grp 16

COPYRIGHT© 2011INTERNATIONAL TRUCK AND ENGINE CORP.

https://truckmanualshub.com/

Figure 1698197C91

KIT,SEAT CHUGGER

Item	Part No.	Qty	Description	Kit	Var	Figure
800		RF	NOTE: THE FOLLOWING PARTS ARE NON-ILLUSTRATED			
801		AR	CARTON, 16.5X16X3			
802		AR	STRAP,PANDUIT TIE			
880		RF	NOTE: ASM BELOW COMPRISED OF ABOVE COMPONENTS			
881	1698197C91	RF	KIT,SEAT CHUGGER			

COPYRIGHT© 2011INTERNATIONAL TRUCK AND ENGINE CORP.

https://truckmanualshub.com/

Figure 2303379C91

KIT,SEAT CHUGGER LOCKOUT

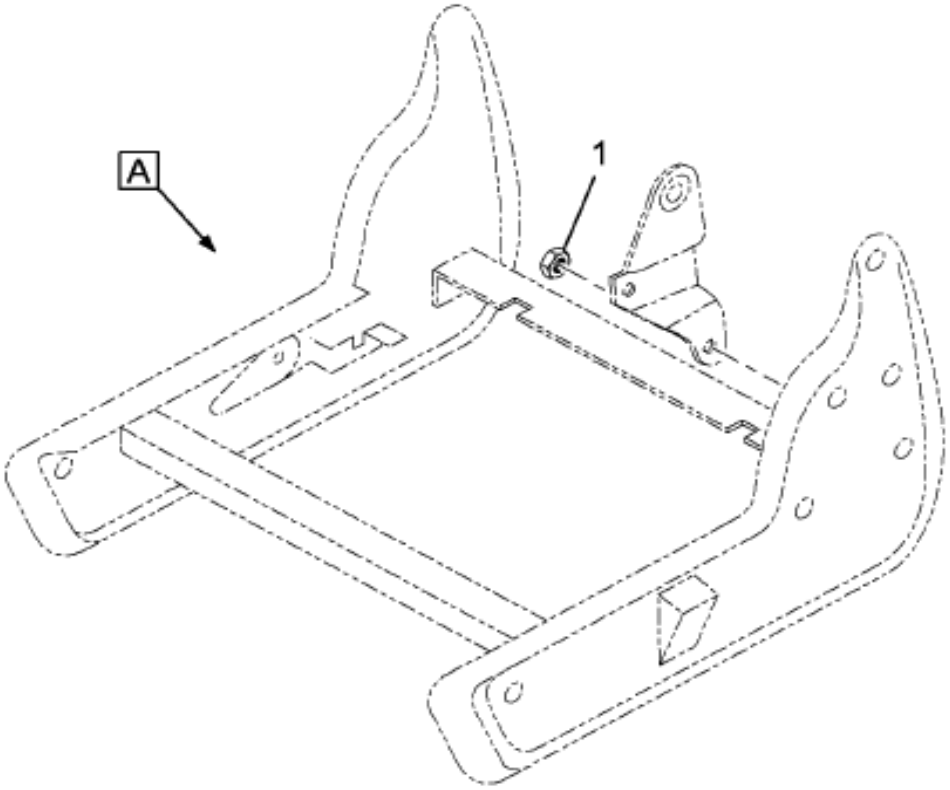

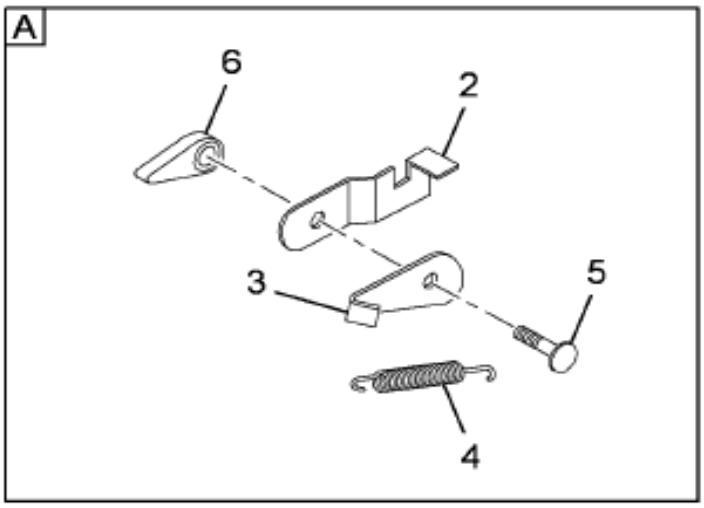

16-432-0803-01 J10

Item	Part No.	Qty	Description	Kit	Var	Figure
1		1	NUT, 1/4-28 LK NYLON INSERT			
2	1685460C1	1	PLATE,SEAT ISOLATOR LOCK			
3	1685459C1	1	LATCH,SEAT BACK ADJ LOCK			
4	1685463C1	1	SPRING,SEAT ADJUSTER ISOL LOCK			
5		1	BOLT, ISOLATOR PIVOT BLACK			
6		1	HANDLE, LH LEVER CHGR GRY X			

Grp 16

COPYRIGHT© 2011INTERNATIONAL TRUCK AND ENGINE CORP.

https://truckmanualshub.com/

Figure 2505379C91

KIT,SEAT CHUGGER LOCKOUT

Item	Part No.	Qty	Description	Kit	Var	Figure
6		RF	LEFT			
880		RF	NOTE: ASM BELOW COMPRISED OF ABOVE COMPONENTS			
881	2505379C91	RF	KIT,SEAT CHUGGER LOCKOUT			

COPYRIGHT© 2011INTERNATIONAL TRUCK AND ENGINE CORP.

https://truckmanualshub.com/

Figure 2505866C91

KIT,TRACK SEAT ADJ

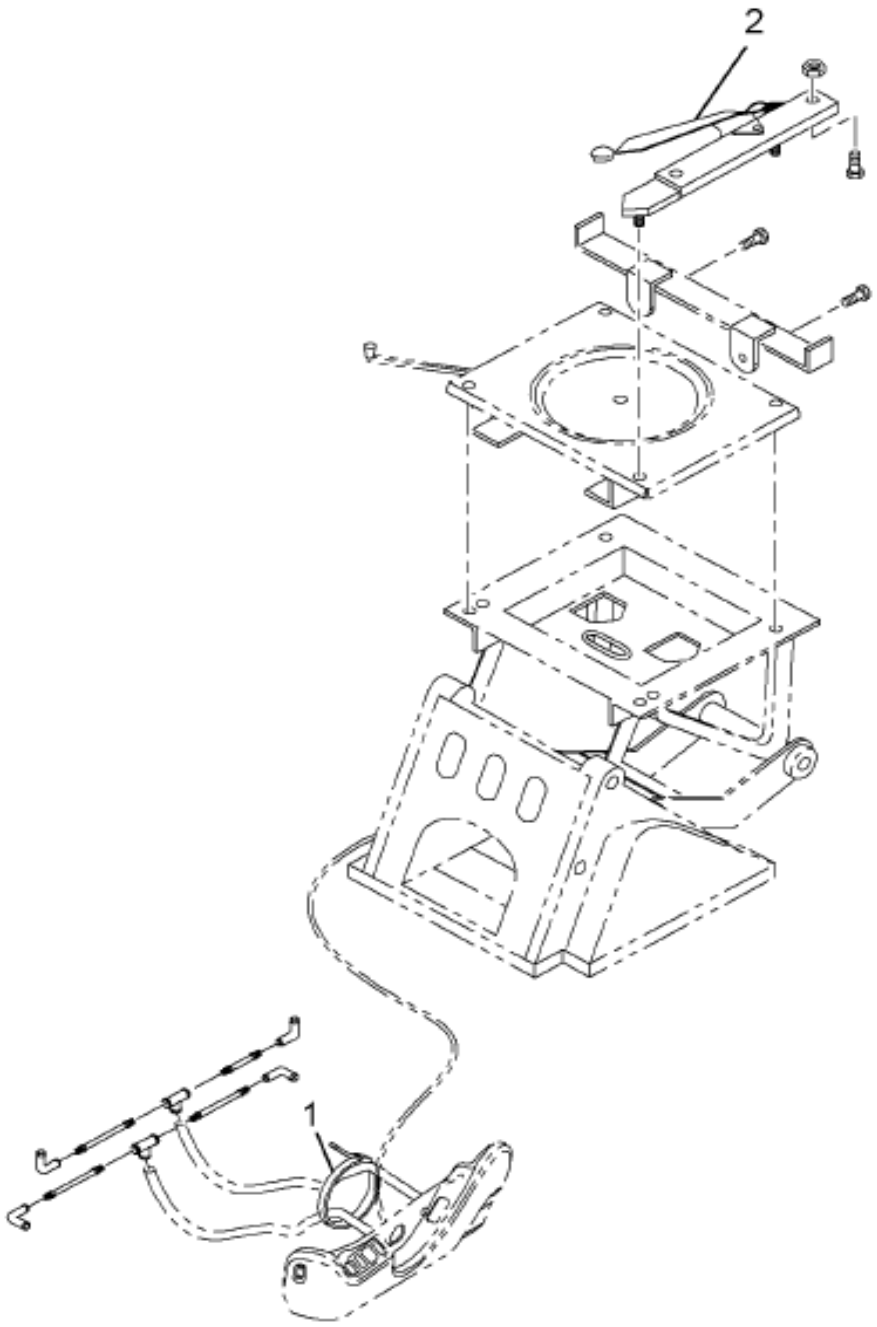

16-432-0802-01 J10

Grp 16

Item	Part No.	Qty	Description	Kit	Var	Figure
1		AR	STRAP, PANDUIT TIE			
2	2505380C1	1	KNOB,SEAT TRACK			
800		RF	NOTE: THE FOLLOWING PARTS ARE NON-ILLUSTRATED			
801		AR	CARTON, 5 X 5 X 22			
802		1	TRACK & HANDLE ASY 7.5 HGV			

COPYRIGHT© 2011INTERNATIONAL TRUCK AND ENGINE CORP.

https://truckmanualshub.com/

Figure 2505886C91

KIT,TRACK SEAT ADJ

Item	Part No.	Qty	Description	Kit	Var	Figure
803		1	7.5" TRACK W/O LATCH 481000			
880		RF	NOTE: ASM BELOW COMPRISED OF ABOVE COMPONENTS			
881	2505886C91	RF	KIT,TRACK SEAT ADJ			

COPYRIGHT© 2011INTERNATIONAL TRUCK AND ENGINE CORP.

https://truckmanualshub.com/

Figure 3338430C93

SEAT DRIVER HI AIR SUSP VINYL

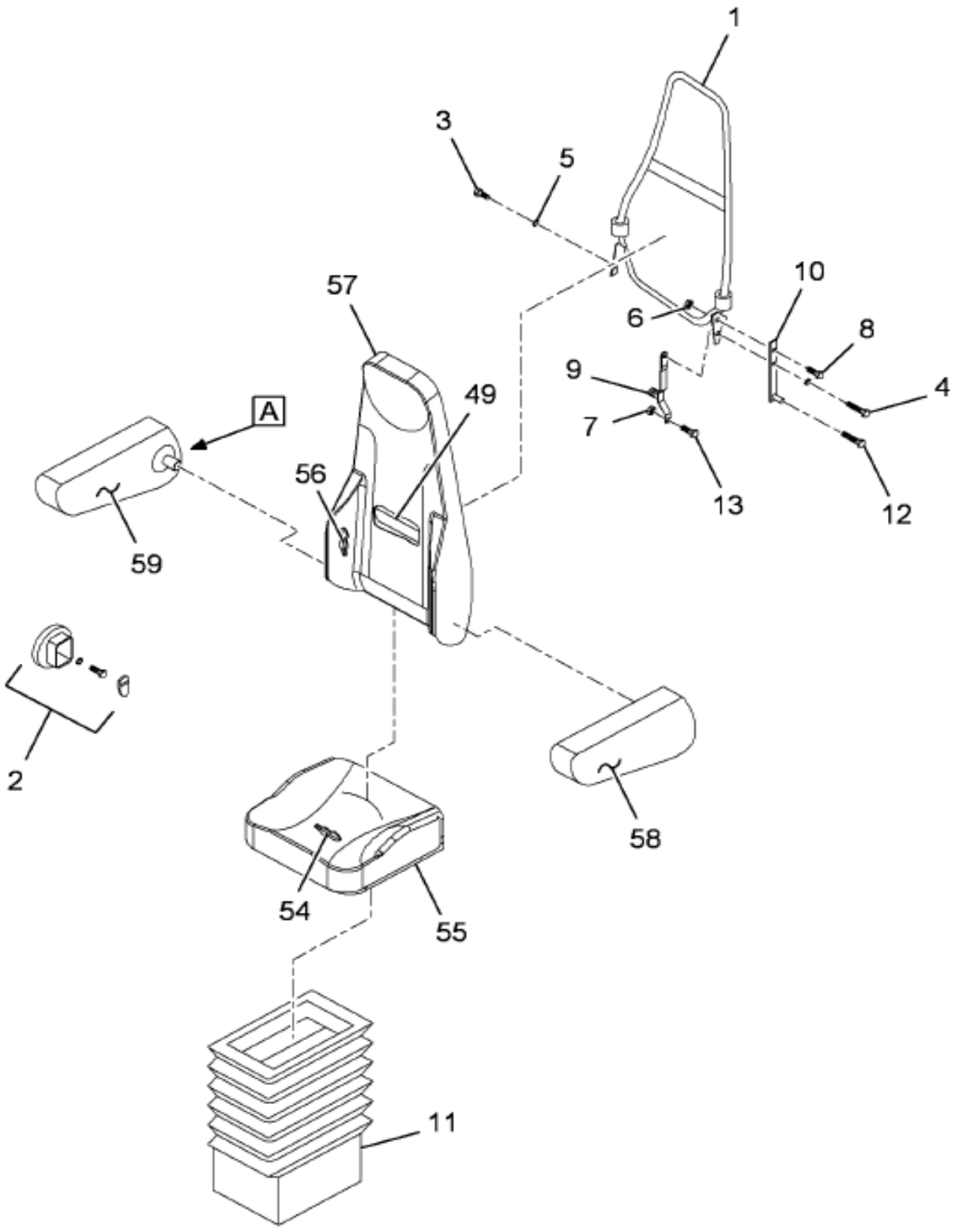

Grp 16

Figure 1 of 3

COPYRIGHT© 2011INTERNATIONAL TRUCK AND ENGINE CORP.

https://truckmanualshub.com/

Figure 3338430C93

SEAT DRIVER HI AIR SUSP VINYL

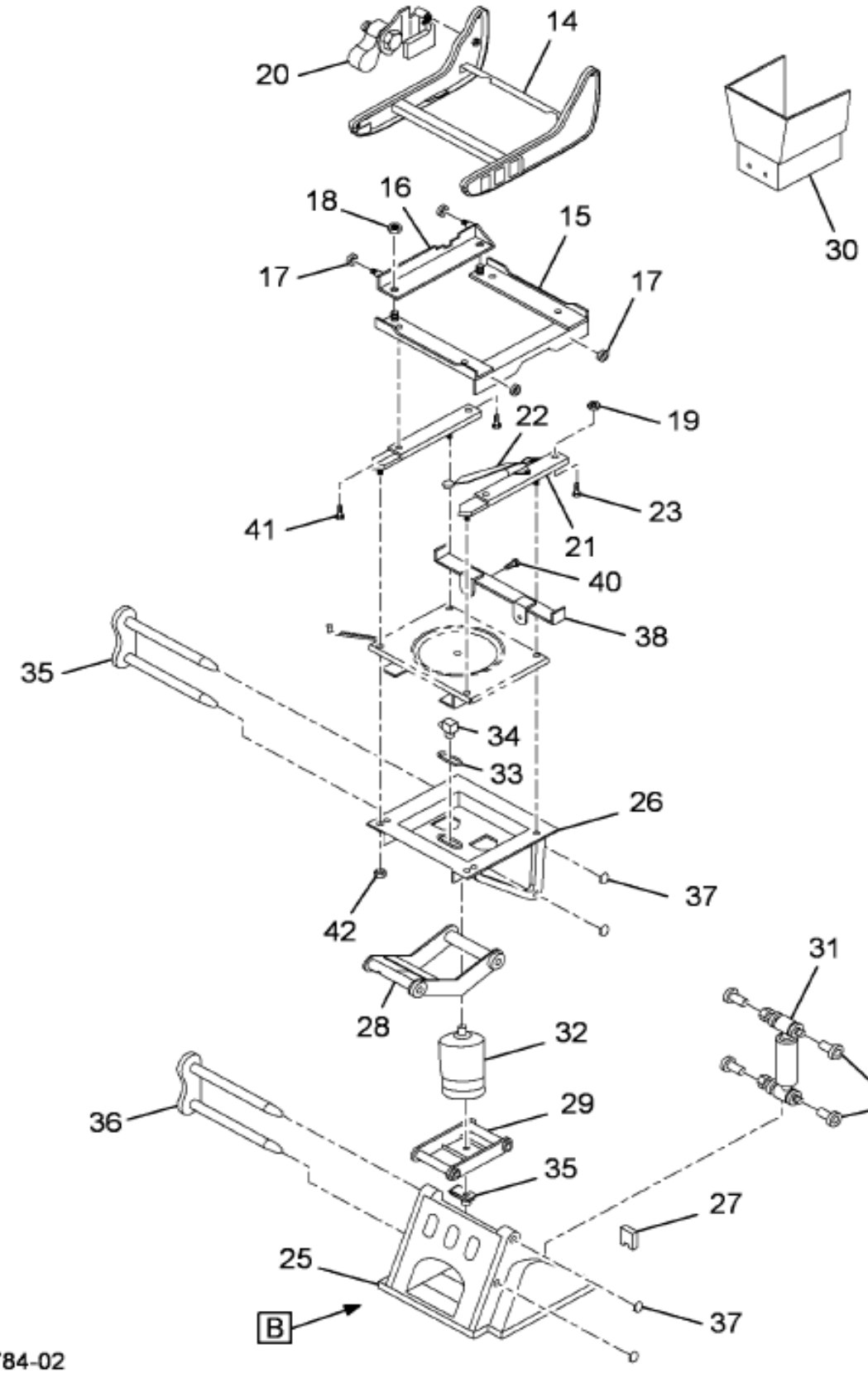

Figure 2 of 3

COPYRIGHT© 2011INTERNATIONAL TRUCK AND ENGINE CORP.

https://truckmanualshub.com/

Figure 3338430C93

SEAT DRIVER HI AIR SUSP VINYL

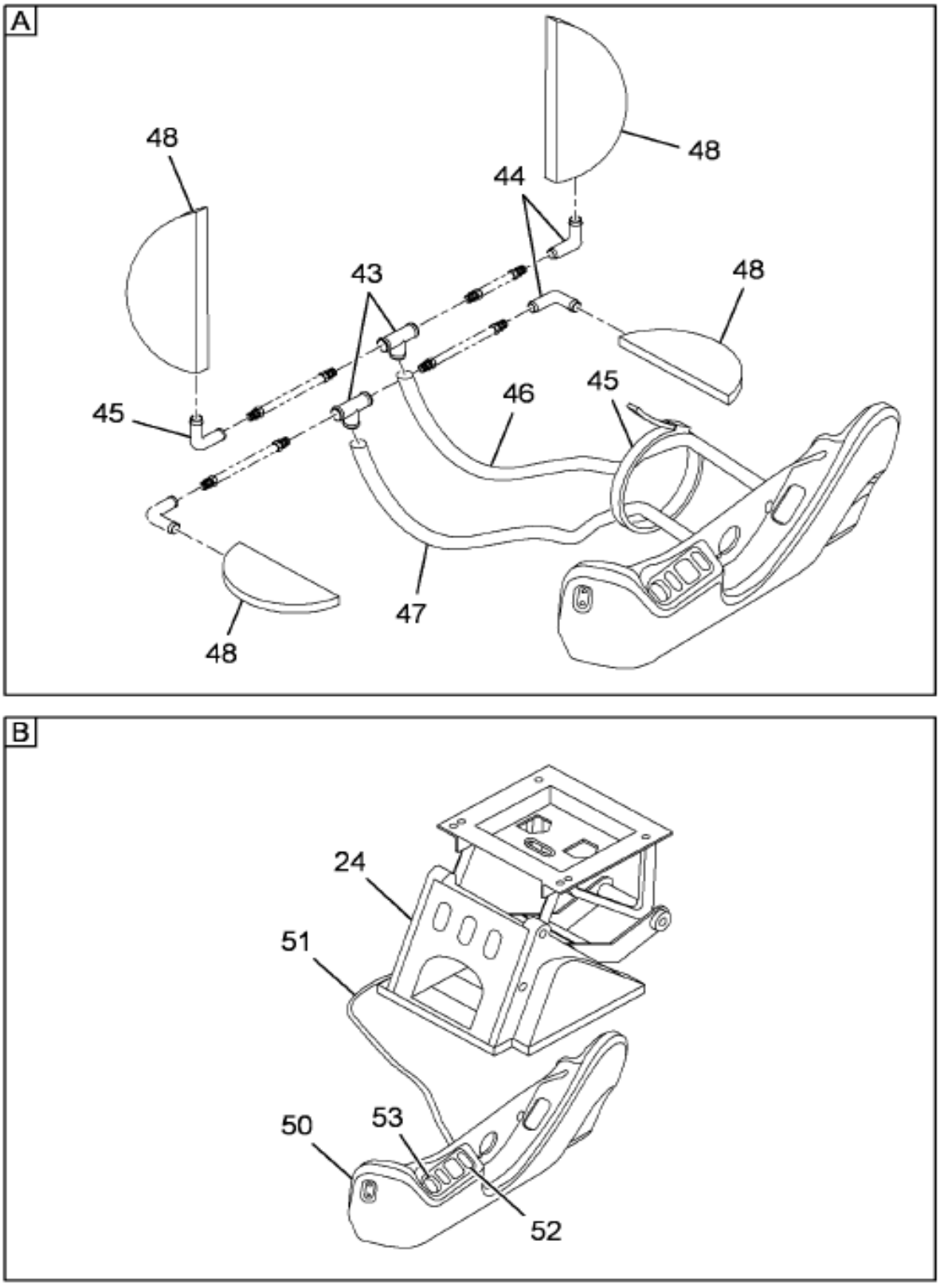

16-432-0789-01 J10

Item	Part No.	Qty	Description	Kit	Var	Figure
1	2589583C1	1	FRAME,SEAT BACK HI			
2	2606404C91	KT	KIT,SEAT BACK RECLINE KNOB			
3		1	BOLT, SHOULDER	B		
4		1	BOLT, SHOULDER	B		
5		6	WASHER, WAVE 3/8	B		
6	NS17706049	1	NUT&WASHER	B		

Grp 16

COPYRIGHT© 2011INTERNATIONAL TRUCK AND ENGINE CORP.

https://truckmanualshub.com/

Figure 3338450C93

SEAT DRIVER HI AIR SUSP VINYL

Item	Part No.	Qty	Description	Kit	Var	Figure
7		1	NUT, 5/16 LOCK HEVY LOCK	B		
8		1	BOLT, SHOULDER 3/8-16 X 1	B		
9		1	PLATE, ASM BACK	B		
10	2505006C1	1	BRACKET,SEAT RECLINE LIMITING	B		
10	2590579C91	1	BRACKET,SEAT RCLN LMTNG 6-23LH	B		
11	2505472C91	KT	KIT,SHROUD & BLWS FOR NS2000			
12	1685452C1	1	BOLT,SPECIAL BACKREST ADJU KNO	B		
13		1	BOLT, SQ NECK 5/16X.68	B		
14	2505826C1	1	FRAME,SEAT LOWER			
15	NS22972301	1	SUPPORT,CHUGGER	A		
16		1	SUPPORT, ASM BEARING	A		
17	1685465C1	4	BEARING,ROLLER ASM CHUGGER SEA	A		
18	NS22815201	2	NUT&WASHER	A		
19	NS17706049	4	NUT&WASHER	A		
20	2505379C91	KT	KIT,SEAT CHUGGER LOCKOUT			2505379C91
21	2505886C91	KT	KIT,TRACK SEAT ADJ			2505886C91
22	2505380C1	1	KNOB,SEAT TRACK			
23	2502303C1	4	BOLT,SPL SQ NECK TRACK STUD			
24	2505907C91	1	PEDESTAL,SEAT			
25	2505382C1	1	BASE,SEAT MTG LOWER			
26	2505383C1	1	BASE,SEAT MTG UPPER			
27	2505384C1	1	BUMPER,SEAT STOP (STD)			
28	2505385C1	1	ARM,ASSY UPPER W/BUSHINGS			
29	2502060C91	AR	ARM,ASSY LWR W/BUSHINGS			
29	2505386C91	AR	ARM,ASSY LWR F/LTD UP-STOP			
30	2508535C91	KT	KIT,SEAT BASE CVR & SHRD BRGDY			
31	507831C91	1	ABSORBER, SHOCK H.D. SEAT			
32	1696990C91	KT	KIT,AIR SPRING			
33	1685464C1	1	RETAINER,AIR SPRING SEAT.			
34	571156C1	1	ELBOW, HOSE CONNECTOR 90 DEG.			
35		1	CLIP, HAIR PIN			
36		2	SHAFT			
36	1660393C91	KT	KIT, SEAT SHAFT ASSY W/BUSH			1660393C91
37	544968R1	4	RING			
38	2505888C1	1	BRACKET,SEAT BELT MOUNTING			
39	2505470C1	8	BUSHING,SEAT ARM SPACER			
40		2	BOLT, SELF TAPPING			
41		4	BOLT, 5/16-18			
42	NS17706049	4	NUT&WASHER			
43		2	TEE, PLASTIC BARBED FITTING			
44	NS18002753	3	ELBOW,90 DEGREE PLASTIC			
45		5	STRAP, PANDUIT TIE			
46		1	TUBING, CLEAR 2.83'			
47		1	TUBING, GREEN 2.67'			
48	1699520C1	4	SUPPORT,ASM SEAT AIR LIMBAR			
49	2505855C1	1	SUPPORT,SNGL CHMBR AIR LUMBAR			
50	2505829C1	1	MANIFOLD,ASSY SEAT 2 BUTTON			
51		1	TUBING, BLACK NYLON			
52	2505475C1	1	VALVE,AIR HI PRESS RED HNDL			
53	2505476C1	5	VALVE,AIR L-PRESS GRY HNDL LUM			
54	2505891C92	AR	CUSHION,SEAT GRAY VINYL			
55		1	COVER, SEAT CUSH GRY VN			
56	2585487C92	AR	CUSHION,BACK HI GRAY VINYL			
57		1	COVER, BCK CUSH MID GRY VN			
58	2606399C1	AR	REST,ARM UPH			
58		RF	LEFT			
58	2606401C1	AR	REST,ARM COVER LH			
58		RF	LEFT			

COPYRIGHT© 2011INTERNATIONAL TRUCK AND ENGINE CORP.

https://truckmanualshub.com/

Figure 3558490C93

SEAT DRIVER HI AIR SUSP VINYL

Item	Part No.	Qty	Description	Kit	Var	Figure
59	2606400C1	AR	REST,ARM UPH RH			
59		RF	RIGHT			
59	2606402C1	AR	REST,ARM COVER RH			
59		RF	RIGHT			
800		RF	NOTE: THE FOLLOWING PARTS ARE			
			NON-ILLUSTRATED			
801	1698107C1	1	SUPPORT,ASM SEAT AIR LUMBAR			
870	1698197C91	KT	KIT,SEAT CHUGGER			1698197C91
870		RF	(CONSISTS OF PARTS DENOTED BY A)			
871	2505361C91	KT	KIT,SEAT BCK FRM TO LWR FRM			2505361C91
871		RF	(CONSISTS OF PARTS DENOTED BY B)			
872	2595024C91	KT	KIT,FRT SEAT CUSH ADJ REPAIR			2595024C91
880		RF	NOTE: ASM BELOW COMPRISED OF ABOVE			
			COMPONENTS			
881	3558490C93	RF	SEAT DRIVER HI AIR SUSP VINYL			

Grp 16

COPYRIGHT© 2011INTERNATIONAL TRUCK AND ENGINE CORP.

https://truckmanualshub.com/

Figure 05153

ENGINE COVER INSTL

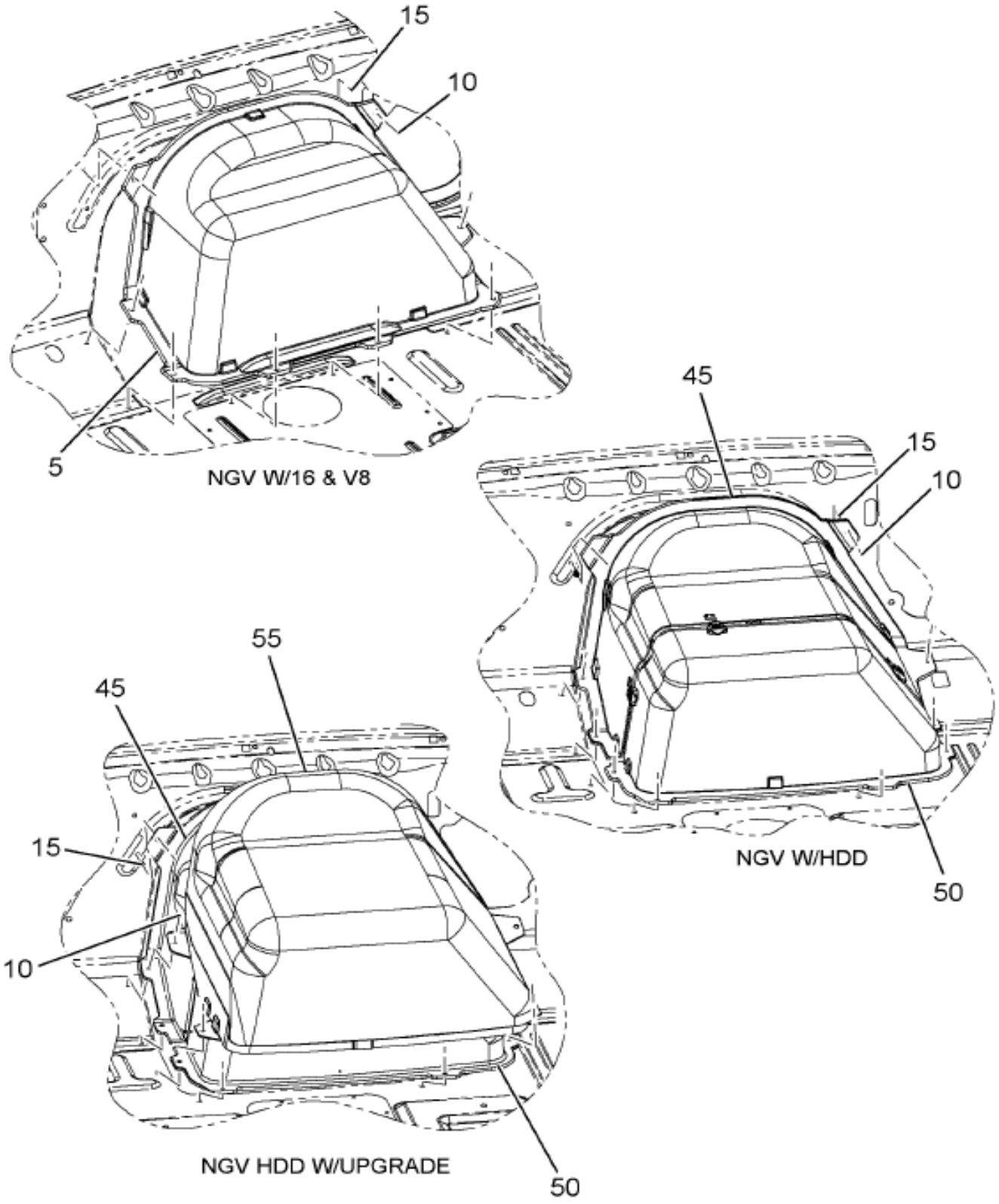

16-V02-0011-01 K09

Item	Part No.	Qty	Description	Kit	Var	Figure
10	3669494C1	10	BOLT, M6 35MM LONG HEX HEAD WI		0TM59	
15	3510918C1	8	INSERT,THREADED M6 OPEN END		0TM59	
45	3841735C91	1	COVER, ENGINE HDD FRONT ASSY-P		0TM59	3841735C91
50	3823561C91	1	COVER, ENGINE HDD REAR ASSY-PA		0TM59	3823561C91

COPYRIGHT© 2011INTERNATIONAL TRUCK AND ENGINE CORP.

https://truckmanualshub.com/

Figure 3841733C91

COVER, ENGINE HDD FRONT ASSY-P

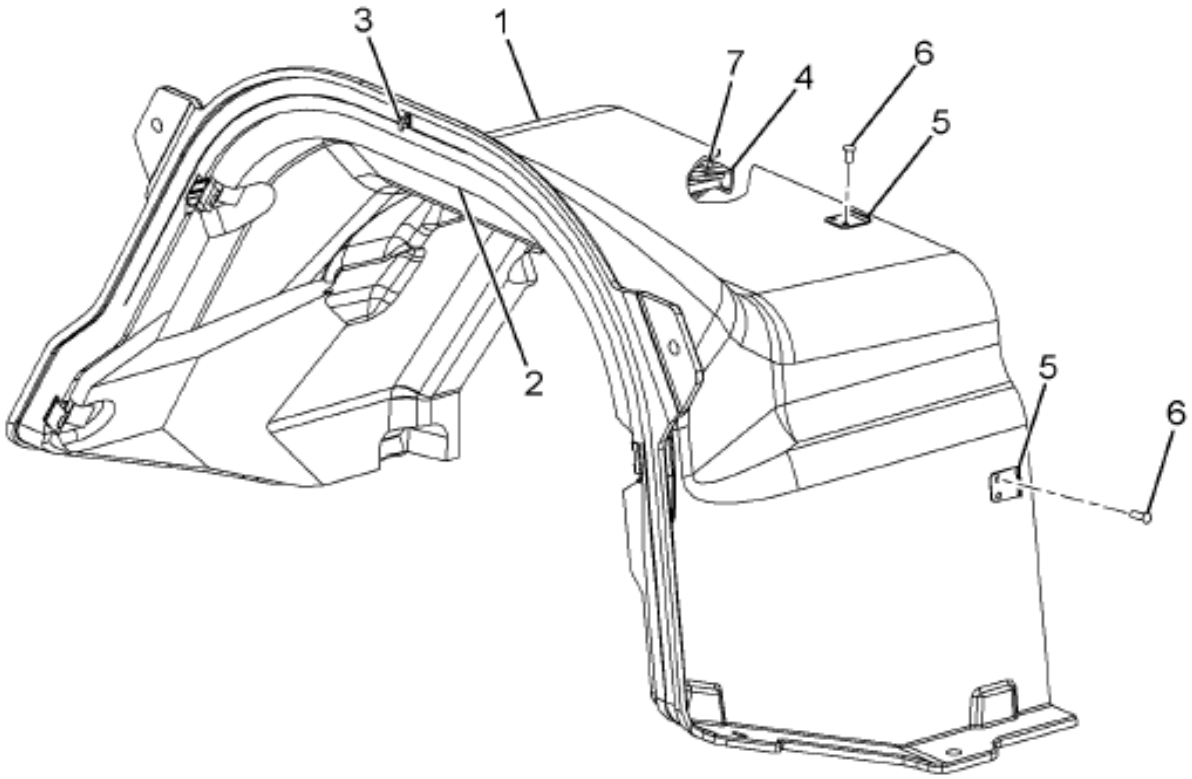

16-V02-0032-01 F09

Item	Part No.	Qty	Description	Kit	Var	Figure
1	3823559C1	1	COVER, ENGINE RH/SS 107 HDD FR			
1		RF	RIGHT			
2	3841717C1	1	INSULATOR,CAB ENG COVER, FOR A			
2		RF	RIGHT			
3	3508978C2	AR	SEAL,ENGINE COVER			
4	3541216C1	9	FASTENER,ENGINE COVER CLIP			

Grp 16

COPYRIGHT© 2011INTERNATIONAL TRUCK AND ENGINE CORP.

https://truckmanualshub.com/

Figure 3841735C91

COVER, ENGINE HDD FRONT ASSY-P

Item	Part No.	Qty	Description	Kit	Var	Figure
5	3577406C1	3	CATCH,ENG CVR EXTENDED			
6	3579107C1	6	RIVET,BLIND 1/8 DIA			
7	3578751C1	1	SEAL ENG CVR SEAL BLK CLSD CEL			
880		RF	NOTE: ASM BELOW COMPRISED OF ABOVE COMPONENTS			
881	3841735C91	RF	COVER, ENGINE HDD FRONT ASSY-P			

COPYRIGHT© 2011INTERNATIONAL TRUCK AND ENGINE CORP.

https://truckmanualshub.com/

Figure 3823561C91

COVER, ENGINE HDD REAR ASSY-PA

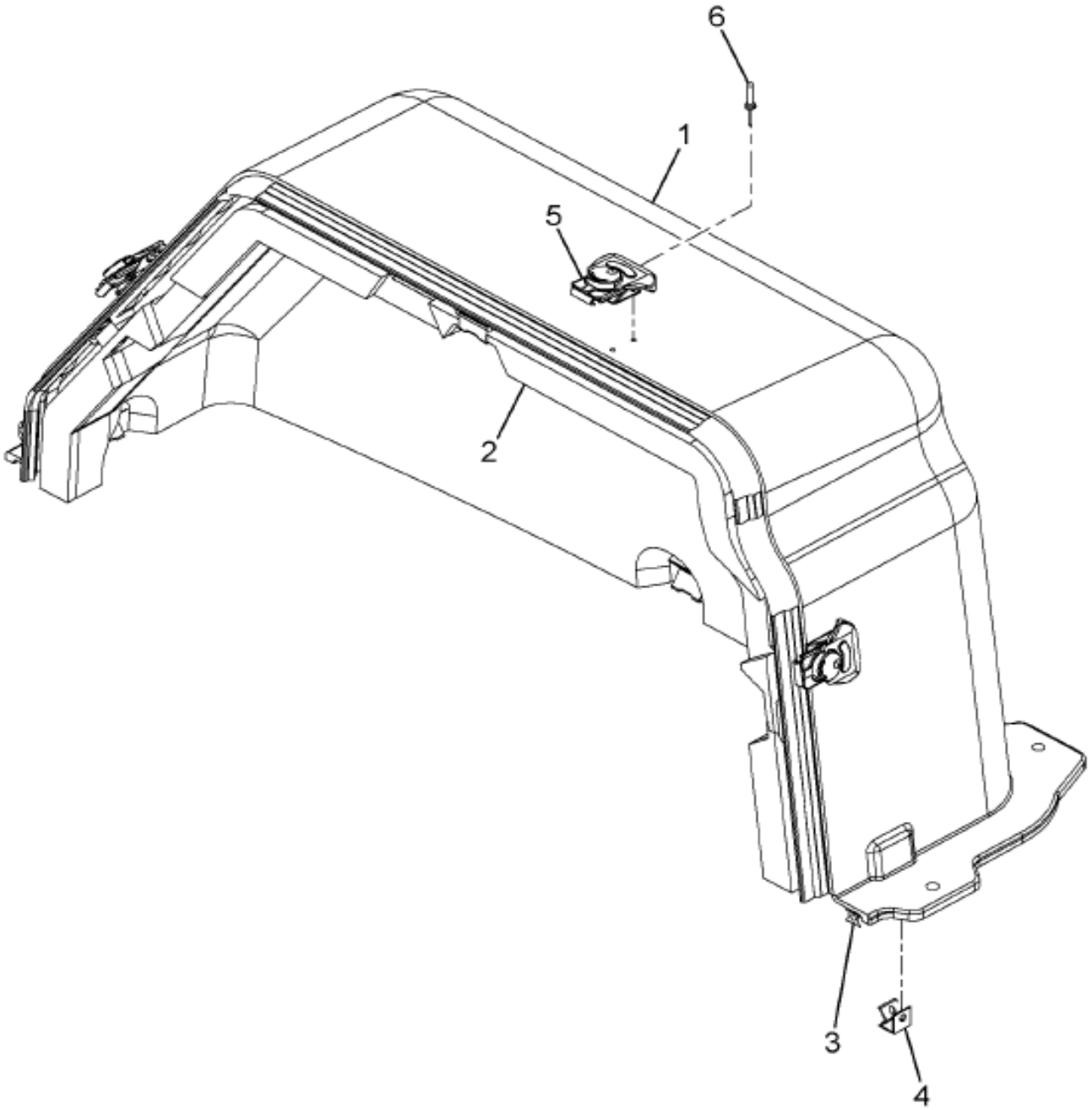

16-V02-0028-01 D08

Item	Part No.	Qty	Description	Kit	Var	Figure
1	3823558C1	1	COVER, ENGINE-RH/SS 107 HDD RE			
2	3586172C1	1	INSULATOR,CAB ENG COVER RH/SS			
3	3508978C2	AR	SEAL,ENGINE COVER			
4	3541216C1	6	FASTENER,ENGINE COVER CLIP			
5	3577405C1	3	LATCH,ENG CVR ROTRY DRAW LATCH			
6	3579107C1	6	RIVET,BLIND 1/8 DIA			

Grp 16

COPYRIGHT© 2011INTERNATIONAL TRUCK AND ENGINE CORP.

https://truckmanualshub.com/

Figure 3823561C91

COVER, ENGINE HDD REAR ASSY-PA

Item	Part No.	Qty	Description	Kit	Var	Figure
880		RF	NOTE: ASM BELOW COMPRISED OF ABOVE COMPONENTS			
881	3823561C91	RF	COVER, ENGINE HDD REAR ASSY-PA			

COPYRIGHT© 2011INTERNATIONAL TRUCK AND ENGINE CORP.

https://truckmanualshub.com/

Figure 0051C

GRAB HANDLE & MTG; CAB, INTERIOR, A & B-PILLAR

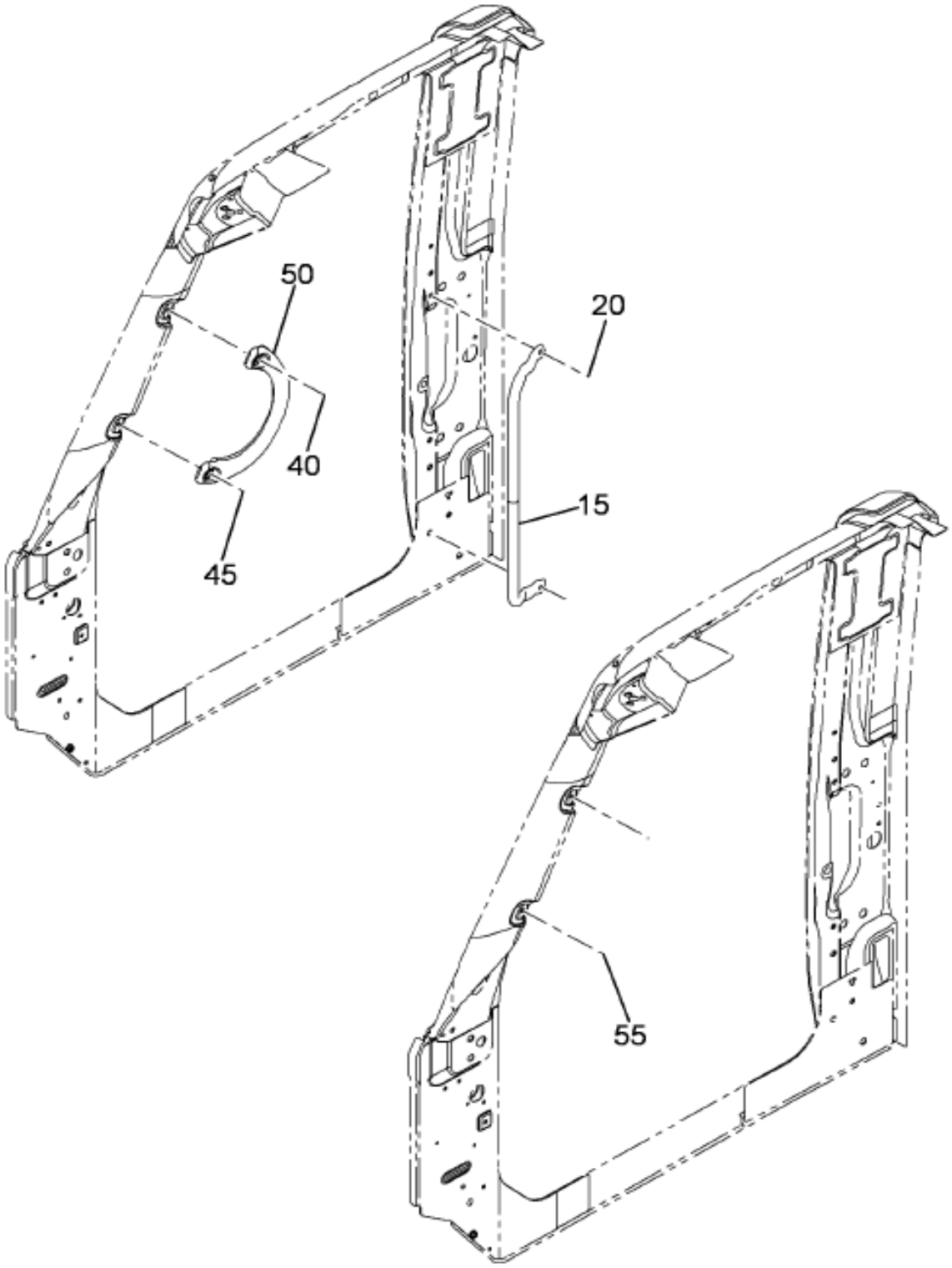

16-681-0047-01 E09

Item	Part No.	Qty	Description	Kit	Var	Figure
15	3542428C2	2	HANDLE,GRAB,B-PILLAR		0DB5D	
20	3514273C1	4	BOLT SEMS M8 X 1.25-35		0DB5D	
40	3510917C1	2	BOLT,SEMS ALL M6 35MM LONG HEX		0DB5D	
45	3510918C1	2	INSERT,THREADED M6 OPEN END		0DB5D	
50	3710932C2	1	HANDLE,GRAB,		0DB5D	

Grp 16

COPYRIGHT© 2011INTERNATIONAL TRUCK AND ENGINE CORP.

https://truckmanualshub.com/

Figure 0D327
HEADER PANEL INSTL; FRONT

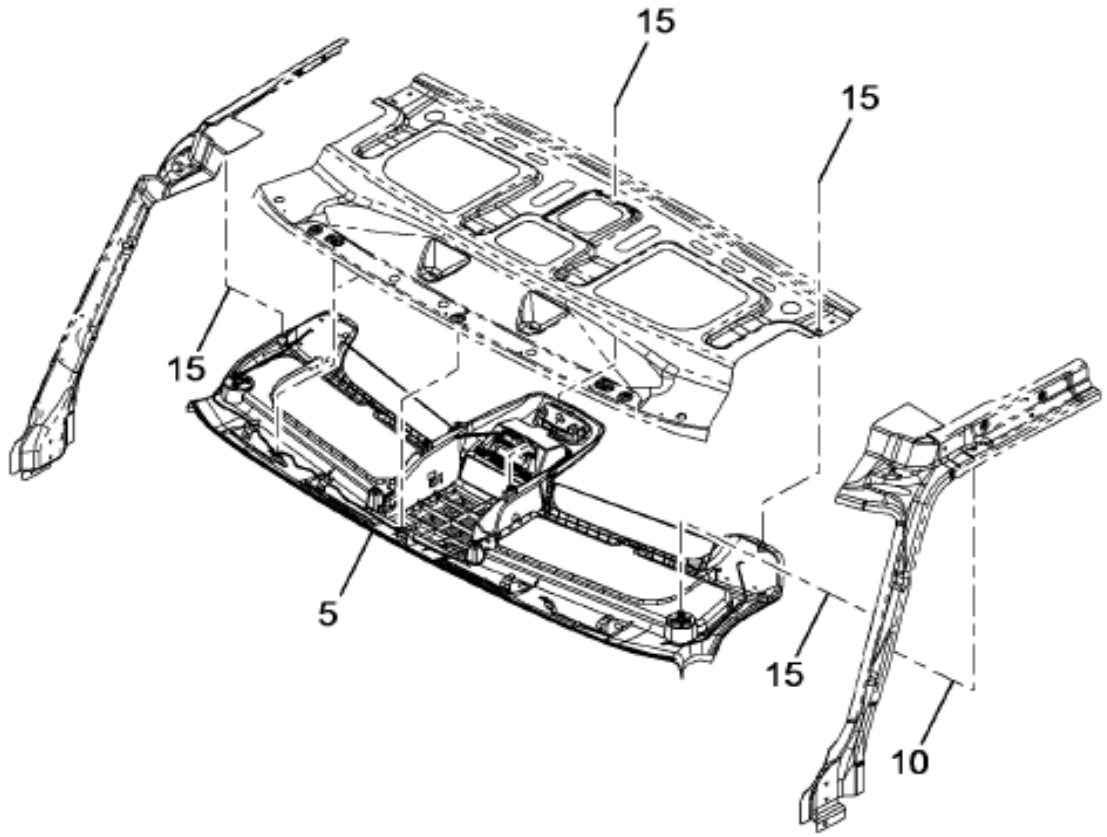

M-NGV-SS-7600-113
W/0016XVZ

16-620-0082-01 J11

Figure 1 of 2

COPYRIGHT© 2011INTERNATIONAL TRUCK AND ENGINE CORP.

https://truckmanualshub.com/

Figure 0D327

HEADER PANEL INSTL; FRONT

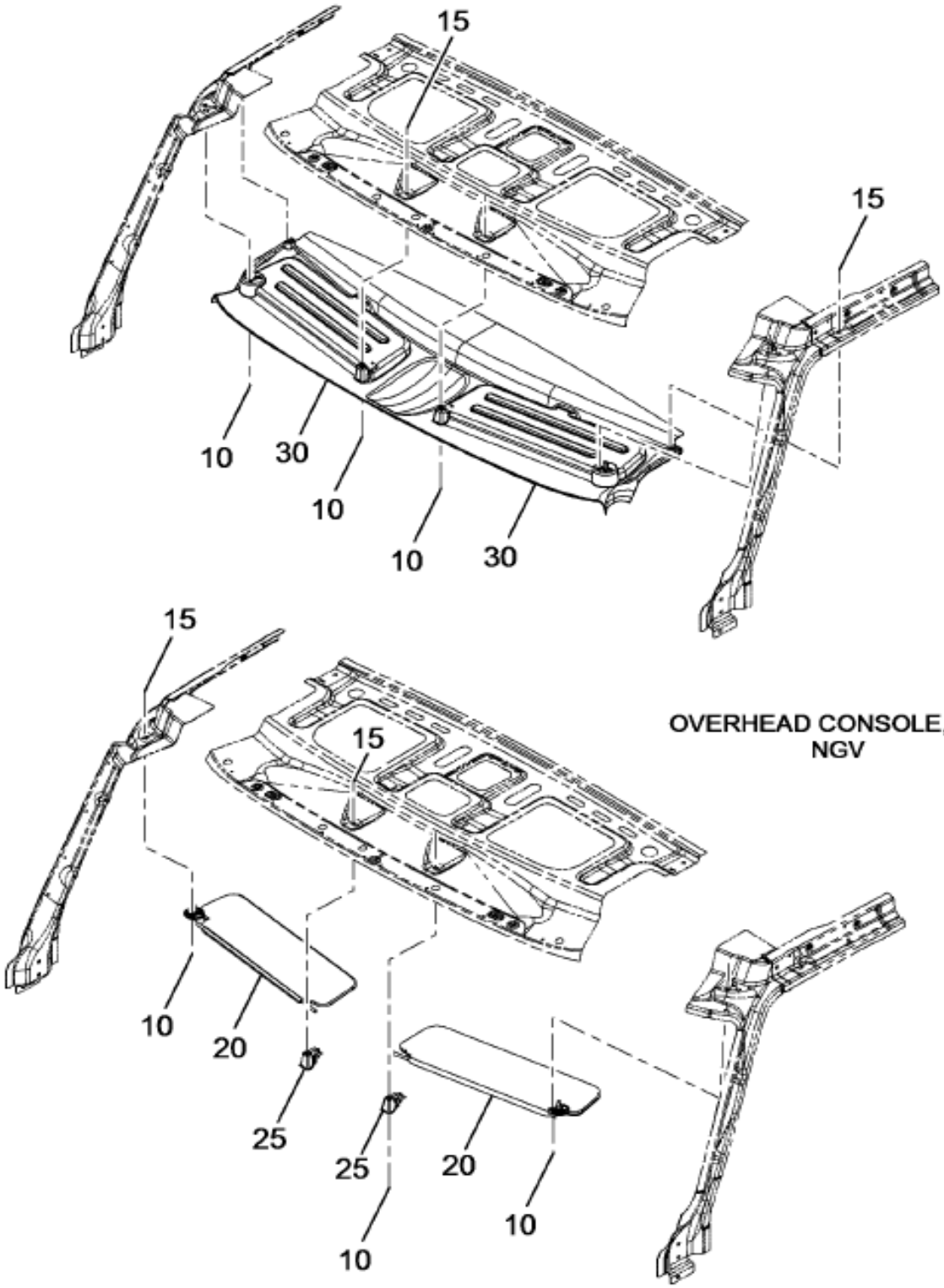

16-620-0082-02 K11

Item	Part No.	Qty	Description	Kit	Var	Figure
5	3546500C96	1	PANEL, OVERHEAD CONSOLE, STD		0PK02	3546500C96
10	3552454C1	14	SCREW,TAPPING M4.2 X 1.41-35MM		0PK02	
15	3548695C1	14	FASTENER,TRIM NYLON GROMMET		0PK02	

Grp 16

COPYRIGHT© 2011INTERNATIONAL TRUCK AND ENGINE CORP.

https://truckmanualshub.com/

Figure 3609781C1
LIGHT,DOME DRAWBRIDGE GRAY

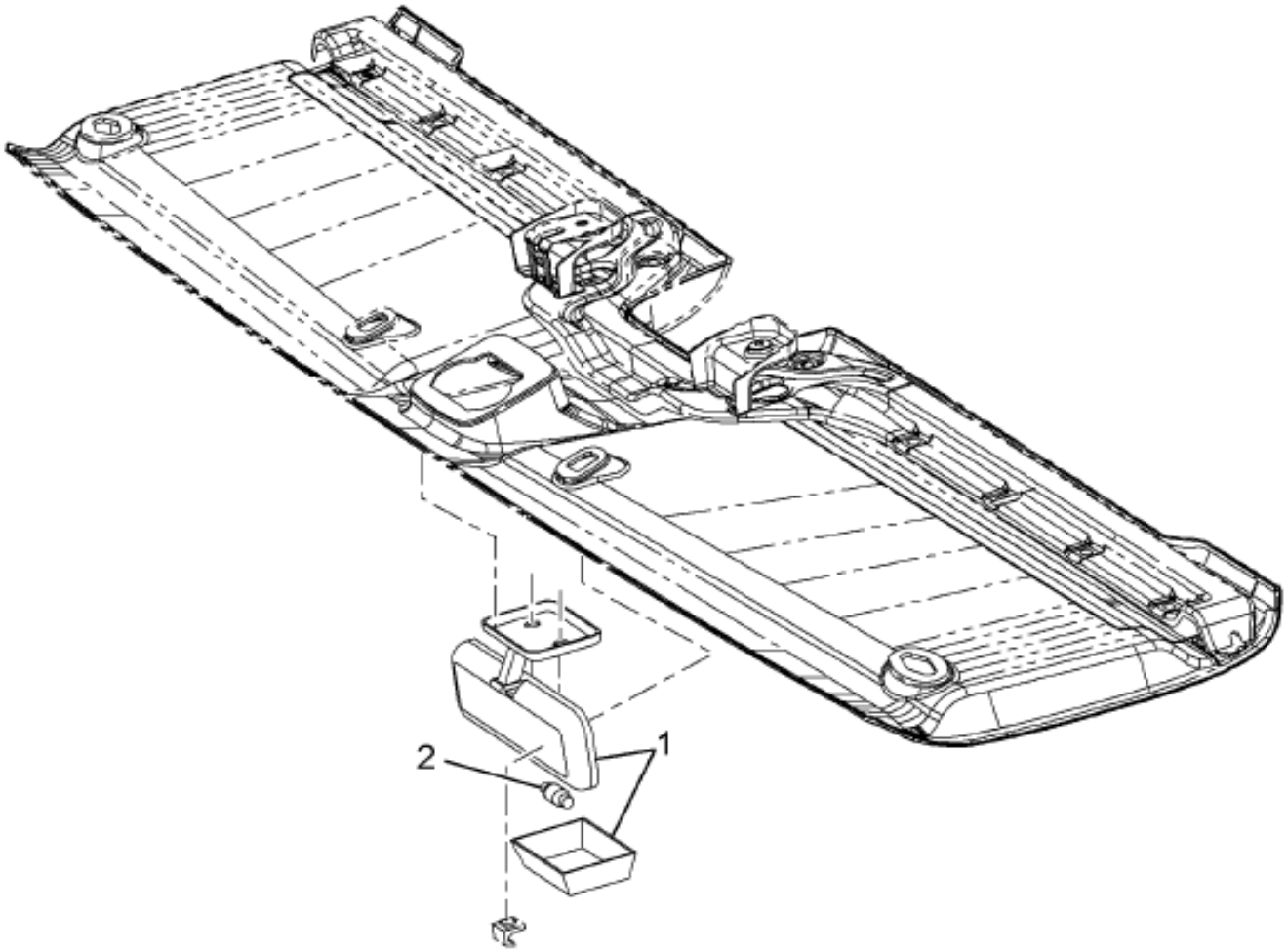

16-N02-0021-01 J07

Item	Part No.	Qty	Description	Kit	Var	Figure
1	2508816C1	1	LENS,DOME LIGHT			
2	GE2122	1	LAMP,INCANDESCENT 12V			
880		RF	NOTE: ASM BELOW COMPRISED OF ABOVE COMPONENTS			
881	3609781C1	RF	LIGHT,DOME DRAWBRIDGE GRAY			

COPYRIGHT© 2011INTERNATIONAL TRUCK AND ENGINE CORP.

https://truckmanualshub.com/

Figure 3546500C96

PANEL, OVERHEAD CONSOLE, STD

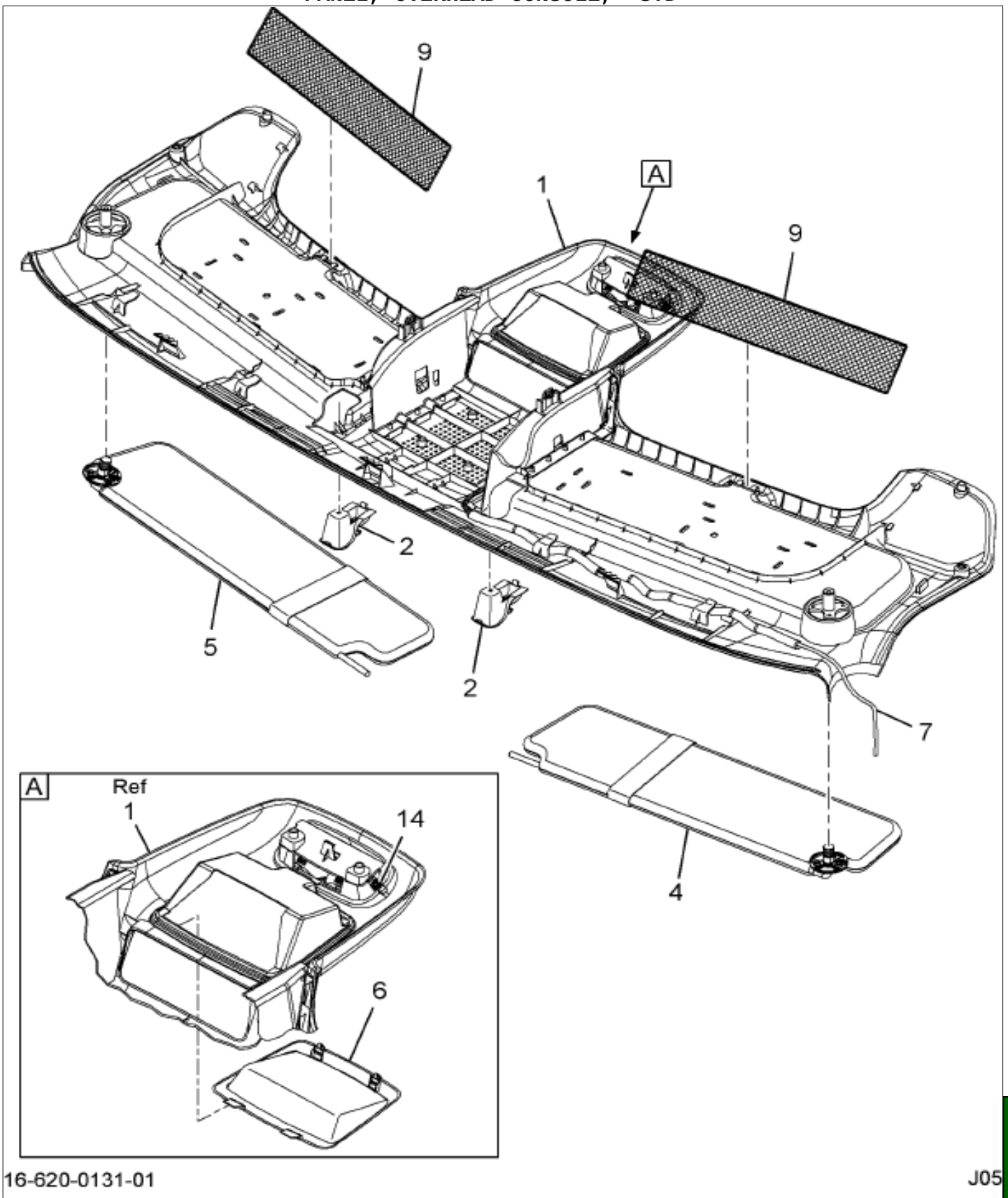

16-620-0131-01 J05

Item	Part No.	Qty	Description	Kit	Var	Figure
1	3604881C2	1	PANEL, OVERHEAD CONSOLE -			
2	3565232C1	1	CLIP,SUN VISOR ROD LH			
2		RF	LEFT			
2	3565233C1	1	CLIP,SUN VISOR ROD RH			
2		RF	RIGHT			
4	3565230C3	1	VISOR,SUN LH			

Grp 16

COPYRIGHT© 2011INTERNATIONAL TRUCK AND ENGINE CORP.

https://truckmanualshub.com/

Figure 3546500C96

PANEL, OVERHEAD CONSOLE, STD

Item	Part No.	Qty	Description	Kit	Var	Figure
4		RF	LEFT			
5	3565231C3	1	VISOR,SUN RH			
5		RF	RIGHT			
6	3605567C2	1	BEZEL,TRIM, CENTER			
7	3554613C92	1	HARNESS,ELEC; DOME/MAP L			
9	3600019C1	2	NET,RESTRAINT OVRHD CNSL			
14	3609781C1	1	LIGHT,DOME DRAWBRIDGE GRAY			3609781C1
880		RF	NOTE: ASM BELOW COMPRISED OF ABOVE COMPONENTS			
881	3546500C96	RF	PANEL, OVERHEAD CONSOLE, STD			

COPYRIGHT© 2011INTERNATIONAL TRUCK AND ENGINE CORP.

https://truckmanualshub.com/

Figure 0QFGB

HTR & A/C UNIT INSTL; W/DUCT

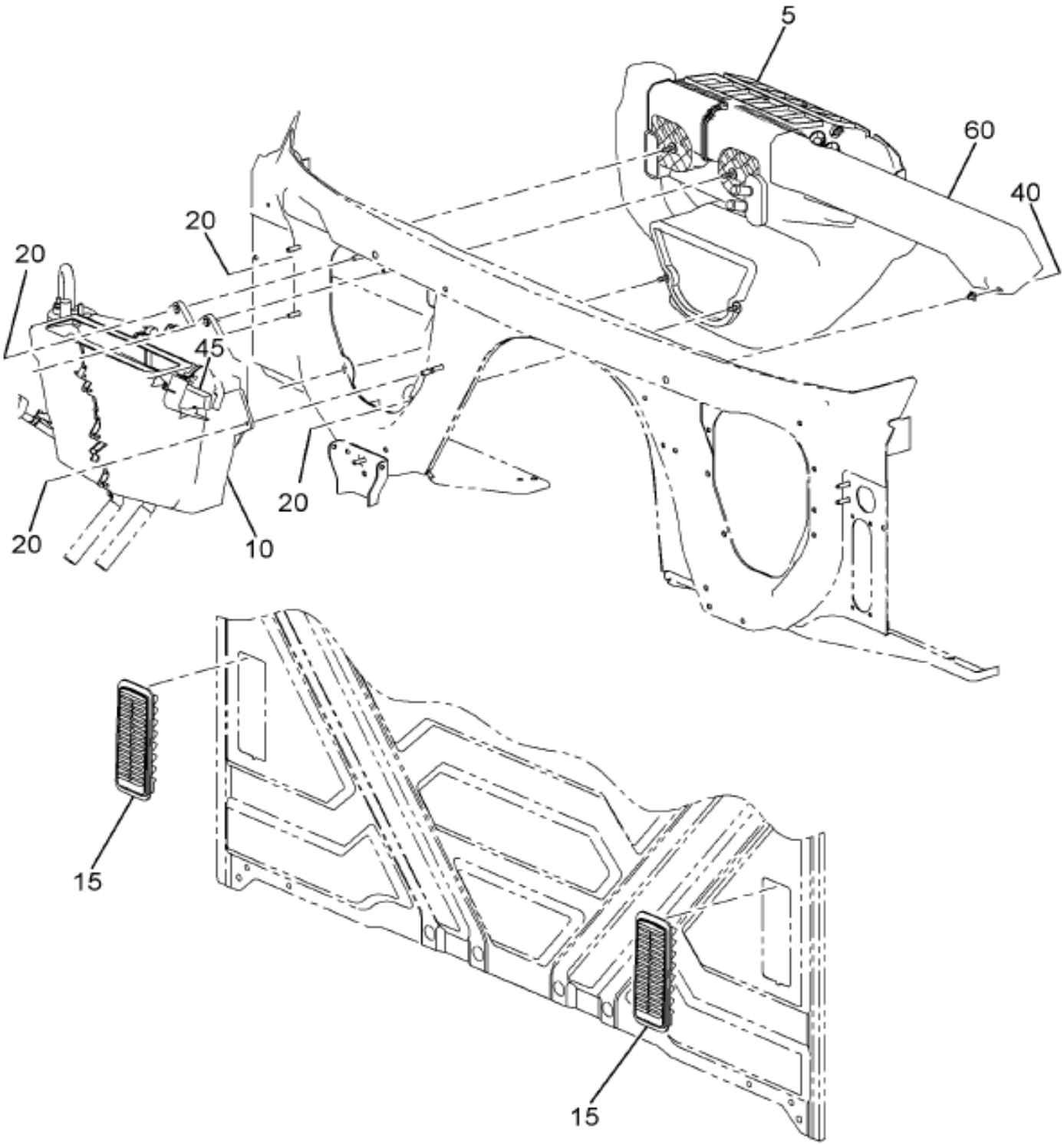

Grp 16

Figure 1 of 2

COPYRIGHT© 2011INTERNATIONAL TRUCK AND ENGINE CORP.

https://truckmanualshub.com/

Figure 0QPGB

HTR & A/C UNIT INSTL; W/DUCT

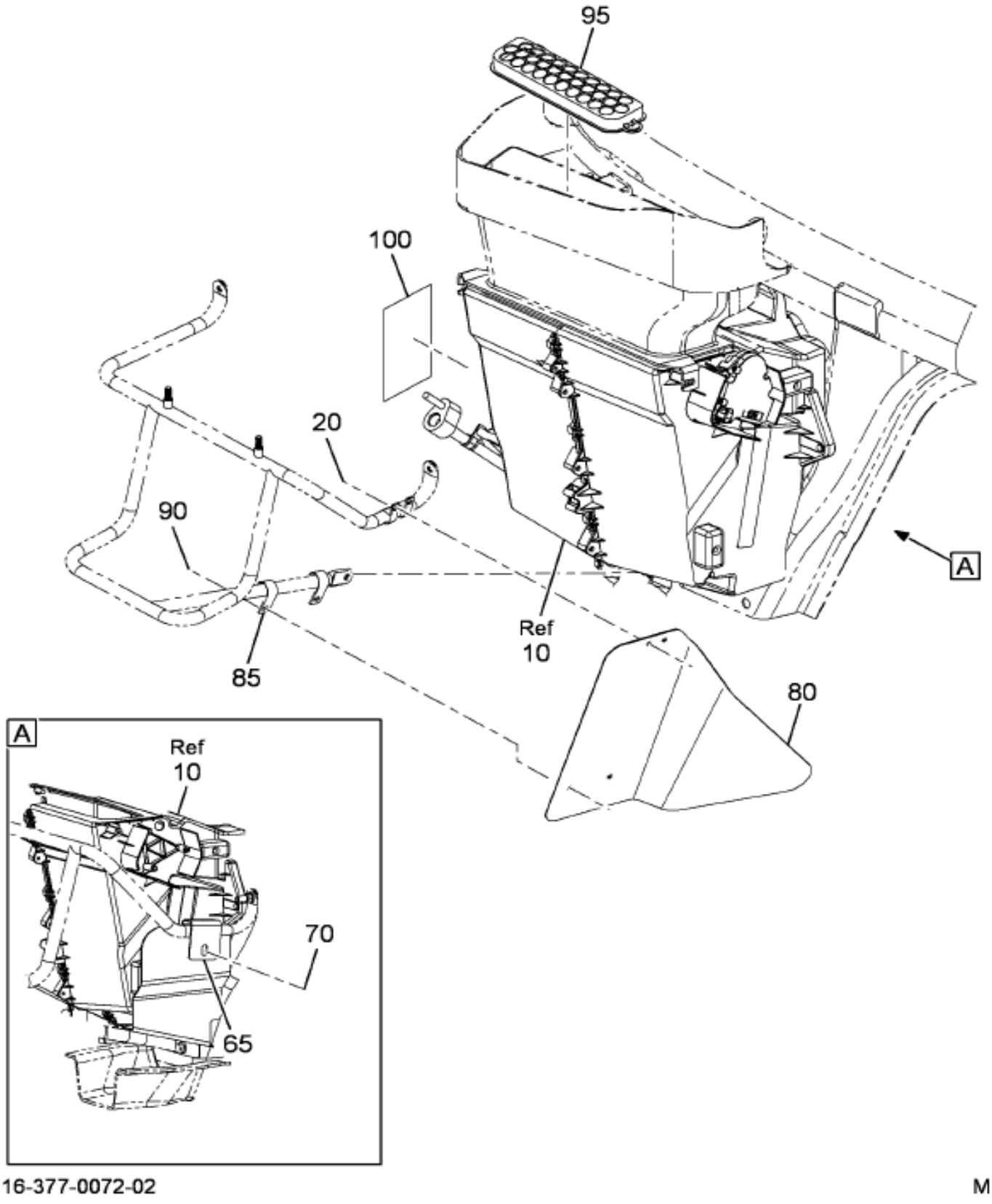

Item	Part No.	Qty	Description	Kit	Var	Figure
5	3677090C91	1	HEATER, FRESH AIR ASSY-EXPORT		0QPGF	3677090C91
10	3670125C93	1	AIR CONDITIONER,ASSY, LOW COST		0QPGF	3670125C93
15	3660647C1	2	VENT,CAB EXHAUSTER		0QPGB	
20	3534873C2	8	NUT,HEX*M8 X 1.25 W/CAPTURE WA		0QPGB	
40	3552454C1	1	SCREW,TAPPING M4.2 X 1.41-35MM		0QPGB	
40	3548695C1	1	FASTENER,TRIM NYLON GROMMET		0QPGB	

COPYRIGHT© 2011INTERNATIONAL TRUCK AND ENGINE CORP.

https://truckmanualshub.com/

Figure 0QPGB

HTR & A/C UNIT INSTL; W/DUCT

Item	Part No.	Qty	Description	Kit	Var	Figure
45	3548705C1	1	FILTER,MICRON FRESH AIR		0QPJF	
60	3542600C1	1	DUCT,FLOOR DRIVER LHD		0QPGF	
95	3791081C91	1	FILTER,ASSY CAB FRESH A/C		0RYWJ	3791081C91
100	3609753C3	1	PRODUCT GRAPHIC SVC HVAC FLTR		0RZ51	
110	2606230C1	2	SHIELD,HEAT SHRINK 80MM		0QPGF	

COPYRIGHT© 2011INTERNATIONAL TRUCK AND ENGINE CORP.

https://truckmanualshub.com/

Figure 3670125C93

AIR CONDITIONER,ASSY, LOW COST

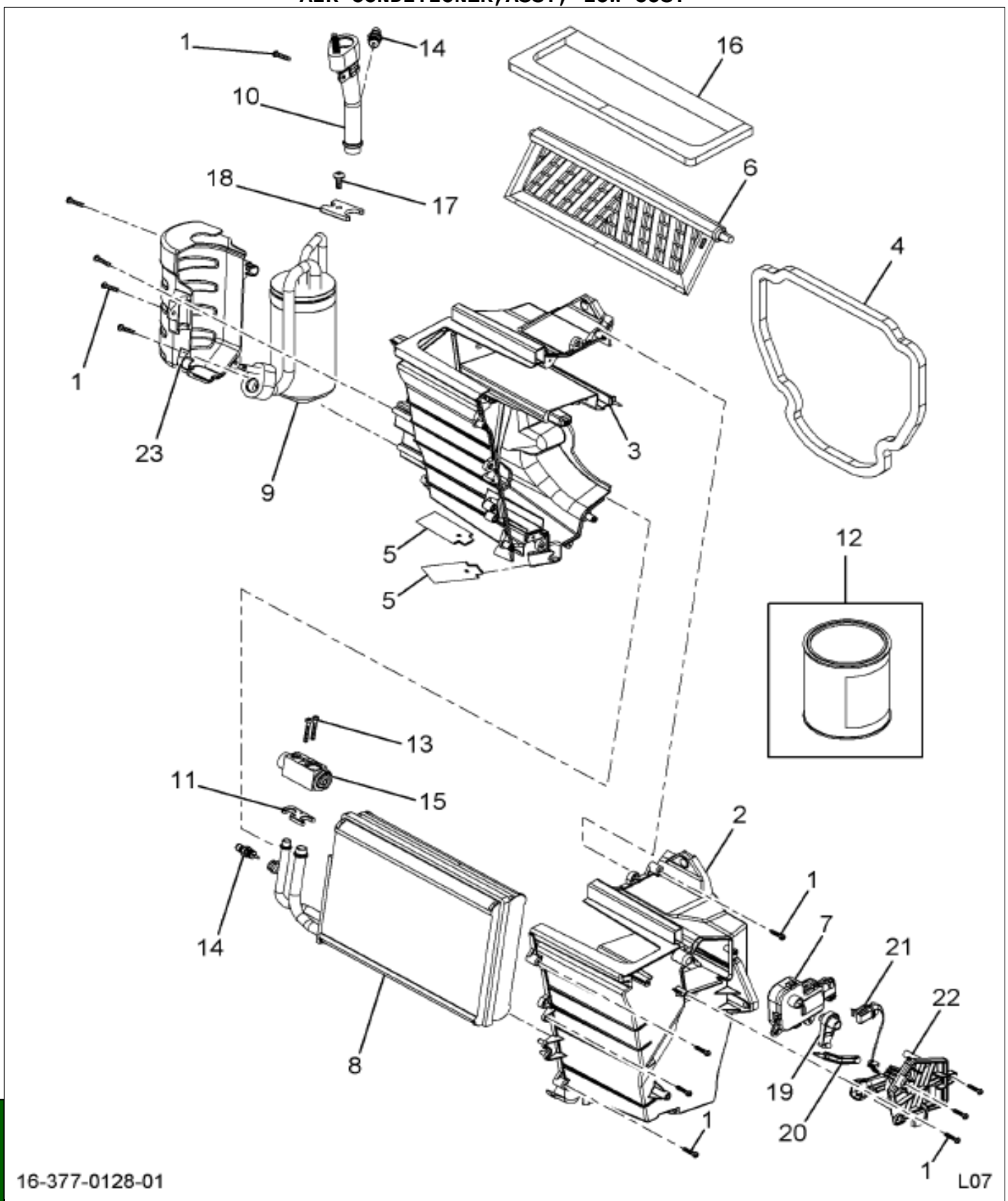

Item	Part No.	Qty	Description	Kit	Var	Figure
1	3612136C1	KT	SCREW,KIT TORX RND HD (30 PCK)			
2	3670126C1	1	DUCT,A/C LEFT HSG TXV			
2		RF	LEFT			
3	3670127C1	1	DUCT,A/C RIGHT HSG TXV			
3		RF	RIGHT			
4	3542572C2	1	SEAL,DUCT AIR COND			

COPYRIGHT© 2011INTERNATIONAL TRUCK AND ENGINE CORP.

https://truckmanualshub.com/

Figure 3670125C93

AIR CONDITIONER,ASSY, LOW COST

Item	Part No.	Qty	Description	Kit	Var	Figure
5	3542573C3	2	TUBE,DRAIN DUCKBILL			
6	3670117C1	1	DOOR,AIR COND, FRESH/RECIR AIR			
7	3542606C1	1	MOTOR,CNTRL MODE DR ACTUATORSR			
8	3670133C91	1	EVAPORATOR,AIR COND, ASSY-LOW			3670133C91
9	3670135C91	1	FILTER,DRIER AIR COND, ASSY, H			3670135C91
10	3670136C92	1	TUBE, ASSY SUCTION LINE-LOW CO			3670136C92
11	3660855C1	1	PLATE,, MOUNTING-TXV INLET			
12	2643016R1	AR	FLUID,A/C			
13	3599587C1	2	SCREW,SPL TXV RSTNR (2 PCK)			
14	3622764C3	2	SENSOR, FREON THERMISTOR ASSY			
15	3660853C2	1	VALVE,EXPANSION AIR COND, HPV-			
16	3554237C2	1	SEAL,DUCT AIR COND COWL TRAY			
17	3660863C1	1	SET,SCREW M6X16 T30 TRX PKG 20			
18	3660861C1	1	PLATE,, MOUNTING-TVX OUTLET			
19	3670119C1	1	LEVER, FRESH/RECIR DOOR			
20	3670118C1	1	ARM, FRESH/AIR DOOR LINKAGE			
21	3670120C1	1	HARNESS,AIR COND, FRESH/RECIR			
22	3670128C1	1	COVER,RECIRC ACTUATOR MTR TXV			
23	3670137C1	1	COVER,RCVR DRIER TXV			
880		RF	NOTE: ASM BELOW COMPRISED OF ABOVE COMPONENTS			
881	3670125C93	RF	AIR CONDITIONER,ASSY, LOW COST			

Grp 16

COPYRIGHT© 2011INTERNATIONAL TRUCK AND ENGINE CORP.

https://truckmanualshub.com/

Figure 3670133C91
EVAPORATOR,AIR COND, ASSY-LOW

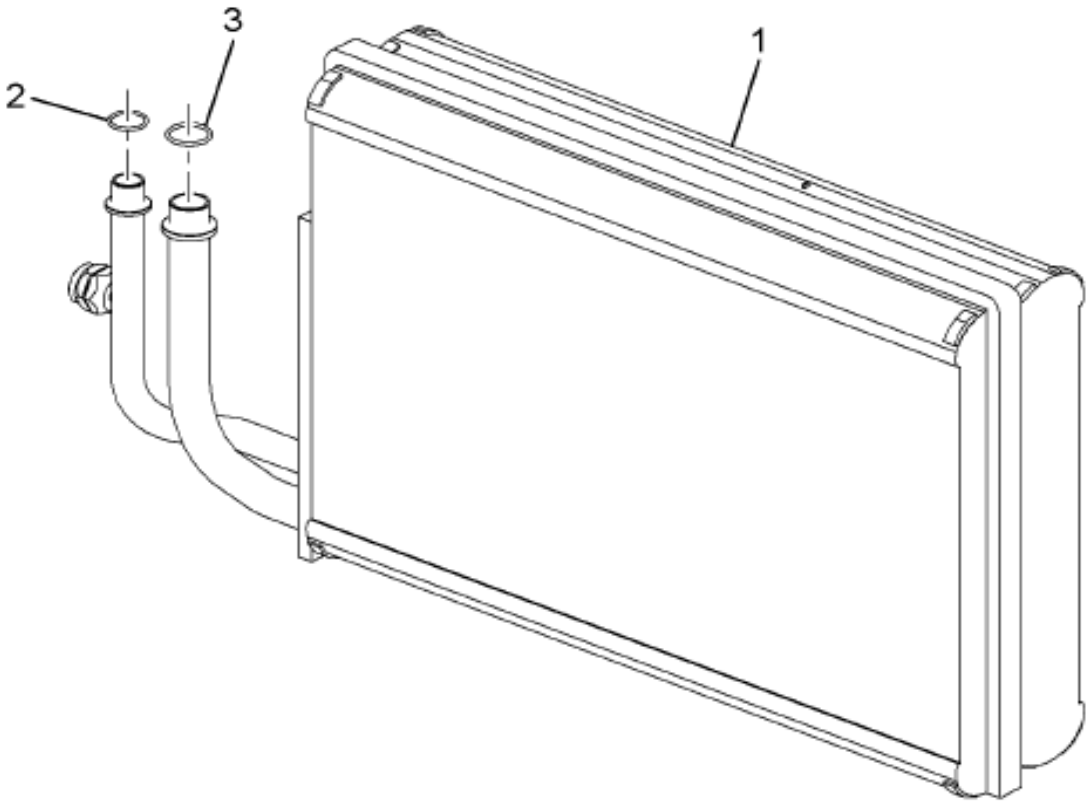

16-377-0129-01 E07

Item	Part No.	Qty	Description	Kit	Var	Figure
1	3670132C1	1	EVAPORATOR,ASSY A/C W/FOAM			3670132C1
2	3660864C1	1	RING,O 10.82 X 1.78 10 PACK			
3	3660865C1	1	KIT,0-RING 14IDX1.78 (10 PACK)			
880		RF	NOTE: ASM BELOW COMPRISED OF ABOVE COMPONENTS			
881	3670133C91	RF	EVAPORATOR,AIR COND, ASSY-LOW			

COPYRIGHT© 2011INTERNATIONAL TRUCK AND ENGINE CORP.

https://truckmanualshub.com/

Figure 3670132C1

EVAPORATOR,ASSY A/C W/FOAM

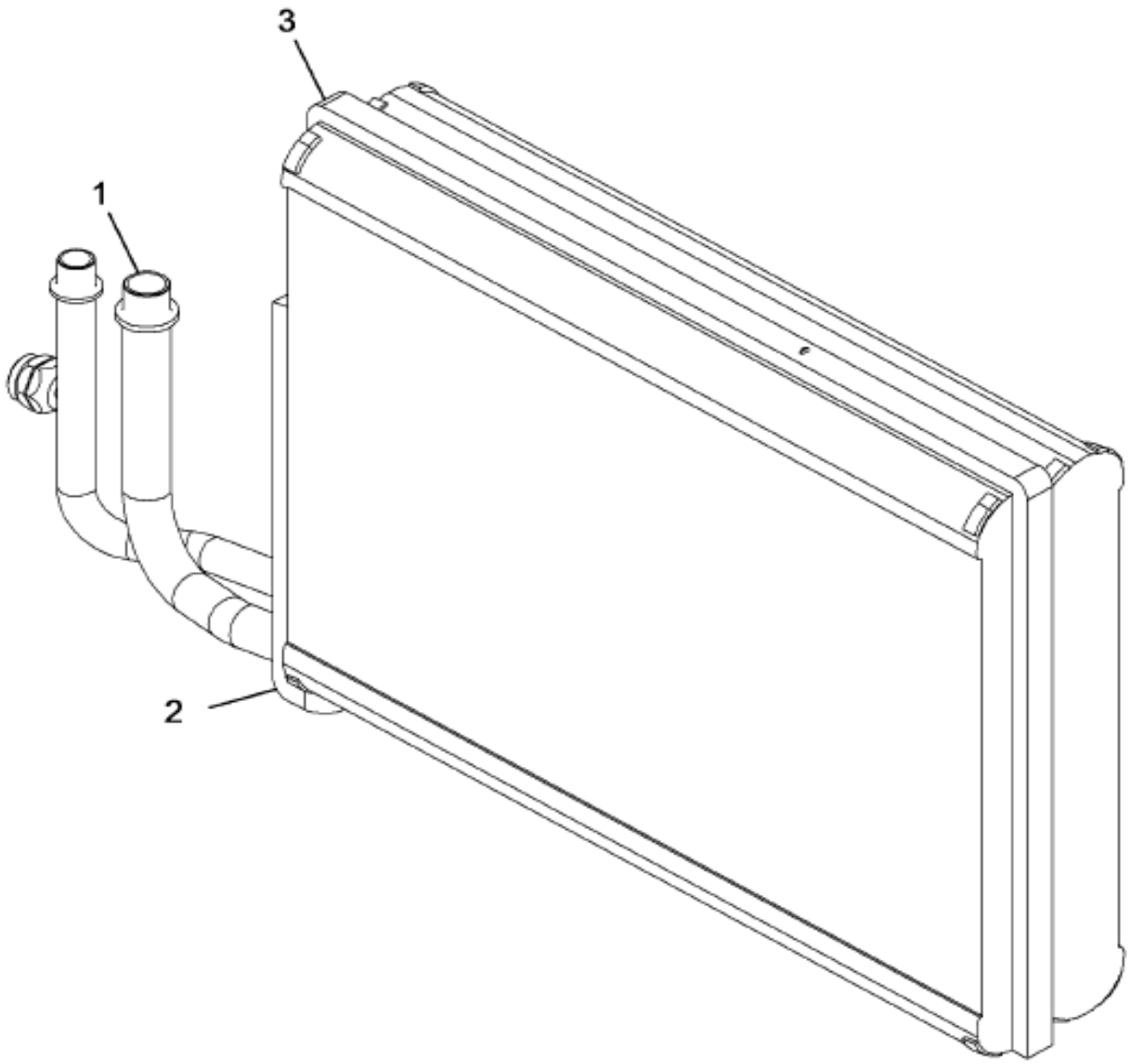

16-377-0207-01 J11

Item	Part No.	Qty	Description	Kit	Var	Figure
1	3670129C1	1	EVAPORATOR,AIR COND, LOW COST			
2	3670130C1	1	SEAL, EVAPORATOR CORE TO CASE-			
3	3670131C1	1	SEAL, EVAPORATOR CORE-LOW COST			
880		RF	NOTE: ASM BELOW COMPRISED OF ABOVE COMPONENTS			
881	3670132C1	RF	EVAPORATOR,ASSY A/C W/FOAM			

Grp 16

COPYRIGHT© 2011INTERNATIONAL TRUCK AND ENGINE CORP.

https://truckmanualshub.com/

Figure 3791081C91

FILTER,ASSY CAB FRESH A/C

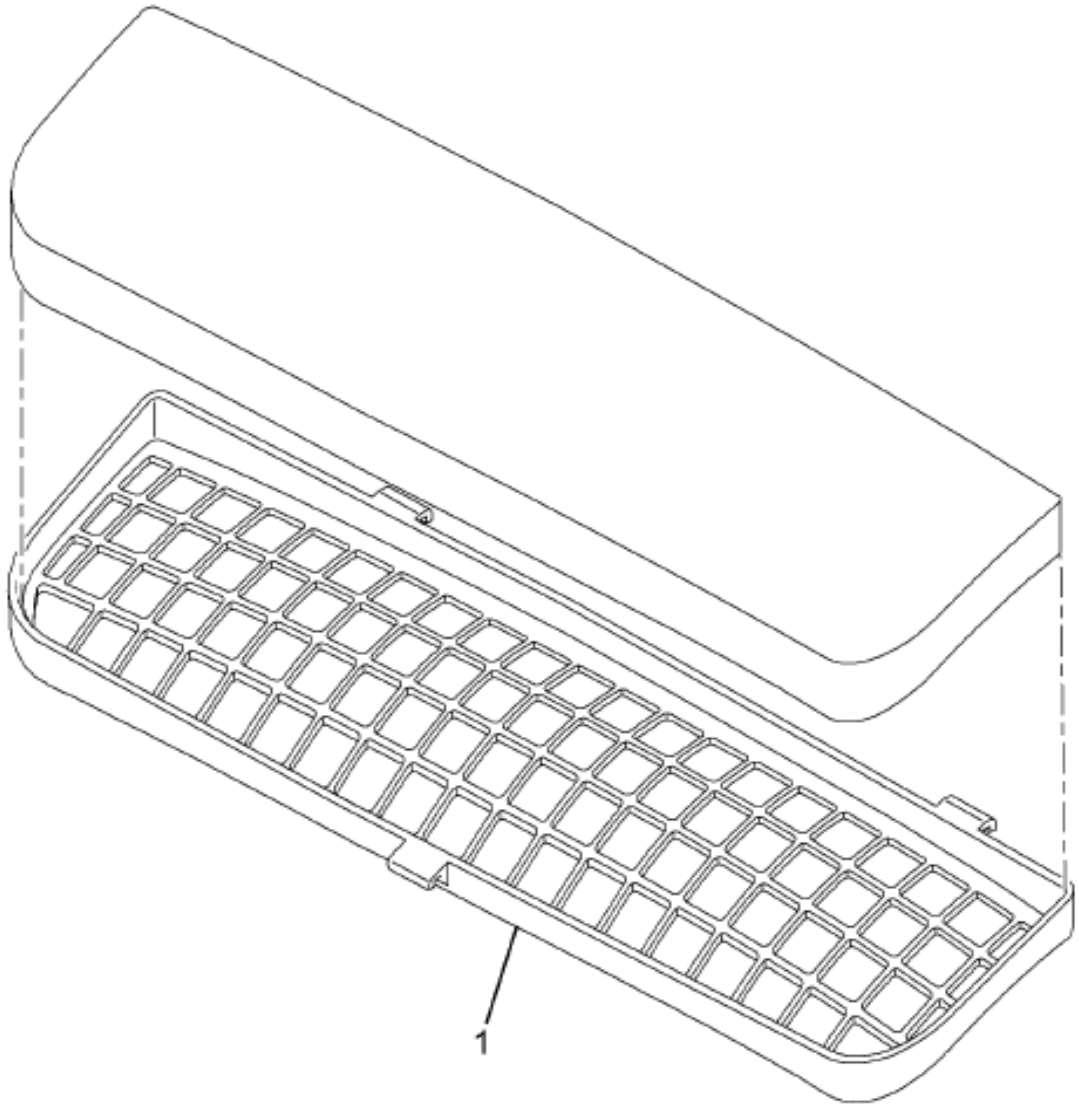

16-377-0104-01 M06

Item	Part No.	Qty	Description	Kit	Var	Figure
1	CFFNR6100	1	ELEMENT,AIR FILTER HVAC			
880		RF	NOTE: ASM BELOW COMPRISED OF ABOVE COMPONENTS			
881	3791081C91	RF	FILTER,ASSY CAB FRESH A/C			

COPYRIGHT© 2011INTERNATIONAL TRUCK AND ENGINE CORP.

https://truckmanualshub.com/

Figure 3670135C91
FILTER,DRIER AIR COND, ASSY, H

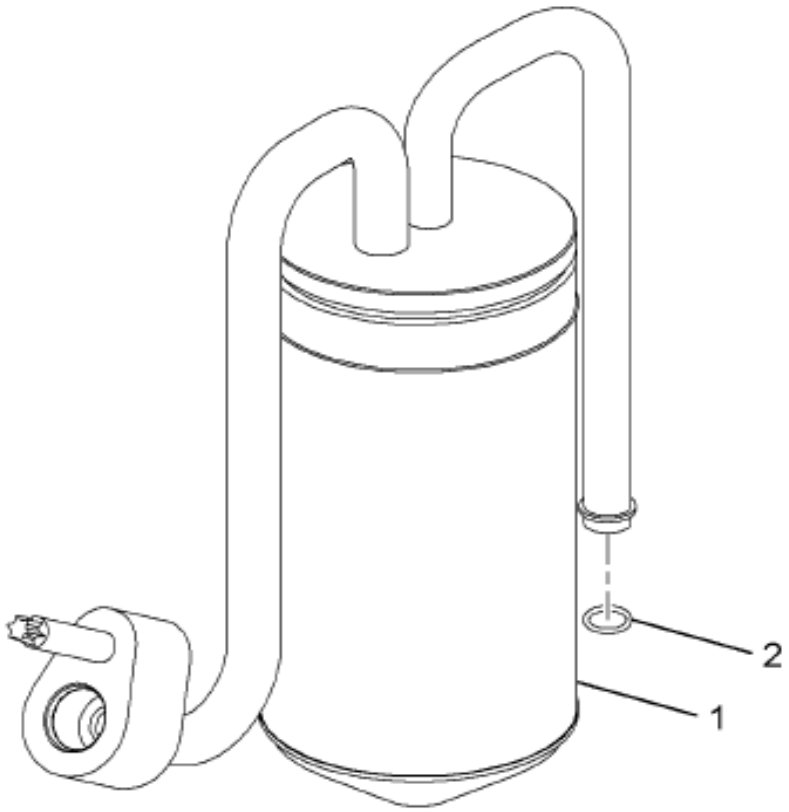

16-377-0130-01 E07

Grp 16

Item	Part No.	Qty	Description	Kit	Var	Figure
1	3670134C1	1	FILTER DRIER AIR COND HPV TXV			
2	3661318C1	1	RING,O,SEAL 7.65X1.78 10PK SET			
880		RF	NOTE: ASM BELOW COMPRISED OF ABOVE COMPONENTS			
881	3670135C91	RF	FILTER,DRIER AIR COND, ASSY, H			

COPYRIGHT© 2011INTERNATIONAL TRUCK AND ENGINE CORP.

https://truckmanualshub.com/

Figure 3343211C93

HARNESS,CAB/PLATFORM WIRING BA

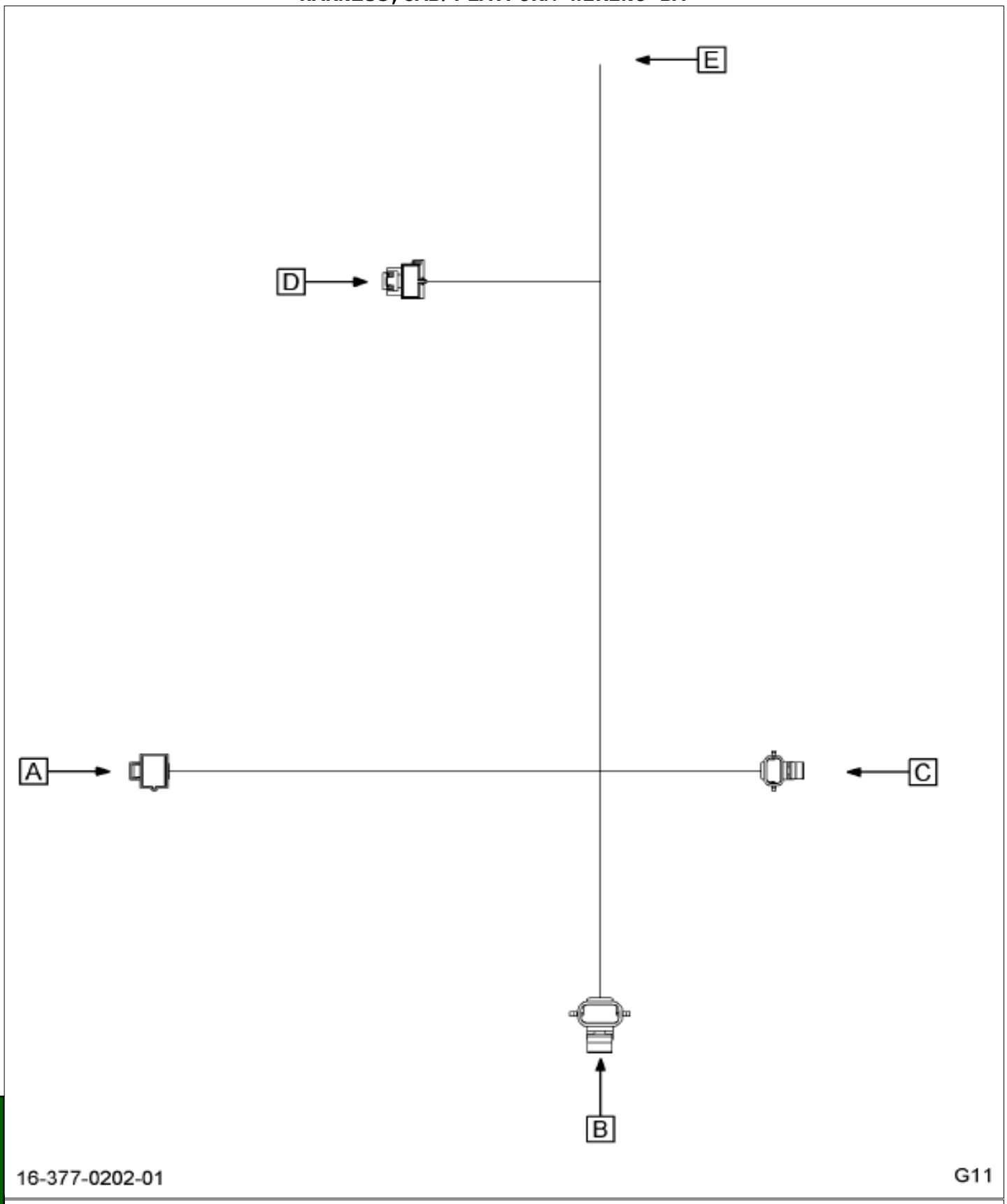

Figure 1 of 2

COPYRIGHT© 2011INTERNATIONAL TRUCK AND ENGINE CORP.

https://truckmanualshub.com/

Figure 3343211C93

HARNESS,CAB/PLATFORM WIRING BA

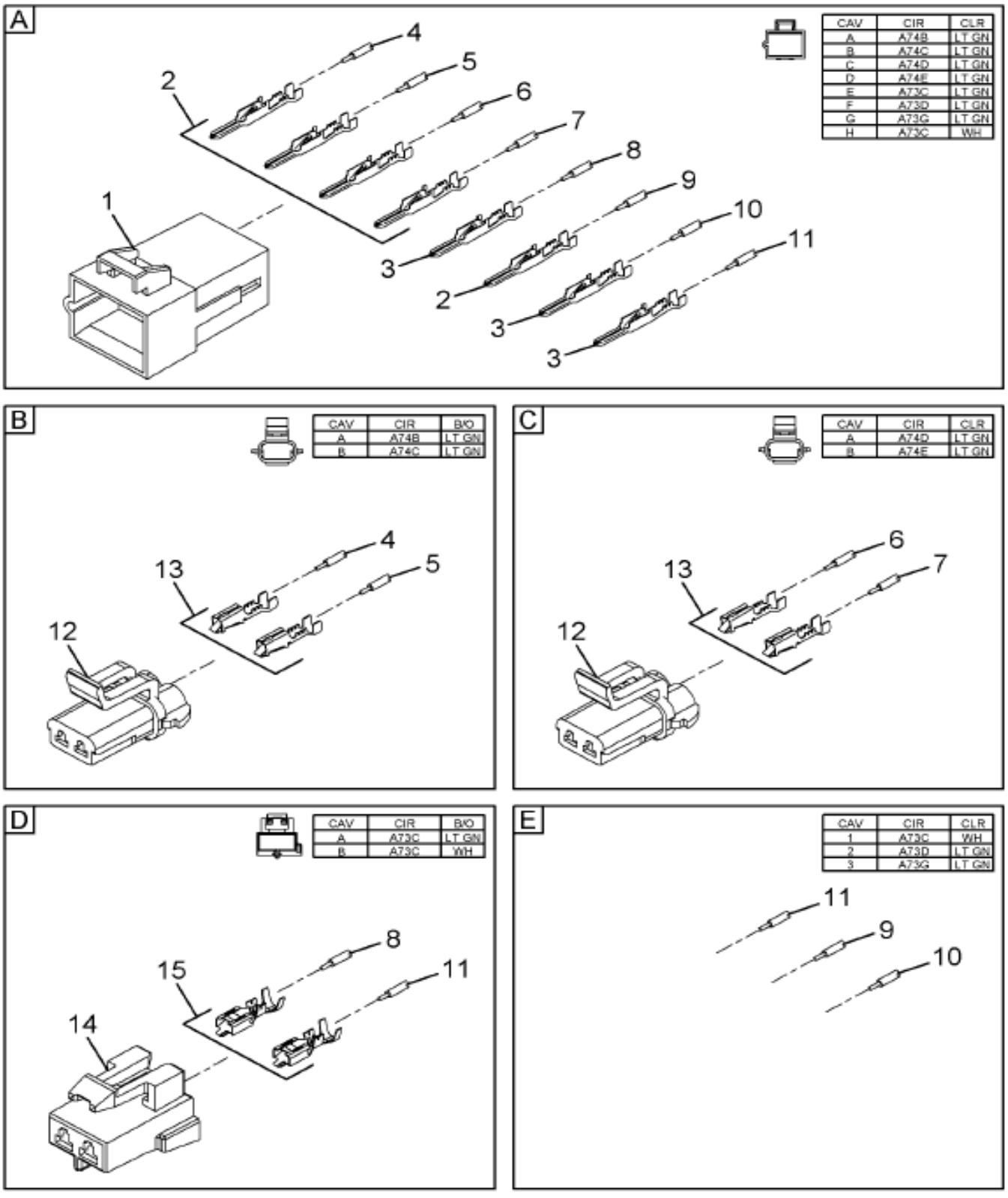

16-377-0202-02 G11

Item	Part No.	Qty	Description	Kit	Var	Figure
1	2005836C1	1	CONNECTOR,CABLE 8M M/P 280			
2	1661212C1	5	TERMINAL,MALE 280 SERIES			
3	3534167C1	3	TERMINAL,CABLE*MALE M/P 280 SE			
4		AR	CABLE, 18 GA			
5		AR	CABLE, 18 GA			
6		AR	CABLE, 18 GA			

Grp 16

COPYRIGHT© 2011INTERNATIONAL TRUCK AND ENGINE CORP.

https://truckmanualshub.com/

Figure 3545211C93

HARNESS,CAB/PLATFORM WIRING BA

Item	Part No.	Qty	Description	Kit	Var	Figure
7		AR	CABLE, 18 GA			
8		AR	CABLE, 18 GA			
9		AR	CABLE, 18 GA			
10		AR	CABLE, 18 GA			
11		AR	CABLE, 18 GA			
12		2	CONNECTOR, FEMALE			
13	2033819C1	4	TERMINAL,CABLE FOR 16 GA ONLY			
14	3599253C1	1	CONNECTOR,BODY,2-WAY F P480 M			
15		2	TERMINAL, FEMALE			
880		RF	NOTE: ASM BELOW COMPRISED OF ABOVE COMPONENTS			
881	3545211C93	RF	HARNESS,CAB/PLATFORM WIRING BA			

COPYRIGHT© 2011INTERNATIONAL TRUCK AND ENGINE CORP.

https://truckmanualshub.com/

Figure 3677090C91
HEATER, FRESH AIR ASSY-EXPORT

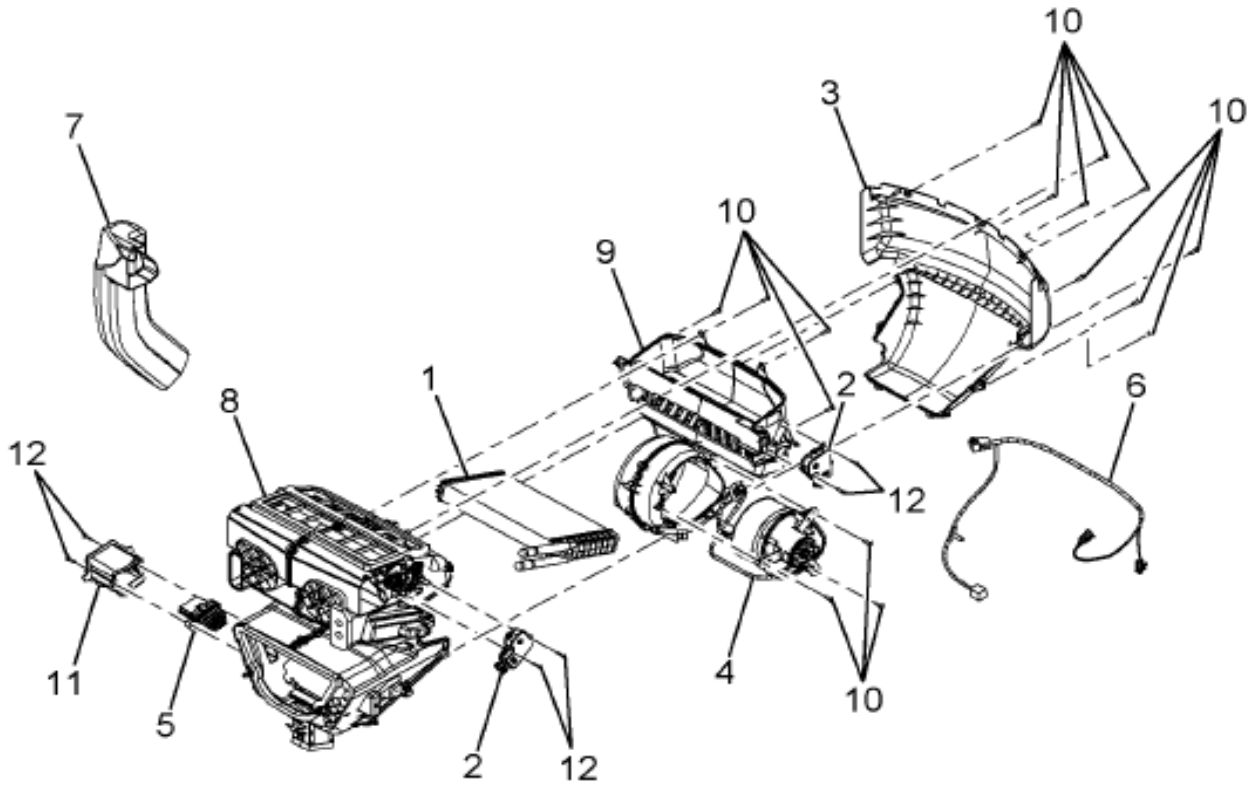

16-377-0139-01 K07

Item	Part No.	Qty	Description	Kit	Var	Figure
1	3542604C3	1	CORE,ASM HEATER			
2	3542606C1	2	MOTOR,CNTRL MODE DR ACTUATORSR			
3	3677091C1	1	COVER, REAR ACCESS-EXPORT			
3	3542607C2	1	COVER,TRIM HEATER			
4	3674285C1	1	BLOWER,HEATER,			
4	3542611C2	1	BLOWER,HEATER TEMP BLEND			

Grp 16

COPYRIGHT© 2011INTERNATIONAL TRUCK AND ENGINE CORP.

https://truckmanualshub.com/

Figure 3677090C91

HEATER, FRESH AIR ASSY-EXPORT

Item	Part No.	Qty	Description	Kit	Var	Figure
5	3562102C1	1	RESISTOR,ELEC FOR HTR OR A/C			
5	3626414C1	1	RESISTOR,LINEAR PWR MODULE			
6	3545211C93	1	HARNESS,CAB/PLATFORM WIRING BA			3545211C93
6	3674290C91	1	HARNESS, HEATER MODULE			
7	3678806C1	1	DUCT, PASSENGER-ONE PIECE			
8	3674288C1	1	HOUSING,HEATER, BLOWER MAIN			
8	3825822C1	1	HOUSING,HEATER, MAIN			
9	3674286C1	1	HOUSING,HEATER W/O DOOR/SEAL			3674286C1
9	3825823C1	1	HOUSING,HTR BLWR OLD VER W/DOO			
10	3542582C1	18	SCREW,SPL HI-LO #11-16 X 3/4			
11	3674291C1	1	ADAPTER, ASSY-LPM SURROUND SEA			
11	3576604C1	1	COVER,MOTOR BLOWER LPM			
12	3579582C1	4	SCREW,SPL PTM 4X20 (20 PER PCK			
880		RF	NOTE: ASM BELOW COMPRISED OF ABOVE COMPONENTS			
881	3677090C91	RF	HEATER, FRESH AIR ASSY-EXPORT			

COPYRIGHT© 2011INTERNATIONAL TRUCK AND ENGINE CORP.

https://truckmanualshub.com/

Figure 3674286C1

HOUSING,HEATER W/O DOOR/SEAL

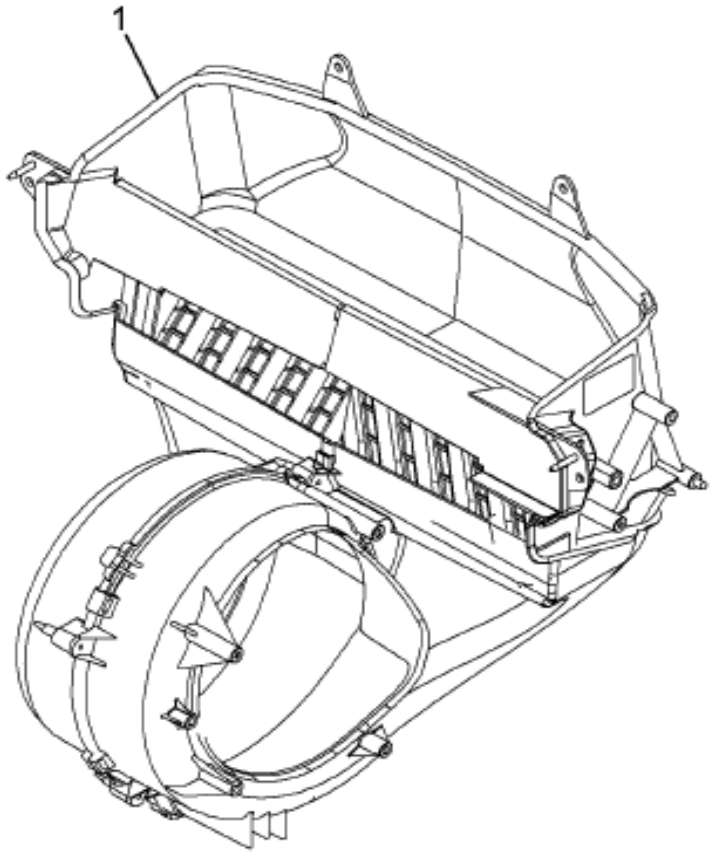

16-377-0150-01 C09

Grp 16

Item	Part No.	Qty	Description	Kit	Var	Figure
1	2601387C1	1	DOOR,HEATER			
880		RF	NOTE: ASM BELOW COMPRISED OF ABOVE COMPONENTS			
881	3674286C1	RF	HOUSING,HEATER W/O DOOR/SEAL			

COPYRIGHT© 2011INTERNATIONAL TRUCK AND ENGINE CORP.

https://truckmanualshub.com/

Figure 3670136C92
TUBE, ASSY SUCTION LINE-LOW CO

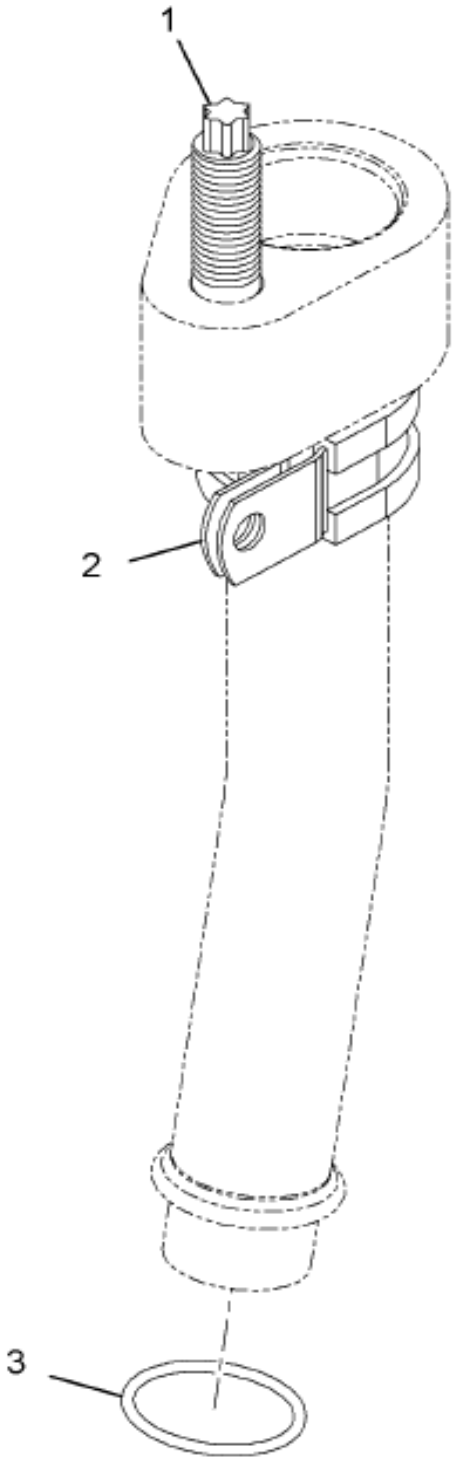

16-377-0198-01 F11

Item	Part No.	Qty	Description	Kit	Var	Figure
1	3544699C1	1	STUD GROOVED DRIVE*A/C FTG M8			
2	3847466C1	1	CLAMP,PIPE, CUSHIONED-SINGLE 3			
3	3660862C1	1	RING,O 17.17 X 1.78 10 PACK			
880		RF	NOTE: ASM BELOW COMPRISED OF ABOVE COMPONENTS			
881	3670136C92	RF	TUBE, ASSY SUCTION LINE-LOW CO			

COPYRIGHT© 2011INTERNATIONAL TRUCK AND ENGINE CORP.

https://truckmanualshub.com/

Figure 0RNX1

HTR OR HTR & A/C HOSE ROUTING; W/ CUM ISM ENG (SS HDD)

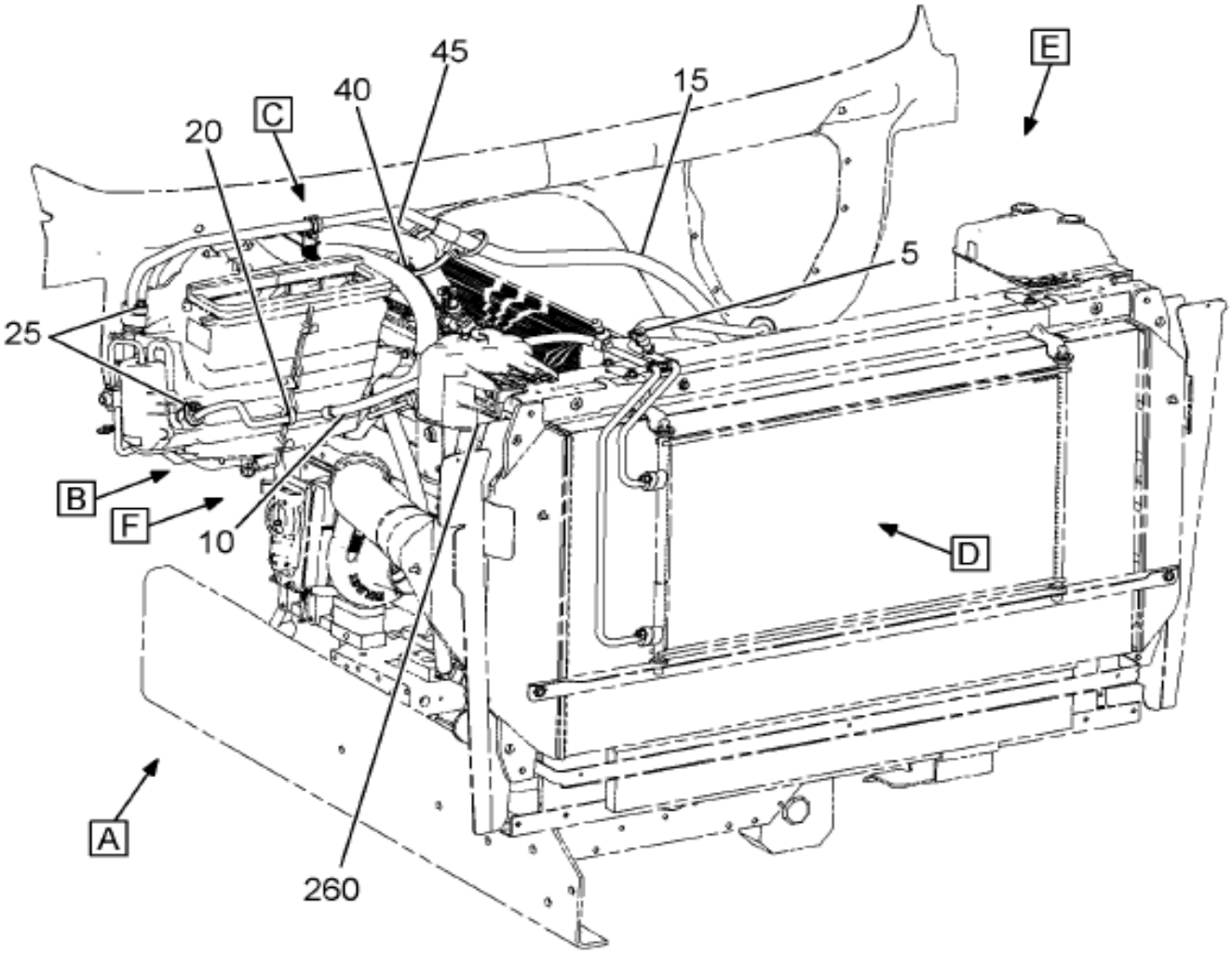

16-367-0973-01 J09

Grp 16

Figure 1 of 5

COPYRIGHT© 2011INTERNATIONAL TRUCK AND ENGINE CORP.

https://truckmanualshub.com/

Figure 0RNX1

HTR OR HTR & A/C HOSE ROUTING; W/ CUM ISM ENG (SS HDD)

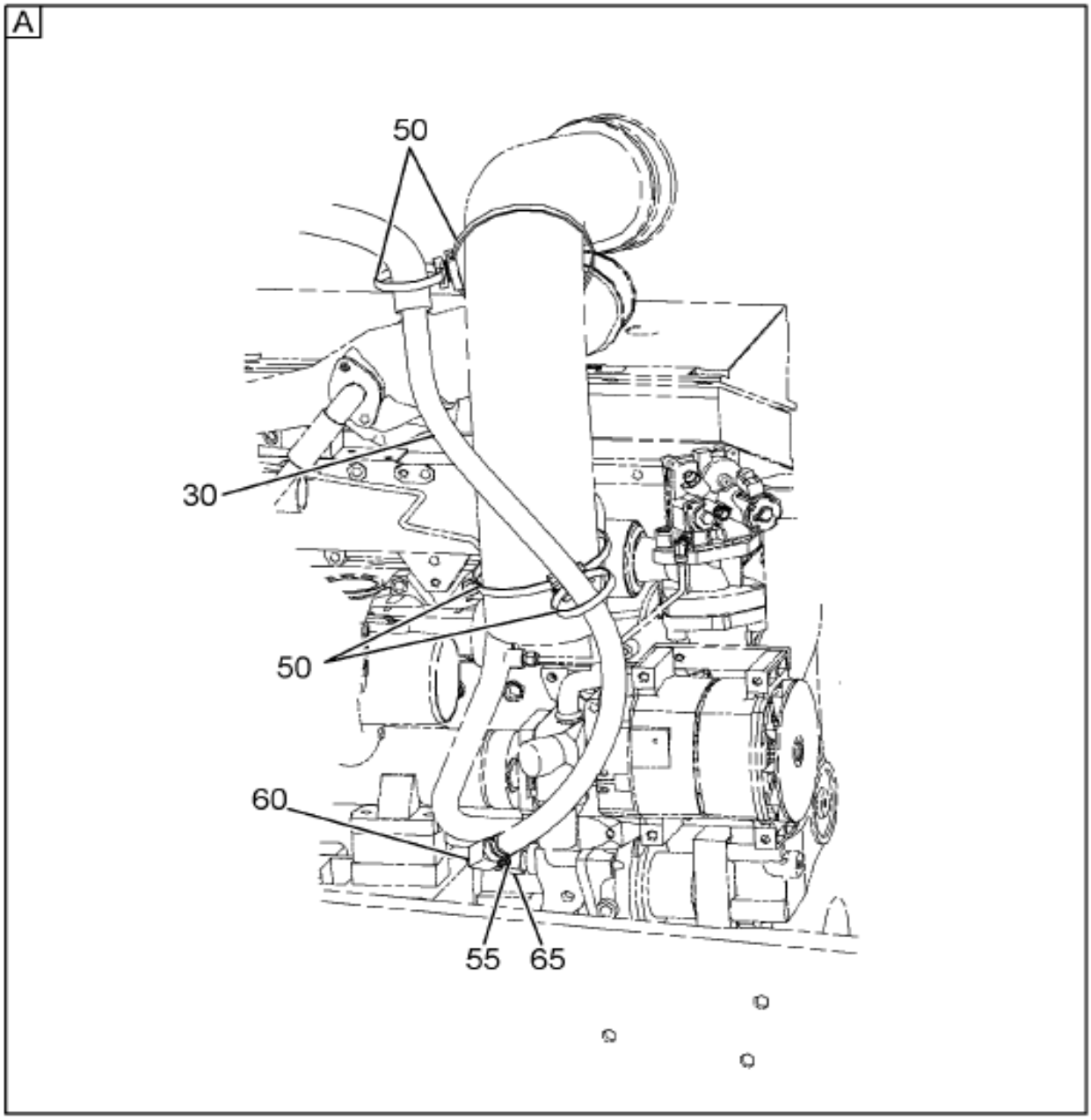

16-367-0973-02 J09

Figure 2 of 5

COPYRIGHT© 2011INTERNATIONAL TRUCK AND ENGINE CORP.

https://truckmanualshub.com/

Figure 0RNX1

HTR OR HTR & A/C HOSE ROUTING; W/ CUM ISM ENG (SS HDD)

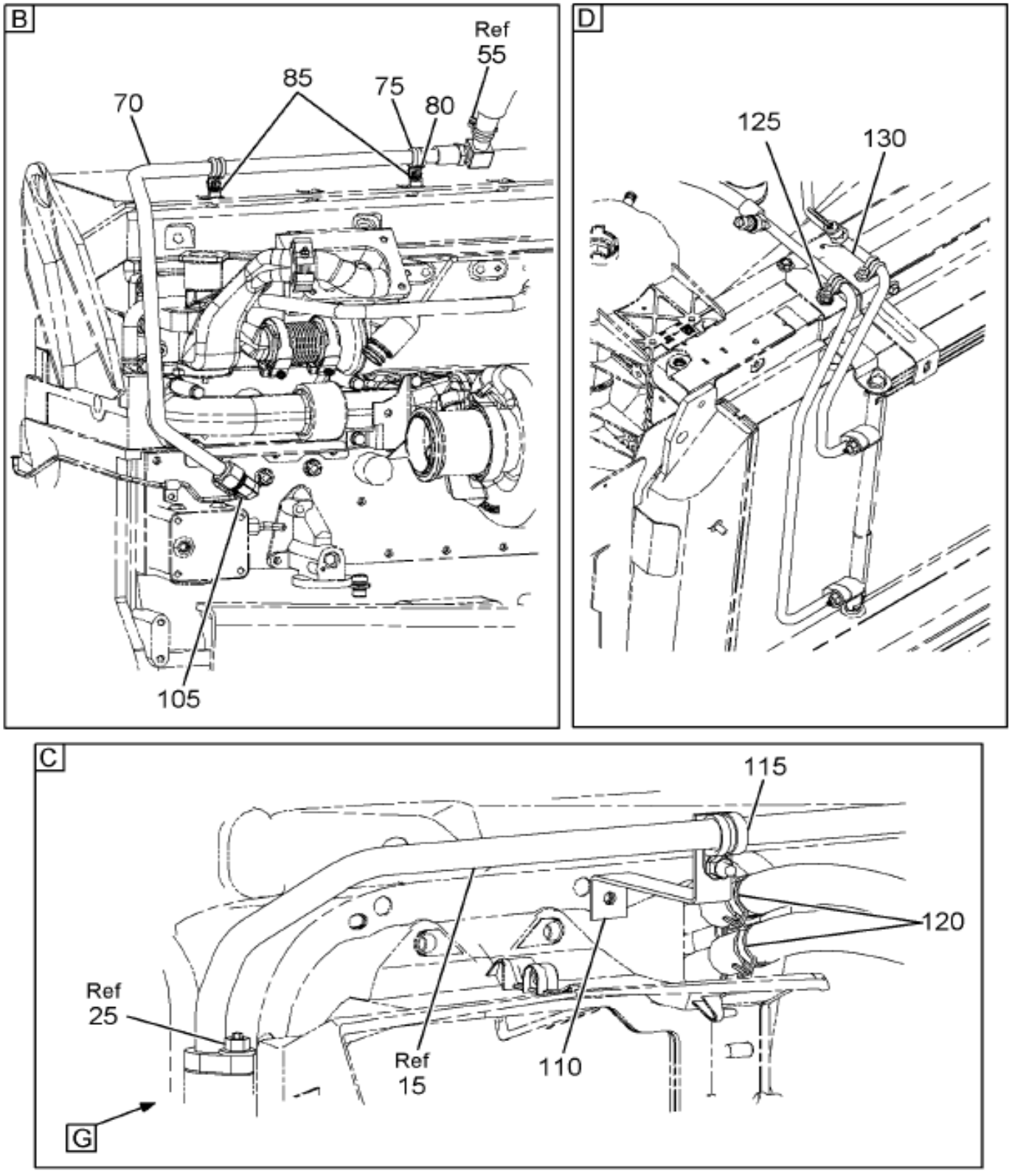

16-367-1034-01 J09

Grp 16

Figure 3 of 5

COPYRIGHT© 2011INTERNATIONAL TRUCK AND ENGINE CORP.

https://truckmanualshub.com/

Figure 0RNX1

HTR OR HTR & A/C HOSE ROUTING; W/ CUM ISM ENG (SS HDD)

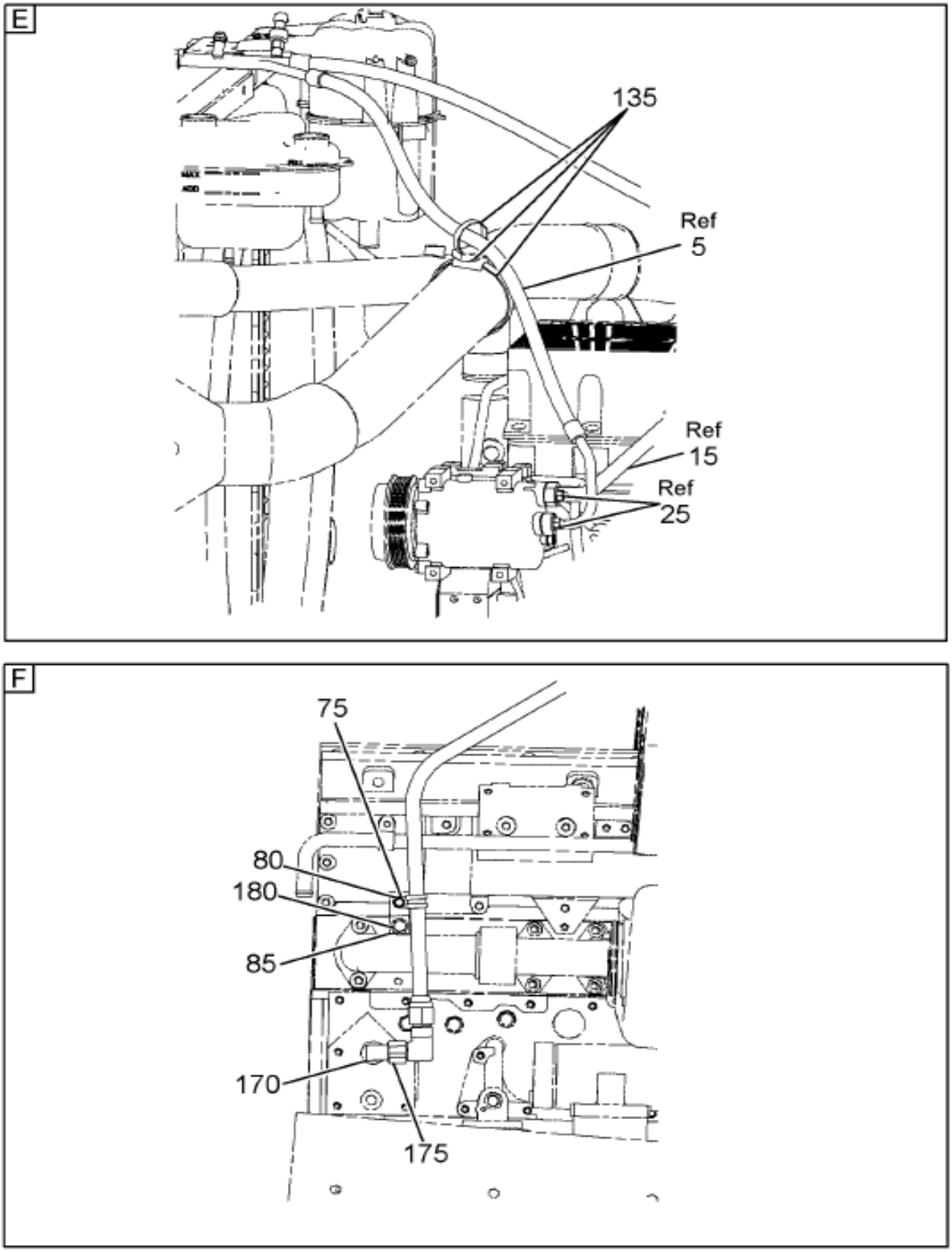

Figure 4 of 5

COPYRIGHT© 2011INTERNATIONAL TRUCK AND ENGINE CORP.

https://truckmanualshub.com/

Figure 0RNX1 HTR OR HTR & A/C HOSE ROUTING; W/ CUM ISM ENG (SS HDD)

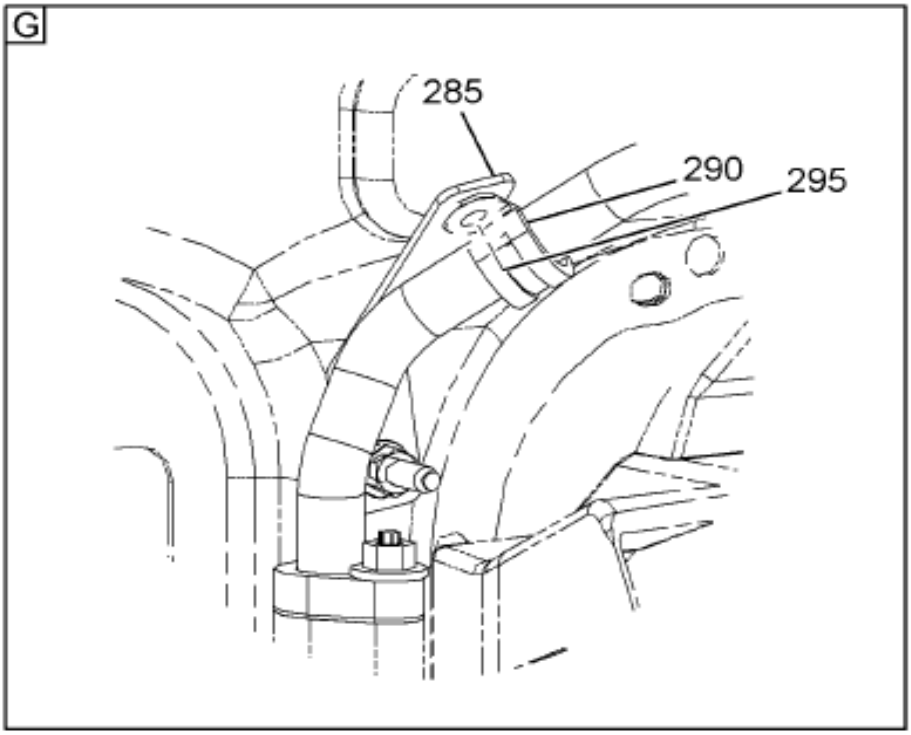

16-367-1034-02 J09

Item	Part No.	Qty	Description	Kit	Var	Figure
5	3606259C94	1	HOSE, A/C, ASSY COMPRESSOR TO		0RNXZ	3606259C94
10	3605975C95	1	HOSE, A/C, ASSY CONDENSER TO		0RNXZ	3605975C95
15	3606258C92	1	HOSE,ASSY ACCUM TO COMPR		0RNXZ	3606258C92
20	3516934C1	1	STRAP,CABLE LOCK 1/2" X 20"		0RNXZ	
25	3535162C1	6	NUT,HEX METRIC PREV. TORQ*M8 X		0RNXZ	
30	2643486R1	1125	HOSE,HEATER PREMIUM 3/4 ID		0RNY0	

COPYRIGHT© 2011INTERNATIONAL TRUCK AND ENGINE CORP.

https://truckmanualshub.com/

Figure 0RNXY HTR OR HTR & A/C HOSE ROUTING; W/ CUM ISM ENG (SS HDD)

Item	Part No.	Qty	Description	Kit	Var	Figure
40	584067C1		CONDUIT,CABLE ELEC 1-1/4		0RNXY	
45	2643486R1	50	HOSE,HEATER PREMIUM 3/4 ID		0RNY0	
45	584067C1		CONDUIT,CABLE ELEC 1-1/4		0RNXY	
50	3554554C1	2	GUIDE,BRK HOSE & CABLE*SWIVEL		0RNXY	
50	3516934C1	4	STRAP,CABLE LOCK 1/2" X 20"		0RNXY	
55	2022867C1	2	CLAMP, COOLER MTG #27		0RNY2	
60	864459R1	1	ELBOW,HOSE 3/4 X 1/2		0RNXY	
65	444058	1	ELBOW, 1/2-14 PLN AUTO 45D PIP		0RNXY	
70	3576520C92	1	PIPE,FLUID, CAB HEATER SUPPLY		0RNXY	3576520C92
75	299259C91	1	CLAMP RUBBER CUSHIONED		0RNXY	
80	3544378C1	1	NUT,HEX METRIC PREV. TORQ*M6 H		0RNXY	
80	3552155C1	1	BOLT,HEX FLG HD METRIC*M6 X 20		0RNXY	
85	3583999C1	1	EXTENSION,CLIP*"Z" CLIP		0RNXY	
105	110289	1	ELBOW, 3/4 PLN 45D FLARED TUBE		0RNXY	
110	3538199C5	1	EXTENSION,, ASSY "Z" STYLE W/M		0RNXZ	3538199C5
115	299259C91	1	CLAMP RUBBER CUSHIONED		0RNXZ	
115	3544379C1	1	NUT,HEX FLG M8 METRIC		0RNXZ	
120	2022867C1	2	CLAMP, COOLER MTG #27		0RNY2	
125	3544379C1	1	NUT,HEX FLG M8 METRIC		0RNXZ	
130	446075R91	2	CLAMP,CABLE CLOSED		0RNXZ	
135	3554554C1	1	GUIDE,BRK HOSE & CABLE*SWIVEL		0RNXZ	
135	306132C1	2	STRAP,CABLE LOCK		0RNXZ	
170	444042	1	ELBOW, 3/8-18 PLN AUTO 90D PIP		0RNXY	
175	444016	1	BUSHING, 1/2 TO 3/8 PLN AUTO P		0RNXY	
180	30848R2	1	BOLT, M10 X 20MM PHC FLG CLASS		0RNXY	
260	3827480C1	1	PRODUCT GRAPHIC -SPANISH		0SNXZ	
285	3850294C1	1	EXTENSION, ANGLE BRKT ASSY		0RNXZ	3850294C1
290	299259C91	1	CLAMP RUBBER CUSHIONED		0RNXZ	
295	3544379C1	2	NUT,HEX FLG M8 METRIC		0RNXZ	

COPYRIGHT© 2011INTERNATIONAL TRUCK AND ENGINE CORP.

https://truckmanualshub.com/

Figure 3850294C1

EXTENSION, ANGLE BRKT ASSY

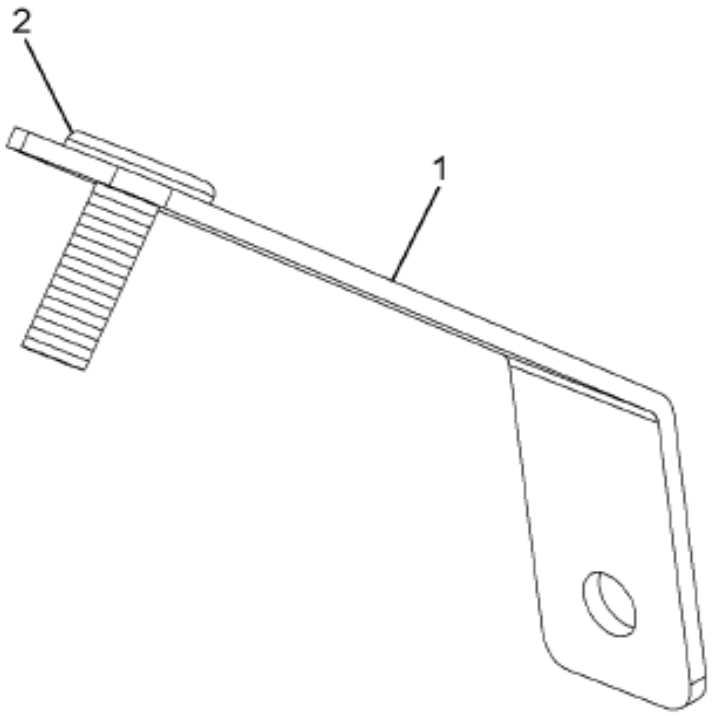

16-367-1002-01 F09

Grp 16

Item	Part No.	Qty	Description	Kit	Var	Figure
1	3844462C1	1	EXTENSION, ANGLE BRKT			
2	30608R1	1	BOLT, M8 X 25 PLN WELD			
880		RF	NOTE: ASM BELOW COMPRISED OF ABOVE COMPONENTS			
881	3850294C1	RF	EXTENSION, ANGLE BRKT ASSY			

COPYRIGHT© 2011INTERNATIONAL TRUCK AND ENGINE CORP.

https://truckmanualshub.com/

Figure 3538199C5
EXTENSION,, ASSY "Z" STYLE W/M

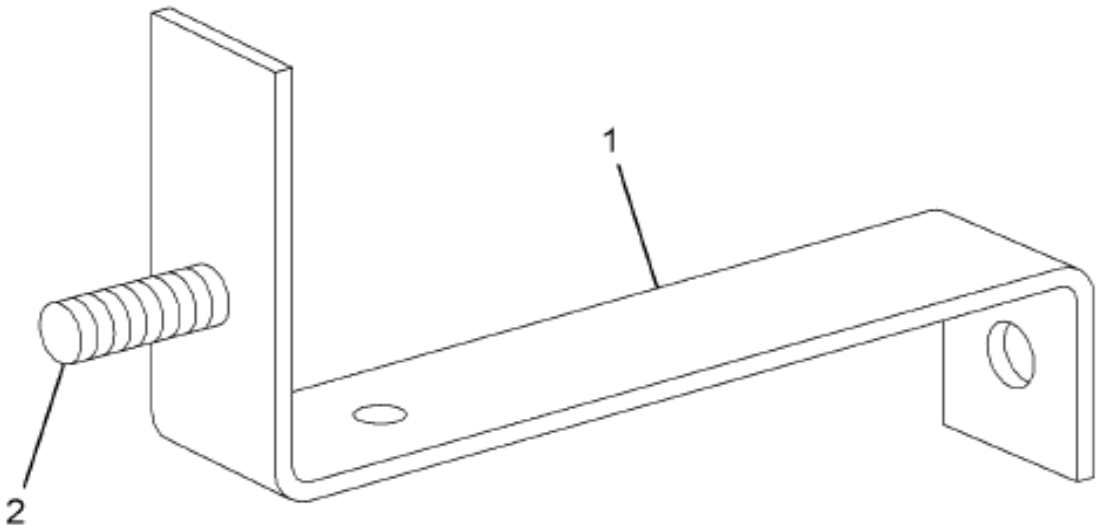

16-367-0526-01 D06

Item	Part No.	Qty	Description	Kit	Var	Figure
1	3538198C4	1	EXTENSION,, Z STYLE			
2	30608R1	1	BOLT, M8 X 25 PLN WELD			
880		RF	NOTE: ASM BELOW COMPRISED OF ABOVE COMPONENTS			
881	3538199C5	RF	EXTENSION,, ASSY "Z" STYLE W/M			

COPYRIGHT© 2011INTERNATIONAL TRUCK AND ENGINE CORP.

https://truckmanualshub.com/

Figure 3600259C94

HOSE, A/C, ASSY COMPRESSOR TO

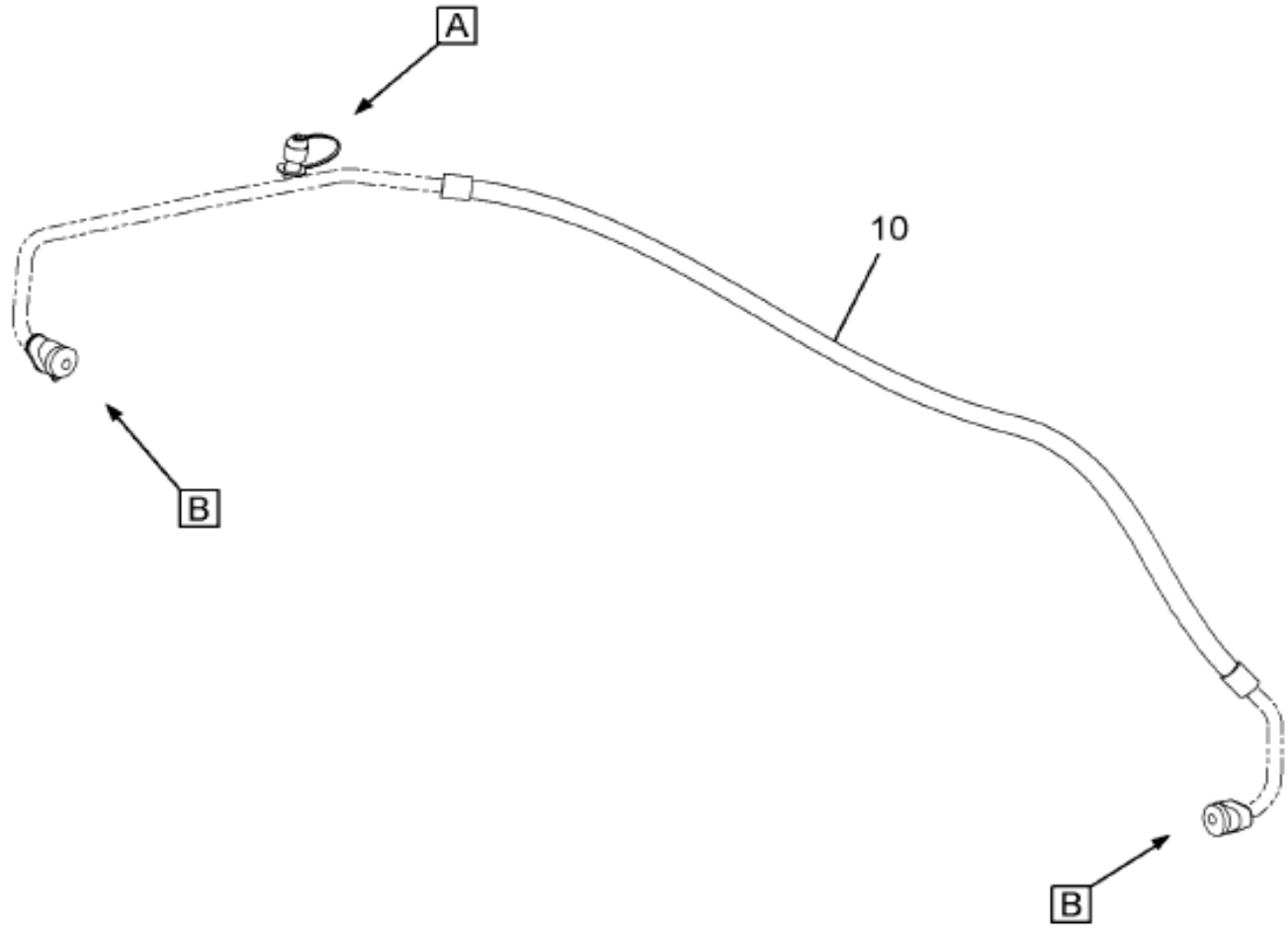

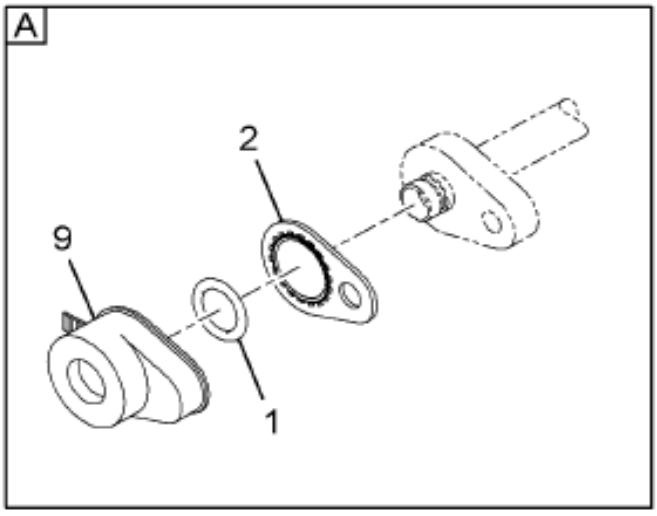

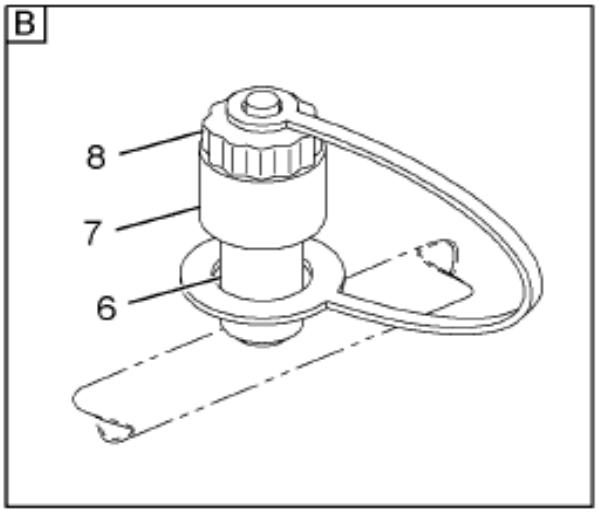

16-367-1073-01 C10

Item	Part No.	Qty	Description	Kit	Var	Figure
1	3543727C1	2	RING,O SEAL 10.78 X 2.62 (TAN)			
2	3543881C1	2	SEAL C-PLATE 1/2"			
6	3544707C1	1	VALVE,AIR CONTROL ASSY CHARGIN			
7	3544706C1	1	CORE,VALVE ASSY A/C CHARGING V			
8	3625408C1	1	CAP TETHERED REFRIG FTG			
9	3555226C1	2	CAP,DUST REFRIG FTG 1/2" MALE			

Grp 16

COPYRIGHT© 2011INTERNATIONAL TRUCK AND ENGINE CORP.

https://truckmanualshub.com/

Figure 3606259C94

HOSE, A/C, ASSY COMPRESSOR TO

Item	Part No.	Qty	Description	Kit	Var	Figure
10	449632C1	AR	CONDUIT,CABLE 50'ROLL 13MM ID			
880		RF	NOTE: ASM BELOW COMPRISED OF ABOVE COMPONENTS			
881	3606259C94	RF	HOSE, A/C, ASSY COMPRESSOR TO			

COPYRIGHT© 2011INTERNATIONAL TRUCK AND ENGINE CORP.

https://truckmanualshub.com/

Figure 3603973C93
HOSE, A/C, ASSY CONDENSER TO

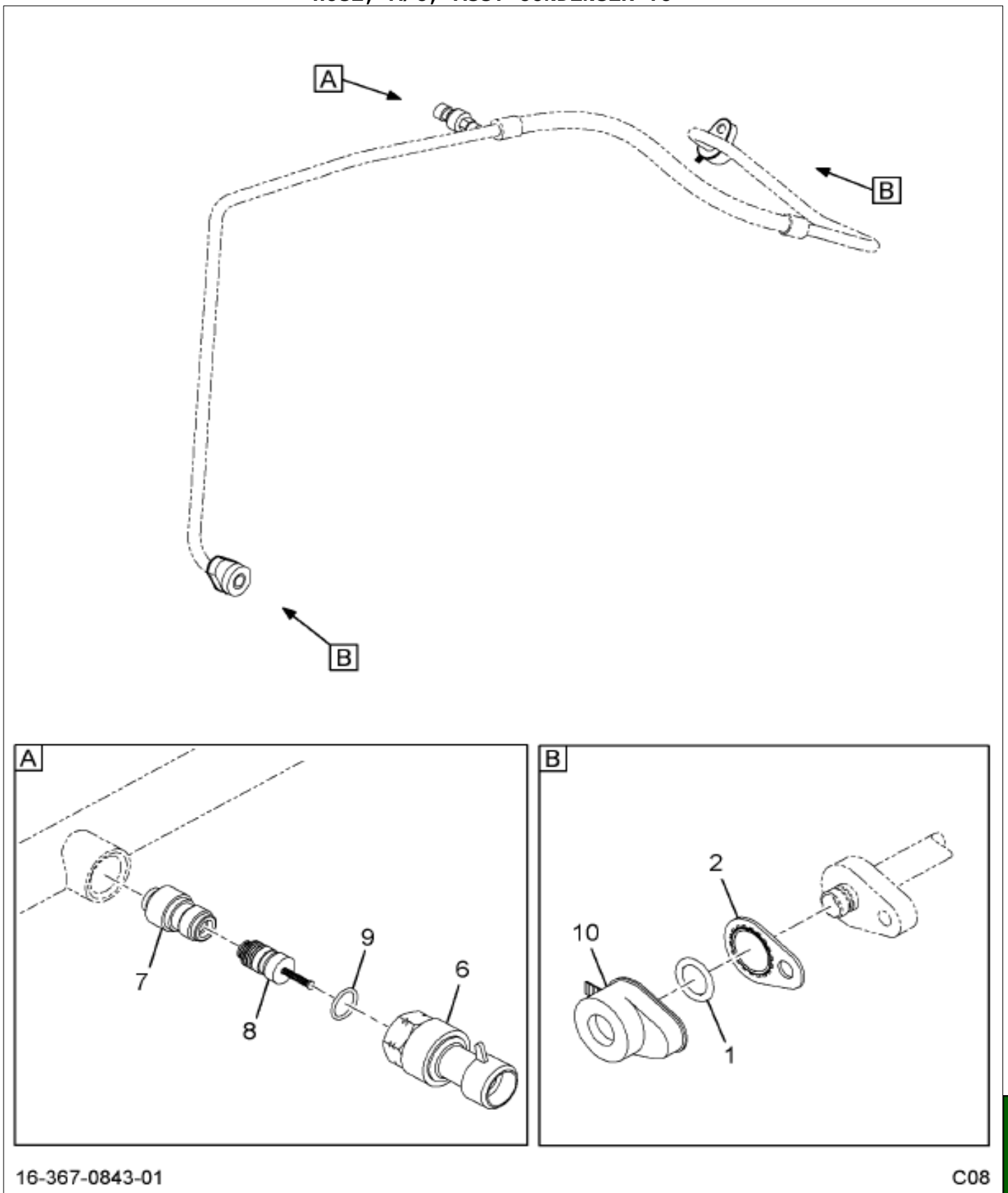

16-367-0843-01 C08

Item	Part No.	Qty	Description	Kit	Var	Figure
1	3543727C1	2	RING,O SEAL 10.78 X 2.62 (TAN)			
2	3543881C1	2	SEAL C-PLATE 1/2"			
6	3546241C1	1	SWITCH,A/C PRESS TRANSDUCER			
7	3544769C1	1	VALVE,AIR CONTROL			
8	2503677C1	1	CORE,VALVE A/C HOSE			
9	1693968C1	1	RING,O A/C HNBR (W/134A) #6			

Grp 16

COPYRIGHT© 2011INTERNATIONAL TRUCK AND ENGINE CORP.

https://truckmanualshub.com/

Figure 3605975C95

HOSE, A/C, ASSY CONDENSER TO

Item	Part No.	Qty	Description	Kit	Var	Figure
10	3555226C1	2	CAP,DUST REFRIG FTG 1/2" MALE			
880		RF	NOTE: ASM BELOW COMPRISED OF ABOVE COMPONENTS			
881	3605975C95	RF	HOSE, A/C, ASSY CONDENSER TO			

COPYRIGHT© 2011INTERNATIONAL TRUCK AND ENGINE CORP.

https://truckmanualshub.com/

Figure 3600258C92
HOSE,ASSY ACCUM TO COMPR

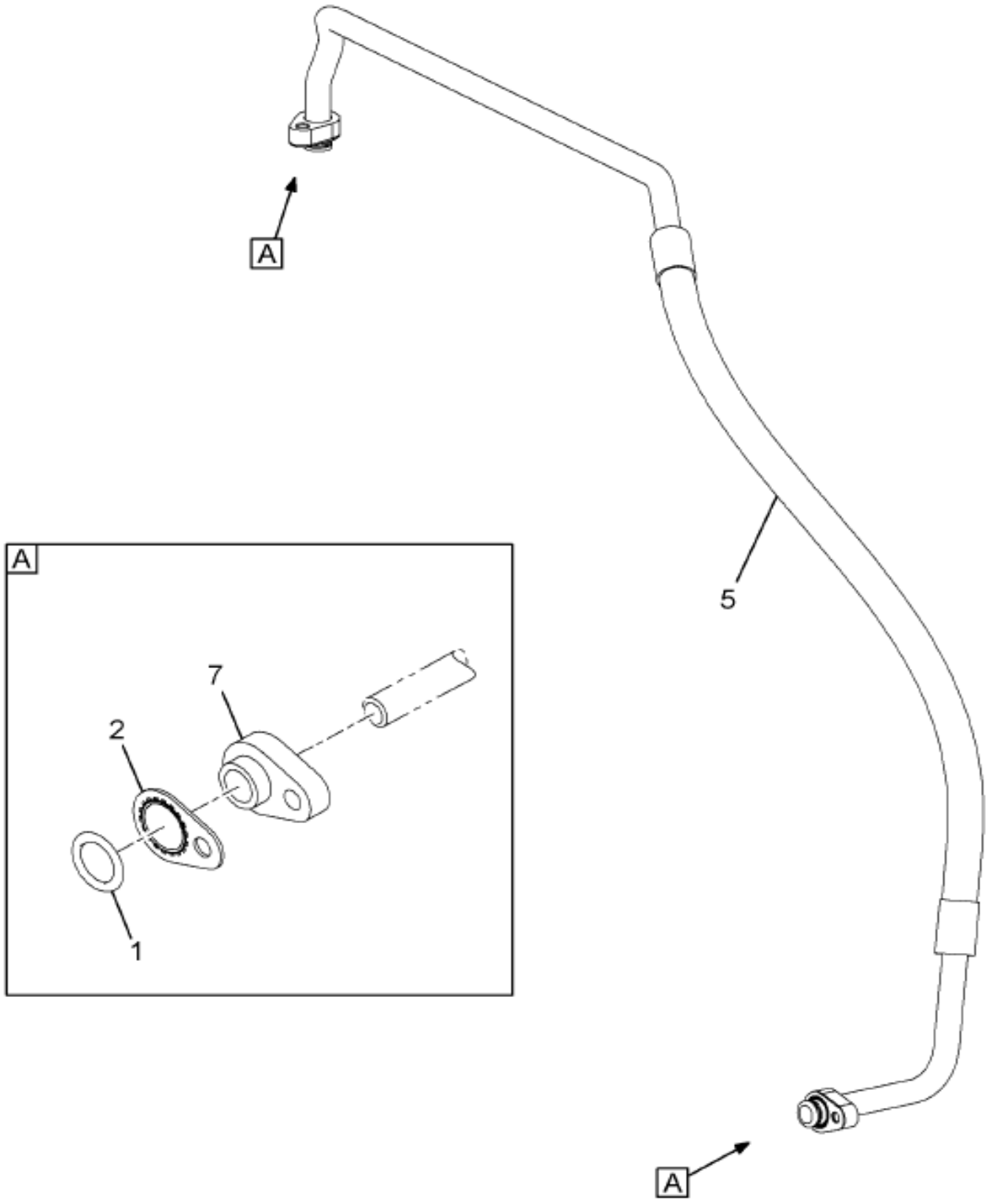

16-367-0541-01 G06

Grp 16

Item	Part No.	Qty	Description	Kit	Var	Figure
1	3543728C1	2	RING,O SEAL 15.54 X 2.62			
2	3543882C1	2	SEAL C-PLATE 3/4"			
5	584067C1	AR	CONDUIT,CABLE ELEC 1-1/4			
7	3555227C1	2	CAP,DUST REFRIG FTG 3/4" MALE			
880		RF	NOTE: ASM BELOW COMPRISED OF ABOVE COMPONENTS			

COPYRIGHT© 2011INTERNATIONAL TRUCK AND ENGINE CORP.

https://truckmanualshub.com/

Figure 3606258C92

HOSE,ASSY ACCUM TO COMPR

Item	Part No.	Qty	Description	Kit	Var	Figure
881	3606258C92	RF	HOSE,ASSY ACCUM TO COMPR			

COPYRIGHT© 2011INTERNATIONAL TRUCK AND ENGINE CORP.

https://truckmanualshub.com/

Figure 3576520C92

PIPE,FLUID, CAB HEATER SUPPLY

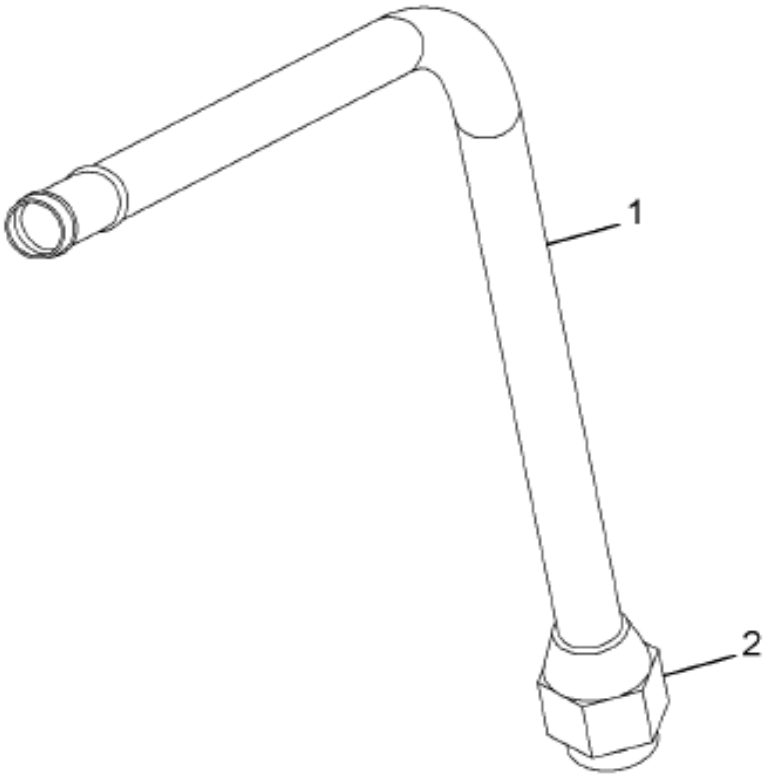

16-367-0938-01 J08

Grp 16

Item	Part No.	Qty	Description	Kit	Var	Figure
1	3576519C2	1	PIPE,FLUID, CAB HEATER SUPPLY			
2	144309	1	NUT,3/4 PLN 45D FLARED TUBE			
880		RF	NOTE: ASM BELOW COMPRISED OF ABOVE COMPONENTS			
881	3576520C92	RF	PIPE,FLUID, CAB HEATER SUPPLY			

COPYRIGHT© 2011INTERNATIONAL TRUCK AND ENGINE CORP.

https://truckmanualshub.com/

Figure 06TRV

INSTR PANEL MTG & WIRING INSTL; CONTROL MODULE

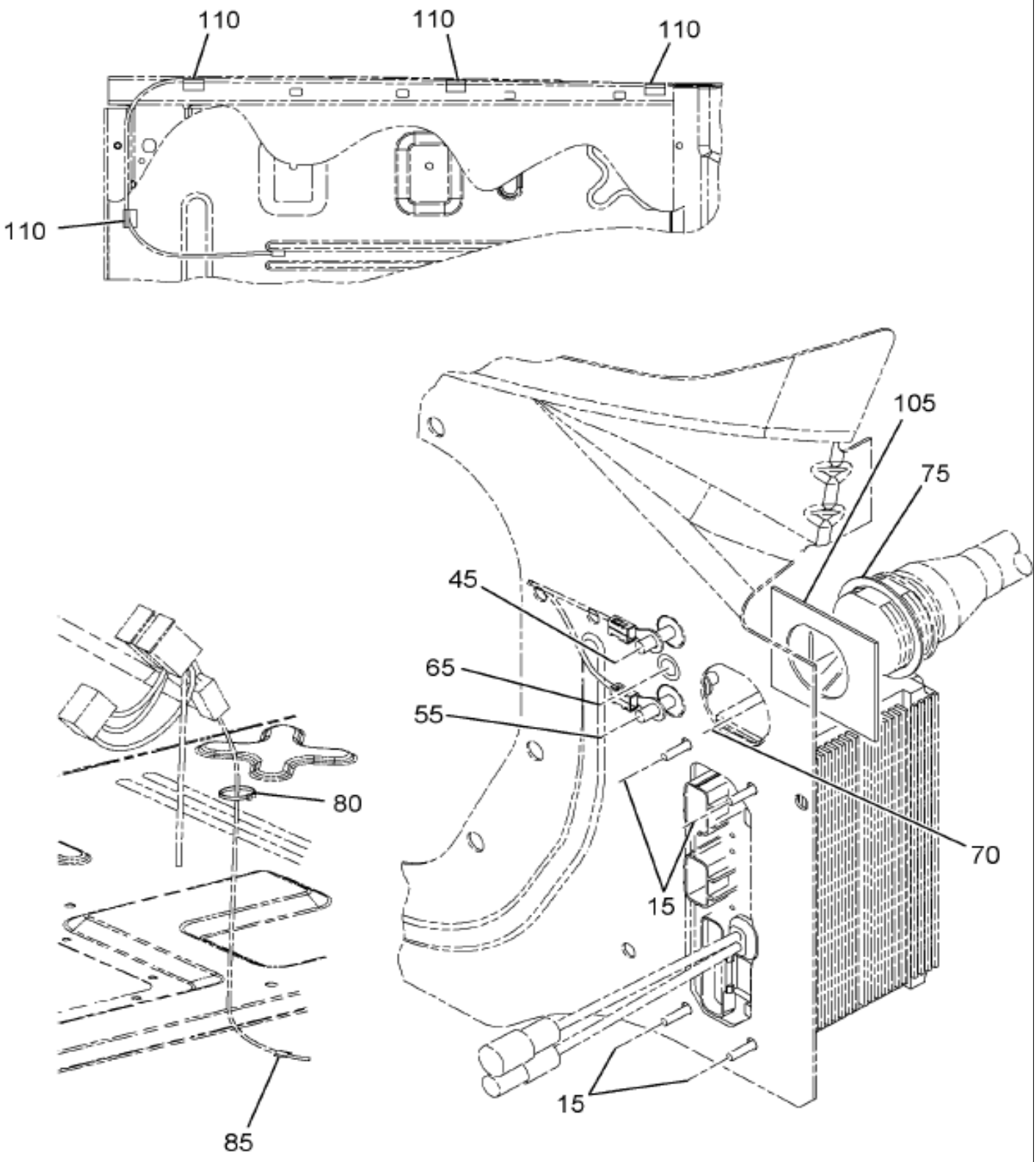

Item	Part No.	Qty	Description	Kit	Var	Figure
15	3535410C1	4	NUT HEX METRIC PREV. TORQ*M6 X		06TRV	
65	3535162C1	1	NUT,HEX METRIC PREV. TORQ*M8 X		06TRV	
65	2643099R3	1	FLUID LUBRICANT GRAFFO 112X		06TRV	

COPYRIGHT© 2011INTERNATIONAL TRUCK AND ENGINE CORP.

https://truckmanualshub.com/

Figure 06RNB

INSTRUMENT PANEL INSTL; MTG HDWE FOR CUPHOLDER

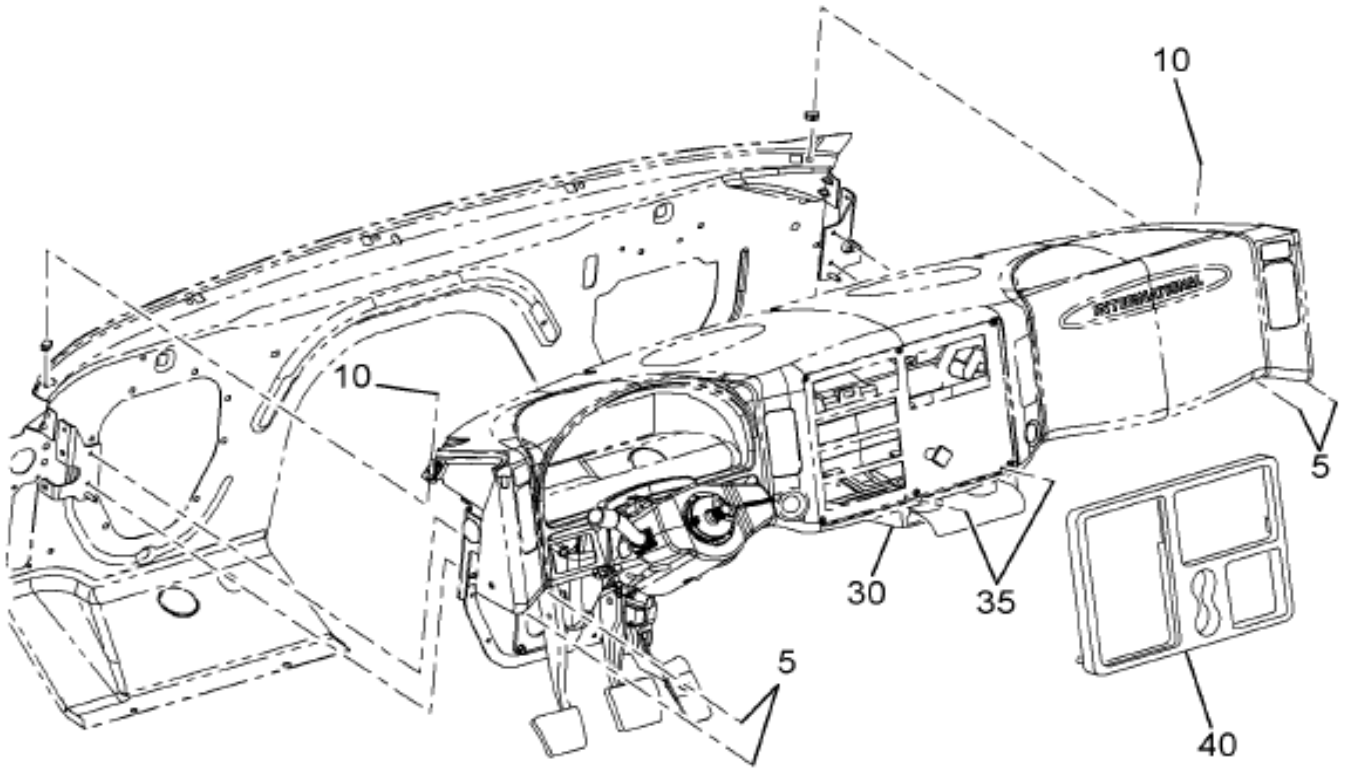

08-V81-0004-AA D08

Item	Part No.	Qty	Description	Kit	Var	Figure
5	3514273C1	4	BOLT SEMS M8 X 1.25-35		06RNB	
10	3544343C1	5	NUT,SPEED M6 X 1 U-NUT LCKNG		06RNB	
10	3510917C1	5	BOLT,SEMS ALL M6 35MM LONG HEX		06RNB	
30	3553479C2	1	HOLDER,CUP 2-CUP W/ ASHTRAY		0SZ4C	3553479C2
35	3545857C1	2	SCREW,TAPPING M4.2 X 1.4 - 30M		0SZ4C	
40	3544344C3	1	COVER, INSTRUMENT PANEL,		0DCDS	3544344C3

Grp 16

COPYRIGHT© 2011INTERNATIONAL TRUCK AND ENGINE CORP.

https://truckmanualshub.com/

Figure 3544344C3
COVER, INSTRUMENT PANEL,

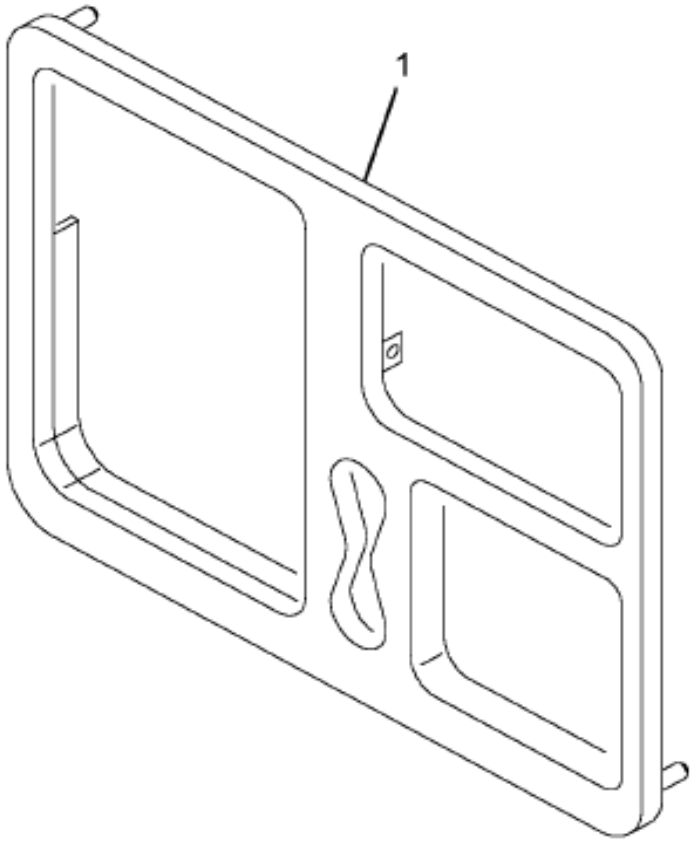

08-V81-0001-00 E04

Item	Part No.	Qty	Description	Kit	Var	Figure
1	2508859C1	5	CLIP,INSTR PNL CTR PNL TRM BZL			
880		RF	NOTE: ASM BELOW COMPRISED OF ABOVE COMPONENTS			
881	3544344C3	RF	COVER, INSTRUMENT PANEL,			

COPYRIGHT© 2011INTERNATIONAL TRUCK AND ENGINE CORP.

https://truckmanualshub.com/

Figure 3553479C2
HOLDER,CUP 2-CUP W/ ASHTRAY

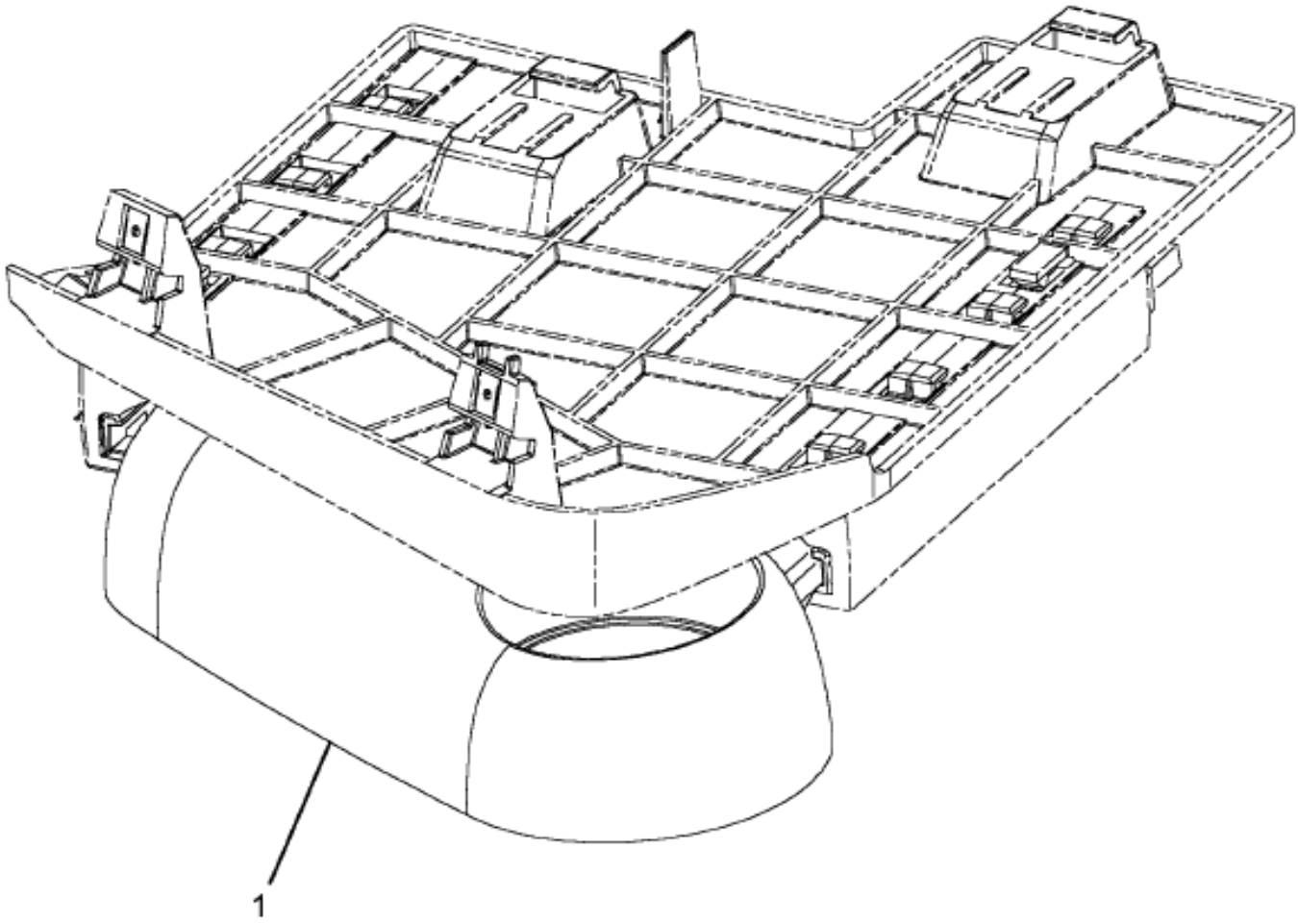

08-V81-0003-00 E04

Item	Part No.	Qty	Description	Kit	Var	Figure
1	3547242C1	1	TRAY,ASH			
880		RF	NOTE: ASM BELOW COMPRISED OF ABOVE COMPONENTS			
881	3553479C2	RF	HOLDER,CUP 2-CUP W/ ASHTRAY			

COPYRIGHT© 2011INTERNATIONAL TRUCK AND ENGINE CORP.

https://truckmanualshub.com/

Figure 0D52B

INTERIOR TRIM INSTL; A-PILLAR

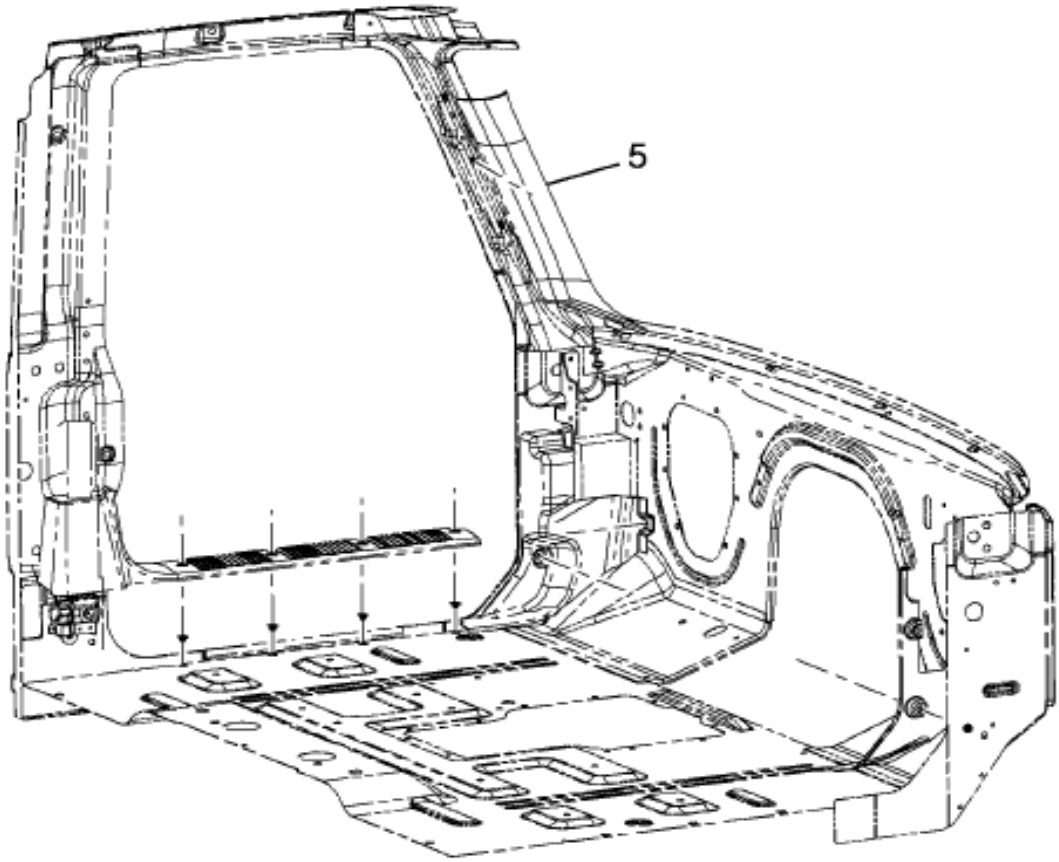

NGV CONV

16-396-0009-01 B11

Item	Part No.	Qty	Description	Kit	Var	Figure
5	3543556C3	1	COVER,A-PILLAR TRIM RH		0JDDX	
5	3545399C3	1	COVER,A-PILLAR TRIM LH		0JDDX	

COPYRIGHT© 2011INTERNATIONAL TRUCK AND ENGINE CORP.

https://truckmanualshub.com/

Figure 005H5

INTERIOR TRIM INSTL; BACK & SIDE,B-PILLAR COVERS

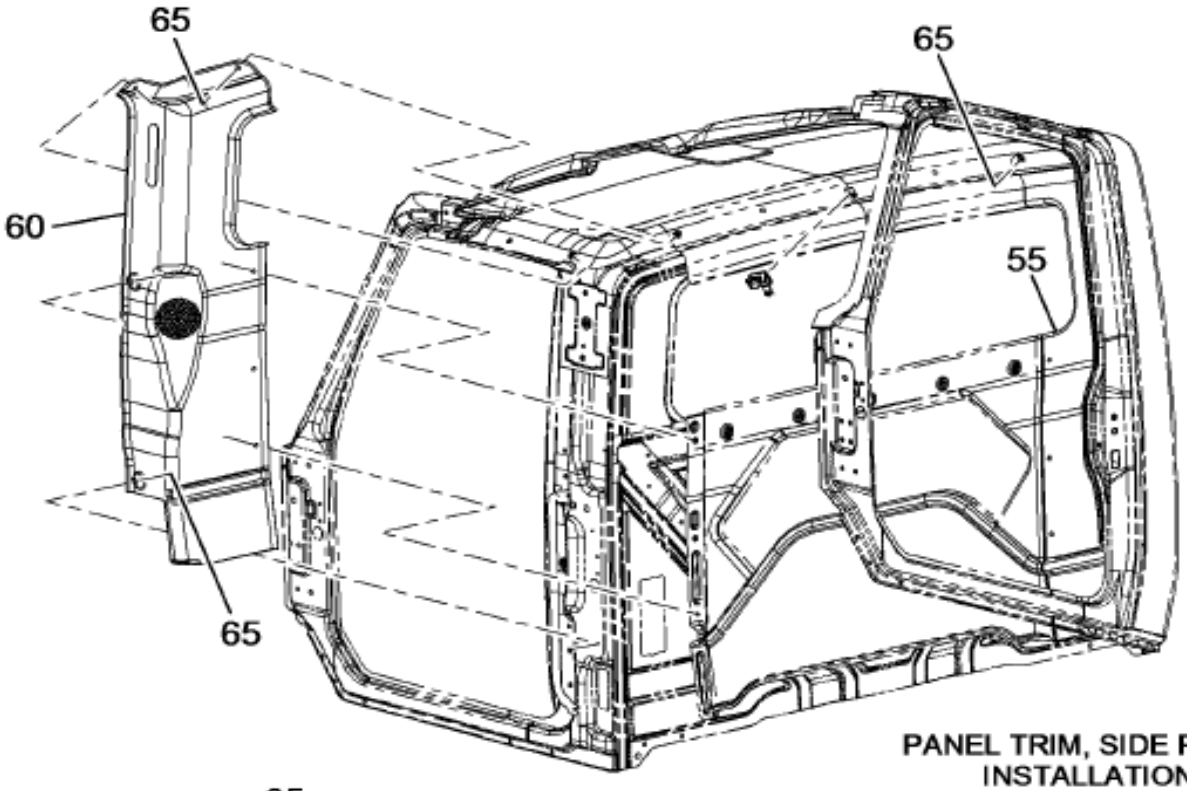

PANEL TRIM, SIDE PANEL
INSTALLATION
NGV - CONV.

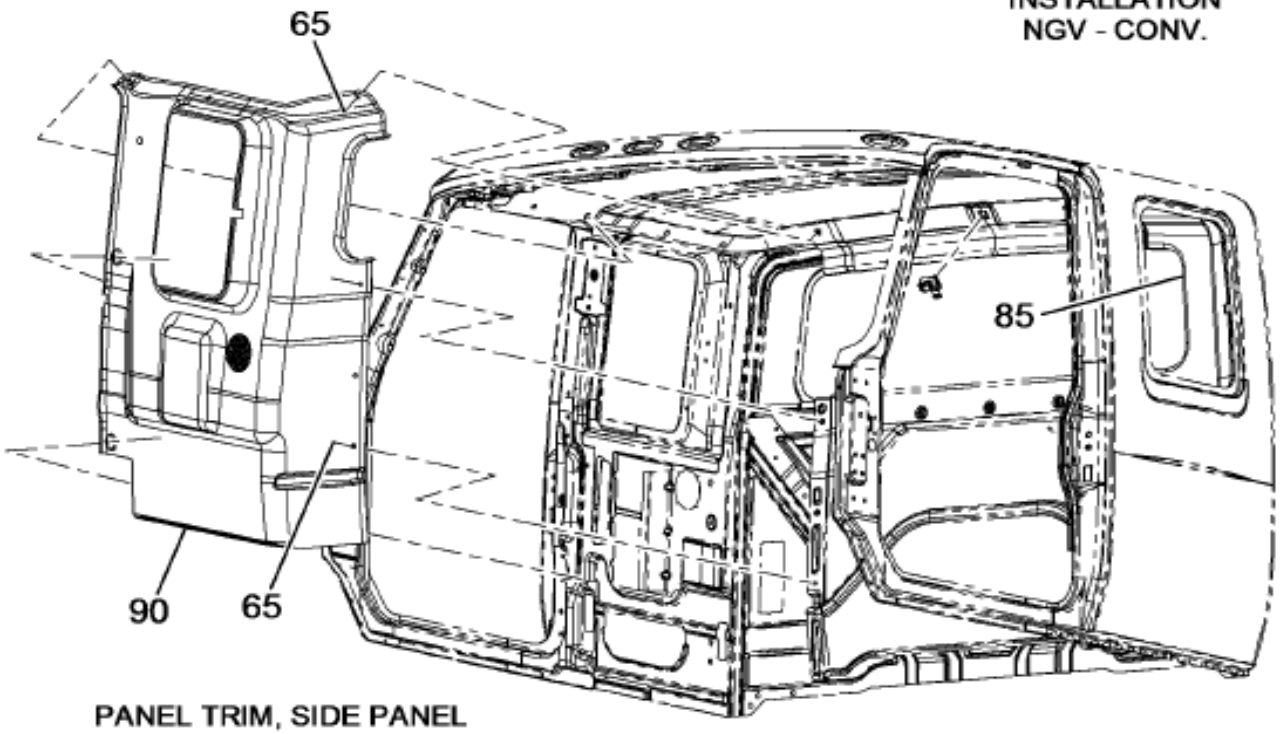

PANEL TRIM, SIDE PANEL
INSTALLATION
NGV - EXT.

16-380-0076-00 A10

Grp 16

Figure 1 of 4

COPYRIGHT© 2011INTERNATIONAL TRUCK AND ENGINE CORP.

https://truckmanualshub.com/

Figure 005H5

INTERIOR TRIM INSTL; BACK & SIDE,B-PILLAR COVERS

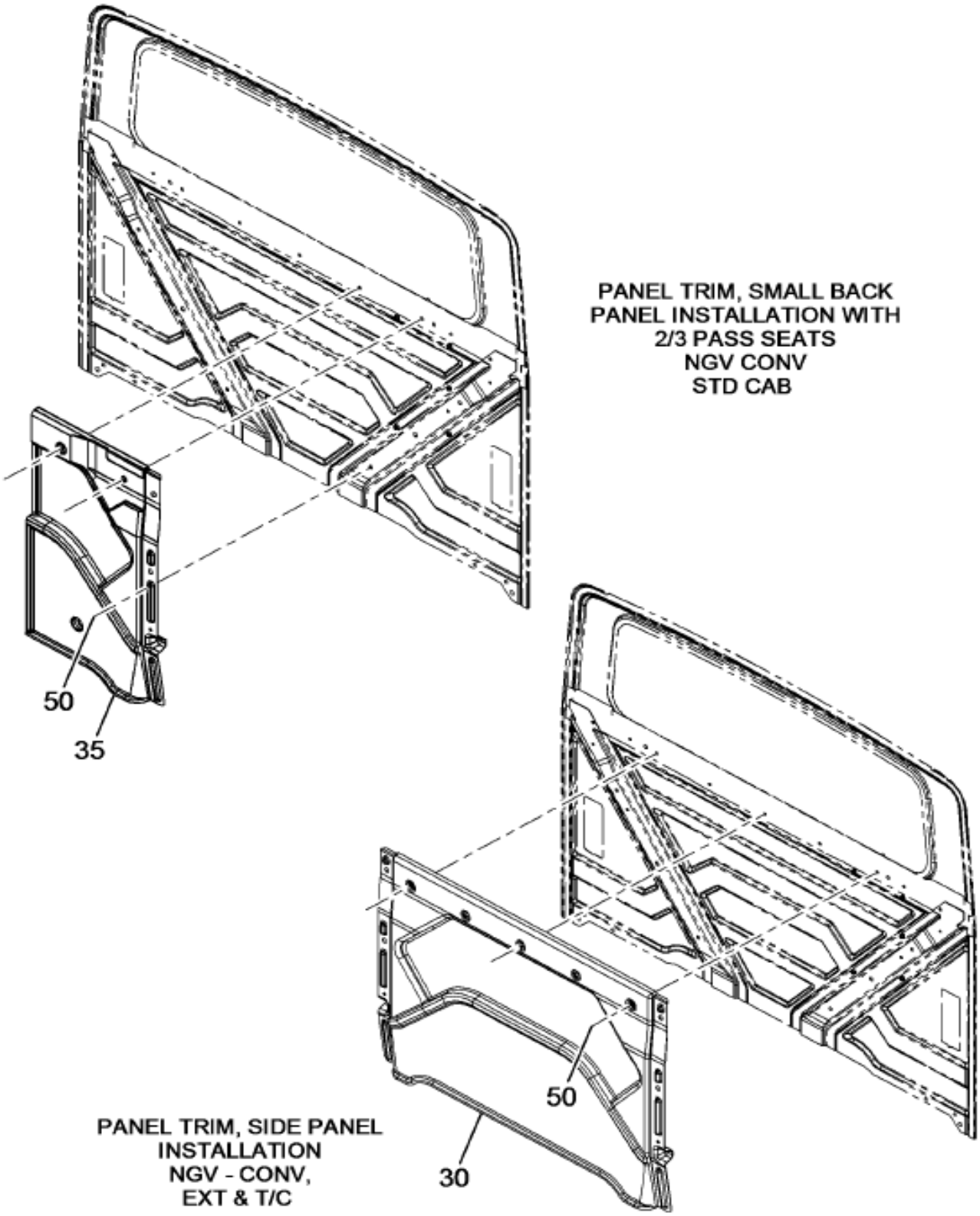

Figure 2 of 4

COPYRIGHT© 2011INTERNATIONAL TRUCK AND ENGINE CORP.

https://truckmanualshub.com/
Figure 003H5
INTERIOR TRIM INSTL; BACK & SIDE,B-PILLAR COVERS

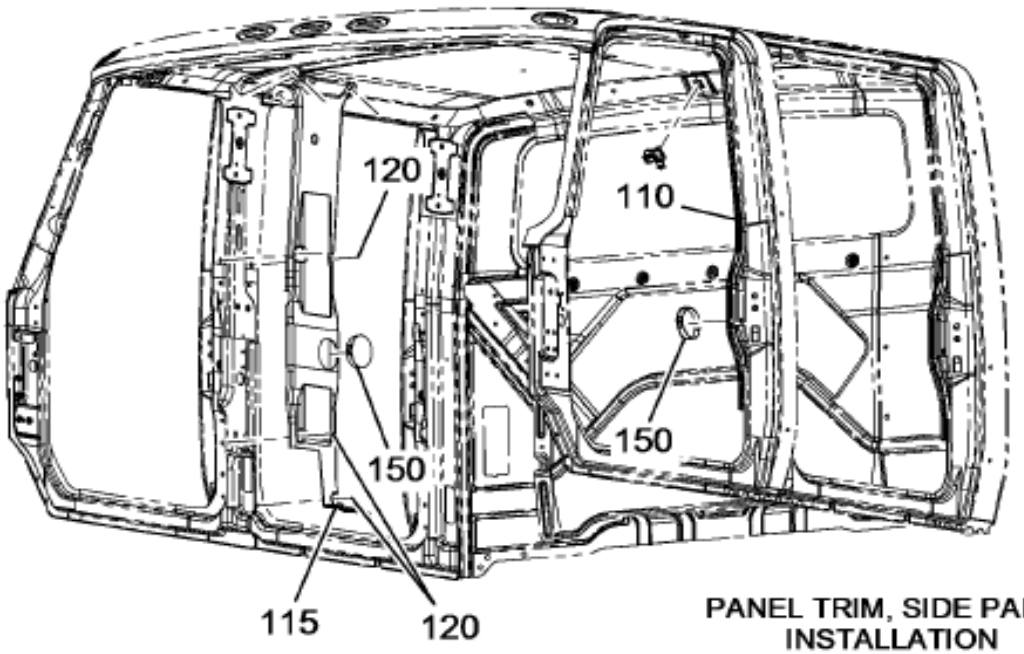

PANEL TRIM, SIDE PANEL INSTALLATION NGV - T/C

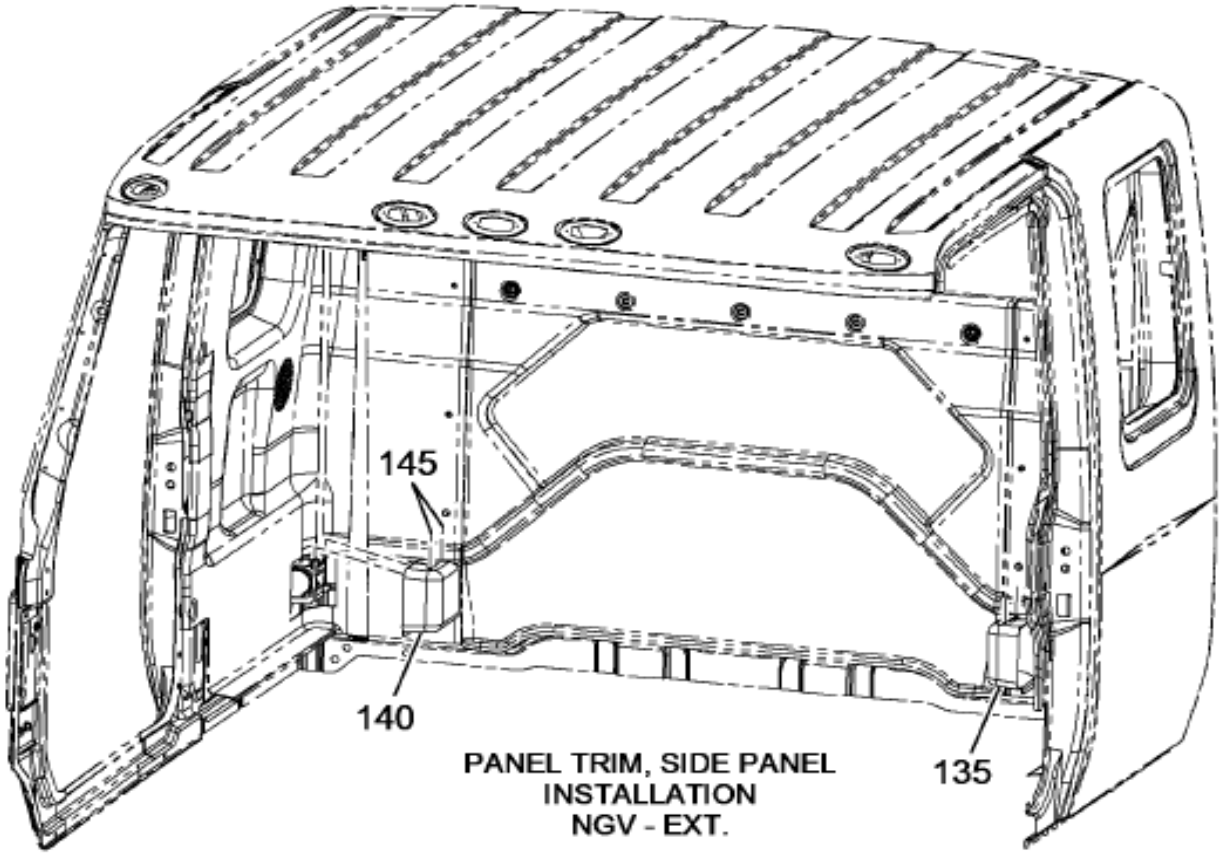

PANEL TRIM, SIDE PANEL INSTALLATION NGV - EXT.

16-380-0076-02 A10

Grp 16

Figure 3 of 4

COPYRIGHT© 2011INTERNATIONAL TRUCK AND ENGINE CORP.

https://truckmanualshub.com/

Figure 005H5

INTERIOR TRIM INSTL; BACK & SIDE,B-PILLAR COVERS

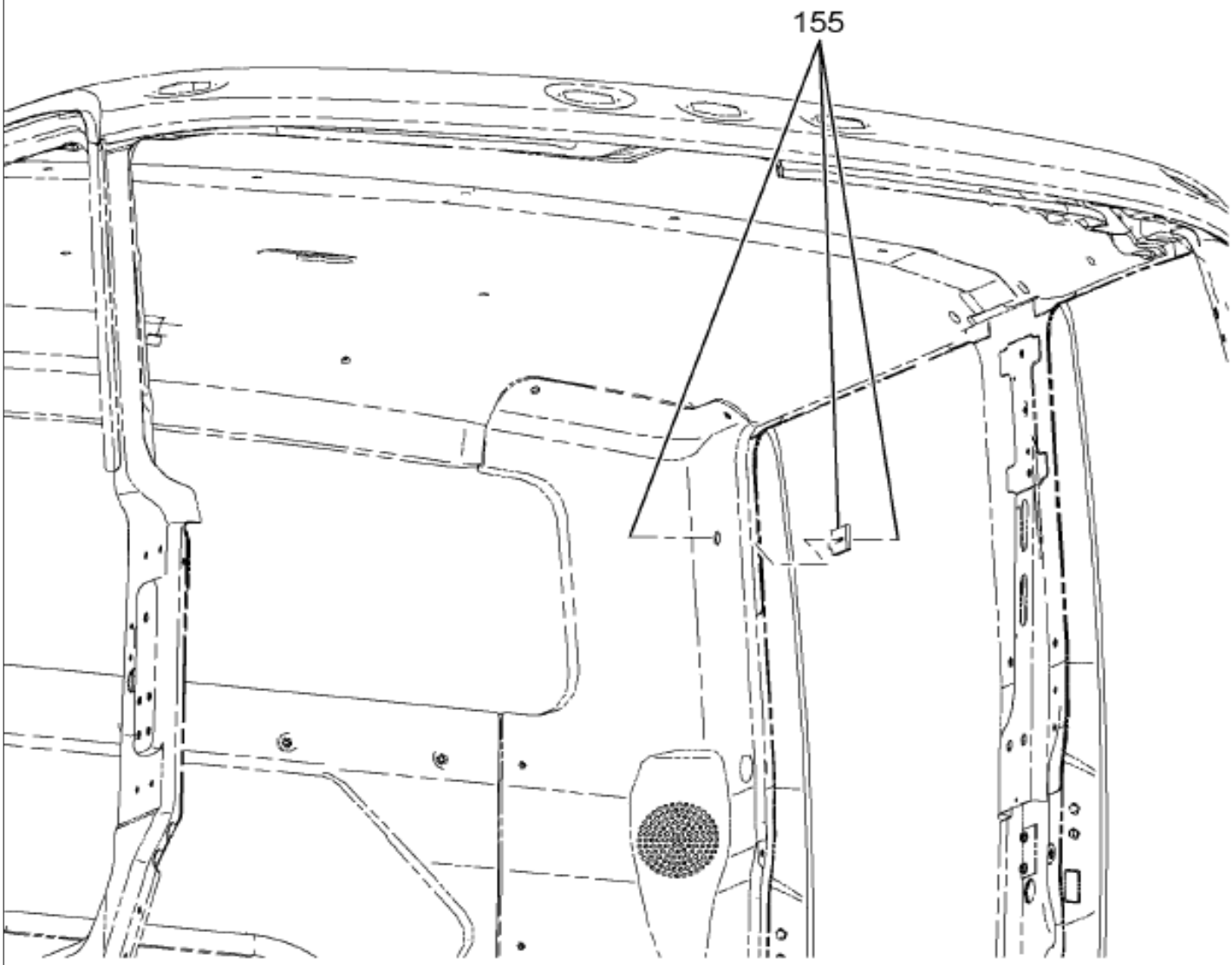

NGV
W/CREW CAB
W/16PCU

16-380-0158-03 M09

Item	Part No.	Qty	Description	Kit	Var	Figure
30	3512588C8	1	PANEL, CAB BACK TRIM LOWER		0QPJN	
50	3548696C3	5	FASTENR,CHRSTMS TREE 29.2X10MM		0QPJN	
55	3559943C4	1	PANEL,SIDE TRM INT LH CONV		0QPJM	
60	3559944C4	1	PANEL,SIDE TRM INT RH CONV		0QPJM	
65	3548696C3	12	FASTENR,CHRSTMS TREE 29.2X10MM		0QPJM	

COPYRIGHT© 2011INTERNATIONAL TRUCK AND ENGINE CORP.

https://truckmanualshub.com/

Figure 05XSH
INTERIOR TRIM INSTL; CONV FRONT RIGHT DOOR TRIM

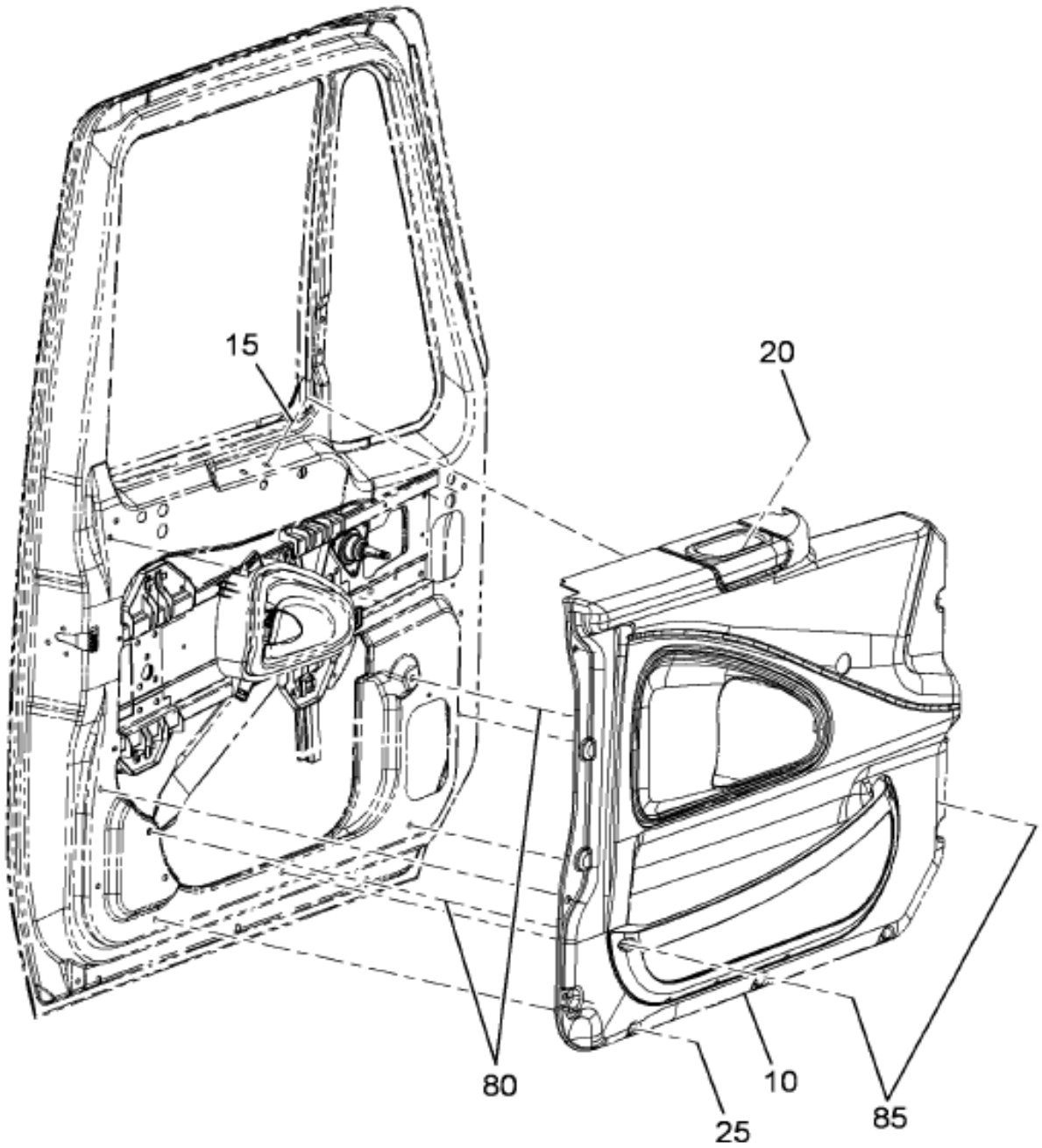

16-392-0134-01 B09

Item	Part No.	Qty	Description	Kit	Var	Figure
10	3558221C92	1	PANEL,DOOR TRIM RH CONV FRONT		0SXSQ	3558221C92
15	3548695C1	2	FASTENER,TRIM NYLON GROMMET		0SXSQ	
20	3552454C1	2	SCREW,TAPPING M4.2 X 1.41-35MM		0SXSQ	
25	3511058C2	9	FASTENER,TRM 2-STG RVT SMK GRY		0SXSQ	
80	3510918C1	2	INSERT,THREADED M6 OPEN END		0SXSQ	
85	3612354C1	2	BOLT,M6X1.0-40MM SST TORX PAN		0SXSQ	

Grp 16

COPYRIGHT© 2011INTERNATIONAL TRUCK AND ENGINE CORP.

https://truckmanualshub.com/

Figure 3558221C92
PANEL,DOOR TRIM RH CONV FRONT

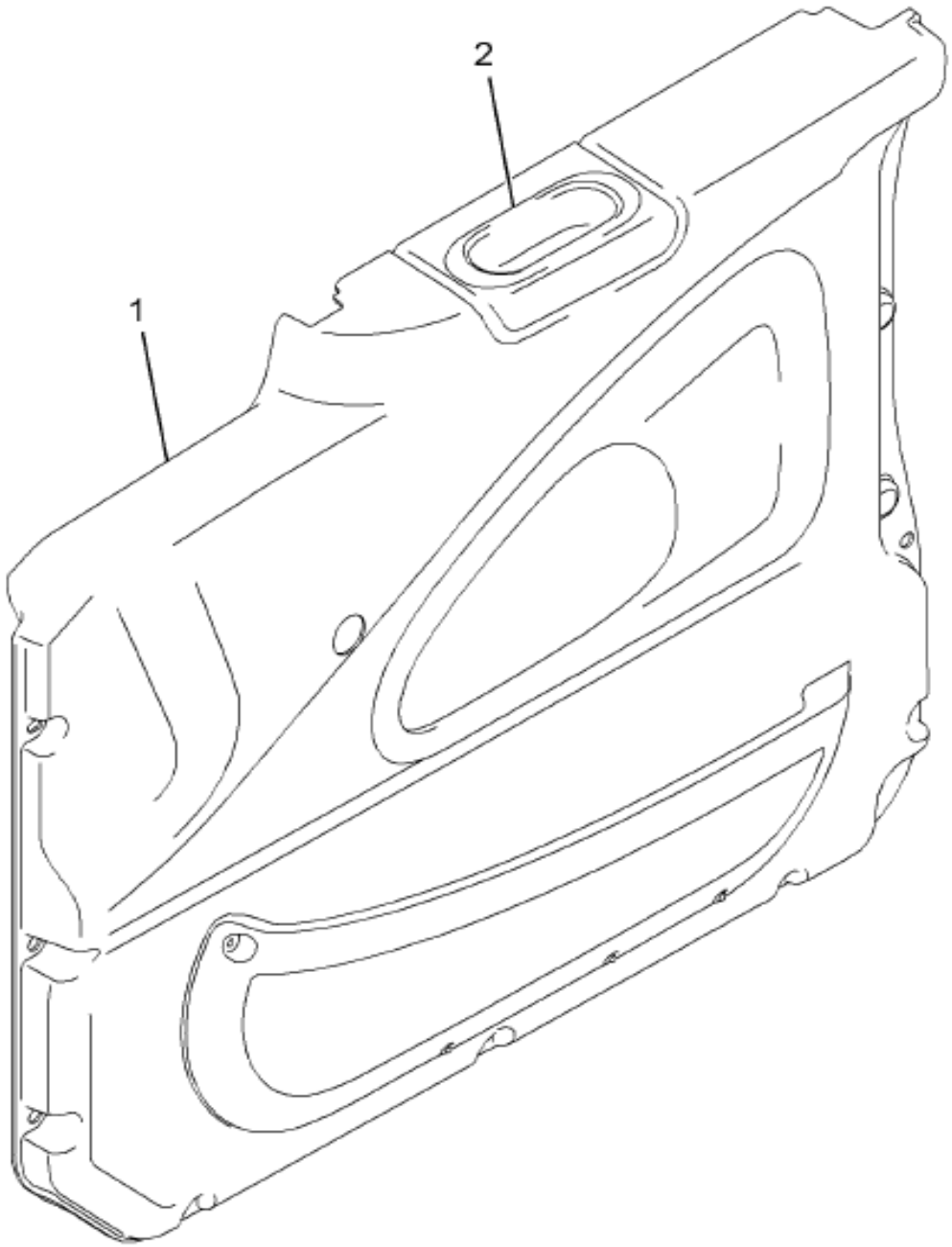

16-773-0051-01 C04

Item	Part No.	Qty	Description	Kit	Var	Figure
1	2506370C91	1	PANEL,DR TRM RH STD SMOKE GRAY			
2	2505201C1	1	CONTAINER,PULL CUP			
801	2506369C91	KT	KIT,INTR TRM PCKT SMK GRY RH			
880		RF	NOTE: ASM BELOW COMPRISED OF ABOVE COMPONENTS	Q		
881	3558221C92	RF	PANEL,DOOR TRIM RH CONV FRONT			

COPYRIGHT© 2011INTERNATIONAL TRUCK AND ENGINE CORP.

https://truckmanualshub.com/

Figure 0WLXG
INTERIOR TRIM; FLOOR MAT

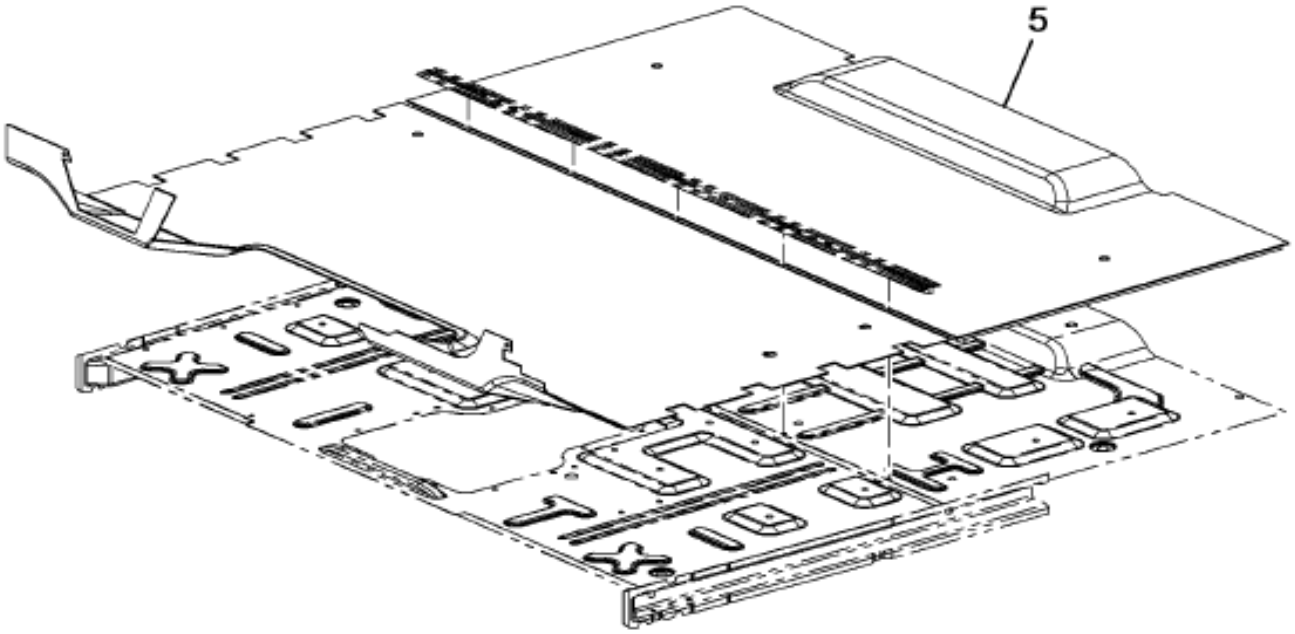

16-498-0001-01 A10

Item	Part No.	Qty	Description	Kit	Var	Figure
5	3548991M1	1	MAT,CUTOUT-STD,EXT CAB & T'CRE		0WLY9	
5	3548993M1	1	MAT,CUTOUT-STD,EXT CAB & T'CRE		0WLYF	
5	3548994M1	1	MAT,CUTOUT-STD,EXT CAB & T'CRE		0WLYG	
5	3565985M1	1	MAT,CUTOUT-STD EXT CAB & T'CR		0WLYL	
5	3549001M1	1	MAT,CUTOUT-STD,EXT CAB & T'CRE		0YLPJ	
5	3559137M1	1	MAT,CUTOUT-STD,EXT CAB & T'CRE		0WLZ5	

Grp 16

COPYRIGHT© 2011INTERNATIONAL TRUCK AND ENGINE CORP.

https://truckmanualshub.com/

Figure 0WLXG

INTERIOR TRIM; FLOOR MAT

Item	Part No.	Qty	Description	Kit	Var	Figure
5	3572235M1	1	MAT,CUTOUT-STD,EXT CAB & T'CRE		0WLZ9	

COPYRIGHT© 2011INTERNATIONAL TRUCK AND ENGINE CORP.

https://truckmanualshub.com/
Figure 005118
INTERIOR TRIM; HEADLINER

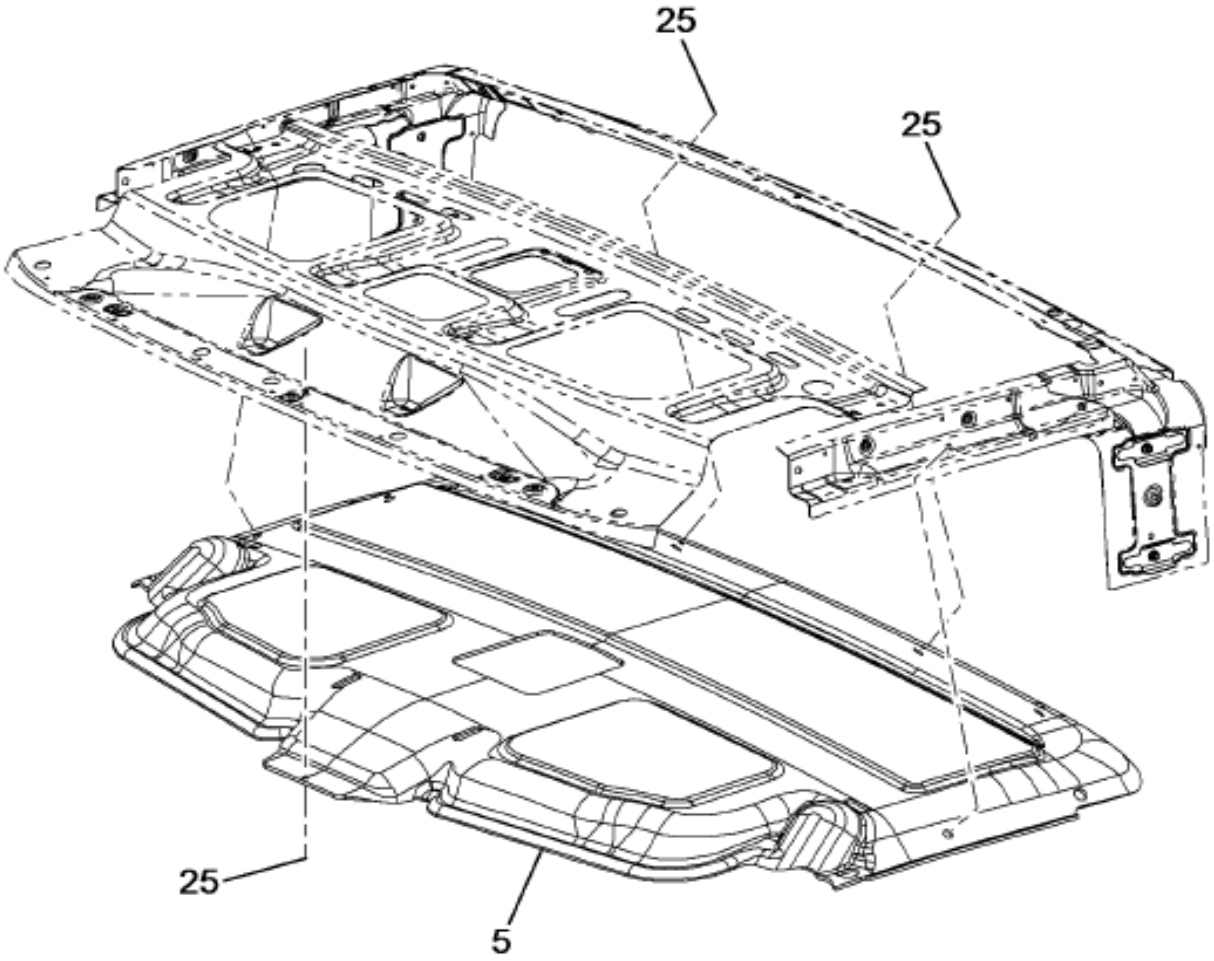

PANEL TRIM, SIDE PANEL
INSTALLATION
NGV - CONV

16-389-0033-01 E09

Grp 16

Figure 1 of 3

COPYRIGHT© 2011INTERNATIONAL TRUCK AND ENGINE CORP.

https://truckmanualshub.com/
Figure 005118
INTERIOR TRIM; HEADLINER

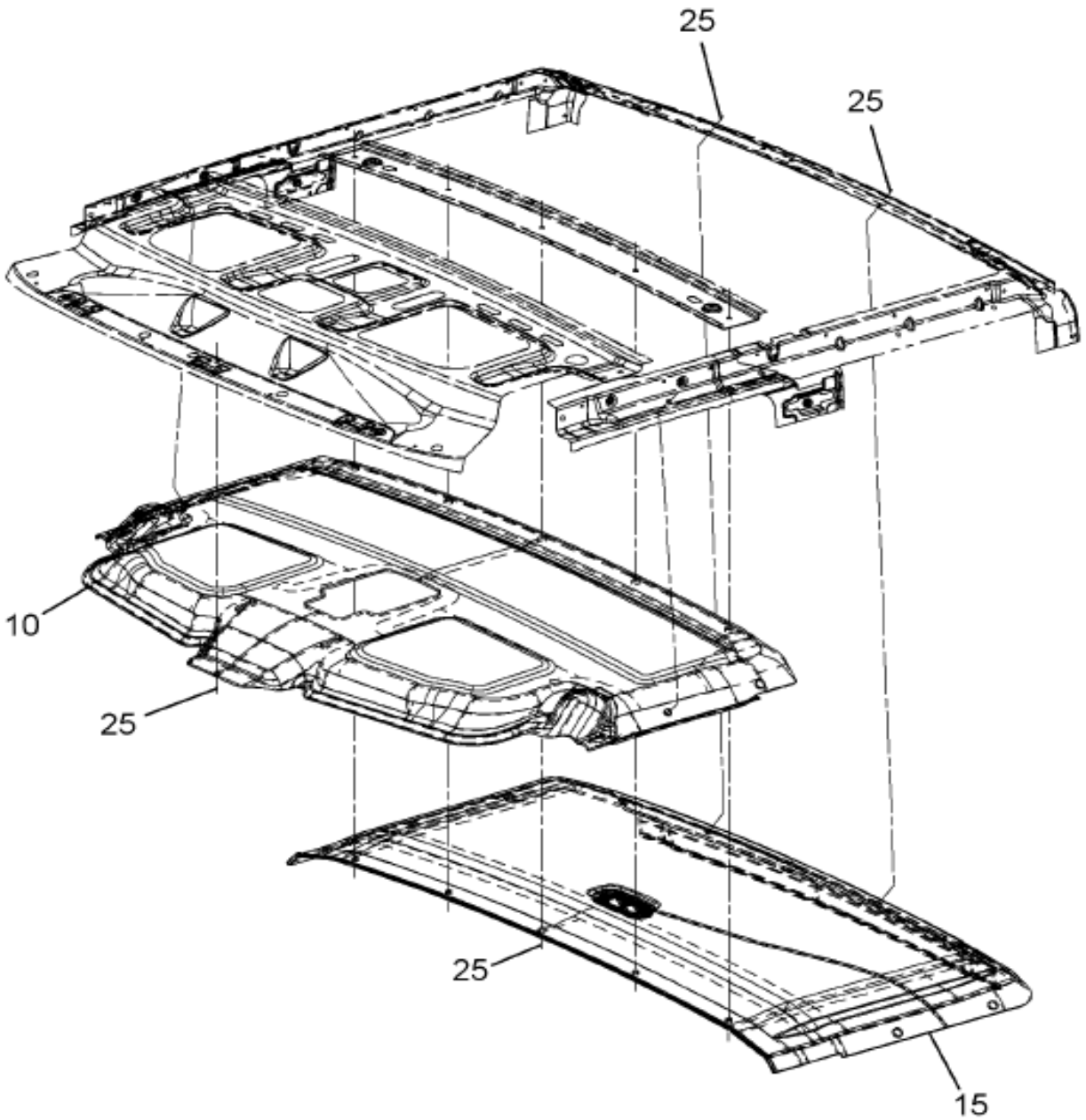

16-389-0034-01 M02

Figure 2 of 3

COPYRIGHT© 2011INTERNATIONAL TRUCK AND ENGINE CORP.

https://truckmanualshub.com/

Figure 005118

INTERIOR TRIM; HEADLINER

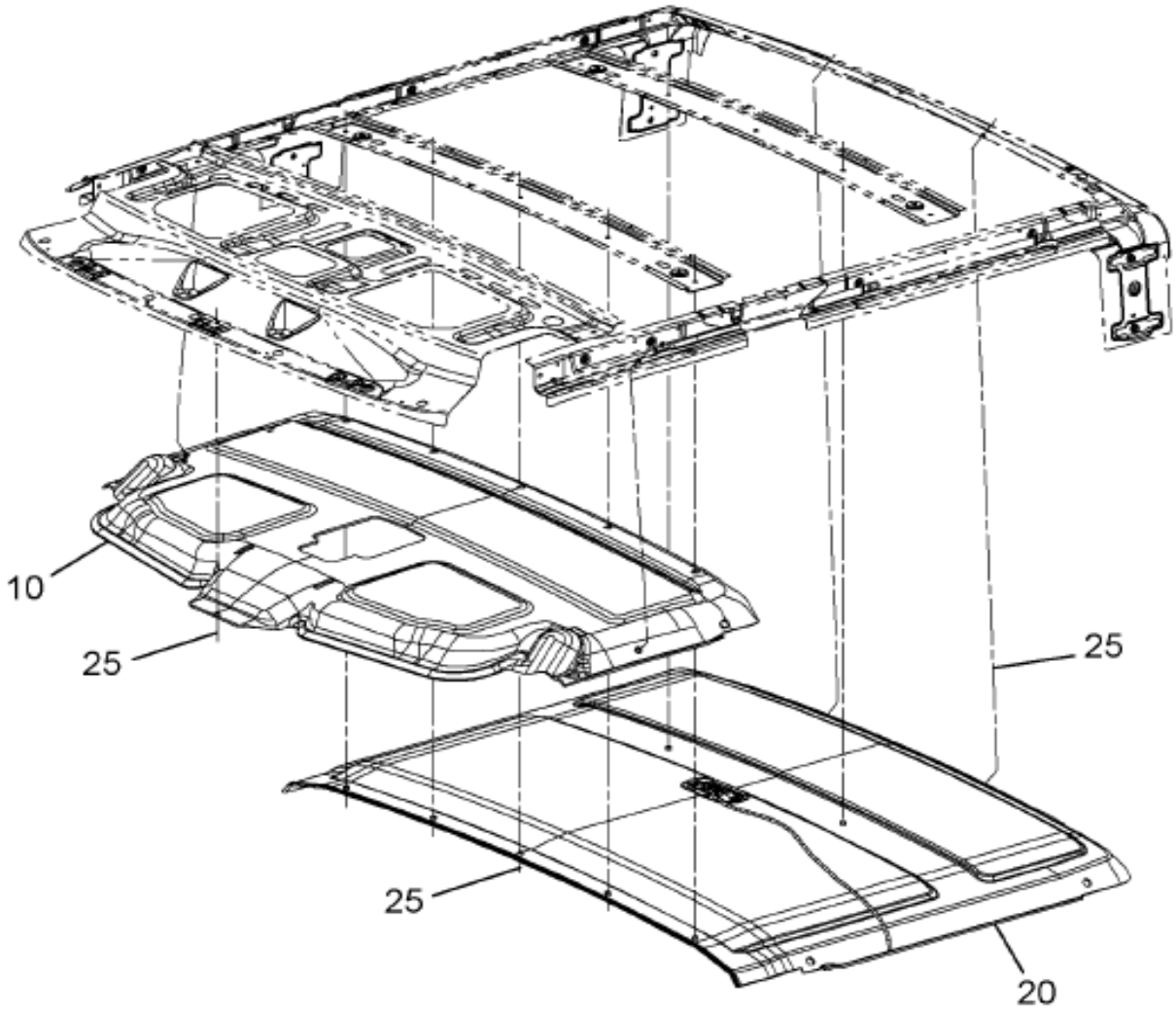

16-389-0035-01 M02

Grp 16

Item	Part No.	Qty	Description	Kit	Var	Figure
5	3559947C2	1	LINING HEAD ROOF TRIM STD CAB		06SHC	
25	3548696C3	3	FASTENR,CHRSTMS TREE 29.2X10MM		06SHC	

COPYRIGHT© 2011INTERNATIONAL TRUCK AND ENGINE CORP.

https://truckmanualshub.com/

Figure 06NKM

INTERIOR TRIM; KICK PANEL INSTL

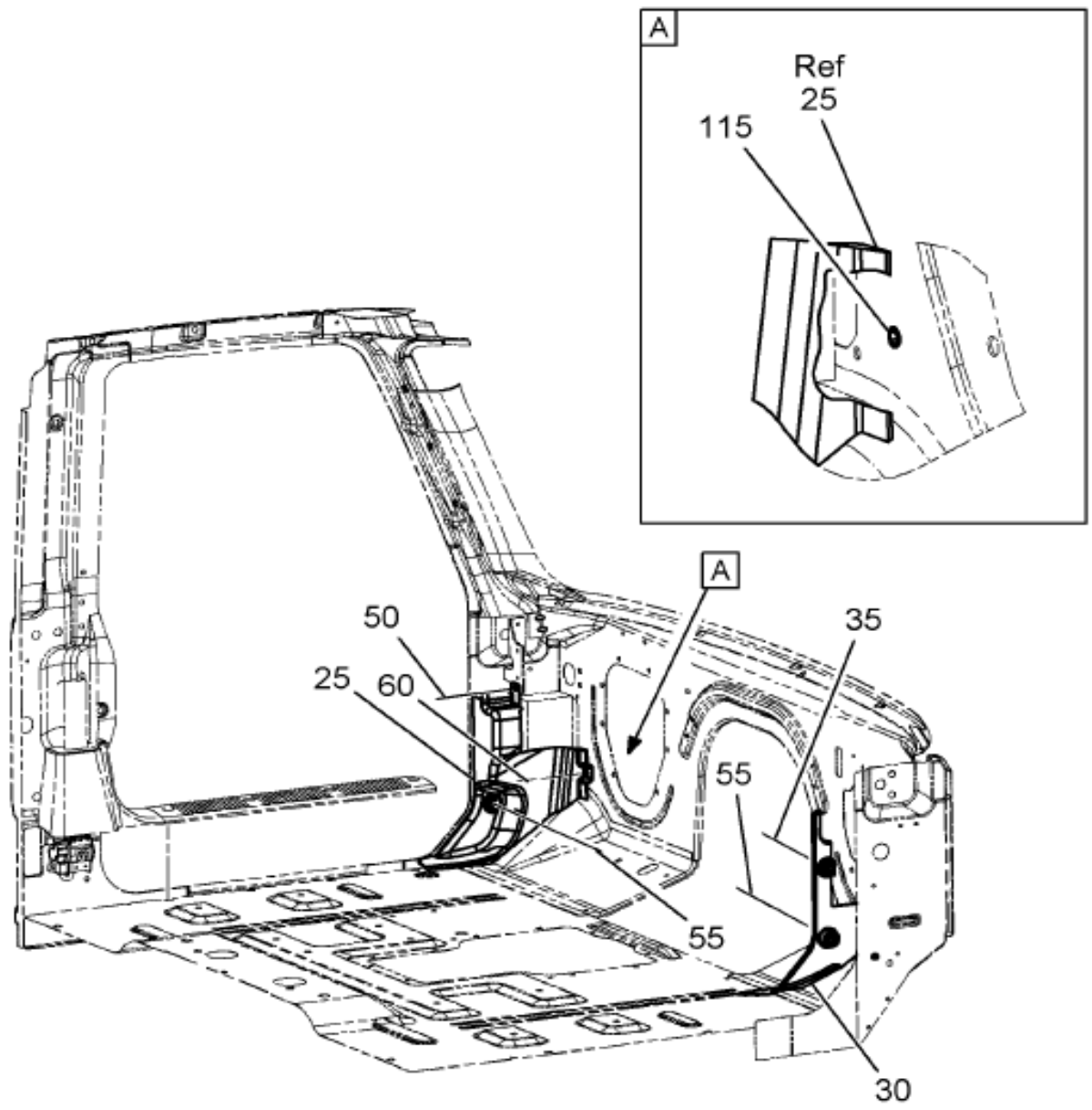

16-415-0005-AA B10

Item	Part No.	Qty	Description	Kit	Var	Figure
25	3544791C3	1	PANEL,COWL TRIM LH		06NLW	
30	3601851C1	1	PANEL,STD,EXT & LFE RH		06NLW	
35	3511058C2	1	FASTENER,TRM 2-STG RVT SMK GRY		06NLW	
50	3534873C2	1	NUT,HEX*M8 X 1.25 W/CAPTURE WA		06NLW	
55	3532083C1	2	BOLT,LOCK 8 MM W/PATCH		06NLW	
60	3510917C1	1	BOLT,SEMS ALL M6 35MM LONG HEX		06NLW	

COPYRIGHT© 2011INTERNATIONAL TRUCK AND ENGINE CORP.

https://truckmanualshub.com/

Figure 06NKM

INTERIOR TRIM; KICK PANEL INSTL

Item	Part No.	Qty	Description	Kit	Var	Figure
115	3510918C1	1	INSERT,THREADED M6 OPEN END		06NLW	

COPYRIGHT© 2011INTERNATIONAL TRUCK AND ENGINE CORP.

https://truckmanualshub.com/

Figure 0DBW3

IP MODULE EFFECTS, ABR#41, ENGINE OIL TEMP GAUGE

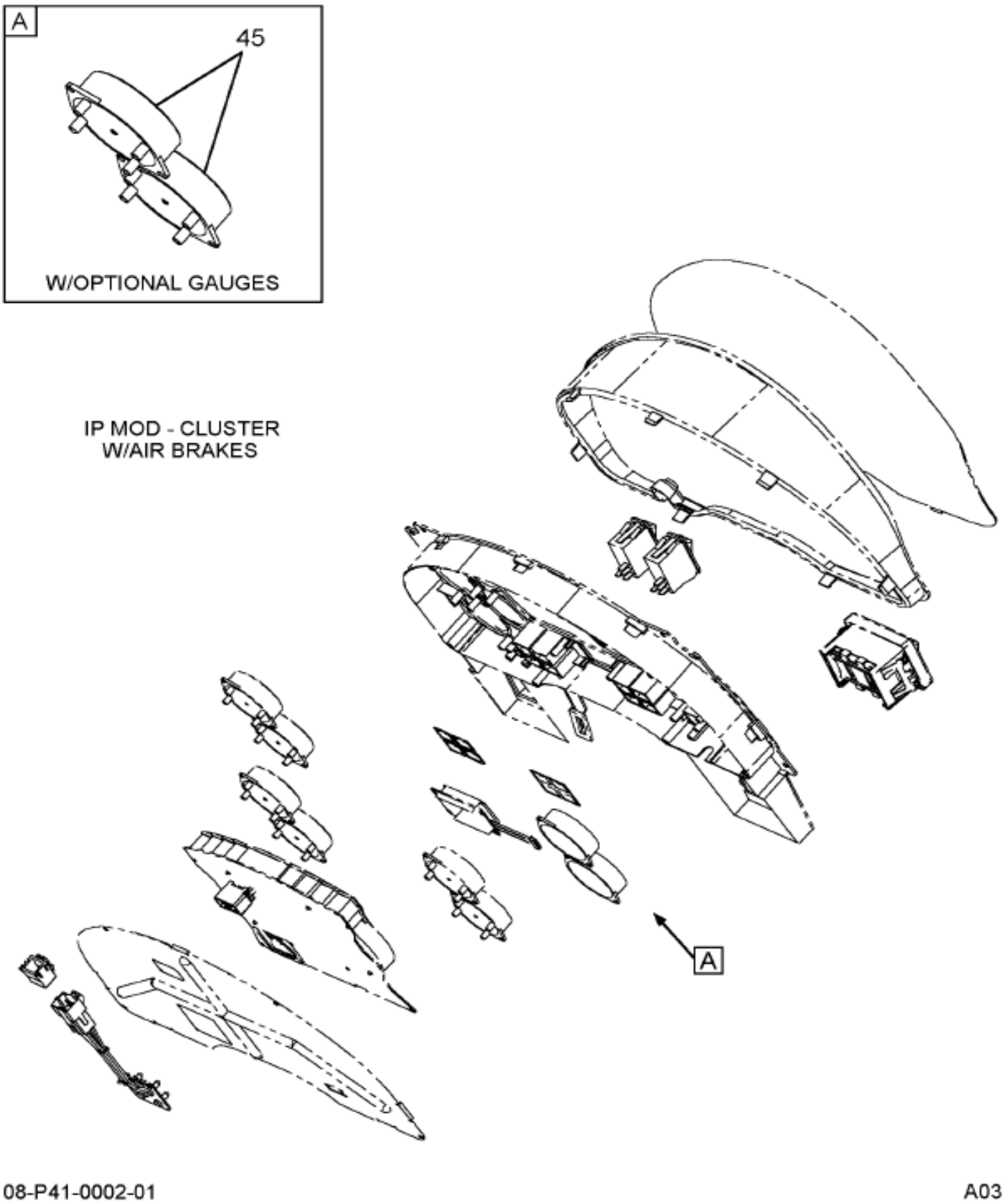

Item	Part No.	Qty	Description	Kit	Var	Figure
45	3548169F91	1	ELEC IP; GAUGE, ENGINE		0FF75	3548169F91
			NON-ILLUSTRATED REFERENCE FIGURE 3548169F91			
1	3533886C1	1	GAUGE,ELTRNC*ENGINE OIL TEMPER			3533886C1
880		RF	NOTE: ASM BELOW COMPRISED OF ABOVE COMPONENTS			

COPYRIGHT© 2011INTERNATIONAL TRUCK AND ENGINE CORP.

https://truckmanualshub.com/

Figure 0DBW3

IP MODULE EFFECTS, ABR#41, ENGINE OIL TEMP GAUGE

Item	Part No.	Qty	Description	Kit	Var	Figure
881	3548169F91	RF	ELEC IP; GAUGE, ENGINE			

COPYRIGHT© 2011INTERNATIONAL TRUCK AND ENGINE CORP.

https://truckmanualshub.com/

Figure 3535886C1

GAUGE,ELTRNC*ENGINE OIL TEMPER

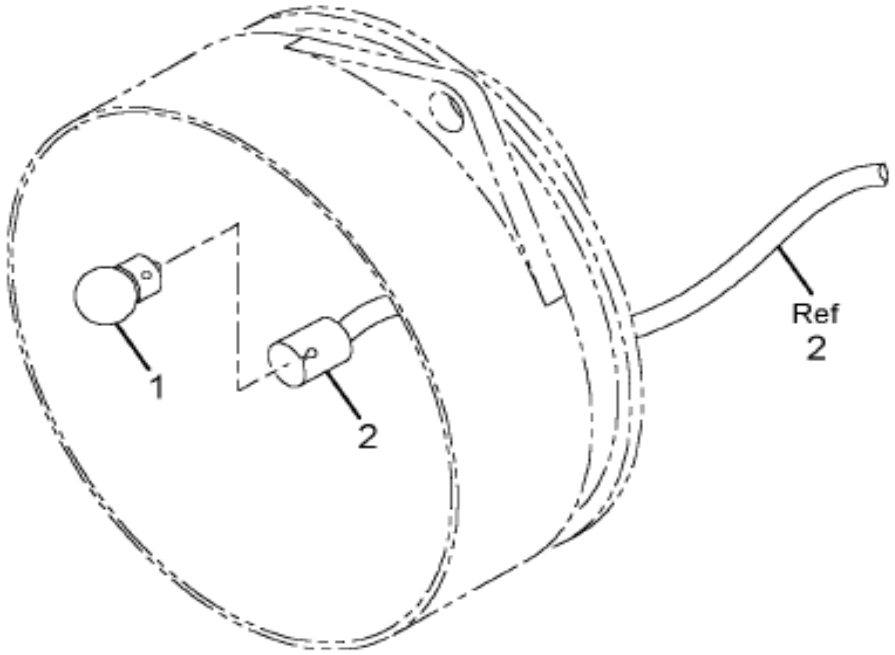

08-P42-0004-01 H03

Item	Part No.	Qty	Description	Kit	Var	Figure
1	2506796C1	2	LAMP,INCANDESCENT			
2	2506798C1	1	HARNESS,GAUGE JUMPER 5"-100/PK			
800		RF	NOTE: THE FOLLOWING PARTS ARE			
			NON-ILLUSTRATED			
801	2506420R1	1	MANUAL,INST GAGE INST & RPLMNT			
880		RF	NOTE: ASM BELOW COMPRISED OF ABOVE			

COPYRIGHT© 2011INTERNATIONAL TRUCK AND ENGINE CORP.

https://truckmanualshub.com/

Figure 3533886C1

GAUGE,ELTRNC*ENGINE OIL TEMPER

Item	Part No.	Qty	Description	Kit	Var	Figure
			COMPONENTS			
881	3533886C1	RF	GAUGE,ELTRNC*ENGINE OIL TEMPER			

COPYRIGHT© 2011INTERNATIONAL TRUCK AND ENGINE CORP.

https://truckmanualshub.com/

Figure 0691X

IP MODULE EFFECTS; ABR#1, MAIN CARRIER ASM

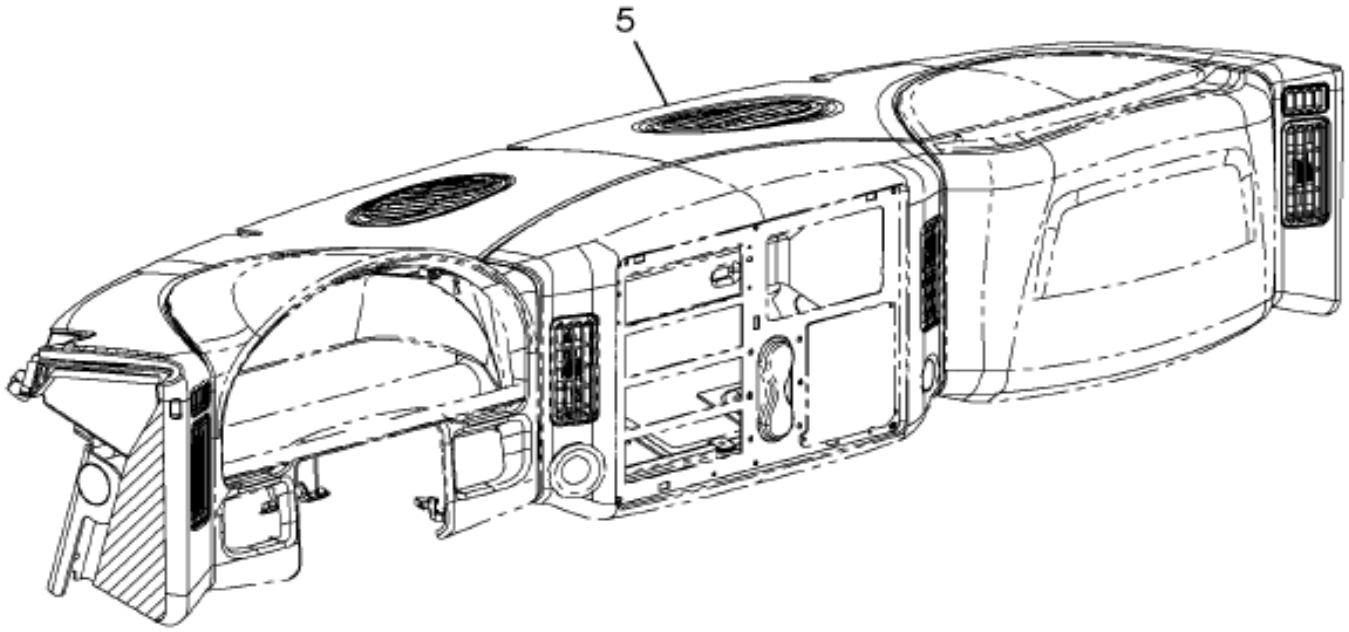

08-P01-0002-A1 B11

Item	Part No.	Qty	Description	Kit	Var	Figure
5	3511018F93	1	INST PANEL MAIN CARRIER LHD		06JTY	3511018F93

COPYRIGHT© 2011INTERNATIONAL TRUCK AND ENGINE CORP.

https://truckmanualshub.com/

Figure 3511018F93

INST PANEL MAIN CARRIER LHD

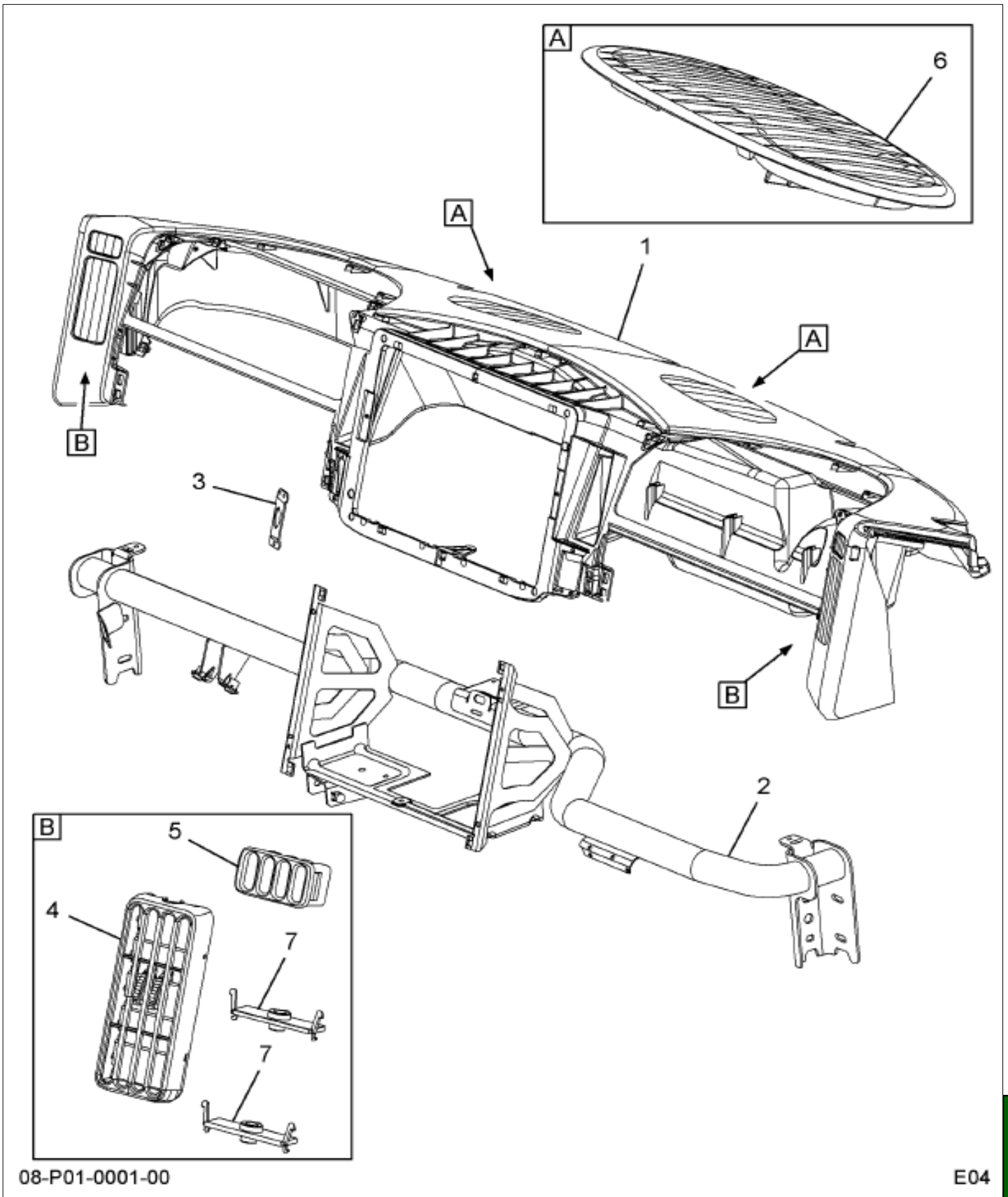

Item	Part No.	Qty	Description	Kit	Var	Figure
1	3547243C1	1	PANEL,INSTRUMENT DUCT LHD			
2	3547249C1	1	PANEL,INSTRUMENT TIEBAR LHD			
3	3554198C1	1	BRACKET,SWITCH IGNITION			
4	3547244C1	2	OUTLET,LOUVER AIR COND			
5	3547247C1	2	OUTLET,DEFROSTER SIDE WINDOW			
6	3547246C1	2	OUTLET,DEFROSTER WINDSHIELD			

Grp 16

COPYRIGHT© 2011INTERNATIONAL TRUCK AND ENGINE CORP.

https://truckmanualshub.com/

Figure 3511018F93

INST PANEL MAIN CARRIER LHD

Item	Part No.	Qty	Description	Kit	Var	Figure
7	3547245C1	4	BUSHING,SPECIAL NYL A/C OUTLET			
880		RF	NOTE: ASM BELOW COMPRISED OF ABOVE COMPONENTS			
881	3511018F93	RF	INST PANEL MAIN CARRIER LHD			

COPYRIGHT© 2011INTERNATIONAL TRUCK AND ENGINE CORP.

https://truckmanualshub.com/

Figure 06JV1

IP MODULE EFFECTS; ABR#2, LEFT CLOSEOUT PANEL

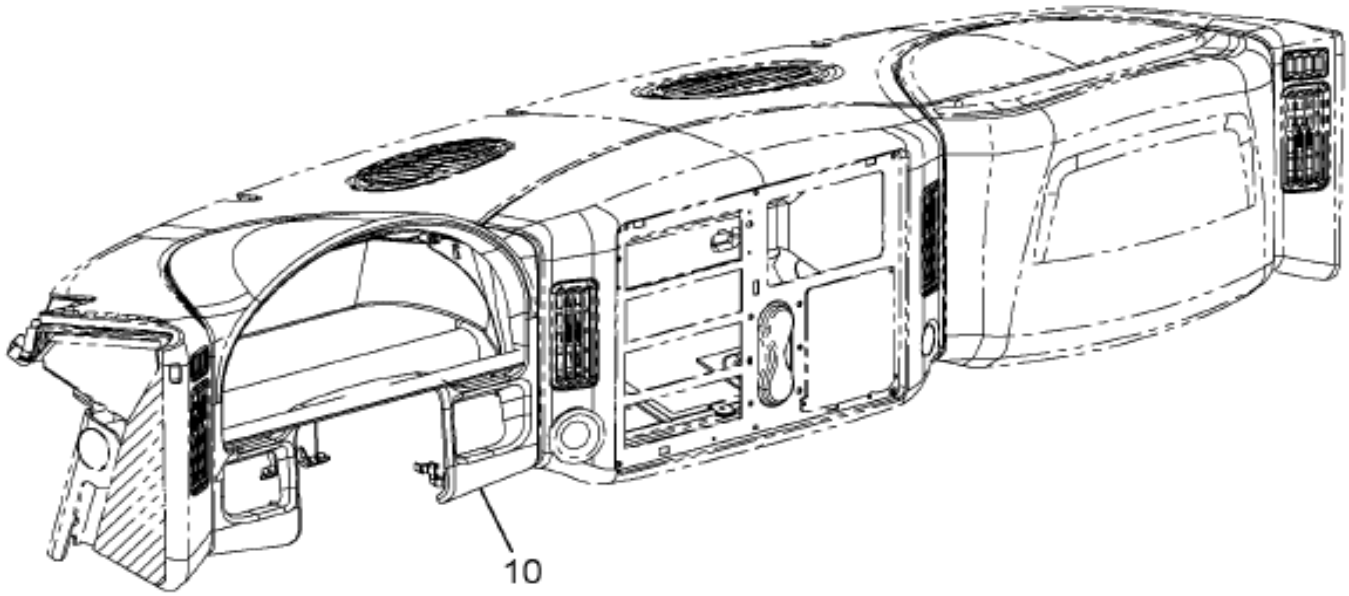

08-P02-0003-A2 B11

Item	Part No.	Qty	Description	Kit	Var	Figure
10	3511042F93	1	INST PNL CLSTR CLSOUT LHD		06JV2	3511042F93

Grp 16

COPYRIGHT© 2011INTERNATIONAL TRUCK AND ENGINE CORP.

https://truckmanualshub.com/

Figure 3511042F93
INST PNL CLSTR CLSOUT LHD

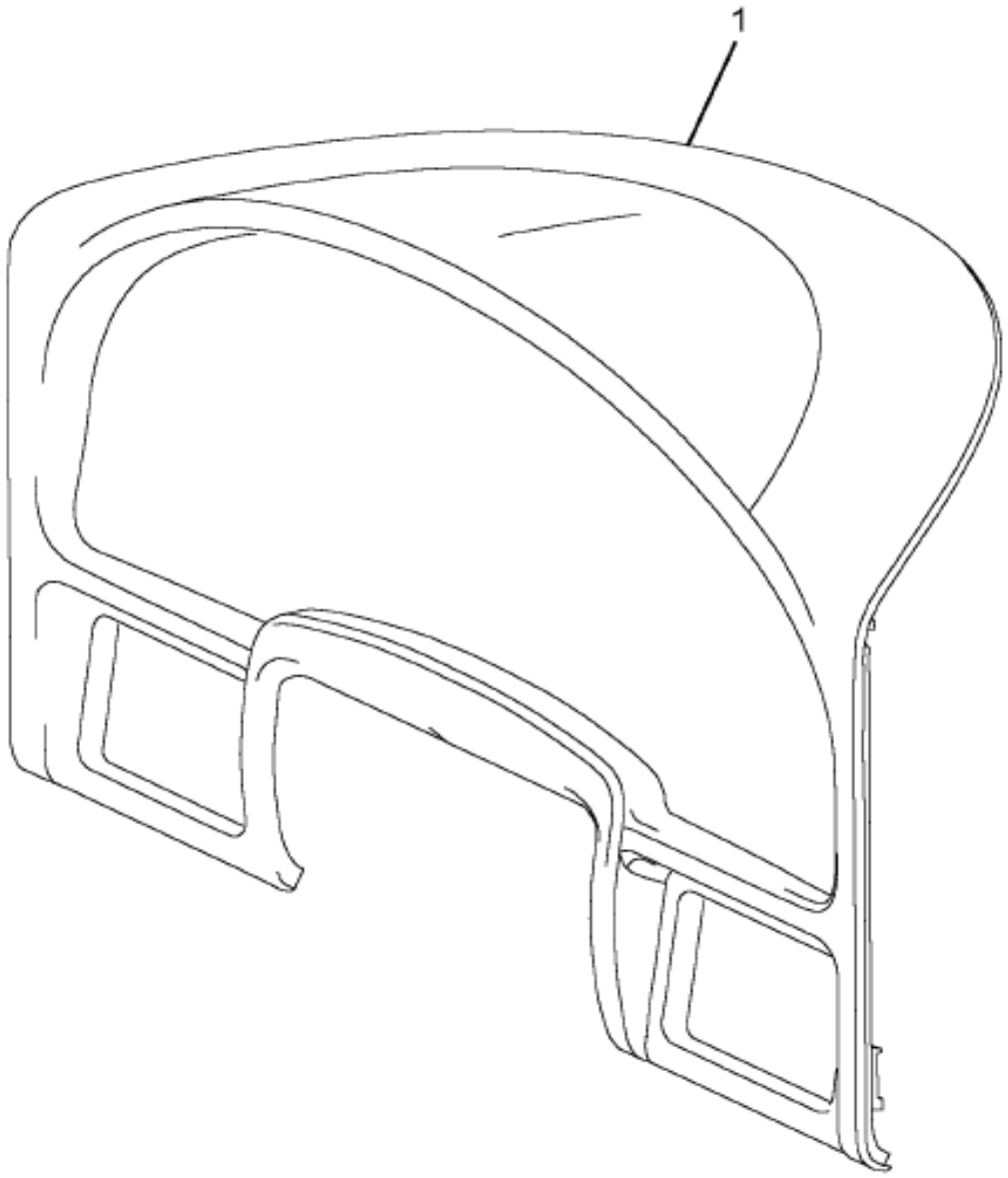

08-P02-0002-00 J03

Item	Part No.	Qty	Description	Kit	Var	Figure
1	3547251C1	1	PANEL,INSTRUMENT CLSTR CLOSEOU			
1	2507003C1	6	CLIP,INSTR CLSTR CL0SEOUT TRM			
880		RF	NOTE: ASM BELOW COMPRISED OF ABOVE COMPONENTS			
881	3511042F93	RF	INST PNL CLSTR CLSOUT LHD			

COPYRIGHT© 2011INTERNATIONAL TRUCK AND ENGINE CORP.

https://truckmanualshub.com/

Figure 0015C

IP MODULE EFFECTS; ABR#22, RIGHT SIDE WARNING LIGHT

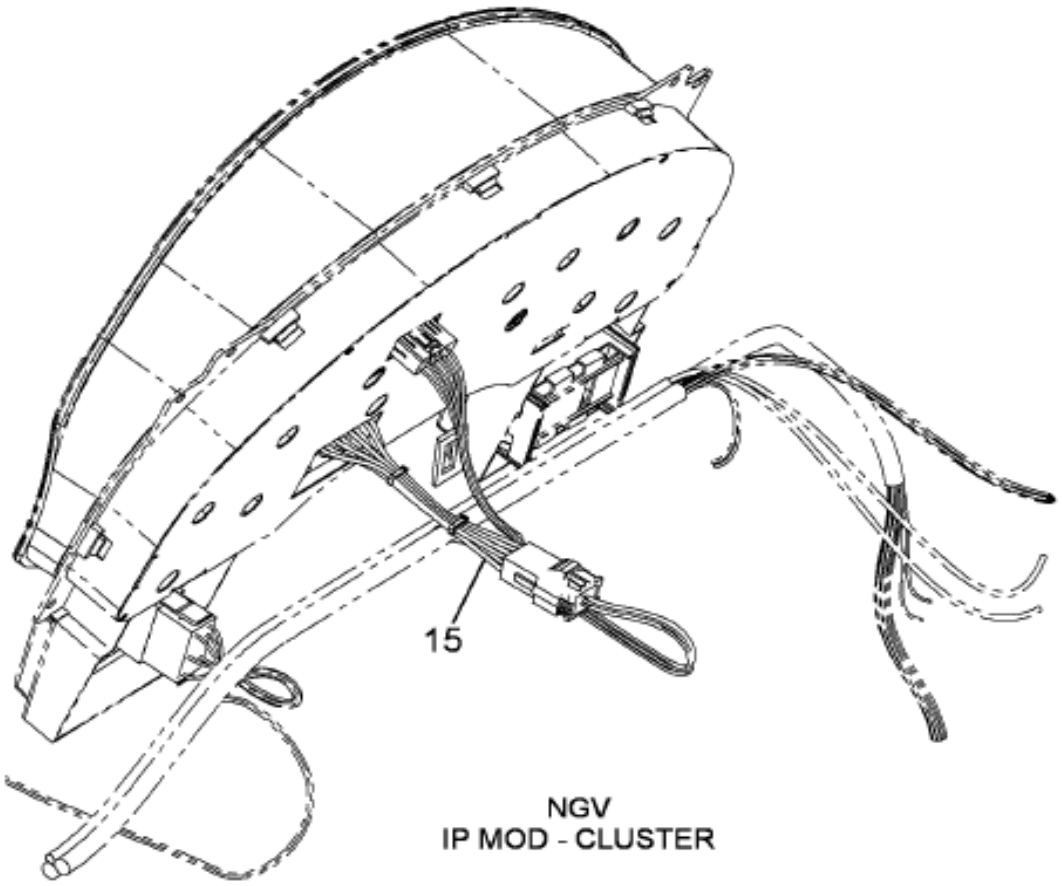

08-P22-0003-C0 A11

Grp 16

Item	Part No.	Qty	Description	Kit	Var	Figure
15	3550701F94	1	IP,CLUSTER,RH WARNING LIGHTS		0PSXQ	3550701F94

COPYRIGHT© 2011INTERNATIONAL TRUCK AND ENGINE CORP.

https://truckmanualshub.com/

Figure 3330743C92

HARNESS,WARNING LITES,W/PANEL

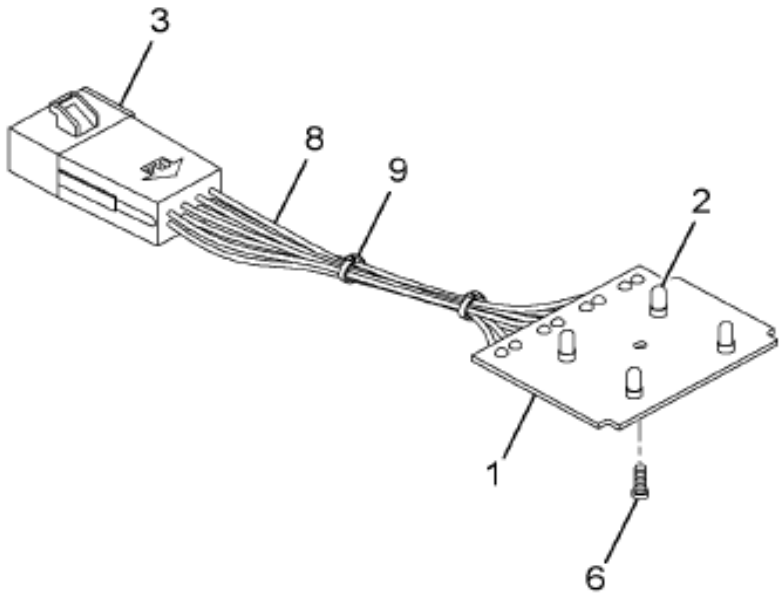

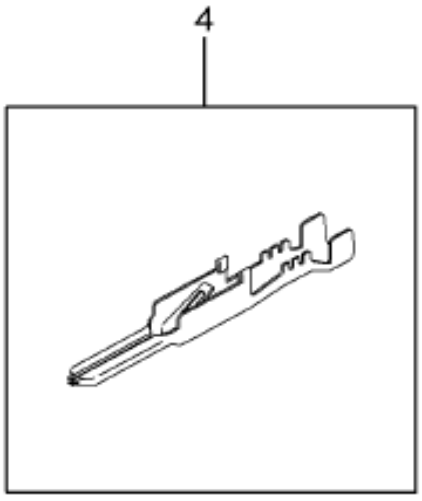

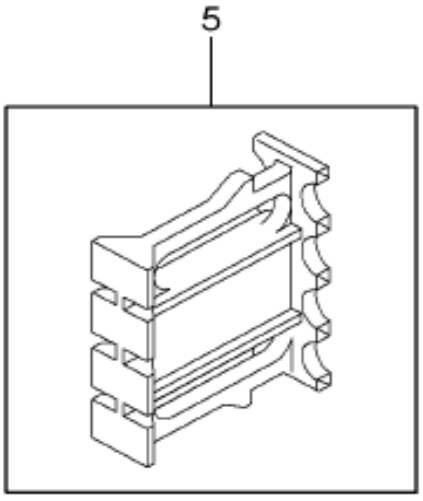

08-P22-0013-01 B09

Item	Part No.	Qty	Description	Kit	Var	Figure
1		1	PC BOARD			
2		4	SOCKET LAMP			
3		1	METRI-PACK CONN "PACKARD"			
4		8	TERMINAL CONN PACKARD 12020116			
5		1	SECONDARY LOCK PACKARD12065141			
6		1	SCREW, MACH, PHIL HD PLASTITE			

COPYRIGHT© 2011INTERNATIONAL TRUCK AND ENGINE CORP.

https://truckmanualshub.com/

Figure 3550743C92

HARNESS,WARNING LITES,W/PANEL

Item	Part No.	Qty	Description	Kit	Var	Figure
8		8	WIRE, GXL, AWG 16, WHITE			
9		2	CABLE TIE			
800		RF	NOTE: THE FOLLOWING PARTS ARE NON-ILLUSTRATED			
801		8	TERMINAL PCB, SOLDERED			
880		RF	NOTE: ASM BELOW COMPRISED OF ABOVE COMPONENTS			
881	3550743C92	RF	HARNESS,WARNING LITES,W/PANEL			

COPYRIGHT© 2011INTERNATIONAL TRUCK AND ENGINE CORP.

https://truckmanualshub.com/

Figure 3350701F94

IP,CLUSTER,RH WARNING LIGHTS

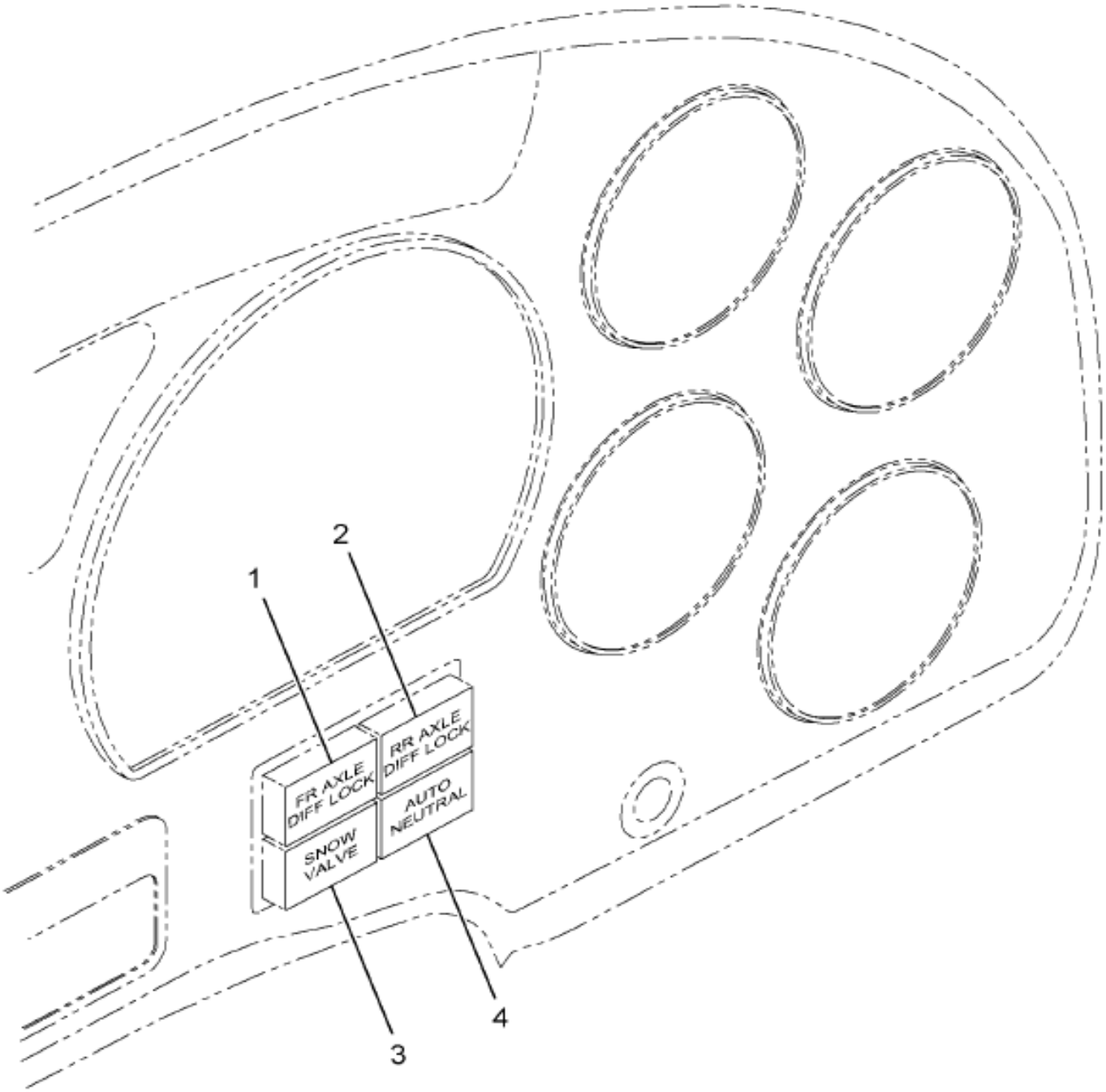

08-P22-0002-00 K04

Item	Part No.	Qty	Description	Kit	Var	Figure
1	3550731C2	1	LENS,INSTR CLUSTER*FWD AXLE DI			
2	3550732C2	1	LENS,INSTR CLUSTER*RR AXLE DIF			
3	3550733C1	1	LENS,INSTR CLUSTER*SNOW VALVE			
4	3550734C1	1	LENS,INSTR CLUSTER*AUTO NEUTRA			
800		RF	NOTE: THE FOLLOWING PARTS ARE			
			NON-ILLUSTRATED			

COPYRIGHT© 2011INTERNATIONAL TRUCK AND ENGINE CORP.

https://truckmanualshub.com/

Figure 3550701F94

IP,CLUSTER,RH WARNING LIGHTS

Item	Part No.	Qty	Description	Kit	Var	Figure
801	3550743C92	1	HARNESS,WARNING LITES,W/PANEL			3550743C92
880		RF	NOTE: ASM BELOW COMPRISED OF ABOVE COMPONENTS			
881	3550701F94	RF	IP,CLUSTER,RH WARNING LIGHTS			

COPYRIGHT© 2011INTERNATIONAL TRUCK AND ENGINE CORP.

https://truckmanualshub.com/

Figure 0375K

IP MODULE EFFECTS; ABR#23, LEFT HAND SWITCH HOUSING

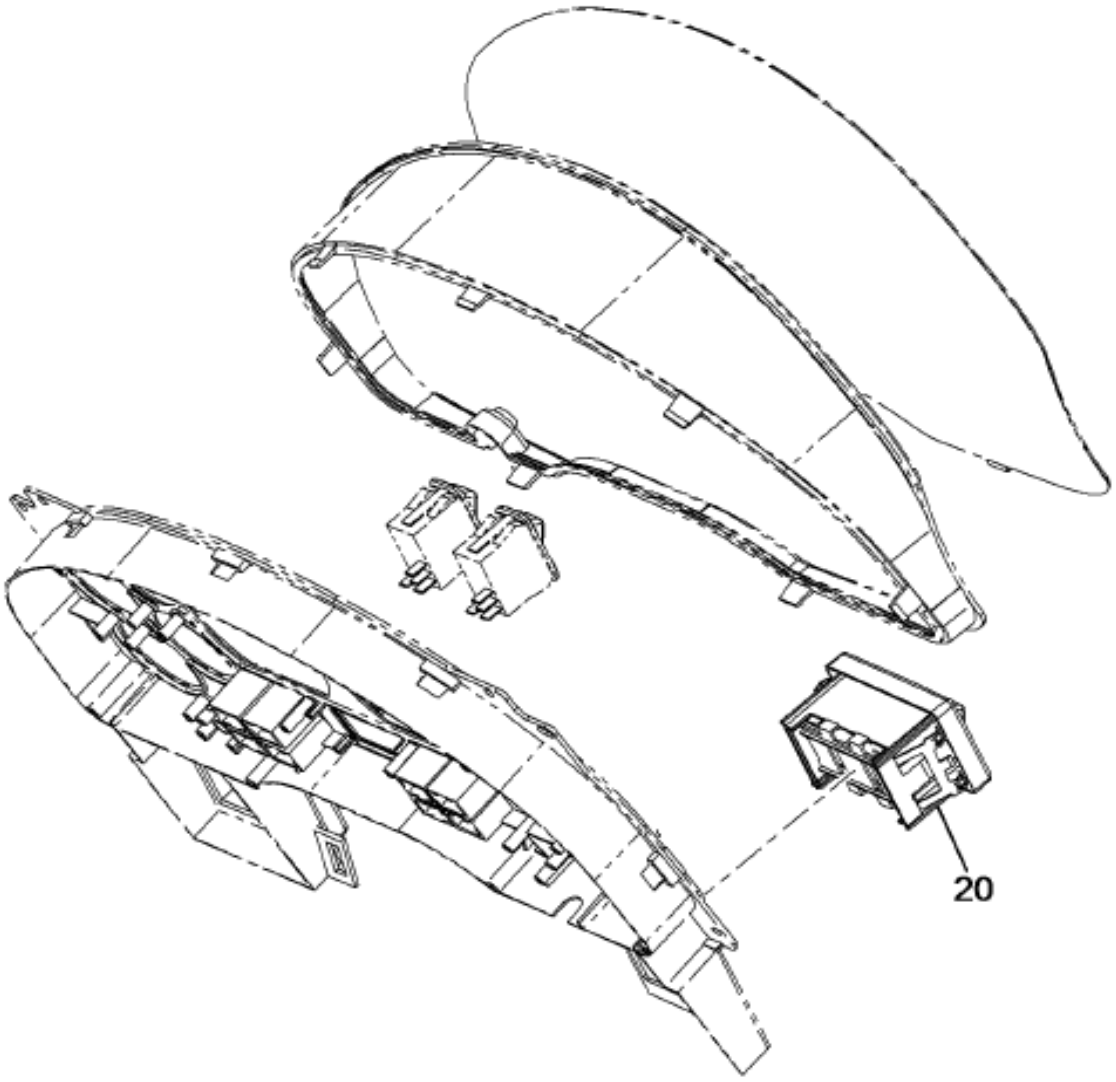

NGV
IP MOD - CLUSTER
(W/AIR BRAKES)

08-P23-0003-01 A09

Item	Part No.	Qty	Description	Kit	Var	Figure
20	3581699F91	1	ELEC IP,3 SW HDLGT MOD-2LYR		0JD12	3581699F91

COPYRIGHT© 2011INTERNATIONAL TRUCK AND ENGINE CORP.

https://truckmanualshub.com/

Figure 3581691P91
ELEC IP,3 SW HDLGT MOD-2LYR

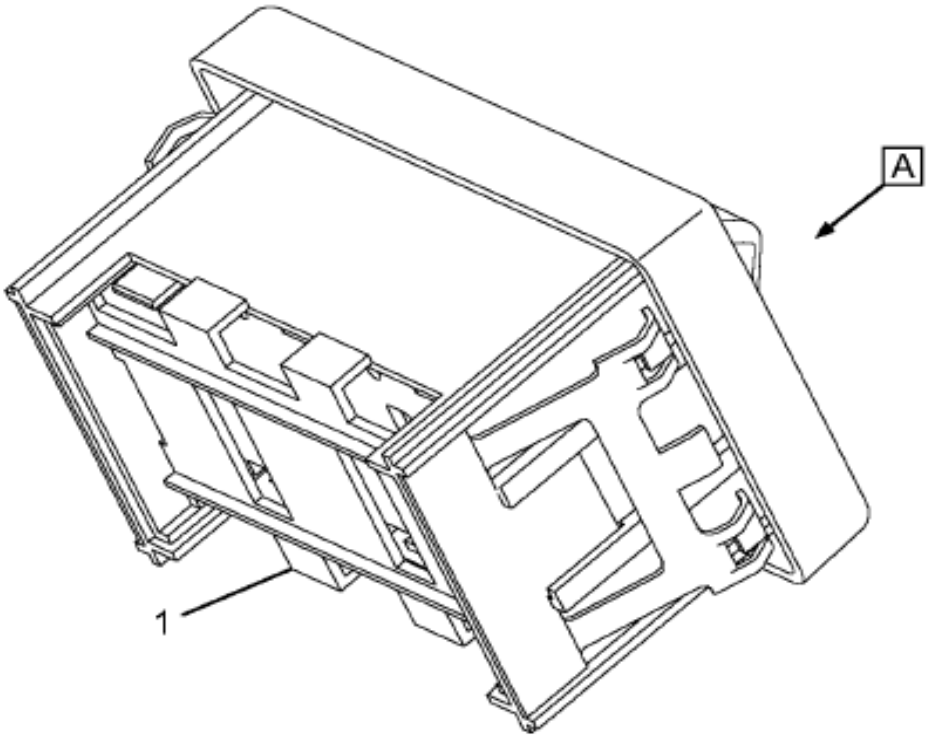

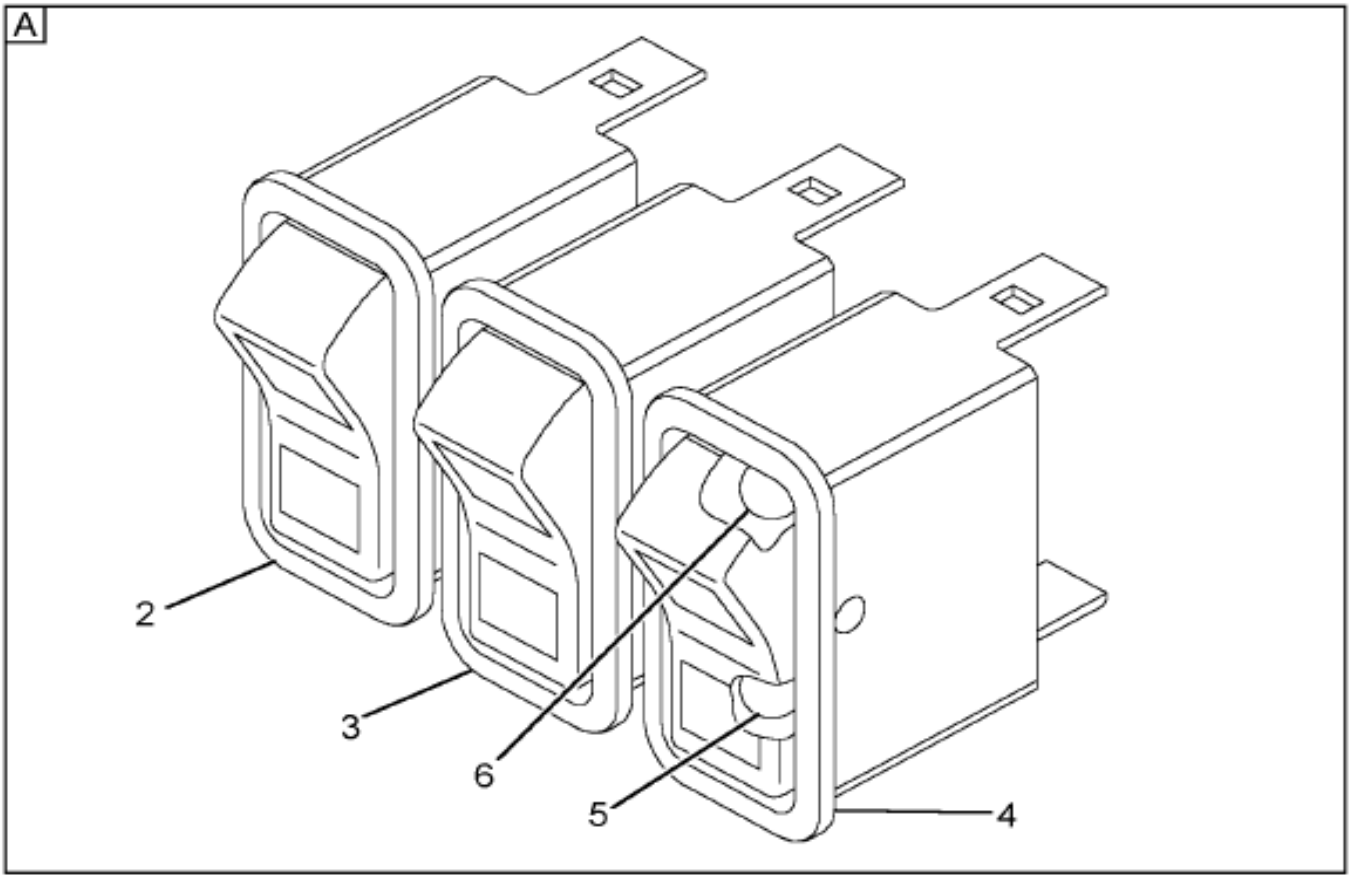

08-P23-0004-01 E03

Item	Part No.	Qty	Description	Kit	Var	Figure
1	3582062C1	1	HOUSING,SW ASSY,2/3 PK (2 LYR)			
2	3563061C1	1	SWITCH,HEADLIGHT-3 WAY ROCKER			
3	3563062C1	1	SWITCH,ELEC PANEL LIGHT DIMMER			3563062C1
4	3563063C1	1	SWITCH,ELECTRONIC WORK LIGHT			3563063C1
5	3533928C1	1	LIGHT,IND,LED AMBER BKLGT			
6	3578733C1	1	LIGHT,IND,LED ON-GREEN,BRIGHT			

Grp 16

COPYRIGHT© 2011INTERNATIONAL TRUCK AND ENGINE CORP.

https://truckmanualshub.com/

Figure 3581699F91

ELEC IP,3 SW HDLGT MOD-2LYR

Item	Part No.	Qty	Description	Kit	Var	Figure
880		RF	NOTE: ASM BELOW COMPRISED OF ABOVE COMPONENTS			
881	3581699F91	RF	ELEC IP,3 SW HDLGT MOD-2LYR			
			NON-ILLUSTRATED REFERENCE FIGURE 3563062C1			
1		RF	SWITCH,PANEL LIGHT DIMMER			
2	2506670R2	1	MANUAL,SWITCH INSTL SW HSG			
880		RF	NOTE: ASM BELOW COMPRISED OF ABOVE COMPONENTS			
881	3563062C1	RF	SWITCH,ELEC PANEL LIGHT DIMMER			
			NON-ILLUSTRATED REFERENCE FIGURE 3563063C1			
1		RF	SWITCH,WORK LIGHT			
2	2506670R2	1	MANUAL,SWITCH INSTL SW HSG			
880		RF	NOTE: ASM BELOW COMPRISED OF ABOVE COMPONENTS			
881	3563063C1	RF	SWITCH,ELECTRONIC WORK LIGHT			

COPYRIGHT© 2011INTERNATIONAL TRUCK AND ENGINE CORP.

https://truckmanualshub.com/

Figure 06JV3

IP MODULE EFFECTS; ABR#3, RIGHT CLOSEOUT PANEL

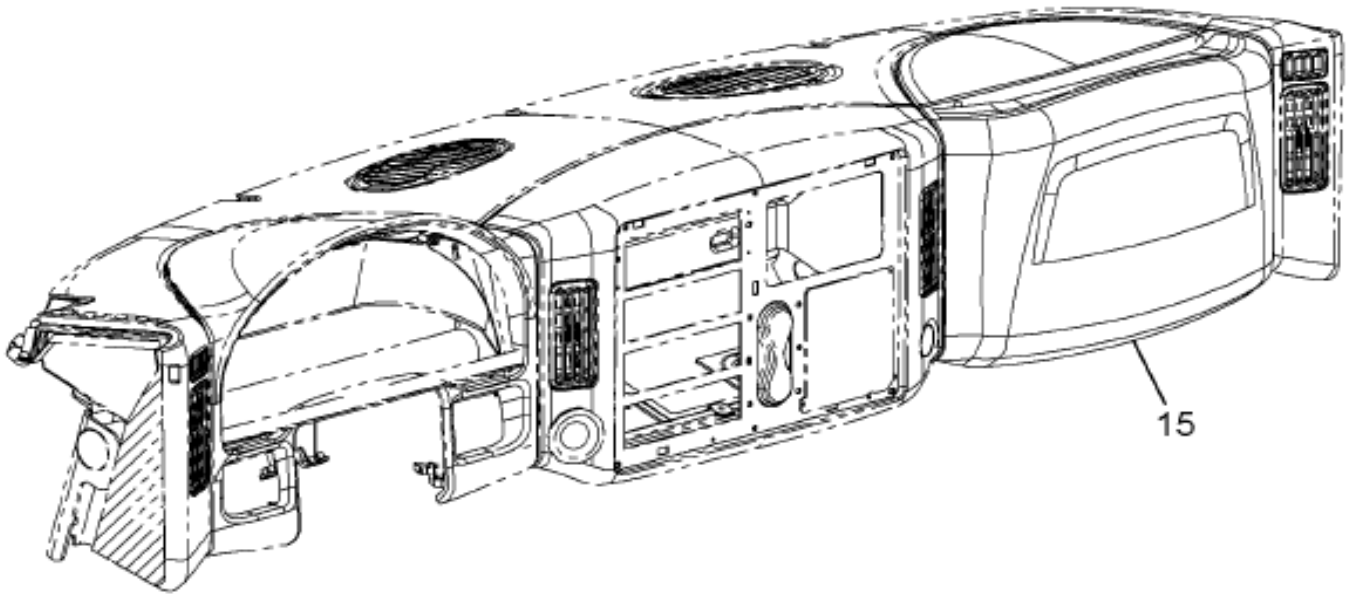

08-P03-0003-A3 B11

Grp 16

Item	Part No.	Qty	Description	Kit	Var	Figure
15	3511056F93	1	INST PNL PASS CLSOUT LHD		06JV6	3511056F93

COPYRIGHT© 2011INTERNATIONAL TRUCK AND ENGINE CORP.

https://truckmanualshub.com/

Figure 3511056F93

INST PNL PASS CLSOUT LHD

Item	Part No.	Qty	Description	Kit	Var	Figure
1	3547252C1	1	PANEL,INSTRUMENT UPR PAS PNL			
2	3547253C1	1	PANEL,INSTRUMENT FUSE ACCESS			
3	473143C1	2	SCREW SPECIAL HI-LOW			
4	2507003C1	2	CLIP,INSTR CLSTR CL0SEOUT TRM			
880		RF	NOTE: ASM BELOW COMPRISED OF ABOVE COMPONENTS			

COPYRIGHT© 2011INTERNATIONAL TRUCK AND ENGINE CORP.

https://truckmanualshub.com/

Figure 3511056F93

INST PNL PASS CLSOUT LHD

Item	Part No.	Qty	Description	Kit	Var	Figure
881	3511056F93	RF	INST PNL PASS CLSOUT LHD			

COPYRIGHT© 2011INTERNATIONAL TRUCK AND ENGINE CORP.

https://truckmanualshub.com/

Figure 0DC0X

IP MODULE EFFECTS; ABR#30, COURTESY & DOME LIGHT WIRING

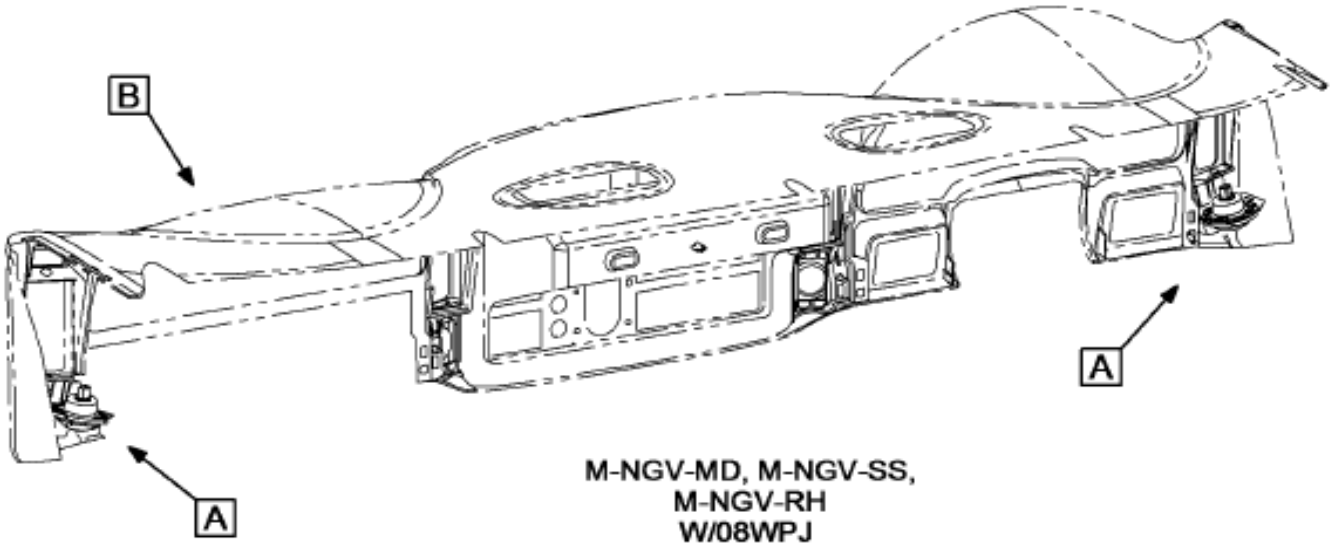

M-NGV-MD, M-NGV-SS,
M-NGV-RH
W/08WPJ
W/016WRX, 016WSG
OR
W/016WRZ, 016WSJ

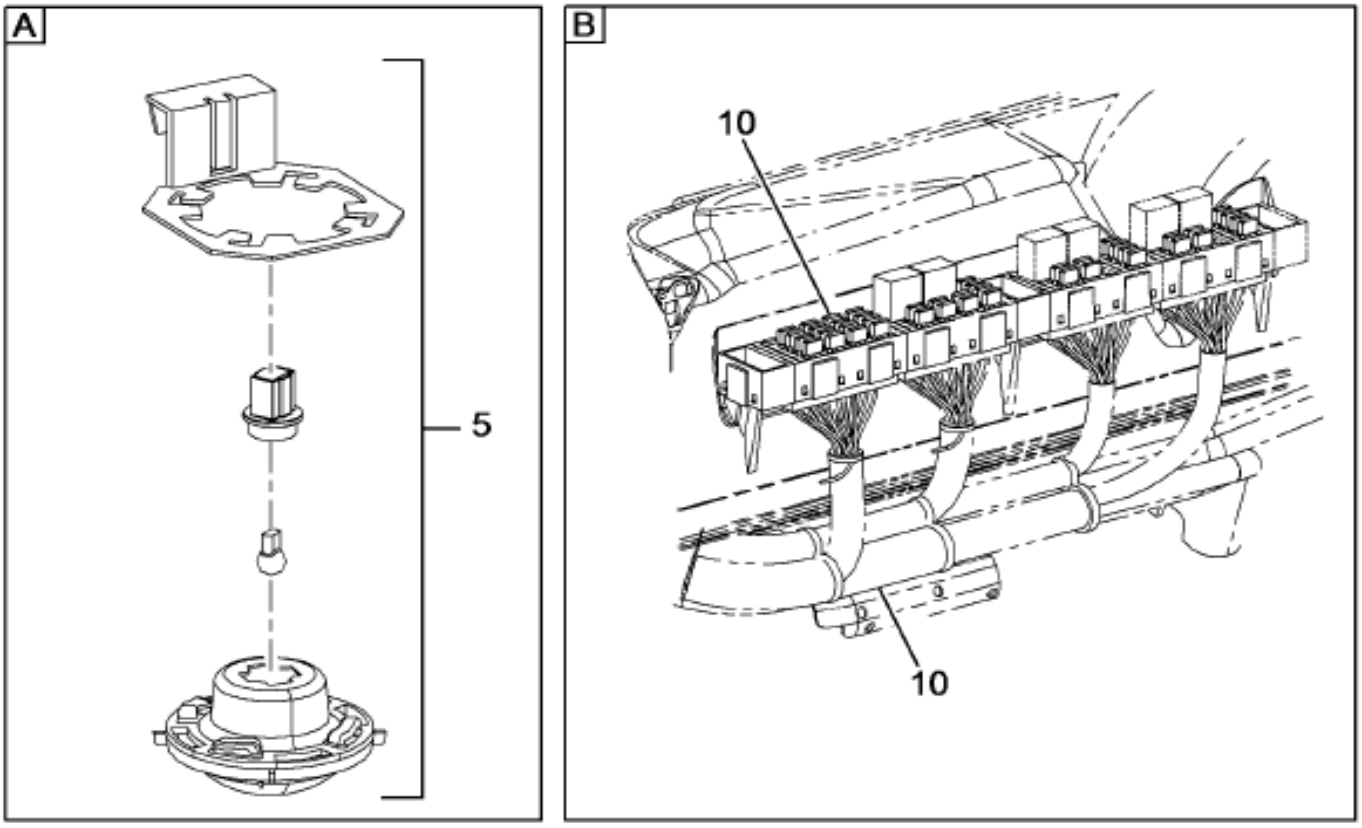

08-P30-0003-A0 M08

Item	Part No.	Qty	Description	Kit	Var	Figure
10	3549471F92	1	ELEC IP; DOME & COURTESY LIGHT		0DCJX	3549471F92

COPYRIGHT© 2011INTERNATIONAL TRUCK AND ENGINE CORP.

https://truckmanualshub.com/

Figure 3549471F92

ELEC IP; DOME & COURTESY LIGHT

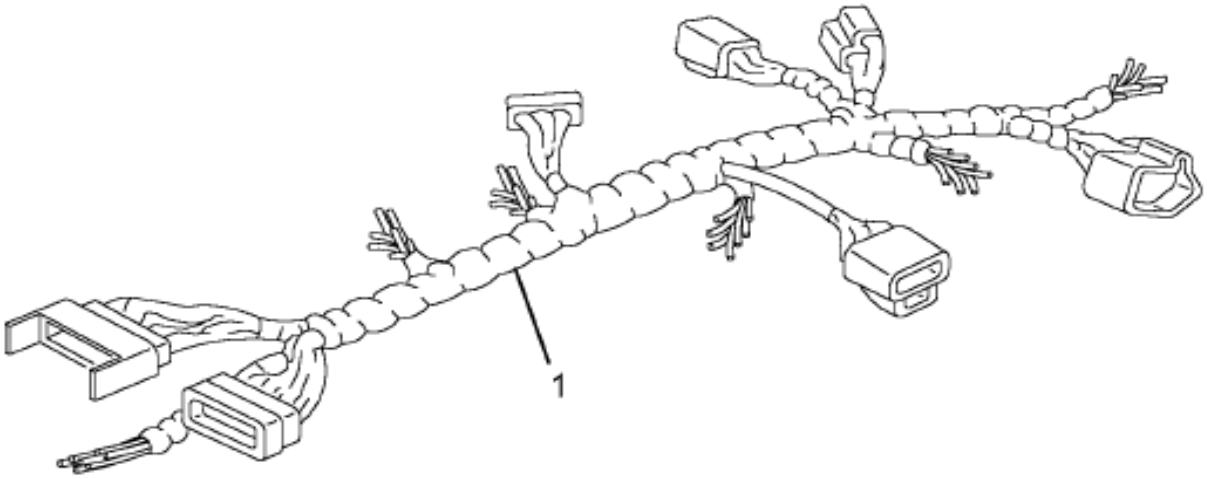

08-P58-0006-01 C03

Grp 16

Item	Part No.	Qty	Description	Kit	Var	Figure
1	3549470C92	1	HARNESS,DOME & COURTESY LT WRG			
1	3549470C91	1	HARNESS,DOME & COURTESY LT WRG			
880		RF	NOTE: ASM BELOW COMPRISED OF ABOVE COMPONENTS			
881	3549471F92	RF	ELEC IP; DOME & COURTESY LIGHT			

COPYRIGHT© 2011INTERNATIONAL TRUCK AND ENGINE CORP.

https://truckmanualshub.com/

Figure 0RWQD

IP MODULE EFFECTS; ABR#36, DOOR WIRING

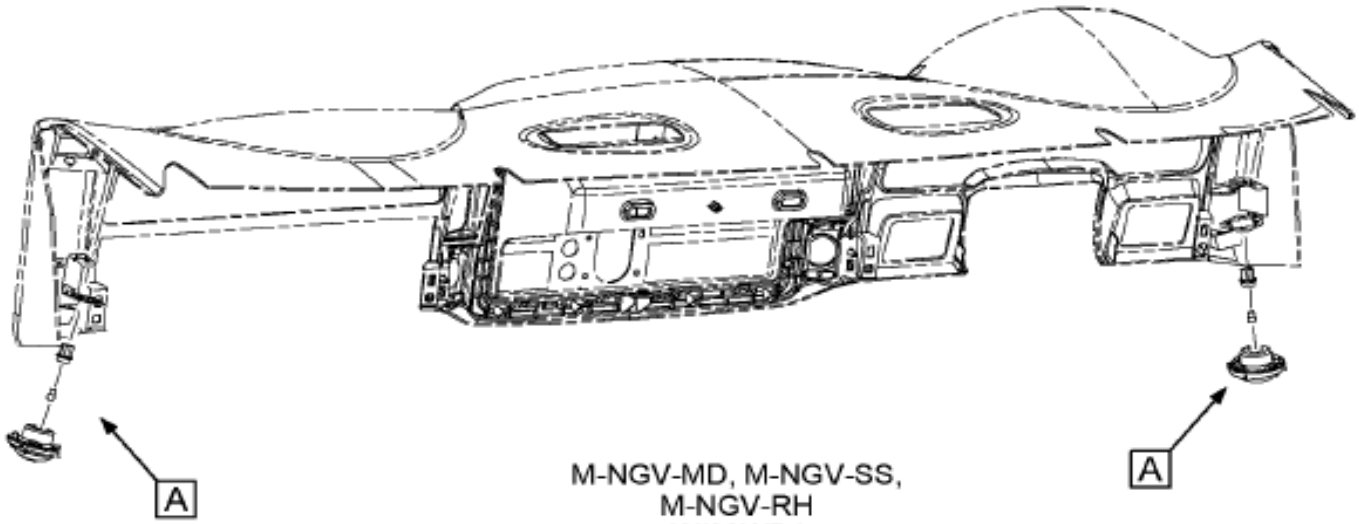

M-NGV-MD, M-NGV-SS,
M-NGV-RH
W/08WPJ
W/01WRX, 016WSG
OR
W/01WRZ, 016WSJ

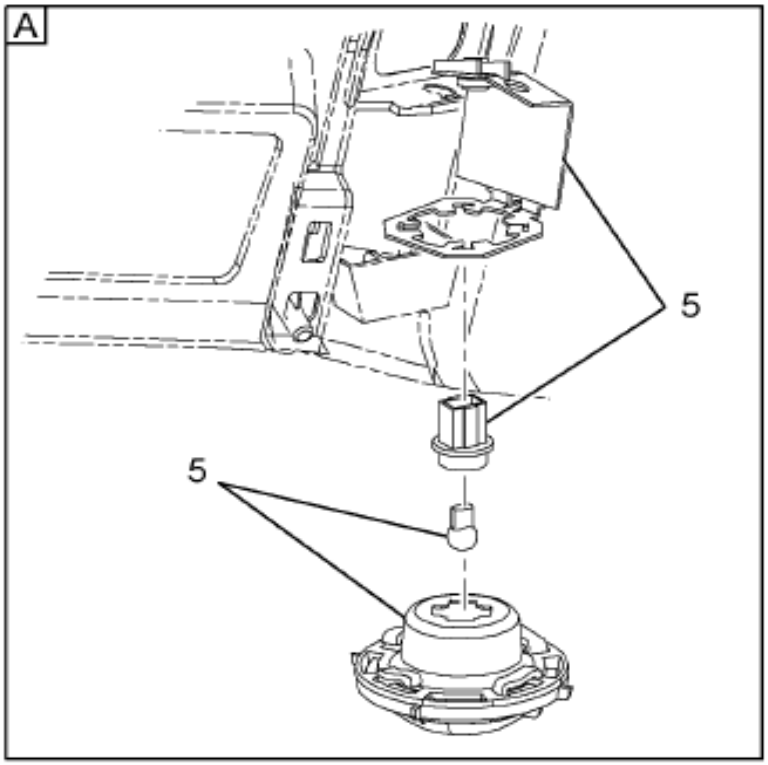

08-P36-0001-DA K09

Item	Part No.	Qty	Description	Kit	Var	Figure
5	3598028F91	1	IP, HT & LT MIR & W/ FUSE W		0S761	3598028F91

COPYRIGHT© 2011INTERNATIONAL TRUCK AND ENGINE CORP.

https://truckmanualshub.com/

Figure 3381315C91

HARNESS,ELECTRICAL, MIRROR WIR

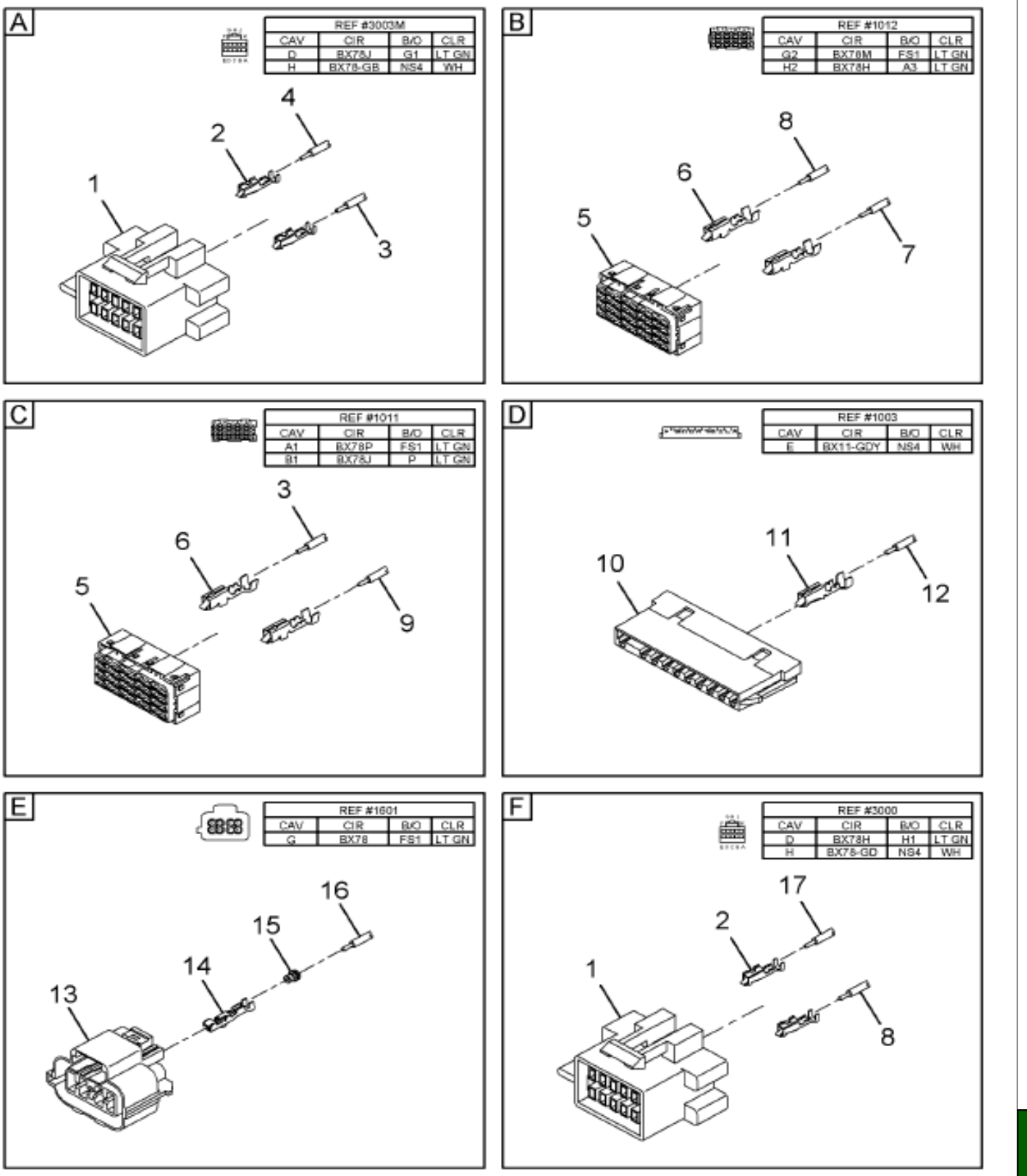

08-P36-0014-02 A11

Grp 16

Item	Part No.	Qty	Description	Kit	Var	Figure
1	3540612C1	2	CONNECTOR,BODY*MALE METRI-PACK			
2	1661261C1	4	TERMINAL,CABLE 150 SERIES FEMA			
3	2643678R1	AR	CABLE LOW TENSION SINGLE COND			
4	2643681R1	AR	CABLE LOW TENSION SINGLE COND			
5	3534572C1	2	BLOCK,FUSE*BLOCK, 280 FUSE AND			
6	3573312C1	4	TERMINAL,CABLE,280SERIES FEMAL			

COPYRIGHT© 2011INTERNATIONAL TRUCK AND ENGINE CORP.

https://truckmanualshub.com/

Figure 3581315C91

HARNESS,ELECTRICAL, MIRROR WIR

Item	Part No.	Qty	Description	Kit	Var	Figure
7	2643678R1	AR	CABLE LOW TENSION SINGLE COND			
8	2643678R1	AR	CABLE LOW TENSION SINGLE COND			
9	2643678R1	AR	CABLE LOW TENSION SINGLE COND			
10	2007315C1	1	CONNECTOR,280 SERIES 10-WAY BA			
11	3566715C1	1	TERMINAL,CABLE*280 FEMALE MINI			
12	2643787R1	AR	CABLE LOW TENSION 12 GAUGE WHI			
13	3548934C1	1	CONNECTOR,BODY*8 WAY BROWN PAC			
14	3535931C1	1	TERMINAL,CABLE*GT 280 SERIES 5			
15	3548945C1	1	SEAL,CABLE TERMINAL*GT 280 SER			
16	2643687R1	AR	CABLE LOW TENSION SINGLE COND			
17	2643681R1	AR	CABLE LOW TENSION SINGLE COND			
880		RF	NOTE: ASM BELOW COMPRISED OF ABOVE COMPONENTS			
881	3581315C91	RF	HARNESS,ELECTRICAL, MIRROR WIR			

COPYRIGHT© 2011INTERNATIONAL TRUCK AND ENGINE CORP.

https://truckmanualshub.com/

Figure 3349338C92

HARNESS,POWER TRAIN D-LINK WRG

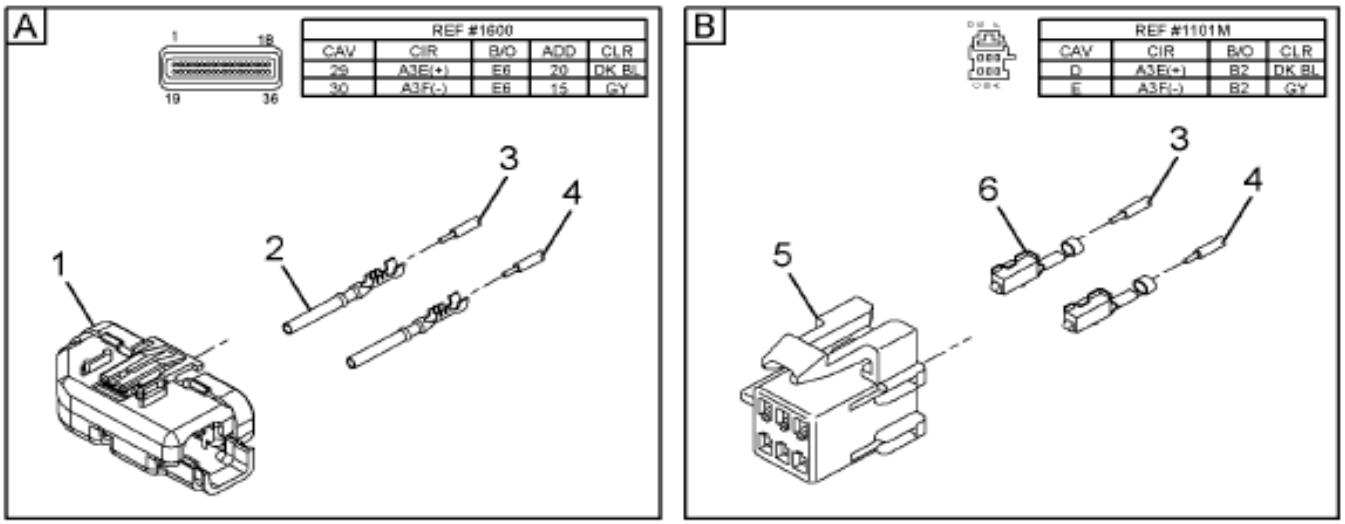

08-P36-0015-02 F11

Grp 16

Item	Part No.	Qty	Description	Kit	Var	Figure
1	3533832C1	1	CONNECTOR,BODY*CNTR STRAIN REL			
2	3517243C1	2	TERMINAL,CABLE			
3	2643771R1	AR	CABLE LOW TENSION DARK BLUE 20			
4	2643763R1	AR	CABLE LOW TENSION GRAY 20 GAUG			
5	2031871C1	1	CONNECTOR, METRI-PACK 150 SERS			
6	3544254C1	2	TERMINAL,CABLE*FEMALE METRI-PA			

COPYRIGHT© 2011INTERNATIONAL TRUCK AND ENGINE CORP.

https://truckmanualshub.com/

Figure 3549338C92

HARNESS,POWER TRAIN D-LINK WRG

Item	Part No.	Qty	Description	Kit	Var	Figure
880		RF	NOTE: ASM BELOW COMPRISED OF ABOVE COMPONENTS			
881	3549338C92	RF	HARNESS,POWER TRAIN D-LINK WRG			

COPYRIGHT© 2011INTERNATIONAL TRUCK AND ENGINE CORP.

https://truckmanualshub.com/

Figure 3598028F91
IP, HT & LT MIR & W/ FUSE W

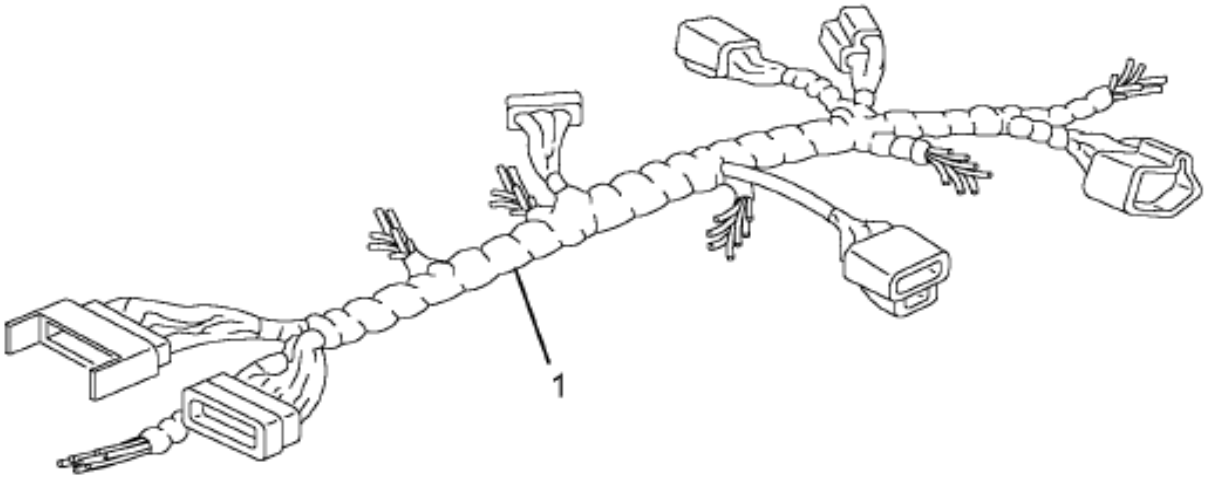

08-P58-0006-01 C03

Grp 16

Item	Part No.	Qty	Description	Kit	Var	Figure
1	3581315C91	1	HARNESS,ELECTRICAL, MIRROR WIR			3581315C91
1	3536178C1	2	BREAKER,CIRCUIT*10 AMP, 12 VOL			
1	3599139C91	1	HARN,CAB MRKR LTS W/LTD MR&RAD			
1	3549338C92	1	HARNESS,POWER TRAIN D-LINK WRG			3549338C92
880		RF	NOTE: ASM BELOW COMPRISED OF ABOVE COMPONENTS			

COPYRIGHT© 2011INTERNATIONAL TRUCK AND ENGINE CORP.

https://truckmanualshub.com/

Figure 3598028F91

IP, HT & LT MIR & W/ FUSE W

Item	Part No.	Qty	Description	Kit	Var	Figure
881	3598028F91	RF	IP, HT & LT MIR & W/ FUSE W			

COPYRIGHT© 2011INTERNATIONAL TRUCK AND ENGINE CORP.

https://truckmanualshub.com/

Figure 0DBW1

IP MODULE EFFECTS; ABR#39, #1 AND #2 AIR GAUGES

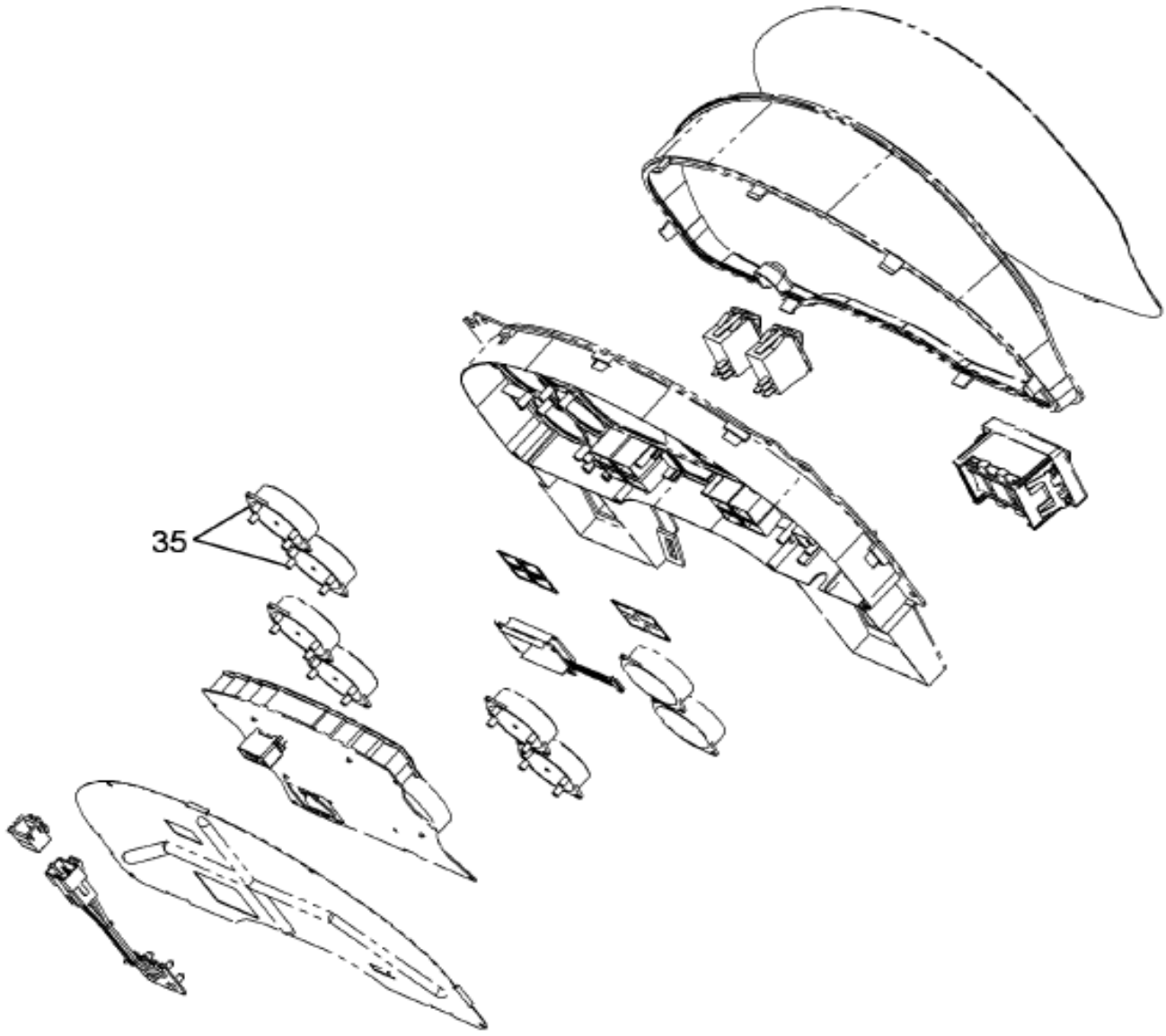

08-P39-0002-01 E09

Item	Part No.	Qty	Description	Kit	Var	Figure
35	3545994F92	1	ELEC IP; GAUGES, CLUST		0DC4W	3545994F92

Grp 16

COPYRIGHT© 2011INTERNATIONAL TRUCK AND ENGINE CORP.

https://truckmanualshub.com/

Figure 3545994F92

ELEC IP; GAUGES, CLUST

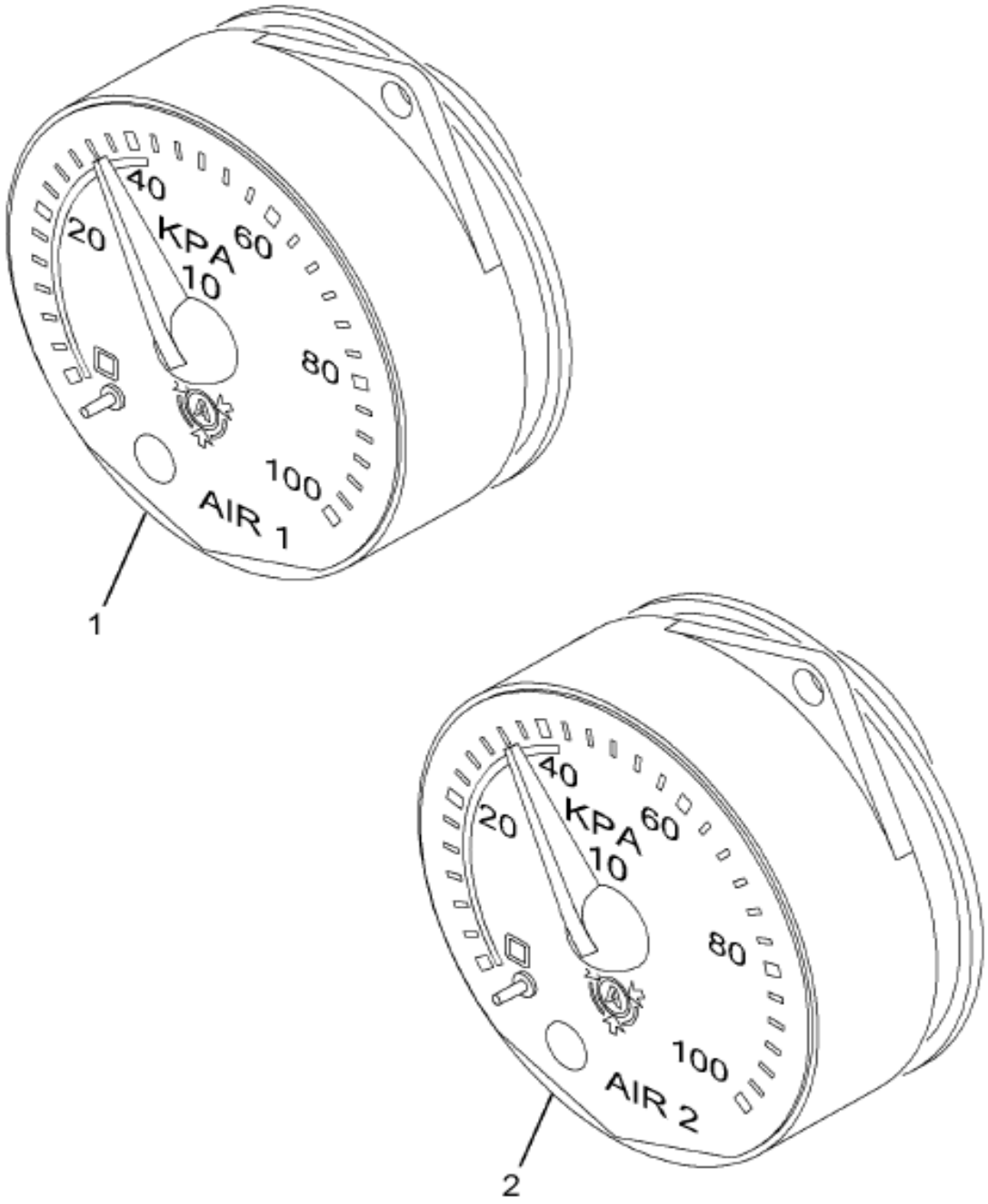

08-P42-0008-01 C04

Item	Part No.	Qty	Description	Kit	Var	Figure
1	3533883C1	1	GAUGE,ELTRNC*AIR 1 (ENGLISH)			3533883C1
2	3533884C1	1	GAUGE,ELTRNC*AIR 2 (ENGLISH)			3533884C1
880		RF	NOTE: ASM BELOW COMPRISED OF ABOVE COMPONENTS			
881	3545994F92	RF	ELEC IP; GAUGES, CLUST			

COPYRIGHT© 2011INTERNATIONAL TRUCK AND ENGINE CORP.

https://truckmanualshub.com/

Figure 3535883C1

GAUGE,ELTRNC*AIR 1 (ENGLISH)

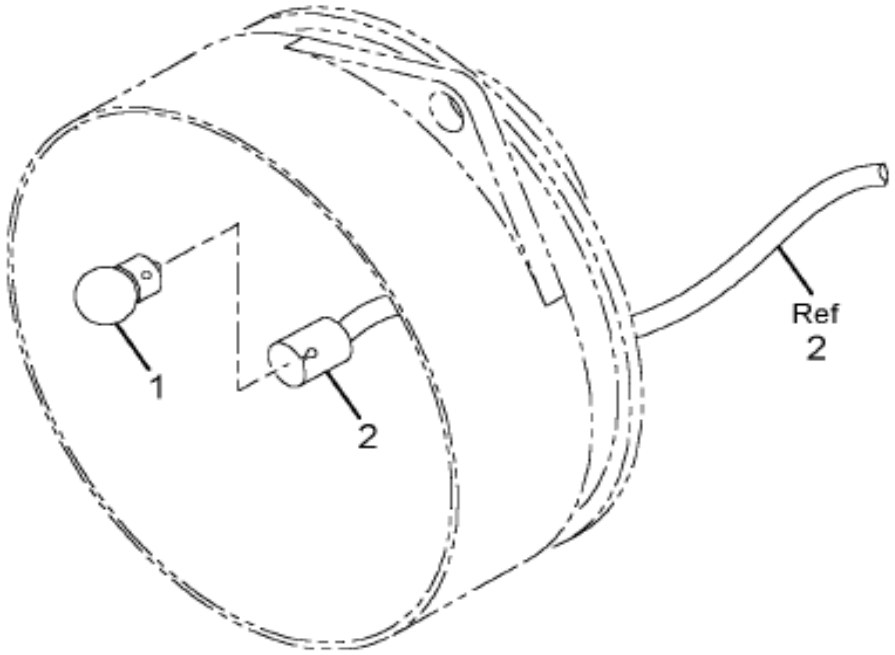

08-P42-0004-01 H03

Grp 16

Item	Part No.	Qty	Description	Kit	Var	Figure
1		RF	AIR 1 ENGLISH			
1	2506796C1	2	LAMP,INCANDESCENT			
2	2506798C1	1	HARNESS,GAUGE JUMPER 5"-100/PK			
800		RF	NOTE: THE FOLLOWING PARTS ARE			
			NON-ILLUSTRATED			
801	2506420R1	1	MANUAL,INST GAGE INST & RPLMNT			

COPYRIGHT© 2011INTERNATIONAL TRUCK AND ENGINE CORP.

https://truckmanualshub.com/

Figure 3533883C1

GAUGE,ELTRNC*AIR 1 (ENGLISH)

Item	Part No.	Qty	Description	Kit	Var	Figure
880		RF	NOTE: ASM BELOW COMPRISED OF ABOVE COMPONENTS			
881	3533883C1	RF	GAUGE,ELTRNC*AIR 1 (ENGLISH)			

COPYRIGHT© 2011INTERNATIONAL TRUCK AND ENGINE CORP.

https://truckmanualshub.com/

Figure 3535884C1

GAUGE,ELTRNC*AIR 2 (ENGLISH)

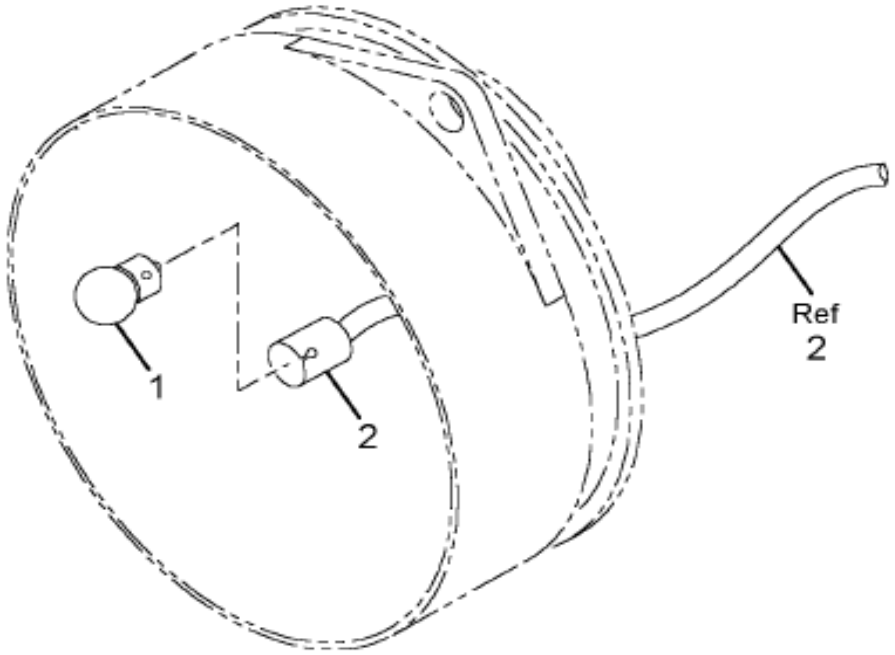

08-P42-0004-01 H03

Grp 16

Item	Part No.	Qty	Description	Kit	Var	Figure
1	2506796C1	2	LAMP,INCANDESCENT			
1	2506420R1	1	MANUAL,INST GAGE INST & RPLMNT			
2	2506798C1	1	HARNESS,GAUGE JUMPER 5"-100/PK			
800		RF	NOTE: THE FOLLOWING PARTS ARE			
			NON-ILLUSTRATED			
880		RF	NOTE: ASM BELOW COMPRISED OF ABOVE			

COPYRIGHT© 2011INTERNATIONAL TRUCK AND ENGINE CORP.

https://truckmanualshub.com/

Figure 3533884C1

GAUGE,ELTRNC*AIR 2 (ENGLISH)

Item	Part No.	Qty	Description	Kit	Var	Figure
			COMPONENTS			
881	3533884C1	RF	GAUGE,ELTRNC*AIR 2 (ENGLISH)			

COPYRIGHT© 2011INTERNATIONAL TRUCK AND ENGINE CORP.

https://truckmanualshub.com/

Figure 06JV9

IP MODULE EFFECTS; ABR#4, CENTER COVER ASM

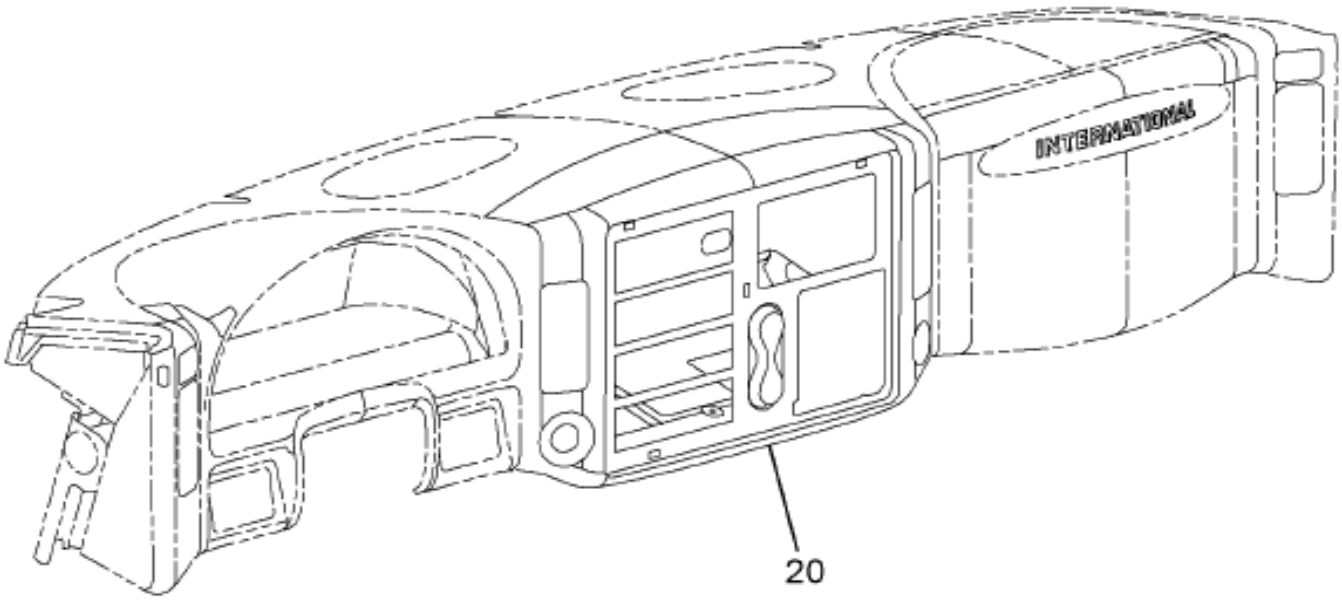

08-P04-0004-A4 K02

Grp 16

Item	Part No.	Qty	Description	Kit	Var	Figure
20	3511044F93	1	INST PNL FLT CTR ASSY LHD		06JVB	3511044F93

COPYRIGHT© 2011INTERNATIONAL TRUCK AND ENGINE CORP.

https://truckmanualshub.com/

Figure 3511044F93

INST PNL FLT CTR ASSY LHD

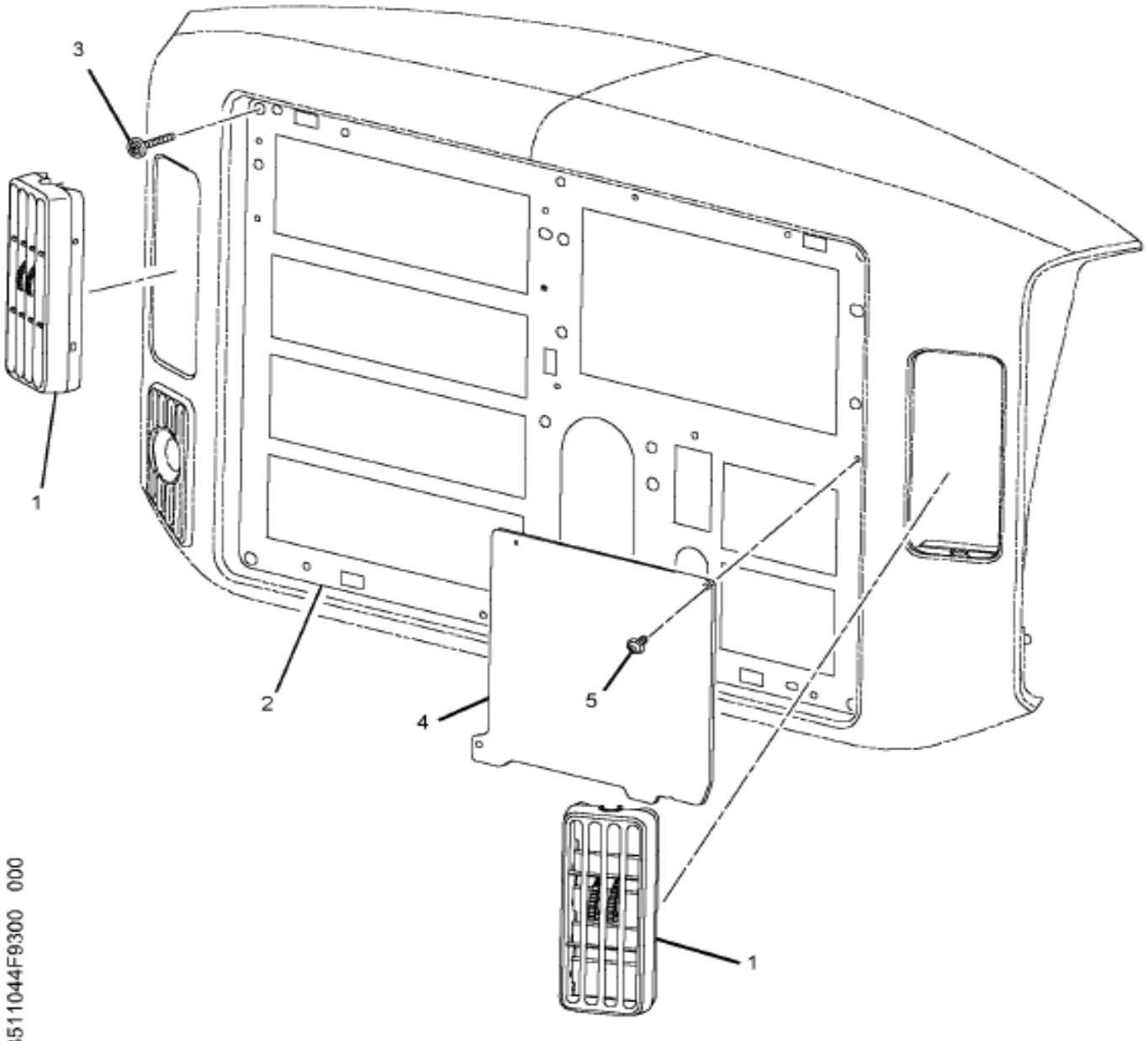

Item	Part No.	Qty	Description	Kit	Var	Figure
1	3547254C1	1	PANEL,INSTR CNTR FLAT COVR LHD			3547254C1
2	3547255C1	1	PANEL,INSTR CNTR MNT PLATE LHD			
3	3545857C1	6	SCREW,TAPPING M4.2 X 1.4 - 30M			
4	3547256C1	1	PANEL,INSTR CNTR TRIM PLATE			
5	3545277C1	2	SCREW,SELF DRILLING			
880		RF	NOTE: ASM BELOW COMPRISED OF ABOVE			

COPYRIGHT© 2011INTERNATIONAL TRUCK AND ENGINE CORP.

https://truckmanualshub.com/

Figure 3511044F93

INST PNL FLT CTR ASSY LHD

Item	Part No.	Qty	Description	Kit	Var	Figure
			COMPONENTS			
881	3511044F93	RF	INST PNL FLT CTR ASSY LHD			

COPYRIGHT© 2011INTERNATIONAL TRUCK AND ENGINE CORP.

https://truckmanualshub.com/

Figure 3547254C1

PANEL,INSTR CNTR FLAT COVR LHD

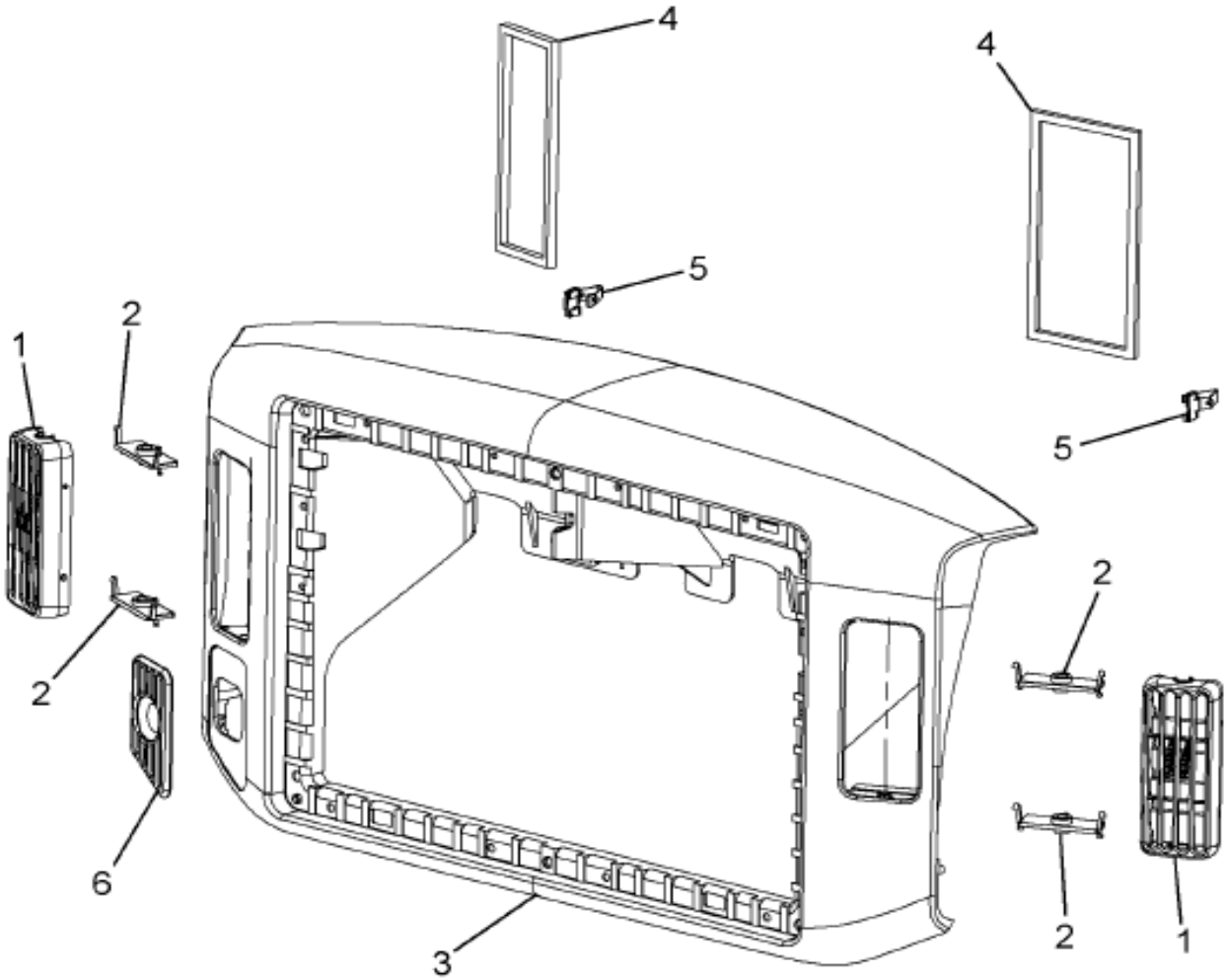

08-P04-0009-01 C06

Item	Part No.	Qty	Description	Kit	Var	Figure
1	3547244C1	2	OUTLET,LOUVER AIR COND			
2	3547245C1	4	BUSHING,SPECIAL NYL A/C OUTLET			
3		1	COVER, CENTER MEDIUM DUTY			
4		2	SEAL, FOAM CENTER COVER			
5	2507003C1	1	CLIP,INSTR CLSTR CL0SEOUT TRM			
6	2509753C1	1	SHIELD,IGN SW KEY			

COPYRIGHT© 2011INTERNATIONAL TRUCK AND ENGINE CORP.

https://truckmanualshub.com/

Figure 3547254C1

PANEL,INSTR CNTR FLAT COVR LHD

Item	Part No.	Qty	Description	Kit	Var	Figure
880		RF	NOTE: ASM BELOW COMPRISED OF ABOVE COMPONENTS			
881	3547254C1	RF	PANEL,INSTR CNTR FLAT COVR LHD			

COPYRIGHT© 2011INTERNATIONAL TRUCK AND ENGINE CORP.

https://truckmanualshub.com/

Figure 0DBW2

IP MODULE EFFECTS; ABR#40, TRANS OIL TEMP GAUGE

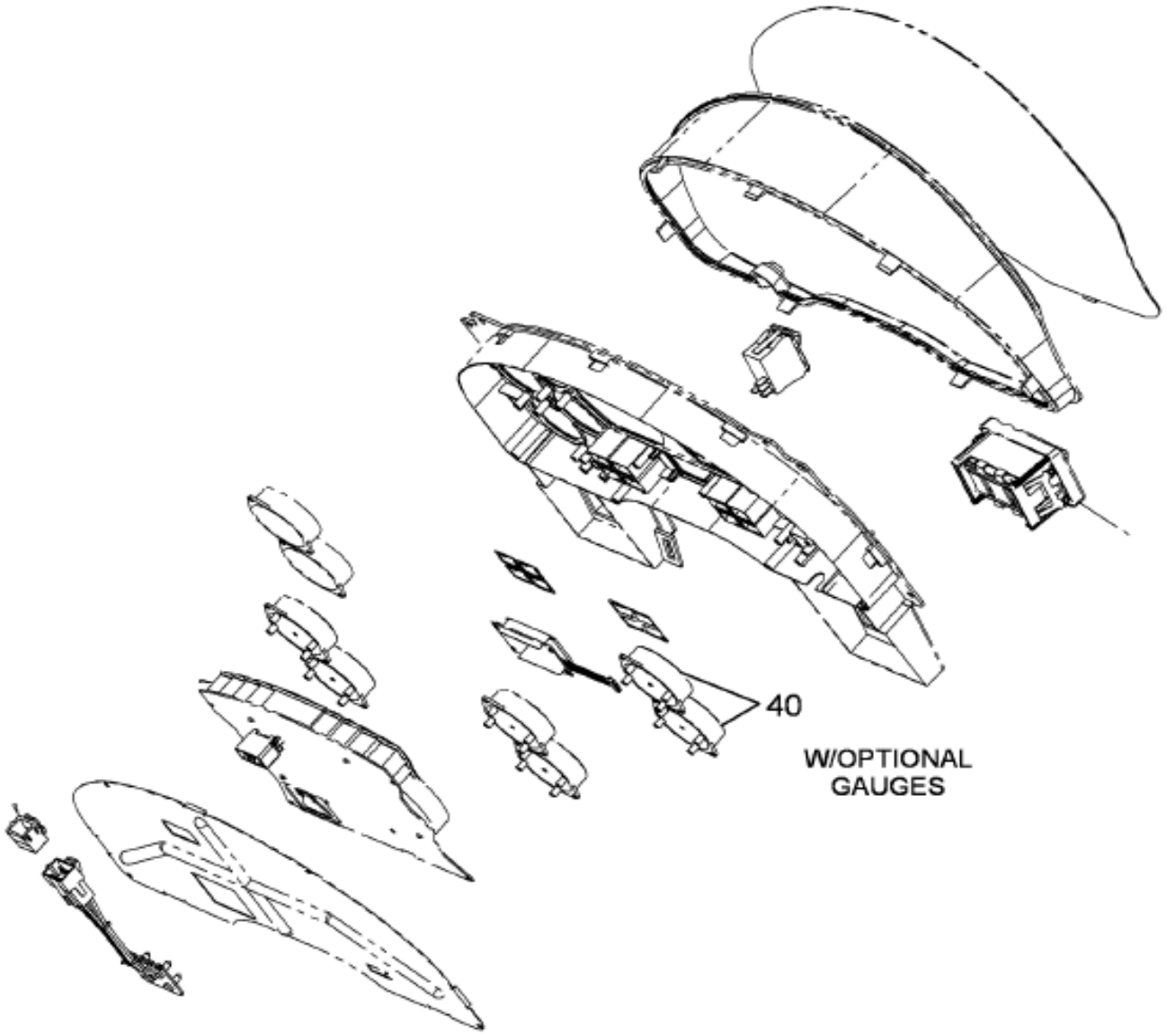

DES FOR: NGV
IP MOD - CLUSTER
(W/HYD BRAKES)

08-P43-0003-01 E09

Item	Part No.	Qty	Description	Kit	Var	Figure
40	3545995F92	1	ELEC IP; GAUGES, XMSN		0NBPJ	3545995F92

COPYRIGHT© 2011INTERNATIONAL TRUCK AND ENGINE CORP.

https://truckmanualshub.com/

Figure 3545995F92
ELEC IP; GAUGES, XMSN

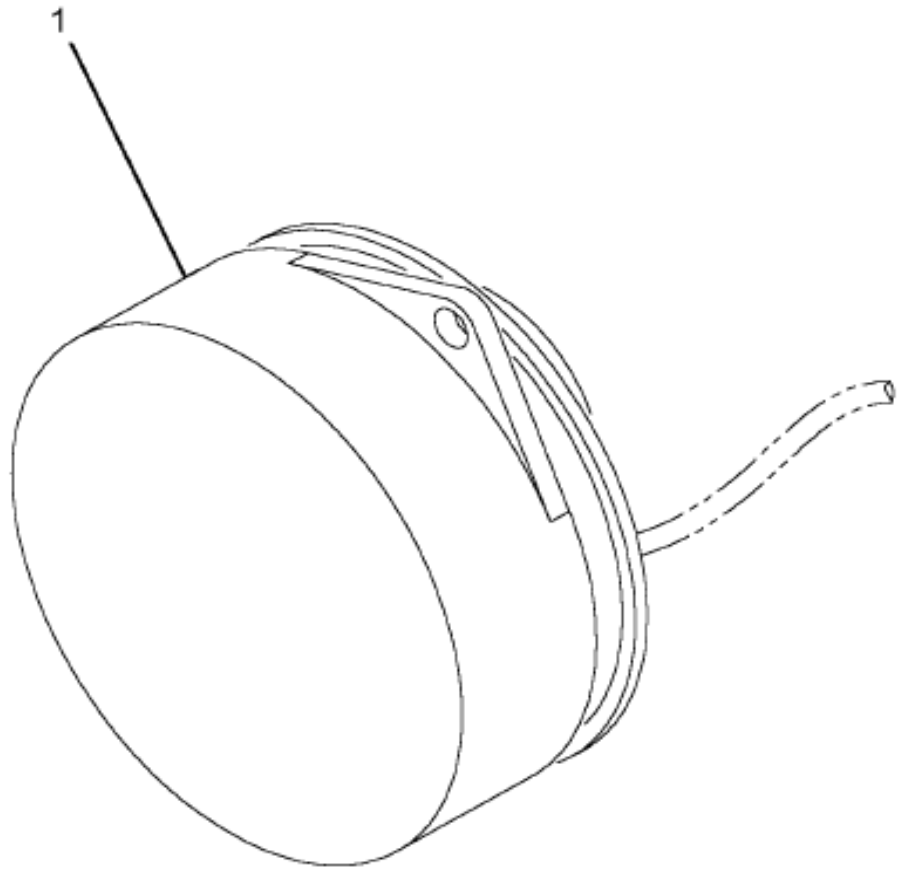

08-P42-0006-01 J03

Grp 16

Item	Part No.	Qty	Description	Kit	Var	Figure
1	3533885C1	1	GAUGE,ELTRNC*TRANSMISSION OIL			3533885C1
880		RF	NOTE: ASM BELOW COMPRISED OF ABOVE COMPONENTS			
881	3545995F92	RF	ELEC IP; GAUGES, XMSN			

COPYRIGHT© 2011INTERNATIONAL TRUCK AND ENGINE CORP.

https://truckmanualshub.com/

Figure 3535865C1

GAUGE,ELTRNC*TRANSMISSION OIL

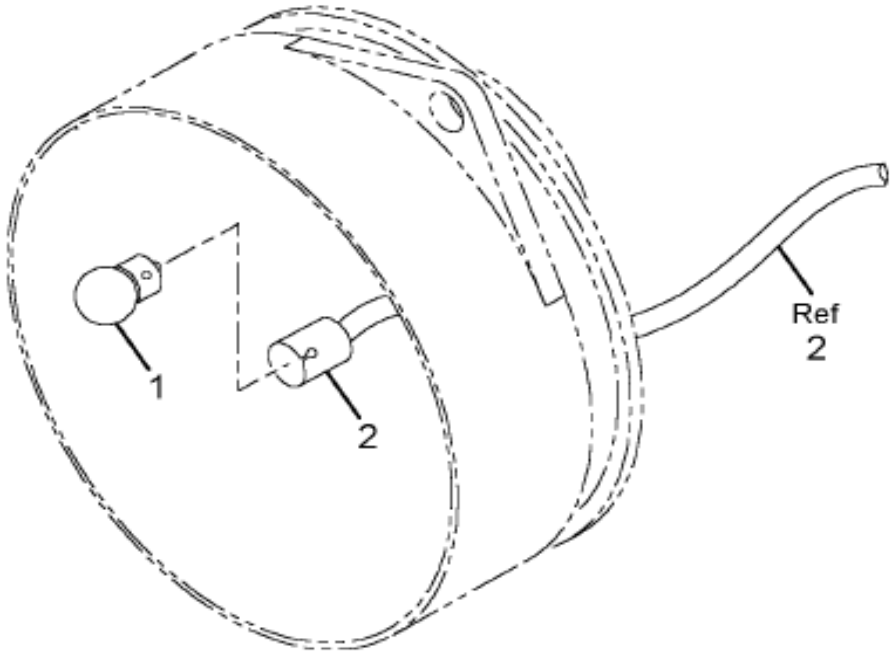

08-P42-0004-01 H03

Item	Part No.	Qty	Description	Kit	Var	Figure
1	2506796C1	2	LAMP,INCANDESCENT			
2	2506798C1	1	HARNESS,GAUGE JUMPER 5"-100/PK			
800		RF	NOTE: THE FOLLOWING PARTS ARE			
			NON-ILLUSTRATED			
801	2506420R1	1	MANUAL,INST GAGE INST & RPLMNT			
880		RF	NOTE: ASM BELOW COMPRISED OF ABOVE			

COPYRIGHT© 2011INTERNATIONAL TRUCK AND ENGINE CORP.

https://truckmanualshub.com/

Figure 3533885C1

GAUGE,ELTRNC*TRANSMISSION OIL

Item	Part No.	Qty	Description	Kit	Var	Figure
			COMPONENTS			
881	3533885C1	RF	GAUGE,ELTRNC*TRANSMISSION OIL			

COPYRIGHT© 2011INTERNATIONAL TRUCK AND ENGINE CORP.

https://truckmanualshub.com/

Figure 0DBW8

IP MODULE EFFECTS; ABR#46, GAUGE PRIORITY

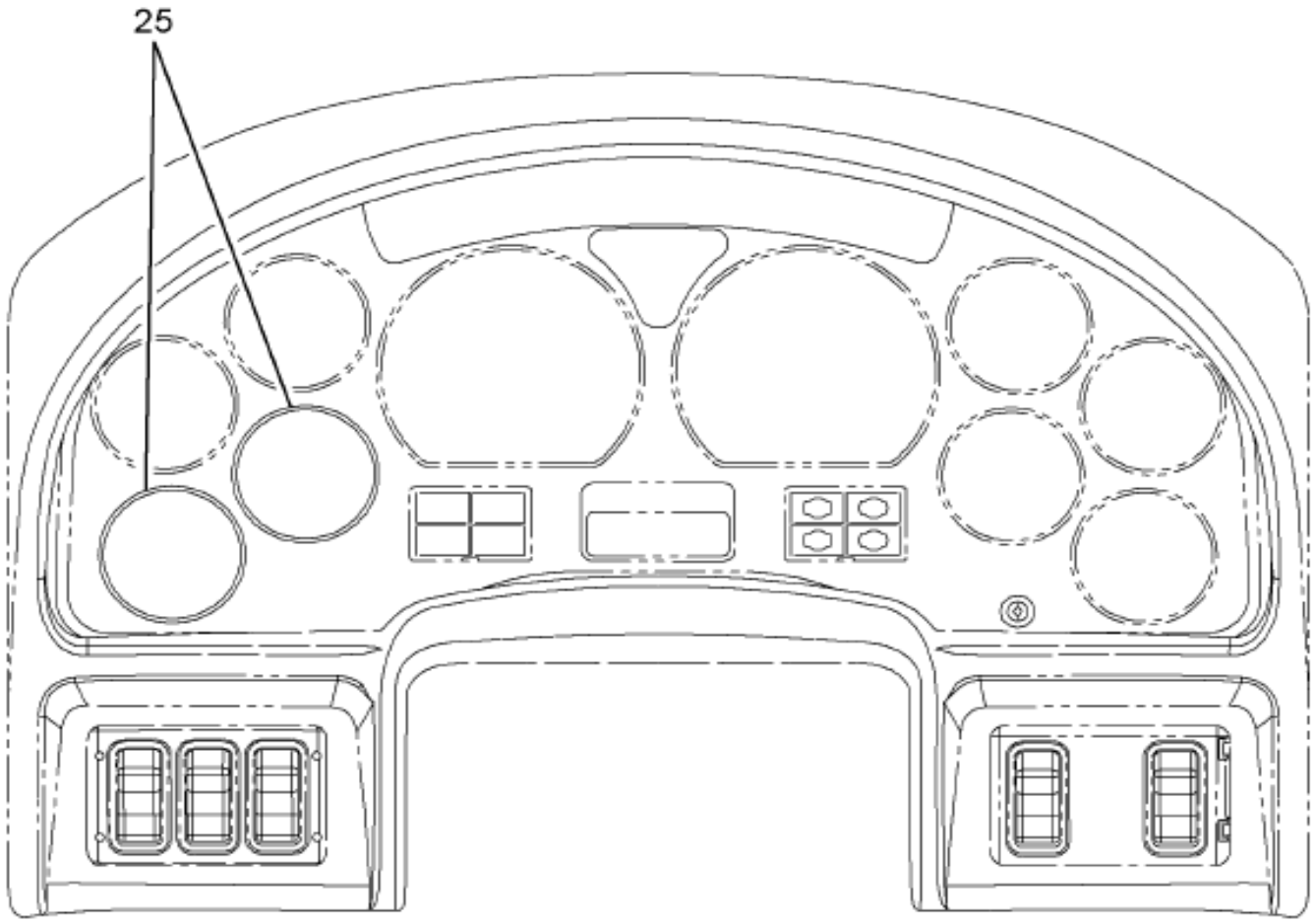

08-P43-0002-E0 B10

Item	Part No.	Qty	Description	Kit	Var	Figure
25	3554789F91	1	ELEC IP; CLUSTER MOUNT		0FFC1	3554789F91
			NON-ILLUSTRATED REFERENCE FIGURE 3554789F91			
1	3545857C1	4	SCREW,TAPPING M4.2 X 1.4 - 30M			
880		RF	NOTE: ASM BELOW COMPRISED OF ABOVE COMPONENTS			

COPYRIGHT© 2011INTERNATIONAL TRUCK AND ENGINE CORP.

https://truckmanualshub.com/

Figure 0DBW8

IP MODULE EFFECTS; ABR#46, GAUGE PRIORITY

Item	Part No.	Qty	Description	Kit	Var	Figure
881	3554789F91	RF	ELEC IP; CLUSTER MOUNT			

COPYRIGHT© 2011INTERNATIONAL TRUCK AND ENGINE CORP.

https://truckmanualshub.com/

Figure 06M16

IP MODULE EFFECTS; ABR#7, HVAC CONTROL

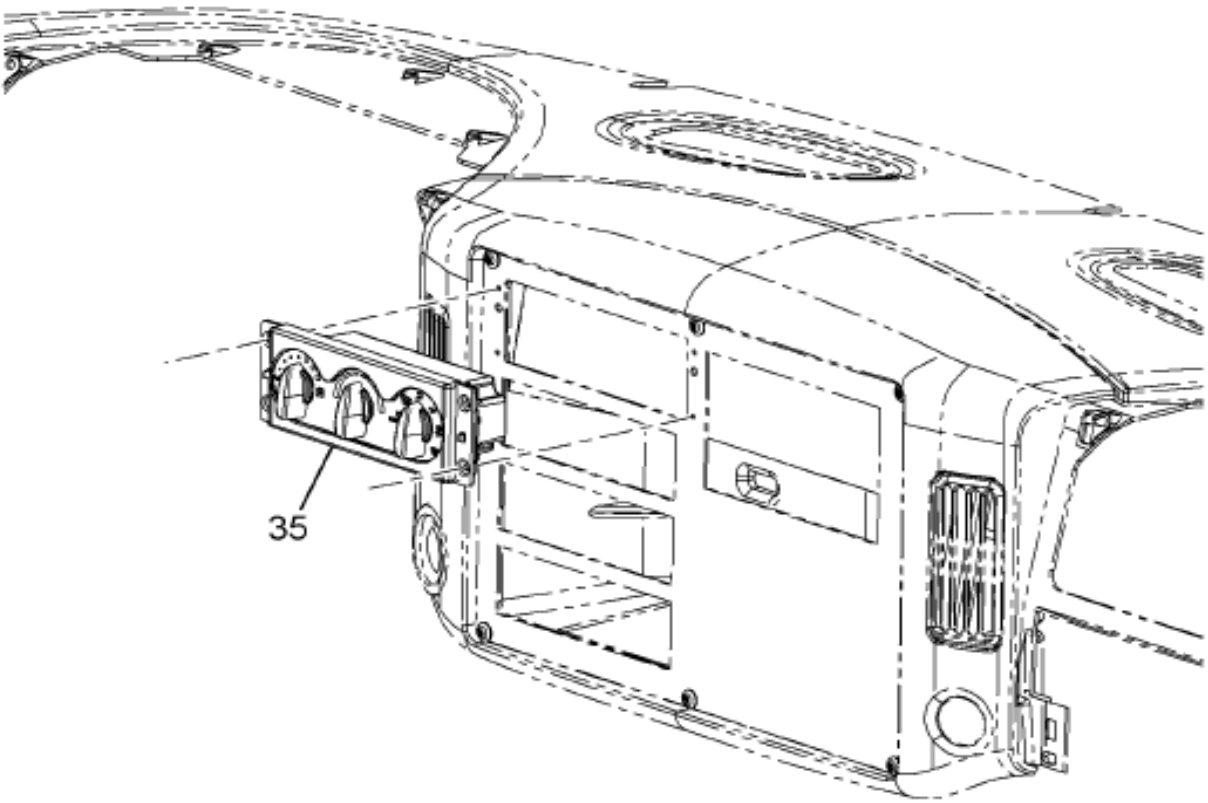

08-P07-0003-A7 B11

Item	Part No.	Qty	Description	Kit	Var	Figure
35	3545546F95	1	DRIVER CONTROL, HEATER AND		06M16	3545546F95

COPYRIGHT© 2011INTERNATIONAL TRUCK AND ENGINE CORP.

https://truckmanualshub.com/

Figure 3545546F95

DRIVER CONTROL, HEATER AND

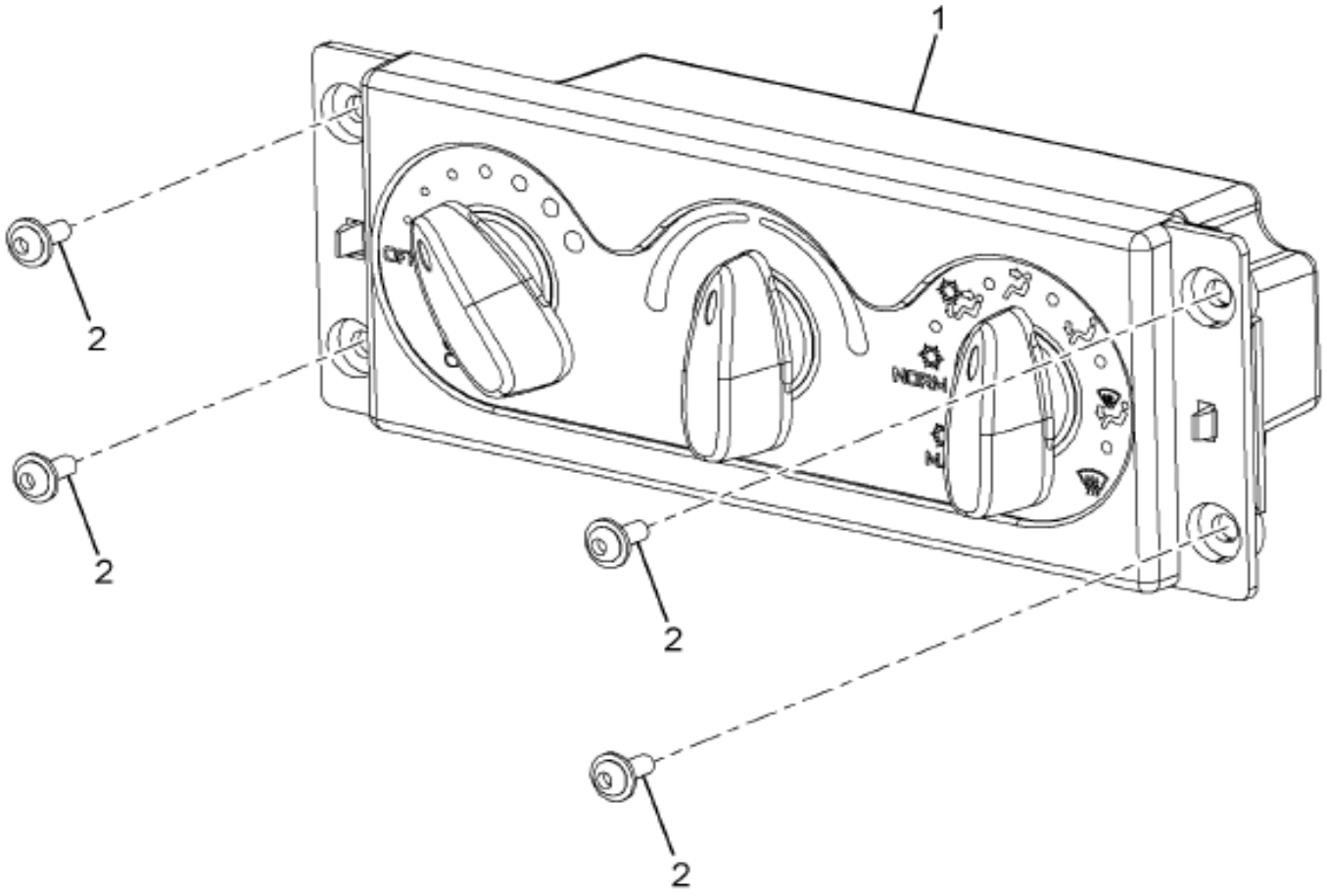

08-PCF-0002-01 K06

Grp 16

Item	Part No.	Qty	Description	Kit	Var	Figure
1	3545543C5	1	CONTROL,HEATER, AND A/C			
2	3545277C1	4	SCREW,SELF DRILLING			
880		RF	NOTE: ASM BELOW COMPRISED OF ABOVE COMPONENTS			
881	3545546F95	RF	DRIVER CONTROL, HEATER AND			

COPYRIGHT© 2011INTERNATIONAL TRUCK AND ENGINE CORP.

https://truckmanualshub.com/

Figure 0LK4R

IP MODULE, HOUSING INSTL (ABR #20)

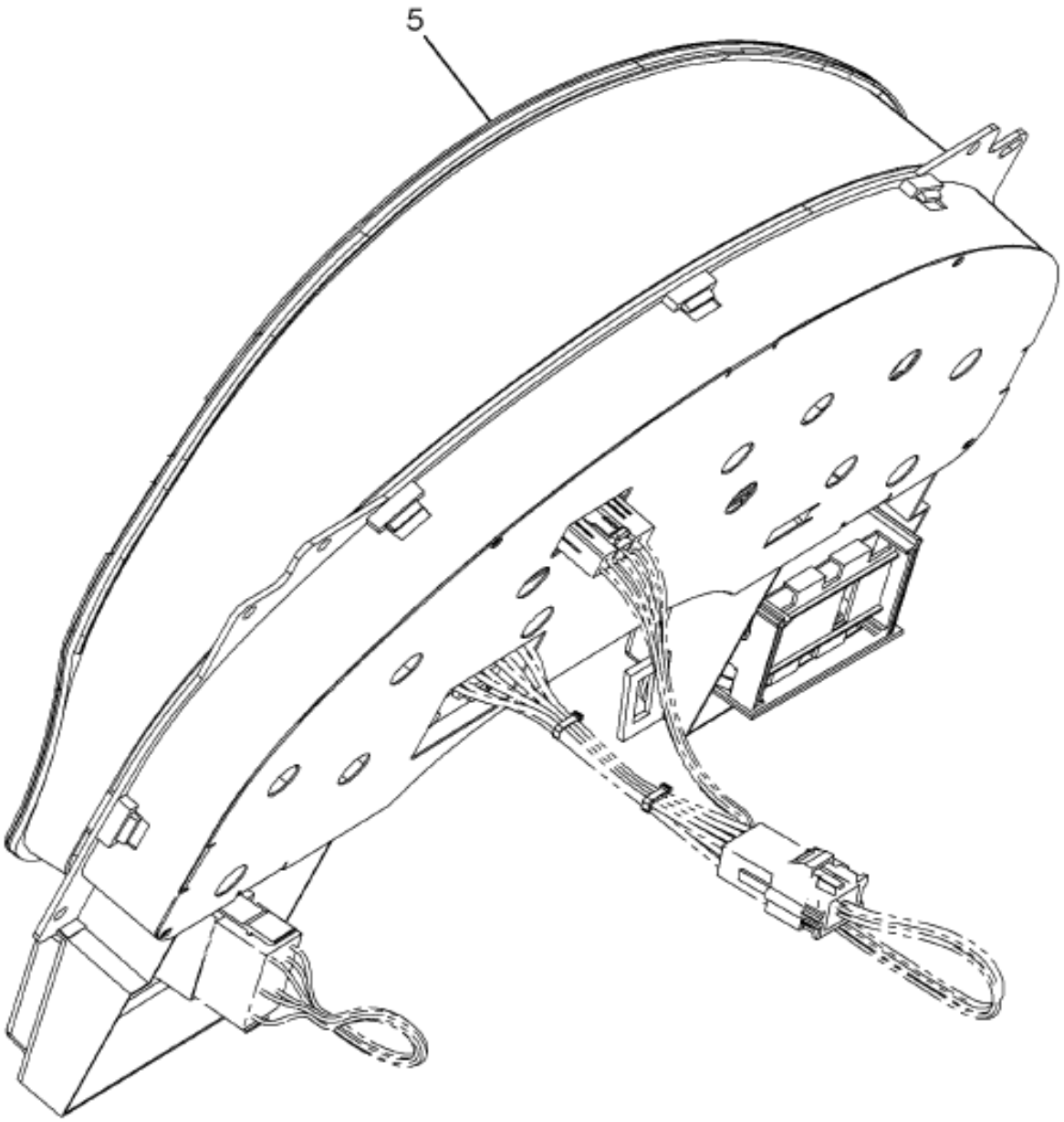

08-P20-0002-01 J04

Item	Part No.	Qty	Description	Kit	Var	Figure
5	3599648F93	1	IP, CLSTR HSG N/PRNDL, NO O		0QW9R	3599648F93

COPYRIGHT© 2011INTERNATIONAL TRUCK AND ENGINE CORP.

https://truckmanualshub.com/

Figure 3599648F93

IP, CLSTR HSG N/PRNDL, NO O

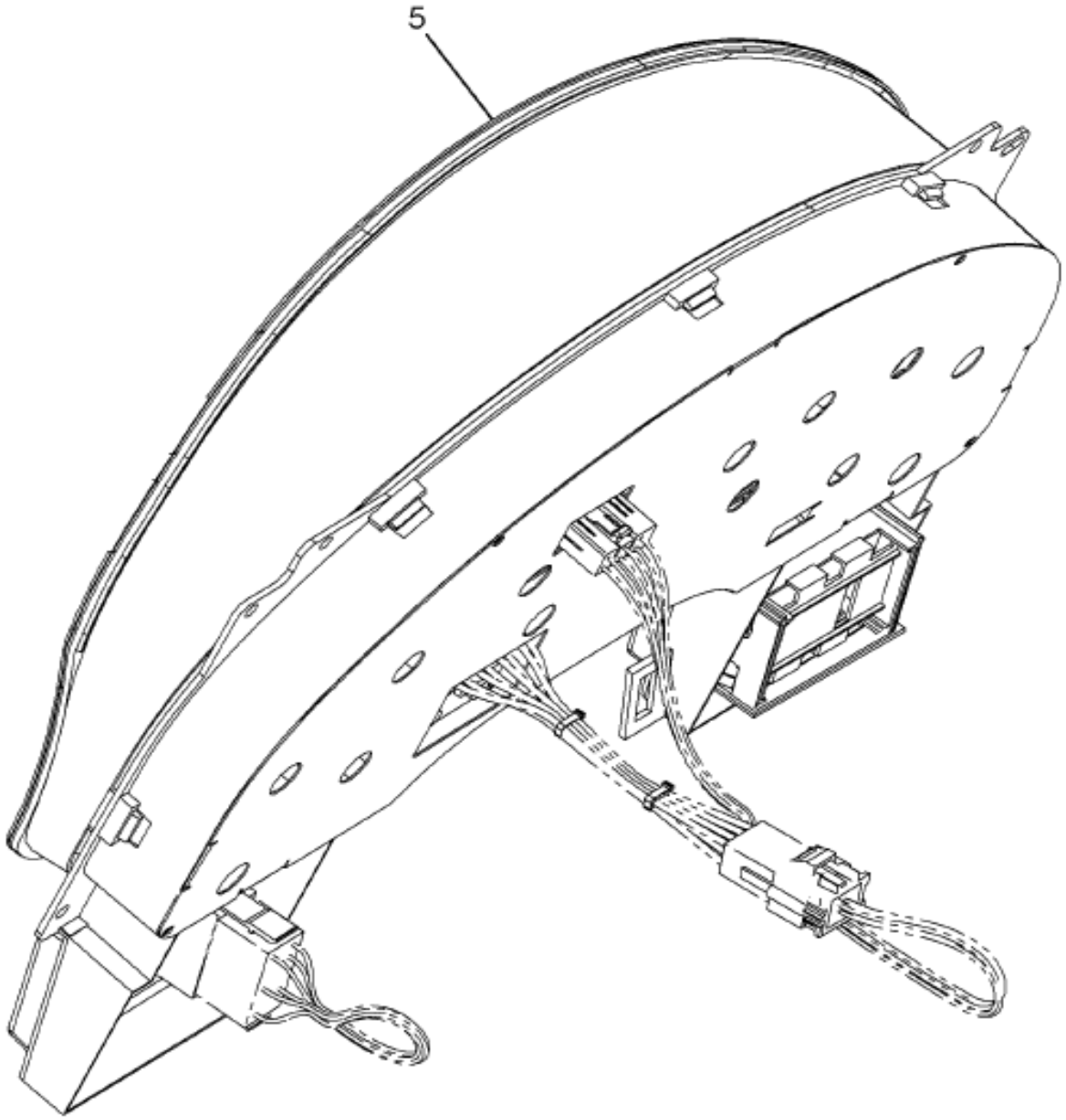

08-P20-0002-01 J04

Item	Part No.	Qty	Description	Kit	Var	Figure
5	3599640C93	1	HOUSING,INSTR CLUSTER, N/PRNDL			
880		RF	NOTE: ASM BELOW COMPRISED OF ABOVE COMPONENTS			
881	3599648F93	RF	IP, CLSTR HSG N/PRNDL, NO O			

Grp 16

COPYRIGHT© 2011INTERNATIONAL TRUCK AND ENGINE CORP.

https://truckmanualshub.com/

Figure 0P1CK

IP MODULE, LCD DISPLAY; ODOMETER (ABR #74)

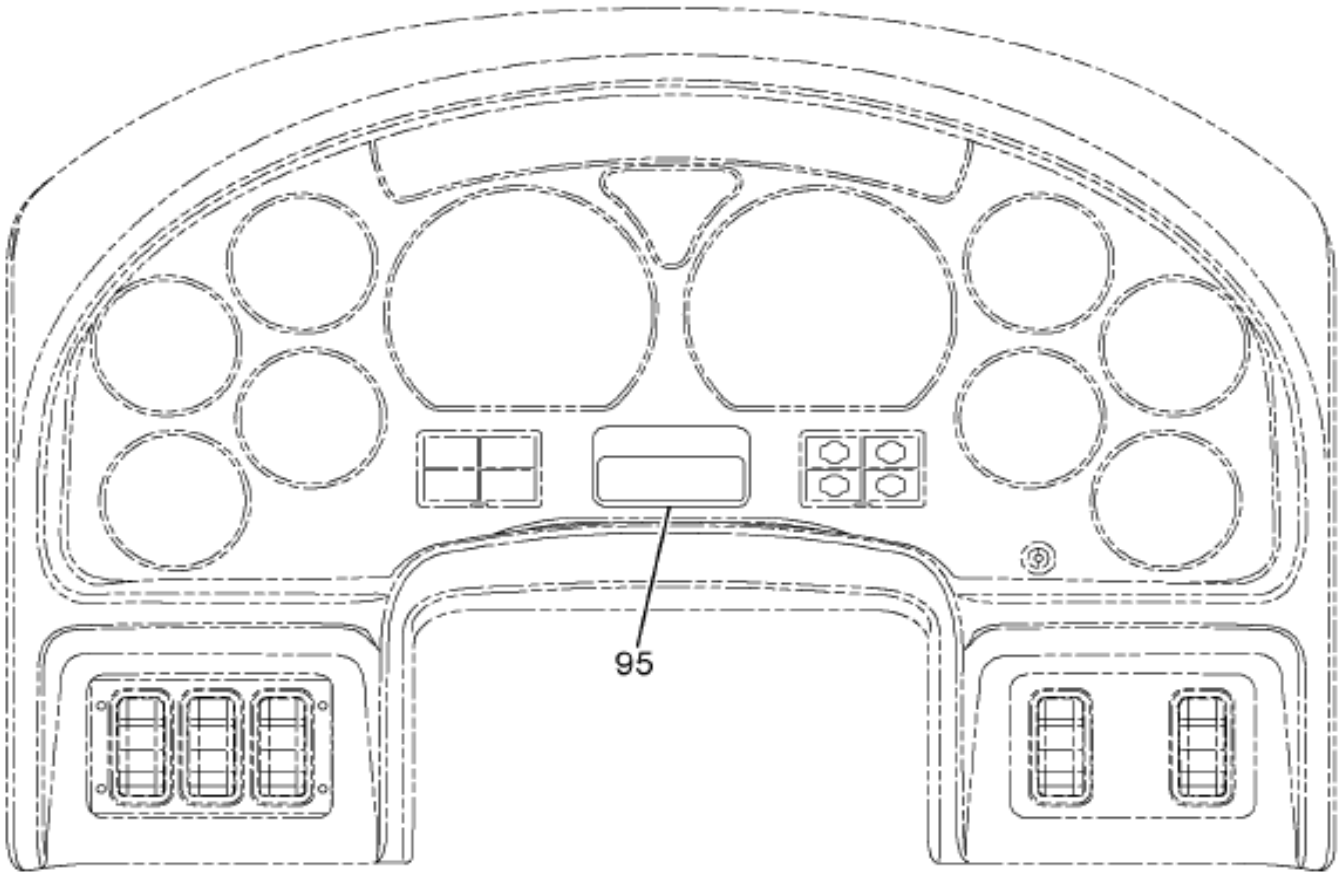

16-P74-0001-TA B09

Item	Part No.	Qty	Description	Kit	Var	Figure
95	3554423F91	1	ELEC IP; LCD N/EATON A		0QW9P	3554423F91

COPYRIGHT© 2011INTERNATIONAL TRUCK AND ENGINE CORP.

https://truckmanualshub.com/

Figure 3554423F91
ELEC IP; LCD N/EATON A

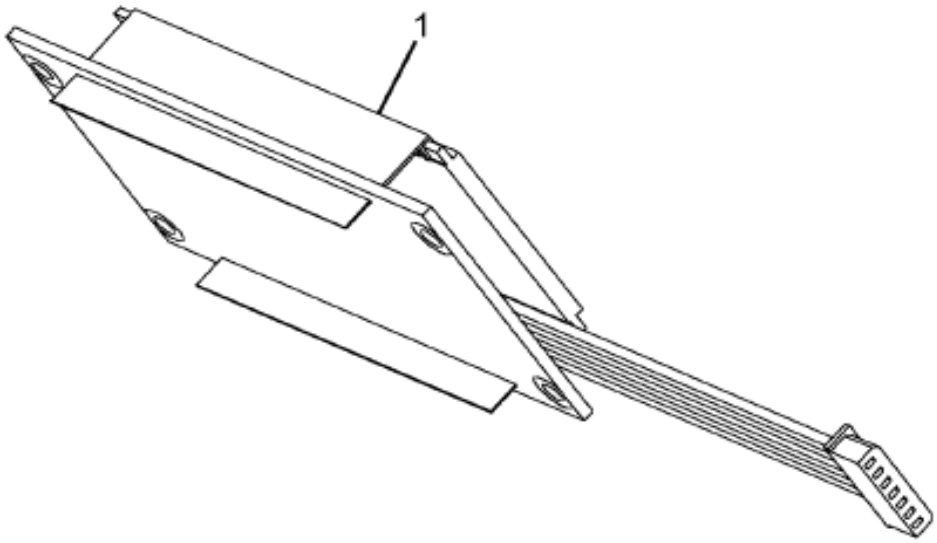

16-P74-0002-01 K03

Grp 16

Item	Part No.	Qty	Description	Kit	Var	Figure
1	3554433C1	1	METER,ODOMETER*LCD N/EATON AUT			
880		RF	NOTE: ASM BELOW COMPRISED OF ABOVE COMPONENTS			
881	3554423F91	RF	ELEC IP; LCD N/EATON A			

COPYRIGHT© 2011INTERNATIONAL TRUCK AND ENGINE CORP.

https://truckmanualshub.com/

Figure 0371C

IP MODULE, SWITCH ASM; HEATED MIRROR CNTRL (ABR #69)

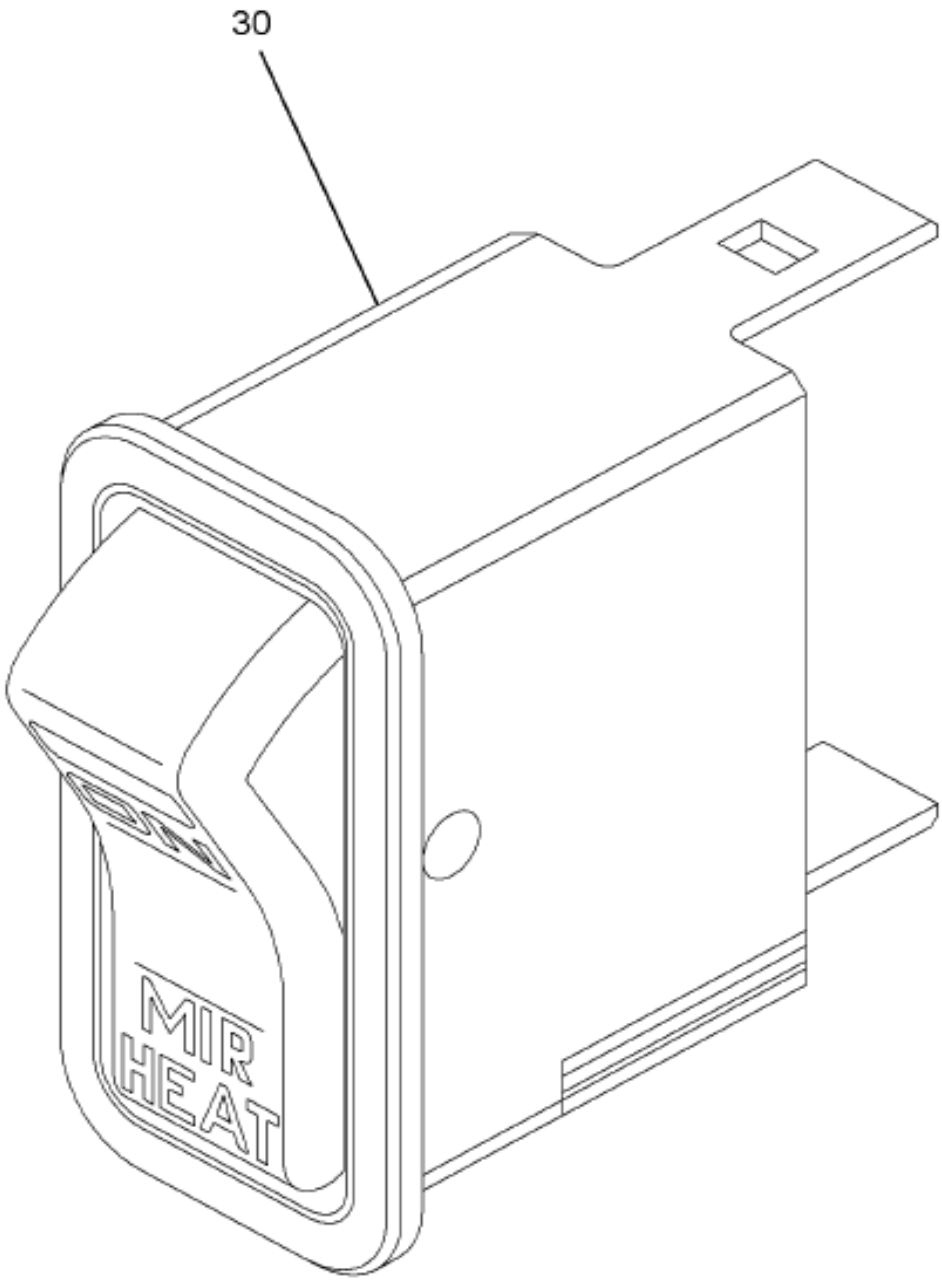

08-P69-0002-FA K04

Item	Part No.	Qty	Description	Kit	Var	Figure
30	3582190F91	1	ELEC IP,MIRROR HEAT ON/OFF		0JDX8	3582190F91

COPYRIGHT© 2011INTERNATIONAL TRUCK AND ENGINE CORP.

https://truckmanualshub.com/

Figure 3582190F91

ELEC IP,MIRROR HEAT ON/OFF

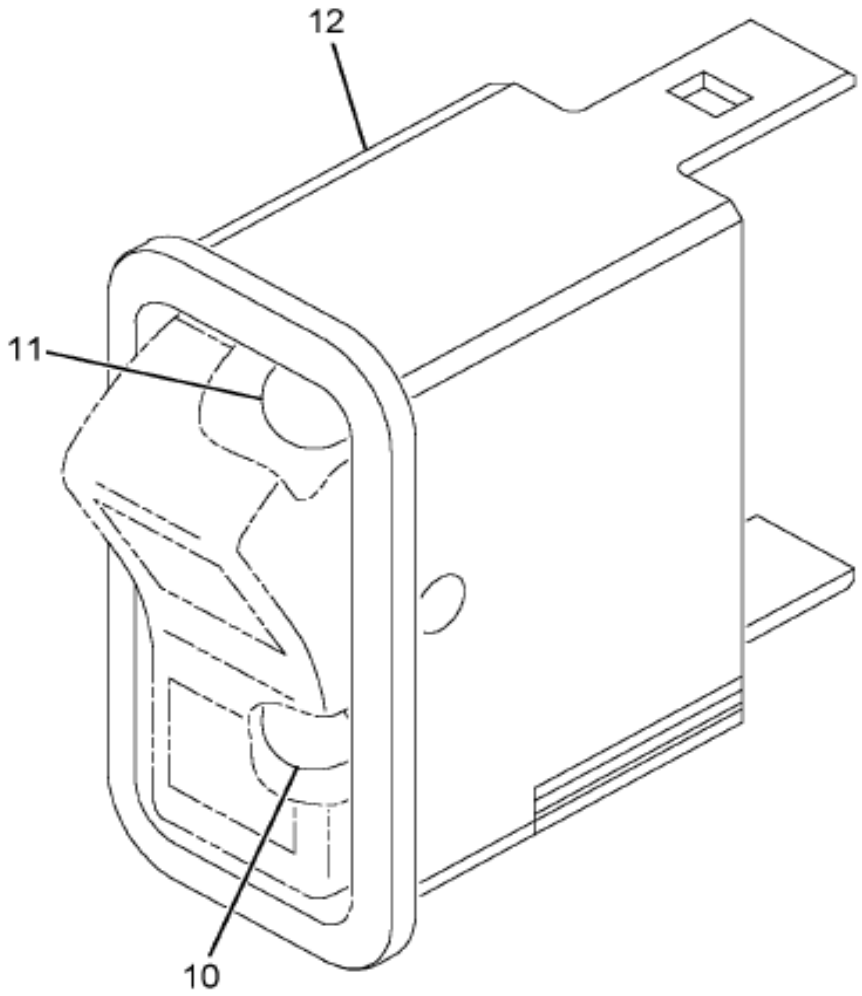

08-P91-0001-00 A03

Grp 16

Item	Part No.	Qty	Description	Kit	Var	Figure
10	3533928C1	1	LIGHT,IND,LED AMBER BKLGT			
11	3578733C1	1	LIGHT,IND,LED ON-GREEN,BRIGHT			
12	3582129C1	1	SWITCH,ELECTRONIC MIRROR HEAT			3582129C1
880		RF	NOTE: ASM BELOW COMPRISED OF ABOVE COMPONENTS			
881	3582190F91	RF	ELEC IP,MIRROR HEAT ON/OFF			

COPYRIGHT© 2011INTERNATIONAL TRUCK AND ENGINE CORP.

https://truckmanualshub.com/

Figure 3502125C1

SWITCH,ELECTRONIC MIRROR HEAT

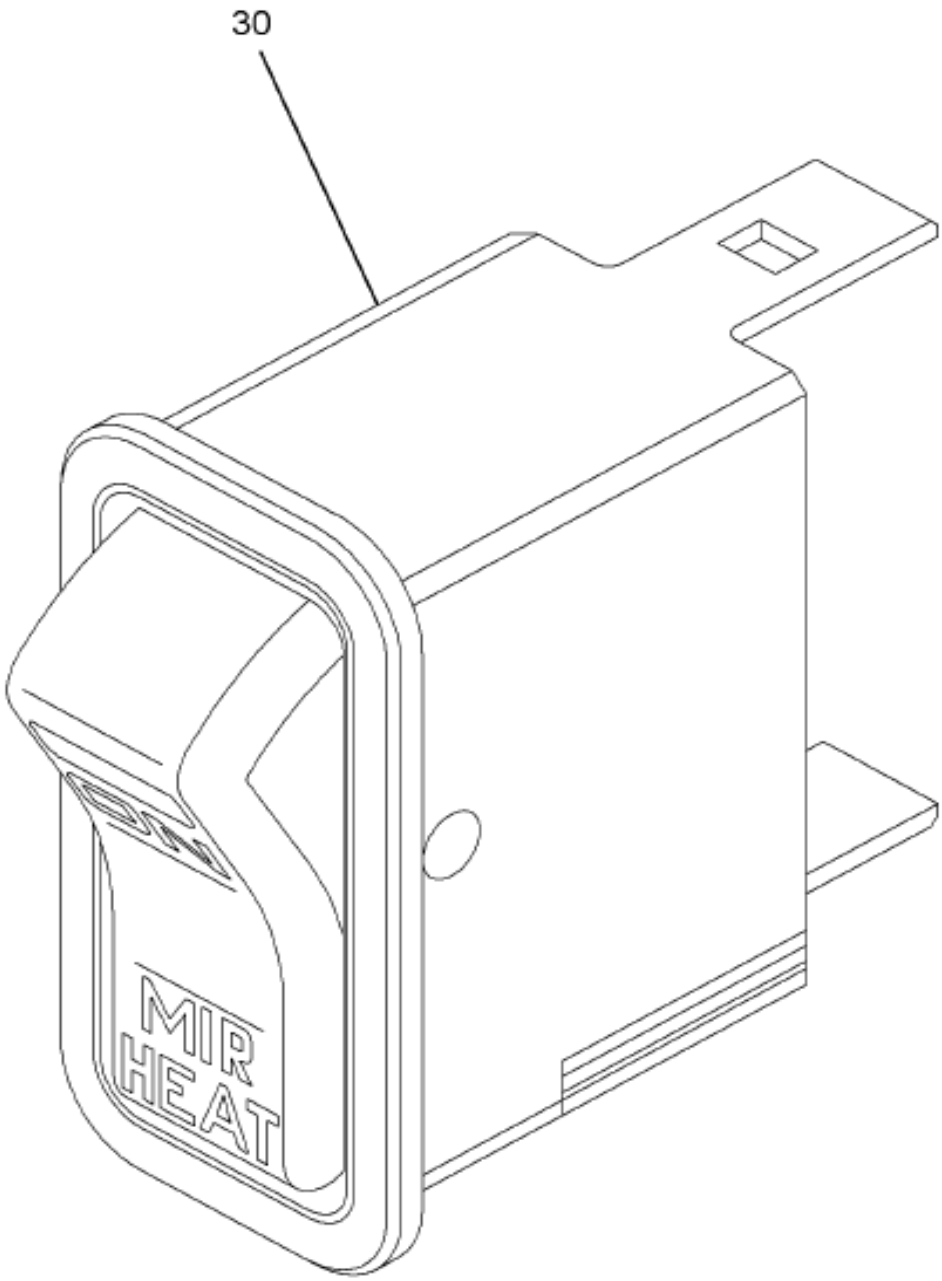

08-P69-0002-FA K04

Item	Part No.	Qty	Description	Kit	Var	Figure
30		RF	SWITCH,MIRROR HEAT			
800		RF	NOTE: THE FOLLOWING PARTS ARE			
			NON-ILLUSTRATED			
801	2506670R2	1	MANUAL,SWITCH INSTL SW HSG			
880		RF	NOTE: ASM BELOW COMPRISED OF ABOVE			
			COMPONENTS			

COPYRIGHT© 2011INTERNATIONAL TRUCK AND ENGINE CORP.

https://truckmanualshub.com/

Figure 3582129C1

SWITCH,ELECTRONIC MIRROR HEAT

Item	Part No.	Qty	Description	Kit	Var	Figure
881	3582129C1	RF	SWITCH,ELECTRONIC MIRROR HEAT			

COPYRIGHT© 2011INTERNATIONAL TRUCK AND ENGINE CORP.

https://truckmanualshub.com/

Figure 0FFCL

IP MODULE, WARNING LIGHTS; LT (ABR #75)

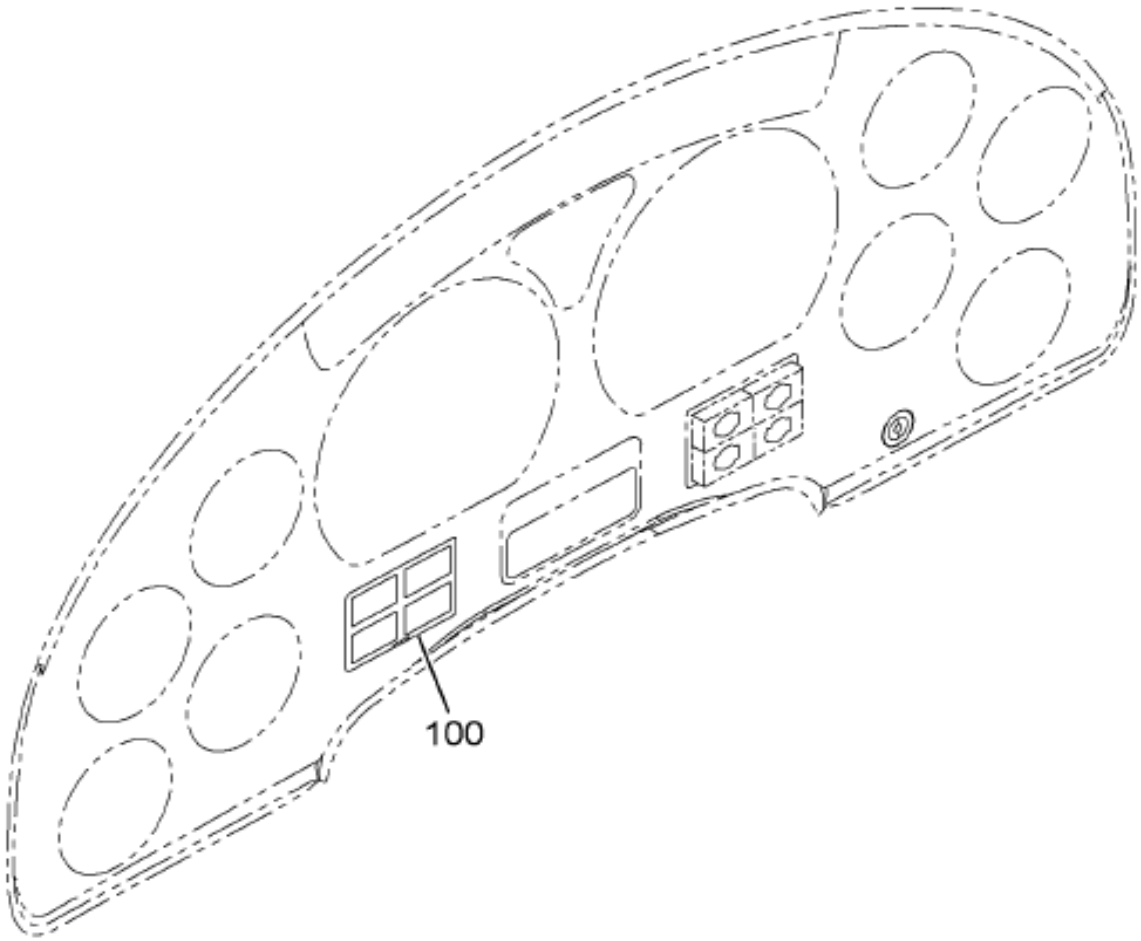

16-P75-0001-UA G07

Item	Part No.	Qty	Description	Kit	Var	Figure
100	3604603F91	1	IP,CLUSTER,LEFT WARNING LIGHTS		0M37N	3604603F91

COPYRIGHT© 2011INTERNATIONAL TRUCK AND ENGINE CORP.

https://truckmanualshub.com/

Figure 3604603F91

IP,CLUSTER,LEFT WARNING LIGHTS

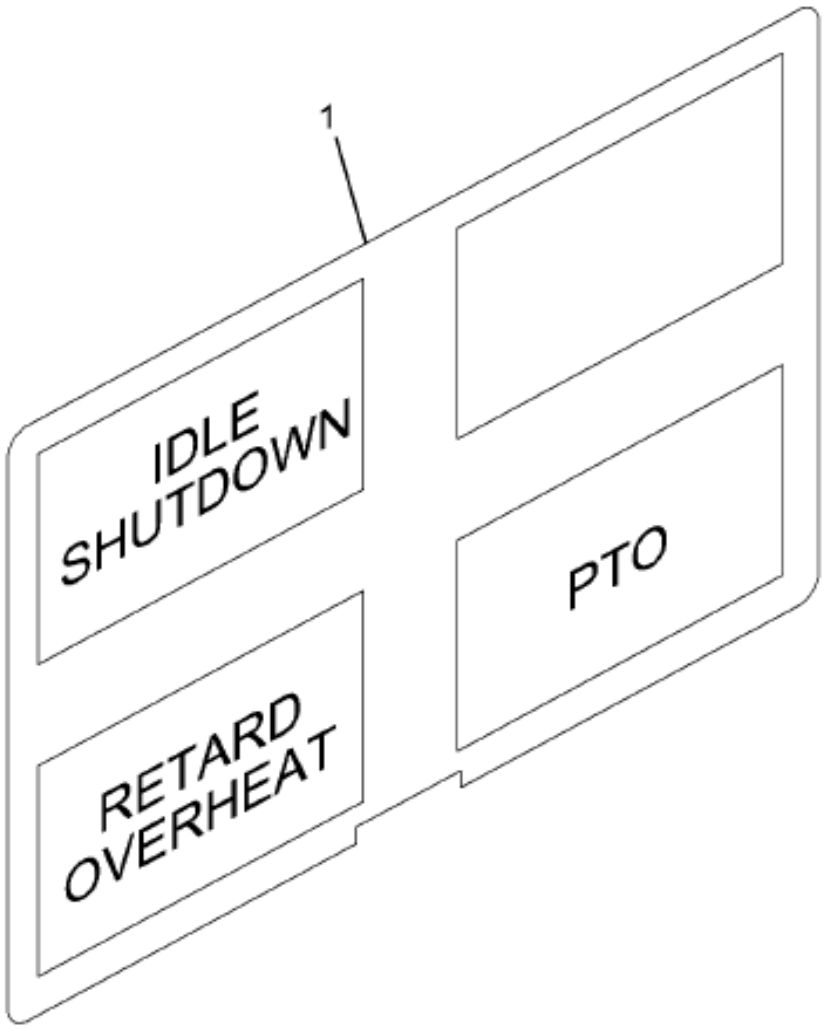

16-P75-0005-01 F05

Grp 16

Item	Part No.	Qty	Description	Kit	Var	Figure
1	3604595C1	1	LENS,INSTR CLUSTER, IDLE SHUTD			
880		RF	NOTE: ASM BELOW COMPRISED OF ABOVE COMPONENTS			
881	3604603F91	RF	IP,CLUSTER,LEFT WARNING LIGHTS			

COPYRIGHT© 2011INTERNATIONAL TRUCK AND ENGINE CORP.

https://truckmanualshub.com/

Figure 0FG0C

IP MODULE, WIRING INSTL; WARNING LIGHT (ABR #77)

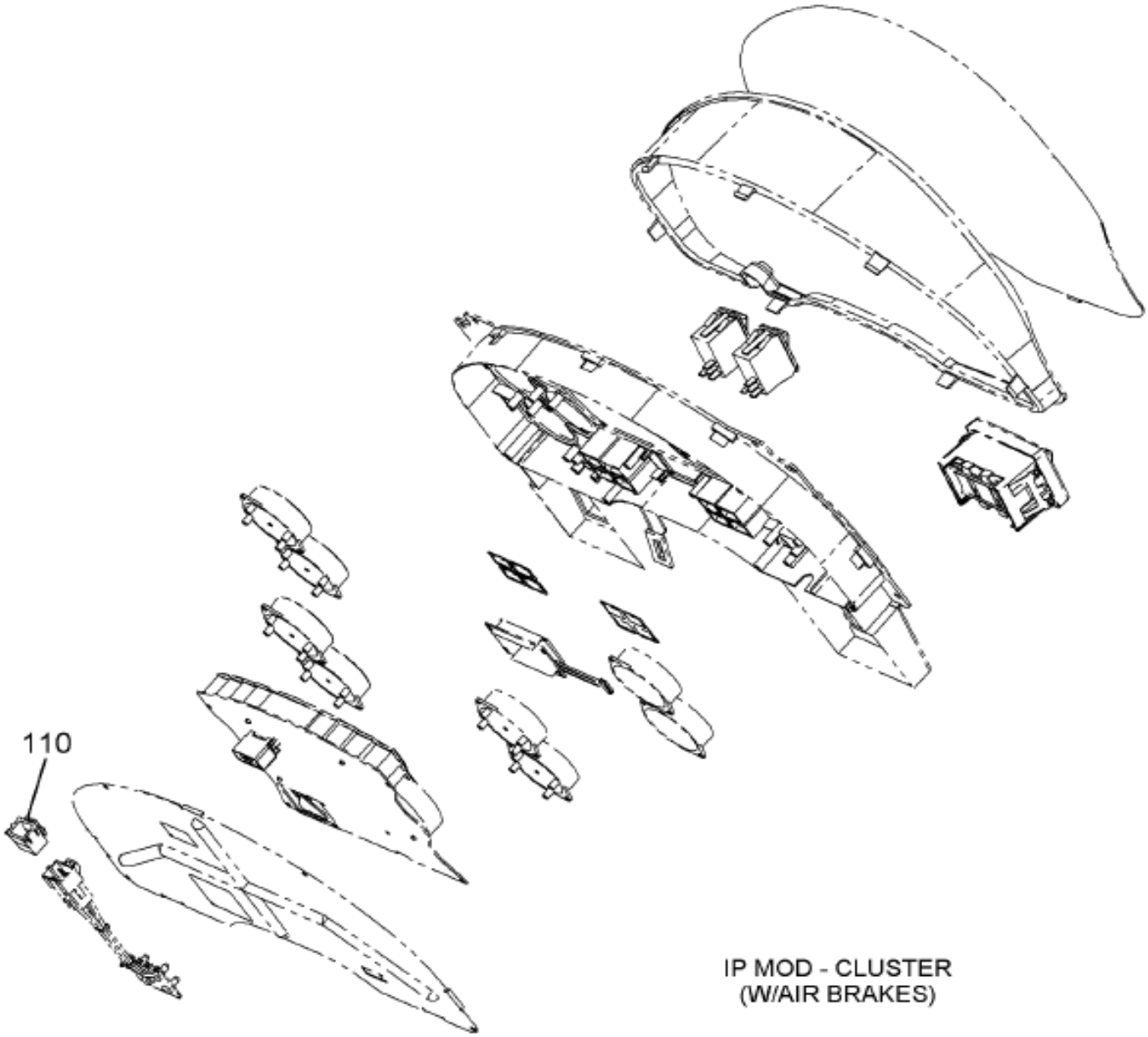

16-P77-0001-01 B09

Item	Part No.	Qty	Description	Kit	Var	Figure
110	3588120F91	1	ELEC IP,WARN LIGHT IGN ADAP		0R349	3588120F91

COPYRIGHT© 2011INTERNATIONAL TRUCK AND ENGINE CORP.

https://truckmanualshub.com/

Figure 3588120F91

ELEC IP,WARN LIGHT IGN ADAP

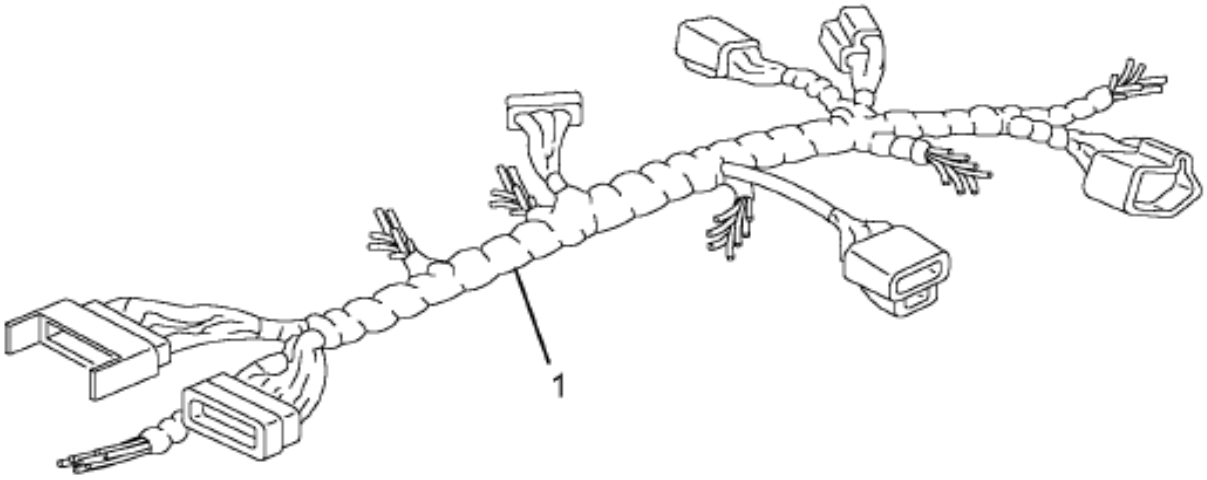

08-P58-0006-01 C03

Grp 16

Item	Part No.	Qty	Description	Kit	Var	Figure
1	3588115C91	1	HARN,CAB OVERLAY WARN LT IGN A			
1	3534208C1	1	FUSE,*FUSE, 5AMP MINI			
880		RF	NOTE: ASM BELOW COMPRISED OF ABOVE COMPONENTS			
881	3588120F91	RF	ELEC IP,WARN LIGHT IGN ADAP			

COPYRIGHT© 2011INTERNATIONAL TRUCK AND ENGINE CORP.

https://truckmanualshub.com/

Figure 0M72R

MIRROR ASM & MTG; REAR VIEW

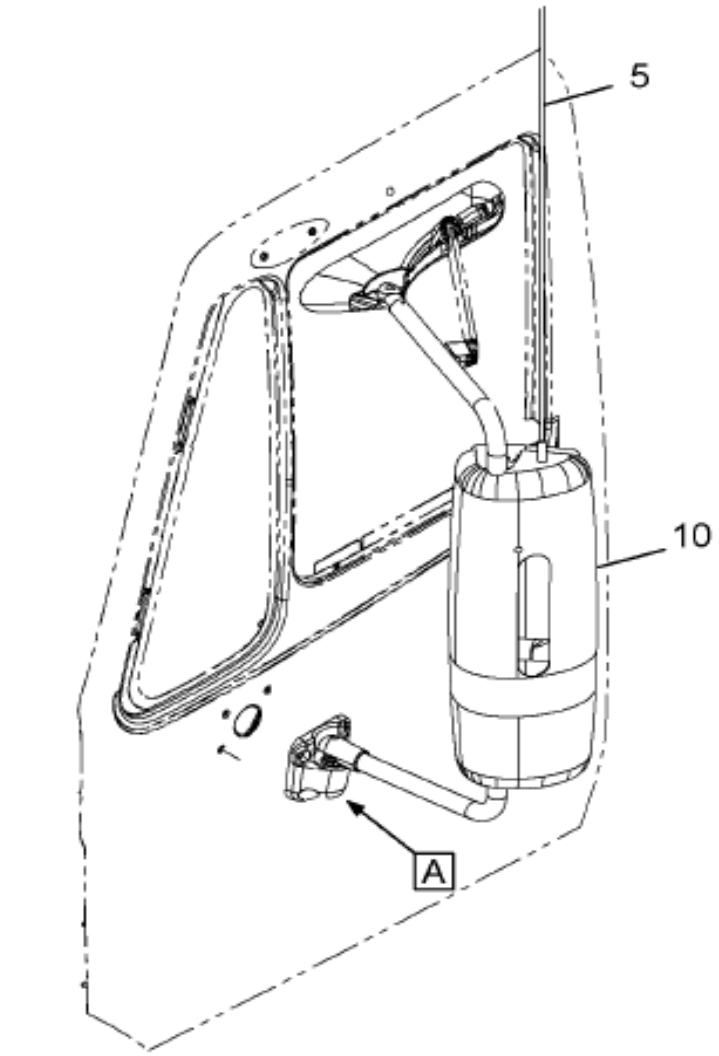

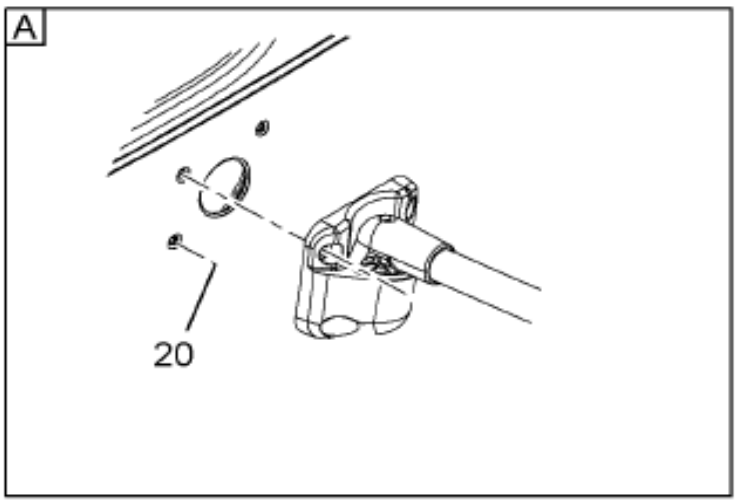

16-503-0359-01 L10

Item	Part No.	Qty	Description	Kit	Var	Figure
5	3602836C95	1	MIRROR,REAR VIEW, LH STD-HT-CV		0M73W	3602836C95
5	3602840C95	1	MIRROR,REAR VIEW, RH STD-HT-CV		0M73W	3602840C95
20	3588152C1	12	BOLT,SPL M8-1.25X30 T-40 SST		0M72R	

COPYRIGHT© 2011INTERNATIONAL TRUCK AND ENGINE CORP.

https://truckmanualshub.com/

Figure 2307653C91

KIT,FLIP-OUT ARM LH

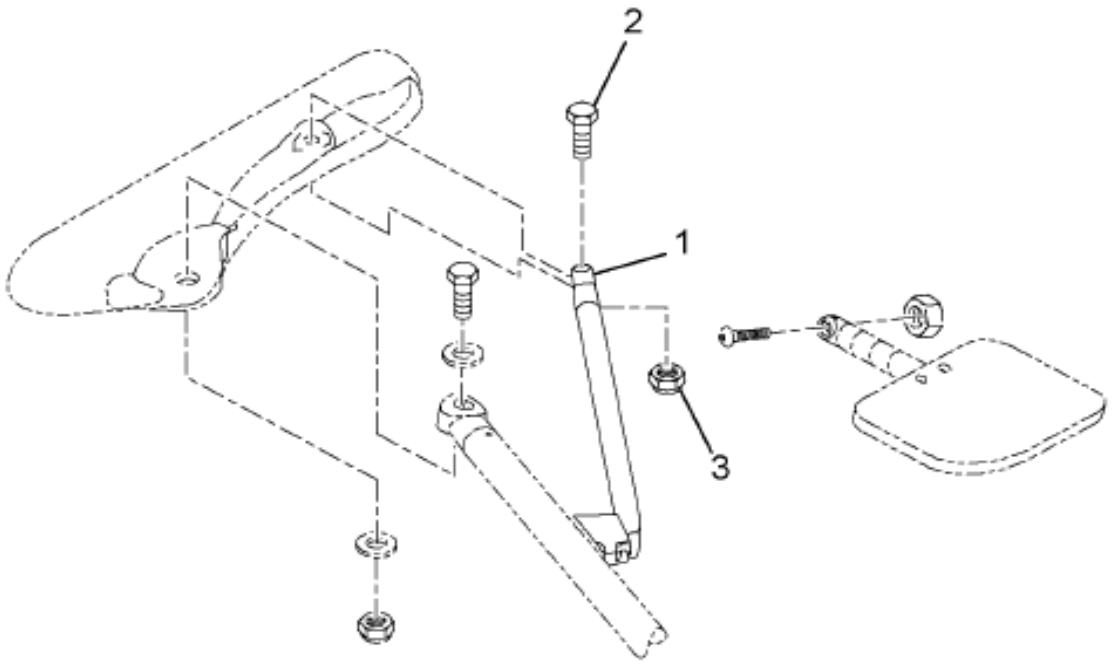

LEFT HAND SHOWN
RIGHT HAND OPPOSITE

16-503-0261-01 C08

Grp 16

Item	Part No.	Qty	Description	Kit	Var	Figure
1		1	ARM,FLIP-OUT WITH TIP LH			
1		RF	LEFT			
2		1	SCREW,M5-0.8			
3		1	NUT,M5 NYLON INSERT LOCK			
800		RF	NOTE: THE FOLLOWING PARTS ARE			
			NON-ILLUSTRATED			

COPYRIGHT© 2011INTERNATIONAL TRUCK AND ENGINE CORP.

https://truckmanualshub.com/

Figure 2507655C91

KIT,FLIP-OUT ARM LH

Item	Part No.	Qty	Description	Kit	Var	Figure
801	2592963C1	1	INSERT,MOLDED RBR PKG OF 25			
880		RF	NOTE: ASM BELOW COMPRISED OF ABOVE COMPONENTS			
881	2507655C91	RF	KIT,FLIP-OUT ARM LH			

COPYRIGHT© 2011INTERNATIONAL TRUCK AND ENGINE CORP.

https://truckmanualshub.com/

Figure 2307656C91

KIT,FLIP-OUT ARM RH

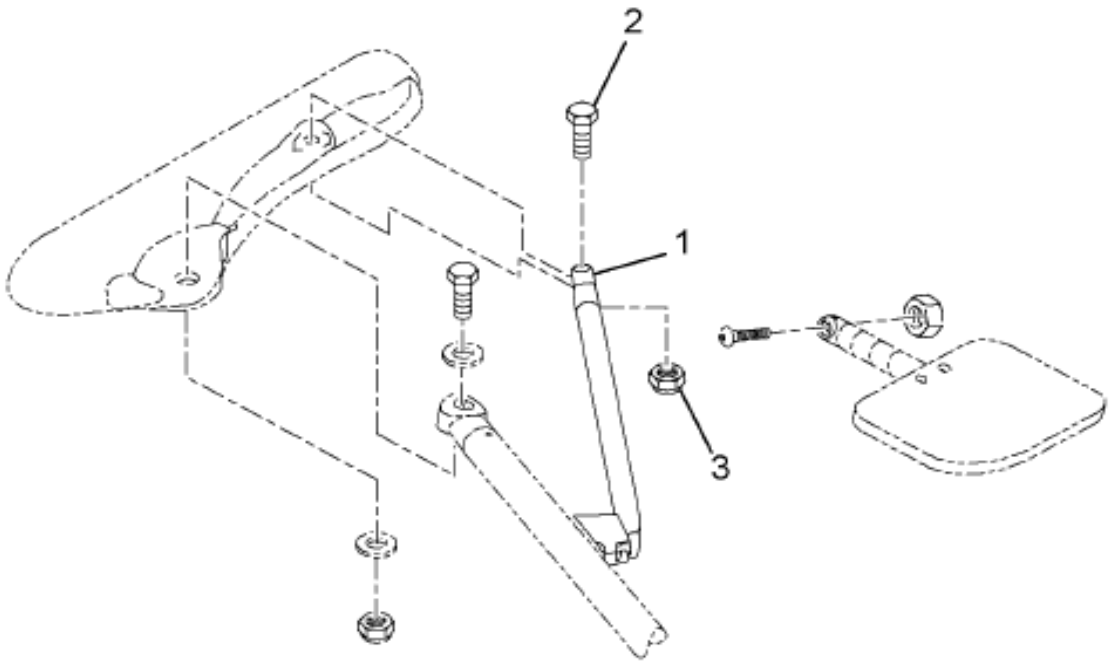

LEFT HAND SHOWN
RIGHT HAND OPPOSITE

16-503-0261-01 C08

Grp 16

Item	Part No.	Qty	Description	Kit	Var	Figure
1		1	ARM,FLIP-OUT WITH TIP RH			
1		RF	RIGHT			
2		1	SCREW,M5-0.8			
3		1	NUT,M5 NYLON INSERT LOCK			
800		RF	NOTE: THE FOLLOWING PARTS ARE			
			NON-ILLUSTRATED			

COPYRIGHT© 2011INTERNATIONAL TRUCK AND ENGINE CORP.

https://truckmanualshub.com/

Figure 2507656C91

KIT,FLIP-OUT ARM RH

Item	Part No.	Qty	Description	Kit	Var	Figure
801	2592963C1	1	INSERT,MOLDED RBR PKG OF 25			
880		RF	NOTE: ASM BELOW COMPRISED OF ABOVE COMPONENTS			
881	2507656C91	RF	KIT,FLIP-OUT ARM RH			

COPYRIGHT© 2011INTERNATIONAL TRUCK AND ENGINE CORP.

https://truckmanualshub.com/

Figure 3602836C93

MIRROR,REAR VIEW, LH STD-HT-CV

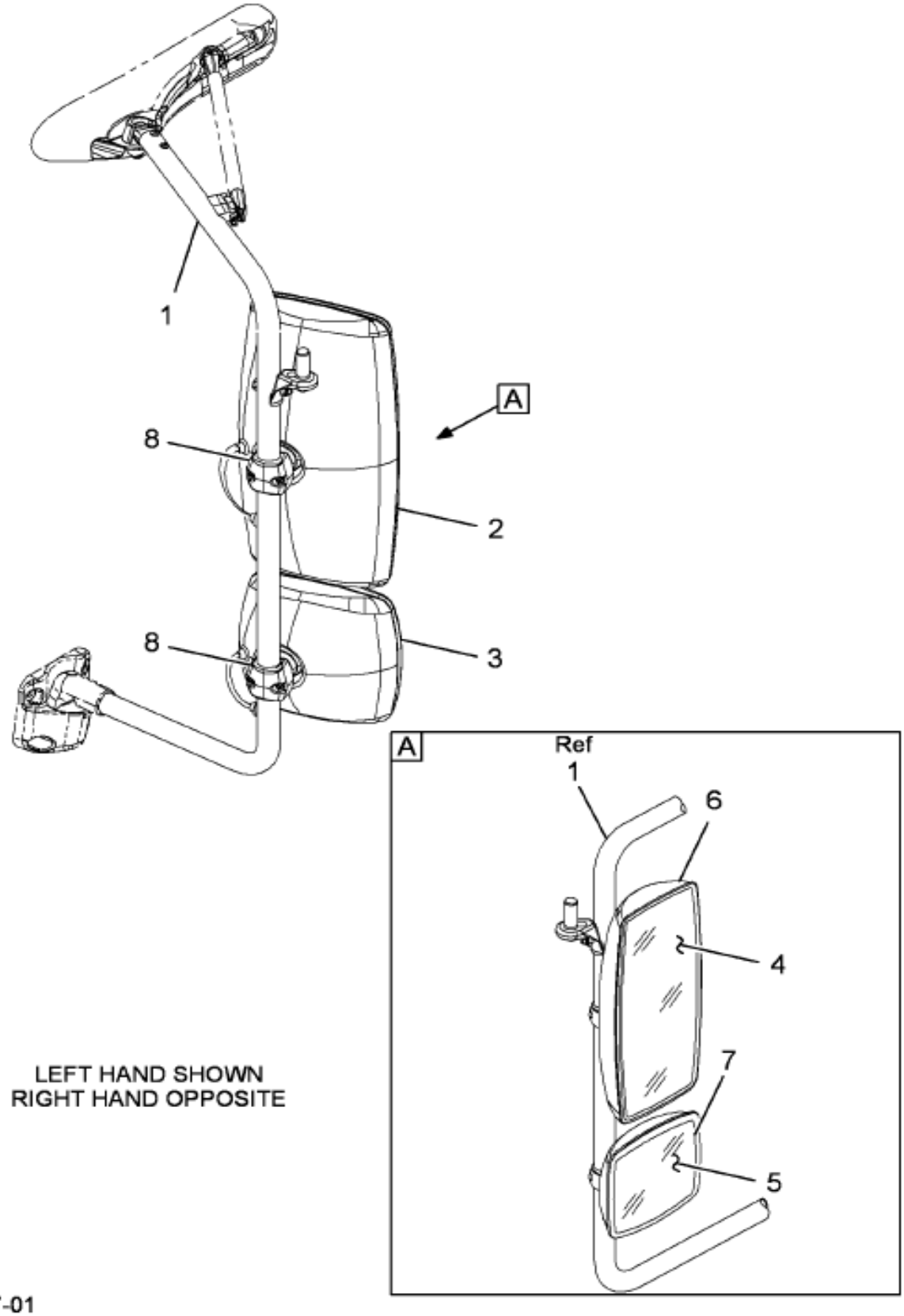

16-503-0327-01 H10

Item	Part No.	Qty	Description	Kit	Var	Figure
1	2589149C2	1	BRACKET,ASSY LH BLK HTD W/GSKT			
1		RF	LEFT			
2	2589243C3	1	KIT,MAIN MAN HTD GLASS & BEZEL			
2	2591865C1	1	HEAD,MIRROR STD 405 HTD MANUAL			
3	2591866C1	1	HEAD,MIRROR CONVEX HTD MANUAL			
3	2589244C3	1	KIT,CVX MAN GLASS & BEZEL			

Grp 16

COPYRIGHT© 2011INTERNATIONAL TRUCK AND ENGINE CORP.

https://truckmanualshub.com/

Figure 3602836C95

MIRROR,REAR VIEW, LH STD-HT-CV

Item	Part No.	Qty	Description	Kit	Var	Figure
4	2505814C1	1	GLASS,ASSY STD FLT HTD			
5	2505816C2	1	GLASS,ASSY MIR STD CNVX HTD			
6	2509980C1	1	BEZEL,FLAT MAIN BLACK			
7	2509979C1	1	BEZEL,BLACK SPOT CONVEX R450			
8	2507274C1	1	CLAMP,MIR TUBE CLAMP BLACK (1)			
800		RF	NOTE: THE FOLLOWING PARTS ARE NON-ILLUSTRATED			
801	2592963C1	1	INSERT,MOLDED RBR PKG OF 25			
802	2590983C1	1	GASKET,MIRROR MTG BRKT LH			
802		RF	LEFT			
803	2506243C91	1	BOX,MIR TESTER UNIT			
870	2506235C91	KT	KIT,LOOKDOWN MIRROR FASTENER			
871	2507655C91	KT	KIT,FLIP-OUT ARM LH			2507655C91
871		RF	LEFT			
872	2597071C91	KT	KIT,LOWER HOLDER, LH			
872		RF	LEFT			
873	2509068C91	KT	KIT,MIR UPR HLDR LH W/O CB GRD			
873		RF	LEFT			
874	2509146C91	KT	KIT,LH RECEIVER W/RIVET			
874		RF	LEFT			
875	2588788C91	KT	KIT,MIRROR GROMMET			
876	2595028C91	KT	KIT,MIR UPR TUBE CONNECTOR			
880		RF	NOTE: ASM BELOW COMPRISED OF ABOVE COMPONENTS			
881	3602836C95	RF	MIRROR,REAR VIEW, LH STD-HT-CV			

COPYRIGHT© 2011INTERNATIONAL TRUCK AND ENGINE CORP.

https://truckmanualshub.com/

Figure 3602840C93

MIRROR,REAR VIEW, RH STD-HT-CV

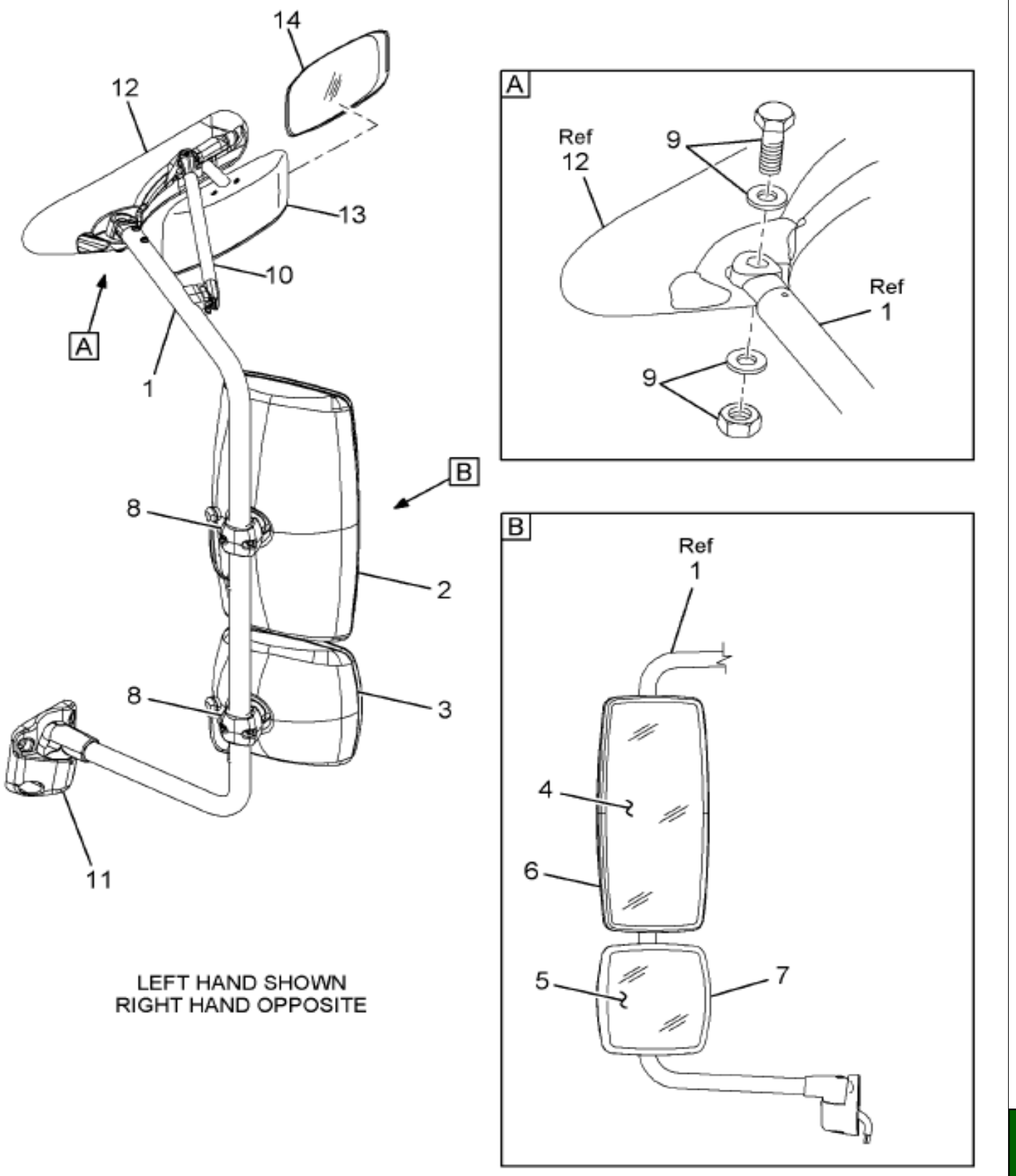

16-503-0258-01 C08

Item	Part No.	Qty	Description	Kit	Var	Figure
1	2589153C1	1	BRACKET,ASSY RH BLK HTD LKDWN			
1		RF	RIGHT			
2	2591865C1	1	HEAD,MIRROR STD 405 HTD MANUAL			
2	2589243C3	1	KIT,MAIN MAN HTD GLASS & BEZEL			
2	2591866C1	1	HEAD,MIRROR CONVEX HTD MANUAL			
3	2589244C3	1	KIT,CVX MAN GLASS & BEZEL			

Grp 16

COPYRIGHT© 2011INTERNATIONAL TRUCK AND ENGINE CORP.

https://truckmanualshub.com/

Figure 3602840C95

MIRROR,REAR VIEW, RH STD-HT-CV

Item	Part No.	Qty	Description	Kit	Var	Figure
4	2505814C1	1	GLASS,ASSY STD FLT HTD			
5	2505816C2	1	GLASS,ASSY MIR STD CNVX HTD			
6	2509980C1	1	BEZEL,FLAT MAIN BLACK			
7	2509979C1	1	BEZEL,BLACK SPOT CONVEX R450			
8	2507274C1	2	CLAMP,MIR TUBE CLAMP BLACK (1)			
9	2506235C91	KT	KIT,LOOKDOWN MIRROR FASTENER			
10	2507656C91	KT	KIT,FLIP-OUT ARM RH			2507656C91
10		RF	RIGHT			
10	2509147C91	KT	KIT,RH RECEIVER W/RIVET			
10		RF	RIGHT			
11	2597075C91	KT	KIT,LOWER HOLDER,RH			
11		RF	RIGHT			
12	2509070C91	KT	KIT,MIR UPR HLDR W/LKDWN W/O			
12		RF	RIGHT			
13	2506219C92	1	MIRROR,LOOK DOWN (BLACK)			
14	2585911C2	1	GLASS,360 LOOK DOWN MIRROR			
800		RF	NOTE: THE FOLLOWING PARTS ARE NON-ILLUSTRATED			
801	2592963C1	1	INSERT,MOLDED RBR PKG OF 25			
802	2590984C1	1	GASKET,MIRROR MTG BRKT RH			
802		RF	RIGHT			
803	2588788C91	KT	KIT,MIRROR GROMMET			
804	2506243C91	1	BOX,MIR TESTER UNIT			
805	2595028C91	KT	KIT,MIR UPR TUBE CONNECTOR			
806	2591517C1	4	CONNECTOR,CABLE MIR 24PCS=1KIT			
880		RF	NOTE: ASM BELOW COMPRISED OF ABOVE COMPONENTS			
881	3602840C95	RF	MIRROR,REAR VIEW, RH STD-HT-CV			

COPYRIGHT© 2011INTERNATIONAL TRUCK AND ENGINE CORP.

https://truckmanualshub.com/

Figure 0VMB6

MODESTY PANEL INSTL; MTG BRKT

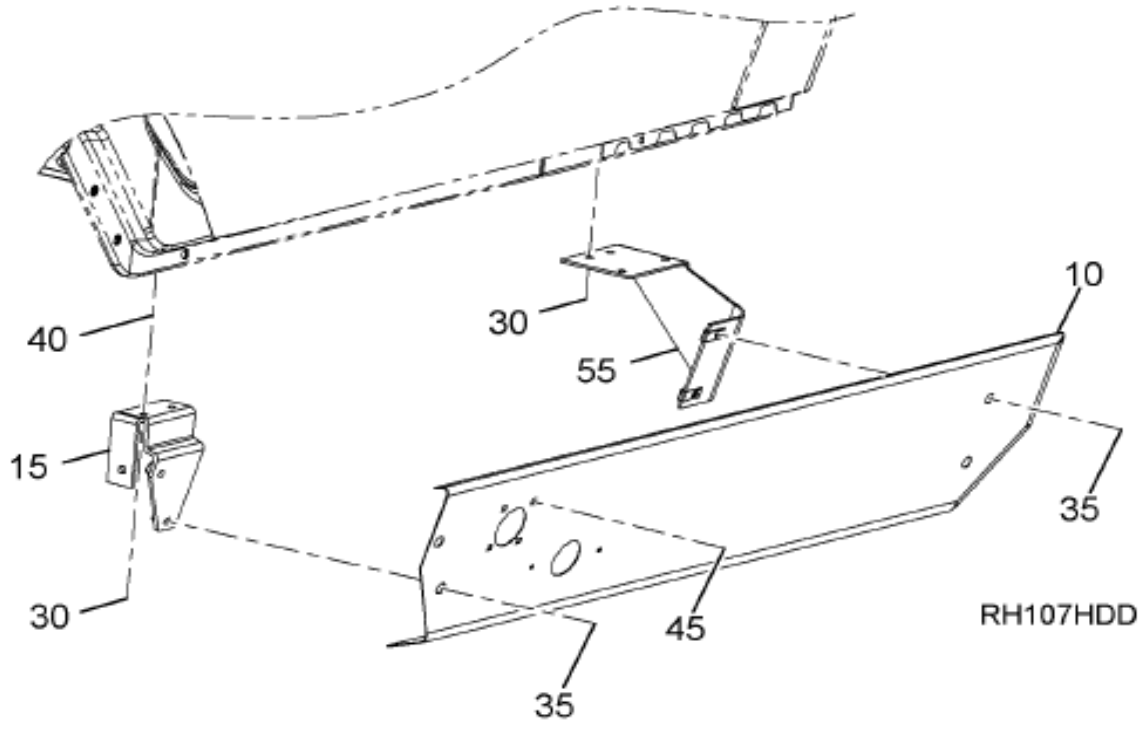

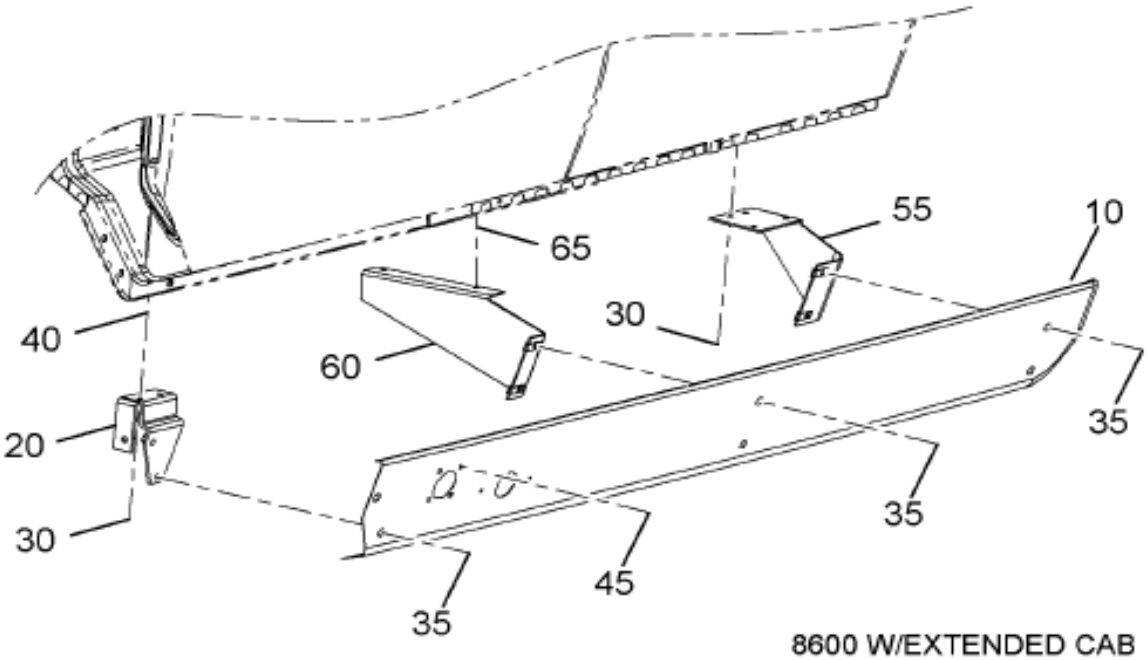

16-494-0070-01 L10

Item	Part No.	Qty	Description	Kit	Var	Figure
10	3563998C1	1	PANEL CAB SKIRT LH		0VMBF	
15	3561821C2	1	SUPPORT,SKIRT FRONT MOUNTNG LH		0VMB6	3561821C2
30	3535316C1	4	BOLT LATCH OR CATCH M6X1-20		0VMB6	
35	3588153C1	4	BOLT,SEMS ALL M8-1.25 X30 T-40		0VMBF	
40	3510918C1	4	INSERT,THREADED M6 OPEN END		0VMB6	
55	3571958C1	1	BRACKET,SKIRT REAR MOUNTING		0VMB6	

Grp 16

COPYRIGHT© 2011INTERNATIONAL TRUCK AND ENGINE CORP.

https://truckmanualshub.com/

Figure 3561821C2

SUPPORT,SKIRT FRONT MOUNTNG LH

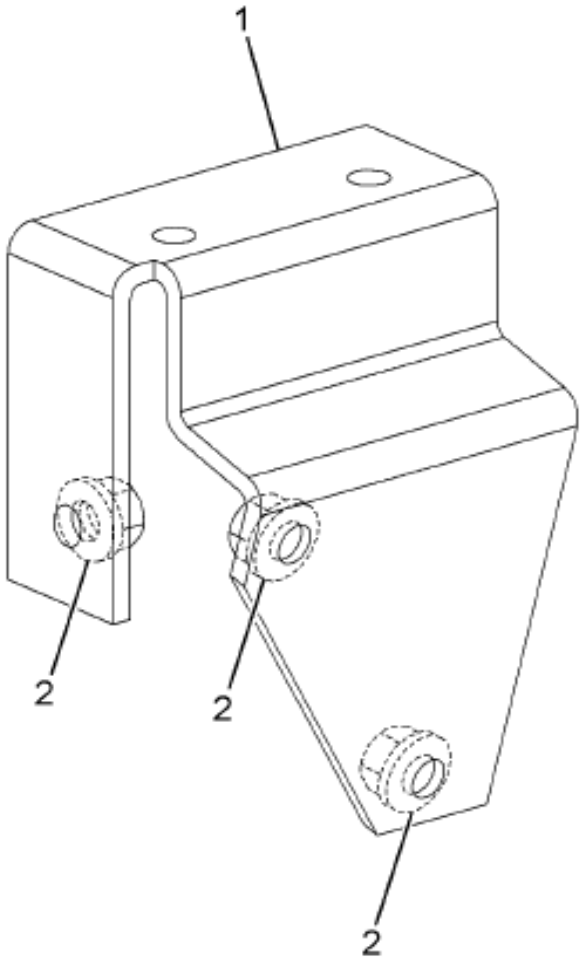

LEFT HAND SHOWN
RIGHT HAND OPPOSITE

16-494-0027-01 K06

Item	Part No.	Qty	Description	Kit	Var	Figure
1	3561819C2	1	SUPPORT,SKIRT FRONT MOUNTNG LH			
1		RF	LEFT			
2	3548808C1	3	NUT,WELD FLANGED M8 X 1.25			
880		RF	NOTE: ASM BELOW COMPRISED OF ABOVE COMPONENTS			
881	3561821C2	RF	SUPPORT,SKIRT FRONT MOUNTNG LH			

COPYRIGHT© 2011INTERNATIONAL TRUCK AND ENGINE CORP.

https://truckmanualshub.com/

Figure 0GWJ7

PASS SEAT INSTL; W/ BELT

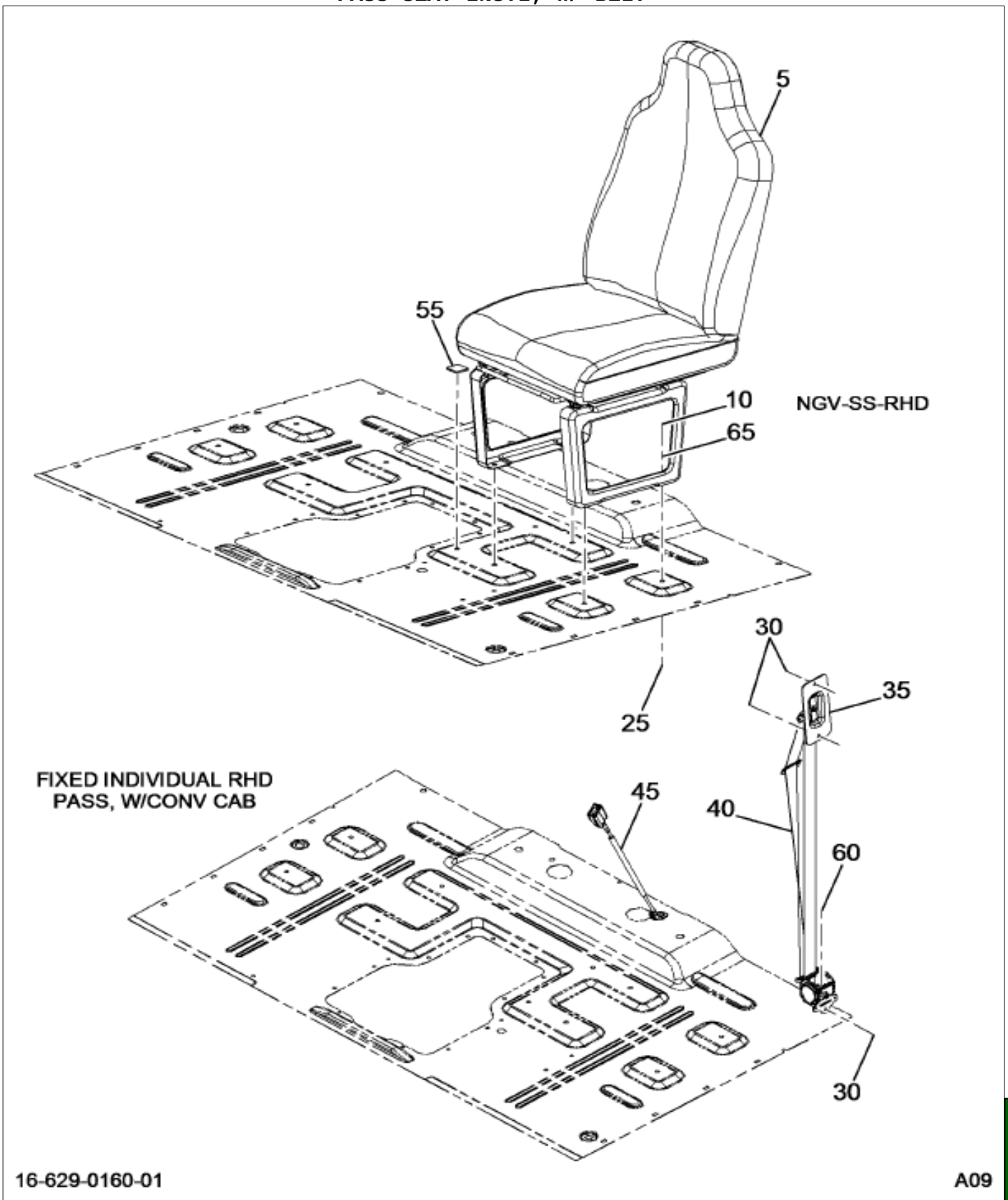

Item	Part No.	Qty	Description	Kit	Var	Figure
5	3575620C93	1	SEAT,PASS 1/3 HI BCK GRAY VNYL		0HJ5M	3575620C93
10	3544442C1	4	BOLT,SEAT MTG STUD		0KYL7	
25	3557057C1	4	NUT,HEX*M8 X 1.25 W/ CAPTURE		0GWJ7	
30	3554364C2	3	BOLT,SPECIAL SEAT BELT ANCHOR		0KXGR	
35	3562147C3	1	BRACKET,ASSY SEAT BELT ANCHOR		0GWJ7	
40	3711330C1	1	BELT,SAFETY,RETRACTOR ASSY,BLK		0KXGR	

Grp 16

COPYRIGHT© 2011INTERNATIONAL TRUCK AND ENGINE CORP.

https://truckmanualshub.com/

Figure 0GW37
PASS SEAT INSTL; W/ BELT

Item	Part No.	Qty	Description	Kit	Var	Figure
45	3711397C1	1	BELT, BUCKLE, STATIC SEAT, RH		0KXGR	
60	3554368C1	1	BOLT,TORX M12X1.7X54 SEAT BELT		0KXGR	

COPYRIGHT© 2011INTERNATIONAL TRUCK AND ENGINE CORP.

https://truckmanualshub.com/

Figure 3375620C93

SEAT,PASS 1/3 HI BCK GRAY VNYL

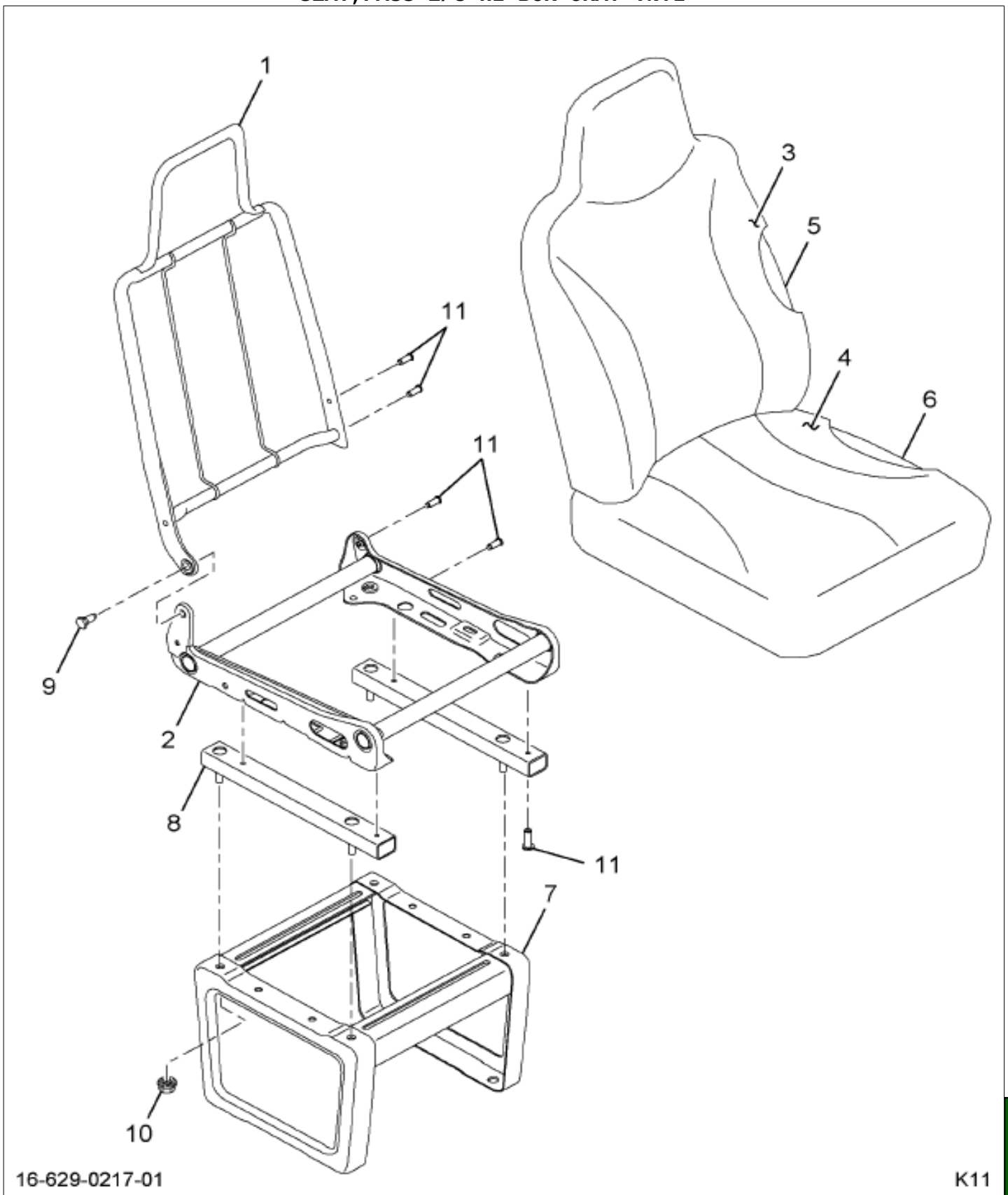

Item	Part No.	Qty	Description	Kit	Var	Figure
1	2505733C1	1	FRAME,SEAT (BUCKET BACK CUSH)			
2	2505732C1	1	FRAME,SEAT (BUCKET SEAT CUSH)			
3	2509756C91	1	CUSHION,BACK HI 1/3 VINYL FXD			
4	2507654C91	1	CUSHION,SEAT W/CVR			
5		1	PAD,ASM BUCKET BACK			
6		1	PAD ASM BUCKET CUSHION			

Grp 16

COPYRIGHT© 2011INTERNATIONAL TRUCK AND ENGINE CORP.

https://truckmanualshub.com/

Figure 3575620C93

SEAT,PASS 1/3 HI BCK GRAY VNYL

Item	Part No.	Qty	Description	Kit	Var	Figure
7	2505727C1	1	RISER,ASSY SEAT			
8	2505735C1	2	SPACER,BUCKET SEAT MTG			
9		1	BOLT,M10X1.5X35X8.6 SHOULDER			
10		4	NUT & CONED WSHR M10 X 1.5 MM			
11		8	BOLT,M8X1.25X16HEX FLG HD-T/R			
800		RF	NOTE: THE FOLLOWING PARTS ARE NON-ILLUSTRATED			
801	2593487C1	1	SUPPORT,CANVAS CLOTH SEAT RT			
880		RF	NOTE: ASM BELOW COMPRISED OF ABOVE COMPONENTS			
881	3575620C93	RF	SEAT,PASS 1/3 HI BCK GRAY VNYL			

COPYRIGHT© 2011INTERNATIONAL TRUCK AND ENGINE CORP.

https://truckmanualshub.com/

Figure 0QL12
PRODUCT GRAPHIC; CAB/HOOD, PRODUCT ID

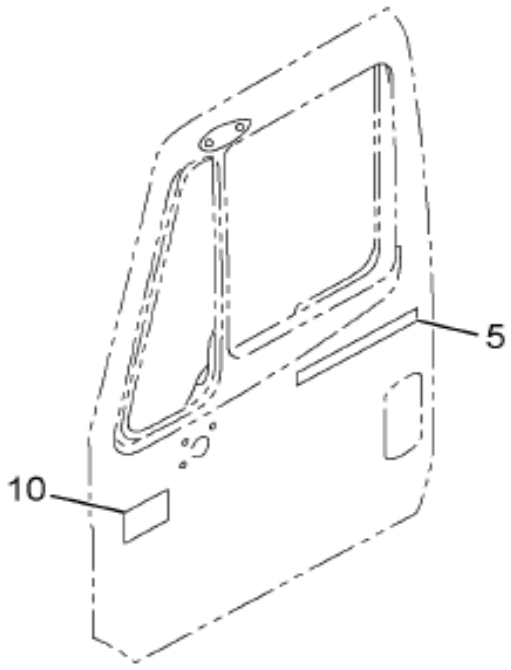

3200
LEFT HAND SHOWN
RIGHT HAND OPPOSITE

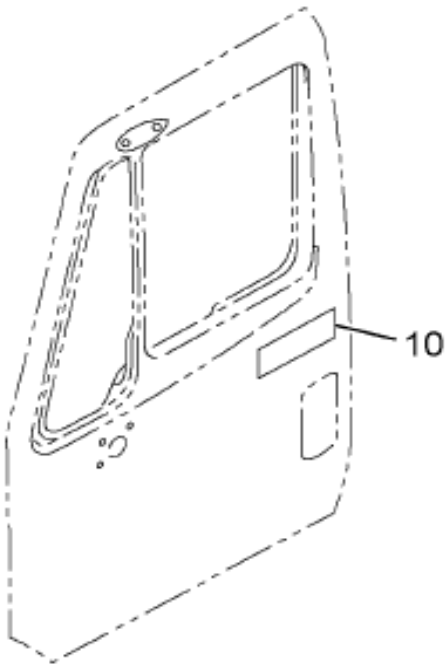

WORKSTAR, TRANSTAR, DURASTAR,
LEFT HAND SHOWN
RIGHT HAND OPPOSITE

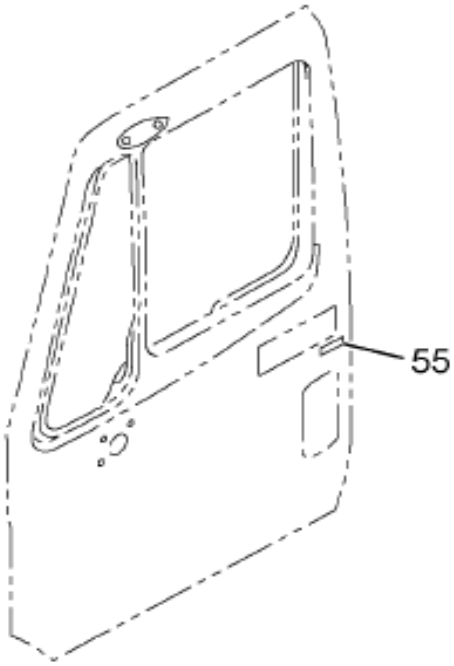

HYBRID
LEFT HAND SHOWN

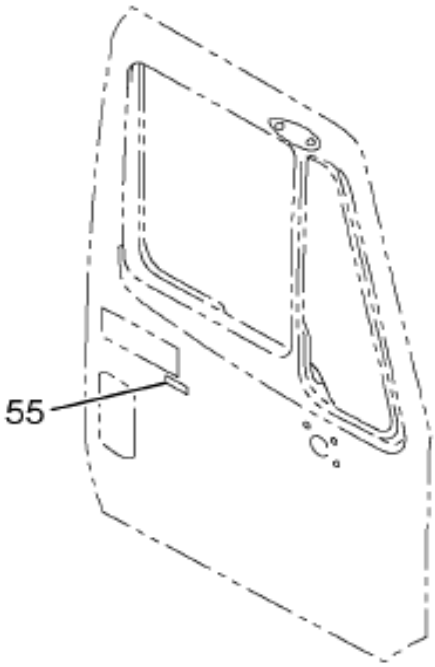

HYBRID
RIGHT HAND SHOWN

16-421-0041-01 C07

Item	Part No.	Qty	Description	Kit	Var	Figure
10	3814531C2	2	PRODUCT GRAPHIC, WORKSTAR		0QLV9	

Grp 16

COPYRIGHT© 2011INTERNATIONAL TRUCK AND ENGINE CORP.

https://truckmanualshub.com/

Figure 07M45

PRODUCT GRAPHIC; LEGISLATIVE

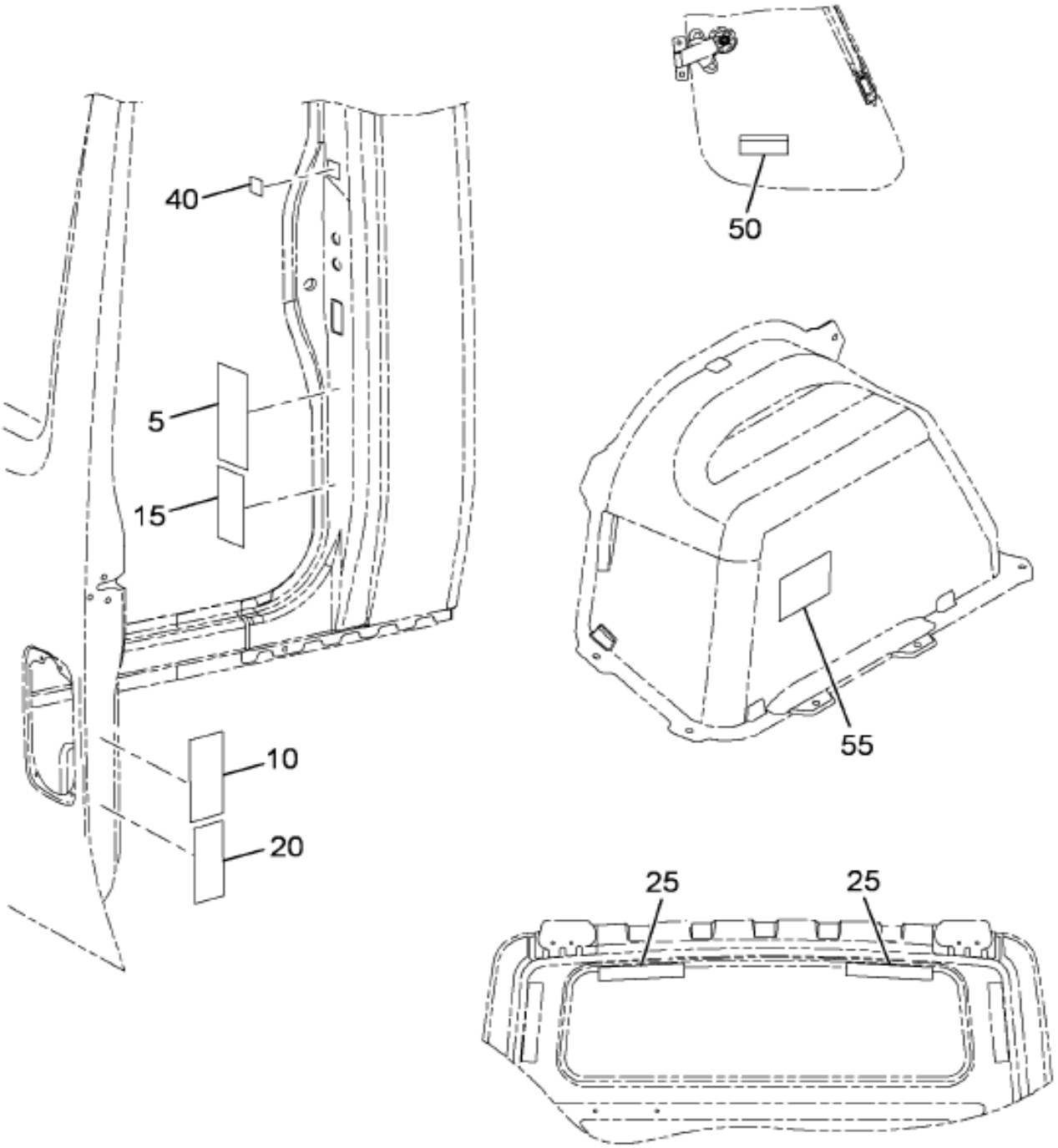

Figure 1 of 3

COPYRIGHT© 2011INTERNATIONAL TRUCK AND ENGINE CORP.

https://truckmanualshub.com/

Figure 07M43
PRODUCT GRAPHIC; LEGISLATIVE

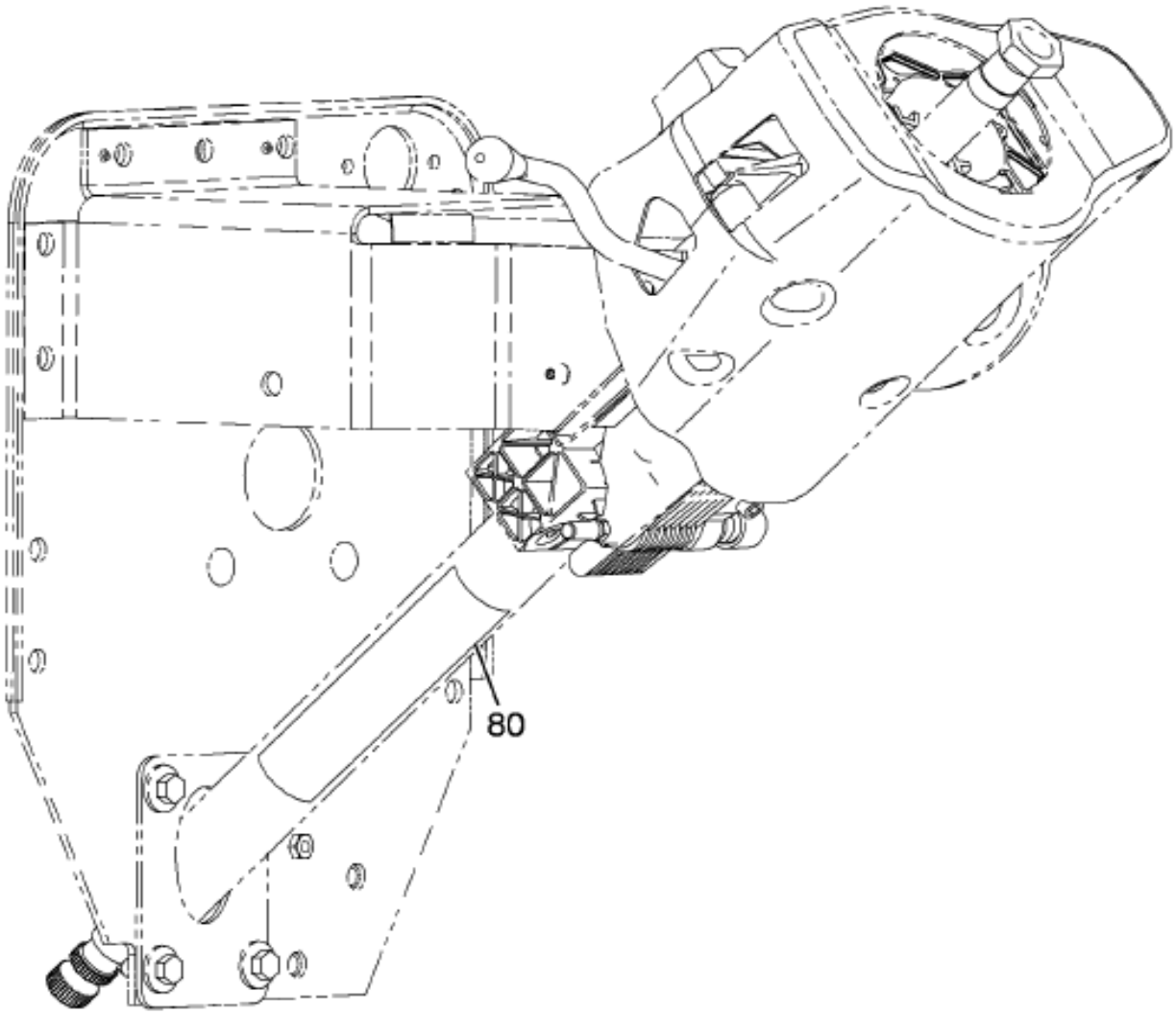

16-767-0015-01 M09

Grp 16

Figure 2 of 3

COPYRIGHT© 2011INTERNATIONAL TRUCK AND ENGINE CORP.

https://truckmanualshub.com/

Figure 07M45

PRODUCT GRAPHIC; LEGISLATIVE

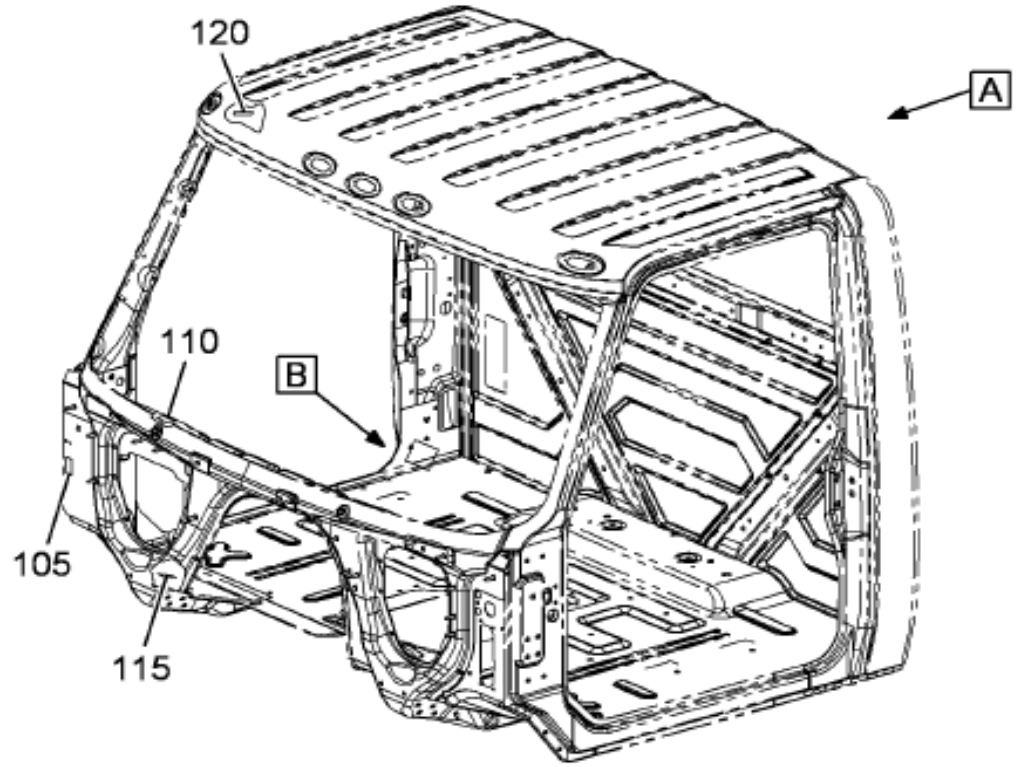

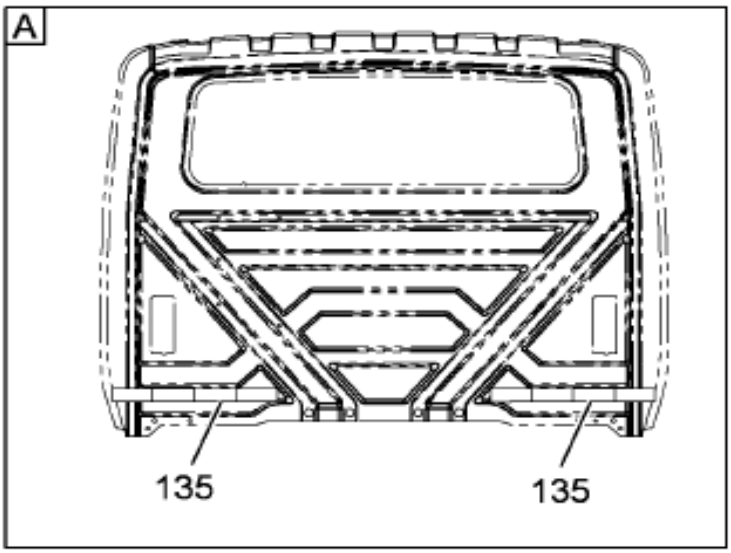

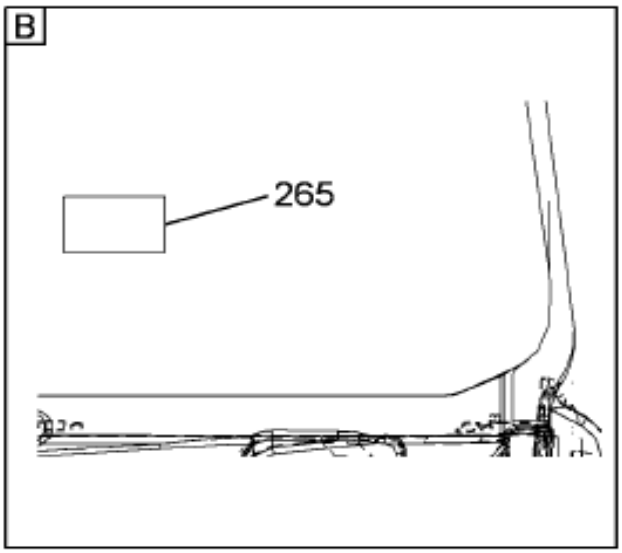

16-767-0020-02 M09

Item	Part No.	Qty	Description	Kit	Var	Figure
20	3593358C3	1	PRODUCT GRAPHIC,NOISE, EMISSIO		0LB7C	3593358C3
55		REF	PRODUCT GRAPHICS,LABEL CAUTION		0S1NW	

COPYRIGHT© 2011INTERNATIONAL TRUCK AND ENGINE CORP.

https://truckmanualshub.com/

Figure 3593358C3

PRODUCT GRAPHIC,NOISE, EMISSIO

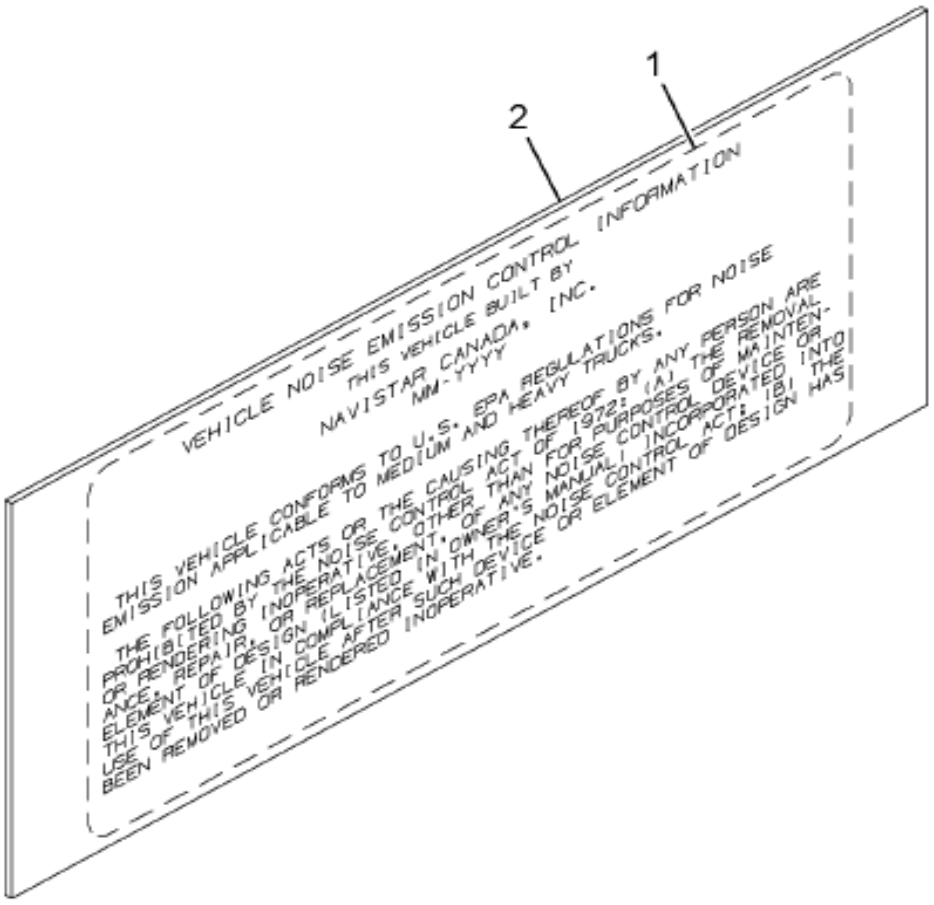

16-421-0048-01 M08

Grp 16

Item	Part No.	Qty	Description	Kit	Var	Figure
1	3518910C2	1	PRODUCT GRAPHICS,*BLANK LABEL			
2	435654C2	1	COVER PROTECTIVE			
880		RF	NOTE: ASM BELOW COMPRISED OF ABOVE COMPONENTS			
881	3593358C3	RF	PRODUCT GRAPHIC,NOISE, EMISSIO			

COPYRIGHT© 2011INTERNATIONAL TRUCK AND ENGINE CORP.

https://truckmanualshub.com/

Figure 0FDGN
PRODUCT GRAPHIC; NON-LEGISLATIVE

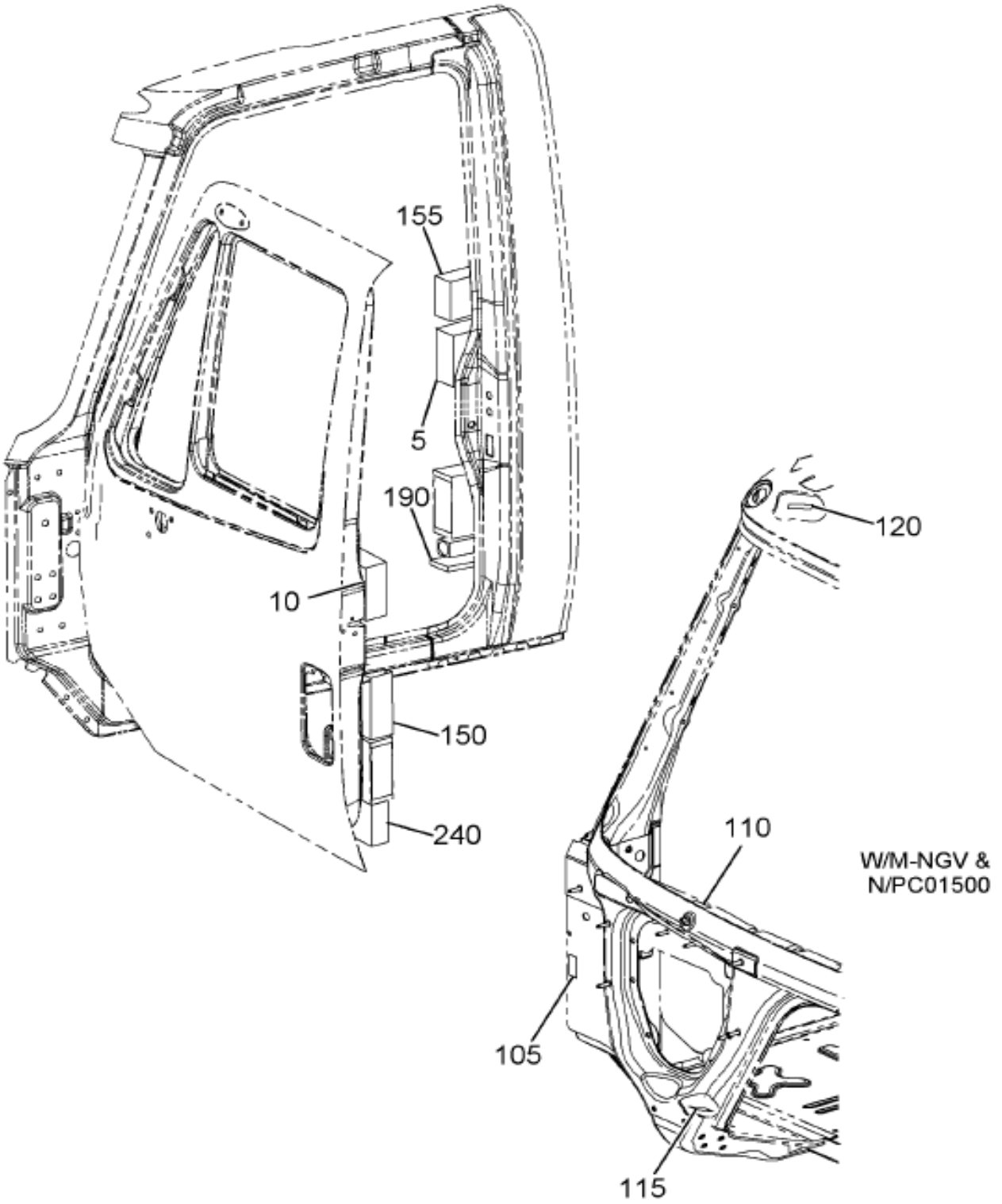

Figure 1 of 6

COPYRIGHT© 2011INTERNATIONAL TRUCK AND ENGINE CORP.

https://truckmanualshub.com/

Figure 01DGN
PRODUCT GRAPHIC; NON-LEGISLATIVE

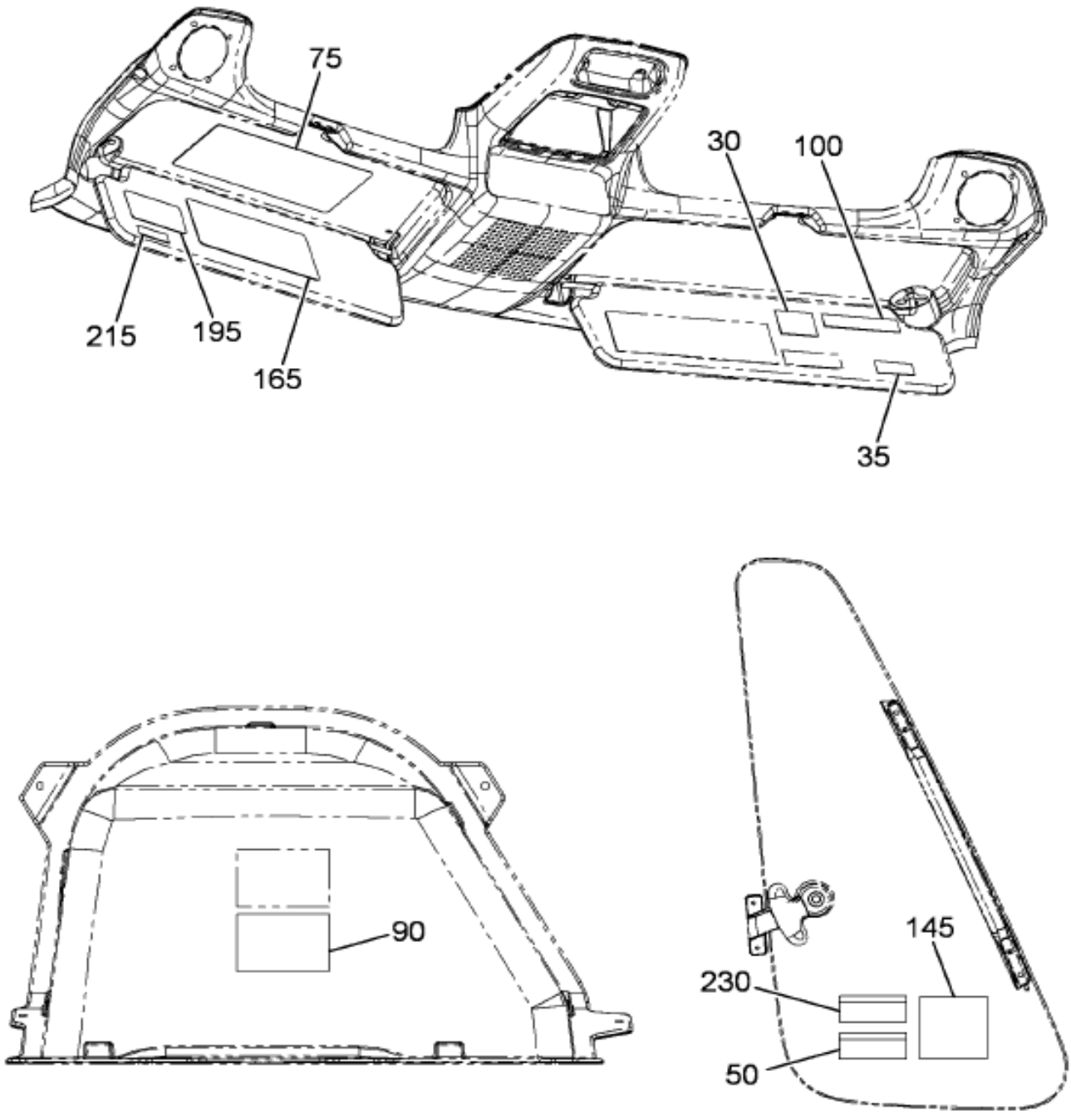

16-768-0034-02 C09

Grp 16

Figure 2 of 6

COPYRIGHT© 2011INTERNATIONAL TRUCK AND ENGINE CORP.

https://truckmanualshub.com/

Figure 0FDGN
PRODUCT GRAPHIC; NON-LEGISLATIVE

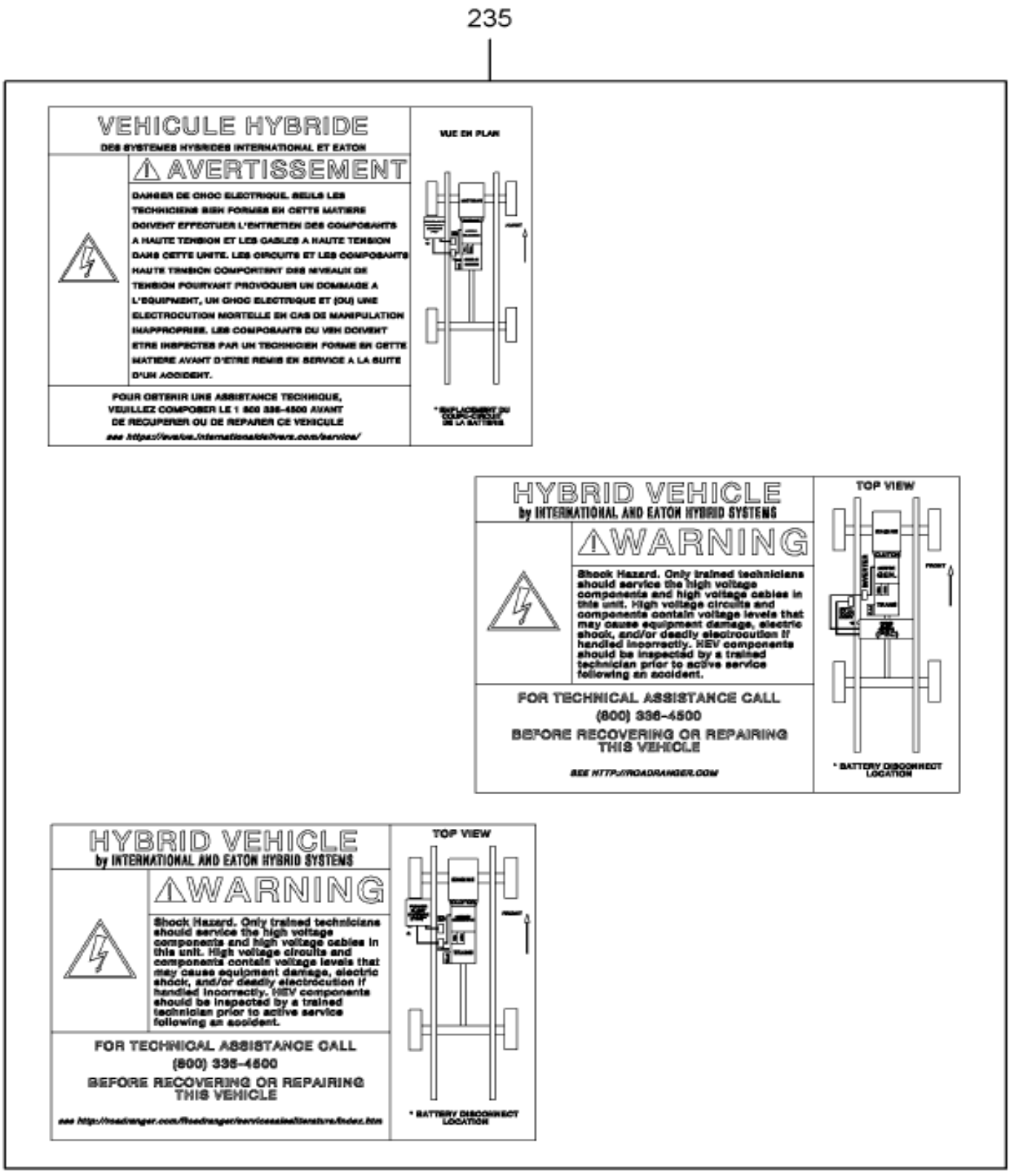

Figure 3 of 6

COPYRIGHT© 2011INTERNATIONAL TRUCK AND ENGINE CORP.

https://truckmanualshub.com/
Figure 0FDGN
PRODUCT GRAPHIC; NON-LEGISLATIVE

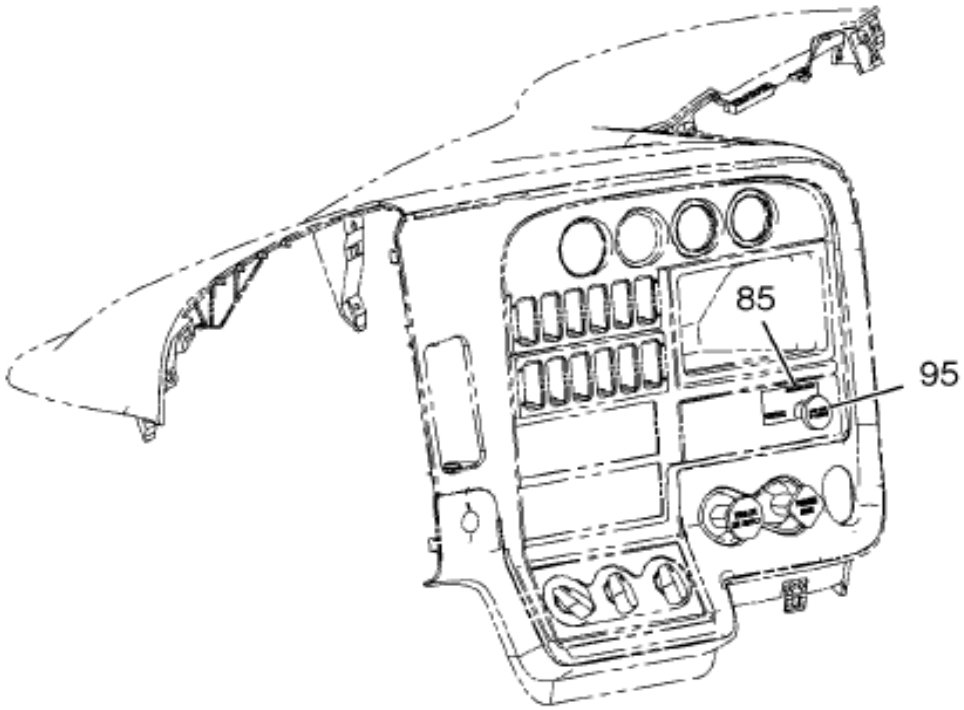

LF51700
W/04596

16-768-0041-01 J10

Grp 16

Figure 4 of 6

COPYRIGHT© 2011INTERNATIONAL TRUCK AND ENGINE CORP.

https://truckmanualshub.com/
Figure 0FDGN
PRODUCT GRAPHIC; NON-LEGISLATIVE

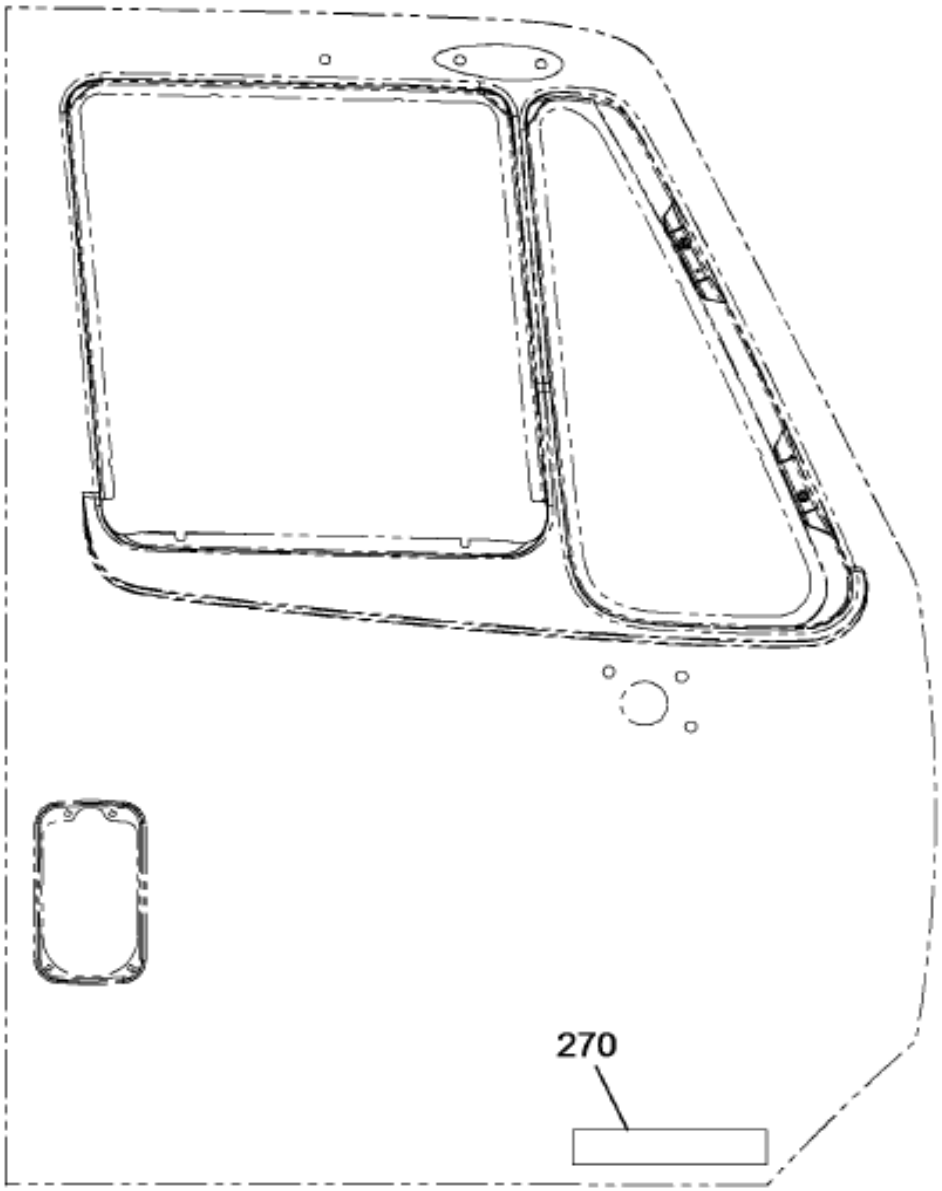

16-768-0045-01 D11

Figure 5 of 6

COPYRIGHT© 2011INTERNATIONAL TRUCK AND ENGINE CORP.

https://truckmanualshub.com/

Figure 01 DGN

PRODUCT GRAPHIC; NON-LEGISLATIVE

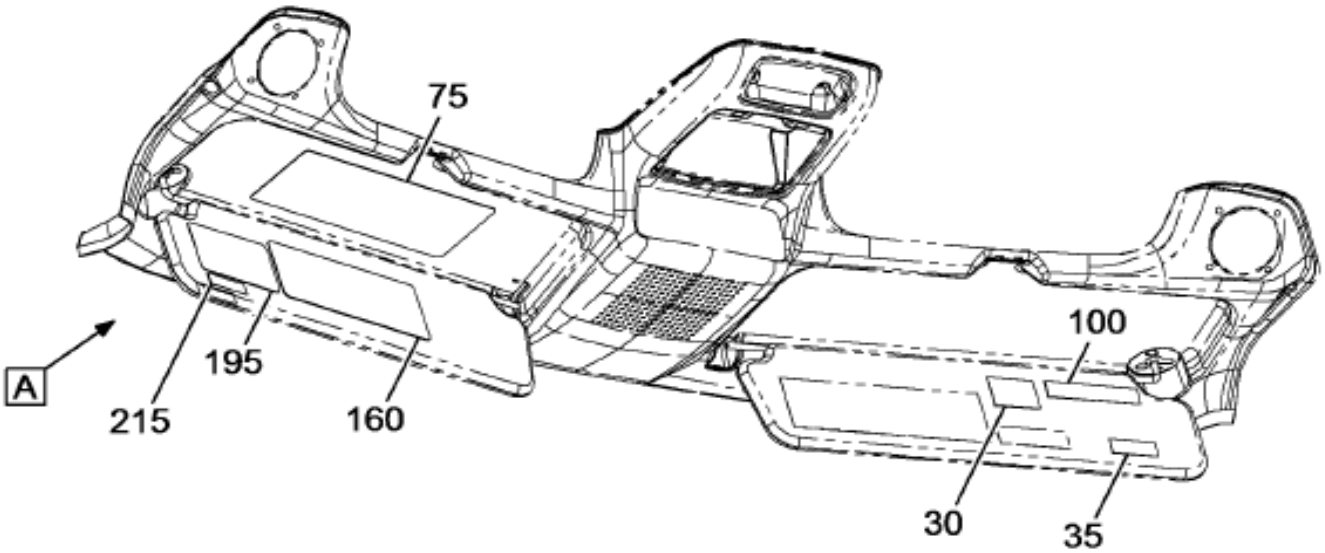

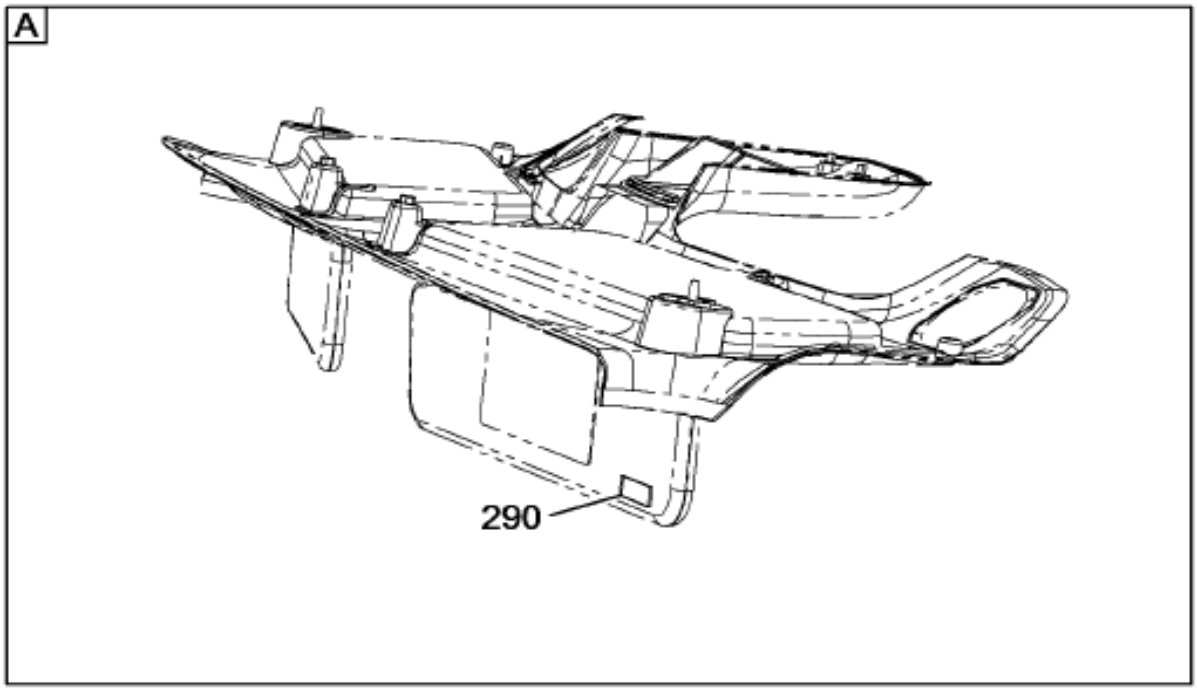

16-768-0047-01 E11

Item	Part No.	Qty	Description	Kit	Var	Figure
5	3586355C3	1	PRODUCT GRAPHIC,VEH ID NO, MAD		0L5BC	
35	3555584C1	1	PRODUCT GRAPHICS INSTRUCTION*S		0G8HB	
50	3557499C1	1	PRODUCT GRAPHICS ESCUTCHEON*TH		0NBYD	
100	3596502C1	1	PRODUCT GRAPHICS SAFETY WARNIN		0L86G	
105	3589859C1	1	LABEL, FIREWALL SECURITY LABEL		0L4VN	
110	3589857C1	1	LABEL, DASH BOARD SECURITY LAB		0L4VN	

Grp 16

COPYRIGHT© 2011INTERNATIONAL TRUCK AND ENGINE CORP.

https://truckmanualshub.com/

Figure 0FDGN

PRODUCT GRAPHIC; NON-LEGISLATIVE

Item	Part No.	Qty	Description	Kit	Var	Figure
115	3589836C1	1	LABEL, FLOOR SECURITY LABEL		0L4VN	
120	3589824C1	1	LABEL, ROOF SECURITY LABEL		0L4VN	

COPYRIGHT© 2011INTERNATIONAL TRUCK AND ENGINE CORP.

https://truckmanualshub.com/

Figure 0FPSH
REAR WINDOW INSTL

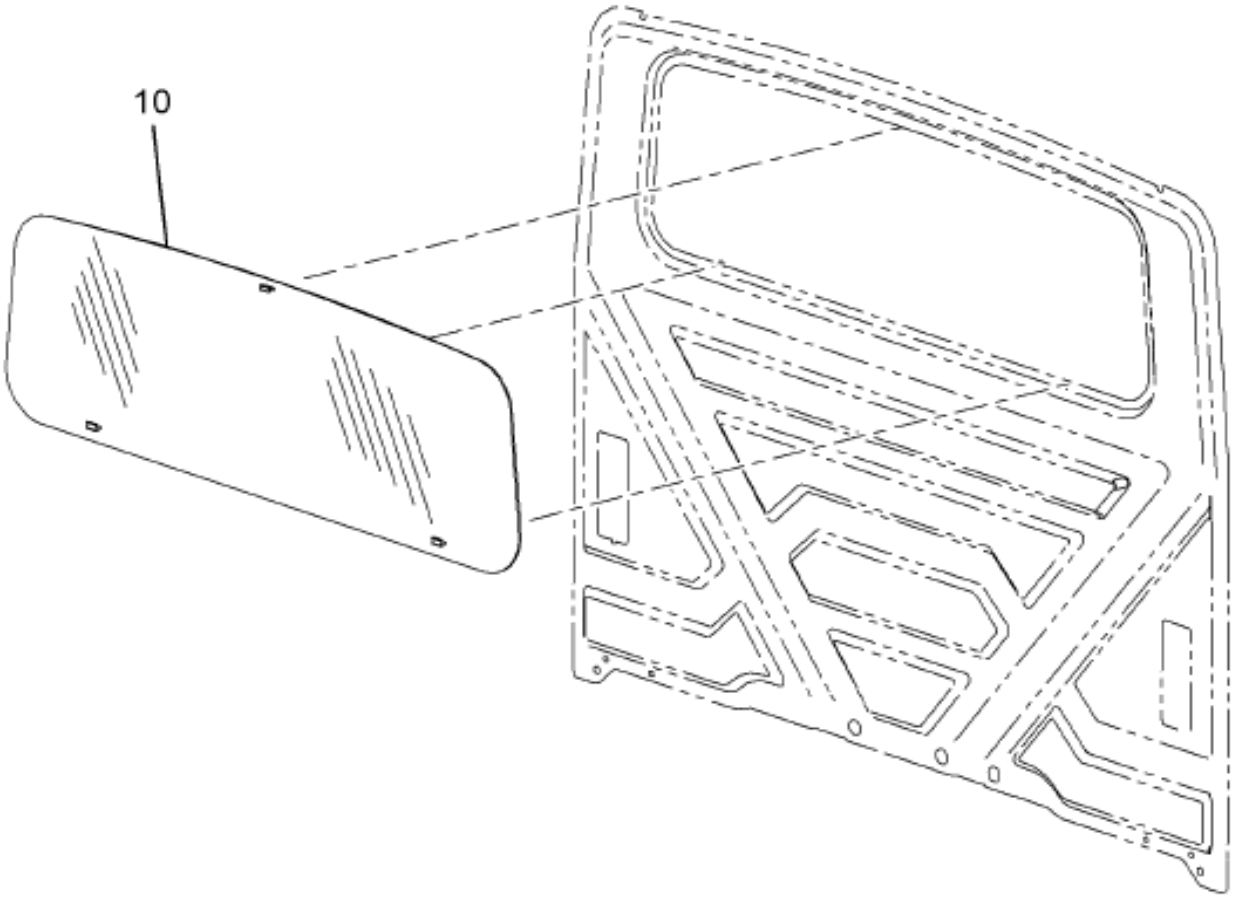

16-363-0005-00 L04

Grp 16

Item	Part No.	Qty	Description	Kit	Var	Figure
10	3554253C2	1	GLASS,WNDW RR UNPRIMED W/TABS		0FPSK	
8005		REF	SEALANT,CLEAR GLASS PRMR 1 LTR		0FPSK	
8005	3537991R1	1	SEALANT,BLACK GLASS PRMR 1 LTR		0FPSK	
8005	3566773R1	1	SEALANT,ADHESIVE URETHANE,1PA		0FPSK	

COPYRIGHT© 2011INTERNATIONAL TRUCK AND ENGINE CORP.

https://truckmanualshub.com/

Figure 06NRT

SCUFF PLATE INSTL; LT/RT

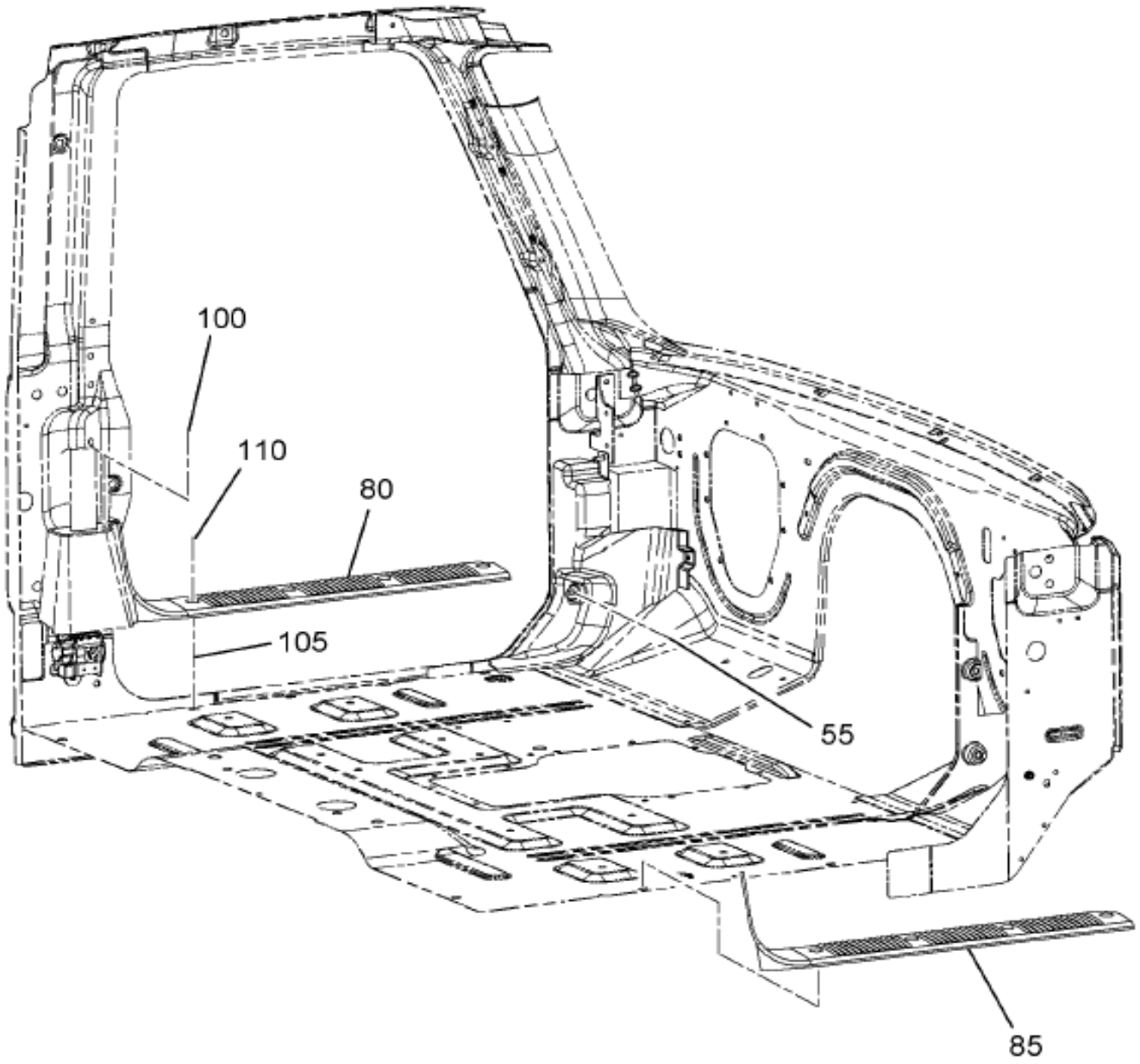

16-427-0007-C0 B10

Item	Part No.	Qty	Description	Kit	Var	Figure
80	3544789C4	1	PLATE,SCUFF LH BLACK		06NLY	
85	3544790C4	1	PLATE,SCUFF RH BLACK		06NLY	
100	3584262C1	2	FASTENER,TRIM XMAS TREE 6.45 X		06NLY	
105	3548695C1	8	FASTENER,TRIM NYLON GROMMET		06NLY	
110	3552454C1	8	SCREW,TAPPING M4.2 X 1.41-35MM		06NLY	

COPYRIGHT© 2011INTERNATIONAL TRUCK AND ENGINE CORP.

https://truckmanualshub.com/

Figure 0M56Q
SERVICE CAB ASM

CAB ASSEMBLY MATRIX

CAB MODEL	CAB STYLE	ENGINE	SERVICE SHELL CAB	SERVICE TRIMMED CAB	PRODUCTION CAB ASSY	UNDERBODY ASSEMBLY
7600,8500	BS2	BB	CAB028TCA	CAB517PTCA	3602962C94	3547272C98
42/43/4400 - 73/74/7500	CS1	V8 + I6	CAB027	CAB513/CAB513P	3602961C94	3547271C98
7600	CS3	BB	CAB028TR	CAB516/CAB516P	3602964C94	3547272C98
4400,7400,7500, 8500	CS5	V8 + I6	CAB027TC	CAB517/CAB517P	3602966C94	3547271C98
76,008,600	CS6	BB	CAB028	CAB519/CAB519P	3602967C94	3547272C98
42/43/4400 - 73/74/7500	CS7	V8 + I6	CAB027TRA	CAB513TRA/CAB513PTRA	3602968C94	3547271C98
7600	CS8	BB	CAB028TRA	CAB516TRA/CAB516PTRA	3602969C94	3547272C98
8500	CS9	V8 + I6	CAB030	CAB522/CAB522P	3604145C94	3547271C98
8600	CS10	BB	CAB031	CAB523/CAB523P	3604146C94	3547272C98
8500	CS11	V8 + I6	CAB032	CAB524/CAB524P	3604147C94	3547271C98
8600	CS12	BB	CAB033	CAB525/CAB525P	3604148C94	3547272C98
42/43/4400 - 73/74/7500	CE1	V8 + I6	CAB025	CAB514/CAB514P	3602971C94	3543973C98
7600	CE3	BB	CAB029TR	CAB520/CAB520P	3602972C94	3543976C97
76,008,600	CE4	BB	CAB029	CAB521/CAB521P	3602973C94	3543976C97
8500	CE5	V8 + I6	CAB025TC	CAB514TC/CAB514PTC	3602976C94	3543973C98
42/43/4400 - 73/74/7500	CT1	V8 + I6	CAB026	CAB515/CAB515P	3602975C95	3543974C98

LEGEND

BS1 LIGHT WEIGHT HIGHWAY TRACTOR - AERO - LHD - I6 ENGINE
BS2 LIGHT WEIGHT HIGHWAY TRACTOR - AERO - LHD - BIG BORE ENGINE
CS1 SEVERE SERVICE - TRUCK - LHD - V8 OR I6 ENGINE
CS3 SEVERE SERVICE - TRUCK - LHD - BIG BORE ENGINE
CS5 SEVERE SERVICE - TRACTOR - LHD - V8 OR I6 W/AERO SIDE ASSYS
CS6 SEVERE SERVICE - TRACTOR - LHD - BIG BORE W/AERO SIDE ASSYS
CS7 SEVERE SERVICE - TRUCK - LHD - V8 OR I6 W/AERO SIDE ASSYS
CS8 SEVERE SERVICE - TRUCK- LHD-BIG BORE W/AERO SIDE ASSYS
CS9 REGIONAL HAUL - TRACTOR - LHD - V8 OR I6 - W/ ROOF BRACKETS
CS10 REGIONAL HAUL - TRACTOR - LHD - BIG BORE - W/ ROOF BRACKETS
CS11 REGIONAL HAUL - TRACTOR - LHD - V8 OR I8 - STD ROOF
CS12 REGIONAL HAUL - TRACTOR - LHD - BIG BORE - STD ROOF
CE1 EXTENDED CAB - TRUCK - LHD- V8 OR I6 ENGINE
CE3 EXTENDED CAB - TRUCK - LHD - BIG BORE ENGINE
CE4 EXTENDED CAB - TRUCK - LHD - BIG BORE ENGINE W/ TRACTOR BACK PANEL
CE5 EXTENDED CAB - TRUCK - LHD - V8 OR I6 ENGINE W/ TRACTOR BACK PANEL
CT1 TRAVELCREW CAB - TRUCK - LHD - V8 OR I6 ENGINE
BB BIG BORE
TC TRACTOR AIR BRAKES
TCA TRACTOR AIR BRAKES AND AERO EFFECTS
TR TRUCK AIR OR HYDRAULIC BRAKES
TRA TRUCK AIR OR HYDRAULIC BRAKES AND AERO EFFECTS
P PREMIUM TRIM LEVEL

10-V97-0001-01 K06

Grp 16

Item	Part No.	Qty	Description	Kit	Var	Figure
8005	CAB028TR	AR	CAB,SHELL STD BB ENG LHD		0M571	

COPYRIGHT© 2011INTERNATIONAL TRUCK AND ENGINE CORP.

https://truckmanualshub.com/

Figure 0M3VP

SERVICE CAB ASM; DRIVER CONTROL MODULE

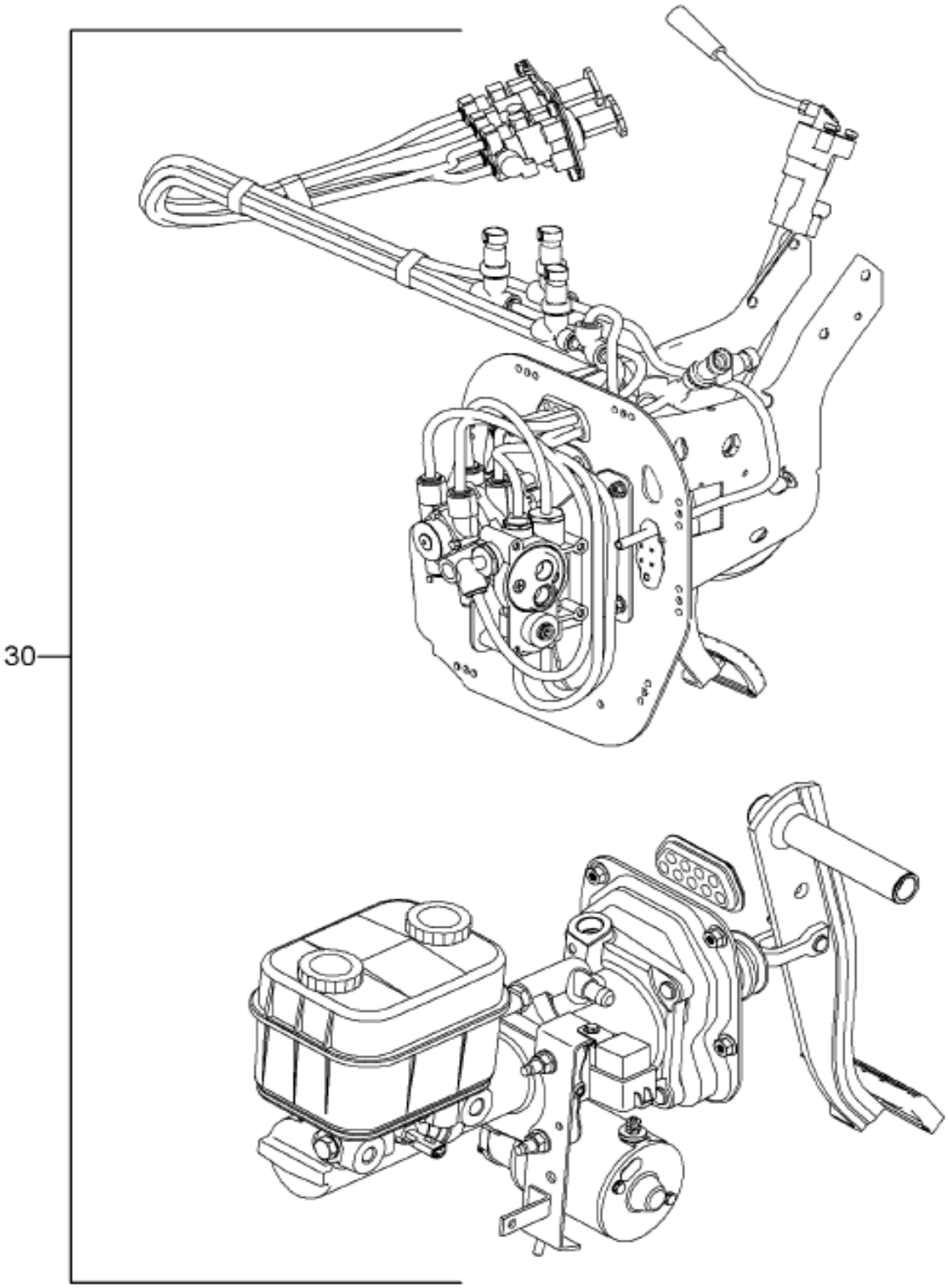

16-V94-0011-01 A08

Item	Part No.	Qty	Description	Kit	Var	Figure
30	2505765C93	AR	BRAKE-SVC DCM W/TRK BRK,MAN		0M3VP	

COPYRIGHT© 2011INTERNATIONAL TRUCK AND ENGINE CORP.

https://truckmanualshub.com/

Figure 0M3W4

SERVICE CAB ASM; INSTRUMENT PANEL

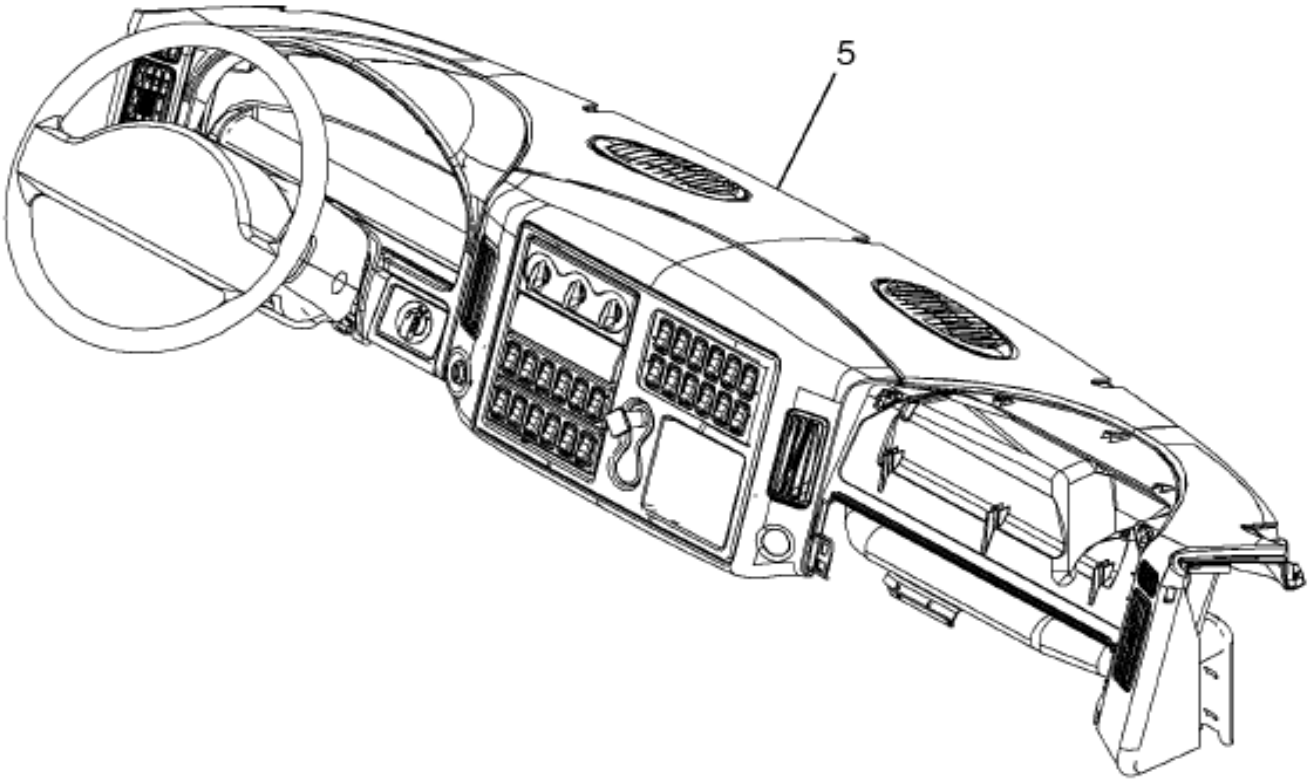

16-399-0007-01 F08

Item	Part No.	Qty	Description	Kit	Var	Figure
5	2506263C91	AR	PANEL,INST-SVC ASM-PER LINESET		0M3W8	

COPYRIGHT© 2011INTERNATIONAL TRUCK AND ENGINE CORP.

https://truckmanualshub.com/

Figure 0M583

SERVICE CAB ASM; MATRIX

CAB ASSEMBLY MATRIX

CAB MODEL	CAB STYLE	ENGINE	SERVICE SHELL CAB	SERVICE TRIMMED CAB	PRODUCTION CAB ASSY	UNDERBODY ASSEMBLY
7600,8500	BS2	BB	CAB028TCA	CAB517PTCA	3602962C94	3547272C98
42/43/4400 - 73/74/7500	CS1	V8 + I6	CAB027	CAB513/CAB513P	3602961C94	3547271C98
7600	CS3	BB	CAB028TR	CAB516/CAB516P	3602964C94	3547272C98
4400,7400,7500, 8500	CS5	V8 + I6	CAB027TC	CAB517/CAB517P	3602966C94	3547271C98
76,008,600	CS6	BB	CAB028	CAB519/CAB519P	3602967C94	3547272C98
42/43/4400 - 73/74/7500	CS7	V8 + I6	CAB027TRA	CAB513TRA/CAB513PTRA	3602968C94	3547271C98
7600	CS8	BB	CAB028TRA	CAB516TRA/CAB516PTRA	3602969C94	3547272C98
8500	CS9	V8 + I6	CAB030	CAB522/CAB522P	3604145C94	3547271C98
8600	CS10	BB	CAB031	CAB523/CAB523P	3604146C94	3547272C98
8500	CS11	V8 + I6	CAB032	CAB524/CAB524P	3604147C94	3547271C98
8600	CS12	BB	CAB033	CAB525/CAB525P	3604148C94	3547272C98
42/43/4400 - 73/74/7500	CE1	V8 + I6	CAB025	CAB514/CAB514P	3602971C94	3543973C98
7600	CE3	BB	CAB029TR	CAB520/CAB520P	3602972C94	3543976C97
76,008,600	CE4	BB	CAB029	CAB521/CAB521P	3602973C94	3543976C97
8500	CE5	V8 + I6	CAB025TC	CAB514TC/CAB514PTC	3602976C94	3543973C98
42/43/4400 - 73/74/7500	CT1	V8 + I6	CAB026	CAB515/CAB515P	3602975C95	3543974C98

LEGEND

BS1 LIGHT WEIGHT HIGHWAY TRACTOR - AERO - LHD - I6 ENGINE
BS2 LIGHT WEIGHT HIGHWAY TRACTOR - AERO - LHD - BIG BORE ENGINE
CS1 SEVERE SERVICE - TRUCK - LHD - V8 OR I6 ENGINE
CS3 SEVERE SERVICE - TRUCK - LHD - BIG BORE ENGINE
CS5 SEVERE SERVICE - TRACTOR - LHD - V8 OR I6 W/AERO SIDE ASSYS
CS6 SEVERE SERVICE - TRACTOR - LHD - BIG BORE W/AERO SIDE ASSYS
CS7 SEVERE SERVICE - TRUCK - LHD - V8 OR I6 W/AERO SIDE ASSYS
CS8 SEVERE SERVICE - TRUCK- LHD-BIG BORE W/AERO SIDE ASSYS
CS9 REGIONAL HAUL - TRACTOR - LHD - V8 OR I6 - W/ ROOF BRACKETS
CS10 REGIONAL HAUL - TRACTOR - LHD - BIG BORE - W/ ROOF BRACKETS
CS11 REGIONAL HAUL - TRACTOR - LHD - V8 OR I8 - STD ROOF
CS12 REGIONAL HAUL - TRACTOR - LHD - BIG BORE - STD ROOF
CE1 EXTENDED CAB - TRUCK - LHD- V8 OR I6 ENGINE
CE3 EXTENDED CAB - TRUCK - LHD - BIG BORE ENGINE
CE4 EXTENDED CAB - TRUCK - LHD - BIG BORE ENGINE W/ TRACTOR BACK PANEL
CE5 EXTENDED CAB - TRUCK - LHD - V8 OR I6 ENGINE W/ TRACTOR BACK PANEL
CT1 TRAVELCREW CAB - TRUCK - LHD - V8 OR I6 ENGINE
BB BIG BORE
TC TRACTOR AIR BRAKES
TCA TRACTOR AIR BRAKES AND AERO EFFECTS
TR TRUCK AIR OR HYDRAULIC BRAKES
TRA TRUCK AIR OR HYDRAULIC BRAKES AND AERO EFFECTS
P PREMIUM TRIM LEVEL

10-V97-0001-01 K06

Item	Part No.	Qty	Description	Kit	Var	Figure
8005	CAB516	AR	CAB,STD TRMD BB TRUCK AIR BRKS		0M58X	

COPYRIGHT© 2011INTERNATIONAL TRUCK AND ENGINE CORP.

https://truckmanualshub.com/

Figure 0HKTX

STEPS; AIR TANKS MODULE

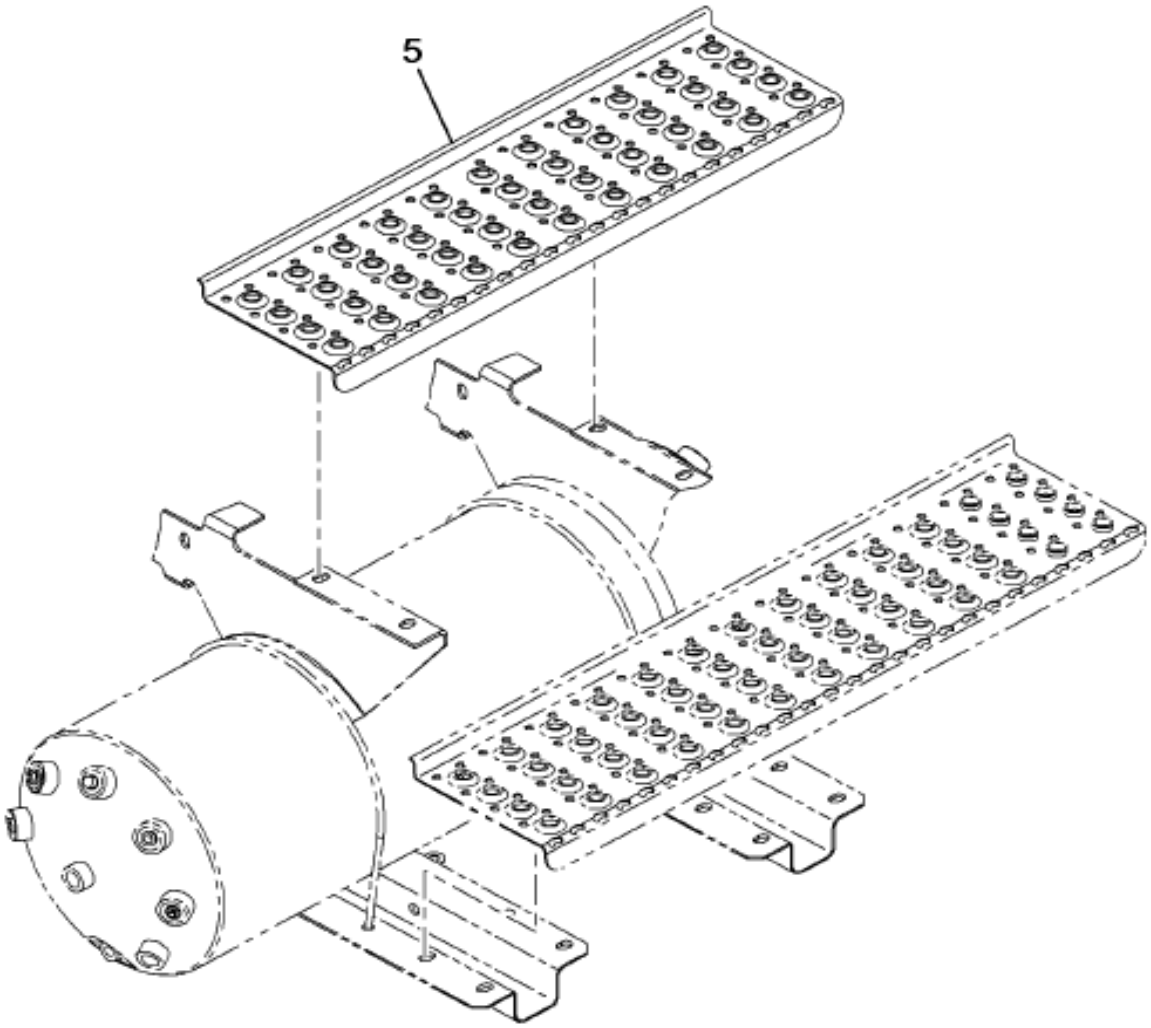

08-L54-0006-01 G09

Grp 16

Item	Part No.	Qty	Description	Kit	Var	Figure
5	3576210F92	1	BRAKE*AIR TANK STEPS		0HL1R	3576210F92

COPYRIGHT© 2011INTERNATIONAL TRUCK AND ENGINE CORP.

https://truckmanualshub.com/

Figure 3370210F92
BRAKE*AIR TANK STEPS

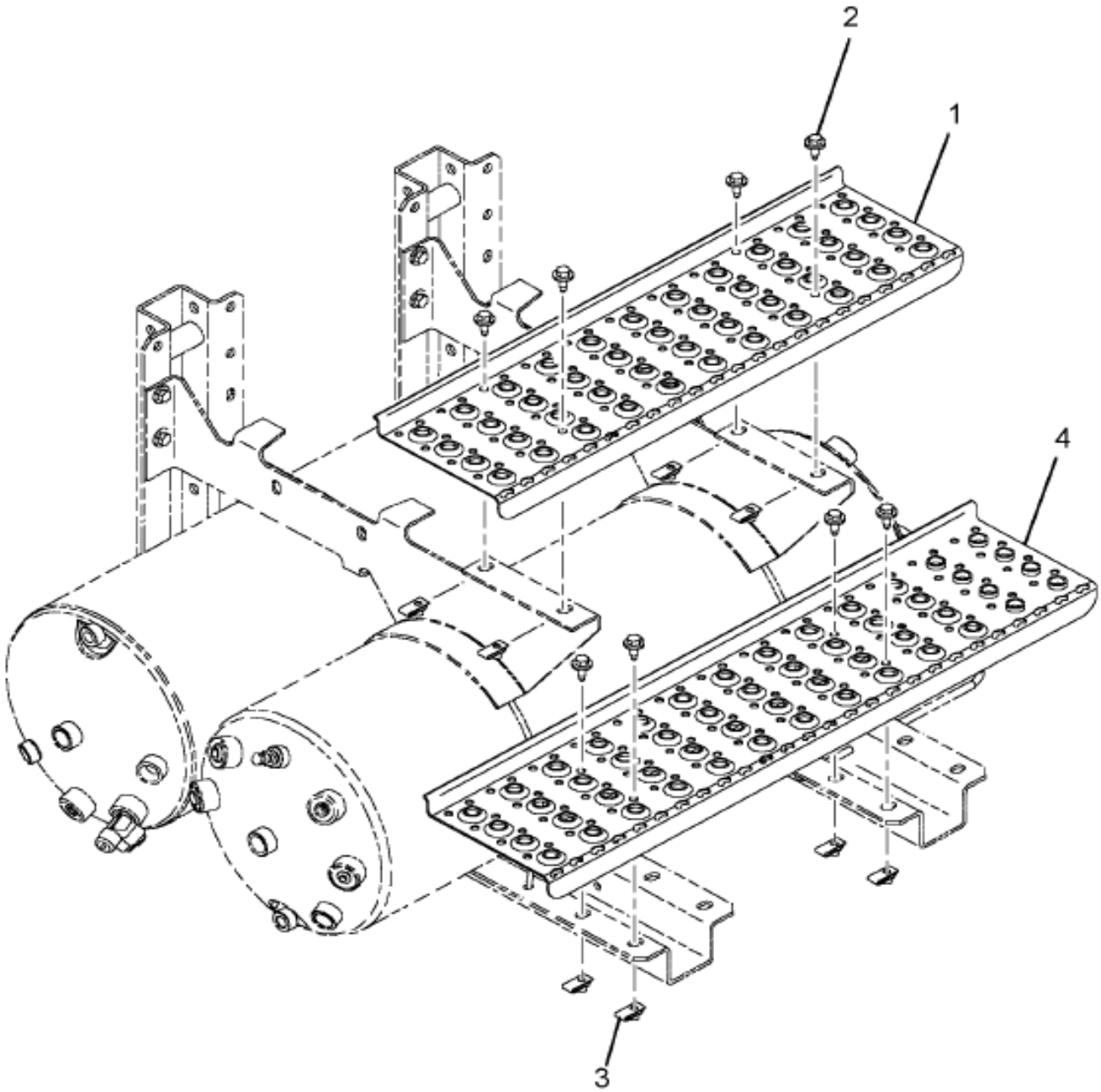

08-L54-0003-00 E04

Item	Part No.	Qty	Description	Kit	Var	Figure
1	3536370C2	1	STEP,FUEL TANK*704 MM UPR			
2	3541322C1	8	BOLT,SPECIAL*M8 X 1.25 - 25 MM			
3	3541323C1	8	NUT,SPECIAL*M8 X 1.25 U-NUT (L			
4	3578201C1	1	STEP,FUEL TANK*832MM X 150MM			
880		RF	NOTE: ASM BELOW COMPRISED OF ABOVE COMPONENTS			

COPYRIGHT© 2011INTERNATIONAL TRUCK AND ENGINE CORP.

https://truckmanualshub.com/

Figure 3576210F92

BRAKE*AIR TANK STEPS

Item	Part No.	Qty	Description	Kit	Var	Figure
881	3576210F92	RF	BRAKE*AIR TANK STEPS			

COPYRIGHT© 2011INTERNATIONAL TRUCK AND ENGINE CORP.

https://truckmanualshub.com/

Figure 0WTN6

SUNSHADE INSTL; PAINTED, MOUNTING FOR NGV, LINE HAUL

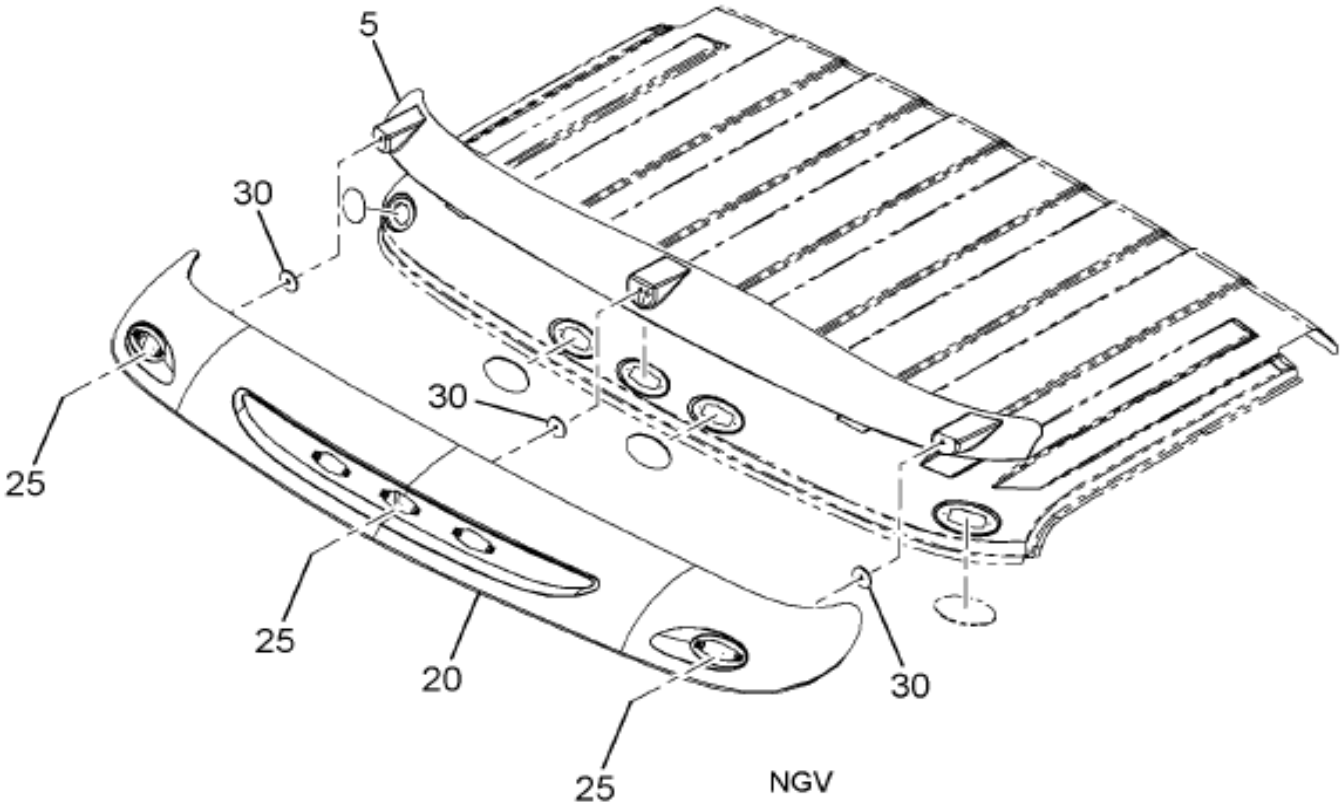

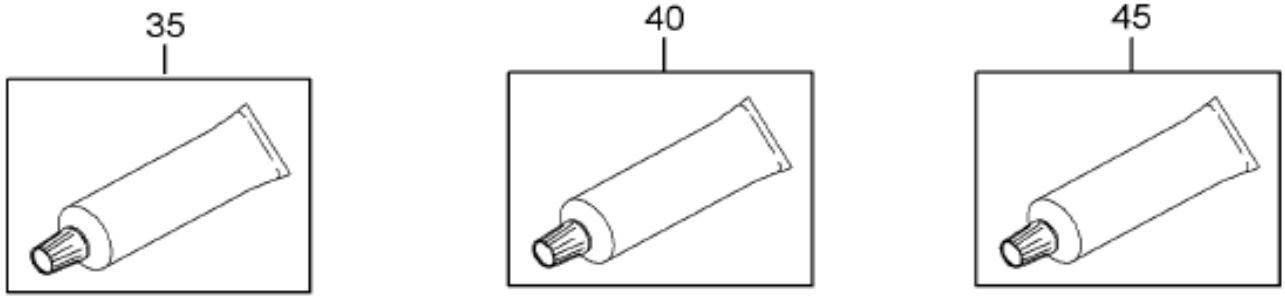

16-510-0040-01 G10

Item	Part No.	Qty	Description	Kit	Var	Figure
5		REF	SUPPORT, ASSY, SUNSHADE		0WTP3	
5	3596417C93	1	SUPPORT, ASSY, SUNSHADE		0WTP3	3596417C93
20	3561065C2	1	SUNSHADE,ASM		0WTN6	
25	3530018C1	3	BOLT SEMS ALL M10 X 1.50 35 MM		0WTN6	
30	3523427C2	3	SEAL,SUNSHADE MTG SEAL GASKET		0WTN6	
35	2644083R1	2	SEALANT,RESIN		0WTP3	

COPYRIGHT© 2011INTERNATIONAL TRUCK AND ENGINE CORP.

https://truckmanualshub.com/

Figure 0W1N6 SUNSHADE INSTL; PAINTED, MOUNTING FOR NGV, LINE HAUL

Item	Part No.	Qty	Description	Kit	Var	Figure
40	2644115R1	1	SEALANT,STRUCTURAL ADHSV ACTVT		0WTP3	

COPYRIGHT© 2011INTERNATIONAL TRUCK AND ENGINE CORP.

https://truckmanualshub.com/

Figure 3534772C94
SUPPORT, ASSY, SUNSHADE

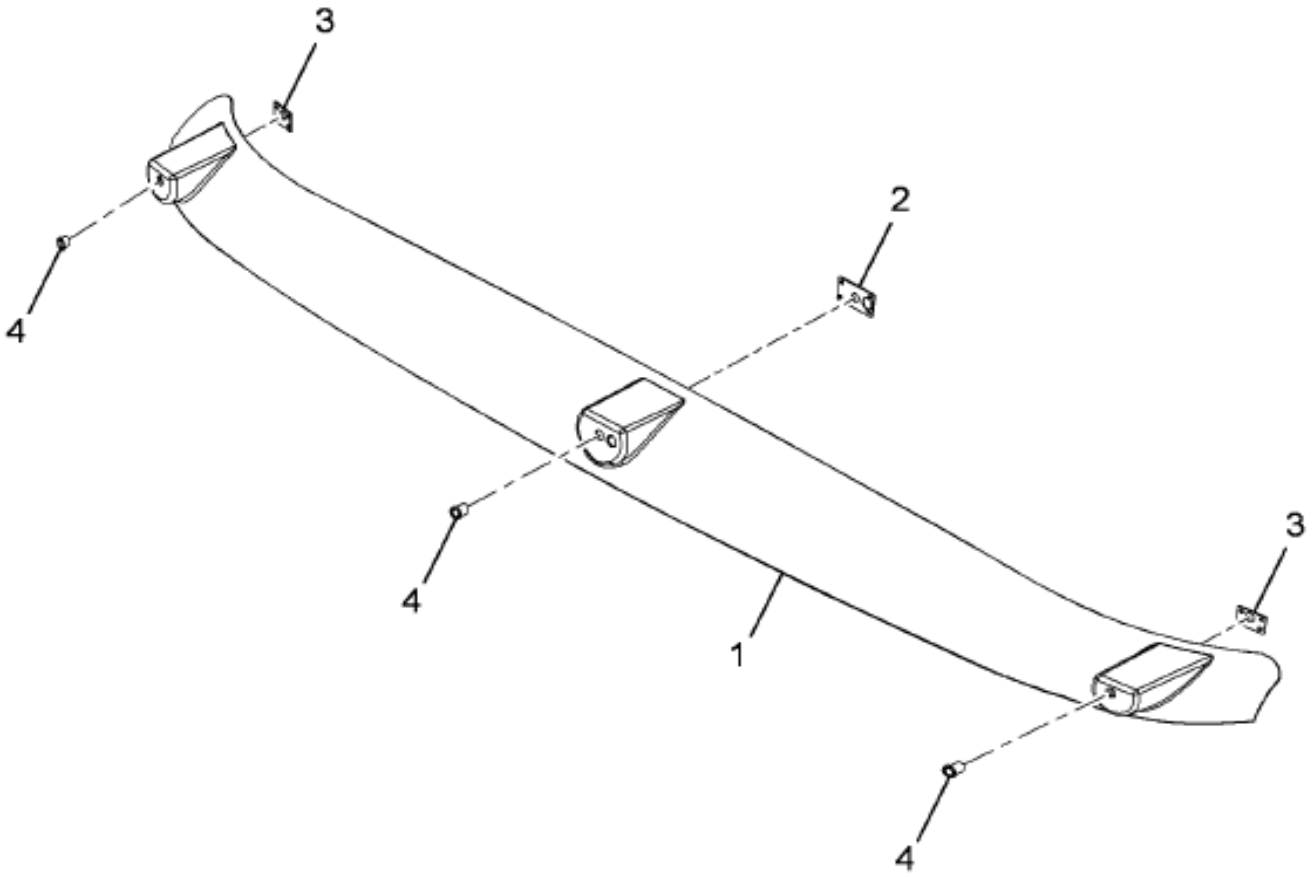

16-510-0034-01 A10

Item	Part No.	Qty	Description	Kit	Var	Figure
1	3553762C4	1	SUPPORT, SUNSHADE			
2	3571459C1	1	PLATE,TAPPING SUNSHADE			
3	3571461C1	2	PLATE,TAPPING SUNSHADE MTG			
4	3571602C1	3	NUT,RIV*M10X1.5 GRIP RANGE 3.			
880		RF	NOTE: ASM BELOW COMPRISED OF ABOVE COMPONENTS			

COPYRIGHT© 2011INTERNATIONAL TRUCK AND ENGINE CORP.

https://truckmanualshub.com/

Figure 3554772C94

SUPPORT, ASSY, SUNSHADE

Item	Part No.	Qty	Description	Kit	Var	Figure
881	3554772C94	RF	SUPPORT, ASSY, SUNSHADE			

COPYRIGHT© 2011INTERNATIONAL TRUCK AND ENGINE CORP.

https://truckmanualshub.com/

Figure 3596417C93
SUPPORT, ASSY, SUNSHADE

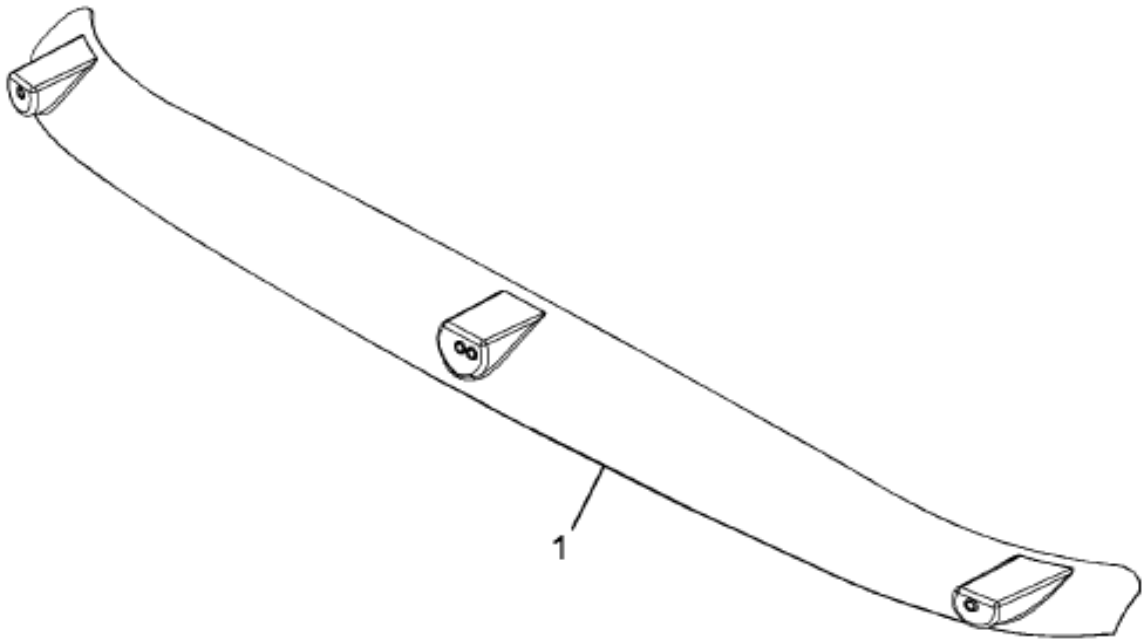

16-510-0039-01 F10

Item	Part No.	Qty	Description	Kit	Var	Figure
1	3554772C94	1	SUPPORT, ASSY, SUNSHADE			3554772C94
880		RF	NOTE: ASM BELOW COMPRISED OF ABOVE COMPONENTS			
881	3596417C93	RF	SUPPORT, ASSY, SUNSHADE			

COPYRIGHT© 2011INTERNATIONAL TRUCK AND ENGINE CORP.

https://truckmanualshub.com/

Figure 0J4WM

SWITCH INSTL, DOOR; DOME LGHT, MAGNETIC, STD/EXTD/CREW CAB

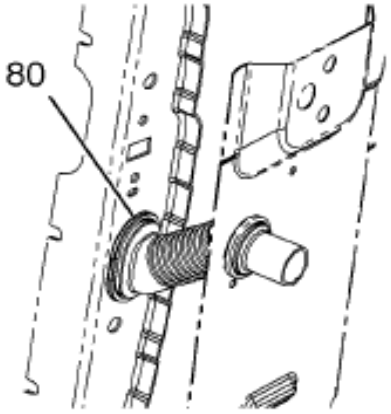

FOR M-NGV-SS
W/ROOF AUX LOAD

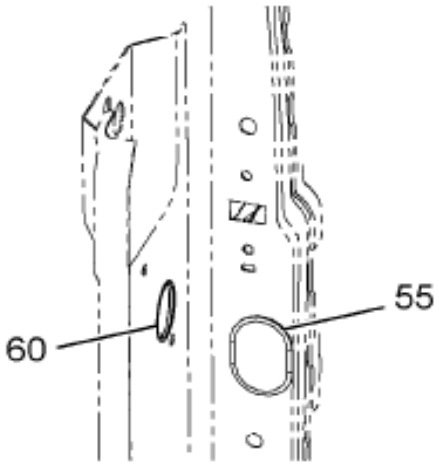

M-NGV-MD, SS,
RH W/FRONT DOORS
N/POWER MIRRORS,
CB PKG, OR DOOR PODS
OR W/CREW DOORS
N/DOOR PODS

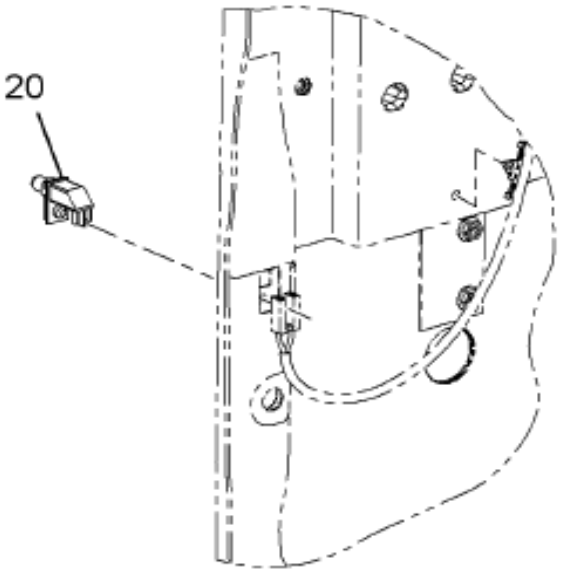

M-NGV-MD,
SS RH

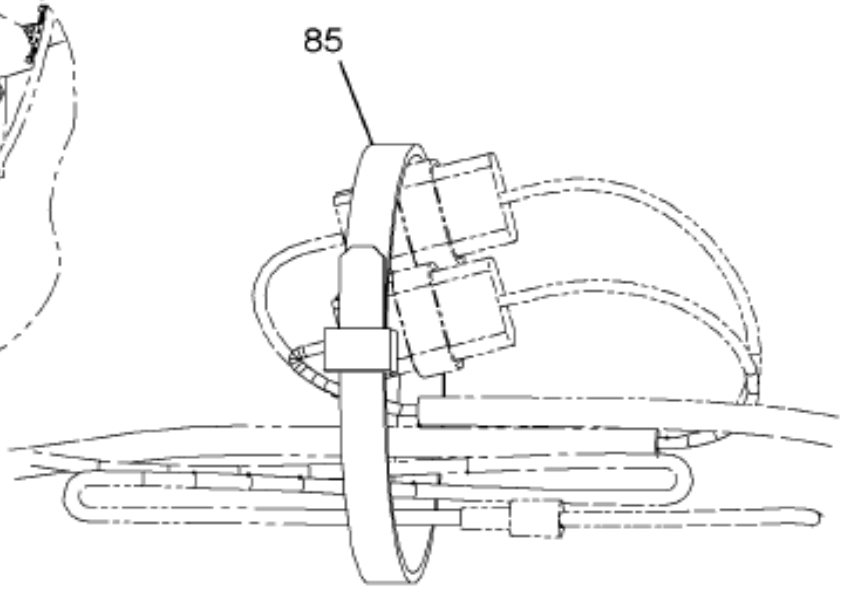

M-NGV-MD, SS,
RH W/POWER MIRRORS. CB PKG, OR DOOR PODS

08-V73-0002-01 H04

Grp 16

Item	Part No.	Qty	Description	Kit	Var	Figure
20	3579984C1	2	SWITCH,DOR CNTRL DOME/CRTSY LT		0J4WN	3579984C1
20	3580447C1	2	SCREW,TAPPING #6-20 X 1/2" PH		0J4WN	
80	3675961C1	2	GROMMET,*DOOR TO CAB		0J4WV	
85	289862C1	1	STRAP,CABLE LOCK		0J4WV	

COPYRIGHT© 2011INTERNATIONAL TRUCK AND ENGINE CORP.

https://truckmanualshub.com/

Figure 3579984C1
SWITCH,DOR CNTRL DOME/CRTSY LT

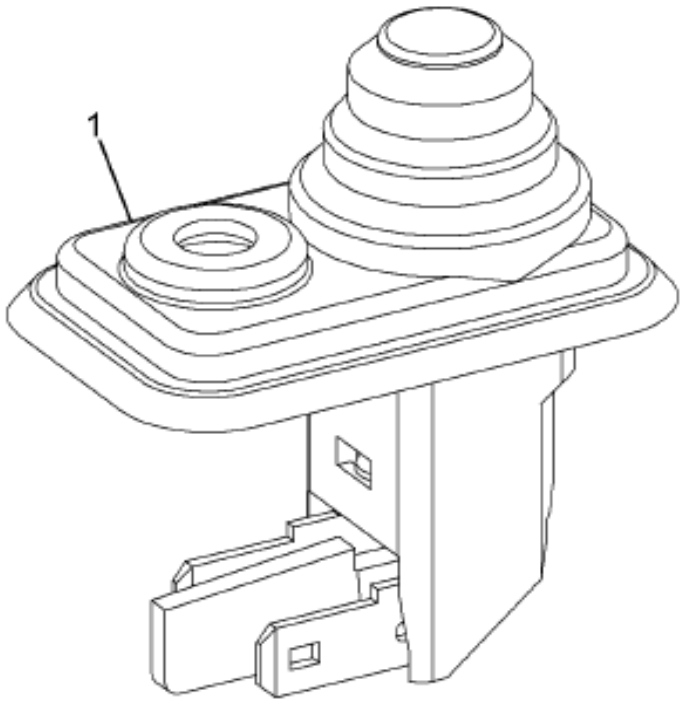

08-V73-0005-01 J07

Item	Part No.	Qty	Description	Kit	Var	Figure
1	2596707C1	1	SEAL,DOOR DOME LIGHT SWITCH			
880		RF	NOTE: ASM BELOW COMPRISED OF ABOVE COMPONENTS			
881	3579984C1	RF	SWITCH,DOR CNTRL DOME/CRTSY LT			

COPYRIGHT© 2011INTERNATIONAL TRUCK AND ENGINE CORP.

https://truckmanualshub.com/

Figure 03WV9

THERMAL INSULATION; INTERIOR TRIM

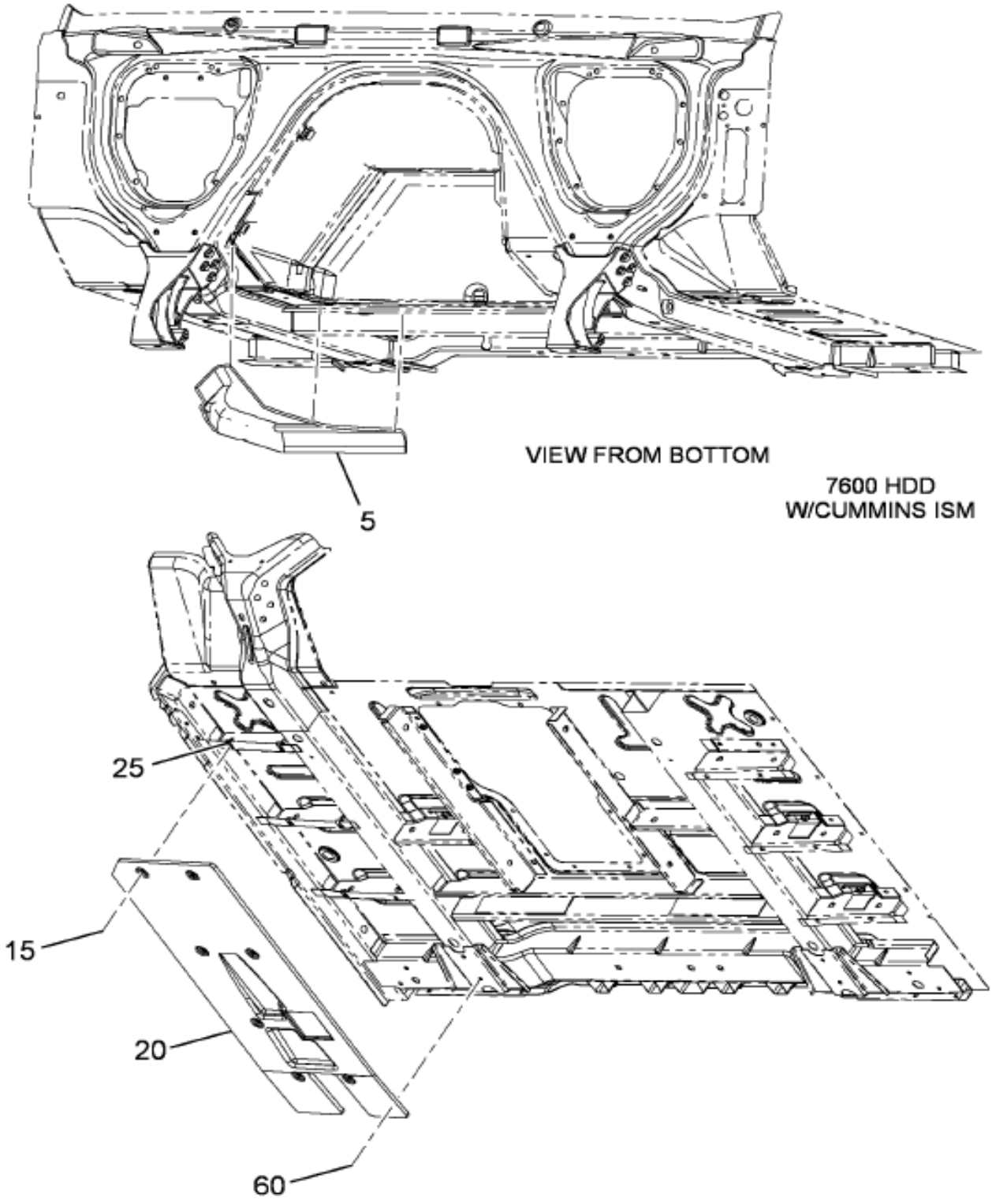

Grp 16

Figure 1 of 3

COPYRIGHT© 2011INTERNATIONAL TRUCK AND ENGINE CORP.

https://truckmanualshub.com/

Figure 03W19

THERMAL INSULATION; INTERIOR TRIM

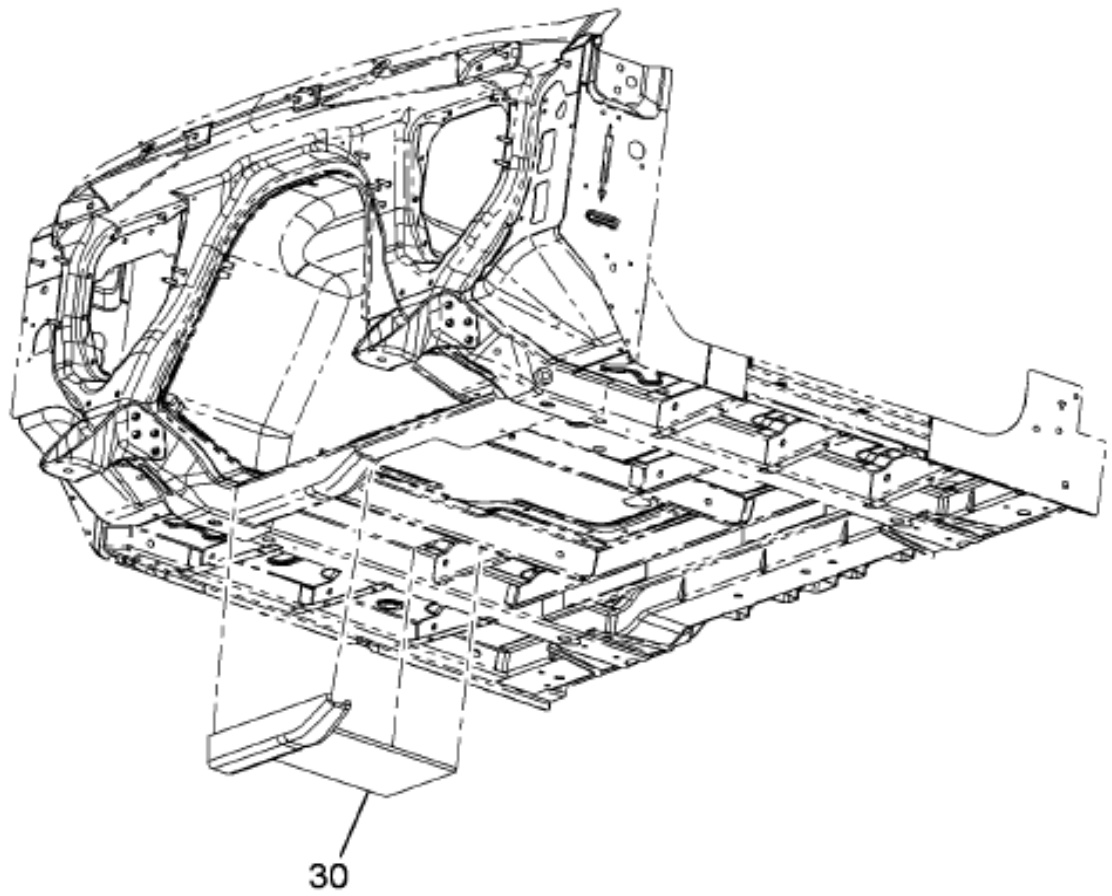

16-963-0002-01 D10

Figure 2 of 3

COPYRIGHT© 2011INTERNATIONAL TRUCK AND ENGINE CORP.

https://truckmanualshub.com/

Figure 0JWV9

THERMAL INSULATION; INTERIOR TRIM

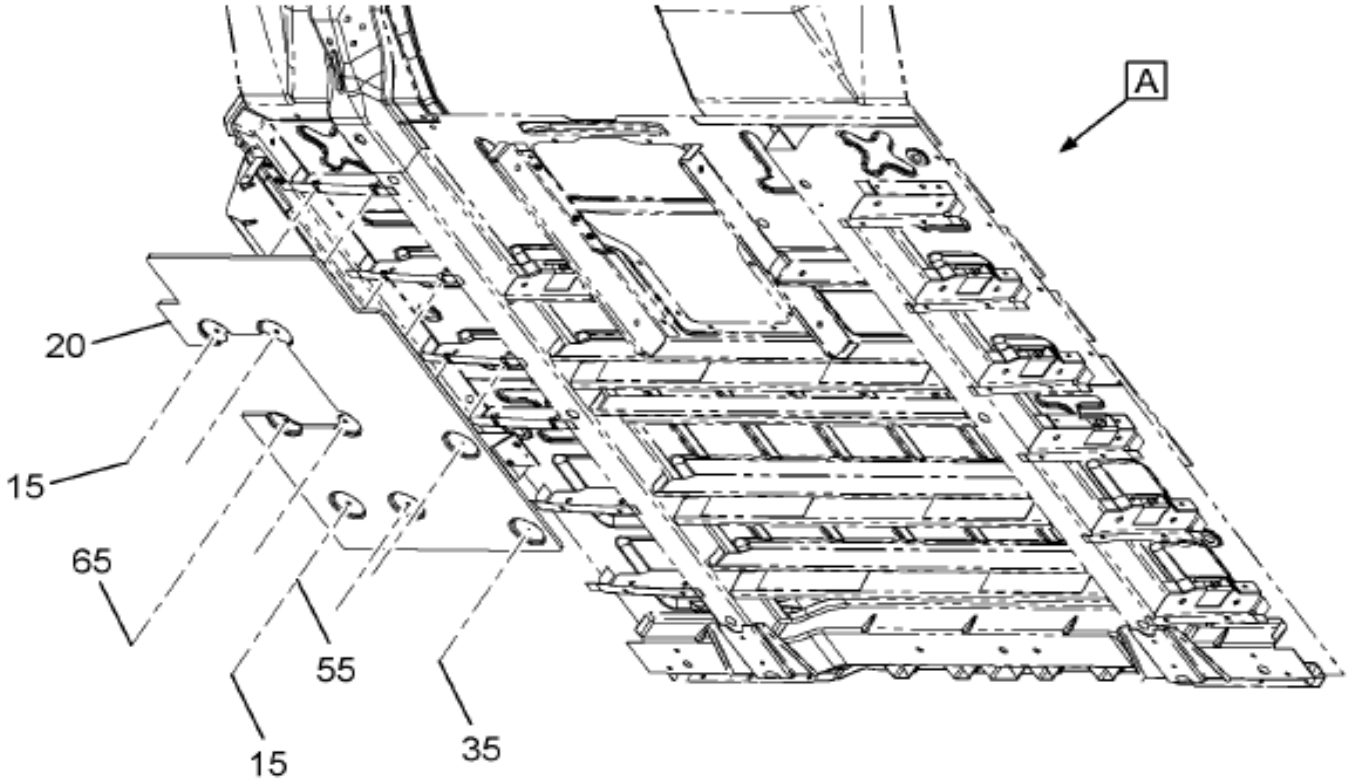

GLOBAL RHD, W/M-NGV-RH-HDD,
NF1AA00

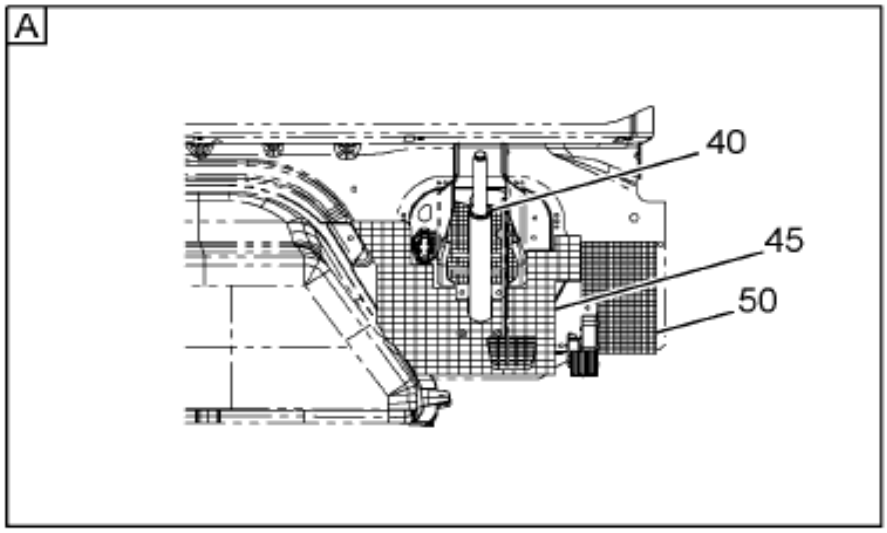

16-963-0003-01 J10

Item	Part No.	Qty	Description	Kit	Var	Figure
5	3586079C1	1	INSULATOR,CAB FLOOR TOE BOARD		0JWVB	
15	3514273C1	2	BOLT SEMS M8 X 1.25-35		0QT1C	
20	3815530C1	1	SHIELD,CAB, CAB, HEAT		0QT1C	
25	3510210C1	6	NUT,SPEED		0QT1C	
35	27384R1	2	SCREW SELF TAPPING 10-16X3/4		0QT1C	
35	250097R1	2	WASHER,SPECIAL		0QT1C	

Grp 16

COPYRIGHT© 2011INTERNATIONAL TRUCK AND ENGINE CORP.

https://truckmanualshub.com/

Figure 0JWV9

THERMAL INSULATION; INTERIOR TRIM

Item	Part No.	Qty	Description	Kit	Var	Figure
40	3813484C2	1	COVER, HEAT INSULATION, INTERI		0QT1C	
45	3813485C2	1	COVER, HEAT INSULATION, INTERI		0QT1C	
55	3566185C1	6	WASHER,SPECIAL LOCK OR FLAT FE		0QT1C	
8005	3586956C1	1	SILICONE,BLACK LOCTITE BLACK S		0JWVB	
8005	3586956C1	1	SILICONE,BLACK LOCTITE BLACK S		0QT1C	

COPYRIGHT© 2011INTERNATIONAL TRUCK AND ENGINE CORP.

https://truckmanualshub.com/

Figure 0G4MZ

TRANSMISSION COVER INSTL

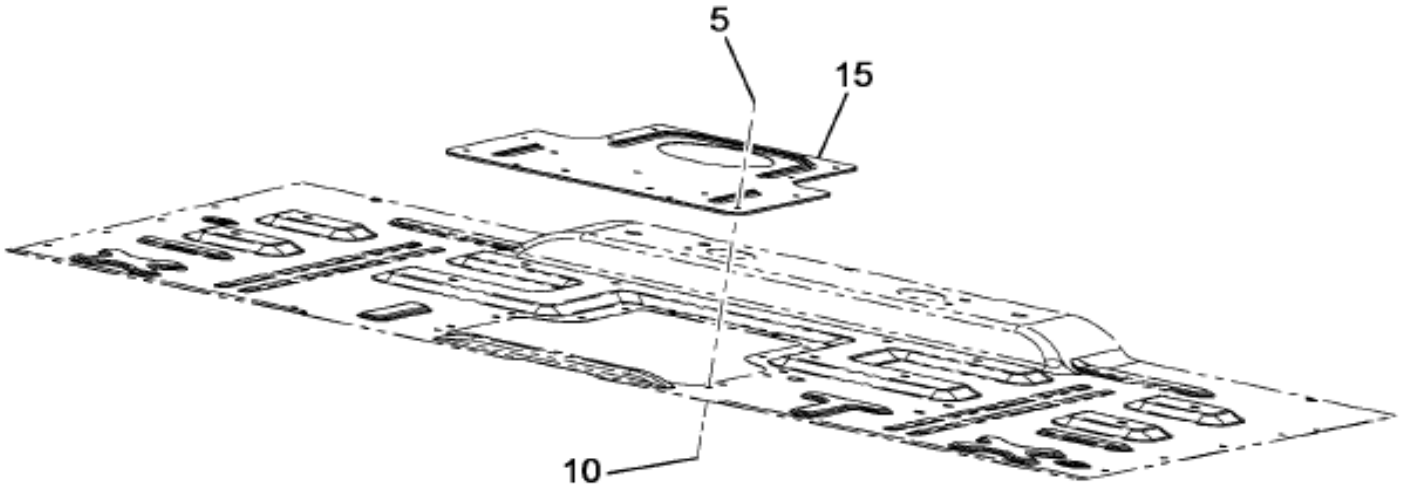

122 BBC

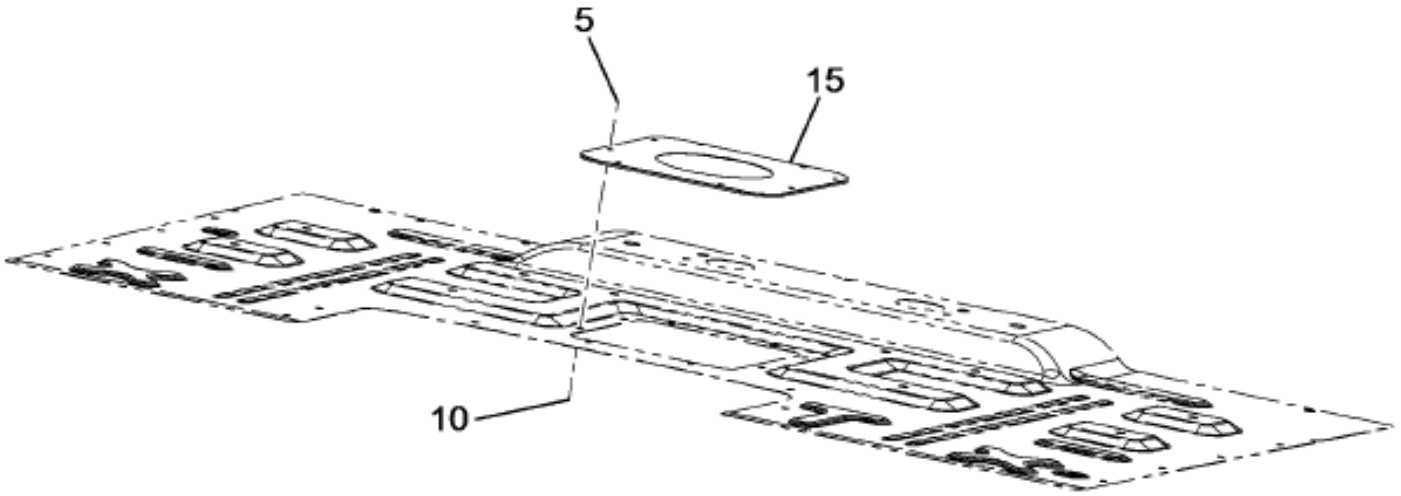

113 BBC

16-V03-0012-01 E09

Item	Part No.	Qty	Description	Kit	Var	Figure
5	3535318C1	8	BOLT SEMS M6X1.0-25 CL9.8		0G4MZ	
10	3510918C1	8	INSERT,THREADED M6 OPEN END		0G4MZ	
15	3566589C92	1	COVER,XMSN OPENING		0G4MZ	

Grp 16

COPYRIGHT© 2011INTERNATIONAL TRUCK AND ENGINE CORP.

https://truckmanualshub.com/

Figure 0FPSJ

WINDSHIELD INSTL; W/REAR SIDE QTR WINDOW

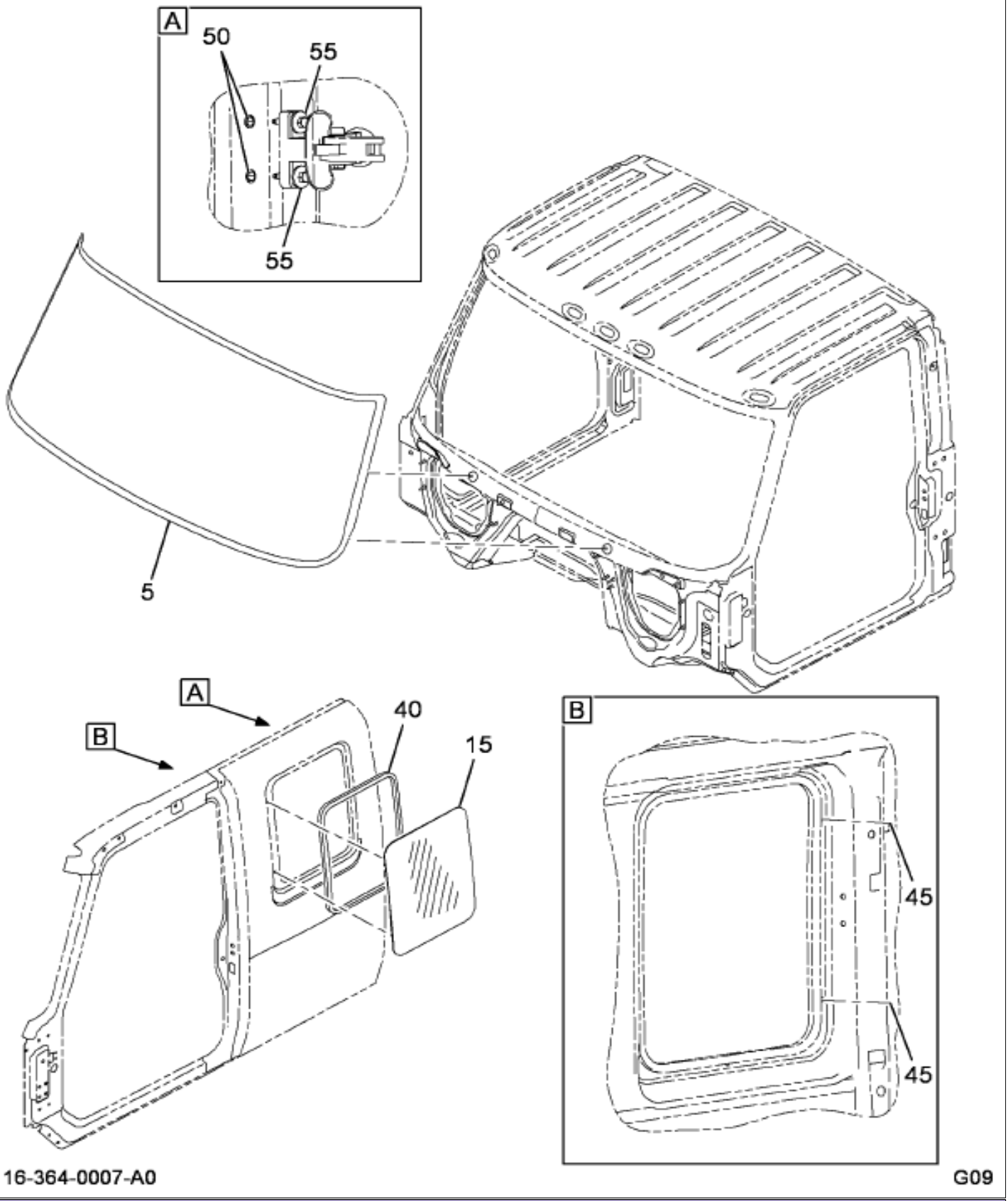

Item	Part No.	Qty	Description	Kit	Var	Figure
5	3554252C4	1	WINDSHIELD,ASM SOLX TINT UNPRI		0FPSJ	
8005		REF	SEALANT,CLEAR GLASS PRMR 1 LTR		0FPSJ	
8005	3537991R1	1	SEALANT,BLACK GLASS PRMR 1 LTR		0FPSJ	
8005	3566773R1	1	SEALANT,ADHESIVE URETHANE,1PA		0FPSJ	

COPYRIGHT© 2011INTERNATIONAL TRUCK AND ENGINE CORP.

https://truckmanualshub.com/

Figure 001J1

WINDSHIELD WASHER INSTL

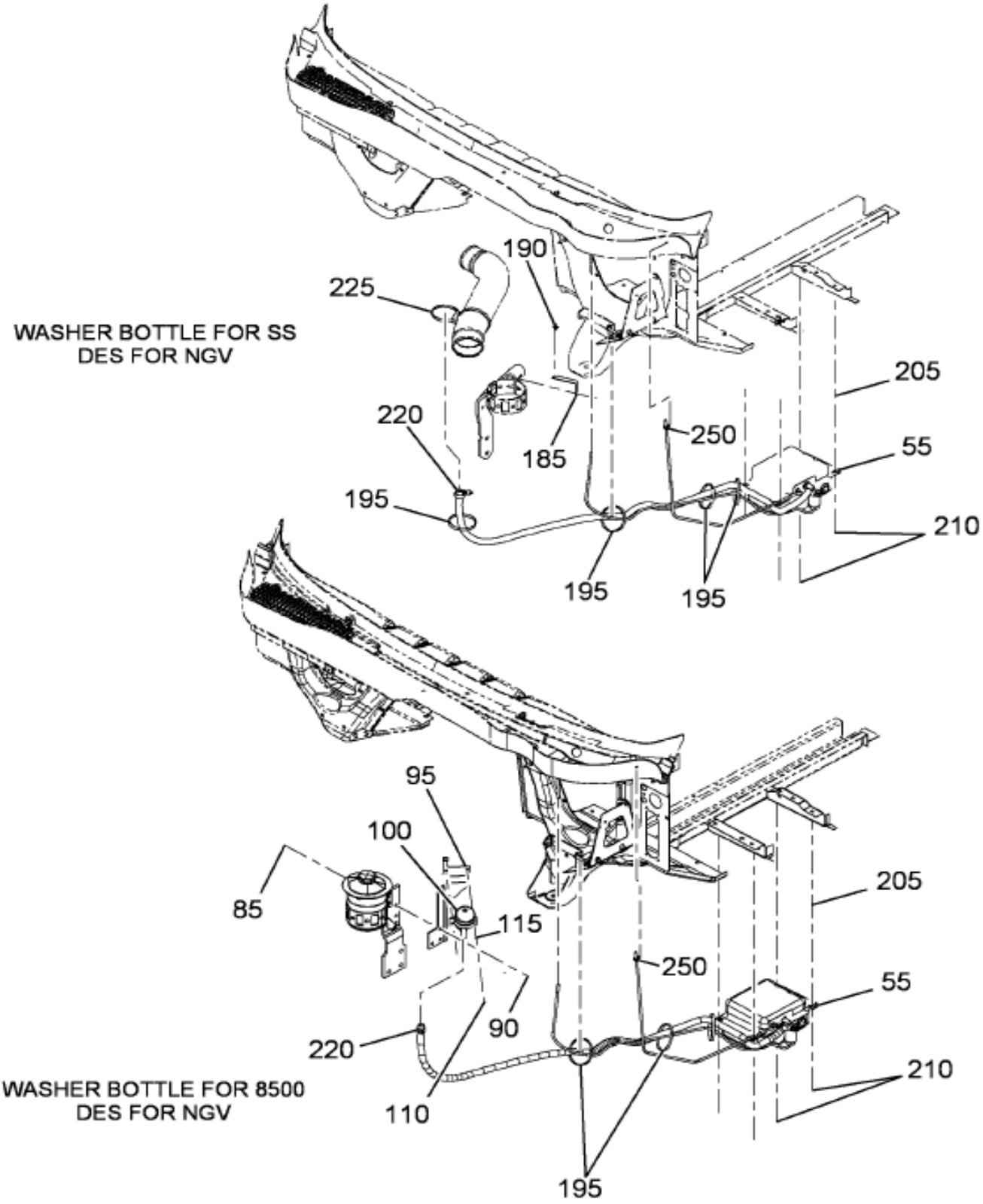

16-438-0046-02 K09

Grp 16

Figure 1 of 16

COPYRIGHT© 2011INTERNATIONAL TRUCK AND ENGINE CORP.

https://truckmanualshub.com/

Figure 06191

WINDSHIELD WASHER INSTL

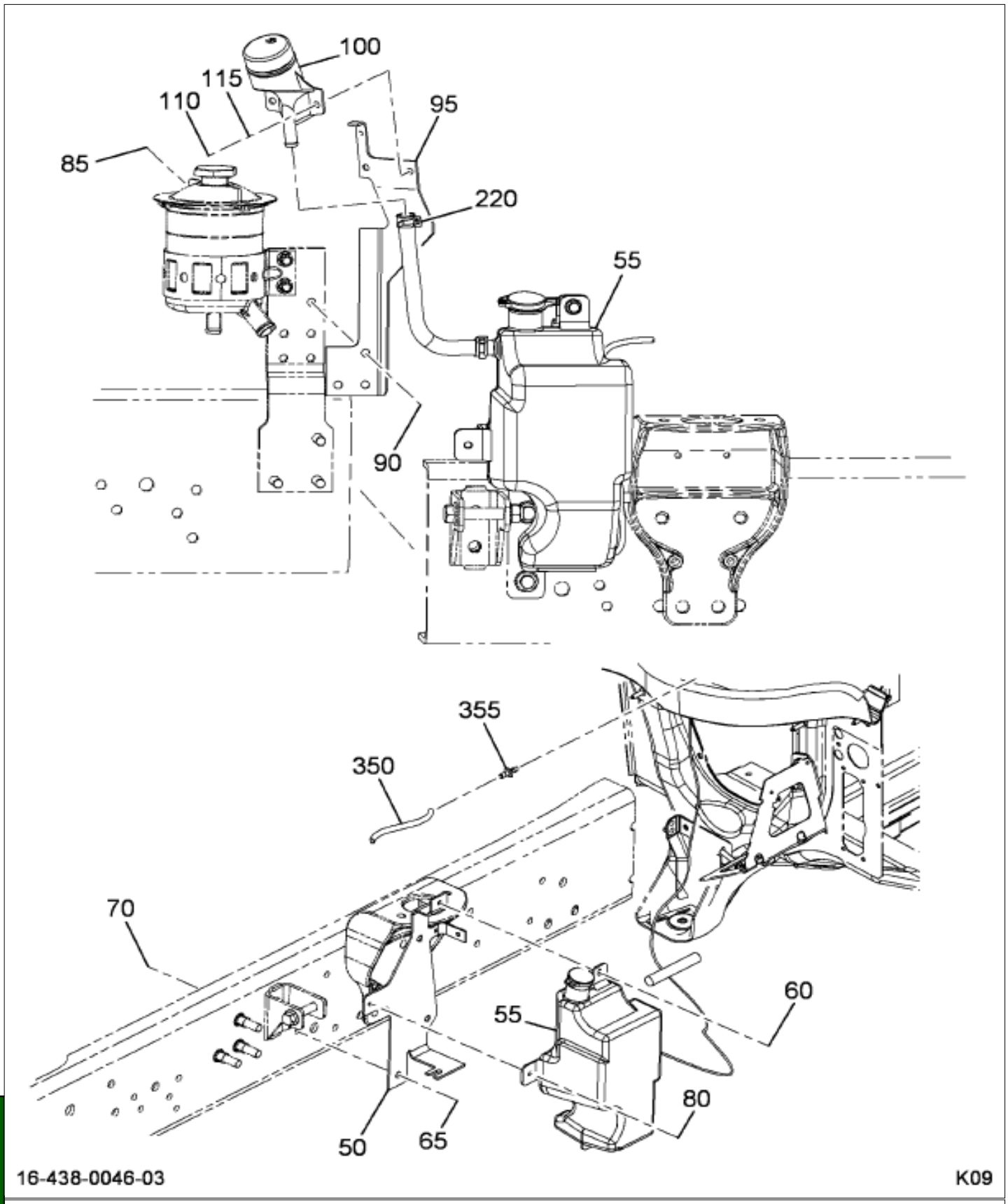

Figure 2 of 16

COPYRIGHT© 2011INTERNATIONAL TRUCK AND ENGINE CORP.

https://truckmanualshub.com/

Figure 06191
WINDSHIELD WASHER INSTL

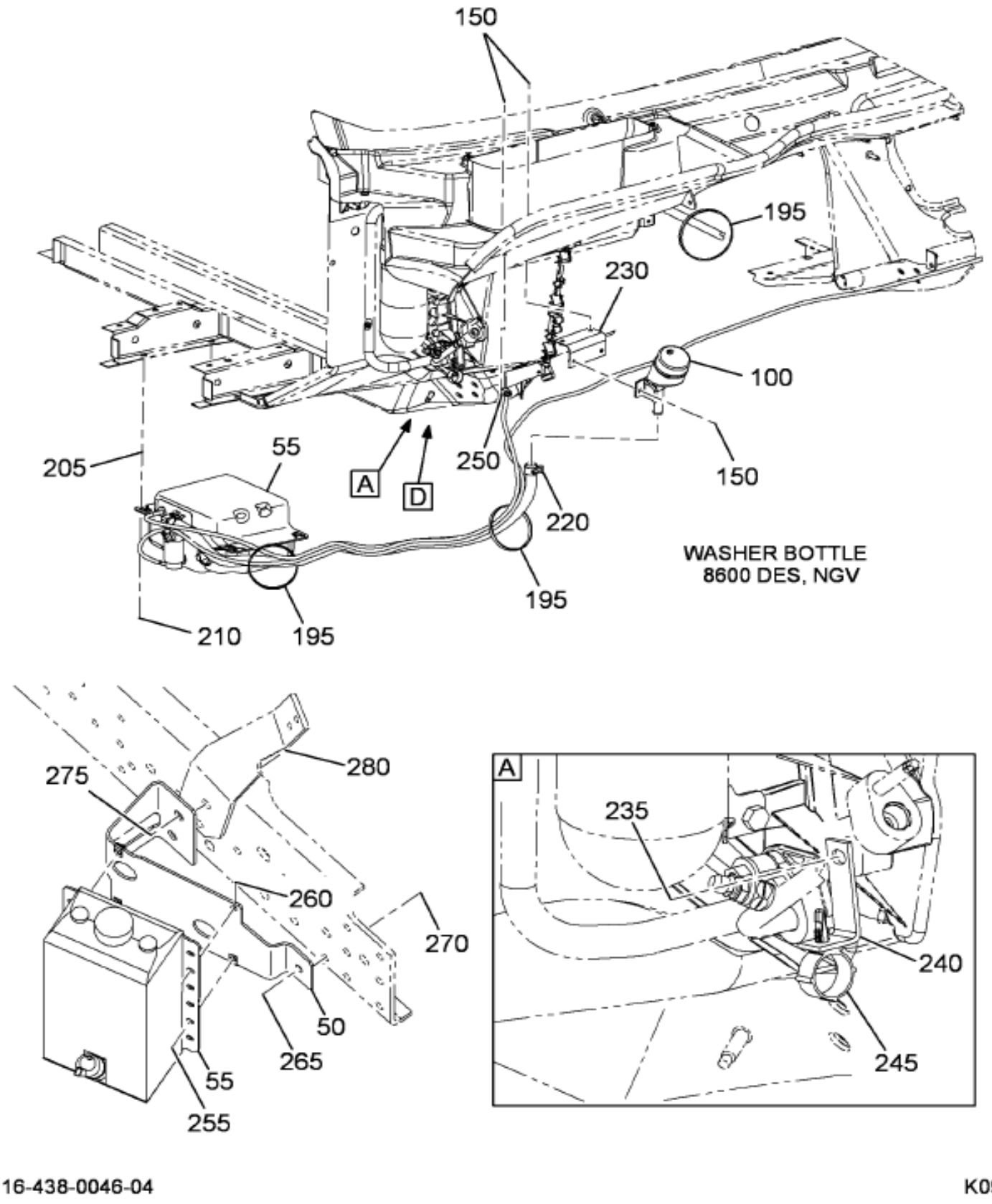

16-438-0046-04 K09

Grp 16

Figure 3 of 16

COPYRIGHT© 2011INTERNATIONAL TRUCK AND ENGINE CORP.

https://truckmanualshub.com/

Figure 06191

WINDSHIELD WASHER INSTL

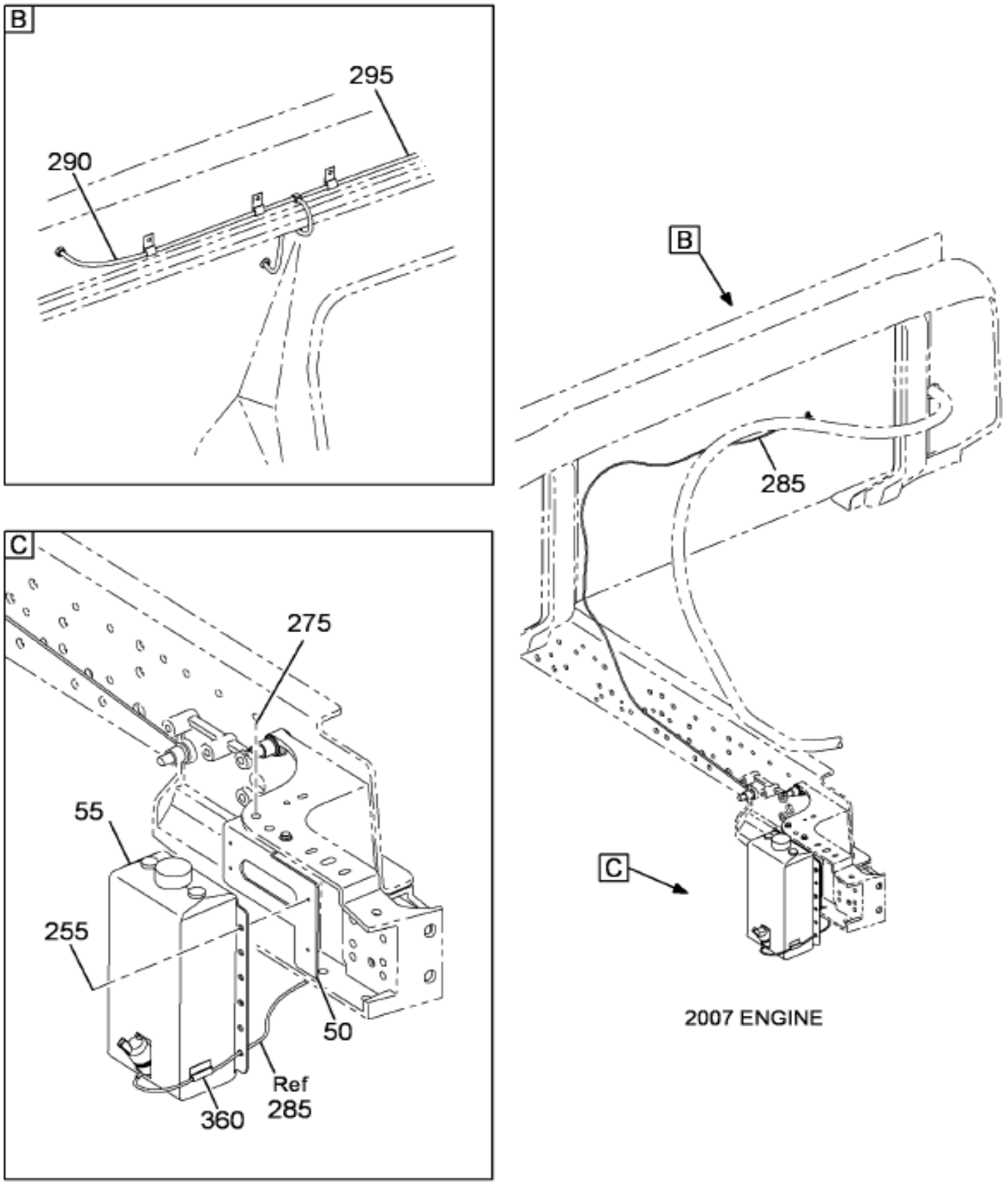

Figure 4 of 16

COPYRIGHT© 2011INTERNATIONAL TRUCK AND ENGINE CORP.

https://truckmanualshub.com/

Figure 061J1

WINDSHIELD WASHER INSTL

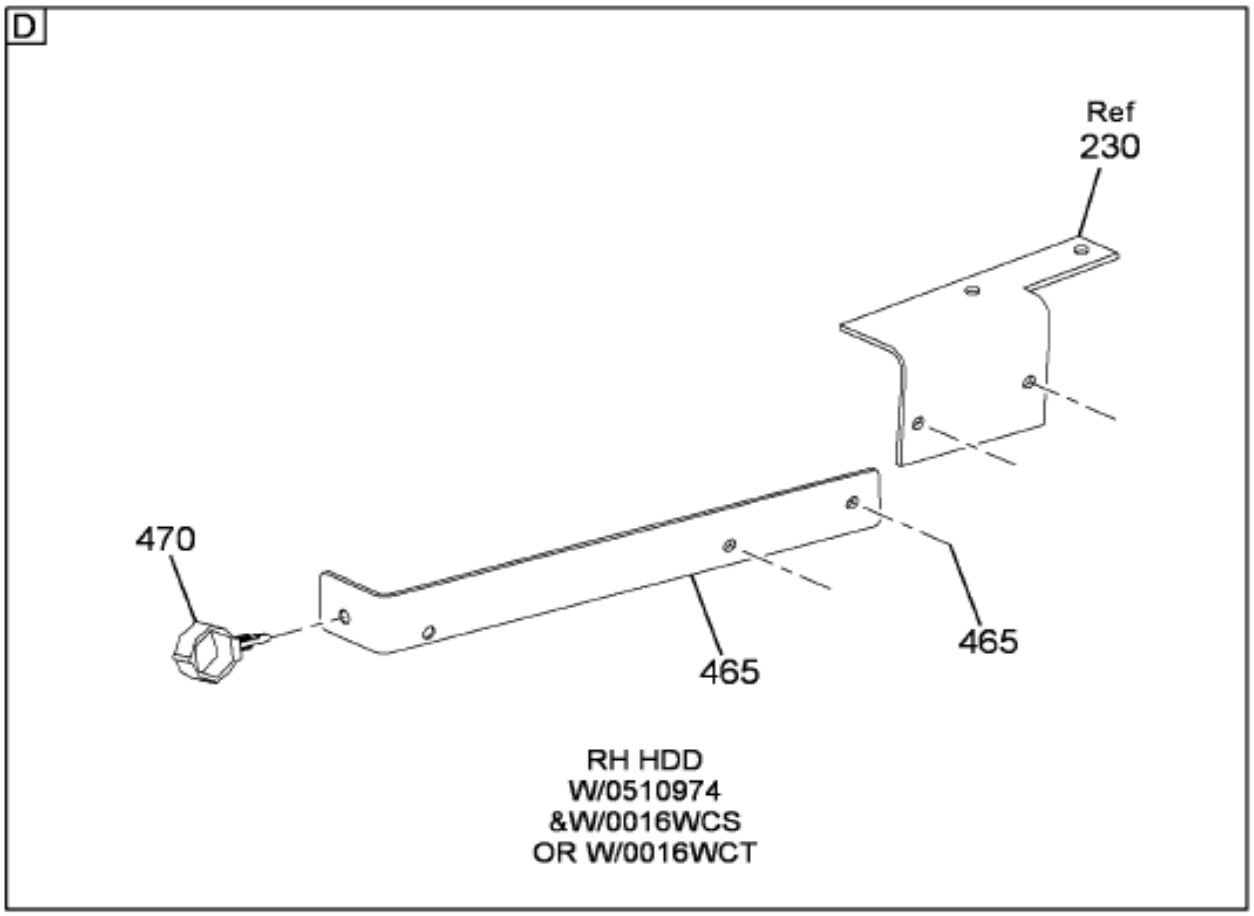

16-438-0112-01 K09

Grp 16

Figure 5 of 16

COPYRIGHT© 2011INTERNATIONAL TRUCK AND ENGINE CORP.

https://truckmanualshub.com/

Figure 061J1

WINDSHIELD WASHER INSTL

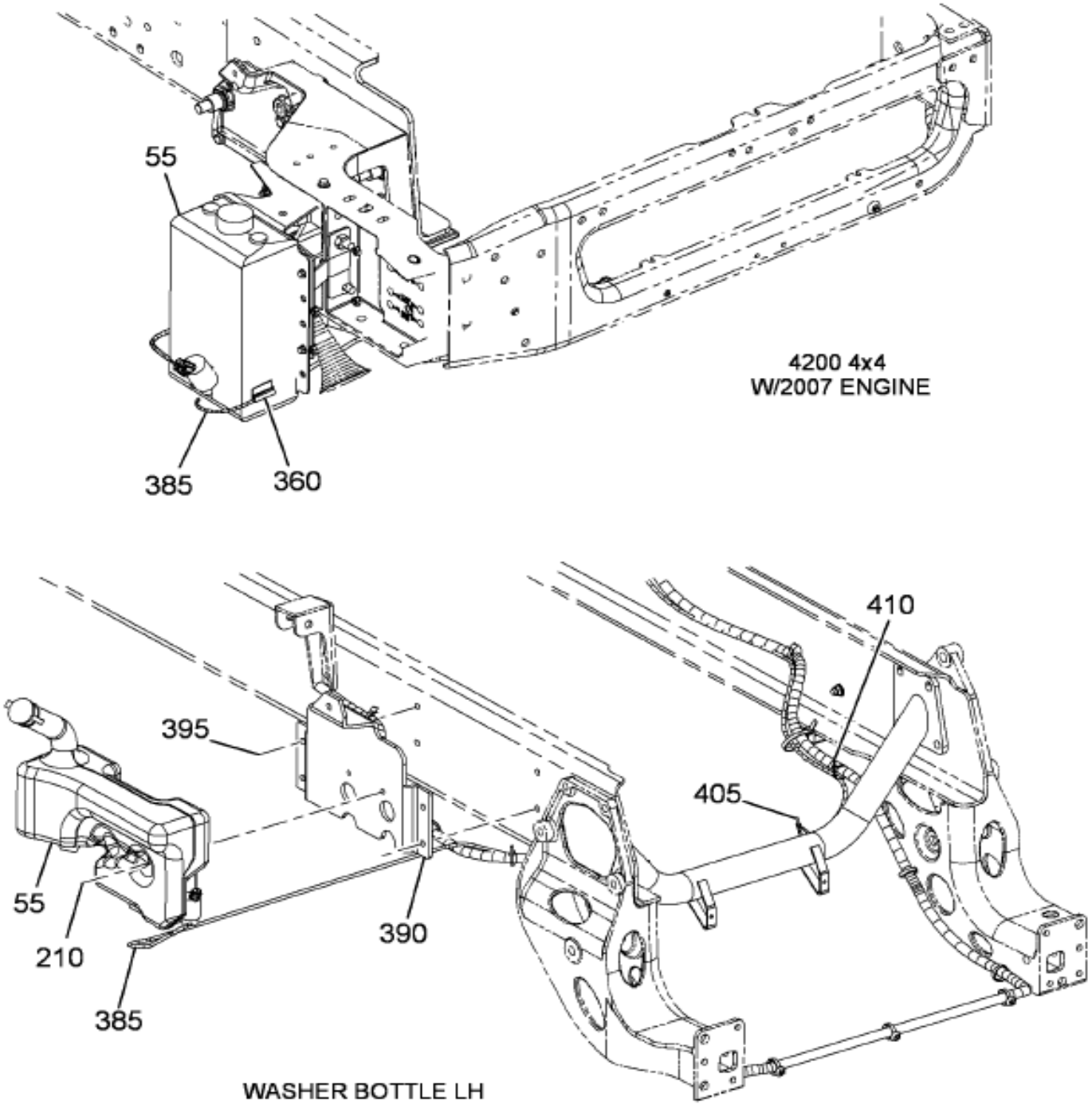

Figure 6 of 16

COPYRIGHT© 2011INTERNATIONAL TRUCK AND ENGINE CORP.

https://truckmanualshub.com/

Figure 06191

WINDSHIELD WASHER INSTL

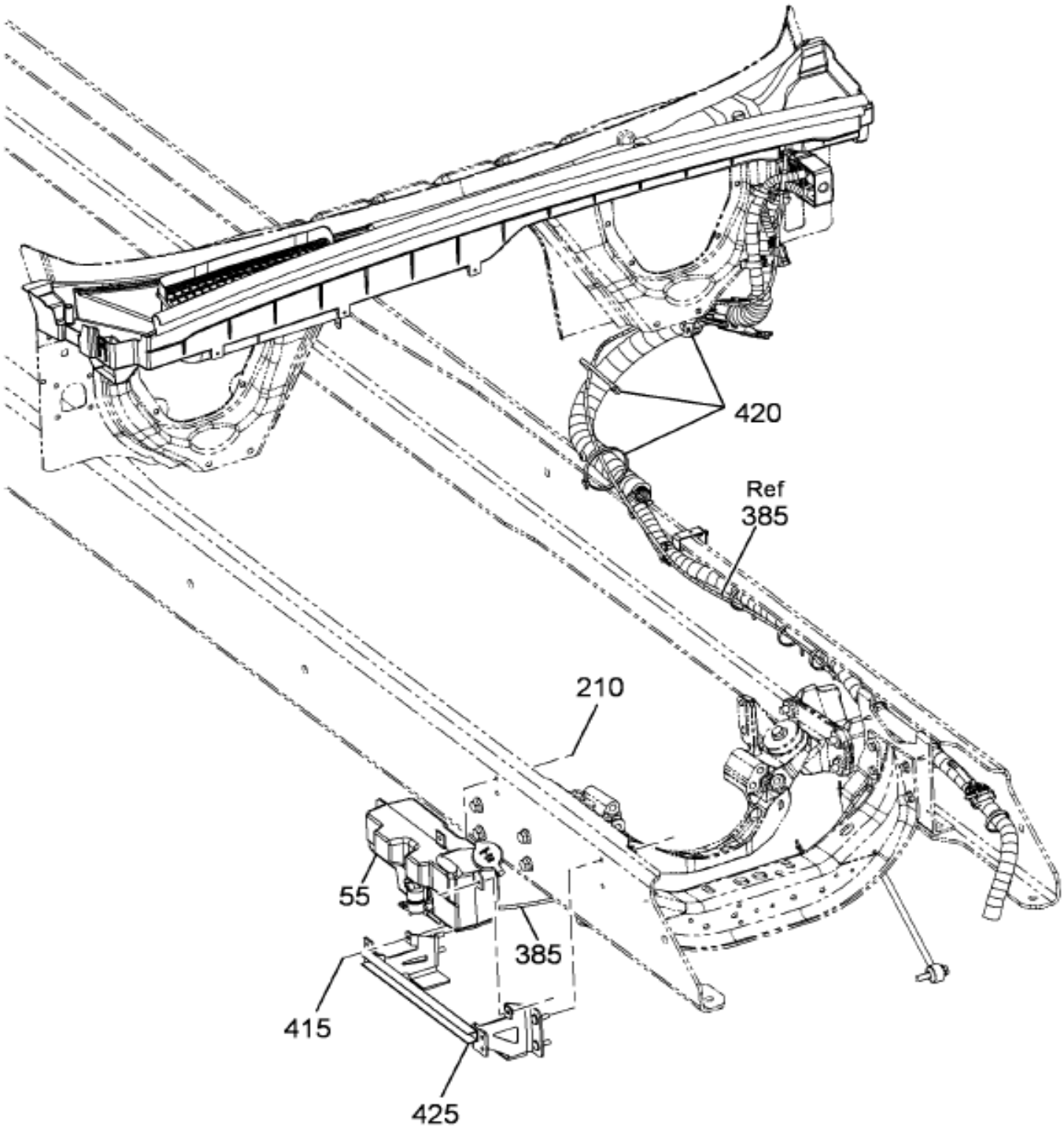

16-438-0082-03 K09

Grp 16

Figure 7 of 16

COPYRIGHT© 2011INTERNATIONAL TRUCK AND ENGINE CORP.

https://truckmanualshub.com/

Figure 06191

WINDSHIELD WASHER INSTL

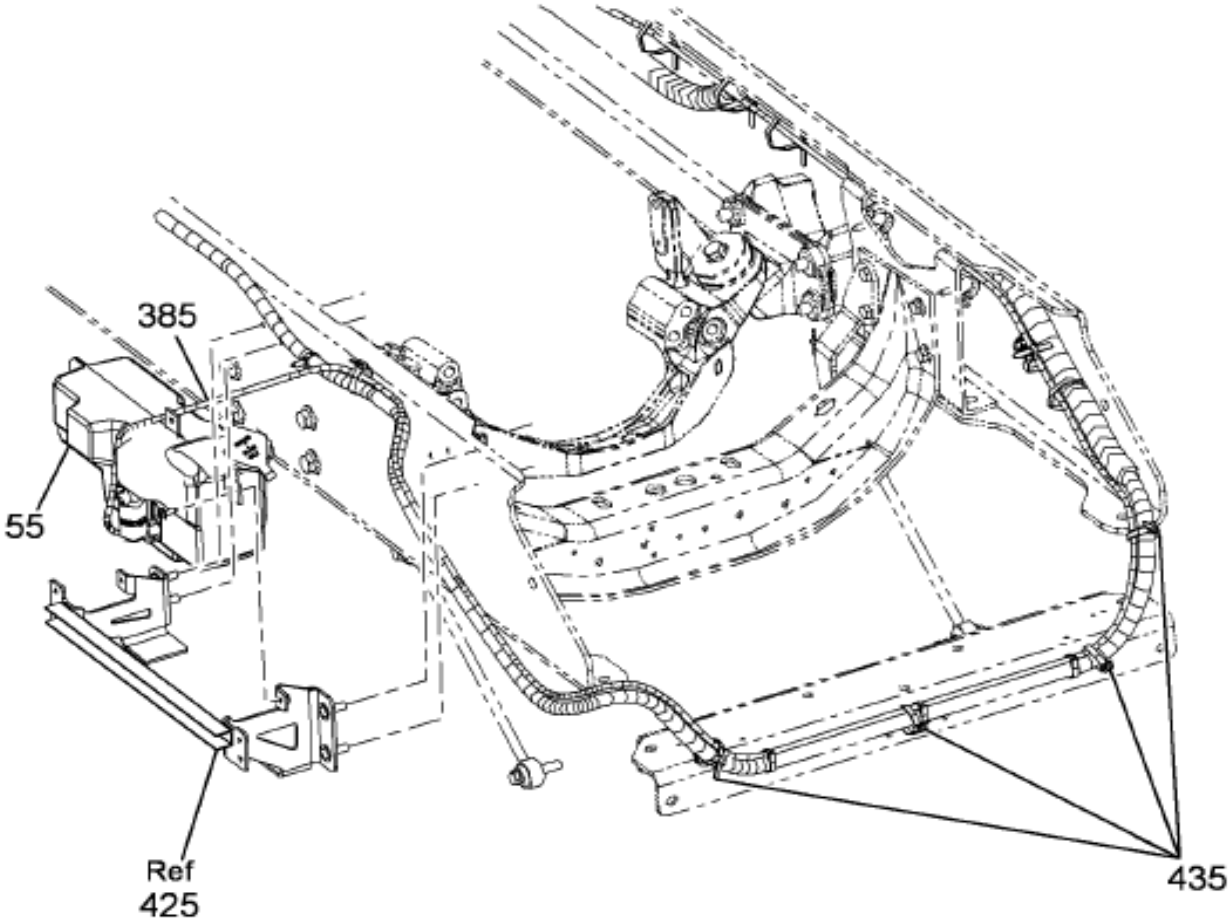

16-438-0095-01 K09

Figure 8 of 16

COPYRIGHT© 2011INTERNATIONAL TRUCK AND ENGINE CORP.

https://truckmanualshub.com/

Figure 061J1

WINDSHIELD WASHER INSTL

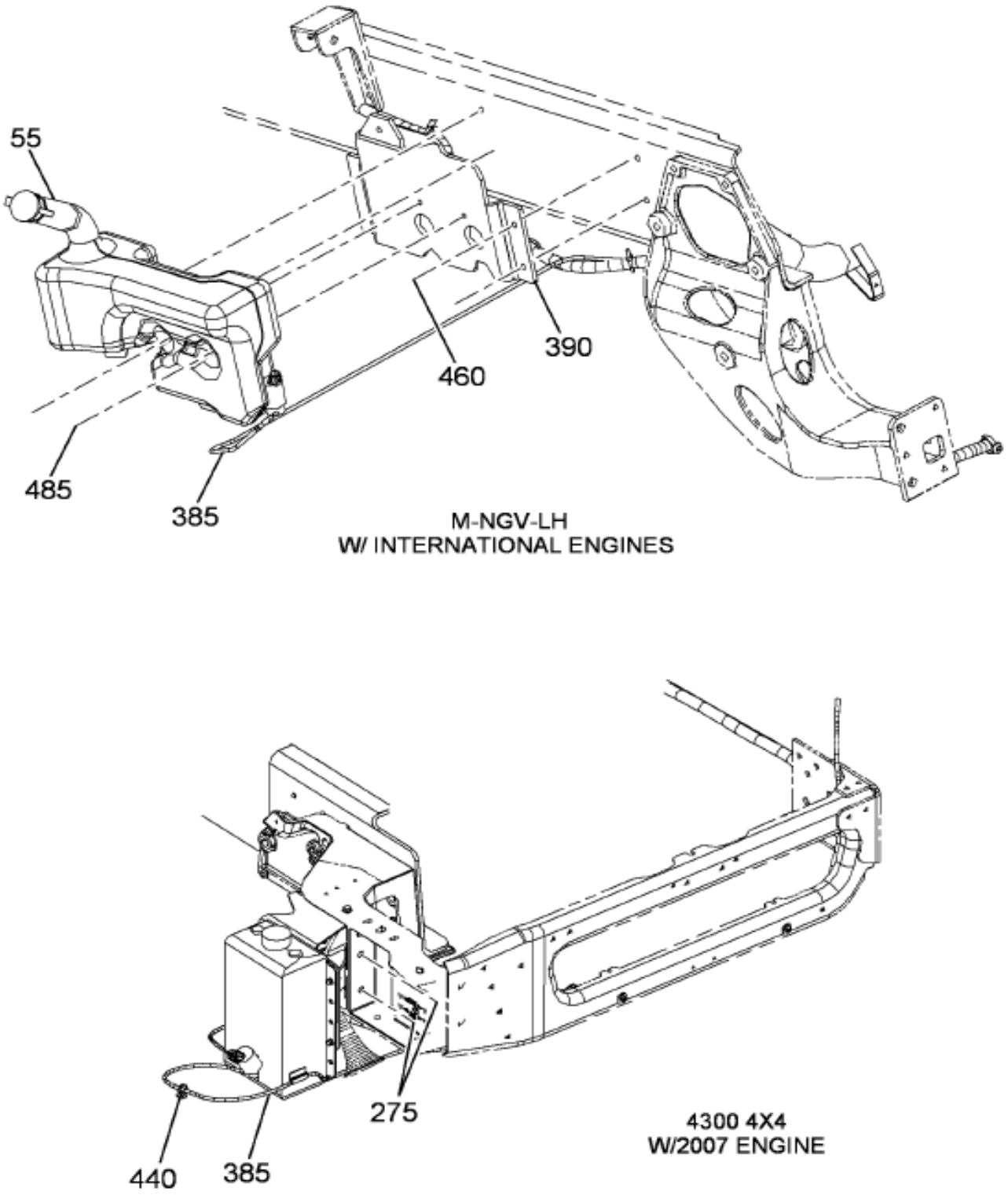

Grp 16

Figure 9 of 16

COPYRIGHT© 2011INTERNATIONAL TRUCK AND ENGINE CORP.

https://truckmanualshub.com/

Figure 001J1

WINDSHIELD WASHER INSTL

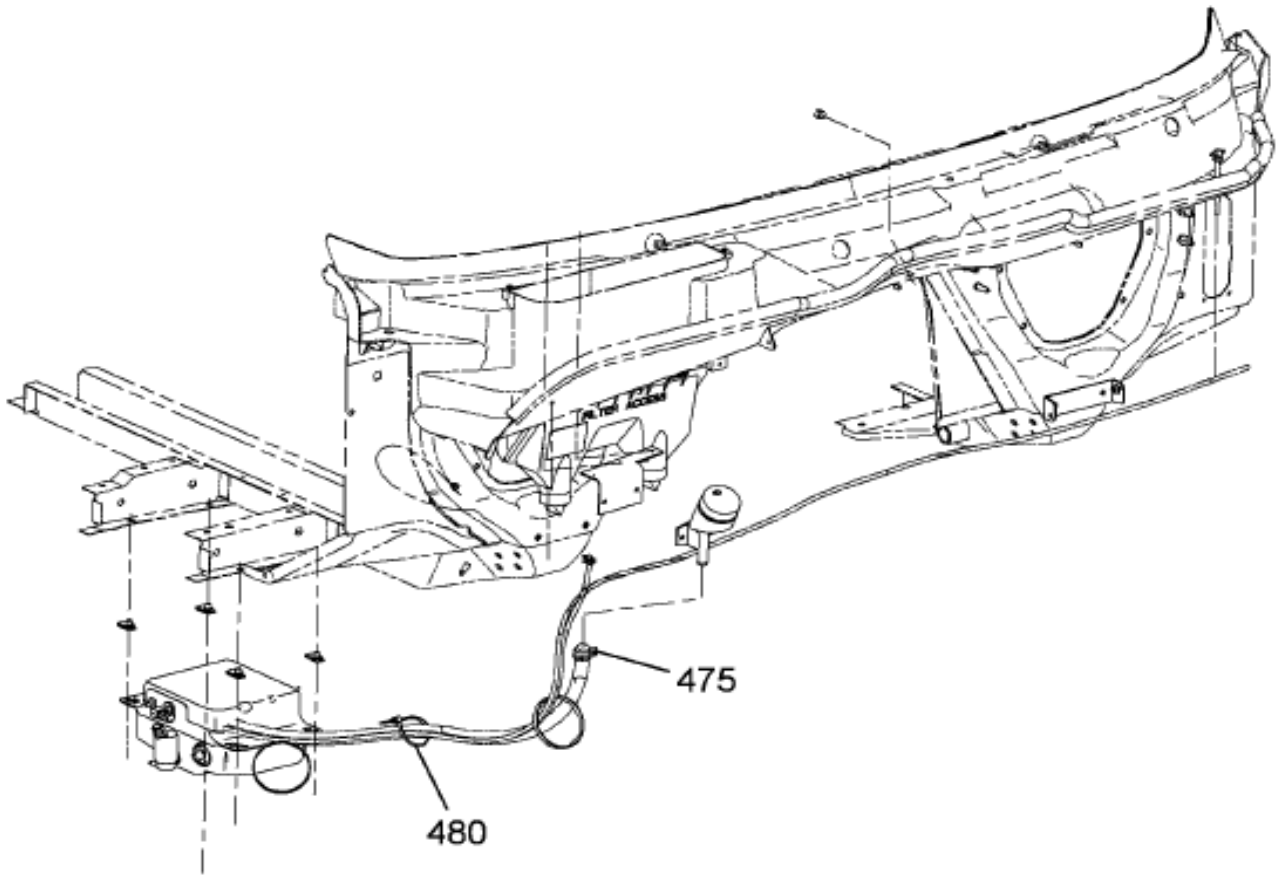

16-438-0115-01 K09

Figure 10 of 16

COPYRIGHT© 2011INTERNATIONAL TRUCK AND ENGINE CORP.

https://truckmanualshub.com/

Figure 06191

WINDSHIELD WASHER INSTL

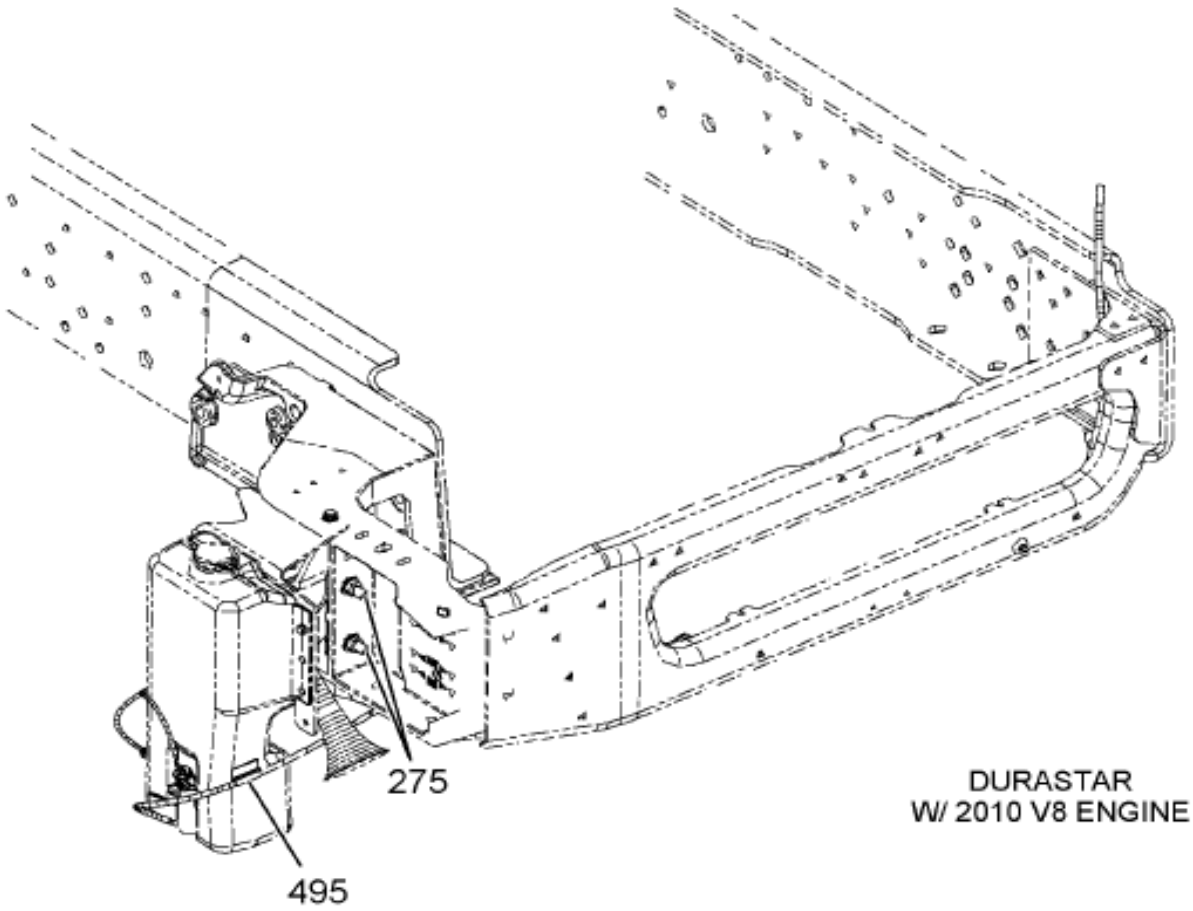

16-438-0120-01 C10

Grp 16

Figure 11 of 16

COPYRIGHT© 2011INTERNATIONAL TRUCK AND ENGINE CORP.

https://truckmanualshub.com/

Figure 06191

WINDSHIELD WASHER INSTL

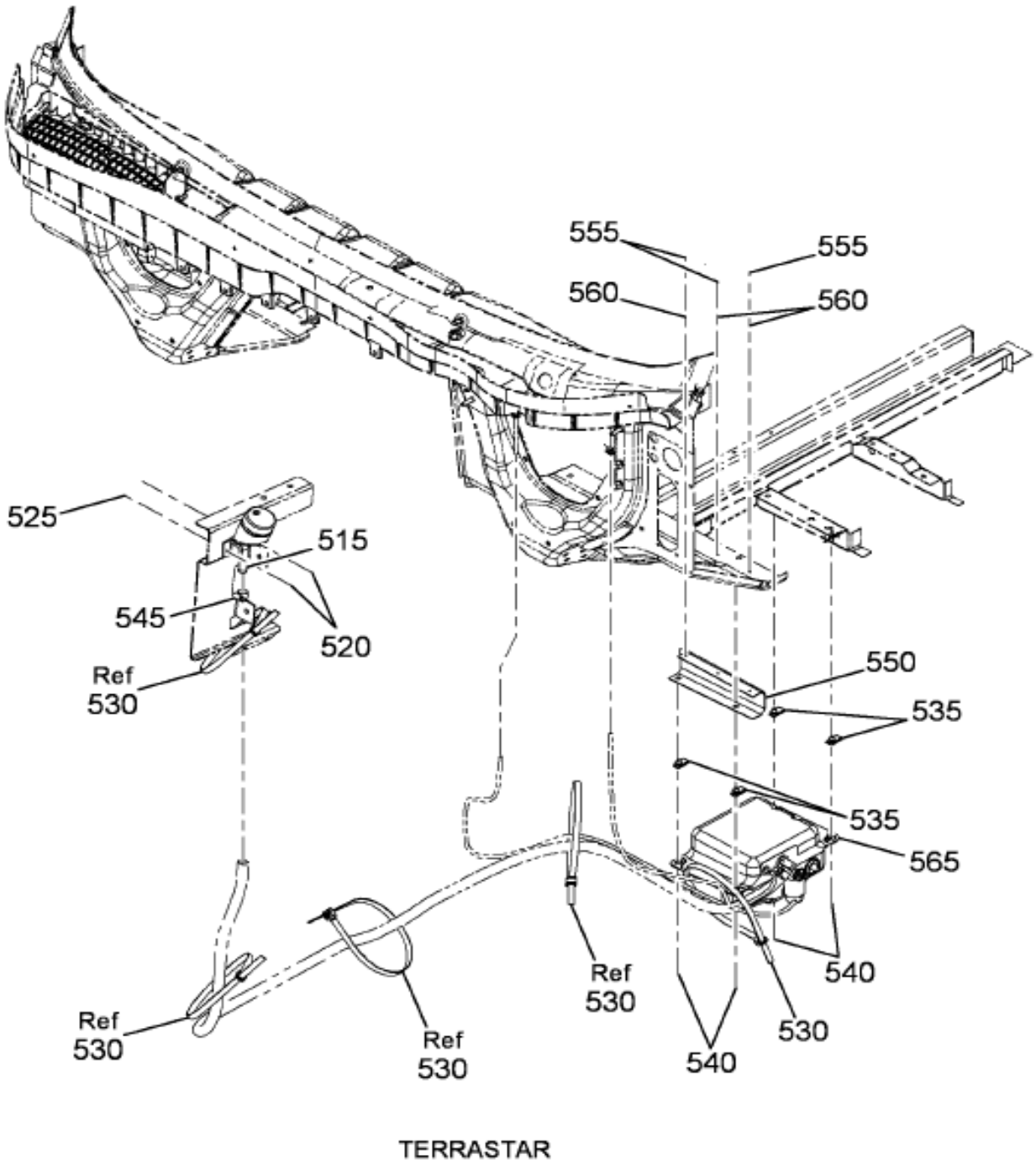

16-438-0126-01 G10

Figure 12 of 16

COPYRIGHT© 2011INTERNATIONAL TRUCK AND ENGINE CORP.

https://truckmanualshub.com/

Figure 06191

WINDSHIELD WASHER INSTL

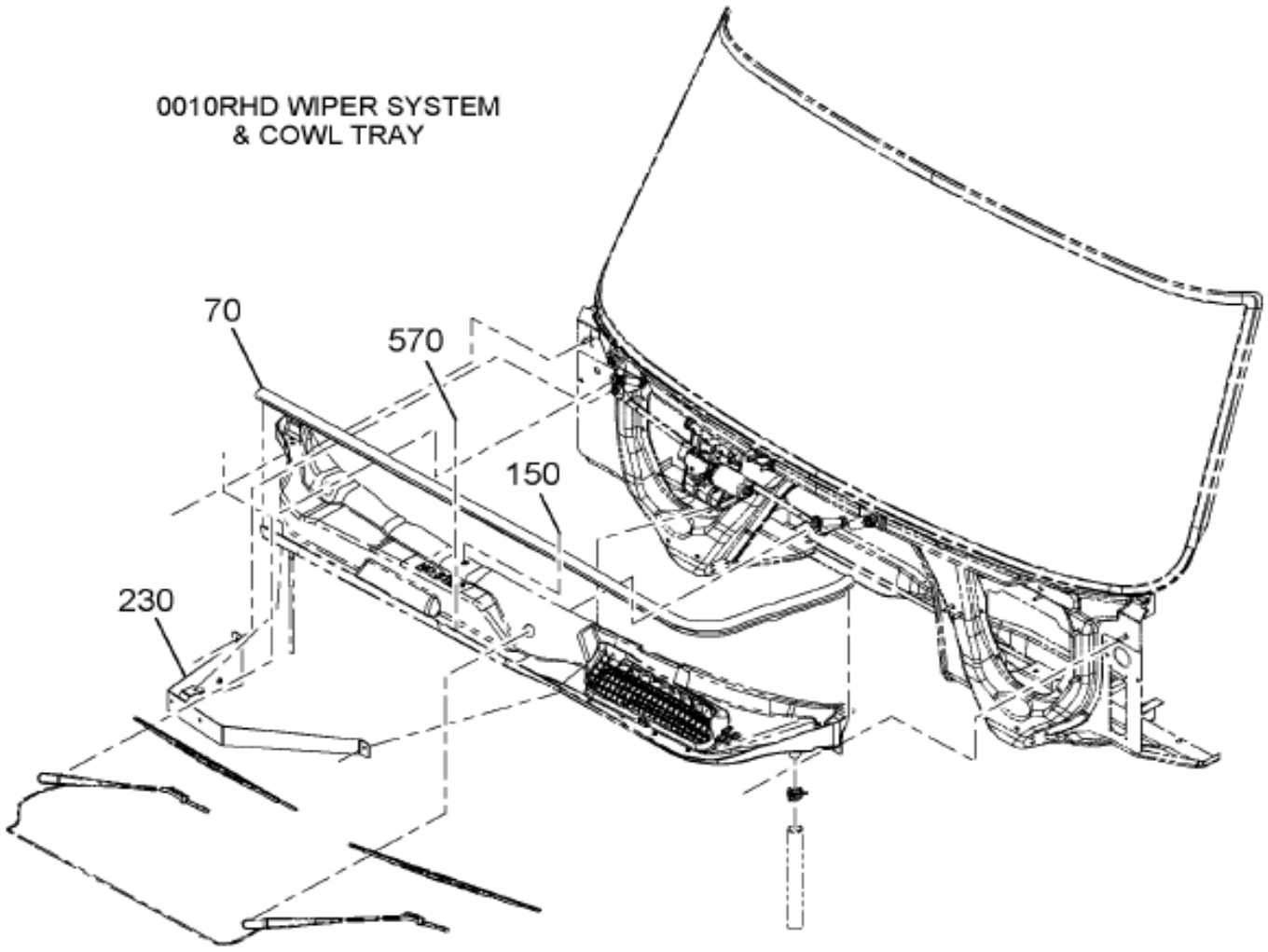

Grp 16

Figure 13 of 16

COPYRIGHT© 2011INTERNATIONAL TRUCK AND ENGINE CORP.

https://truckmanualshub.com/

Figure 06191

WINDSHIELD WASHER INSTL

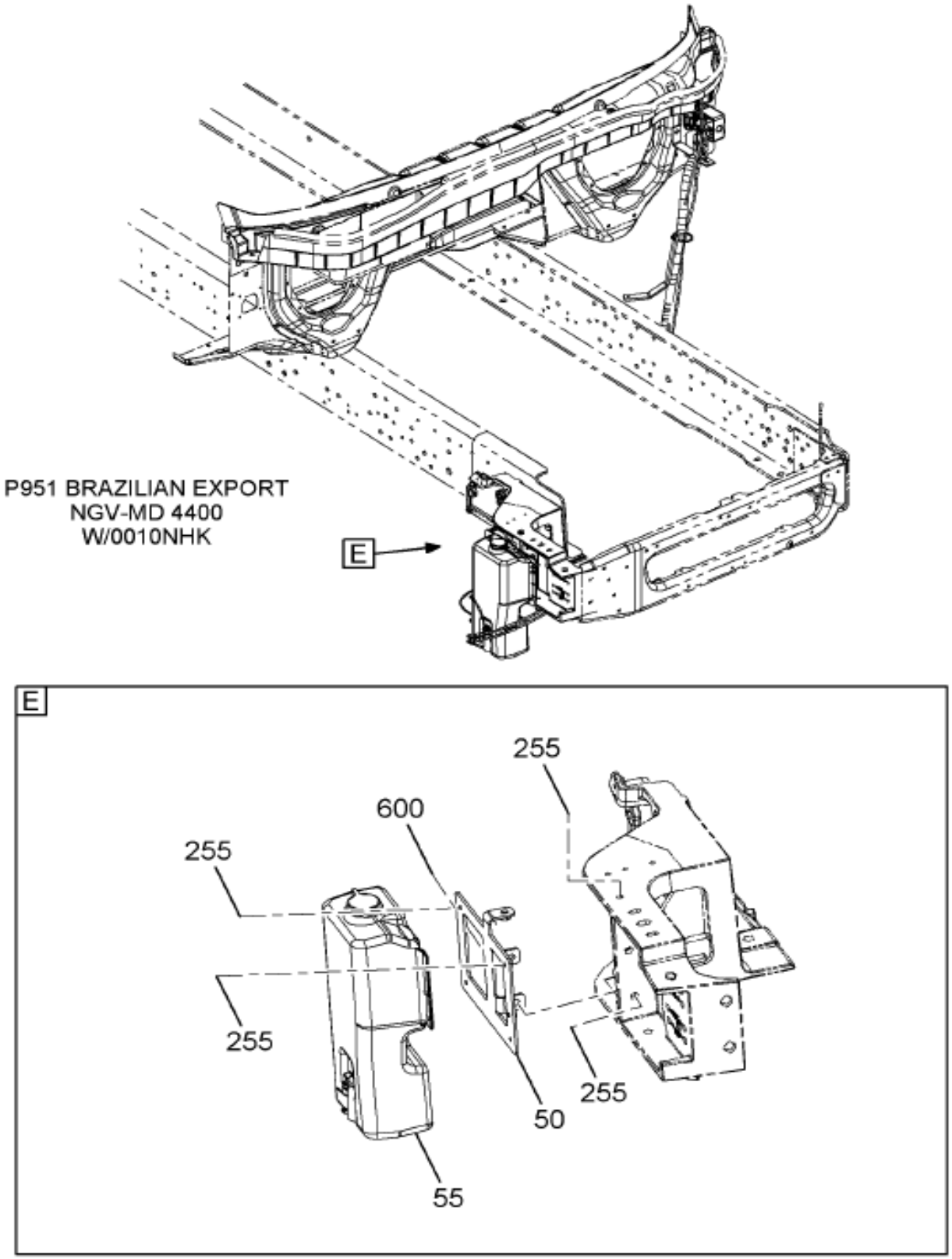

Figure 14 of 16

COPYRIGHT© 2011INTERNATIONAL TRUCK AND ENGINE CORP.

https://truckmanualshub.com/

Figure 06191

WINDSHIELD WASHER INSTL

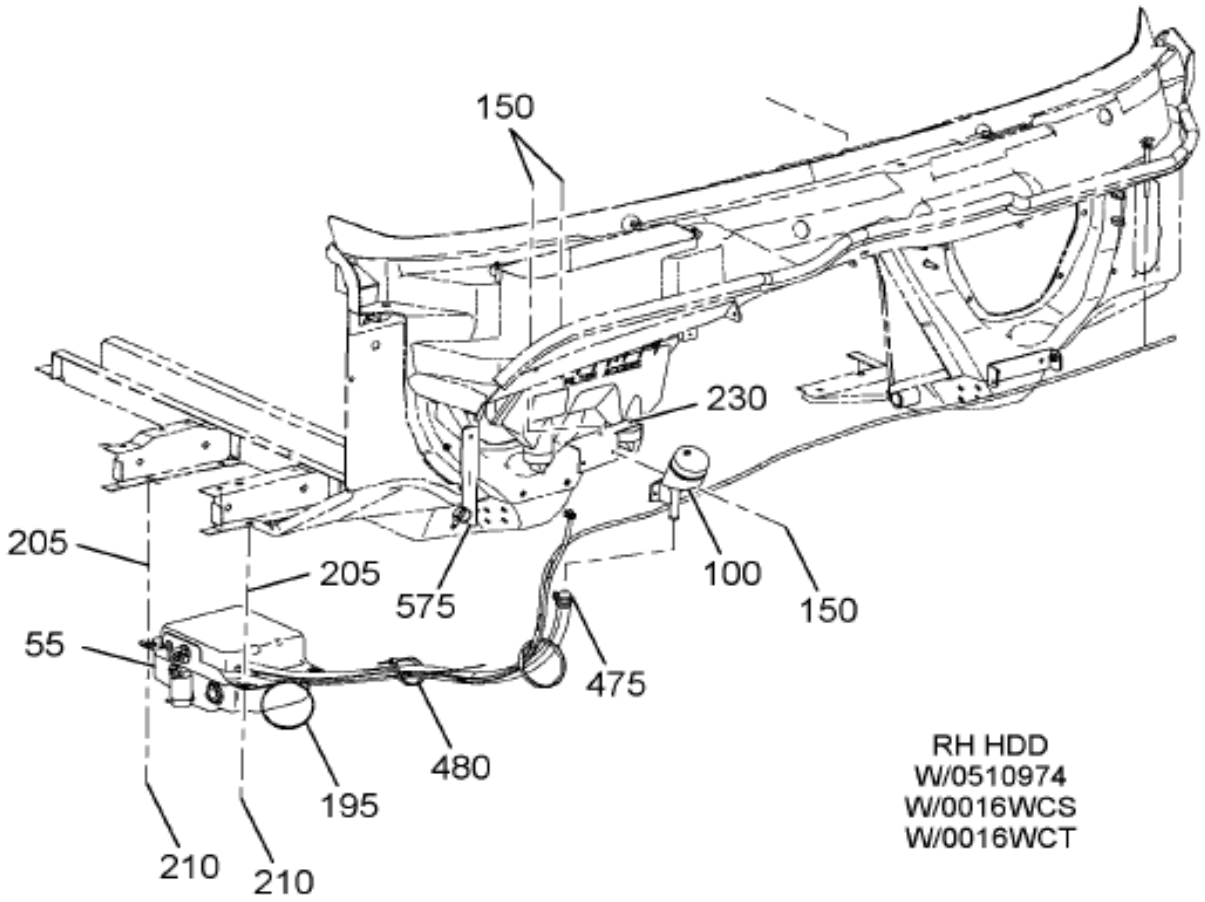

16-438-0129-03 A11

Grp 16

Figure 15 of 16

COPYRIGHT© 2011INTERNATIONAL TRUCK AND ENGINE CORP.

https://truckmanualshub.com/

Figure 06191

WINDSHIELD WASHER INSTL

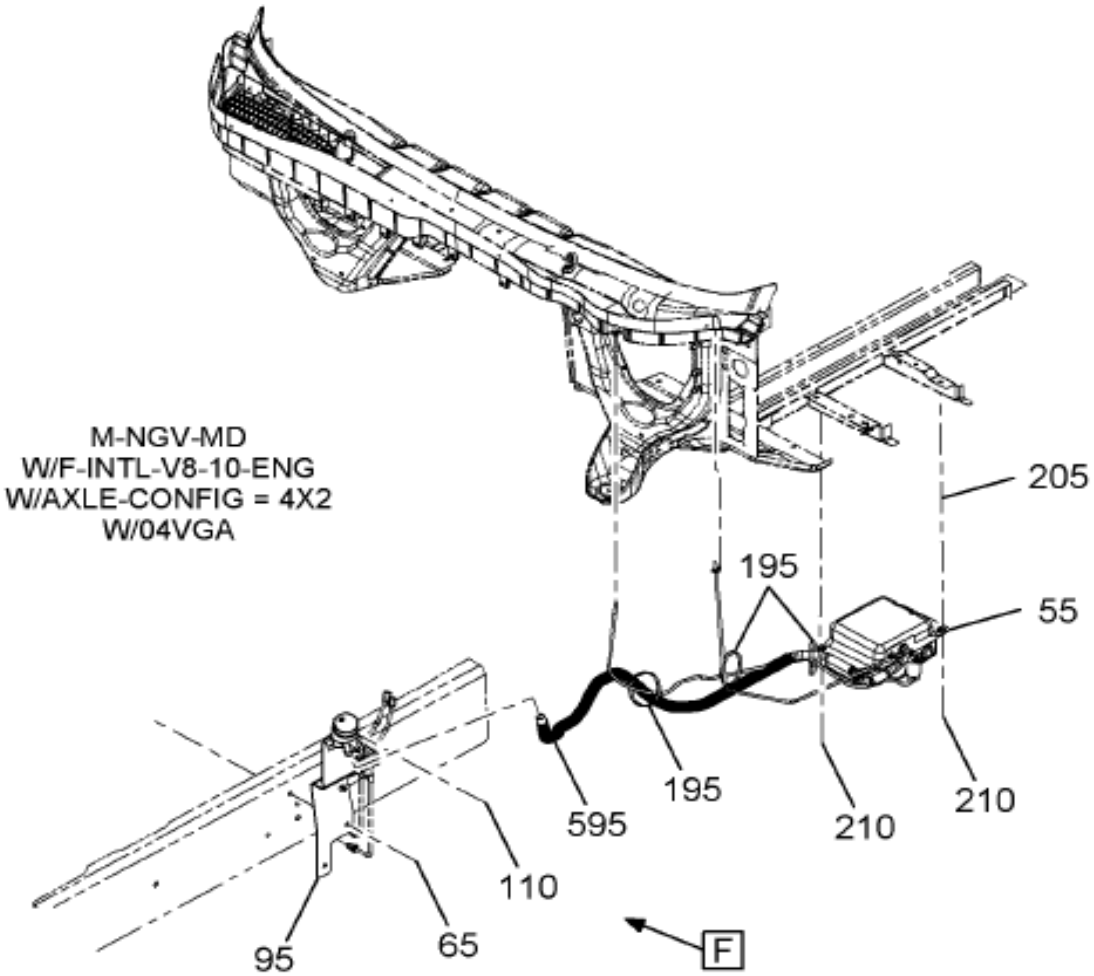

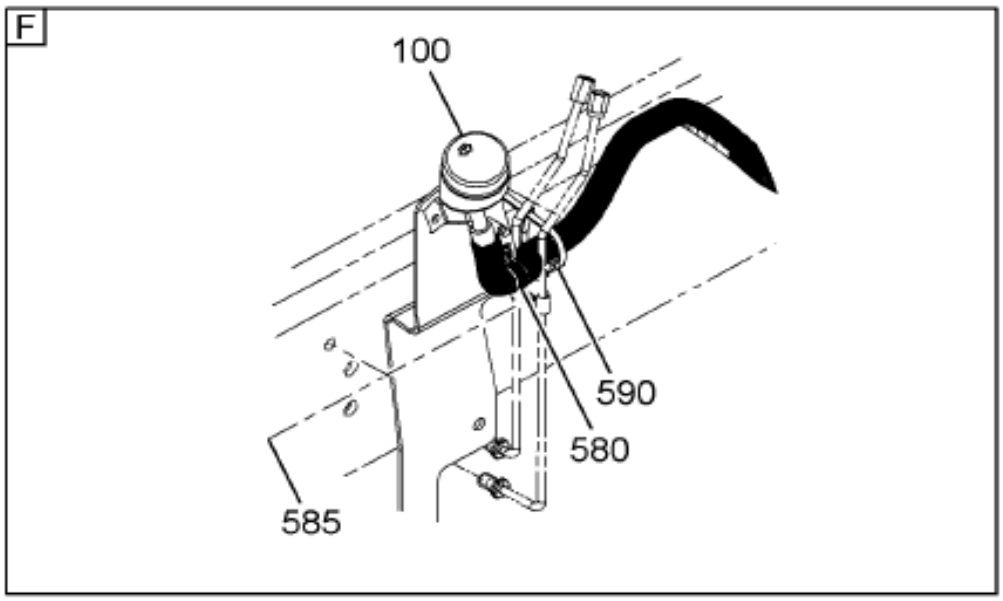

16-438-0129-04 A11

Item	Part No.	Qty	Description	Kit	Var	Figure
55	3561152C97	1	TANK,W/S WASHER, BOTTLE ASSY R		0MQVY	3561152C97
100	3552649C1	1	TUBE,PLASTIC WSHR FILL W/CAP		0MQVY	3552649C1
110	24408R1	2	SCREW, 1/4-14 X 5/8 P/HDCR TAP		0MQVY	
110	97865H	2	WASHER,FENDER MTG		0MQVY	
195	3516934C1	4	STRAP,CABLE LOCK 1/2" X 20"		0MQVY	
205	3510210C1	4	NUT,SPEED		0MQVY	

COPYRIGHT© 2011INTERNATIONAL TRUCK AND ENGINE CORP.

https://truckmanualshub.com/

Figure 0619 1

WINDSHIELD WASHER INSTL

Item	Part No.	Qty	Description	Kit	Var	Figure
210	3514273C1	4	BOLT SEMS M8 X 1.25-35		0MQVY	
220	274085R91	1	CLAMP, NO. 10 TYPE F HOSE		0MQVY	
225	3554554C1	1	GUIDE,BRK HOSE & CABLE*SWIVEL		0MQVY	
225	306132C1	2	STRAP,CABLE LOCK		0MQVY	

COPYRIGHT© 2011INTERNATIONAL TRUCK AND ENGINE CORP.

https://truckmanualshub.com/

Figure 3301152C97

TANK,W/S WASHER, BOTTLE ASSY R

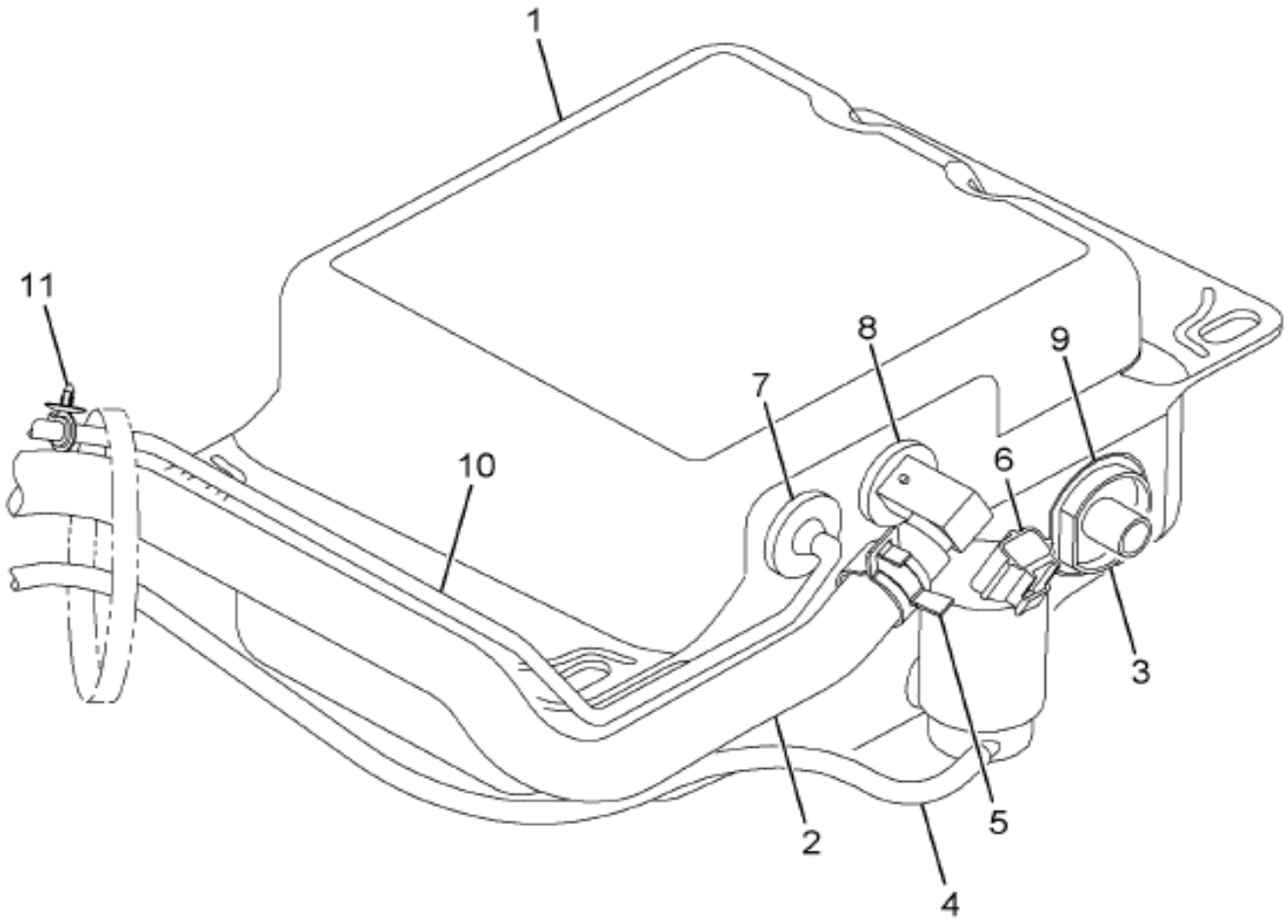

16-438-0090-01 F07

Item	Part No.	Qty	Description	Kit	Var	Figure
1		1	BOTTLE, WINDSHIELD WASHER			
2		AR	HOSE, 15.9 ID X 22.2 OD X 2250			
3	2506101C1	1	GAUGE,FLUID LEVEL SENSOR			
4		AR	HOSE, 3.97 ID X 7.14 OD X 1700			
5	2022866C1	1	CLAMP COOLER MTG #24			
6	2506099C1	1	PUMP,ELEC W/S WPR W/O GROMMET			

COPYRIGHT© 2011INTERNATIONAL TRUCK AND ENGINE CORP.

https://truckmanualshub.com/

Figure 3561152C97

TANK,W/S WASHER, BOTTLE ASSY R

Item	Part No.	Qty	Description	Kit	Var	Figure
7		1	CONNECTOR, 1/4" STRAIGHT			
8		1	FITTING, 90 DEG FILL TUBE			
9	2506100C1	2	GROMMET,RUBBER PUMP			
10		AR	3.97 ID X 7.14 OD X 1250 TUBE			
11	3581068C1	1	CLIP,HOSE WASHER VENT HOSE			
880		RF	NOTE: ASM BELOW COMPRISED OF ABOVE COMPONENTS			
881	3561152C97	RF	TANK,W/S WASHER, BOTTLE ASSY R			

COPYRIGHT© 2011INTERNATIONAL TRUCK AND ENGINE CORP.

https://truckmanualshub.com/

Figure 3552649C1
TUBE,PLASTIC WSHR FILL W/CAP

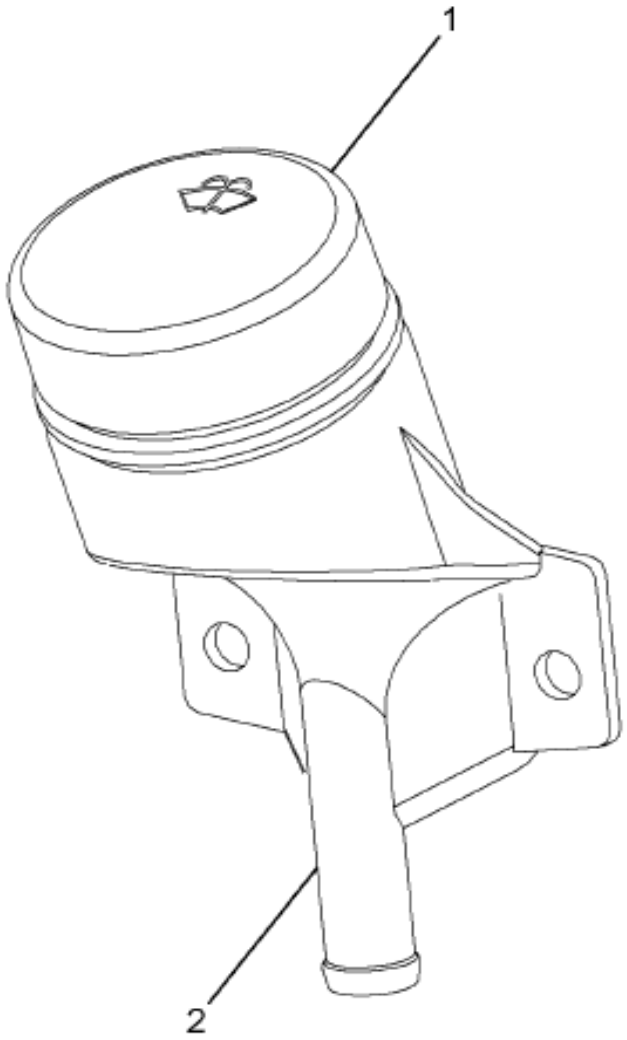

16-438-0061-01 M04

Item	Part No.	Qty	Description	Kit	Var	Figure
1	2508669C1	1	CAP,TUBE W/S WASHER FILL			
2		RF	SPOUT,NATURAL REMOTE FILL			
880		RF	NOTE: ASM BELOW COMPRISED OF ABOVE COMPONENTS			
881	3552649C1	RF	TUBE,PLASTIC WSHR FILL W/CAP			

COPYRIGHT© 2011INTERNATIONAL TRUCK AND ENGINE CORP.

https://truckmanualshub.com/

Figure 005Lv

WINDSHIELD WIPER INSTL; W/BAFFLE ASM

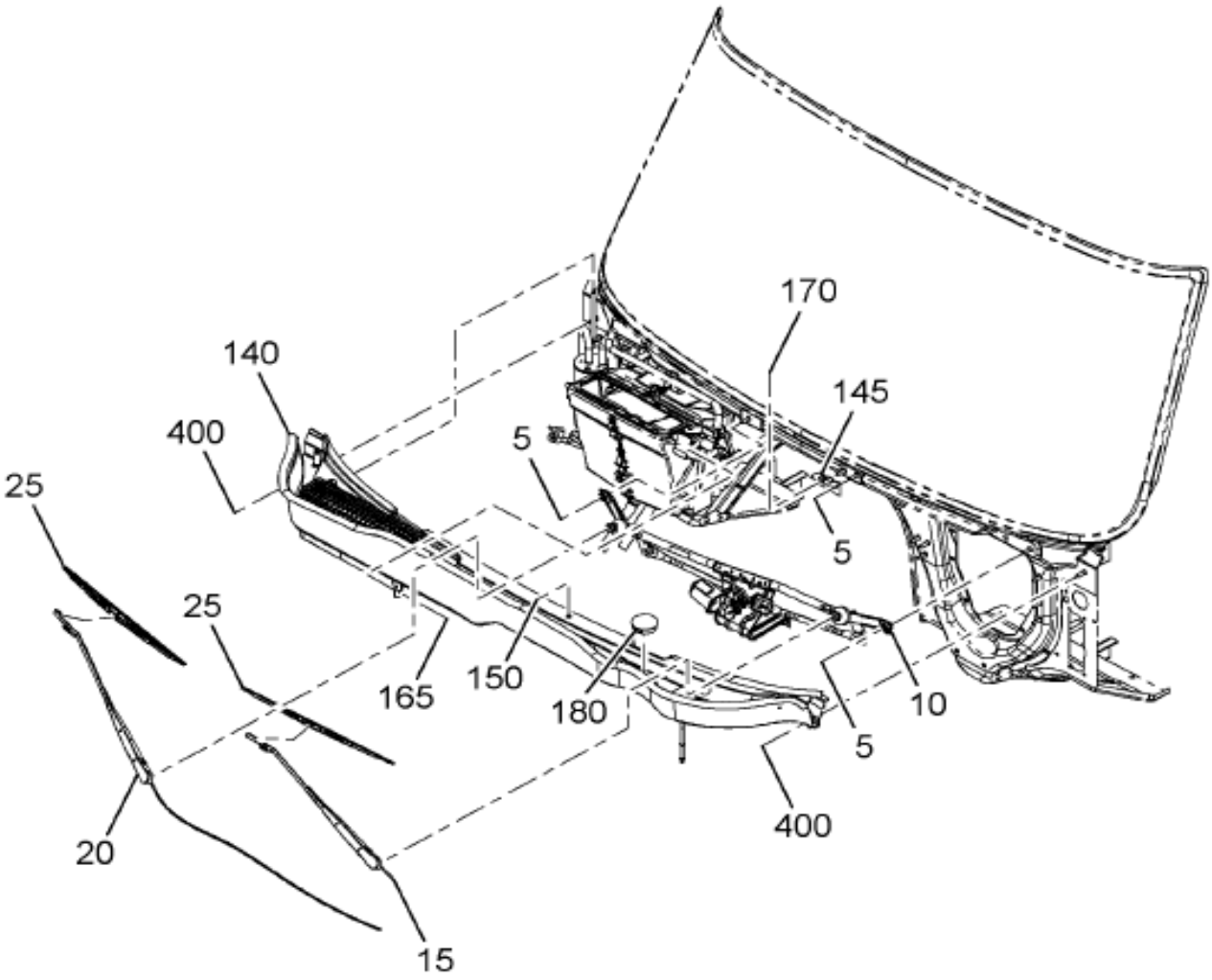

16-562-0037-BC C11

Grp 16

Figure 1 of 5

COPYRIGHT© 2011INTERNATIONAL TRUCK AND ENGINE CORP.

https://truckmanualshub.com/

Figure 005Lv

WINDSHIELD WIPER INSTL; W/BAFFLE ASM

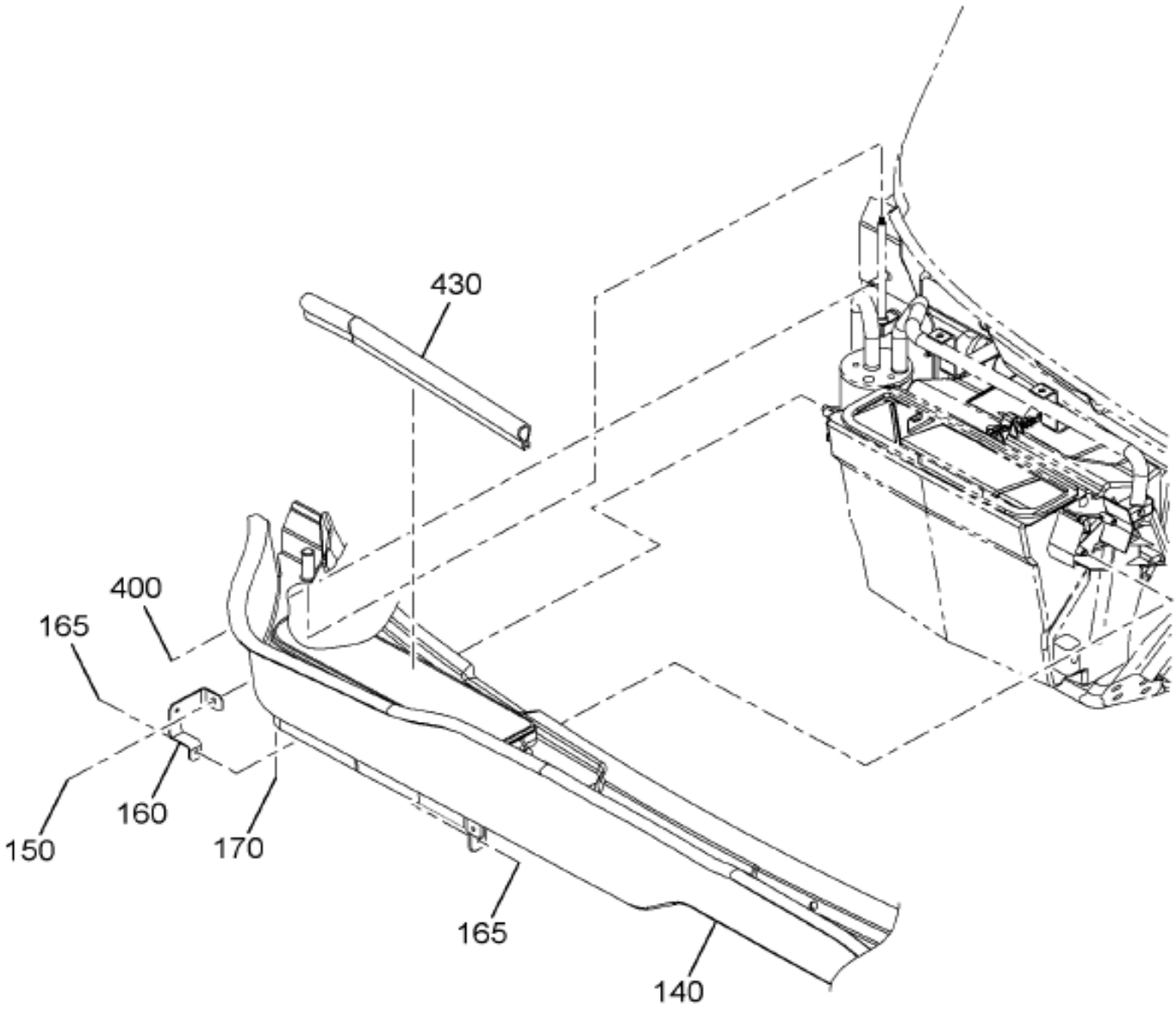

Figure 2 of 5

COPYRIGHT© 2011INTERNATIONAL TRUCK AND ENGINE CORP.

https://truckmanualshub.com/

Figure 065Lv

WINDSHIELD WIPER INSTL; W/BAFFLE ASM

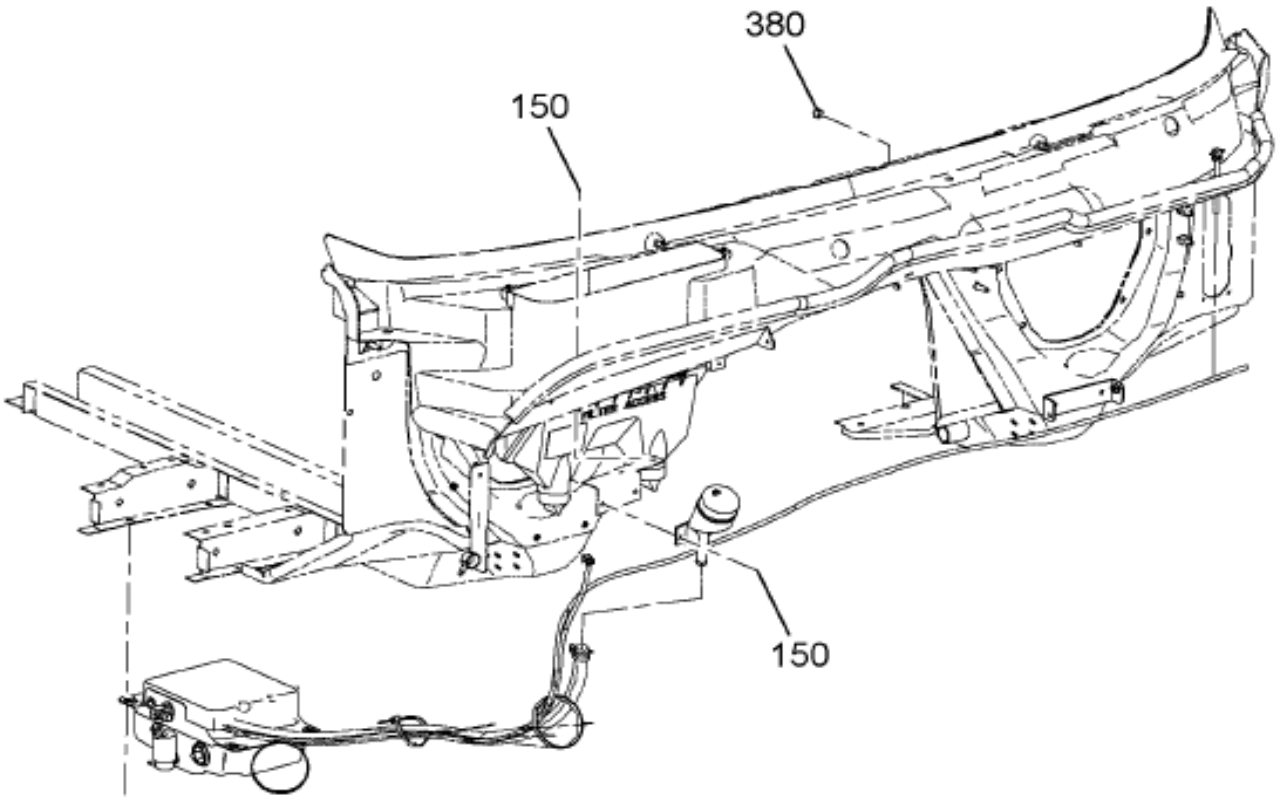

RH HDD
W/0510974
W/0016WCS
W/0016WCT

16-562-0104-01 C11

Grp 16

Figure 3 of 5

COPYRIGHT© 2011INTERNATIONAL TRUCK AND ENGINE CORP.

https://truckmanualshub.com/

Figure 065Lv

WINDSHIELD WIPER INSTL; W/BAFFLE ASM

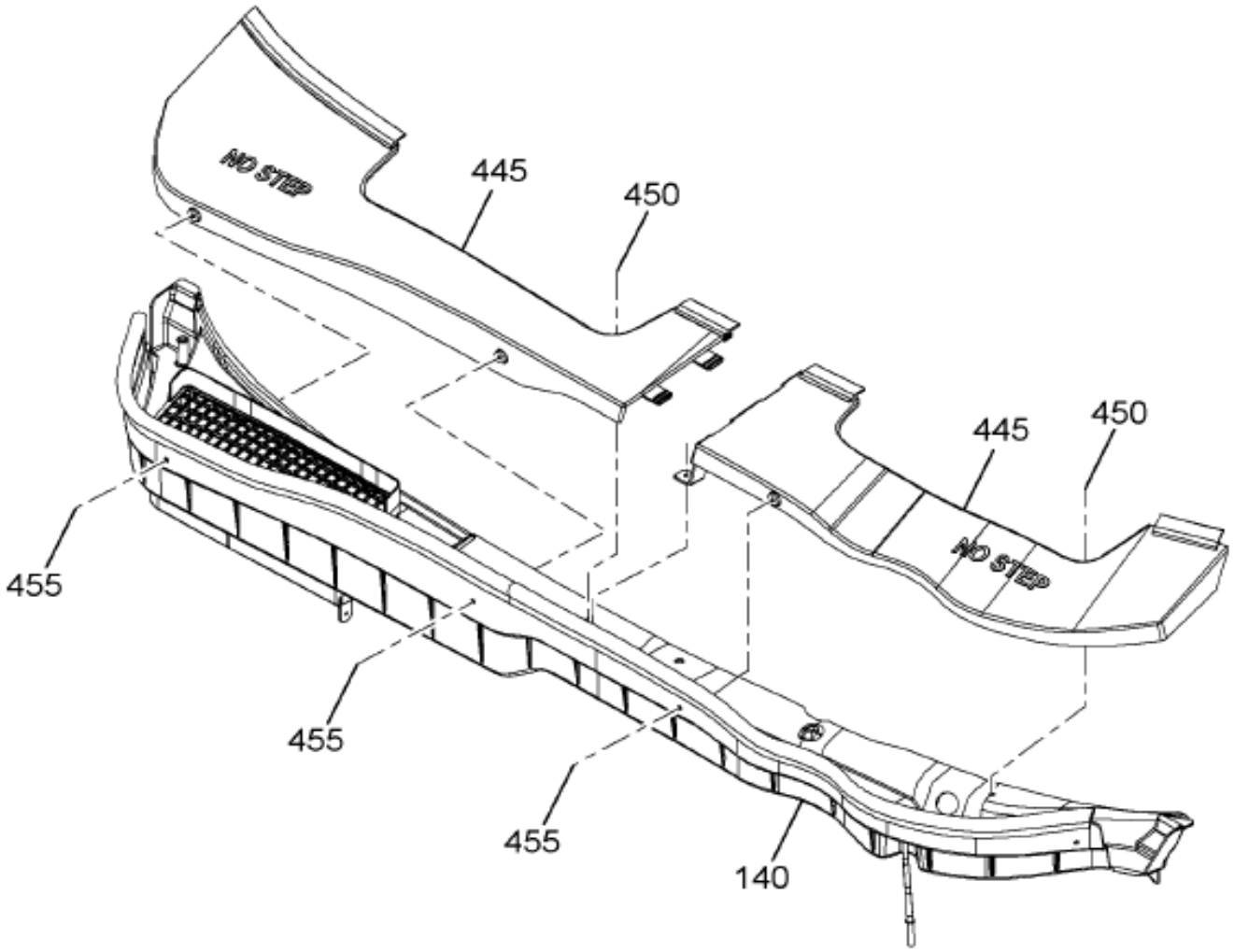

16-562-0121-01 C11

Figure 4 of 5

COPYRIGHT© 2011INTERNATIONAL TRUCK AND ENGINE CORP.

https://truckmanualshub.com/

Figure 065LV

WINDSHIELD WIPER INSTL; W/BAFFLE ASM

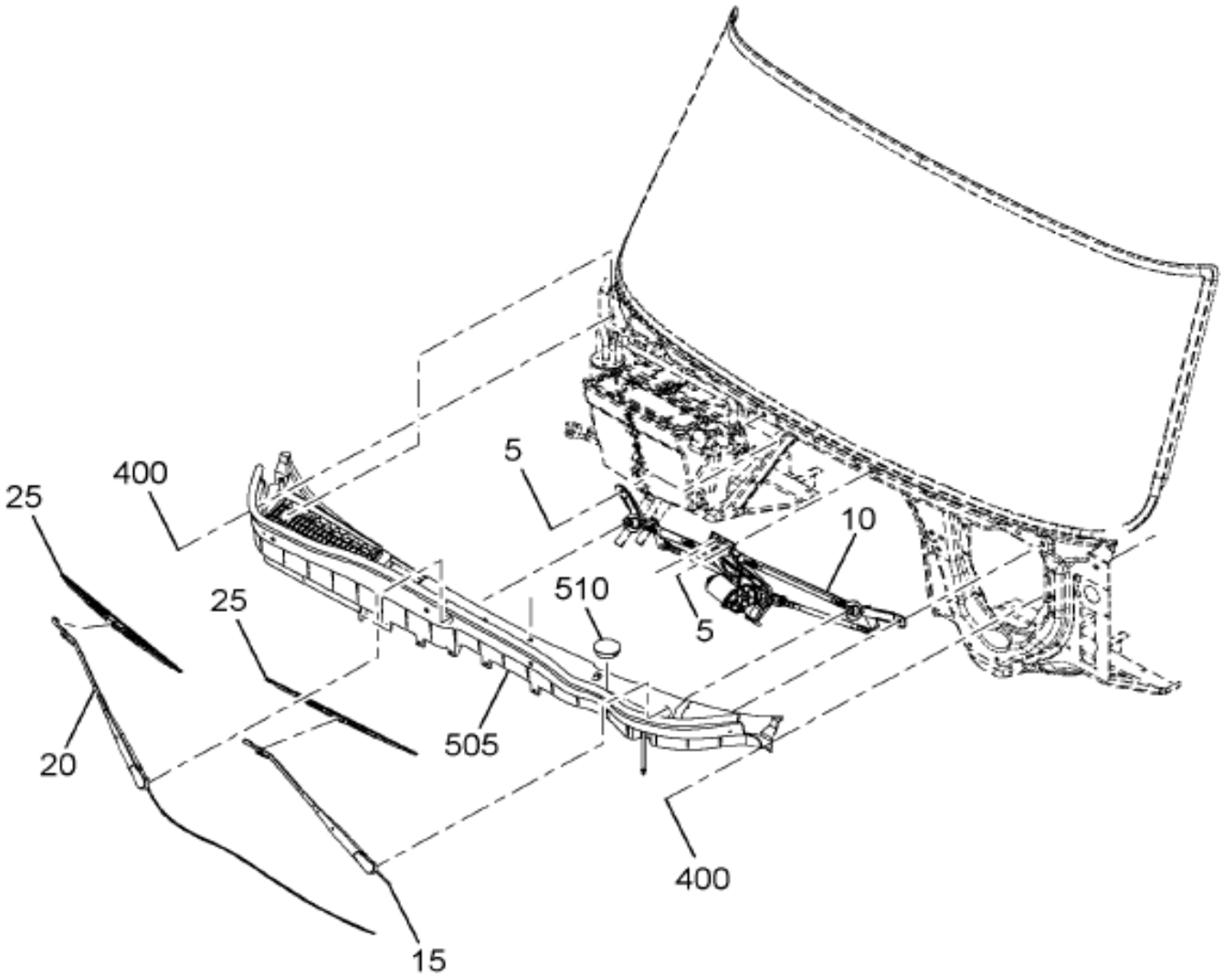

16-562-0153-01 C11

Item	Part No.	Qty	Description	Kit	Var	Figure
5	3535162C1	4	NUT,HEX METRIC PREV. TORQ*M8 X		06SLV	
10	3554255C98	1	WIPER,W/S ELECT, MODULE		0FVTZ	3554255C98
15	3535049C2	1	ARM,W/S WIPER LHD DRVR SIDE		0FVTZ	3535049C2
20	3535050C3	1	ARM,W/S WIPER PASS, LH DRIVE		0FVTZ	3535050C3
25	3535051C2	2	BLADE,W/S WIPER,LH DRIVE 560MM		0FVTZ	
140	3710649C91	1	BAFFLE,ASM MOTOR COVER, COWL		0MQW0	3710649C91

Grp 16

COPYRIGHT© 2011INTERNATIONAL TRUCK AND ENGINE CORP.

https://truckmanualshub.com/

Figure 065LV

WINDSHIELD WIPER INSTL; W/BAFFLE ASM

Item	Part No.	Qty	Description	Kit	Var	Figure
150	3535318C1	1	BOLT SEMS M6X1.0-25 CL9.8		0MQW0	
165	3510975C1	1	SCREW,TAPPING M4.8 X 1.59 -25M		0MQW0	
170	30592R1	1	NUT,SPEED STANDARD PART M6X1 U		0MQW0	
400	3534873C2	2	NUT,HEX*M8 X 1.25 W/CAPTURE WA		06SLV	

COPYRIGHT© 2011INTERNATIONAL TRUCK AND ENGINE CORP.

https://truckmanualshub.com/

Figure 3535049C2
ARM,W/S WIPER LHD DRVR SIDE

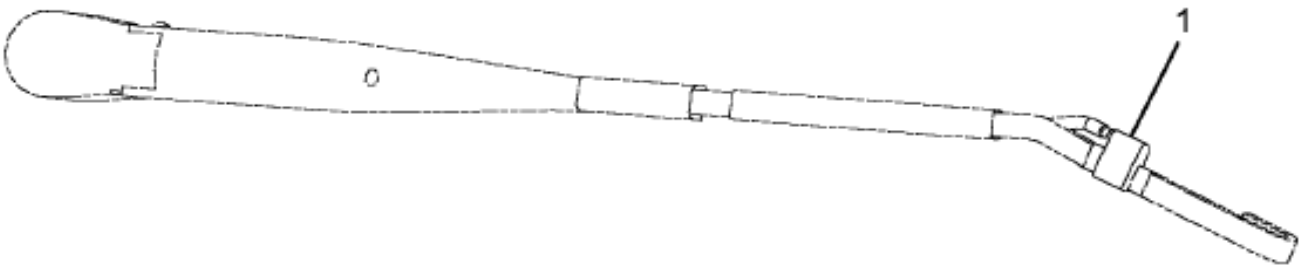

16-562-0070-01 G03

Grp 16

Item	Part No.	Qty	Description	Kit	Var	Figure
1	2504705C91	1	KIT,W/S WPR ARM NOZZLE			
880		RF	NOTE: ASM BELOW COMPRISED OF ABOVE COMPONENTS			
881	3535049C2	RF	ARM,W/S WIPER LHD DRVR SIDE			

COPYRIGHT© 2011INTERNATIONAL TRUCK AND ENGINE CORP.

https://truckmanualshub.com/

Figure 3535050C3
ARM,W/S WIPER PASS, LH DRIVE

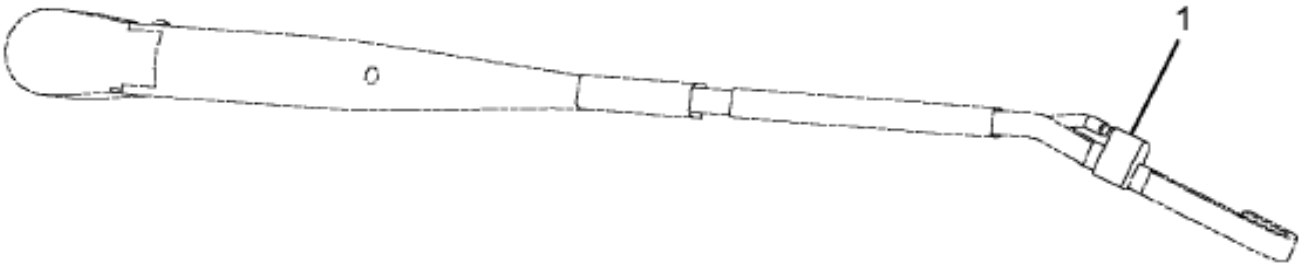

16-562-0070-01 G03

Item	Part No.	Qty	Description	Kit	Var	Figure
1	2504705C91	1	KIT,W/S WPR ARM NOZZLE			
880		RF	NOTE: ASM BELOW COMPRISED OF ABOVE COMPONENTS			
881	3535050C3	RF	ARM,W/S WIPER PASS, LH DRIVE			

COPYRIGHT© 2011INTERNATIONAL TRUCK AND ENGINE CORP.

https://truckmanualshub.com/

Figure 3710649C91

BAFFLE,ASM MOTOR COVER, COWL

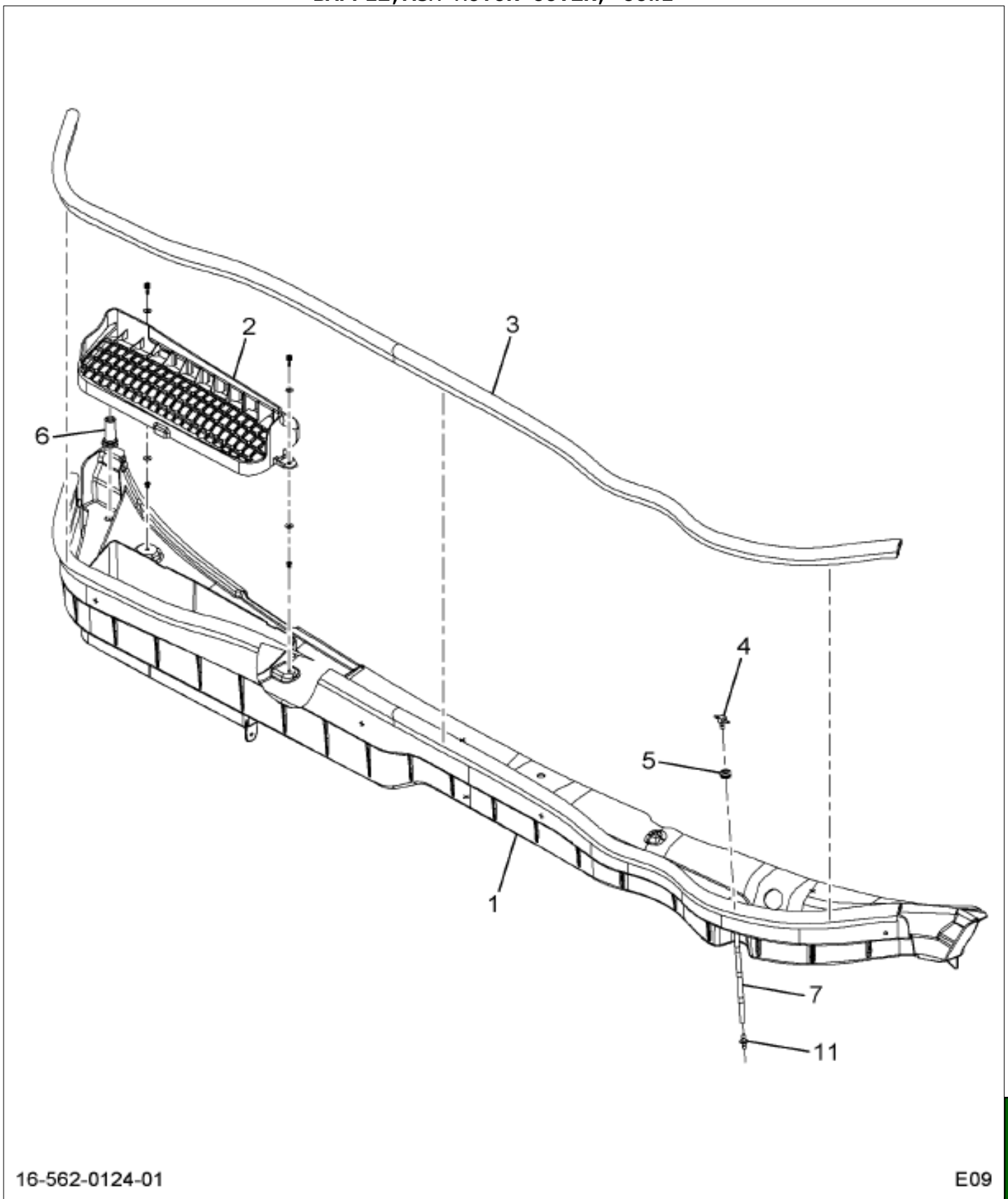

16-562-0124-01 E09

Item	Part No.	Qty	Description	Kit	Var	Figure
1	3710650C1	1	BAFFLE,ASM MOTOR COVER, COWL			
2	3710651C1	1	SCREEN,COWL VENT OR CAB,			
3	3576492C1	AR	SEAL,CAB BAFFLE COWL TRAY			
4	3552344C1	1	TEE,HOSE W/S WASHER			
5	3527130C1	1	GROMMET,W/WASHER HOSE TO COWL			
6	3555650C1	1	FERRULE,SEAL ANTENNA TO COWL			

Grp 16

COPYRIGHT© 2011INTERNATIONAL TRUCK AND ENGINE CORP.

https://truckmanualshub.com/

Figure 3710649C91

BAFFLE,ASM MOTOR COVER, COWL

Item	Part No.	Qty	Description	Kit	Var	Figure
7	990016C1	AR	HOSE,W/S WSHR .156 IDX.06 WALL			
11	3557100C1	1	CONNECTOR,WASHER HOSE 5/32			
880		RF	NOTE: ASM BELOW COMPRISED OF ABOVE COMPONENTS			
881	3710649C91	RF	BAFFLE,ASM MOTOR COVER, COWL			

COPYRIGHT© 2011INTERNATIONAL TRUCK AND ENGINE CORP.

https://truckmanualshub.com/

Figure 3554255C98

WIPER,W/S ELECT, MODULE

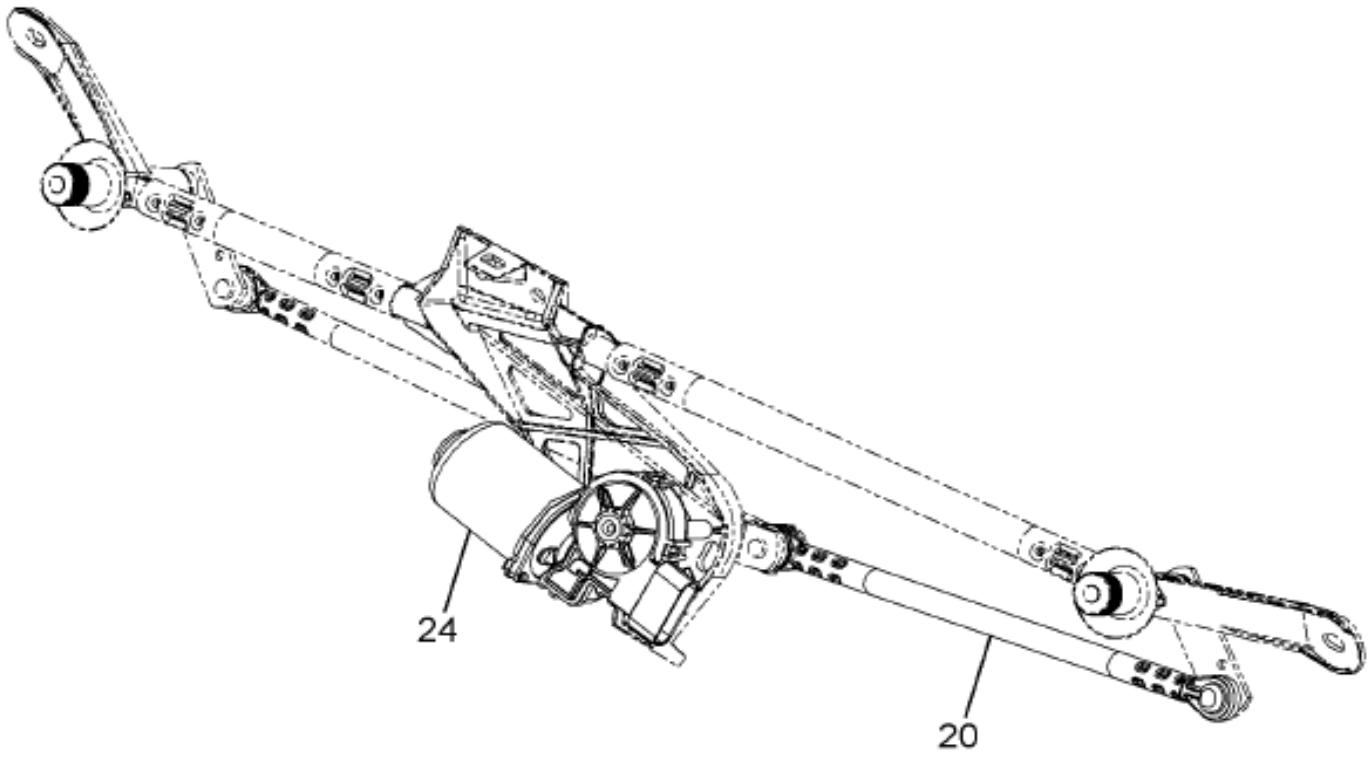

16-562-0109-01 D08

Item	Part No.	Qty	Description	Kit	Var	Figure
20	2588669C6	1	ARM,W/S REGULATOR ASSY			
24	2588670C1	1	MOTOR,W/S WIPER ELECT 12V			
880		RF	NOTE: ASM BELOW COMPRISED OF ABOVE COMPONENTS			
881	3554255C98	RF	WIPER,W/S ELECT, MODULE			

Grp 16

COPYRIGHT© 2011INTERNATIONAL TRUCK AND ENGINE CORP.

https://truckmanualshub.com/

Figure 0JDY4

WIRING INSTL; CAB, STD, EXTD, CREW CABS

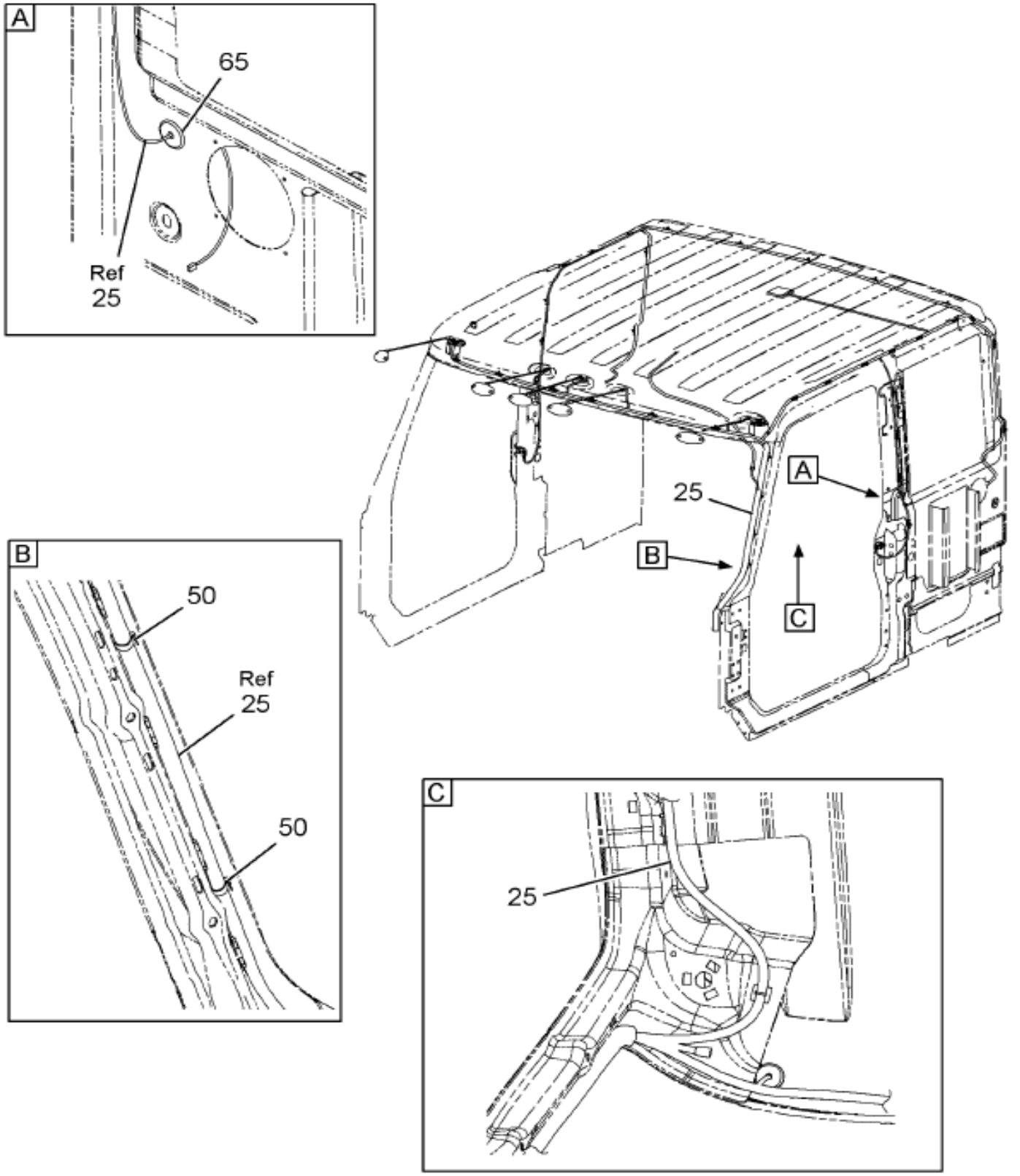

08-661-0021-01 L02

Item	Part No.	Qty	Description	Kit	Var	Figure
25	3582539C92	1	HARNESS, ROOF WIRING, STANDARD		0JDY5	
40	3556375C92	1	HARNESS, ROOF WIRING, AUXILIAR		0JDYF	

COPYRIGHT© 2011INTERNATIONAL TRUCK AND ENGINE CORP.

INTERNATIONAL
https://truckmanualshub.com/

Group 17
Wheels

COPYRIGHT© 2011INTERNATIONAL TRUCK AND ENGINE CORP.

https://truckmanualshub.com/

Figure 0KTJM

FLUID; RR AXLE,F-200,WHEEL END,BOG

Item	Part No.	Qty	Description	Kit	Var	Figure
5	2643454R1	4	FLUID,GEAR LUB 85W-140		0KTJM	

COPYRIGHT© 2011INTERNATIONAL TRUCK AND ENGINE CORP.

https://truckmanualshub.com/

Figure 0KNS2

FLUID; WHEEL/HUB,F-F16,SGL,FRTAXLE

Item	Part No.	Qty	Description	Kit	Var	Figure
5	2643454R1	3	FLUID,GEAR LUB 85W-140		0KNS8	

COPYRIGHT© 2011INTERNATIONAL TRUCK AND ENGINE CORP.

https://truckmanualshub.com/

Figure 0MVFK

HDWE, RR AXLE RIM MTG; M22X1.5 NUT, W/10-STUD HUB

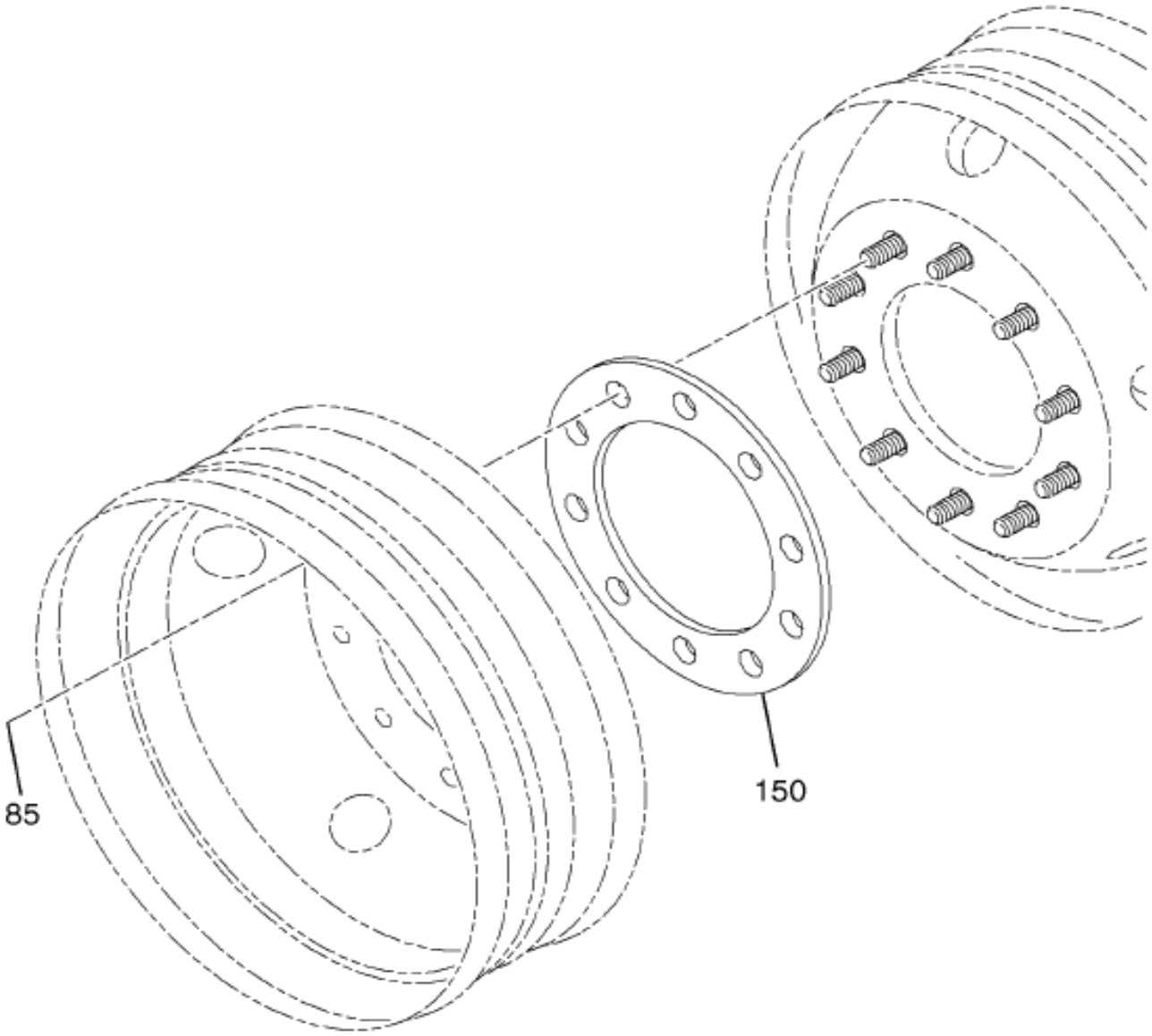

28-628-0009-01 M02

Item	Part No.	Qty	Description	Kit	Var	Figure
85	1649492C2	40	NUT,WHEEL HUB BOLT M22 X 1.5		0MVFK	

COPYRIGHT© 2011INTERNATIONAL TRUCK AND ENGINE CORP.

https://truckmanualshub.com/

Figure 0MTH4

HDWE; FRT AXLE RIM MTG,M22 - 1.5 MM NUT

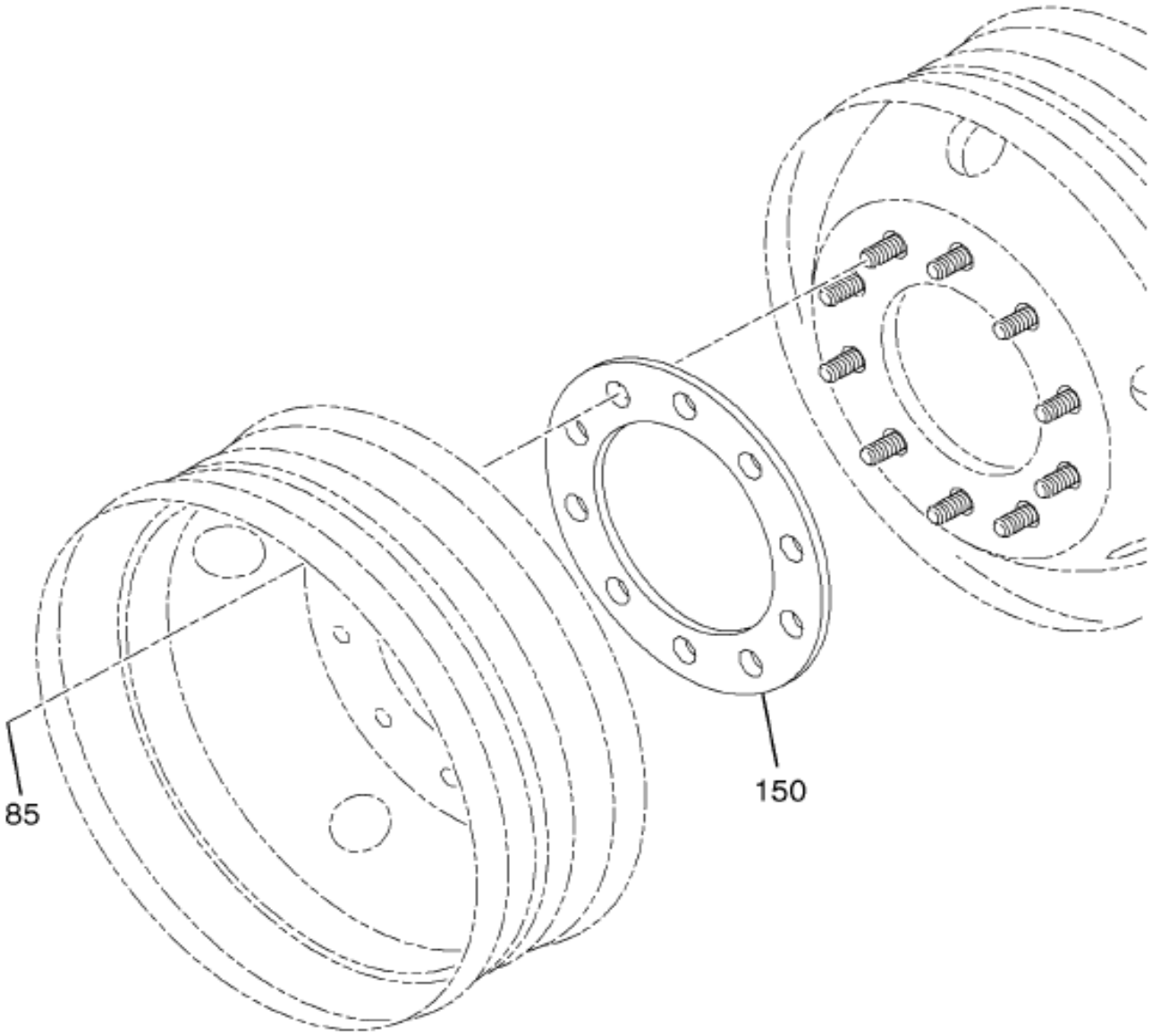

28-628-0009-01 M02

Item	Part No.	Qty	Description	Kit	Var	Figure
85	1649492C2	20	NUT,WHEEL HUB BOLT M22 X 1.5		0MTH4	

Grp 17

COPYRIGHT© 2011INTERNATIONAL TRUCK AND ENGINE CORP.

https://truckmanualshub.com/

Figure 0711Q

HUB CAP KIT; FRONT WHEEL

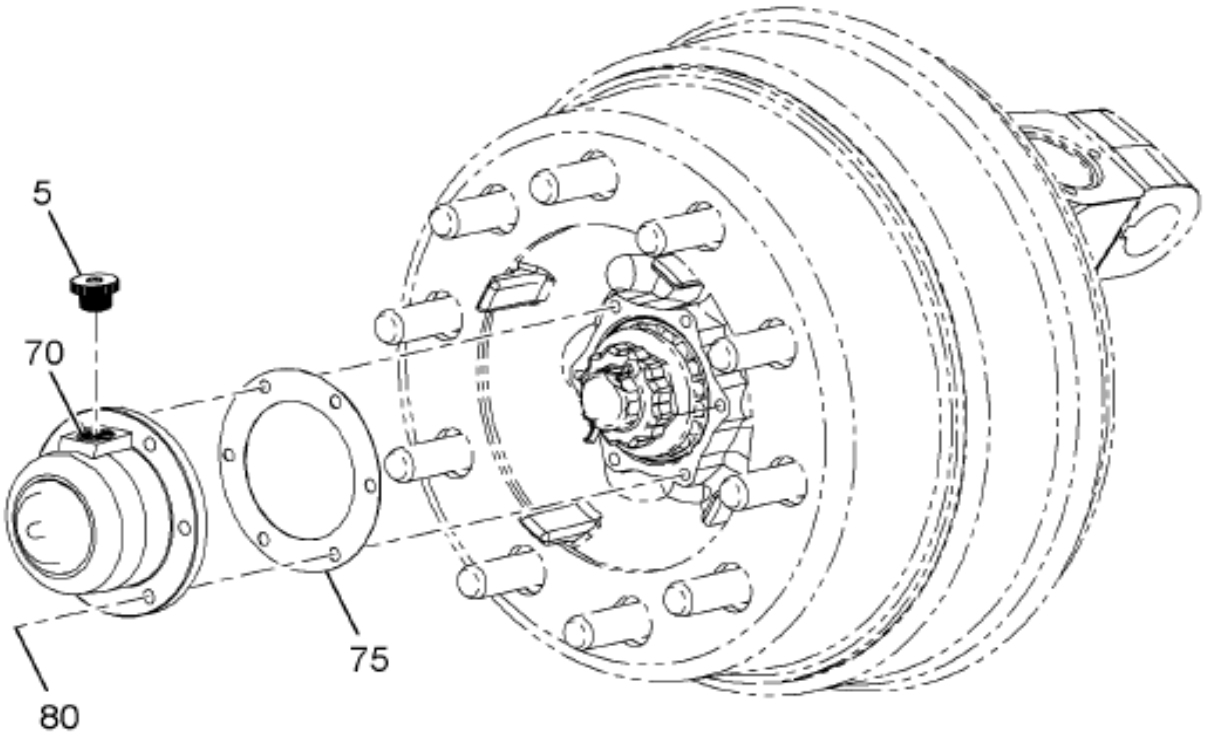

27-610-0004-01 J10

Item	Part No.	Qty	Description	Kit	Var	Figure
70	2016460C91	2	CAP HUB FRONT OIL		07T2M	2016460C91
70	2016461C91	2	PLUG,SPECIAL HUB CAP FILL		07T2M	
75	388249C1	2	GASKET,HUB CAP		07T2N	
80	2011115C1	12	BOLT SEMS 5/16-18X1.00		07T2P	

COPYRIGHT© 2011INTERNATIONAL TRUCK AND ENGINE CORP.

https://truckmanualshub.com/

Figure 2016460C91
CAP HUB FRONT OIL

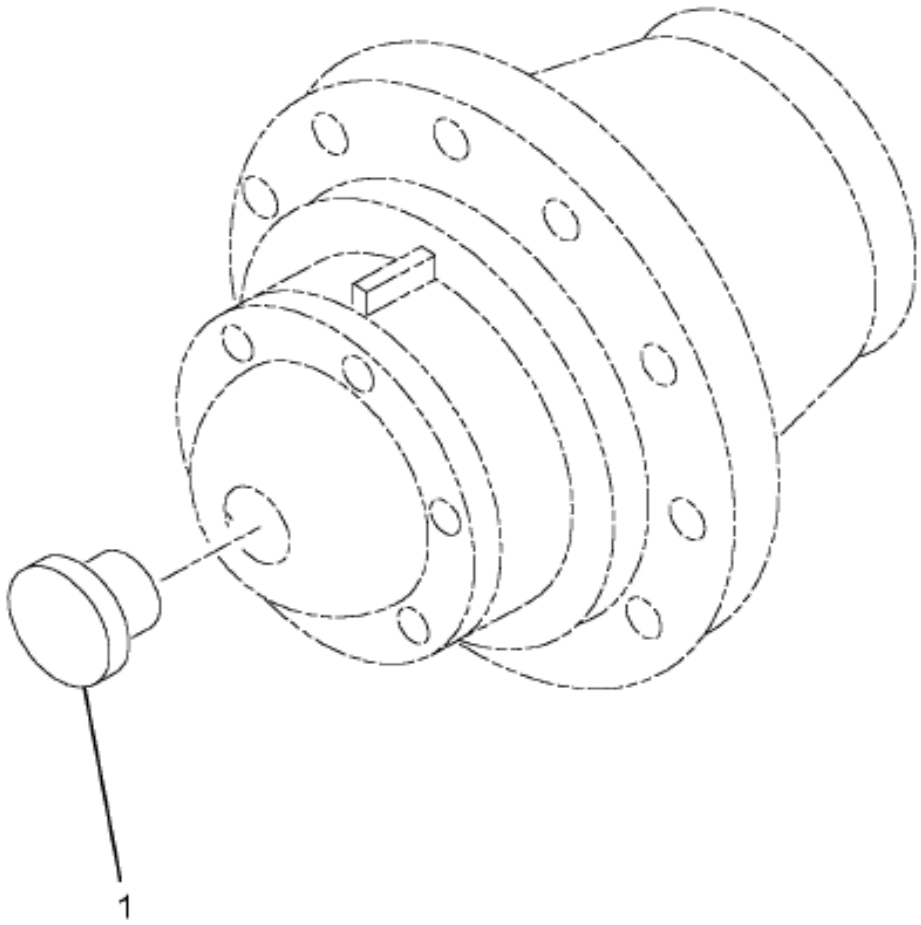

27-610-0001-00 K03

Item	Part No.	Qty	Description	Kit	Var	Figure
1	2016461C91	1	PLUG,SPECIAL HUB CAP FILL			
1	2016462C1	1	PLUG,SPECIAL HUB CAP VENT			
880		RF	NOTE: ASM BELOW COMPRISED OF ABOVE COMPONENTS			
881	2016460C91	RF	CAP HUB FRONT OIL			

Grp 17

COPYRIGHT© 2011INTERNATIONAL TRUCK AND ENGINE CORP.

https://truckmanualshub.com/

Figure 06LYK

RIM, FRT AXLE; DISC WHEEL 1-PC

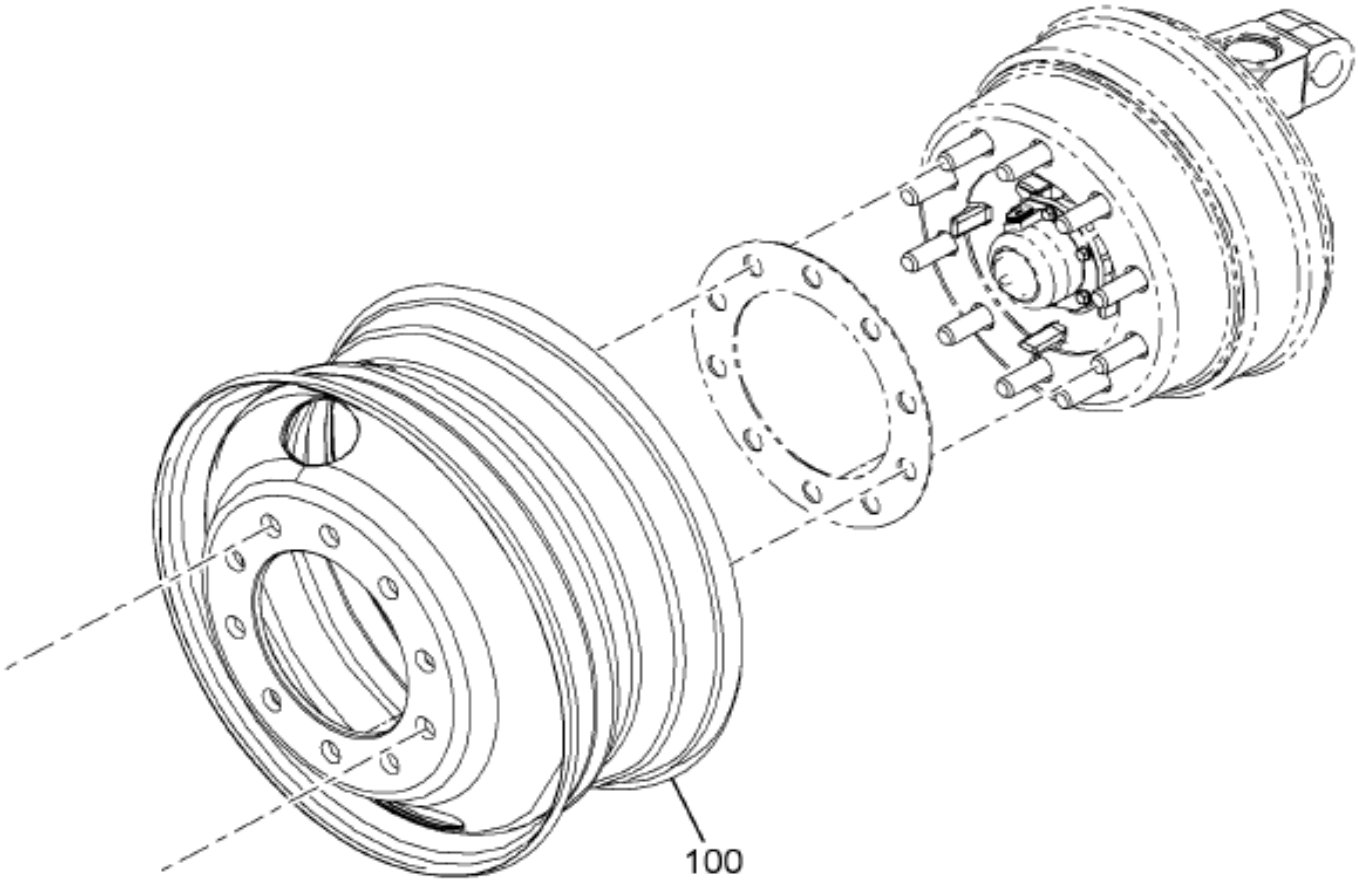

27-604-0006-01 E10

Item	Part No.	Qty	Description	Kit	Var	Figure
100	3664158C2	2	WHEEL,DISC, 22.5X9.00DC, 285 S		0PZFS	

COPYRIGHT© 2011INTERNATIONAL TRUCK AND ENGINE CORP.

https://truckmanualshub.com/

Figure 06M11

RIM; RR AXLE, DISC WHEEL, 1-PC

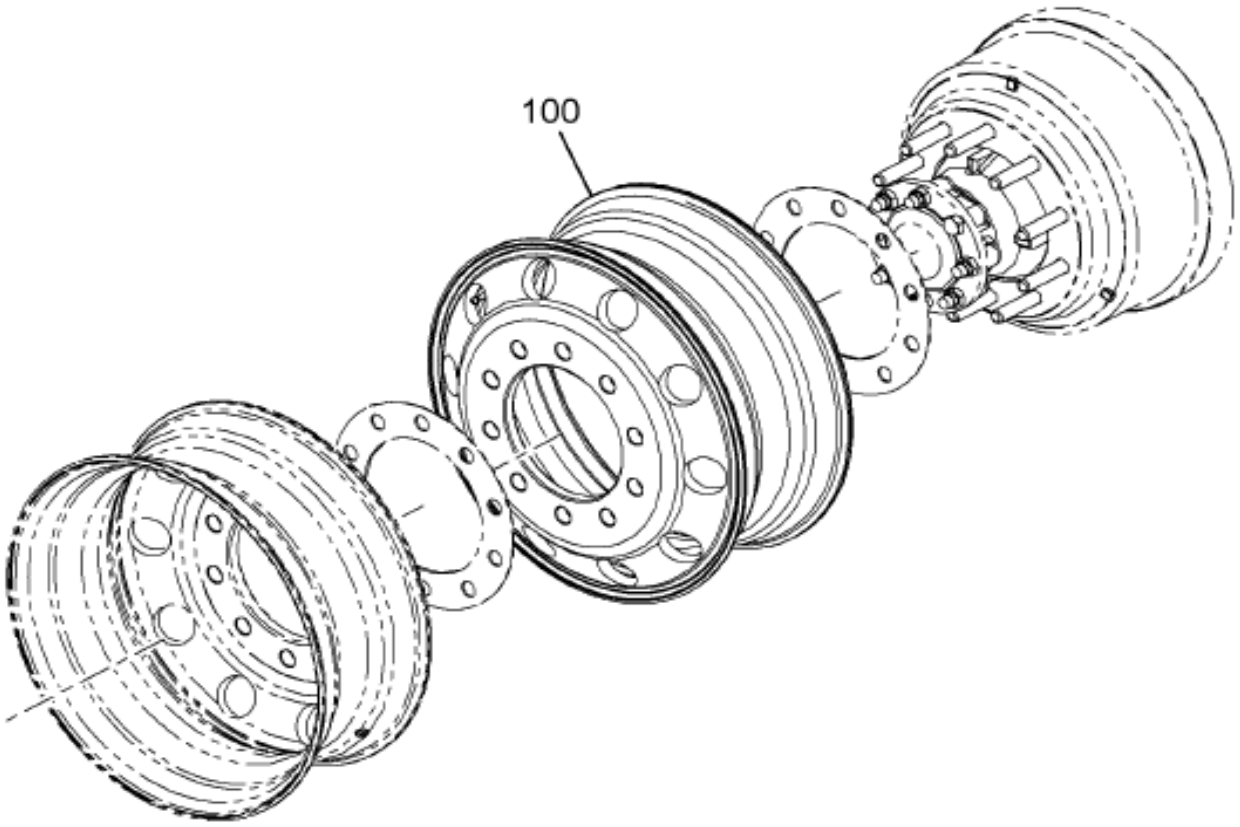

28-607-0007-GA G10

Item	Part No.	Qty	Description	Kit	Var	Figure
100	3527746C2	8	WHEEL,DISC, 22.5X8.25DC, 285 S		07Z7D	3527746C2

Grp 17

COPYRIGHT© 2011INTERNATIONAL TRUCK AND ENGINE CORP.

https://truckmanualshub.com/

Figure 3527746C2

WHEEL,DISC, 22.5X8.25DC, 285 S

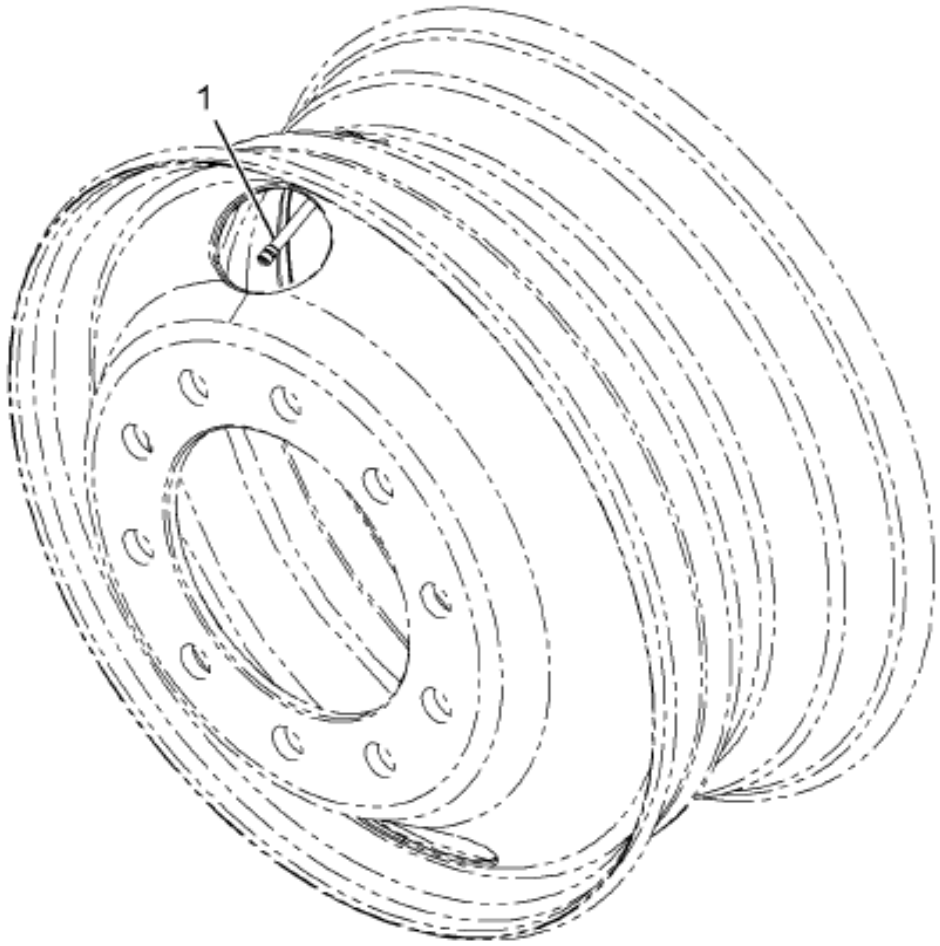

28-607-0049-01 L09

Item	Part No.	Qty	Description	Kit	Var	Figure
1	3000139C91	1	VALVE,ASSY TIRE			
880		RF	NOTE: ASM BELOW COMPRISED OF ABOVE COMPONENTS			
881	3527746C2	RF	WHEEL,DISC, 22.5X8.25DC, 285 S			

COPYRIGHT© 2011INTERNATIONAL TRUCK AND ENGINE CORP.

https://truckmanualshub.com/

Figure 06LVQ

RR WHEEL HUB ASM; DISC

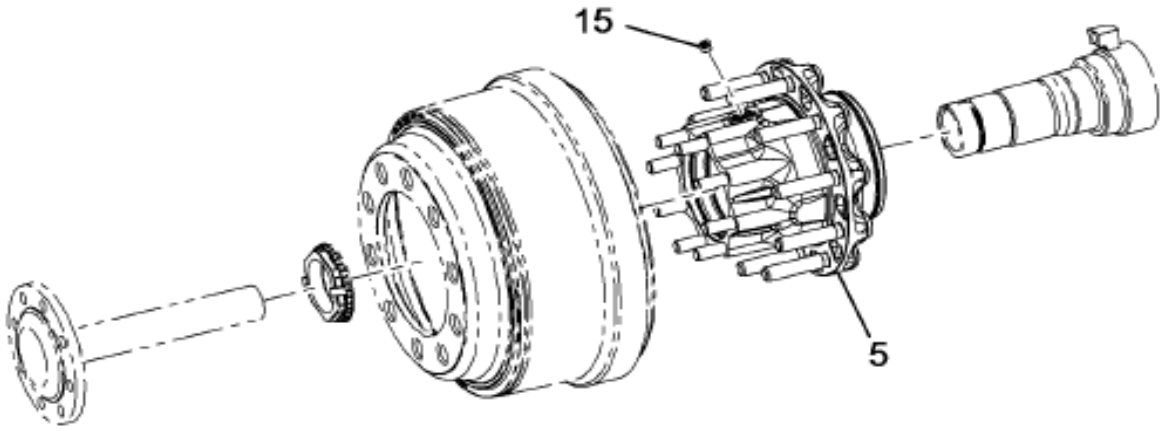

28-606-0029-01 J11

Item	Part No.	Qty	Description	Kit	Var	Figure
5	2014885C93	4	HUB,REAR WHEEL W/DRUM*CAST		0FY72	2014885C93

Grp 17

COPYRIGHT© 2011INTERNATIONAL TRUCK AND ENGINE CORP.

https://truckmanualshub.com/

Figure 2014865C93

HUB,REAR WHEEL W/DRUM*CAST

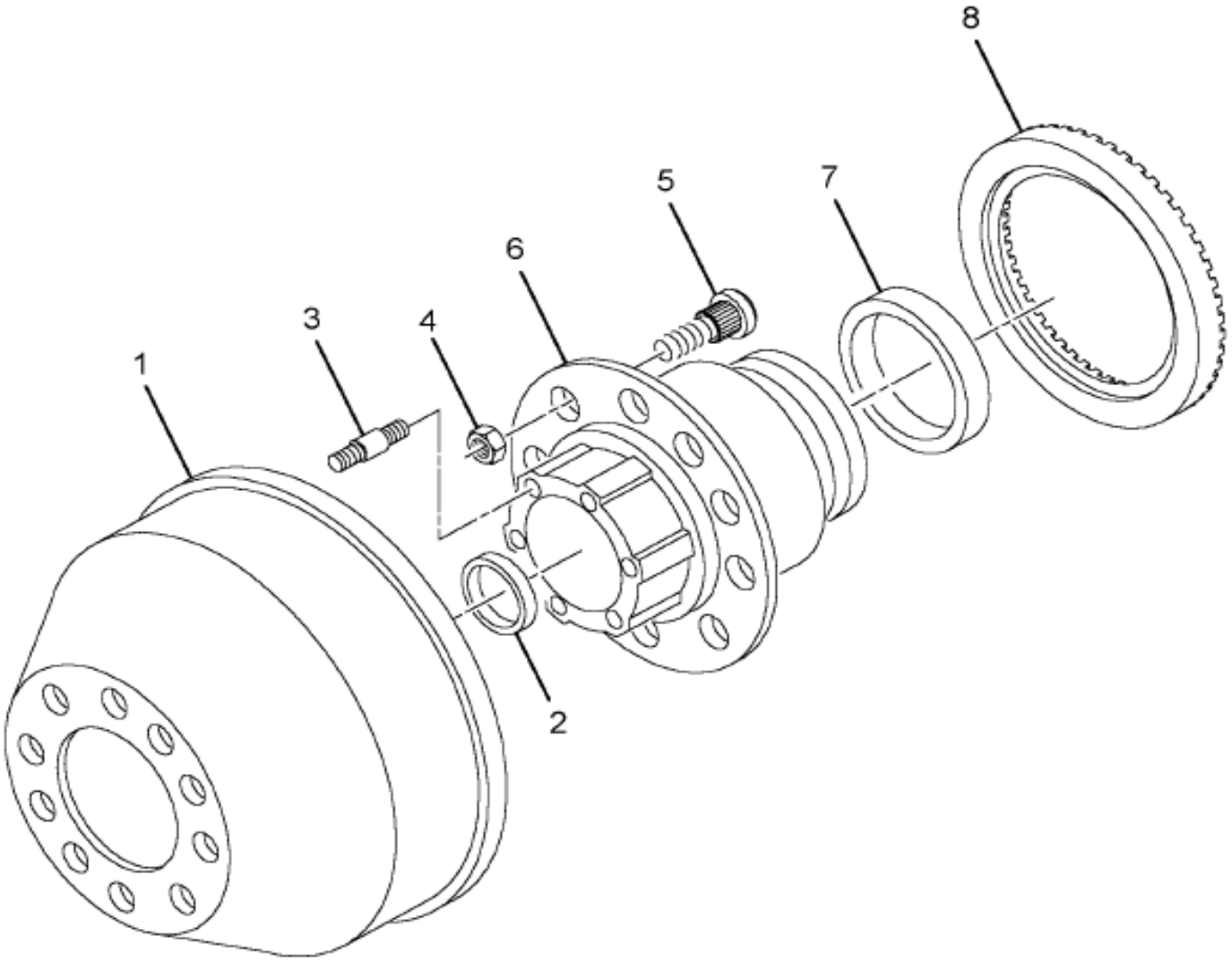

28-606-0042-01 K03

Item	Part No.	Qty	Description	Kit	Var	Figure
1	ZBR3600AX	1	DRUM-BRAKE 16.5X7 BAL 1PC			
2	TM572	1	BEARING,CUP			
3	588760C1	7	STUD DRIVE			
4		RF	RETAINING NUT			
5	2007175C2	10	BOLT,WHL HUB RHD M22 X 3.5"LG			
6	2586994C91	1	HUB,REAR WHL W/CUPS & STUDS			

COPYRIGHT© 2011INTERNATIONAL TRUCK AND ENGINE CORP.

https://truckmanualshub.com/

Figure 2014885C93

HUB,REAR WHEEL W/DRUM*CAST

Item	Part No.	Qty	Description	Kit	Var	Figure
7	TM592A	1	BEARING,CUP			
8	3585986C1	1	RING,BRAKE EXCITER*STAMPED			
800		RF	NOTE: THE FOLLOWING PARTS ARE NON-ILLUSTRATED			
801	2017187C1	1	BOLT,AXLE SHAFT FLG*3/4NC-2.0			
880		RF	NOTE: ASM BELOW COMPRISED OF ABOVE COMPONENTS			
881	2014885C93	RF	HUB,REAR WHEEL W/DRUM*CAST			

Grp 17

COPYRIGHT© 2011INTERNATIONAL TRUCK AND ENGINE CORP.

https://truckmanualshub.com/

Figure 06M13

SEAL & BRGS; WHEELS,RR AXLE

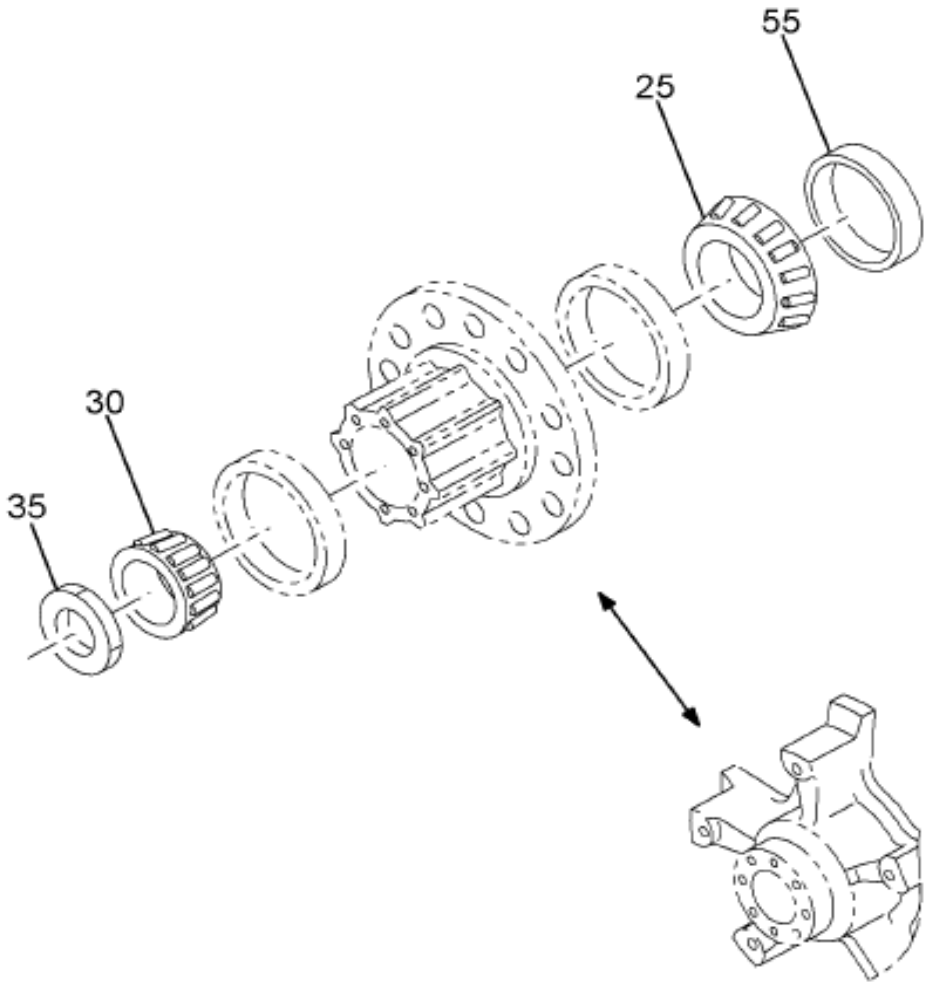

28-612-0004-01 F09

Item	Part No.	Qty	Description	Kit	Var	Figure
25	3628347C91	4	BEARING,CONE/ROLLERS THRU-HARD		06MG7	
30	3628358C91	4	BEARING,CONE/ROLLERS THRU-HARD		06MG7	
35	2032055C1	4	NUT,RR WHL BRG ADJ (AXILOK)		06MGC	
55	775698C91	4	SEAL,OIL REAR WHEEL BRG INNER		06MGD	

COPYRIGHT© 2011INTERNATIONAL TRUCK AND ENGINE CORP.

https://truckmanualshub.com/

Figure 07SZV

SEALS & BEARINGS; WHEELS, FRONT AXLE

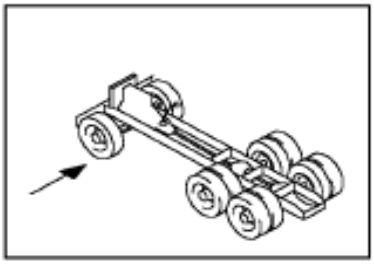

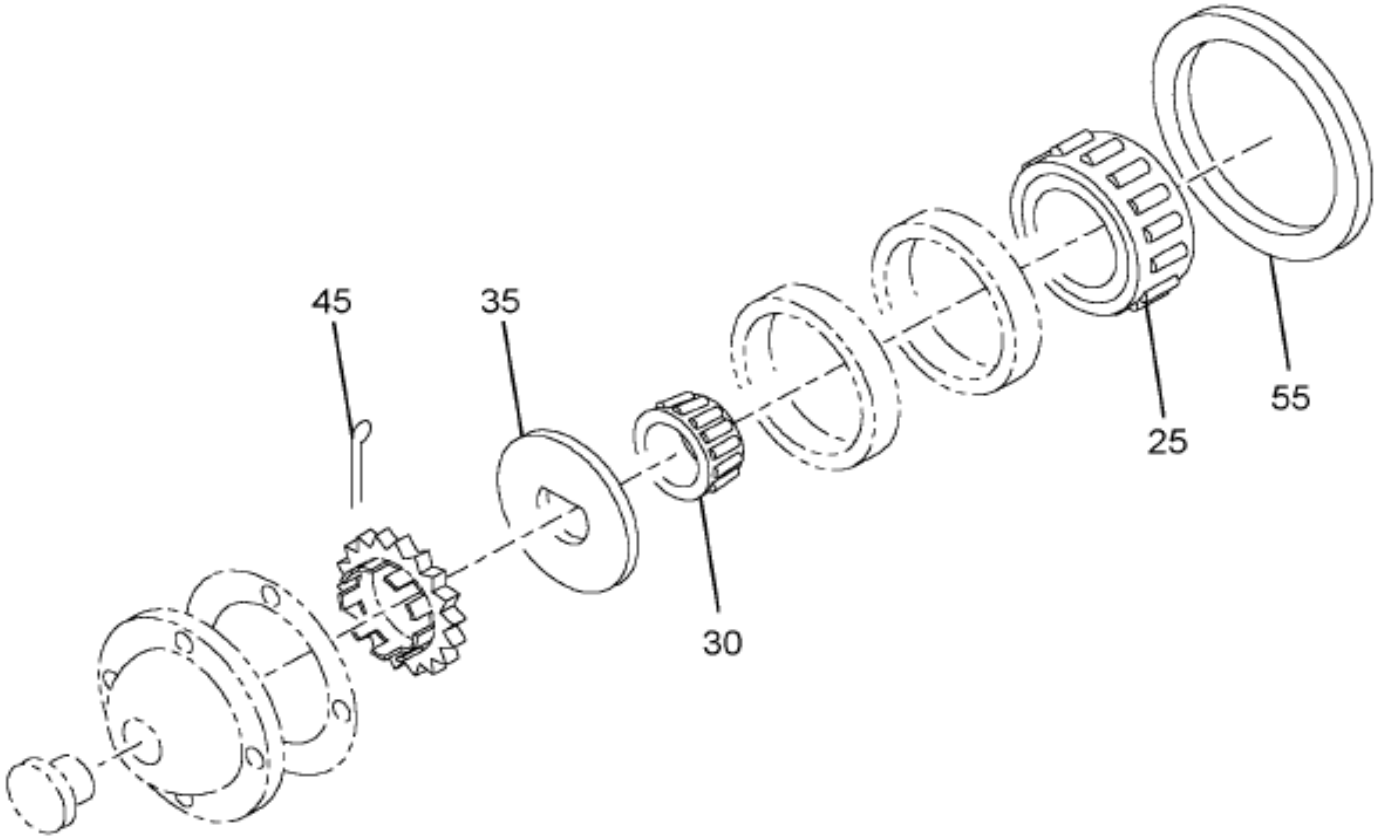

27-609-0010-01 A04

Item	Part No.	Qty	Description	Kit	Var	Figure
25	3628354C91	2	BEARING,CONE/ROLLERS THRU-HARD		081SJ	
30	3628412C91	2	BEARING,CONE/ROLLERS THRU-HARD		081SJ	
45	1690303C1	2	PIN,COTTER 1/4 X 3		081SJ	
55	794408C91	2	SEAL,ASSY OIL FRT WHL		07SZW	

Grp 17

COPYRIGHT© 2011INTERNATIONAL TRUCK AND ENGINE CORP.

https://truckmanualshub.com/

Figure 0HQ8S

SPARE WHEEL ASM; DISC, 22.5 X 9.00DC STEEL

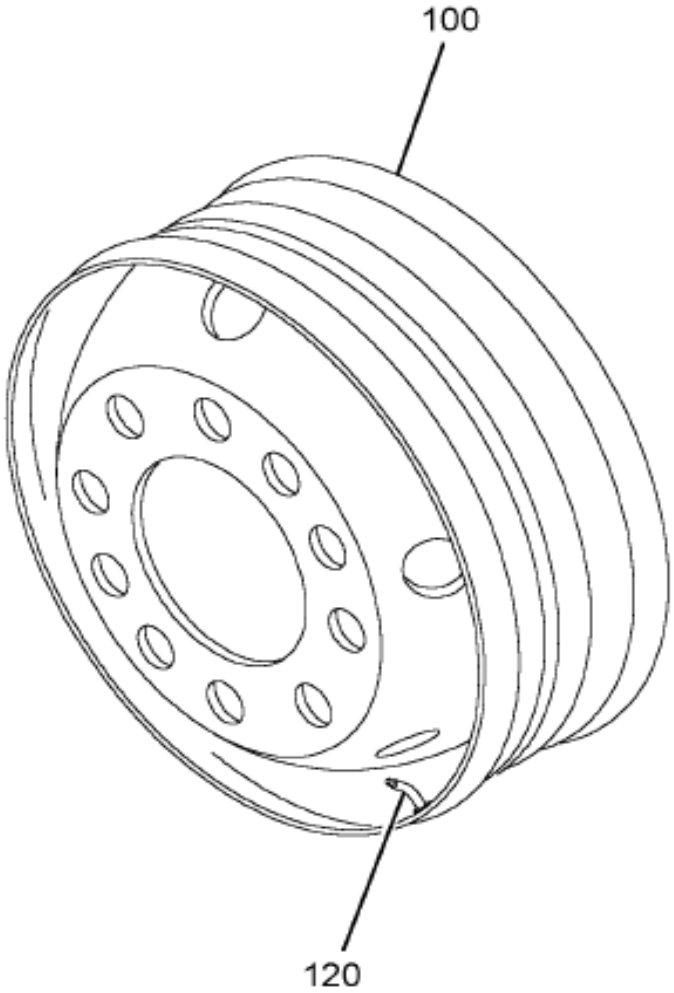

25-614-0001-AA G04

Item	Part No.	Qty	Description	Kit	Var	Figure
100	3664158C2	1	WHEEL,DISC, 22.5X9.00DC, 285 S		0HQ8S	
120	3500941C93	1	VALVE,TUBELESS TIRE W/CAP		0HQ8S	3500941C93

COPYRIGHT© 2011INTERNATIONAL TRUCK AND ENGINE CORP.

https://truckmanualshub.com/

Figure 3500941C93
VALVE,TUBELESS TIRE W/CAP

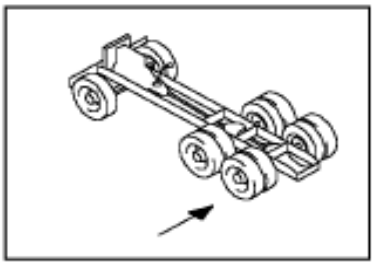

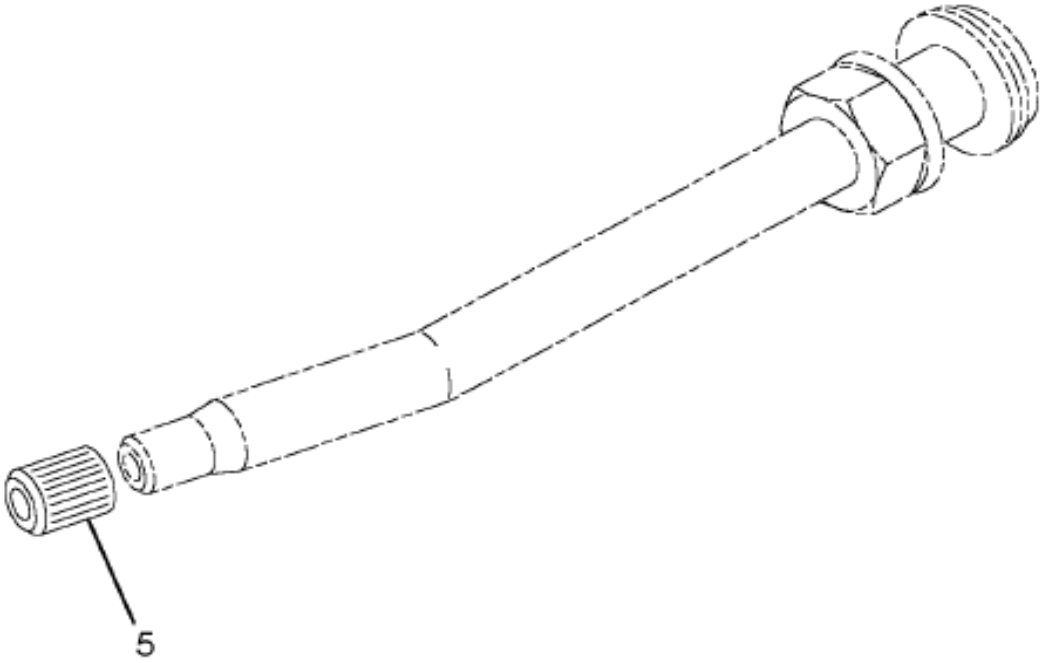

27-613-0001-01 A03

Item	Part No.	Qty	Description	Kit	Var	Figure
5	140255H	1	CAP,VALVE TIRE			
880		RF	NOTE: ASM BELOW COMPRISED OF ABOVE COMPONENTS			
881	3500941C93	RF	VALVE,TUBELESS TIRE W/CAP			

Grp 17

COPYRIGHT© 2011INTERNATIONAL TRUCK AND ENGINE CORP.

https://truckmanualshub.com/

Figure 0P6ML

TIRE VALVE & CAP; REAR WHEEL, TR572

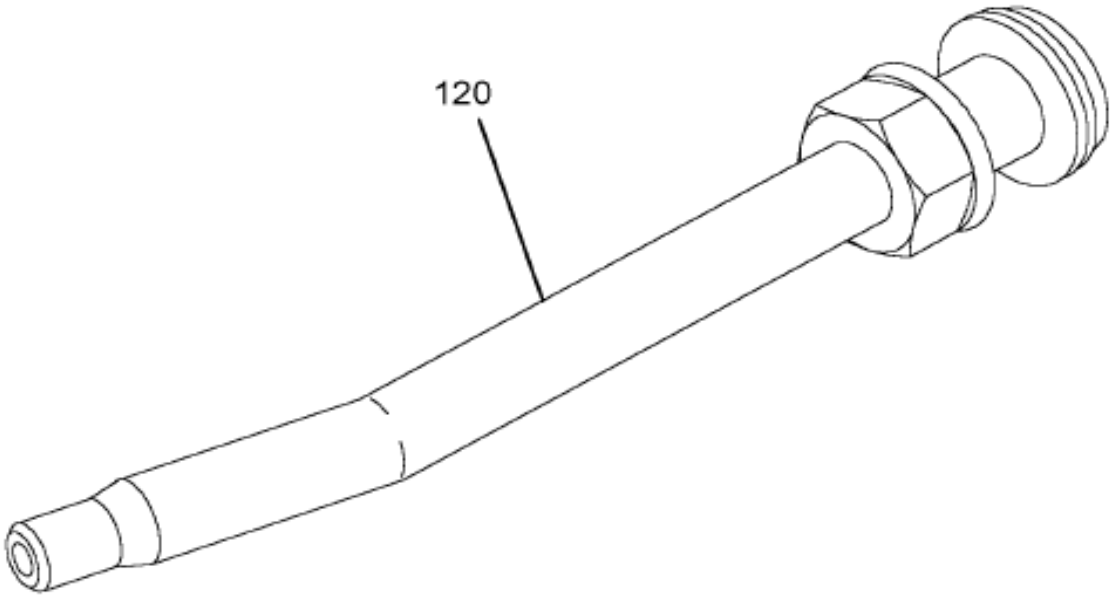

28-613-0008-01 G04

Item	Part No.	Qty	Description	Kit	Var	Figure
120	158120R93	8	VALVE,TUBELESS TIRE W/CAP 3.75		0P6ML	158120R93

COPYRIGHT© 2011INTERNATIONAL TRUCK AND ENGINE CORP.

https://truckmanualshub.com/

Figure 158120R93

VALVE,TUBELESS TIRE W/CAP 3.75

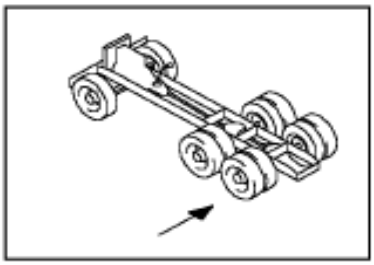

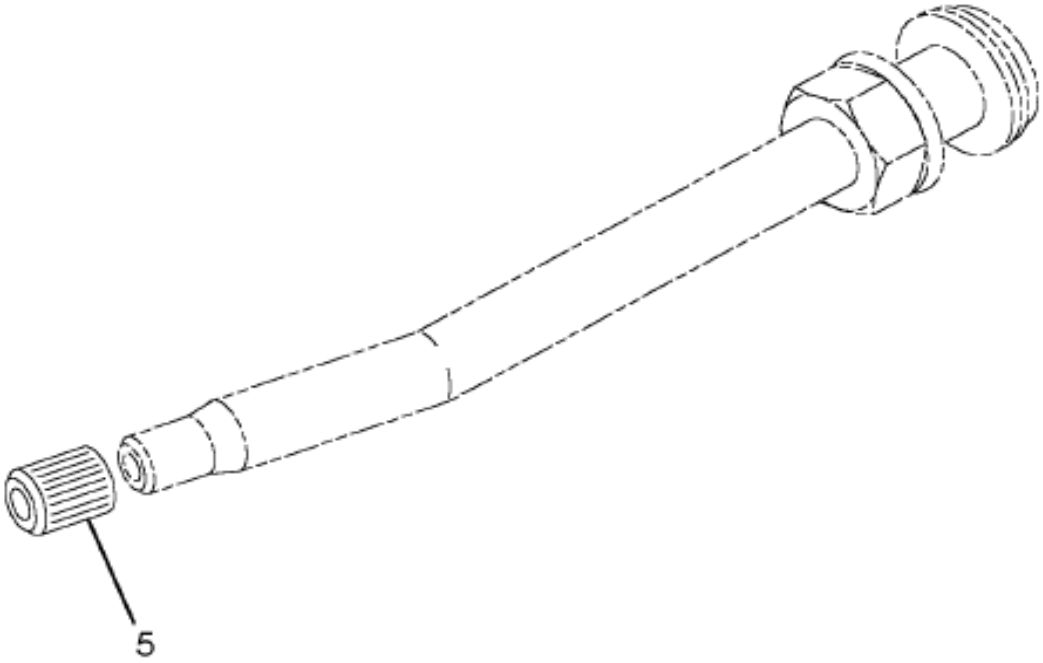

27-613-0001-01 A03

Grp 17

Item	Part No.	Qty	Description	Kit	Var	Figure
5	140255H	1	CAP,VALVE TIRE			
880		RF	NOTE: ASM BELOW COMPRISED OF ABOVE COMPONENTS			
881	158120R93	RF	VALVE,TUBELESS TIRE W/CAP 3.75			

COPYRIGHT© 2011INTERNATIONAL TRUCK AND ENGINE CORP.

https://truckmanualshub.com/

Figure 0S0RW

TIRE VALVE ASM; W/CAP, TR573-E17

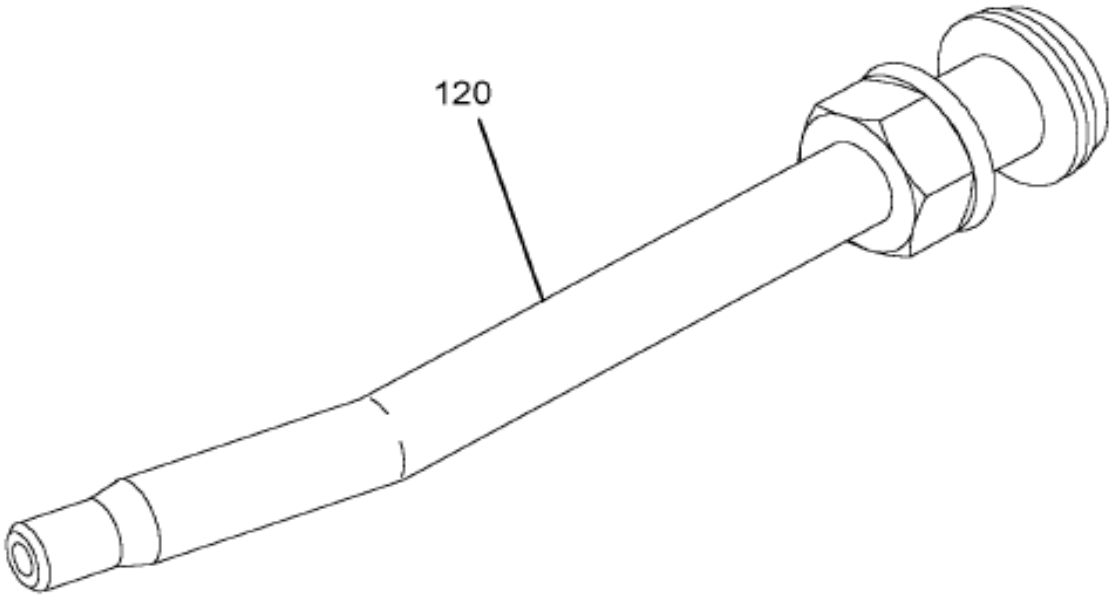

28-613-0008-01 G04

Item	Part No.	Qty	Description	Kit	Var	Figure
120	3500941C93	2	VALVE,TUBELESS TIRE W/CAP		0S0RW	3500941C93

COPYRIGHT© 2011INTERNATIONAL TRUCK AND ENGINE CORP.

https://truckmanualshub.com/

Figure 3500941C93
VALVE,TUBELESS TIRE W/CAP

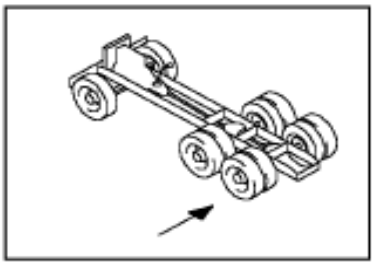

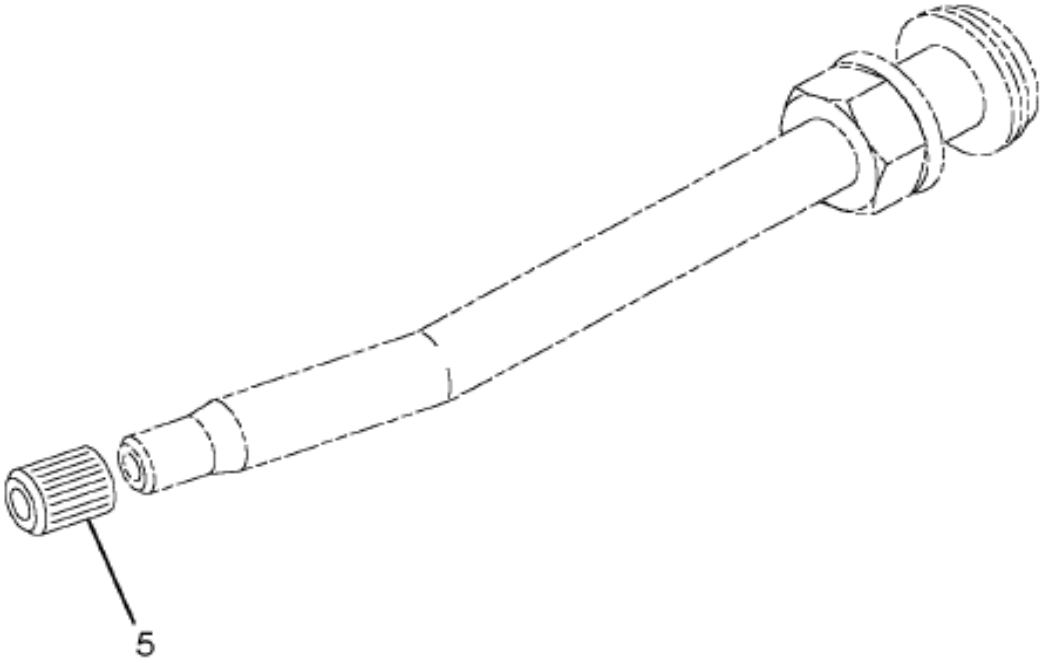

27-613-0001-01 A03

Item	Part No.	Qty	Description	Kit	Var	Figure
5	140255H	1	CAP,VALVE TIRE			
880		RF	NOTE: ASM BELOW COMPRISED OF ABOVE COMPONENTS			
881	3500941C93	RF	VALVE,TUBELESS TIRE W/CAP			

Grp 17

COPYRIGHT© 2011INTERNATIONAL TRUCK AND ENGINE CORP.

https://truckmanualshub.com/

Figure 0M9JF

TIRE; GOODYEAR, 12R22.5 UNISTEEL G

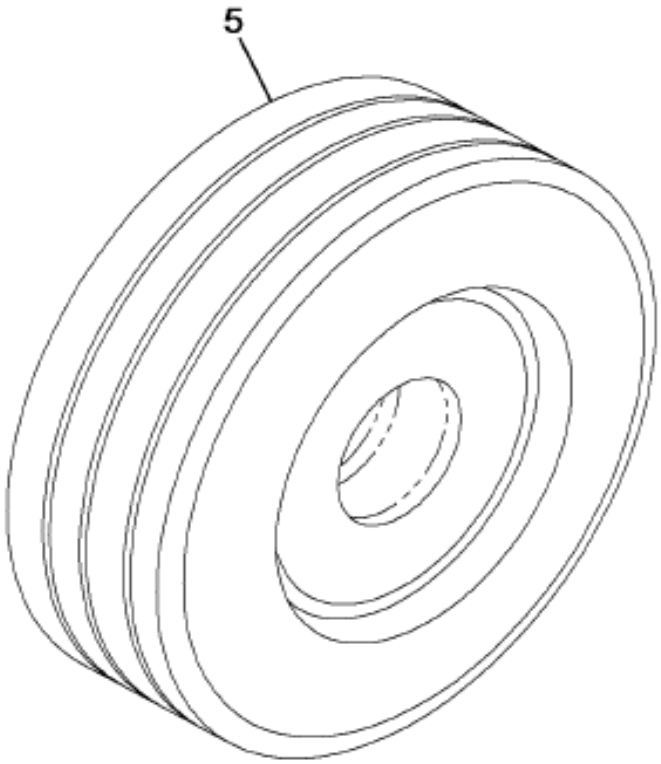

30-602-0002-AA L08

Item	Part No.	Qty	Description	Kit	Var	Figure
5	7382150162	1	TIRE,GOODYR. 12R22.5 UNISTL G		0M9JF	

COPYRIGHT© 2011INTERNATIONAL TRUCK AND ENGINE CORP.

https://truckmanualshub.com/

Figure 0N4JC

TIRE; GOODYEAR, 315/80R22.5 G287 MSA

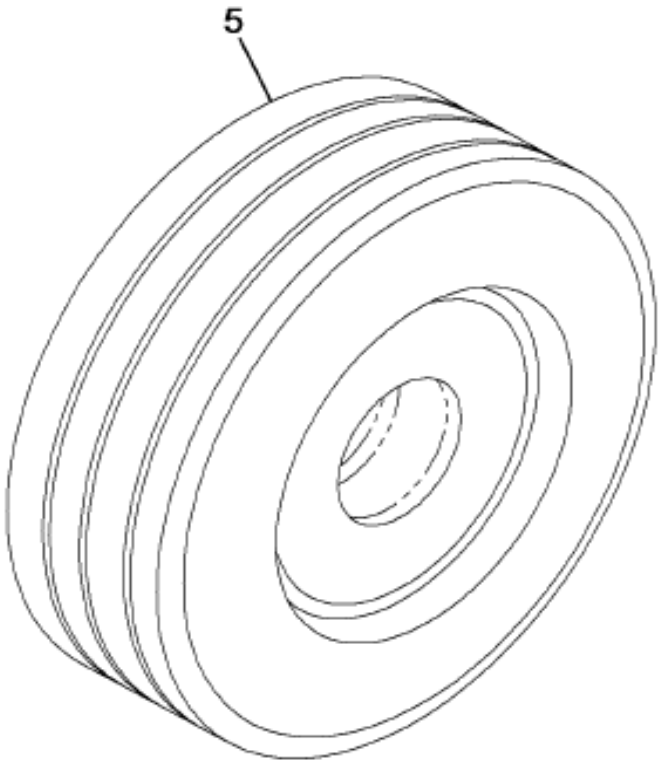

30-602-0002-AA L08

Item	Part No.	Qty	Description	Kit	Var	Figure
5	7772540125	1	TIRE		0N4JC	

Grp 17

COPYRIGHT© 2011INTERNATIONAL TRUCK AND ENGINE CORP.

https://truckmanualshub.com/

Figure 06LX1

WHEEL HUB ASM; FRONT, DISC, W/DRUM

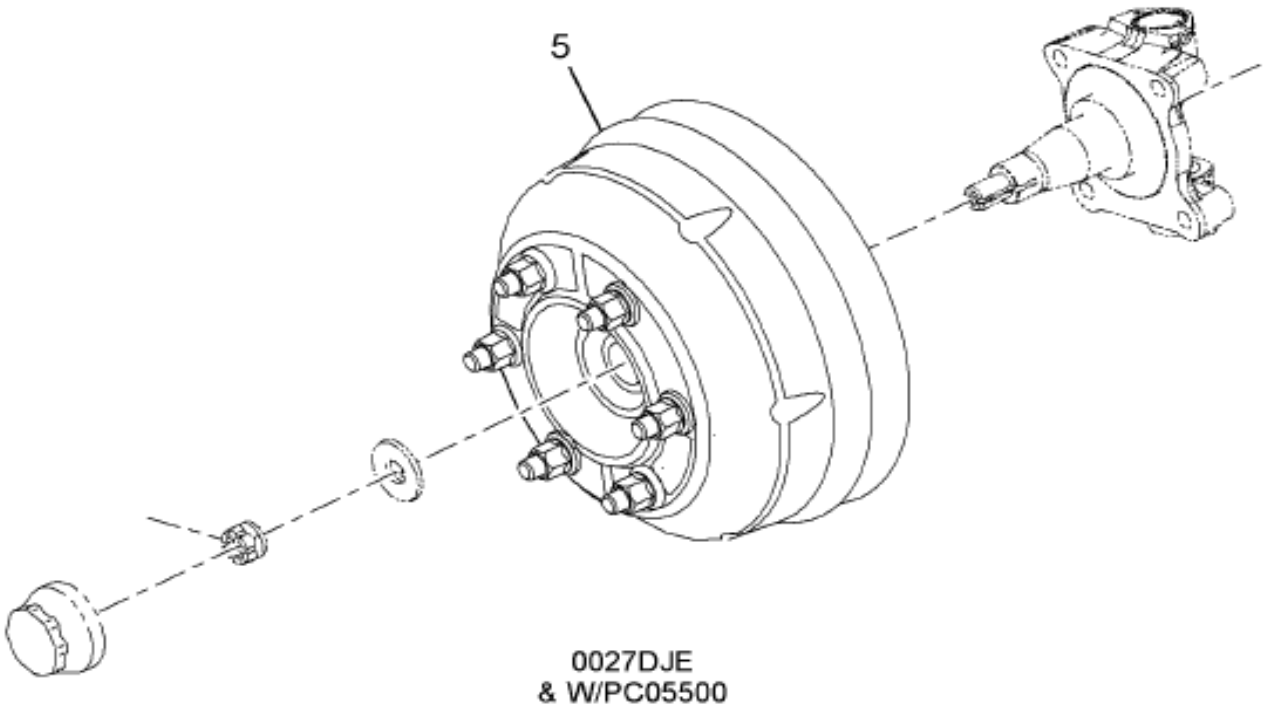

27-603-0045-01 H10

Item	Part No.	Qty	Description	Kit	Var	Figure
5	2035633C91	2	HUB,FRT WHEEL W/DRUM		07SY0	2035633C91

COPYRIGHT© 2011INTERNATIONAL TRUCK AND ENGINE CORP.

https://truckmanualshub.com/

Figure 2035951C91
HUB,FRT WHEEL W/DRUM

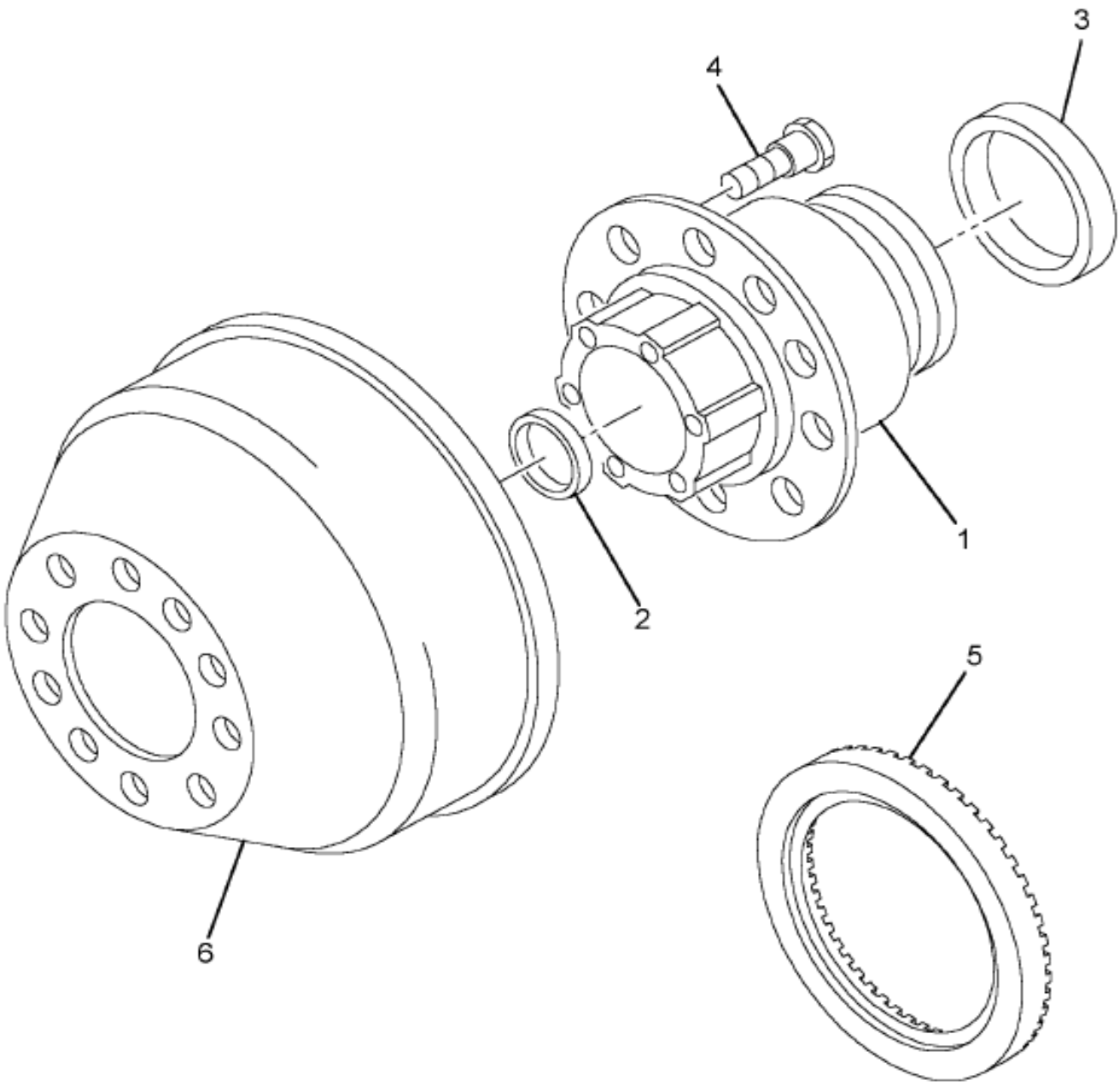

27-603-0022-00 L02

Item	Part No.	Qty	Description	Kit	Var	Figure
1	2035951C91	1	HUB,ASSY W/CUPS & STUDS			
1	2021555C1	1	HUB,FRT WHEEL L/DRUM			
2	FP552A	1	BEARING,CUP OUTER			
3	FP6420	1	BEARING,CUP INNER			
4	2010358C1	10	BOLT,DISC WHL M22 X 1.5			
5	2021556C1	1	RING,BK EXCITER			

Grp 17

COPYRIGHT© 2011INTERNATIONAL TRUCK AND ENGINE CORP.

https://truckmanualshub.com/

Figure 2035633C91

HUB,FRT WHEEL W/DRUM

Item	Part No.	Qty	Description	Kit	Var	Figure
6	2010238C1	1	DRUM,FRT WHEEL BRK 16.5X6			
880		RF	NOTE: ASM BELOW COMPRISED OF ABOVE COMPONENTS			
881	2035633C91	RF	HUB,FRT WHEEL W/DRUM			

COPYRIGHT© 2011INTERNATIONAL TRUCK AND ENGINE CORP.