https://truckmanualshub.com/

STRALIS

CIRCUIT DIAGRAMS (BC2)

IVECO

https://truckmanualshub.com/

"This document provides data, characteristics, instructions and methodology to perform repair interventions on the vehicle and its components.

Anyhow, this document is addressed to qualified and specialised personnel. Iveco commercial and assistance network personnel as well as all Iveco authorised points of assistance are specifically qualified and equipped to perform the repair interventions that are indicated in this document.

Before performing any intervention, check to have available the document relating to the vehicle model on which the intervention is being performed and also make sure that all accident prevention devices, such as, as a rough guide, goggles, helmet, gloves, shoes, as well as work tooling, lifting and transport tooling, etc., are available and efficient, and further make sure that the vehicle is put such a way that an intervention can be made in safety conditions.

Making interventions strictly observing the indications given here, as well as using specific tooling indicated, assures a correct repair intervention, execution timing observance and operators' safety.

Each repair intervention must be finalised to the recovery of functionality, efficiency and safety conditions that are provided by Iveco.
Each intervention, on the vehicle, that is finalised to a modification, alteration or else, which is not authorised by Iveco, involves the exclusion of any responsibility for Iveco, and, in particular, where the vehicle is covered by a guarantee, each such intervention involves an immediate lapse of the guarantee.

Responsibility for Iveco in repair intervention execution is excluded.

Iveco is available to provide all clarifications necessary to make interventions, as well as to provide indications in cases and situations not included in this document.

Data and information contained in this document could result not to be updated owing to modifications made by Iveco at any moment for technical or commercial reasons, or because of the need to adapt the vehicle to law requirements in different countries.

In the case of a difference between what contained here and what actually found on the vehicle, please contact Iveco network before making any intervention."

The data contained in this publication might fail to reflect the latest changes which the Manufacturer may introduce at any time, for technical or sales purposes, or to meet the requirements of local legislation.

Copy, even partial, of text and drawings is forbidden.

Publication Edited by:
IVECO S.p.A.
Customer Service
Lungo Stura Lazio, 15
10156 Torino (TO) - Italy

Print **603.93.746** - 1st Ed. 2007

Produced by:

SATIZ

B.U. TECHNICAL PUBLISHING
Iveco Technical Publications
Lungo Stura Lazio, 15
10156 Torino (TO) - Italy

https://truckmanualshub.com/

Contents

	Page
NEW FEATURES DUE TO THE INTRODUCTION OF BODY COMPUTER 2 (BC2)	3
CAN LINES	4
CAN LINE ASSEMBLY DRAWING	10
DIAGNOSIS OUTLET	11
OBD DIAGNOSIS CONNECTOR (BLUE)	12
RECEPTACLE CONNECTOR	15
REMOTE-CONTROL SWITCH / FUSE HOLDER CONTROL UNIT	20
SUPPLEMENTARY REMOTE SWITCHES	23
SUPPLEMENTARY FUSES (70000)	25
INSTRUMENT BOARD (AS)	27
CONTROLS ON THE CENTRAL BOARD (AS)	28
INSTRUMENT BOARD (AT/AD)	29
CONTROLS ON THE CENTRAL BOARD (AT/AD)	30
BODY COMPUTER 2 (BC2)	31
F.F.C. - R.F.C. (FRONT FRAME COMPUTER - REAR FRAME COMPUTER)	40
F.F.C. (SERVICES / ENGINE)	41
R.F.C.	44
D.D.M. / P.D.M.	47
D.D.M. / P.D.M.	48
P.D.M.	49
D.D.M.	50
B.M. (BED MODULE)	51
E.B.M. (EASY BED MODULE)	52
EDC (ECM) SYSTEMS	54
VCM (VEHICLE CONTROL MODULE) ELECTRONIC CONTROL UNIT	58
EM (EXPANSION MODULE) ELECTRONIC CONTROL UNIT (PTO)	61

https://truckmanualshub.com/

Page

CENTRAL LOCKING WITH REMOTE CONTROL 64

CIRCUIT CHARTS 67

BLOCK DIAGRAM 141

https://truckmanualshub.com/

NEW FEATURES DUE TO THE INTRODUCTION OF BODY COMPUTER 2 (BC2)

Functions moved from BC1, CM (now eliminated) and VCM:

- Engine cranking
- Some body builder sgnal
  - Ext. Body Builder Cruise Control,
  - Parking light,
  - Parking brake.

Functions moved from CM to BC2:

- Window curtain,
- Red lght,
- Windscreen washer pump,
- Windscreen water low sensor,
- Vehicle standstill signal for BB.

Functions eliminated from the Multiplex:

- Rotating lights,
- Front window heater,
- Automatic snow chain.

Functions added to the Multiplex with BC2:

- External Light signal / Emergency light for BB
- K15 low for frame computer (the K15 with BC2 will be connected to Vbat instead of ground as BC1),
- Seat belt inserted sensor (not used at the moment),
- Fading white lights,
- New bed spot lights,
- Power preservation for production line and showroom, power management supplement shut off at very low battery,
- Programmable spare I/O,
- KW2000 on CAN.

Apart from these changes to the MUX system, the connectors are being standardised for the Stralis, Trakker and Eurocargo bodybuilders.

https://truckmanualshub.com/

CAN LINES

Dialogue between the Multiplex system, vehicle systems, engine control unit, SCR system, radio and various setters is carried out by means of the CAN lines:

- BCB - Body Control Bus
- VDB - Vehicle Data Bus
- ECB - Engine Control Bus
- ICB - Instruments Cluster Bus
- IDB - Infotainment Data Bus
- FMB - Fuhrpark Management Bus

BCB (Body Control Bus) communication line

Allows communication between the different electronic systems on the vehicle. This line does not regard directly the units on the VDB line but the units that carry out different onboard services.

Figure 1

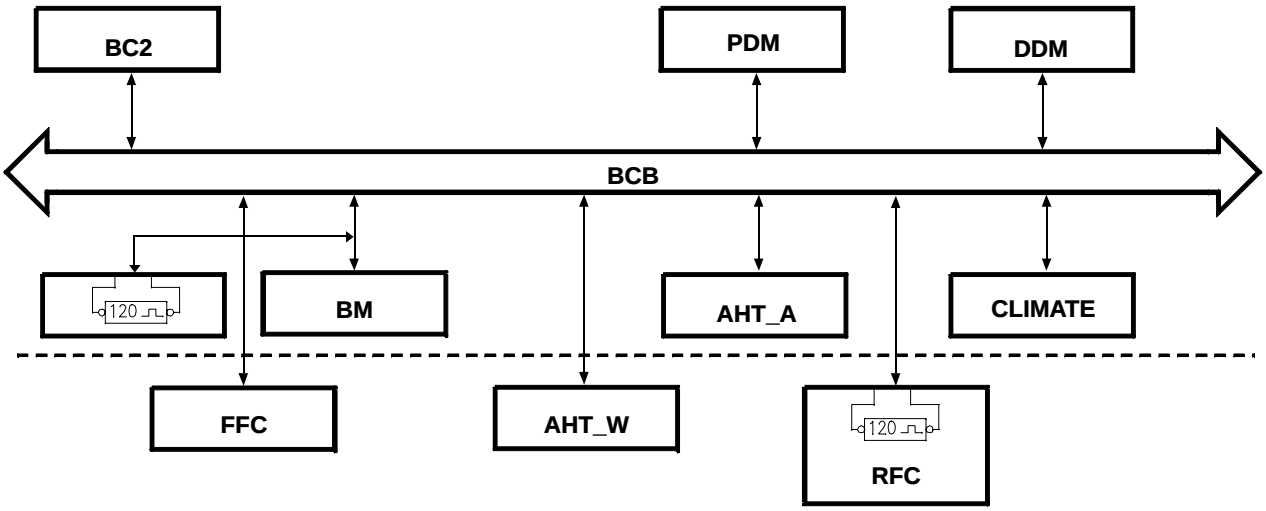

113545

Technical features

- Data transmission speed 62.500 (BIT/SEC)
- Color of the wire Gray

List of Units

Ref.	Description
BC2	Body Computer
DDM	Driver Door Module Unit
PDM	Passenger Door Module Unit
BM	Bed Module
CLIMATE	Air Conditioning
FFC	Front Frame Computer Unit
RFC	Rear Frame Computer Unit
AHT-A	Air type heater, located on the rear right part of the cab
AHT-W	Water type heater, located on the front right wheel house, next to the FFC

VDB (Vehicle Data Bus) Communication Line

Allows the electronic systems on the vehicle to dialogue. The units connected to it are: Eurotronic Transmission, Retarder, EBS, Ecas, Diagnosis connector, VCM, Tachograph, ACC and EM
This line also dialogues with the Cluster and the Body Computer.

Figure 2

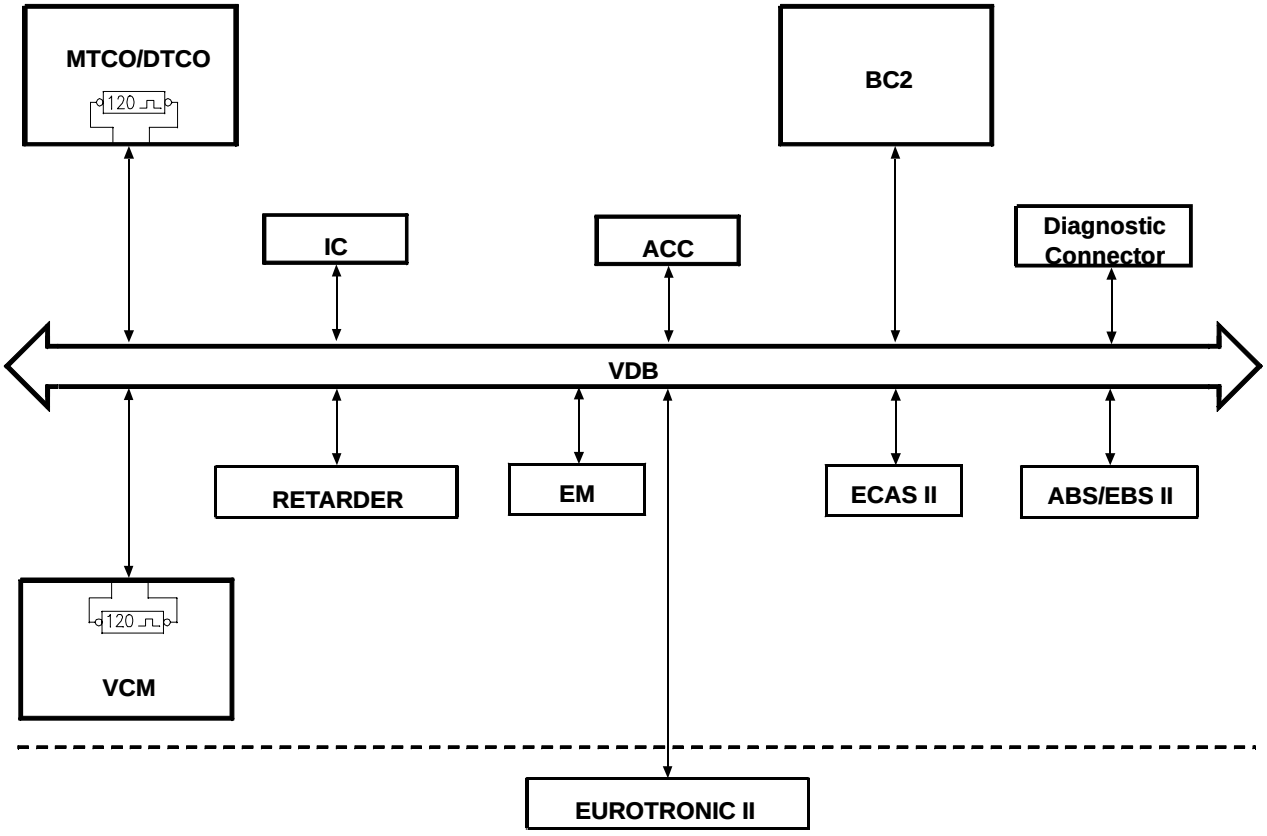

113546

Features

- ❑ Data transmission speed — 250.000 (BIT/SEC)
- ❑ Color of the wire — Black

List of Units

Ref.	Description
MTCO	Tachograph
DTCO	Digital Tachograph
VCM	Vehicle Control Module Unit
IC	Cluster
BC2	Body Computer
Diagnostic Connector	30 pole diagnosis connector
ABS	ABS Unit
EBS II	EBS II Unit
RETARDER	Intarder Unit
ECAS II	Pnuematic suspension unit
EUROTRONIC II	Eurotronic II automatic transmission unit
ACC	ACC (Adaptive Cruise Control) Unit
EM	Expansion Module

https://truckmanualshub.com/

ECB (Engine Control Bus) communication line

Allows the units and the engine control sensors to dialogue together. The units connected to it are: EDC, VCM, DCU15, NO_x sensor and the OBD connector.

Figure 3

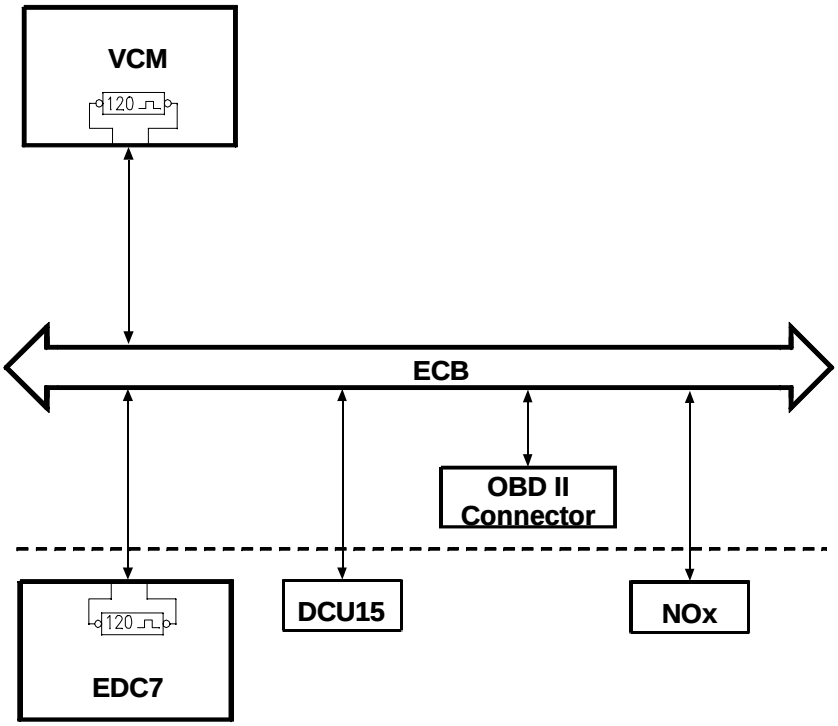

Features

- ❑ Data transmission speed — 250.000 (BIT/SEC)
- ❑ Color of the wire — Yellow

List of Units

Ref.	Description
VCM	Vehicle Control Module Unit
EDC7	Engine control unit
DCU15	SCR pumping module unit
OBD II Connector	16 pole connector for OBD (onbord diagnose)
NO_x	NO_x sensor

I.C.B. (Instruments Cluster Bus) communication line

Allows dialogue between the unit located on the steering column (SWI), BODY COMPUTER, CLUSTER and VCM,. In this way all information coming from the steering wheel and the power steering can reach their respective users i.

Figure 4

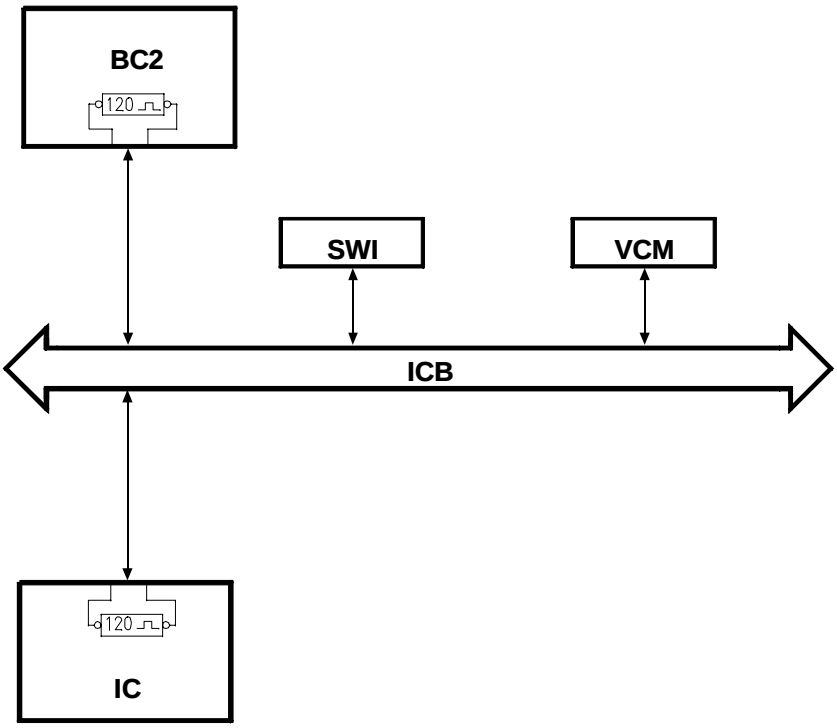

113548

Technical features

- Data transmission speed 250.000 (BIT/SEC)
- Color of the wire Green

List of Units

Ref.	Description
IC	Cluster
BC2	Body Computer
VCM	Vehicle Control Module Unit
SWI	Steering Wheel Interface Unit

https://truckmanualshub.com/

I.D.B. (Infotainment Data Bus) communication line

Allows communication between the Cluster and the Radio. The messages sent are shown on the CLUSTER.

Figure 5

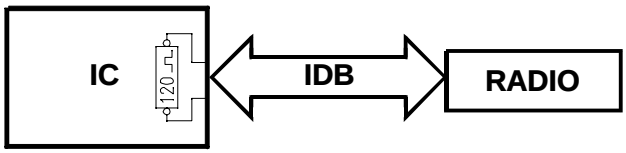

112282

Technical features

- Data transmission speed 100.000 (BIT/SEC)
- Color of the wire Blue

List of Units

Ref.	Description
Radio	Radio
IC	Cluster

https://truckmanualshub.com/

F.M.B. (Fuhrpark Managemant Bus) communication line

Allows communication between the different electronic systems (accessories) on the vehicle, , FMS (Telephone) connector and VCM unit.

Figure 6

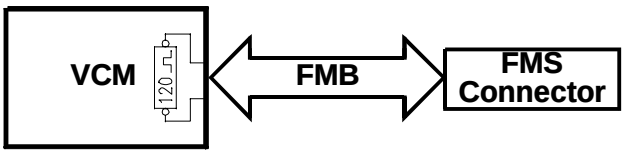

112283

Technical features

- Data transmission speed 250.000 (BIT/SEC)
- Color of the wire White

List of Units

Ref.	Description
VCM	Vehicle Control Module Unit
FMS	Connector FMS

https://truckmanualshub.com/

CAN LINE ASSEMBLY DRAWING

Figure 7

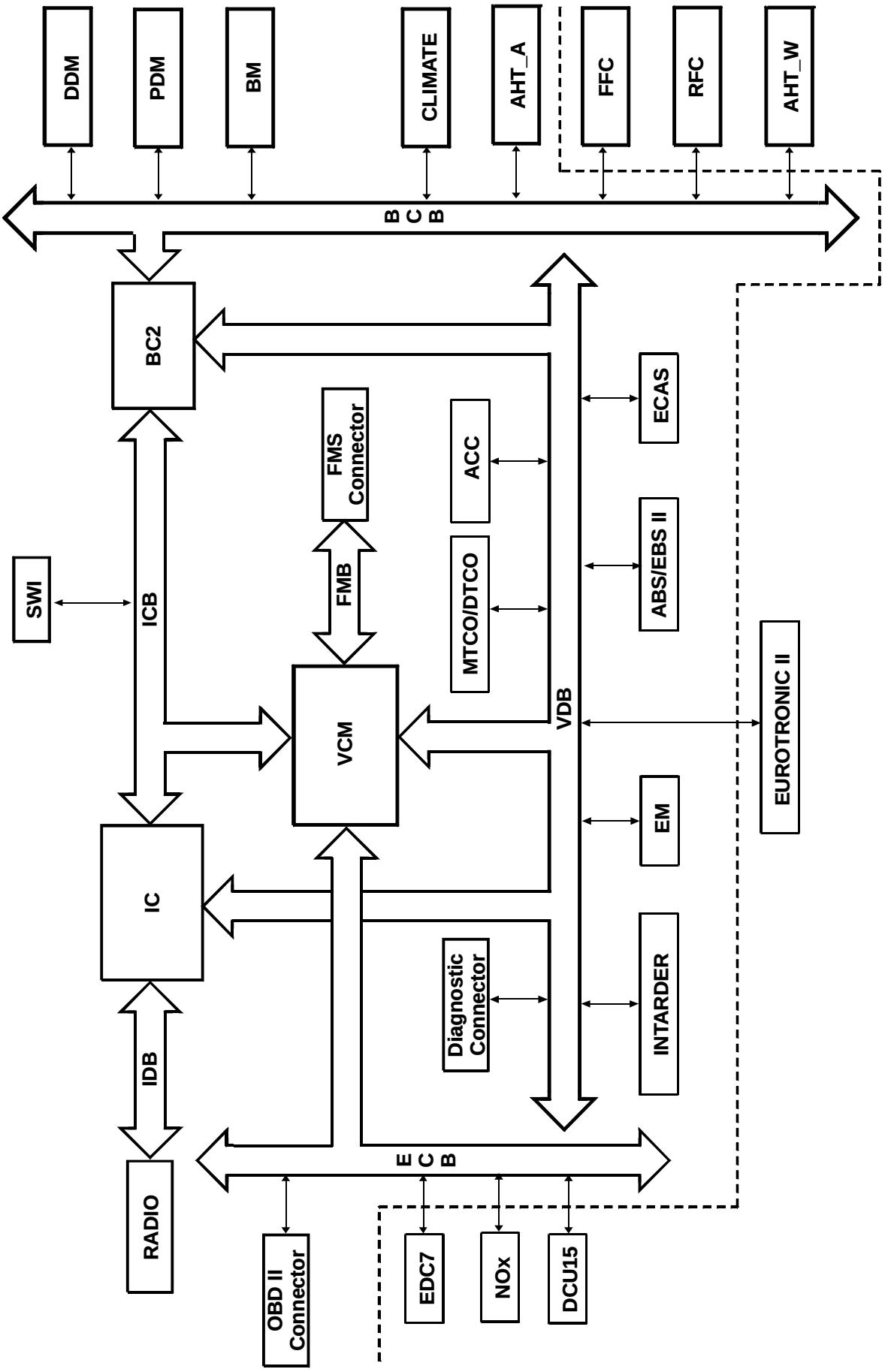

DIAGNOSIS OUTLET
Diagnosis connector - 72021

Figure 8

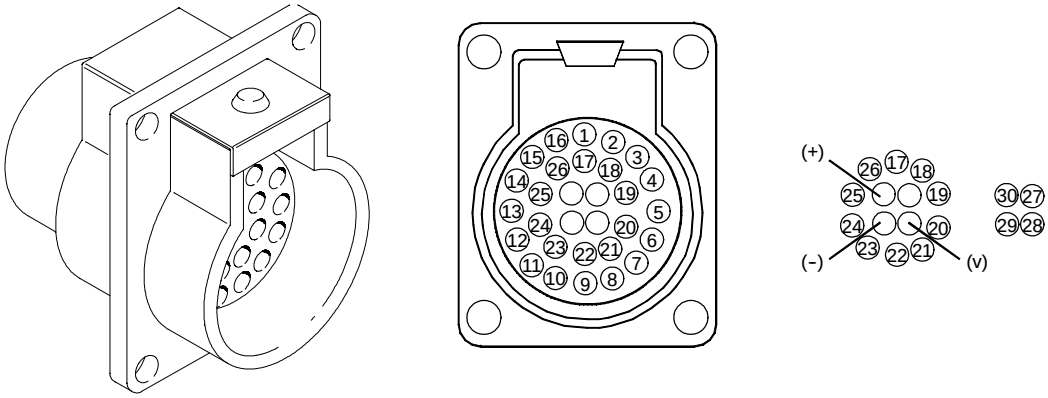

DIAGNOSIS CONNECTOR (FRONT VIEW)

Pins 27,28,29,30 might be printed with different positions from those reported in this picture.

Pin	System	Function	Cable colour code
1	Free	-	-
2	EDC (ECM)	K	2298
3	Free	-	-
4	ABS / EBS + ECAS	K	2299
5	Free	-	-
6	Intarder / EM	K	2293
7	Free	-	-
8	Multiplex Control units	K	2295
9	Free	-	-
10	Heater / Air conditioner	K	2296
11	Service actuation Key to "MAR"	+ 15	8802
12	VCM	K	2292
13	Free	-	-
14	Cluster / tachograph	K	2994
15	Free	-	-
16	UREA (SCR system)	K	2257
17	Free	-	-
18	EUROTRONIC	K	2297
19	Free	-	-
20	Programming retarder EOL	-	3393
21	CAN H (VDB)	H	Ws/Bi
22	CAN L (VDB)	L	Gn/Ve
23	Free	-	-
24	Free	-	-
25	Startup signal	-	8050
26	Signal ground	-	0050
27	Free	-	-
28	Speed signal (B7)	v	5540
29	Signal ground	31	0050
30	Positive	+ 30	7772

https://truckmanualshub.com/

OBD DIAGNOSIS CONNECTOR (BLUE)

Figure 9

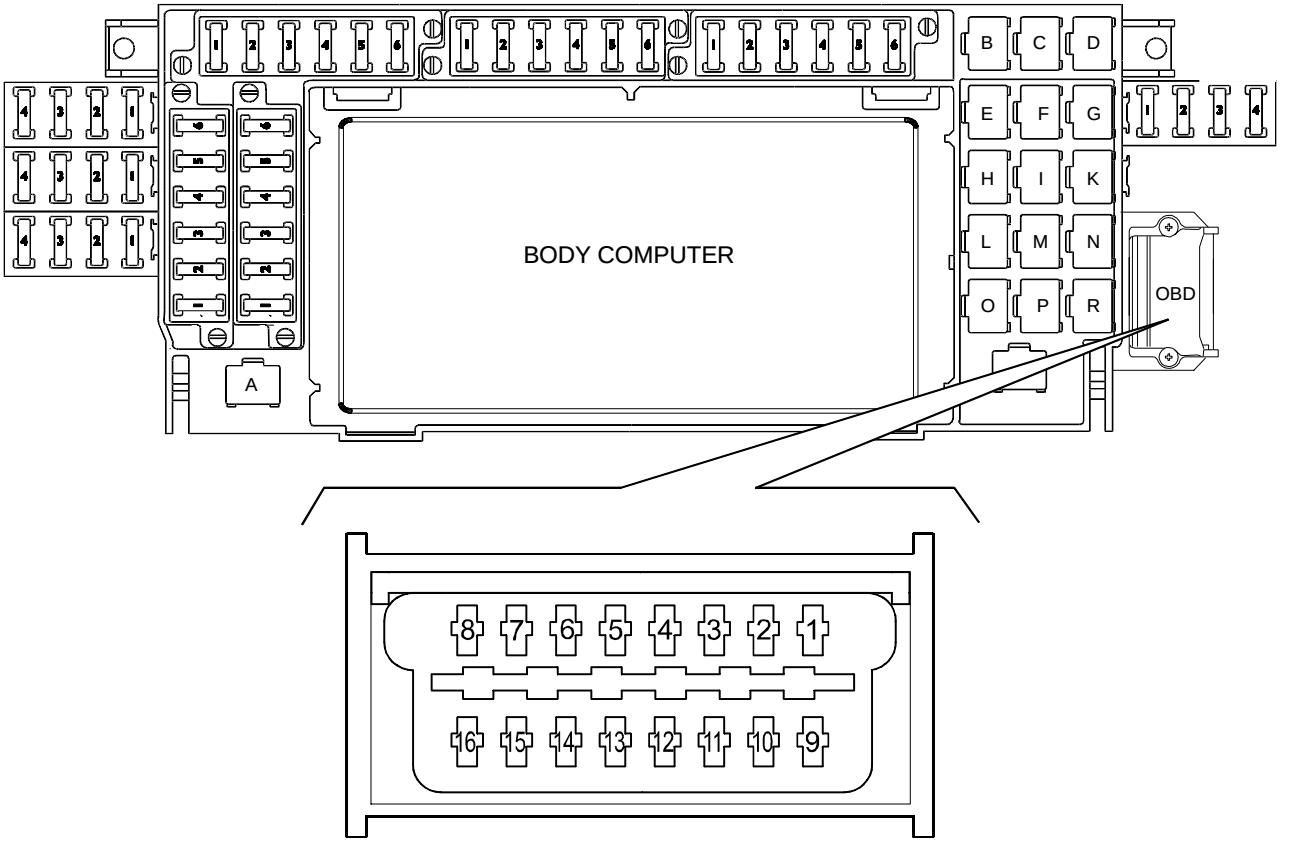

KEY SIDE CONNECTOR VIEW

Pin	Function	Cable colour code
1	-	-
2	-	-
3	-	-
4	Ground	0000
5	Signal ground	0050
6	CAN line H (ECB)	White
7	-	-
8	-	-
9	-	-
10	-	-
11	-	-
12	-	-
13	-	-
14	CAN line L (ECB)	Green
15	-	-
16	Battery direct positive (+Batt)	7721

ST14 junction connector - ECAS bodybuilders (cab)

Figure 10

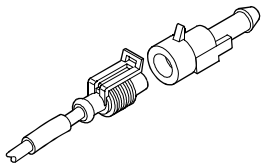

101523

KEY SIDE CONNECTOR VIEW

Pin	Function	Cable colour code
1	Power supply to liftable axle lowering or lifting switch	8445

ST14A junction connector (blue) - for bodybuilders (cab)

Figure 11

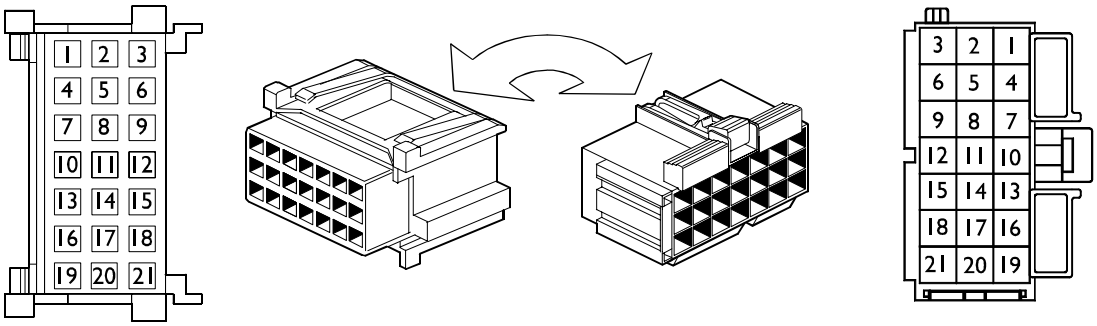

107554

KEY SIDE CONNECTOR VIEW

Pin	Function	Cable colour code
1	Engine start-up signal input	8892
2	Engine turning off signal input	0151
3	Stop lights signal for bodybuilders	1165
4	Vehicle not in operation signal output	5515
5	Parking brake engaged signal output	6656
6	-	-
7	Speed signal from tachograph	5155
8	Engine condition (output signal) 0 V engine not in operation / 24 V engine in operation	7778
9	Gearbox in neutral position signal	8050
10	Reverse gear signal	2268
11	Positive +15	8871
12	Provision for Cruise Control SET +	8156
13	Provision for Cruise Control SET -	8157
14	Provision for Cruise Control OFF	8154
15	Provision for Cruise Control RESUME	8155
16	Provision Cruise Control (internal /external choice)	0152
17	Ground	0000
18	Provision for P.T.O. 1 control signal	0131
19	Provision for P.T.O. 2 control signal	0132
20	Provision for P.T.O. 3 control signal	0123
21	Positive +30	7772

https://truckmanualshub.com/

ST14B junction connector (blue) - for bodybuilders (cab)

Figure 12

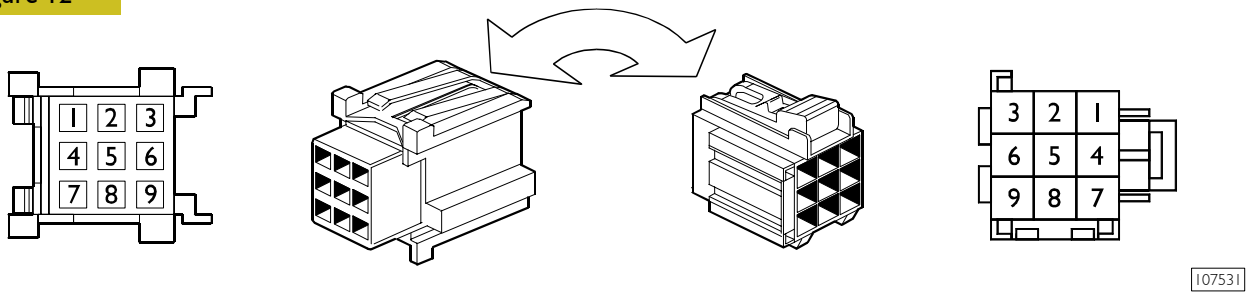

KEY SIDE CONNECTOR VIEW

Pin	Function	Cable colour code
1	Signal for the second speed limiter	0172
2	-	-
3	Clutch status signal	9963
4	Programmable speed threshold indicator signal (PTS)	5542
5	Hazard light signal	1113
6	-	-
7	-	-
8	Engine rpm signal	5584
9	External light signal	3333

ST14C junction connector (grey) - for set up devices (Allison)

Figure 13

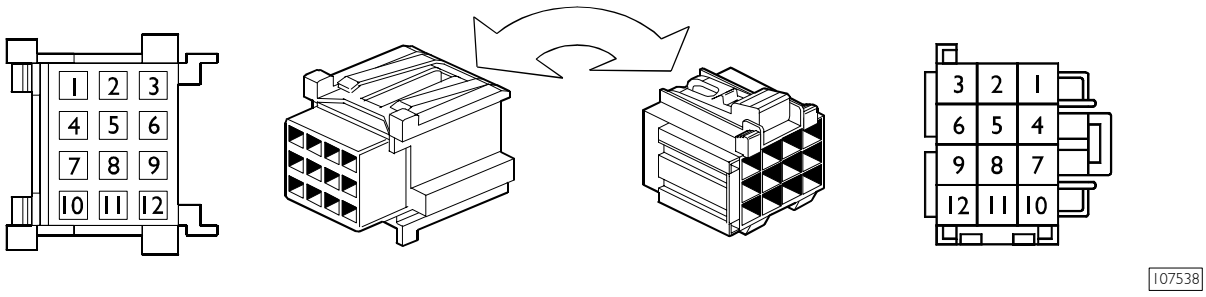

KEY SIDE CONNECTOR VIEW

Pin	Function	Cable colour code
1	Neutral signal for PTO	145
2	Stepping switch signal	123
3	-	-
4	PTO signal active	143
5	PTO signal active	130
6	-	-
7	-	-
8	Automatic neutral signal	117
9	Automatic neutral signal	101
10	Digital ground	103
11	Zone indicator signal	113
12	-	-

RECEPTACLE CONNECTOR

LEFT HAND DRIVE

A connector	-	White (free)	**D** connector	-	Blue (EuroTronic/PTO/Intarder)
B connector	-	Brown (ECAS)	**E** connector	-	Green (EDC/ADR)
C Connector	-	Yellow (EBS/ABS/ASR)			

Figure 14

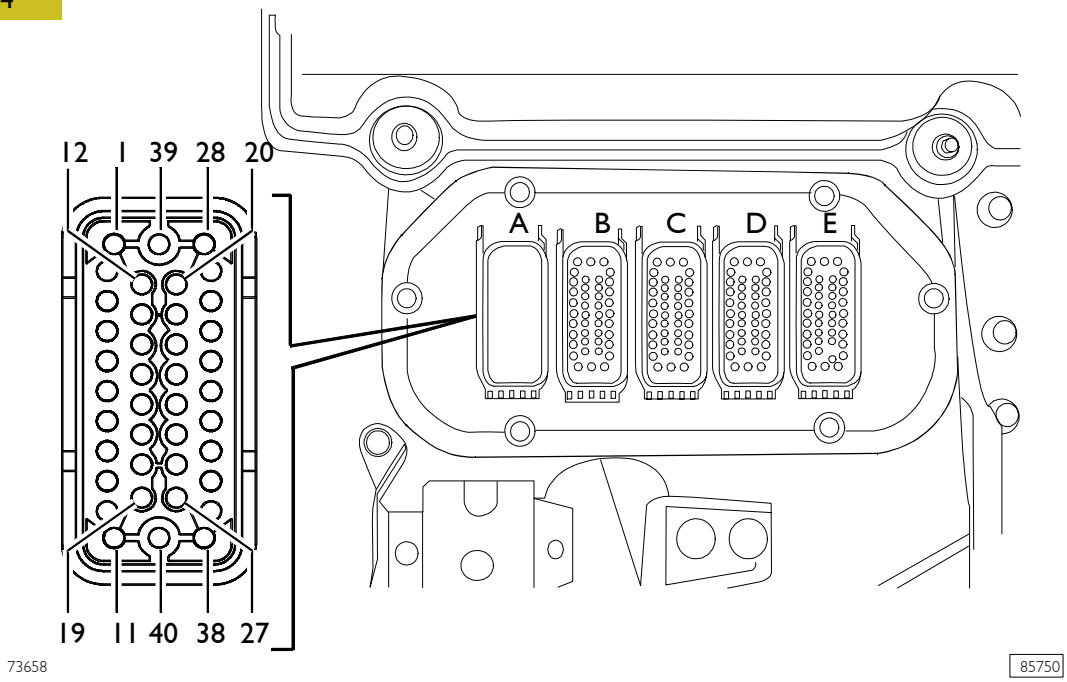

RIGHT HAND DRIVE

A connector	-	White (EDC/ADR)	**C** Connector	-	Yellow (EBS/ABS/ASR)
B connector	-	Brown (EuroTronic/PTO/Intarder)	**D** connector	-	Blue (ECAS)
			E connector	-	Green (free)

Figure 15

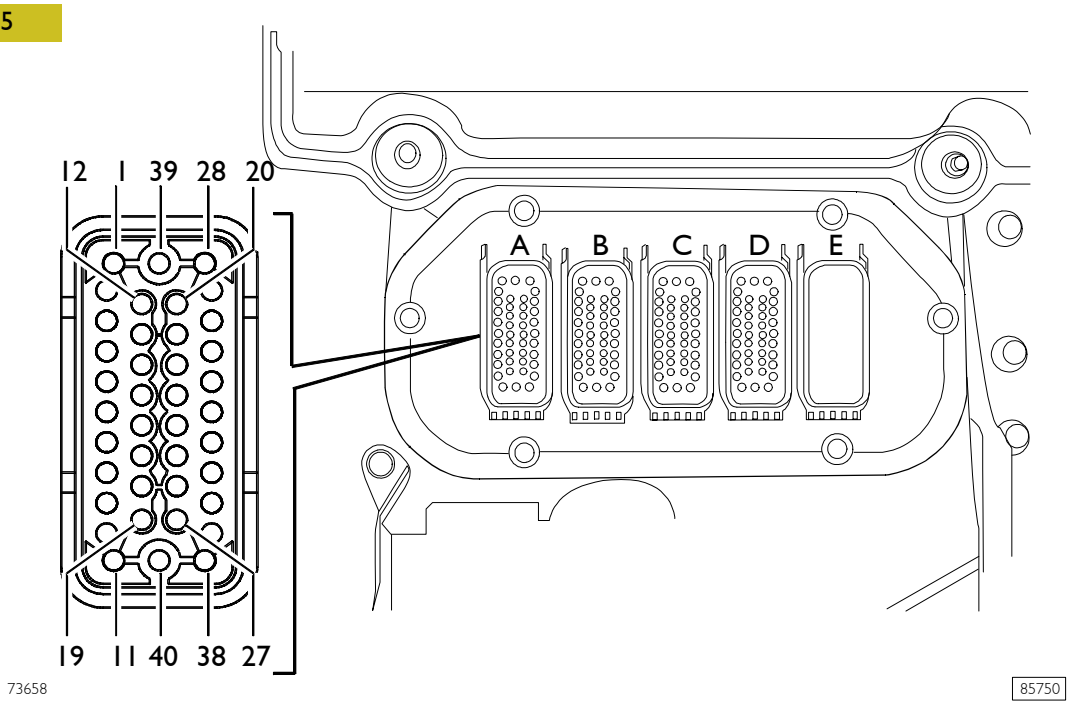

Thanks to the new bayonet connectors the continuity of the various signals is much more reliable than with the previous system.

https://truckmanualshub.com/

Brown bulkhead "B"

Pin	Function	Cable colour code
1	Chassis height sensor ground	0400
2	Inductive rear axle chassis height sensor (Ecas)	5421
3	Inductive rear axle chassis height sensor (Ecas)	5422
4	Electro-pneumatic rear axle distributor (Ecas)	9442
5	Electro-pneumatic front axle distributor (Ecas)	9413
6	Inductive front axle chassis height sensor (Ecas)	5410
7	Power supply to electro-pneumatic distributors (Ecas)	9400
8	Electro-pneumatic distributor	9423
9	Electro-pneumatic rear axle distributor (Ecas)	9425
10	Electro-pneumatic rear axle distributor (Ecas)	9424
11	Electro-pneumatic rear axle distributor (Ecas)	5445
12	Electro-pneumatic rear axle distributor (Ecas)	9447
13	Electro-pneumatic rear axle distributor (Ecas)	9446
14	Third axle lifting/lowering switch (Ecas)	5441
15	Third axle lifting/lowering switch (Ecas)	5443
16	Third axle lifting/lowering switch (Ecas)	5444
17	Third axle lifting/lowering switch (Ecas)	5442
18	Air pressure sensor on the pneumatic third axle lifting device (Ecas)	8403
19	Trailer axle lifted warning light signal	6442
20	CAN - L line (BCB)	GN/VE
21	CAN - H line (BCB)	WS/BI
22	Engine fan solenoid valve control	9166
23	Tachograph speed sensor power supply	5514
24	Signal from the tachograph speed sensor	5516
25	Signal from the tachograph speed sensor	5517
26	Tachograph speed sensor ground (speed signal)	0058
27	VGT turbine piping air block solenoid valve +15 power supply (shut-off)	8360
28	Positive +15 from BC2 for RFC	0987
29	Drier/heater power supply / Trailer current tap terminal 15	8840
30	Relay excitation for TGC ON maintenance (closing)	8035
31	Relay excitation for TGC OFF maintenance (opening)	8045
32	Cabin unhooked signal	0096
33	Diagnosis K line for R.F.C.	2999
34	Power take-off ON signal (sensor)	0132
35	CAN L line (SB) (EM, bodybuilders)	GN/VE
36	CAN H line (SB) (EM, bodybuilders)	WS/BI
37	Trailer ABS/EBS failure signal	6671
38	Electrical power supply socket for trailer ABS/EBS clamp 2	8847
39	Clamp 30 for 15 pins coupler for trailer electrical connection	7790
40	Positive for tachograph, Body Computer, Cluster, Bed Module, Refrigerator (+Batt)	7972

https://truckmanualshub.com/

Yellow wall pass "C"

Pin	Function	Cable colour code
1	PTO 1 power take-off return signal	6131
2	Rear axle braking detection pressure sensor signal	6245
3	Locked power supply positive	8847
4	Front right ABS sensor	5571
5	Front right ABS sensor	5571
6	Positive for front right ABS power supply solenoid valve	9920
7	PTO 1 solenoid valve power supply	9131
8	Positive for front right ABS release solenoid valve	9918
9	Centralized smearing system ground	0000
10	Central lubrication system supply	8898
11	Rear right ABS sensor	5573
12	Rear right ABS sensor	5573
13	Positive for rear right hand side ABS power supply solenoid valve	9930
14	Consent for power take-off 1 (PTO1)	0391
15	Positive for rear right hand side ABS release solenoid valve	9928
16	Power take-off 2 (PTO2) return signal	6132
17	Power take-off 2 (PTO2) solenoid valve power supply	9132
18	Enabling signal for power take-off 2 (PTO2)	0392
19	Power take-off 3 (PTO3) return signal	6133
20	Ground for shielding (EM, bodybuilders)	0999
21	Negative for hydraulic cab release control in the lifting phase	0923
22	Negative for hydraulic cab release control in the lowering phase	0922
23	Power take-off 3 solenoid valve power supply	9123
24	Negative for rear axle ASR solenoid valve	0260
25	Positive for rear axle ASR solenoid valve	9260
26	Negative enabling signal for power take-off 3	0393
27	Positive +30 (EM, bodybuilders)	7795
28	Chassis height sensor ground	0400
29	Positive for rear left hand side ABS release solenoid valve	9929
30	Inductive rear axle chassis height sensor (Ecas)	8403
31	Positive for rear left hand side ABS power supply solenoid valve	9931
32	Positive for front left hand side ABS drain solenoid valve	9919
33	Air pressure sensor on front axle	5440
34	Positive for front left hand side ABS power supply solenoid valve	9921
35	Front left hand side ABS sensor	5570
36	Front left hand side ABS sensor	5570
37	Rear left hand side ABS sensor	5572
38	Rear left hand side ABS sensor	5572
39	Negative wire from terminal 15 (EM, bodybuilders)	0975
40	ABS solenoid valve ground	0000

https://truckmanualshub.com/

Blue wall pass "D"

Pin	Function	Cable colour code
1	TGC opening signal	8101
2	Eurotronic ground	0000
3	Electric selector with automatic transmission (power supply from the control unit) / Positive for splitter gear activation solenoid (9 speed gearbox)	6100/9973
4	Transmission warning horn grounding / Positive for normal gear activation solenoid (9 speed gearbox)	1101/9974
5	Free	-
6	Eurotronic power supply (+30)	7101
7	Eurotronic diagnosis K line	2297
8	Automatic transmission electronic control unit CAN - L line (VDB)	GN/VE
9	Automatic transmission electronic control unit CAN - H line (VDB)	WS/BI
10	Automatic transmission electronic control unit CAN - L line (VDB)	GN/VE
11	Automatic transmission electronic control unit CAN - H line (VDB)	WS/BI
12	Free	-
13	Free	-
14	Water temperature transmitter for decelerator	0309
15	Water temperature transmitter for decelerator	5309
16	Decelerator oil accumulator solenoid valve	9311
17	Decelerator oil accumulator solenoid valve	0311
18	Decelerator deactivation solenoid valve (proportional solenoid valve)	9310
19	Decelerator actuation solenoid valve (proportional solenoid valve)	0310
20	"K" line for auxiliary water heater control unit diagnostic / Power supply to auxiliary water heater dosing pump	2295 / 7783
21	Auxiliary heater power supply by means of switch	7775
22	Auxiliary heater control with passage for microswitch on heating tap control lever	7506
23	Windscreen heating, control and defrosting motor power supply	7711
24	Auxiliary heater power supply	7708
25	Free	-
26	Auxiliary water heater	GN/VE
27	CAN - H line (BCB)	WS/BI
28	CAN - L line (BCB)	GN/VE
29	CAN - H line (BCB)	WS/BI
30	Solenoid valve power supply for water circulation block in the engine circuit or cabin with auxiliary heater	9506
31	Auxiliary heater ON optical indicator power supply	6605
32	Free	-
33	ADR dynamic control	8876
34	+30 power supply	8876
35	Ground (TGC ADR)	0000
36	Free	-
37	TGC opening signal from the switch	0176
38	TGC closing signal from the switch	0178
39	Power supply to heated fuel pre-filter	7753
40	Free	-

https://truckmanualshub.com/

Green wall pass "E"

Pin	Function	Cable colour code
1	CAN - L line (ECB)	GN/VE
2	CAN - H line (ECB)	WS/BI
3	CAN - L line (BCB)	GN/VE
4	CAN - H line (BCB)	WS/BI
5	K line - F.F.C. diagnosis	2998
6	Positive +15 from BC2 for FFC	0987
7	Terminal 15 generator power supply	8876
8	EDC system diagnostic switch power supply (presetting)	0163
9	EDC system diagnosis inciting switch power supply (presetting)	5163
10	ACC supply	8176
11	Free	-
12	Free	-
13	EDC control unit terminal 15 power supply	8015
14	Servo-assisted tilting hydraulic pump power supply	7730
15	Hydraulic cabin uncoupling (+ lowering) pump motor power supply	9029
16	CAN - L line (VDB)	GN/VE
17	CAN - H line (VDB)	WS/BI
18	CAN - L line (VDB)	GN/VE
19	CAN - H line (VDB)	WN/VE
20	CAN - L line (BCB)	GN/VE
21	CAN - H line (BCB)	WS/BI
22	K line - EDC diagnosis	2298
23	Starting motor (terminal 50)	8888
24	Compressor electromagnet (Valeo)	9993
25	SCR system supply	7540
26	SCR system supply	8540
27	Fault diagnosis line for SCR	2257
28	Signal for windscreen washer tank low water level	5521
29	Electric pump power supply headlamp wipers	8821
30	Cooling water level optical indicator	5520
31	Engine rpm signal for bodybuilders	5587
32	Low cooling water level signal	5527
33	Front rear-view mirror heating positive	8830
34	Free	-
35	Windscreen washer control signal	8886
36	Positive for motor fan speed 2 electromagnet	5166
37	Ground enabling engine fan activation	5187
38	Positive enabling engine fan activation	0014
39	+30 positive	7151
40	+30 positive	7151

https://truckmanualshub.com/

REMOTE-CONTROL SWITCH / FUSE HOLDER CONTROL UNIT

FUSES

Figure 16

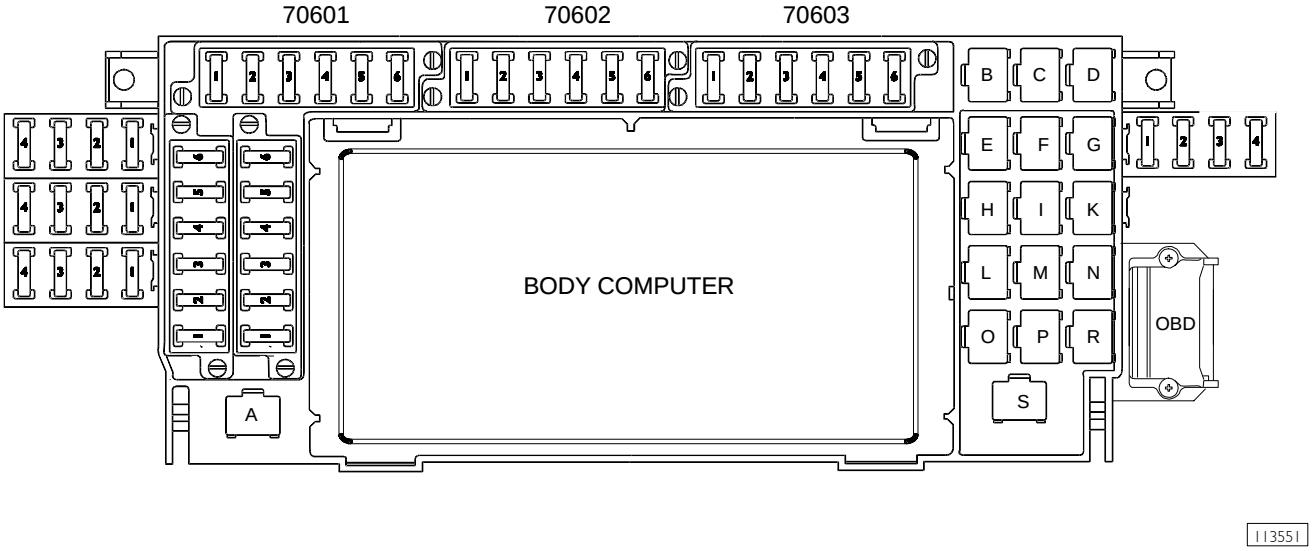

Black color fuse holder (70601)

Ref.	Function	Delivery (A)	Terminal
1	Terminal 15 for air conditioning / Heated prefilter / Radio 24V	5	+15
2	Food warmer + Fridge / BM / Diagnosis connector / OBD connector	10	+Batt
3	Tachograph / IC / Centralized locking (remote control)	5	+Batt
4	SWI	3	+30
5	Cigar lighter - 24V/12V voltage reducer / Radio 24V	20	+30
6	Tilted cab / Drier / Water presence in fuel filter / "Shut off" solenoid valve/ Projectors positioning	10	+15

Red color fuse holder (70602)

Ref.	Function	Delivery (A)	Terminal
1	ACC / Allison gearbox (AT/AD)	10	+15
2	Eurotronic II / Baruffaldi / Allison gearbox (AT/AD)	10	+30
3	Internal lighting / Tool compartment lights	5	+30
4	EBS / ABS - D BASIC	5	+15
5	EBS	15	+30
6	EBS / ABS - D BASIC	15	+30

Natural color fuse holder (70603)

Ref.	Function	Delivery (A)	Terminal
1	Driver door module (DDM) / AT/AD driver's electric window without DDM/PDM	20/15	+30/+15
2	Passenger door module (PDM) / AT/AD passenger's electric window without DDM/PDM	20/15	+30/+15
3	IC	10	+15
4	EDC (ECM)	30	+30
5	Body Computer	25	+30
6	Body Computer	25	+30

Figure 17

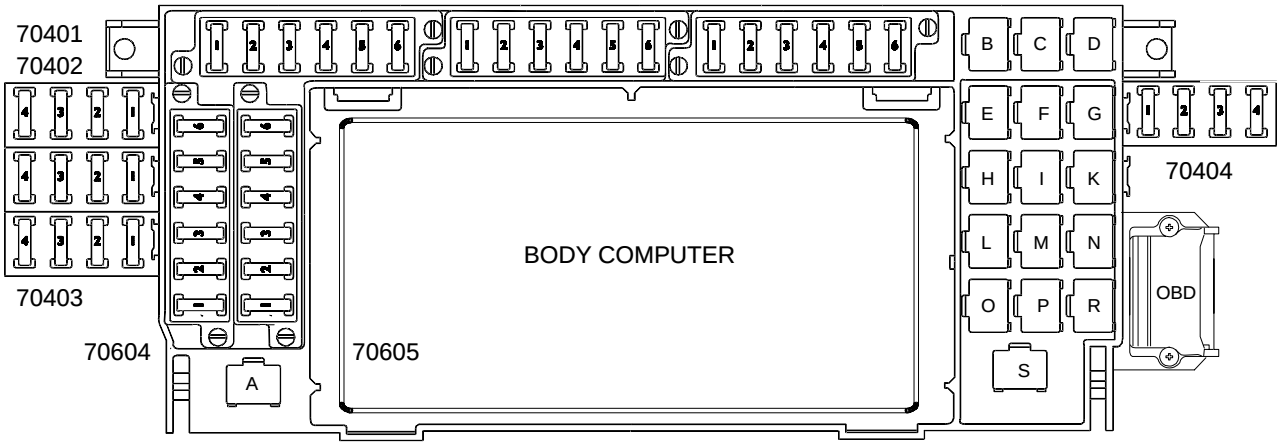

Black color fuse holder (70604)

Ref.	Function	Delivery (A)	Terminal
1	EM	15	+30
2	Air-conditioning system	15	+30
3	Air-conditioning system / IT / Navigation / Panel light (AS)	5	+30
4	Auxiliary heating	15	+30
5	Auxiliary heating	5	+30
6	VCM (Vehicle Control Module)	20	+30

Natural color fuse holder (70605)

Ref.	Function	Delivery (A)	Terminal
1	EM	15	+30
2	Vehicle levelling	5	+15
3	Chassis level adjustment	7.5	+30
4	Decelerator with CAN / Headlight washer	10	+30
5	Decelerator with CAN / Retarder - Mirror heating (AT/AD)	10/15	+15
6	Heated seat / Central lubrication / IT / navigation / Centralized locking	7.5	+15

https://truckmanualshub.com/

Figure 18

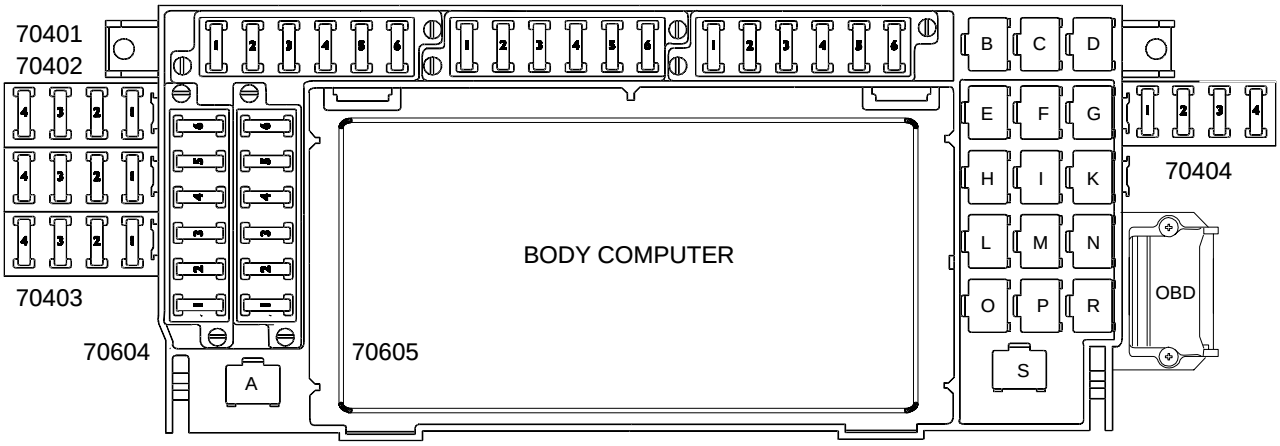

Black color fuse holder (70401)

Ref.	Function	Delivery (A)	Terminal
1	Cabin tilting	25	+30
2	Cabin tilting	5	+30
3	Body builders	10	+30
4	Heated windscreen	25	+30

Black color fuse holder (70402)

Ref.	Function	Delivery (A)	Terminal
1	Heated windscreen	25	+30
2	12V internal lighting / 12V Reading lights / Navigation system/Telematic system	5	-
3	Heated prefilter	20	+30
4	K15 for alternator	5	+15

Black color fuse holder (70403)

Ref.	Function	Delivery (A)	Terminal
1	EM	10	+30
2	EM	10	+30
3	Urea (SCR system) / EM / ACC	5	+15
4	Urea (SCR system)	15	15

Black color fuse holder (70404)

Ref.	Function	Delivery (A)	Terminal
1	Trailer ABS/EBS	10	+15
2	Sunblind AT/AD	7,5	+15
3	Fan for AT/AD Car Transporter air conditioner	25	+30
4	Free	-	-

SUPPLEMENTARY REMOTE SWITCHES

Figure 19

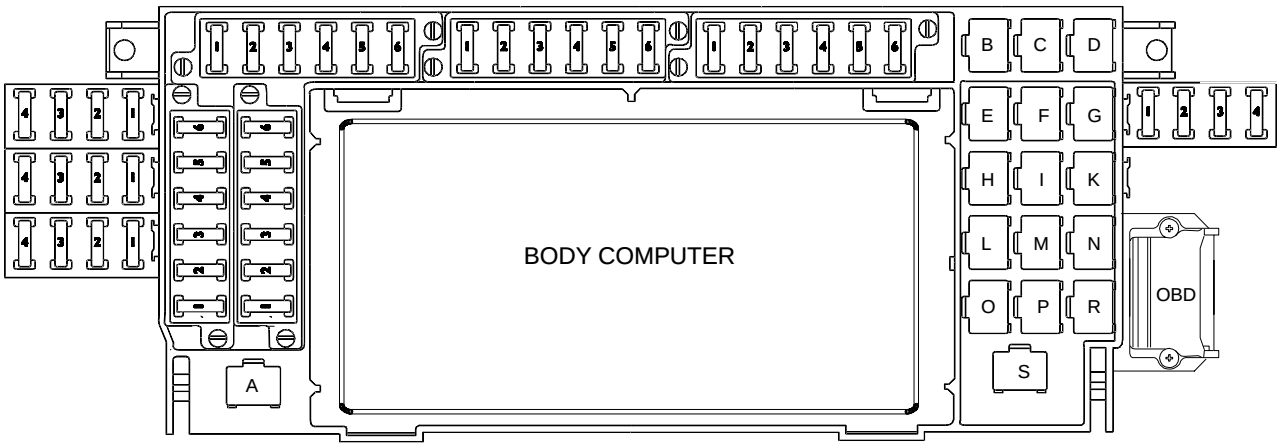

Ref.	Description	Component code
A	-	-
B	Water heater remote control switch	25337
C	Allison gearbox remote-control switch AT/AD	25210
D	Manual air conditioner remote-control switch Manual air conditioner remote-control switch (compressor) (AS)	25545 25332
E	Water heater remote-control switch	25325
F	Allison gearbox remote-control switch AT/AD	25609
G	Manual air conditioning remote-control switch	25544
H	Cabin tilting diodes	61000B
I	Manual air conditioning remote-control switch	25874
K	Manual air conditioning remote-control switch	25310
L	Remote control switch for IGC	25903
M	Manual air conditioning remote-control switch	25322
N	Manual air conditioning remote-control switch	25332B
O	Diodes for cab tilt system	61000A
P	Manual air conditioning remote-control switch	25327
R	Manual air conditioning remote-control switch	25332A
S	Manual air conditioning remote-control switch (AS)	25314

https://truckmanualshub.com/

Remote-control switches

Positioned behind the BODY COMPUTER.

Figure 20

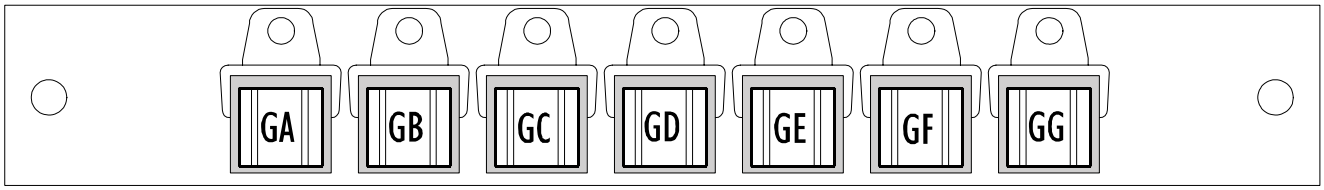

73672

Ref.	Description	Component code
GA	Heated prefilter remote-control switch	25825
GB	Remote-control switch (terminal 15), 50A	25213
GC	Starting remote-control switch (50), 40A	25200
GD	-	-
GE	Cabin tilting remote-control switch / Manual conditioning remote control switch (Car Transporter)	25906/25329
GF	Cabin tilting remote-control switch / Manual conditioning remote control switch (Car Transporter)	25722/25308
GG	Cabin tilting remote-control switch	25723

Positioned in control unit compartment, replacing the removed CM control unit

Figure 21

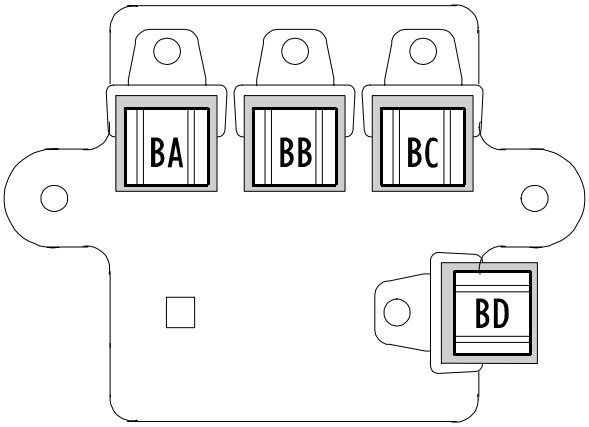

113554

Ref.	Description	Component code
BA	Headlight washer enablement relay	25740
BB	Timer for headlamp washer	66010
BC	-	-
BD	-	-

SUPPLEMENTARY FUSES (70000)

They are located on the left side of the vehicle, next to the batteries and the TGC. The fuse compartment can be accessed by levering on the two springs available on cover (A).

Figure 22

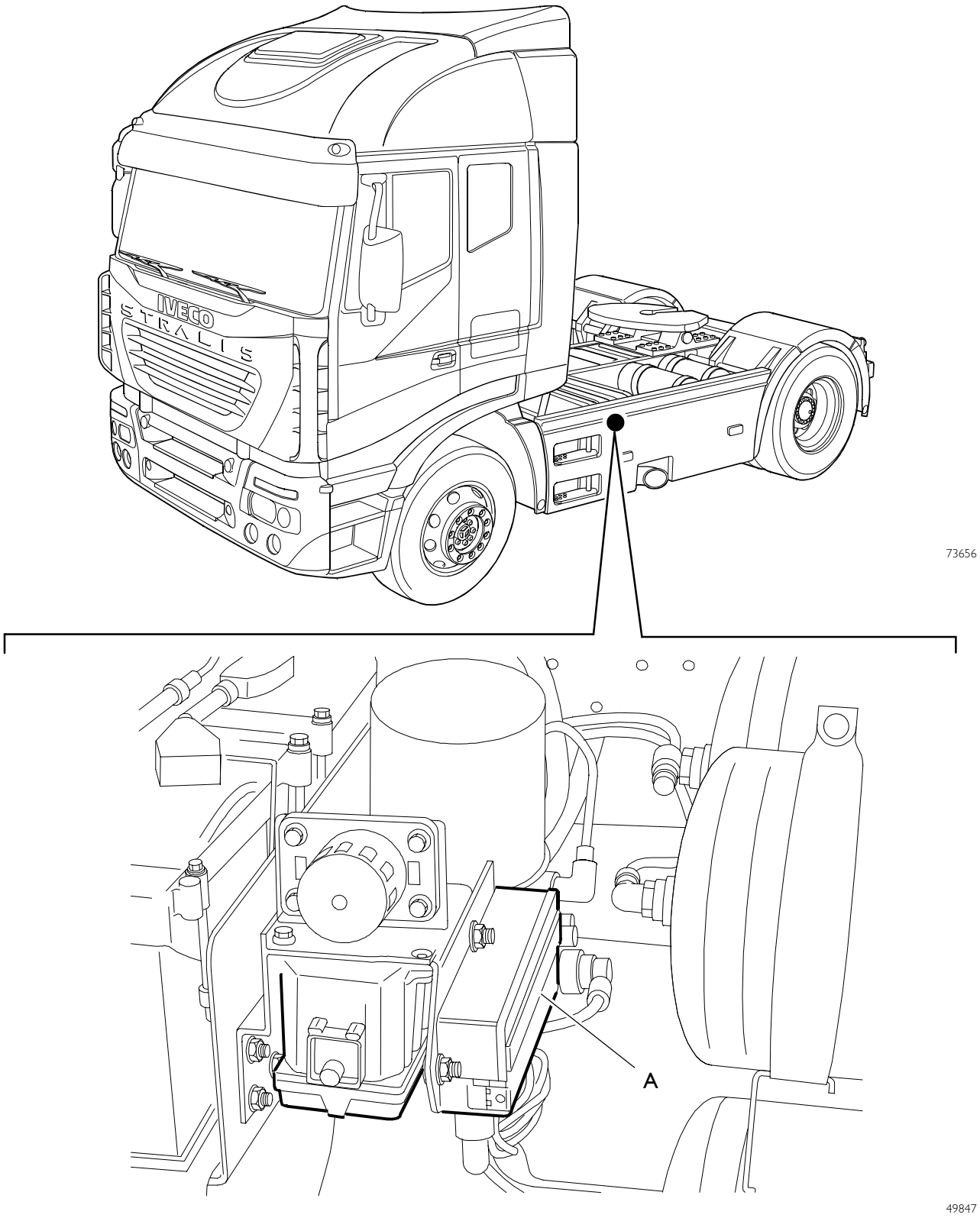

A. Auxiliary fuse holder

https://truckmanualshub.com/

Figure 23

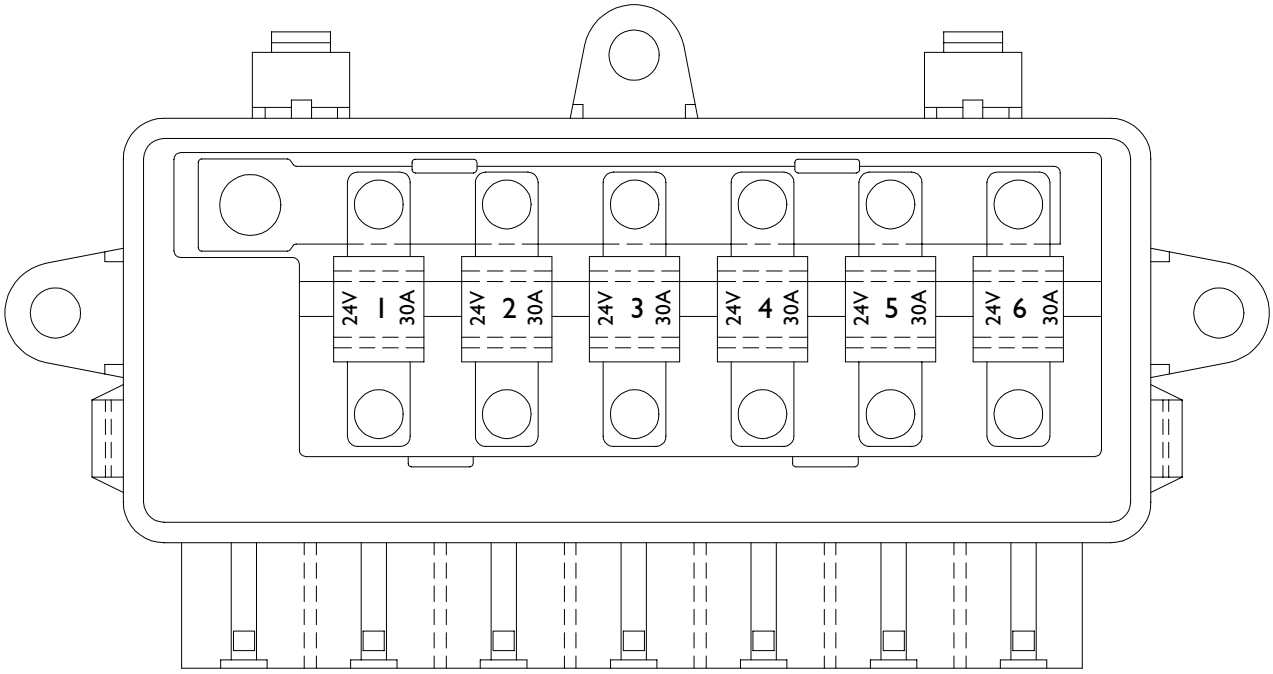

49731

Ref.	Function	Delivery A
1	R.F.C. (rear right light power supply)	30
2	R.F.C. (rear left light power supply)	30
3	F.F.C. (front right light power supply)	30
4	F.F.C. (front left light power supply)	30
5	Current tap - ABS/EBS	30
6	Presetting	30

INSTRUMENT BOARD (AS)

Figure 24

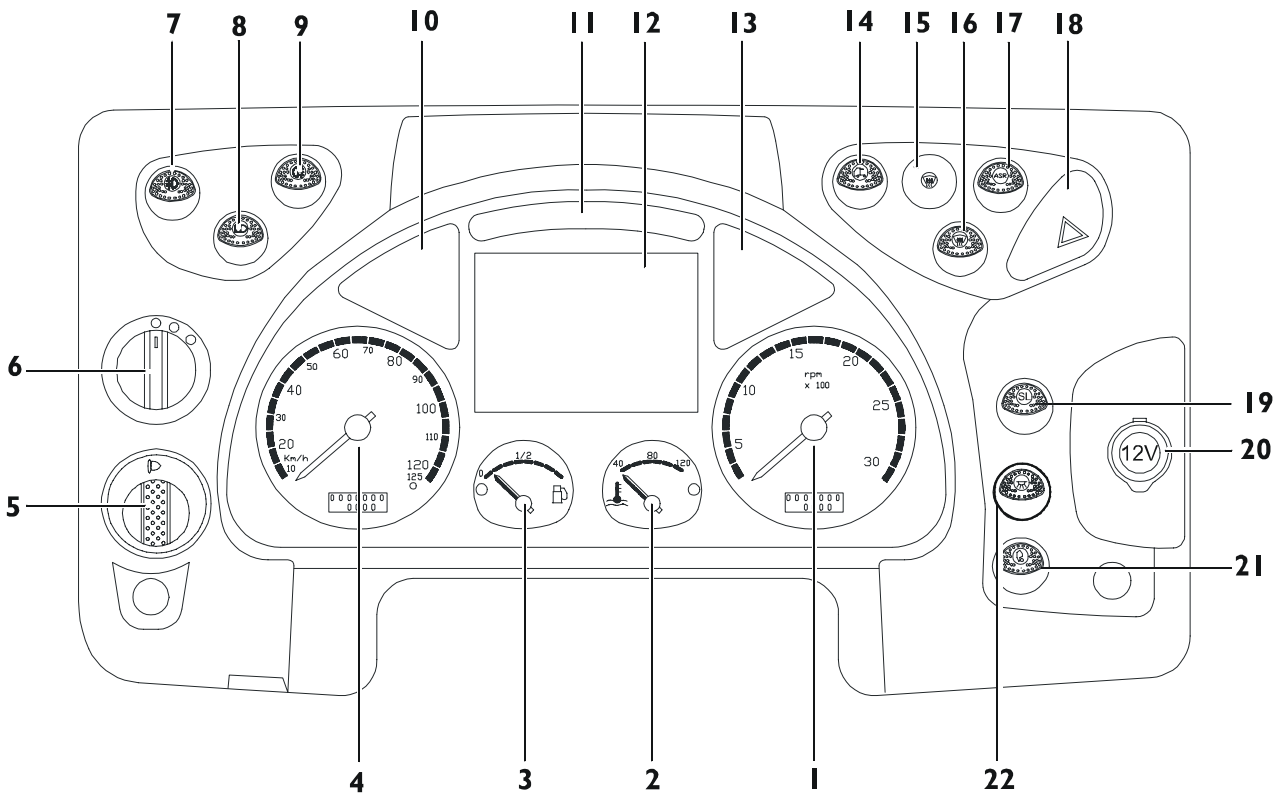

Ref.	Description
1	Revs counter
2	Coolant thermometer
3	Fuel level gauge
4	Speedometer
5	Headlamp trim control
6	External light switch
7	Fog light actuation switch
8	Auxiliary headlamp actuation switch
9	Rear fog light actuation switch
10	Optical indicator cluster
11	Optical indicator cluster
12	Display
13	Optical indicator cluster
14	Loading platform light actuation switch
15	Heated windscreen warning light
16	Heated windscreen actuation switch (OPT)
17	ASR actuation switch (if available)
18	Emergency light actuation switch
19	Speed limiter cut-in switch
20	12 V current tap
21	Cabin tilting enable switch
22	Switch for spotlights

https://truckmanualshub.com/

CONTROLS ON THE CENTRAL BOARD (AS)

Figure 25

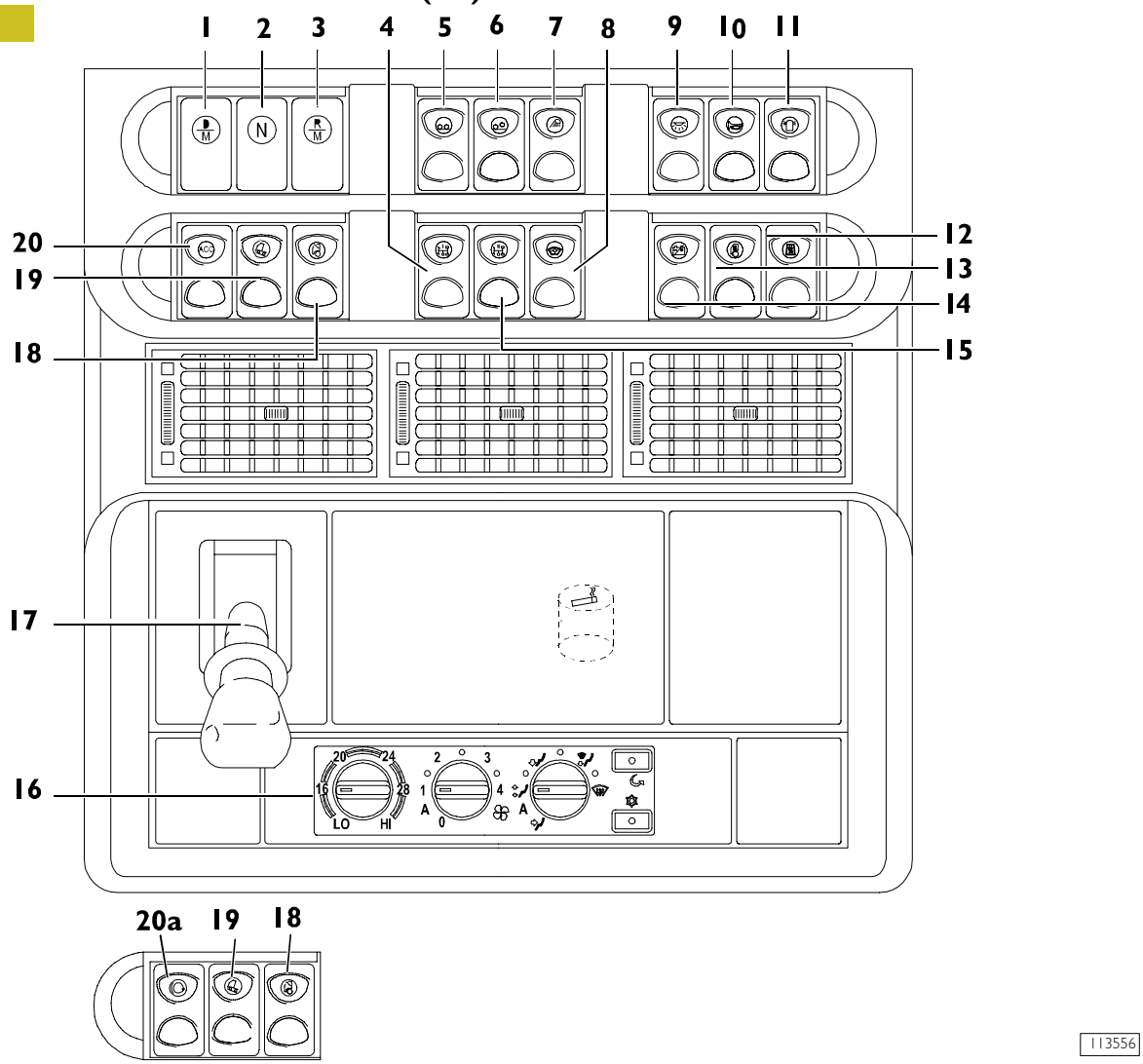

Ref.	Description
1	Eurotronic "Drive"
2	Eurotronic "Neutral"
3	Eurotronic "Reverse"
4	Power take-off 1 (OPT)
5	Pick-up assist provision (OPT)
6	Third axle lifting/lowering (OPT)
7	Spotlights on tie (central) (OPT)
8	Sun visors (OPT)
9	Cabin lights (ceiling lights)
10	Pneumatic horns
11	Rotary lamps (OPT)
12	Auxiliary water heater (OPT)
13	Cabin/engine preheating (OPT)
14	Master current remote-control switch
15	Power take-off 2 (OPT)
16	Air conditioner heating/ventilation or controls (OPT)
17	Hand brake
18	Electric trap door (OPT)
19	ARB - Anti Roll Back enabling switch (if present)
20	ACC
20a	Engine brake control switch

INSTRUMENT BOARD (AT/AD)

Figure 26

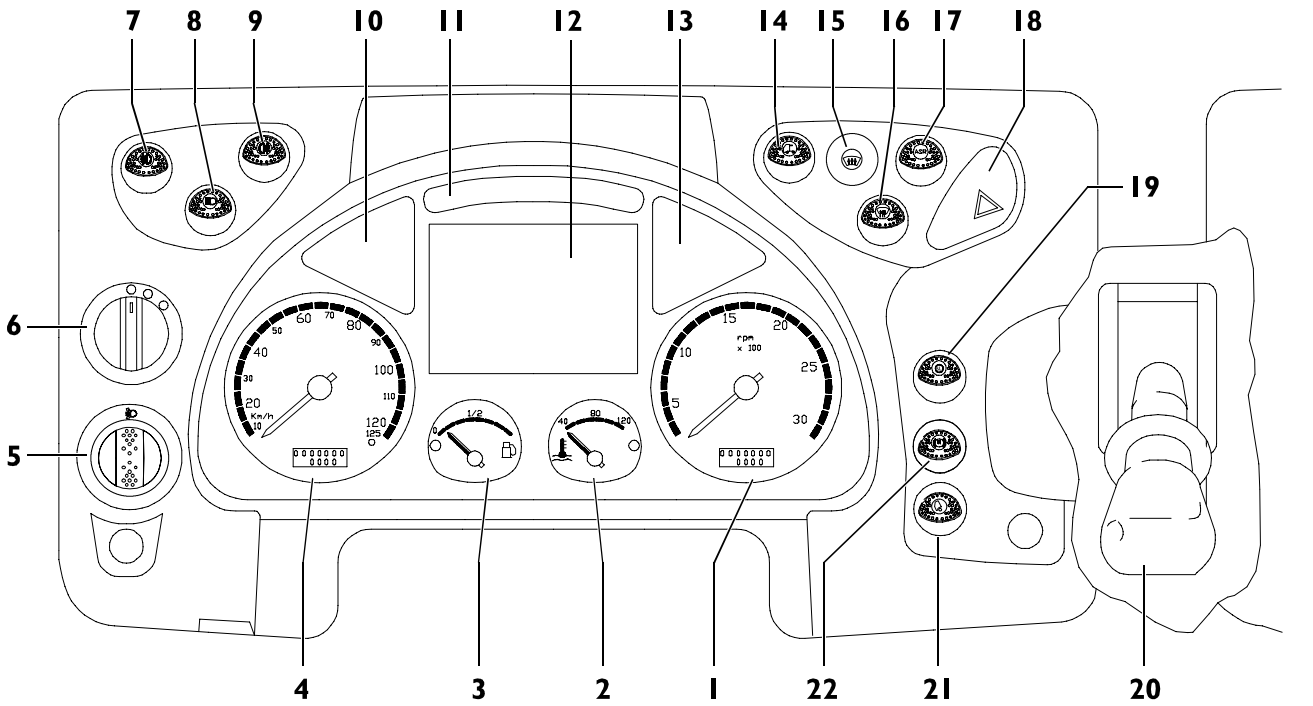

Ref.	Description
1	Revs counter
2	Coolant thermometer
3	Fuel level gauge
4	Speedometer
5	Headlamp trim control
6	External light switch
7	Fog light actuation switch
8	Auxiliary headlamp actuation switch
9	Rear fog light actuation switch
10	Optical indicator cluster
11	Optical indicator cluster
12	Display
13	Optical indicator cluster
14	Loading platform light actuation switch
15	Heated windscreen warning light
16	Heated windscreen actuation switch (OPT)
17	ASR actuation switch (if available)
18	Emergency light actuation switch
19	Cabin tilting electric circuit failure warning light
20	Parking brake
21	Cab tilt enablement switch
22	Retarder on switch

https://truckmanualshub.com/

CONTROLS ON THE CENTRAL BOARD (AT/AD)

Figure 27

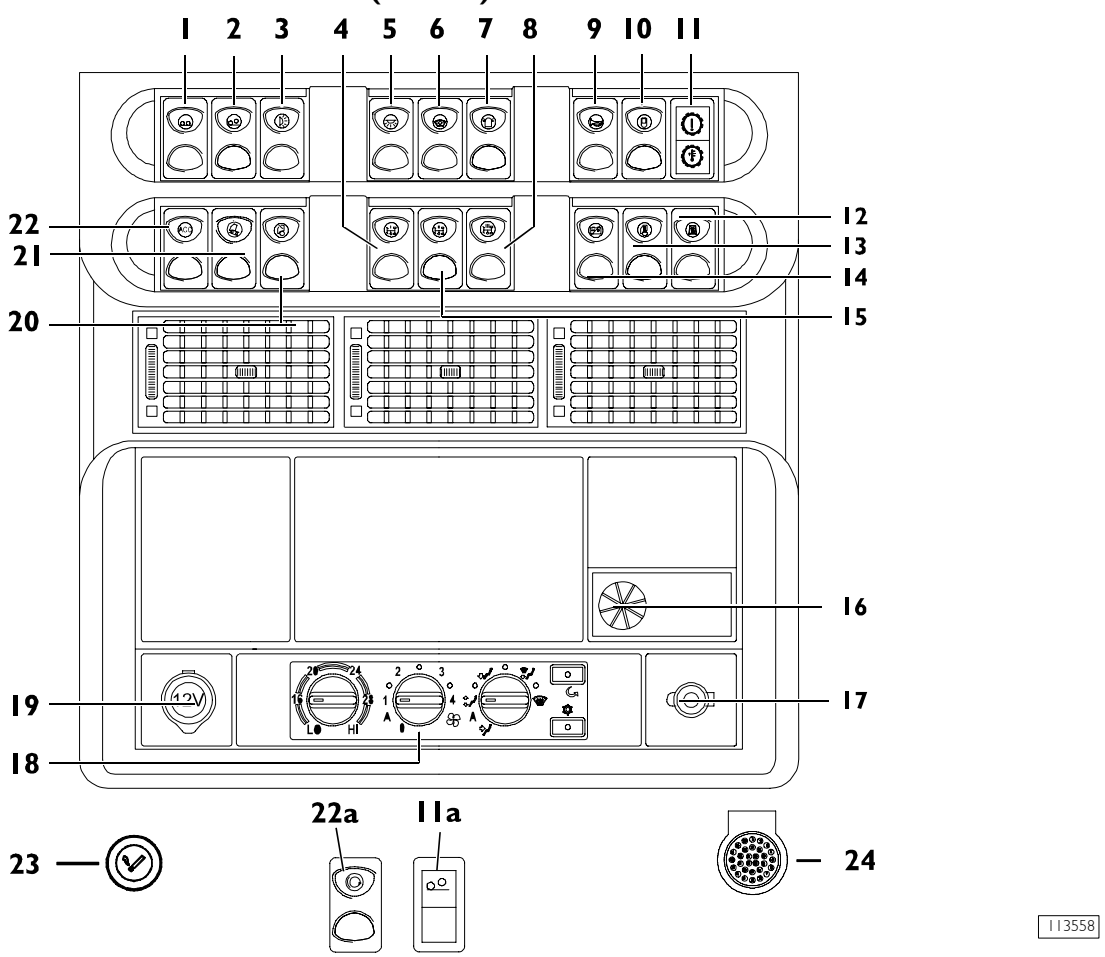

Ref.	Description
1	Pickup help button (OPT)
2	Third axle lifting/lowering button (OPT)
3	Rotating lamps switch (OPT)
4	Power takeoff switch 1 (OPT)
5	Pneumatic horns
6	Sunshade curtain control (OPT)
7	Roof side roof lamps cabin lights control
8	Power takeoff 2 (OPT)
9	Central roof lamp cabin lights
10	Rearview mirrors heating
11	Allison gearbox oil high temperature warning light
11a	Liftable 3rd axle warning light with cantilever
12	Switch for immediately connecting supplementary water heater (OPT)
13	Engine/cabin pre-heating selector (OPT)
14	Switch for connecting supplementary air heater (OPT - for manual version only)
15	Multipower power takeoff control (OPT)
16	Supplementary water heater thermostat (OPT)
17	Key switch for ECO - POWER function
18	Heating/venting or air conditioner controls (OPT)
19	12V current outlet
20	Control for electric hatch pit (OPT)
21	ARB - Anti Roll Back actuation switch (if available)
22	ACC
22a	Engine brake engagement switch
23	Lighter
24	30-pole outlet for diagnosis

https://truckmanualshub.com/

BODY COMPUTER 2 (BC2)

Body Computer perspective view

Figure 28

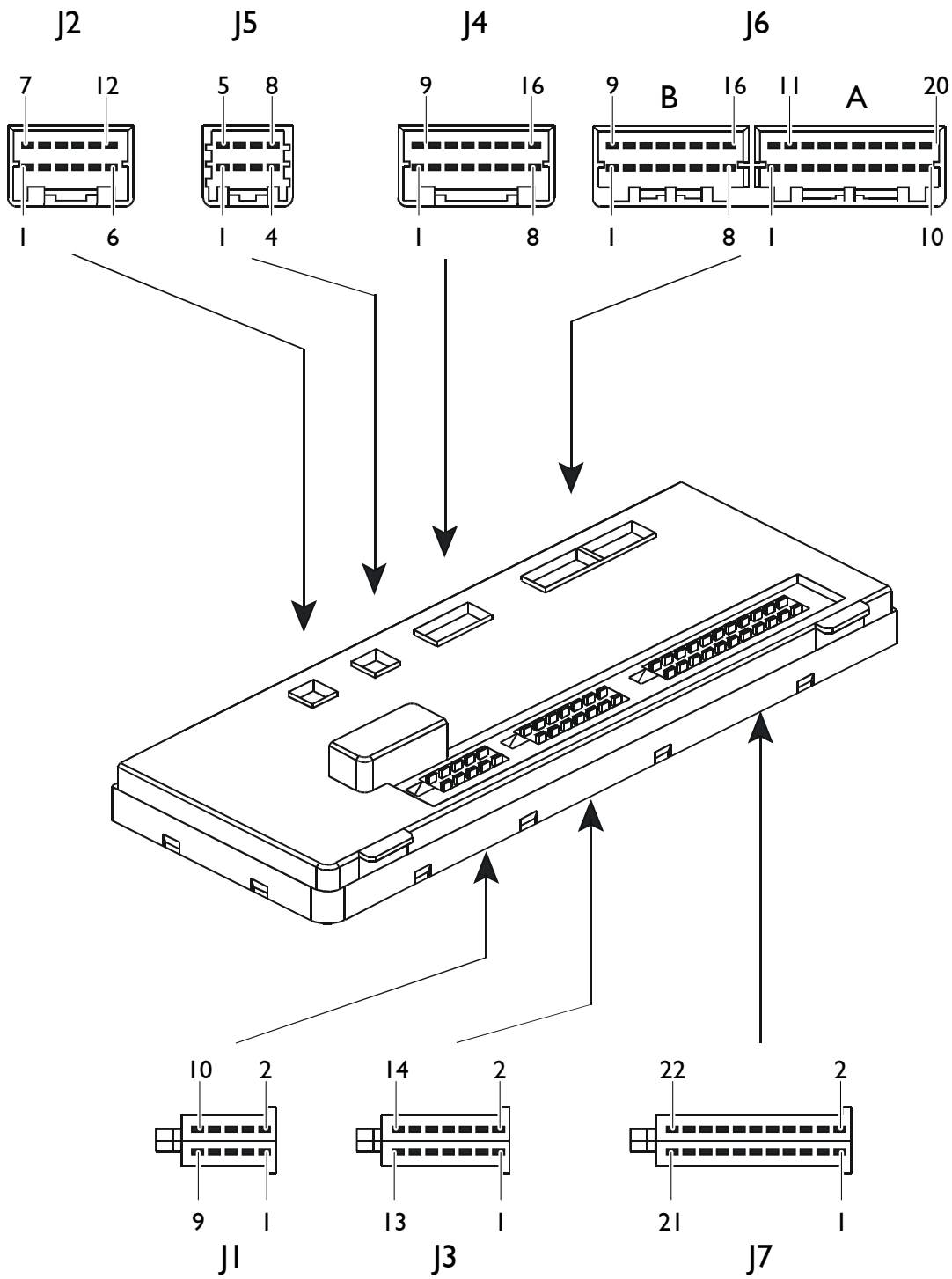

The connector pin-out is viewed from the cabling side.

50242

https://truckmanualshub.com/

Connector "J1"

Figure 29

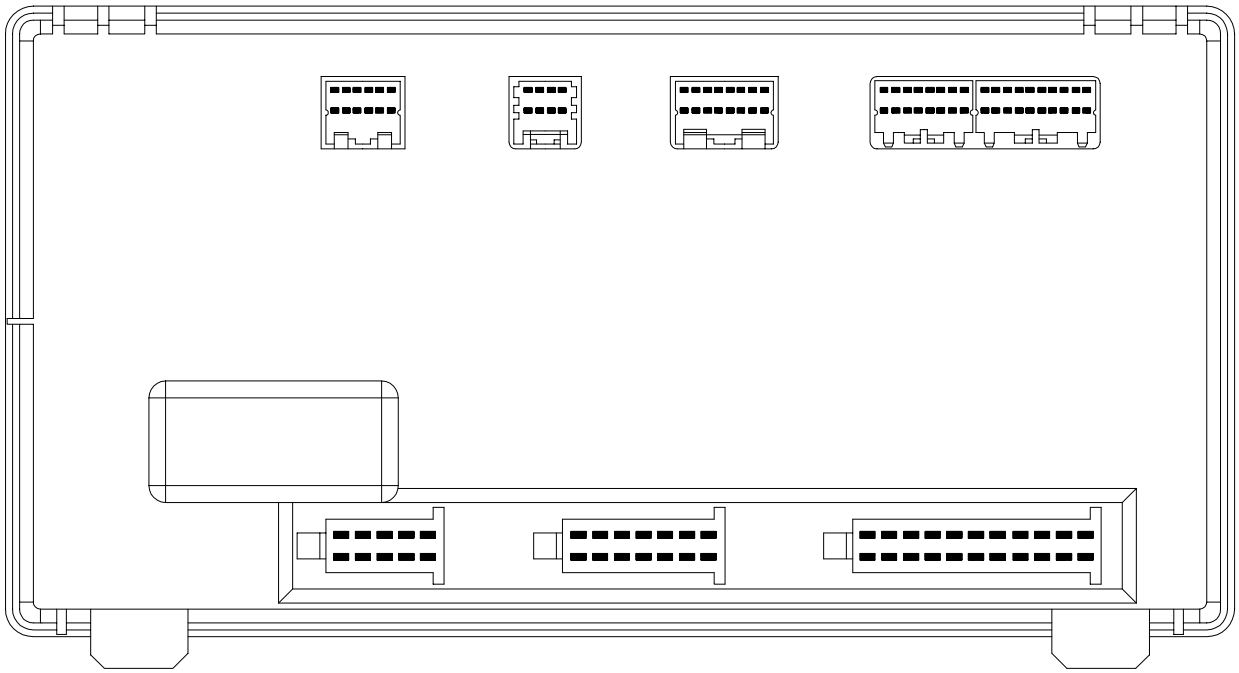

49372

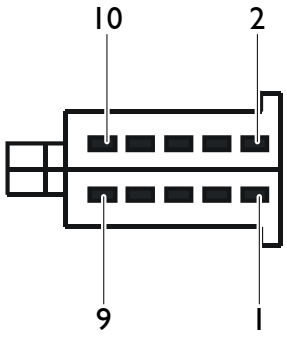

Ref.	Description	Component code	Cable color code
1	Positive from the fuse (after TGC)	70603/6	7905
2	Positive from the fuse (after TGC)	70603/6	7905
3	Positive from the fuse (after TGC)	70603/5	7905
4	Positive from the fuse (after TGC)	70603/5	7905
5	Ground	-	0000
6	Ground	-	0000
7	Ground	-	0000
8	Positive from the fuse (to the battery)	70058	7972
9	Exterior lights for bodybuilders	ST14B	3333
10	TGC closing signal	25900	8035

https://truckmanualshub.com/

Connector "J2"

Figure 30

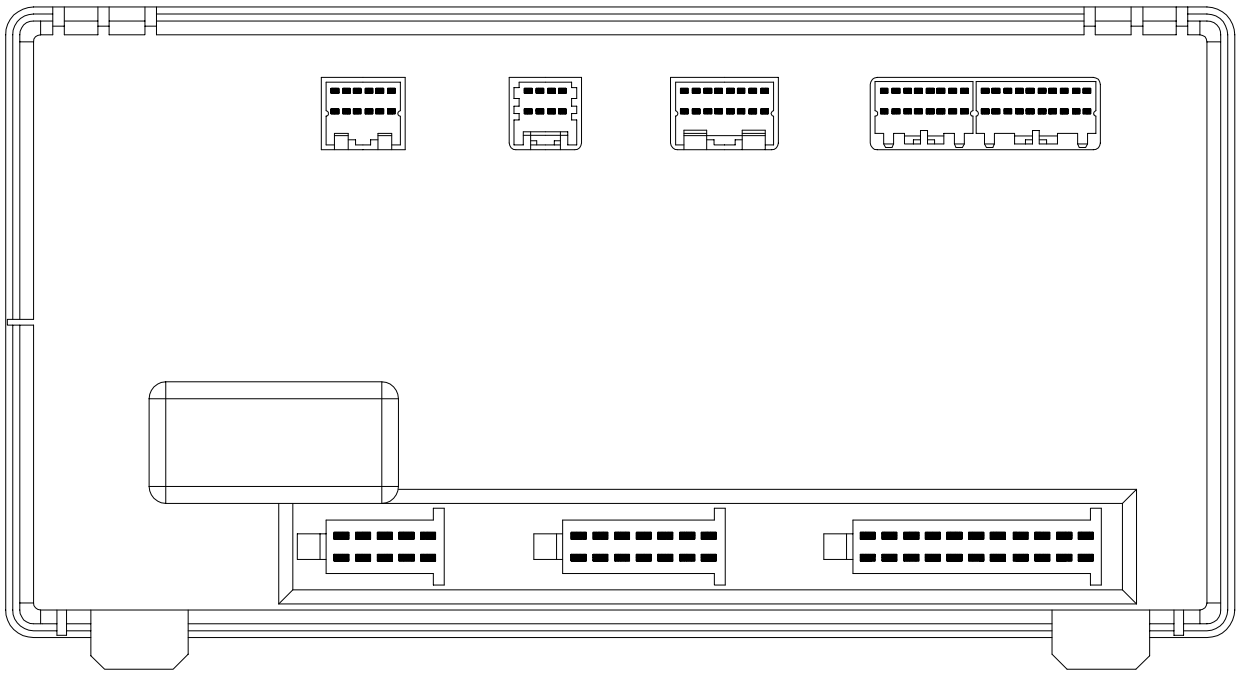

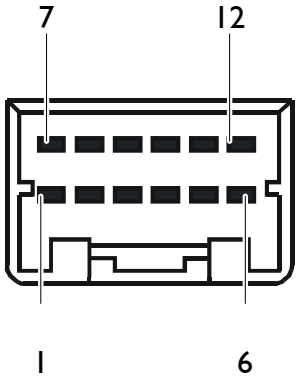

Ref.	Description	Component code	Cable color code
1	CAN - H line (ICB)	-	Ws/Bi
2	CAN - L line (ICB)	-	Gn/Ve
3	CAN - H line (VDB)	-	Ws/Bi
4	CAN - L line (VDB)	-	Gn/Ve
5	Diagnosis K line	72021	2995
6	Free	-	-
7	Free	-	-
8	Free	-	-
9	Free	-	-
10	CAN - H line (BCB)	-	Ws/Bi
11	Free	-	-
12	CAN - L line (BCB)	-	Gn/Ve

https://truckmanualshub.com/

Connector "J3"

Figure 31

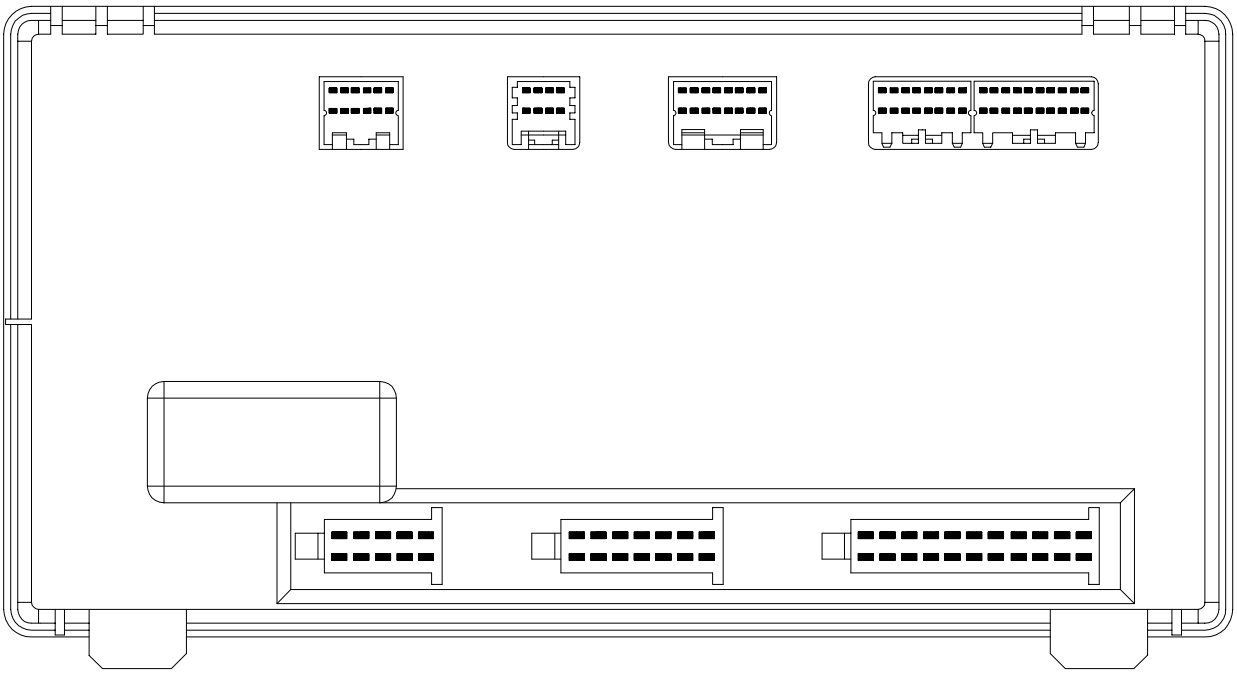

49372

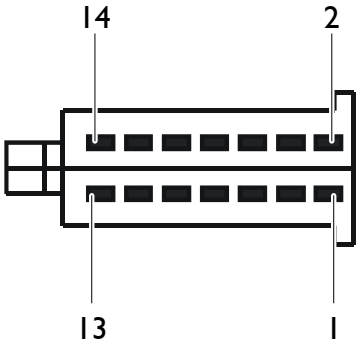

Ref.	Description	Component code	Cable color code
1	Signal from the external light switch	52307	2237
2	Positive for internal light ceiling light fixture	39034	4423
3	Negative from the internal light switch	52326	0942
4	Free	-	-
5	Negative from the external air temperature sensor	42045	0550
6	TGC opening signal (OPT)	25900	8045
7	Sun curtain motor (AS)	-	8063
8	Positive from the external air temperature sensor	42045	7573
9	Negative from the TGC opening switch (OPT)	53316	0946
10	Positive for horn switch	52200	1116
11	Positive for front clearance lamps	37001	3339
12	Sunroof opening signal (OPT)	12015	7010
13	Sun curtain motor (AS)	-	8064
14	Sunroof closing signal (OPT)	12015	7011

Connector "J4"

Figure 32

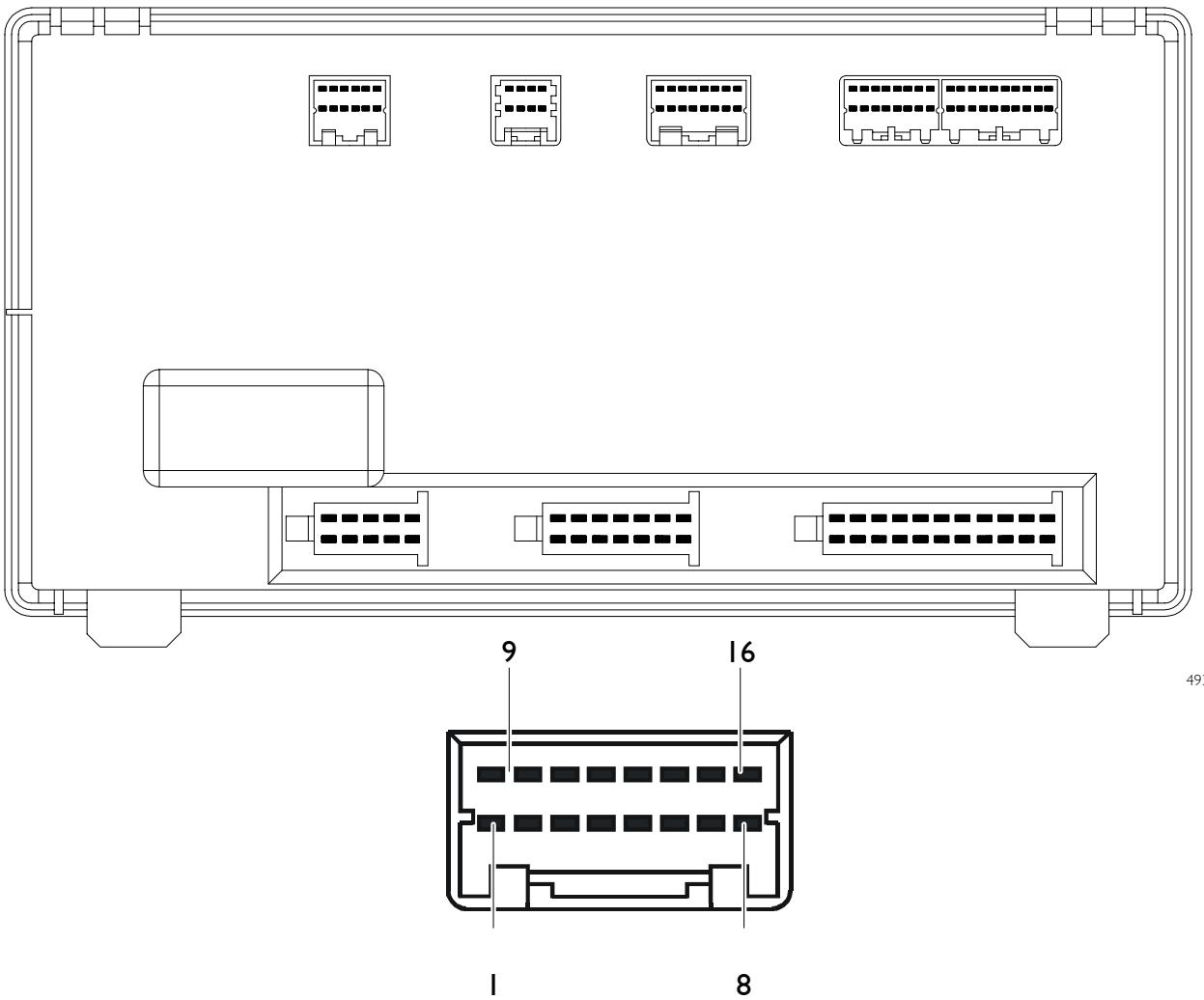

Ref.	Description	Component code	Cable color code
1	Positive for step illumination light fixture	39003	4445
2	Negative from the TGC closing switch (ON)	53316	0945
3	Negative from the exhaust brake presetting switch	52324	0082
4	Free	-	-
5	Auxiliary heater actuation presetting	(ST19/10)	0501
6	Horn control	54033	1116
7	Door closing negative (passenger's side)	85023	0985
8	Door closing negative (driver's side)	85023	0065
9	Sun curtain (rise) control (AS)	-	0973
10	Sun curtain (descent) control (AS)	-	0972
11	Negative from the engine radiator low fluid level sensor	44036	5527
12	Negative from the engine radiator lacking fluid sensor	44036	5520
13	Auxiliary heater water pump consent	ST9/11	7786
14	Negative from the switch for cabin uncoupled during lowering	61000B	0922
15	Door opening negative (passenger's side)	85023	0984
16	Sun curtain position (AS)	52035	0974

https://truckmanualshub.com/

Connector "J5"

Figure 33

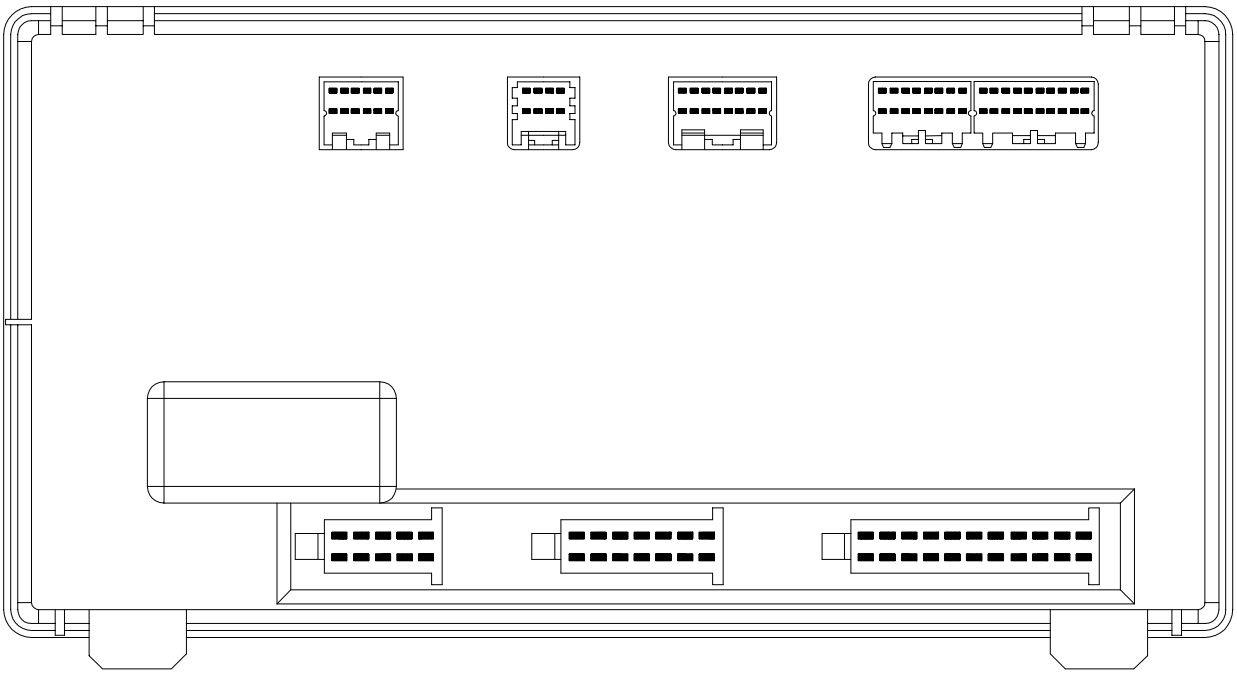

49372

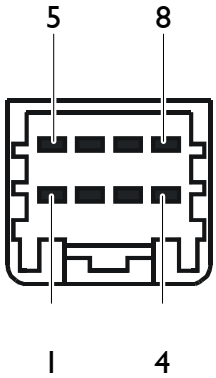

Ref.	Description	Component code	Cable color code
1	Bodybuilder vehicle parked signal	ST14A	5515
2	Negative from the handbrake ON switch	42102	6662
3	Free	-	-
4	Control for internal red light	52326	0941
5	Reverse gear signal	ST14A - 10	2268
6	Free	-	-
7	Spot light switch	52094	4440
8	Free	-	-

Connector "J6A"

Figure 34

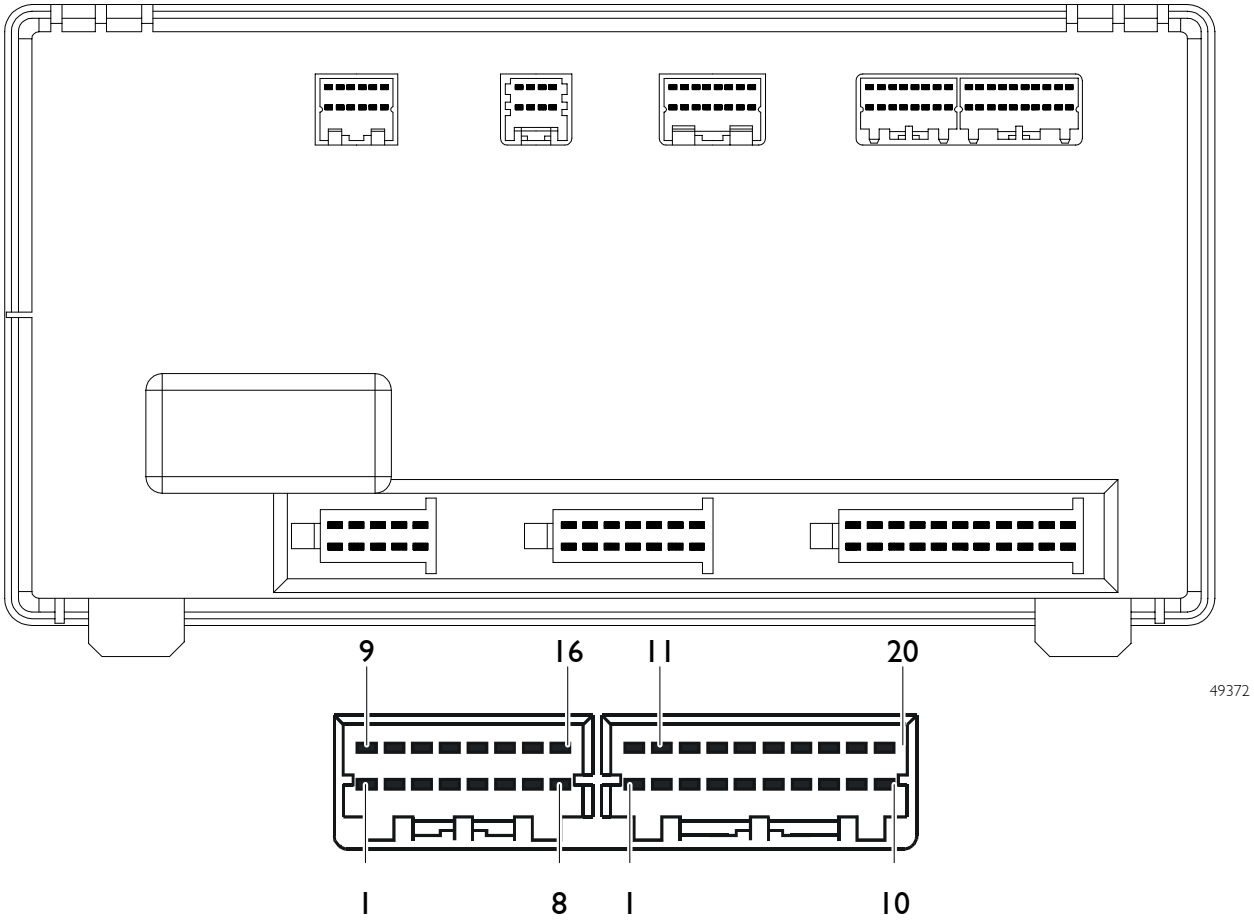

Ref.		Description	Component code	Cable color code
A	1	Negative from the sunroof switch (closing)	53306	0971
	2	Positive +15 for RFC/FFC	86117/86118	0987
	3	Free	-	-
	4	Positive for red lights	-	4422
	5	Free	-	-
	6	Free	-	-
	7	Positive for spotlights (AS)	39036	4941
	8	Free	-	-
	9	Windscreen washer fluid level sensor	44035	5521
	10	Free	-	-
	11	Free	-	-
	12	Free	-	-
	13	Signal from headlamp trim control	52312	9936
	14	Free	-	-
	15	Free	-	-
	16	Cab tilt enablement signal	61000A	8128
	17	Free	-	-
	18	Free	-	-
	19	Free	-	-
	20	Free	-	-

https://truckmanualshub.com/

Connector "J6B"

Figure 35

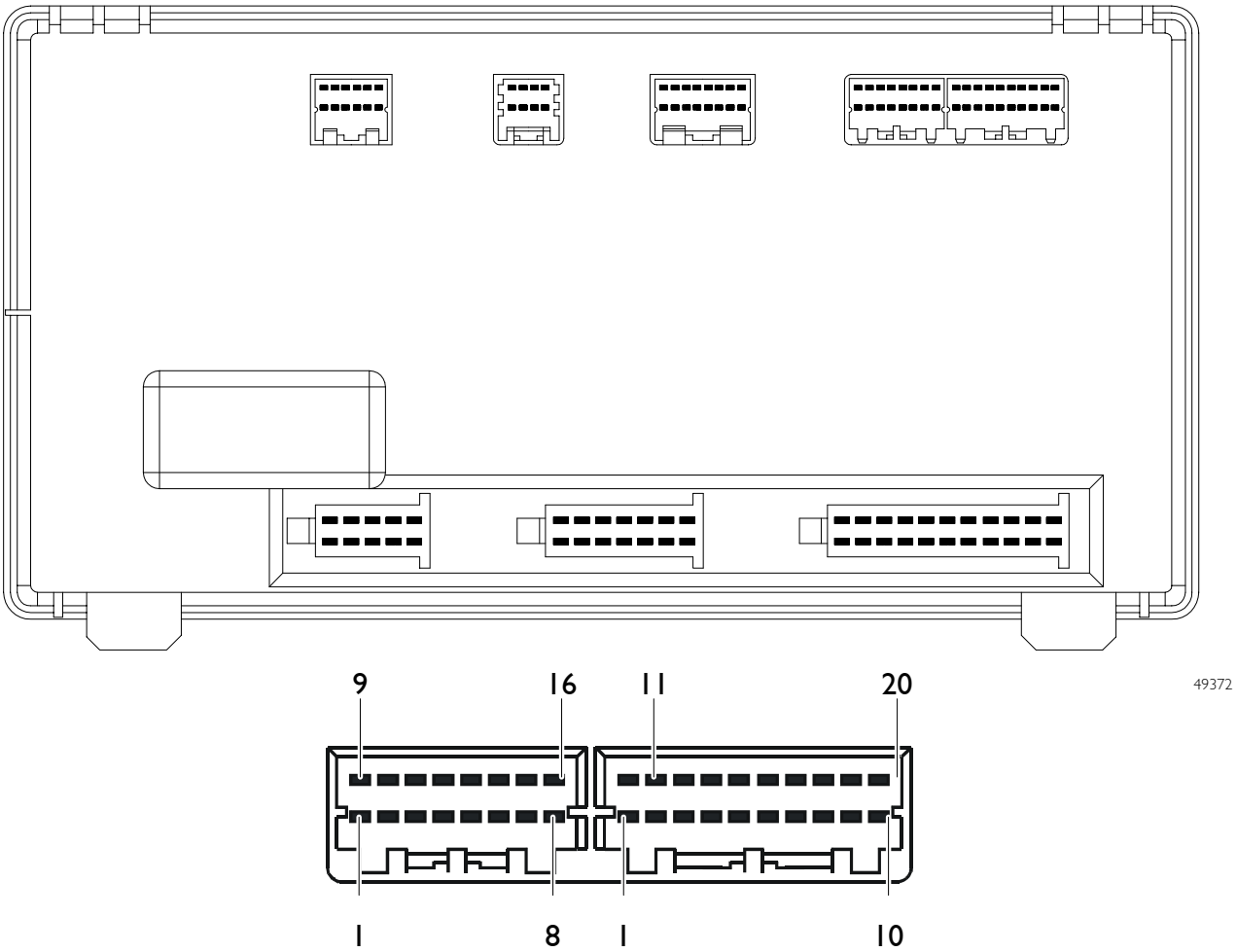

Ref.		Description	Component code	Cable color code
B	1	Free	-	-
	2	Negative from the trailer brake pressure gauge	42108	-
	3	Free	-	-
	4	Free	-	-
	5	Free	-	-
	6	Free	-	-
	7	Free	-	-
	8	Negative from the cabin uncoupling enable switch	53061	8129
	9	Free	-	-
	10	Trailer EBS/ABS failure signal	72006	6671
	11	Free	-	-
	12	Free	-	-
	13	Free	-	-
	14	Free	-	-
	15	Free	-	-
	16	Negative from the sunroof control switch (opening)	53306	0970

Connector "J7"

Figure 36

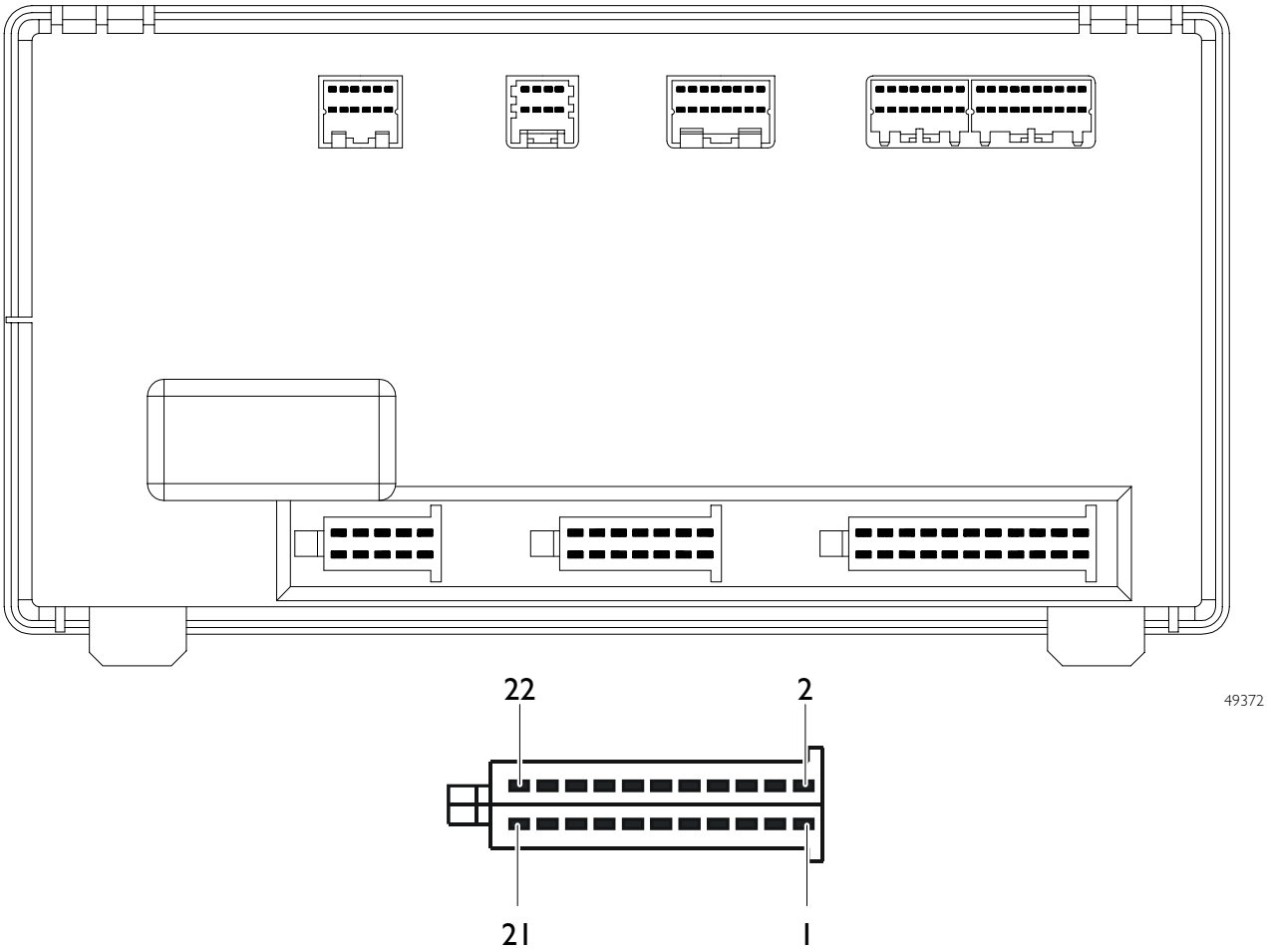

Ref.	Description	Component code	Cable color code
1	User positive under key (+15)	25213	8802
2	-	-	-
3	Positive (+15) for bodybuilders	ST14A - 11	8871
4	Engine started signal	ST14A - 8	7778
5	Negative from the parking light switch	52307	3333
6	Negative from front fog light switch	52304	2228
7	Free	-	-
8	Negative from rear fog light switch	53315	2284
9	Positive 30-pole	72021	8802
10	Negative from circle light switch	52009	2224
11	Negative for operator side door opening	85023	0064
12	Negative from supplementary light switch	52024	2229
13	Negative from the passenger's side door switch	53509	0003
14	Positive from key switch (15)	52502	8887
15	Negative from the driver's side door switch	53509	0893
16	Positive from windshield wiper unit	65000	8880
17	Negative from emergency light control switch	52302	1113
18	Positive for windscreen washer pump and headlight washer pump enablement	64000/25740	8886
19	Positive for instrument lighting	-	4442
20	Positive from windshield wiper unit	65000	8873
21	Positive for windshield wiper unit (low speed)	65000	8882
22	Positive for windshield wiper unit (high speed)	65000	8881

https://truckmanualshub.com/

F.F.C. - R.F.C. (Front Frame Computer - Rear Frame Computer)

These are Peripheral Electronic Units used to pilot most electrical utilities.
They can be connected directly to loads such as lights, sensors and electrical motors.

The F.F.C. is located on the vehicle front below the cab and the R.F.C. is located in the frame center.

They differ by a code (F for Front and R for Rear) and a different assembly hole (*).

Figure 37

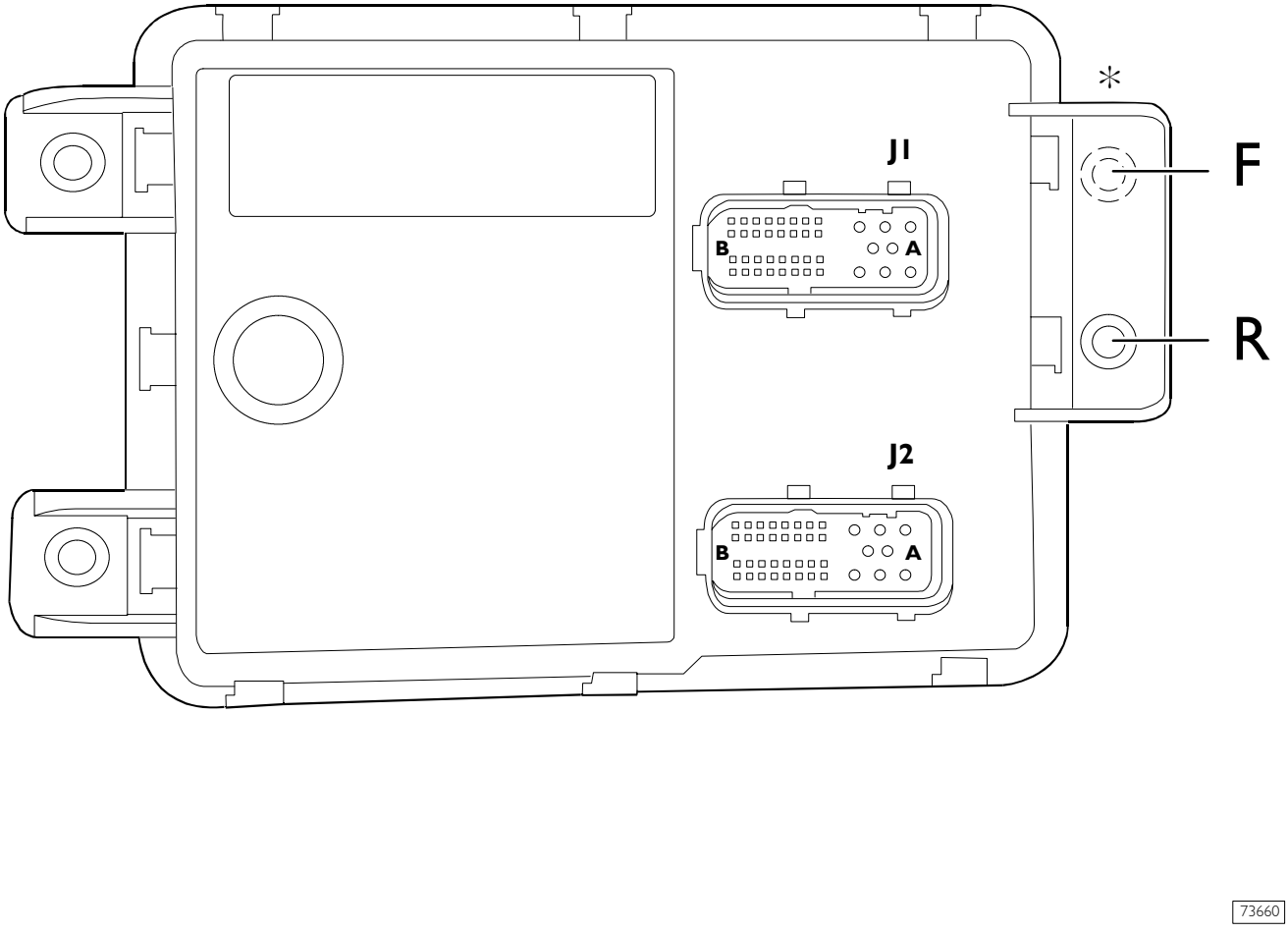

https://truckmanualshub.com/

F.F.C. (Services / Engine)

Figure 38

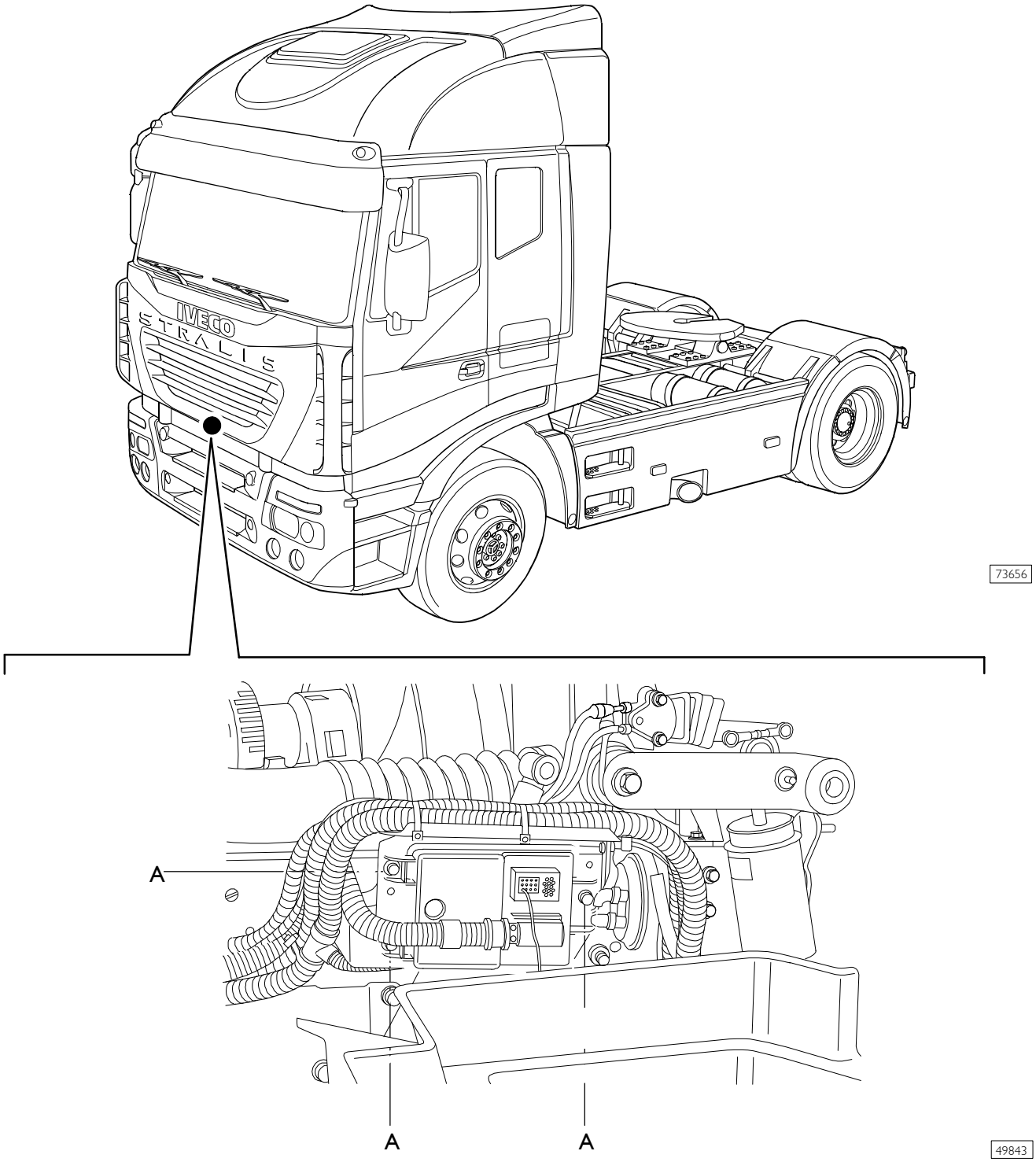

Located on the right frame beam in the vehicle front under the cab. Proceed as follows to remove the electronic center:

- overturn the cabin
- unscrew the three control unit (A) supporting screws;
- disconnect the two connectors without removing cables from the connector seat.

https://truckmanualshub.com/

F.F.C. (Services / Engine) Connector "J1"

Figure 39

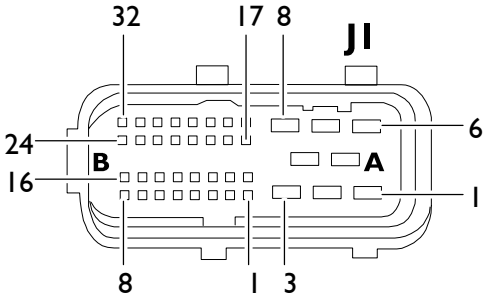

Ref.	Description	Component code	Cable colour code
1	Positive for right low-beam headlight	30001	2223
2	Positive for right high-beam headlight	30001	2221
3	Free	-	-
A 4	Free	-	-
5	Positive for left high-beam headlight	30001	2219
6	Positive for auxiliary lamp high-beam headlights	30010	2229
7	Positive for front fog lights	30011	2228
8	Positive for left low-beam headlight	30001	2231
1	Free	-	-
2	Positive for headlamp trim actuator	30100	9937
3	Free	-	-
4	Free	-	-
5	Free	-	-
6	Free	-	-
7	Positive for front and right-side indicator lights	32002-33001	1123
8	Positive for windscreen washer electric pump	64000	8886
9	Free	-	-
10	Free	-	-
11	Free	-	-
12	Free	-	-
13	Free	-	-
14	Free	-	-
15	Signal for headlamp trim actuator	30100	9936
B 16	Positive for front right dimmer	30001	3330
17	Free	-	-
18	Negative for headlamp trim actuator	30100	9935
19	Free	-	-
20	Free	-	-
21	Free	-	-
22	Free	-	-
23	Free	-	-
24	Positive for front and left-side indicator lights	32002- 33001	1129
25	Free	-	-
26	Free	-	-
27	Free	-	-
28	Free	-	-
29	Free	-	-
30	Free	-	-
31	-	-	-
32	Positive for front left dimmers	30001	3339

Connector "J2"

Figure 40

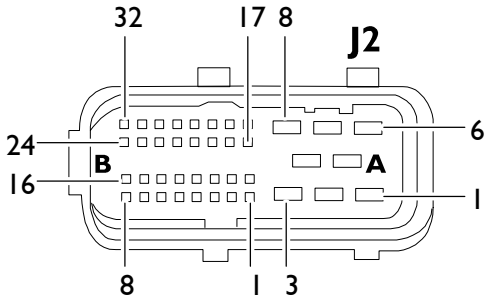

Ref.	Description	Component code	Cable colour code
1	Positive from the light power supply fuse (left side)	70000	7904
2	Positive from the light power supply fuse (left side)	70000	7904
3	Positive from the light power supply fuse (right side)	70000	7903
A 4	Positive from the light power supply fuse (left side)	70000	7904
5	Positive from the light power supply fuse (left side)	70000	7903
6	Free	-	-
7	Chassis ground	-	0000
8	Positive from the light power supply fuse (right side)	70000	7903
1	CAN - H line (BCB)	-	Ws/Bi
2	CAN - L line (BCB)	-	Gn/Ve
3	CAN - H line (BCB)	-	Ws/Bi
4	CAN - L line (BCB)	-	Gn/Ve
5	Free	-	-
6	Tester K line	72021	2998
7	Positive +15 from BC2	86116	0987
8	Positive for engine oil level sensor	44043	5506
9	Free	-	-
10	Free	-	-
11	Negative from the fuel filter clogging signalling switch	42700	5531
12	Free	-	0000
13	Free	-	-
14	Free	-	-
15	Free	-	-
B 16	Free	-	-
17	Free	-	-
18	Negative from the front shoe wear signalling sensor	86002	6664
19	Free	-	-
20	Free	-	-
21	Free	-	-
22	Free	-	-
23	Negative from the indicator power assisted steering low fluid level	44037	5525
24	Signal from alternator (L)	03000	7009
25	Free	-	-
26	Free	-	-
27	Free	-	-
28	Free	-	-
29	Free	-	-
30	Free	-	-
31	Free	-	-
32	Signal from engine oil pressure sensor	44043	5505

https://truckmanualshub.com/

R.F.C.

Located in the vehicle center on the right side. Follow the F.F.C. center instructions for removal.

Figure 41

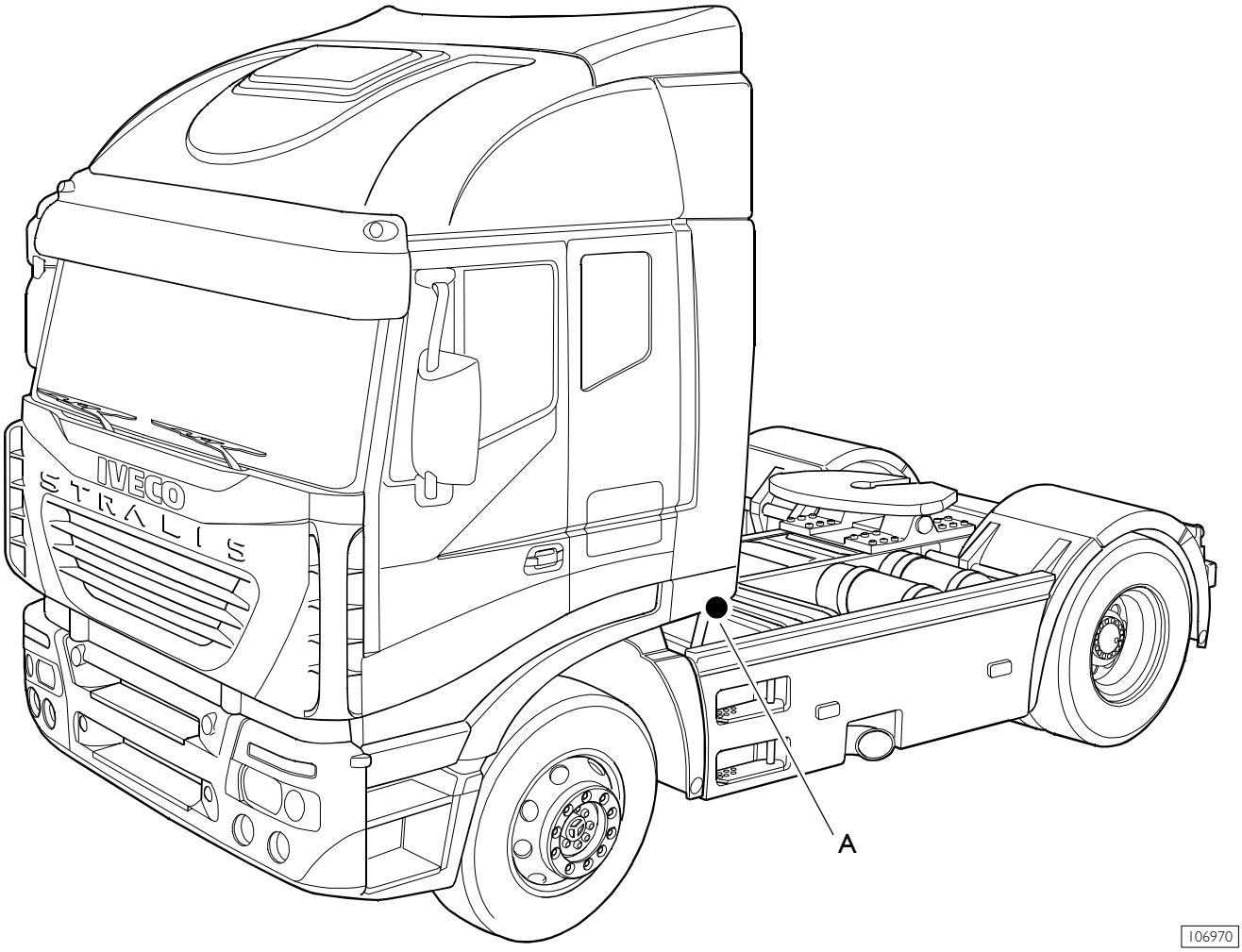

A. R.F.C. electronic center

R.F.C. (chassis) Connector "J1"

Figure 42

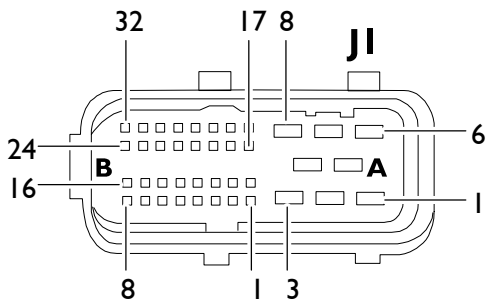

Ref.	Description	Component code	Cable colour code
1	Free	-	-
2	Positive +15 for bodybuilders	-	8871
3	Positive for trailer / right side clearance light	33004	3330
A 4	Positive for trailer / left side clearance light	33004	3339
5	Free	-	-
6	Positive for trailer brake lights	72010	1179
7	Positive for trailer reversing lights	72010	2226
8	Free	-	-
1	Free	-	-
2	Free	-	-
3	Negative of switch for transmission in neutral position	53508	8050
4	Negative of switch for lighting reverse gear lights	53503	2268
5	Negative of switch for signalling reduced speed-gear engaged	53507	9992
6	Negative of switch for signalling clogged air filter	42351	6663
7	Positive for the trailer right direction light	72010	1185
8	Free	-	-
9	Front sensor air pressure signal (APU)	-	5562
10	Rear sensor air pressure signal (APU)	-	5561
11	Negative of the switch signalling trailer braking circuit failure	42111	6689
12	Free	-	-
13	Positive for brakes pressure sensors and shoes wear	61104	5560
14	Positive from fuel level sensor	44031	5557
15	Free	-	-
B 16	Positive for light illuminating the fifth wheel	34011	2224
17	Return from fuel level sensor	44031	5555
18	Free	-	-
19	Free	-	-
20	Free	-	-
21	Free	-	-
22	Free	-	-
23	Free	-	-
24	Positive for the trailer left direction light	72010	1180
25	Free	-	-
26	Free	-	-
27	Free	-	-
28	Free	-	-
29	Free	-	-
30	Signal from the sensor signalling water in Diesel oil filter	86013	5530
31	Free	-	-
32	Positive for trailer rear fog-lights	72010	2283

https://truckmanualshub.com/

R.F.C.
Connector "J2"

Figure 43

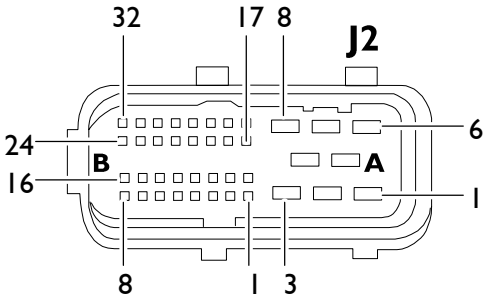

Ref.	Description	Component code	Cable colour code
1	Positive from the light power supply fuse (left side)	70000	7902
2	Positive from the light power supply fuse (left side)	70000	7902
3	Positive from the light power supply fuse (right side)	70000	7901
A 4	Positive from the power supply fuse (left side)	70000	7902
5	Positive from the power supply fuse (right side)	70000	7901
6	Positive for external lights (body builders)	ST 52/3	3333
7	Chassis ground	-	0000
8	Positive from the power supply fuse (right side)	70000	7901
1	CAN - H line (BCB)	-	Ws/Bi
2	CAN - L line (BCB)	-	Gn/Ve
3	Free	-	-
4	Free	-	-
5	Positive for the rear left indicator lights	34000	1120
6	K line (diagnosis connector)	72021	2999
7	Positive +15 from BC2	86116	0987
8	Positive for left brake lights	34000	1175
9	Free	-	-
10	Positive for rear fog lamps	34000	2283
11	Free	-	-
12	Negative from the 3rd axis shoe wear signalling sensor	86003	6664
13	Positive for right brake light	34000	1175
14	Positive for rear right dimmer	34000	1125
15	Positive for rear right clearance light	34000	3307
B 16	Positive for right parking indicator light	34000	3315
17	Free	-	-
18	Negative from the pneumatic suspension failure pressure switch	42200	6401
19	Negative from the longitudinal differential lock ON signalling switch	53521	6603
20	Negative from the 2nd rear axle shoe wear signalling sensor	86003	6667
21	Free	-	-
22	Signal from the 3rd axis wheel pad wear signalling sensor (left)	88011	6037
23	Negative from the transverse differential lock switch	53801	0041
24	Signal from the 3rd axis wheel pad wear sensor (right)	88011	6035
25	Free	-	-
26	Positive for reverse gear light	34000	2226
27	Positive for rear left clearance light	34000	3306
28	Positive for rear left parking light	34000	3305
29	Free	-	-
30	Negative from the transverse differential lock signalling switch	53801	0040
31	Free	-	-
32	Free	-	-

https://truckmanualshub.com/

D.D.M. / P.D.M.

The three centers are identical.
The D.D.M. is located inside the operator door; the P.D.M. inside the passenger door.

Figure 44

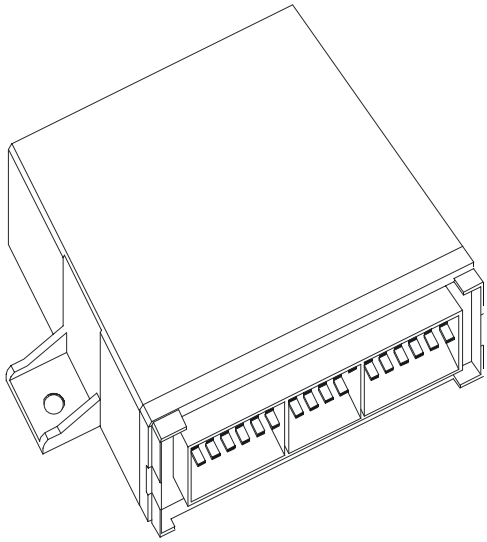

50239

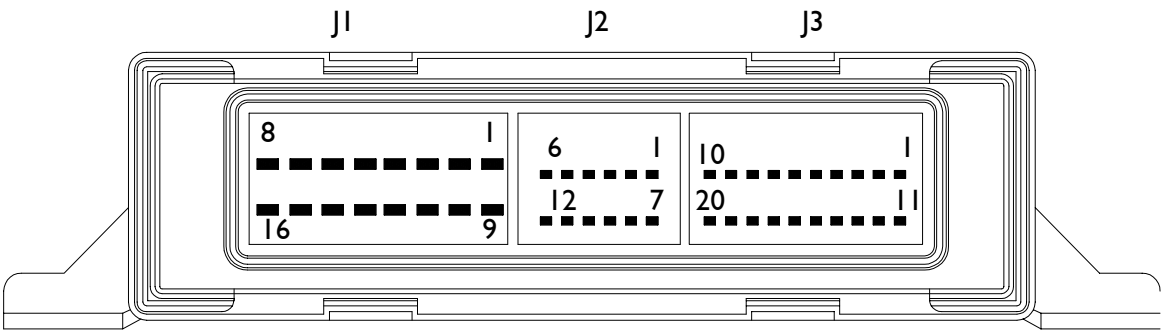

49723

The only difference between D.D.M. and P.D.M. is that the P.D.M. pin J2/10 is connected by means of a jumper with pin J1/8 towards the ground for passenger module recognition.

https://truckmanualshub.com/

D.D.M. / P.D.M.

Figure 45

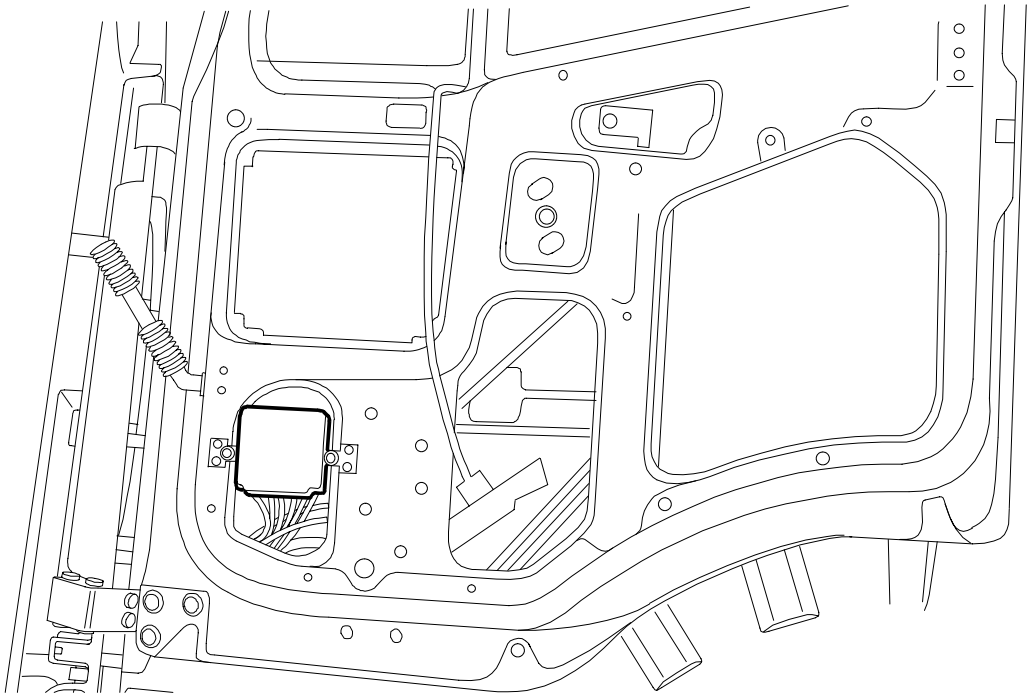

49838

These centers manage all the functions appertaining to the two vehicle doors, namely:

- mirror heating
- mirror adjustment
- window lifter
- centralized lock.

They are located inside the vehicle door and removal is as follows:

1. remove the door lining;
2. disassemble the loudspeaker tray by removing the three fastening screws;
3. take DDM off the tray by removing the two fastening screws
4. disconnect the three electric connection adapters.

Disassembling operations are the same for both doors.

https://truckmanualshub.com/

P.D.M.

CONNECTOR J1		
Pin	Cable	Function
1	8830	Positive for main rear view mirror heating (only AS)
2	8830	Positive for wide-angle rear view mirror heating (only AS)
3	8830	Positive for manoeuvring door mirror heating (only AS)
4	9965	Centralized lock motor control (CDL)
5	9964	Centralized lock motor control (CDL)
6	8863	Window lifter motor control (opening)
7	8865	Window lifter motor control (closing)
8	0000	Mass - Bridge with (J2-10) for module recognition
9	-	Free
10	-	Free
11	0000	Negative for centralized door lock release push button
12	0000	Negative for main rearview mirror heating
13	0000	Negative for wide angle rearview mirror heating
14	-	-
15	2990	K line for diagnosis
16	7990	Center power positive
CONNECTOR J2		
Pin	Cable	Function
1	Ws/Bi	CAN H line (BCB)
2	-	Free
3	-	Free
4	8851	Wide angle rearview mirror control (return)
5	8852	Wide angle rearview mirror control (vertical)
6	8857	Main rearview mirror control (return)
7	Gv/Ve	CAN L line (BCB)
8	8853	Wide angle rearview mirror control (horizontal)
9	-	Free
10	0000	Mass - Bridge with (J1-8) for passenger side ECU recognition
11	8859	Main rearview mirror control (horizontal)
12	8858	Main rearview mirror control (vertical)
CONNECTOR J3		
Pin	Cable	Function
1	0962	Negative from passenger side glass lifter push button
2 ÷ 9	-	Free
10	4442	Positive for passenger side glass lifter push button light
11	0961	Negative from passenger side glass lower push button
12	0960	Negative for passenger side glass control push button + lighting
13 ÷ 20	-	Free

https://truckmanualshub.com/

D.D.M.

CONNECTOR J1		
Pin	Cable	Function
1	8830	Positive for main rear view mirror heating (only AS)
2	8830	Positive for wide-angle rear view mirror heating (only AS)
3	8830	Positive for front rear view mirror heating (only AS)
4	9965	Centralized door lock motor control
5	9964	Centralized door lock motor control
6	8863	Window lifter motor control
7	8865	Window lifter motor control
8	0000	Control unit ground
9	-	Free
10	-	Free
11	0000	Negative for Centralized door lock
12	0000	Negative for main rearview mirror heating
13	0000	Negative for wide angle rearview mirror heating
14	-	Free
15	2991	K line for diagnosis
16	7991	Positive for center power
CONNETOR J2		
Pin	Cable	Function
1	Ws/Bi	CAN H line (BCB)
2	-	Free
3	-	Free
4	8851	Wide angle rearview mirror control (return)
5	8852	Wide angle rearview mirror control (vertical)
6	8806	Main rearview mirror control (return)
7	Gv/Ve	CAN L line (BCB)
8	8843	Wide angle rearview mirror control (horizontal)
9	-	Free
10	-	Free
11	8809	Main rearview mirror control (horizontal)
12	8808	Main rearview mirror control (vertical)
CONNECTOR J3		
Pin	Cable	Function
1	0962	Negative from passenger side window lifter push button
2	0966	Negative from passenger side window lower push button
3	0967	Negative from operator side window lifter push button
4	0957	Mirror heating control (only AS)
5	0956	Mirror selection control (only AS)
6	0953	Negative from right rearview mirror control push button (movement to the right)
7	0954	Negative from left rearview mirror control push button (movement to the left)
8	0951	Negative from right rearview mirror control push button (movement downwards)
9	0952	Negative from left rearview mirror control push button (movement upwards)
10	4442	Positive for passenger/operator side window push button lighting
11	0961	Negative from passenger side window lower push button
12	0960	Negative for passenger side window control push button + lighting
13	0951	Negative for operator side window control push button + lighting
14	0083	Mirror selection and heating ground (only AS)
15	0950	Negative for rearview mirror control joystick push buttons
16	0000	Negative for rearview mirror control joystick push button lighting
17	0000	Mirror heating control light ground (only AS)
18	-	Free
19	4442	Positive for rearview mirror control joystick push button lighting
20	4442	Positive for mirror heating control light (only AS)

https://truckmanualshub.com/

B.M. (BED MODULE)

Positioned at the cab rear

Figure 46

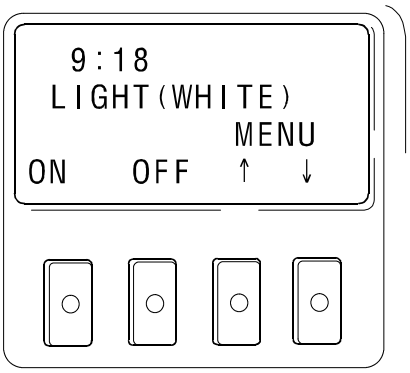

10697

The B.C. identifies its presence but CANNOT be diagnosed.

Its functions are as follows
(variable configuration according to vehicle accessories):

- ❑ Time in hours and minutes
- ❑ Switching on/off of cab interior lights (selection of white/nightime lights).
- ❑ Opening/closing doors.
- ❑ Opening/closing electric windows.
- ❑ Opening/closing electric hatch.
- ❑ Lowering/raising sun blinds.
- ❑ Switching radio on/off
- ❑ Radio volume adjustment
- ❑ Radio tuning
- ❑ Wake up function.
- ❑ Switching additional heater on/off.
- ❑ Temperature adjustment (only with additional heater switched on). (Automatic).
- ❑ Adjustment of heater on time (9 hours max.)

NOTE Press the switch on the instrument panel before adjusting heater temperature.

https://truckmanualshub.com/

E.B.M. (EASY BED MODULE)

E.B.M. (Easy Bed Module) substitutes the previous (B.M.) roughly carrying out same functions. It has three keys and a display with icons for the various functions and the visualisation of the time. The B.M.E. connector is the same as the B.M. and the electrical connections are unchanged.

Figure 47

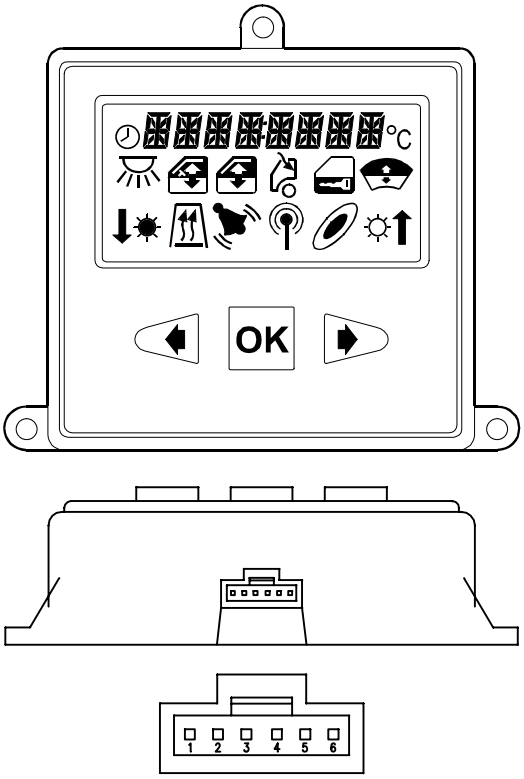

113411

Technical features

❑ Supplier	ITALAMEC
❑ Nominal Voltage	24V
❑ Working Voltage	18V ÷ 32V
❑ Working Temperature	-30°C ÷ +60°C
❑ Absorption - stand by	<200mA
❑ Absorption - normal display mode	<200mA
❑ Absorption - sleep mode	<3mA
❑ Data transmission speed (CAN line)	62,500 (BIT/SEC)

Pin - out

Pin	Description	Cable code colour
1	Direct Positive battery (+Bat)	7906
2	Ground	0000
3	-	-
4	CAN L line (BCB)	Green
5	CAN H line (BCB)	White
6	-	-

https://truckmanualshub.com/

E.B.M. Functions

The functions which are carried out by E.B.M. vary according to the configuration of the accessories expected on the vehicle.

Figure 48

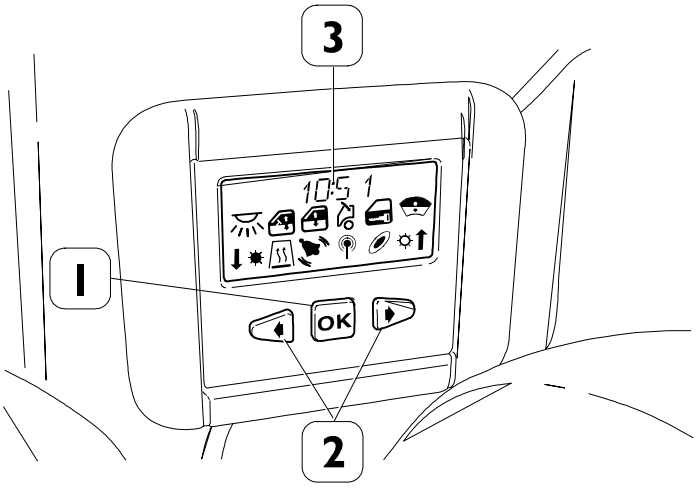

1. Confirmation key - 2. Key for the selection of the desired function - 3. Clock

Function	Symbol	Availability
Indication of hour and minutes		Always
Switching on / off of internal cabin lights (white lights)		Always
Switching on / off of internal cabin lights (red lights)		Only for vehicles with medium-high roofs
Opening/closure doors		Optional
Opening/closure electric windows		Optional
Opening/closure electric trapdoor		Optional
Lowering /raising of sun blinds		Optional
Switching on / off radio Regulation of radio volume Radio tuning		Optional
Switching on / off radio Regulation volume Selection CD tracks		Optional
Alarm clock setting		Only if the alarm clock function is present on the Cluster
Alarm clock repetition (snooze) / switching off (stop)		Only if the alarm clock function is present on the Cluster
Switching on / off supplementary heater Regulation of temperature (if heater is switched on) Regulation of duration of heater functioning (max.9 hours)		Optional

https://truckmanualshub.com/

EDC (ECM) SYSTEMS

EDC 7 UC31 electronic control unit

Figure 49

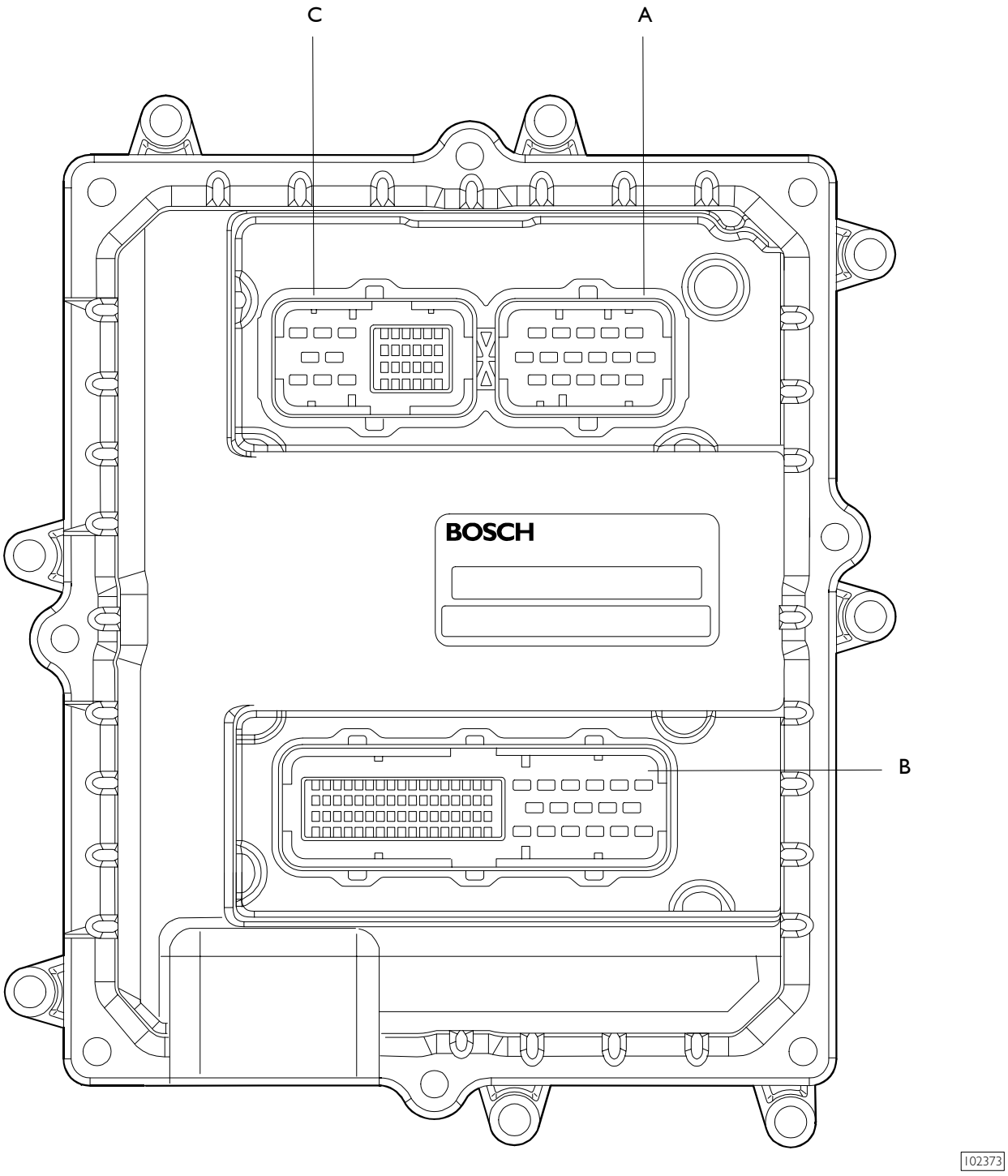

A. Injector connector - B. Chassis connector - C. Sensor connector

Electric injector connector 3 "A"

Figure 50

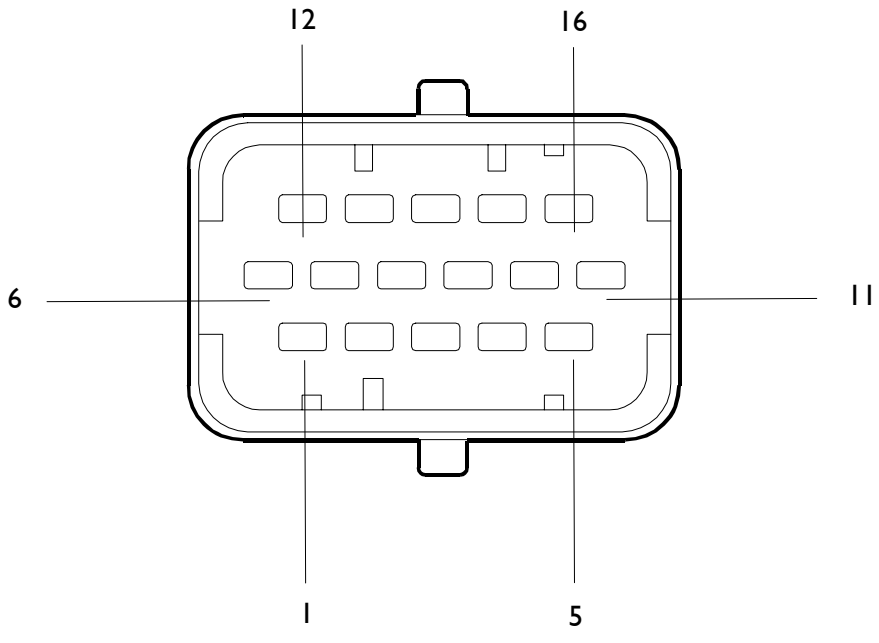

Colour legend

C	ORANGE
A	LIGHT BLUE
B	WHITE
L	BLUE
G	YELLOW
H	GREY
M	DARK BROWN
N	BLACK
W	LIGHT BROWN
S	PINK
R	RED
V	GREEN
Z	PURPLE

Pin	Description (F3B)	Description (F2B)	Cable colour code	
			F3A/B	F2B
1	-	Cylinder 5 pump injector	-	N
2	-	Cylinder 6 pump injector	-	N
3	Cylinder 4-5-6 pump injector shared cable	Cylinder 4 pump injector	N	N
4	-	Cylinder 1 pump injector control	-	B
5	-	Cylinder 3 pump injector control	-	V
6	Cylinder 2 pump injector control	Cylinder 2 pump injector	B	R
7	Engine brake control solenoid	Engine brake control solenoid	C	C
8	Engine brake control solenoid	Engine brake control solenoid	M	M
9	-	-	-	-
10	-	-	-	-
11	Cylinder 1-2-3 pump injector shared cable	Cylinder 2 pump injector control	R	G
12	Cylinder 3 pump injector control	Cylinder 3 pump injector	V	R
13	Cylinder 1 pump injector control	Cylinder 1 pump injector	B	R
14	Cylinder 4 pump injector control	Cylinder 4 pump injector control	L	L
15	Cylinder 6 pump injector control	Cylinder 6 pump injector control	H	V
16	Cylinder 5 pump injector control	Cylinder 5 pump injector control	Z	Z

https://truckmanualshub.com/

Sensor connector 2 "C"

Figure 51

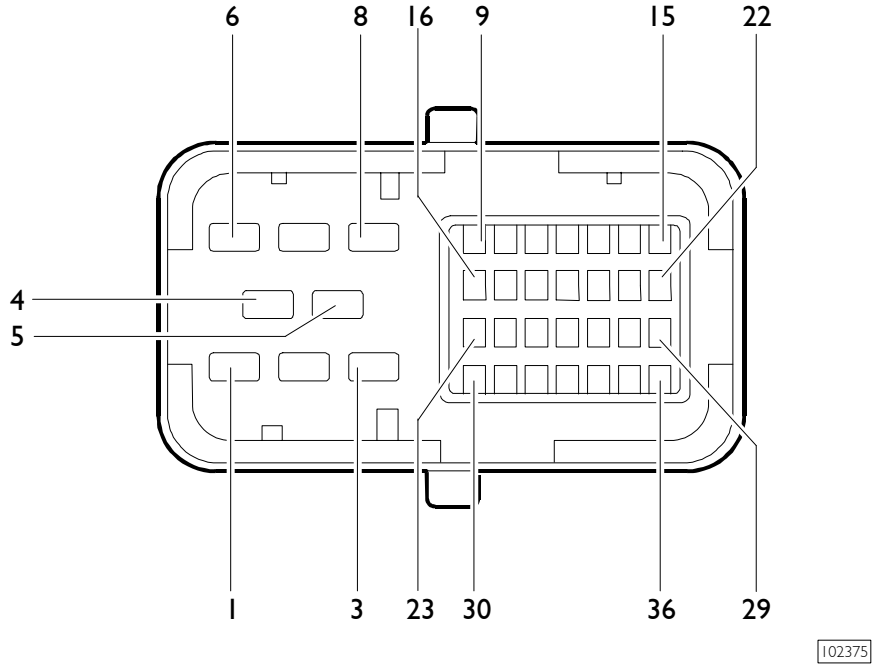

Colour legend

C	ORANGE
A	LIGHT BLUE
B	WHITE
L	BLUE
G	YELLOW
H	GREY
M	DARK BROWN
N	BLACK
W	LIGHT BROWN
S	PINK
R	RED
V	GREEN
Z	PURPLE

Pin	Description	Cable colour code
1	Variable geometry turbine control solenoid	M
2	-	-
3	Variable geometry turbine control solenoid	N
4÷8	-	-
9	Ground for engine rpm sensor on timing system (timing sensor)	B
10	Engine rpm signal on timing system (timing sensor)	R
11÷14	-	-
15	Water temperature sensor signal	S
16 ÷17	-	-
18	Fuel temperature sensor ground	CN
19	Engine rpm sensor ground (flywheel sensor)	N
20	Turbocharger speed sensor ground	M
21÷22	-	-
23	Engine rpm sensor signal (flywheel sensor)	B
24	Oil temperature/pressure sensor ground	M
25	Air temperature/pressure sensor ground	B
26	Water temperature sensor ground	G
27	Oil temperature sensor signal	CN
28	Oil pressure sensor signal	L
29	-	-
30	Turbocharger speed sensor signal	B
31	-	-
32	Oil temperature/pressure sensor power supply	C
33	Air temperature/pressure sensor power supply	R
34	Air pressure sensor signal	V
35	Fuel temperature sensor signal	BR
36	Air temperature sensor signal	C

Chassis connector 1 "B"

Figure 52

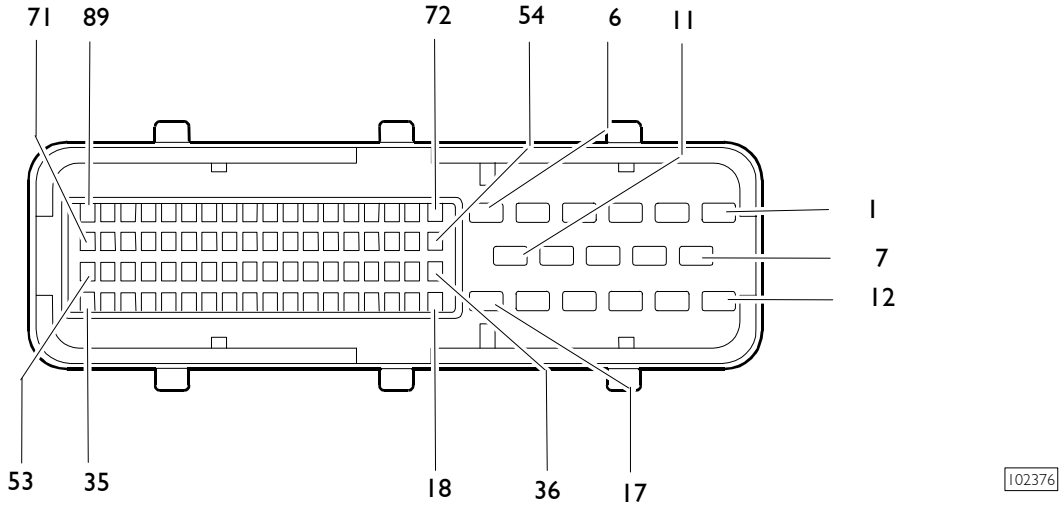

Pin	Description	Cable colour code
1	-	-
2	Control unit power supply positive (+30)	7151
3	Control unit power supply positive (+30)	7151
4	-	-
5	Ground	0151
6	Ground	0151
7	-	-
8	Control unit power supply positive (+30)	7151
9	Control unit power supply positive (+30)	7151
10	Ground	0151
11	Ground	0151
12	Ground enabling preheating activation	0094
13	Ground enabling preheating activation	0966
14÷15	-	-
16	Ground enabling engine fan activation	0014
17÷25	-	-
26	Signal from fuel air temperature sensor	5173
27	Signal from combustion air humidity sensor	5174
28	Ground for combustion air humidity and temperature sensors	0173
29	Ground from EDC system diagnosis request switch (wiring)	5163
30	-	-
31	-	-
32	Ground from engine bay start-up button	8892
33	Engine rpm signal for bodybuilders (ST14B)	5587
34	Can - L line (ECB)	Green
35	Can - H line (ECB)	White
36÷39	-	-
40	Positive +15 (from BC2)	8015
41÷46	-	-
47	Ground from engine bay shut-down button	0151
48÷53	-	-
54	Positive for engine fan (speed 1) solenoid valve	9166
55	Positive for engine brake solenoid (wiring)	9966
56	-	-
57	Positive enabling engine fan activation	5187
58	Ground for engine brake solenoid (wiring)	0043
59÷67	-	-
68	Power for combustion air humidity and temperature sensors	8173
69÷74	-	-
75	Positive enabling preheating activation	9164
76÷84	-	-
85	Ground from EDC system diagnosis request switch (wiring)	5163
86÷88	-	-
89	K line (diagnostic connector pin 2)	2298

https://truckmanualshub.com/

VCM (VEHICLE CONTROL MODULE) ELECTRONIC CONTROL UNIT

This Electronic Control Unit is interfaced with the other on-board electronic systems through CAN lines:

- ECB - Engine Control Bus
- VDB - Vehicle Data Bus
- ICB - Instrument Cluster Bus
- FMB - Fuhrpark Managemant Bus

Among the Electronic Control Unit input signals we find those of the accelerator pedal sensor, deviator for signalling (ABS) stop, switch on clutch and switch for Economy function, which previously were connected to the EDC Electronic Control Unit.

The Immobilizer Elec. Cont. Unit is eliminated and the immobilizer antenna is connected to the Elec. Cont. Unit VCM.

The VCM operates also Cruise Control which before was connected onto Body Computer.

VCM main functions

- **Driveability:** accelerator pedal control and generation of torque requirements via CAN towards the engine according to the driveability maps, Required torque = f (Engine Speed, Accelerator Pedal Position).
- **Arbitration of the requirements of Torque and Engine Speed:** from external systems (Brakes, Transmission, Fitters, etc.) towards the engine during the phases of braking, changing gear, operations in PTO mode, VCM determines the requirement with the highest priority and transmits the corresponding requirement of Torque or Engine Speed via CAN to the engine.
- **Speed limiter:** (main, programmable and secondary) VCM determines the extent of the requirement of torque towards the engine ensuring that the active speed limits are not exceeded.
- **Cruise Control:** VCM adjusts the vehicle speed according to the set Cruise speed by modulating the requirement of torque transmitted via CAN to the engine (torque limitation or control), via the requirement of turning on the exhaust brake and Intarder, integrating the control functions of the conditions of engagement and release.
- **Adaptive Cruise Control:** VCM reads the data of the Radar relating to the distance of the preceding vehicle, adjusts the vehicle speed according to the set Cruise speed, keeping the distance selected by the driver, modulating the requirement of torque transmitted via CAN to the engine (torque limitation or control), via the requirement to turn on the exhaust brake and Intarder, integrating the functions of control of the conditions of engagement and release and in case of risk of collision activating the conventional brakes (interacting with the EBS system).
- **Engine starting / stopping control logic and associated safety devices:** requirement control from cab, engine bay, fitter connector.
- **Power take off (PTO mode):** management of the requirement to adjust engine speed via CAN in accordance with the conditions relating to the PTO 0, 1, 2, 3 (pre-programmed) modes with actuation by the engine.
- **Low Idle control logic:** dynamic High Idle control with requirement relating to the engine via CAN the VCM controls the requirement for engine speed adjustment via CAN with actuation by the engine.
- **Exhaust Brake activation logic:** control of driver requirements and arbitration of the requirements from external systems (Brakes, Transmission, Fitters, etc.), transmission of the value via CAN and actuation by the engine.
- **Engine cooling fan activation logic (Baruffaldi):** management of control logic, transmission of the activation request via CAN and actuation by the engine.
- **ZF Simple H Gearbox:** gearbox control with solenoid activation to pass from low range and high range in conditions of safety
- **ALLISON Gearbox:** standard CAN interface control on lever side, external requirements (Fitters) and for display logic on Instrument Panel.
- **New EUROTRONIC lever (used for ALLISON too):** driver requirement control for sending to EUROTRONIC gearbox and recovery in case of breakdown.
- **Vehicle security system:** Immobilizer
- **Communication on CAN bus:** Point-to-point communication from external bus for dedicated connection to apparatuses of Fleet Management in accordance with Bus - FMS. Interface for connection to Tester for diagnosis via CAN of the on-board systems.
- **Others:** Interface towards Instrument Panel on dedicated bus (ICB on Heavy Range) for information / controls to / from Driver. HW signal generation for fitter connector.

Electronic Control Unit location

Figure 53

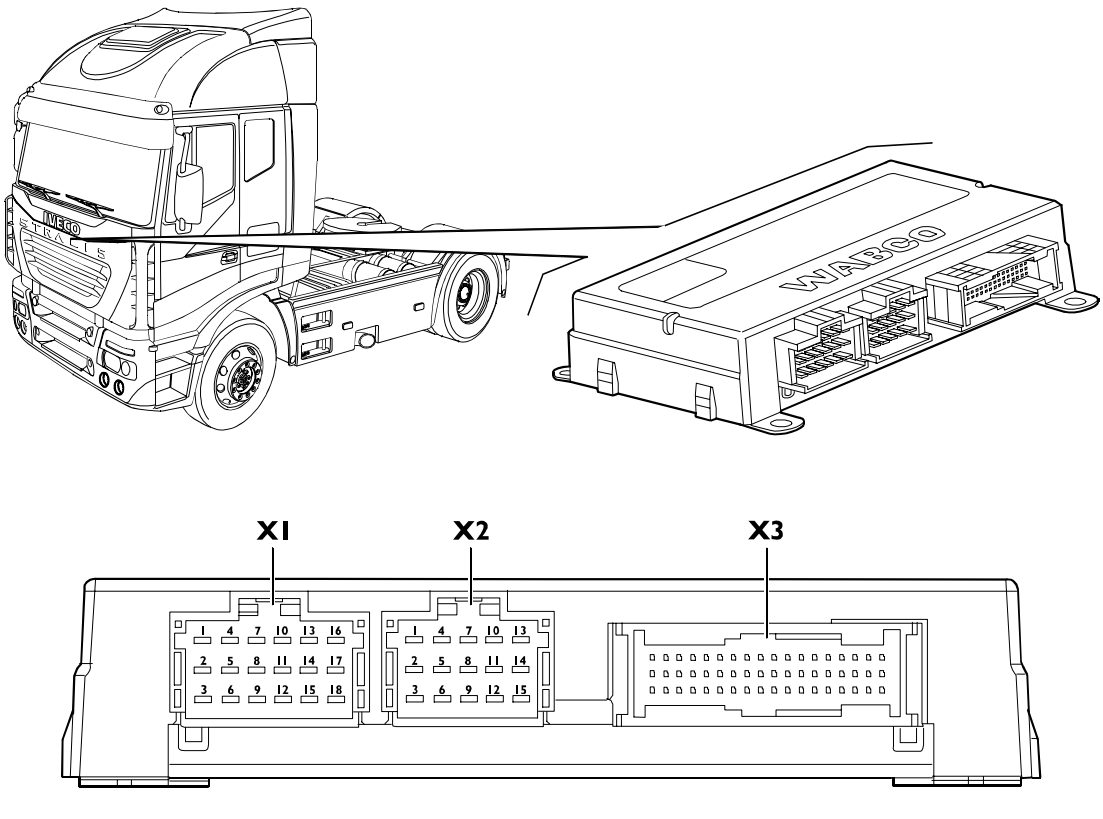

Pin - out

Connector X1

Pin	Description	Cable color code
1	Immobiliser aerial input signal	-
2	-	-
3	Immobiliser aerial output signal	-
4	Positive +30	7993
5	Positive +15 (from BC2)	8802
6	Ground	0000
7	Gearbox in neutral signal for body builders (ST14A)	8050
8	Positive for splitter gear activation solenoid (9 speed gearbox) (AT/AD)	9973
9	EDC system faulty signal for cluster	6150
10	Handbrake engaged signal for bodybuilders (ST14A)	6656
11	Positive for normal gear activation solenoid (9 speed gearbox) (AT/AD)	9974
12	Clutch status signal for bodybuilders (ST14B)	9963
13	Brake light signal for bodybuilders (ST14A)	1165
14	Signal indicating programmable speed threshold (PST) for bodybuilders (ST14B)	5542
15	Ground controlling starter motor relay	0008
16	Positive controlling starter motor relay	8888

https://truckmanualshub.com/

Pin - out

Connector X3

Pin	Description	Cable color code
1	CAN L line (VDB)	White
2	CAN H line (VDB)	Green
3	-	-
4	Ground from coolant pressure indicator switch (22 bars)	0583
5	Ground from coolant pressure indicator switch (18 bars)	0582
6	-	-
7	Control cable for activating ACC	0179
8	Ground from switch indicating gearbox in neutral	8050
9	-	-
10	Ground from engine brake wiring switch (associated with accelerator pedal release)	0082
11	Negative signal from control, Economy Power function switch	0166
12	Positive from ignition key terminal 50 (ignition control)	8888
13	Second speed limiter engagement signal from body builders (ST14B)	0172
14	Positive from brake indicator switch (brake pedal pressed - main brake lights)	8153
15	Positive from brake indicator switch (brake pedal released - secondary brake lights)	8158
16	-	-
17	Positive for accelerator pedal sensor	5158
18	-	-
19	Can H line (ECB)	White
20	Can L line (ECB)	Green
21	-	-
22	-	-
23	Ground from switch (N) for neutral position gear with automatic gearbox	0147
24	Ground from switch (D) for forward gears with automatic gearbox	0125
25	Ground from switch (D) for forward manoeuvre gears with automatic gearbox	0127
26	Engine stop signal (ST14A pin 2)	0151
27	Engine start-up signal from diagnostic interface/body builders (ST14A)	8892
28	Ground from start-up enablement switch	8892
29	Signal from cab release indicator switch	0096
30	Ground from Cruise Control cut-out switch (OFF)	8154
31	Ground from Cruise Control resume switch (RESUME)	8155
32	Ground from Cruise Control speed increase switch (SET+)	8156
33	Ground from Cruise Control speed decrease switch (SET-)	8157
34	Signal from switch indicating engine idling	0159
35	Signal from accelerator pedal sensor	5157
36	-	-
37	CAN H Line (FMB)	White
38	CAN L Line (FMB)	Green
39	-	White
40	-	Green
41	Ground from switch (R) for reverse gears with automatic gearbox	0126
42	Ground from switch (D) for reverse manoeuvre gears with automatic gearbox	0128
43	-	-
44	-	-
45	Ground for power take-off 3 request from body builders (ST14A)	0123
46	Ground for power take-off 2 request from body builders (ST14A)	0123
47	Ground for power take-off 1 request from body builders (ST14A)	0131
48	Ground from signalling switch connection of slow gears (9 gear changes)	0117
49	Cruise Control selection signal (INT / EXT) from body builders (ST14A)	0152
50	Signal from switch (SL) for speed limiter with automatic transmission	9968
51	Signal from switch on clutch for VCM (clutch cylinder 20% compressed)	0160
52	Ground from accelerator pedal idle switch	0158
53	Ground for accelerator pedal sensor	0157
54	VCM control unit K line (diagnostic connector pin 12)	2292

https://truckmanualshub.com/

EM (EXPANSION MODULE) ELECTRONIC CONTROL UNIT (PTO)

The EM (Expansion Module) control unit located in the cabin control unit compartment (passenger's side) controls the power takeoffs and, unlike the DMI, makes it possible to carry out complicated applications such as:

- transmission (gearbox) control from external source (TCI message)
- engine control from external sources, like request and limitation of engine rev number, vehicle speed limit, start up and engine stop
- safety logics for waste collection applications
- optimization of braking system for waste collection applications
- additional headlight control
- interface with CAN_open network

Figure 54

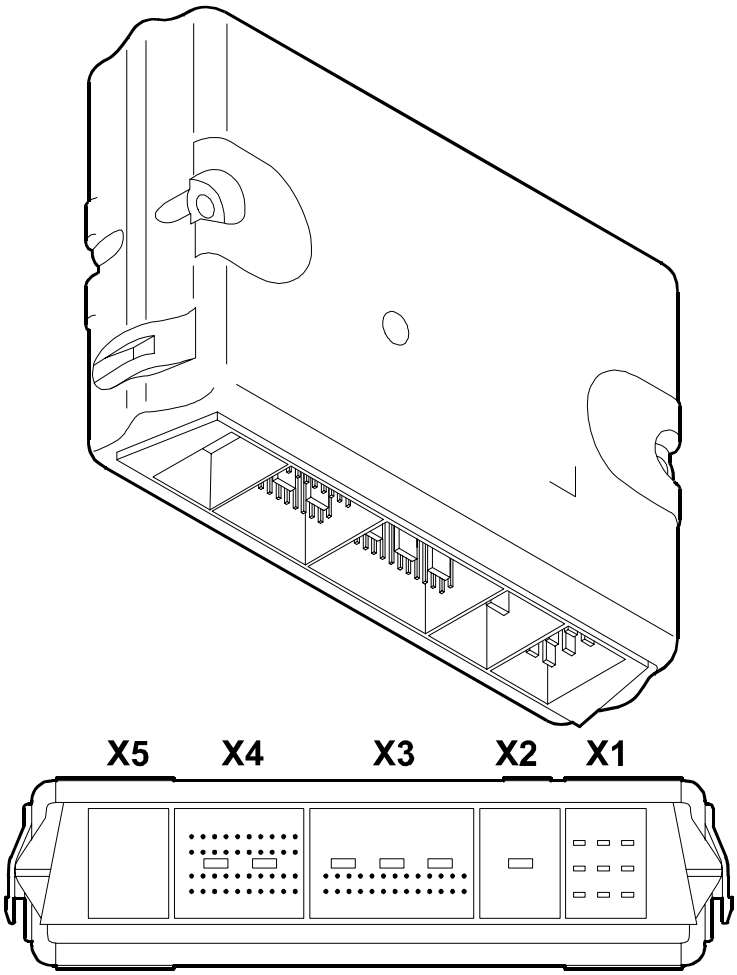

112596

https://truckmanualshub.com/

Pin - out

Connector XI

Pin	Description	Cable colour code
1	PTO1 solenoid valve power supply	9131
2	Positive +30	7772
3	Signal for operators (72072B - pin 6)	6985
4	PTO2 solenoid valve power supply	9132
5	Ground	0000
6	PTO3 solenoid valve power supply	9132
7	Clutch solenoid valve signal (72072A - pin 4)	9995
8	Signal for operators (72072B - pin 7)	6986
9	Positive +30	7166

Connector X3

Pin	Description	Cable colour code
1	CAN - H line (VDB)	Sw/Bi
2	CAN - L line (VDB)	Gn/Ve
3	Free	-
4	Line K (diagnosis connector pin 6)	2996
5	PTO1 request	0131
6	PTO2 request	0132
7	PTO3 request	0123
8	Signal of PTO1 engaged	6131
9	Signal of PTO2 engaged	6132
10	Signal of PTO3 engaged	6133
11	PTO1 consensus signal	0391
12	PTO2 consensus signal	0392
13	Positive +15	8166
14	Free	-
15	Free	-
16	PTO3 consensus signal	0393
17	Signal from operators (72072A - pin 3)	0991
18	Signal from operators (72072A - pin 1)	0992
19	Signal from operators (72072A - pin 2)	0993
20	Signal from operators (72072B - pin 3)	0994
21	Signal from operators (72072B - pin 4)	0995
22	Pin 24 jumper	8990
23	Pin 26 jumper	0990
24	Pin 22 jumper	8990
25	Free	-
26	Pin 23 jumper	0990

https://truckmanualshub.com/

Connector X4

Pin	Description	Cable colour code
1	Signal for operators (72072B - pin 8)	6987
2	Signal for operators (72072B - pin 9)	6988
3	Signal for operators (72072B - pin 10)	6989
4	Parking brake signal (72072A - pin 1)	6981
5	Neutral gear signal (72072A - pin 2)	6983
6	Signal from operators (72072B - pin 5)	0996
7	Free	-
8	Free	-
9	Signal from operators (72072C / 72072D - pin 5)	0999
10	Free	-
11	Free	-
12	Line CAN - H (SB) - (trailer)	Ws/Bi
13	Line CAN - L (SB) - (trailer)	Gn/Ve
14	-	5981
15	-	5982
16	-	5991
17	Line CAN - H (SB)	Ws/Bi
18	Line CAN - H (SB)	Ws/Bi
19	Line CAN - L (SB)	Gn/Ve
20	Line CAN - L (SB)	Gn/Ve
21	Signal for operators (72072B - pin 11)	6990
22	Signal for operators (72072B - pin 12)	6991
23	Signal for operators (72072B - pin 13)	6992
24	Free	-
25	Free	-
26	Free	-
27	Free	-
28	Signal from operators (72072C / 72072D - pin 3)	0975
29	Signal from operators (72072B - pin 18)	5983
30	Free	-
31	Signal for operators (72072B - pin 14)	6993
32	Signal for operators (72072B - pin 15)	6994
33	Free	-
34	Free	-
35	Free	-
36	Free	-
37	Free	-
38	Signal from operators (72072B - pin 20)	5992
39	Free	-
40	Free	-

https://truckmanualshub.com/

CENTRAL LOCKING WITH REMOTE CONTROL

The system consists of one or several (max. 8) transmitters and a receiver.

Transmitter

The transmitter has a special container of its own, equipped with an eyelet and ring.. The shock-proof transmitter container is also waterproof.
The transmitter sends the receiver a variable code (rolling code) by means of a radiofrequency signal at 433.92 MHz (EC Directive 95/56).
It is equipped with two buttons for door opening and closing, respectively.
By keeping the button pressed down for 50 msec, the variable code will be fully transmitted. If the button is actuated continuously, however, transmission will be interrupted after 5 seconds (± 10%).
The transmitter operating range is 10 m.
The battery guarantees a 2 years' service life. Following the replacement, the transmitter may be briefly actuated twice in order to restore synchronism with the receiver. This sequence is also permitted at any time other than battery replacement

Receiver

The receiver is housed inside a container with a white cover, which includes a transmitter programming button (easily accessible and protected against unintentional actuation), a programming check green LED, and a 8-way connector.
It is housed in instrument panel upper side, in front of passenger's seat.
The receiver antenna is housed inside the container, too.
The receiver receives and decodes the code that was sent by the transmitter, and can store up to eight codes. Doors locking and unlocking commands go from the transmitter to the receveir, which sends the signal to Body Computer central unit, which in turn via CAN line sends a message to Door Modules to activate the locks.
If the vehicle is in the key-ON condition (+15 is available), the receiver will perform no actuation through the remote control.
The receiver manages synchronization between the locks, and resumes correct alignment through a sequence of two or several transmitter or lock key drives.

Blinker control

Door lock locking and opening will be signalled by the lighting of the indicator lights. Therefore, the receiver need be interfaced with the Body Computer control unit that manages the above-mentioned lights.
The receiver features an output (to the ground) that is connected in parallel with the emergency light switch. The latter consists of an unstable button that actuates and deactivates the blinking sequence (blinker signal).

Description of blinker controls:

- ❑ T1 = 120 msec (Start)
- ❑ T2 = 700 msec (Delay - Lock)
- ❑ T2 = 1550 msec (Delay - Unlock)
- ❑ T3 = 120 msec (Stop)

Figure 55

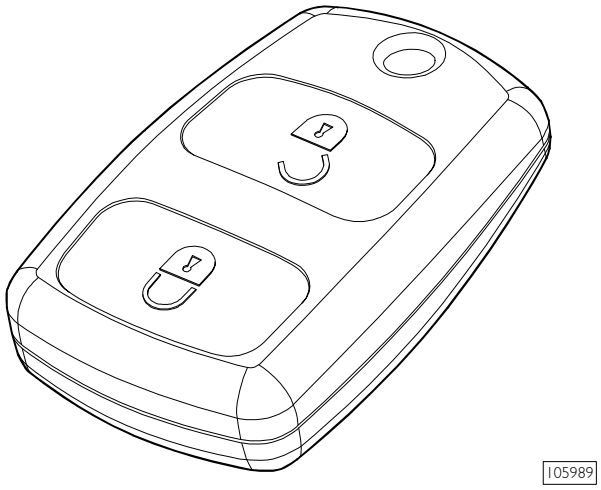

TRANSMITTER

Figure 56

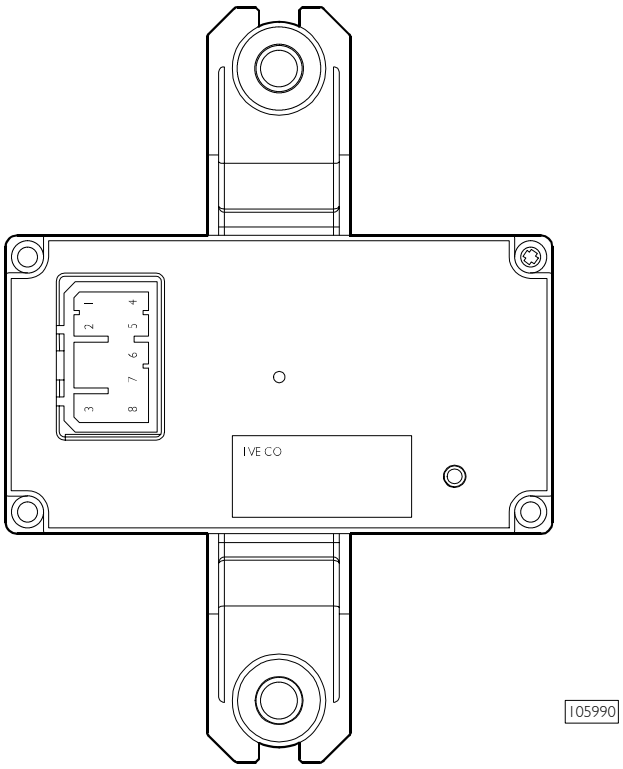

CENTRAL LOCKING CONTROL UNIT (RECEIVER)

https://truckmanualshub.com/

Control unit pin-out (receiver)

Pin	Function	Cable colour code
1	Blinker control	1113
2	Engine power supply for centralised closure (door closure) - (without DDM, PDM) (only AT/AD)	9965
2	Battery positive	7772
4	Ground	0000
5	Central locking control (door closing)	0064
6	Central locking control (door opening)	0065
7	+15 power supply	8871
8	Engine power supply for centralised closure (door opening) - (without DDM, PDM) (only AT/AD)	9964

Programming

The programming status makes it possible to get the receiver to recognize the transmitters enabled to control the respective functions.
Programming is accessed through the rest state when the +15 signal is not available.
The receiver may be controlled by a transmitter with a universal code as long as at least one transmitter is not programmed.
After a variable code (other than the universal code) has been programmed, the latter will not be recognized any longer.
Transmitters are programmed in the FIFO mode.
Two transmitter programming modes are available:

- ❑ simplified programming: it allows you to program the transmitters quickly. It can be actuated until 128 actuations are performed after the first programming, or until it is disabled.
- ❑ Protected programming: it guarantees the customer against the risk of other transmitters being programmed without the knowledge of the customer themselves. It involves using a password (shown on the tag enclosed with the transmitter) that can be obtained from the transmitter code.

Simplified programming

The first code (and the subsequent ones as well) are programmed as follows:

- ❑ press the button on the receiver: the LED will light up and blink;
- ❑ the operator presses, while keeping the button on the receiver pressed down, any of the key of the transmitter, which sends out the code;
- ❑ the receiver stores, after detecting three subsequent transmission instances (with the current checksum), the code into the memory;
- ❑ the receiver LED will, at the very time when it recognizes the code, light up steadily, thus signalling that the code has been received: now the operator may release the transmitter button to end the programming.

Simplified programming disable
Simplified programming may be disabled by entering the password as follows:

- ❑ press the small button on the receiver: the LED will light up and blink;
- ❑ release the small button: the LED will blink once;
- ❑ enter, by means of the small button, a 4-digit code (password): each digit shall be included between 0 and 9 (code written on the label delivered together with the transmitter). An optical feedback will be generated on the LED every time the small button is pressed;
- ❑ after each digit has been entered, wait for the LED to blink again to request the next digit, up to the fourth digit;
- ❑ the procedure will be over after the last digit is entered.

Protected programming

Every time a new transmitter is to be recognized after firstly entering the password, you will need to enter the password of any of the transmitters previously stored into the memory. Correct recognition of the password will be signalled by the LED blinking after the password has been entered (if the password is not recognized, the LED will remain ON for 10 seconds). When the LED is blinking, keep the receiver button pressed down, then transmit with the new remote control to be stored into the memory, by following the simplified programming instructions.

https://truckmanualshub.com/

https://truckmanualshub.com/

Circuit charts

		Page
CHART 1:	DIRECT POSITIVE TO BATTERY	69
CHART 2:	POSITIVE AFTER TGC (+30)_1 (AS)	70
CHART 3:	POSITIVE AFTER TGC (+30)_1 (AT/AD)	71
CHART 4:	POSITIVE AFTER TGC (+30)_2 (AS)	72
CHART 5:	POSITIVE AFTER TGC (+30)_2 (AT/AD)	73
CHART 6:	POSITIVE AFTER TGC (+30)_3 (AS)	74
CHART 7:	POSITIVE AFTER TGC (+30)_3 (AT/AD)	75
CHART 8:	POWER SUPPLY (+15)_1 (AS)	76
CHART 9:	POWER SUPPLY (+15)_1 (AT/AD)	77
CHART 10:	POWER SUPPLY (+15)_2 (AS)	78
CHART 11:	POWER SUPPLY (+15)_2 (AT/AD)	79
CHART 12:	BODY COMPUTER (BC2)_(J7)	80
CHART 13:	BODY COMPUTER (BC2)_(J6) (AS)	81
CHART 14:	BODY COMPUTER (BC2)_(J6) (AT/AD)	82
CHART 15:	BODY COMPUTER (BC2)_(J4-J5) (AS)	83
CHART 16:	BODY COMPUTER (BC2)_(J4-J5) (AT/AD)	84
CHART 17:	BODY COMPUTER (BC2)_(J2-J3) (AS)	85
CHART 18:	BODY COMPUTER (BC2)_(J2-J3) (AT/AD)	86
CHART 19:	IC CENTRAL UNIT (AS)	87
CHART 20:	IC CENTRAL UNIT (AT/AD)	88
CHART 21:	TACHOGRAPH / DIAGNOSIS SOCKET	89
CHART 22:	STEERING WHEEL INTERFACE (SWI)	90
CHART 23:	DDM-BM CENTRAL UNIT (AS)	91
CHART 24:	DDM-BM CENTRAL UNIT (AT/AD)	92
CHART 25:	PDM CENTRAL UNIT (AS)	93
CHART 26:	PDM CENTRAL UNIT (AT/AD)	94
CHART 27:	THERMAL MIRRORS / CENTRALISED CLOSURE / WINDOW WINDERS (WITHOUT DDM-PDM) (AT/AD)	95

https://truckmanualshub.com/

		Page
CHART 28:	ELECTRONIC CONTROL UNIT VCM_01 (AS)	96
CHART 29:	ELECTRONIC CONTROL UNIT VCM_01 (AT/AD)	97
CHART 30:	ELECTRONIC CONTROL UNIT VCM_02 (AS)	98
CHART 31:	ELECTRONIC CONTROL UNIT VCM_02 (AT/AD)	99
CHART 32:	EDC (CONNECTOR B)	100
CHART 33:	EDC (CONNECTOR A/C - F2B)	101
CHART 34:	EDC (CONNECTOR A/C - F3B)	102
CHART 35:	CENTRAL UNIT UDS (DENOX2)	103
CHART 36:	CENTRAL UNIT FFC (J1)	104
CHART 37:	CENTRAL UNIT FFC (J2)	105
CHART 38:	CENTRAL UNIT RFC (J1)	106
CHART 39:	CENTRAL UNIT RFC (J2)	107
CHART 40:	LINE CAN-IDB / FMB / TELEMATICS CENTRAL UNIT / NAVIGATOR	108
CHART 41:	CAN-SB (EBS2-ABS) LINE	109
CHART 42:	CAN-BCB LINE	110
CHART 43:	CAN-VDB LINE	111
CHART 44:	CAN-ECB LINE	112
CHART 45:	ECAS 4X2 P (TRACTOR)	113
CHART 46:	ECAS 4X2 FP (TRACTOR)	114
CHART 47:	ECAS 4X2 P/FP (LORRY)	115
CHART 48:	ECAS 6X4 P	116
CHART 49:	ECAS 6X2 P/FP/C (3RD AXLE LIFTABLE)	117
CHART 50:	ECAS 6X2 P/FP (3RD AXLE NOT LIFTABLE)	118
CHART 51:	ECAS 6X2 C (3RD AXLE NOT LIFTABLE)	119

		Page
CHART 52:	ABS	120
CHART 53:	EBS2	121
CHART 54:	ENGINE COOLING/VENTILATION (AS)	122
CHART 55:	VENTILATION (AT/AD)	123
CHART 56:	ENGINE COOLING (AT/AD)	124
CHART 57:	MANUALLY CONTROLLED CLIMATE CONTROL SYSTEM (AS)	125
CHART 58:	MANUALLY CONTROLLED CLIMATE CONTROL SYSTEM (AT/AD)	126
CHART 59:	MANUALLY CONTROLLED CLIMATE CONTROL SYSTEM (AT/AD CAR TRANSPORTER)	127
CHART 60:	AUTOMATICALLY CONTROLLED CLIMATE CONTROL SYSTEM (AS)	128
CHART 61:	MANUAL DRIVE ADDITIONAL WATER HEATER	129
CHART 62:	AUTOMATICALLY CONTROLLED SUPPLEMENTARY WATER HEATER	130
CHART 63:	MANUAL/AUTOMATIC SUPPLEMENTARY WATER HEATER	131
CHART 64:	EUROTRONIC II	132
CHART 65:	DECELERATOR ZF	133
CHART 66:	CENTRAL UNIT EM (PTO)	134
CHART 67:	RADIO RECEIVER	135
CHART 68:	MECCHANICAL IGC	136
CHART 69:	ADR (OPT. 0129)	137
CHART 70:	ADR (2001)	138
CHART 71:	ALLISON GEARBOX (AT/AD)	139

Chart 1: Direct positive to battery

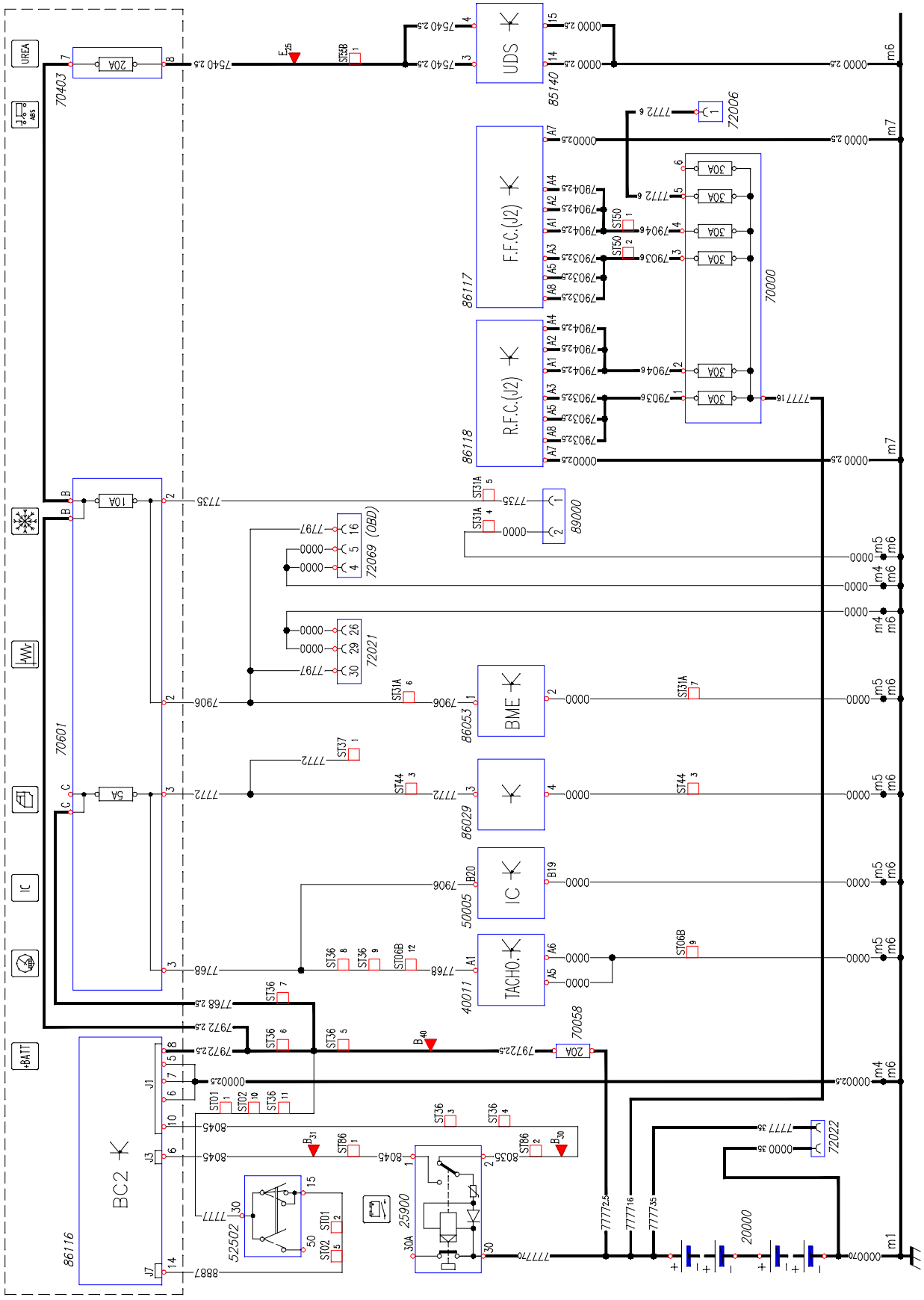

https://truckmanualshub.com/

Chart 2: Positive after TGC (+30)_I (AS)

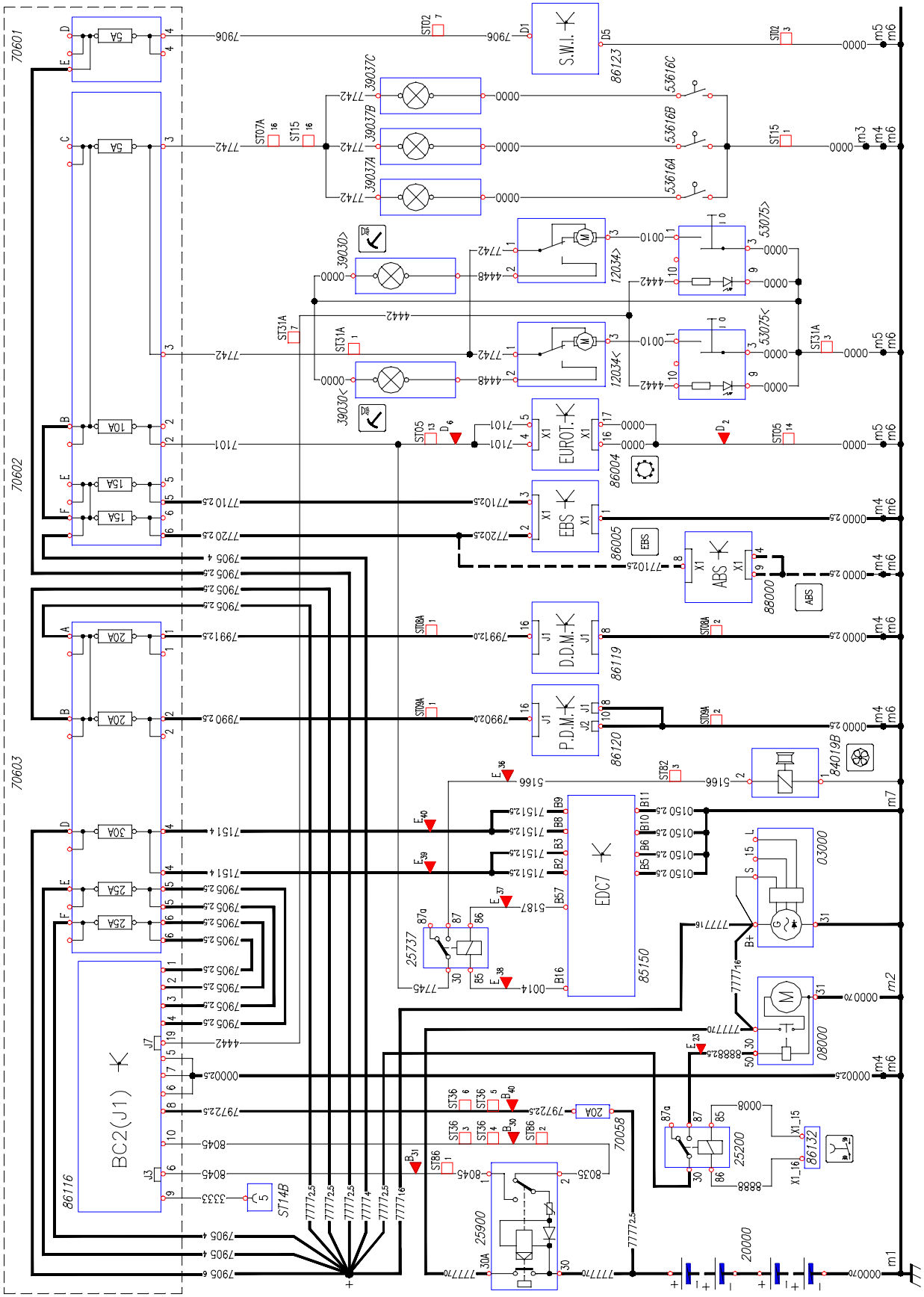

113445

Chart 3: Positive after TGC (+30)_I (AT/AD)

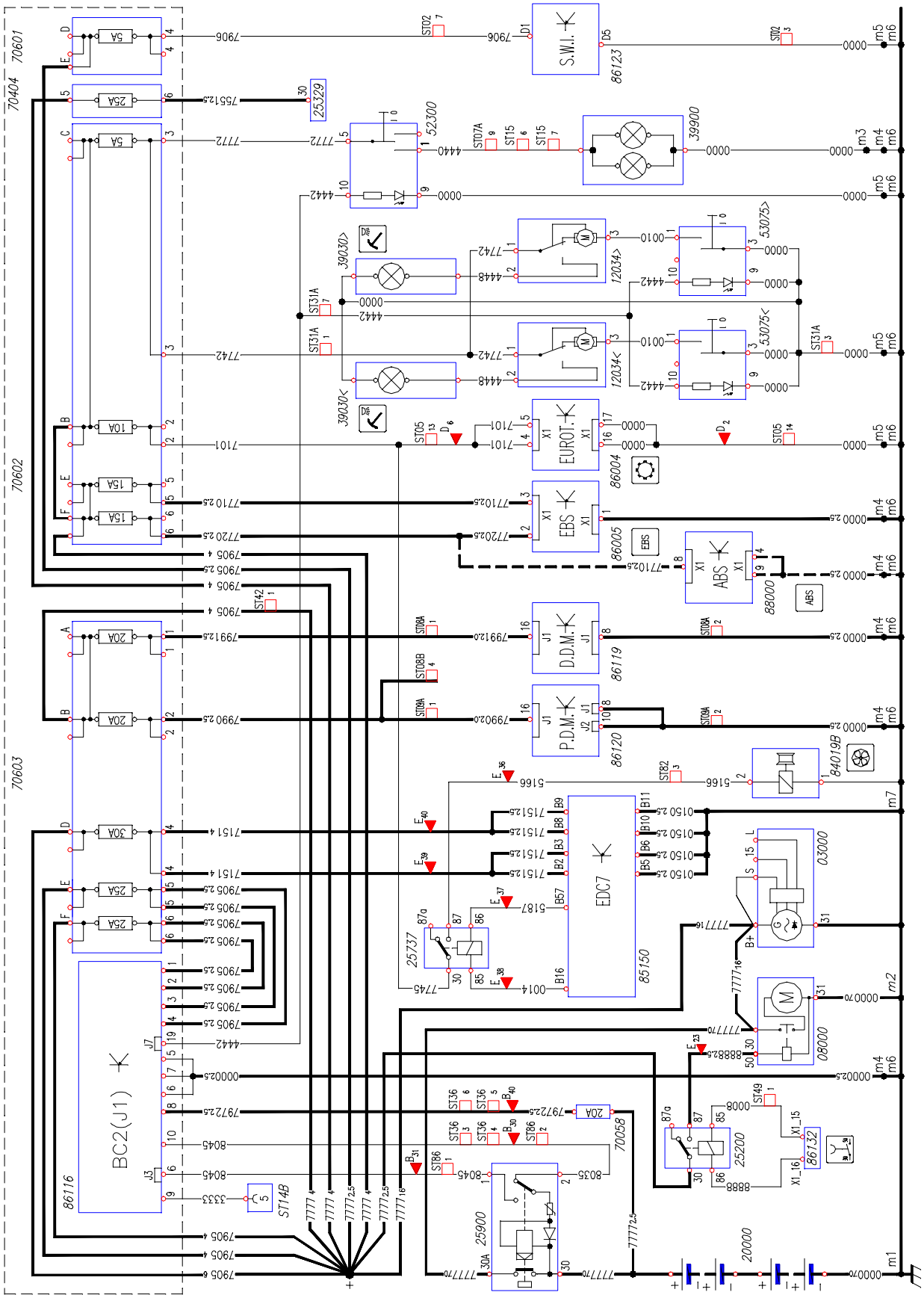

113446

https://truckmanualshub.com/

Chart 4: Positive after TGC (+30)_2 (AS)

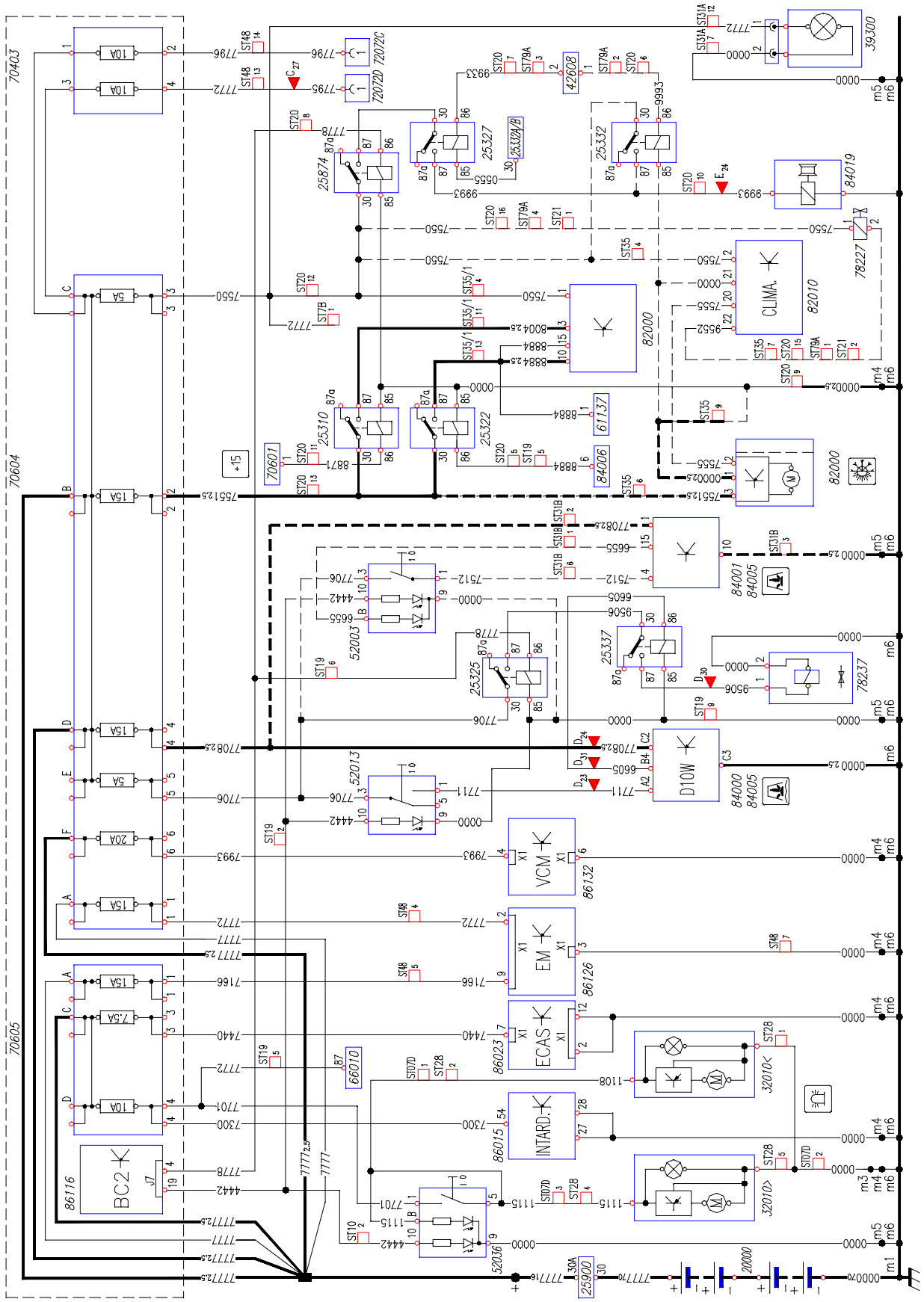

Chart 5: Positive after TGC (+30)_2 (AT/AD)

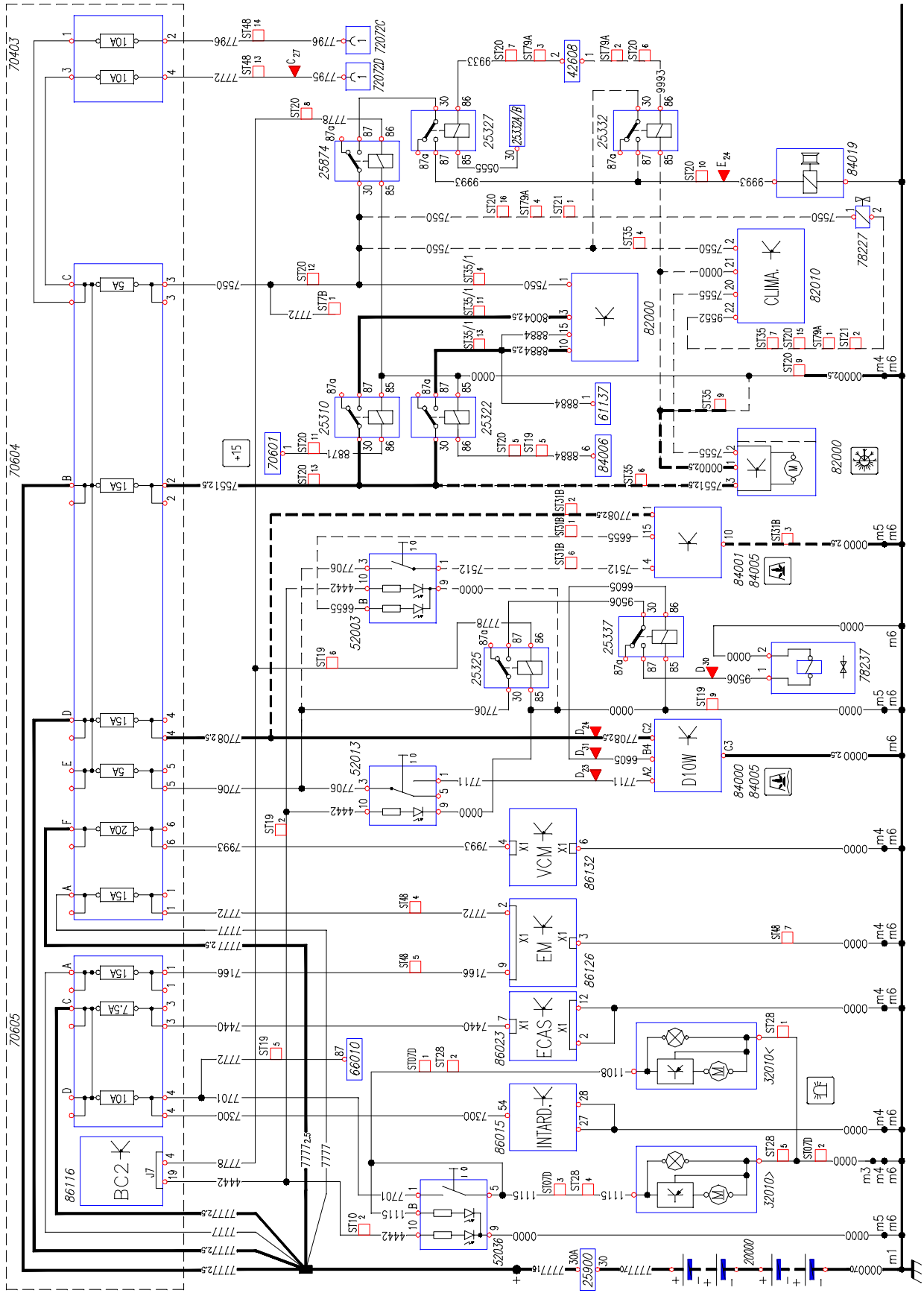

113448

https://truckmanualshub.com/

Chart 6: Positive after TGC (+30)_3 (AS)

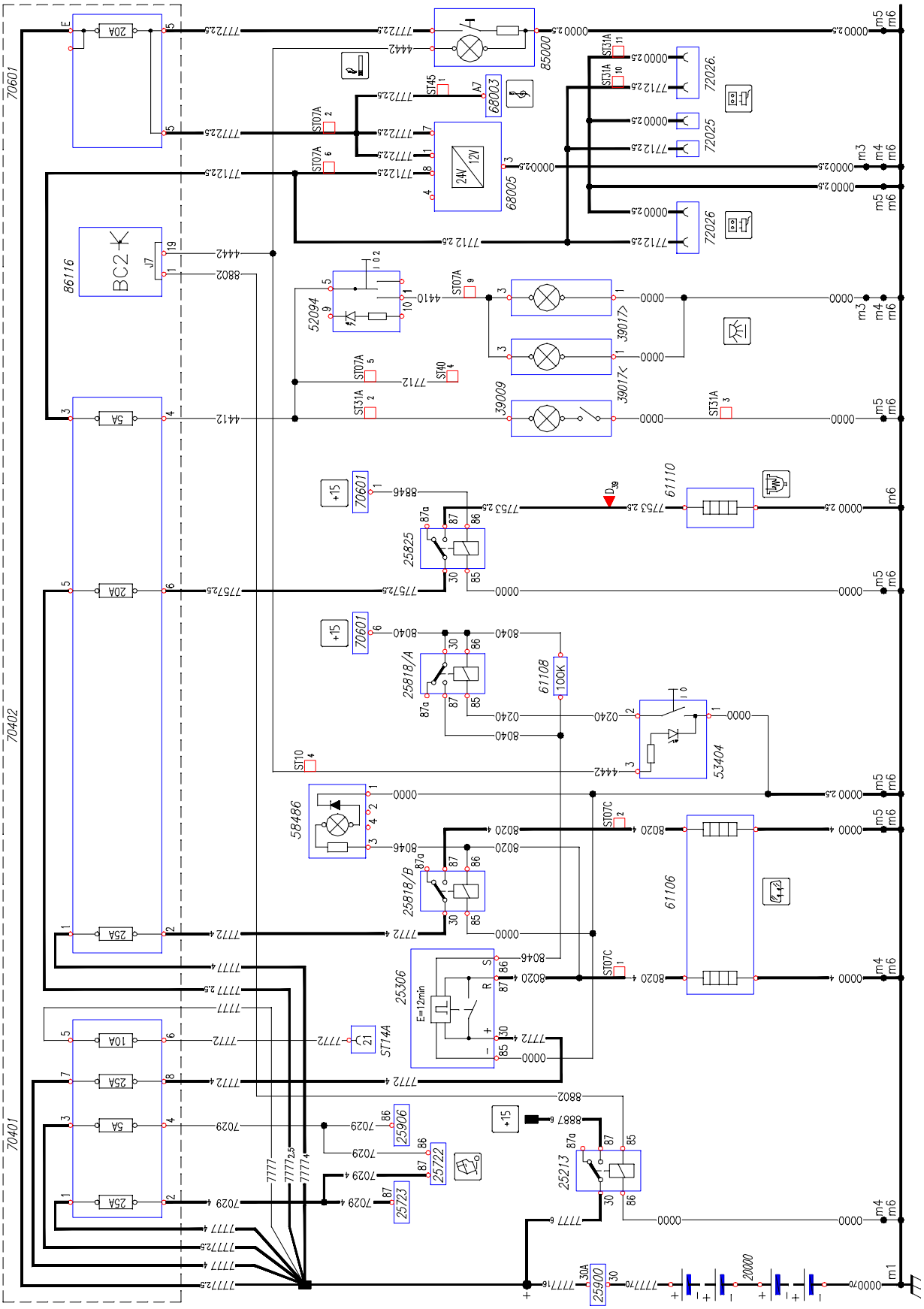

Chart 7: Positive after TGC (+30)_3 (AT/AD)

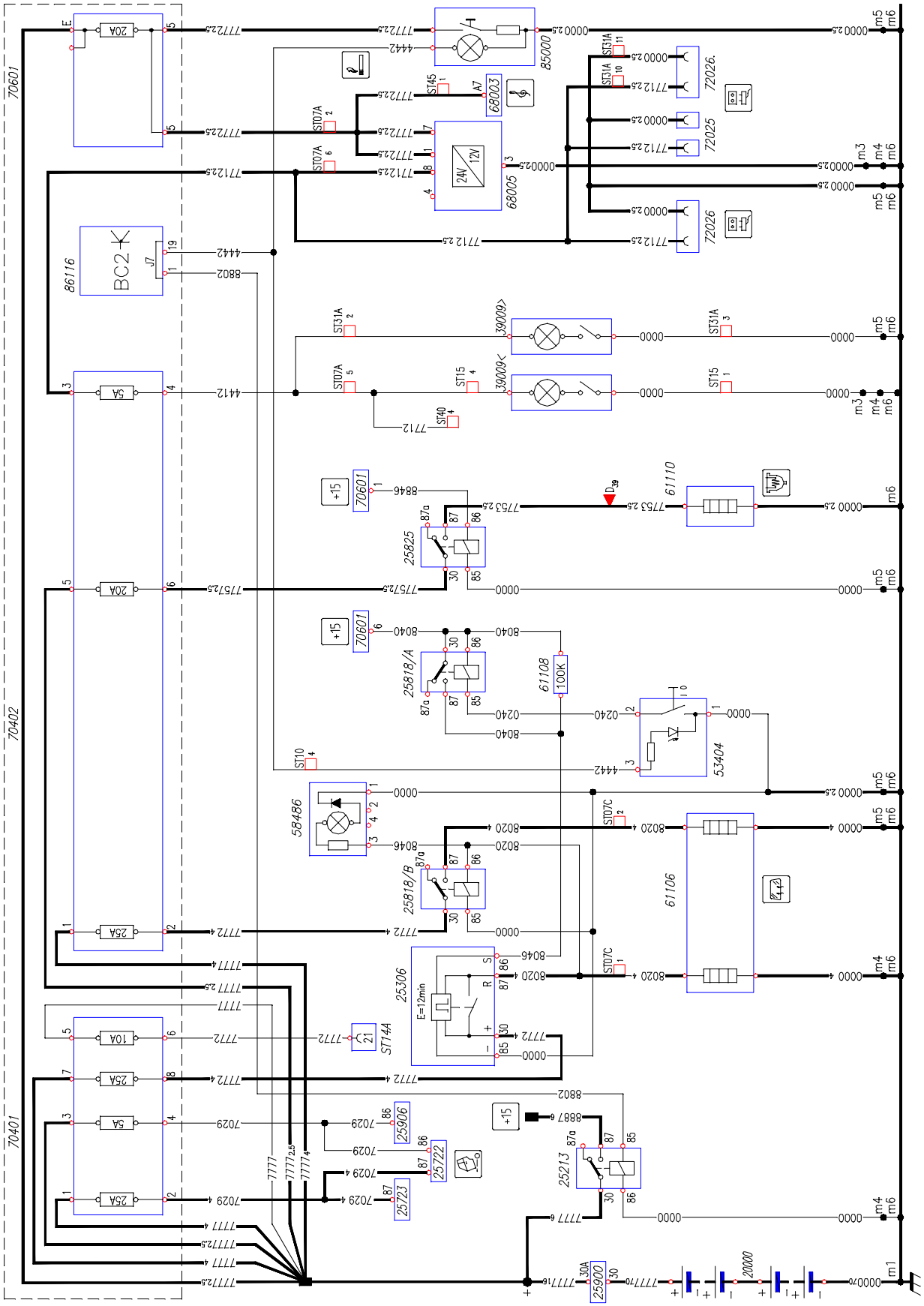

113450

https://truckmanualshub.com/

Chart 8: Power supply (+15)_1 (AS)

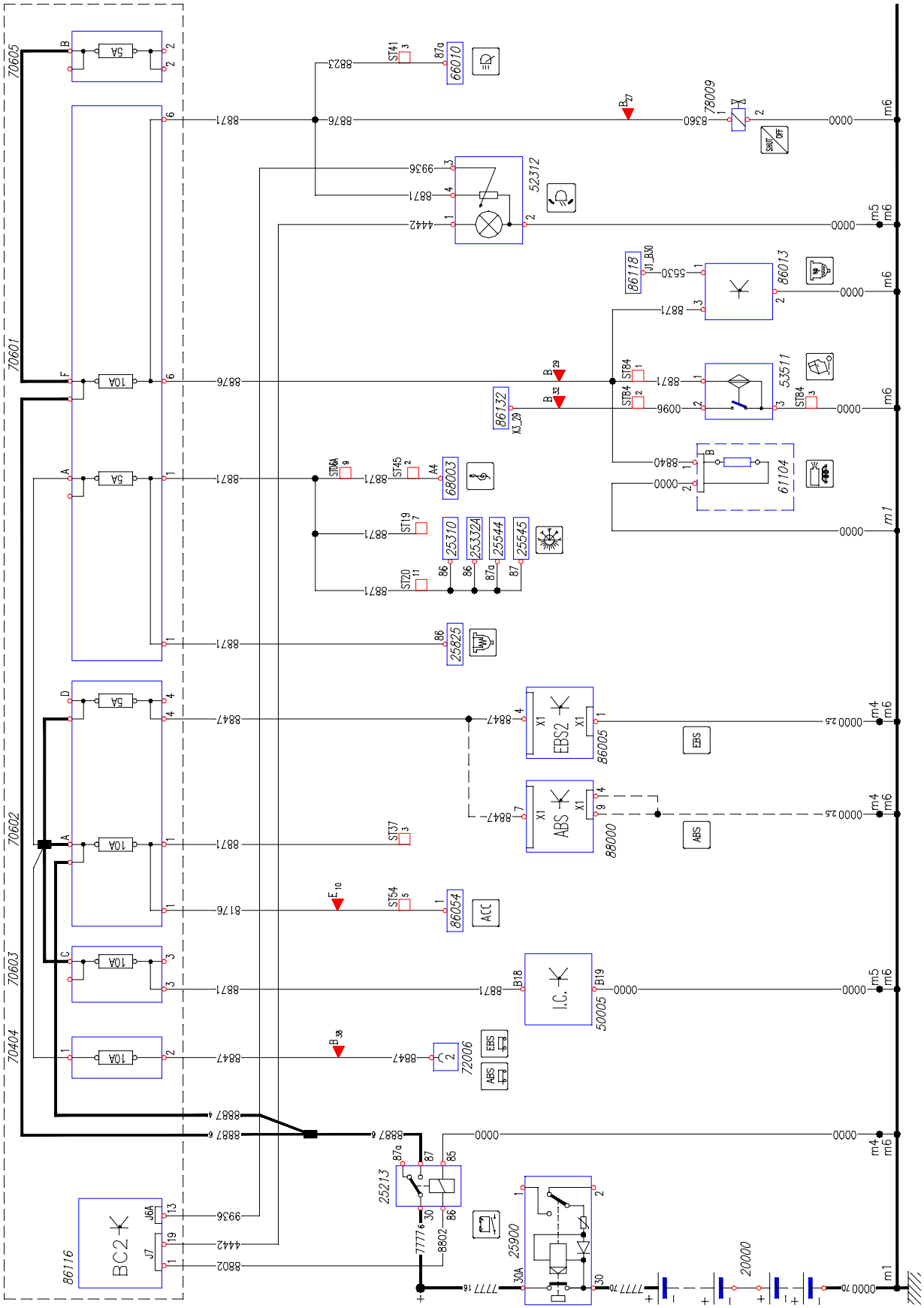

113451

Chart 9: Power supply (+15)_I (AT/AD)

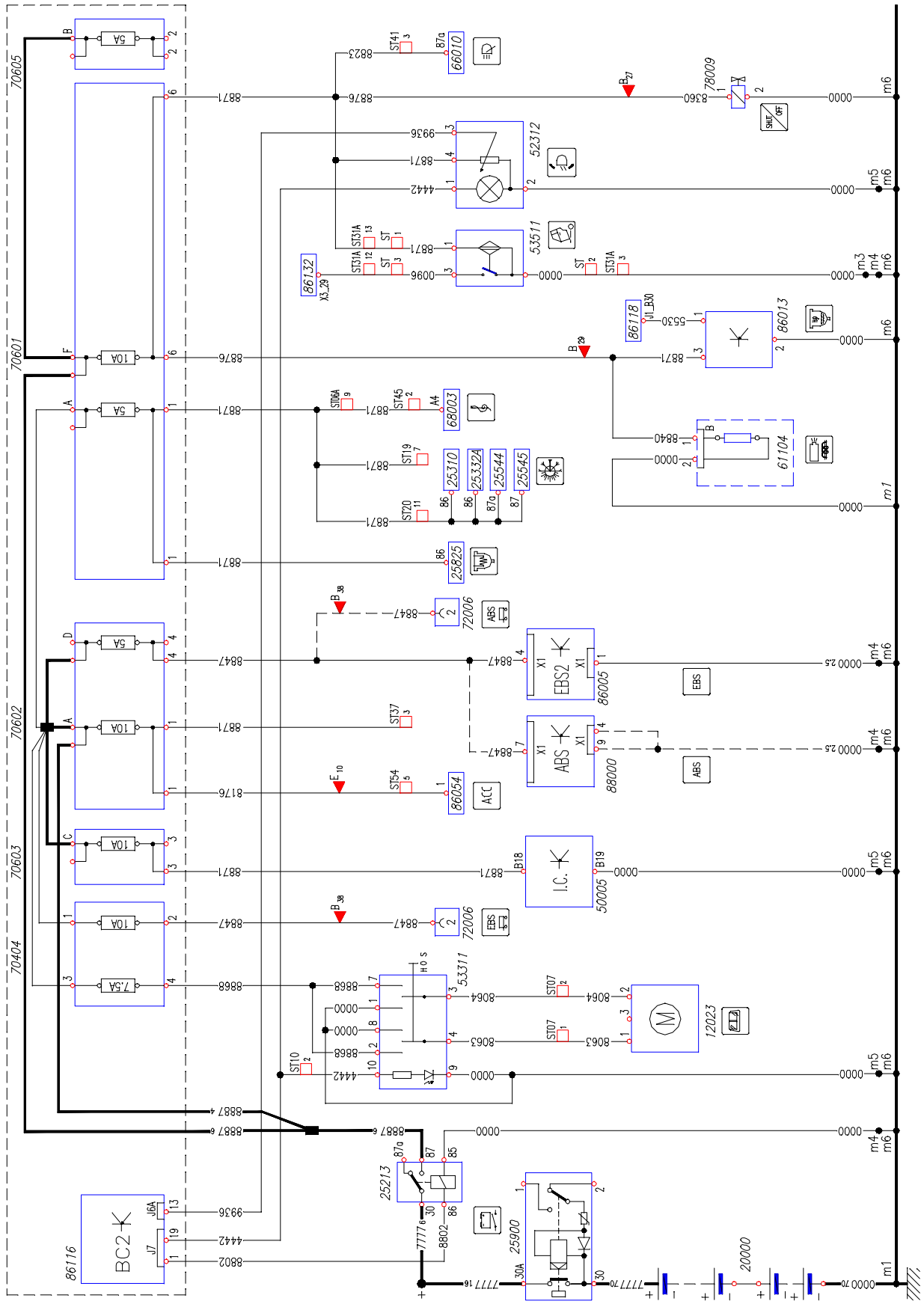

https://truckmanualshub.com/

Chart 10: Power supply (+15)_2 (AS)

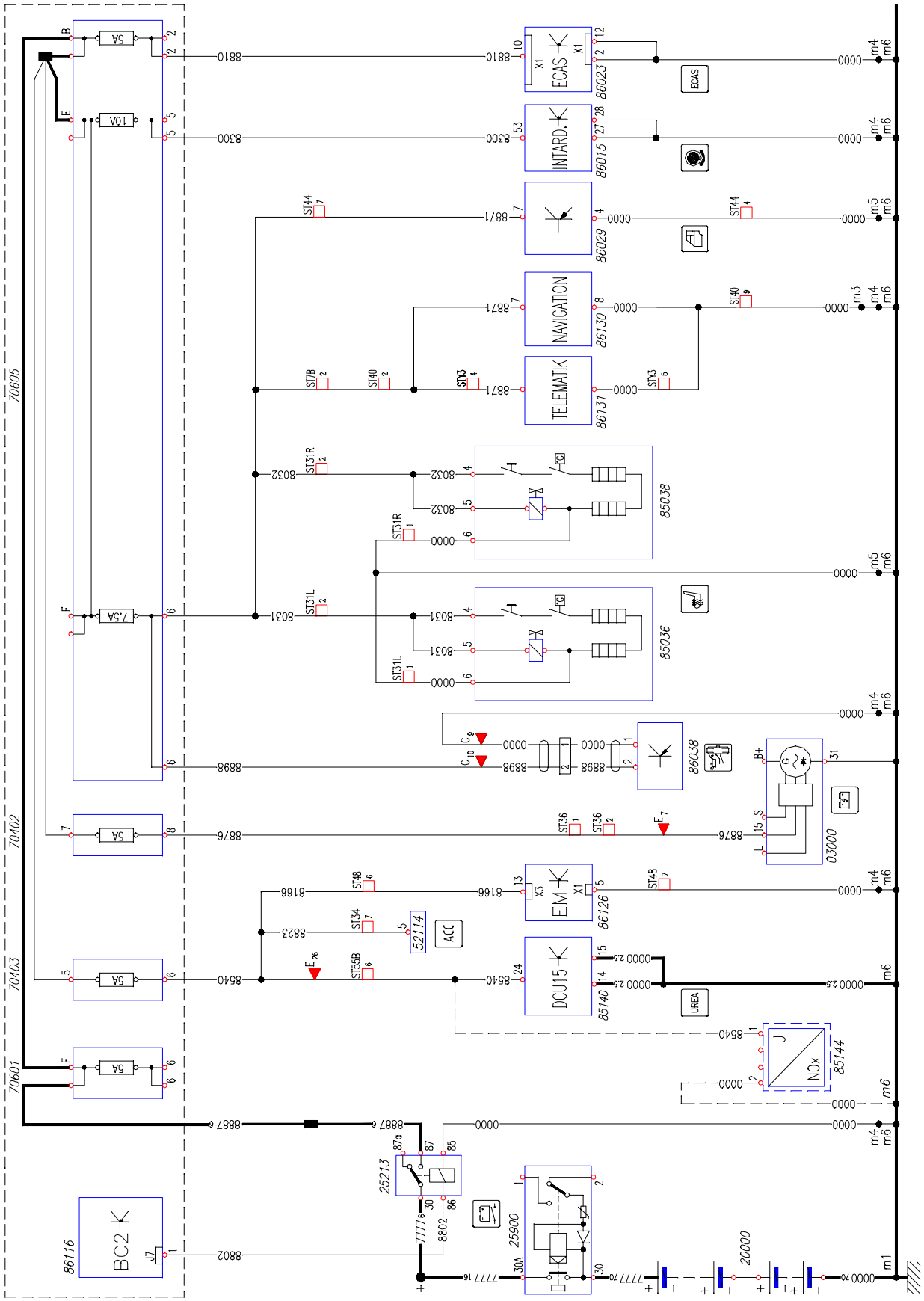

https://truckmanualshub.com/

Chart 11: Power supply (+15)_2 (AT/AD)

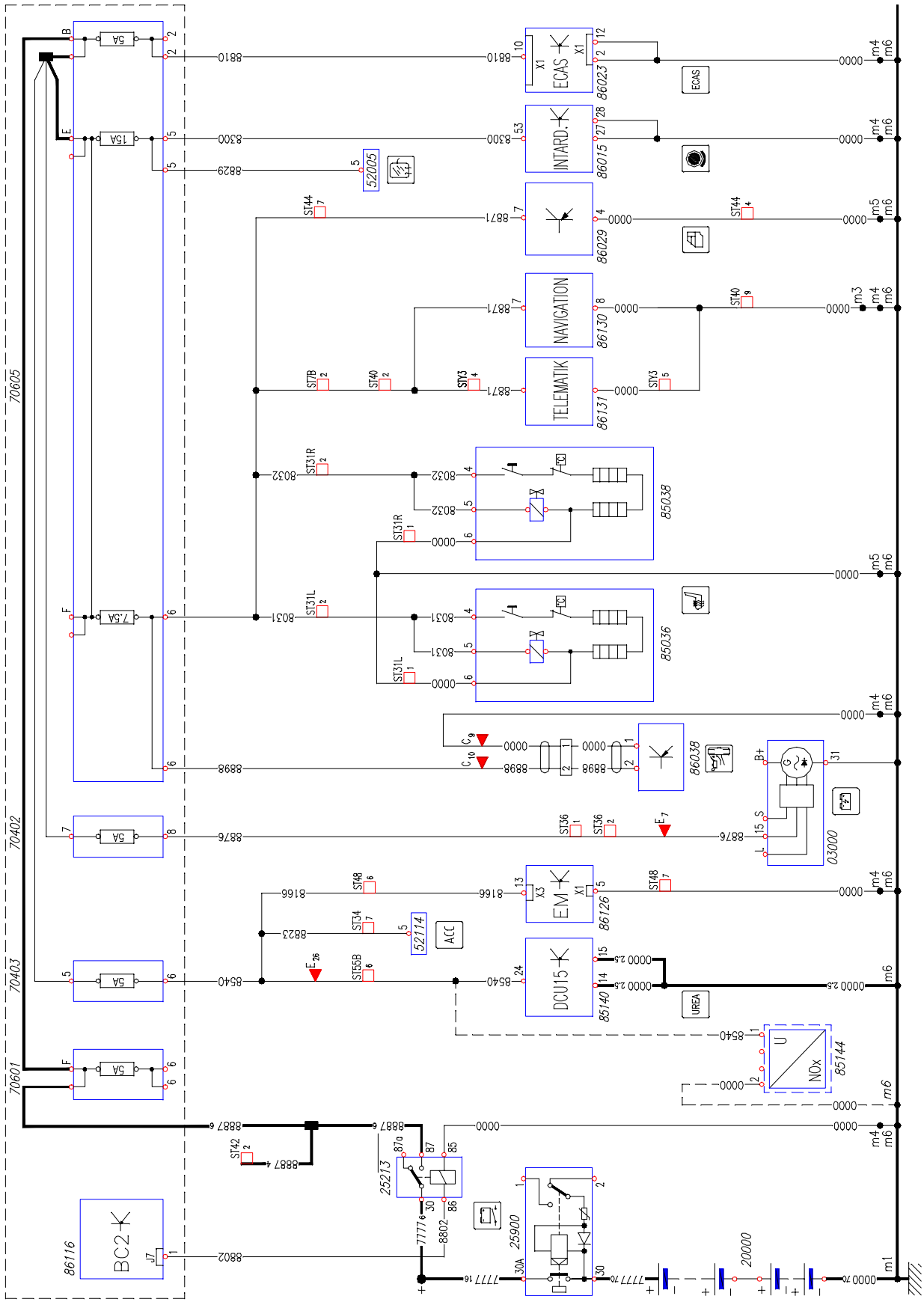

https://truckmanualshub.com/

Chart 12: Body Computer (BC2)_(J7)

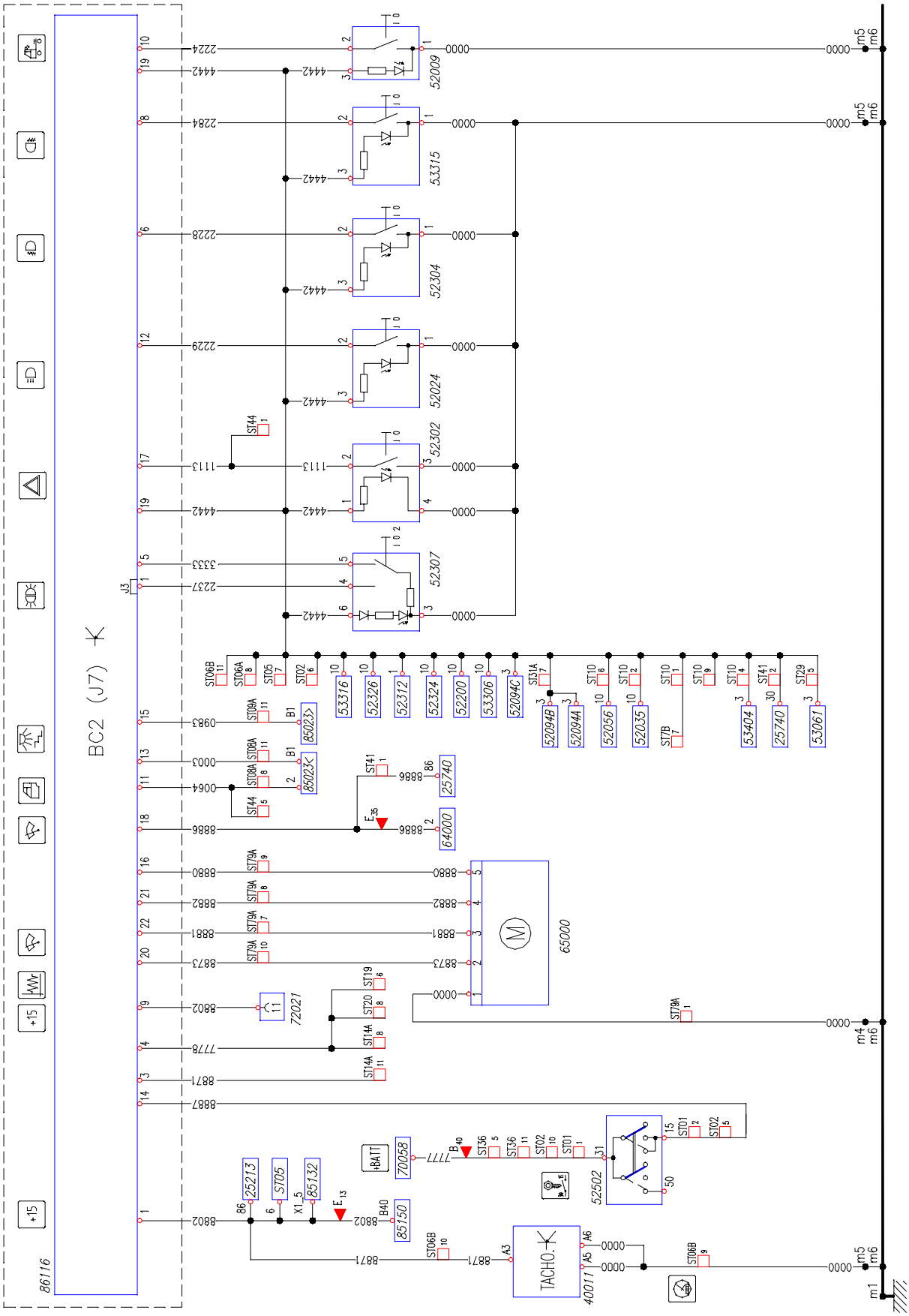

Chart 13: Body Computer (BC2)_(J6) (AS)

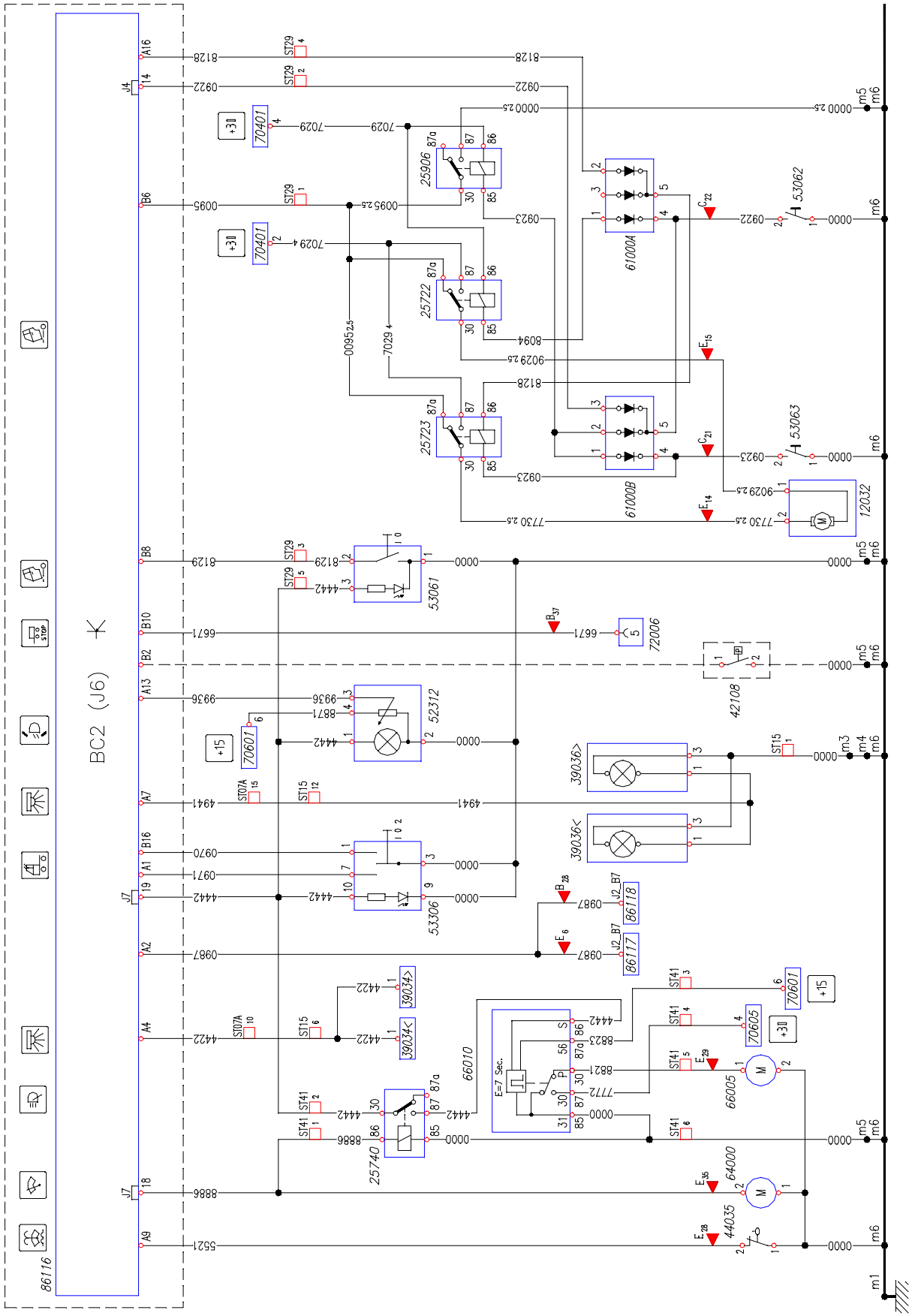

https://truckmanualshub.com/

Chart 14: Body Computer (BC2)_(J6) (AT/AD)

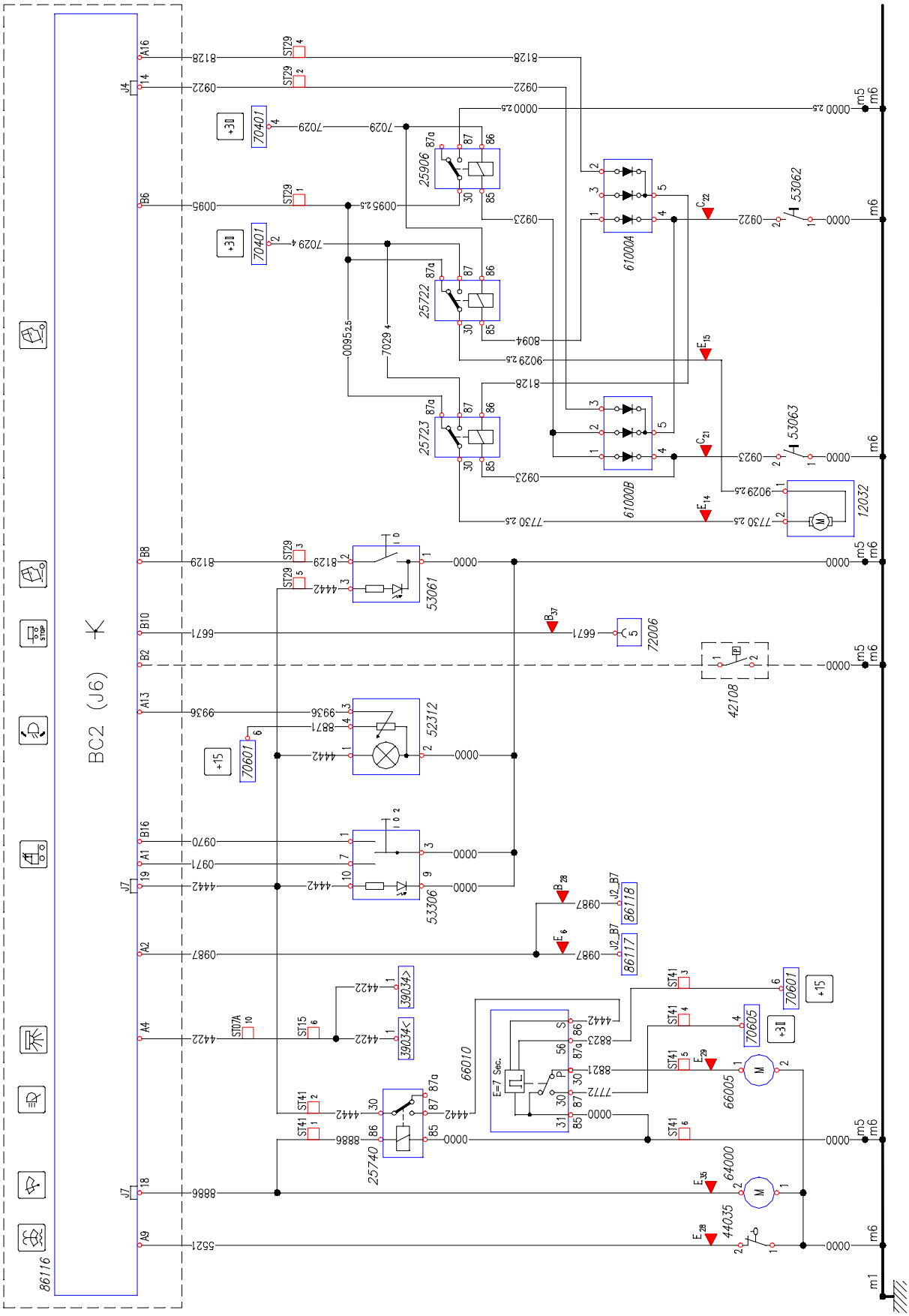

113457

https://truckmanualshub.com/

Chart 15: Body Computer (BC2)_(J4-J5) (AS)

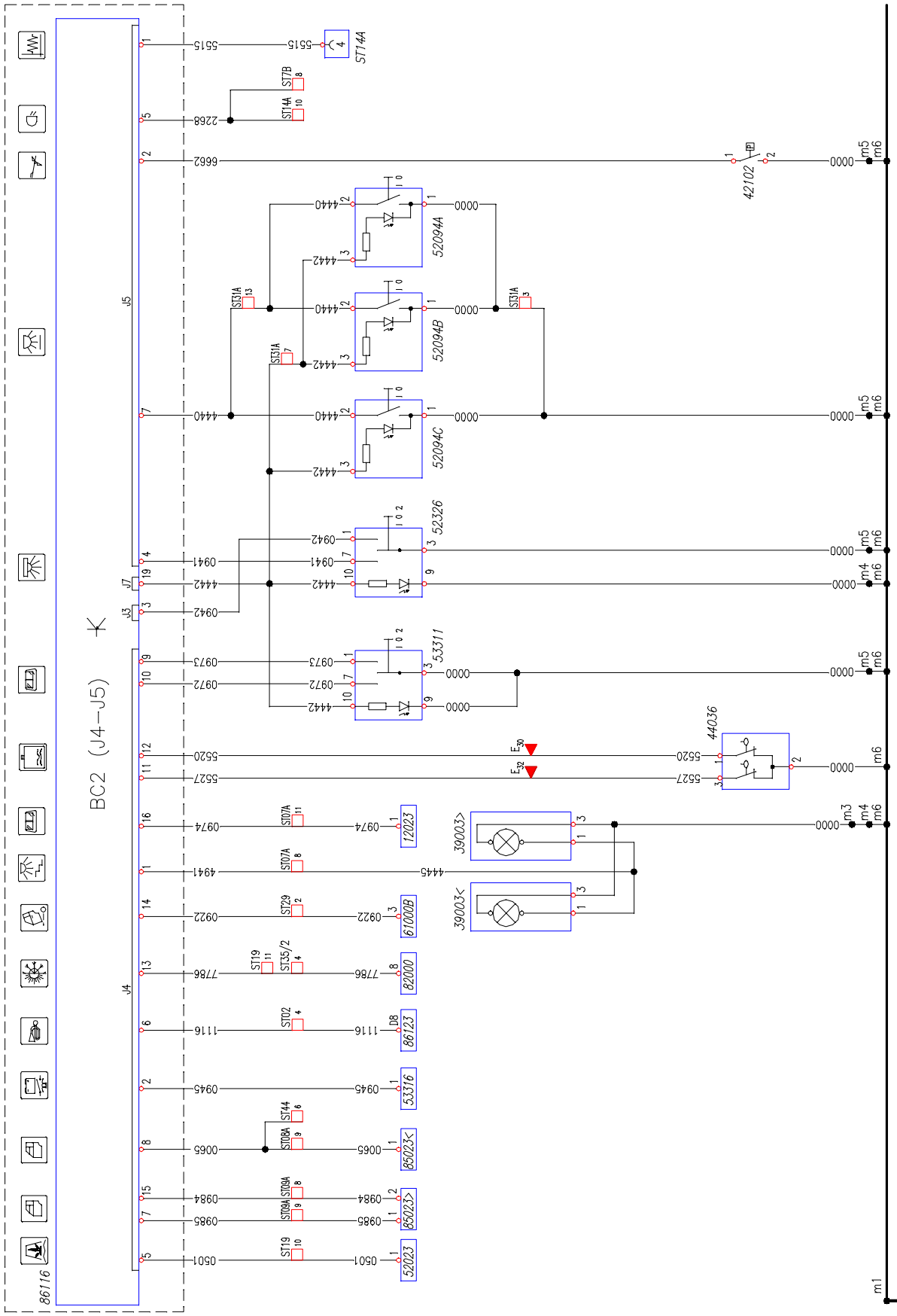

https://truckmanualshub.com/

Chart 16: Body Computer (BC2)_(J4-J5) (AT/AD)

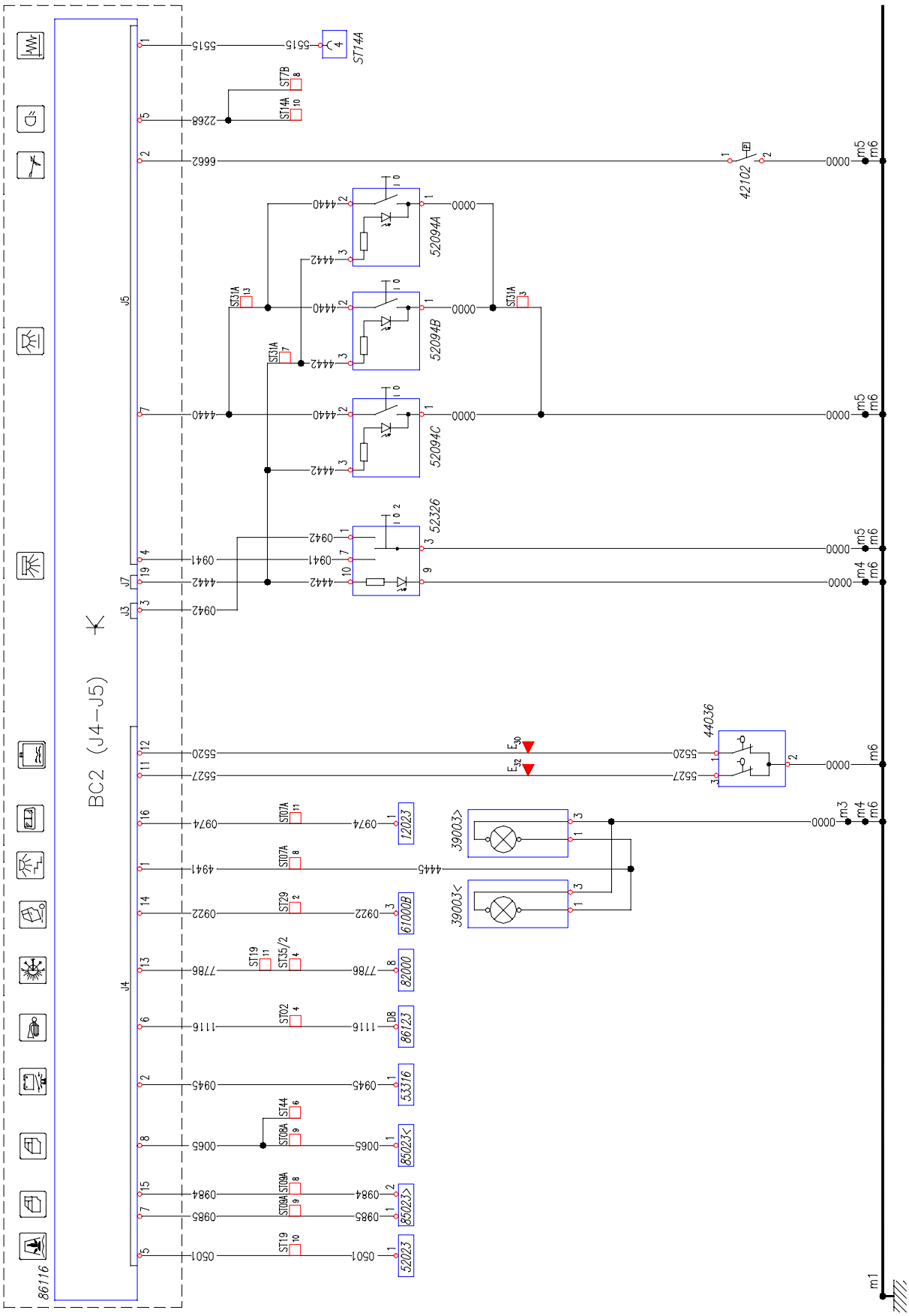

Chart 17: Body Computer (BC2)_(J2-J3) (AS)

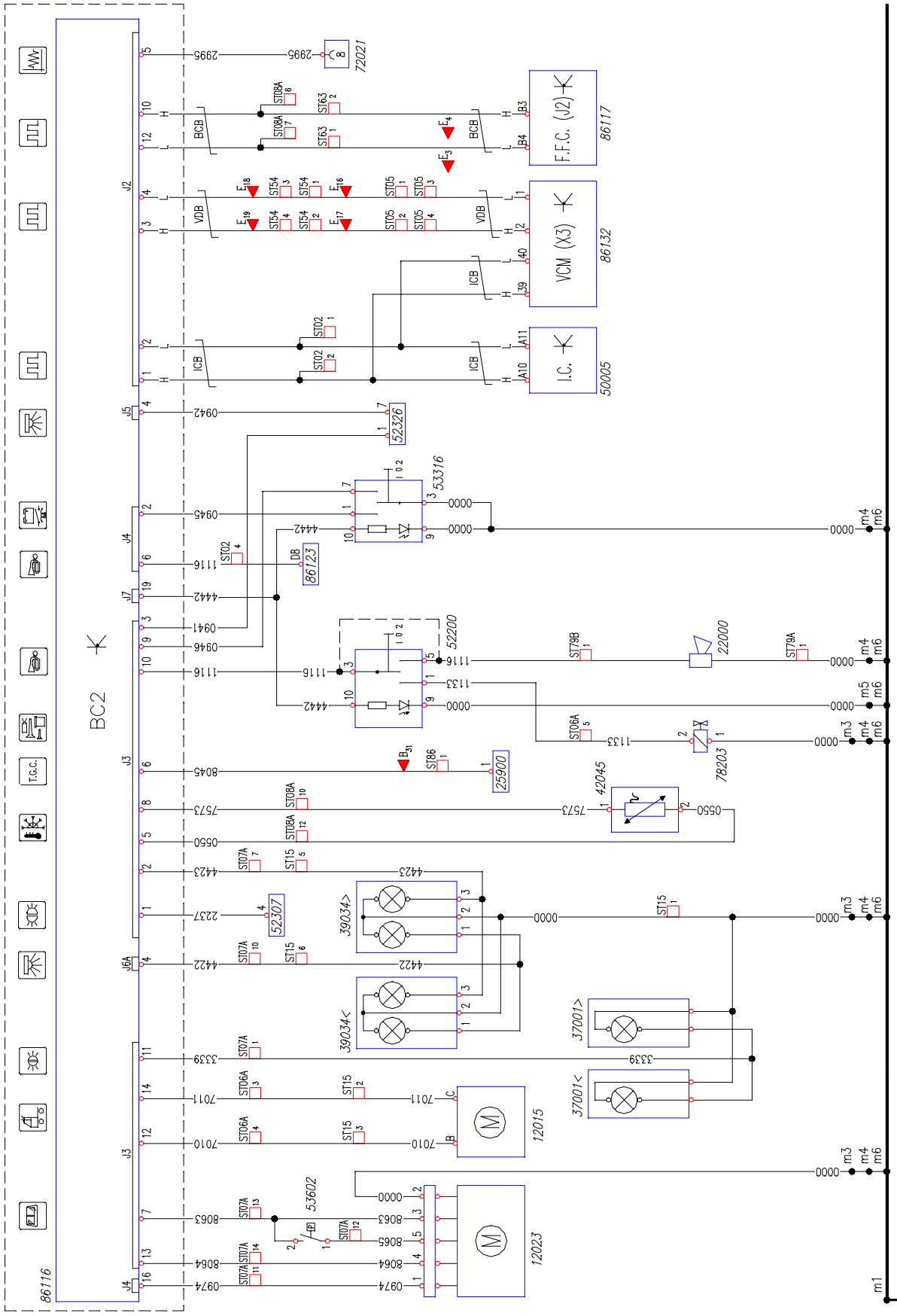

113460

https://truckmanualshub.com/

Chart 18: Body Computer (BC2)_(J2-J3) (AT/AD)

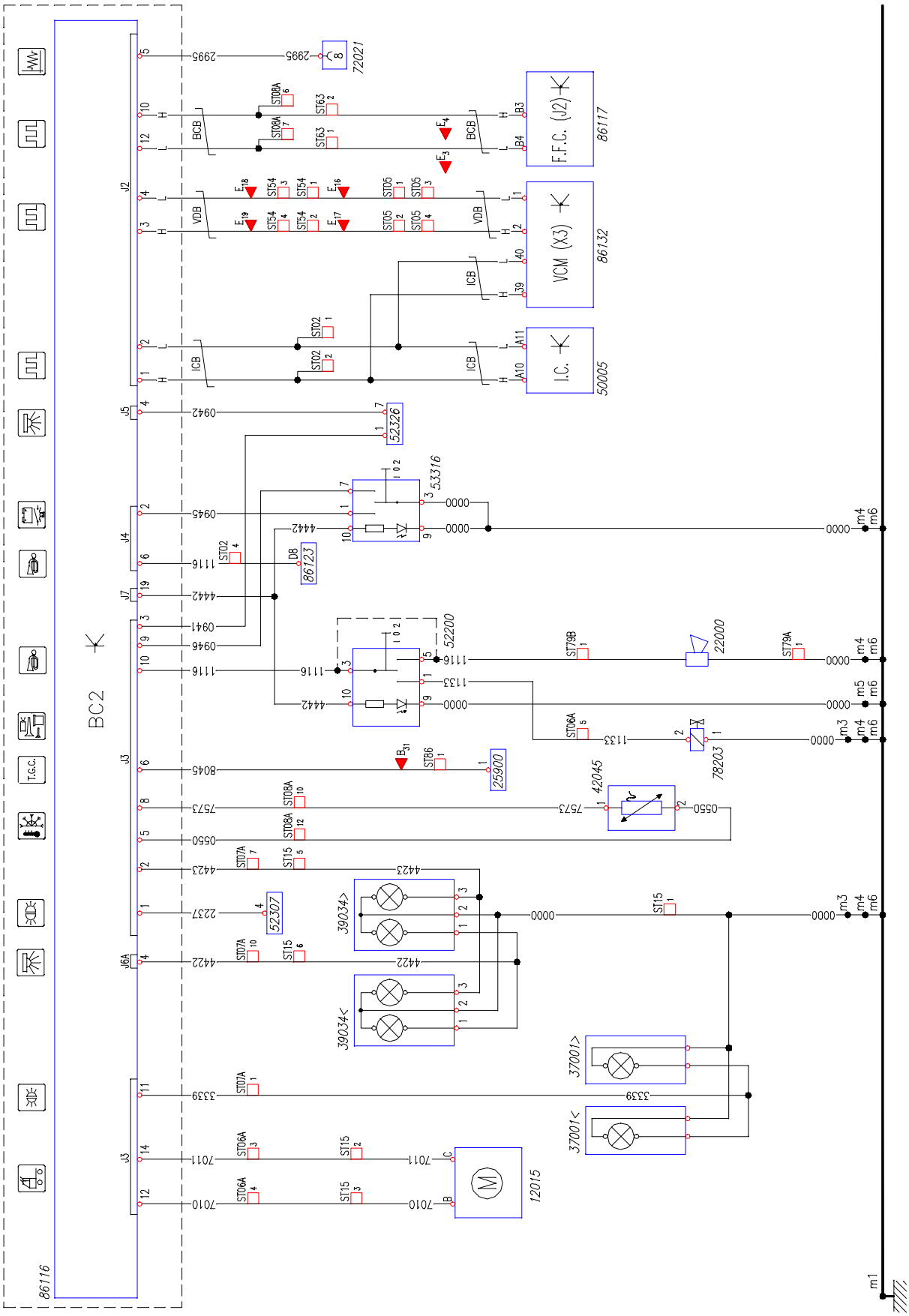

https://truckmanualshub.com/

Chart 19: IC central unit (AS)

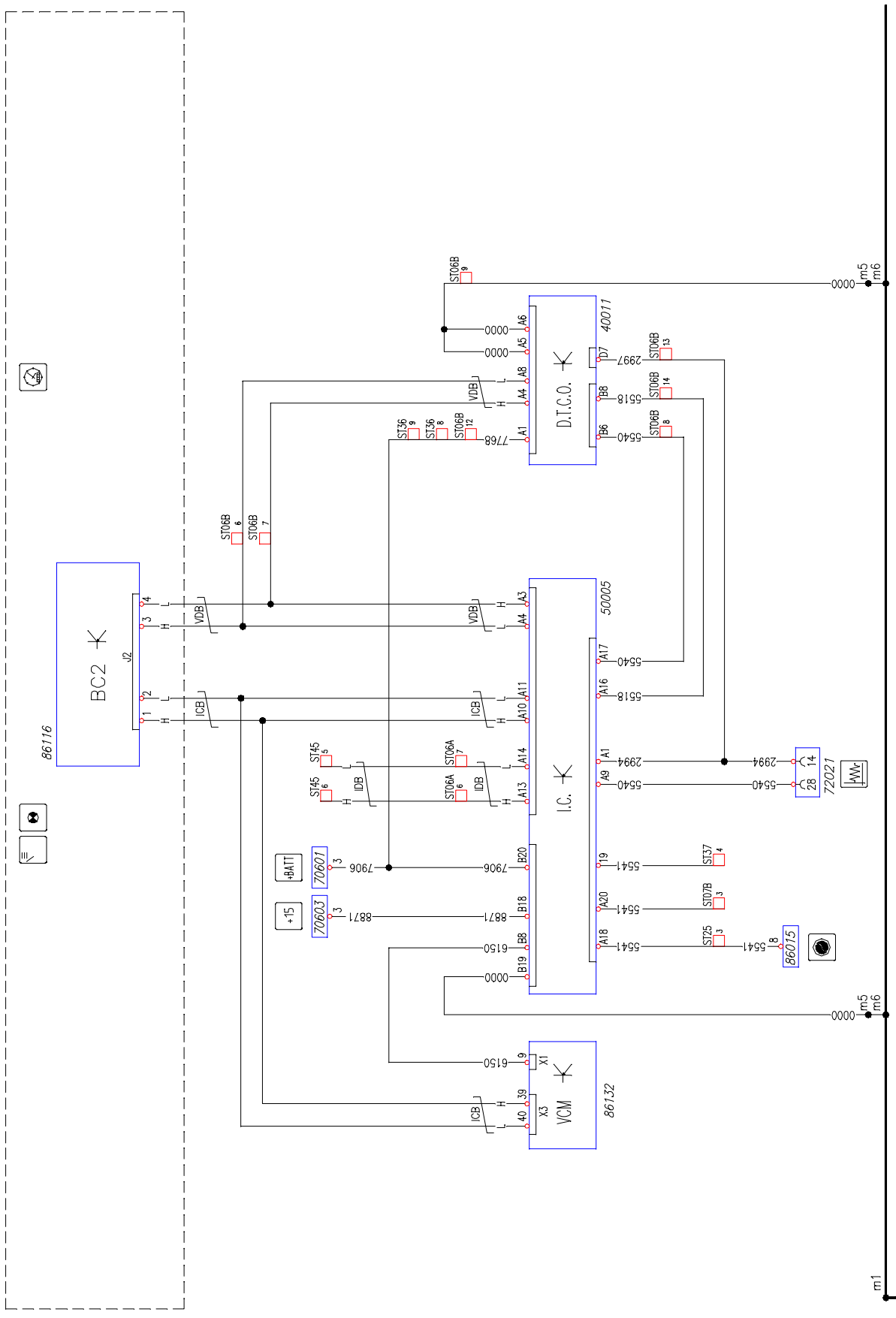

113462

https://truckmanualshub.com/

Chart 20: IC central unit (AT/AD)

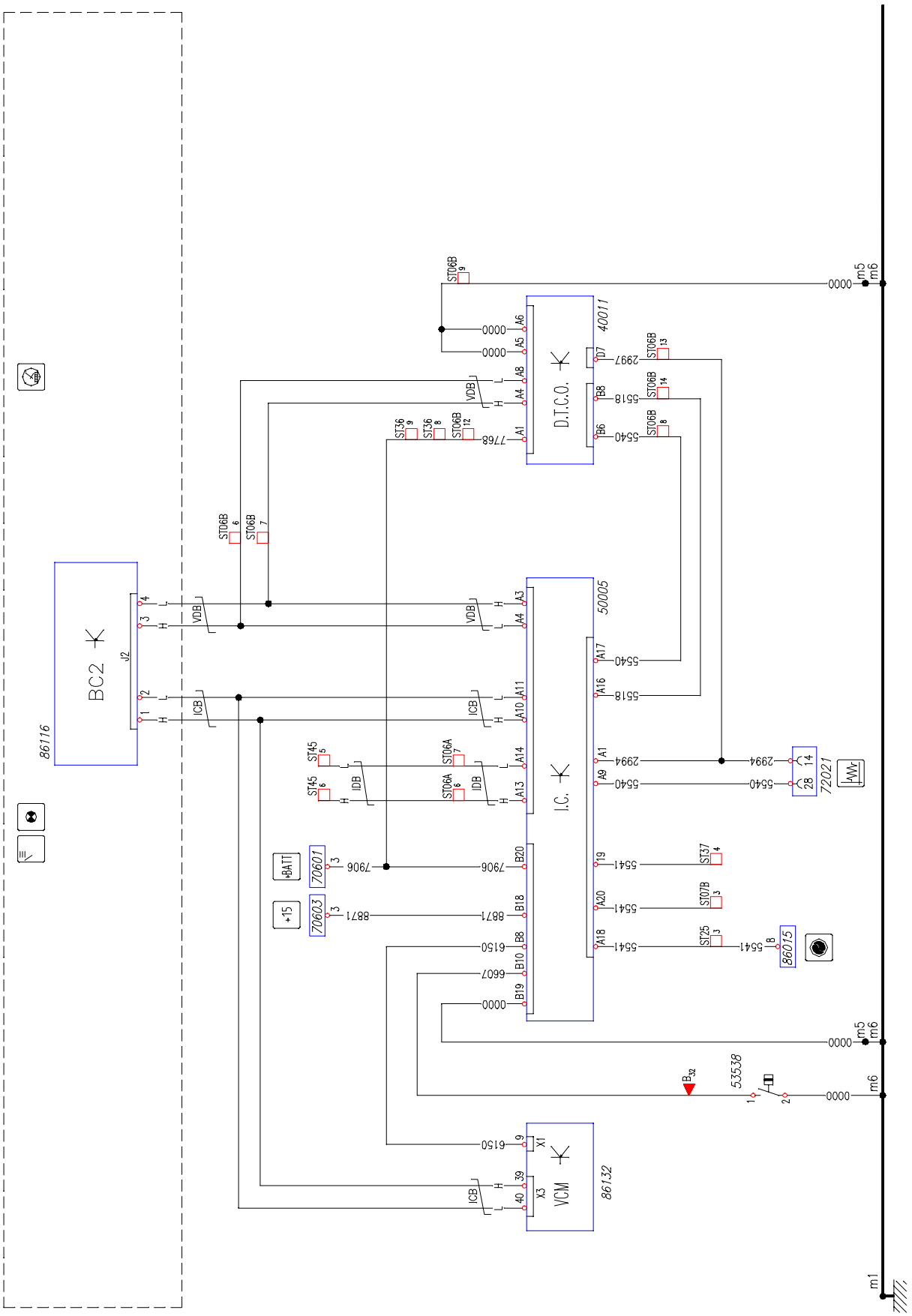

113463

Chart 21: Tachograph / Diagnosis socket

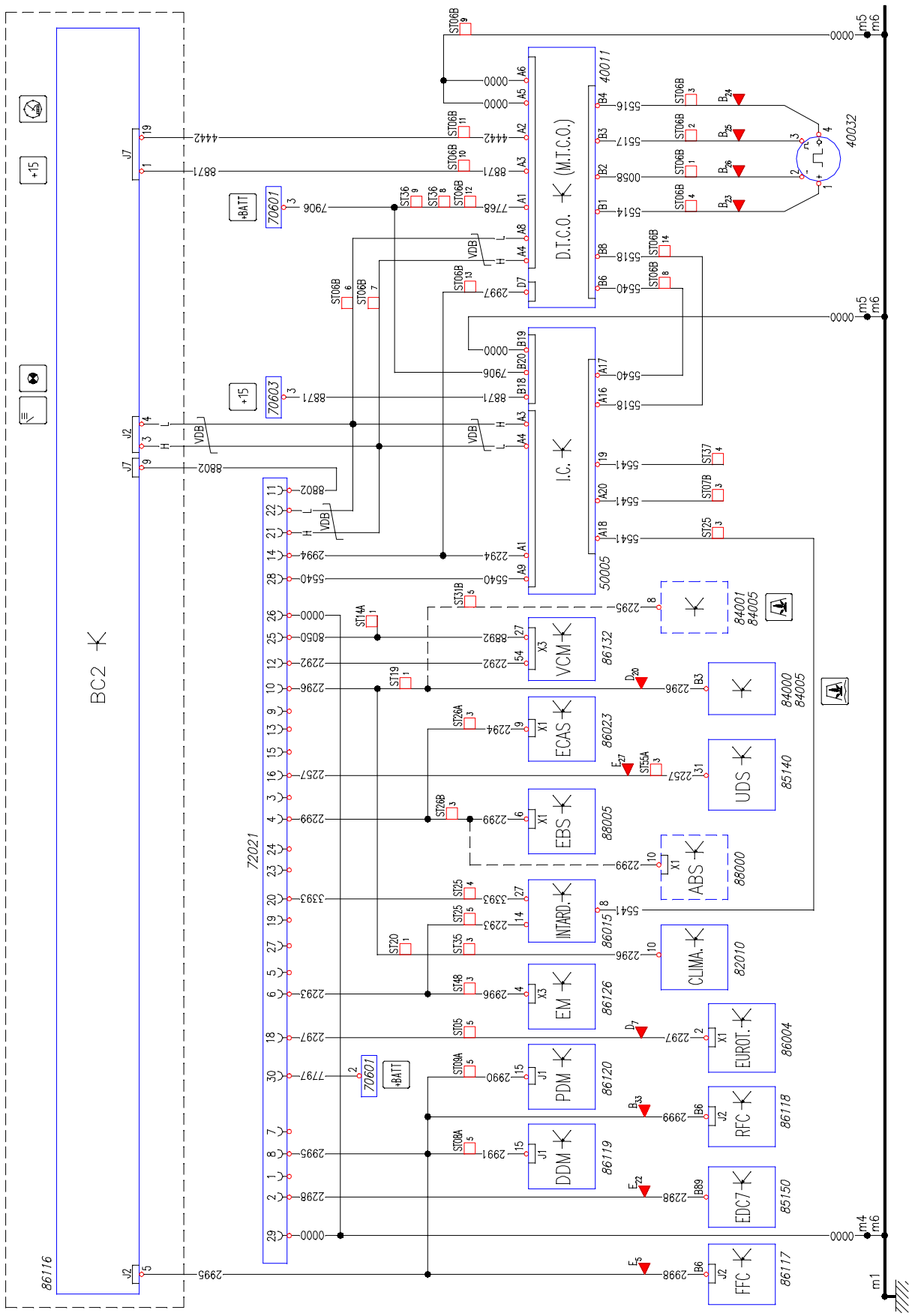

https://truckmanualshub.com/

Chart 22: Steering Wheel Interface (SWI)

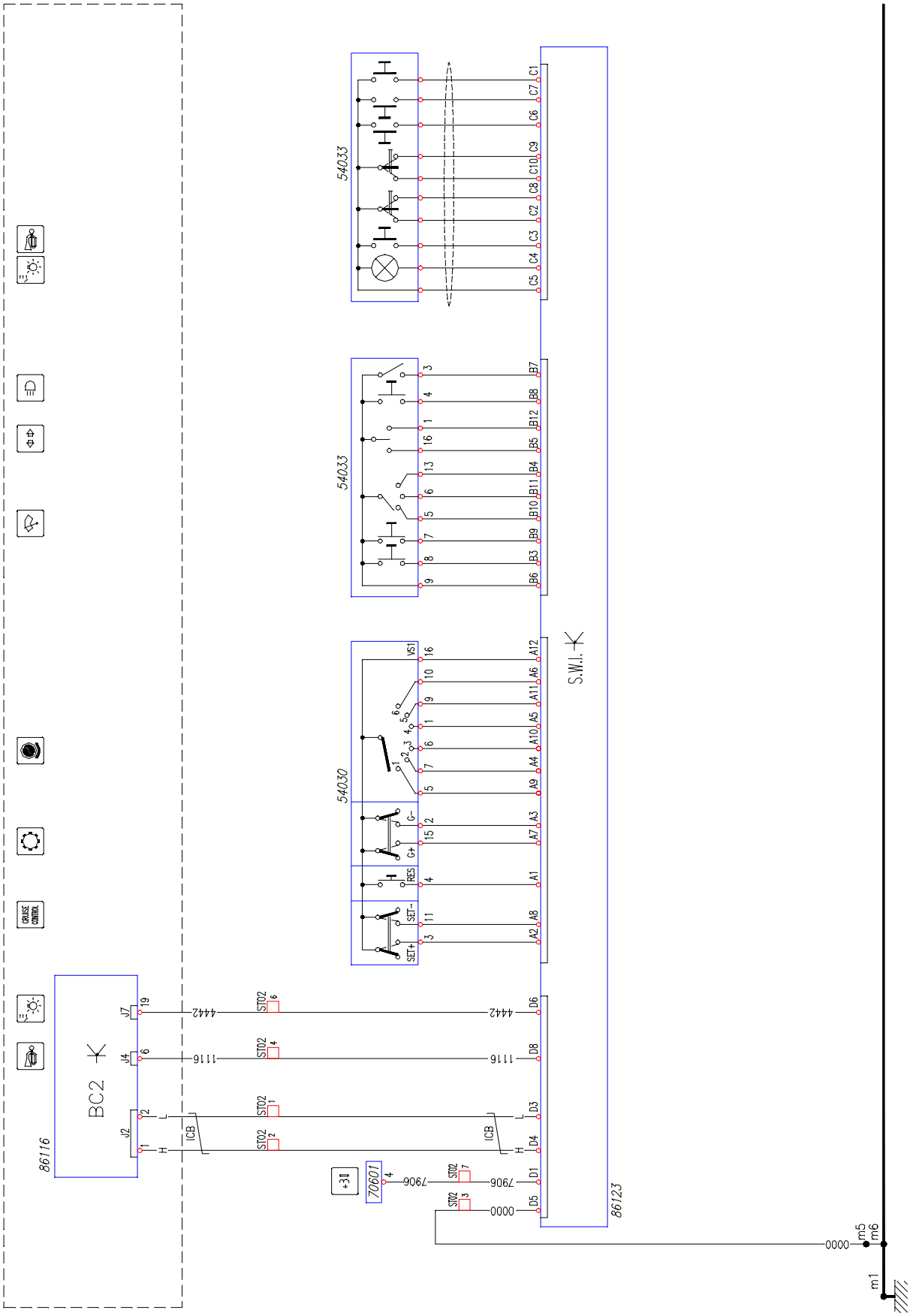

113465

Chart 23: DDM-BM central unit (AS)

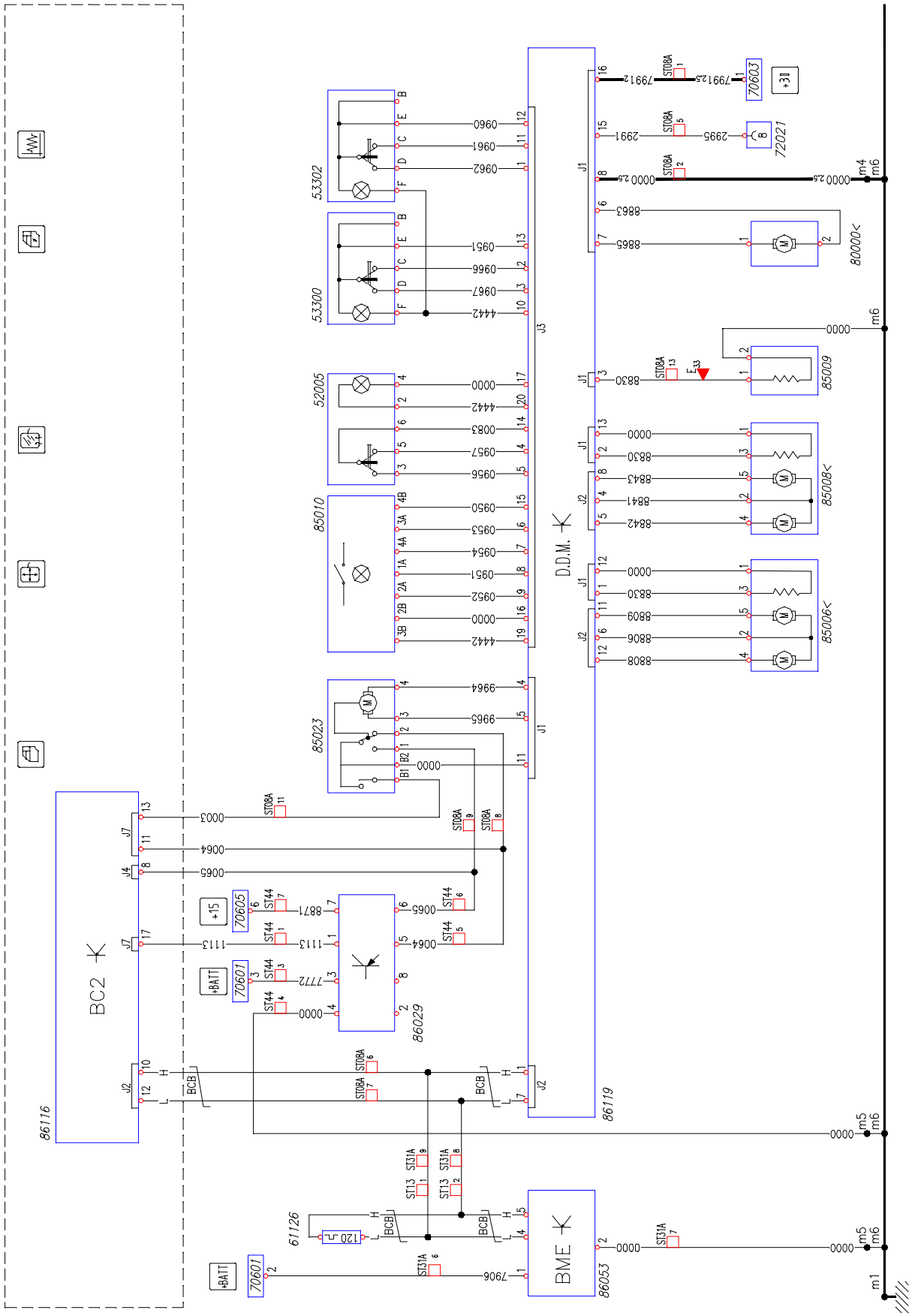

https://truckmanualshub.com/

Chart 24: DDM-BM central unit (AT/AD)

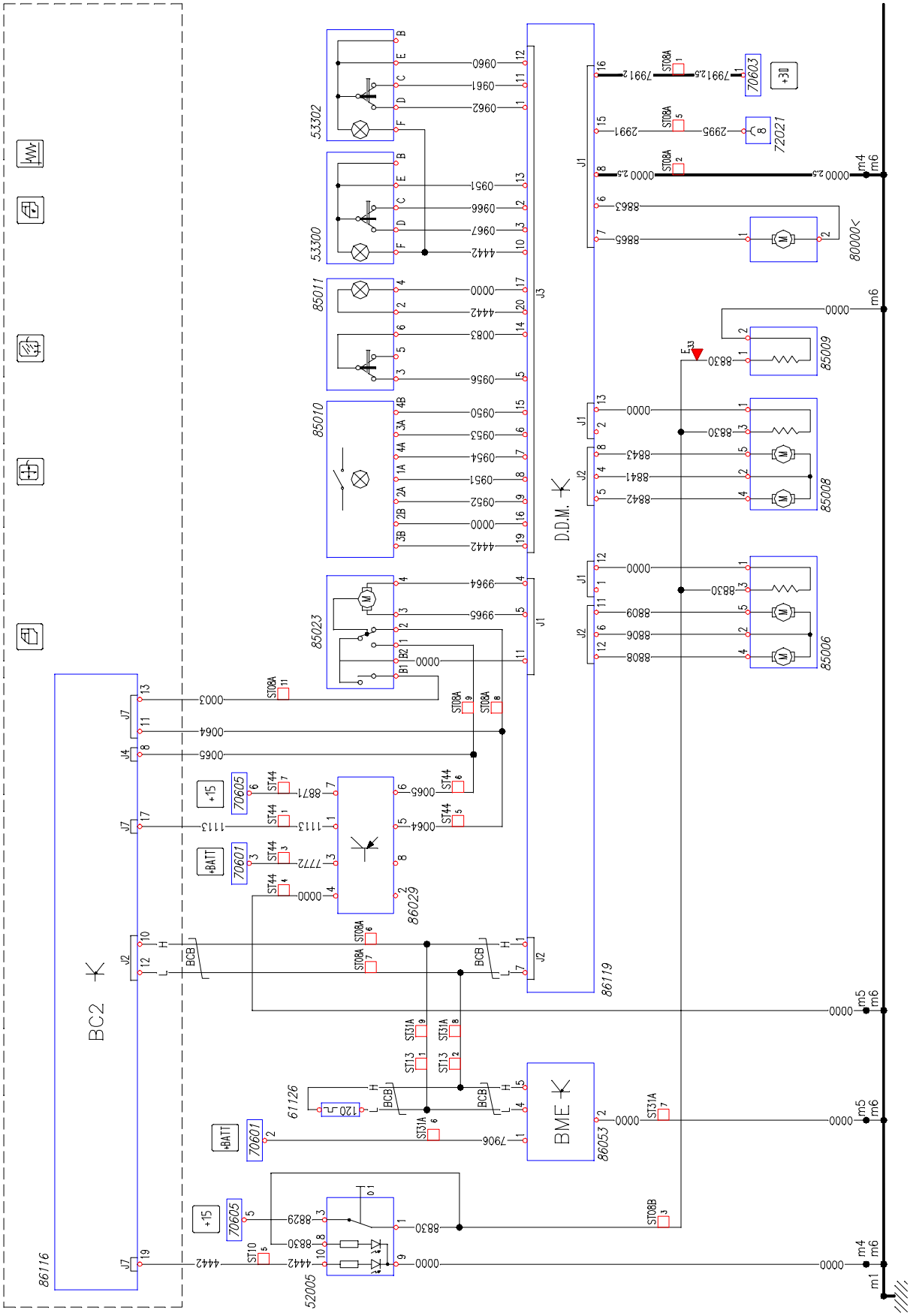

https://truckmanualshub.com/

Chart 25: PDM central unit (AS)

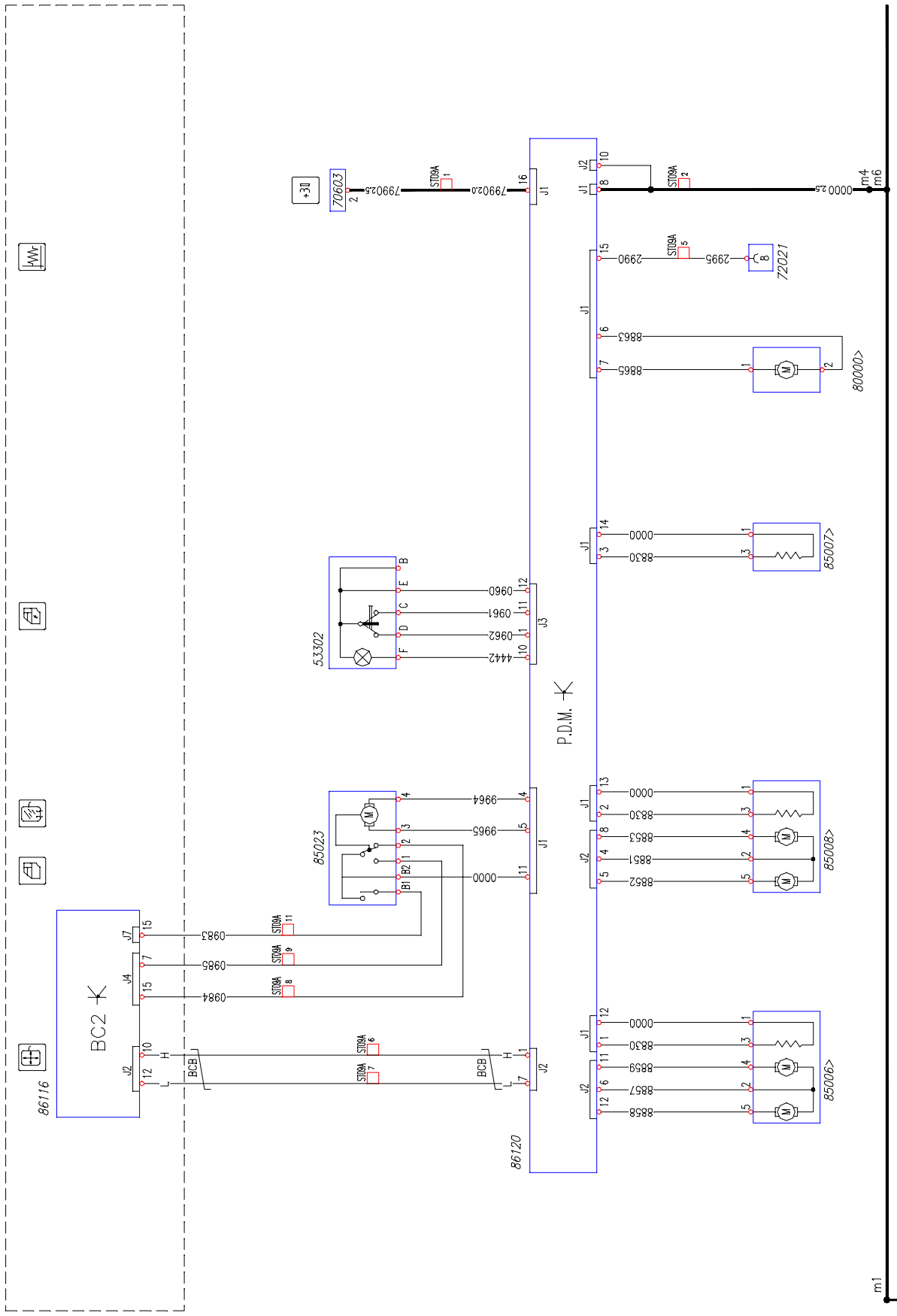

https://truckmanualshub.com/

Chart 26: PDM central unit (AT/AD)

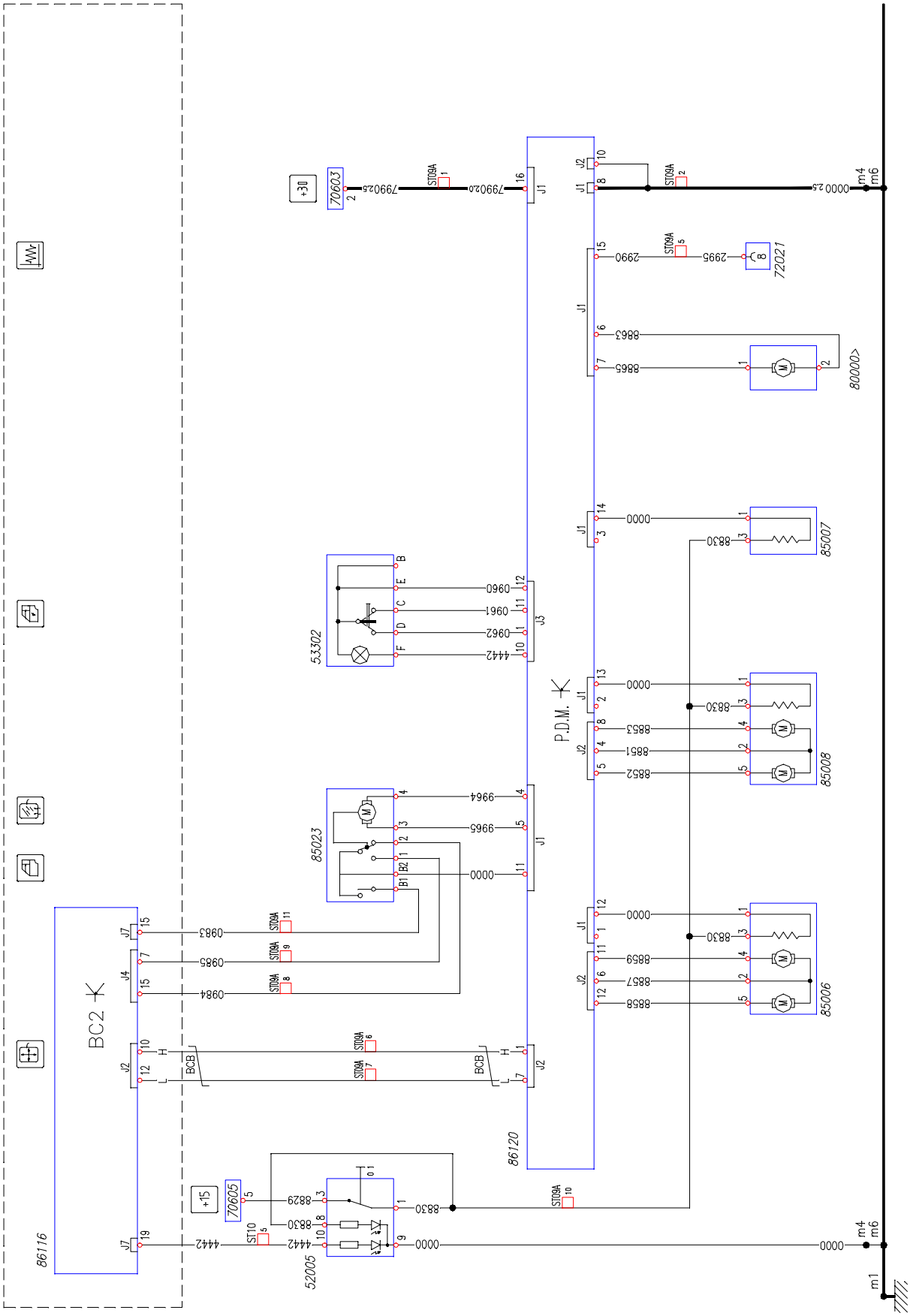

Chart 27: Thermal mirrors / Centralised closure / Window winders (without DDM-PDM) (AT/AD)

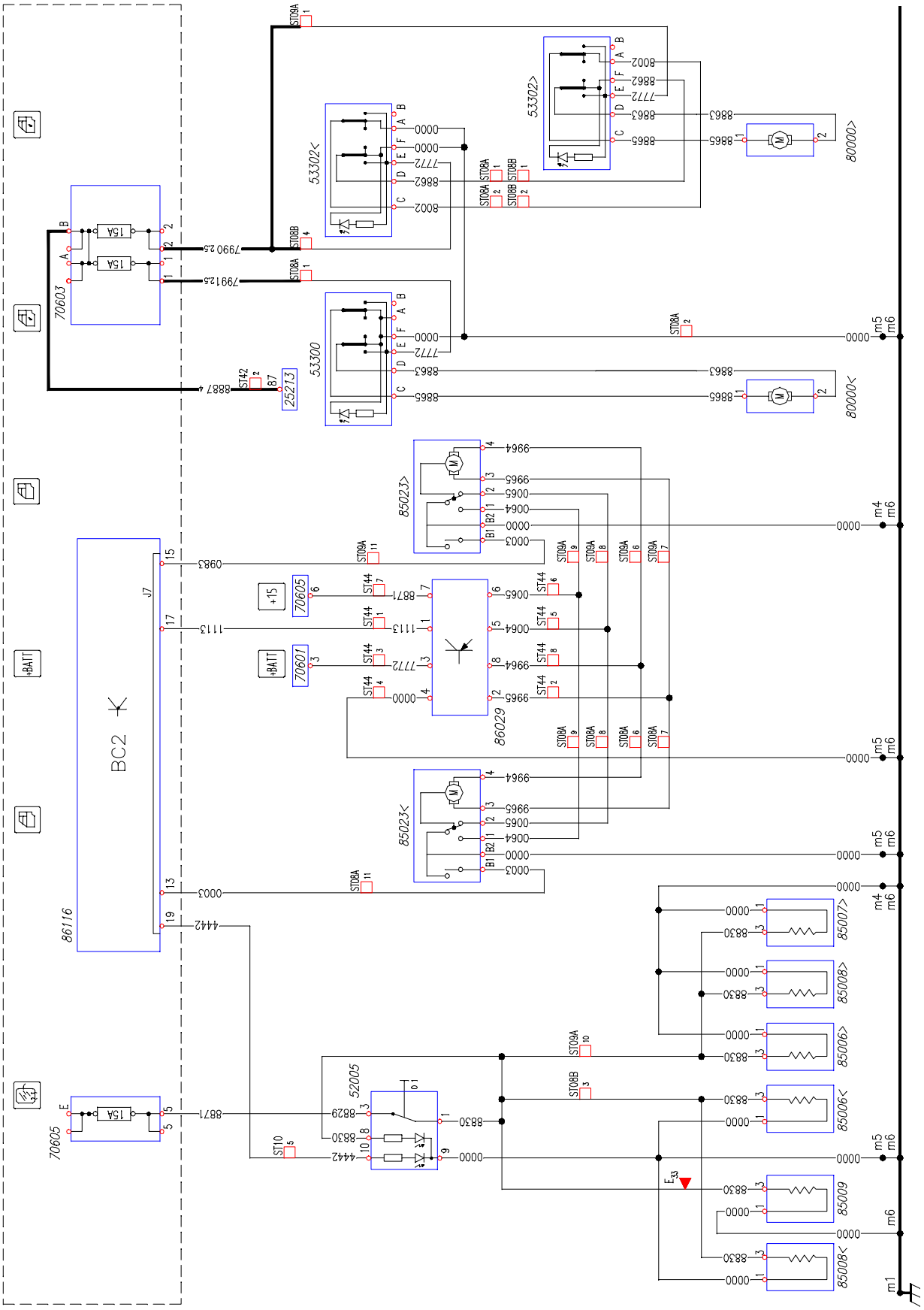

https://truckmanualshub.com/

Chart 28: Electronic Control Unit VCM_01 (AS)

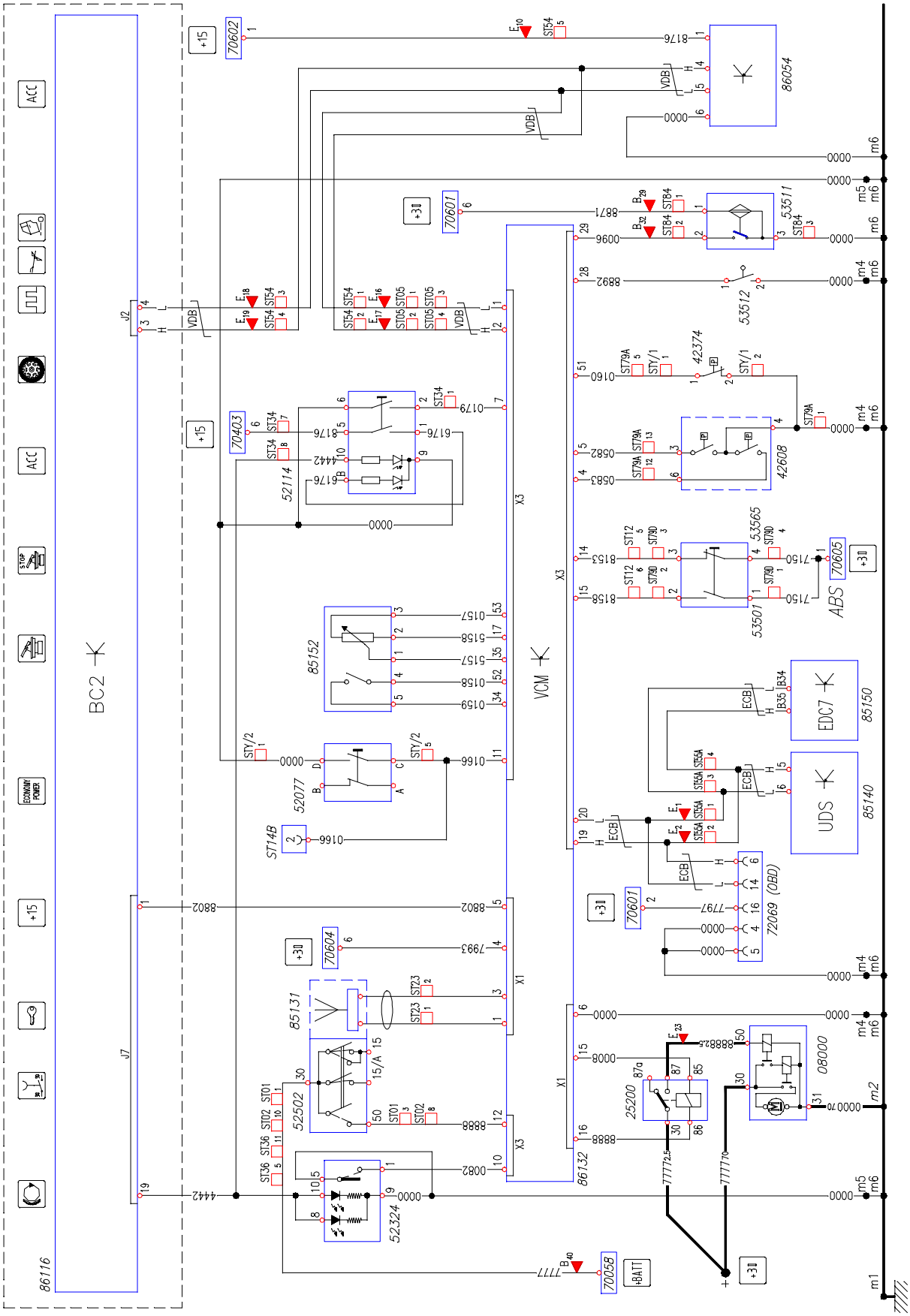

113471

Chart 29: Electronic Control Unit VCM_01 (AT/AD)

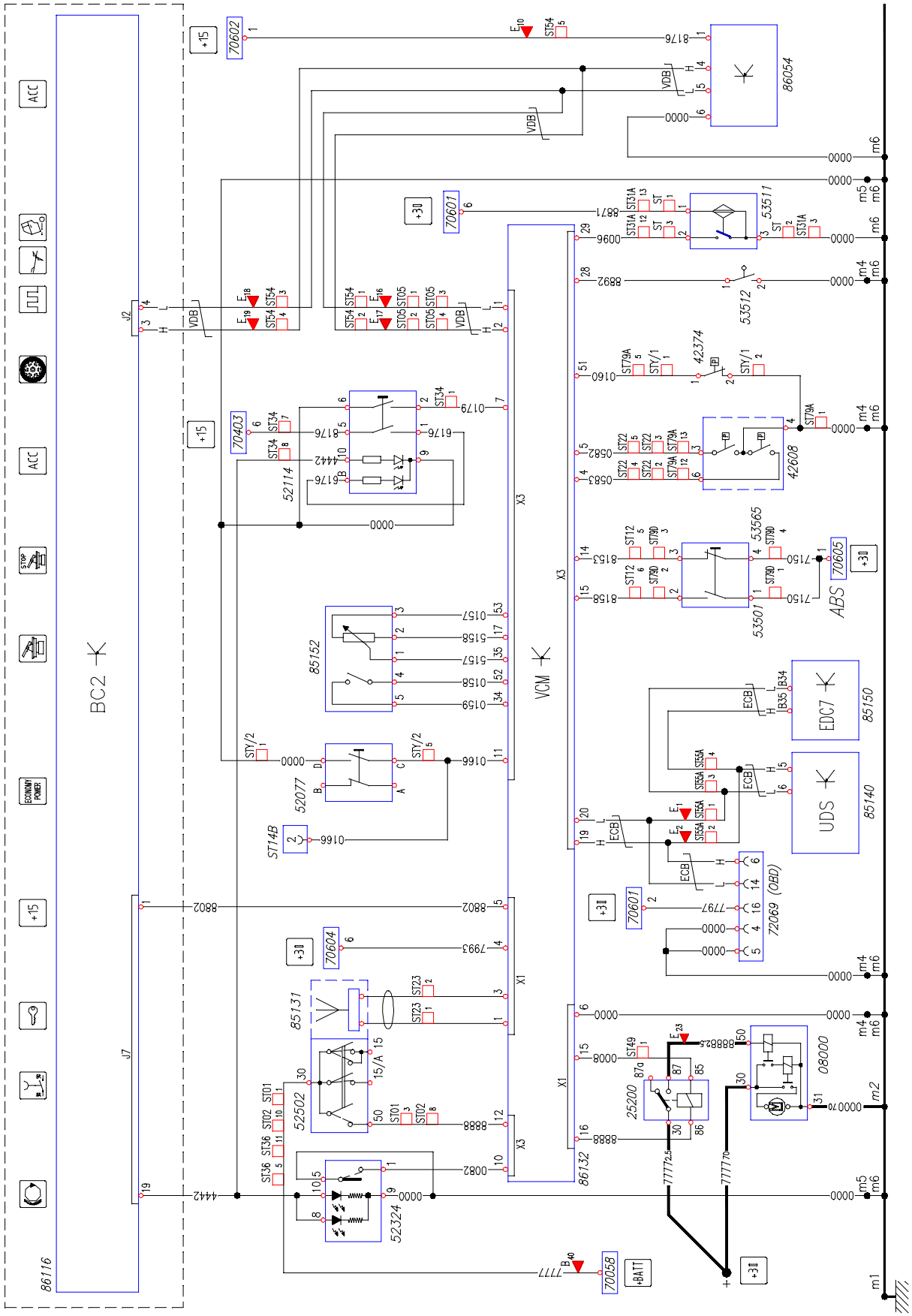

https://truckmanualshub.com/

Chart 30: Electronic Control Unit VCM_02 (AS)

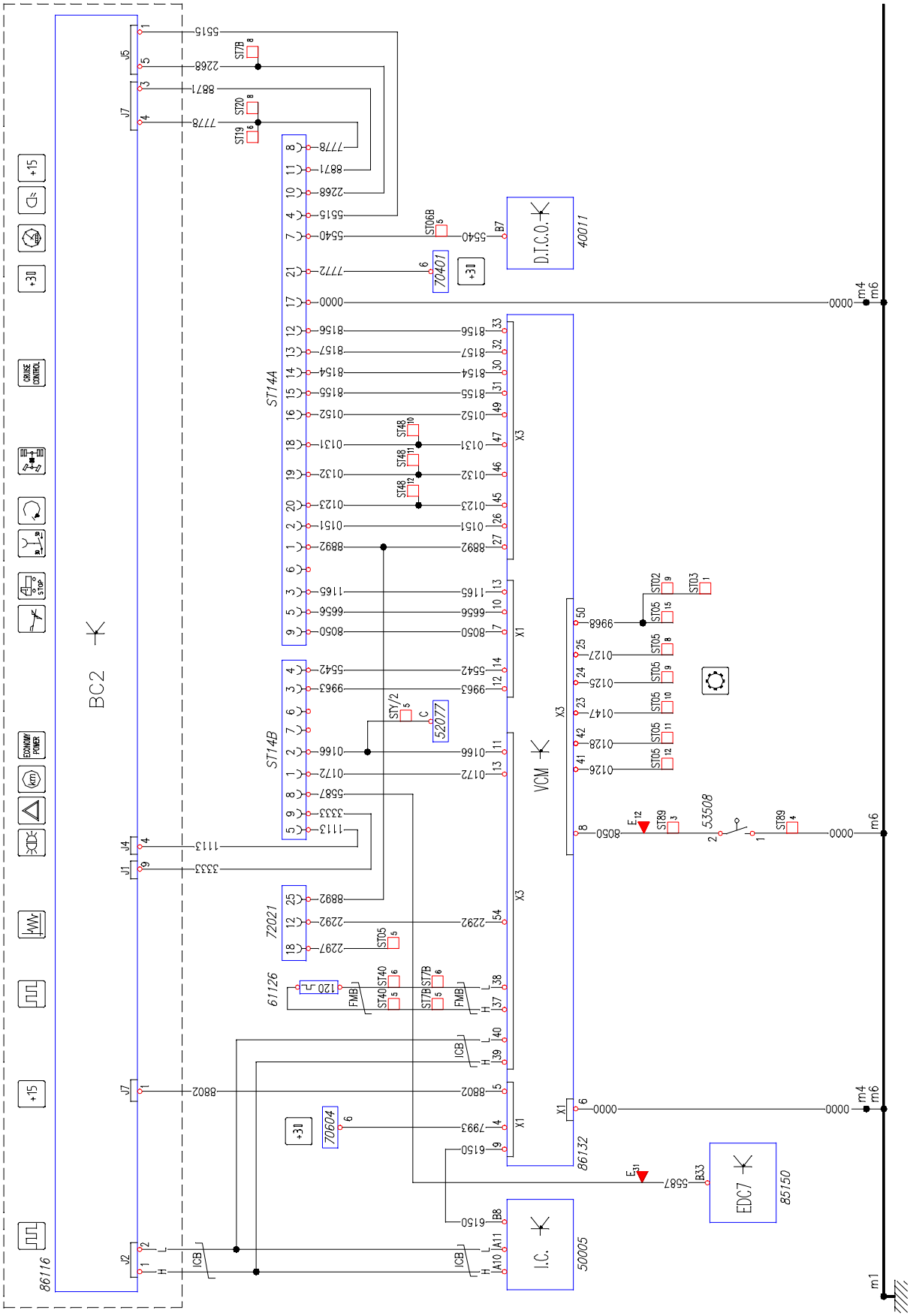

113473

Chart 31: Electronic Control Unit VCM_02 (AT/AD)

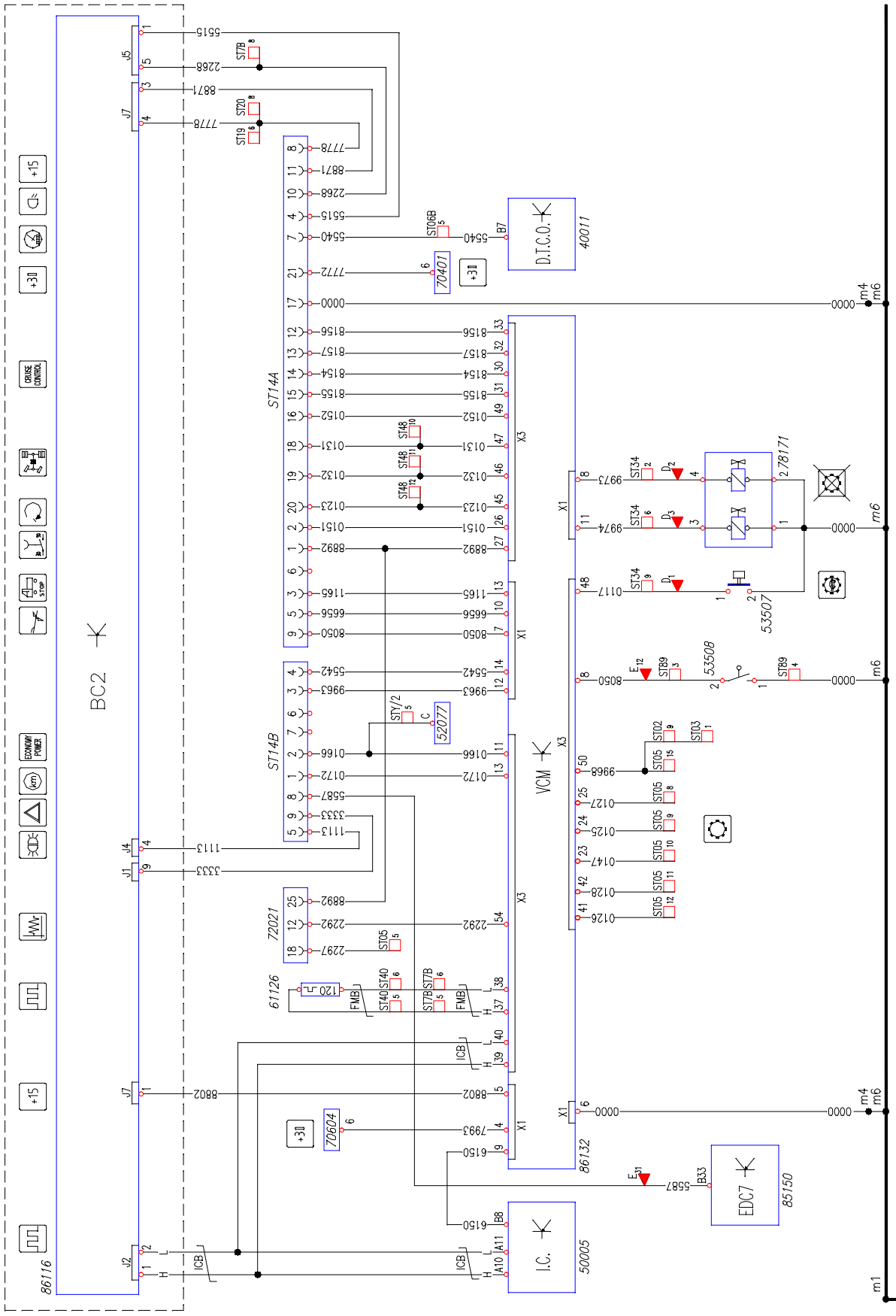

113474

https://truckmanualshub.com/

Chart 32: EDC (Connector B)

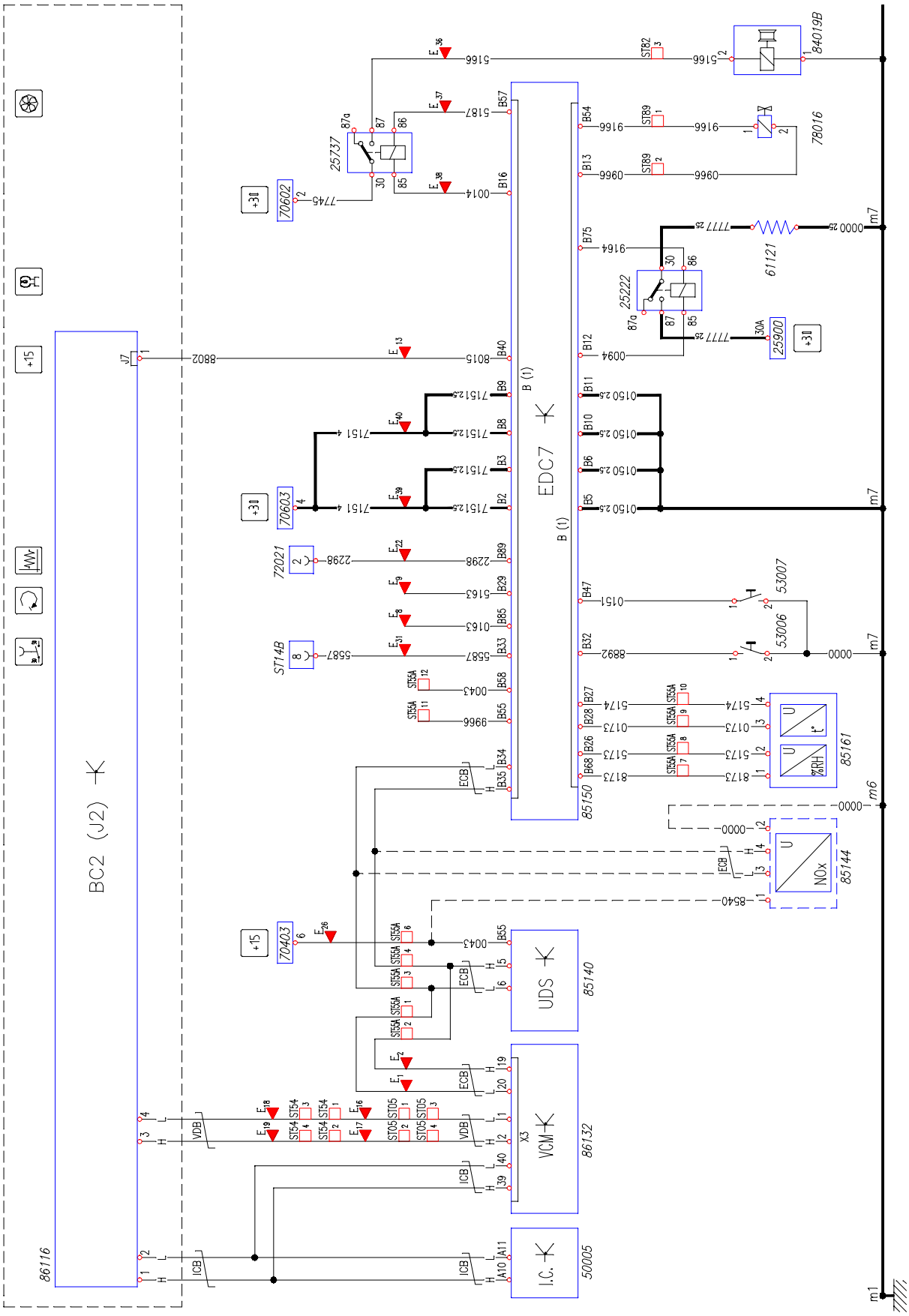

https://truckmanualshub.com/

Chart 33: EDC (Connector A/C - F2B)

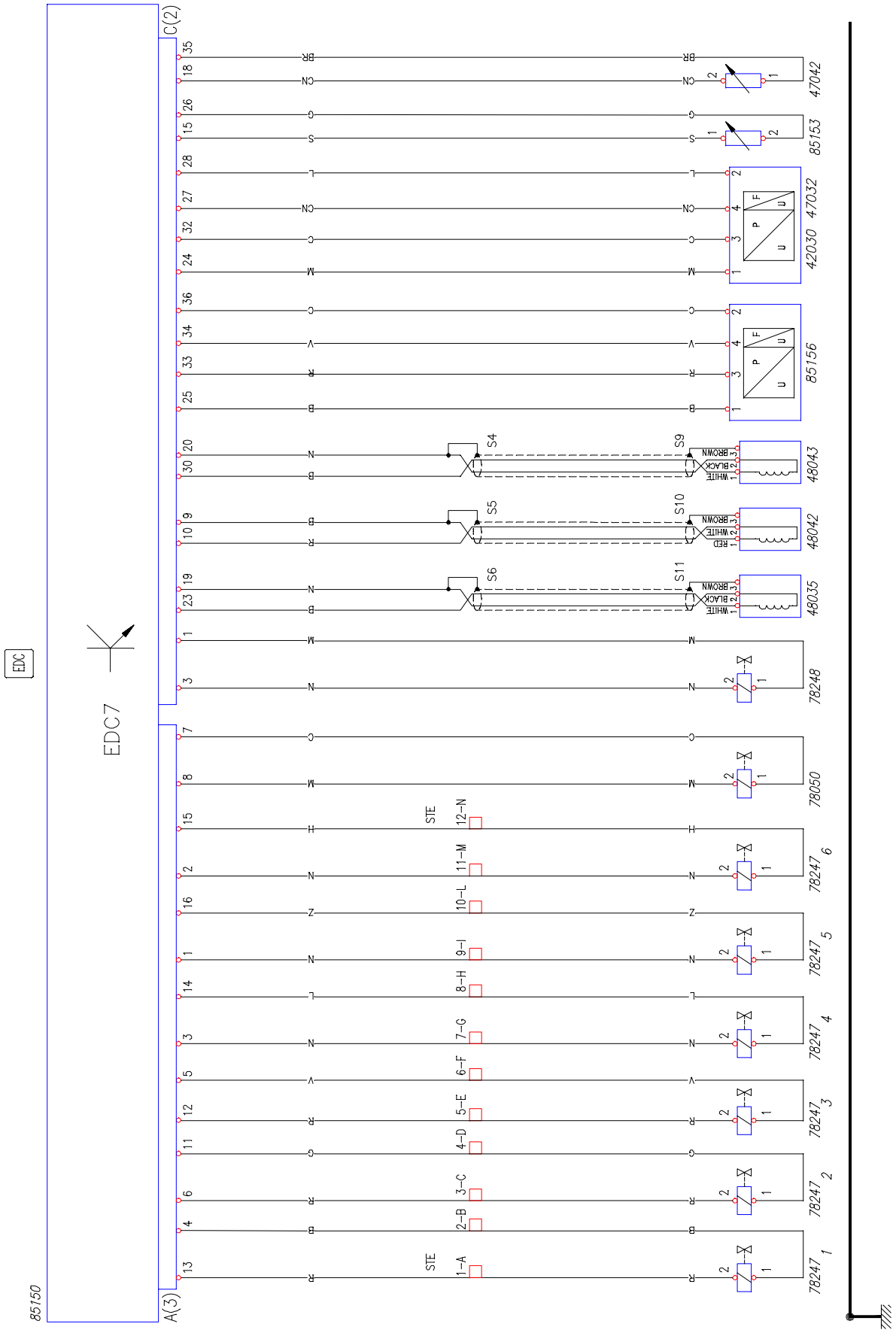

113476

https://truckmanualshub.com/

Chart 34: EDC (Connector A/C - F3B)

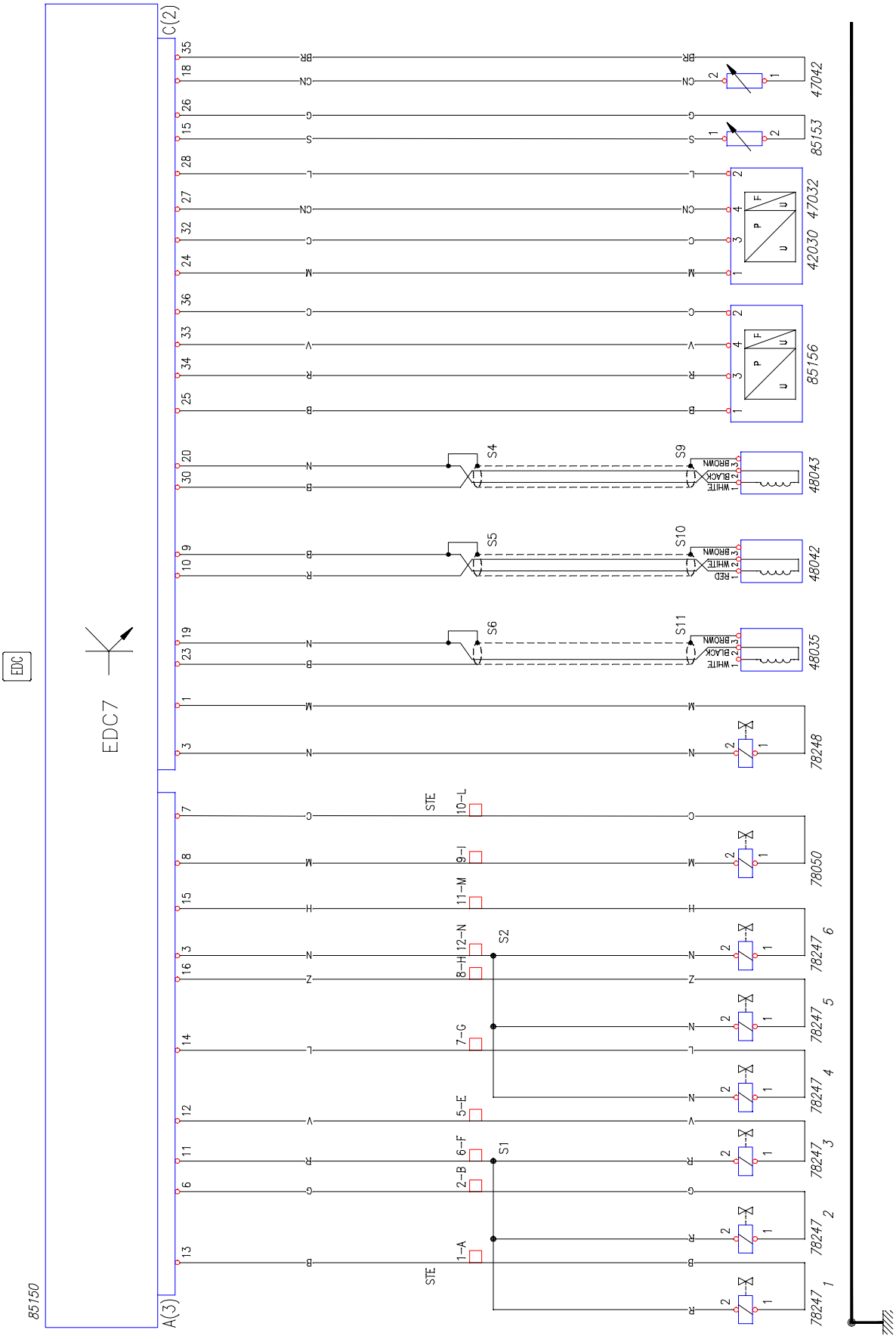

113477

Chart 35: Central unit UDS (DENOX2)

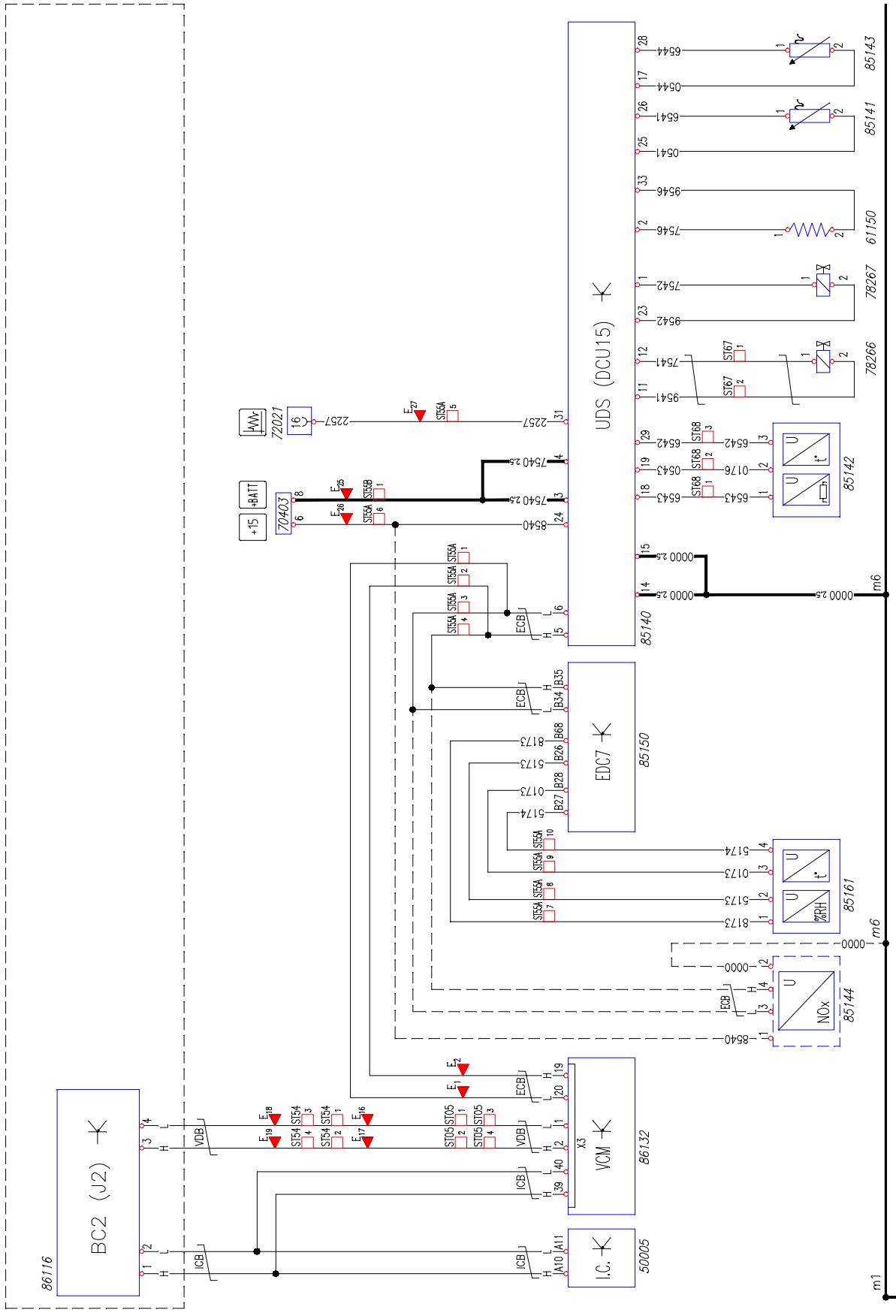

https://truckmanualshub.com/

Chart 36: Central unit FFC (J1)

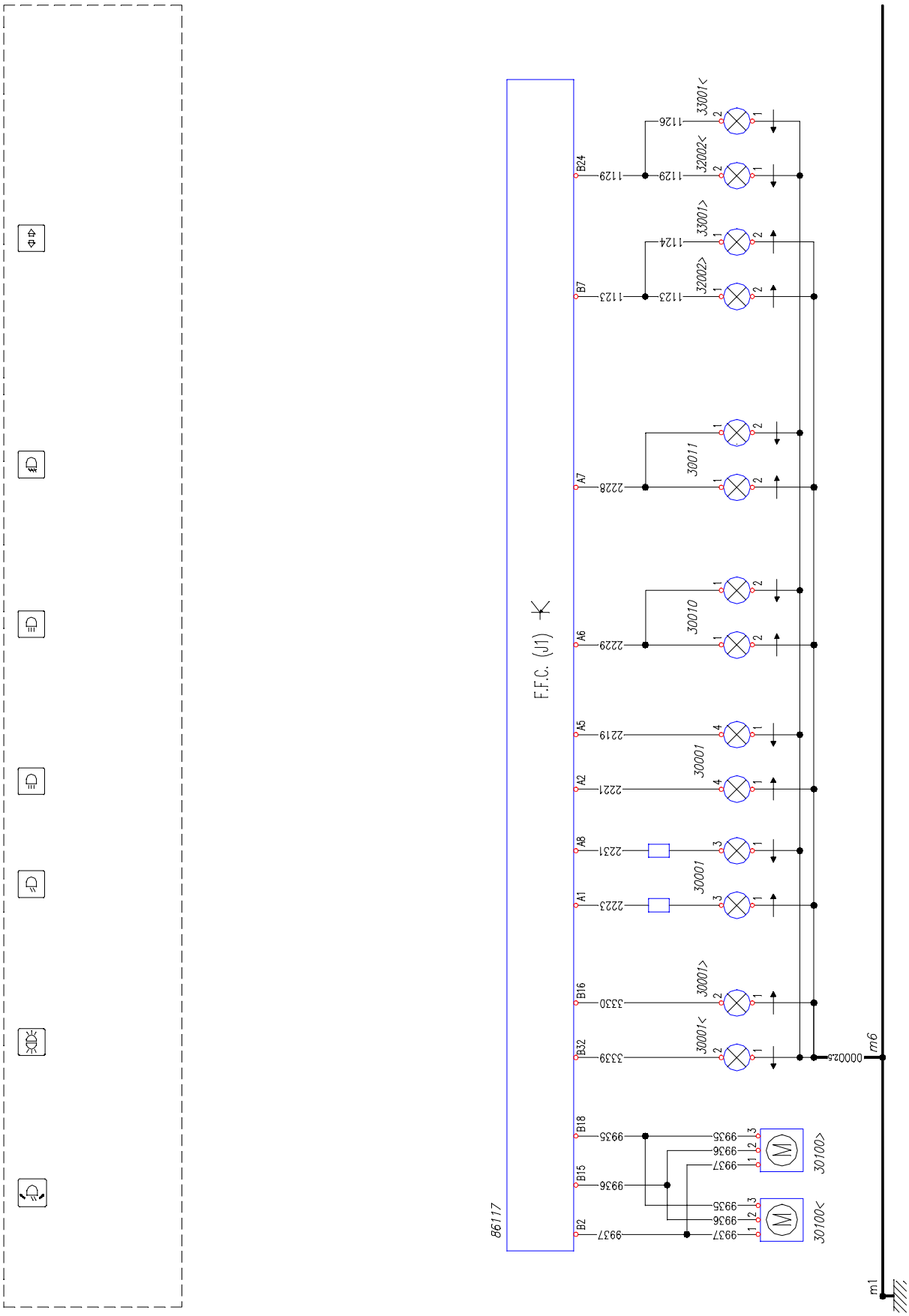

https://truckmanualshub.com/

Chart 37: Central unit FFC (J2)

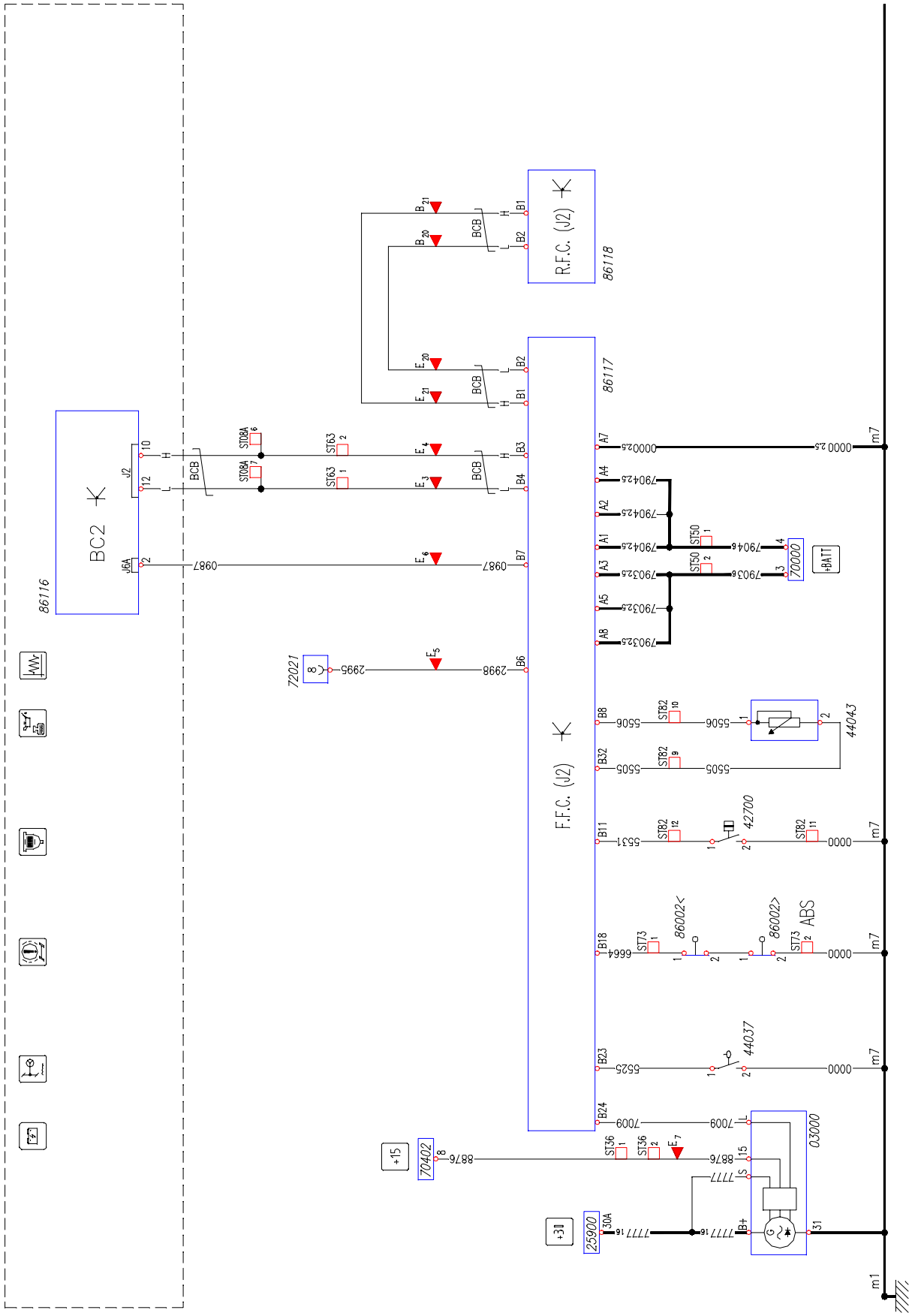

113480

https://truckmanualshub.com/

Chart 38: Central unit RFC (J1)

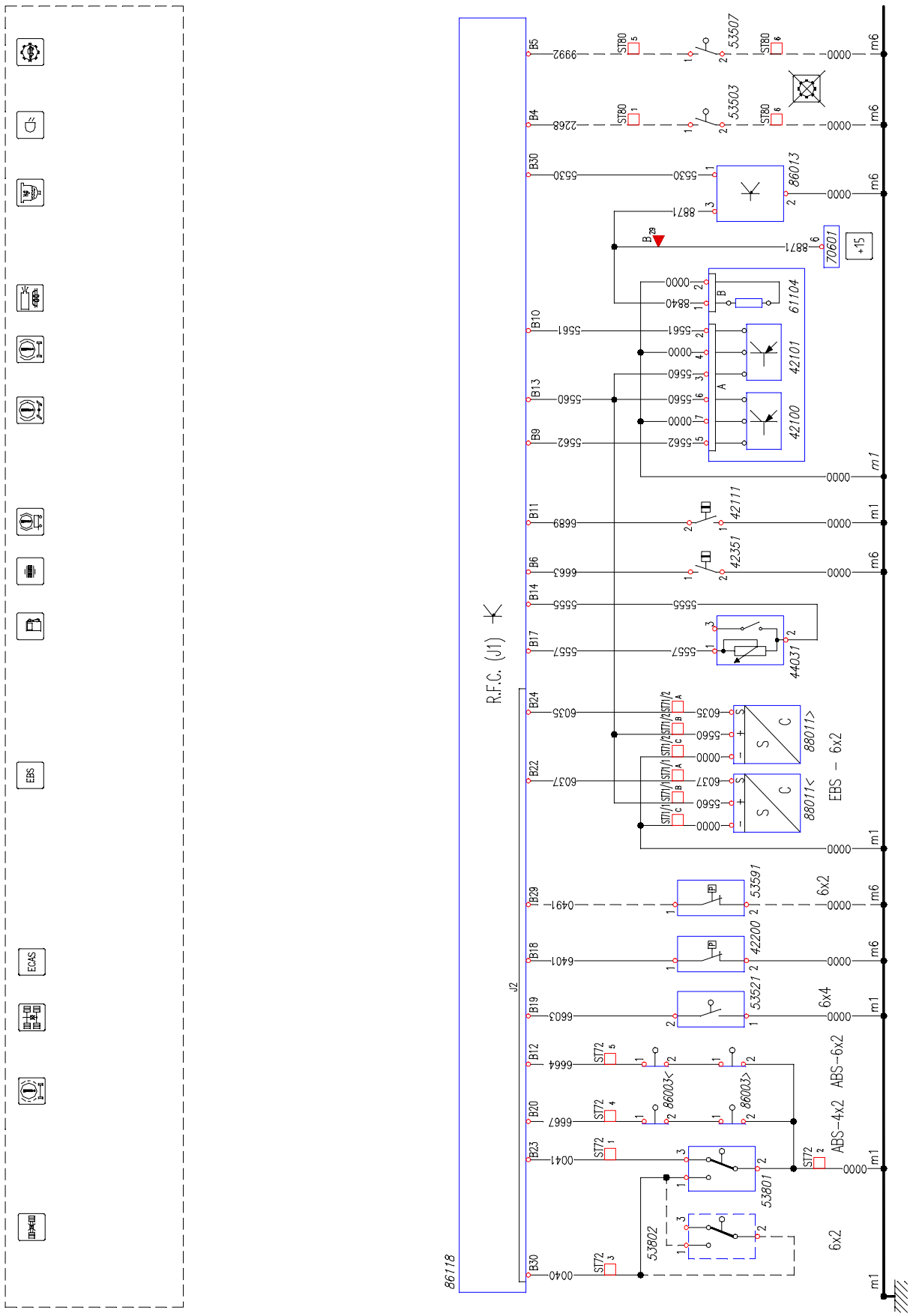

Chart 39: Central unit RFC (J2)

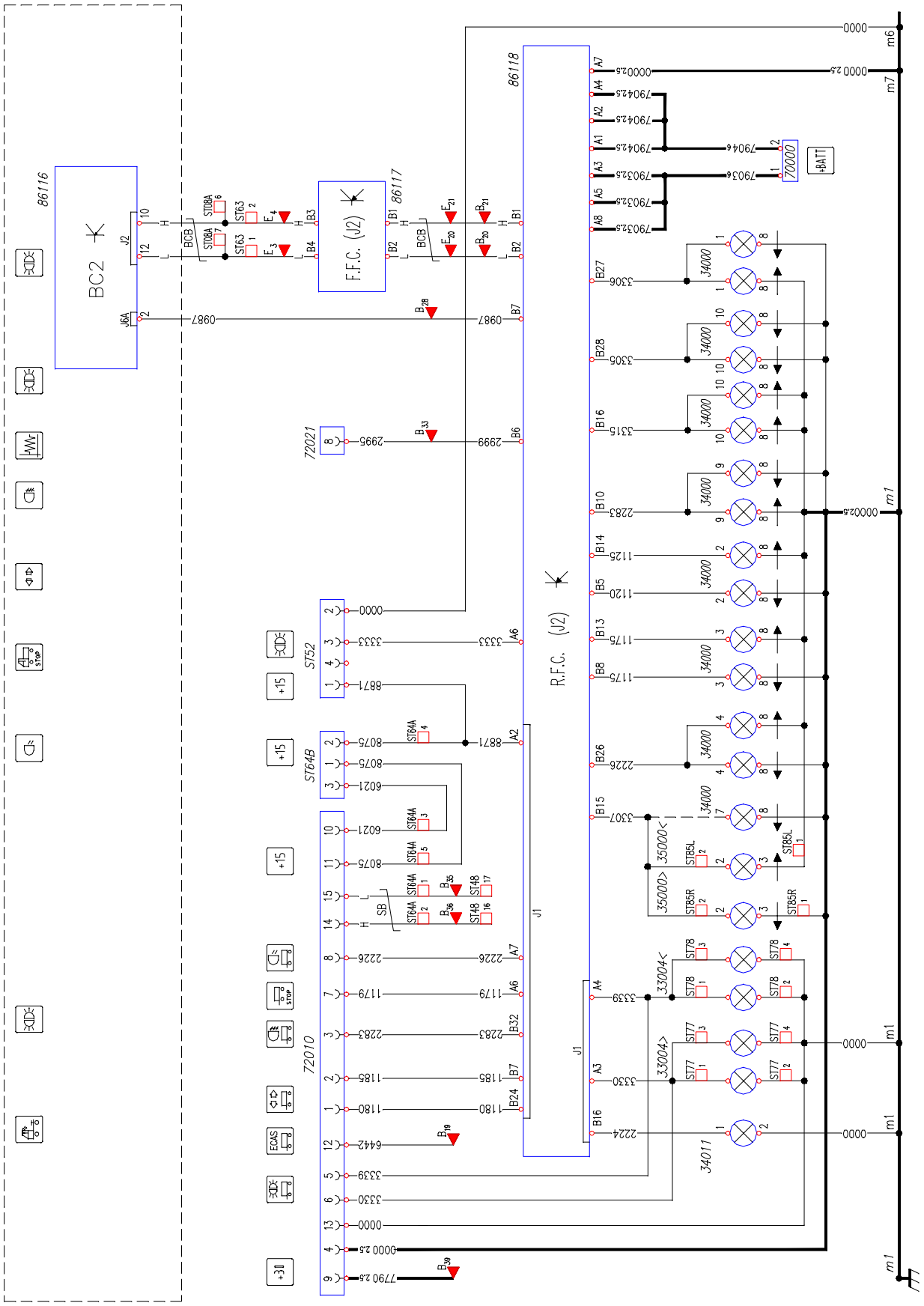

113482

https://truckmanualshub.com/

Chart 40: Line CAN-IDB / FMB / Telematics central unit / Navigator

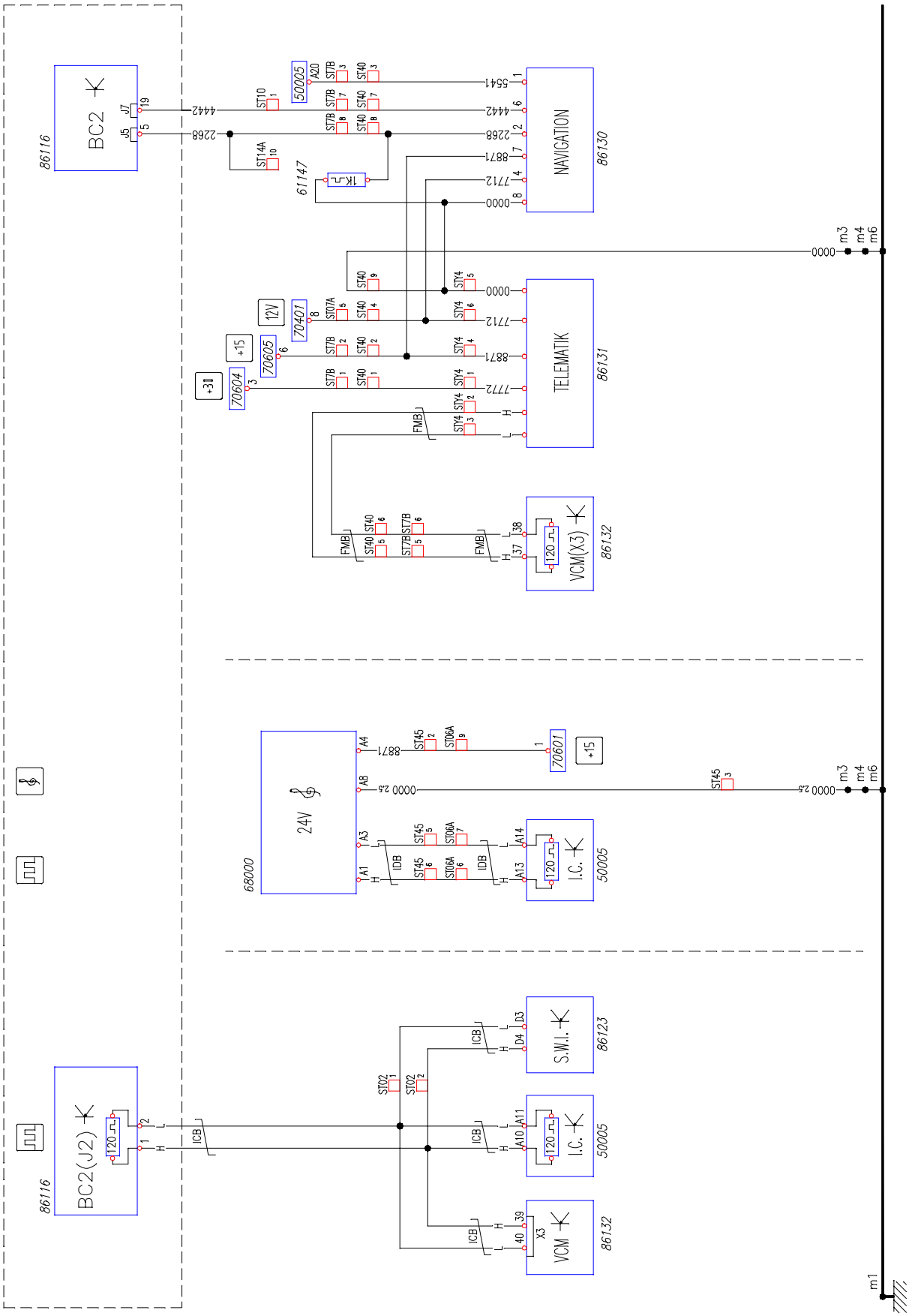

https://truckmanualshub.com/

Chart 41: CAN-SB (EBS2-ABS) line

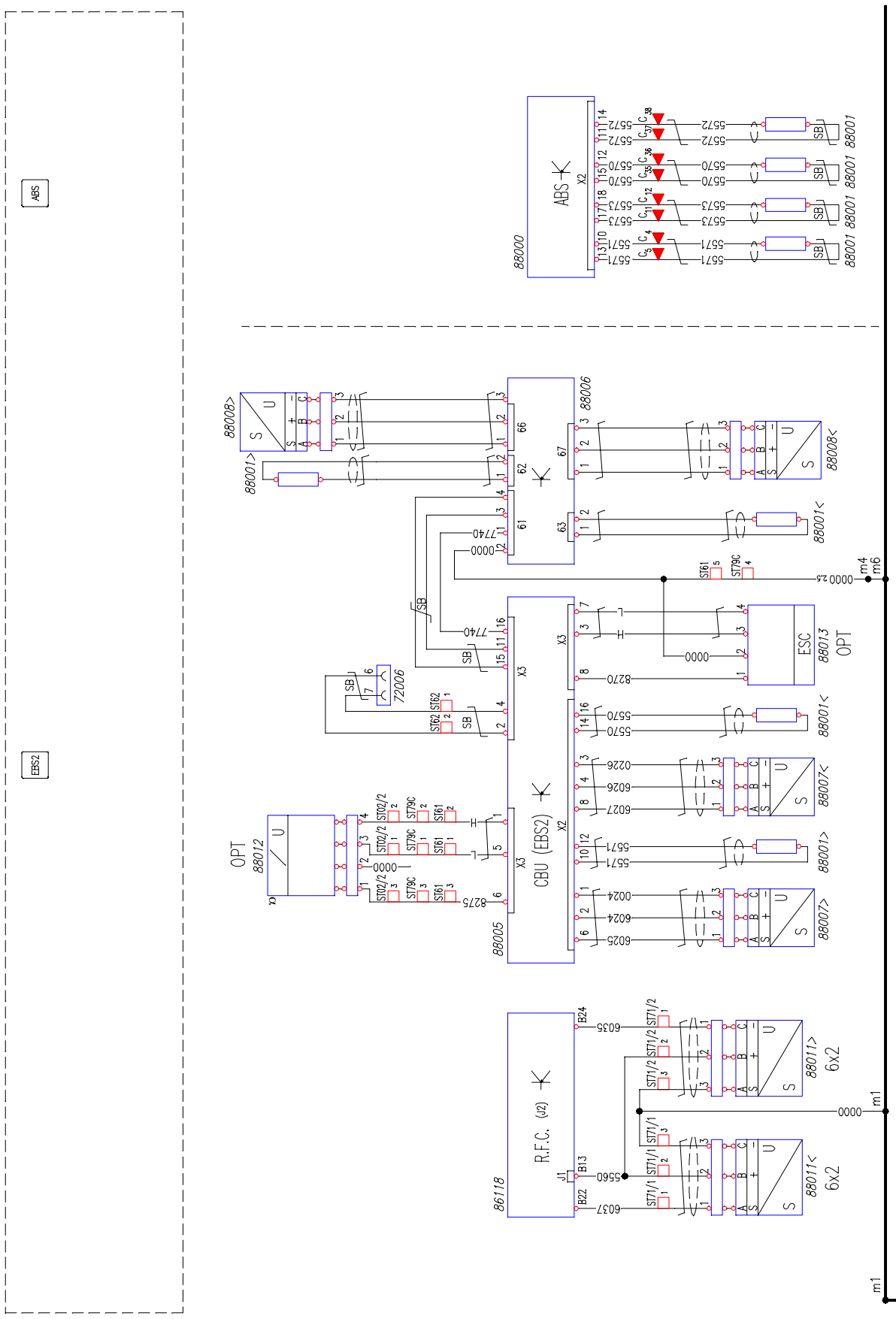

https://truckmanualshub.com/

Chart 42: CAN-BCB line

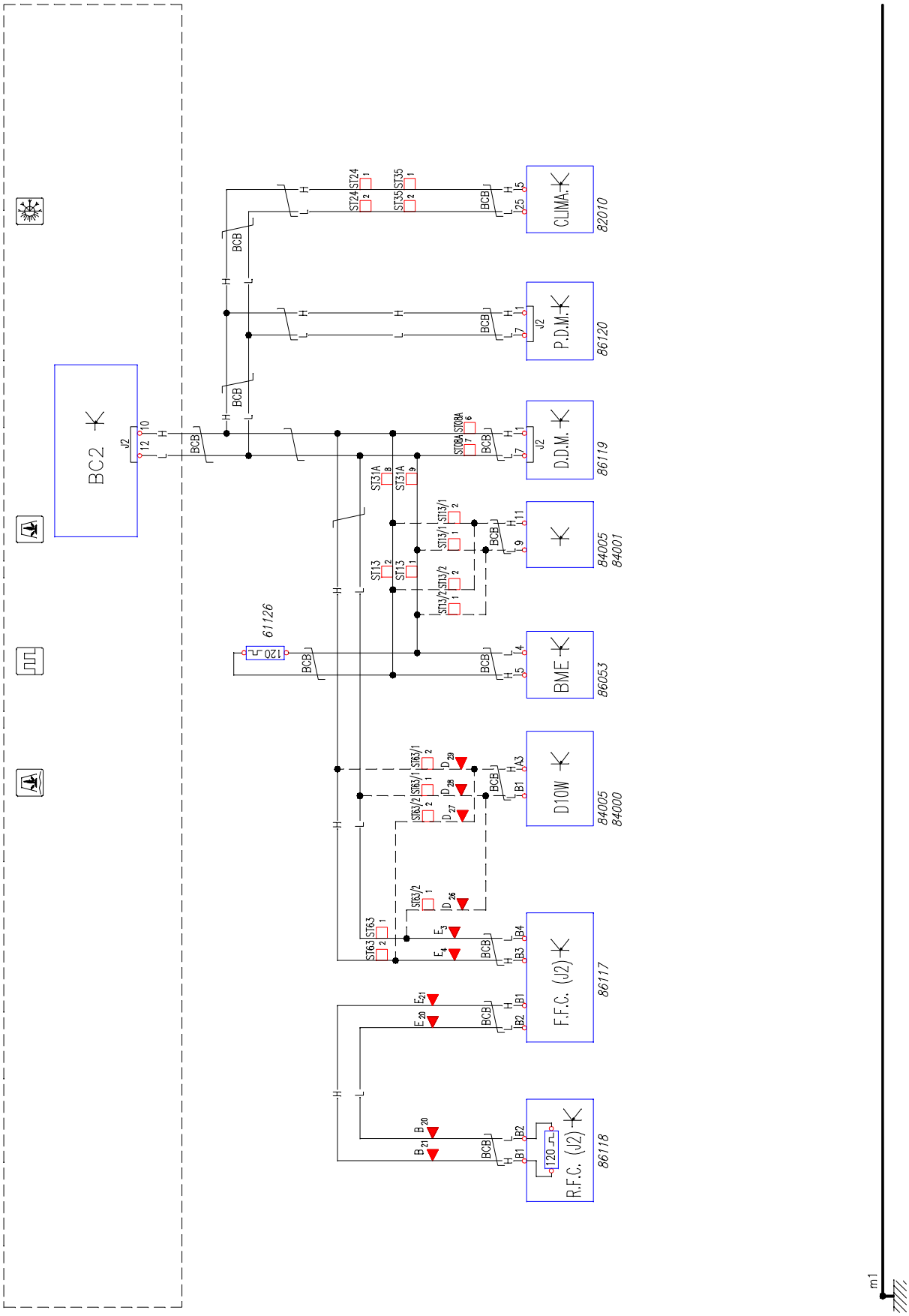

113485

Chart 43: CAN-VDB line

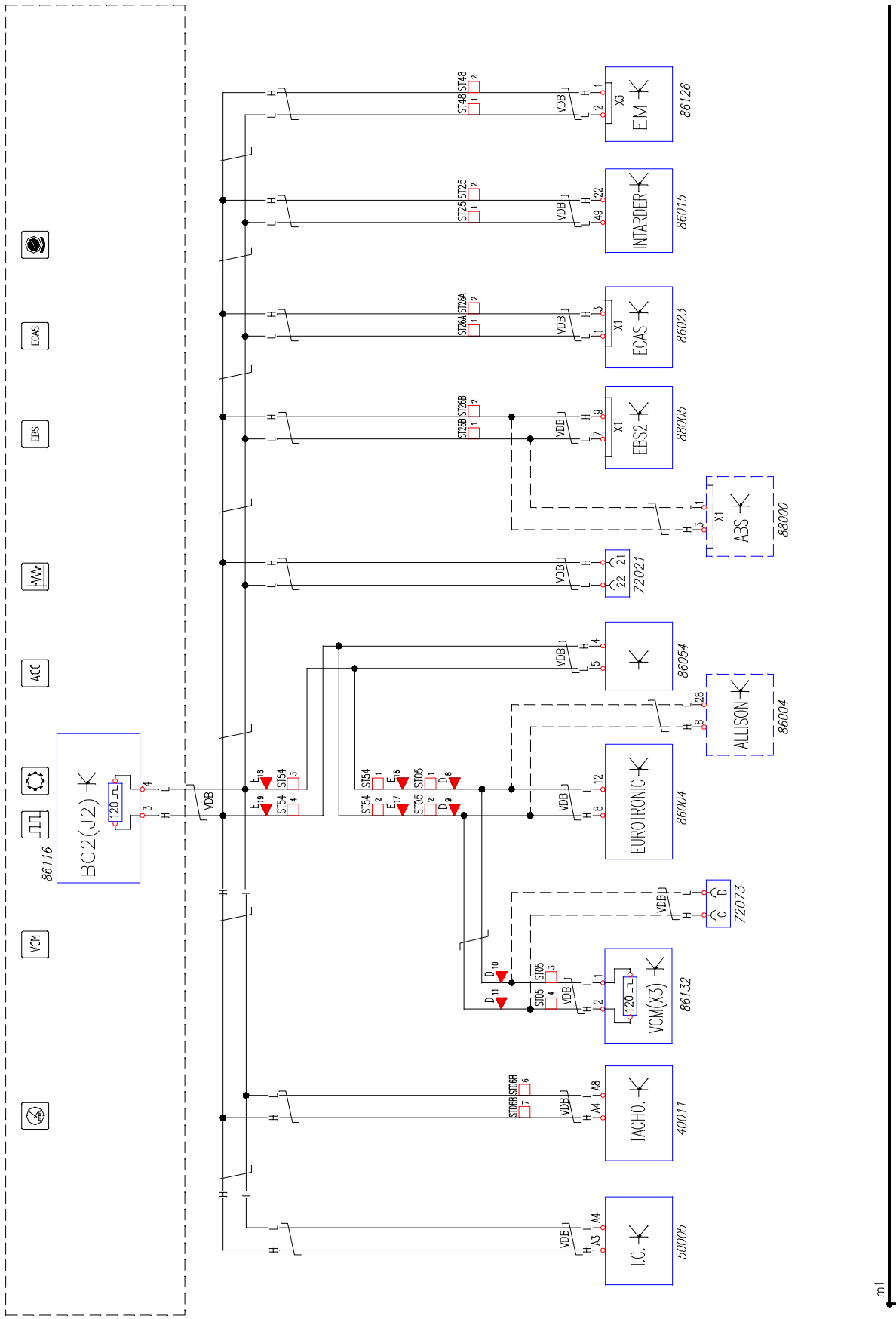

113486

https://truckmanualshub.com/

Chart 44: CAN-ECB line

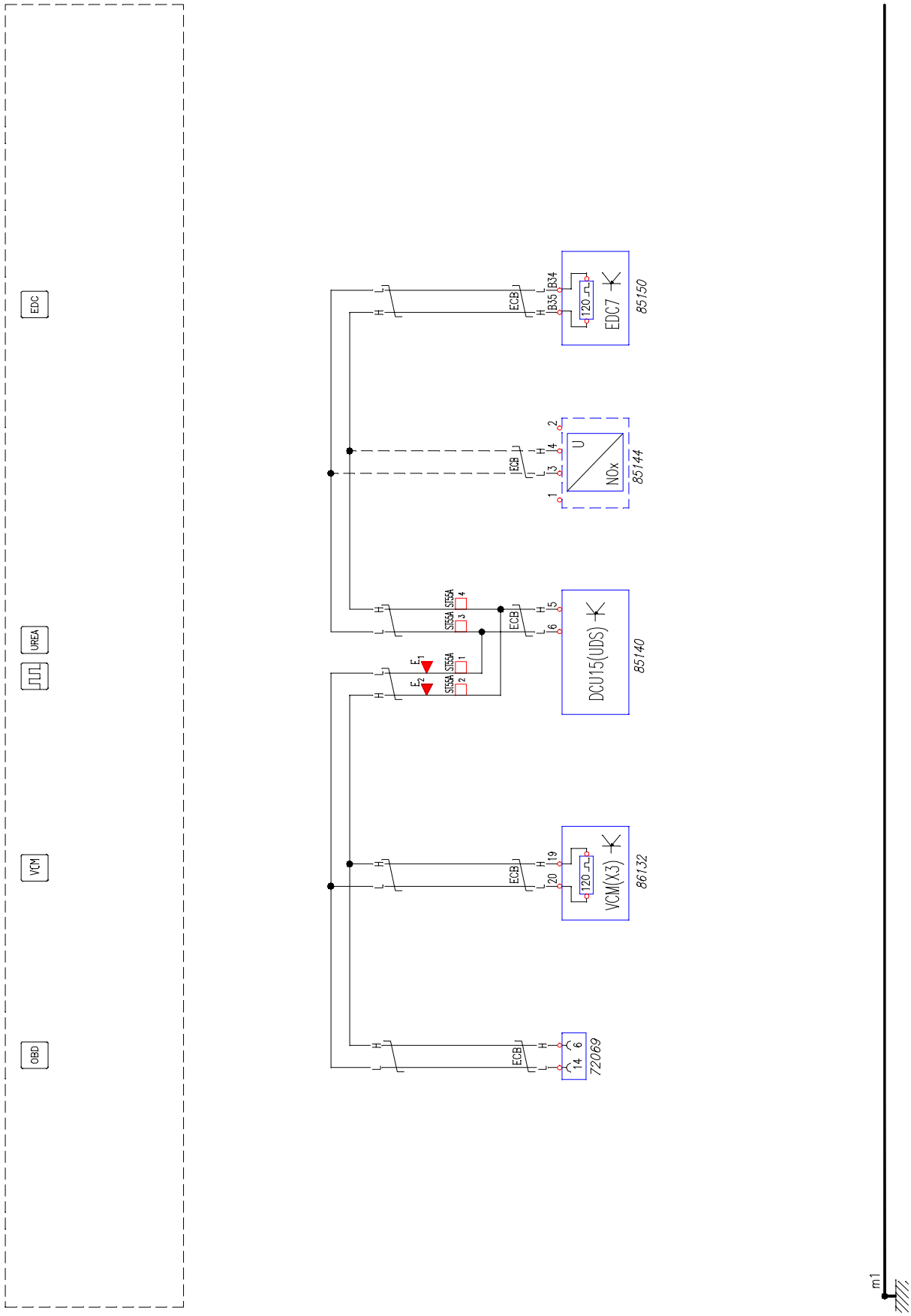

https://truckmanualshub.com/

Chart 45: ECAS 4x2 P (TRACTOR)

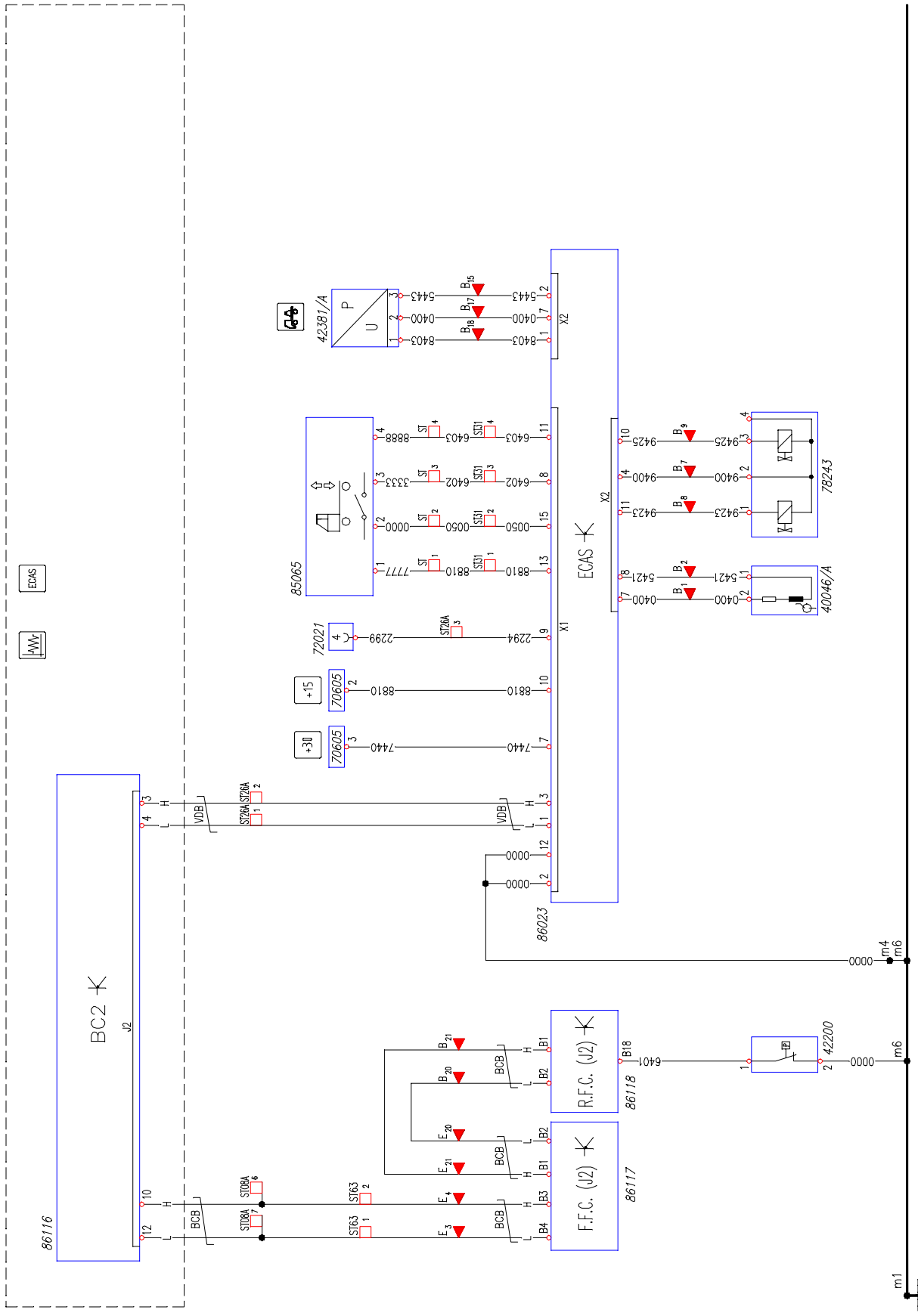

https://truckmanualshub.com/

Chart 46: ECAS 4x2 FP (TRACTOR)

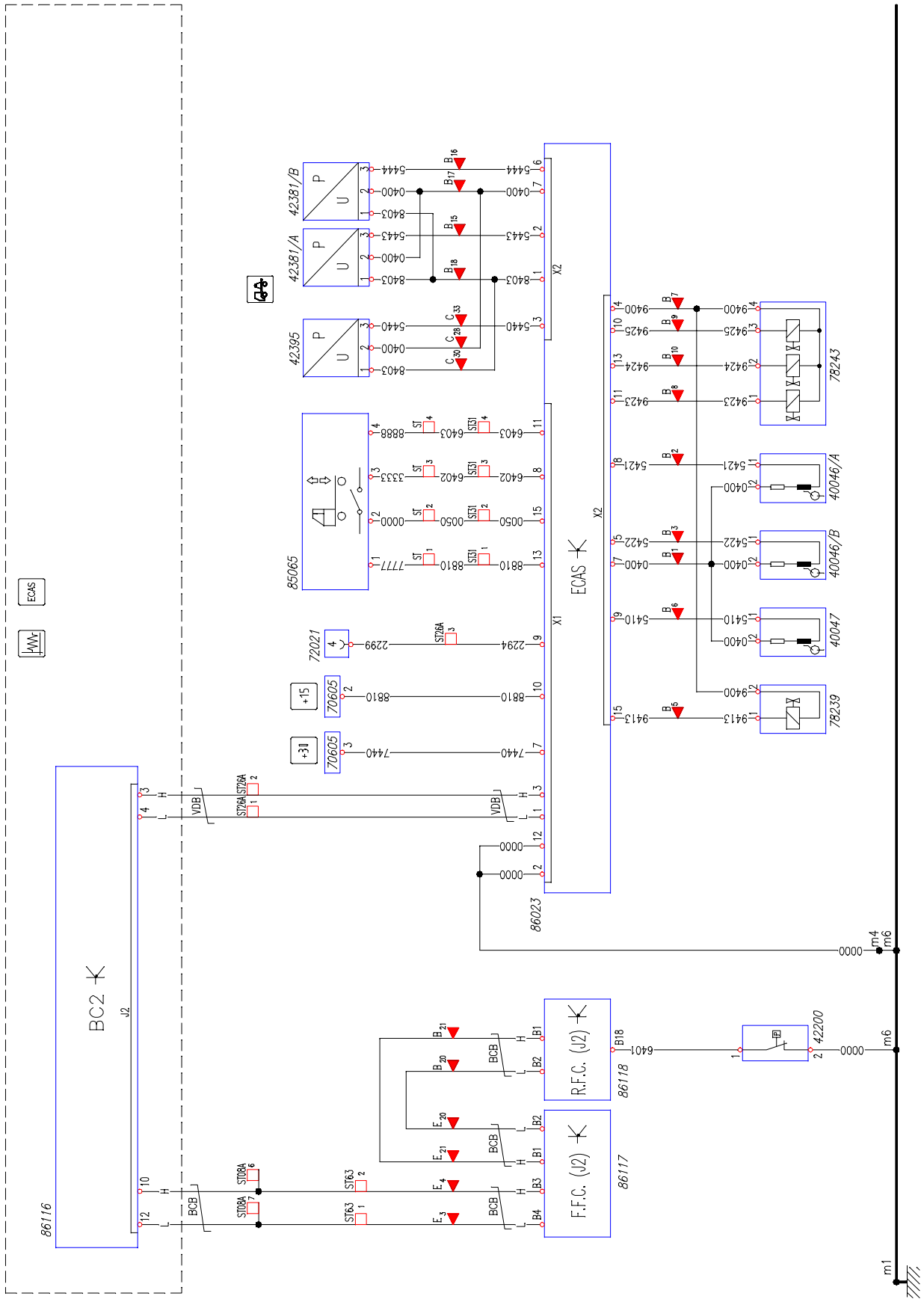

Chart 47: ECAS 4X2 P/FP (LORRY)

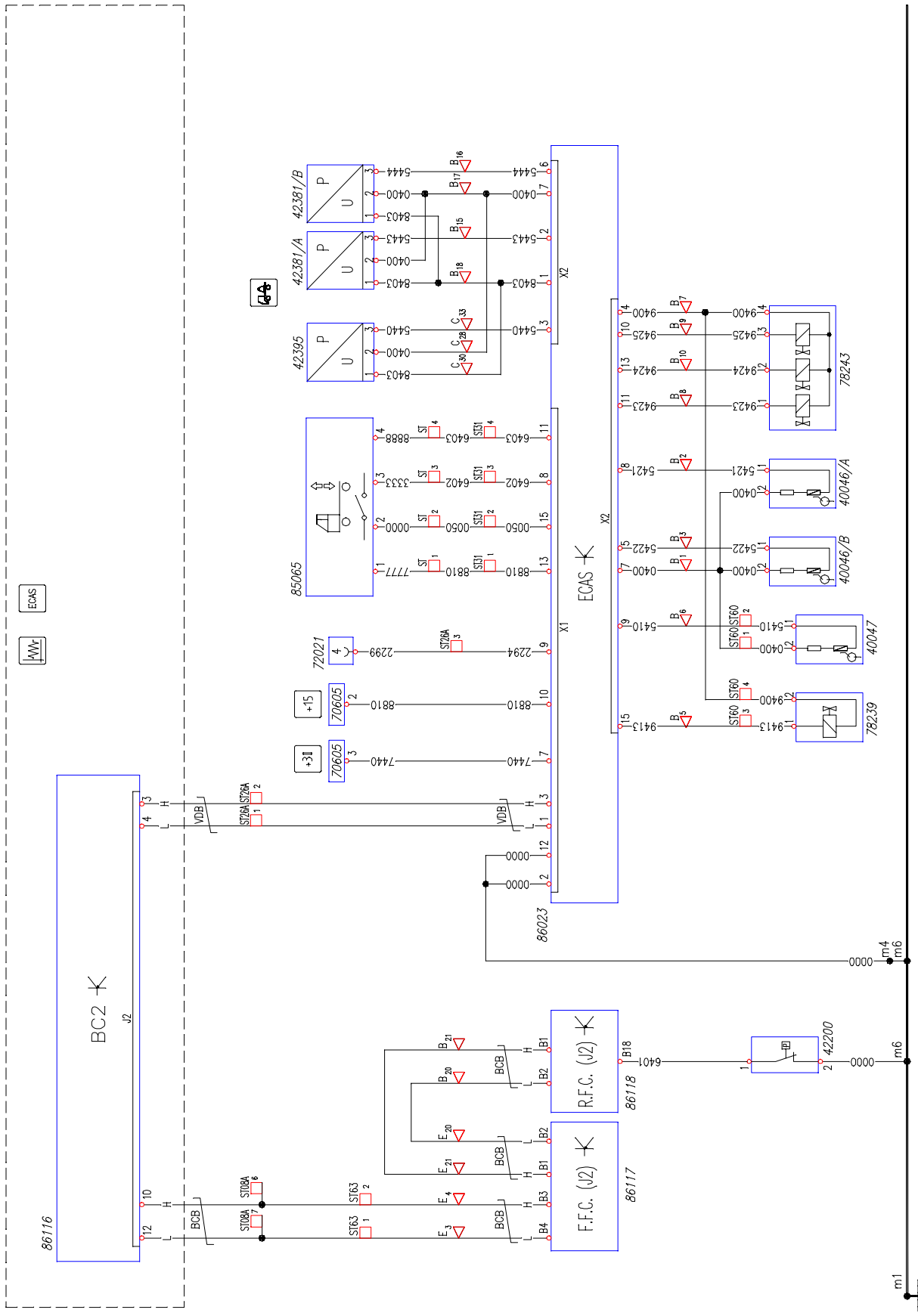

https://truckmanualshub.com/

Chart 48: ECAS 6X4 P

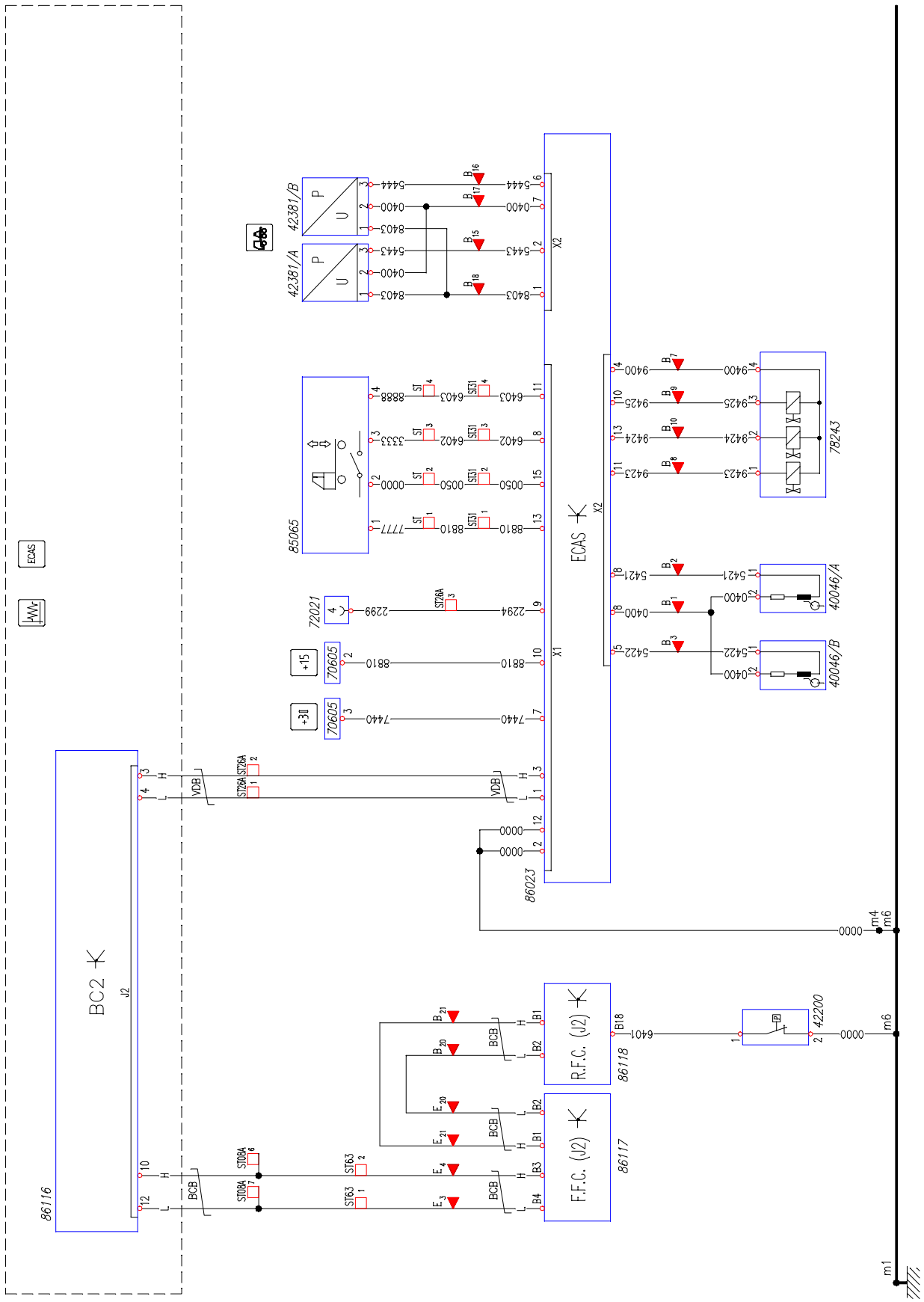

113491

Chart 49: ECAS 6X2 P/FP/C (3rd axle liftable)

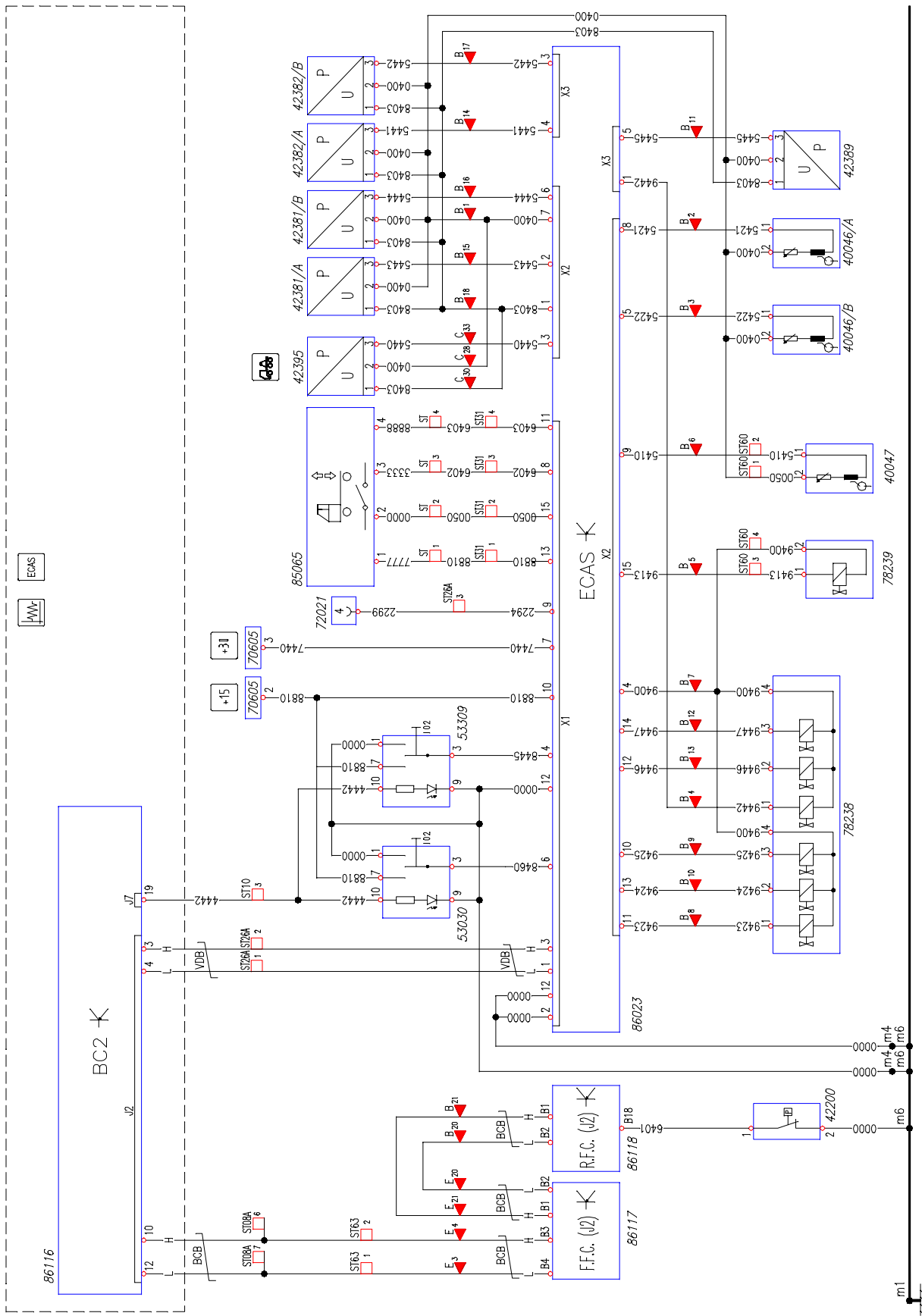

https://truckmanualshub.com/

Chart 50: ECAS 6X2 P/FP (3rd axle not liftable)

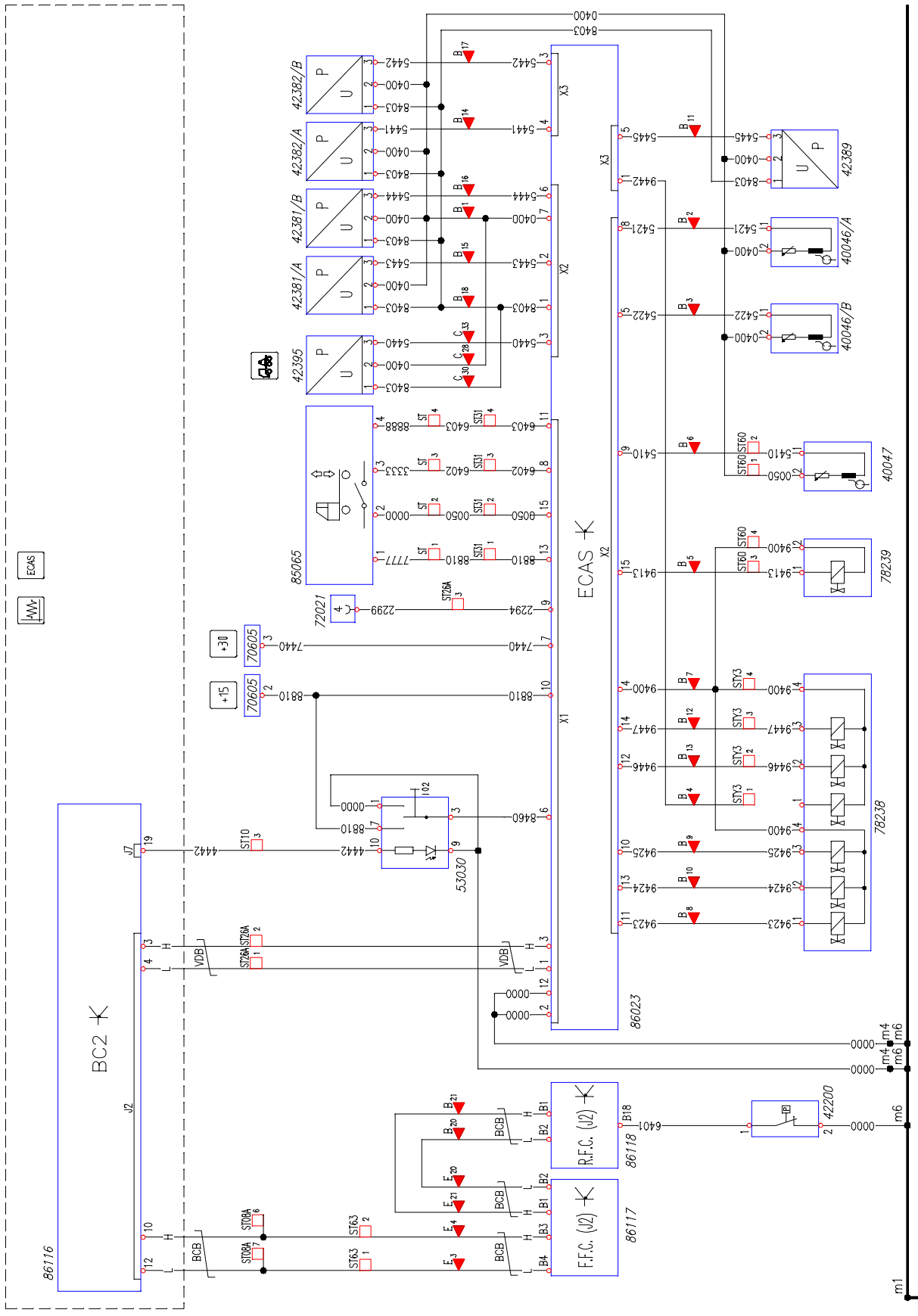

113493

https://truckmanualshub.com/

Chart 51: ECAS 6X2 C (3rd axle not liftable)

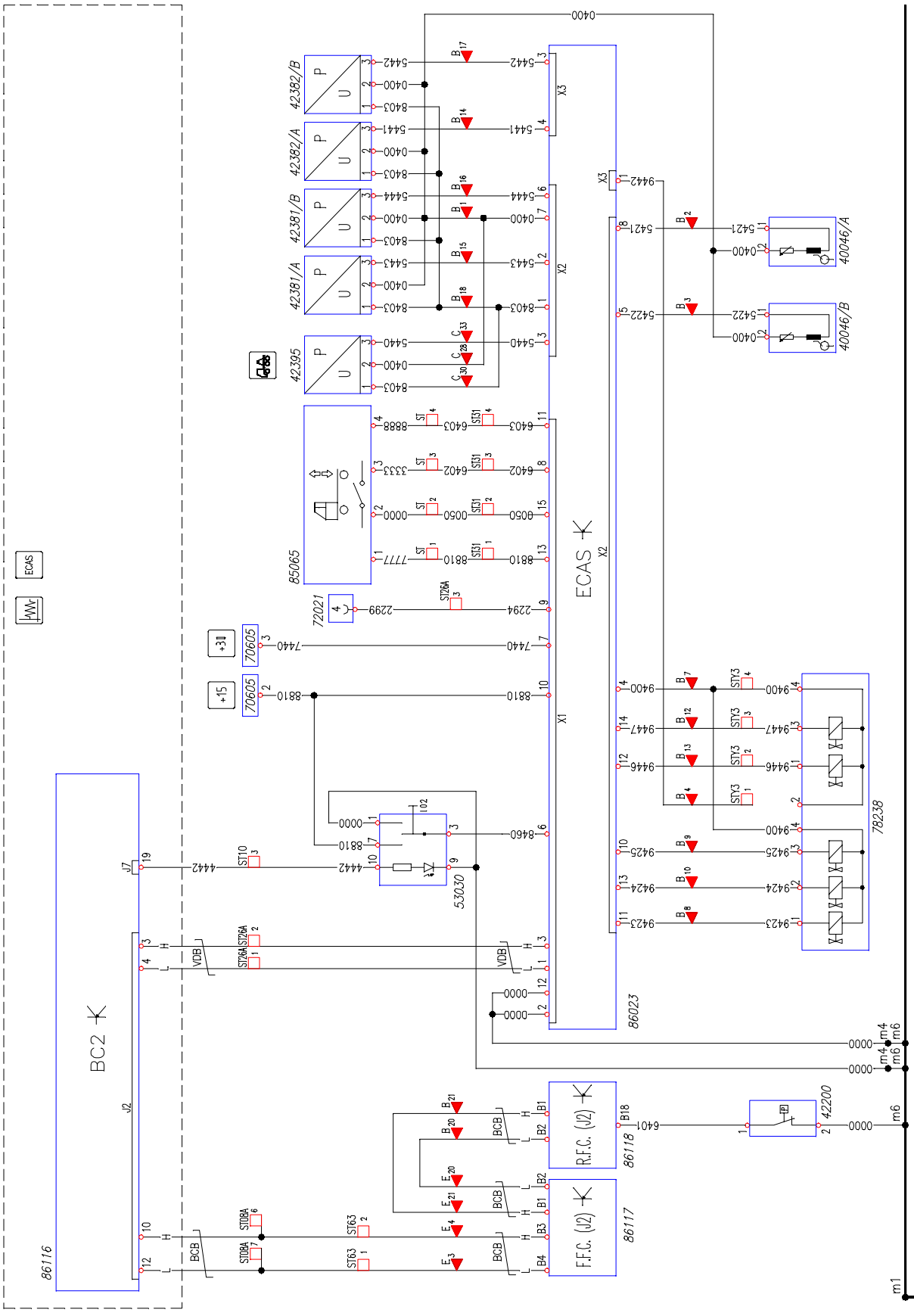

https://truckmanualshub.com/

Chart 52: ABS

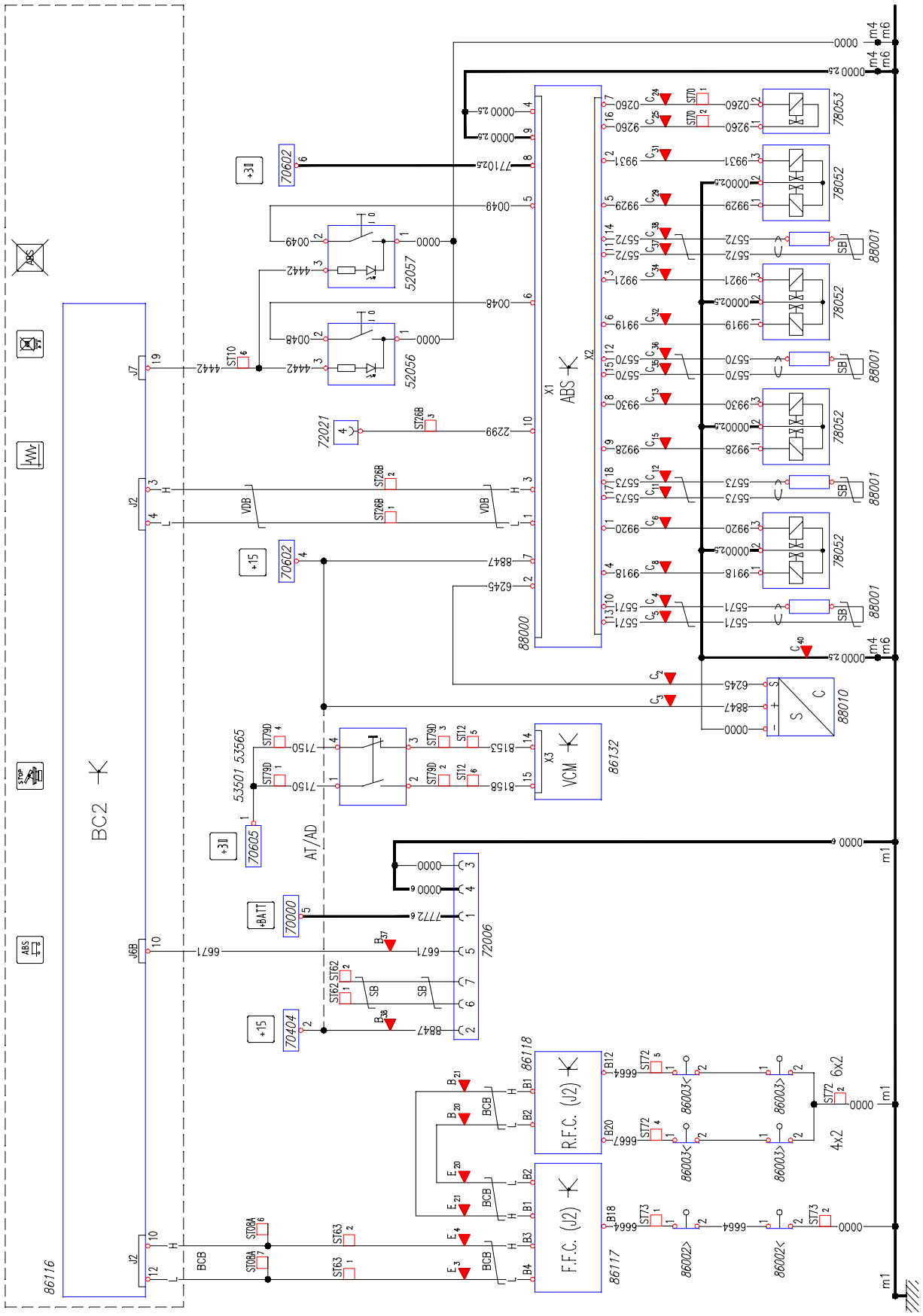

Chart 53: EBS2

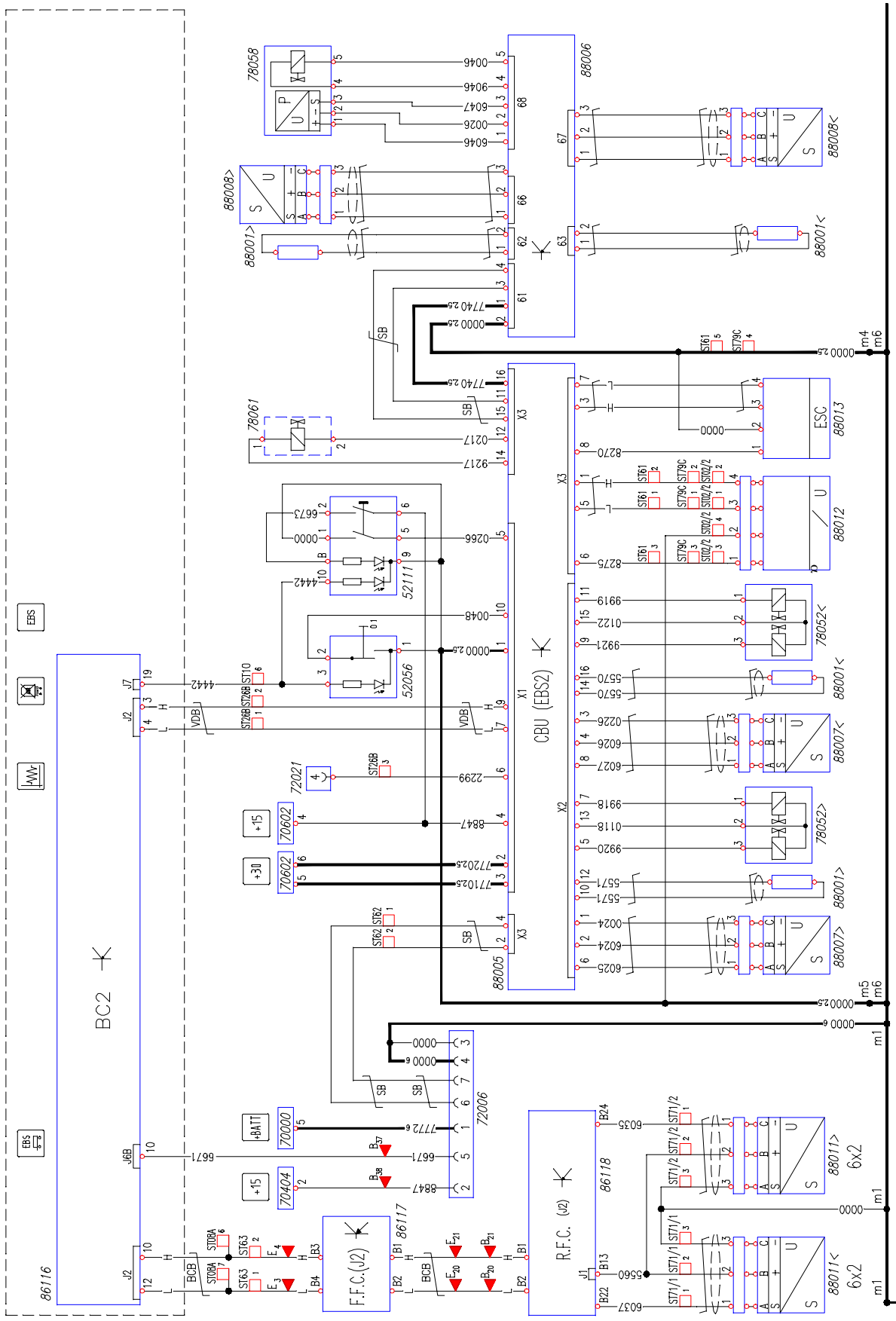

https://truckmanualshub.com/

Chart 54: Engine cooling/ventilation (AS)

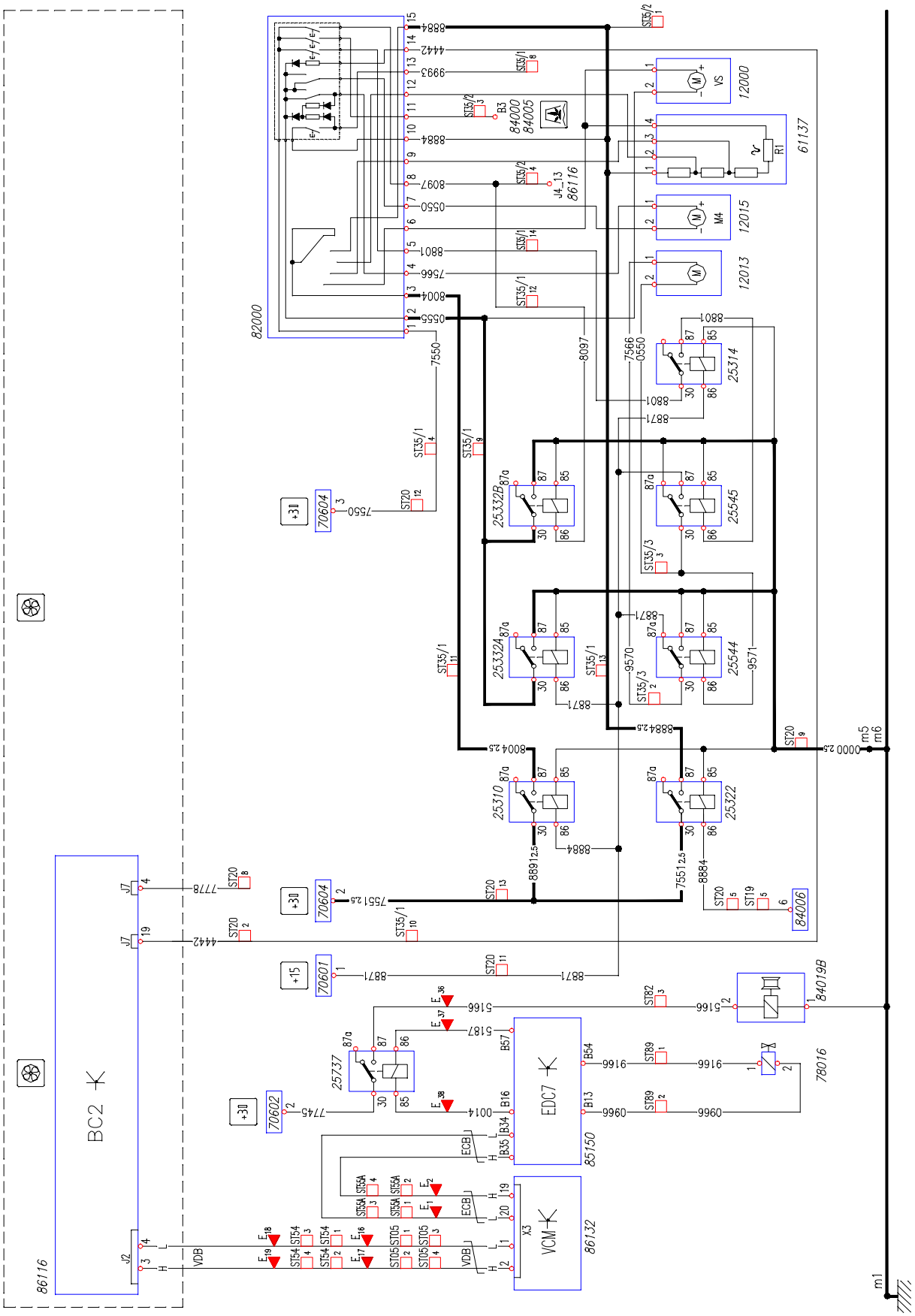

Chart 55: Ventilation (AT/AD)

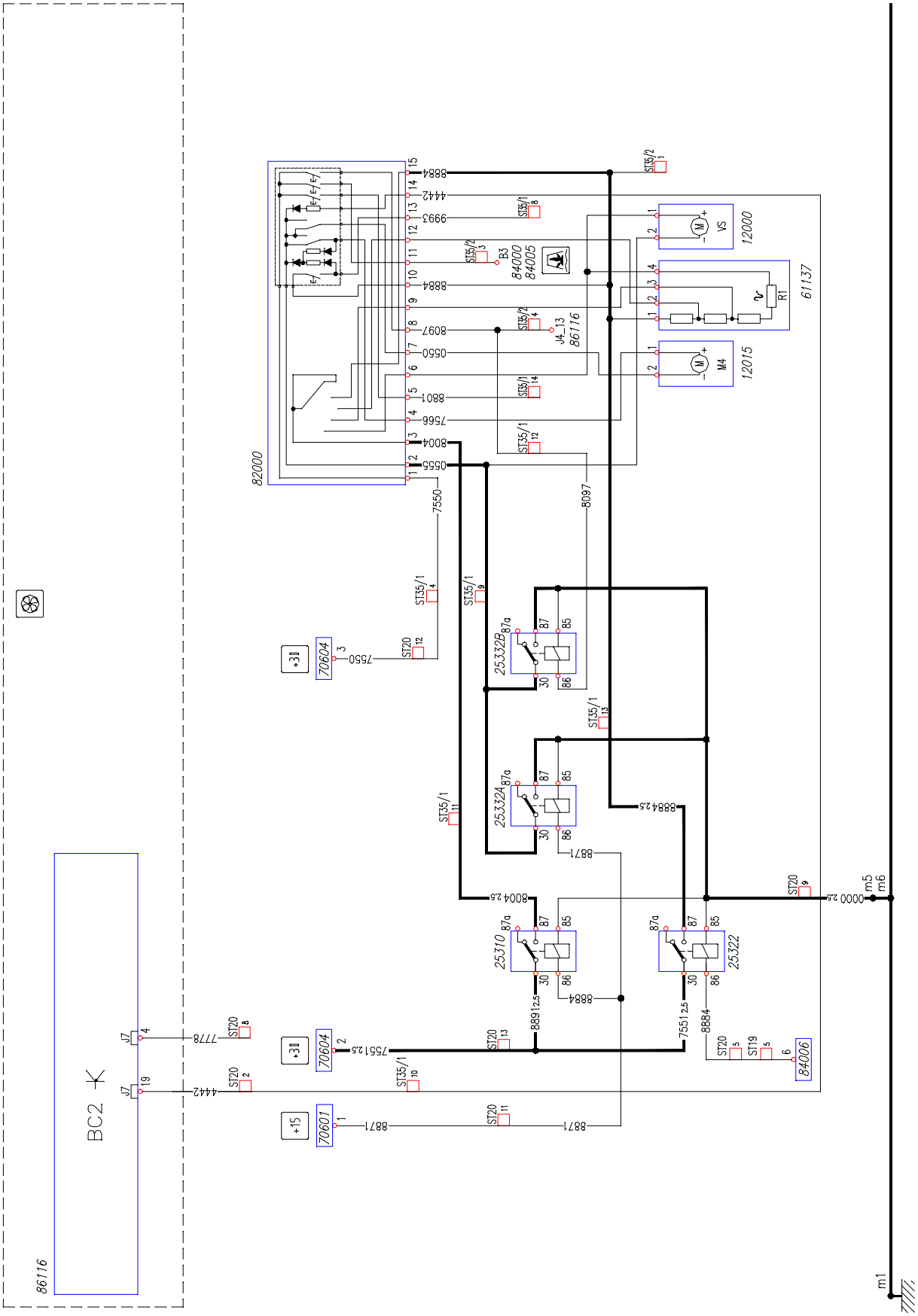

https://truckmanualshub.com/

Chart 56: Engine cooling (AT/AD)

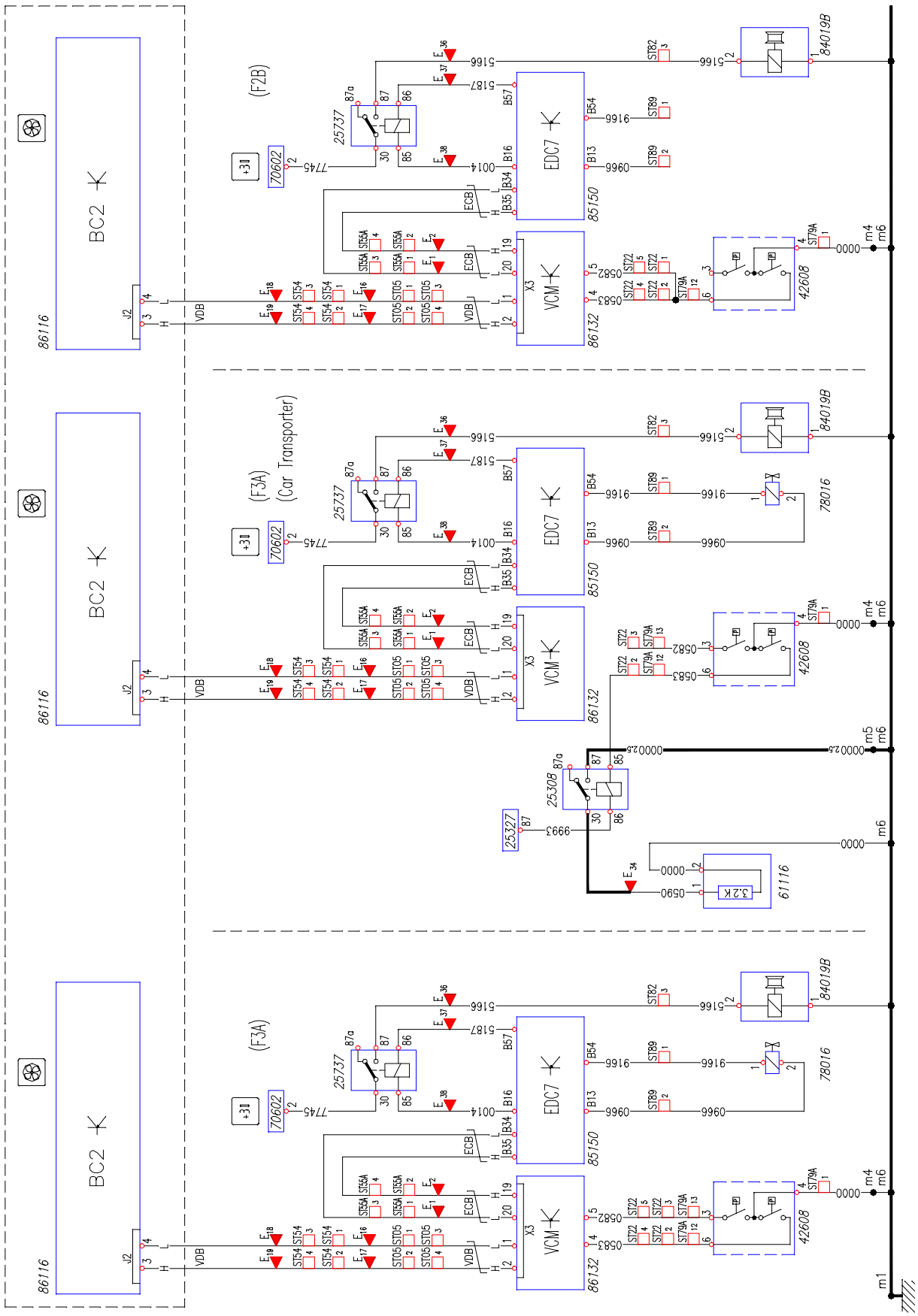

113499

Chart 57: Manually controlled climate control system (AS)

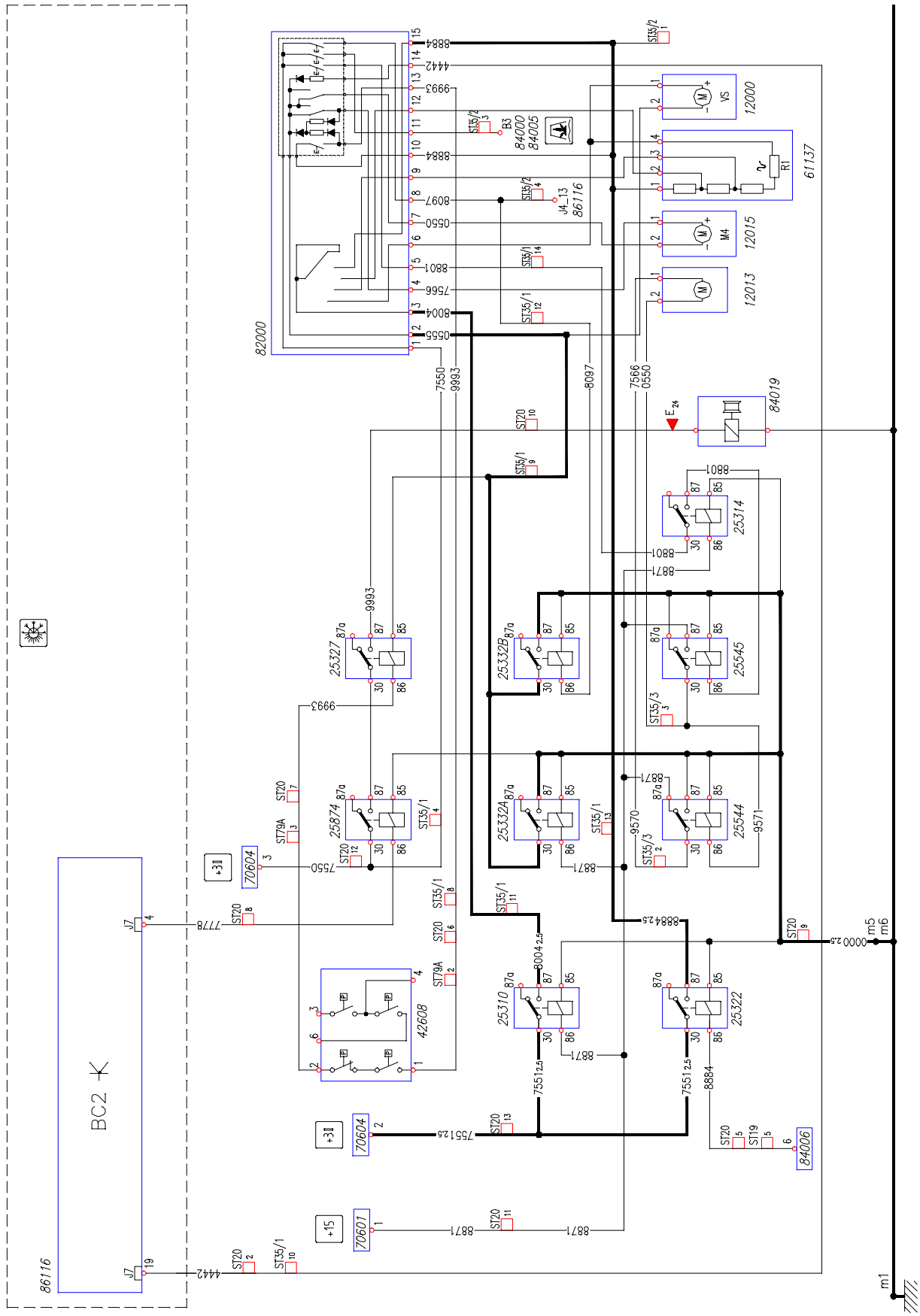

https://truckmanualshub.com/

Chart 58: Manually controlled climate control system (AT/AD)

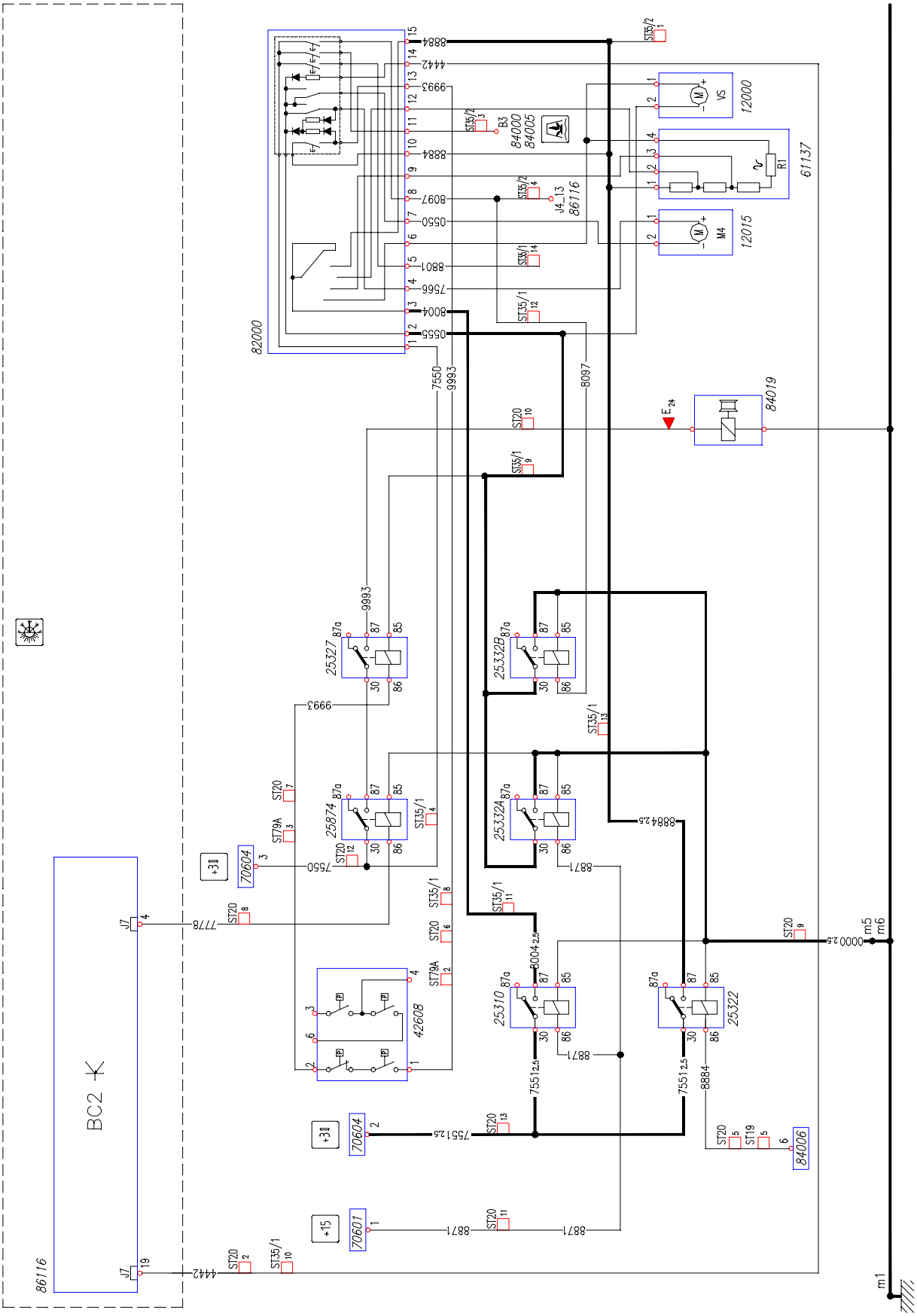

Chart 59: Manually controlled climate control system (AT/AD CAR TRANSPORTER)

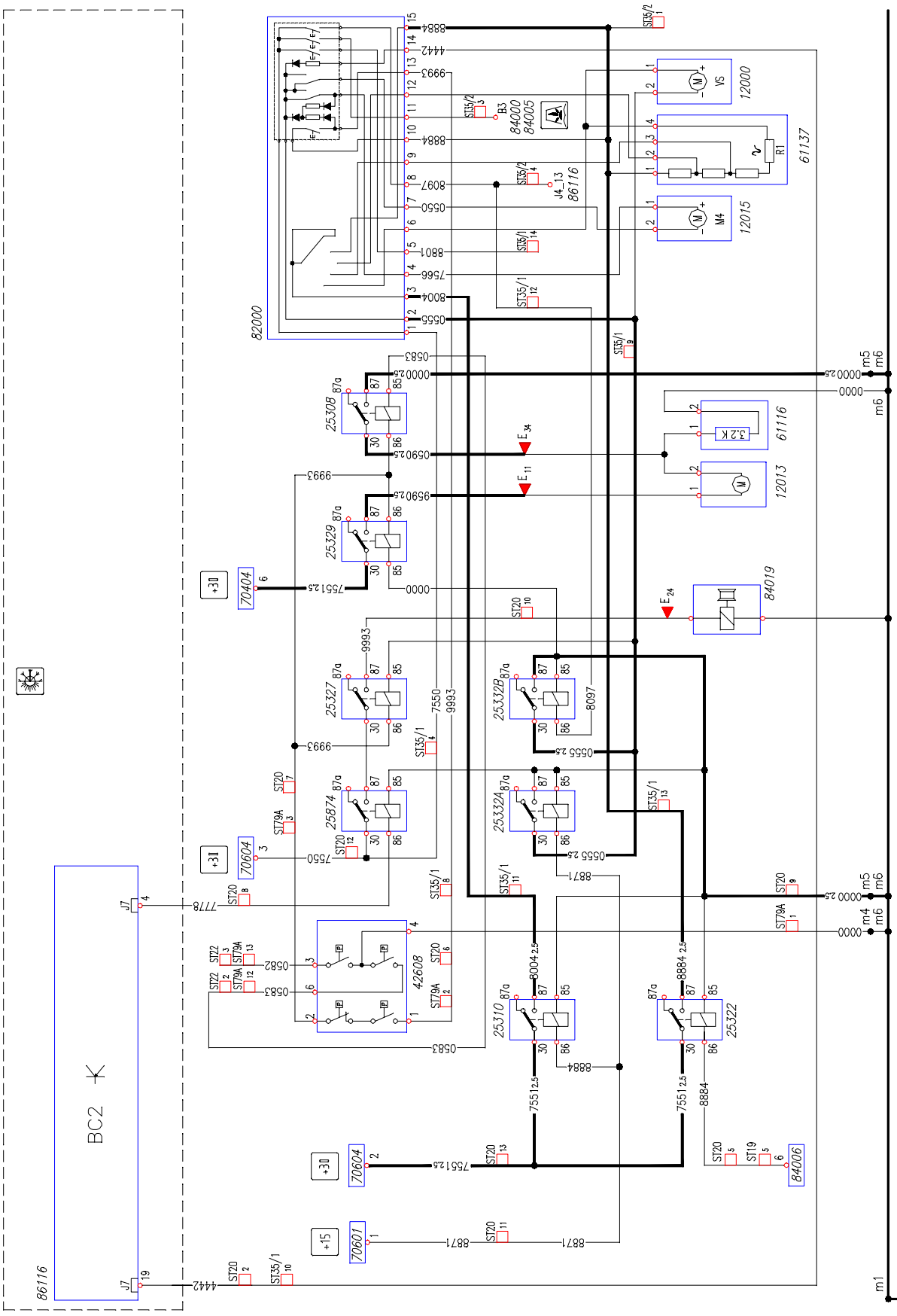

113502

https://truckmanualshub.com/

Chart 60: Automatically controlled climate control system (AS)

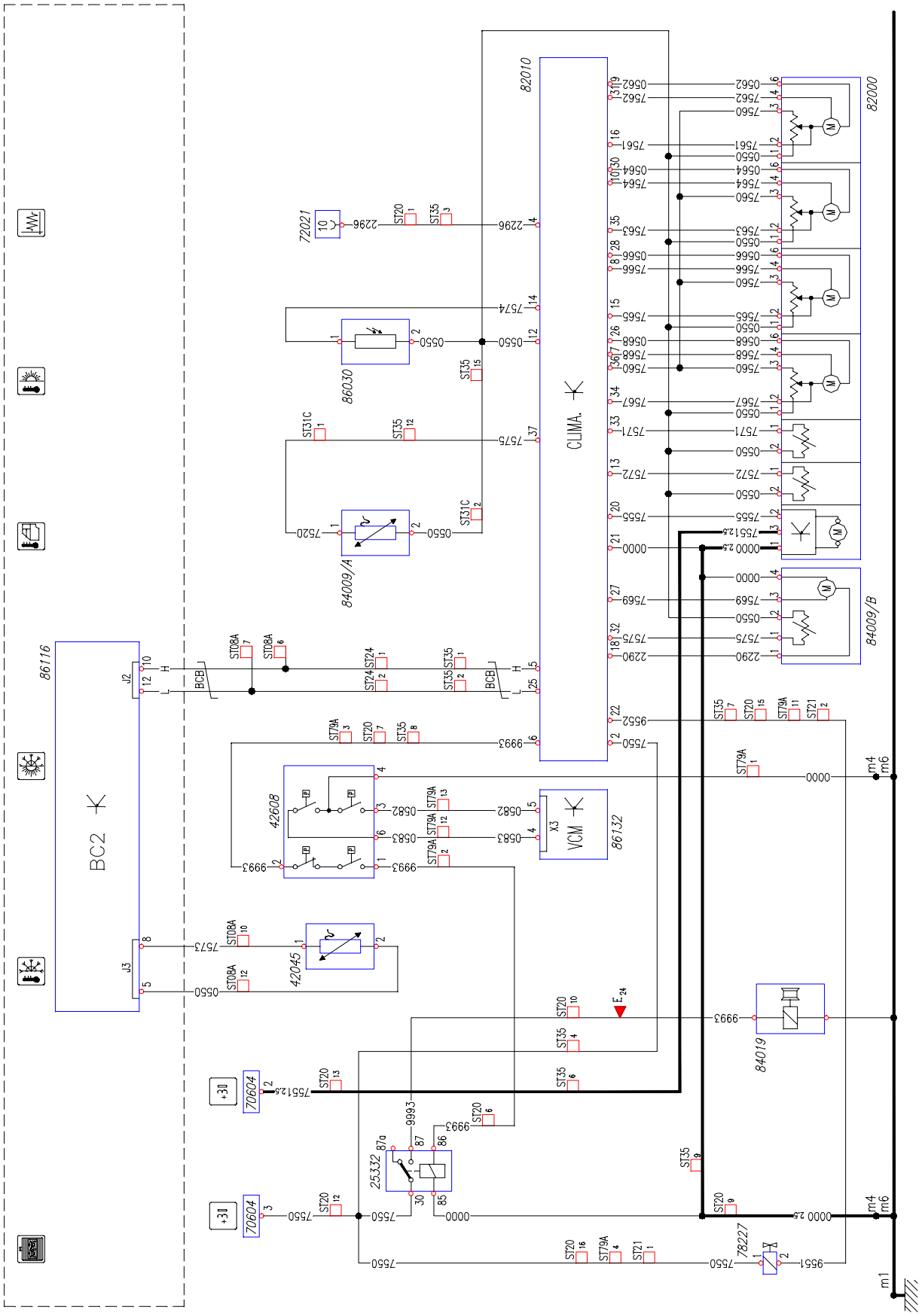

https://truckmanualshub.com/

Chart 61: Manual drive additional water heater

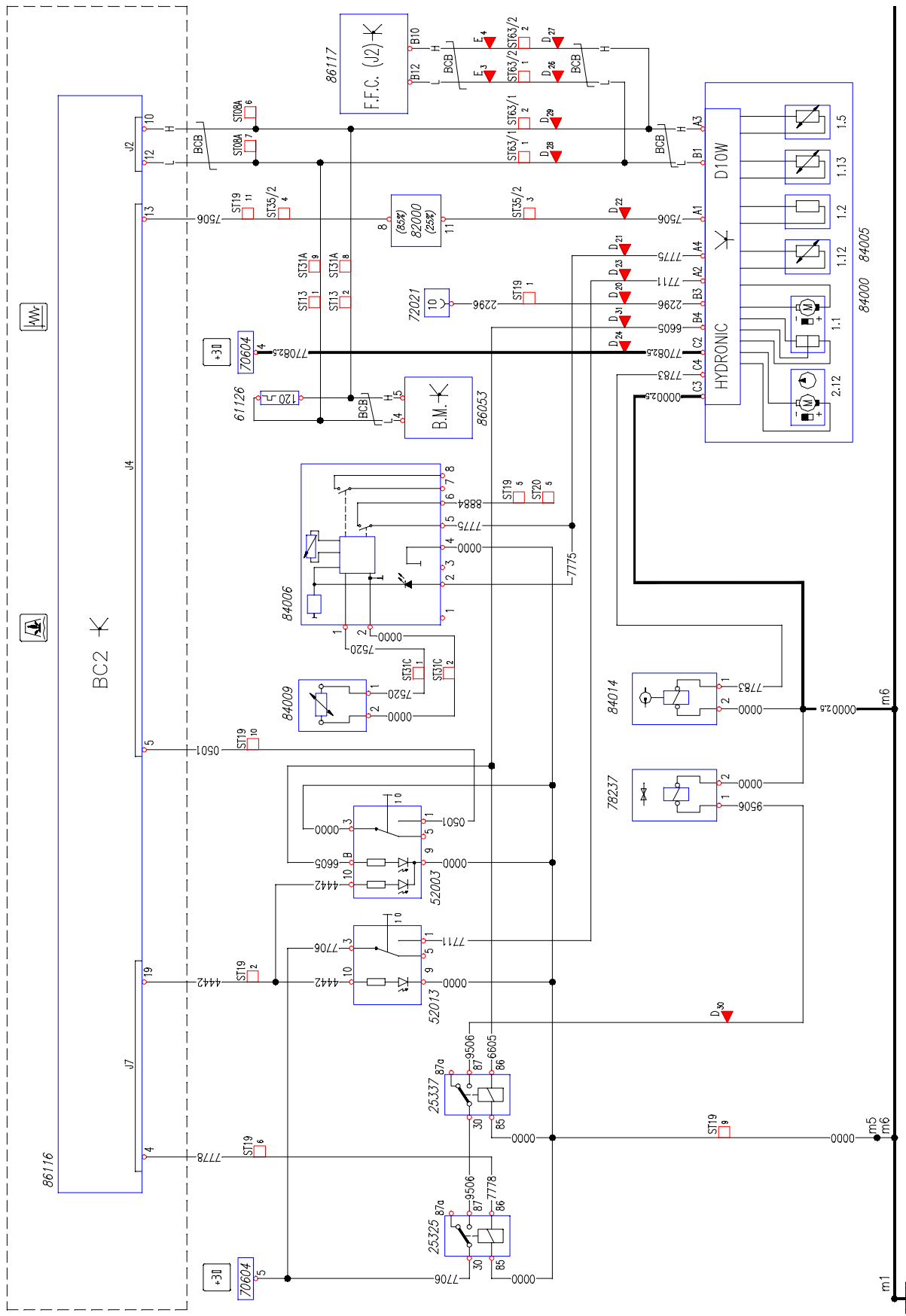

https://truckmanualshub.com/

Chart 62: Automatically controlled supplementary water heater

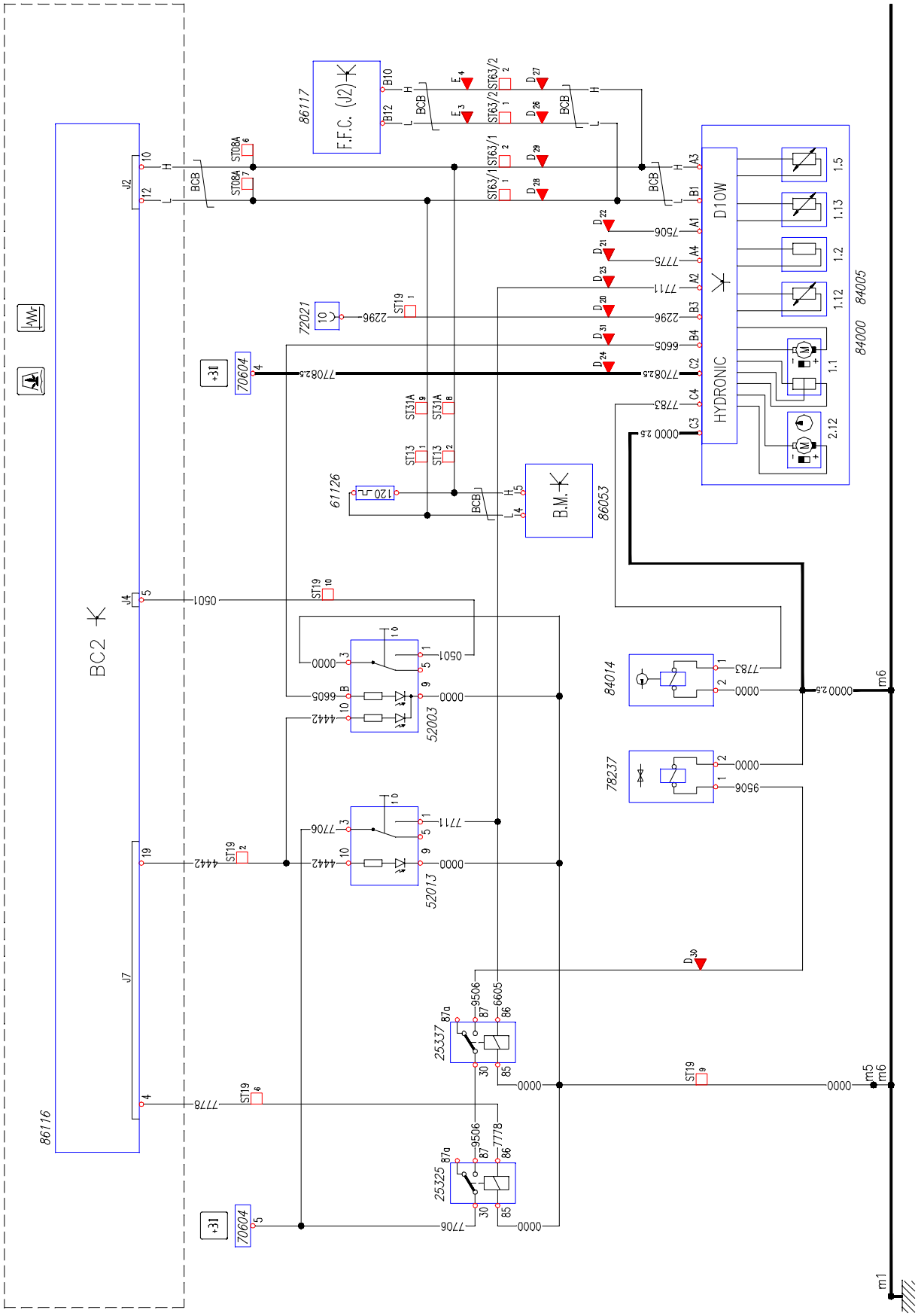

https://truckmanualshub.com/

Chart 63: Manual/automatic supplementary water heater

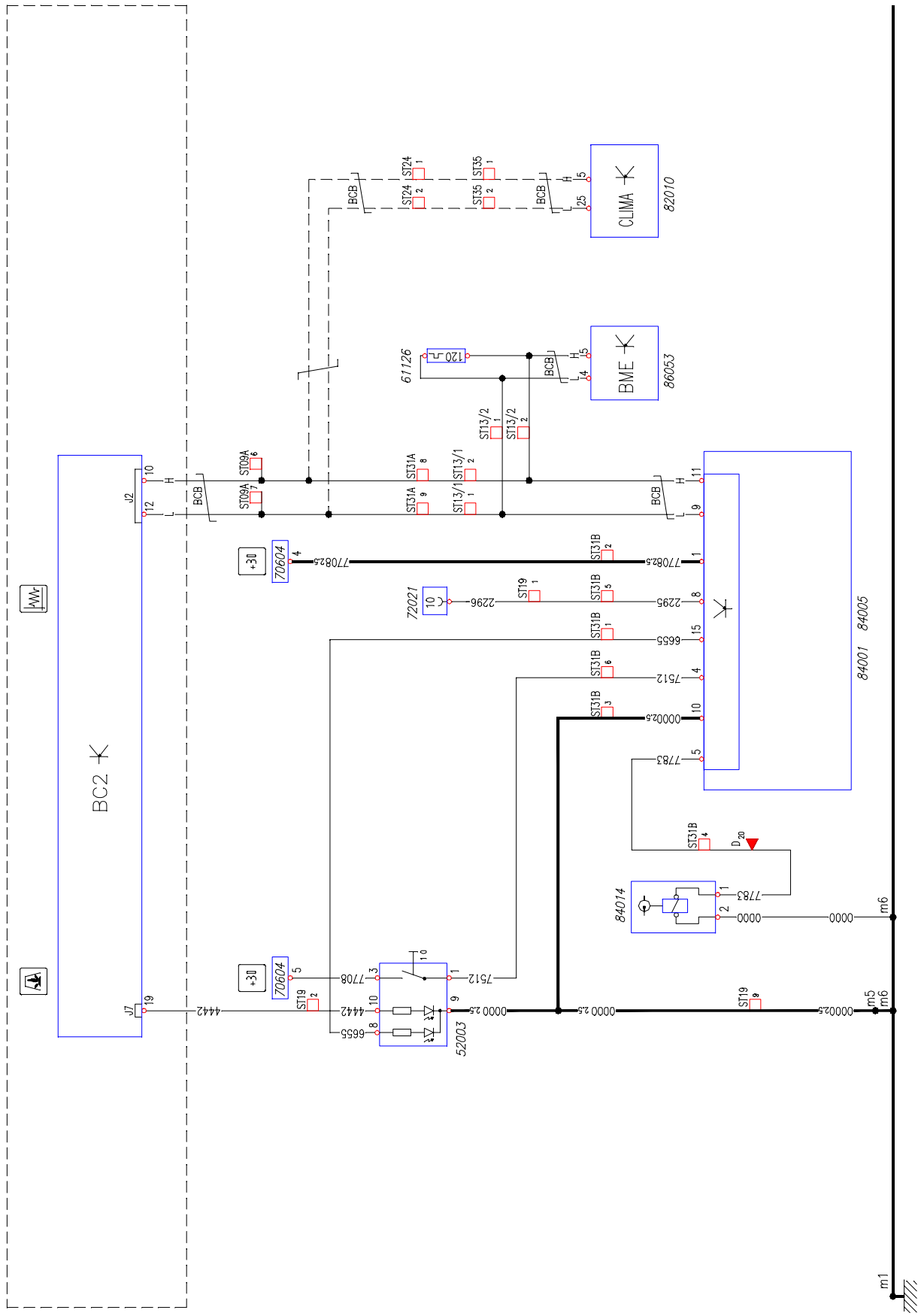

https://truckmanualshub.com/

Chart 64: EuroTronic II

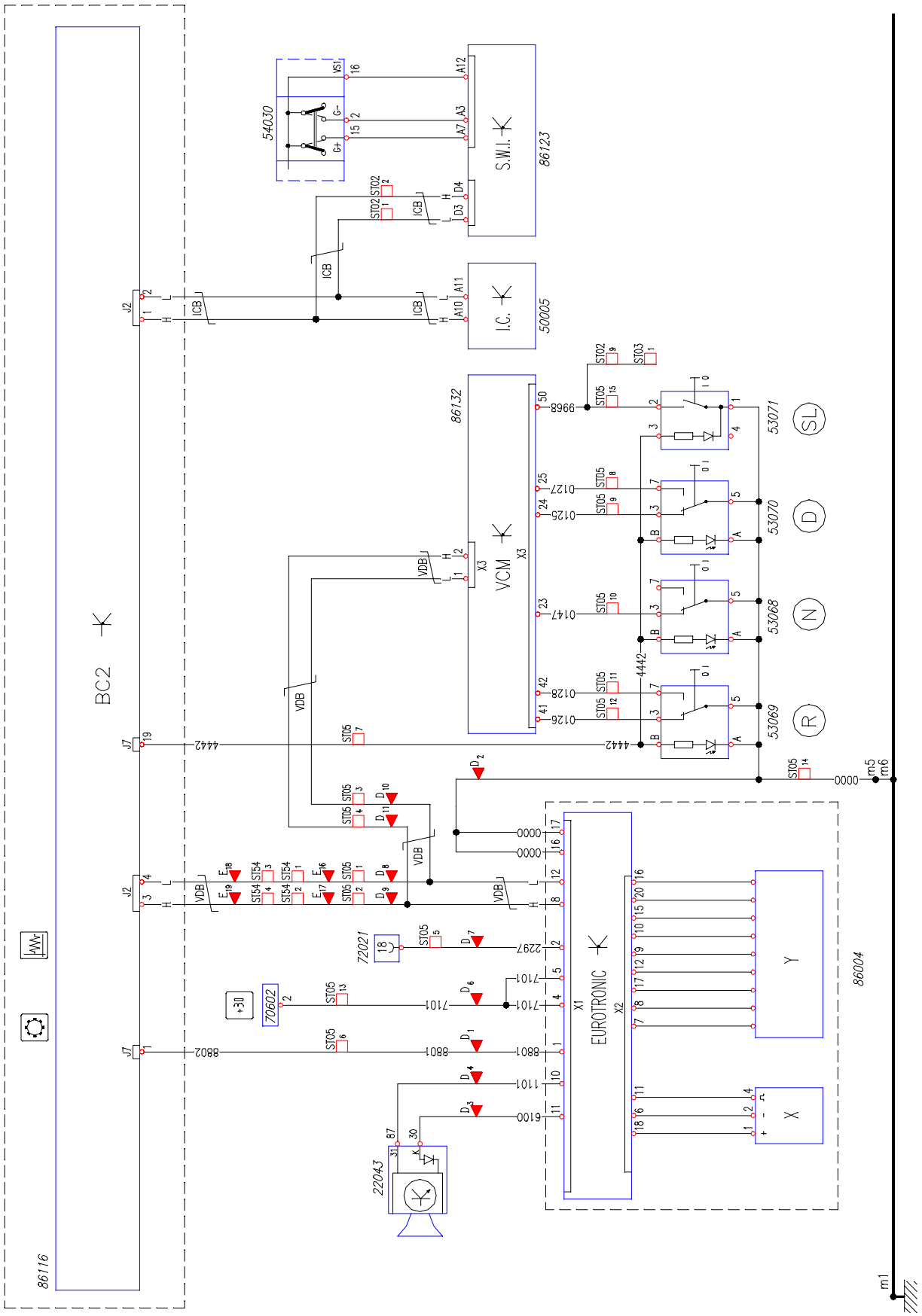

https://truckmanualshub.com/

Chart 65: Decelerator ZF

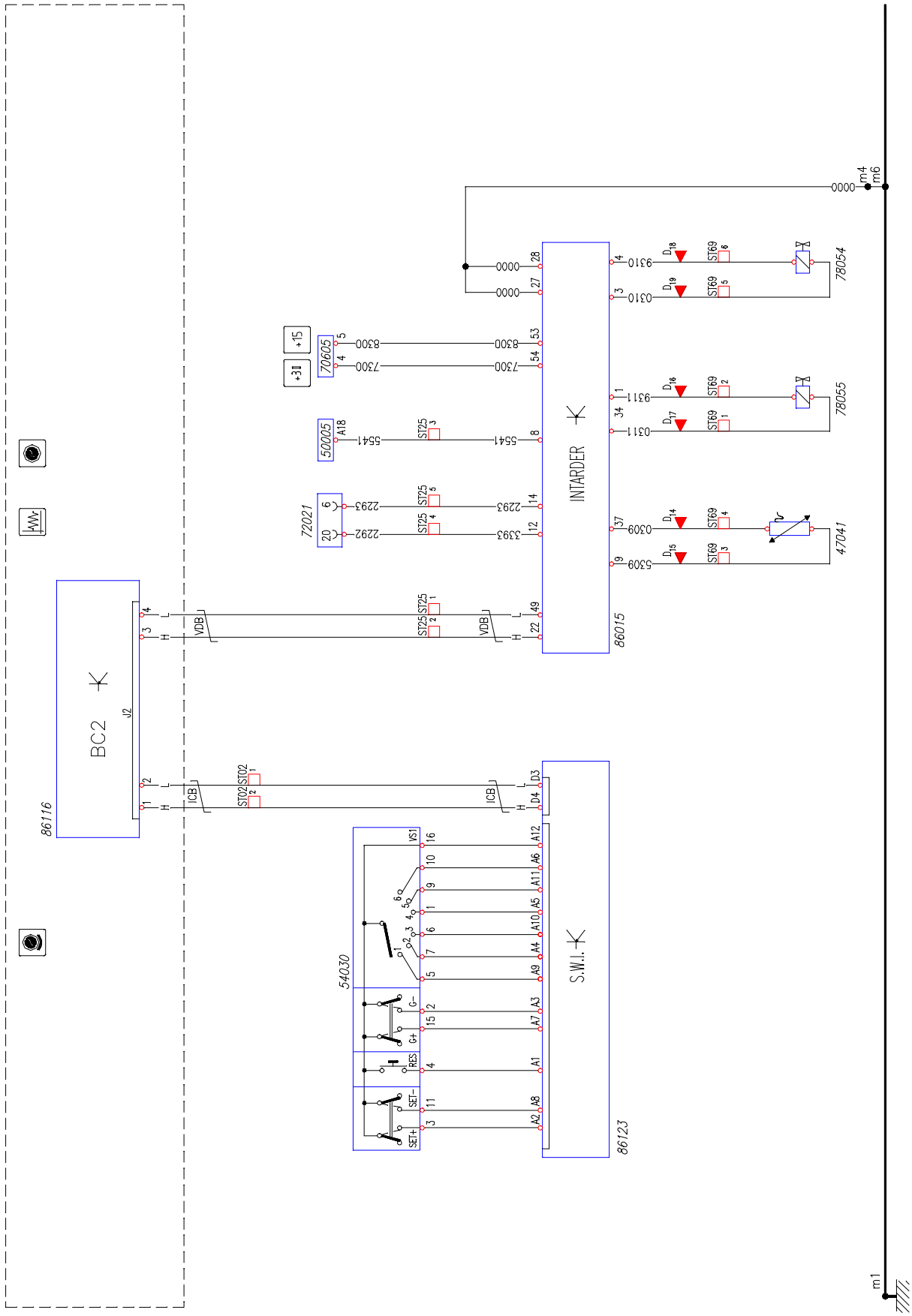

https://truckmanualshub.com/

Chart 66: Central unit EM (PTO)

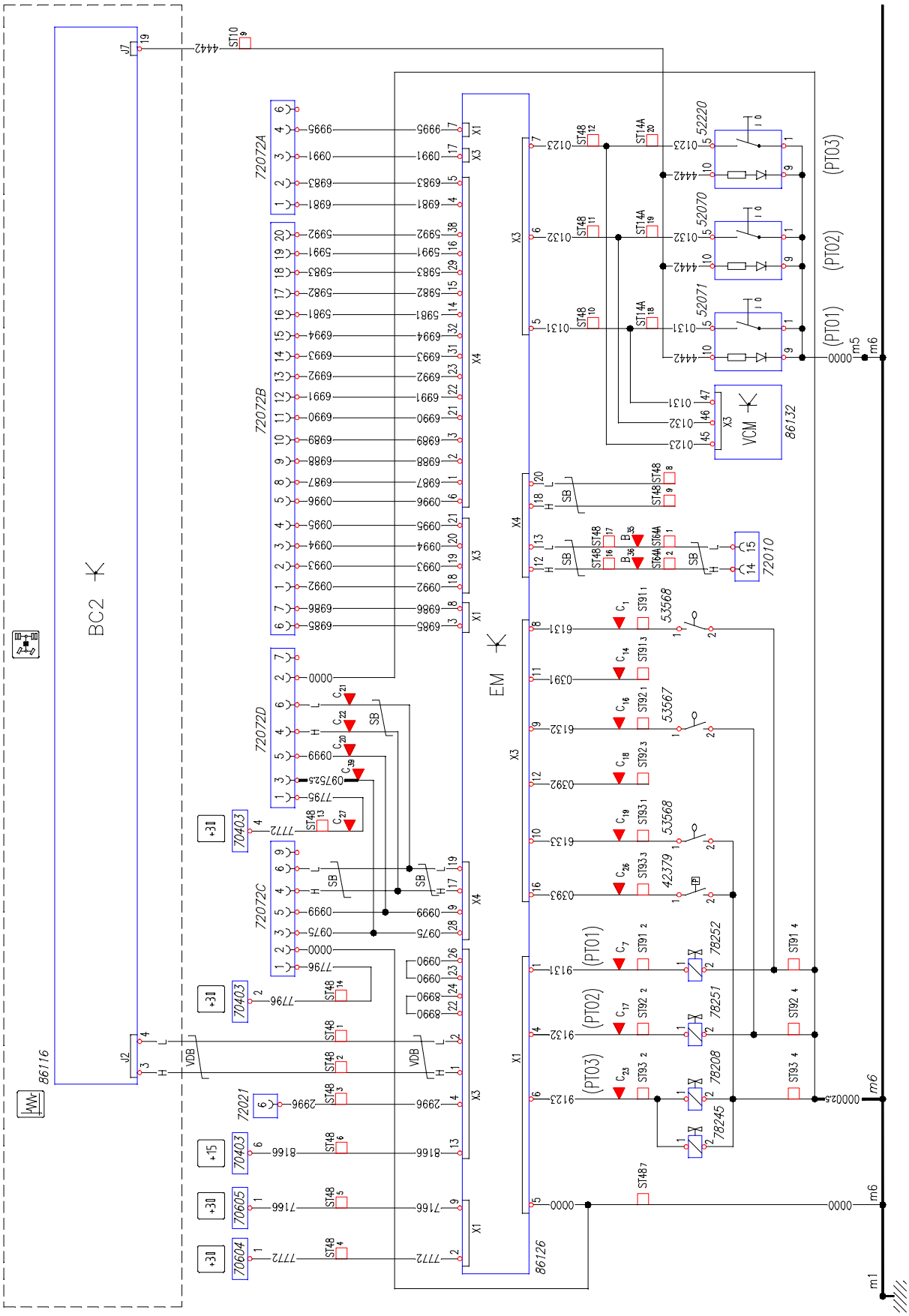

https://truckmanualshub.com/

Chart 67: Radio receiver

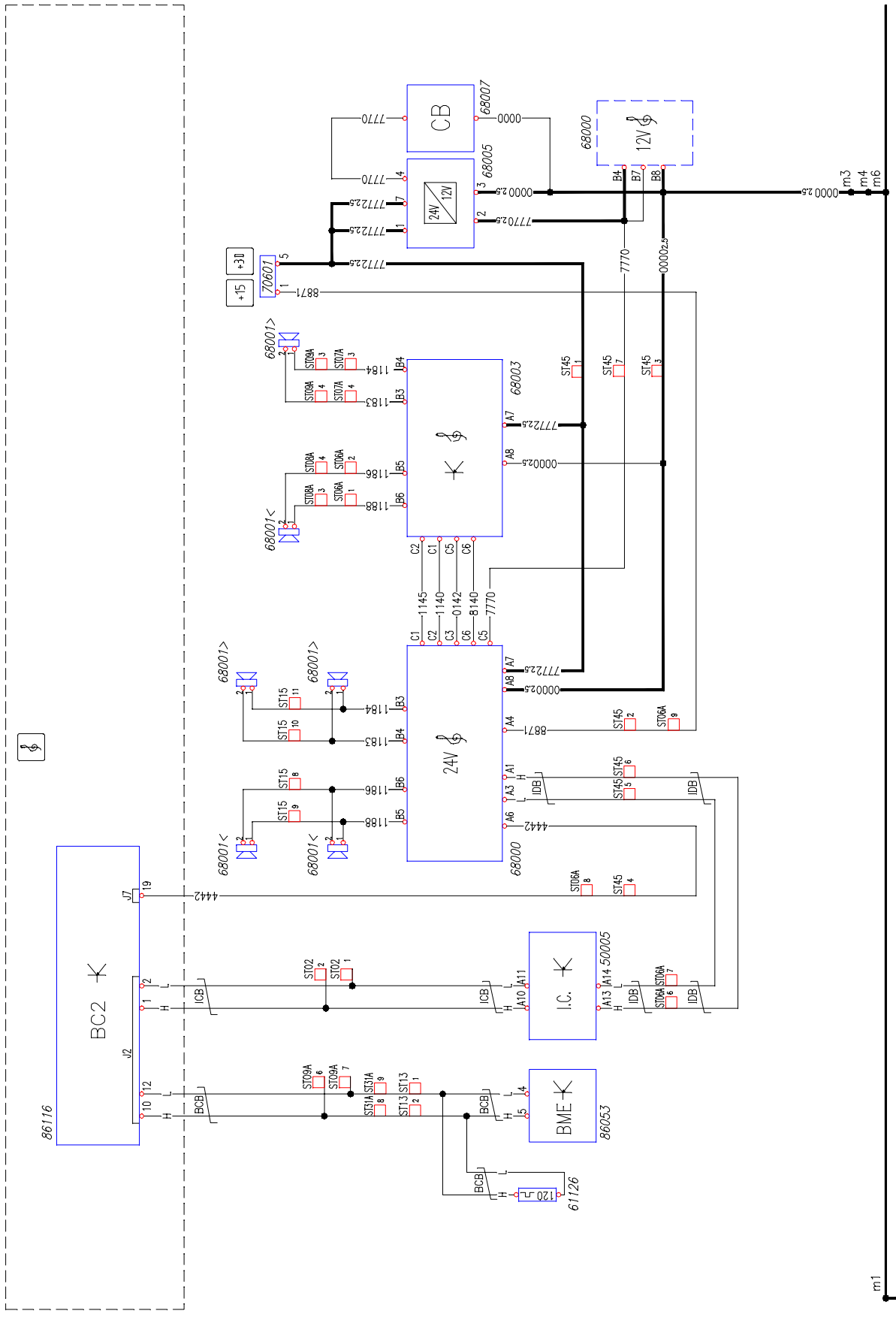

https://truckmanualshub.com/

Chart 68: Mecchanical IGC

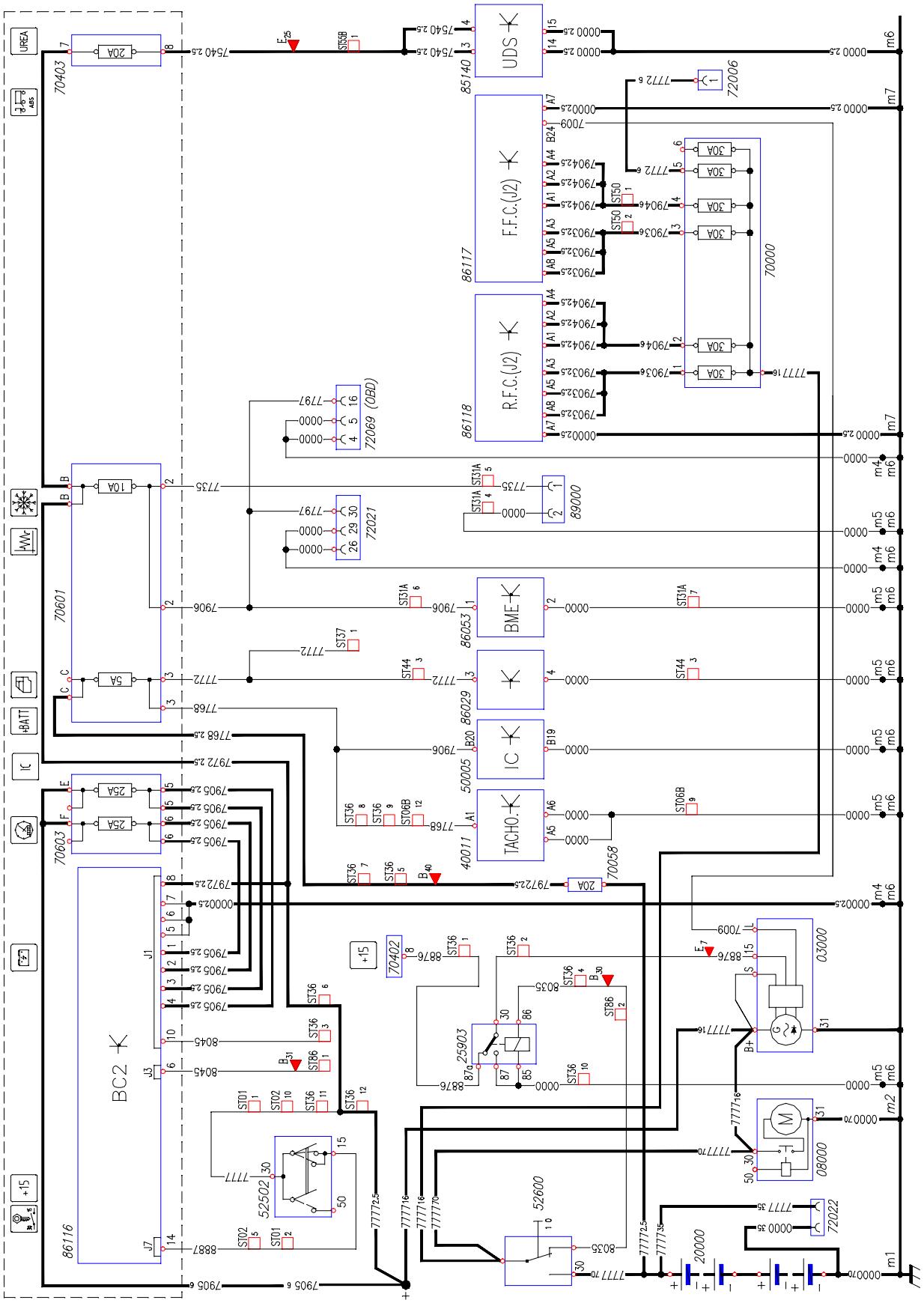

113511

Chart 69: ADR (OPT. 0129)

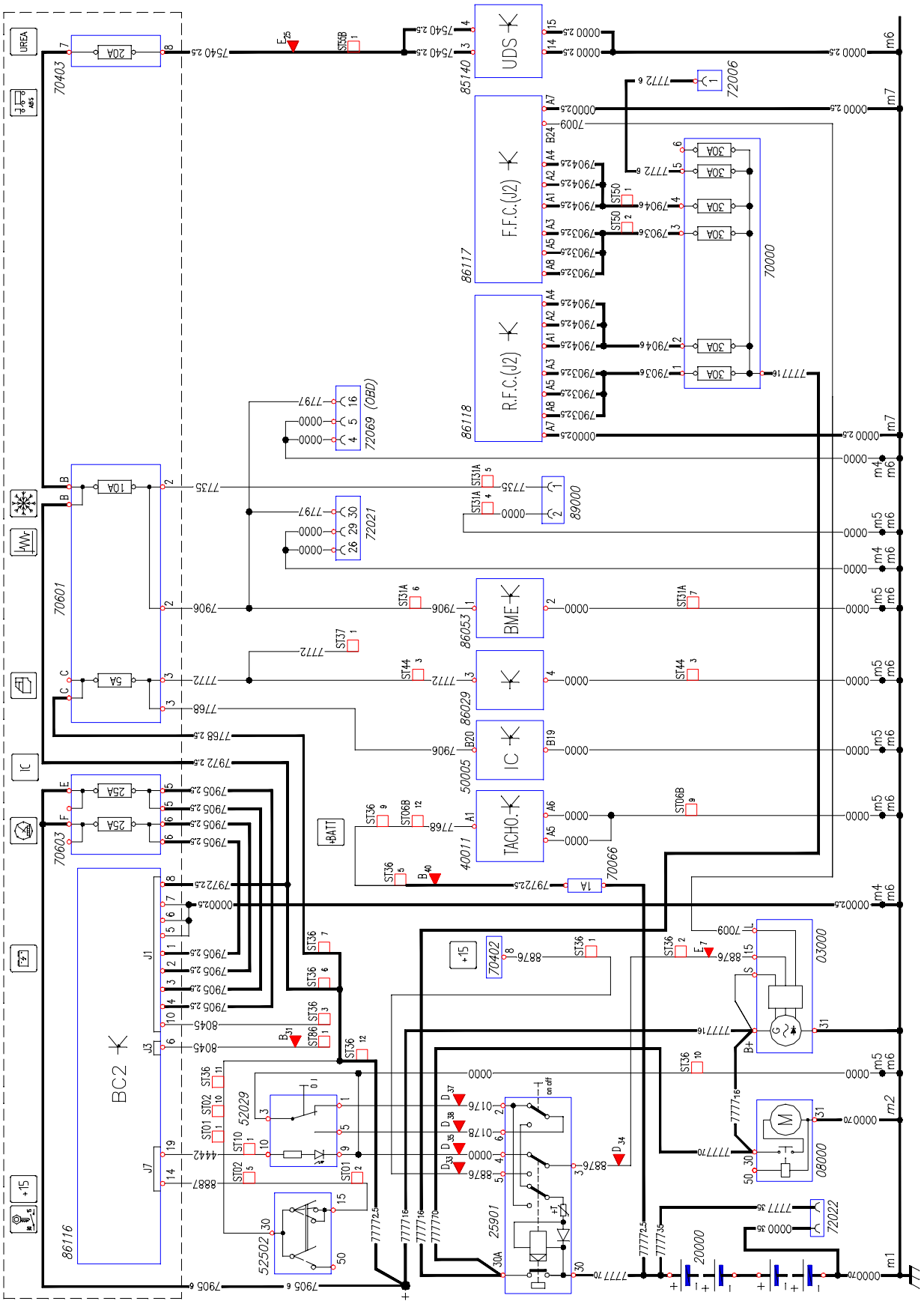

https://truckmanualshub.com/

Chart 70: ADR (2001)

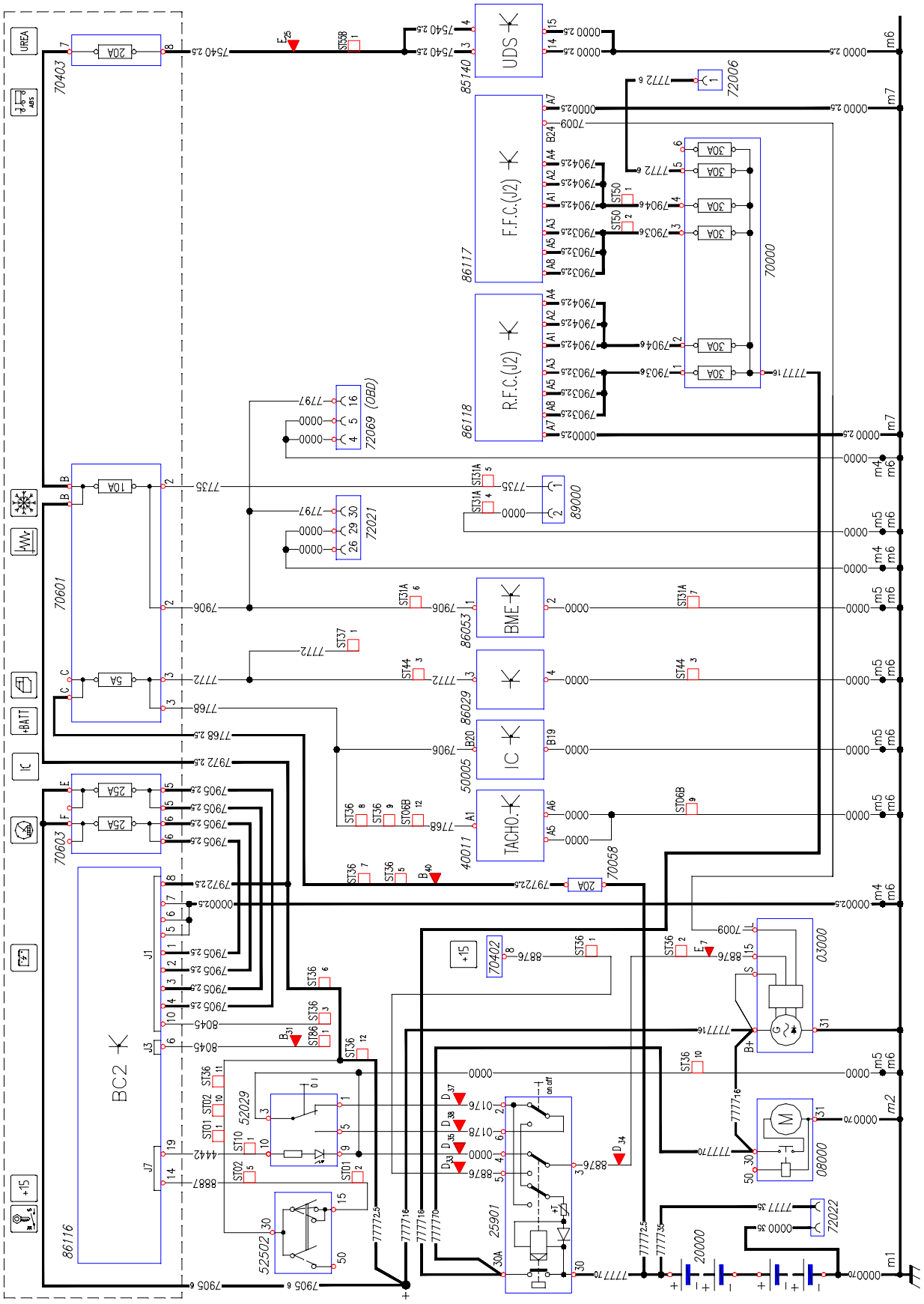

Chart 71: Allison gearbox (AT/AD)

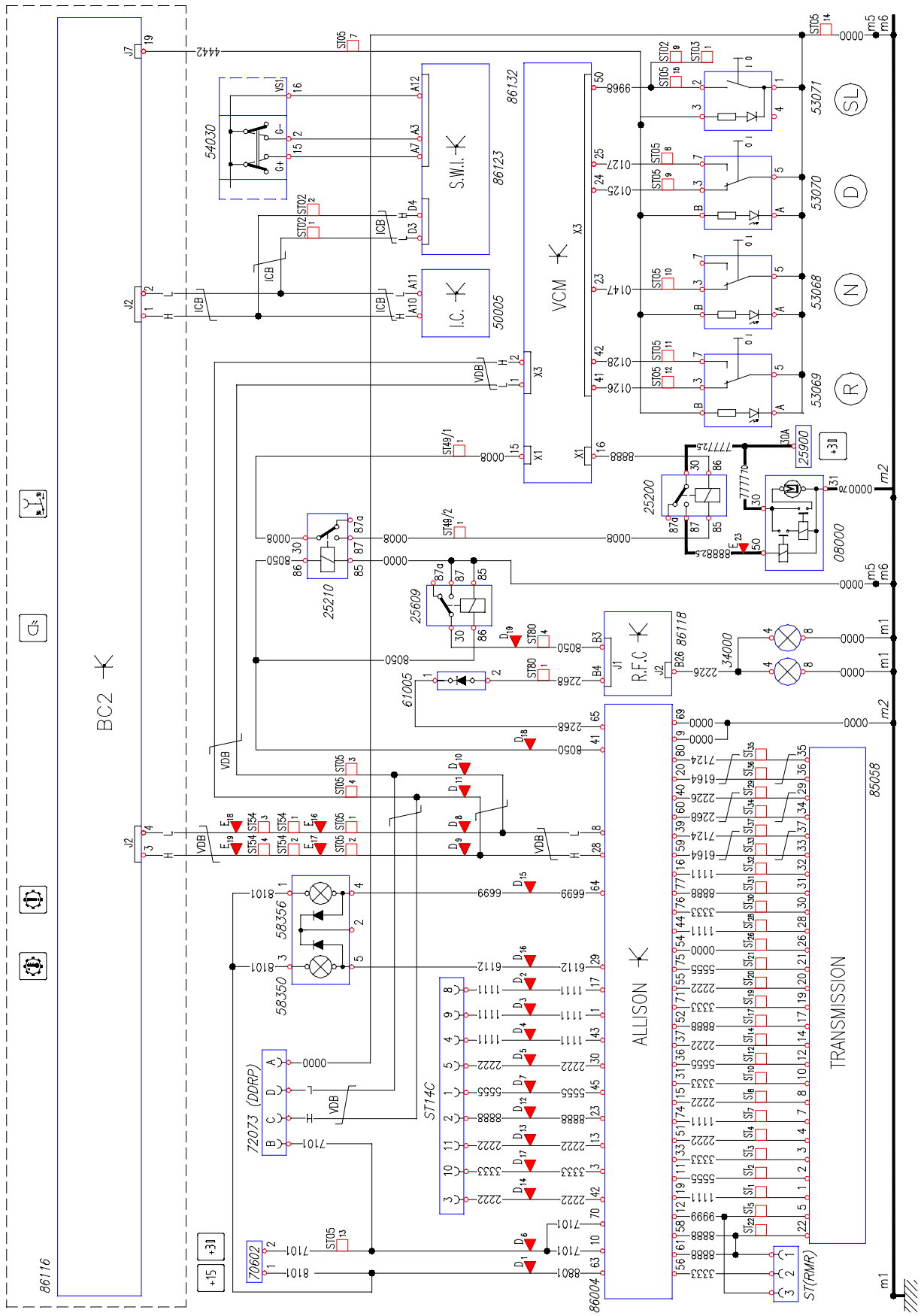

https://truckmanualshub.com/

https://truckmanualshub.com/

Block diagram

Page

CHART 1: 143
A. ENGINE START-UP FROM CAB AND FRONT GROUND
B. LOADS ACTIVATED WITH ENGINE ON
C. BATTERY RECHARGING WARNING LIGHT

CHART 2: 144
A. POWER TO BODYBUILDERS CONNECTOR ST14.
B. IMMOBILISER BLINK CODES FOR EMERGENCY START-UP AND CONTROL OF BOILER ACTIVATION RELAY.
C. FOUR WHEEL DRIVE ENGAGEMENT WARNING LIGHT

CHART 3: 145
A. CRUISE CONTROL
B. ACCELERATOR PEDAL
C. PRE-POST HEATING ACTIVATION WARNING LIGHT

CHART 4: 146
A. ENGINE BRAKE (WITH EBS AND INTARDER)
B. ENGINE BRAKE (WITH EBS)
C. ENGINE BRAKE (WITH ABS AND INTARDER)
D. ENGINE BRAKE (WITH ABS WITHOUT INTARDER)
E. ENGINE BRAKE ENGAGEMENT WARNING LIGHT

CHART 5: 147
A. BATTERY VOLTAGE GAUGE
B. ENGINE RPM GAUGE
C. COOLANT TEMPERATURE GAUGE
D. FUEL LEVEL GAUGE

CHART 6: 148
A. LOW ENGINE OIL PRESSURE WARNING LIGHTS
B. LOW ENGINE OIL LEVEL WARNING LIGHTS
C. LOW WINDSCREEN WASHER FLUID WARNING LIGHT
D. LOW POWER STEERING FLUID WARNING LIGHTS
E. LOW ENGINE COOLANT LEVEL WARNING LIGHTS

CHART 7: 149
A. BRAKE WEAR WARNING LIGHTS
B. BRAKE WEAR LEVEL INDICATOR
C. CRAWLER GEARS ENGAGED WARNING LIGHT
D. OIL FILTER BLOCKED WARNING LIGHT
E. AIR CLEANER BLOCKED WARNING LIGHT

CHART 8: 150
A. HANDBRAKE ENGAGED WARNING LIGHT
B. ON-ROAD VEHICLE TRANSVERSAL DIFFERENTIAL LOCK WARNING LIGHTS
D. LONGITUDINAL DIFFERENTIAL LOCK WARNING LIGHT
E. WATER IN FUEL FILTER WARNING MESSAGE

CHART 9: A. EXTERIOR LIGHTS 151

https://truckmanualshub.com/

Page

CHART 10: 152
A. EXTERIOR LIGHTS (LOW BEAM HEADLIGHTS)
B. EXTERIOR LIGHTS (HIGH BEAMS AND ADDITIONAL BEAMS)
C. EXTERIOR LIGHTS (FOG LIGHT)

CHART 11: 153
A. EXTERIOR LIGHTS (BRAKE LIGHTS WITH EBS)
B. EXTERIOR LIGHTS (BRAKE LIGHTS WITH ABS)
C. REVERSE
D. FIFTH WHEEL LIGHT

CHART 12: 154
A. HAZARD LIGHTS
B. HEADLAMP ALIGNMENT CORRECTOR

CHART 13: A.INTERIOR LIGHTS WITH HIGH TOP

CHART 14: A.INTERIOR LIGHTS WITH LOW OR MEDIUM HIGH ROOF 156

CHART 15: 157
A. WINDSCREEN WIPER
B. HORN
C. TRIP COMPUTER

CHART 16: A.WAKE UP SIGNALS FOR TGC 158

CHART 17: 159
A. SUN-ROOF
B. WINDSCREEN WASHER PUMP AND HEADLAMP WASHER PUMP

CHART 18: A. TACHOGRAPH 160

CHART 19: 161
A. LOAD DIAGNOSIS
B. WARNING LIGHT DIAGNOSIS
C. ENGINE FAN CONTROL
D. MANUAL CLIMATE CONTROL SYSTEM

CHART 20: 162
A. MIRROR MOVEMENT AND HEATING
B. ELECTRIC WINDOWS

CHART 21: 163
A. CENTRAL LOCKING
B. PDM CONTROL UNIT SELECTION
C. DOOR MODULE CONNECTORS

Page

CHART 22: 164
A. AIR SUSPENSION
B. ABS FUNCTION WARNING LIGHT

CHART 23: 165
A. EBS FAULTS
B. HEATED WINDSCREEN
D. ENGINE PTO

CHART 24: 166
A. RETARDER ENGAGEMENT WARNING LIGHT
B. FUEL FILTER BLOCKED INFORMATION DISPLAY
D. CAB TILT

CHART 25: 167
A. BRAKE PRESSURE GAUGE
B. AXLE LOAD INFORMATION DISPLAY
D. EXTERIOR TEMPERATURE DISPLAY

CHART 26: 168
A. ODOMETER/TRIP COUNTER
B. GEARBOX
C. SECOND SPEED LIMITERS
D. CLUTCH CONTROL

CHART 27: 169
A. ENGINE OIL TEMPERATURE
B. ROTARY LIGHTS
C. SUN BLINDS

CHART 28: 170
A. SEAT BELT WARNING LIGHT
B. GEAR SELECTOR ON STEERING WHEEL INTERFACE
C. ADDITIONAL EUROTRONIC CONTROL BUTTONS
D. SPOTLIGHTS (ONLY WITH HIGH TOP)

CHART 29: A. H GEARLEVER 171

CHART 30: 172
A. BC CAN LINES
B. VCM CAN LINES

Chart 1: A. Engine start-up from cab and front ground
B. Loads activated with engine on
C. Battery recharging warning light

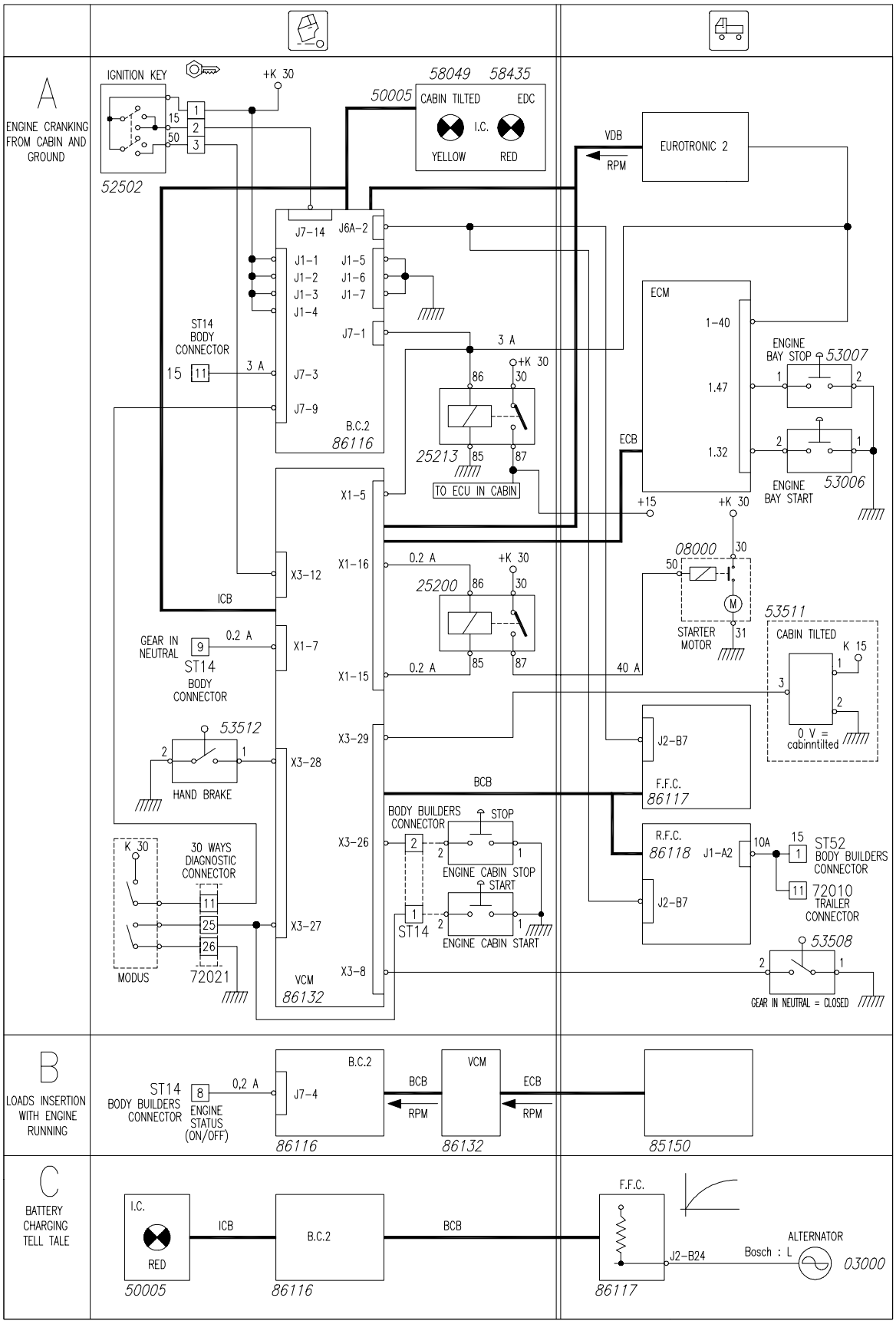

https://truckmanualshub.com/

Chart 2: A. Power to bodybuilders connector ST14.
B. Immobiliser blink codes for emergency start-up and control of boiler activation relay.
C. Four wheel drive engagement warning light

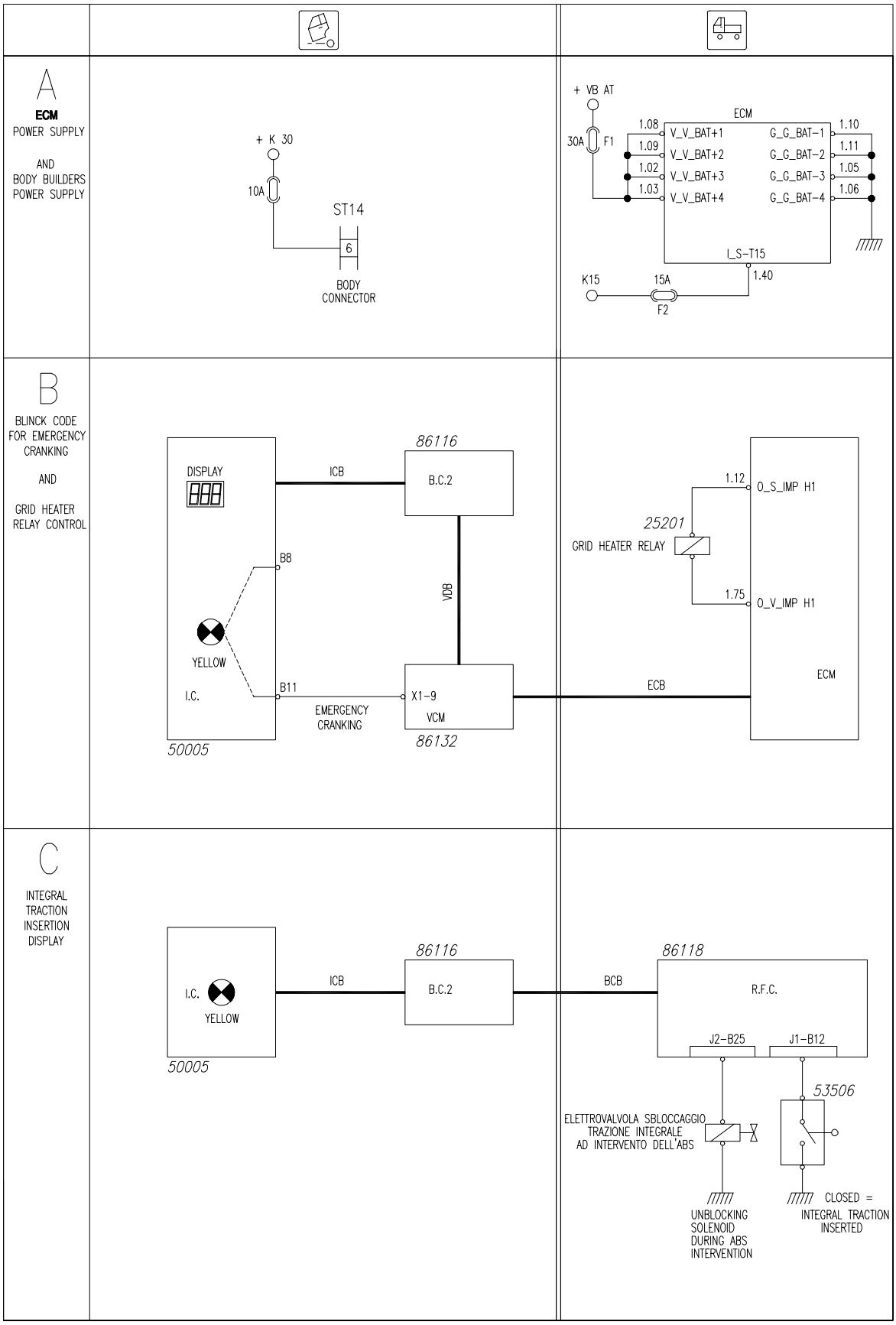

113516

https://truckmanualshub.com/

Chart 3: A. Cruise control
B. Accelerator pedal
C. Pre-post heating activation warning light

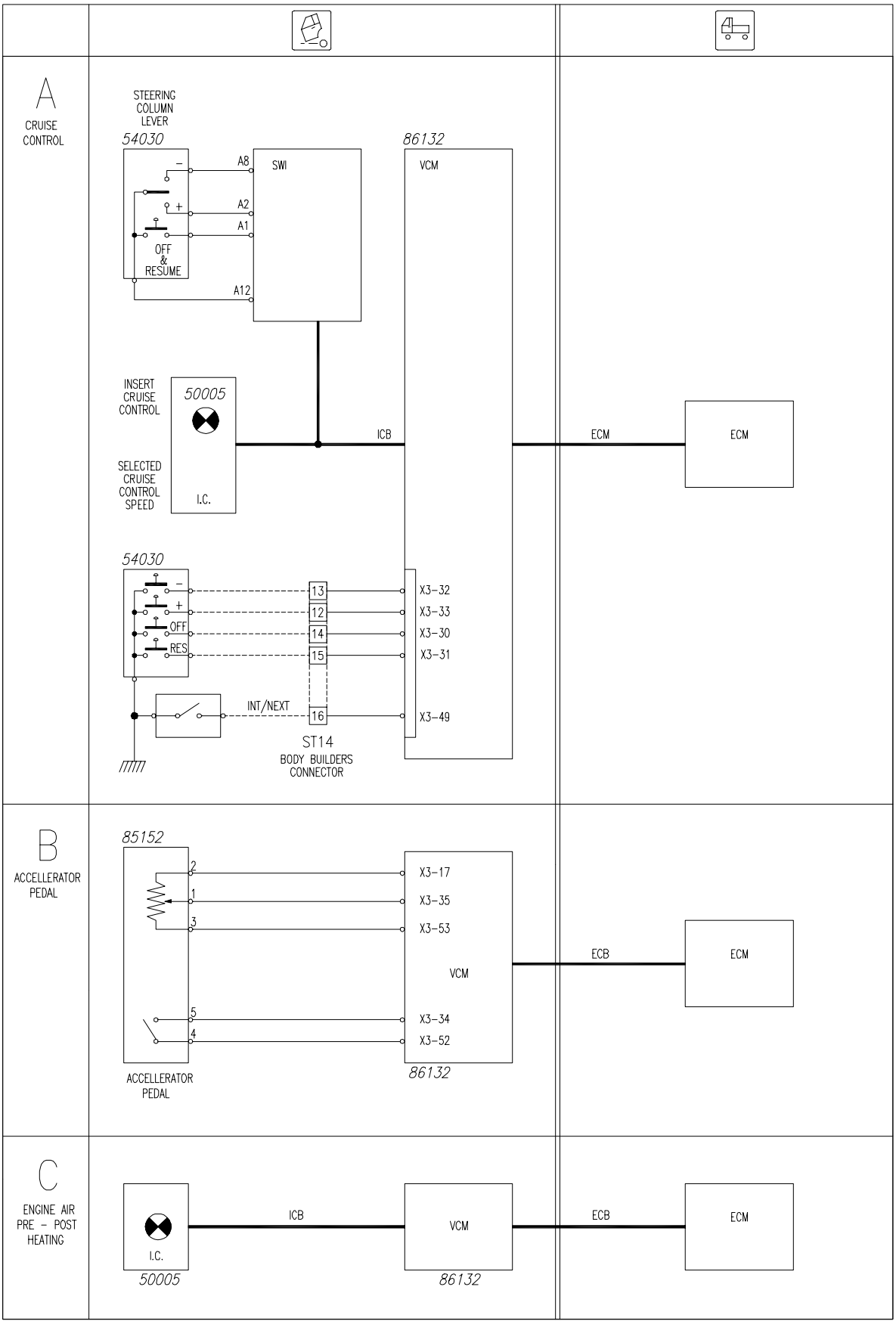

113517

https://truckmanualshub.com/

Chart 4: A. Engine brake (with EBS and intarder)
B. Engine brake (with EBS)
C. Engine brake (with ABS and intarder)
D. Engine brake (with ABS without intarder)
E. Engine brake engagement warning light

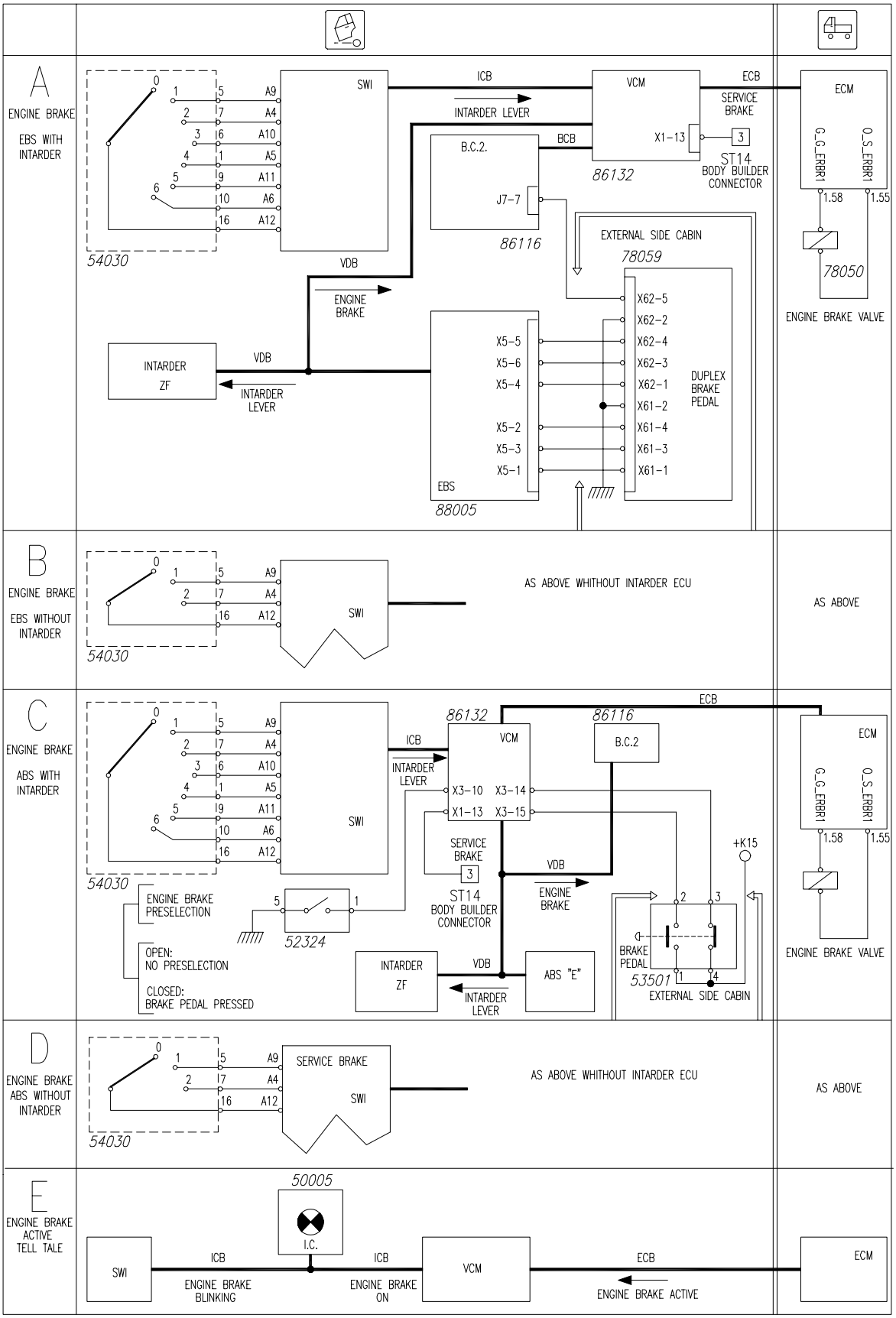

https://truckmanualshub.com/

Chart 5: A. Battery voltage gauge
B. Engine rpm gauge
C. Coolant temperature gauge
D. Fuel level gauge

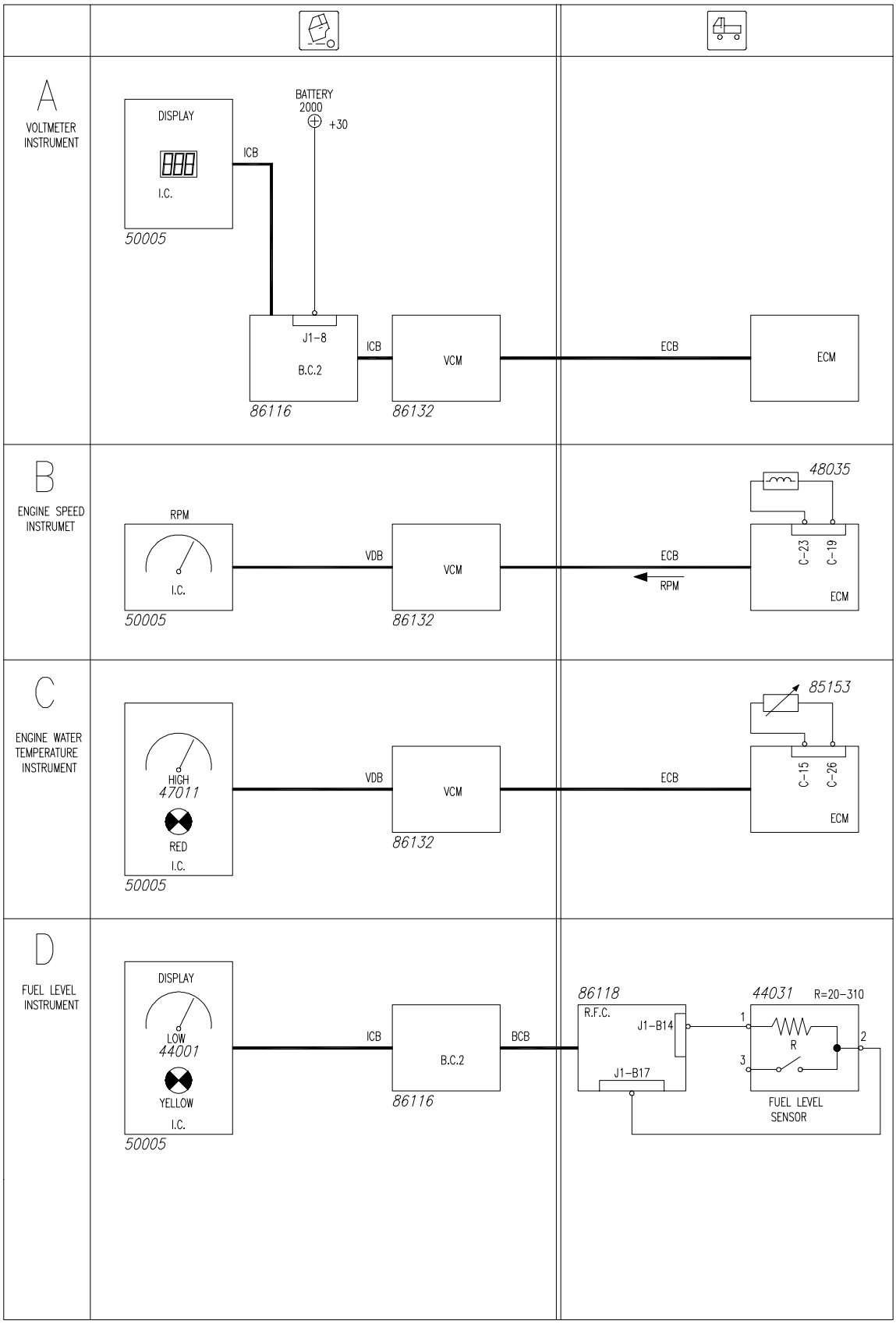

113519

https://truckmanualshub.com/

Chart 6: A. Low engine oil pressure warning lights
B. Low engine oil level warning lights
C. Low windscreen washer fluid warning light
D. Low power steering fluid warning lights
E. Low engine coolant level warning lights

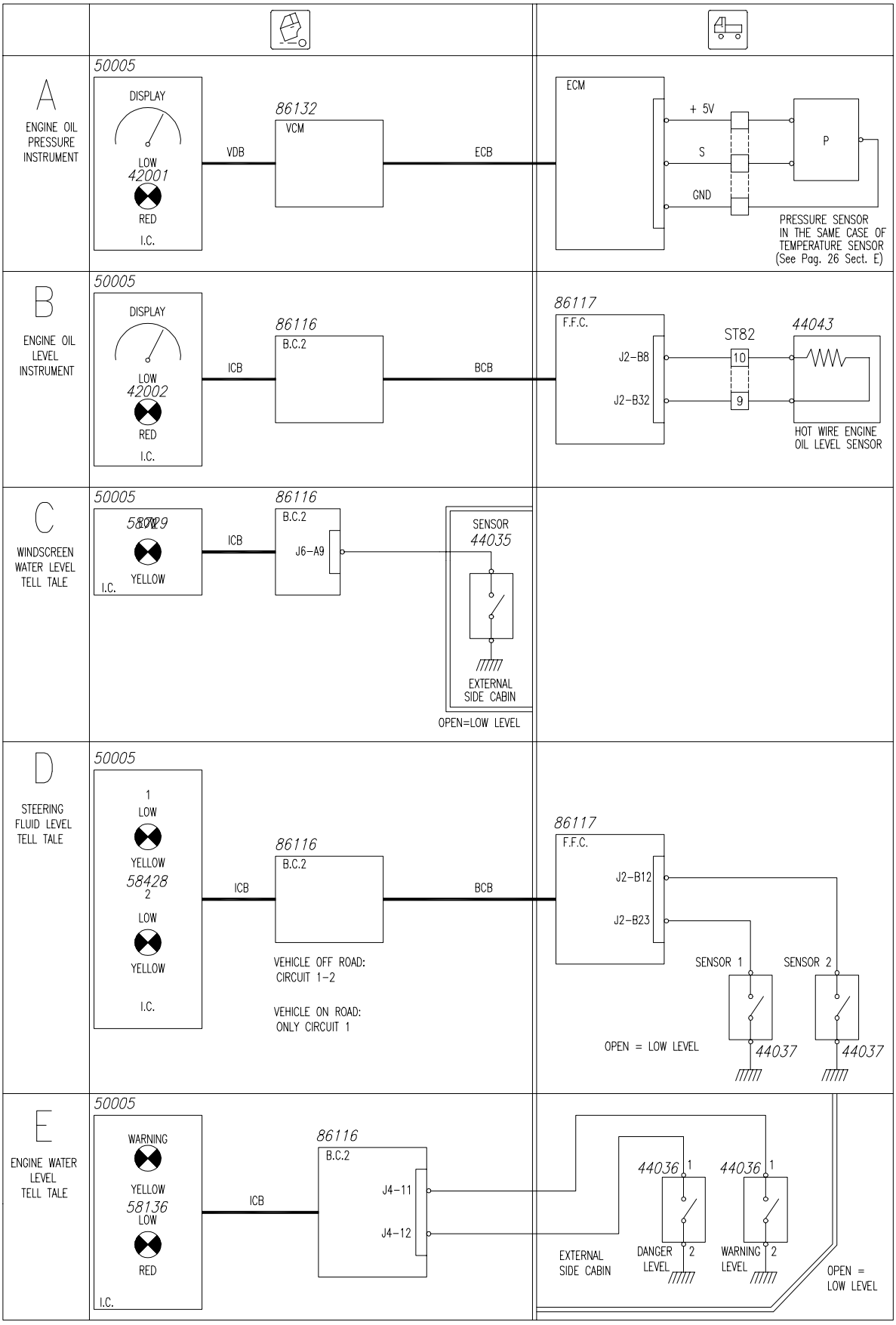

https://truckmanualshub.com/

Chart 7:
A. Brake wear warning lights
B. Brake wear level indicator
C. Crawler gears engaged warning light
D. Oil filter blocked warning light
E. Air cleaner blocked warning light

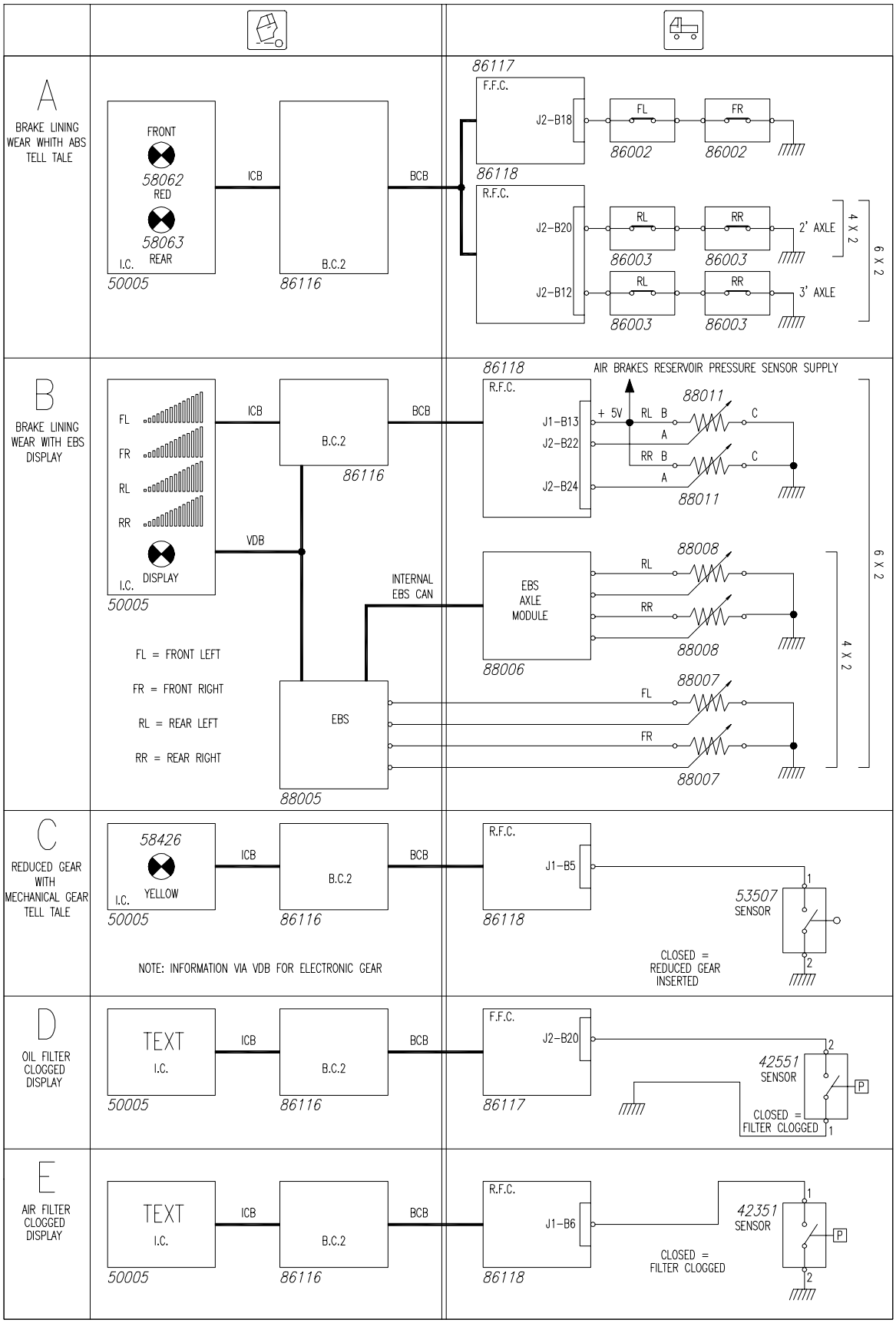

113521

https://truckmanualshub.com/

Chart 8: A. Handbrake engaged warning light
B. On-road vehicle transversal differential lock warning lights
D. Longitudinal differential lock warning light
E. Water in fuel filter warning message

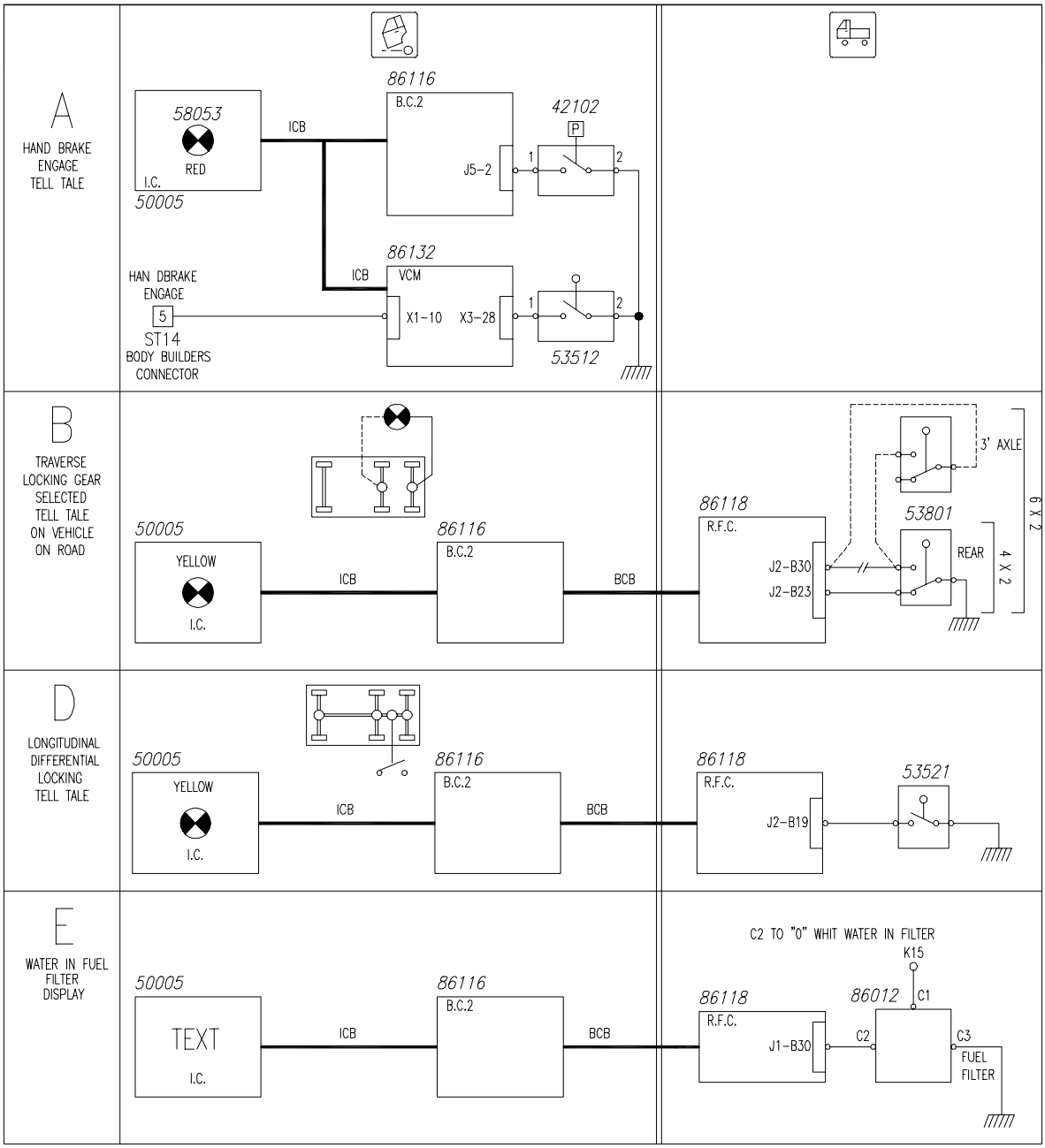

113522

https://truckmanualshub.com/

Chart 9: A.Exterior lights

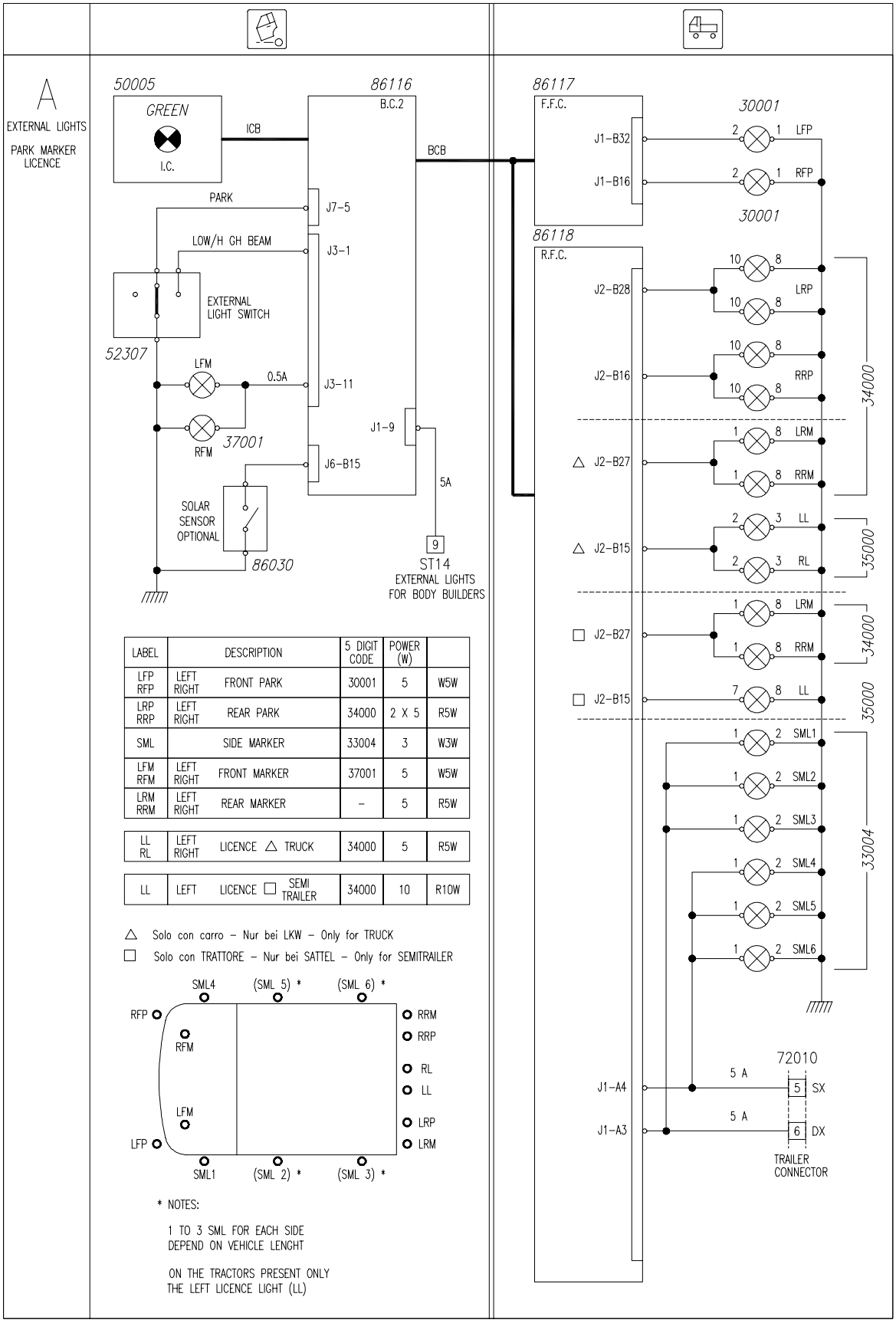

LABEL		DESCRIPTION	5 DIGIT CODE	POWER (W)	
LFP RFP	LEFT RIGHT	FRONT PARK	30001	5	W5W
LRP RRP	LEFT RIGHT	REAR PARK	34000	2 X 5	R5W
SML		SIDE MARKER	33004	3	W3W
LFM RFM	LEFT RIGHT	FRONT MARKER	37001	5	W5W
LRM RRM	LEFT RIGHT	REAR MARKER	–	5	R5W
LL RL	LEFT RIGHT	LICENCE △ TRUCK	34000	5	R5W
LL	LEFT	LICENCE □ SEMI TRAILER	34000	10	R10W

△ Solo con carro – Nur bei LKW – Only for TRUCK

□ Solo con TRATTORE – Nur bei SATTEL – Only for SEMITRAILER

* NOTES:

1 TO 3 SML FOR EACH SIDE DEPEND ON VEHICLE LENGHT

ON THE TRACTORS PRESENT ONLY THE LEFT LICENCE LIGHT (LL)

113523

https://truckmanualshub.com/

Chart 10: A. Exterior lights (Low beam headlights)
B. Exterior lights (high beams and additional beams)
C. Exterior lights (fog light)

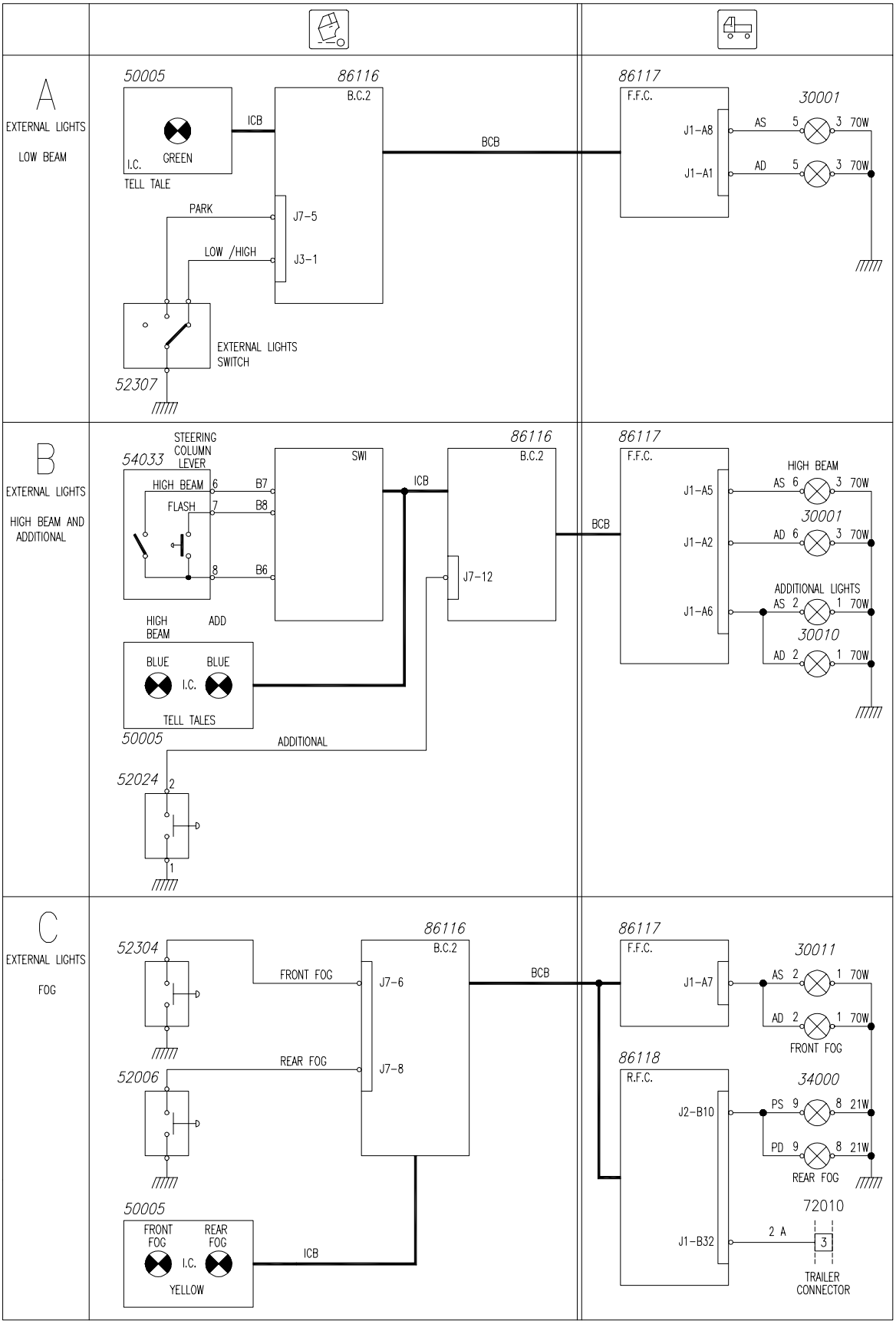

https://truckmanualshub.com/

Chart 11: A. Exterior lights (brake lights with EBS)
B. Exterior lights (brake lights with ABS)
C. Reverse
D. Fifth wheel light

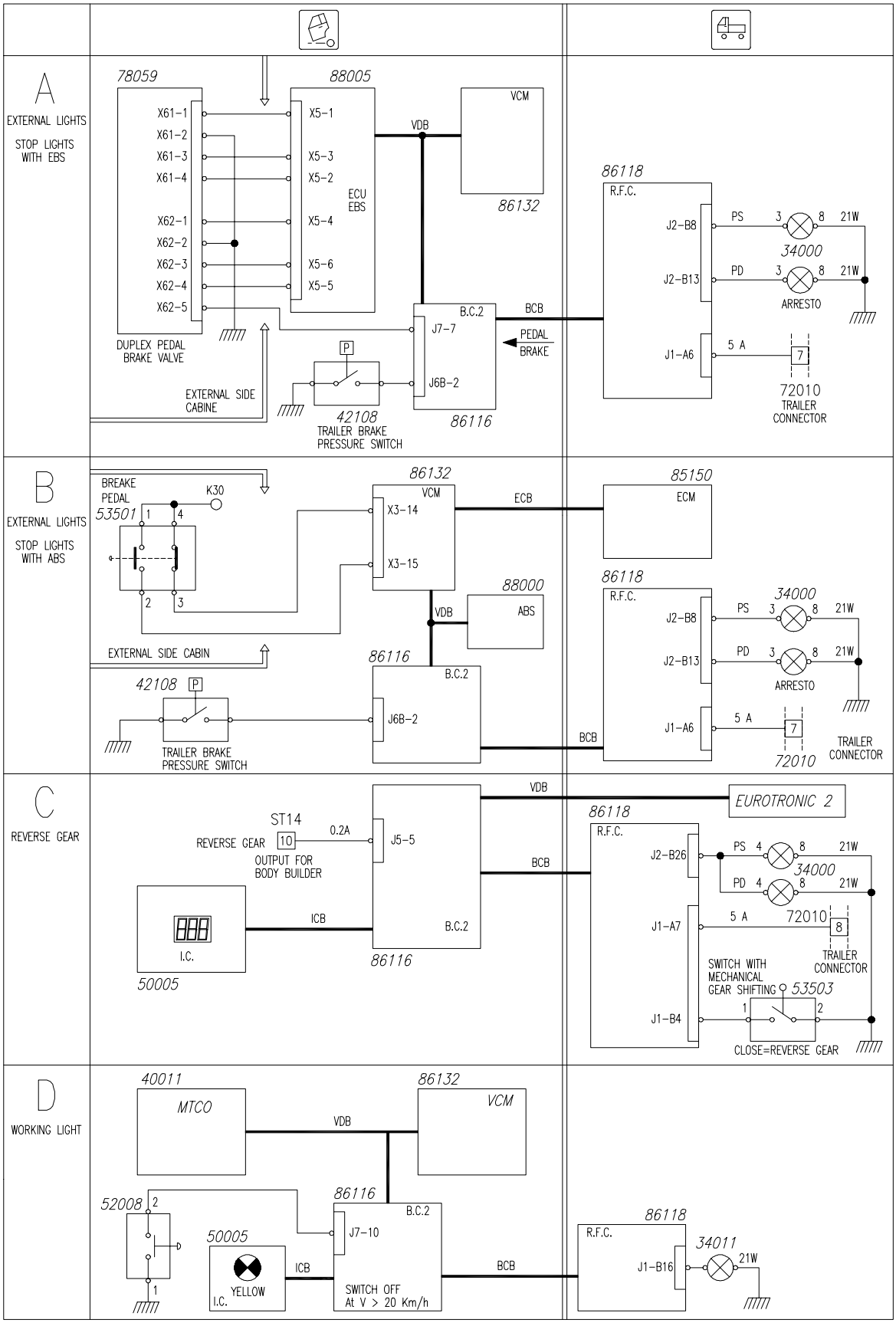

113525

https://truckmanualshub.com/

Chart 12: A. Hazard lights
B. Headlamp alignment corrector

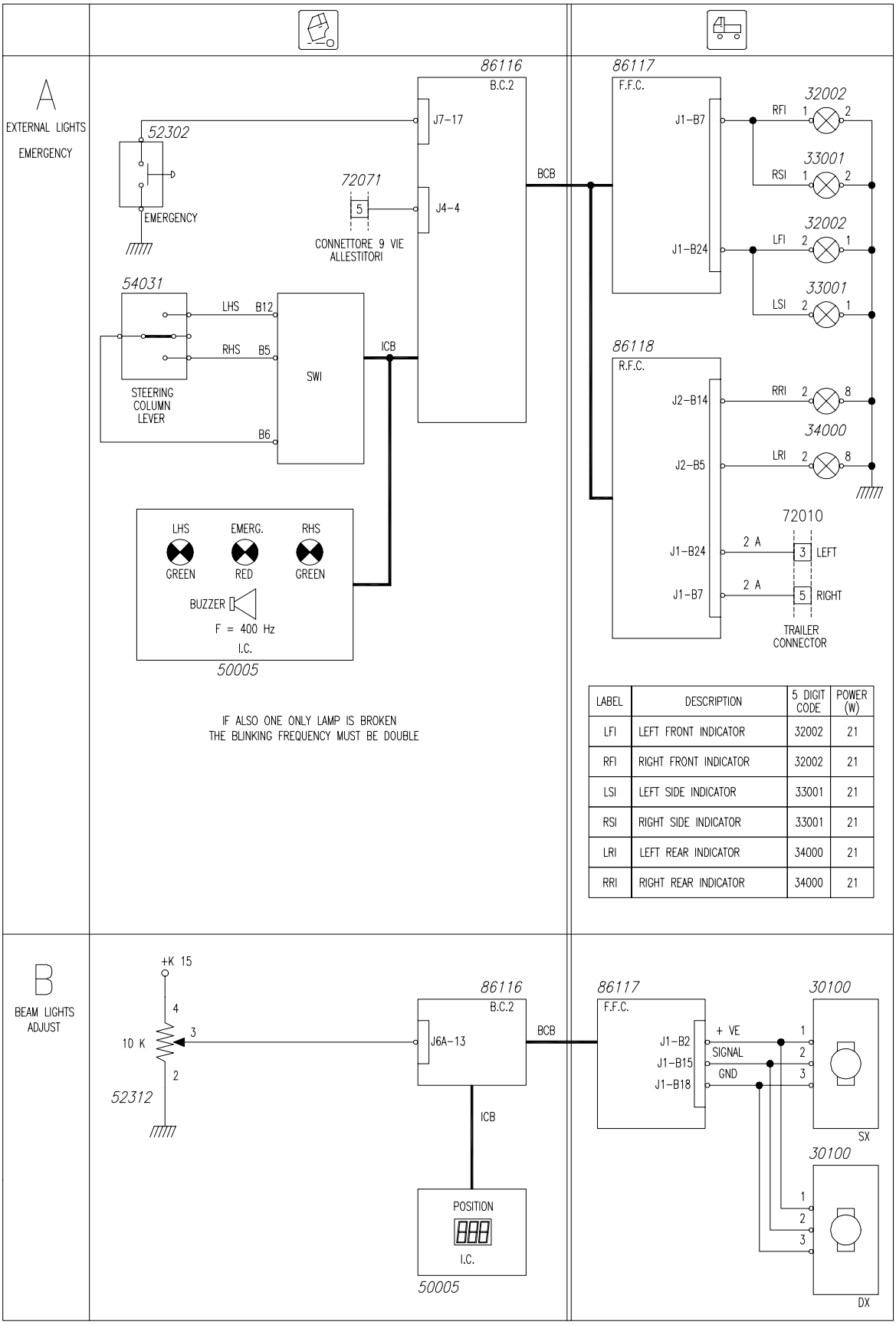

LABEL	DESCRIPTION	5 DIGIT CODE	POWER (W)
LFI	LEFT FRONT INDICATOR	32002	21
RFI	RIGHT FRONT INDICATOR	32002	21
LSI	LEFT SIDE INDICATOR	33001	21
RSI	RIGHT SIDE INDICATOR	33001	21
LRI	LEFT REAR INDICATOR	34000	21
RRI	RIGHT REAR INDICATOR	34000	21

https://truckmanualshub.com/

Chart 13: A. Interior lights with high top

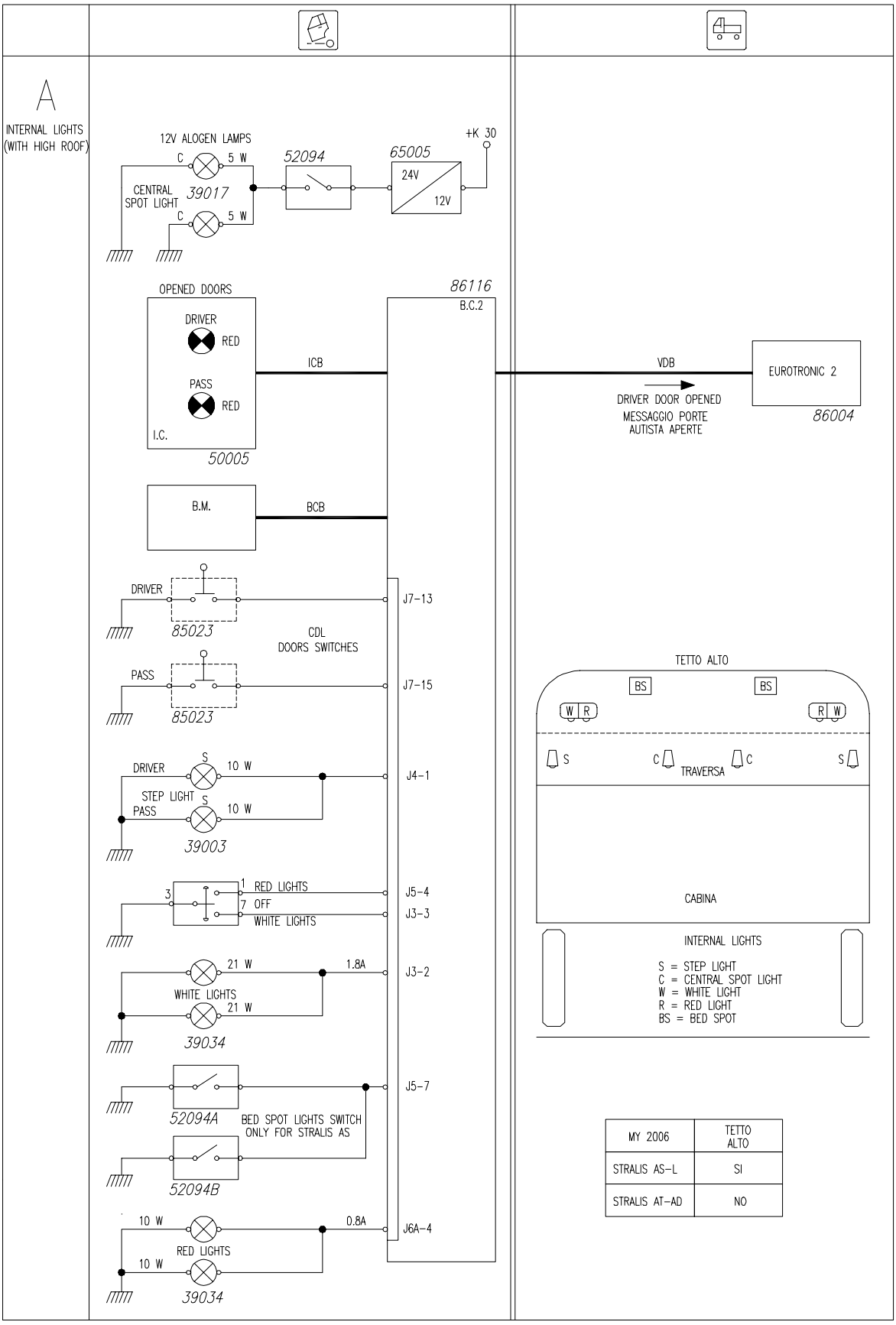

MY 2006	TETTO ALTO
STRALIS AS-L	SI
STRALIS AT-AD	NO

113527

https://truckmanualshub.com/

Chart 14: A. Interior lights with low or medium high roof

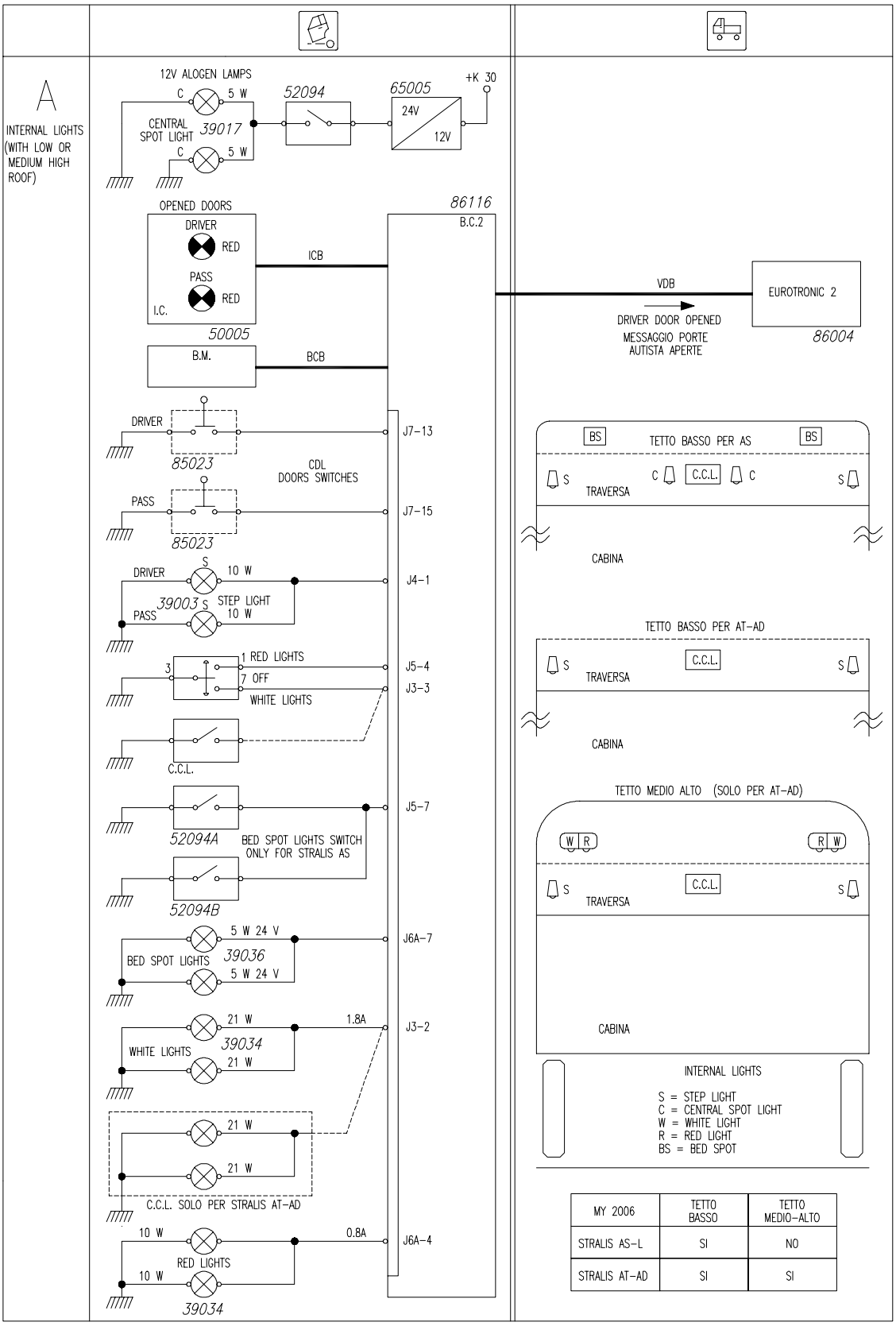

MY 2006	TETTO BASSO	TETTO MEDIO-ALTO
STRALIS AS-L	SI	NO
STRALIS AT-AD	SI	SI

113528

https://truckmanualshub.com/

Chart 15: A. Windscreen wiper
B. Horn
C. Trip Computer

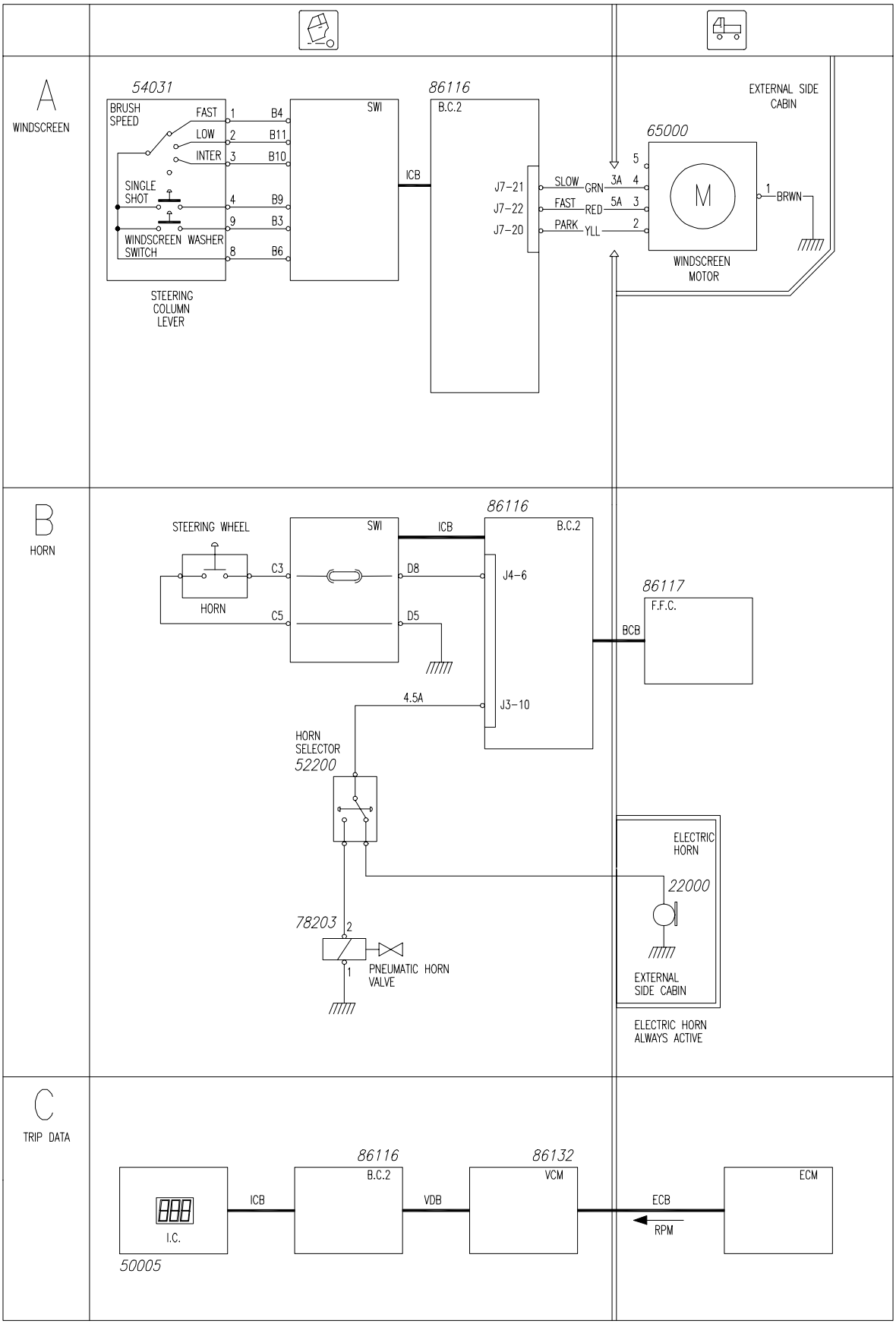

https://truckmanualshub.com/

Chart 16: A. Wake up signals for TGC

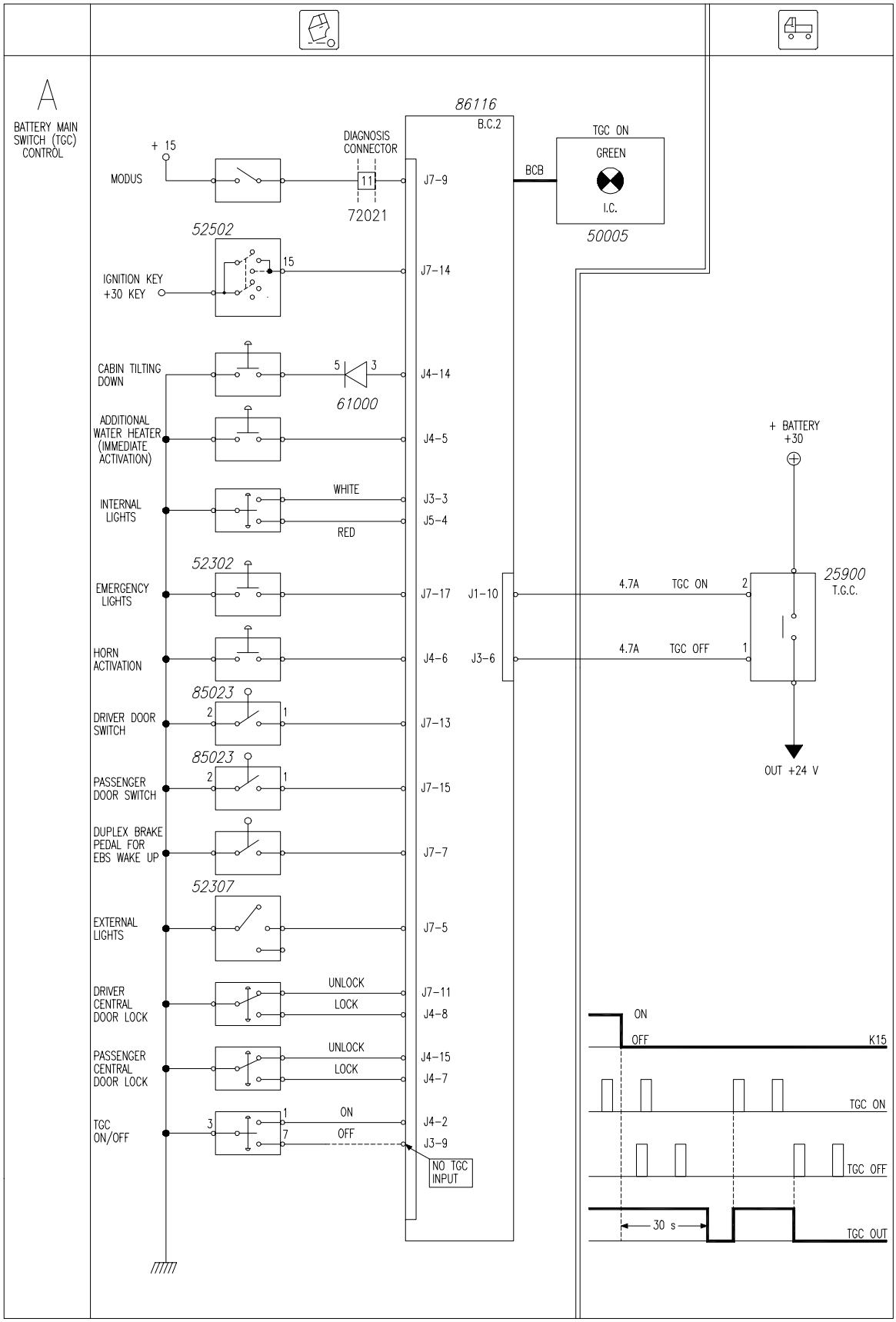

113530

https://truckmanualshub.com/

Chart 17: A. Sun-roof
B. Windscreen washer pump and headlamp washer pump

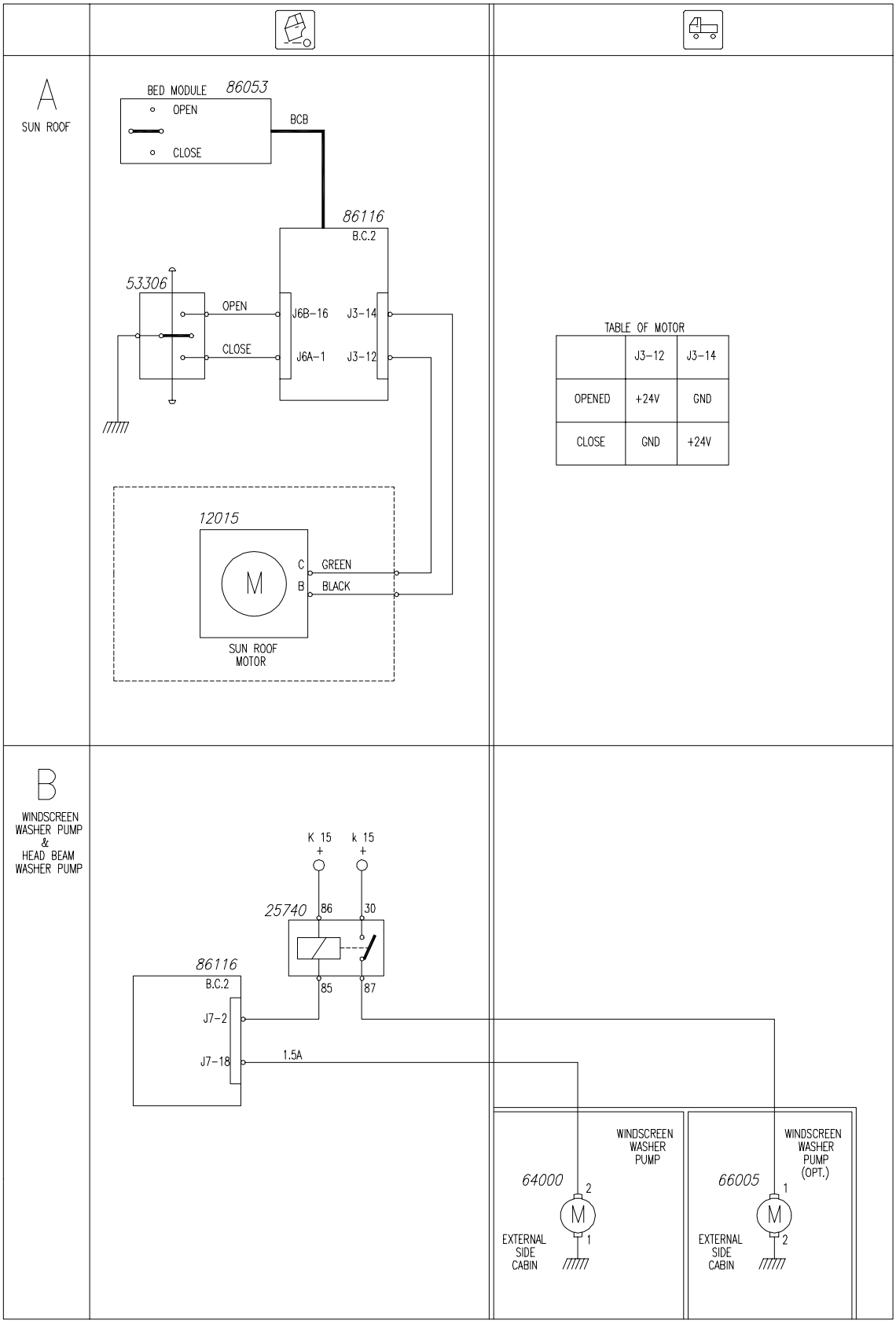

113531

https://truckmanualshub.com/

Chart 18: A. Tachograph

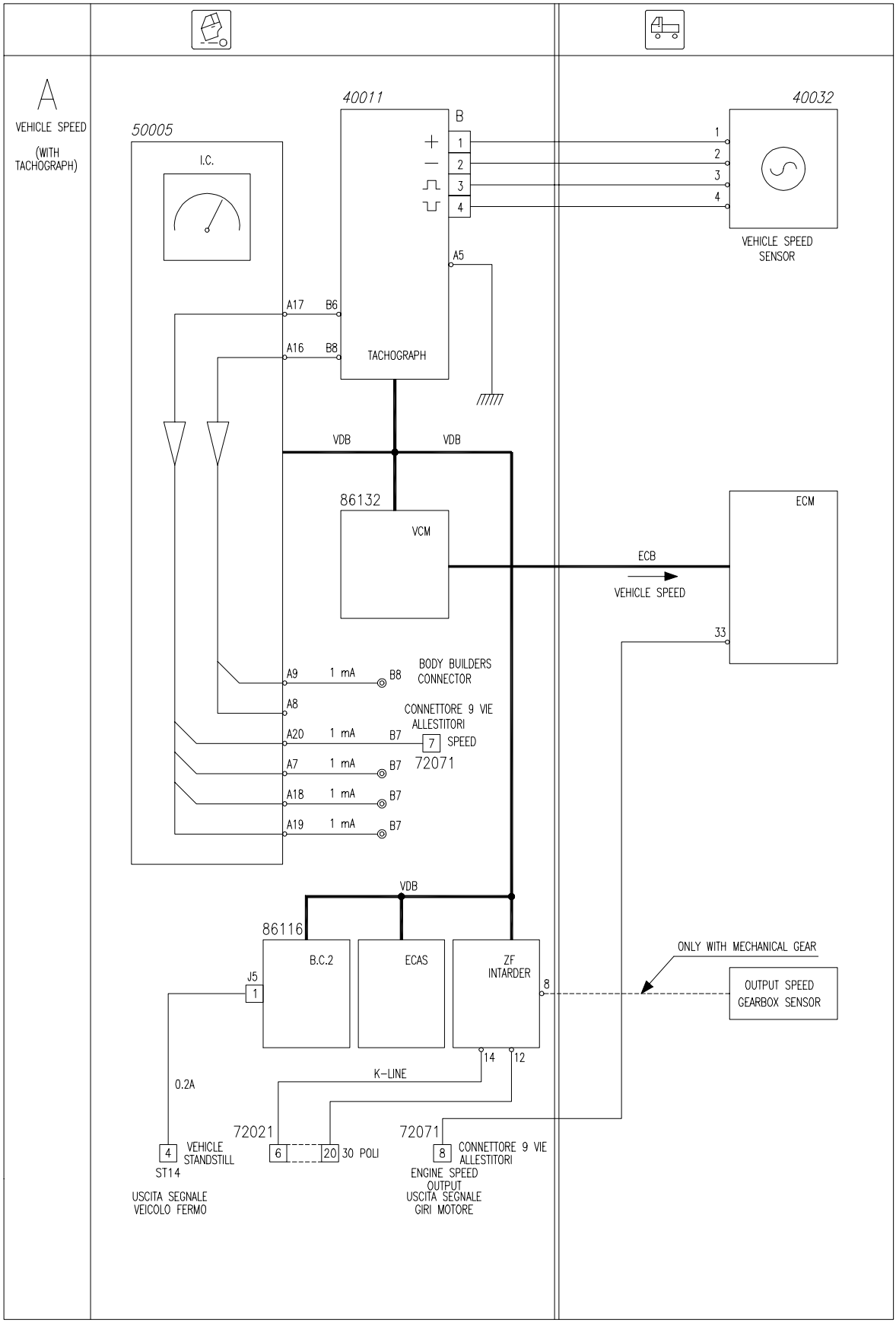

113532

https://truckmanualshub.com/

Chart 19: A. Load diagnosis
B. Warning light diagnosis
C. Engine fan control
D. Manual climate control system

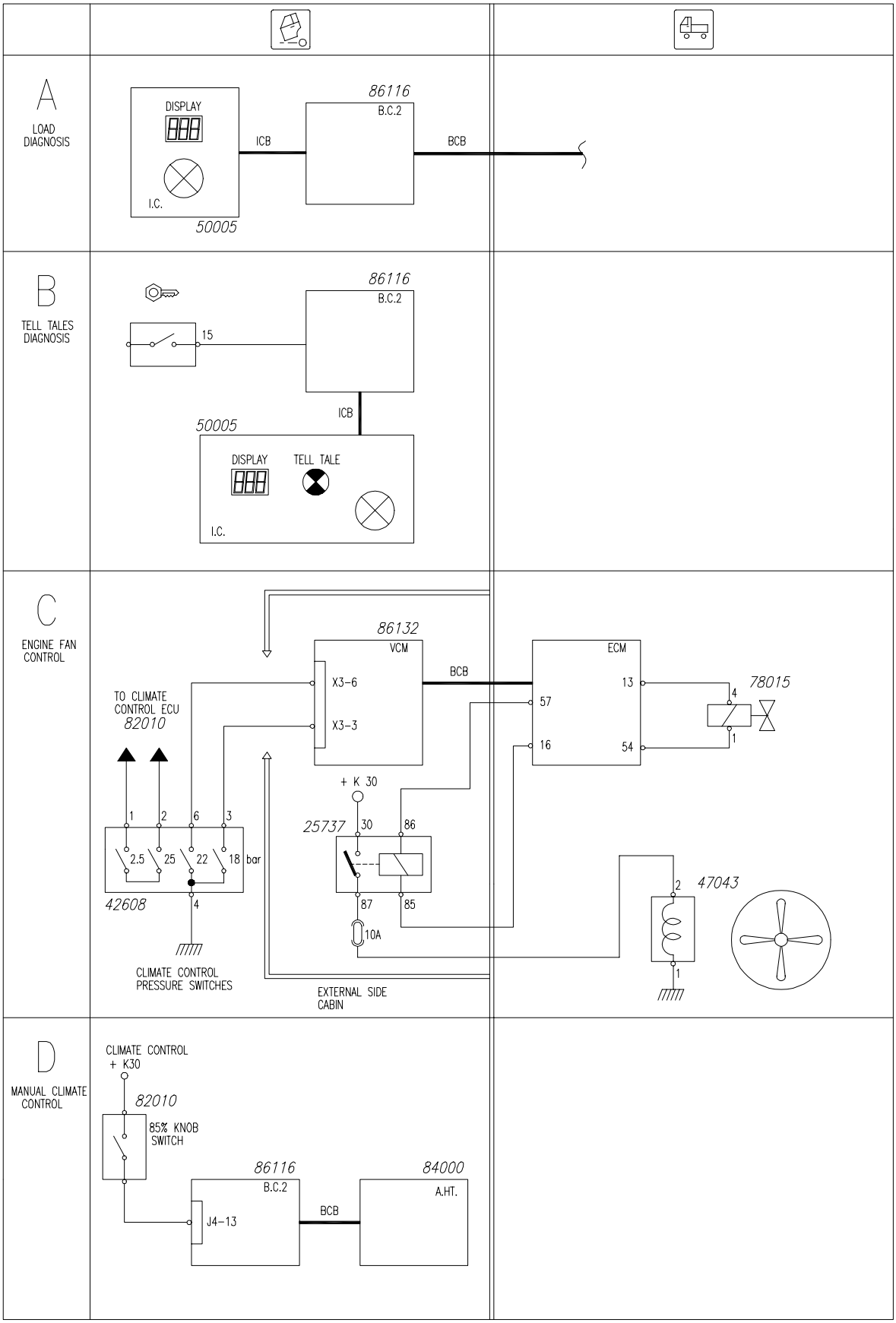

113533

https://truckmanualshub.com/

Chart 20: A. Mirror movement and heating
B. Electric windows

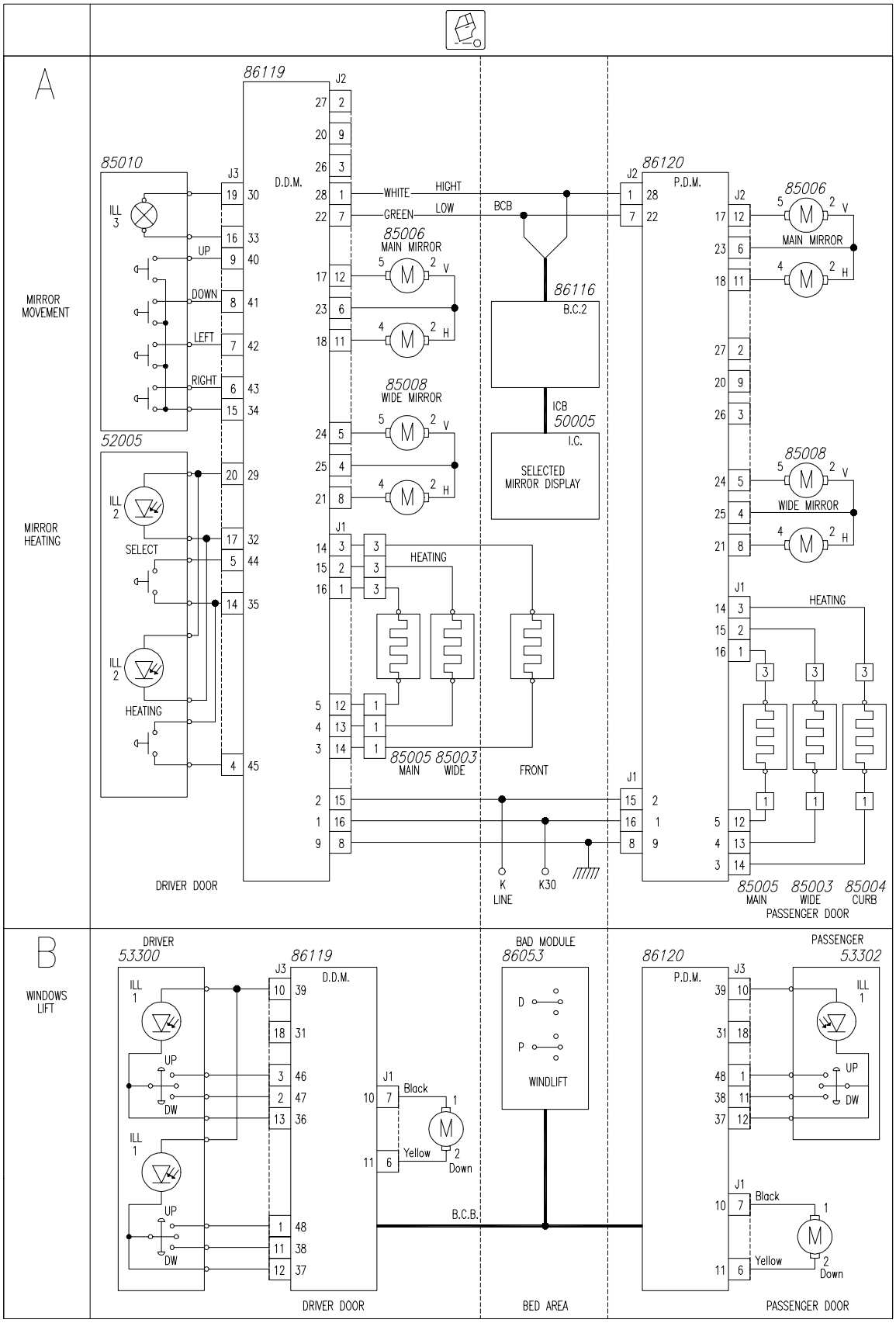

https://truckmanualshub.com/

Chart 21: A. Central locking
B. PDM control unit selection
C. Door module connectors

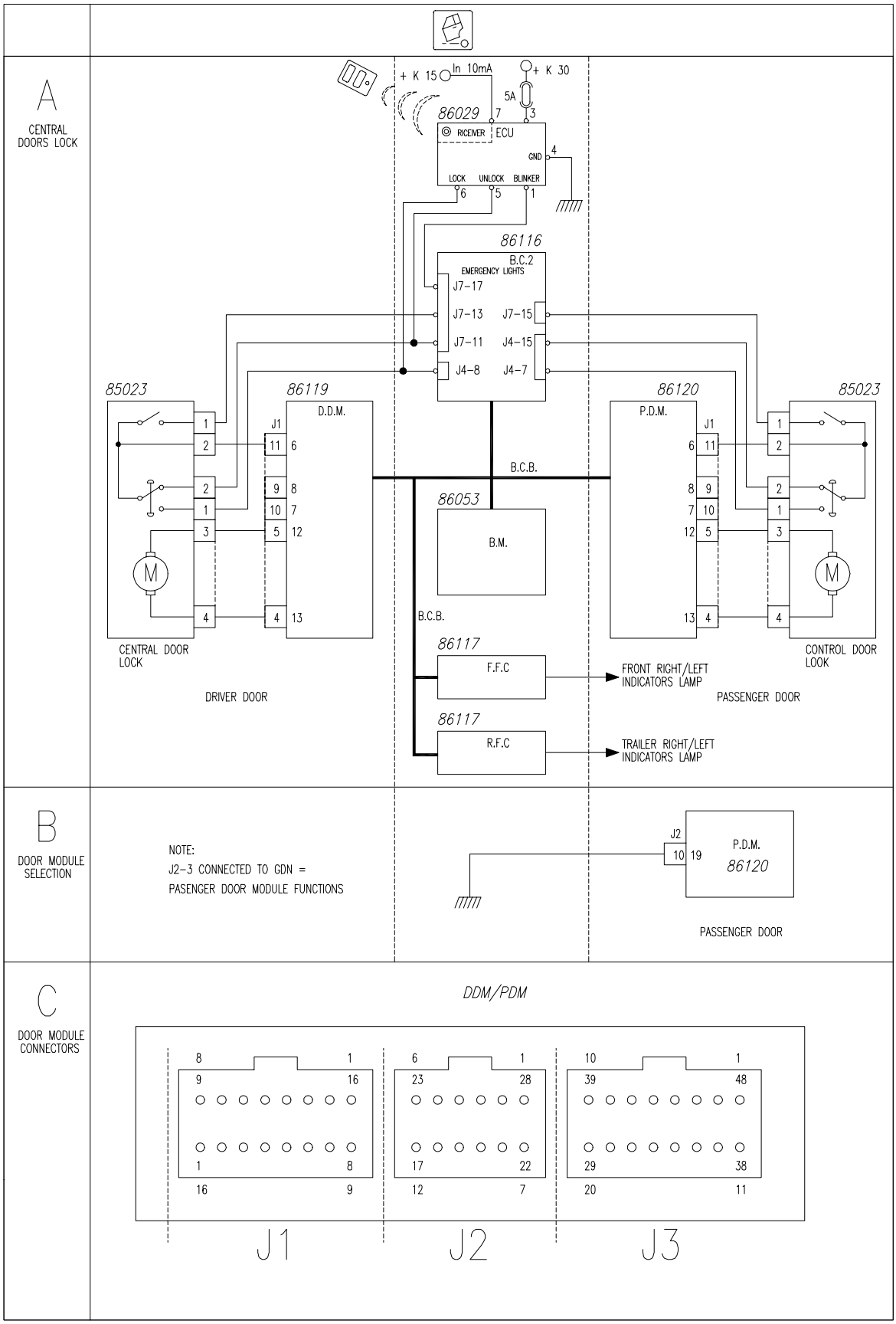

113535

https://truckmanualshub.com/

Chart 22: A. Air suspension
B. ABS function warning light

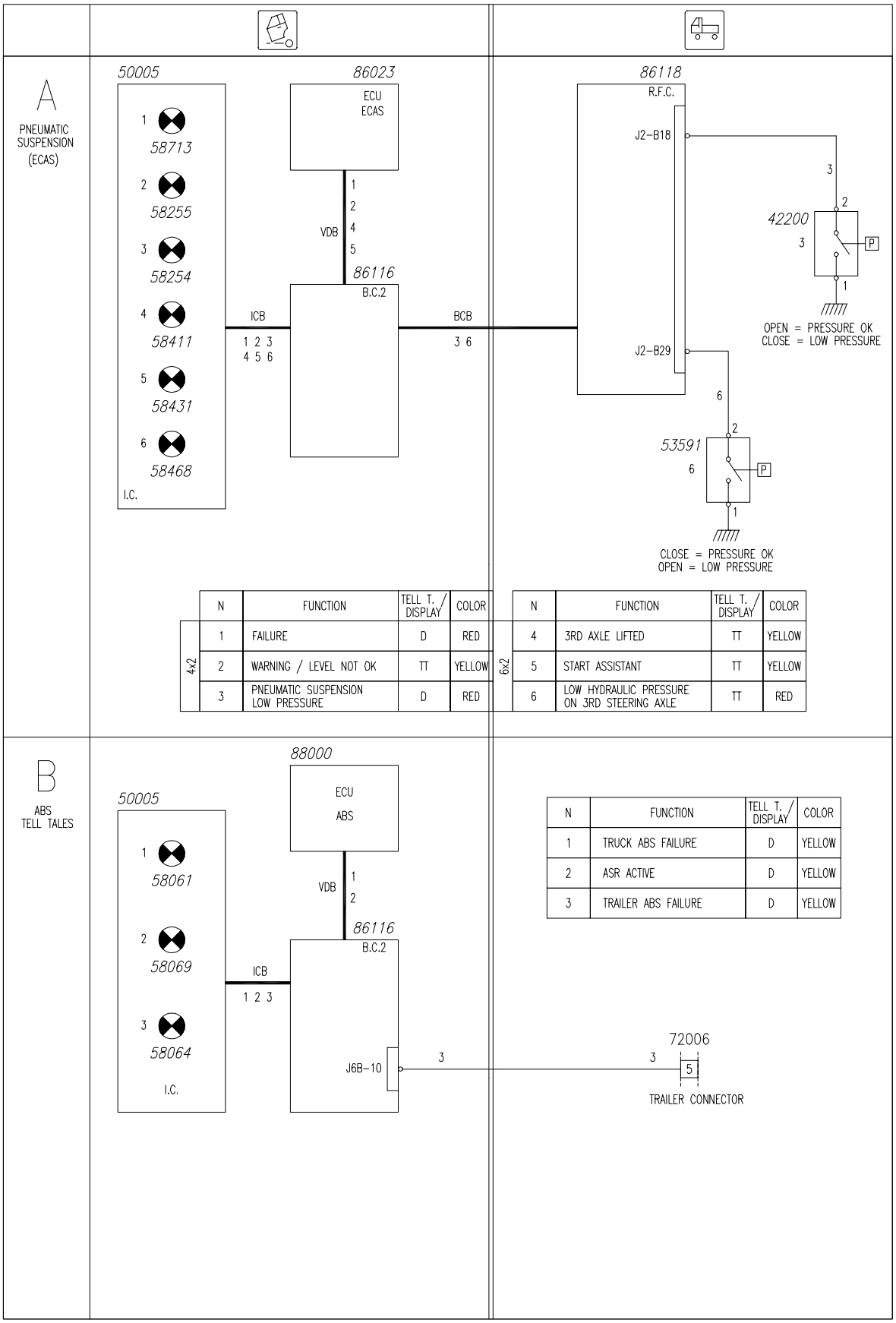

	N	FUNCTION	TELL T. / DISPLAY	COLOR
4x2	1	FAILURE	D	RED
4x2	2	WARNING / LEVEL NOT OK	TT	YELLOW
4x2	3	PNEUMATIC SUSPENSION LOW PRESSURE	D	RED

	N	FUNCTION	TELL T. / DISPLAY	COLOR
6x2	4	3RD AXLE LIFTED	TT	YELLOW
6x2	5	START ASSISTANT	TT	YELLOW
6x2	6	LOW HYDRAULIC PRESSURE ON 3RD STEERING AXLE	TT	RED

N	FUNCTION	TELL T. / DISPLAY	COLOR
1	TRUCK ABS FAILURE	D	YELLOW
2	ASR ACTIVE	D	YELLOW
3	TRAILER ABS FAILURE	D	YELLOW

https://truckmanualshub.com/

Chart 23: A. EBS faults
B. Heated windscreen
D. Engine PTO

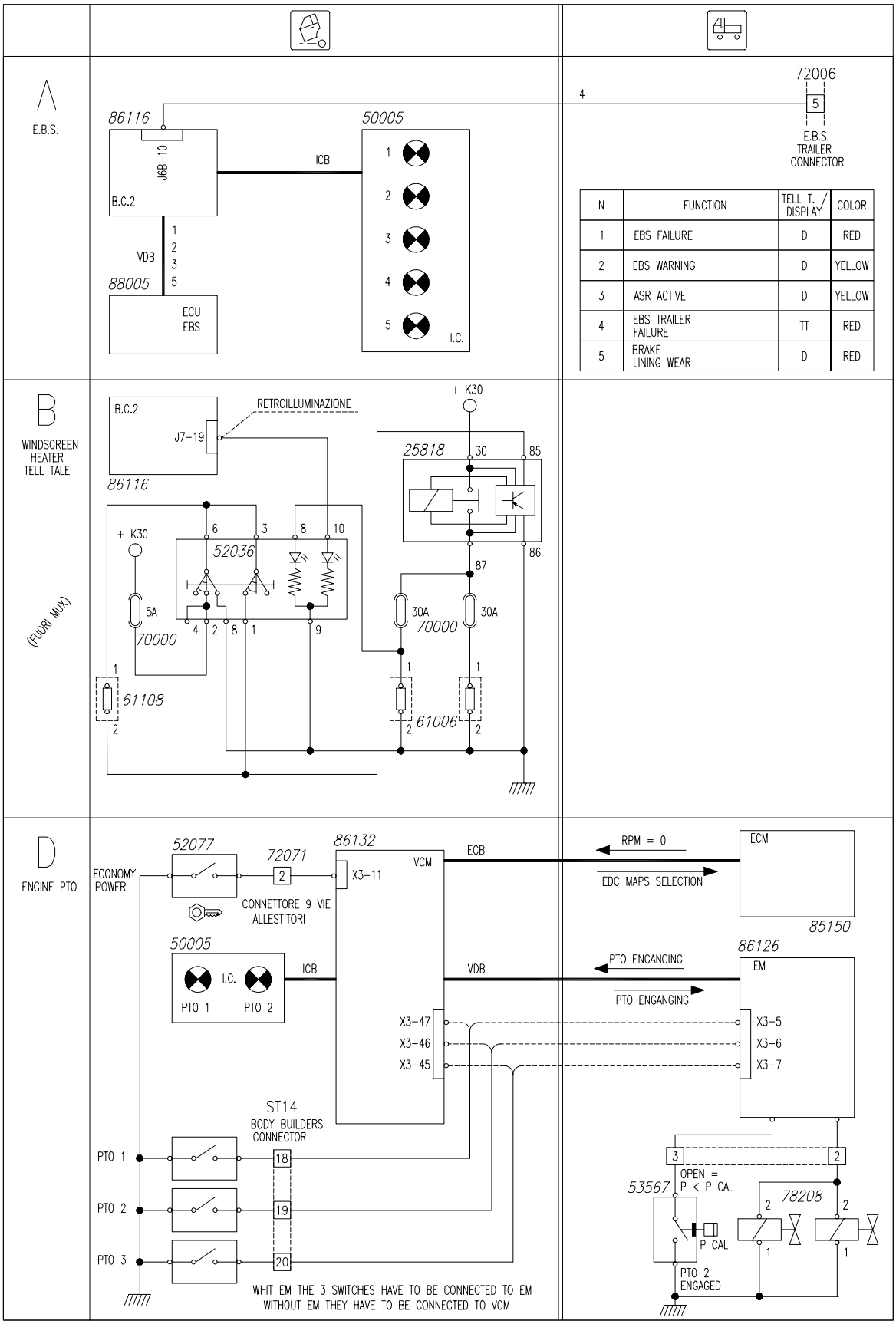

N	FUNCTION	TELL T. / DISPLAY	COLOR
1	EBS FAILURE	D	RED
2	EBS WARNING	D	YELLOW
3	ASR ACTIVE	D	YELLOW
4	EBS TRAILER FAILURE	TT	RED
5	BRAKE LINING WEAR	D	RED

113537

https://truckmanualshub.com/

Chart 24: A. Retarder engagement warning light
B. Fuel filter blocked information display
D. Cab tilt

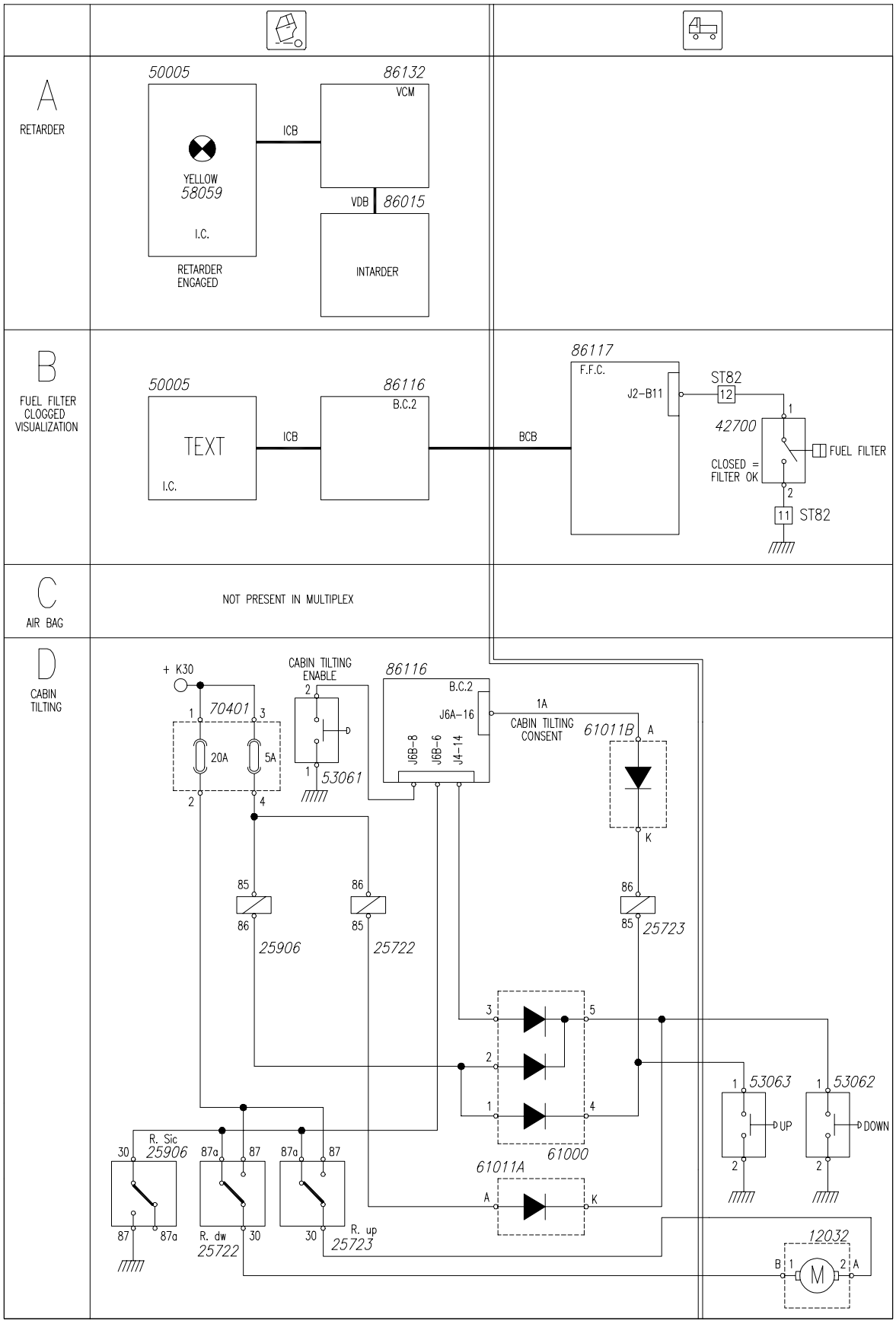

113538

https://truckmanualshub.com/

Chart 25: A. Brake pressure gauge
B. Axle load information display
D. Exterior temperature display

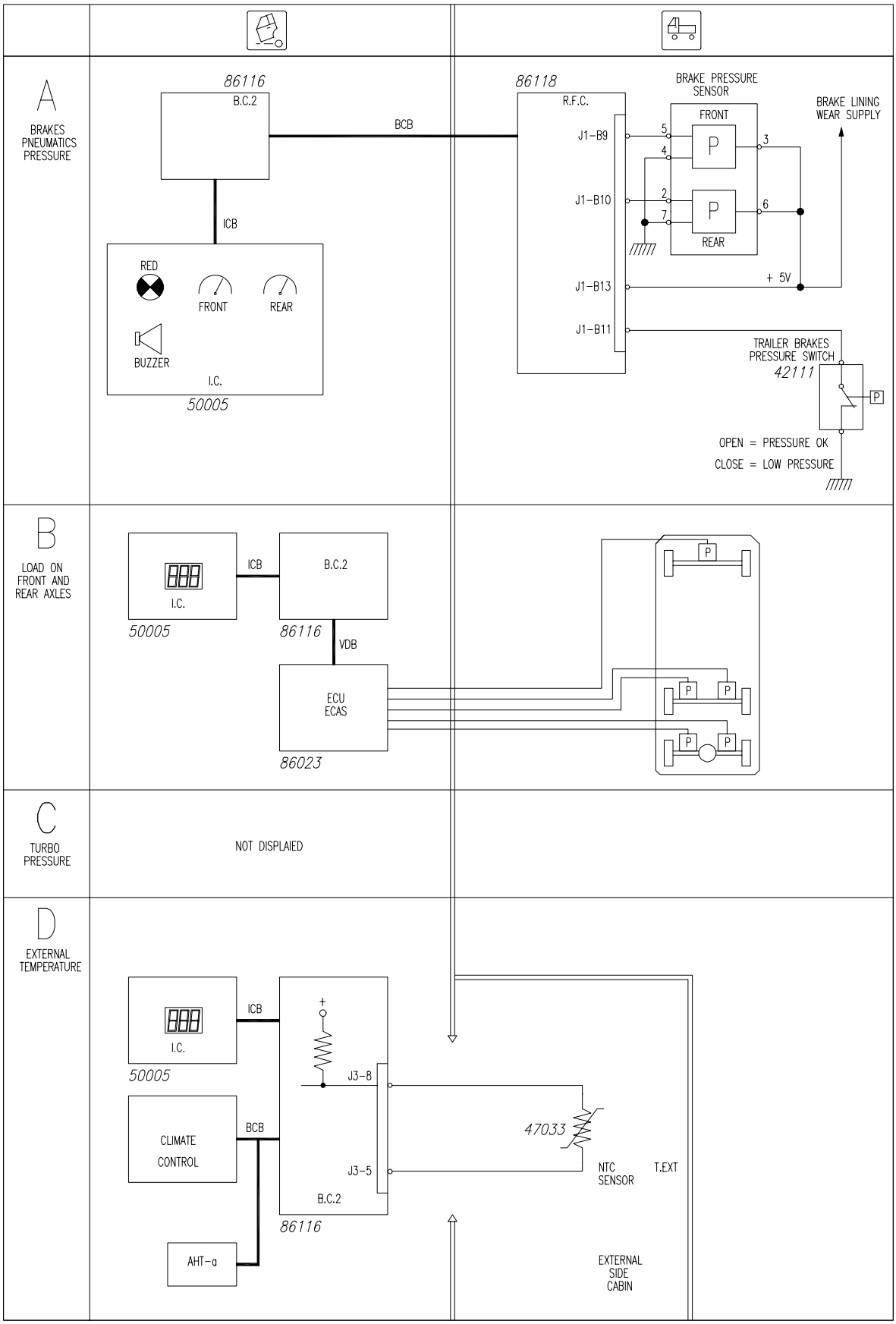

https://truckmanualshub.com/

Chart 26: A. Odometer/trip counter
B. Gearbox
C. Second speed limiters
D. Clutch control

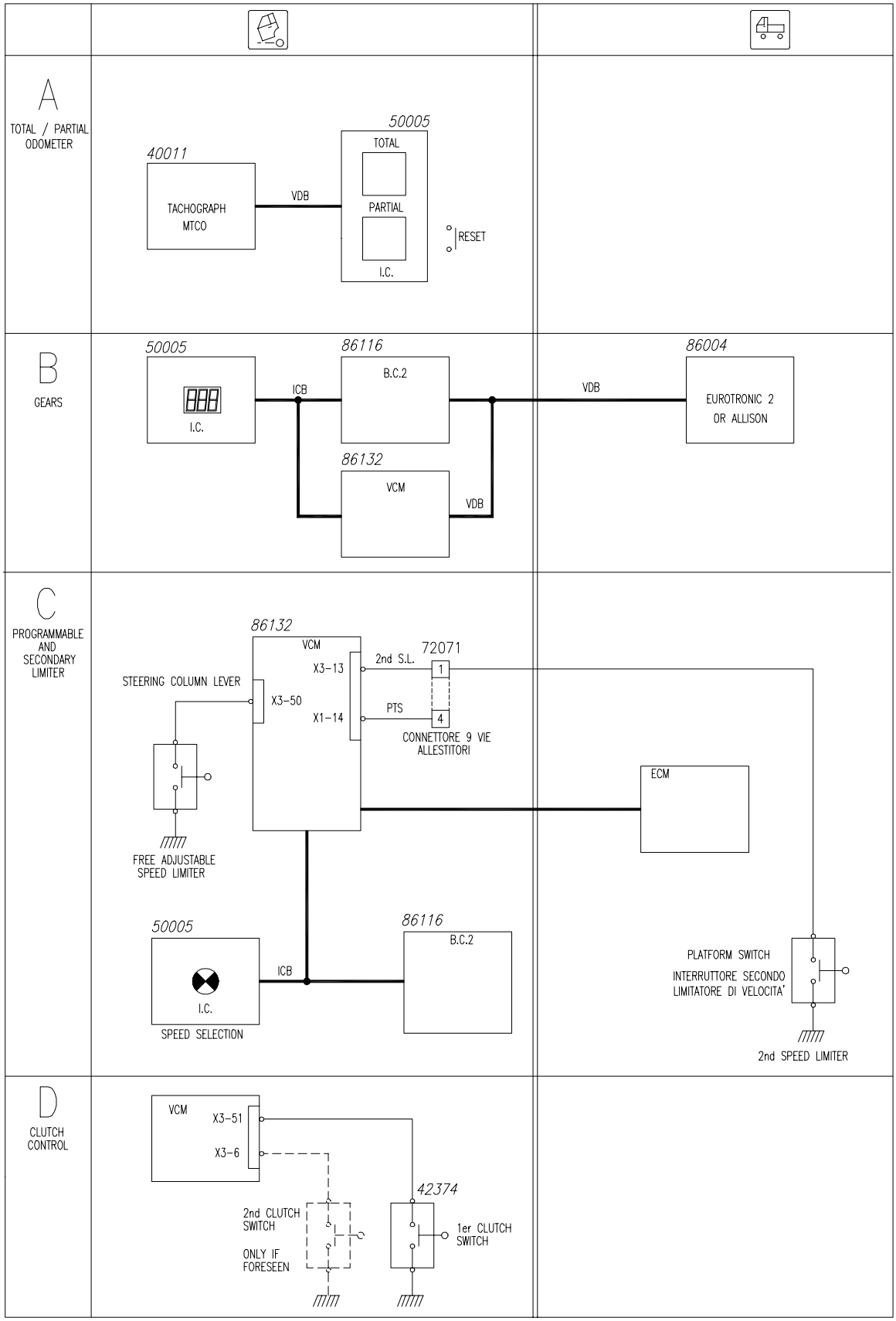

113540

https://truckmanualshub.com/

Chart 27: A. Engine oil temperature
B. Rotary lights
C. Sun blinds

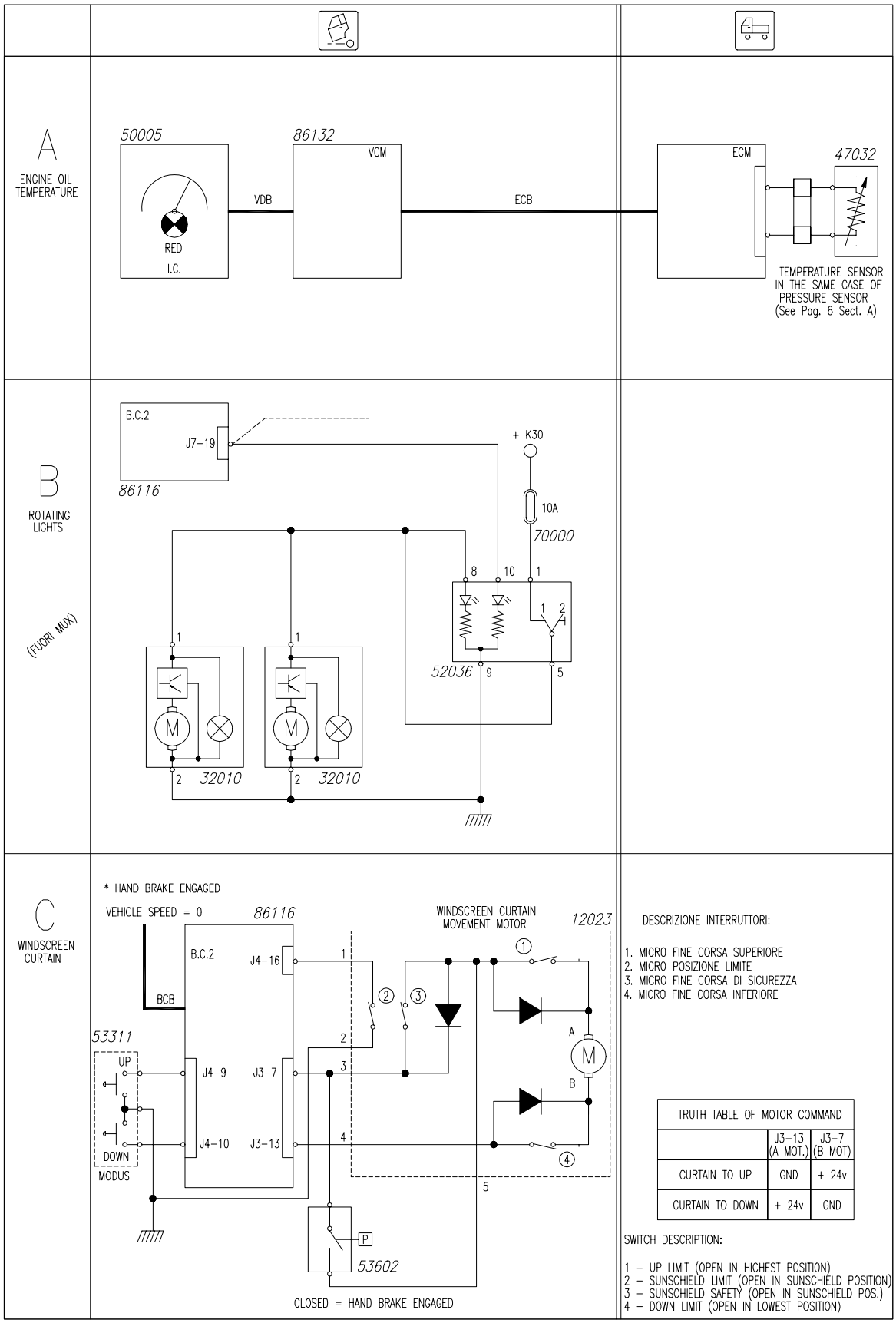

113541

https://truckmanualshub.com/

Chart 28: A. Seat belt warning light
B. Gear selector on steering wheel interface
C. Additional Eurotronic control buttons
D. Spotlights (only with high top)

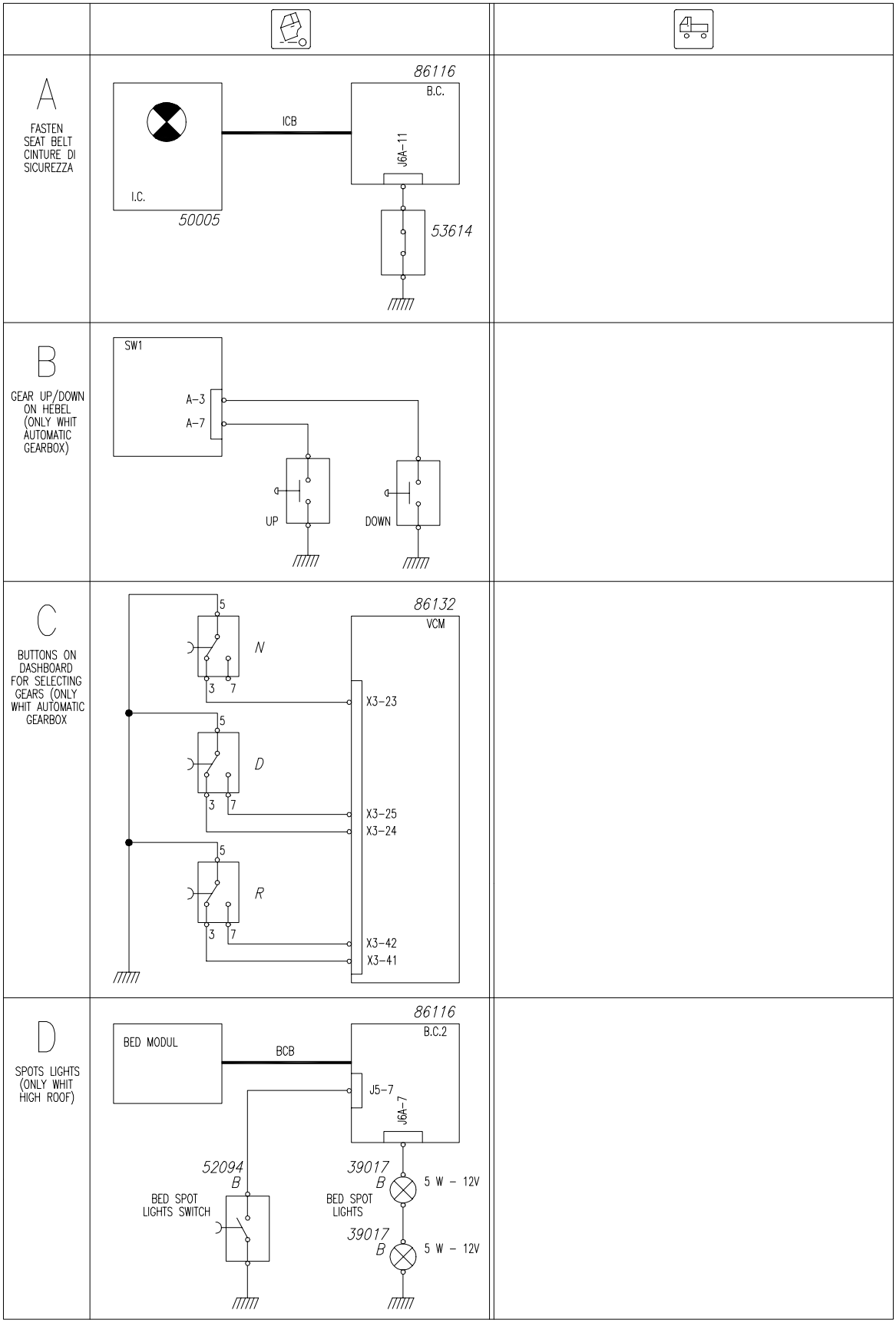

113542

https://truckmanualshub.com/

Chart 29: A. H gearlever

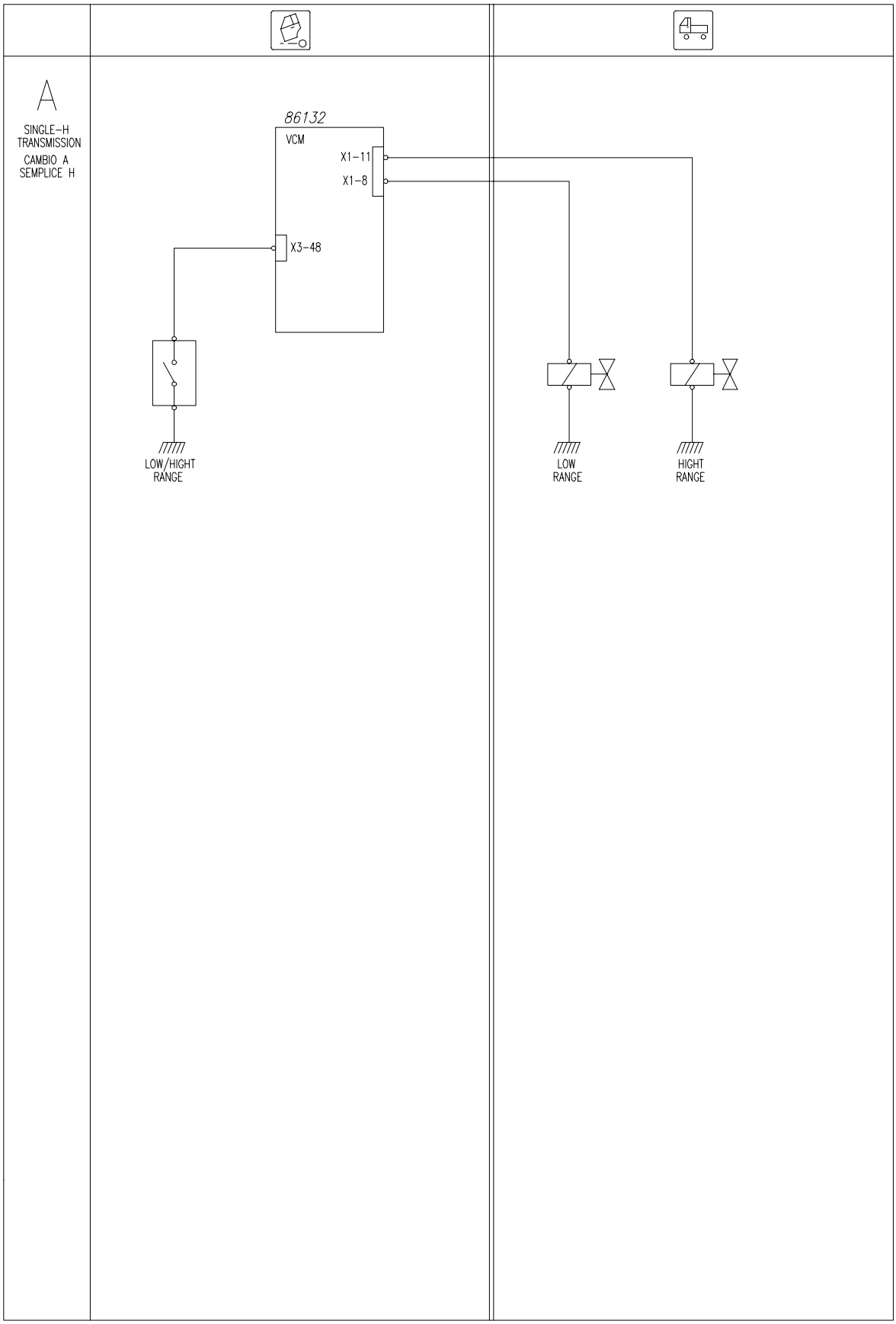

113543

https://truckmanualshub.com/

Chart 30: A. BC CAN lines
B. VCM CAN lines

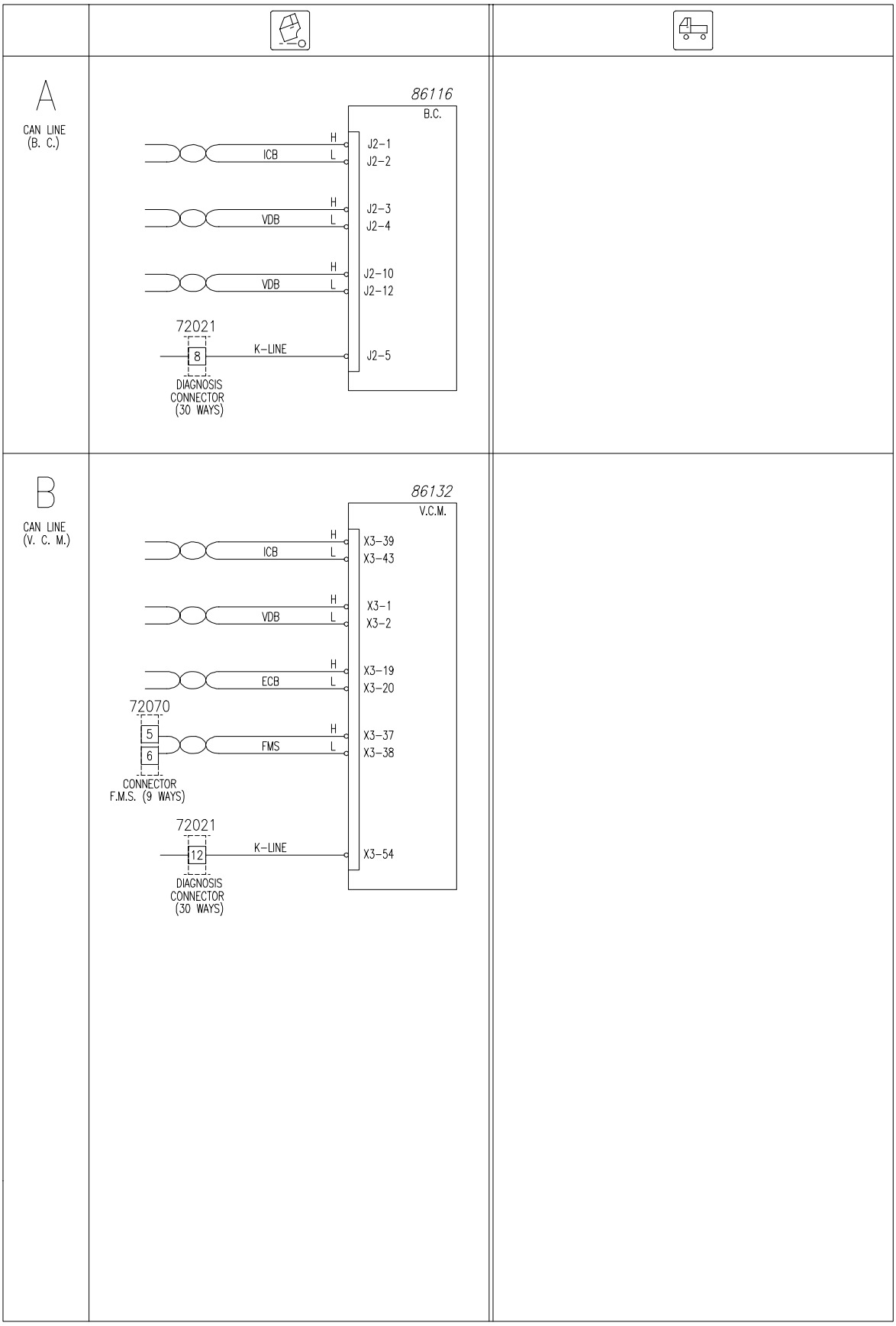

113544