https://truckmanualshub.com/

Kalmar

Maintenance manual

A Foreword

B Safety

C Preventive maintenance

0 Complete machine

1 Engine

2 Transmission

3 Driveline/axle

4 Brakes

5 Steering

6 Suspension

7 Load handling

8 Control system

9 Frame, body, cab and accessories

10 Common hydraulics

11 Common electrics

12 Common pneumatics

D Error codes

E Schematics

F Technical data

G Terminology and index

https://truckmanualshub.com/

https://truckmanualshub.com/

Table of Contents A Foreword

Foreword **3**
About the Maintenance Manual 3
General 3
Conditions 3
Storage 3
About the machine version 3
Copyright 3
Reading instructions 4
Warning information 4
Important information 4
Read operator's manual 4
Read maintenance manual 4
Maintenance manual's content 5
Function group structure 6
References between different information types 7
Product alternatives and optional equipment 7
Machine card 8
Function descriptions 9
About the documentation 12
Documentation sections 12
Ordering of documentation 12
Feedback 13
Form for copying 13

https://truckmanualshub.com/

https://truckmanualshub.com/

Foreword

About the Maintenance Manual

General

Thank you for choosing Kalmar Industries as your machine supplier. We hope that we'll meet your expectations.

This maintenance manual contains information about how the machine should be maintained for maximal operating reliability and service life as well as troubleshooting information for fast correction of any malfunctions.

Conditions

The instructions are based on the use of generally available standard tools. All lifting devices, for example, slings, straps, ratchet blocks, etc., must meet governing national standards and regulations for lifting devices.

Kalmar Industries will not accept any responsibility for modifications performed without permission from Kalmar Industries or if other lifting devices, tools or work methods are used other than those described in this manual.

Storage

NOTE

The maintenance manual shall be accessible to service personnel.

About the machine version

The information in this publication corresponds to the machine's design and appearance at the time of delivery from Kalmar Industries. Due to customizations, there may be variations and/or deviations.

Kalmar Industries reserves the right to modify specifications and equipment without prior notice. All information and data in this manual are valid at the time of publication.

Copyright

Kalmar Industries AB

Duplication of the content in this manual, in whole or in part, is strictly prohibited without written permission from Kalmar Industries AB.

Duplication by any means such as copying, printing, etc., is prohibited.

https://truckmanualshub.com/

Reading instructions

Warning information

Warnings inform on potential dangers which can, if the warnings are not heeded, result in personal injury or product damage.

DANGER

Situation that may result in serious personal injury, possible death, if the instruction is not followed.

WARNING

Situation that may result in serious personal injury if the instruction is not followed.

CAUTION

Situation that may result in damage to the product if the instruction is not followed.

Important information

Important information marked with NOTE facilitates the work process, operation/handling or increases understanding of the information.

NOTE

Information that is important without being safety related.

Read operator's manual

000262

Read the operator's manual

The symbol to the left is used in certain cases on the machine and refers to important information in the operator’s manual.

Read maintenance manual

001128

Read the maintenance manual

The symbol to the left is used in certain cases on the machine and refers to important information in the maintenance manual.

https://truckmanualshub.com/

Maintenance manual's content

The information in the maintenance manual is divided in function groups (0-12) to facilitate information searches. The manual is divided in 20 sections A-C, 0-12, D-G. The sections with letters contain specific information that applies to several function groups and is not bound to a function, e.g., section "F Technical data". This is described in greater detail in the table below.

For more information on function groups, see *Function group structure page 6*. The function group is intended to function together with references as search key between different types of information, see *References between different information types page 7*.

A	Foreword	General information about the maintenance manual's purpose, content and reading instructions as well as survey for feedback of views and eventual inaccuracies.
B	Safety	Keep in mind for your safety.
C	Preventive maintenance	General information about preventive maintenance of the machine.
0	Complete machine	Technical description, description of the machine's functions with schematic drawings and explanatory texts for the included components. Overviews with the components' position on the machine. Work instructions for preventive maintenance. Work instructions for checking and adjusting.
1	Engine	
2	Transmission	
3	Driveline/axle	
4	Brakes	
5	Steering	
6	Suspension	
7	Load handling	
8	Control system	
9	Frame, body, cab and accessories	
10	Common hydraulics	
11	Common electrics	
12	Common pneumatics	
D	Error codes	Error code information and instructions for reading error code information.
E	Schematics	Wiring and hydraulic diagrams
F	Technical data	Technical data, conversion tables, information for conversion of units.
G	Terminology and index	General terminology and abbreviations, explanations of terms and abbreviations that may appear in the manual, index for headings in the manual.

https://truckmanualshub.com/

Function group structure

The information in the manual is divided in a structure of functions at different levels, based on the machine's design and use, called function groups.

The upper level (called main group) determines area, e.g., group 7 Load handling. The second level (called two-digit) determines function, e.g., 7.2 Lift and lower. The third and fourth levels are used to break down functions in smaller parts (components).

The function groups' structure for main group and two-digit group level are common for all machines from Kalmar Industries, e.g., 4.3 Servo brake system. Machine-unique adaptations of functions are done at the third and fourth group level, e.g., 4.3.9 Wheel brake and 4.3.9.1 Disc pack. This means that certain function groups (headings) will be left out in the documentation for certain machines since the machine is missing that specific function or component. In turn, this means that there may be skips in the function groups' numbering (e.g., the three-digit heading level 4.8.7 Oil cooler may be included for some machines, but is missing for others).

The function groups are intended to be used as search terms to find different types of information between different sections and manuals. The information in a function group is divided in smaller sections according to the type of content, e.g., description or change.

The maintenance manual and Workshop manual contain different information. The maintenance manual contains only the information needed for preventive maintenance and simpler troubleshooting. The Workshop manual contains more in-depth information and repair instructions.

References between sections in the same manual are indicated with section and group number, e.g., see section *4 Brakes*, group *4.3.9 Wheel brake*". References within a section are indicated with page number, e.g., "see *Sensor fuel level, description page 24*".

References between Maintenance manual and Workshop manual are not given. If more information is desired for a function group, the primary recommendation is to search in the same function group in the other manual. For additional information about where different information types are found and which references are given, see *References between different information types page 7*.

https://truckmanualshub.com/

References between different information types

The maintenance manual contains different types of information and is mainly divided in function groups, see section *A Foreword*.

The basic rule of searching for information is to use function groups to find different types of information regarding the function or component in question. As a complement to this, there are written references according to the below.

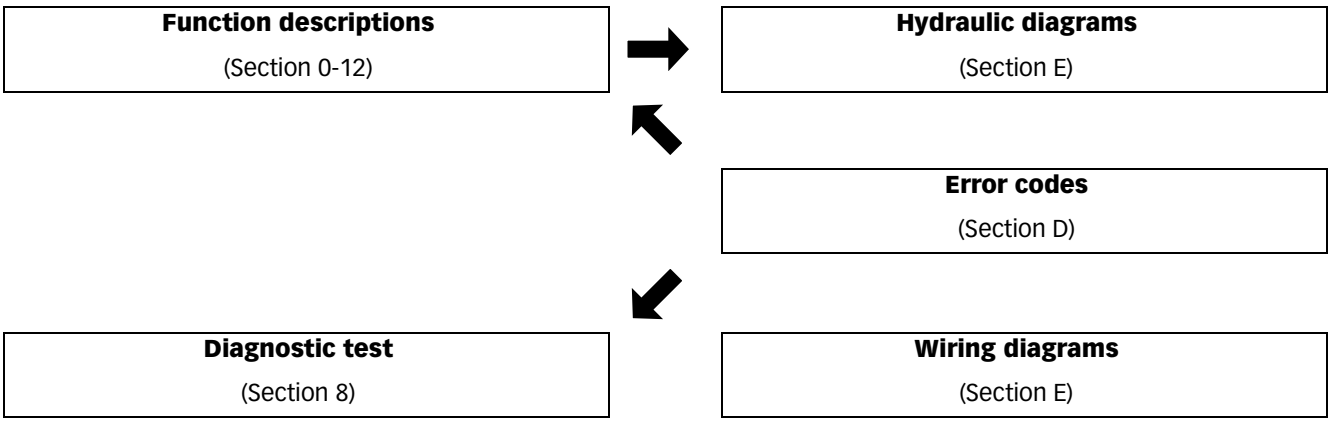

- From Function description to Hydraulic diagram, for hydraulic diagrams of function in question.
- From Error codes to Diagnostic test, for diagnostic menu to troubleshoot component or function in question.
- From Error codes to Function description, for further information about components or function.

Product alternatives and optional equipment

The information in the manual is divided in modules. For product alternatives and optional equipment, handling of the modules differs depending on if it is the one or the other that is described, see below.

Special equipment is not described in the manual. When uncertain about the equipment with which the machine is provided, use the machine card to decide which information applies, see *Machine card page 8*.

Product alternatives

Product alternatives are such options that exclude certain standard equipment (e.g., engine alternative).

Similar information for different product alternatives are described in separate sections following each other in the same function group. To show that there are different alternatives, the added text "Product alternative" is used in the heading, together with a simple description of which alternative is described, e.g., "(Product alternative Air conditioning ECC)". Further, alternatives that are optional equipment are marked with the symbol for optional equipment.

https://truckmanualshub.com/

Symbol indicating optional equipment

000264

Optional equipment

Optional equipment are options that can be added to the standard equipment to obtain additional or improved functions.

Information for optional equipment is described in separate sections with standard equipment as the starting point. The description of the optional equipment describes how the standard function is affected by the option as well as which components are added.

Machine card

NOTE

If the machine has been modified after delivery the information on the machine card may be lacking or incorrect.

The machine card indicates of which drawings the machine consists, in many cases these can be connected to options and product alternatives. For more information about handling of product alternatives and optional equipment, see *Product alternatives and optional equipment page 7*. The machine card is delivered with the parts catalogue and shall be kept in the cab.

The machine card is divided in the same functions groups as the parts catalogue, maintenance and Workshop manual. For practical reasons, the machine card uses only the first and second level in the function group register. The function groups are written in groups of four characters, e.g. group 0107 matches group 1.7 Cooling system in the manual.

For more information about how the machine card is used for ordering spare parts, see the parts catalogue's foreword.

If the information on the machine card does not help, contact Kalmar Industries AB.

NOTE

All documents that accompany the machine are non-registered documents and there will be no notification of changes.

https://truckmanualshub.com/

Function descriptions

Function descriptions are schematic overviews that describe how a function works as well as which components and signals work together.

Function descriptions describe the function in a logical flow from input signal to desired output signal. Most functions require that preset conditions are fulfilled for the function to be activated. In these cases, the conditions are listed above the illustration.

Function descriptions use symbols to illustrate components such as valves, sensors, etc.

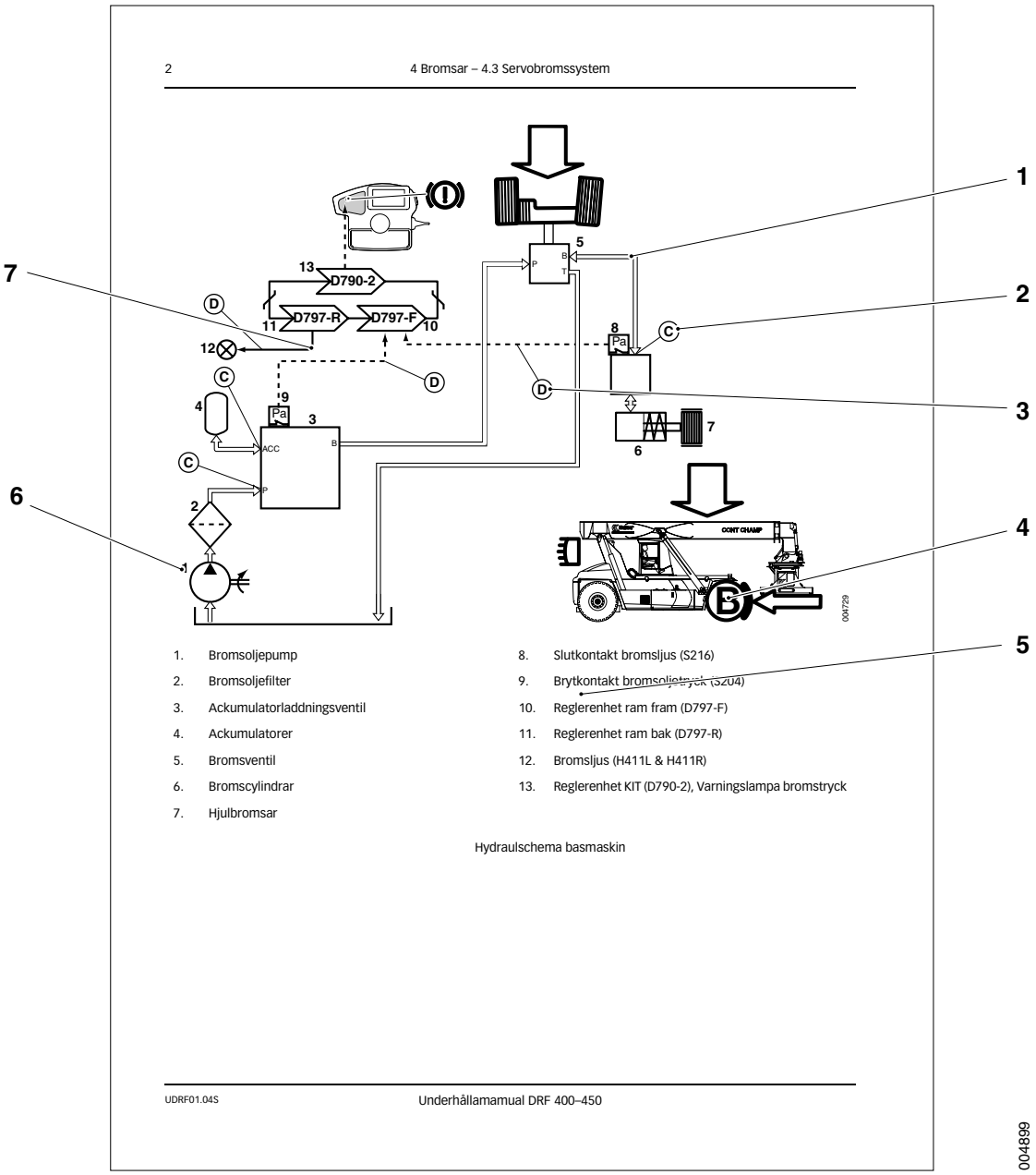

Example of function description

https://truckmanualshub.com/

1. Hydraulic force (solid double line)
2. Flag pressure check connection (Check point), indicates that there is pressure check connection for checking pressure signal
3. Flag diagnostic test, indicates that signal can be checked with diagnostic test, see section *8 Control system,* group *8.4 Diagnostics*
4. Illustration of function, (applied brake)
5. Component list
6. Position number in illustration, reference to component list
7. Electric power (solid single line)

https://truckmanualshub.com/

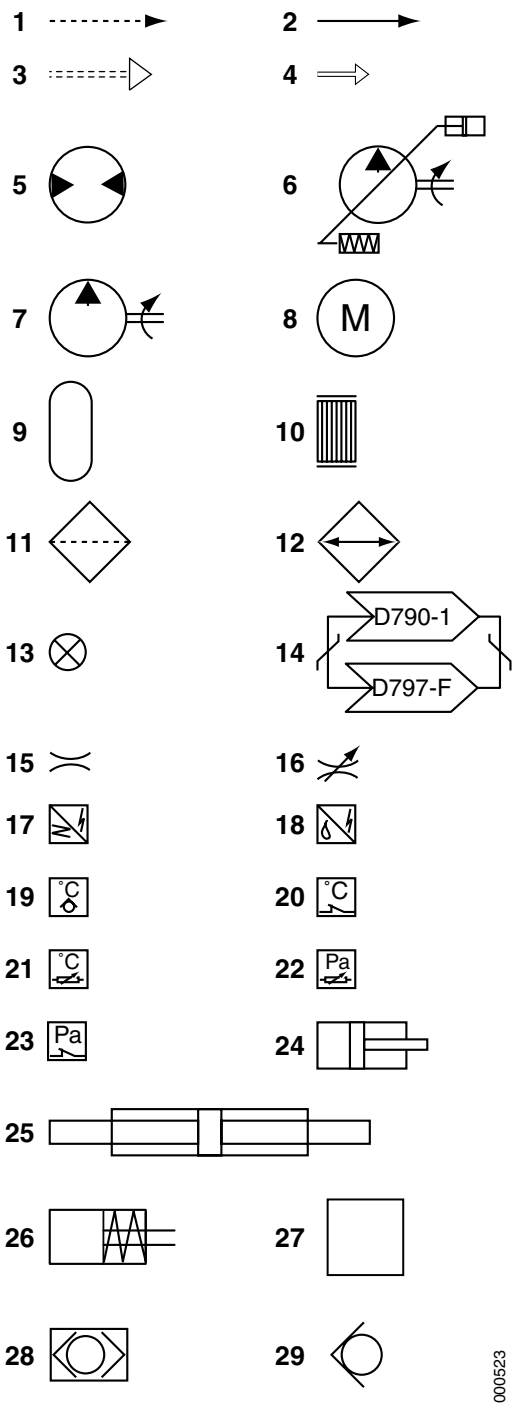

Symbol explanation function descriptions

The following symbols are used in function descriptions, the symbols are based on standard symbols used in wiring and hydraulic diagrams.

1. Electric control signal
2. Electric force
3. Hydraulic control signal
4. Hydraulic force
5. Hydraulic motor
6. Hydraulic oil pump with variable displacement
7. Hydraulic oil pump with fixed displacement
8. Electric motor
9. Accumulator
10. Disc brake
11. Filter
12. Radiator
13. Bulb
14. Control system, two control units with CAN-buss
15. Restriction
16. Adjustable restriction
17. Inductive position sensor
18. Electrically controlled servo valve
19. Thermal by-pass valve
20. Temperature-controlled switch
21. Temperature sensor
22. Pressure sensor
23. Pressure-controlled switch
24. Hydraulic cylinder
25. Double-acting hydraulic cylinder
26. Spring brake cylinder
27. Valve block
28. Shuttle valve
29. Non-return valve

https://truckmanualshub.com/

About the documentation

Documentation sections

The documentation to the machine comprises the following sections:

Operator's manual

The Operator's manual is supplied with the machine in the cab.

Documentation kit

Maintenance manual and spare parts catalogue with machine card are supplied with the machine as a separate documentation kit.

Supplementary documentation

There are Supplementary documentation that can be ordered for the machine in the form of a Workshop manual. The Workshop manual includes supplier documentation for engine, transmission and drive axle.

Ordering of documentation

Extra copies and supplementary documentation is ordered from Kalmar Industries.

Kalmar Industries AB

SE-341 81 Ljungby, Sweden.

NOTE

If possible, always indicate publication number when ordering.

https://truckmanualshub.com/

Feedback

Form for copying

Kalmar Industries' ambition is that you who work with maintenance of Kalmar machines shall have access to correct information.

Your feedback is important to be able to improve the information.

Copy this form, write down your views and send it to us. Thank you for your participation!

To:	**Kalmar Industries AB** **Product Support** **Torggatan 3** **SE-340 10 Lidhult** **SWEDEN** **Fax: +46 372 263 93**
From:	Company / Sender: ..... Telephone: ..... E-mail: ..... Date: ..... - ..... - .....
Manual information	Name / Publication number: ..... Section / page number: .....
Suggestions, views, remarks, etc.	....

https://truckmanualshub.com/

https://truckmanualshub.com/

Table of Contents B Safety

Safety **3**
General safety information 3
Safety concerns everyone! 3
A near-accident is a warning signal! 3
Safety instructions 4
General 4
Service position 4
Hydraulic and brake systems, depressurizing 5
Clothing etc. 6
Several mechanics on the same machine 6
Working under machine 7
Lifting heavy components 7
Vibrations 8
Noise 8
Solvents 9
Fire and explosion risks 9
Fluid or gas under pressure 10
Coolant 11
Refrigerant 12
Air pollution 12
Tensioned springs 13
Electric motors 14
Rotating components and tools 14
Tyre system 15
Environment 16
General 16

https://truckmanualshub.com/

https://truckmanualshub.com/

Safety

General safety information

Safety concerns everyone!

The safety information concerns everyone who works with the machine! Persons who do not follow the safety instructions given in this manual must make absolutely sure that the work is performed without risks of personal injury and without risk of damage to machine or machine property!

Remember to:

- follow the instructions in this manual
- be trained for the work in question
- follow local laws, safety rules and regulations
- use the correct equipment and tools for the job
- wear the correct clothes
- use common sense and work carefully, do not take any risks!

Kalmar Industries has in this publication documented and warned for situations and risks that may occur in connection with using as well as service/repairs of the machine during normal circumstances.

That' s why it's important that all who work with the machine, or repair/service the machine read and follow the information in the manual and operator's manual.

A near-accident is a warning signal!

A near-accident is an unexpected event where neither persons, machine or property are injured or damaged. However, a near-accident indicates that there is an injury risk and actions must be taken to avoid the risk of injuries.

https://truckmanualshub.com/

Safety instructions

General

Read, consider and follow the safety instructions below before starting to work in the machine:

- *Service position page 4*
- *Hydraulic and brake systems, depressurizing page 5*
- *Clothing etc. page 6*
- *Several mechanics on the same machine page 6*
- *Working under machine page 7*
- *Lifting heavy components page 7*
- *Vibrations page 8*
- *Noise page 8*
- *Solvents page 9*
- *Fire and explosion risks page 9*
- *Fluid or gas under pressure page 10*
- *Coolant page 11*
- *Refrigerant page 12*
- *Air pollution page 12*
- *Tensioned springs page 13*
- *Electric motors page 14*
- *Rotating components and tools page 14*
- *Tyre system page 15*

Service position

General

Service position is used for service, maintenance and other situations when the machine needs to be secured.

Service position means:

- Machine parked, that is, parking brake applied.
- Boom fully retracted and lowered to horizontal position.
- Engine off.
- Main electric power off (with battery disconnector).

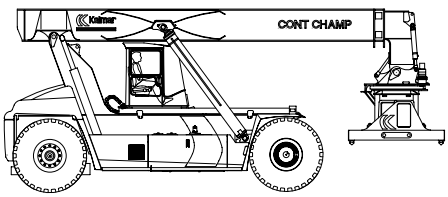

003603

Machine with fully retracted and lowered boom

https://truckmanualshub.com/

Hydraulic and brake systems, depressurizing

1 Machine in service position.

2 Depressurize the hydraulic system.

Turn the start key to position I and activate extension out, a distinct hissing sound is heard if there is pressure in the hydraulic system. Activate lift, extension and sideshift several times.

3 Turn the start key to position 0 and turn off the main electric power.

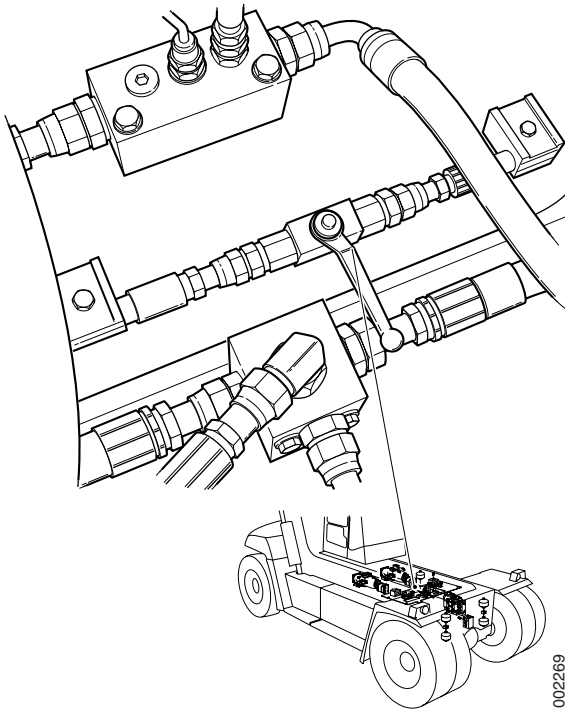

4 Depressurize the attachment.

Open the relief valve top lift.

The above illustration shows closed valve.

https://truckmanualshub.com/

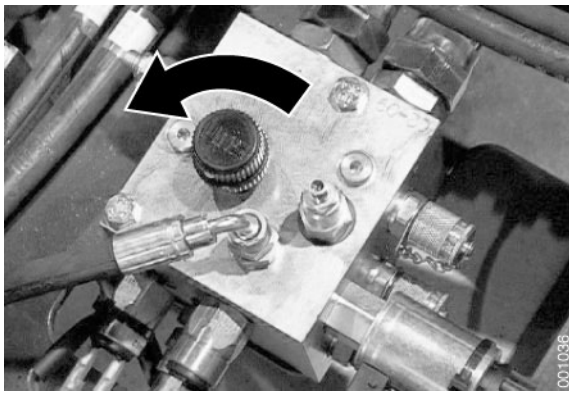

5 Depressurize the brake system by opening the drain valve on the accumulator charging valve.

NOTE

Keep the drain valve open as long as work is in progress.

Clothing etc.

Clothes should be in good condition. Remove loosely hanging clothing (tie, scarf, etc.). Do not wear clothes with wide sleeves, wide trouser legs, etc.

Remove jewelry as it may conduct electricity and get caught in moving parts.

Long hair must be tied up securely, otherwise it may easily get caught in moving parts. Be careful when performing welding work or work requiring open flames since hair catches fire easily.

Several mechanics on the same machine

WARNING

Be extra careful if several mechanics work on the same vehicle, so that unintentional movements do not injury another person. Communicate so that everyone knows where all are and what they are doing.

Risks

Work with wheels or axle suspension, mountings, etc. may result in components on the other side moving and causing damage/injury.

Movements performed from the operator's station, e.g., movement of lifting equipment, may cause severe personal injuries.

Safety actions

- Make sure that the machine's lifting equipment is completely lowered or secured in another way.
- Move battery disconnector to position zero, remove the key.
- Be aware of the risks when several persons work around the vehicle.
- Make your co-workers aware of what you're working with.
- Do not work with drive wheels on the machine's both sides at the same time.

https://truckmanualshub.com/

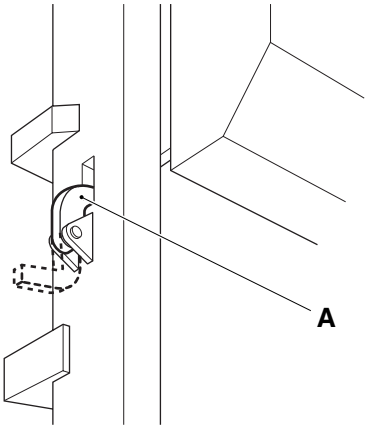

Lock on lift frame for securing cab in raised position.

Working under machine

Working under cab

On machines with cab lift the machine shall be secured in raised position with the intended locks.

Working under chassis

A lifted/raised vehicle may under no circumstances be supported or lifted in parts that belong to the wheel suspension or steering. Always support under the frame or wheel axle.

Risks

Mechanical or hydraulic tools and lifting devices can fall over or accidentally be lowered due to malfunctions or incorrect use.

Safety actions

Use axle stands and supports that stand securely.

Lifting tools should be inspected and type approved for use.

Lifting heavy components

WARNING

Careless handling of heavy components can lead to serious personal injury and material damage.

Use type approved lifting tools or other devices to move heavy components. Make sure that the device is stable and intact.

Risks

Unsuitable lift slings, straps, etc. may break or slip.

The centre of gravity (balance point) of the component can change during the course of the work, and the component may then make unexpected movements which may cause severe personal injuries and material damage.

A component lifted with lifting equipment can start to turn if the equilibrium is upset.

A component lifted using an overhead crane may start to swing back and forth, which can cause severe crushing injuries or material damage.

https://truckmanualshub.com/

Safety precautions

Lift using a lifting device. Use lifting tools or equipment, especially when such equipment is available for specific work operations. See the workshop manual for methods.

If lifting must be performed without lifting device:

- Lift near the body.
- Keep your back vertical. Raise and lower with legs and arms, do not bend your back. Do not rotate your body while lifting. Ask for assistance in advance.
- Wear gloves. They're good protection against minor crushing injuries and cuts to fingers.
- Always use protective shoes.

Vibrations

In case of long-term use of vibrating tools, for example, impact nut runners or grinders, injuries may be sustained as vibrations can be transmitted from tools to hands. Especially when fingers are cold.

Safety actions

Use heavy gloves to protect against cold and somewhat against vibrations.

Switch between work duties to give the body time to rest.

Vary work position and grip so that the body is not stressed in only one position by the vibrations.

Noise

Noise louder than 85 dB (A) that lasts for longer than 8 hours is considered harmful to hearing. (Limit values may vary between different countries.) High tones (high frequencies) are more damaging than low tones at the same sound level. Impact noise can also be hazardous, e.g. hammer blows.

Risks

At noise levels higher than the limits hearing damage can occur. In more severe cases, hearing damage can become permanent.

Safety precautions

Use hearing protection. Make sure that it is tested and protects against the noise level in question.

Limit noise with noise-absorbing dividers, for example, noise-absorbing materials in roof and on walls.

https://truckmanualshub.com/

Solvents

Fluids that (as opposed to water) dissolve grease, paint, lacquer, wax, oil, adhesive, rubber, etc. are called organic solvents. Examples: White (petroleum) spirits, gasoline, thinner, alcohols, diesel, xylene, trichloroethylene, toluene. Many solvents are flammable and constitute a fire hazard.

Risks

Products containing solvents produce vapors that can cause dizziness, headaches and nausea.They may also irritate mucous membranes in the throat and respiratory tracts.

If the solvent comes into direct contact with the skin, this may cause drying and cracking.Risk for skin allergies increases. Solvents may also cause injury if they penetrate through the skin and are absorbed by the blood.

If the body is continuously exposed to solvents, the nervous system may be damaged. Symptoms include sleep disorders, depressions, nervousness, poor memory or general tiredness and fatigue. Continuous inhalation of gasoline and diesel fumes is suspected to cause cancer.

Safety precautions

Avoid inhaling solvent fumes by providing good ventilation, or wearing a fresh-air mask or respiratory device with a suitable filter for the toxic gases.

Never leave a solvent container without tight-sealing lid.

Use solvents with low content of aromatic substances. This reduces the risk of injuries.

Avoid skin contact.

Use protective gloves.

Make sure that work clothes are solvent-resistant.

Fire and explosion risks

Examples of explosion-prone substances are oils, petrol, diesel fuel, organic solvents (lacquer, plastic, cleaning agents), rustproofing agents, welding gas, gas for heating (acetylene), high concentration of dust particles of combustible materials. Rubber tyres are highly flammable and cause fires that spread explosively.

Risks

Examples of causes of ignition include welding, cutting, smoking, sparks produced by grinding, inflammable materials coming into contact with hot machine parts, the generation of heat in rags saturated with oil or paint (linseed oil) and oxygen.Oxygen cylinders, lines and valves must be kept free from oil and grease.

Fumes from gasoline, for example, are heavier than air and can thus “run down” a sloping grade, or down into a grease pit, where welding flames, grinding sparks or a burning cigarette can cause an explosion. Evaporated gasoline has a very powerful explosive force.

https://truckmanualshub.com/

Special cases

Diesel fuel oil with an additive of petrol has a reduced flash point. Explosion risk even at room temperature. The explosion risk due to warmed diesel fuel oil is greater than for gasoline.

When changing oil in the engine, hydraulic system and transmission, keep in mind that the oil may be hot and can cause burn injuries.

Welding on or near the machine. If diesel or other oils have leaked out and have been absorbed by rags, absorbing agent, paper or other porous material, glowing welding sparks can cause ignition and an explosive spread of fire.

When a battery is being charged, the battery electrolyte water is divided into oxygen and hydrogen gas. This mixture is very explosive. The risk of explosion is especially high when a booster battery or a rapid-charge unit is used, as these increase the risk of sparks.

The machines nowadays contain a lot of electronic equipment. During welding work, the control units must be disconnected and current turned off using the battery disconnect switch. Otherwise, strong welding currents can short-circuit the electronics, destroy expensive equipment, and may also cause an explosion or fire.

Welding work must never be carried out on painted surfaces (remove paint by blasting at least 10 cm around the welding or cutting point.) Use gloves, breathing protection and protective safety glasses. Also, welding work must never take place near plastic or rubber materials without first protecting them from the heat. Paints, plastics and rubber generate various substances when heated that may be hazardous to health. Be careful with machines that have been exposed to intense heat or a fire.

Safety precautions

Store hazardous substance in approved and sealed container.

Make sure that there is no ignition source near flammable or explosive substances.

Make sure that ventilation is adequate or there is an air extraction unit when handling flammable substances.

Fluid or gas under pressure

High-pressure lines can be damaged during work, and fluid or gas can stream out.

There may be high pressure in a line even if the pump has stopped. Therefore, gas or fluid can leak out when the connection to the hose is loosened.

A gas cylinder subjected to careless handling can explode, for example, if it falls onto a hard surface. Gas can stream out through damaged valves.

https://truckmanualshub.com/

Risks

There are injury risks in connection with work on:

- Hydraulic system (for example, working hydraulics and brake system).
- Fuel system.
- Tyre repairs.
- Air conditioning.

Safety precautions

- Use safety glasses and protective gloves.
- Never work in on a pressurized system.
- Never adjust a pressure limiting valve to a higher pressure than recommended by the manufacturer.
- A hydraulic hose that swells, for example, at a connection, is about to rupture. Replace it as soon as possible! Check connections thoroughly.
- Use fluid when checking for leaks.
- Never blow clothes clean with compressed air.
- Discarded pressure accumulators must first be punctured before they are deposited as waste (to avoid risk of explosion). Carefully drill a hole with 3 mm diameter after depressurizing.
- Never use your hands directly to detect a leak.A fine high-pressure stream from a hydraulic hose can easily penetrate a hand and causes very severe injuries.

Coolant

The coolant in the machine's cooling system consists of water, anti-corrosion compound and (when needed) anti-freeze fluid, for example, ethylene glycol.

Coolant must not be drained into the sewer system or directly onto the ground.

Risks

The cooling system operates at high pressure when the engine is warm. Hot coolant can jet out and cause scalding in case of a leak or when the expansion tank cap (filler cap) is opened.

Ingesting ethylene glycol and anti-corrosion compound is dangerous and hazardous to health.

Safety precautions

- Use protective gloves and safety glasses if there is a risk of splashing or spraying.
- Open the filler cap first, to release the excess pressure. Open carefully.Hot steam and coolant can stream out.
- If possible, avoid working on the cooling system when the coolant is hot.

https://truckmanualshub.com/

Refrigerant

Refrigerant is used in the machine's air conditioning system.

Work on the air conditioning system must be performed by accredited/authorised and trained personnel according to national legislation and local regulations.

Risks

The air conditioning operates at high pressure. Escaping refrigerant can cause frostbite.

Refrigerant that is heated (e.g., when repairing leaking climate/AC system), generates gases that are very dangerous to inhale.

Safety actions

- Use special instructions and equipment for refrigerant according to the manual when working on the air conditioning system. Special certification and authorization is often required of the person who may do the work. (Note national legislation and local regulations!)
- Use protective gloves and safety glasses if there's a risk of leaks.
- Make sure that heat-producing sources or objects are not close by (cigarette glow, welding flame).

Air pollution

Air pollution is the impurities in the air around us and which are regarded as hazardous to health. Certain pollution is more prominent in certain environments.

The following health-hazardous air pollution is especially prominent in workshops:

- **Carbon monoxide (fumes)** is present in exhaust fumes. Odorless and therefore especially dangerous.
- **Nitrogen oxides (nitrous gases)** are present in exhaust fumes.
- **Welding smoke** especially hazardous to health when welding on oily surfaces, galvanized or lacquered materials.
- **Oil mist** for example, when applying anti-corrosion agent.
- **Grinding dust and gases** generated when grinding and heating plastics, lacquer, anti-corrosion agents, lubricants, paint, etc.
- **Isocyanates** are present in certain paints, fillers, adhesives and foam plastics used on machines.

https://truckmanualshub.com/

Risks

Sulfuric acid mist is corrosive and injures the respiratory tracts. (Generated when heating certain plastics and paints.)

Isocyanates can be released in the form of steam, dust (or may be present in aerosols) when cutting, grinding or welding. Can irritate mucous membranes producing symptoms similar to asthma and impairing lung function. Even brief exposure to high concentrations can give problems with persistent high sensitivity.

Safety precautions

- Make sure of adequate ventilation with fresh air when welding, battery charging and other work when hazardous gases are generated.
- Use suitable gloves and breathing protection when there's a risk of oil mist. Make sure that protective gear is oil-resistant.
- Apply oil-resistant protective lotion to unprotected skin.
- Make sure that an eye-wash station is in the immediate vicinity when working with corrosive substances.
- Avoid unnecessary operation of the machine inside the workshop. Connect an air extractor to the exhaust pipe so that the exhaust fumes are removed from the workshop.

Tensioned springs

Examples of tensioned springs:

1. Torque springs in pedals for example.
2. Return spring (cup springs) in parking brake cylinder.
3. Lock rings
4. Gas springs

Risks

If a tensioned spring releases, it is shot out by the spring force and can also take adjoining parts with it.

Small springs can cause eye injuries.

Parking brake springs are tensioned with high force and can cause very severe accidents if they are accidentally released in an uncontrolled manner.

Gas springs and gas-charged shock absorbers are tensioned with high force and can cause very severe accidents if they are accidentally released in an uncontrolled manner.

Safety precautions

- Use safety glasses.
- Lock rings should be of a suitable type and in good condition.
- Follow the instructions in this and other manual when performing maintenance and changing parts and components.
- Always use recommended tools.

https://truckmanualshub.com/

Electric motors

Safety actions

Always turn off the battery disconnector when working on electric motors.

Always block the machine's wheels, make sure that the parking brake is activated and that the gear selector is in neutral position before starting any work on the machine.

Rotating components and tools

Examples of rotating components and tools:

- Cooling fan
- Drive belts
- Propeller shafts
- Drills
- Grinders

Risks

Rotating components, for example, fans or shafts, can cause severe injuries if touched.

Drills, lathes, grinders or other machines with rotating parts can cause severe accidents if clothes or hair get caught and are wound up in the machine.

Safety precautions

- Do not use gloves when working with a drill.
- Remove loose, hanging clothing, scarf or tie.
- Never use clothing with wide sleeves or trouser legs.
- Make sure that clothing is intact and in good condition.
- Long hair should be gathered up in a hair-net or similar.
- Remove large or loose hanging jewelry from hands, arms and neck.

https://truckmanualshub.com/

Tyre system

DANGER

Tyres should be regarded as pressurized containers. They constitute fatal danger if handled incorrectly.

Parts can be thrown with explosive force and may cause severe injuries.

Never repair damaged tyres, rims or lock rings. Tyre repairs should only be performed by authorized personnel.

Risks

Dismantling wheels: Tyres, rims or lock rings can be thrown.

Inflating tyres: Tyres, rims and lock rings can be thrown.

Safety actions

- Deflate the tyre before starting to work on the wheel.
- Check that tyres, rims and lock rings aren't damaged. Never repair damaged rims or lock rings.
- Use protective screen and safety glasses.

https://truckmanualshub.com/

Environment

General

Ever-increasing industrialisation of our world is having a significant impact on our global environment. Nature, animals and man are subjected daily to risks in connection with various forms of chemical handling.

There are still no environmentally safe chemicals, such as oils and coolants, available on the market. Therefore, all who handle, perform service on or repair machines must use the tools, assisting devices and methods necessary to protect the environment in an environmentally sound manner.

By following the simple rules below, you will contribute to protecting our environment.

Recycling

Deposit discarded materials for recycling or destruction.

Environmentally hazardous waste

Components such as batteries, plastics and other items that may constitute environmentally hazardous waste must be handled and taken care of in an environmentally safe and sound manner.

Discarded batteries contain substances hazardous to personal health and the environment. Therefore, handle batteries in an environmentally safe manner and according to national regulations.

Oils and fluids

Oils freely discharged cause environmental damage and can also be a fire hazard. Therefore, when emptying and draining oils or fuel, take appropriate action to prevent unnecessary spills.

Waste oils and fluids must always be taken care of by an authorised disposal company.

Pay close attention to oil leaks and other fluid leaks! Take immediate action to seal the leaks.

Air conditioning system

The refrigerant in the air conditioning system for the cab adds to the greenhouse effect and may never be intentionally released into open air. Special training is required for all service work on the air conditioning system. Many countries require special certification by an authority for such work.

Working in a contaminated area

Used cab and engine air filters from machines operating in conditions with asbestos dust, or other hazardous dust, must be sealed in air-tight plastic bags before being deposited in the designated area. The machine must be equipped for work in a contaminated area (environmentally contaminated or hazardous to personal health) before work is started. In addition, special local regulations apply when handling and servicing such a machine.

https://truckmanualshub.com/

Table of Contents C Preventive maintenance

Preventive maintenance **3**
Preventive maintenance, general 3
Preventive maintenance, work instructions 3
Check and service log 4
50h-check 5
Service schedule 7
Washing 13
Lubrication 500 hours 14
Lubrication 1000 hours 16

https://truckmanualshub.com/

https://truckmanualshub.com/

Preventive maintenance

Preventive maintenance, general

It's very important that preventive maintenance is performed according to recommended intervals.

Preventive maintenance should be performed by Kalmar Industries, or by a service organization authorized by Kalmar Industries.

CAUTION

The warranty is not valid if service intervals are not followed.

Preventive maintenance shall be performed according to the prescribed intervals and extent.

Use spare parts, oils and fluids approved by Kalmar Industries.

Preventive maintenance, work instructions

1 For new machine it is very important to check-tighten the wheel nuts during the first work week, until they are securely tightened. This shall be performed at an interval of 4–5 operating hours (up to approx. 40–50 operating hours).

2 For new machine, checking actions shall be performed after 50 hours of operation, see *50h-check page 5*.

Note completed 50h check in the service log, see *Check and service log page 4*.

3 Service at regular intervals shall be performed according to service schedule, see *Service schedule page 7*. The service schedule shall be followed to ensure the machine's high operating reliability.

Note completed service in the service log, see *Check and service log page 4*.

https://truckmanualshub.com/

Check and service log

Model:	
Serial number:	

		Completed maintenance		
Oper-ating hours	**Actions**	**Operating hours**	**Date**	**Signature**
50h	50h-check			
500h	500h service			
1000h	1000h service			
1500h	500h service			
2000h	2000h service			
2500h	500h service			
3000h	1000h service			
3500h	500h service			
4000h	2000h service			
4500h	500h service			
5000h	1000h service			
5500h	500h service			
6000h	2000h service			
6500h	500h service			
7000h	1000h service			
7500h	500h service			
8000h	2000h service			
8500h	500h service			
9000h	1000h service			
9500h	500h service			
10000h	2000h service			

https://truckmanualshub.com/

50h-check

For new machine, checks shall be performed after 50h operating time. Checks are performed to increase the machine's reliability.

1 Engine	**Reference**
Leakage check oil, coolant, exhaust system	
Coolant level, check	Section *1 Engine,* group *1.7.7 Coolant*
Oil and oil filter, change	Section *1 Engine,* group *1.8 Lubrication*
Air filter main cartridge, inspection	Section *1 Engine,* group *1.6.1 Air cleaning system*
Air filter safety cartridge, inspection	Section *1 Engine,* group *1.6.1 Air cleaning system*
Drive belt tension, check	Section *1 Engine,* group *1.7.5 Cooling fan*
Bolted joints, attachments, mountings, hose clamps, wear and chafing of hoses, cable harnesses, etc.	
Fuel pre-filter, drain water	Section *1 Engine,* group *1.2.3 Fuel pre-filter*
2 Transmission	
Leakage check	
Oil level, check	Section *2 Transmission,* group *2.6 Lubrication*
Transmission oil filter, changing	Section *2 Transmission,* group *2.6 Lubrication*
3 Driveline/axle	
Mounting propeller shaft, check-tightening	Section *3 Driveline/axle,* group *3.2 Propeller shaft*
Mounting drive axle, inspection	Section *3 Driveline/axle,* group *3.3 Drive axle*
4 Brakes	
Power-assisted brake, function check	Section *4 Brakes,* group *4.3.4 Accumulator*
Parking brake, function check	
Leakage check	
5 Steering	
No action	
6 Suspension	
Tyre system, check	Section *6 Suspension,* group *6.3 Tyre and rim system*
Wheel nuts, check-tightening	Section *6 Suspension,* group *6.3 Tyre and rim system*
7 Load handling	
Hose connections, check-tightening	
Chain tension extension (spreader), check and adjust	Section *7 Load handling,* group *7.5.7 Positioning chains*
8 Control system	
Check that there are no active error codes	Section *8 Control system,* group *8.3 Error codes*

https://truckmanualshub.com/

9 Frame, body, cab and accessories	
Locking of cab (mechanically moveable), check	Section *9 Frame, body, cab and accessories,* group *9.10.4 Longitudinal displacement of cab*
10 Common hydraulics	
Leakage check, check-tightening as needed	
Oil level, check	Section *10 Common hydraulics*, group *10.6.8 Hydraulic oil*
Fine filter hydraulic oil, change	Section *10 Common hydraulics,* group *10.6.9 Hydraulic oil fine-filter*
11 Common electrics	
Batteries, check	Section *11 Common electrics,* group *11.3.1 Start battery*

https://truckmanualshub.com/

Service schedule

Service shall be performed every 500 operating hours. Actions are divided into 500h, 1000h and 2000h service.

Actions for 500h service are performed between 1000h and 2000h service, which means at 500h, 1500h, 2500h, etc.

Actions for 1000h service are performed at **odd** thousands of operating hours: 1000h, 3000h, 5000h, etc.

Actions for 2000h service are performed at **even** thousands of operating hours: 2000h, 4000h, 6000h, etc.

After completed service a note shall be made in the Check and service log, see *Check and service log page 4*.

In the column for service below, the following abbreviations are used:

R = replace

C = check or inspection

L = lubrication

Object, action	**Service**			**Comment**	**Reference**
	500h, 1500h, 2500h etc.	**1000h, 3000h, 5000h, etc.**	**2000h, 4000h, 6000h etc.**		
0 Complete machine					
Leakage check	C	C	C		
Attachments (axle pins)		C	C	Visual check in connection with lubrication.	
Lubrication 500 hours	L	L	L	**NOTE!** only: Brake pedal Link arms Wheel hub steering axle Wheel spindle steering axle	*Lubrication 500 hours page 14*
Lubrication 1000 hours		L	L		*Lubrication 1000 hours page 16*
1 Engine					
Engine oil	R	R	R	For volume and quality, see section F *Technical data*	Section *1 Engine,* group *1.8 Lubrication*
Engine oil filter	R	R	R		
Fuel filter	R	R	R		Section *1 Engine,* group *1.2.3 Fuel pre-filter*

https://truckmanualshub.com/

Object, action	Service			Comment	Reference
	500h, 1500h, 2500h etc.	1000h, 3000h, 5000h, etc.	2000h, 4000h, 6000h etc.		
Fuel pre-filter	R	R	R	Incl. draining of condensation water.	Section *1 Engine,* group *1.2.3 Fuel pre-filter*
Radiator	C	C	C	External cleaning **NOTE!** Not high-pressure washer.	
Coolant filter, engine alternative Volvo		R	R	For volume and quality, see section F *Technical data*	Section *1 Engine,* group *1.7.2 Coolant filter*
Coolant filter, engine alternative Cummins	R	R	R	For volume and quality, see section F *Technical data*	Section *1 Engine,* group *1.7.2 Coolant filter*
Coolant, level	C	C	C / R	Level check. Change after 5 000 h or every other year.	
Coolant, freezing point	C	C	C		
Air filter main cartridge	C / R	C / R	C / R	Check of indicator, change at indication.	Section *1 Engine,* group *1.6.1 Air cleaning system*
Air filter safety cartridge	C	C /R	C / R	Changed every other time main cartridge is changed.	
Fan belt	C / R	C / R	C / R	Change when needed.	
Bolted joints, attachments, mountings, etc.	C	C	C		
Valve clearance			C	Only engine alternative Volvo.	Performed by service shop authorized by Volvo Penta
Fuel tank			C	Clean, when needed.	
2 Transmission					
Transmission oil filter		R	R		Section *2 Transmission,* group *2.6 Lubrication*
Transmission oil		R	R	For volume and quality, see section F *Technical data*	
Transmission, calibration		C	C	Calibration of the transmission is recommended every 1000 hours.	Section *2 Transmission,* group *2.8 Control system transmission*
3 Driveline/axle					
Propeller shaft	C	C	C	Bolted joints and universal joint.	Section *3 Driveline/axle,* group *3.2 Propeller shaft*

https://truckmanualshub.com/

Object, action	Service			Comment	Reference
	500h, 1500h, 2500h etc.	1000h, 3000h, 5000h, etc.	2000h, 4000h, 6000h etc.		
Drive axle oil		R	R	For volume and quality, see section F *Technical data*	Section *3 Driveline/axle,* group *3.3 Drive axle*
Mounting drive axle		C	C		Section *3 Driveline/axle,* group *3.3 Drive axle*
4 Brakes					
Brake oil filter	R	R	R		Section *4 Brakes,* group *4.8.12 Brake oil filter*
Accumulator	C	C	C		Section *4 Brakes,* group *4.3.4 Accumulator*
Parking brake	C / R	C / R	C / R	Check pad thickness, change when needed.	Section *4 Brakes,* group *4.5.4 Parking brake unit*
Oil cooler	C	C	C	Clean when needed. **NOTE!** Not high-pressure washer.	
Oil brake system			R	For volume and quality, see section F *Technical data*	Section *4 Brakes,* group *4.8.14 Oil brake system*
Breather filter			R		Section *4 Brakes,* group *4.8.11 Breather filter*
5 Steering					
Link arms	C / L	C / L	C / L	Check bearings.	*Lubrication 500 hours page 14*
6 Suspension					
Steering axle mounting		C	C		Section *6 Suspension,* group *6.2.1 Steering axle cradle*
Wheel spindle, checking		C	C	Clearance in wheel suspension shall be checked. Max. 1.5 mm.	Section *6 Suspension,* group *6.2.2 Wheel spindle*
Wheel hub steering axle, checking			C	Check bearing pre-load.	Section *6 Suspension,* group *6.2.3 Wheel hub*
Tyre system	C	C	C	Damage, wear and pressure, change as needed.	Section *6 Suspension,* group *6.3 Tyre and rim system*
Wheel nuts		C	C	Check-tightening.	Section *6 Suspension,* group *6.3 Tyre and rim system*
7 Load handling					

https://truckmanualshub.com/

Object, action	Service			Comment	Reference
	500h, 1500h, 2500h etc.	1000h, 3000h, 5000h, etc.	2000h, 4000h, 6000h etc.		
Servo filter	R	R	R		Section *7 Load handling,* group *7.2.2 Servo filter*
Cable racks boom and attachment		C	C	Hose and cable damages.	
Boom and attachment		C	C	Damage.	
Glide plates boom		C	C	Check wear, change as needed.	Section *7 Load handling,* group *7.3.10 Lift boom*
Glide plates sideshift frame		C	C	Check wear, change as needed.	Section *7 Load handling,* group *7.4.6 Sideshift frame*
Chain extension (spreader)		C	C	Tighten chain as needed.	Section *7 Load handling,* group *7.5.7 Positioning chains*
Glide plates spreader beam		C	C	Check wear, change as needed.	Section *7 Load handling,* group *7.5.8 Positioning beam*
Oil rotation motor unit		R	R	For volume and quality, see section F *Technical data*	Section *7 Load handling,* group *7.6.6 Rotation motor unit*
Oil spreader motor unit		R	R	For volume and quality, see section F *Technical data*	Section *7 Load handling,* group *7.5.6 Positioning motor*
Twistlocks		C	C / R	Check for cracks every other year or every 5000 operating hours. Change every 10 000 operating hours.	Section *7 Load handling,* group *7.9.1.7 Twistlocks*
Lift shoe, combi attachment ⊕		C / R	C	Check for cracks every other year or every 5000 operating hours. Change every 10 000 operating hours.	Section *7 Load handling,* group *7.9.2.14 Lifting shoe* Section *7 Load handling,* group *7.9.2.14 Lifting shoe*
Weight indicator ⊕		C		Check that deviation without load is max. 0.5 ton.	Section *7 Load handling,* group *7.10.2 Weight indicator*
8 Control system					
Overload system	C	C	C		Section *8 Control system,* group *8.2.1 Overloading system*

https://truckmanualshub.com/

Object, action	Service			Comment	Reference
	500h, 1500h, 2500h etc.	1000h, 3000h, 5000h, etc.	2000h, 4000h, 6000h etc.		
Service indicator, reset ⊕	C	C	C		Section *8 Control system,* group *8.2.6 Service indicator*
9 Frame, body, cab and accessories					
Hydraulic sliding cab		C	C	Check and adjust chain tension.	
Fresh air filter	R	R	R	Dependent on external environment, at latest every 500 operating hours.	Section *9 Frame, body, cab and accessories,* group *9.4.1 Fresh air filter*
Condenser ⊕	C	C	C	Clean when needed. **NOTE!** Not high-pressure washer.	Section *9 Frame, body, cab and accessories,* group *9.4.8 Condenser*
Moisture filter	C / R	C / R	C / R	Checking, change if indication is grey.	Section *9 Frame, body, cab and accessories,* group *9.4.9 Humidity filter*
Lighting and audible signals	C	C	C		
Windshield wipers	C	C	C	Incl. washer, top up when needed.	
10 Common hydraulics					
Breather filter	C / R	R	R	Change at indication.	Section *10 Common hydraulics,* group *10.6.6 Breather filter hydraulic oil tank*
Hydraulic oil filter		R	R		Section *10 Common hydraulics,* group *10.6.7 Hydraulic oil filter*,
Hydraulic oil filter (high pressure filter) ⊕		R	R		Section *10 Common hydraulics,* group *10.6.7 Hydraulic oil filter*
Oil cooler		C	C	Clean when needed. **NOTE!** Not high-pressure washer.	
Hydraulic oil			R	For volume and quality, see section F *Technical data*	Section *10 Common hydraulics,* group *10.6.8 Hydraulic oil*
Fine filter hydraulic oil	R	R	R		Section *10 Common hydraulics,* group *10.6.9 Hydraulic oil fine-filter*

https://truckmanualshub.com/

Object, action	Service			Comment	Reference
	500h, 1500h, 2500h etc.	1000h, 3000h, 5000h, etc.	2000h, 4000h, 6000h etc.		
11 Common electrics					
Batteries	C	C	C		Section *11 Common electrics*, group *11.3.1 Start battery*
Fuses	C	C	C	Check that fuses are intact, change if needed.	Section *11 Common electrics*, group *11.2.2 Fuses*
Position sensors	C	C	C	Should be free from grease and dirt, clean as needed. • Boom • Attachment • Hydraulic sliding cab • Cab lift and lowering • Support jacks	
Test-run					
Test-run the machine and check: • Instruments • Brakes • Gearshifting • All load handling functions • Steering • Any noise **NOTE!** On machines with manual sliding cab, the cab must be secured in the rear position with both locks before operation.					
After test-run					
Check the following after test-run: • Sealing (no leakage) • Fluid levels					

https://truckmanualshub.com/

Washing

CAUTION

When using a high-pressure washer to clean the machine, do not aim the water jet directly at the radiator or electrical components, for example, control units, connectors and sensors.

https://truckmanualshub.com/

Lubrication 500 hours

1 Clean the area around each grease cup before greasing.

2 Grease all points with lubrication grease, see section *F Technical data*.

Wheel hub and wheel spindle

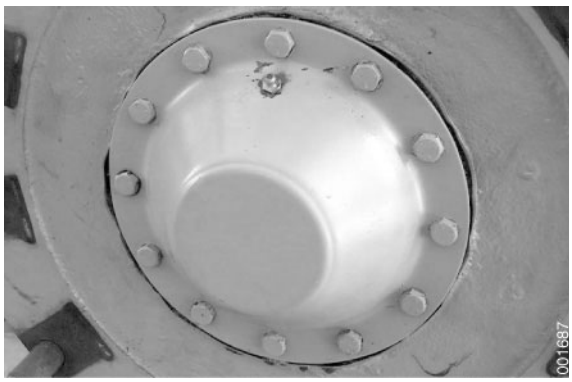

Grease point wheel hub

3 Raise the right steering wheel with a jack (40 ton) so that wheel bearings and wheel spindle are relieved of stress, do not lift to a height where the wheel hangs freely.

4 Grease the wheel hub until grease comes out at the seal on the hub's inside.

Lift the seal ring's lip with a small screwdriver to facilitate pressing out of air. Grease until grease comes out by the seal.

NOTE

Work carefully so that the seal is not damaged.

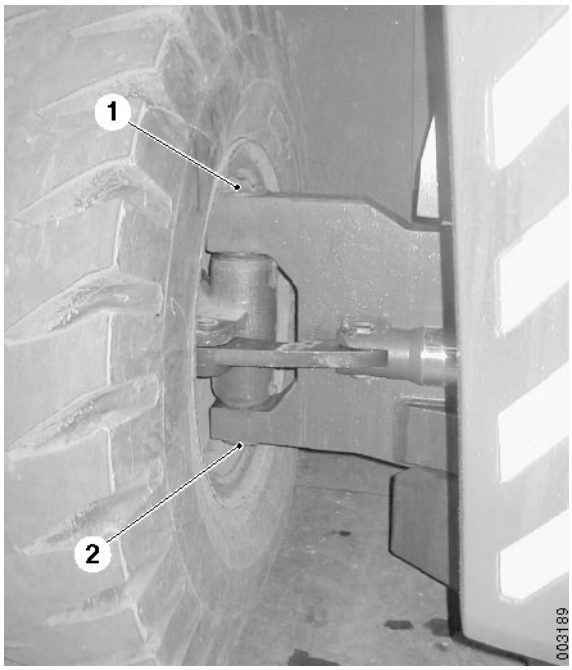

Grease points wheel spindle
1. Upper grease point
2. Lower grease point

5 Grease the wheel spindle's upper and lower bearings.

NOTE

It is important that both upper and lower bearings are greased separately since the grease is not pressed between the bearings.

6 Lower the wheel.

7 Repeat steps 3 - 7 for the left steering wheel.

https://truckmanualshub.com/

Link arms

8 Grease both link arms' outer and inner bearings with grease.

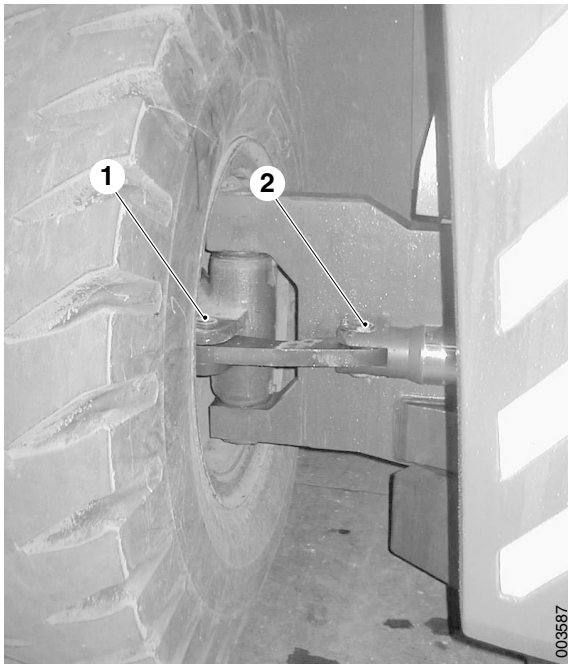

Grease points link arm
1. Outer bearing
2. Inner bearing

Brake pedal

9 Grease the brake pedal's hinge with grease.

10 Wipe off surplus grease.

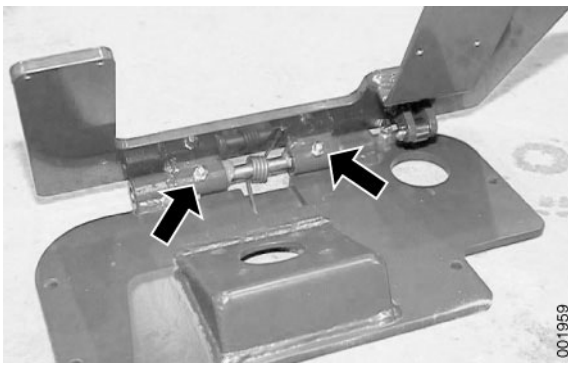

Grease points brake pedal

https://truckmanualshub.com/

Lubrication 1000 hours

1 Lower and run out the boom completely and run out the spreader (positioning) completely.

2 Turn off the engine and the main electric power.

3 Grease all grease points on the machine with **lubrication grease**, see section *F Technical data*.

Also perform a visual check of all attachments that are greased.

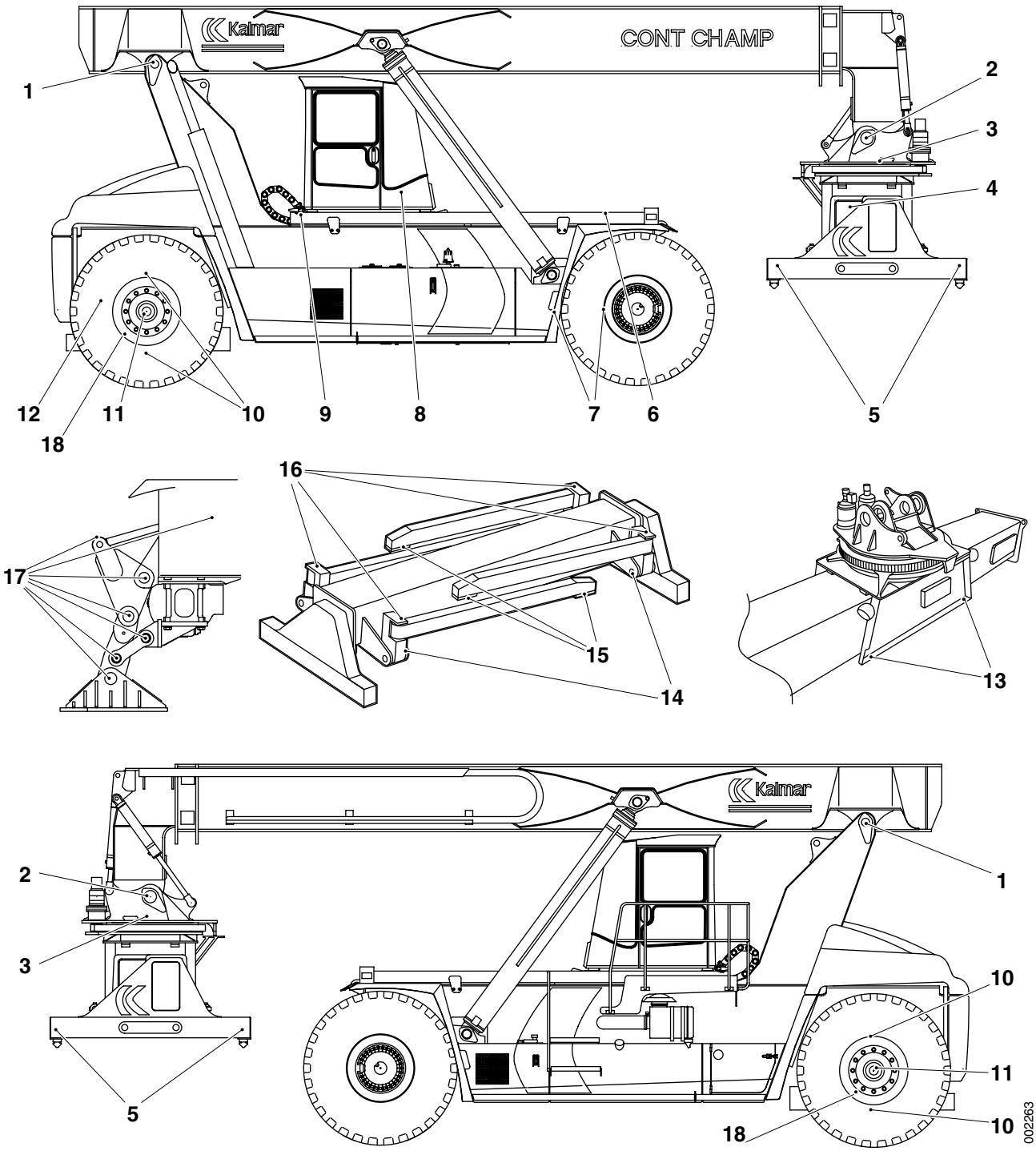

Grease points, lubrication grease

https://truckmanualshub.com/

1	Mounting lift boom (2 pcs.)	10	Wheel spindle (4 pcs.)
2	Mounting attachment (2 pcs.)	11	Wheel hub (2 pcs.)
3	Bearing rotation bar (4 pcs., two per side) + brushing of ring gear	12	Joint steering axle
4	Chain and chain sprocket spreading	13	Glide beam mounting sideshift frame
5	Twistlocks (4 pcs.)	14	Mounting lift legs, combi attachment (4 pcs.) ⊕
6	Chain sliding cab ⊕	15	Lift shoe, combi attachment (4 pcs.) ⊕
7	Universal joint (2 pcs.)	16	Mounting lift legs (knee joint), combi attachment (4 pcs.)
8	Brake pedal in cab (2 pcs.)	17	Support jacks (14 pcs., 7 per support jack) ⊕
9	Gear sliding cab ⊕	18	Link arms (4 pcs.)

Brush the glide areas on boom and attachment with **white lubrication paste** according to illustrations below, see section *F Technical data*.

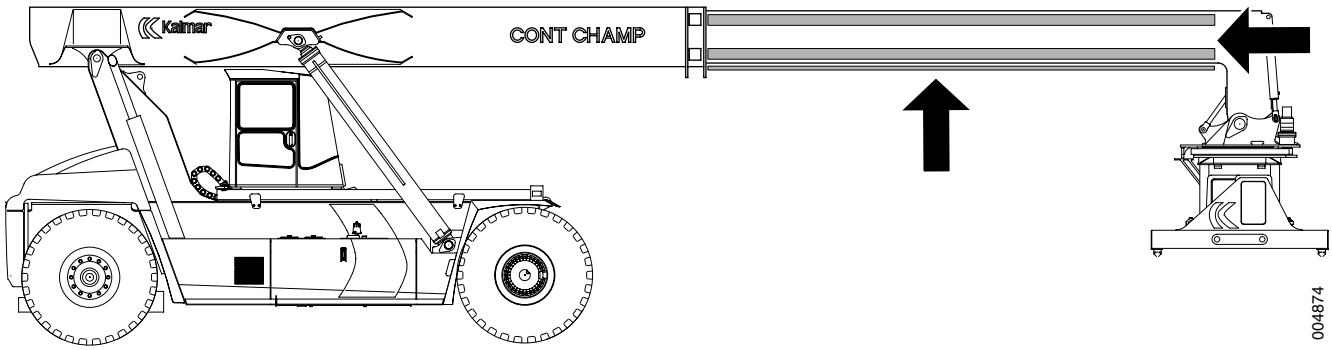

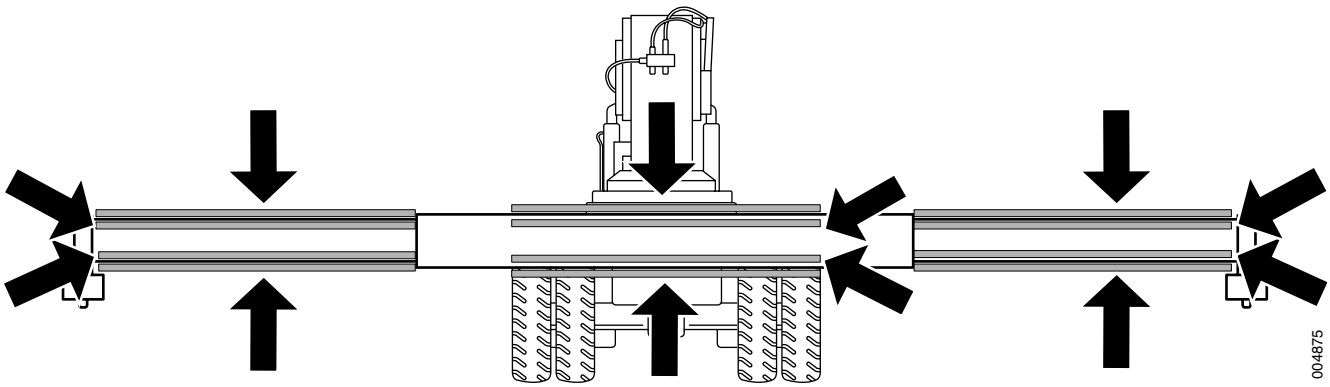

Run the boom and spreader (positioning) in and out as well as sideshift the attachment max. right - left, a few times without load.

https://truckmanualshub.com/

IMPORTANT
Wipe off surplus lubrication paste.

https://truckmanualshub.com/

Table of Contents 0 Complete machine

Complete machine **3**
Complete machine, description 3
Troubleshooting, general work instructions 4
Troubleshooting without an error code, example 5
Troubleshooting with error code, example 5
Troubleshooting cable harness 7
Troubleshooting hydraulic hoses 8

https://truckmanualshub.com/

https://truckmanualshub.com/

Complete machine

Complete machine, description

Kalmar DRF 400-450 is a “Reachstacker” for container handling. The machine has a lift capacity of 40–45 tons depending on version.

The engine is a six cylinder four-stroke direct-injected diesel engine.

The transmission is hydromechanical with gears in constant mesh. It has four forward gears and four reverse gears. The engine power is transmitted with a torque converter.

The driveline/axle consists of a propeller shaft and a rigid drive axle with hub reduction. Drive takes place on the front wheels.

The service brake is of the type disc brake in oil which is built together with the drive wheels' wheel hubs. The parking brake is of the type disc brake and acts on the drive axle's input shaft.

Steering takes place on the rear wheels with a double-acting hydraulic cylinder. The steering axle is oscillation-mounted in the frame.

The wheels are mounted on the hubs with clamps. Twin wheels are mounted on the drive axle, the steering axle single wheels.

Load handling is components and functions for handling loads. Loads are lifted with an attachment that is mounted on a liftable telescopic boom. Load handling is divided into the functions lift and lower, extension, sideshift, spreading, rotation, tilt, levelling and load carrying. Lift and lower is the function to lift and lower the boom. Extension is the function to push out and retract the boom. Sideshift is to move the attachment sideways in relation to the machine. Spreading is to adjust the width between the attachment's lifting points. Rotation is to rotate the load in relation to the machine. Tilt is to angle the load in the machine's longitudinal direction. Levelling is to angle the load in the machine's lateral direction (sideways). Load carrying is to grab the load.

The control system are functions for warning the operator of dangerous situations and malfunctions. The control system has diagnostic possibilities that facilitate troubleshooting.

The frame supports the machine. The engine, transmission, drive axle and steering axle are mounted in the frame. On the frame's sides there are tanks for fuel, hydraulic oil and oil for the brake system. The cab is located in the centre and can be moved fore-aft. As an option the cab is available in a side-mounted version that can be raised and lowered.

https://truckmanualshub.com/

Troubleshooting, general work instructions

When troubleshooting, it's important that the work is structured and logical. The point of the troubleshooting described in the maintenance manual is to exclude components as error source so that the real error source can be pin-pointed. A proposal for structured work method is described below.

When troubleshooting, it's important to understand how the machine functions, certain malfunctions can be pin-pointed directly using function descriptions. In the sections *0–12* there are descriptions of the machine's different functions.

Troubleshooting procedure

1 Check that there is battery voltage available.
   - Battery disconnect switch, must be in position 1.
   - Battery voltage, should be 22–30 V.
   - Fuses, check that they are intact.

2 Check that all oil and fluid levels are normal.
   - Fuel
   - Engine oil
   - Transmission oil
   - Oil for brake system
   - Hydraulic oil
   - Coolant
   - Washer fluid

3 Check if there are error codes.

4 If there are error codes, use the error code lists as a guide. See *Troubleshooting with error code, example page 5*.

   In the error code lists there are recommended actions for every error code. Error code lists are found in section *D Error codes*.

5 If there is no error code, or problem remains, use the function description for function in question in section *0–12*.

   In the function description there's information about which components are involved in the function and how these components work together. In certain cases, there's information about which conditions apply to enable activation of the function. Measuring points are marked with flags (C for pressure check connections, D for diagnostic menu).

https://truckmanualshub.com/

Troubleshooting without an error code, example

1 Choose suitable section *0–12* to find the function and sub-function that have caused the symptom.

2 Read function description for the function in question to get an overall understanding of which components are affected and how these interact

3 Use the function description and check the signals for the function in question to find where in the function chain that signal or reaction is incorrect.

4 The fault is probably between the two units where the signal is failing. Start by checking the component that should send the signal.

5 If the component that is to send the signal seems to be correct, check transmission of the signal (electric wiring or hydraulic hoses).

   For electric cabling, see *Troubleshooting cable harness page 7*.

   For hydraulic hoses, see *Troubleshooting hydraulic hoses page 8*.

6 If the leads or hoses between the components seem in order, then check the component that receives the signal.

Troubleshooting with error code, example

Error codes are strong indicators of malfunctions detected by the control system. Many error codes are connected to electrical malfunctions but there are also error codes that interpret associations between one or several signals that indicate a non-electrical malfunction. It's important to not draw conclusions too fast based on an error code.

1 Read out error code from the display, e.g., error code 34.

2 Use the error code lists and search information about the error code, see "Example of error code information in error code list" below.

   Error code lists are found in section *D Error codes*.

   For detailed instruction on reading out error code, see section *D Error codes*.

3 Follow instructions in field "Action".

4 Use diagnostic menus and circuit diagrams to determine if the input signal to the control unit is correct, see section *8 Control system*, group *8.4 Diagnostics* as well as section *E Schematics*.

https://truckmanualshub.com/

5 Use the function group to find more information if needed.

In section *0–12* there is function description, the function's included components and their position as well as, in certain cases, work instructions for how components are checked, cleaned or adjusted.

6 If possible eliminate component fault by testing the component individually.

Electric components can sometimes be checked with resistance measurements using a multimeter.

Hydraulic components are often checked by measuring pressure (then described in the function group and indicated in the section *C Preventive maintenance*). Sometimes valves can be activated mechanically to determine if the malfunction is electric or hydraulic.

7 If the component's measuring values are correct, continue by troubleshooting electric cabling and hydraulic hoses.

For electric cabling, see *Troubleshooting cable harness page 7*.

For hydraulic hoses, see *Troubleshooting hydraulic hoses page 8*.

8 If the cable is not defective then connect the lead to the control unit.

NOTE

The main electric power shall be turned off with the battery disconnector!

9 Disconnect the cable harness from the component in question.

10 Turn on the main electric power with the battery disconnector.

11 Turn the ignition key to the operating position.

12 Check that voltage reaches the component.

Table 1. Example of error code information in error code list

Code	Description	Limit	Action	Connection and component	Diagnostic menu	Function group
34	Signal error from switch parking brake, indicates released and applied at same time or nothing at all.	Parking brake cannot be released.	Use diagnostic menu to check cable between control unit and component. Check component.	D791-1/K8:5 - S107, K8:13 - S107	HYD, menu 5	4.1.2 Parking brake control

https://truckmanualshub.com/

Troubleshooting cable harness

NOTE

Perform troubleshooting for all cables in the same way to avoid damage to control units, components or measuring equipment.

1 Study the circuit diagram in question, check where the suspected cable is connected and if, and if so where, it is spliced.

2 Turn off the main electric power with the battery disconnector.

3 Unplug the connector at the control unit or component in question.

4 Check if there is open circuit.

NOTE

Some components cannot be checked without power supply to the component. In such an event, proceed to point 5.

a. Measure resistance between connections for the component in the connector at the control unit or component.

b. The resistance must correspond with the component. Otherwise there may be an open circuit or short circuit in cable harness and/or component.

5 Check if there is short circuit to frame:

a. Unplug the connector both at the control unit and component in question.

b. Measure the resistance of one lead at a time. Measure between the lead and a frame-connected part of the machine.

c. The multimeter should show endless resistance.

https://truckmanualshub.com/

Troubleshooting hydraulic hoses

WARNING

Oil under high pressure!

Personal injury!

Always depressurize hydraulic and brake systems before starting to work on the systems.

1 Depressurize the hydraulic and brake systems, see section *B Safety*.

2 Study the relevant hydraulic diagram, check between whichever components the suspect hose is connected and correspondingly where it is spliced.

3 Locate the hose on the machine.

Start at one component and follow the hose to the next component.

4 Inspect the entire hose and splicing points with respect to chafing damage, pinching damage and leaks.

Change damaged hoses. When removing a hydraulic hose, change of O-ring is always recommended on the hoses that have these (ORFS).

https://truckmanualshub.com/

Table of Contents 1 Engine

1 Engine 3
1.2 Fuel system 9
1.2.3 Fuel pre-filter 10
1.2.4 Fuel filter 12
1.6 Air intake and exhaust outlet 14
1.6.1 Air cleaning system 14
1.7 Cooling system 15
1.7.2 Coolant filter 15
1.7.5 Cooling fan 18
1.7.7 Coolant 19
1.8 Lubrication 20
1.9 Control system engine 24
1.10 Ignition/heating 25
1.11 Start/stop 26

https://truckmanualshub.com/

https://truckmanualshub.com/

1 Engine

Engine, description

The engine provides power for propulsion and working hydraulics. The following engine alternatives are available:

- Volvo TWD1240VE
- Cummins QSM11

Both engines are low-emission engines and meet emission standards for USA (California) and Europe. With the new engines, a significant improvement is obtained not only of exhaust emissions but also the power curve and torque curve

Engine alternative Volvo, function description

Engine TWD1240VE is a straight 6-cylinder, 4-stroke turbocharged low-emission diesel engine with unit injectors and liquid-to-air intercooler.

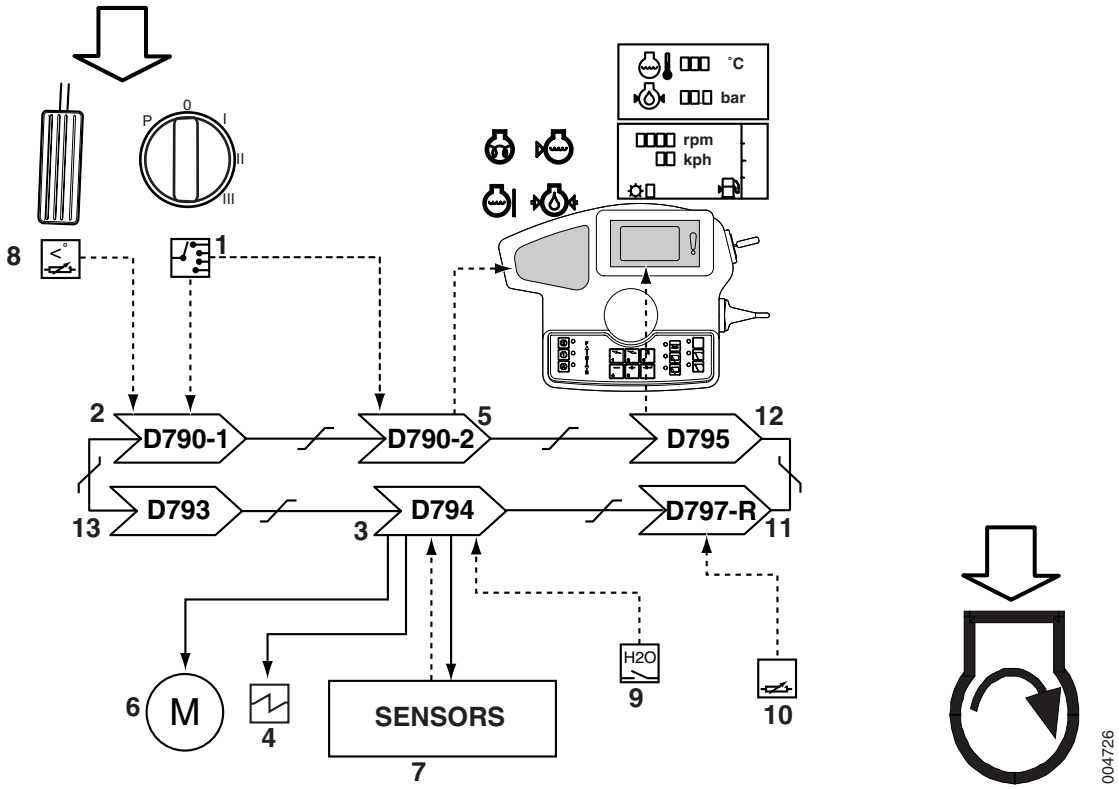

1. Ignition (S150)
2. Control unit cab (D790-1)
3. Control unit engine (D794)
4. Preheating coil (E800)
8. Accelerator pedal (B690)
9. Make-contact (closing switch) coolant level (B759)
10. Sensor fuel level (B757)
11. Control unit frame rear (D797-R)

https://truckmanualshub.com/

5. Control unit KIT (D790-2)
6. Starter motor (M654)
7. Electrical components engine
12. Control unit KID (D795)
13. Control unit transmission (D793)

Engine alternative Volvo, component position

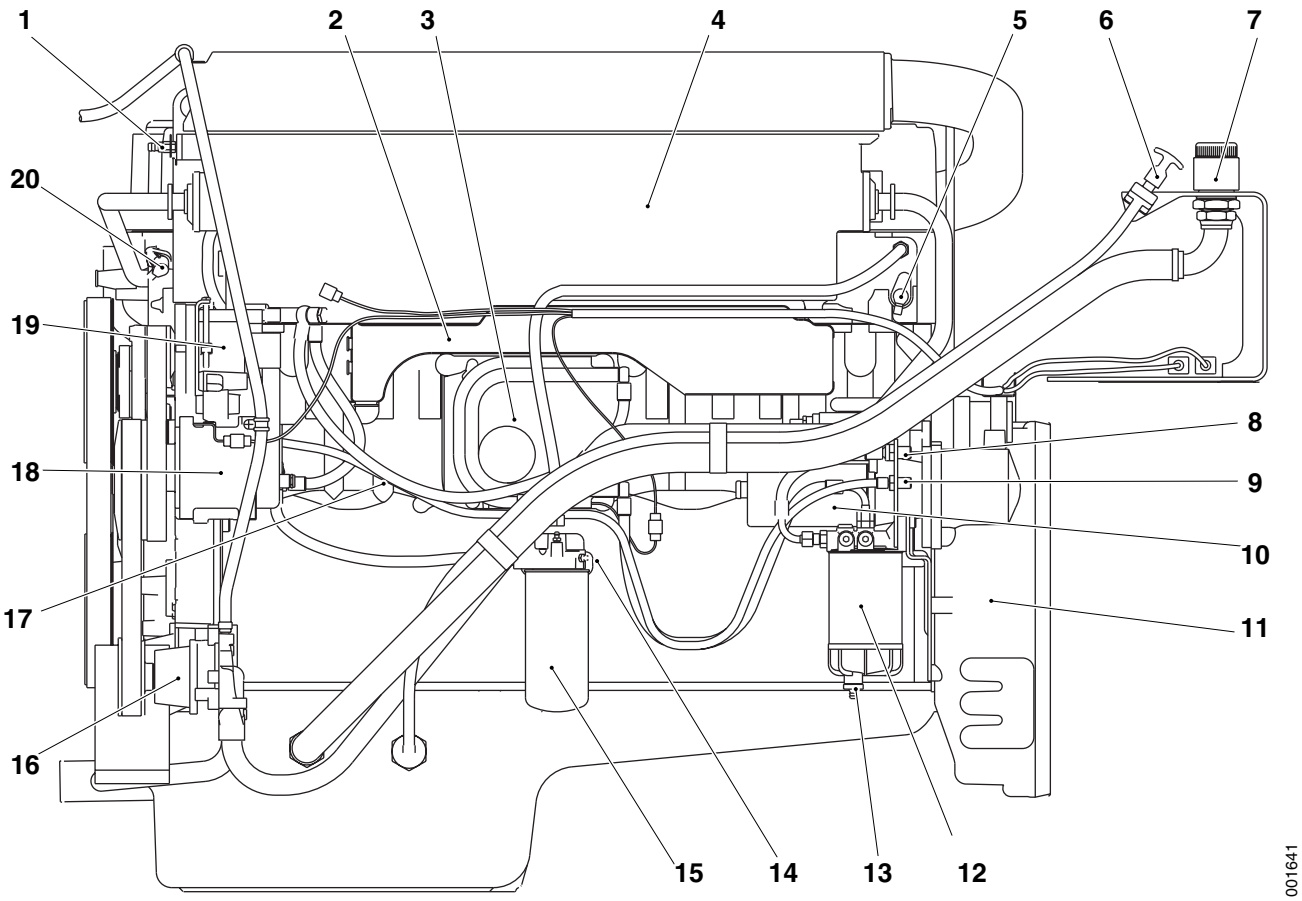

Engine alternative Volvo, right side (in machine's travel direction)

1. Breather nipple cooling system
2. Sensor boost pressure and charge-air temperature
3. Control unit engine (D794)
4. Intercooler
5. Sensor coolant temperature
6. Oil dipstick
7. Filling point engine oil
8. Fuel connection (inlet)
9. Fuel connection (return)
10. Starter motor
11. Sensor engine rpm
12. Fuel pre-filter
13. Drain point condensation water fuel pre-filter and sensor
14. Make-contact fuel pressure
15. Fuel filter
16. Extra coolant pump
17. Sensor oil pressure and oil temperature
18. Compressor climate control unit
19. Alternator
20. Sensor camshaft rpm

https://truckmanualshub.com/

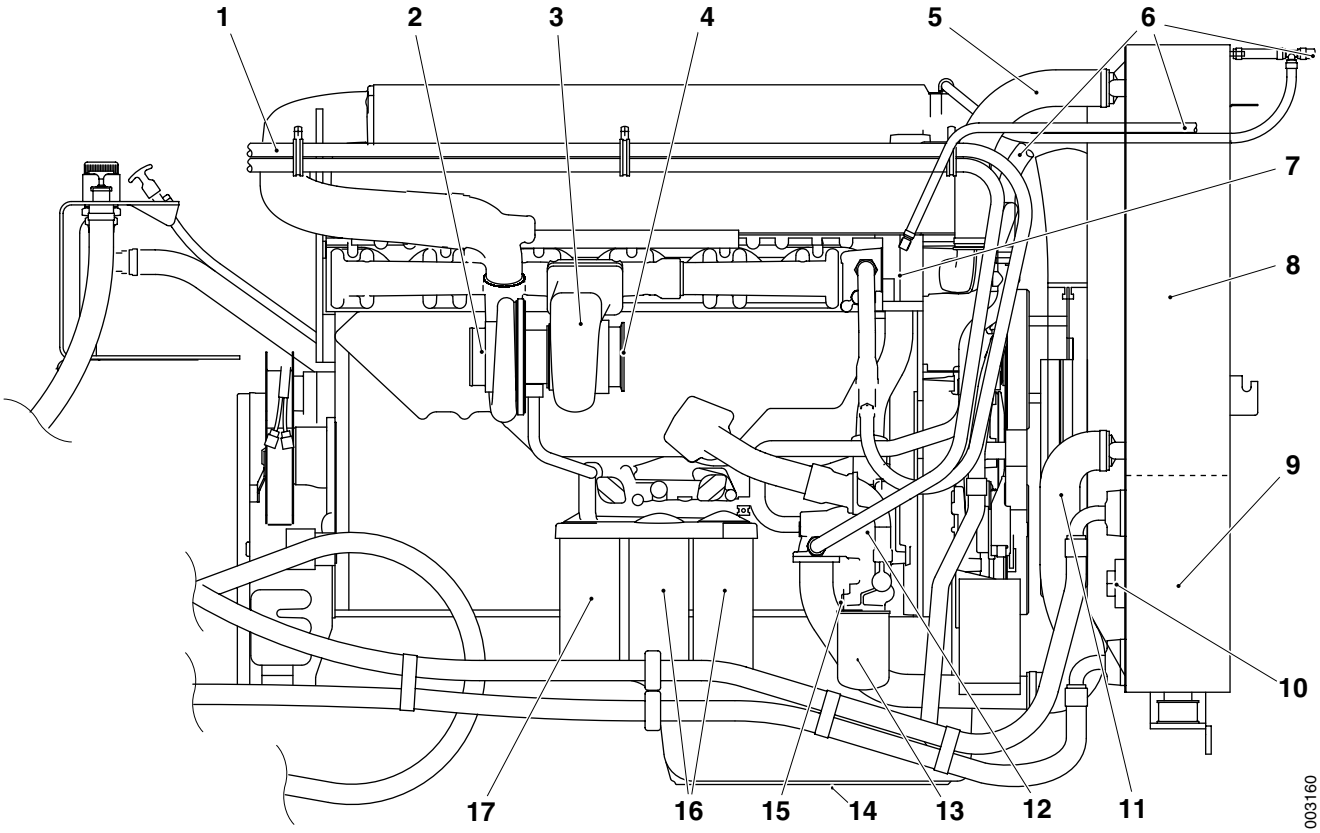

Engine alternative Volvo, left side (in machine's travel direction)

1. Connection cab heat
2. Connection air cleaner
3. Turbocharger
4. Connection exhaust system
5. Connection radiator outlet
6. Connection expansion tank
7. Thermostat
8. Radiator
9. Transmission oil cooler
10. Thermostat transmission oil cooler
11. Connection radiator inlet
12. Coolant pump
13. Coolant filter
14. Drain plug engine oil
15. Shut-off valve, coolant
16. Oil filter (full-flow)
17. Oil filter (by-pass)

https://truckmanualshub.com/

Engine alternative Cummins, function description

Engine QSM11 is a straight 6-cylinder, 4-stroke turbocharged low-emission diesel engine with unit injectors and air-to-air intercooler.

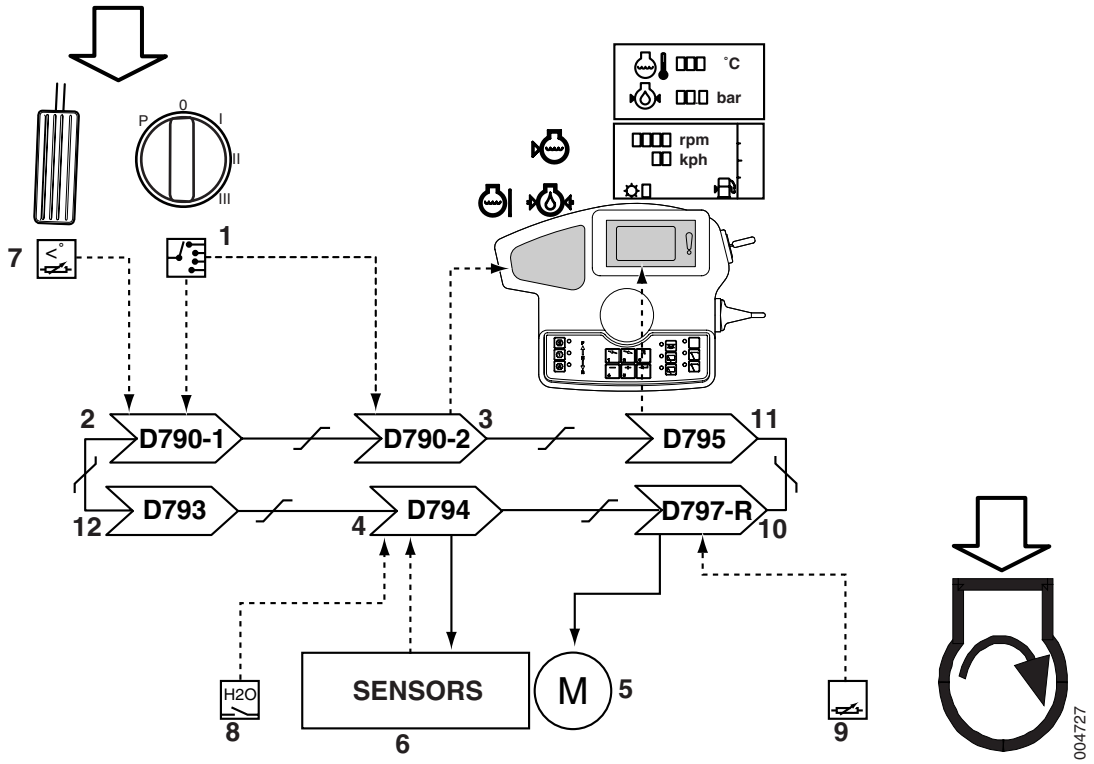

1. Ignition (S150)
2. Control unit cab (D790-1)
3. Control unit KIT (D790-2)
4. Control unit engine (D794)
5. Starter motor (M654)
6. Electrical components engine
7. Accelerator pedal (B690)
8. Make-contact (closing switch) coolant level (B759)
9. Sensor fuel level (B757)
10. Control unit frame rear (D797-R)
11. Control unit KID (D795)
12. Control unit transmission (D793)

https://truckmanualshub.com/

Engine alternative Cummins, component position

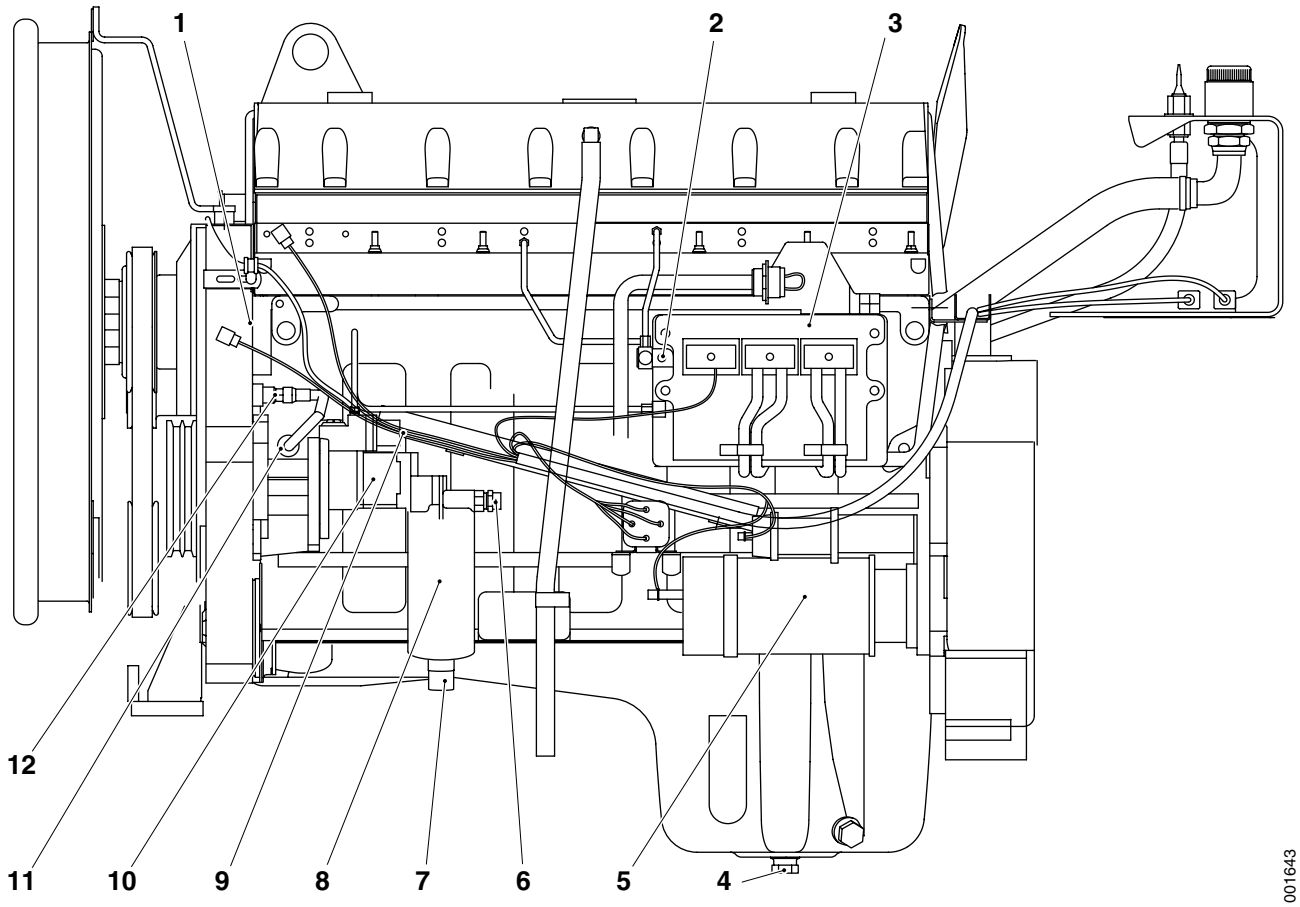

Engine alternative Cummins, right side (in machine's travel direction)

1. Position for compressor climate control unit
2. Fuel connection (outlet)
3. Control unit engine (D794)
4. Drain plug engine oil
5. Starter motor
6. Fuel connection (inlet)
7. Drain point condensation water fuel filter and sensor water in fuel
8. Fuel filter
9. Sensor fuel pressure
10. Fuel pump
11. Sensor oil pressure and oil temperature
12. Sensor crankshaft position

https://truckmanualshub.com/

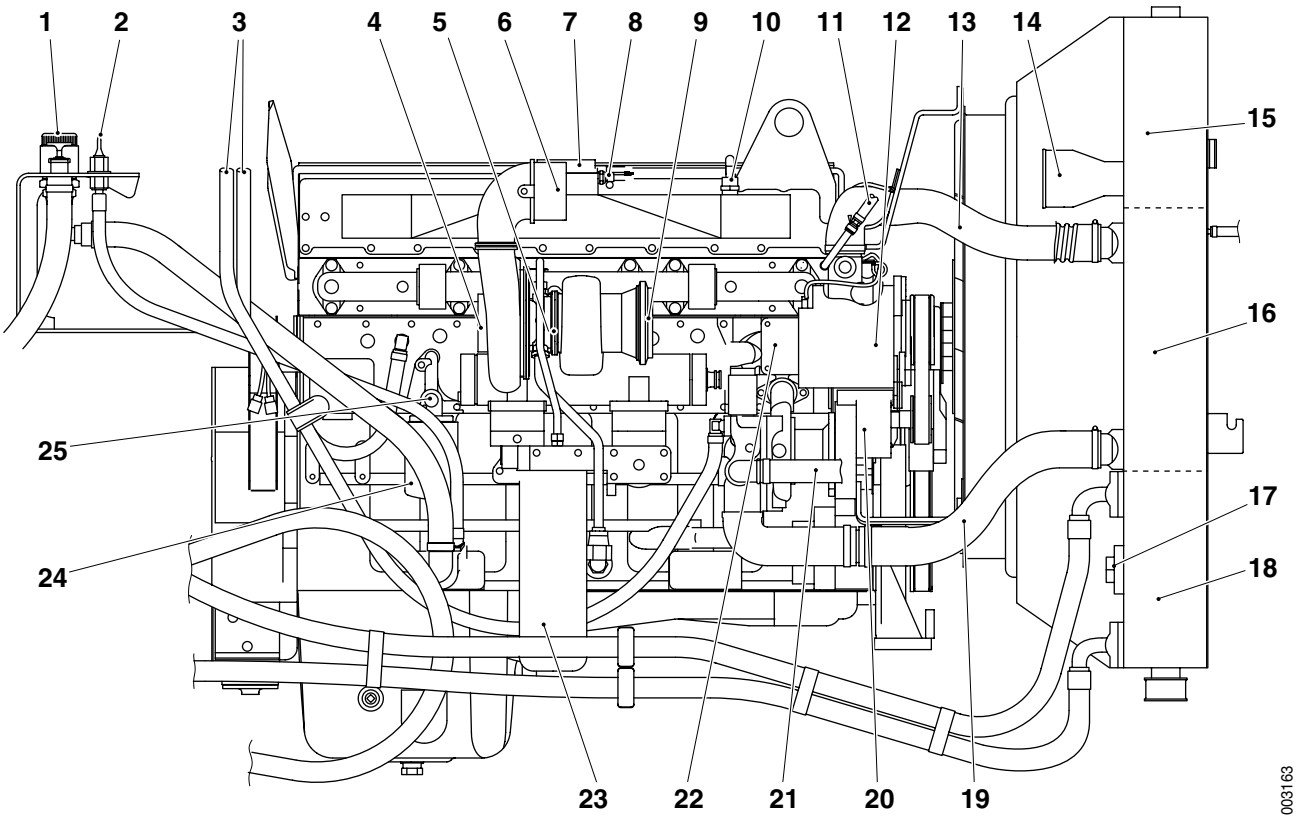

Engine alternative Cummins, left side (in machine's travel direction)

1. Oil dipstick
2. Filling point engine oil
3. Connection cab heat
4. Connection air cleaner
5. Turbocharger
6. Connection intercooler (outlet)
7. Connection intercooler (inlet)
8. Sensor inlet temperature
9. Connection exhaust system
10. Sensor boost pressure
11. Connection expansion tank
12. Alternator (sensor coolant temperature behind alternator)
13. Connection radiator (outlet)
14. Inlet intercooler
15. Intercooler
16. Radiator
17. Thermostat
18. Transmission oil cooler
19. Connection radiator (inlet)
20. Coolant pump
21. Connection expansion tank
22. Thermostat housing
23. Oil filter
24. Coolant filter
25. Shut-off valve, coolant

https://truckmanualshub.com/

1.2 Fuel system

Fuel system, description

For position of components, see *Engine alternative Volvo, component position page 4* or *Engine alternative Cummins, component position page 7*.

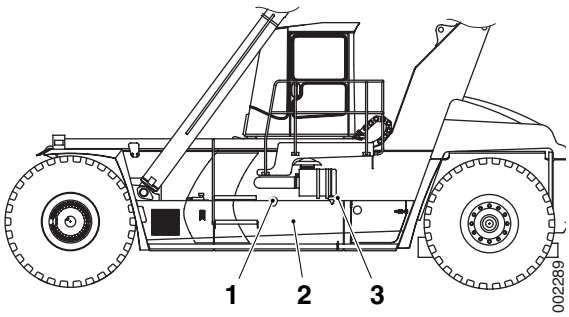

1. Filling point, fuel
2. Fuel tank
3. Sensor, fuel level (behind air filter)

Fuel system, bleeding (engine alternative Volvo)

1 Clean the area around the bleeder nipples on the fuel filter's bracket and cylinder head.

2 Place a receptacle under the fuel filter.

3 Connect a transparent plastic hose to the bleeder nipple on the filter bracket. Place the other end of the hose in the collection container.

4 Open the bleeder nipple on the filter bracket.

5 Pump up fuel with the hand pump until clean fuel free of air bubbles flows out of the hose.

NOTE

If only the fuel filter has been changed, no further bleeding is required.

6 Transfer the hose to bleeder nipple on the cylinder head, bleed in the same way as by the fuel filter.

https://truckmanualshub.com/

Metal filter supply line, cleaning (engine alternative Volvo)

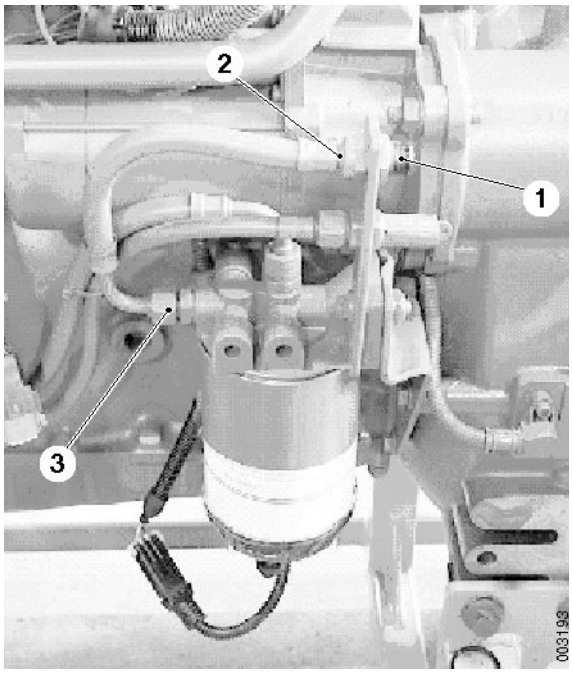

1. Attachment point, inlet
2. Metal filter's position in the hose
3. Attachment point, supply line

1 Use hose pliers and stop the fuel flow to the fuel filter.

2 Disconnect the hose in its attachments at position 1 and position 3.

3 Blow clean the hose with compressed air.

1.2.3 Fuel pre-filter

Fuel pre-filter, changing (Volvo engine)

DANGER

Pay attention to the fire hazard when working on the fuel system.

Avoid changing the fuel pre-filter when the engine is hot.

Fuel may spill on hot surfaces and may ignite.

NOTE

Avoid skin contact with fuel, use gloves. Fuel on hands may cause rashes and irritation.

https://truckmanualshub.com/

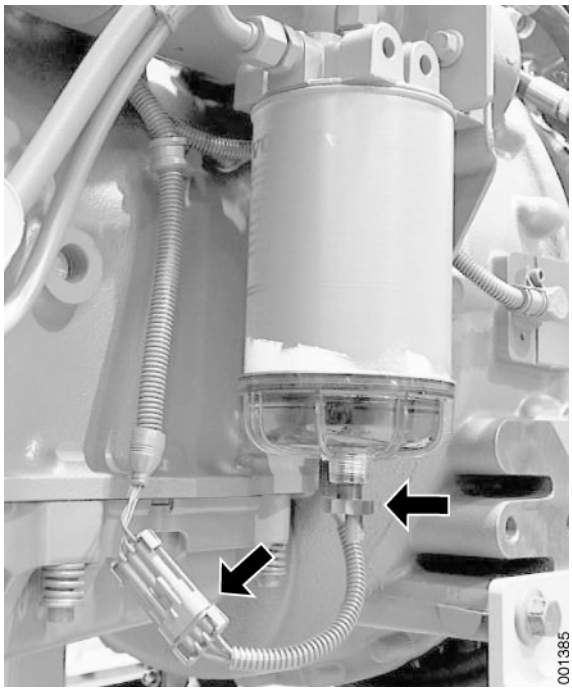

1 Machine in service position, see section *B Safety*.
2 Place a receptacle under the fuel pre-filter.
3 Clean the area around the fuel pre-filter.
4 Drain the fuel pre-filter of fuel and water.

   Open the drain valve on the underside, close the valve when the filter is empty.
5 Disconnect the wiring from the sensor for water in fuel.
6 Remove the fuel pre-filter with the filter tool.
7 Transfer the water trap to the new fuel pre-filter.
8 Lubricate the O-ring on the new fuel pre-filter with engine oil.
9 Fit the new fuel pre-filter.

   Tighten to contact and then another half to three-quarter turn.
10 Connect the wiring to the sensor for water in fuel.
11 Turn on the main electrical power and start the engine. Check that the filter seals tight.
12 Turn off the engine and remove the receptacle. Handle the fuel as environmentally hazardous and inflammable waste.

Fuel pre-filter, draining condensation water (Volvo engine)

NOTE

The fuel pre-filter should be drained of water every 50 operating hours.

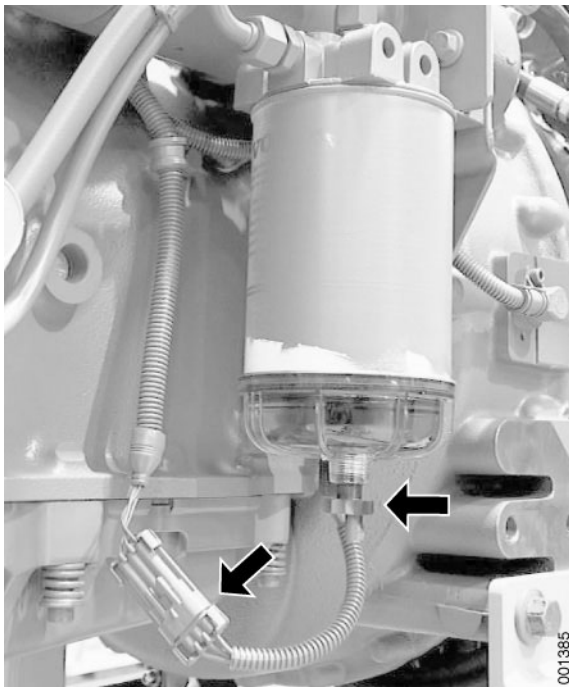

Fuel pre-filter, drain valve and connector for water in fuel sensor

DANGER

Pay attention to the fire hazard when working on the fuel system.

NOTE

Avoid skin contact with fuel, use gloves. Fuel on hands may cause rashes and irritation.

NOTE

Wait a few hours until the engine has cooled down before draining condensation water from the fuel pre-filter.

1 Machine in service position, see section *B Safety*.
2 Place a receptacle under the fuel pre-filter.
3 Open the drain valve on the underside and let the condensation water drain. Close the valve when clean fuel drains (no water bubbles).
4 Remove the receptacle. Handle the fuel as environmentally hazardous and inflammable waste.

https://truckmanualshub.com/

1.2.4 Fuel filter

Fuel filter, changing (Volvo engine)

DANGER

Pay attention to the fire hazard when working on the fuel system.

Avoid changing the fuel filter when the engine is hot.

Fuel may spill on hot surfaces and may ignite.

NOTE

Avoid skin contact with fuel, use gloves. Fuel on hands may cause rashes and irritation.

NOTE

Do not fill the new fuel filter with fuel before installing. There is a risk that impurities may enter the fuel system, resulting in malfunctions or damage.

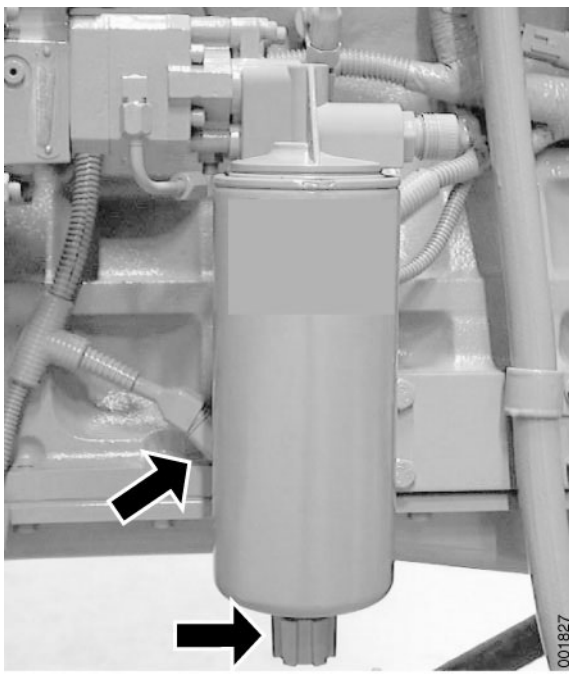

1 Machine in service position, see section *B Safety*.
2 Place a receptacle under the fuel filter.
3 Clean the area around the fuel filter.
4 Remove the fuel filter with filter tool.
5 Lubricate the O-ring on the new fuel filter with engine oil.
6 Fit the new fuel filter.
   Tighten to contact and then another half to three-quarter turn.
7 Bleed the fuel system, see *Fuel system, bleeding (engine alternative Volvo) page 9*.
8 Turn on the main electrical power and start the engine. Check that the fuel filter seals tight.
9 Turn off the engine and remove the receptacle. Handle the fuel as environmentally hazardous and inflammable waste.

https://truckmanualshub.com/

Fuel filter, changing (Cummins engine)

DANGER

Pay attention to the fire hazard when working on the fuel system.

Avoid changing the fuel filter when the engine is hot.

Fuel may spill on hot surfaces and may ignite.

NOTE

Avoid skin contact with fuel, use gloves. Fuel on hands may cause rashes and irritation.

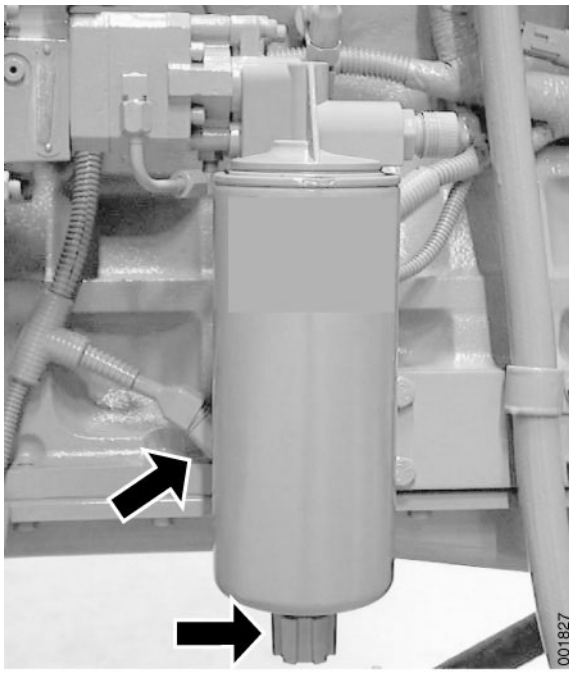

Fuel filter, drain valve and connector for water in fuel sensor

1 Machine in service position, see section *B Safety*.
2 Place a receptacle under the fuel filter.
3 Clean the area around the fuel filter.
4 Disconnect the wiring from the sensor for water in fuel.
5 Remove the fuel filter with filter tool.
6 Change the seal by the filter's threaded connection on the filter holder and lubricate it with engine oil.
7 Fill the new fuel filter with pure fuel.
8 Lubricate the seal on the new fuel pre-filter with engine oil.
9 Fit the new fuel filter.

   Tighten the fuel filter to contact and then another half to three-quarter turn.
10 Turn on the main electrical power and start the engine. Check that the fuel filter seals tight.
11 Turn off the engine and remove the receptacle. Handle the fuel as environmentally hazardous and inflammable waste.

https://truckmanualshub.com/

1.6 Air intake and exhaust outlet

1.6.1 Air cleaning system

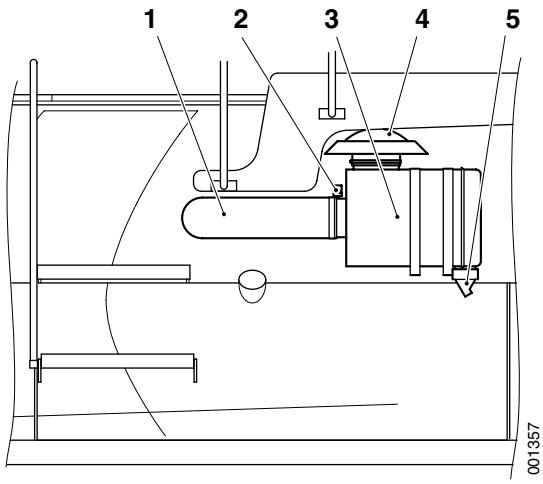

1. Inlet hose
2. Filter indicator
3. Air cleaner
4. Inlet
5. Dust reservoir

Air filter, changing

1 Machine in service position, see section *B Safety*.

2 Clean the outside of the air filter housing.

3 Remove the cap from the air filter housing.

4 Remove the filter cartridge.

5 Clean the particle outlet.

6 Check the safety cartridge, change as needed. (The safety cartridge should be changed every other time the filter cartridge is changed).

7 Fit a new filter cartridge and fit the cap.

NOTE

The filter cartridge should be changed, not cleaned.

8 Reset the indicator.

https://truckmanualshub.com/

1.7 Cooling system

Cooling system, description

The engine radiator is located together with the Intercooler and transmission oil cooler in a unit, a cooling unit.

For position of components, see *Engine alternative Volvo, component position page 4* or *Engine alternative Cummins, component position page 7*.

1.7.2 Coolant filter

Coolant filter, changing (Volvo engine)

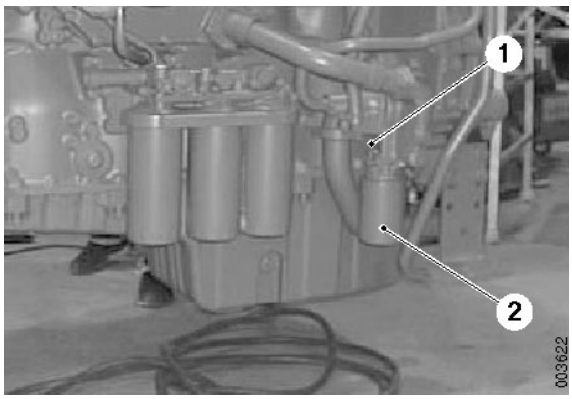

1. Shut-off valve
2. Coolant filter

NOTE

Close the shut-off valve before the filter is loosened. Coolant may run out resulting in environmental damage.

1 Machine in service position, see section *B Safety*.
2 Close the shut-off valve on the filter holder.
3 Clean the area around the coolant filter.
4 Place a receptacle under the coolant filter.
5 Remove the coolant filter with filter tool.
6 Lubricate the O-ring on the filter cartridge with engine oil.
7 Fit the new filter.

  Tighten to contact and then another half to three-quarter turn.

8 Open the shut-off valve on the filter holder.

NOTE

Do not forget to open the valve after changing. Otherwise, the coolant does not pass through the filter and is not cleaned.

9 Turn on the main electrical power and start the engine.
10 Check that the coolant filter seals tight.
11 Remove the receptacle. Handle the coolant as environmentally hazardous waste.

https://truckmanualshub.com/

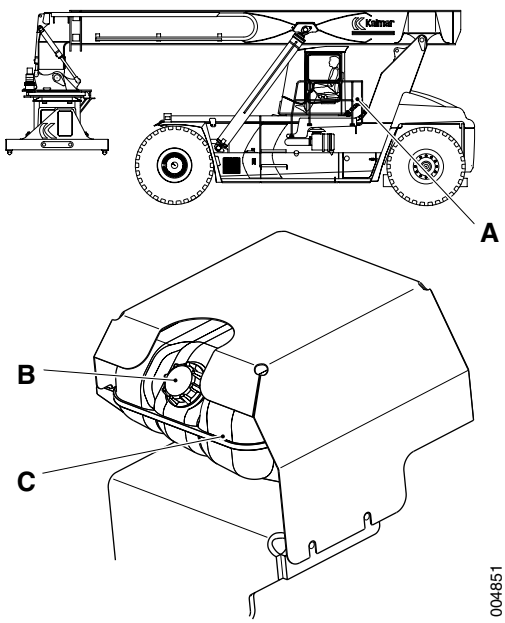

A. Position of coolant reservoir (expansion tank)
B. Filling point
C. Level marking, MIN and MAX

12 Check the coolant level in the expansion tank, top up if needed.

https://truckmanualshub.com/

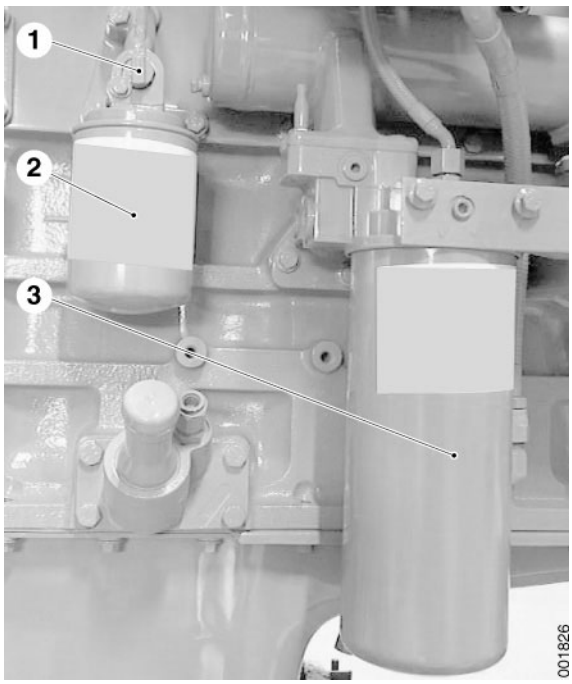

Filter left side, Cummins engine
1. Shut-off valve, coolant
2. Coolant filter
3. Oil filter

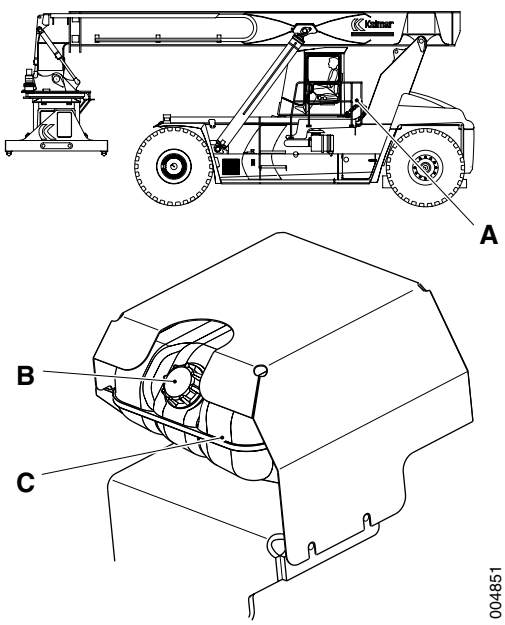

A. Position of coolant reservoir (expansion tank)
B. Filling point
C. Level marking, MIN and MAX

Coolant filter, changing (Cummins engine)

NOTE

Close the shut-off valve before the filter is loosened. Coolant may run out resulting in environmental damage.

1 Machine in service position, see section *B Safety*.
2 Close the shut-off valve on the filter holder.
3 Clean the area around the coolant filter.
4 Place a receptacle under the coolant filter.
5 Remove the coolant filter with filter tool.
6 Lubricate the O-ring on the filter cartridge with engine oil.
7 Fit the new filter.
  Tighten to contact and then another half to three-quarter turn.
8 Open the shut-off valve on the filter holder.

NOTE

Do not forget to open the valve after changing. Otherwise, the coolant does not pass through the filter and is not cleaned.

9 Turn on the main electrical power and start the engine.
10 Check that the coolant filter seals tight.
11 Remove the receptacle. Handle the coolant as environmentally hazardous waste.
12 Check the coolant level in the expansion tank, top up if needed.

https://truckmanualshub.com/

1.7.5 Cooling fan

Fan belt, checking

1 Place the cab in the front position.
2 Remove the cover plates over the engine and radiator.
3 Wash the engine compartment.
4 Machine in service position, see section *B Safety*.

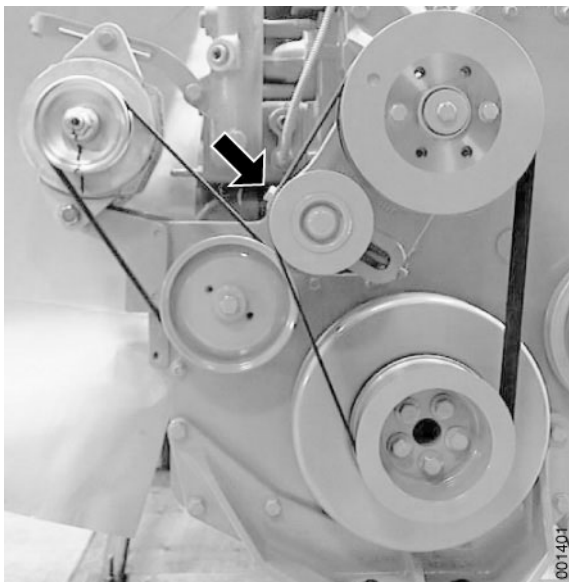

The figure shows engine alternative Cummins

5 Check the belt tension and adjust if needed.

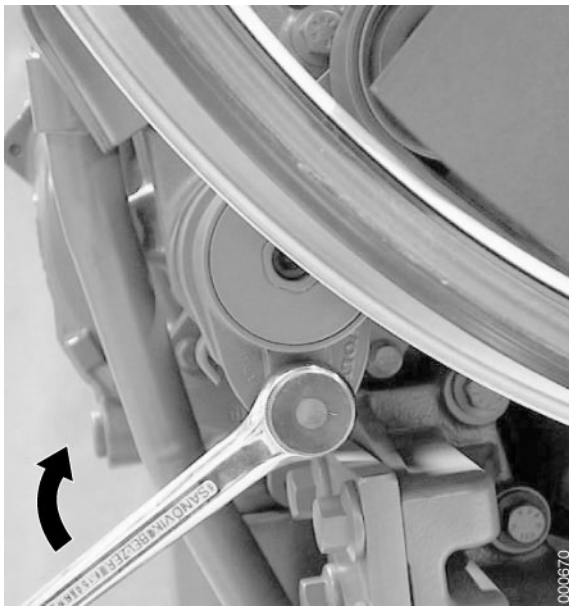

The figure shows engine alternative Volvo

https://truckmanualshub.com/

1.7.7 Coolant

Coolant level, checking

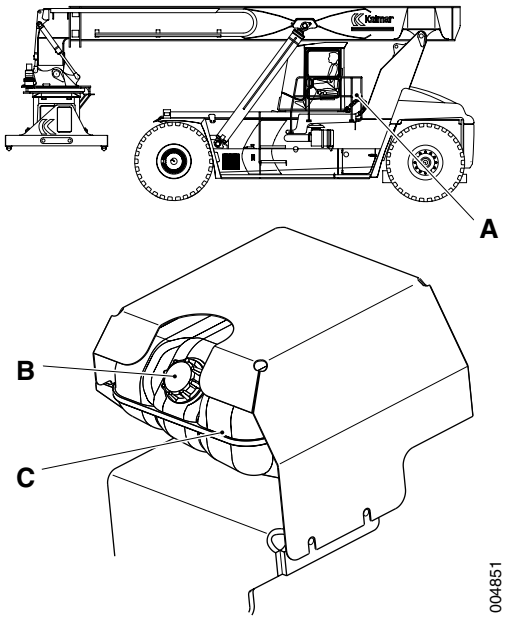

A. Position of coolant reservoir (expansion tank)
B. Filling point
C. Level marking, MIN and MAX

WARNING

The cooling system is pressurized. Steam or hot fluid may jet out.

Risk of scalding and burn injuries!

Open the filler cap (position B) very carefully when the engine is warm. Wait until the coolant has cooled down before topping up.

Coolant is filled in the system's expansion tank (position A). The coolant level should be between the MIN and MAX markings (position C) on the expansion tank.

NOTE

Open very carefully as hot coolant may jet up and out.

If the coolant level becomes too low, the warning light for low coolant level lights up on the instrument panel.

NOTE

A low coolant level may cause engine damage or may cause the engine to stop.

1 Machine in service position, see section *B Safety*.

2 If needed, top up with water (wintertime with at least 40% glycol). For volume, see section *F Technical data*.

If glycol is not used, then anti-corrosion agent must be added. However, anti-corrosion agents do not contain any anti-freeze agent and therefore these shall only be used if the outdoor temperature always is above 0 °C.

https://truckmanualshub.com/

1.8 Lubrication

Lubrication system, description

The engine's lubrication system is a completely closed system and has no connections to the machine.

For position of components, see *Engine alternative Volvo, component position page 4* or *Engine alternative Cummins, component position page 7*.

Oil and oil filter, change (engine alternative Volvo)

WARNING

Avoid skin contact with the oil, use protective gloves.

Hot oil may cause burns, rashes and irritation!

1 Run the engine until warm.

2 Machine in service position, see section *B Safety*.

3 Place a receptacle underneath the engine.

4 Remove the drain plug on the engine and drain the engine of oil.

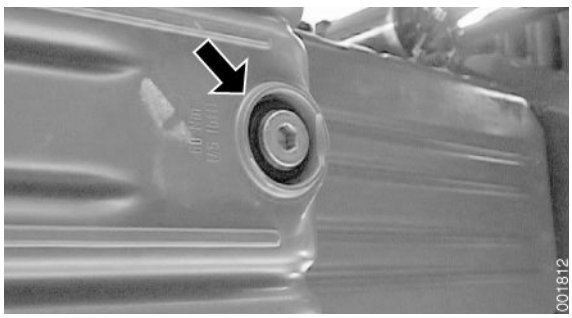

Drain plug, engine from underneath

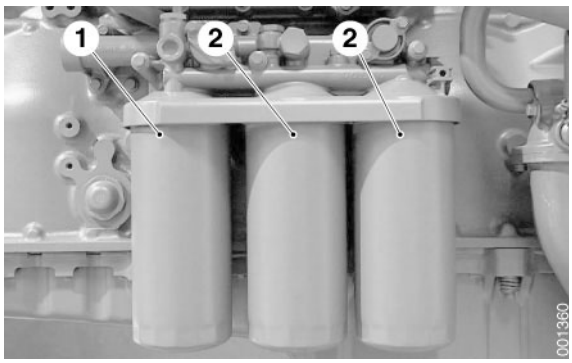

Oil filter engine alternative Volvo TWD1240VE
1. By-pass filter
2. Full-flow filter

5 Place a receptacle under the oil filters.

6 Clean the area around the oil filters.

7 Remove the oil filters.

8 Install new oil filters.

Lubricate the O-rings on the new filters with engine oil.

Full-flow filter: tighten to contact and then another half to three-quarter turn.

By-pass filter: tighten to contact and then another three-quarter to one turn.

9 When the oil has drained, install the oil plug. Torque with max. **60 Nm**.

NOTE

https://truckmanualshub.com/

Do not tighten the oil plug with higher tightening torque, the threads will be damaged.

10 Fill with engine oil. For volume and grade, see section *F Technical data*.

11 Start the engine, let it idle and check that the drain plug and filters do not leak.

12 Turn off the engine and check the oil level, see *Oil level, checking page 23*. Top up if needed.

13 Remove the collection container, handle the engine oil and filters as environmentally hazardous waste.

Oil and oil filter, change (engine alternative Cummins)

CAUTION

Avoid skin contact with the oil, use protective gloves.

Hot oil may cause burns, rashes and irritation!

1 Run the engine until warm.

2 Machine in service position, see section *B Safety*.

3 Remove the protective plates over the oil filling point for the engine and transmission.

4 Place a receptacle underneath the engine.

5 Remove the drain plug on the engine and drain the engine of oil.

6 Place a receptacle under the oil filters.

7 Clean the area around the oil filters.

https://truckmanualshub.com/

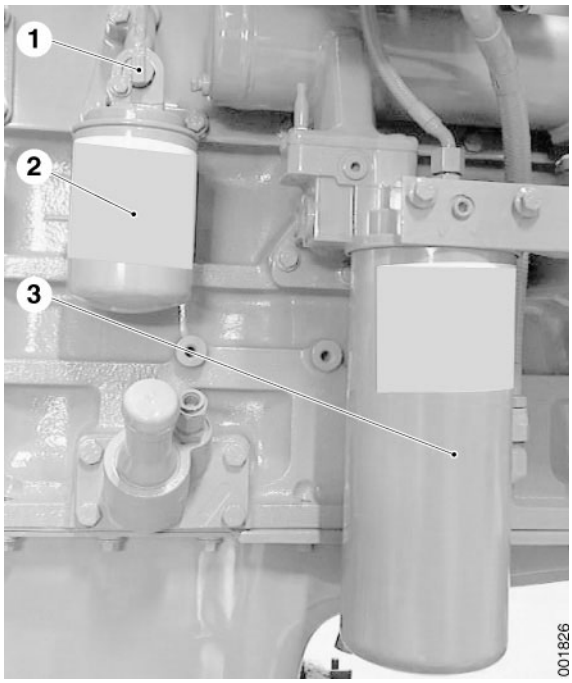

Oil filter left side, engine alternative Cummins QSM11
1. Shut-off valve, coolant
2. Coolant filter
3. Oil filter

8 Remove the oil filter.

9 Fill the new filter with new engine oil and lubricate the O-ring on the filter with engine oil.

10 Fit the new filter.

Tighten the filter according to the instructions on the filter.

11 When the oil has drained, install the oil plug. Torque with **88 Nm**.

12 Fill with engine oil. For volume and grade, see section *F Technical data*.

13 Start the engine, let it idle and check that the drain plug and filters do not leak.

14 Turn off the engine and check the oil level, see *Oil level, checking page 23*. Top up if needed.

15 Remove the receptacle, handle the engine oil as environmentally hazardous waste.

https://truckmanualshub.com/

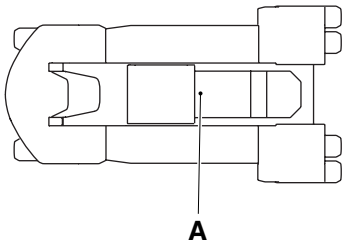

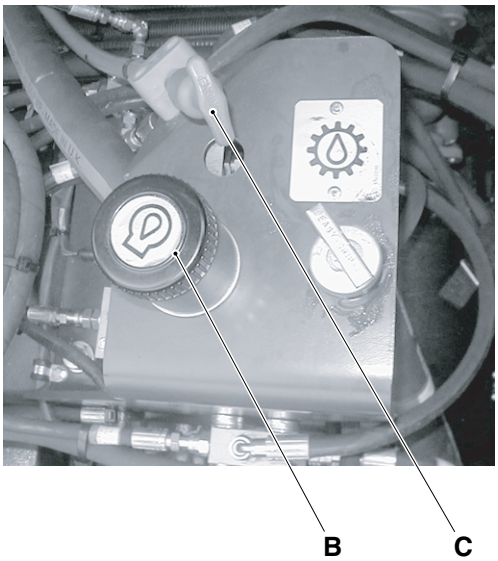

A. Position of filling point and level check
B. Filling point
C. Dipstick

Oil level, checking

WARNING

Avoid prolonged skin contact with engine oil.

Hazardous to health!

Use protective gloves.

Engine oil, general

The engine's oil filler pipe (position B) and dipstick (position C) are located under the service hatch in front of the cab.

1 Machine in service position, see section *B Safety*.

2 Check the oil level when the engine is warm. The dipstick has two markings, MAX. and MIN., the oil level should be between these markings.

Wipe off the dipstick before checking.

NOTE

The oil dipstick is long. Use gloves.

3 Fill engine oil (position B) as needed (for volume, see section *F Technical data*).

4 The recommendation is that oil is filled when the engine and oil are at operating temperature. Fill – wait awhile – check on the dipstick.

NOTE

Work carefully when filling to prevent other fluids or particles from contaminating the oil, which means risk of engine damage.

https://truckmanualshub.com/

1.9 Control system engine

Control system engine, description

The engine is controlled by a control system, for which the central unit is a control unit.

The control unit controls the amount of fuel to the unit injectors by opening and closing a fuel valve by each injector. The unit injectors are activated by an extra cam on the camshaft, which presses together the injector so that the fuel is injected in the cylinder.

The fuel volume is calculated based on the signals from the sensors on the engine and CAN-message about desired engine rpm (from throttle pedal via Control unit cab (D790-1)).

https://truckmanualshub.com/

1.10 Ignition/heating

Ignition/heating, description (engine alternative Volvo)

The engine is equipped with preheating of the inlet air, for faster start at low temperatures. Preheating is activated when the start key is in position II. When preheating is activated Indicator light preheating is on. The ignition sends signals to Control unit KIT (D790-2) which sends messages via CAN-buss drivetrain to Control unit engine (D794).

For position of components, see *Engine alternative Volvo, component position page 4*.

Ignition/heating, description (engine alternative Cummins)

The engine is equipped with preheating of the inlet air, for faster start at low temperatures. Preheating is activated automatically by the engine's own control system.

For position of components, see *Engine alternative Cummins, component position page 7*.

https://truckmanualshub.com/

1.11 Start/stop

Start/stop, description (engine alternative Volvo)

The engine is started and stopped with the ignition. The ignition sends signals to Control unit KIT (D790-2) and Control unit cab (D790-1) which send messages via CAN-buss drivetrain to Control unit engine (D794). Starter motor and stop device are controlled by Control unit engine (D794).

Start interlock (immobilizer) is available as an option, where a code must be entered via the display before the engine can be started.

For position of components, see *Engine alternative Volvo, component position page 4*.

Start/stop, description (engine alternative Cummins)

The engine is started and stopped with the ignition. The ignition sends signals to Control unit KIT (D790-2) and Control unit cab (D790-1) which send messages via CAN-buss drivetrain to Control unit frame rear (D797-R) that activates the starter motor via relay (k360) Stop is controlled by Control unit engine (D794).

Start interlock (immobilizer) is available as an option, where a code must be entered via the display before the engine can be started.

For position of components, see *Engine alternative Cummins, component position page 7*.

https://truckmanualshub.com/

Table of Contents 2 Transmission

2 Transmission 3
2.2 Torque converter/clutch system 5
2.3 Mechanical transmission 6
2.6 Lubrication 7
2.7 Cooling 10
2.8 Control system transmission 11

https://truckmanualshub.com/

https://truckmanualshub.com/

2 Transmission

Transmission, function description

The transmission converts the engine power to the drive wheels (drive axle) via the propeller shaft and also power to drive the hydraulic oil pumps for hydraulics and the brake system.

The transmission is fully automatic with torque converter. It has four forward gears and four reverse gears.

The torque converter and the transmission work together via a common hydraulic system. The torque converter is a hydraulic clutch placed between the engine's output shaft and the transmission's input shaft. The hydraulic oil pumps as well as the oil pump for the transmission's control and lubrication are connected to the torque converter via power take-offs on the transmission.

Gear positions are selected by pressure modulation with electrical valves that are controlled by Control unit transmission (D793). The control unit uses sensors for pressure, temperature and speeds to determine which gear position shall be activated as well as solenoid valves to activate the gear.

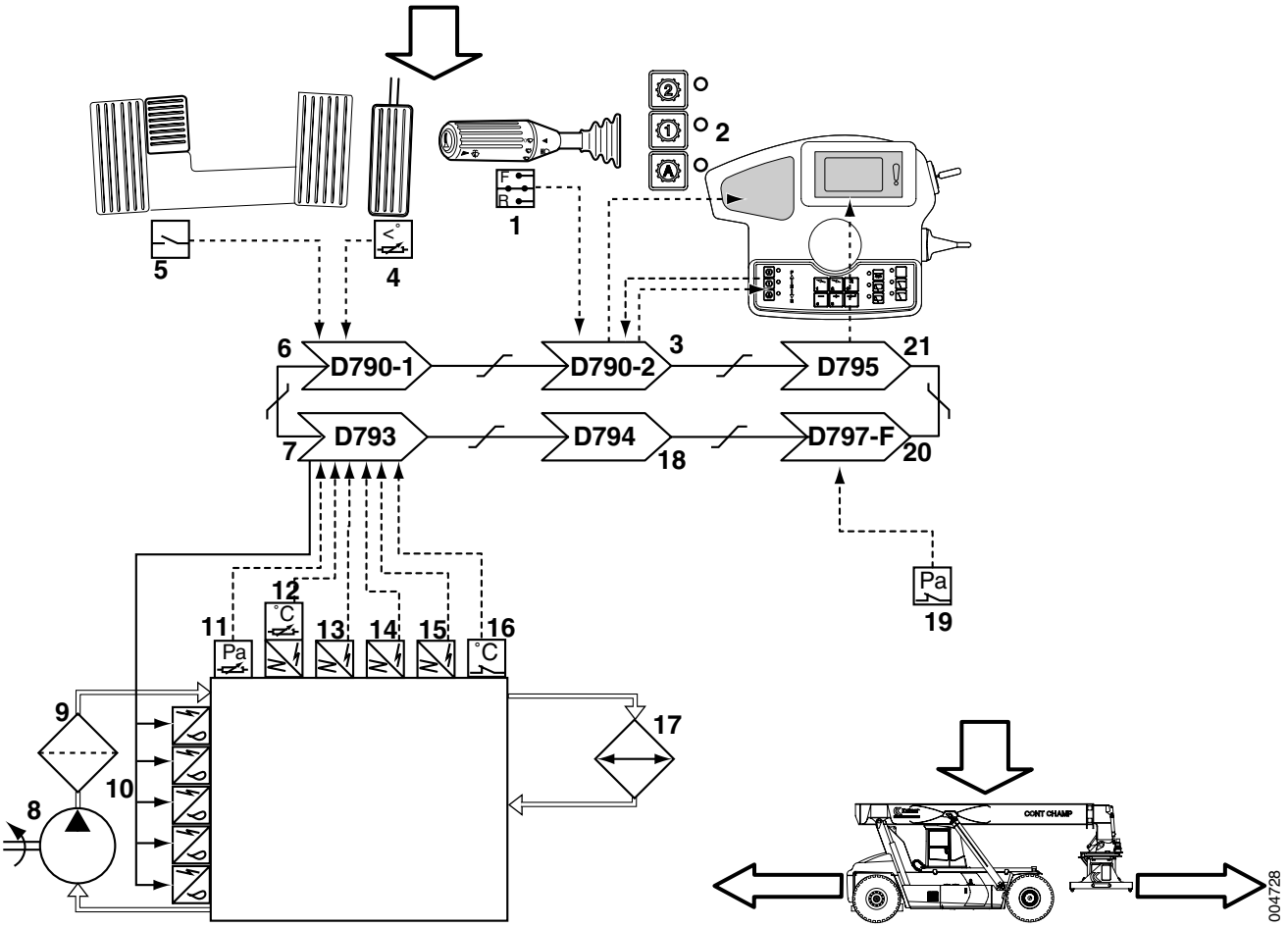

1. Multi-function lever (S162)
12. Sensor engine speed and oil temperature (B758/766)

https://truckmanualshub.com/

2. Mode selector on Control unit KIT (D790-2)
3. Control unit KIT (D790-2)
4. Accelerator pedal (B690)
5. Declutch pedal (S220-1)
6. Control unit cab (D790-1)
7. Control unit transmission (D793)
8. Oil pump transmission
9. Oil filter transmission
10. Solenoid valves for travel direction and gear position in valve block transmission control
11. Sensor oil pressure
13. Sensor drum speed (B752)
14. Sensor turbine speed (B751)
15. Sensor output shaft speed (B758)
16. Temperature monitor torque converter (S221)
17. Oil cooler
18. Control unit engine (D794)
19. Make-contact declutch (S220-2)
20. Control unit frame front (D797-F)
21. Control unit KID (D795)

Transmission, component position

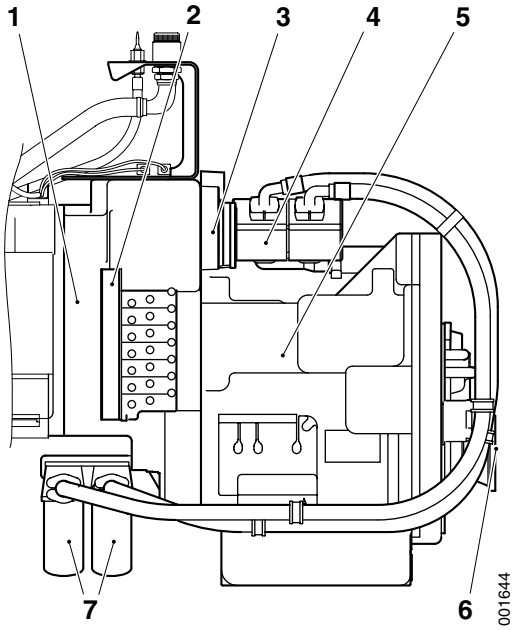

Transmission right side
1. Torque converter
2. Valve block transmission control
3. Power take-off
4. Oil pumps transmission (2 pcs.)
5. Transmission
6. Output shaft
7. Oil filter transmission

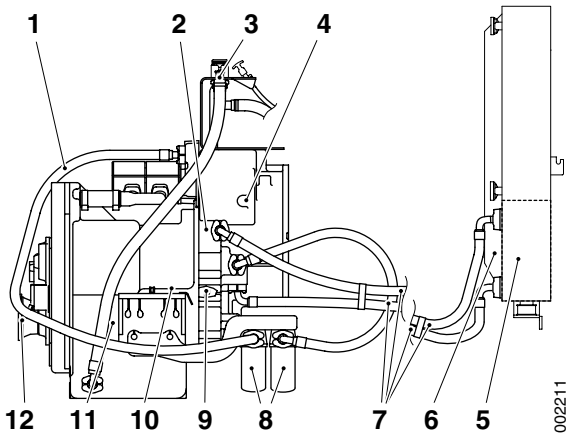

Transmission left side
1. Pressure line oil filter
2. Temperature monitor torque converter
3. Oil dipstick and filling point
4. Sensor engine rpm and oil temperature (from cooler to sump)
5. Transmission oil cooler
6. Thermostat
7. Hoses cooling
8. Oil filter transmission
9. Sensor rpm turbine
10. Sensor rpm drum
11. Sensor rpm output shaft
12. Output shaft

https://truckmanualshub.com/

2.2 Torque converter/clutch system

Torque converter/clutch, description

The torque converter transmits the engine's power to the transmission.

For position of components see *Transmission, component position page 4*.

Breather filter, cleaning

1 Machine in service position, see section *B Safety*.

2 Disconnect the breather filter from the transmission.

3 Clean the breather filter from dirt.

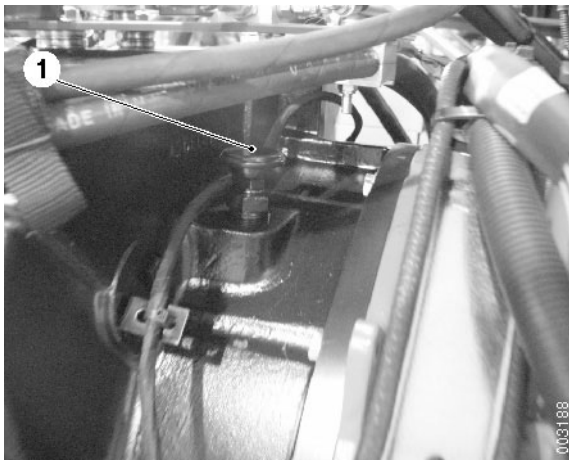

1. Breather filter, on top of torque converter.

https://truckmanualshub.com/

2.3 Mechanical transmission

Mechanical transmission, description

The transmission is built with all gears in constant mesh. It is shifted through hydraulic pressurizing of clutch discs for each one of the gears. The clutch discs connect the input shaft with the main shaft or tubular shaft, depending on which gear has been selected. Shifting takes place without disengaging the transmission from the engine.

The clutches for FORWARD and REVERSE are modulated electro-hydraulically, which means that the clutch pressure builds up gradually. This allows shifting between FORWARD and REVERSE, and vice versa, while operating at a speed lower than set limit value, see section *8 Control system*, group *8.5.1.5 DRIVETRAIN*. Modulation also gives smooth shifting between FORWARD and REVERSE.

High modulation (that is, soft operation/intensive slipping between gear positions) results in high transmission wear and high oil temperature. The sensor for oil temperature generates a warning when the oil gets warmer than 120 °C. If the oil temperature sensor indicates 125 °C, the transmission's function ceases.

There are four gears in each direction for the transmission. A clutch (disengagement) function is operated with a separate clutch pedal that starts to function at a certain brake pressure.

The electric shifting system is either manual or automatic.

For position of components see *Transmission, component position page 4*.

https://truckmanualshub.com/

2.6 Lubrication

Lubrication system, description

The transmission has its own lubrication system that is used for lubrication, control and cooling of the transmission. The transmission oil cooler is located at the bottom in the cooler unit behind the engine, a thermostat in the cooler enables the oil to reach operating temperature faster.

At high oil temperature (120 °C) a warning is activated in Control unit KID (D795) and performance is reduced, if the oil temperature goes above 125 °C the transmission is disengaged.

For position of components see *Transmission, component position page 4*.

Oil and oil filter, changing

WARNING

Avoid skin contact with the oil, use protective gloves.

Hot oil may cause burns, rashes and irritation!

NOTE

The transmission must not be overfilled!

1 Operate and warm up the transmission oil.
2 Machine in service position, see section *B Safety*.
3 Place a receptacle under the transmission.
4 Remove the drain plug for transmission oil and let the oil drain into the receptacle.

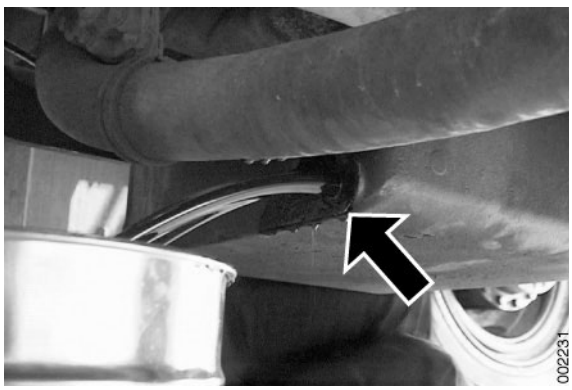

Draining transmission oil

https://truckmanualshub.com/

Oil filter transmission

5 Place a collection container under the oil filters.

6 Clean the area around the oil filters.

7 Remove the oil filters.

8 Install the new oil filters.

Wet the O-ring on the new oil filters with transmission oil. Tighten to contact and then another two-thirds of a turn.

9 When the transmission oil has drained, fit the drain plug.

Make sure that the washer for the oil plug is included.

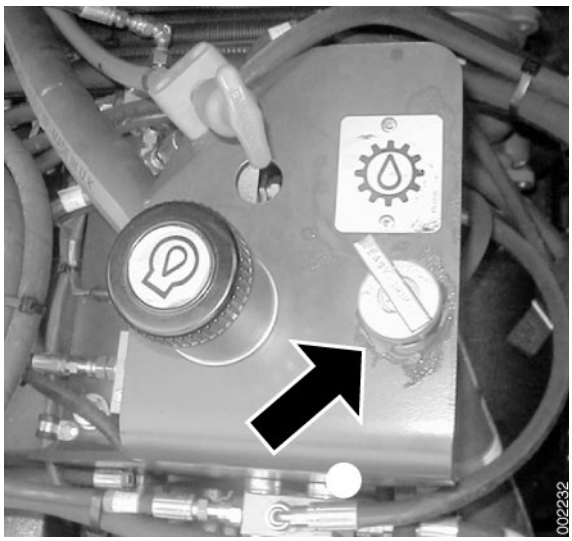

Oil dipstick and filling point transmission oil

10 Remove the transmission dipstick and fill new transmission oil through the dipstick's hole to the marking for low level on the dipstick.

For volume and quality, see section *F Technical data*.

11 Start the engine and let the engine idle for at least two minutes.

12 Check that the drain plug for transmission oil seals tight.

13 Remove the collection container, handle the oil and oil filters as environmentally hazardous waste.

14 Check the transmission oil level with the engine running at idle and top up to the marking for low level.

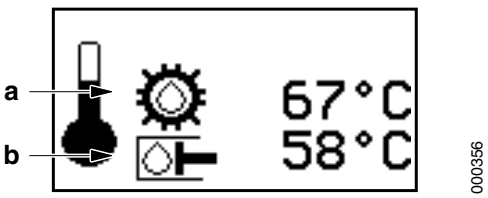

Operating menu oil temperature
a. Transmission oil temperature
b. Hydraulic oil temperature

15 Warm up the transmission so that the oil temperature is 63-73 °C. Use the operating menu to check the transmission oil temperature.

16 Check the oil level and top up to the marking for max. oil level.

https://truckmanualshub.com/

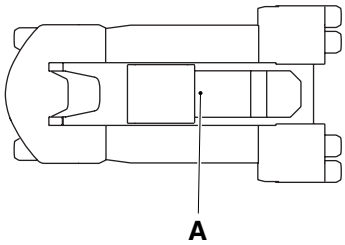

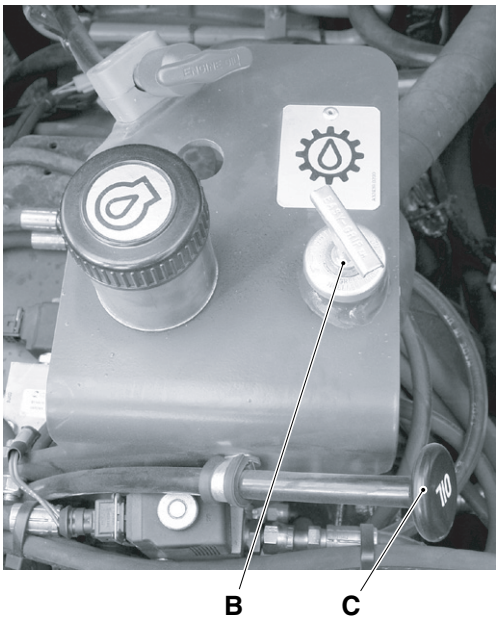

000379

A. Position of filling point and level check
B. Filling point and dipstick

Oil level, checking

WARNING

Avoid prolonged skin contact with the transmission oil.

Hazardous to health!

Use protective gloves.

The transmission's oil filler pipe and dipstick (position B) are located under the service hatch in front of the cab.

1 Check the oil level with the engine at idle, transmission in neutral position and at operating temperature (approx. 85 °C). The dipstick has two markings, MAX and MIN, between which the oil level should be.

Wipe off the dipstick before checking.

NOTE

The dipstick is long. Use gloves.

2 Fill transmission oil (position B) as needed (for volume, see section **F Technical data**).

3 The recommendation is that oil is filled when the transmission is at operating temperature. Fill – wait awhile – check on the dipstick.

NOTE

Work carefully when filling transmission oil to prevent other fluids or particles from contaminating the oil, which means risk of transmission damage.

https://truckmanualshub.com/

2.7 Cooling

Cooling system, description

The transmission is cooled by the lubrication system see *Lubrication system, description page 7*.

For position of components see *Transmission, component position page 4*.

https://truckmanualshub.com/

2.8 Control system transmission

Control system transmission, description

The transmission control unit controls shifting based on pressure sensors, temperature sensors and speed sensors. Gear selection takes place by activating solenoid valves that distribute control pressure in the transmission, so that selected gear gives the correct speed.

For position of components see *Transmission, component position page 4* and section *11 Common electrics,* group *11.5.3 Control units*.

In case of serious transmission problems, the control unit uses two modes with reduced functionality to protect the transmission, Shut-down and Limp-home.

Mode Limp-Home

Display on Control unit transmission shows LH.

In case of:

- a malfunction of a control output from the transmission is detected.
- a malfunction connected to a sensor for “engine speed” is detected.
- two of three “vehicle speed” sensors are defective.

In case any of the above points occur, the transmission will be placed in neutral position. To enable continued operation, gears have to be selected using the gear selector.

In this mode the operator can use the transmission's two first gears in both directions. If the malfunction occurs at a higher gear, the operator has to downshift manually to first or second gear to continue.

The control unit uses standard values for modulation.

Mode Shut-Down

Display on Control unit transmission shows "Sd".

The transmission has a built-in secondary solenoid and pressure sensor that monitor the transmission's internal oil pressure. The secondary solenoid is handled by the control unit.

When the control unit gives a control signal for “Shut-Down“, the oil pressure releases for all pressure modulators. This happens in case of a serious malfunction.

In this mode the transmission is in permanent neutral position as there is no oil pressure to enable selection of a gear.

https://truckmanualshub.com/

Transmission, calibrating

DANGER

Do not leave the machine during calibration. The machine may start to move.

1 Park the machine on level ground, engage neutral position and apply the parking brake. Run the engine at idling speed.

2 To select the function to calibrate, first navigate to the service menu. Then press Enter.

000056

3 Enter code for calibration.

The code is obtained via Kalmar Industries Support.

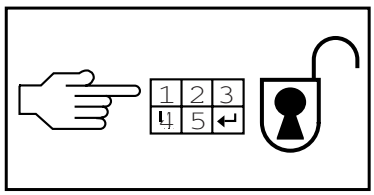

000060

NOTE

The code determines which service menu shall be activated (Diagnostics, Initiation or Calibration).

4 Select group by scrolling with the arrow keys (1 and 2) and confirm DRIVE-TRAIN with Enter.

```
CALIBRATION

SCALE STEERING
DRIVE-TRAIN RETURN
```

000062

5 Scroll with the arrow keys (1 and 2) and select DRIVE-TRAIN, menu 4.

6 Check that the oil temperature is 61 °C.

If the oil temperature is too low go to DRIVE-TRAIN, menu 4.

A. Apply the footbrake so that the machine is stationary.

B. Select travel direction forward and apply maximum acceleration for 20 seconds.

C. Engage neutral position and apply maximum acceleration for 10 seconds, run the engine at idling speed.

D. Repeat steps B and C until the oil is hot.

The engine speed may be reduced towards the end of heating because the oil from the gearbox is too hot. If this occurs, maintain neutral position and maintain an engine speed of 1200 rpm for 20 seconds.

When the temperature is correct, MODE is changed from 0 to 1.

```
CALIBR DRIVE-TRN  4(4)
GEARBOX WARM UP
MODE                X
ACTUAL TEMP       XXX
TARGET TEMP       XXX
```

000082

https://truckmanualshub.com/


```
CALIBR DRIVE-TRN  3(4)
CLUTCH TUNING
PHASE   X    SUB-PH  X
CLUTCH  X    STATUS  X
ACTION  X      XXXXrpm
```

000081

7 Select DRIVE-TRAIN, menu, 3.

GEARBOX TUNING

Description: Calibration of transmission couplings.

PHASE:	Indicates current phase in the calibration. 0. Prefilling of coupling 1. Calibration of coupling 4. Calibration complete 5. Calibration incorrect
CLUTCH:	Indicates which clutch shall be calibrated. F. Clutch forward R. Clutch reverse 1. Clutch gear 1 2. Clutch gear 2 3. Clutch gear 3 4. Clutch gear 4
ACTION:	Indicates action from mechanics (in the event of a fault) 0. No action (normal condition if no fault). 1. Increase throttle application. 2. Reduce throttle application. 3. Select neutral position. 4. Select travel direction forward. 5. Stop the vehicle. (Press the brake if the machine starts to move.) 6. Heat the transmission, see step 4. 7. No action, the engine is controlled via the transmission control unit. 8. Keep the accelerator pedal in its current position. 9. Check error codes.
SUB-PH:	Internal value for sub-phase 1 or 0.
STATUS:	Calibration status. 0. Calibration not in progress. 3. Calibration in progress

8 Check that the gear control is in neutral position.

9 Start calibration by pressing Enter.

https://truckmanualshub.com/

10 Calibration starts (takes approx. 15 minutes) and engine speed is raised to approx. 770 rpm.

The transmission will activate different gears during calibration.

NOTE

If the machine starts to move during calibration then use the footbrake to keep the machine stationary.

IMPORTANT

Calibration can be aborted at any time by selecting travel direction reverse.

11 When the engine speed decreases to idling and PHASE = 4 then calibration is complete.

12 Turn off the ignition to store the values.

https://truckmanualshub.com/

Table of Contents 3 Driveline/axle

3 Driveline/axle 3
3.2 Propeller shaft 4
3.3 Drive axle 5

https://truckmanualshub.com/

https://truckmanualshub.com/

3 Driveline/axle

Driveline/axle, description

The machine's power transmission consists of propeller shaft and drive axle with differential and hub reduction.

https://truckmanualshub.com/

3.2 Propeller shaft

Propeller shaft, description

The propeller shaft transmits the engine power from transmission to the drive axle.

Propeller shaft, checking

Grease nipple for universal joint, example

- After 50h:

  Check-tighten attaching bolts at mountings to drive axle and transmission with **200 Nm**.

- After 500h:

  Clean

  Check clearance in universal joints.

- After 1000h:

  Grease universal joints with universal grease EP2.

  Check-tighten attaching bolts at mountings to drive axle and transmission with **200 Nm**.

https://truckmanualshub.com/

3.3 Drive axle

Drive axle, description

The drive axle transmits the engine power to the wheels. After the drive axle's input shaft is a differential which changes the reduction ratio, distributes the power between right and left drive wheels and also makes it possible for the drive wheels to rotate at different speed when cornering. The drive shaft transmits the power from the differential to the wheel hubs. There are hub reductions at the wheel hubs that change the reduction ratio between wheel and engine to reduce the stress on the drive shaft.

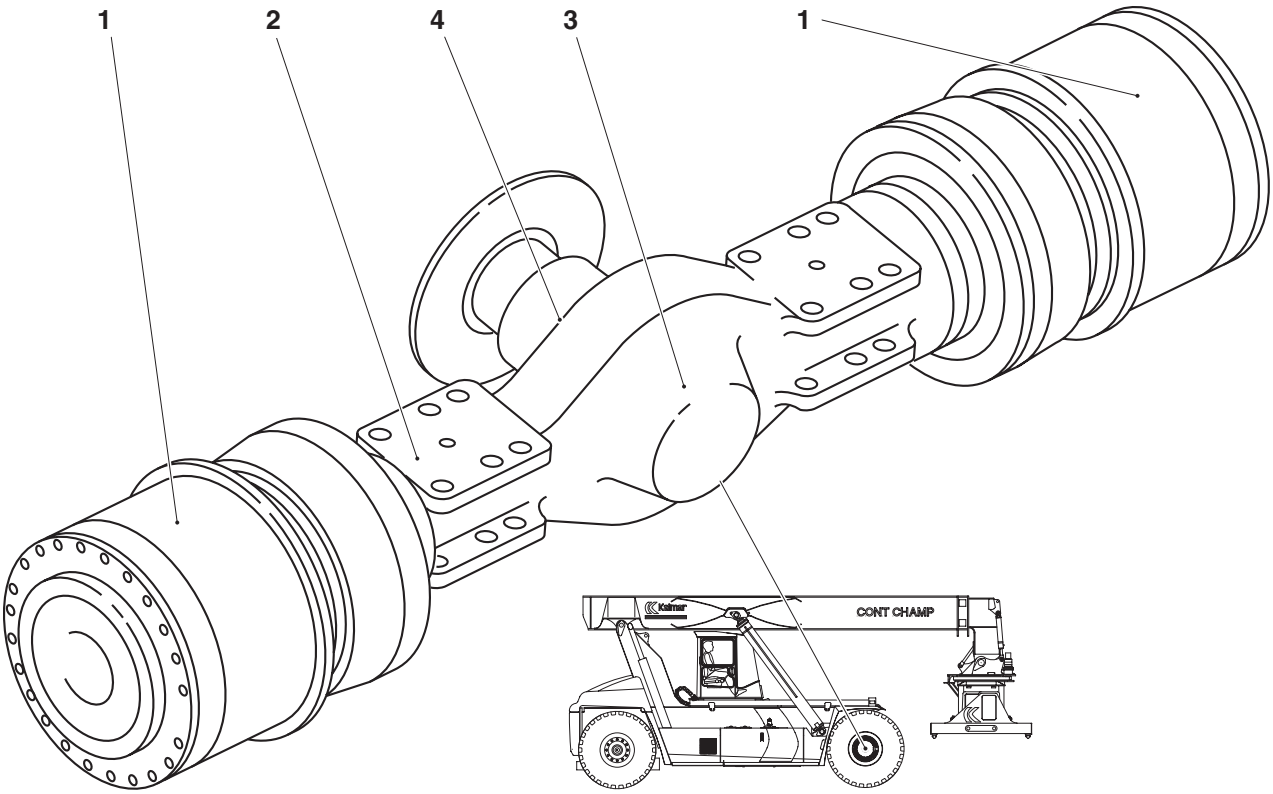

1. Hub reduction
2. Drive shaft (internal)
3. Differential (internal)
4. Drive axle housing

https://truckmanualshub.com/

Drive axle, checking

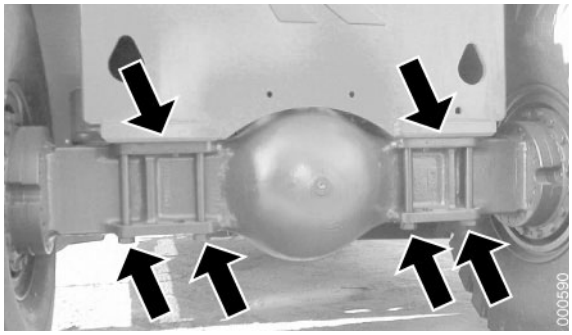

Attaching bolts drive axle

1 Check the drive axle's attachment to the frame so that there is no corrosion on structural elements (e.g., attaching bolts).

2 Check-tighten the drive axle's attaching bolt with **2350 Nm**.

3 Check-tighten the wheel nuts with **400 Nm**.

4 Check the bolted joint to the parking brake caliper's attaching plate and brake disc.

5 Check that drive axle seals tight.

6 Check the oil level in drive axle and the hub reductions.

Drive axle oil, changing

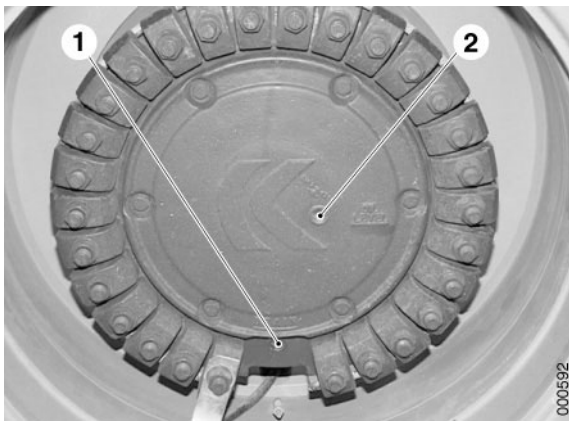

Wheel hub drive axle
1. Drain plug
2. Level and filler plug.

1 Place the machine in position so that the drain plug on the wheel is lowest vertically.

This applies to both drive wheels.

Wheel 1: move forwards or backwards to obtain the correct position.

Wheel 2: lift the wheel from the ground (raise the machine under the drive axle) and rotate the wheel into the correct position.

2 Machine in service position, see section *B Safety*.

3 Remove drain plug (position 3) on both sides. Also remove the level and filler plug (position 2) to facilitate draining.

Both sides shall be drained separately.

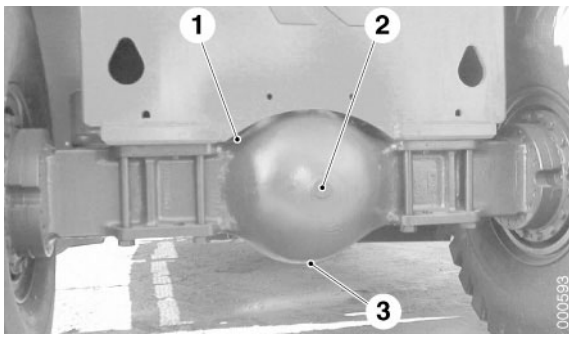

Differential drive axle
1. Breather drive axle (inside frame)
2. Level and filler plug
3. Drain plug

4 Remove the drain plug in the drive axle (at bottom of drive axle). Also remove the level and filler plug to facilitate draining.

5 Clean the drive axle's breather while the oil is draining.

6 Fit the drain plugs.

7 Fill oil in the hubs until the oil level is flush with the level and filler hole. For volume and quality, see section *F Technical data*.

NOTE

The oil is very viscous and filling should proceed slowly. Level check should be done in stages so that the oil has time to settle.

8 Fit the level and filler plug.

9 Fill oil in the differential until the oil level is flush with the level and filler hole.

10 Fit the level and filler plug.

11 Turn on the main electric power.

12 Check the oil in the drive axle after a short test drive.

https://truckmanualshub.com/

Table of Contents 4 Brakes

4 Brakes 3
4.1 Controls and instrumentation 4
4.1.1 Brake pedal 4
4.3 Service brake system 5
4.3.1 Brake oil pump 8
4.3.4 Accumulator 9
4.5 Parking brake system 10
4.5.4 Parking brake unit 11
4.8 Temperature control, filtration and brake fluid 13
4.8.11 Breather filter 15
4.8.12 Brake oil filter 15
4.8.14 Oil brake system 17

https://truckmanualshub.com/

https://truckmanualshub.com/

4 Brakes

Brakes, general

There are brakes to be able to stop the machine. The brakes act on the drive axle, (the steering axle has no brakes).

The brake system is divided into three functions:

- *Power-assisted brake system, function description page 5*
- *Parking brake system, function description page 10*
- *Temperature control, cleaning and brake oil, function description page 13*

https://truckmanualshub.com/

4.1 Controls and instrumentation

4.1.1 Brake pedal

Brake pedal, checking and adjusting

1 Clean the floor around the brake pedal and check that nothing blocks movement of the brake pedal.

2 Check that the brake pedal springs back sufficiently and that the clearance between brake pedal and brake valve is 1–1.5 mm. If needed, adjust the brake pedal's set screw to obtain the correct clearance.

3 Check that the pedal's travel is smooth.

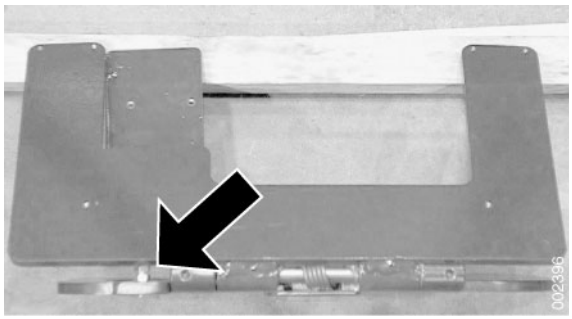

Set screw for adjusting clearance between brake pedal and brake valve. (Illustration shows loose brake pedal.)

4 Grease the pedal hinges with universal grease "EP2".

5 Check that the rubber on the pedal is intact and that the tread pattern isn't worn out. Change if necessary.

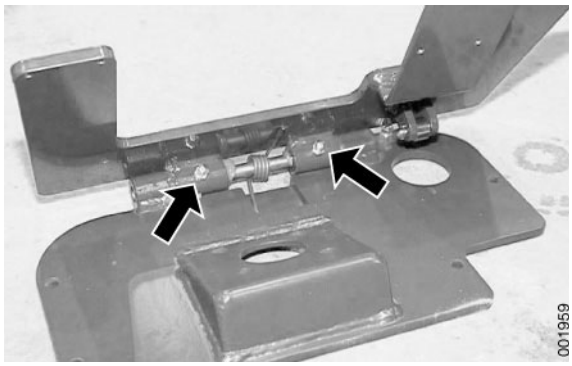

Lubrication points, brake pedal. (Illustration shows loose brake pedal.)

https://truckmanualshub.com/

4.3 Service brake system

Power-assisted brake system, function description

The power-assisted brake system consists of a brake oil tank, brake oil pump, brake oil filter, accumulator charging valve, accumulators, brake valve, pressure sensors, brake cylinder and wheel brake units.

The brake oil pump pumps oil (from tank) which is cleaned in the oil filter. The accumulator charging valve directs pressure to the accumulators that store pressure or direct the oil through the wheel brake for cooling of the brake discs. The brake valve directs pressure from the accumulators to the brake cylinder. The brake cylinder compresses the discs in the brake units that brake the machine. Make-contact brake pressure gives a signal so that the brake lights are activated when the brake cylinder is pressurized.

When the accumulators are charged, the accumulator charging valve controls oil through the drive axle's brake units and cools the brakes. The oil passes through the cooler back to the tank. An electric cooling fan increases the air flow through the cooler when the temperature needs to be lowered. A thermal by-pass valve leads the oil past the cooler if the oil's temperature is low. The temperature sensor controls activation of fan and temperature warning on the display.

https://truckmanualshub.com/

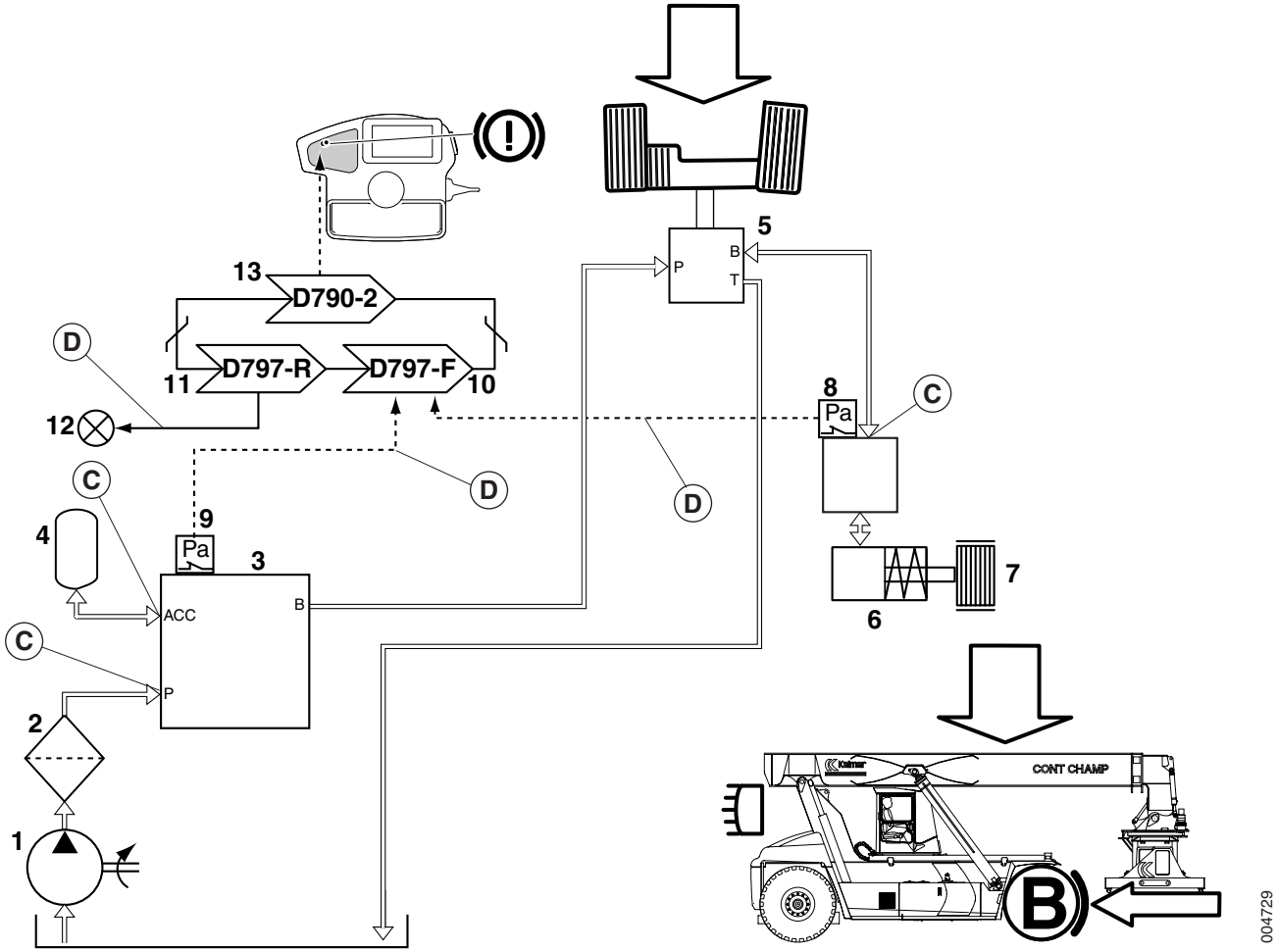

1. Brake oil pump
2. Brake oil filter
3. Accumulator charge valve
4. Accumulators
5. Brake valve
6. Brake cylinders
7. Wheel brakes
8. Make-contact, brake lights (S216)
9. Break-contact brake oil pressure (S204)
10. Control unit frame front (D797-F)
11. Control unit frame rear (D797-R)
12. Brake light (H411L & H411R)
13. Control unit KIT (D790-2), Warning light brake pressure

Hydraulic diagram base machine

https://truckmanualshub.com/

Power-assisted brake system, component position

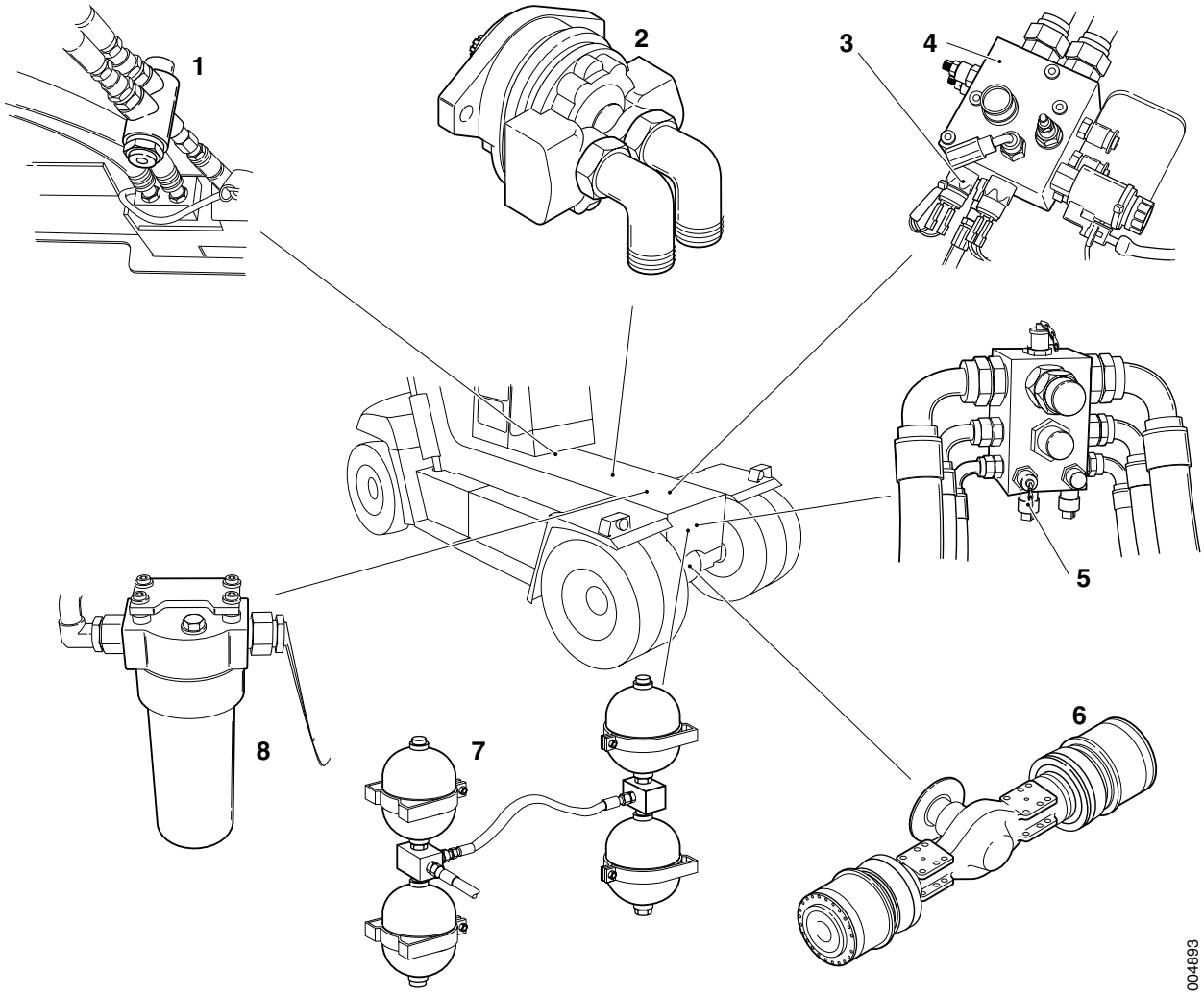

1. Brake valve
2. Brake oil pump
3. Make-contact brake oil pressure (S204)
4. Accumulator charge valve
5. Make-contact, brake lights (S216)
6. Wheel brakes
7. Accumulators brake system
8. Brake oil filter

https://truckmanualshub.com/

4.3.1 Brake oil pump

Brake oil pump, checking

WARNING

Hot, pressurized oil.

Personal injury, burn injury, rash or irritation.

Always depressurize the hydraulic systems before starting to work in the hydraulic systems. Avoid skin contact with the oil, use protective gloves.

1 Operate and warm up the machine so that the oil in the brake system reaches operating temperature, at least 50 °C.

2 Machine in service position, see section *B Safety*

3 Depressurize the brake and hydraulic systems, see section *B Safety*.

4 Connect a pressure gauge (0–25 MPa) to the test outlet for pump pressure on the accumulator charging valve.

5 Start the engine and let it idle.

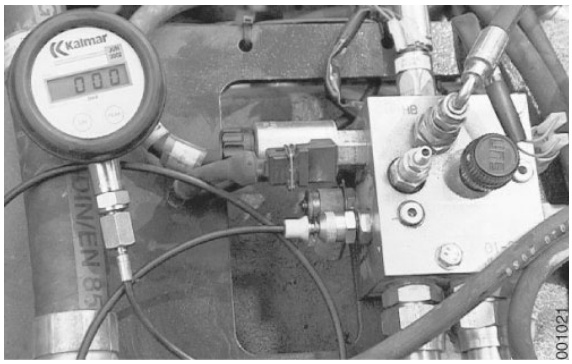

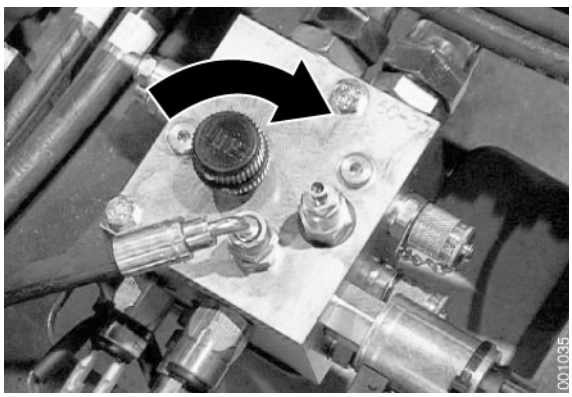

6 Close the drain valve on the accumulator charging valve and check the pump pressure during charging.

During charging, the pressure should increase to **19±0.5 MPa** before the accumulator charging valve switches to cooling. When the accumulator charging valve shifts to cooling, the pressure drops.

7 Check the pressure during cooling.

During cooling the pressure should be **max. 1–1.5 MPa** at max. engine rpm.

8 Turn off the engine.

9 Depressurize the brake and hydraulic systems, see section *B Safety*, *Hydraulic and brake systems, depressurizing*.

10 Remove the pressure gauge and fit the protective cap on the pressure check connection.

11 Close the drain valve on the accumulator charging valve.

https://truckmanualshub.com/

4.3.4 Accumulator

Accumulator, checking

1 Start the engine and let it idle for approx. 1 minute (until the accumulator charging valve switches to cooling).

2 Turn off the engine and turn the start key to position I.

3 Apply and release the brake several times, and count the number of times that the brake can be applied before the warning light for low brake pressure is activated.

It should be possible to apply the brake 8 times before the warning light for low brake pressure is activated.

If the warning light for low brake pressure is activated, one of the brake system's accumulators is probably defective and these should therefore be checked further.

https://truckmanualshub.com/

4.5 Parking brake system

Parking brake system, function description

The parking brake consists of brake oil tank, brake oil pump, brake oil filter, accumulator charging valve, pressure sensors and parking brake unit.

The brake oil pump pumps oil (from tank) which is cleaned in the oil filter. The accumulator charging valve directs pressure to the accumulators that store pressure. The parking brake unit is released with pressure from the accumulators by the parking brake valve in the accumulator charging valve pressurizing the parking brake caliper. Make-contact parking brake gives a signal so that the indicator light parking brake is activated when the parking brake is applied.

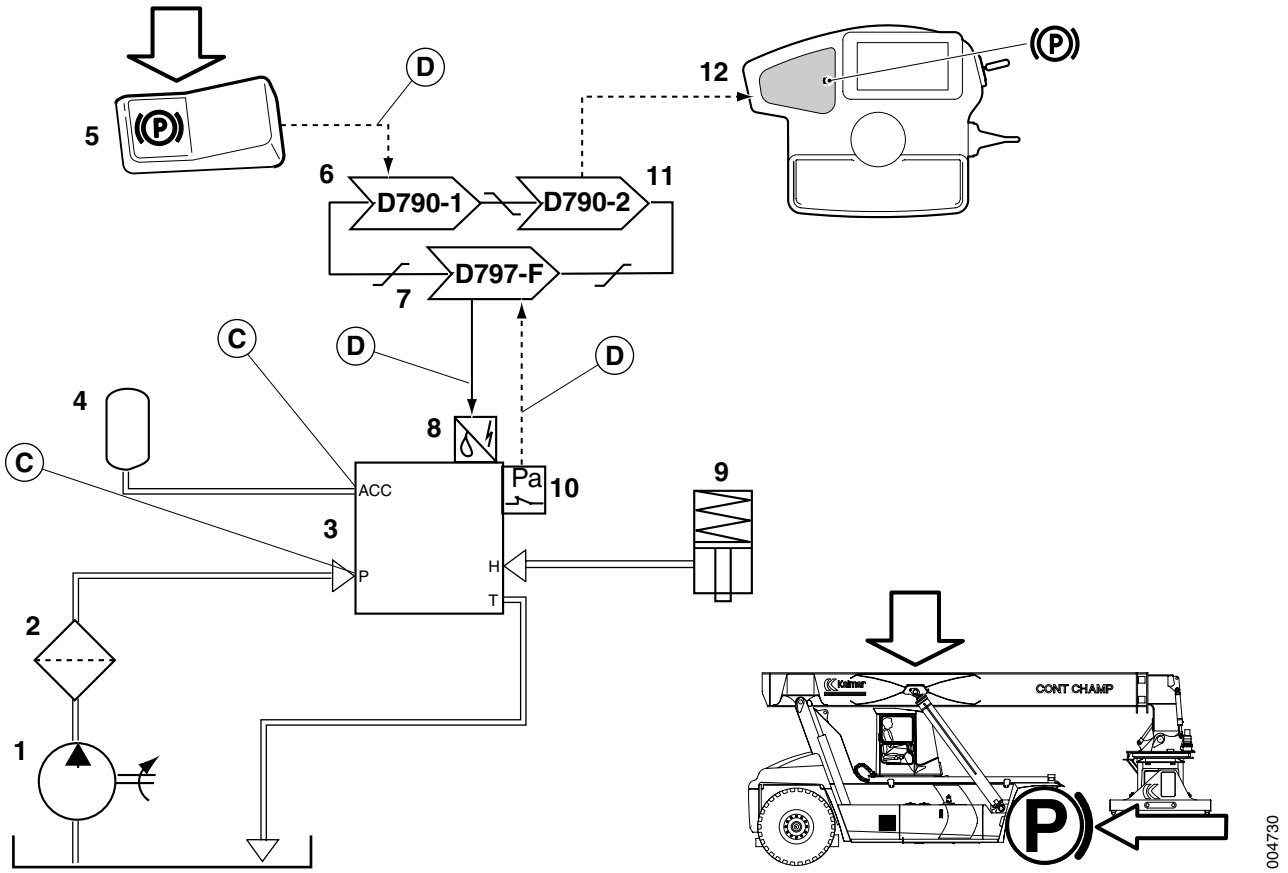

1. Brake oil pump
2. Brake oil filter
3. Accumulator charge valve
4. Accumulators
5. Switch parking brake (S107)
6. Control unit cab (D790-1)
7. Control unit frame front (D797-F)
8. Solenoid valve parking brake (Y642)
9. Brake caliper
10. Break-contact parking brake (S200)
11. Control unit KIT (D790-2)
12. Indicator light parking brake (508)

https://truckmanualshub.com/

Parking brake system, component position

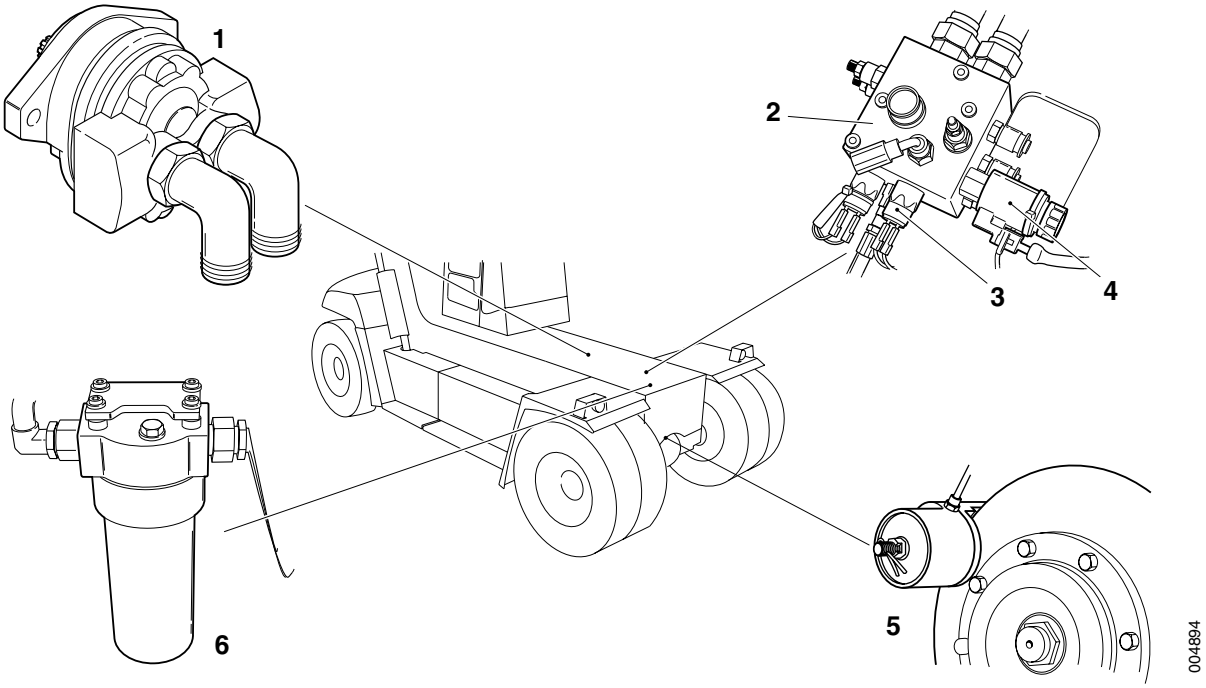

1. Brake oil pump
2. Accumulator charge valve
3. Make-contact parking brake (S200)
4. Solenoid valve parking brake (Y642)
5. Parking brake unit
6. Brake oil filter

4.5.4 Parking brake unit

Parking brake unit, checking and adjustment

DANGER

The machine may start to roll.

Risk of crushing.

Block the wheels so that the machine cannot start to roll when the parking brake is released.

1 Start the engine and run up hydraulic pressure until the accumulators are fully charged and the accumulator charging valve switches to cooling.

2 Turn off the engine and turn the start key to position I.

3 Release the parking brake.

4 Check that the parking brake caliper can move on the bracket.

https://truckmanualshub.com/

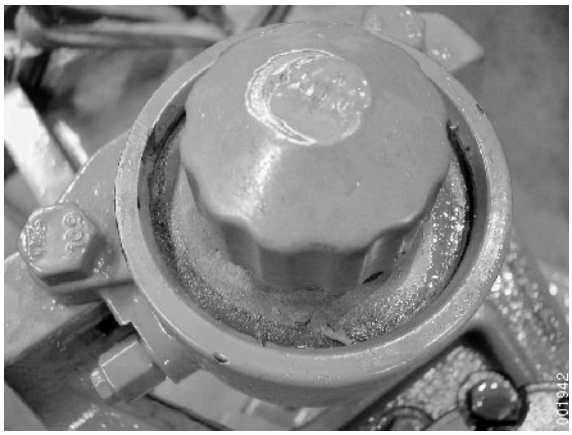

5 Remove the cover from the brake caliper.

6 Undo the lock nut.
7 Adjust the adjustment screw so that the brakes are applied.
8 Back off the adjustment screw 3/4 of a turn.
9 Tighten the lock nut.

NOTE

To avoid turning the adjustment screw as well it must be held still when tightening the lock nut.

10 Refit the cover to the caliper.
11 Test the operation of the parking brake.

https://truckmanualshub.com/

4.8 Temperature control, filtration and brake fluid

Temperature control, cleaning and brake oil, function description

The brake system is cooled with oil that circulates through a cooler. The cooler has a temperature-controlled electric fan that counteracts overheating.

Temperature control consists of brake oil tank, brake oil pump, brake oil filter, accumulator charging valve, wheel brake units, cooler, cooling fan, sensor brake oil temperature and thermal by-pass valve.

The brake oil pump pumps oil (from the tank) which is cleaned in the oil filter. When the accumulators are charged, the accumulator charging valve controls oil through the drive axle's brake units and cools the brakes. The oil passes through the cooler back to tank. An electric cooling fan increases the air flow through the cooler when the temperature needs to be lowered. A thermal by-pass valve leads the hydraulic oil past the cooler if the oil's temperature is too low. The temperature sensor controls activation of fan and temperature warning on the display.

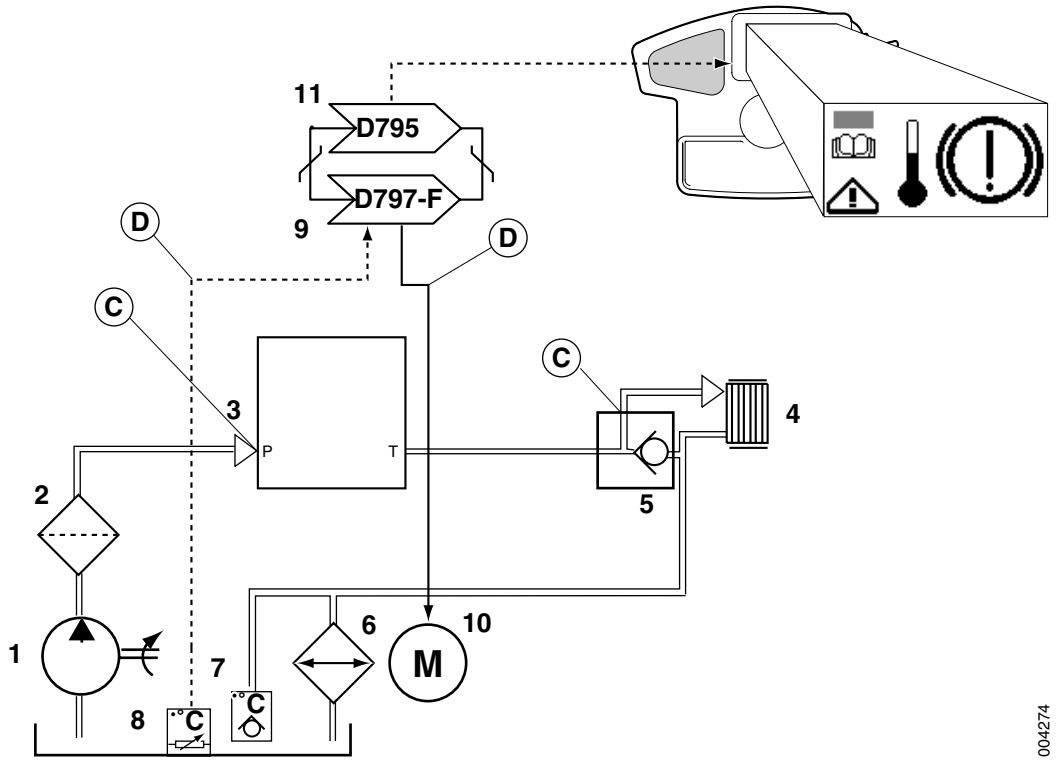

1	Brake oil pump	7	Thermal by-pass valve
2	Brake oil filter	8	Temperature sensor (B762)
3	Accumulator charge valve	9	Control unit frame front (D797-F)
4	The oil cools the wheel brake	10	Cooling fan (M674)

https://truckmanualshub.com/

5 By-pass valve in distribution block

6 Cooler brake system

11 Control unit KID (D795)

Temperature control, cleaning and brake oil, component position

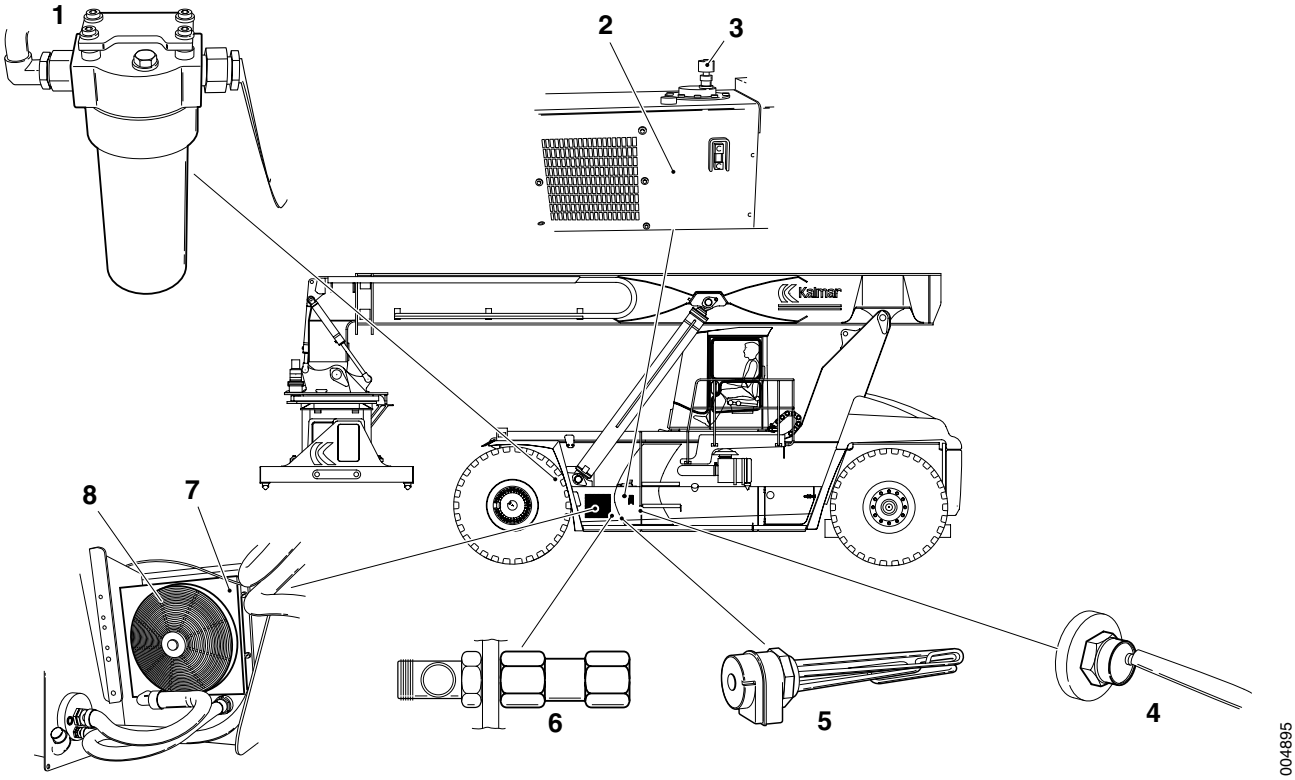

1. Brake oil filter
2. Brake oil tank
3. Breather filter
4. Sensor brake oil temperature (B762)
5. Tank warmer ⊕
6. Thermal by-pass valve
7. Oil cooler
8. Cooling fan (M674)

Brake oil pump, Accumulator charging valve, Drive axle block, Wheel brake

See *Power-assisted brake system, component position page 7*.

https://truckmanualshub.com/

4.8.11 Breather filter

Breather filter, changing

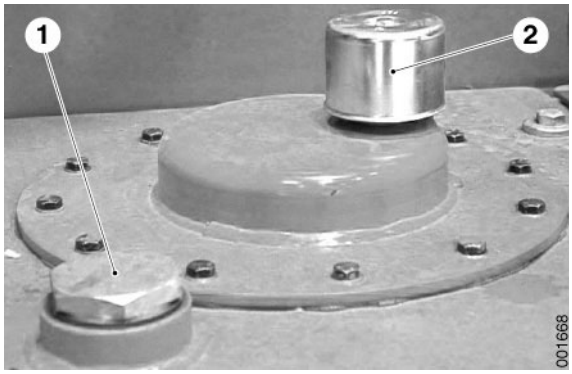

1. Filling point, oil for brake system
2. Breather filter, brake oil tank

1 Clean the area around the brake tank's breather filter.

2 Remove cover from the filter holder.

Remove the screw in the middle and lift away the cover.

3 Remove the old filter cartridge.

4 Clean the filter holder.

NOTE

Work carefully so that impurities do not enter the tank.

5 Fit a new filter cartridge.

6 Refit the cover to the filter holder.

4.8.12 Brake oil filter

Brake oil filter, changing

WARNING

Hot, pressurized oil.

Personal injury, burn injury, rash or irritation

Always depressurize the hydraulic systems before starting to work in the hydraulic systems. Avoid skin contact with the oil, use protective gloves.

NOTE

The filter protects the brake system from impurities. It is very important that new impurities do not enter the brake system when changing the filter.

NOTE

The filter holder is heavy, loosen it carefully.

1 Machine in service position, see section *B Safety*.

2 Depressurize the hydraulic and brake systems, see section *B Safety*.

NOTE

Leave the valve open when changing.

3 Remove the cover plates from over the engine compartment.

https://truckmanualshub.com/

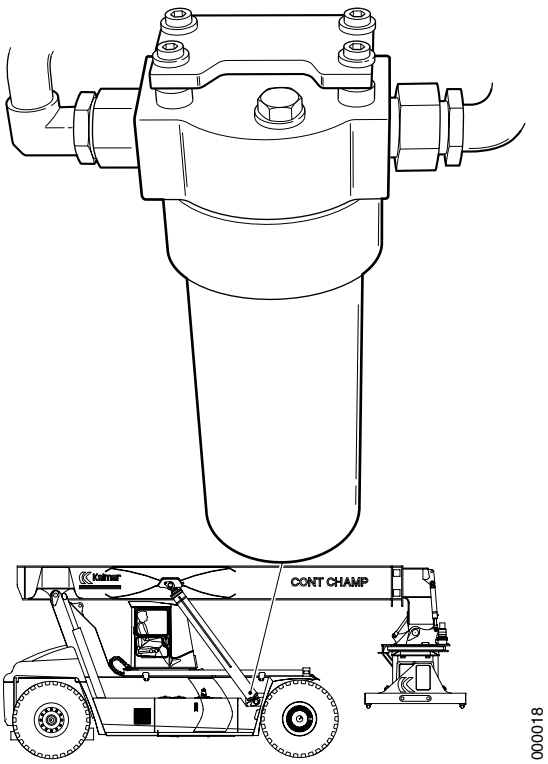

Brake oil filter is located under the lift cylinder beam in front of the transmission.

4 Place a receptacle under the oil filter to collect any oil spills.

5 Clean the outside of the brake oil filter.

6 Remove the drain plug on the underside of the filter.

Let the oil drain. Wait a while since the oil drains slowly.

7 Remove the filter holder.

8 Remove the filter cartridge.

NOTE

Note the position of the O-rings.

9 Clean the filter holder.

10 Fit the O-rings on the filter cartridge and filter holder. Lubricate the O-rings with brake oil.

11 Fit the small O-ring to the filter cartridge.

12 Fit the new filter insert to the filter bracket.

13 Fit the filter holder and the drain plug.

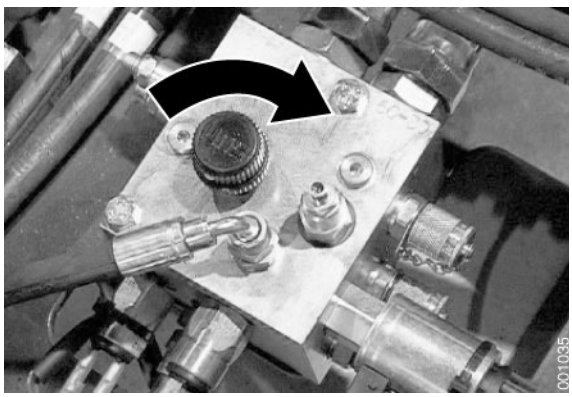

14 Close the drain valve on the accumulator charging valve.

15 Turn on the main electrical power and start the engine.

16 Check that the filter holder does not leak.

17 Remove the receptacle. Handle the filter and oil as environmentally hazardous waste.

18 Fit the cover plates over the engine.

https://truckmanualshub.com/

4.8.14 Oil brake system

Oil brake system, changing

WARNING

Hot, pressurized oil.

Personal injury, burn injury, rash or irritation.

Always depressurize the hydraulic systems before starting to work in the hydraulic systems. Avoid skin contact with the oil, use protective gloves.

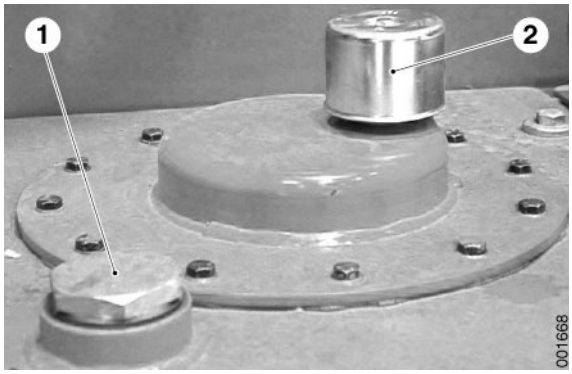

1. Filling point, oil for brake system
2. Breather filter, brake oil tank

1 Machine in service position, see section *B Safety*.

2 Depressurize the hydraulic and brake systems, see section *B Safety*.

3 Place a receptacle under the brake oil tank. The tank holds approx. 140 liters.

4 Clean the area around the drain plug.

5 Remove the drain plug and drain the tank.

6 Fit the drain plug, use a new gasket washer.

7 Clean the area around the filling point.

8 Remove the filler cap and fill the tank with oil. For volume and grade, see section *F Technical data*.

9 Check that the drain plug seals tight.

10 Remove the receptacle. Handle the oil as environmentally hazardous waste.

https://truckmanualshub.com/

https://truckmanualshub.com/

Table of Contents 5 Steering

5 Steering 3
5.2 Power-assisted system 4

https://truckmanualshub.com/

https://truckmanualshub.com/

5 Steering

Steering, general

The function steering means to steer the machine during operation. The machine is steered with the rear wheels by a power-assisted steering system. Available options are joystick steering and min-wheel, which means that the machine is steered electrically with a control on the operator's armrest.

https://truckmanualshub.com/

5.2 Power-assisted system

Power-assisted steering system, function description

The function power-assisted steering system refers to steering the machine. The machine's steering is power-assisted with pressure from the hydraulic oil pumps.

Steering consists of steering wheel, steering wheel shaft, steering valve, hydraulic oil pumps, priority valve, steering cylinder, link arms and wheel spindles.

The steering wheel affects (via steering wheel shaft) the steering valve which in turn directs oil pressure from the hydraulic oil pumps to the steering cylinder. Between the hydraulic oil pumps and the steering valve there's a priority valve which gives priority to oil supply to the steering valve before other functions, for example, load handling. The steering cylinder affects the wheel spindles. There are link arms between the steering cylinder and wheel spindles.

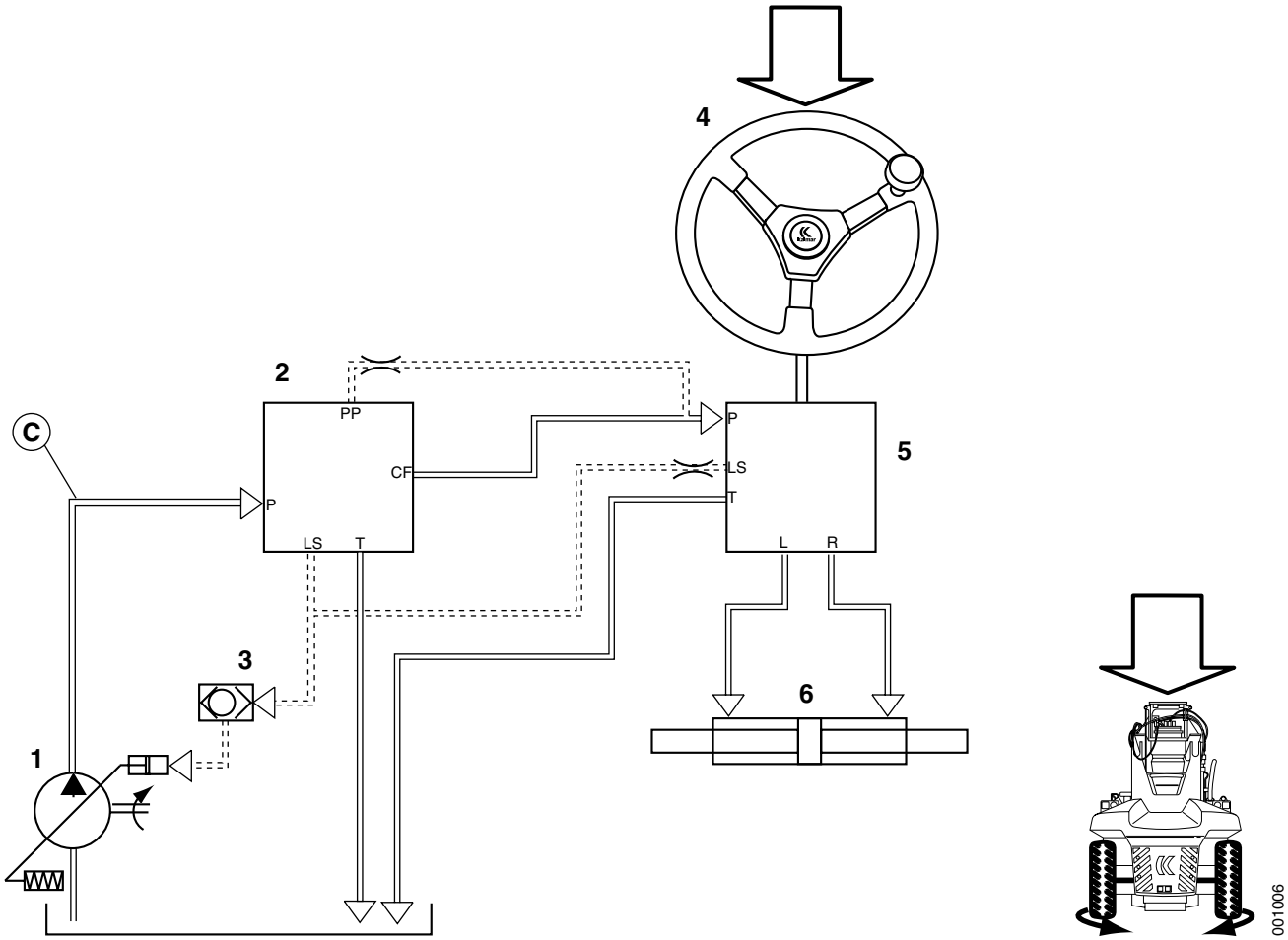

1. Hydraulic oil pump
2. Priority valve
3. Shuttle valve
4. Steering wheel
5. Steering valve
6. Steering cylinder

https://truckmanualshub.com/

Hydraulic diagram base machine

Joystick steering/mini-wheel, function description

Joystick steering or mini-wheel means that the machine is steered with an electric control in the operator seat's left armrest. The electric control sends signals to the control system. The steering cylinder is pressurized by a control valve which also is controlled by the control system.

Joystick steering and mini-wheel function in the same way, the difference is in the design of the control.

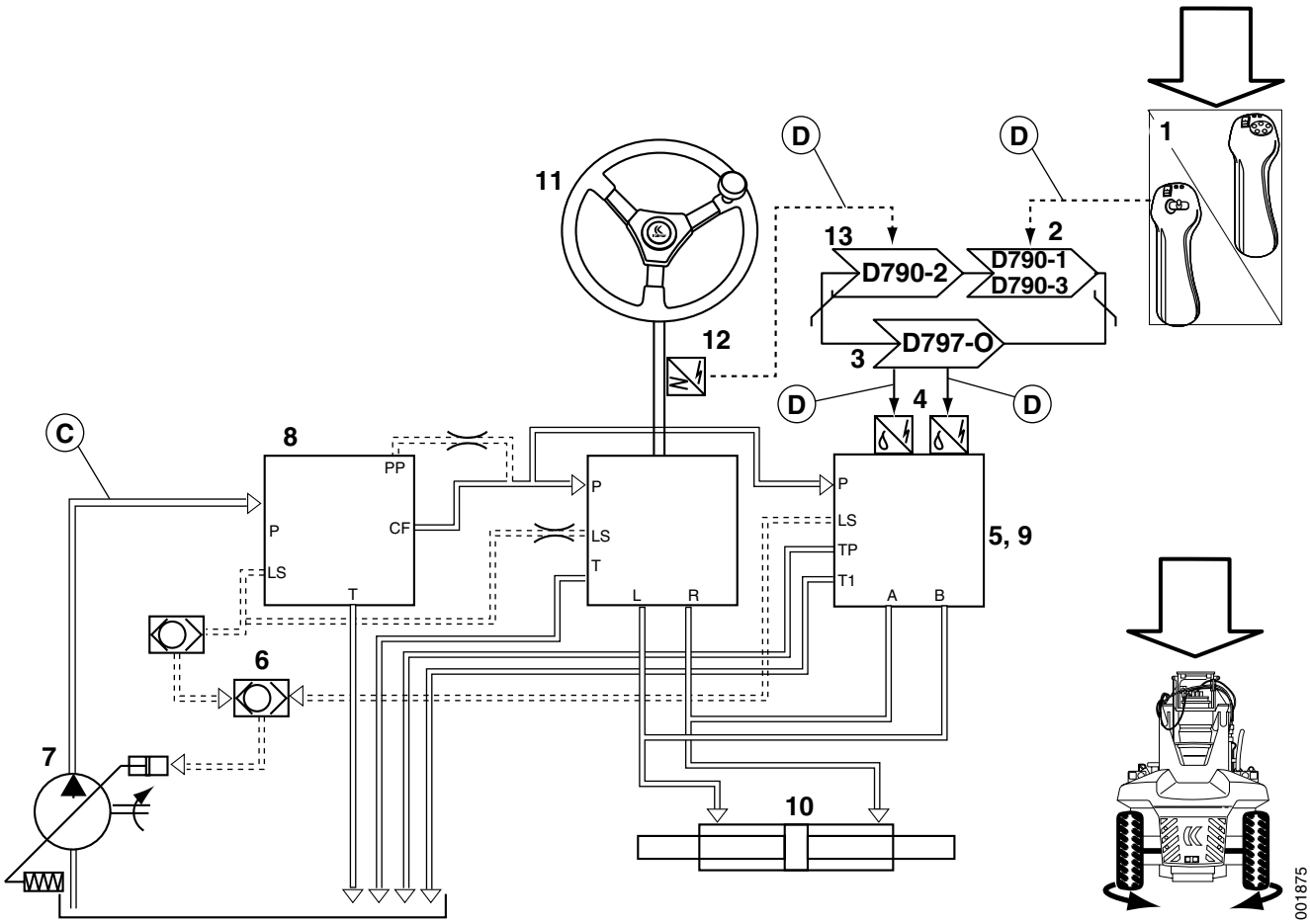

1. Switch joystick *or Switch mini-wheel*
2. Control unit cab (D790-1)

   Control unit cab option (D790-3) (machine with mini-wheel and combi attachment)
3. Control unit frame option (D797-O)
4. Solenoid valve steering right (Y636R) *or Solenoid valve steering left (Y636L)*
7. Hydraulic oil pump
8. Priority valve
9. Steering slide
10. Steering cylinder
11. Steering wheel

https://truckmanualshub.com/

5. Control valve joystick steering or mini-wheel
6. Shuttle valve
12. Sensor steering wheel shaft
13. Control unit cab (D790-1)

Power-assisted steering system, component position

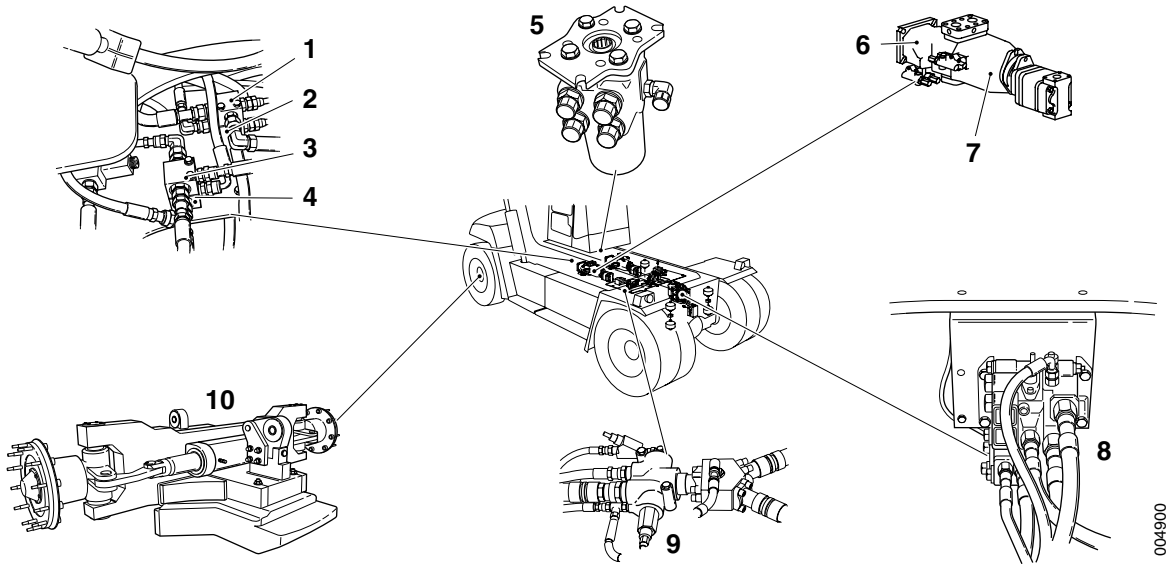

1. Shuttle valve attachment
2. Shuttle valve steering
3. Shuttle valve mini-wheel or joystick steering ⊕
4. Shuttle valve frame option ⊕
5. Steering valve
6. Pump working hydraulics 3
7. Pump working hydraulics 4
8. Control valve mini-wheel/joystick steering
9. Priority valve
10. Steering axle

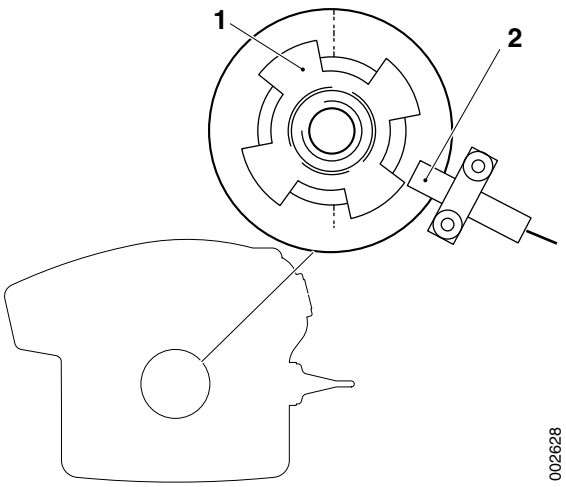

Sensor steering angle (product alternative mini-wheel/joystick steering)

⊕

1. Indicator ring
2. Sensor steering angle (B770)

https://truckmanualshub.com/

Table of Contents 6 Suspension

6 Suspension 3
6.2 Suspension 4
6.2.1 Steering axle cradle 4
6.2.2 Wheel spindle 5
6.2.3 Wheel hub 5
6.3 Tyre and rim system 7
6.3.1 Tyres 17
6.3.2 Rims 18

https://truckmanualshub.com/

https://truckmanualshub.com/

6 Suspension

Suspension, description

The machine’s suspension consists of its tyres (with associated rims and bolts), steering axle with hub, wheel spindles and the steering axle's suspension in the frame. The drive axle belongs to power transmission, see section *3 Driveline/axle,* group *3.3 Drive axle*.

https://truckmanualshub.com/

6.2 Suspension

Suspension, description

Suspension refers to:

- Steering axle cradle
- Wheel spindle
- Wheel hub

The steering axle cradle is attached to the frame with two bushings, one at the leading edge and one at the trailing edge of the steering axle cradle. In the steering axle cradle there are two wheel spindles mounted on journalled shafts. The wheel spindle is hinged to enable steering. On the wheel spindles there are journalled wheel hubs where the wheels are mounted.

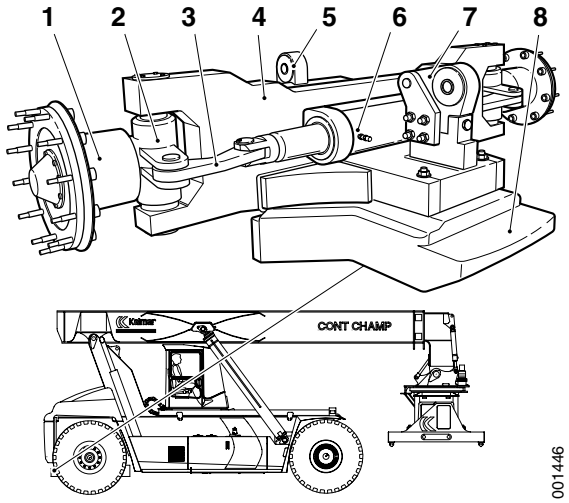

1. Wheel hub
2. Wheel spindle
3. Link arm
4. Steering axle
5. Front suspension
6. Steering cylinder
7. Rear suspension
8. Counterweight

6.2.1 Steering axle cradle

Steering axle cradle, checking

1 Check that the bushings in the mountings are intact.

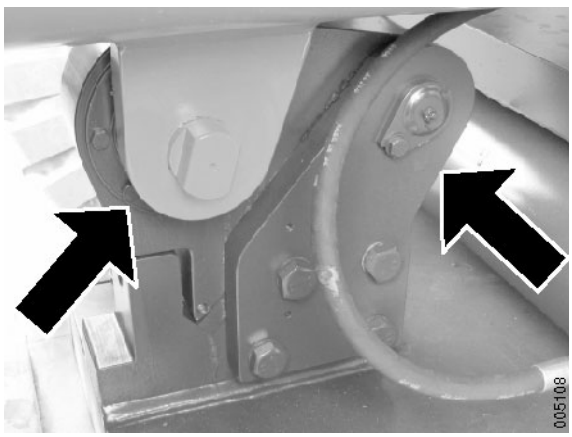

https://truckmanualshub.com/

6.2.2 Wheel spindle

Wheel spindle bearing, checking

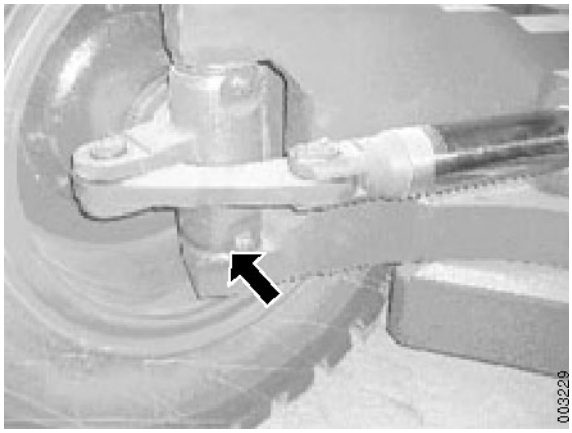

1 Machine in service position, see section *B Safety*.
2 Carefully pry up the O-ring.
3 Measure with feeler gauge between thrust bearing and thrust washer. Max. clearance: 1.5 mm.

6.2.3 Wheel hub

Wheel hub, checking

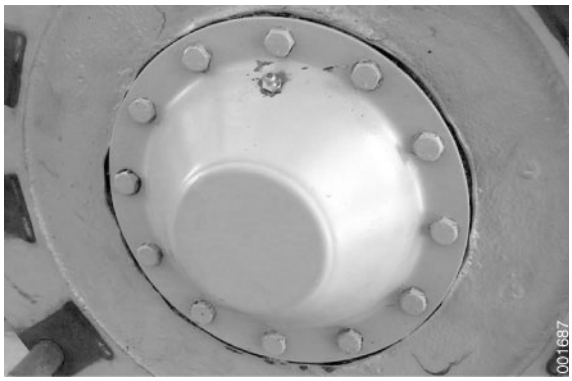

1 Clean the hub covers on the steering wheels.
2 Remove the hub cover.
3 Wipe grease off the hub cover and the hub nut. Handle as environmentally hazardous waste.

4 Bend up the lock washer's tabs, remove the lock nut and the lock washer.

https://truckmanualshub.com/

5 Torque the bearing nut as follows.

   A. Lubricate the thread on the spindle and the side of the nut facing the bearing with oil SAE 80W/140.

   B. Tighten the nut to 250 Nm.

   C. Rotate the hub at least 2 revolutions and then tighten the nut 45 degrees.

   D. Rotate the hub again at least 2 revolutions and then tighten the nut another 45 degrees.

6 Fit the lock washer and outer lock nut.

7 Tighten with at least **250 Nm** or as hard as is needed to bend the lock washer in the closest groove.

8 Fill the bearing casing with grease and fit it.

9 Grease the wheel bearing with grease through the grease nipple.

   Lift the seal ring's lip with a small screwdriver to facilitate the air to escape. Grease until grease comes out by the seal.

NOTE

Work carefully so as not to damage the seal.

https://truckmanualshub.com/

6.3 Tyre and rim system

Tyre and rim system, safety

DANGER

Always block the wheels on the side of the axle where no work is to be done before positioning the jack. Always secure the jack to prevent it from sliding out of position.

Deflate the tyre before removal. Otherwise the lock ring and locking clips can loosen and shoot out when the pressure is changed. With double wheel fitting both tyres must be deflated!

Do not release air through the valve if the tyre or rim is damaged. Drill a hole in the tread to release the air. Damaged tyres may explode.

Never stand directly opposite the tyre when deflating or inflating. The lock ring and lock lugs may release and shoot off when the pressure changes.

Never install damaged tyres or rims.

It's prohibited to repair rims with welding.

It's prohibited to operate the machine if one of the tyres is flat.

https://truckmanualshub.com/

CAUTION

When removing wheels, the wheel nuts should be left in place after loosening. If the wheel nuts are removed immediately, the wheel may release from the hub.

When removing drive wheels, make sure that the wheels are fixed when the spacer rings are removed. If the wheels move, they may move the spacer rings and crushing damage may result.

When installing drive wheels, ensure that the clamps clamp straight on the spacer ring.

Wheel nuts should be check-tightened after 4-5 operating hours.

Always follow the tyre manufacturer's or other approved instructions when changing tyres.

Never use a steel hammer to install or remove rim components. Instead, use a lead, brass or plastic mallet.

Keep the tyre pressure at the prescribed level. Insufficient tyre pressure impairs stability and reduces the machine's capacity.

Remove penetrating objects such as crushed glass, pieces of wood, metal filings, etc.

Check if tyre wear is abnormal, this could indicate a mechanical fault. Rectify faults immediately and change damaged tyres.

Tyre and rim system, description

The tyres are the machine's contact with the ground, the tyres absorb rough surfaces and act as suspension.

The drive axle is exposed to great stresses during operation, and the stresses increase if the drive wheels' rolling circumference differs. It is important that the tyres on the drive axle have equal wear and correct air pressure.

Tyre and rim system, checking

Read the safety instructions before working with the tyre and rim, see *Tyre and rim system, safety page 7*.

https://truckmanualshub.com/

DANGER

Never stand directly opposite the tyre when deflating or inflating. The lock ring and lock lugs may release and shoot off when the pressure changes.

Do not release air through the valve if tyre or rim is damaged. Drill holes in the tread to release the air. If the tyre explodes, the force of the explosion moves in the direction of the valve.

Do not exceed the prescribed air pressure. When changing tyre or rim version, another air pressure may apply. Contact Kalmar Industries.

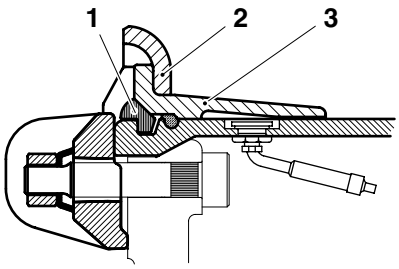

1. Lock ring
2. Rim flange
3. Rim bead seat taper

1 Check the rims.
   - Check that the lock ring and lugs are installed correctly.
   - Check that there are no cracks in the rims' parts.

   In case of damage, the tyre and rim shall be dismantled and checked.

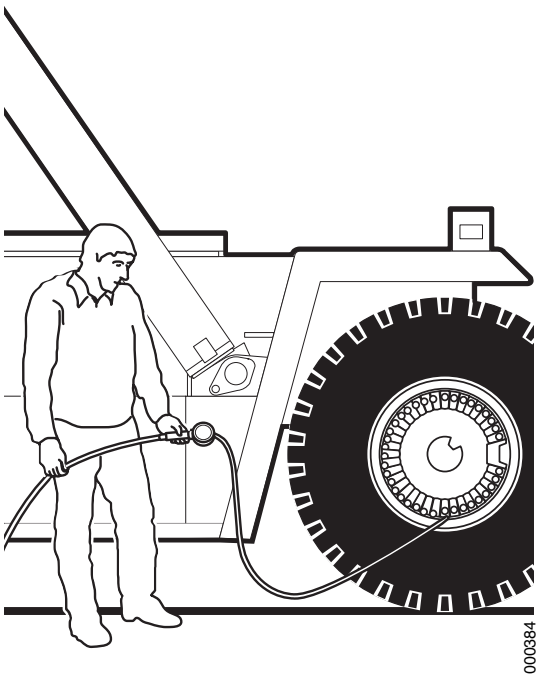

Example: The figure shows inflation of drive wheel.

2 Check the air pressure in the tyres, see section *Tyres, inflating page 17*.

   The pressure must be **1.0 MPa**, inflate if necessary.

3 Check the tyres.
   - Check for uneven and fast wear, this is caused by mechanical problems such as, e.g., uneven brake action. Make sure that such malfunctions are taken care of immediately.
   - Remove penetrating objects such as crushed glass, pieces of wood, metal filings, etc.

   If the tyre is damaged, the wheel shall be dismantled and the tyre shall be changed, see *Tyres, changing page 18*.

4 If the tyres and rims have no defects, check-tighten the wheel nuts.

   Tighten crosswise with torque, **400 Nm**.

https://truckmanualshub.com/

Tyre and rim system, removing (drive axle)

Read the safety instructions before working with the tyre and rim, see *Tyre and rim system, safety page 7*.

1 Lift the machine under the drive axle by the wheel in question. Support under the drive axle in a safe and adequate manner.

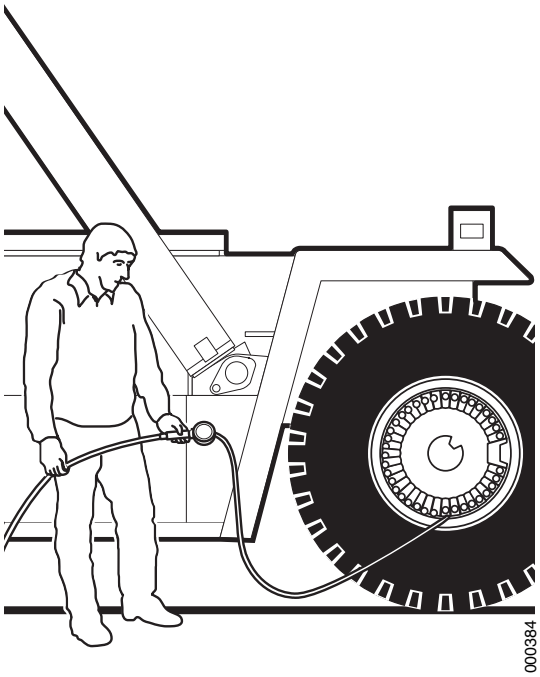

2 Deflate the tyre.

If tyre and rim are in good condition, release air through the valve.

If the tyre or rim is damaged, deflate the tyre by drilling a hole in the tread.

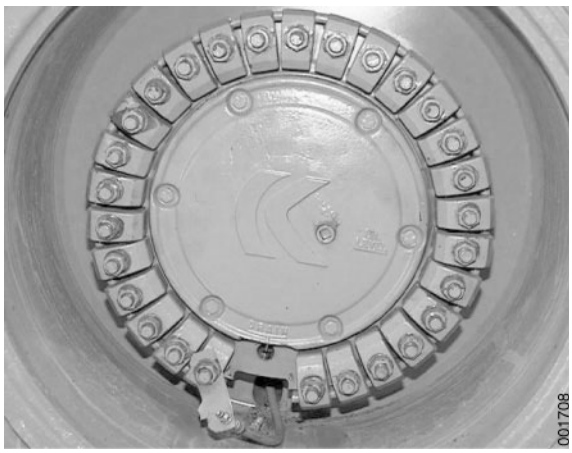

3 Loosen the wheel nuts.

4 Secure the wheel with lifting equipment.

5 Remove nuts, washers and clamps.

https://truckmanualshub.com/

6 Remove the spacer ring.

Pull out the wheel a bit so that the spacer ring comes loose.

NOTE

The spacer ring weighs approx. 20 kg.

7 Remove the outer wheel.

Lift away the wheel and place it in a safe manner.

8 Move the lifting equipment to the inner wheel.

9 Remove the spacer ring between the outer and inner wheel.

NOTE

The spacer ring weighs approx. 20 kg.

10 Remove the inner wheel.

Lift away the wheel and place it in a safe manner.

https://truckmanualshub.com/

Tyre and rim system, removing (steering axle)

Read the safety instructions before working with the tyre and rim, see *Tyre and rim system, safety page 7*.

1 Lift the machine under the steering axle by the wheel in question. Support under the steering axle in a secure manner.

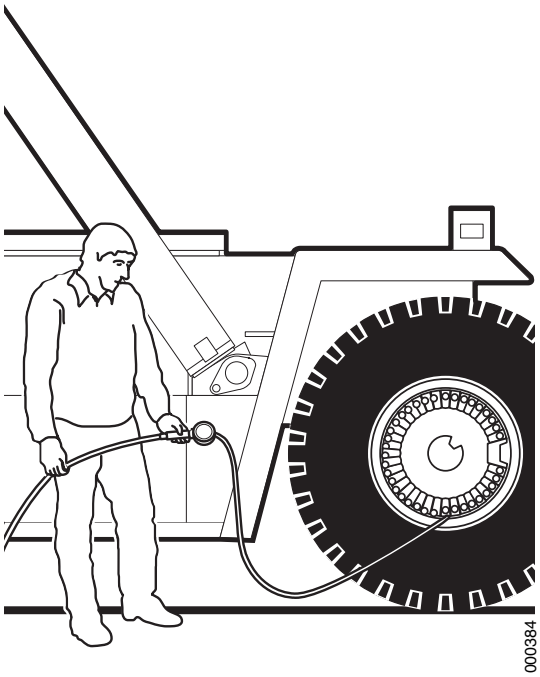

Example: The figure shows inflation of drive wheel.

2 Deflate the tyre.

If tyre and rim are in good condition, release air through the valve.

If the tyre or rim is damaged, deflate the tyre by drilling a hole in the tread.

https://truckmanualshub.com/

000383

3 Loosen the wheel nuts.

4 Secure the wheel with lifting equipment.

001713

5 Remove the wheel.

Remove nuts, washers and clamps and pull out the wheel.

6 Lift away the wheel and place it in a safe manner.

Tyre and rim system, installing (drive axle)

Read the safety instructions before working with the tyre and rim, see *Tyre and rim system, safety page 7*.

001712

1 Lift the inner wheel into place with lifting equipment. Rotate the wheel so that the guide lug enters the groove on the hub.

https://truckmanualshub.com/

2 Fit the inner spacer ring.

NOTE

The inner ring is not split.

3 Lift the outer wheel into place with lifting equipment. Rotate the wheel so that the guide lug enters the groove on the hub.

4 Fit the outer spacer ring.

NOTE

The outer ring is split. Rotate the ring so that the opening ends up in front of the groove on the hub.

5 Place clamps and nuts on the wheel bolts. Where applicable, also washers.

NOTE

Do not forget the retainer for the inner tyre's valve extension.

6 Remove the lifting equipment.

7 Tighten the wheel nuts crosswise.

8 Tighten the wheel nuts crosswise with torque **400 Nm**.

https://truckmanualshub.com/

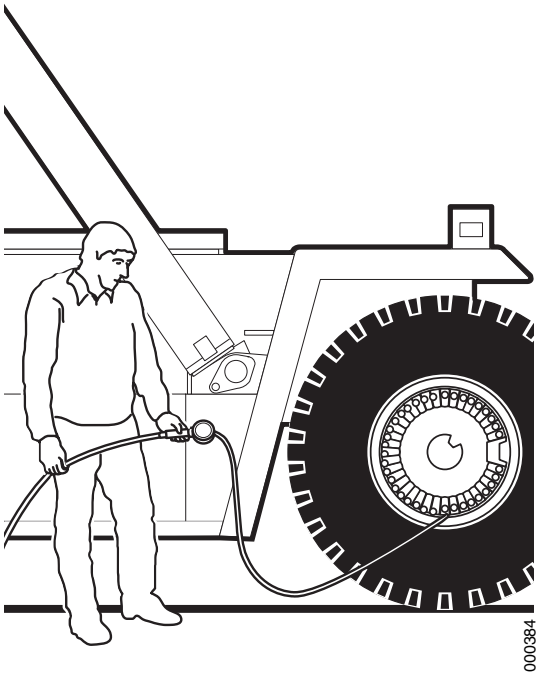

9 Inflate the tyre with air, **1 MPa**, see *Tyres, inflating page 17*.

10 Lower the axle and remove the jack.

11 Test-run the machine and check that the wheels are installed securely.

12 Check-tighten the wheel nuts with torque **400 Nm**.

Tyre and rim system, installing (steering axle)

Read the safety instructions before working with the tyre and rim, see *Tyre and rim system, safety page 7*.

1 Lift the wheel into place with the lifting equipment.

   Adjust the wheel's position so that the guide pin fits over the groove in the hub and the rim rests up against the hub.

https://truckmanualshub.com/

000383

2 Place clamps and nuts on the wheel bolts. Where applicable, also washers.

3 Remove the lifting equipment.

4 Fit the wheel.

Tighten the wheel nuts crosswise with torque **400 Nm**.

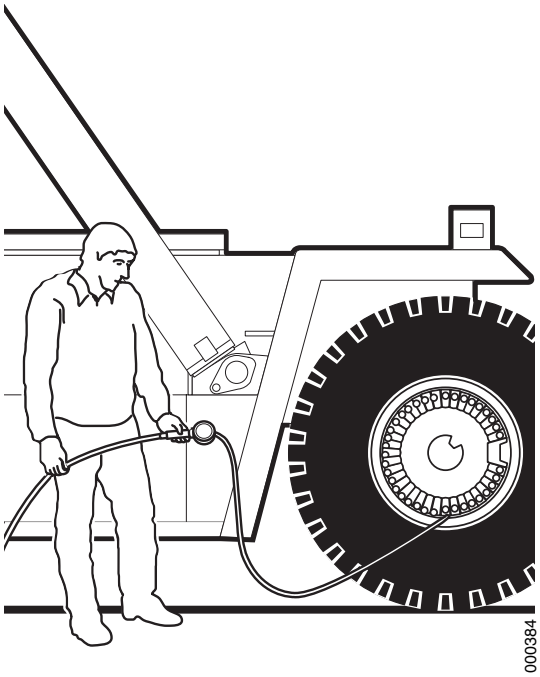

000384

Example: The figure shows inflation of drive wheel.

5 Inflate the tyre with air, **1 MPa**, see *Tyres, inflating page 17*.

6 Lower the axle and remove the jack.

7 Test-run the machine and check that the wheels are installed securely.

8 Check-tighten the wheel nuts with torque **400 Nm**.

https://truckmanualshub.com/

6.3.1 Tyres

Tyres, inflating

Read the safety instructions before working with the tyre and rim, see *Tyre and rim system, safety page 7*.

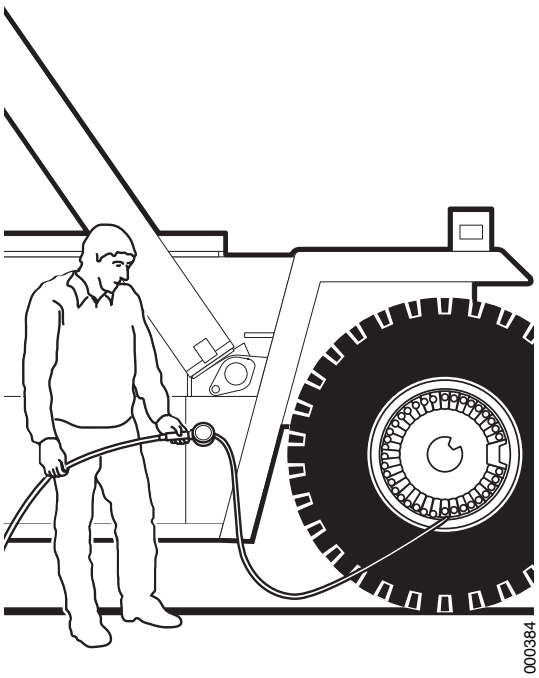

DANGER

Always follow the instructions for inflating tyres to avoid risk of accidents.

Only use approved rim components.

If the tyre has been completely deflated, the tyre must be dismantled and the rim checked for damage.

Never fit rim components by striking with a hammer during inflation. Never strike fully or partly inflated tyres or rim assemblies.

Never inflate tyres before all parts are in place.

Do not exceed the prescribed tyre pressure. Other inflation pressure may apply when changing tyre or rim version, contact Kalmar Industries.

Never stand directly in front of the wheel when deflating or inflating. The conical ring and locking clips can loosen and shoot out when the pressure is changed.

Check that all parts are in place when the tyre pressure is 30 kPa.

NOTE

An air filter and water trap should be installed on the line from the compressor that is used to inflate tyres to avoid rim corrosion.

1 Make sure that the lock ring and lock lugs are in the correct position before inflating.

2 Connect the compressor with a locking air-chuck to the nipple on the tyre.

3 Move to the side and stay to the side of the tyre while inflation is in progress.

4 Inflate the tyre to the prescribed level, see specifications.

Other inflation pressure may apply when changing tyre or rim version, contact Kalmar Industries.

https://truckmanualshub.com/

Tyres, changing

DANGER

Changing tyres is complicated and dangerous work.

FATAL DANGER!

Leave tyre work to authorized personnel/ tyre company.

6.3.2 Rims

Rim, checking

DANGER

Perform the following checks to minimize risks of accidents for all rims that can be dismantled.

Always use the correct size of tyre and a design that is compatible with the type and size of the rim. Over-dimensioned tyres must not be used.

Replace all damaged, worn or corroded rims or mounting parts.

1 Dismantle the rim, see *Tyres, changing page 18*.

2 Carefully clean the outside of the rim edge with a steel brush.

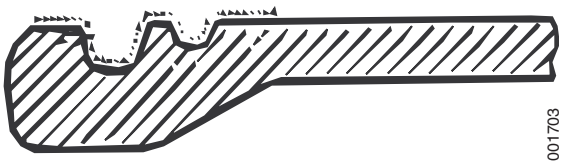

3 Measure wear after the lock ring.

The lock ring's wear on the rim edge often leaves a mark, A in the figure. The mark shows up between the ends of the lock ring.

Measure depth of the wear at point A with a steel ruler and sliding calipers. If wear exceeds 0.5 mm, the rim, lock ring and the rim bead seat taper must be discarded and replaced with new parts.

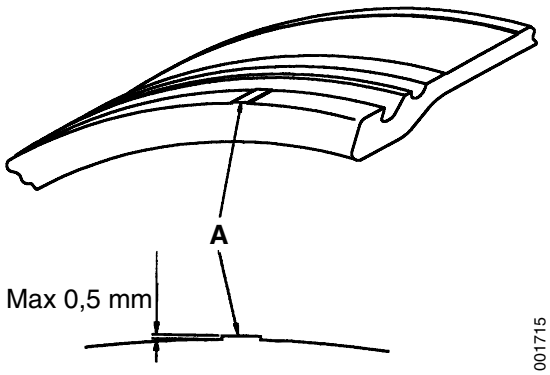

https://truckmanualshub.com/

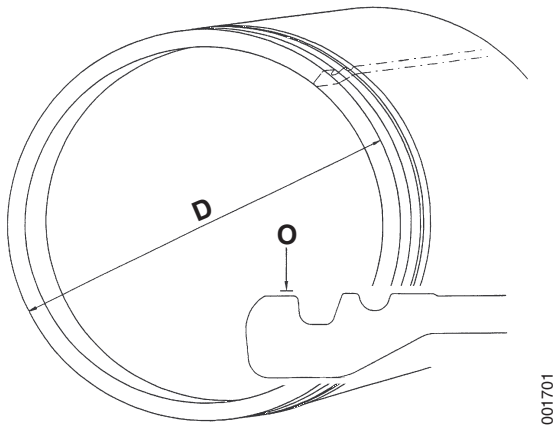

O. Circumference
D. Diameter

4 Check the rim's diameter.

Measure the rim edge's circumference (O) with a measuring tape and calculate the diameter (D). [D = Circumference (O) / 3.14]

Compare the value of the diameter with the specified min. measurement. If the diameter is smaller, the rim, lock ring and the rim bead seat taper must be discarded and replaced with new parts.

Information about min. diameter can be obtained from Kalmar Industries.

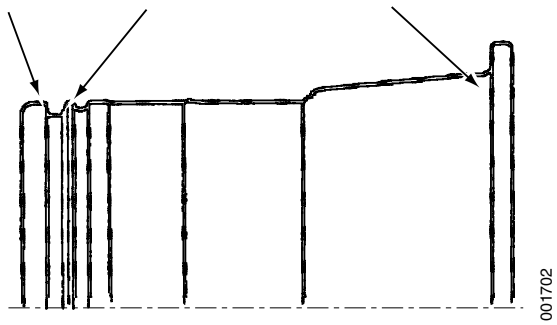

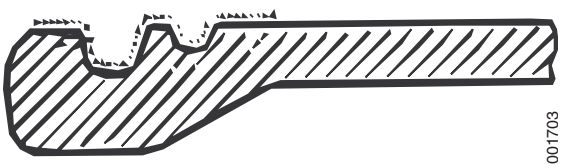

5 Check for damage in the areas with high stress concentration.

Checking is done in two steps:

1. The magnetic powder method is used to determine if there's a crack or not, and where it is.
2. Confirmed cracks are investigated further with penetrating fluid.

Typical rim damages are circumference cracks, corrosive damage, rust, warping and wear.

Magnetic powder method

1 Blast clean the marked area around the entire rim so that it is completely clean from all paint.

2 Test using magnetic powder and the following equipment:

- Equipment: Yoke Tiede
- Method:
  a. AC current
  b. Contrast fluid
- Checking medium:
  a. Wet
  b. Fluid (e.g. Tiede Ferrolux)

If no cracks are detected with the magnetic powder method, checking is finished and the rim is approved.

If cracks are indicated, the crack should be investigated further with penetrating fluid.

https://truckmanualshub.com/

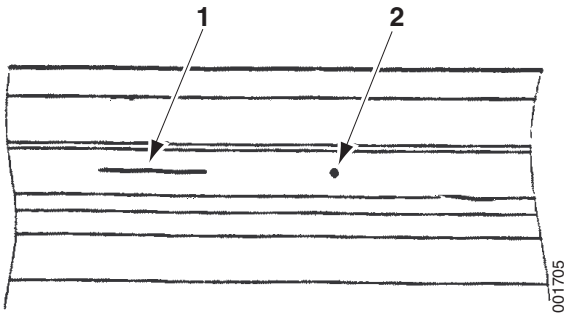

Example of cracks
1. Linear crack
2. Pointed crack

Checking cracks with penetrating fluid

1 Clean the area with cleaning fluid part no. 923626.0668.

2 Spray penetrating fluid part no. 923626.0669 on the cleaned area and let dry 10 min.

3 Wash off penetrating fluid with cleaning fluid part no. 923626.0668.

Thoroughly wipe off the cleaning fluid with a drying cloth and let any remaining cleaning fluid evaporate.

4 Spray detection fluid part no. 923626.0670 on the area.

5 Let the sprayed area dry 1-2 hours.

6 Visually inspect the lock ring groove.

If the tested area does not indicate linear or point-shaped cracks in the lock ring groove the rim is approved.

If the crack check indicates linear or point-shaped cracks the rim should be discarded.

https://truckmanualshub.com/

Table of Contents 7 Load handling

7 Load handling 3
7.2 Lifting/lowering 4
7.2.2 Servo filter 7
7.2.3 Pressure reducer 9
7.3 Protruding 10
7.3.10 Lift boom 13
7.4 Side-shift 14
7.4.6 Sideshift frame 16
7.4.7 Main beam attachment 17
7.5 Positioning 19
7.5.6 Positioning motor 23
7.5.7 Positioning chains 23
7.5.8 Positioning beam 26
7.6 Rotation 27
7.6.6 Rotation motor unit 30
7.7 Tilt 31
7.8 Levelling 37
7.9 Load carrying 41
7.9.1 Twistlocks 41
7.9.2 Lift legs 46
7.10 Additional functions 56
7.10.1 Support jacks 56
7.10.2 Weight indicator 58
7.10.3 Container counter 65
7.10.4 Synchronous lift 67

https://truckmanualshub.com/

https://truckmanualshub.com/

7 Load handling

Load handling, general

The function load handling refers to e.g., to lift, lower, rotate, angle and secure loads. Load handling also includes help functions for handling loads, e.g., support jacks.

Load handling is divided into different sub-functions.

- Lift and lower
- Extension
- Sideshift
- Spreading
- Rotation
- Tilt
- Levelling
- Securing load (for example, twistlocks and lift legs)
- Other (for example, support jacks)

Load handling is primarily controlled with the control lever while certain functions have separate switches.

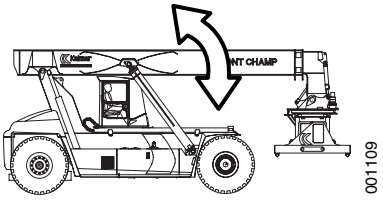

Lift and lower

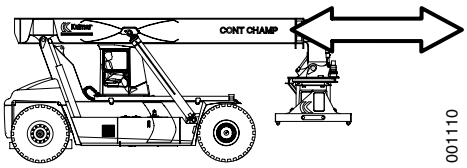

Extension

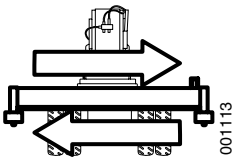

Sideshift

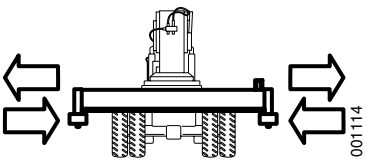

Spreading

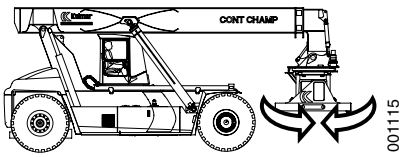

Rotation

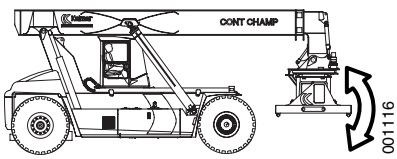

Tilt

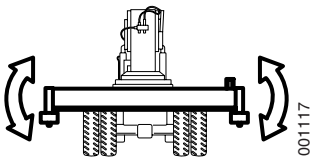

Levelling

https://truckmanualshub.com/

7.2 Lifting/lowering

Lift and lower, function description

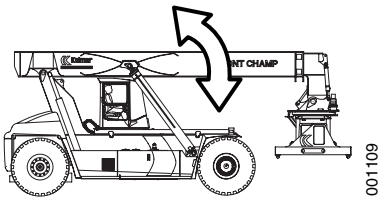

Lift and lower means to angle the boom up and down so that the attachment is lifted and lowered. The lift boom is angled with two lift cylinders that are pressurized by Control valve lift, lower and extension. The lift function is controlled with Control lever (S815).

Damping

Damping means that the speed of functions is reduced automatically near the end-positions. This results in less stress on the mechanical parts when stopping in the end-positions.

Position sensors sense when damping should be activated. When damping is activated, the control unit in question reduces the control current to the solenoid valve for that function.

Regeneration

To increase the speed, oil from the rod side (2) is reused to the piston side (1), this is called regeneration. Engagement of regeneration is controlled by the control system.

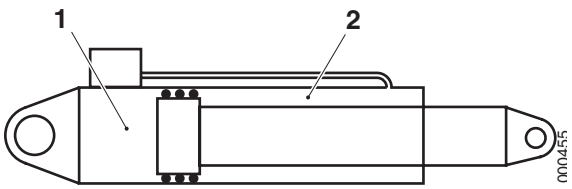

Condition	Reference value
Control switch	Not activated
Twistlocks	Locked or unlocked, not intermediate position
Overloading system	Boom up: passive Boom down: passive or by-pass activated
Alignment	Boom down: no alignment

https://truckmanualshub.com/

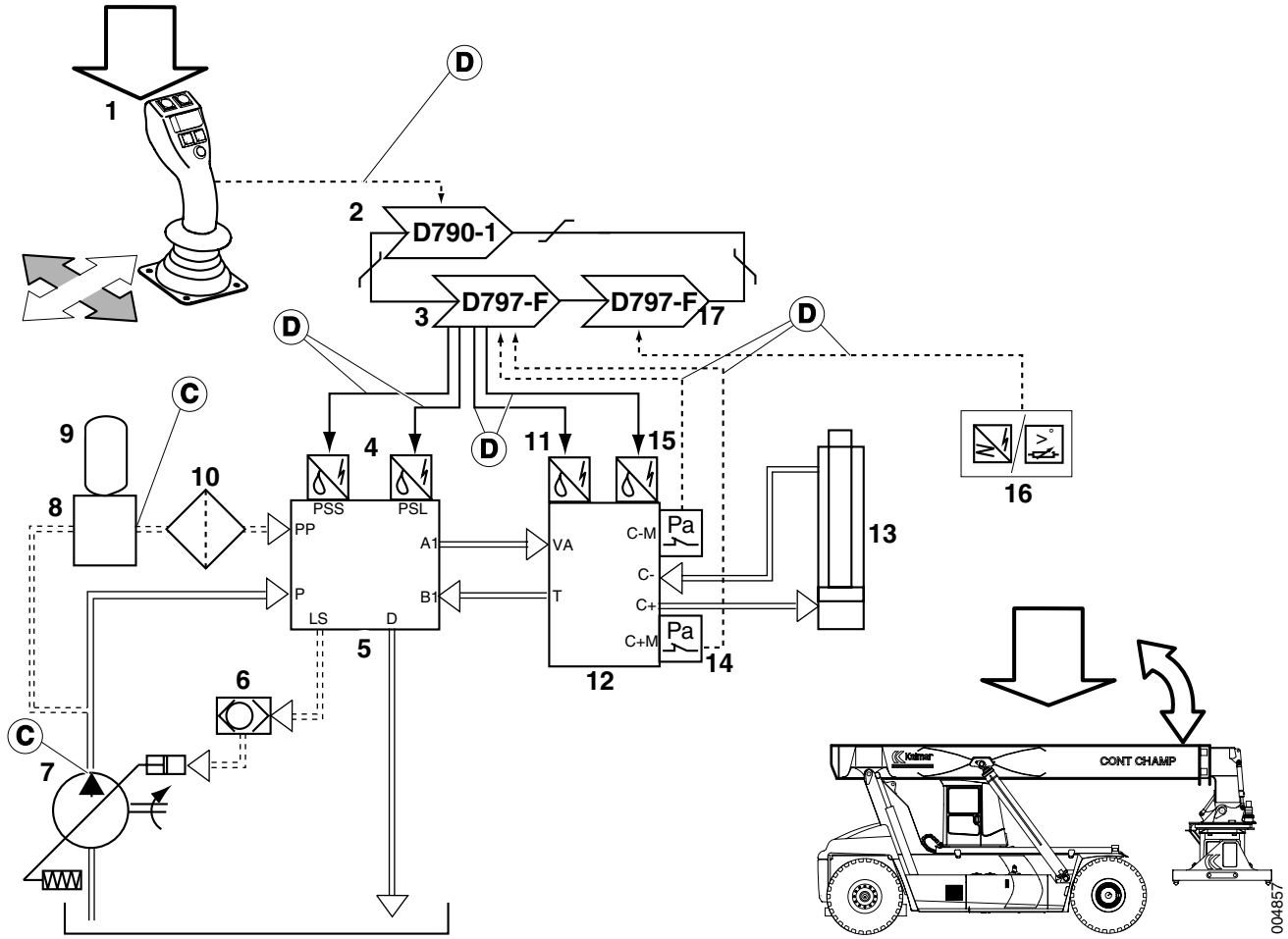

1. Control lever (S815-P1)
2. Control unit cab (D790-1)
3. Control unit frame front (D797-F)
4. Servo valve, lift (Y6005) or Servo valve, lower (Y6004)
5. Control valve lift, lower and extension
6. Shuttle valve
7. Hydraulic oil pump
8. Pressure reducer
9. Accumulator
10. Servo filter
11. Servo valve blocking right (Y6001) and Servo valve blocking left (Y6002)
12. Valve block lift cylinder
13. Lift cylinder
14. Sensor hydraulic pressure lift cylinder piston side left (B768-12)
15. Servo valve regeneration right (Y6051) and Servo valve regeneration left (Y6052)
16. Position sensor damping (B769-1) (Mechanical overloading system)

    ⊕ Sensor boom angle (B771) (Mechanical overloading system with analogue sensors or Electronic overloading system)
17. Control unit frame rear (D797-R)

Hydraulic diagram basic machine

https://truckmanualshub.com/

Lift and lower, component position

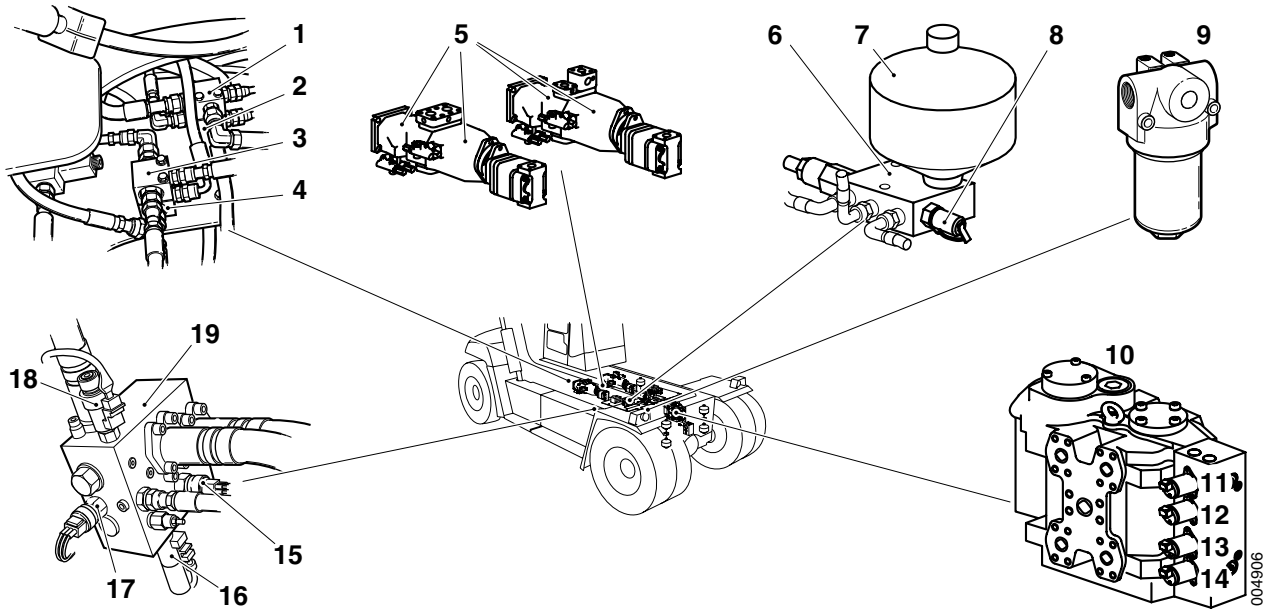

1. Shuttle valve attachment
2. Shuttle valve steering
3. Shuttle valve mini-wheel or joystick steering ⊕
4. Shuttle valve option frame ⊕
5. Hydraulic oil pump
6. Pressure reducer
7. Accumulator servo circuit
8. Test outlet, servo pressure
9. Servo filter
10 Control valve lift, lower and extension
11. Servo valve boom out (Y6006)
12. Servo valve boom in (Y6007)
13. Servo valve boom lower (Y6004)
14. Servo valve lift (Y6004)
15. Pressure sensor piston side [C+M] (B768-10) ⊕ or (B768-12)
16. Servo valve blocking (Y6001) or (Y6002)
17. Pressure sensor rod side [C-M] (B768-11) ⊕ or B768-13) ⊕
18. Servo valve regeneration (Y6051) or (Y6052)
19. Valve block lift cylinder

https://truckmanualshub.com/

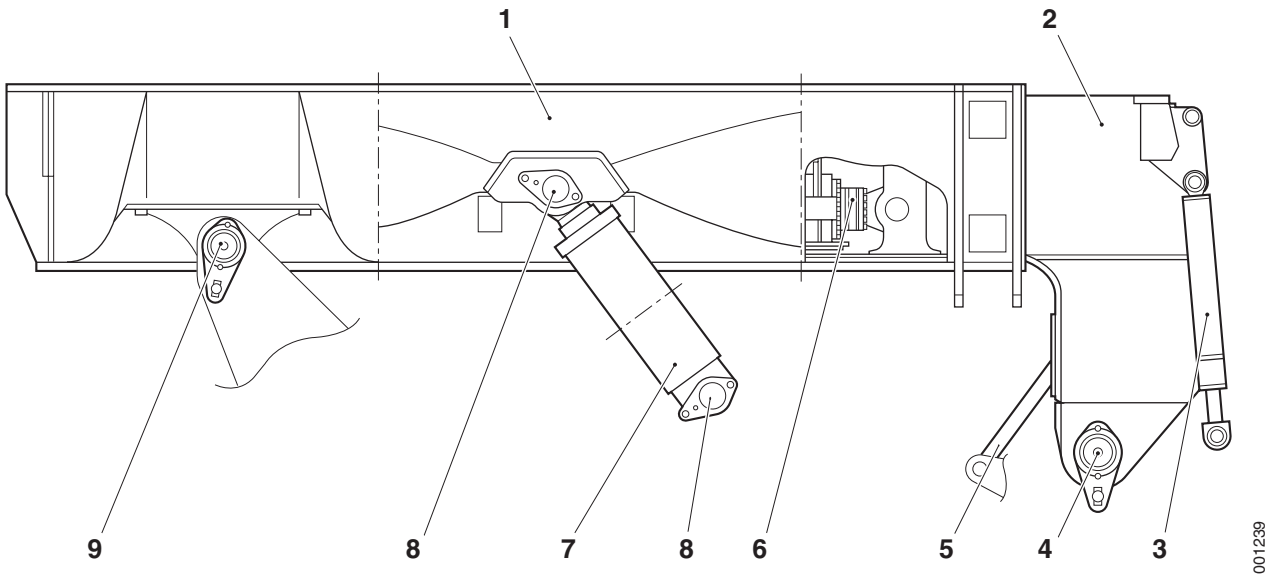

1. Outer boom
2. Inner boom
3. Tilt cylinder, right side
4. Mounting attachment
5. Tilt cylinder, left side
6. Extension cylinder
7. Lift cylinder
8. Mounting, lift cylinder
9. Rear boom mounting

Sensor boom angle

See section *8 Control system,* group *8.2.1 Overloading system*.

7.2.2 Servo filter

Servo filter, changing

WARNING

Hot, pressurized oil.

Personal injury, burn injury, rash or irritation.

Always depressurize the hydraulic systems before starting to work on the hydraulic systems. Avoid skin contact with the oil, use protective gloves.

1 Machine in service position, see section *B Safety*.

2 Depressurize the hydraulic systems, see section *B Safety*.

3 Turn the start key to position 0 and turn off the main electric power.

https://truckmanualshub.com/

4 Clean the outside of the filter housing and filter holder.
5 Remove the filter holder and remove the cartridge downward.
6 Clean the inside of the filter holder.
7 Place the new cartridge in the filter holder.

8 Check that the O-ring on the filter holder is intact and in place.
9 Fit the filter and filter holder.

10 Check the hydraulic oil level with the lift cylinders completely down and the extension cylinder completely in. The oil level should be at the top of the level glass. Top up as needed, for grade see section *F Technical data*.

NOTE

The hydraulic oil level is checked with the boom completely lowered and retracted.

https://truckmanualshub.com/

7.2.3 Pressure reducer

Pressure reducer, checking servo pressure

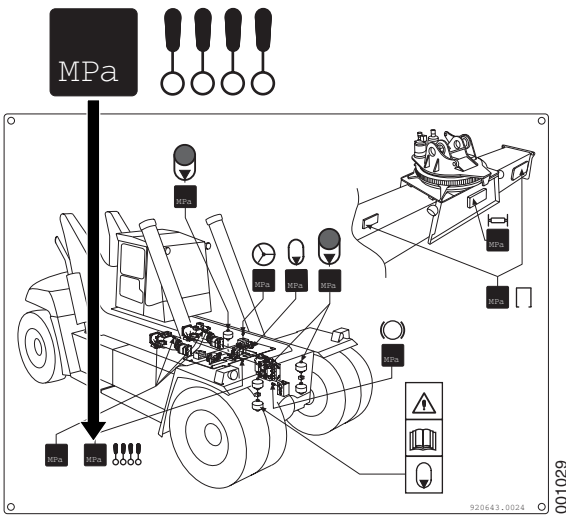

WARNING

Hot, pressurized oil.

Personal injury, burn injury, rash or irritation.

Always depressurize the hydraulic systems before starting to work on the hydraulic systems. Avoid skin contact with the oil, use protective gloves.

1 Operate and warm up the machine so that the hydraulic oil reaches operating temperature, at least 50 °C.
2 Machine in service position, see section *B Safety*.
3 Depressurize the hydraulic systems, see section *B Safety*.
4 Turn the start key to position 0.
5 Connect a pressure gauge (0–25 MPa) to the test outlet on the pressure reducer.
6 Start the engine and check the servo pressure. Compare with pressure plate.

   Turn the steering wheel or activate a load handling function to activate the hydraulic oil pumps. The servo pressure is higher than the stand-by pressure of the hydraulic oil pumps.
7 Depressurize the hydraulic and brake systems, see section *B Safety*, *Hydraulic and brake systems, depressurizing*.
8 Remove the pressure gauge and fit the protective cap on the pressure check connection.

https://truckmanualshub.com/

7.3 Protruding

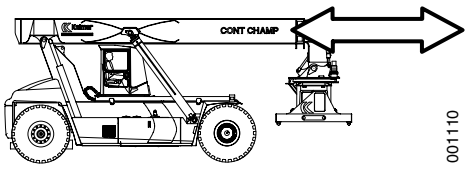

Extension, function description

Extension means to push the inner boom in and out in the outer boom. The inner boom is pushed in and out by the extension cylinder which is pressurized by Control valve lift, lower and extension. Extension is controlled with Control lever (S815).

Damping

Damping means that the speed of functions is reduced automatically near the end-positions. This results in less stress on the mechanical parts when stopping in the end-positions.

Position sensors sense when damping should be activated. When damping is activated, the control unit in question reduces the control current to the solenoid valve for that function.

Regeneration

To increase the extension speed, oil from the rod side (2) is reused to the piston side (1), this is called regeneration. Engagement of regeneration is controlled by the control system.

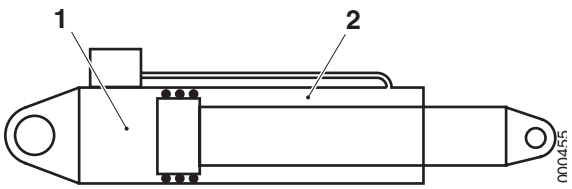

Condition	Reference value
Control switch	Not activated
Overloading system	Boom out: passive

https://truckmanualshub.com/

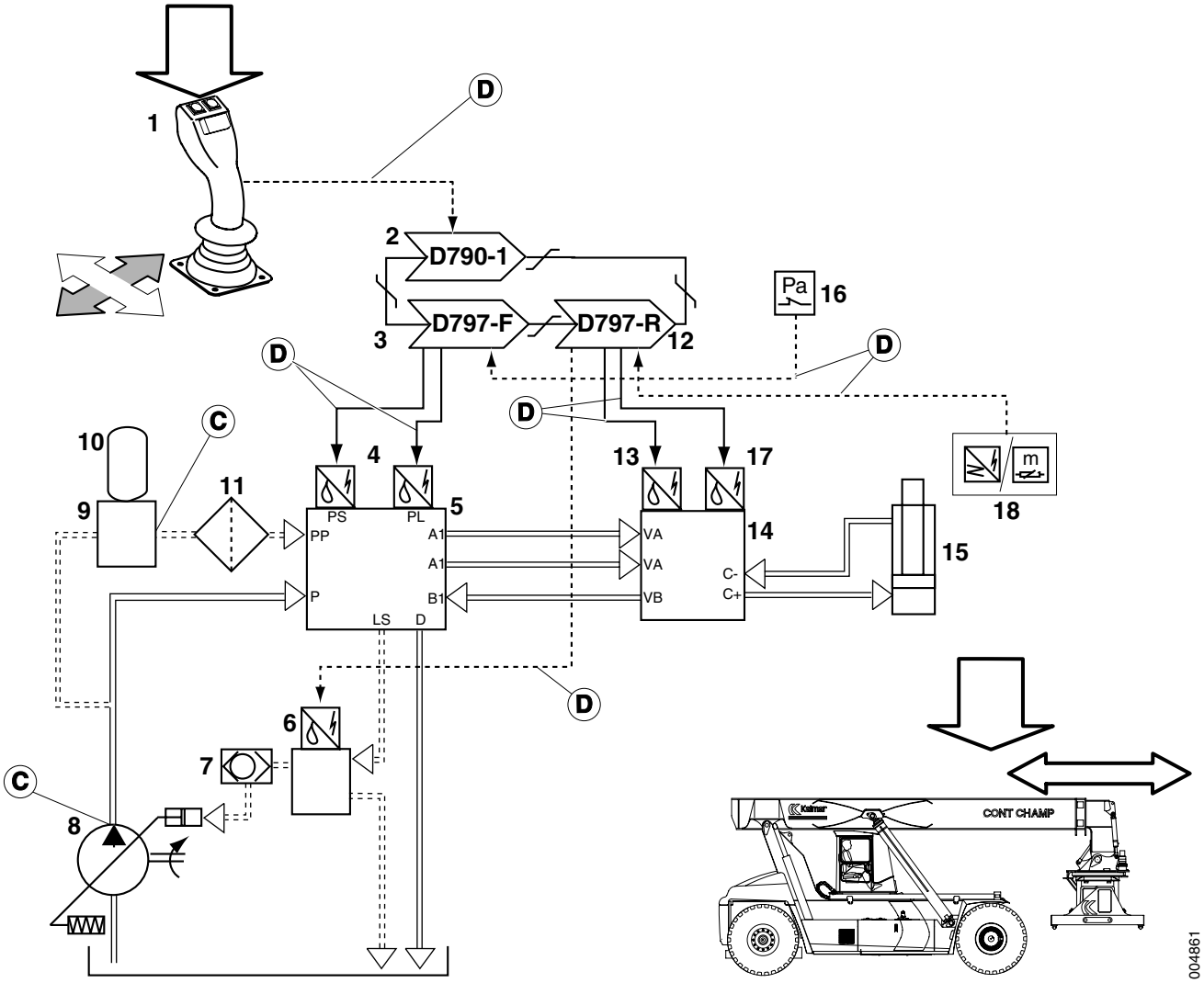

1. Control lever (S815-P2)
2. Control unit cab (D790-1)
3. Control unit frame front (D797-F)
4. Servo valve, boom out (Y6006) or Servo valve, boom in (Y6007)
5. Control valve lift, lower and extension
6. Valve block pump unloading
7. Shuttle valve
8. Hydraulic oil pump
9. Pressure reducer
10. Accumulator servo pressure
11. Servo filter
12. Control unit frame rear (D797-R)
13. Servo valve blocking extension (Y6050)
14. Valve block extension cylinder
15. Extension cylinder
16. Sensor hydraulic pressure lift cylinder (B768-12)
17. Servo valve regeneration (Y6046)
18. Position sensor damping boom in (D796-3) or Position sensor damping boom out (D796-4) (Mechanical overloading system)

    ⊕ Sensor boom length (B777) (Mechanical overloading system with analogue sensors or electronic overloading system)

Hydraulic diagram basic machine

https://truckmanualshub.com/

Extension, component position

Hydraulic oil pump, Servo filter, Pressure reducer, Accumulator servo circuit, Control valve lift, lower and extension, Shuttle valve, Extension cylinder, Lift boom

See *Lift and lower, component position page 6*.

Valve block extension cylinder extension cylinder

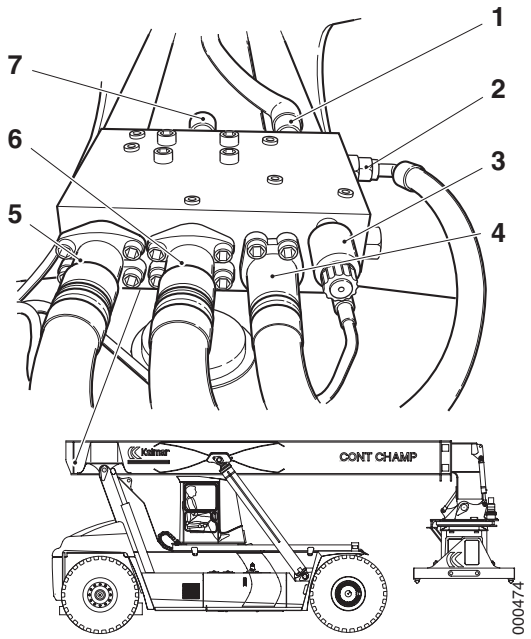

1. Connection rod side (C-)
2. Drain (D)
3. Servo valve regeneration (Y6046)
4. Connection control valve (VB)
5. Connection control valve (VA)
6. Connection control valve (VA)
7. Servo valve blocking (Y6050).

Valve block pump unloading

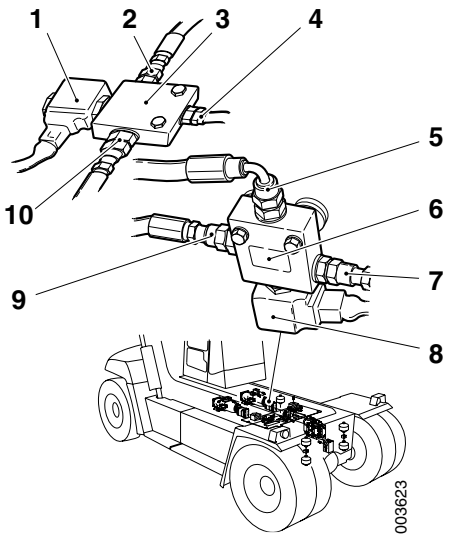

1. Solenoid valve engagement hydraulic pressure (Y6003)
2. Pressure signal to hydraulic oil pump 2
3. Valve block top lift hydraulics
4. Tank drain
5. Pressure signal in, from shuttle valve
6. Valve block pump unloading
7. Pressure signal to hydraulic oil pump 2
8. Solenoid valve pump unloading (Y6062)
9. Tank drain
10. Pressure signal in, from shuttle valve

Sensor boom length

See section *8 Control system,* group *8.2.1 Overloading system*.

https://truckmanualshub.com/

7.3.10 Lift boom

Glide plates lift boom, checking

NOTE

When adjusting side-mounted glide plates, it is important to check the clearance for the whole boom's stroke.

1 Place the boom in the lowest position (fully retracted).

2 Check wear of the side-mounted glide plates at the leading edge of the lift boom. If needed, remove the glide plate and measure the thickness.

Thickness should be at least **25 mm**.

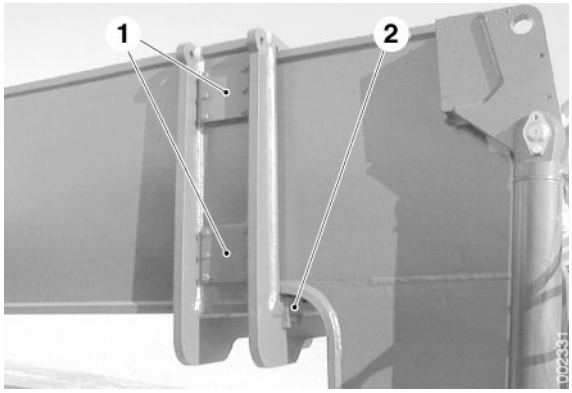

1. Side-mounted glide plates
2. Lower glide plates

NOTE

If the glide plate's thickness is less than 25 mm, the glide plate may work loose from the bracket, which may result in boom damage.

3 Check the clearance between the boom and glide plate, clearance should be **1 mm**, adjust with spacer plates if needed.

NOTE

The inner boom shall be centred in the outer boom.

4 Check thickness of the lower glide plates at the leading edge of the lift boom. If needed, remove the glide plate and measure the thickness.

Thickness should be at least **15 mm**.

5 Check the clearance between the boom and stop at the leading edge/top edge of the boom, clearance may be **max. 3 mm**. Adjust the glide plates with spacer plates if needed.

6 Check wear of the lower and side-mounted glide plates at the trailing edge of the lift boom. If needed, remove the glide plate and measure the thickness.

Thickness should be at least **25 mm**.

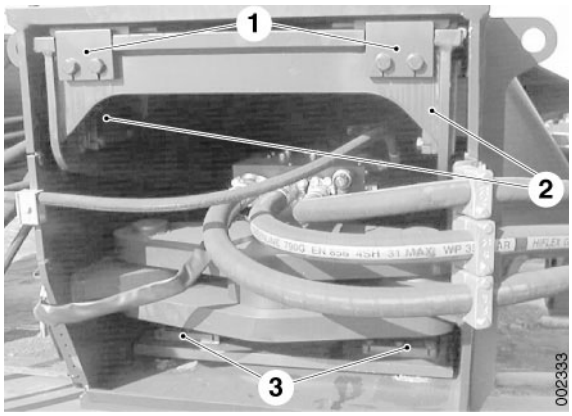

1. Upper glide plates
2. Side-mounted glide plates
3. Lower glide plates

NOTE

If the glide plate's thickness is less than 25 mm, the glide plate may work loose from the bracket, which may result in boom damage.

7 Check the clearance between the boom and glide plate, clearance should be **1 mm**, adjust with spacer plates if needed.

8 Check thickness of the upper glide plates at the trailing edge of the lift boom. If needed, remove the glide plate and measure the thickness.

Thickness should be at least **15 mm**.

https://truckmanualshub.com/

7.4 Side-shift

Sideshift, function description

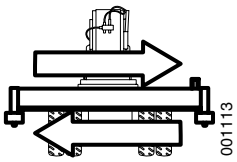

Sideshift means to move the attachment sideways. The attachment can be sideshifted ± 800 mm from the middle position.

Control valve attachment pressurizes the sideshift cylinders which push the attachment's main beam in relation to the lift boom. Sideshift is controlled with Control lever (S815).

Condition	Reference value
Control switch	Not activated

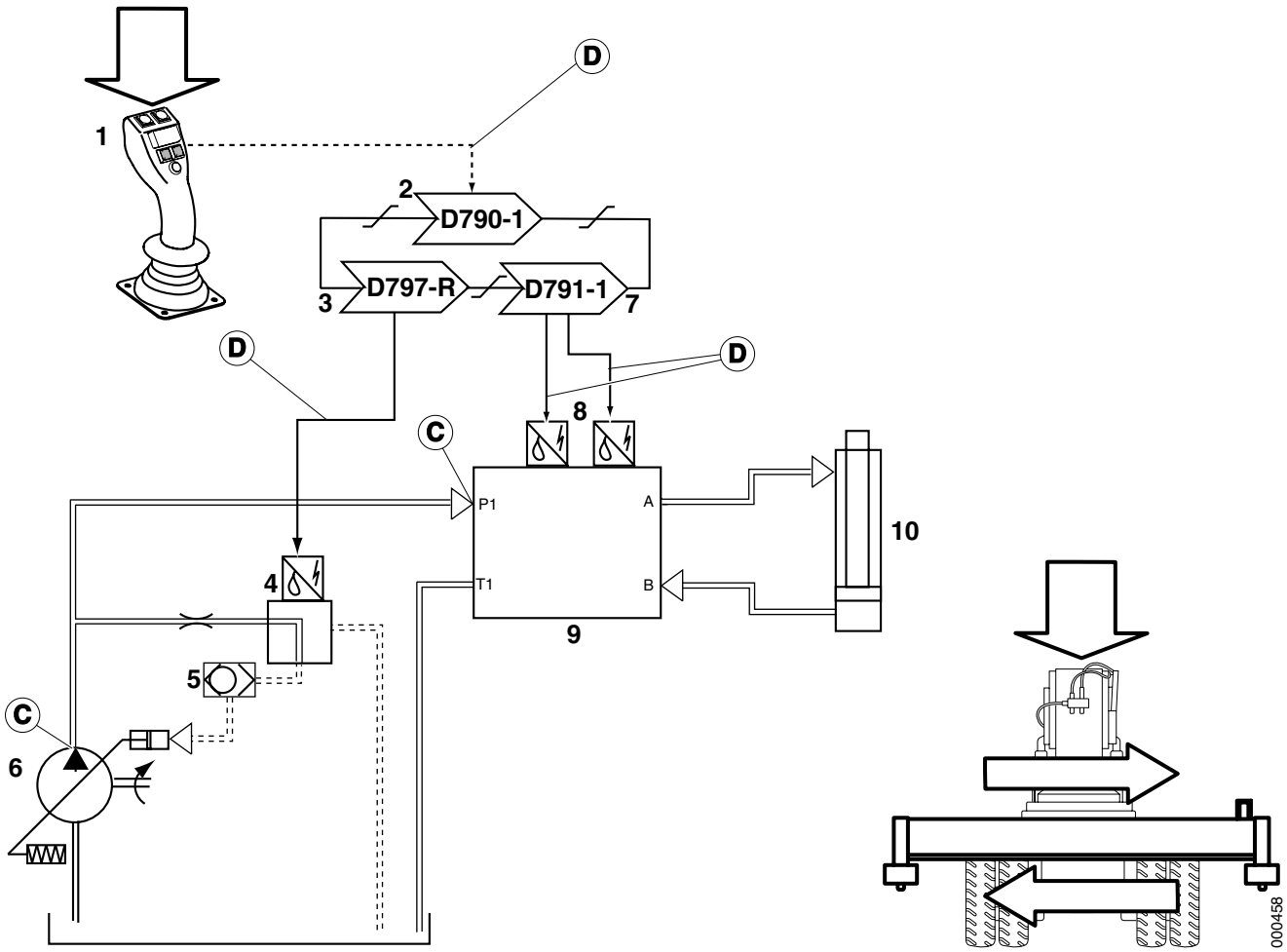

1. Control lever (S815-T1.1)
2. Control unit cab (D790-1)
3. Control unit frame rear (D797-R)
4. Solenoid valve, engagement of hydraulics for top lift (Y6003)
6. Hydraulic oil pump
7. Control unit attachment (D791-1)
8. Servo valve, sideshift left (Y6020) or Servo valve, sideshift right (Y6021)
9. Control valve attachment

https://truckmanualshub.com/

5. Shuttle valve

10. Sideshift cylinder

Hydraulic diagram top lift

Hydraulic diagram top lift, tilt lock and controllable tilt

Hydraulic diagram combi attachment

Hydraulic diagram top lift, tilt lock, controllable tilt and hydraulic levelling

Sideshift, component position

Hydraulic oil pump, Shuttle valve

See *Lift and lower, component position page 6*

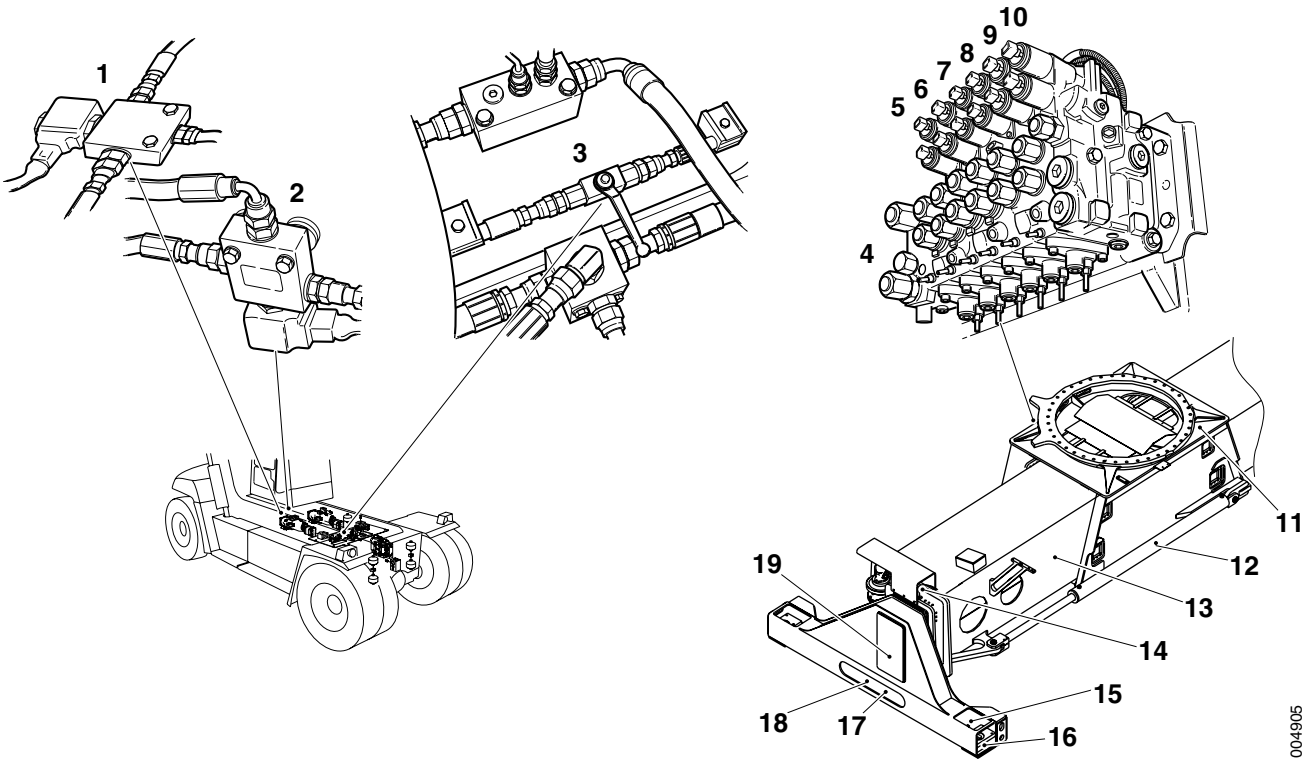

1. Valve block top lift hydraulics
2. Valve block pump unloading
3. Relief valve attachment

NOTE

The illustration shows closed valve. The machine is delivered with the valve in open position.

4. Control valve attachment
5. ⊕ Solenoid valve levelling (Y6035 and Y6036)
9. Solenoid valve spreading (Y6018 and Y6019)
10. Solenoid valve twistlocks (Y6039 and Y6040)
11. Sideshift frame
12. Sideshift cylinder
13. Main beam attachment
14. Position sensor spreading (B769 and B777-3)
15. Sensor alignment (B7204L/R and B7205L/R)
16. Twistlock

https://truckmanualshub.com/

6. ⊕ Solenoid valve tilt (Y6010 and Y6011)
7. Solenoid valve rotation (Y6008 and Y6009)
8. Solenoid valve sideshift (Y6020 and Y6021)
17. Sensor twistlocks (B7202L/R and B7203L/R)
18. Lock cylinder twistlocks
19. Spreader boom

7.4.6 Sideshift frame

Glide plates sideshift frame, checking

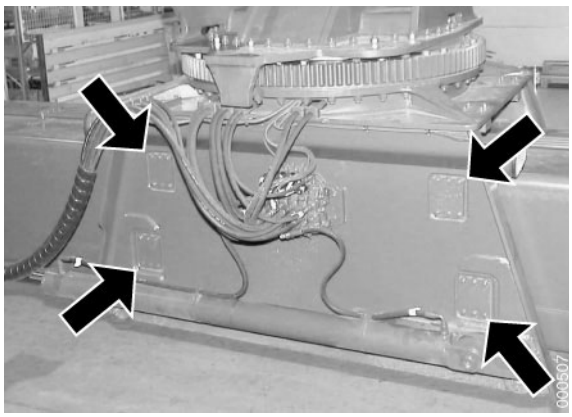

1 Remove cover plate, spacer plate and glide plate.

2 Measure glide plate's thickness.

Thickness should be at least **25 mm**.

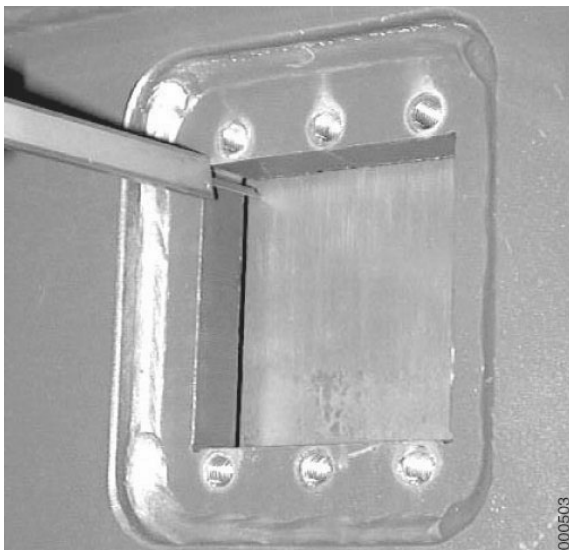

Illustration shows measuring without glide plate.

3 Check the glide plate's clearance by measuring the distance between the glide plate and the edge for the cover plate.

Clearance should be **1 mm**.

Fit/remove spacer plates until the distance is correct.

4 Fit the cover plate.

5 Repeat steps 1–4 on the other glide plates.

https://truckmanualshub.com/

Lower glide plates sideshift frame, checking

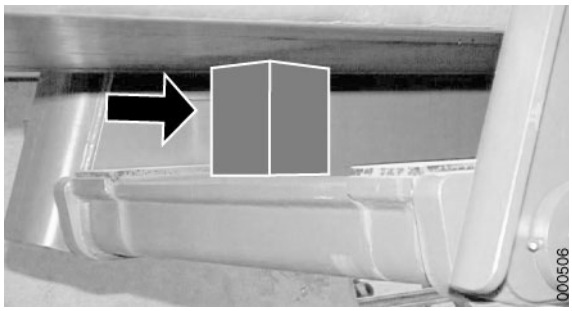

1 Place axle stands or similar under the attachment's spreader booms and lower the attachment axle stands so that the sideshift frame's lower glide plates can be accessed.
2 Turn off the engine and the main electrical power.
3 Place spacers between cross beam and the attachment's main boom on both cross beams.
4 Measure thickness of the glide plates.

   Thickness should be at least **15 mm**. Check that the glide plates have the same thickness.
5 Remove the spacer.
6 Turn on the main electric power and start the engine.
7 Lift the attachment and remove the stands.

7.4.7 Main beam attachment

Glide plates main beam attachment, checking

1 Park the machine with the attachment as far down as possible and spreading run in so that 40 cm remain to the 20-foot position.
2 Turn off the engine and the main electrical power.
3 Take the strain off the glide plate in question.

   Take the strain off the lower glide plates by lifting the spreader beam at the outside edge or by using wedges to change the spreader beam's position on the attachment's main beam.
4 Remove the attaching bolts for the glide plate's bracket.
5 Remove the guide plate's guide pin.

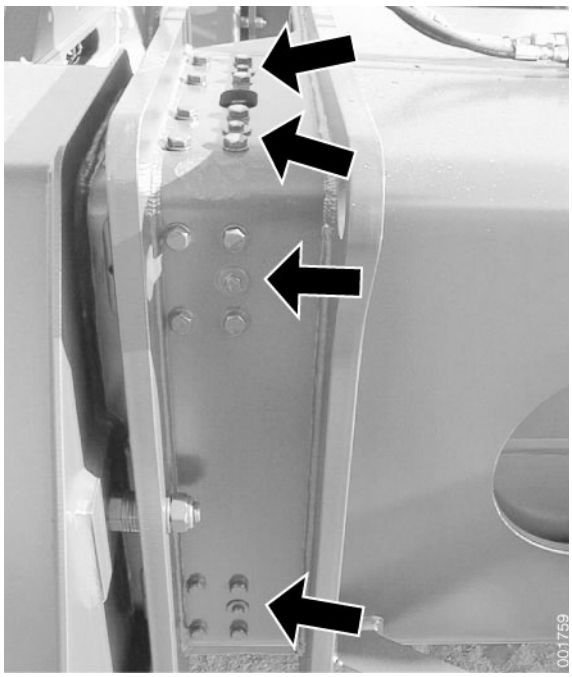

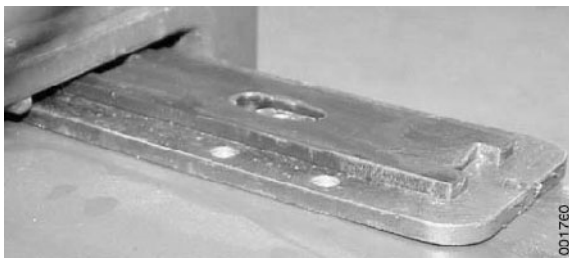

6 Pull out the glide plate with spacer plate and bracket.
7 Measure the glide plate's thickness, change if needed.

   Thickness should be at least **10 mm**.

https://truckmanualshub.com/

8 Place the glide plate in the correct position.

Check the clearance between spreader beam and glide plate. Clearance should be max. **1 mm** with all glide plates mounted.

Fit/remove spacer plates until the distance is correct.

NOTE

Excessive clearance may result in damage to the spreader beam when load handling.

9 Fit the glide plate's bracket.

10 Fit the glide plate's guide pin.

11 Repeat steps 3–10 on the other glide plates.

12 Start the machine and check the spreading function. Try lifting a container and check that the spreader beams do not have too much clearance.

https://truckmanualshub.com/

7.5 Positioning

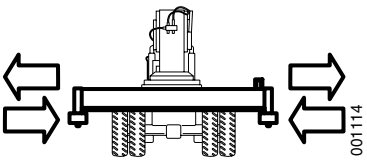

Spreading, function description

Spreading means that the width between the twistlocks is changed. Spreading has two 20-foot and 40-foot stops, as an option there are stops at other distances, e.g., 30-foot stop.

Control valve attachment pressurizes valve block spreader motor that directs pressure to the spreader motor. The spreader motor pulls the spreader chains that pull the spreader booms in and out.

Spreading is controlled with Control lever (S815). Inductive position sensors indicate the spreader units' position.

Damping

Damping means that the speed of functions are reduced automatically close to end-positions. Three seconds after damping is activated, the function is interrupted. This results in less loading of mechanical parts at stops in end-positions.

Position sensors sense when damping should be activated. When damping is activated, the control unit in question reduces the control current to the solenoid valve for that function.

Condition	Reference value
Control switch	Not activated
Twistlocks	Unlocked or by-pass activated
Overloading system	Passive

https://truckmanualshub.com/

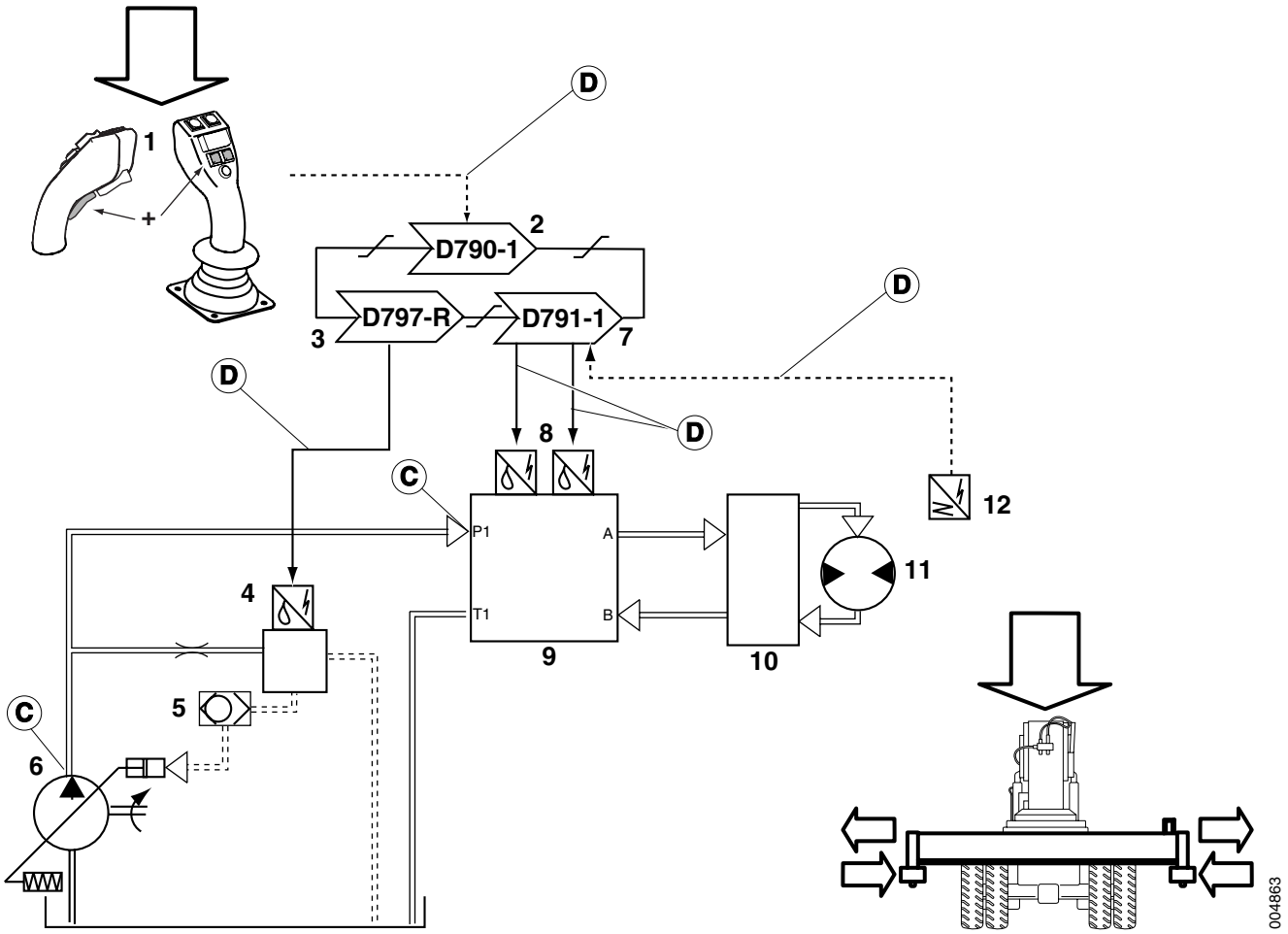

1. Control lever (S815-T1.x and S815-T4)
2. Control unit cab (D790-1)
3. Control unit frame rear (D797-R)
4. Solenoid valve, engagement of hydraulics for top lift (Y6003)
5. Shuttle valve
6. Hydraulic oil pump
7. Control unit cab (D790-1)
8. Servo valve spreading out (Y6018) or Servo valve spreading in (Y6019)
9. Control valve attachment
10. Valve block spreader cylinder
11. Hydraulic motor spreading
12. Sensor end-position 20’-40’ left (B769L) and Sensor end-position 20’-40’ right (B769R)

Hydraulic diagram top lift

Hydraulic diagram top lift, tilt lock and controllable tilt

Hydraulic diagram combi attachment

Hydraulic diagram top lift, tilt lock, controllable tilt and hydraulic levelling

https://truckmanualshub.com/

30-foot stop, function description

30-foot stop is an option for spreading that is activated with Switch stop at 30’ or 35’. When the 30-foot stop is activated, spreading stops at 30 feet. Two inductive position sensors indicate the position of the spreader beams and activates damping. For 30-foot stop, two sensors are used to control the stops.

Condition	Reference value
Control switch	Not activated
Twistlocks	Unlocked or by-pass activated
Overloading system	Passive

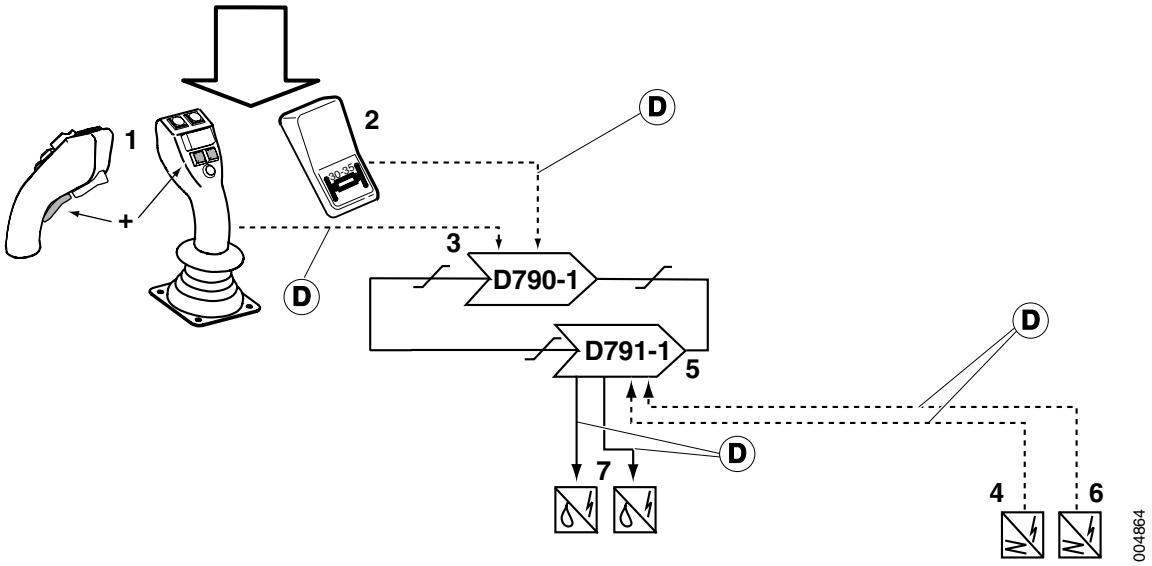

1. Control lever (S815-T1.2 and S815-T4)
2. Switch stop at 30’-35’ (S1004)
3. Control unit cab (D790-1)
4. Sensor, end-position 30’ (B777-3)
5. Control unit attachment (D791-1)
6. Sensor end-position 20’-40’ (Y769)
7. Servo valve spreading out (Y6018) or Servo valve spreading in (Y6019)

Hydraulic diagram top lift

Hydraulic diagram top lift, tilt lock and controllable tilt

Hydraulic diagram combi attachment

Hydraulic diagram top lift, tilt lock, controllable tilt and hydraulic levelling

https://truckmanualshub.com/

Spreading, component position

Hydraulic oil pump, Shuttle valve

See *Lift and lower, component position page 6*.

Valve block top lift hydraulics, Control valve attachment, Spreader beam, Main beam attachment, Relief valve attachment

See *Sideshift, component position page 15*.

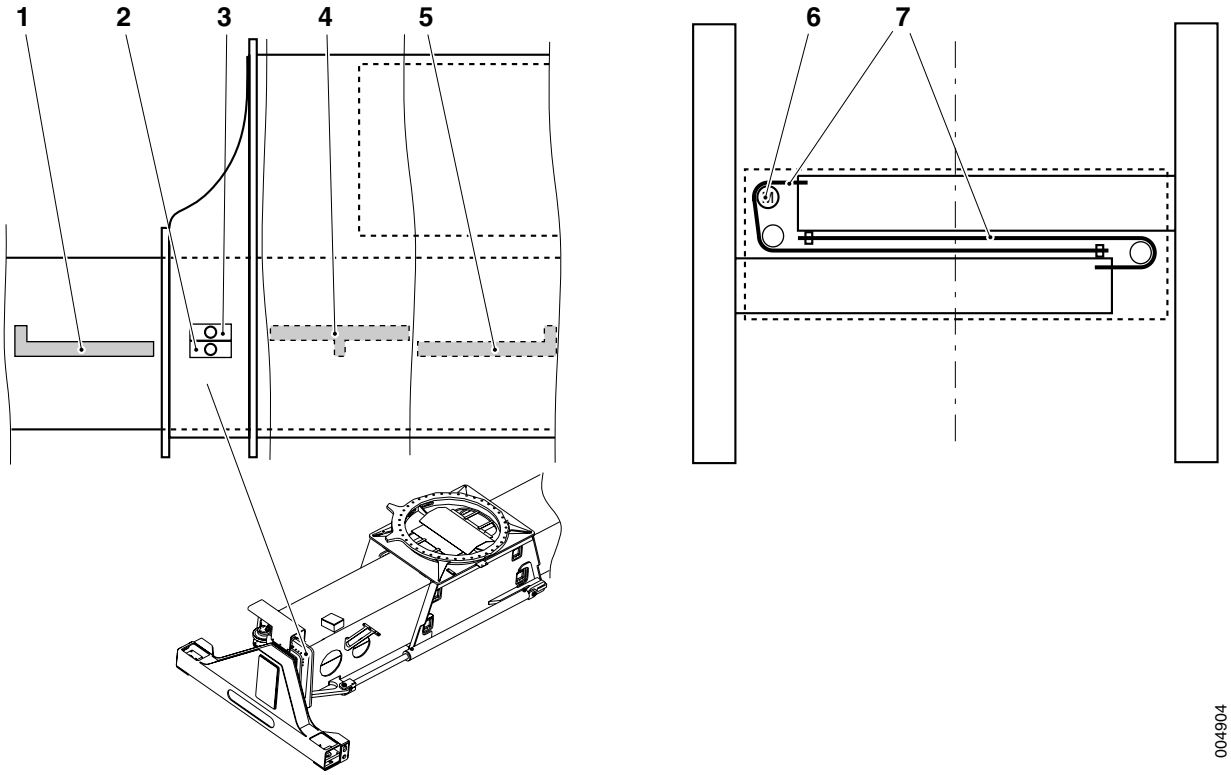

1. Indicator plate 20''
2. Sensor damping 20' and 40', Stop 30' (B769)
3. Sensor damping 30' (B777-3) ⊕
4. Indicator plate 30' or 35' ⊕
5. Indicator plate 40''
6. Spreader motor
7. Spreader chains

https://truckmanualshub.com/

7.5.6 Positioning motor

Oil spreader motor unit, changing

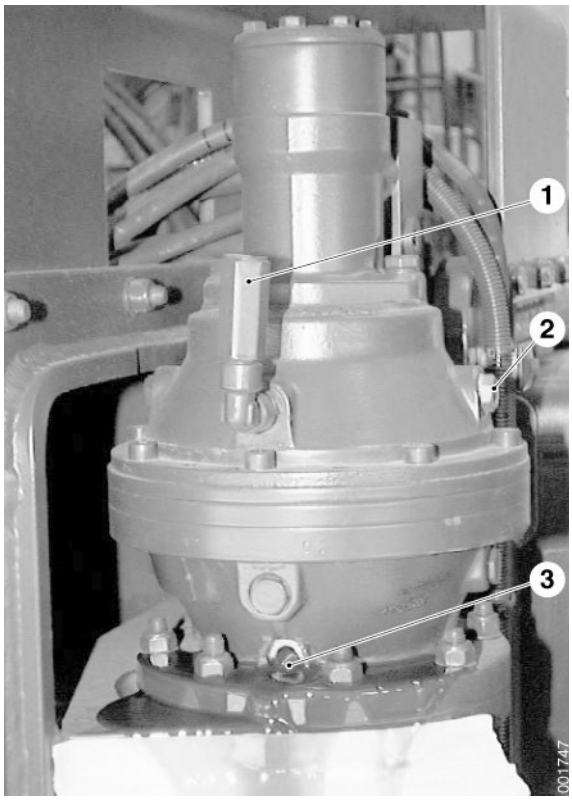

1. Filling point
2. Level glass
3. Drain plug

WARNING

Hot, pressurized oil.

Personal injury, burn injury, rash or irritation.

Always depressurize the hydraulic systems before starting to work on the hydraulic systems. Avoid skin contact with the oil, use protective gloves.

1 Remove the drain plug. Collect the oil in a receptacle.

2 Remove and clean the level glass.

3 Fit the drain plug when all oil has drained.

NOTE

Make sure that the seal washer for the drain plug is installed as well.

4 Fill oil until the level can be seen in the level glass (fill through breather hole).

5 Handle the waste oil as environmentally hazardous waste.

7.5.7 Positioning chains

Spreader chains, checking

1 Before adjustment, the clearance between the slide plates and extension beams must be checked otherwise the chain's mountings will be damaged, see *Slide plates, extension beam, checking and adjustment page 26*.

2 Start the engine and run in the spreading to the 20-foot position, and turn off the engine.

3 Check the C-C measurement between the twistlocks.

C-C 20-foot: 5853±3 mm

Check that both spreader beams run against the 20-foot stops and that the distance between spreader beam and the spreader motor's mounting is at least 3 mm.

https://truckmanualshub.com/

4 If needed, adjust the distance by moving washers between the right and left 20-foot stop. The quantity of washers may not be changed.

NOTE

Note the distance that the stop is adjusted.

Run out the spreading slightly so that it is possible to move the washers.

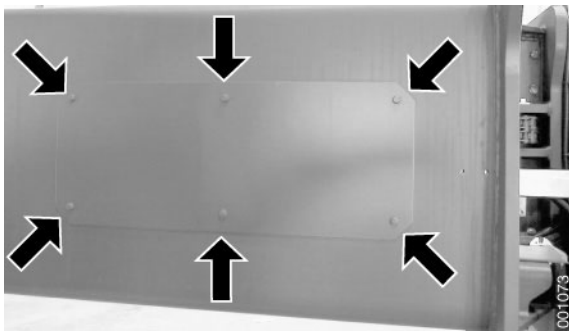

5 Remove the cover plates on the attachment's main beam.

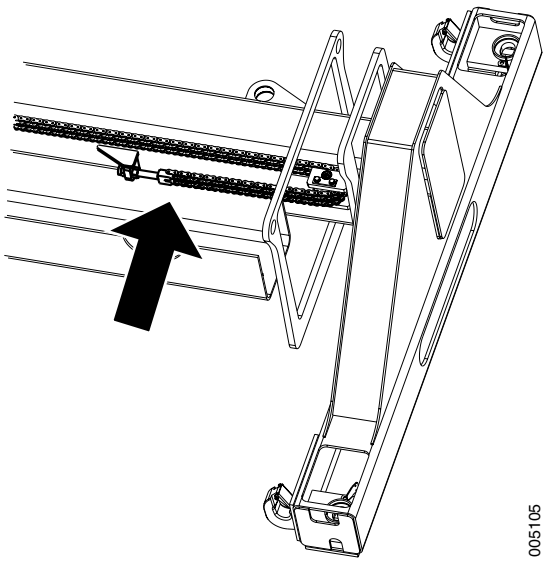

6 If the 20-foot stops have been adjusted, the spreader chains should be adjusted equally (as much).

NOTE

Check the chain tensioner's vertical position so that the chain runs straight toward the chain wheel.

7 Start the engine and run out the spreading to the 40-foot position, and turn off the engine.

8 Check the C-C measurement between the twistlocks.

C-C 40-foot: 11985±3 mm

https://truckmanualshub.com/

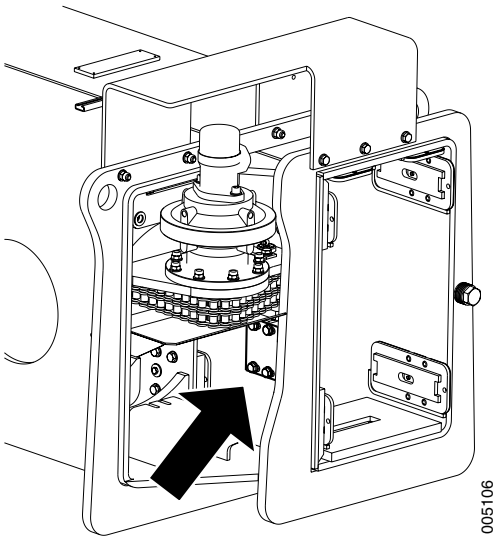

9 If needed, adjust the 40-foot stops.

10 Start the engine and run in the spreading to the 40-foot position.

11 Wait 2 minutes and then check the tension of the chains.

Measure how much the chain can be pushed in at the hole closest to the centre of the attachment. When the chain is pressed in with a force of **250 N** it should move **20–40 mm** from resting position.

12 If needed, adjust the tension of the chains.

Start the engine and run out the spreading until the chain tensioner is visible in the inspection hole. Adjust the chains.

NOTE

Adjust the chain max. 2 mm at a time on the chain tensioner.

13 Repeat steps 9–11 until the chain tension is correct.

14 ⊕

If the machine is equipped with 30-foot or 35-foot stops: Start the engine and run out the spreading to the 30-foot or 35-foot position. Turn off the engine and check the C-C measurement between the twistlocks.

C-C 30-foot: 8918±3 mm

C-C 35-foot: 10488±3 mm

IMPORTANT

Check the distance at stop from both 20' and 40'.

15 Brush lubrication grease on the spreader chain.

16 Fit the cover plates to the attachment's main beam.

https://truckmanualshub.com/

7.5.8 Positioning beam

Slide plates, extension beam, checking and adjustment

1 Park the machine with the attachment as far down as possible and spreading fully run in.

2 Turn off the engine and the main electrical power.

3 Take the strain off the slide plate in question.

The slide plates can be unloaded by lifting the extension beam in the outer edge or by using wedges to change the extension beam position in the attachment main beam.

The illustration shows the inner slide plates in the attachment's main beam.

The illustration shows the inner slide plates in the attachment's main beam.

4 Remove the attaching bolts for the slide plate's bracket.

5 Remove the guide plate's guide pin.

6 Pull out the slide plate with spacer plate and bracket.

7 Measure the slide plate's thickness, change if needed.

Thickness should be at least **10 mm**.

8 Place the slide plate in the correct position.

Check the clearance between the extension beam and slide plate. The clearance must be less than **1 mm** with all slide plates fitted.

Use a spacer plate to adjust the clearance.

9 Fit the slide plate's bracket.

10 Fit the slide plate's guide pin.

11 Grease the slide surface on the extension beam.

12 Start the machine and check the spreading function. Try lifting a container and check the extension beams' clearance in the attachment's main beam.

https://truckmanualshub.com/

7.6 Rotation

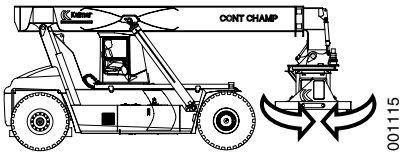

Rotation, function description

The attachment can be rotated +195° -105° in relation to the machine.

Control valve attachment pressurizes Valve block rotation motor. Valve block rotation motor controls pressure to the rotation motors, which rotate the attachment. Rotation is controlled with Control lever (S815). The voltage signal controls direction and speed (clockwise or counter-clockwise).

Condition	Reference value
Control switch	Not activated
Overloading system	Passive

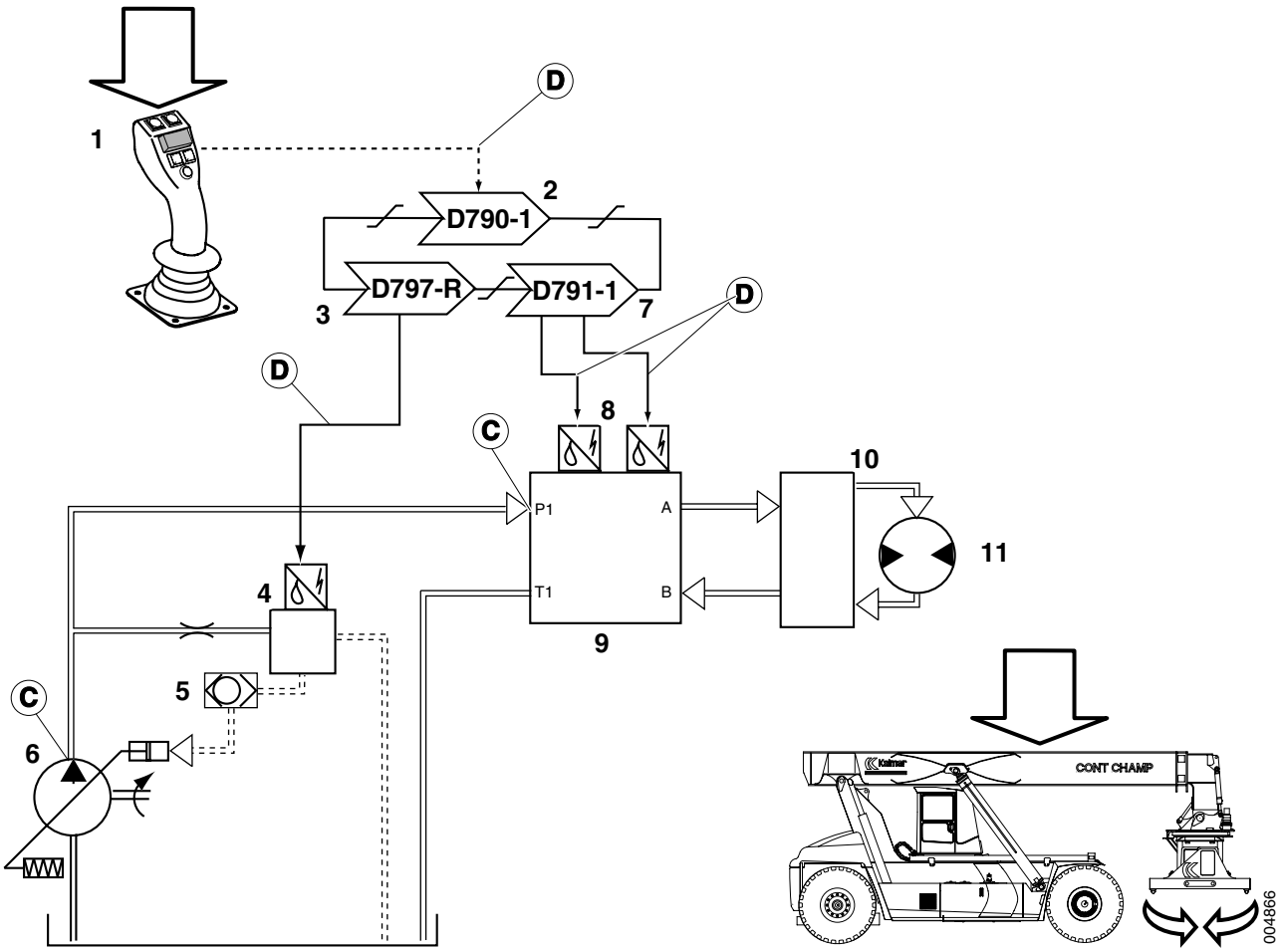

1. Control lever (S815-P3)
2. Control unit cab (D790-1)
3. Control unit frame rear (D797-R)
7. Control unit attachment (D791-1)
8. Servo valve, rotation clockwise (Y6008) or Servo valve, rotation counter-clockwise (Y6009)
9. Control valve attachment

https://truckmanualshub.com/

4. Solenoid valve, engagement of hydraulics for top lift (Y6003)
5. Shuttle valve
6. Hydraulic oil pump
10. Valve block hydraulic motor
11. Rotation motor

Hydraulic diagram top lift

Hydraulic diagram top lift, tilt lock and controllable tilt

Hydraulic diagram combi attachment

Hydraulic diagram top lift, tilt lock, controllable tilt and hydraulic levelling

Rotation stop, function description

Rotation stop is an option for the function rotation that interrupts rotation at ±25° rotation from the middle position. To rotate the attachment more, the function must be by-passed with Switch rotation stop (S1014).

Rotation stop uses a position sensor that indicates when rotation is ±25°, this is used to interrupt rotation.

Condition	Reference value
Control switch	Not activated
Overloading system	Passive

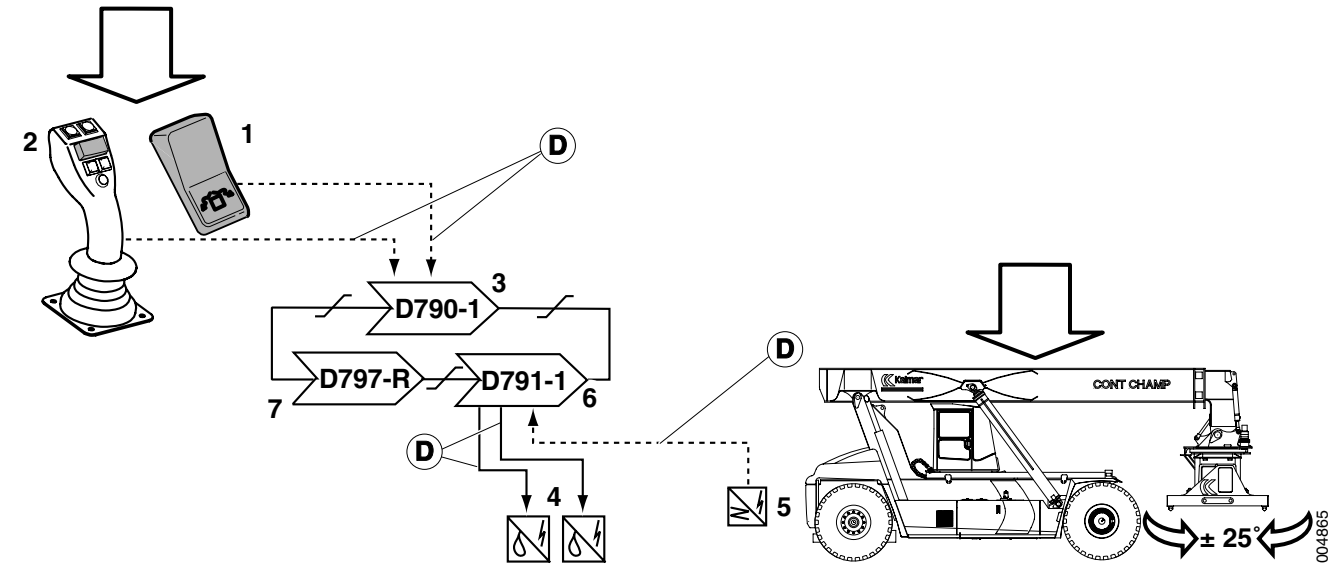

1. Switch rotation stop (S1014)
2. Control lever (S815-P3)
3. Control unit cab (D790-1)
5. Sensor rotation stop (B7225)
6. Control unit attachment (D791-1)
7. Control unit frame rear (D797-R)

https://truckmanualshub.com/

4. Servo valve rotation clockwise (Y6008) or Servo valve rotation counter-clockwise (Y6009)

Hydraulic diagram top lift

Hydraulic diagram top lift, tilt lock and controllable tilt

Hydraulic diagram combi attachment

Hydraulic diagram top lift, tilt lock, controllable tilt and hydraulic levelling

Rotation, component position

Hydraulic oil pump, Shuttle valve

See *Lift and lower, component position page 6*

Valve block top lift hydraulics, Control valve attachment, Sideshift frame, Relief valve attachment

See *Sideshift, component position page 15*.

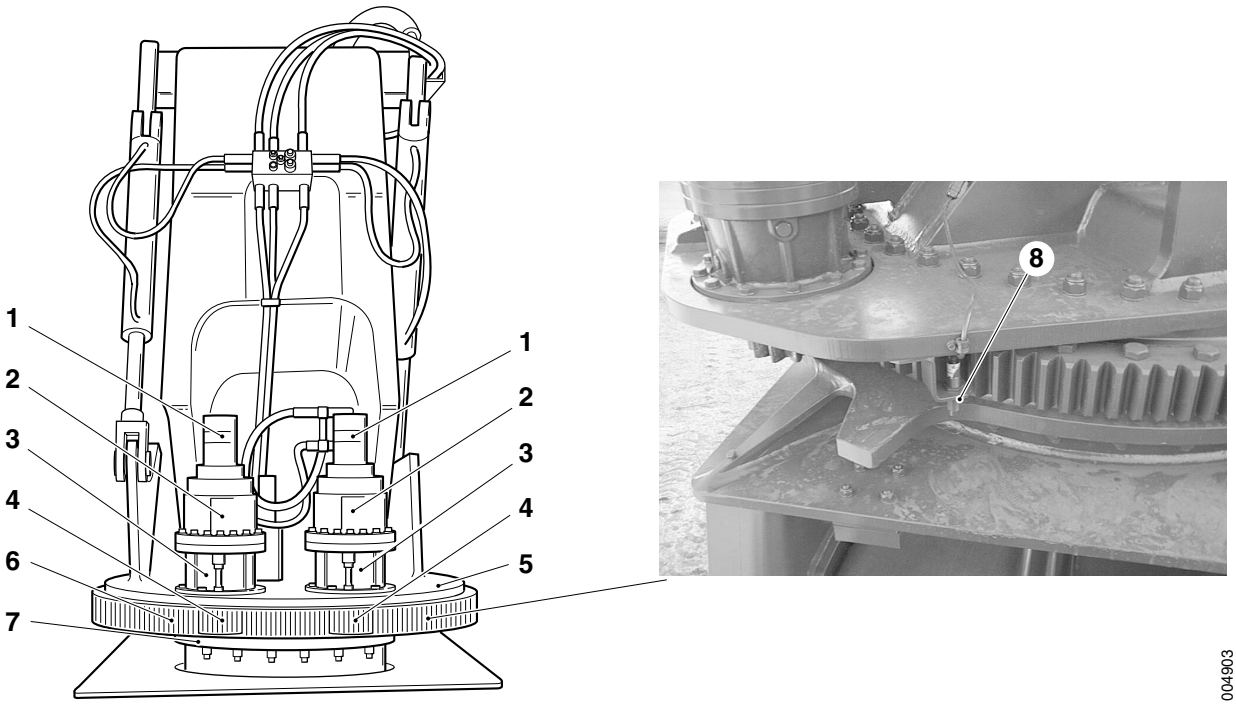

1. Hydraulic motor rotation
2. Disc brake
3. Planetary gear
4. Gear
5. Rotation yoke
6. Ring gear
7. Sideshift frame
8. Sensor rotation stop (B7225)

https://truckmanualshub.com/

7.6.6 Rotation motor unit

Oil rotation motor unit, changing

WARNING

Hot, pressurized oil.

Personal injury, burn injury, rash or irritation.

Always depressurize the hydraulic systems before starting to work on the hydraulic systems. Avoid skin contact with the oil, use protective gloves.

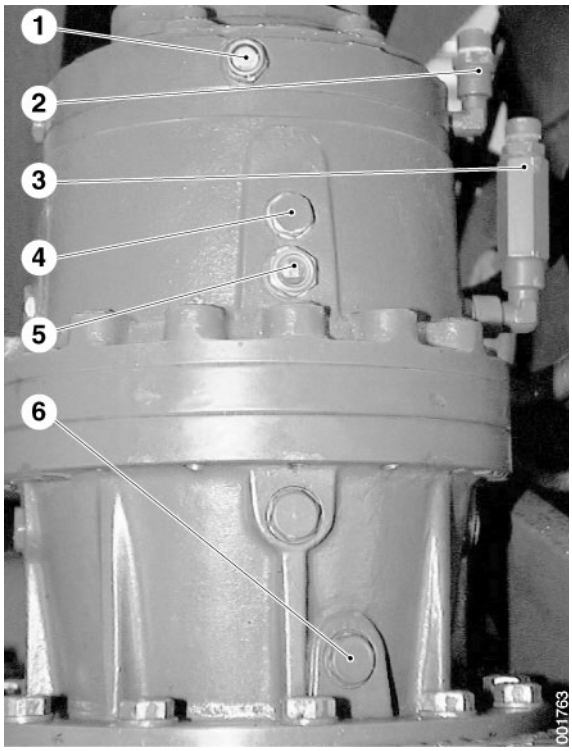

1. Level glass, disc brake
2. Filling point, disc brake
3. Filling point, planetary gear
4. Draining, disc brake
5. Level glass, planetary gear
6. Draining, planetary gear

1 Clean the area around the rotation motor unit.

2 Place a receptacle under the rotation motor.

3 Remove the planetary gear's drain plug (pos. 6) and lead the oil into the receptacle.

Remove the planetary gear's filler plug (pos. 3) for faster draining.

4 Remove and clean the planetary gear's level glass (pos. 5) while the oil drains.

5 Fit the level glass and drain plug.

6 Fill the planetary gear with new oil through the filling point (pos. 3) until the level is in the middle of the level glass. For volume and quality, see section *F Technical data*.

7 Remove the disc brake's drain plug (pos. 4) and lead the oil into the receptacle.

Remove the disc brake's filler plug (pos. 2) for faster draining.

8 Remove and clean the disc brake's level glass (pos. 1) while the oil drains.

9 Fit the level glass and drain plug.

10 Fill the disc brake with new oil through the filling point (pos. 2) until the level is in the middle of the level glass. For volume and quality, see section *F Technical data*.

https://truckmanualshub.com/

7.7 Tilt

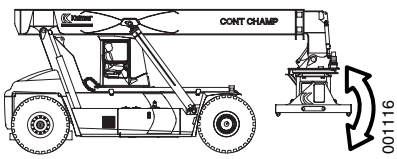

Tilt, description

The rotation yoke's suspension is hinged and is provided with two cross-connected hydraulic cylinders that reduce oscillations. The cylinders are pressurized by the hydraulic system and is connected with a damping block.

There are four versions of tilt:

- Damping
- Damping with tilt lock (Tilt lock) ⊕
- Damping with controllable tilt (Controllable tilt) ⊕
- Damping with controllable tilt and tilt lock ⊕

If the machine is equipped with tilt lock, an electrically controlled blocking valve is used in the damping block.

If the machine is equipped with controllable tilt, the hydraulic cylinders are supplied from a special section in the control valve on the attachment.

https://truckmanualshub.com/

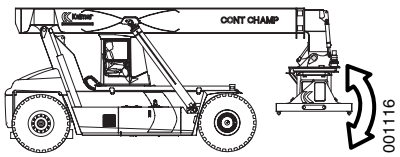

Tilt damping, function description

Tilt means that the attachment can swing back and forth in the suspension to the boom so that the load hangs straight during the entire lift movement. Tilt damping means that the tilt movement is counter-acted.

The attachment's mounting in the boom is hinged and provided with two hydraulic cylinders that dampen the oscillations. The hydraulic cylinders are connected crosswise to damping block tilt. Damping block tilt is supplied with servo pressure from Control valve attachment that is controlled to the tilt cylinders and generates an overpressure in the tilt cylinders. Adjustable restrictions between the connections for piston and rod side in the damping block create resistance that dampens the tilt movement.

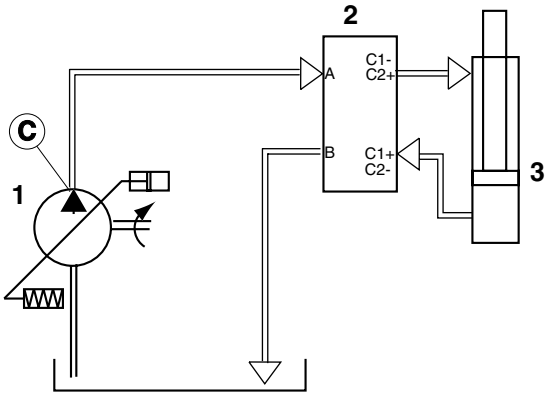

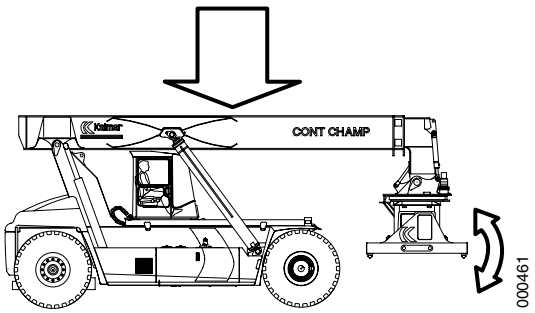

1. Hydraulic oil pump
2. Damping block tilt
3. Tilt cylinders

Hydraulic diagram top lift

Hydraulic diagram top lift, tilt lock and controllable tilt

Hydraulic diagram combi attachment

Hydraulic diagram top lift, tilt lock, controllable tilt and hydraulic levelling

https://truckmanualshub.com/

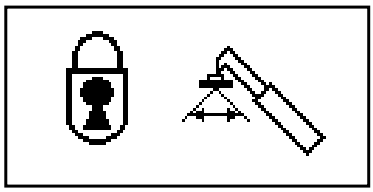

Event menu tilt lock

Tilt lock, function description

Tilt lock is an option for tilt damping which means that the tilt movement can be locked.

Tilt lock uses two solenoid valves in the damping block. One blocks the connection between the tilt cylinders and the damping block while the other blocks the supply of servo pressure from Control valve attachment. Tilt lock is activated with a switch on Control lever (S815).

When tilt lock is activated the machine's speed is limited to max. 5 km/h.

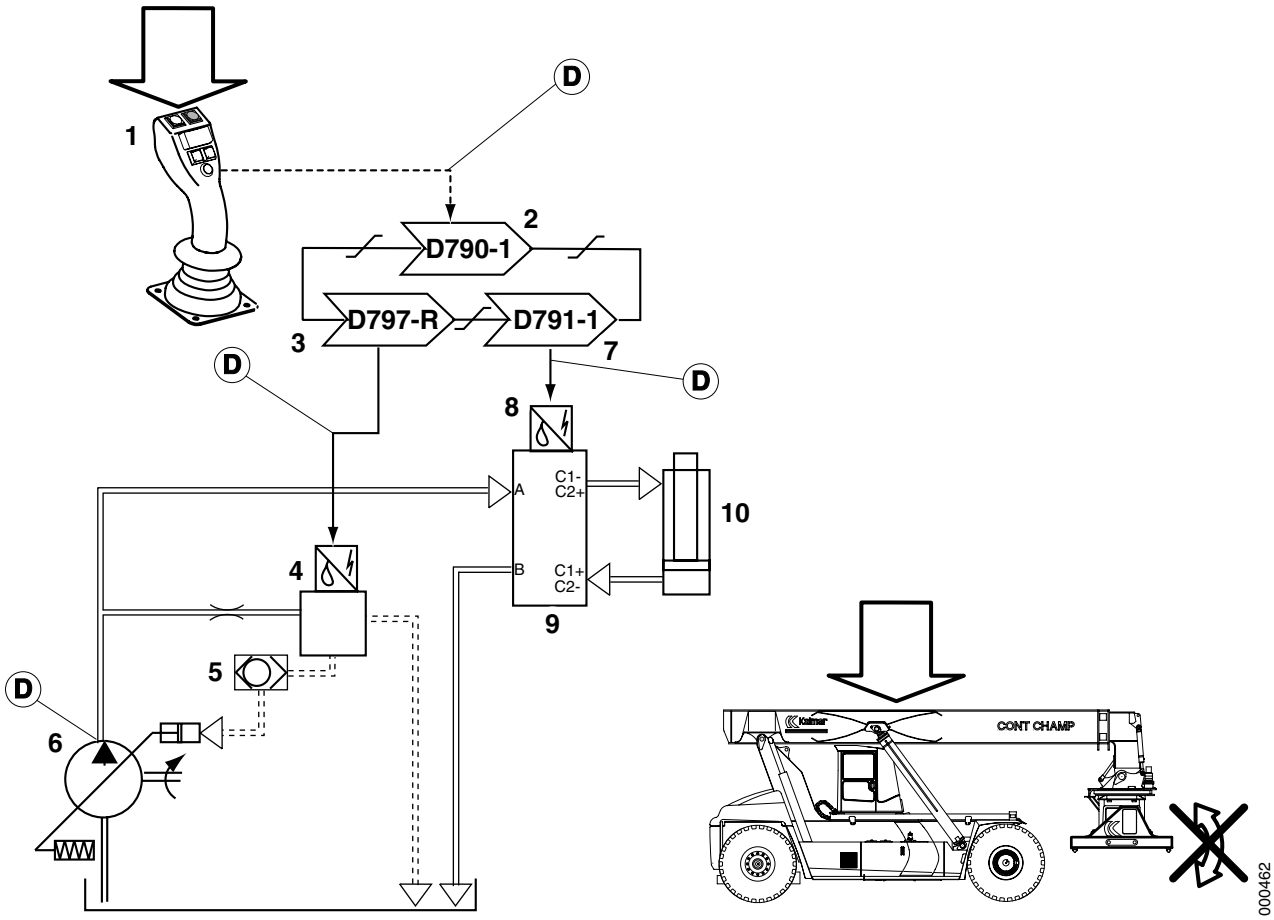

1. Control lever (S815-T3.1)
2. Control unit cab (D790-1)
3. Control unit frame rear (D797-R)
4. Solenoid valve engagement of hydraulics for top lift (Y6003)
5. Shuttle valve
6. Hydraulic oil pump
7. Control unit attachment (D791-1)
8. Solenoid valve tilt lock (Y6012)
9. Lock valve
10. Tilt cylinder

Hydraulic diagram top lift

https://truckmanualshub.com/

Hydraulic diagram top lift, tilt lock and controllable tilt

Hydraulic diagram combi attachment

Hydraulic diagram top lift, tilt lock, controllable tilt and hydraulic levelling

Tilt control, function description

Tilt control is an option for tilt damping and means that tilting of the attachment can be controlled min. ±2° regardless of boom angle.

Tilt control is controlled with Control lever (S815). An extra section in Control valve attachment pressurizes the tilt cylinders through damping block tilt so that the attachment is angled.

If the machine is equipped with tilt control, then tilt lock is also included, see *Tilt lock, function description page 33*.

Condition	Reference value
Control switch	Not activated
Overloading system	Passive

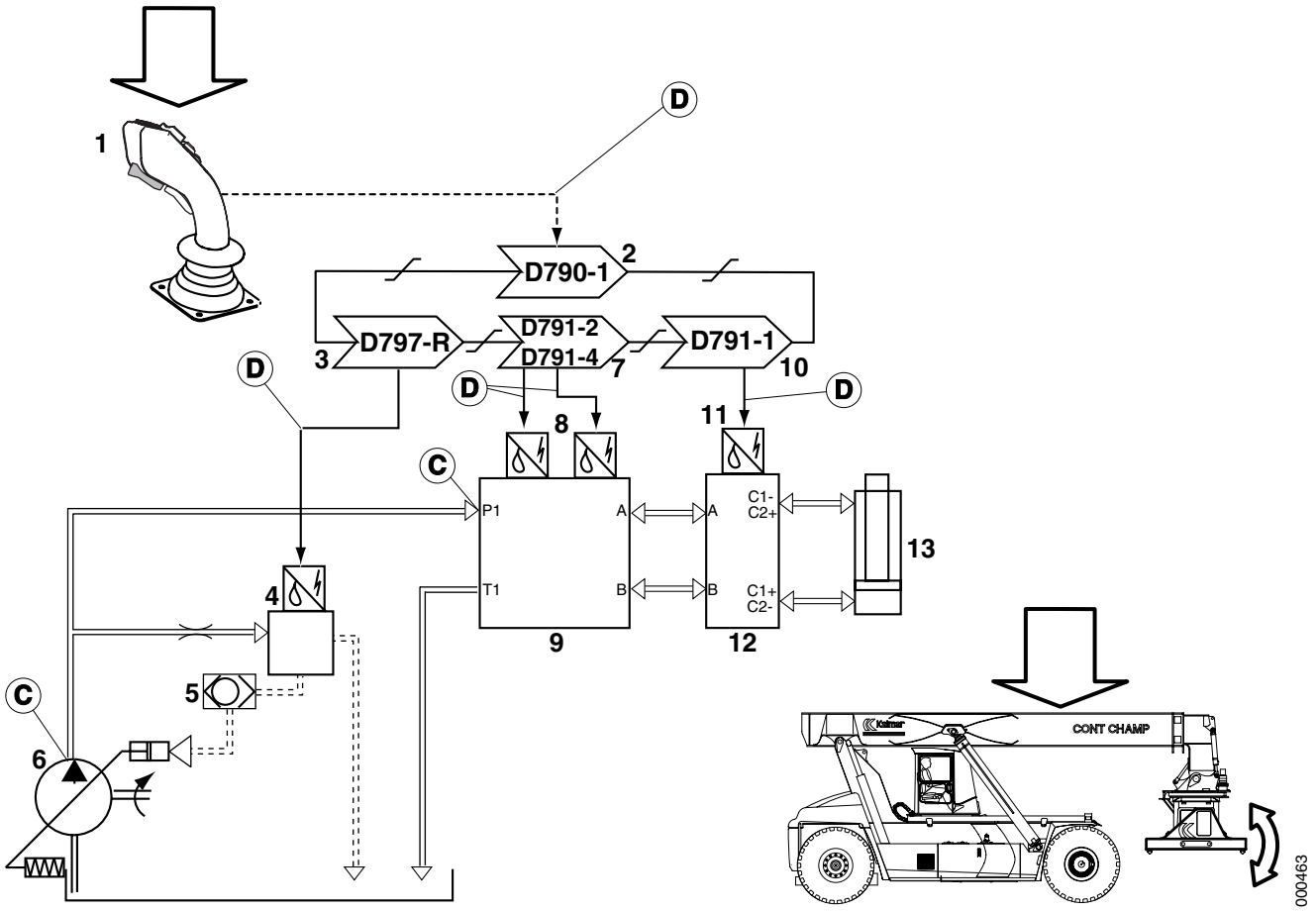

https://truckmanualshub.com/

1. Control lever (S815-P4)
2. Control unit cab (D790-1)
3. Control unit frame rear (D797-R)
4. Solenoid valve engagement of hydraulics for top lift (Y6003)
5. Shuttle valve
6. Hydraulic oil pump
7. Control unit attachment option (D791-2) or Control unit attachment right leg pair (D791-4)
8. Servo valve tilt out (Y6010) or Servo valve tilt in (Y6011)
9. Control valve attachment
10. Control unit attachment (D791-1)
11. Solenoid valve tilt lock (Y6012)
12. Lock valve
13. Tilt cylinder

Hydraulic diagram top lift

Hydraulic diagram top lift, tilt lock and controllable tilt

Hydraulic diagram combi attachment

Hydraulic diagram top lift, tilt lock, controllable tilt and hydraulic levelling

Tilt, component position

Hydraulic oil pump, Shuttle valve, Lift boom

See *Lift and lower, component position page 6*.

Valve block top lift hydraulics, Control valve attachment, Relief valve attachment

See *Sideshift, component position page 15*.

Damping block tilt, Tilt cylinder

1. Damping block tilt and Solenoid valve tilt lock (Y6012)
2. Tilt cylinder

Rotation yoke

Se *Rotation, component position page 29*.

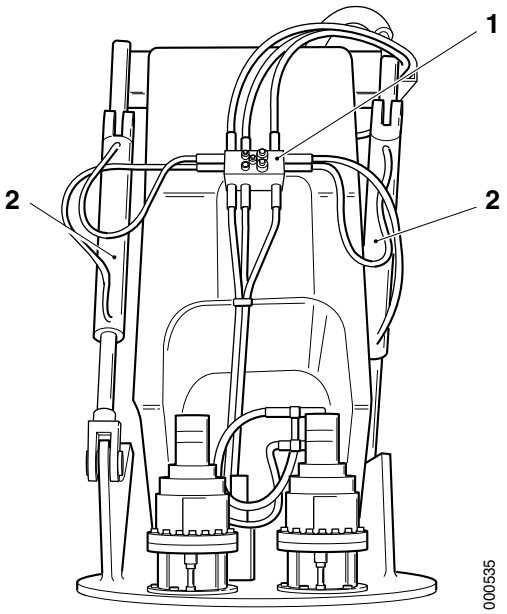

https://truckmanualshub.com/

Tilt damping, adjusting

NOTE

The tilt damping may have to be adjusted after run-in due to mechanical tolerances.

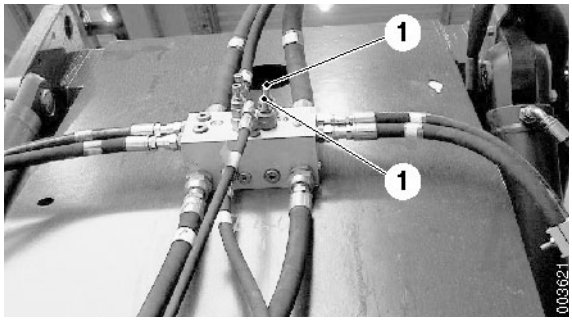

1. Adjusting screw

1 Engine at idle.

2 Lift the boom without load and check that the attachment hangs horizontally during the whole lifting movement.

3 Adjust the tilt damping as needed by adjusting the screws on the damping block. Adjust both screws equally.

Clockwise: increase damping.

Counter-clockwise: reduce damping.

4 Lift a loaded container, test-run and brake, check that the container does not oscillate uncontrollably. If needed, adjust the damping according to step 3.

5 Start the machine and check that the function is satisfactory.

https://truckmanualshub.com/

7.8 Levelling

Mechanical levelling, function description

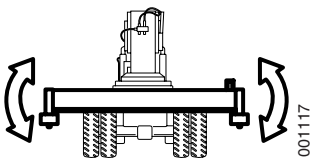

Mechanical levelling means that the attachment is angled in horizontal direction. This enables the machine to handle loads on uneven surfaces.

The attachment's main beam is located in the sideshift frame. The clearance between the sideshift frame and the attachment's main beam allows a movement of approx. 5° which makes it possible to lift containers that lean in relation to the machine. It's the attachment's dead weight that adapts the attachment's angle to the container.

Hydraulic levelling, function description

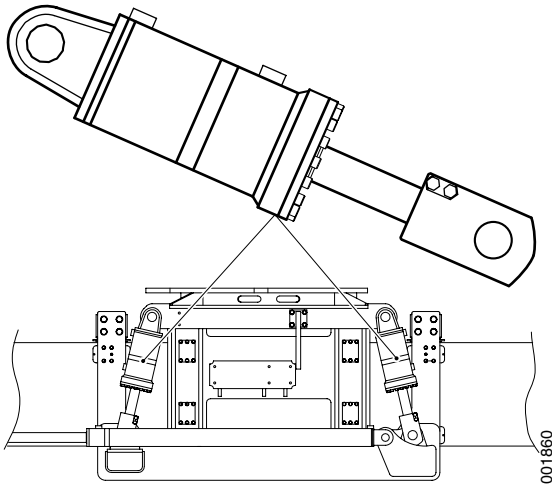

Hydraulic levelling means that the sideshift frame is split and the parts are connected with four hydraulic cylinders. Hydraulic levelling increases mobility of the attachment. The hydraulic levelling has a passive position where the attachment floats freely and an active position where the angle can be controlled. Levelling can be locked by blocking the connection to the levelling cylinders.

Passive levelling means that that an unloaded attachment is in a float position and adapts itself to the angle of the container to be lifted. The passive levelling transfers to active levelling as soon as the attachment is loaded. Two pressure switches are activated when the pressure on the levelling cylinders' rod sides becomes too high.

Active levelling means that levelling is controlled by pressurizing the hydraulic cylinders. Levelling is controlled with the control lever.

Levelling is monitored by sequence valves that close when the feed pressure is high enough to put all cylinders in bottom position.

Condition	Reference value
Control switch	Not activated
Overloading system	Passive

https://truckmanualshub.com/

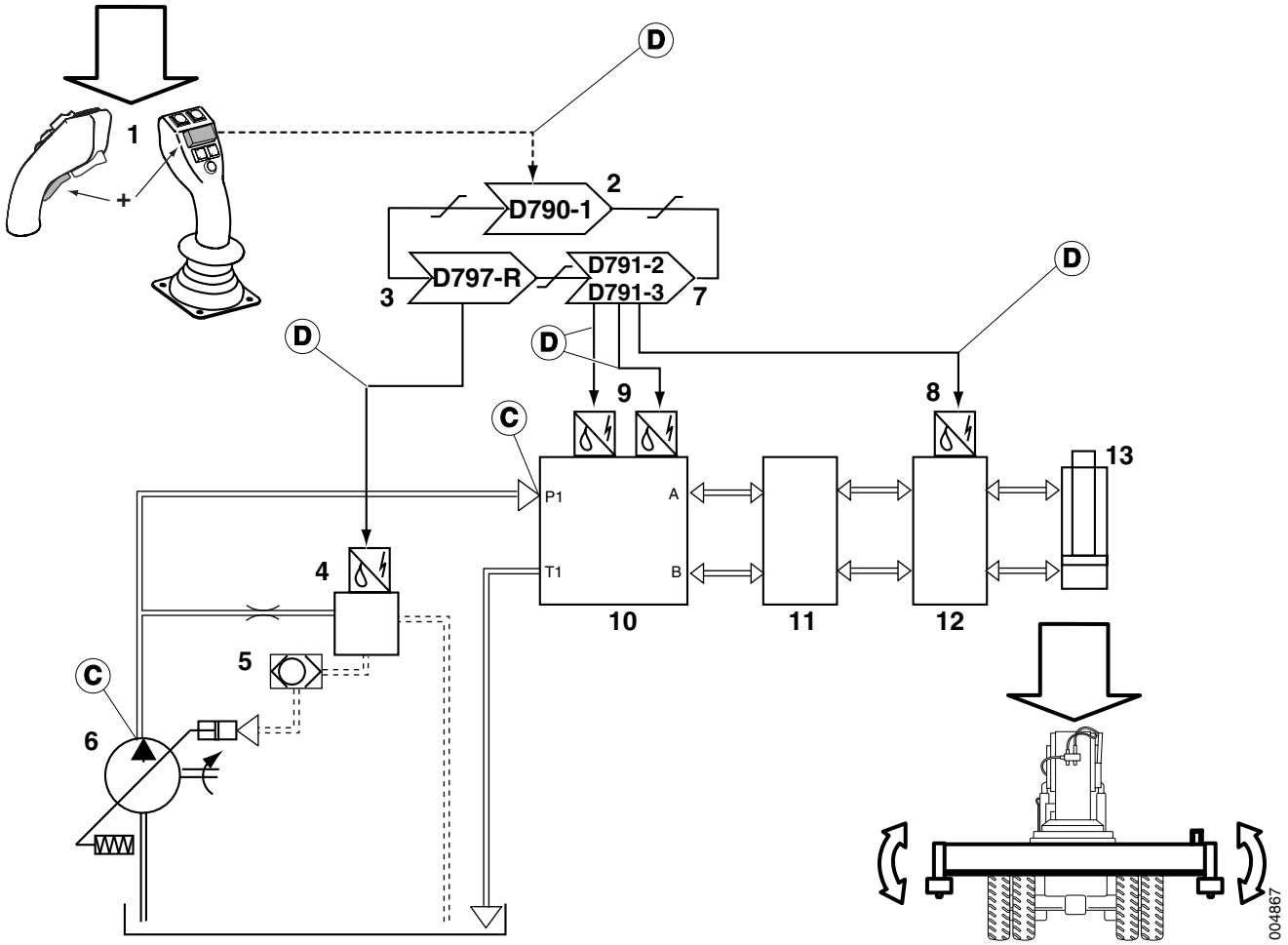

1. Control lever (S815-P1 and S815-T4)
2. Control unit cab (D790-1)
3. Control unit frame rear (D797-R)
4. Solenoid valve, engagement of hydraulics for top lift (Y6003)
5. Shuttle valve
6. Hydraulic oil pump
7. Control unit attachment option (D791-2) or Control unit attachment left legs (D791-3)
8. Solenoid valve levelling (Y6034)
9. Servo valve levelling right (Y6035) or Servo valve levelling left (Y6036)
10. Control valve attachment
11. Over-centre valve
12. Valve block levelling cylinder
13. Levelling cylinder

Hydraulic diagram combi attachment

Hydraulic diagram top lift, tilt lock, controllable tilt and hydraulic levelling

https://truckmanualshub.com/

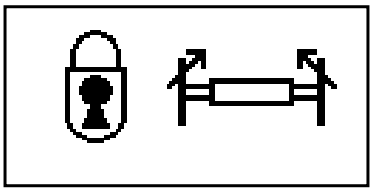

Event menu levelling lock

Levelling lock, function description

Levelling lock is an option for hydraulic levelling which means that the levelling movement can be locked.

Levelling lock uses two solenoid valves in the valve block levelling cylinder which block pressure to and from the levelling cylinders. Levelling lock is activated with a switch on Control lever (S815).

When levelling lock is activated the machine's speed is limited to max. 5 km/h.

Condition	Reference value
Control switch	Not activated

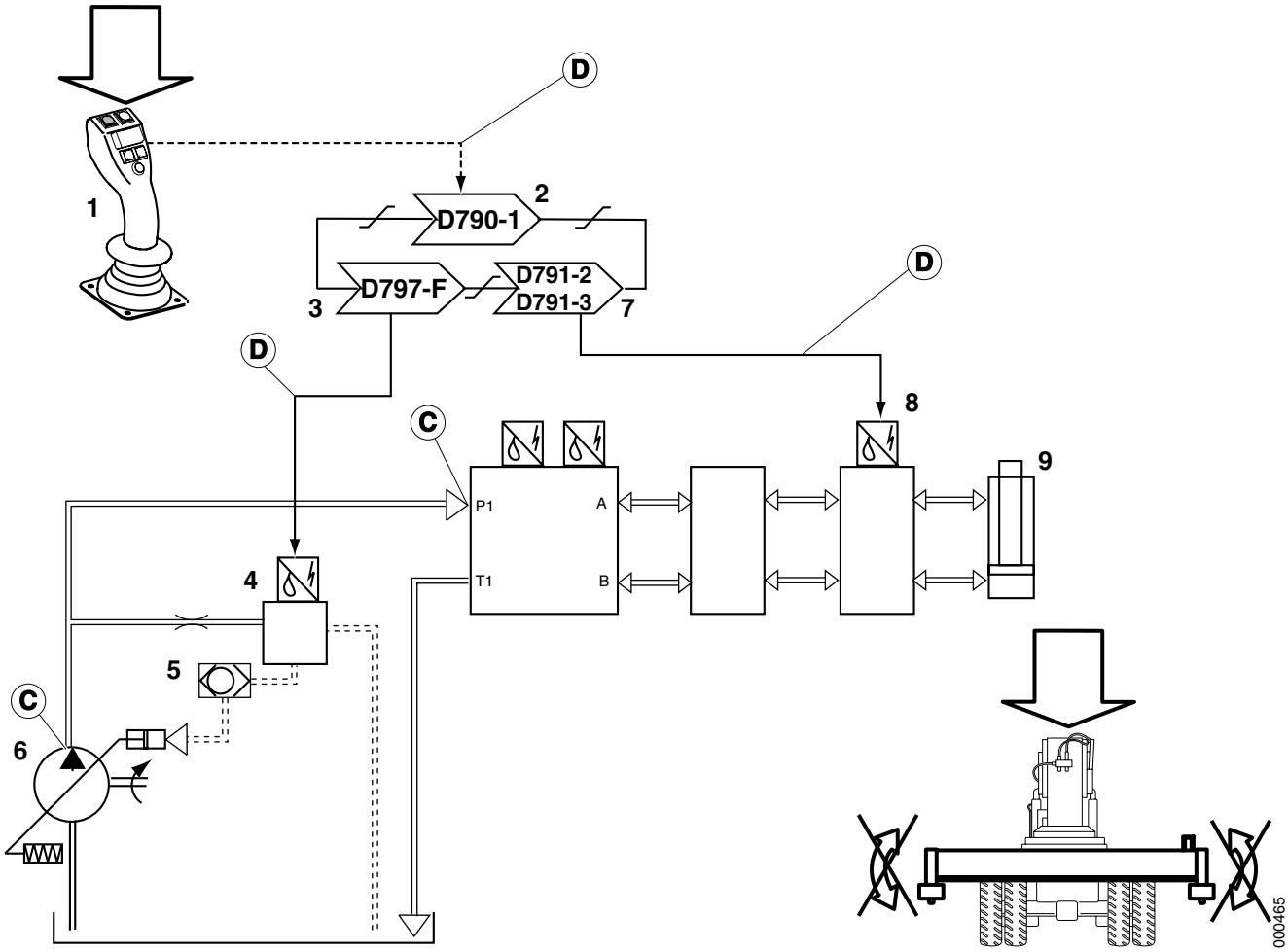

1. Control lever (S815-T3.1)
2. Control unit cab (D790-1)
3. Control unit frame rear (D797-R)
6. Hydraulic oil pump
7. Control unit attachment option (D791-2) or Control unit attachment left legs (D791-3)
8. Solenoid valve levelling (Y6034)

https://truckmanualshub.com/

4. Solenoid valve engagement of hydraulics for top lift (Y6003)
5. Shuttle valve
9. Levelling cylinders

Hydraulic diagram combi attachment

Hydraulic diagram top lift, tilt lock, controllable tilt and hydraulic levelling

Levelling, component position

Hydraulic oil pump, Shuttle valve

See *Lift and lower, component position page 6*.

Valve block top lift hydraulics, Control valve attachment, Relief valve attachment

See *Sideshift, component position page 15*.

Over-centre valve levelling Valve block levelling cylinders, Levelling cylinders, Sideshift frame

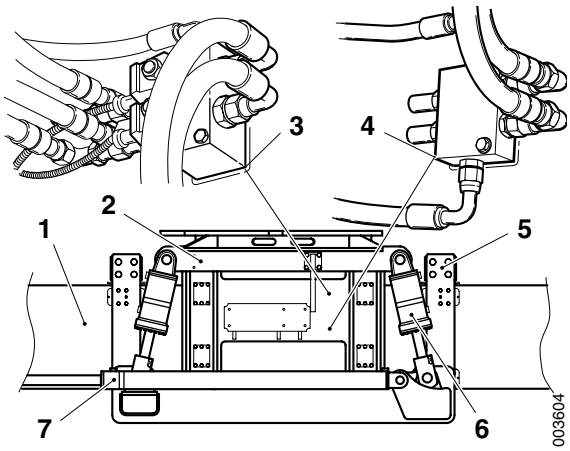

1. Main beam attachment
2. Rotation yoke
3. Valve block levelling cylinders with Solenoid valve levelling (Y6034)
4. Over-centre valve levelling
5. Levelling cylinder
6. Sideshift frame
7. Sideshift cylinder

https://truckmanualshub.com/

7.9 Load carrier

Load carrier, description

Load carrier refers to holding on to any load. There are several ways to hold loads.

- Twistlocks, rotation lift pins that hold the load in oval holes in the corners of the load.

  Used separately on top lift attachment, in combination with lift legs, combi attachment.
- Lift legs, hold the load with legs that grab around and under the load.

  Lift legs are used in combination with twistlock on combi attachment or separately, bottom lift.

7.9.1 Twistlocks

Twistlocks, function description

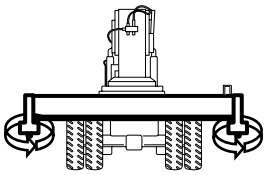

The container is held to the attachment with four twistlocks.

Twistlocks are controlled with the control lever and Switch twistlocks. One section in Control valve attachment pressurizes two hydraulic cylinders connected in parallel, one in each spreader boom. Each hydraulic cylinder affects a linkage that turns two twistlocks. Four position sensors, two in each spreader boom, sense the position of the linkage and indicates if twistlocks are open or locked. Indicator lights on the boom and in the cab shows status for twistlocks.

Four position sensors, one at each twistlock, indicate when the attachment is aligned with the container. This is used to control when twistlocks can be activated. An indicator light on the boom and one in the cab indicate when the attachment has full alignment. An event menu shows the twistlocks with alignment (1 - 4). To activate twistlocks, alignment is required at all four twistlocks.

https://truckmanualshub.com/

Condition	Reference value
Control switch	Not activated
Alignment	Full alignment or by-pass activated
Overloading system	Passive

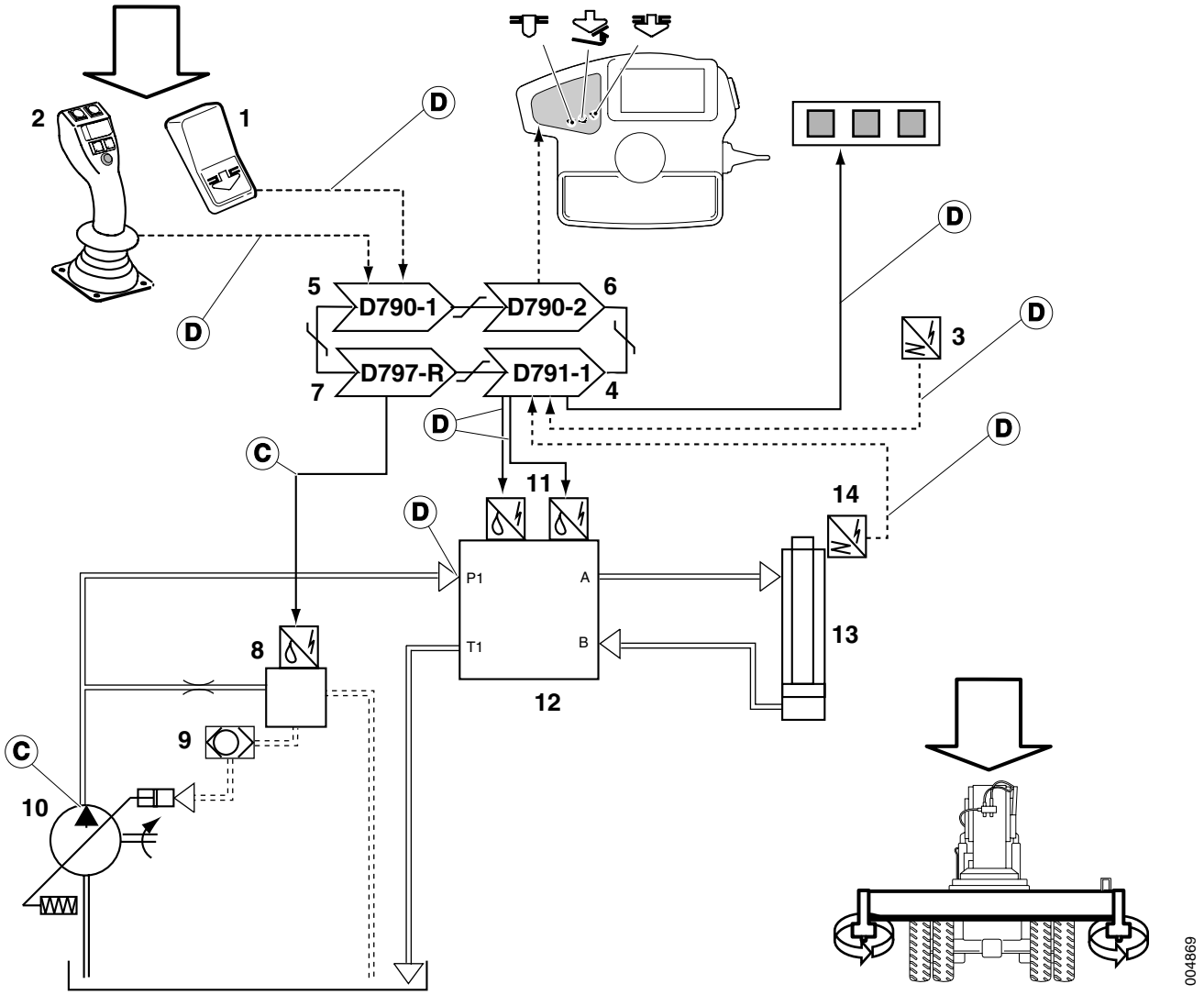

1. Switch lock twistlocks (S1003)
2. Control lever (S815-T2)
3. Sensor alignment left front (7202L), Sensor alignment right front (7202R), Sensor alignment left rear (Y7203L) and Sensor alignment right rear (Y7203R)
4. Control unit attachment (D791)
5. Control unit KIT (D790-2)
8. Solenoid valve, engagement of hydraulics for top lift (Y6003)
9. Shuttle valve
10. Hydraulic oil pump
11. Servo valve open twistlocks (Y6039) or Servo valve lock twistlocks (Y6040)
12. Control valve attachment

https://truckmanualshub.com/

6. Control unit cab (D790-1)
7. Control unit frame rear (D797-R)
13. Lock cylinder
14. Sensor unlocked twistlocks (B7204) or Sensor locked twistlocks (B7205)

Hydraulic diagram top lift

Hydraulic diagram top lift, tilt lock and controllable tilt

Hydraulic diagram combi attachment

Hydraulic diagram top lift, tilt lock, controllable tilt and hydraulic levelling

Twistlocks, component position

Hydraulic oil pump, Shuttle valve

See *Lift and lower, component position page 6*.

Valve block top lift hydraulics, Control valve attachment, Lock cylinder twistlocks, Twistlocks, Sensor alignment, Sensor twistlocks, relief valve attachment

See *Sideshift, component position page 15*.

7.9.1.7 Twistlocks

Twistlocks, checking

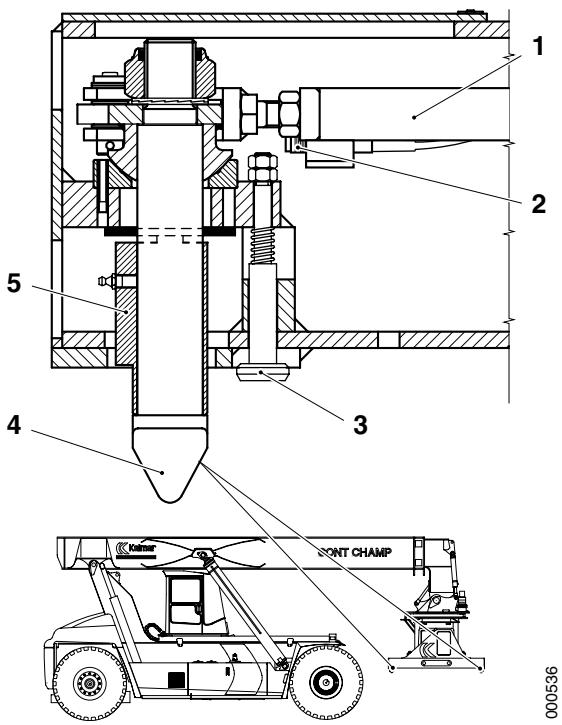

1. Lock mechanism
2. Sensor alignment
3. Alignment pin
4. Lift pin
5. Lock guide

WARNING

Make sure that the engine is off when working on the twistlocks.

Twistlocks can be locked automatically if all sensors for alignment are activated manually.

1 Check that the twistlocks function correctly.

Lock and open the twistlocks, check that the indicator lights work, both in cab and on boom.

2 Clean the twistlocks from any dirt.

3 Under the rubber cover for twistlocks: check pin, link arm and lock nut.

4 Clean the area around the sensor for alignment.

5 Press in the alignment pin so that the head is flush with the spreader beam's underside. Check the distance to sensor alignment, distance should be **5±1 mm**. Adjust as needed

NOTE

The alignment pin should move easily and spring back completely.

https://truckmanualshub.com/

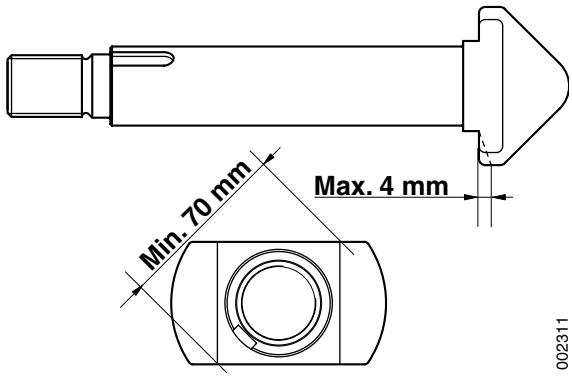

Wear limits, lift pin.

6 Check that the lock guide and lift pin can move freely.

7 Fit a pry bar between the lift pin (pos. 4) and the lock guide (pos. 5) and check the clearance **max. clearance:** 1–1.5 mm.

8 Turn the twistlocks to locked position and check lift pin wear. Change the lift pin if needed.

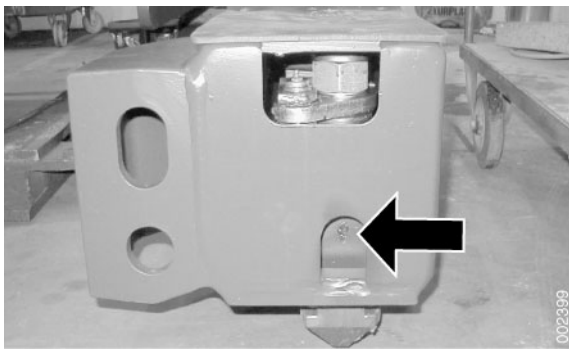

9 Clean the area around the grease cup.

10 Grease the lift pins bearing with universal grease "EP2".

11 Repeat steps 1–10 on all four twistlocks.

https://truckmanualshub.com/

Twistlock, checking for cracks

DANGER

Material fatigue, reduced strength.

Fatal danger!

Change twistlocks that shows signs of cracks or other external damage, or twistlocks with more than 10 000 operating hours.

NOTE

Crack checks shall take place every other year or every 5000 operating hours.

1 Remove the lift pins from the attachment.

NOTE

Twistlocks are heavy. Take care when removing.

2 Test for cracks within the marked area on the pins without re-working or damaging the part.

3 If the lift pins show signs of cracking, they shall be replaced with new ones.

4 Fit approved twistlocks.

NOTE

Use new attaching nut and washers.

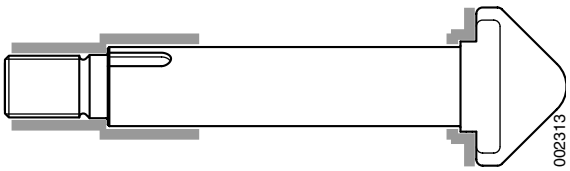

Area for checking for cracks on lift shoe.

https://truckmanualshub.com/

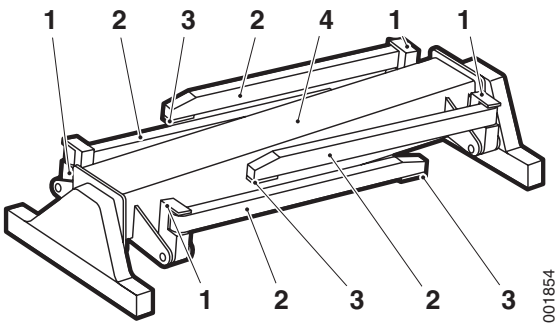

Overview Combi attachment
1. Knee
2. Lift leg
3. Lift shoe
4. Main beam, attachment
1. Sensor, lift leg
2. Hydraulic cylinder, lift leg
3. Lift leg
4. Knee
5. Sensor, knee
6. Hydraulic cylinder, knee and clamp
7. Sensor, operating position

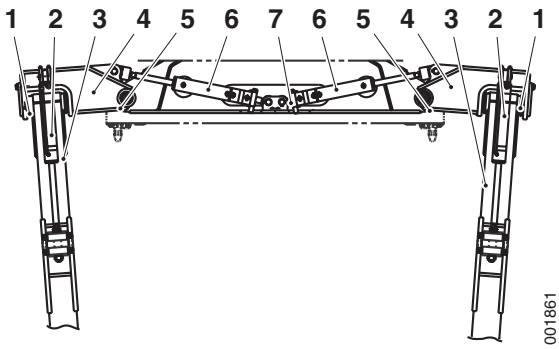

7.9.2 Lift legs

Lift legs, general

The lift legs are designed to lift objects at the lower edge by gripping around the object with four legs. To facilitate loading and transport the front and rear legs can be controlled separately.

The lift legs are controlled with three switches on the instrument panel.

The lift legs are raised and lowered in a pre-set sequence that is controlled by the machine's control system (sequence is reversed when raising). The legs' position (step in sequence) can be checked from the diagnostic menu, see section *8 Control system*, group *8.4.11.1 Combi, menu 14*.

Operating position

Operating position is a predefined position of the rear lift legs that gives the load correct centre of gravity if the machine is driven up to the load with the rear legs lowered until alignment is obtained on the rear legs. If the front legs are lowered and clamped around the load in this position, the load's centre of gravity is centred so that the load is not tilted when lifting. On the condition that the load has an even weight distribution.

The function lift legs includes the following components.

- Main beam attachment
- Knee (4 pcs.)
- Leg (4 pcs.)
- Control valve (2 pcs.)
- Control unit (2 pcs.)
- Hydraulic cylinders (8 pcs.)
- Position sensors legs (4 pcs.)
- Position sensors knee (4 pcs.)
- Position sensors alignment (4 pcs.)
- Position sensors clamping position (4 pcs.)
- Position sensors operating position (2 pcs.)

https://truckmanualshub.com/

Raising/lowering of front lift legs, function description

Condition	Reference value
Control switch	Not activated

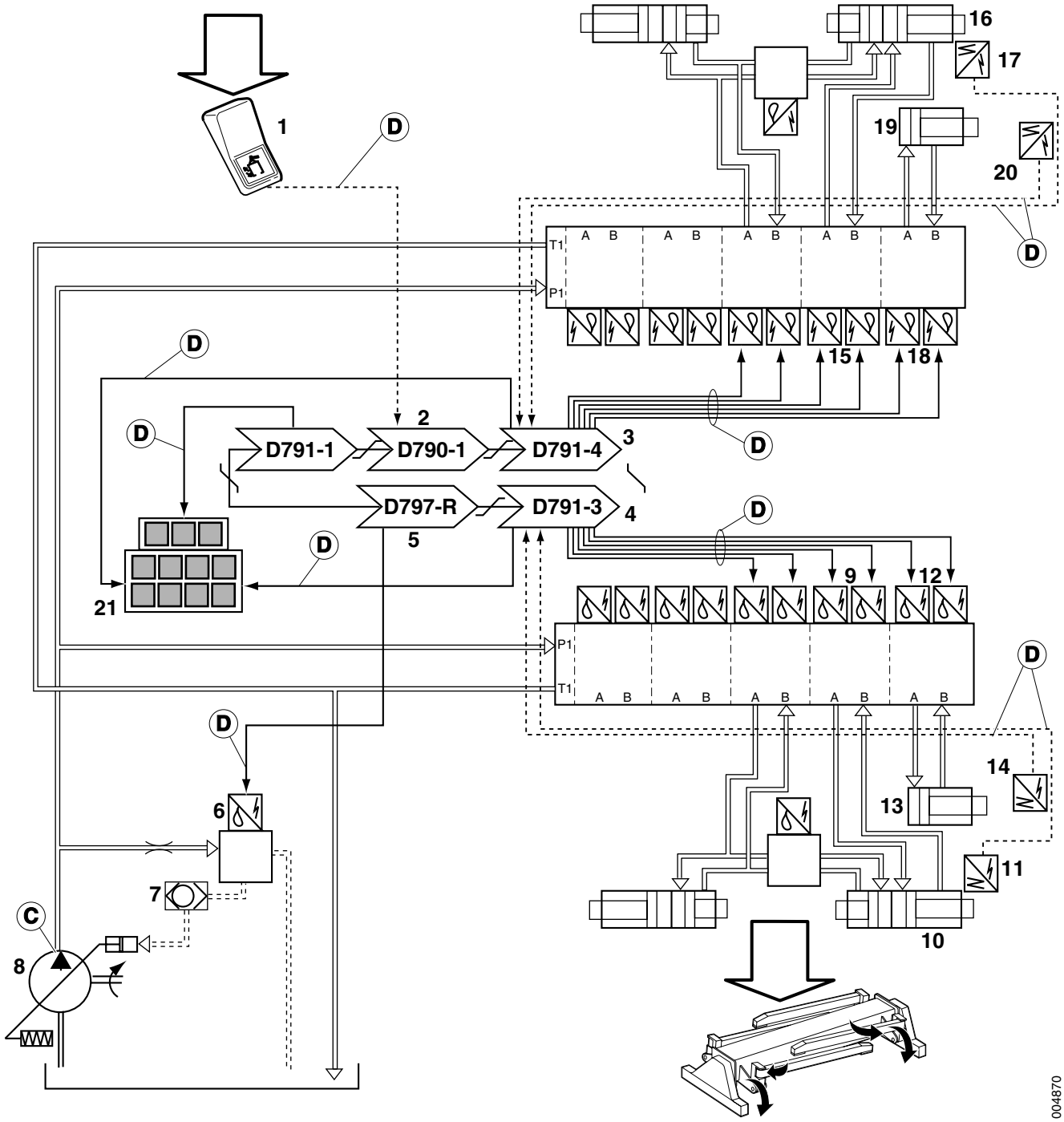

https://truckmanualshub.com/

1. Switch lowering front legs (S1006)
2. Control unit cab (D790-1)
3. Control unit attachment right leg pair (D791-4)
4. Control unit attachment left legs (D791-3)
5. Control unit frame rear (D797-R)
6. Solenoid valve, engagement of hydraulics for top lift (Y6003)
7. Shuttle valve
8. Hydraulic oil pump
9. Solenoid valve front knee out left (Y6056L) or Solenoid valve front knee in left (Y6057L)
10. Hydraulic cylinder knee left front
11. Sensor front knee left (B7217L)
12. Solenoid valve front leg down left (Y6013L) or Solenoid valve front leg down left (Y6060L)
13. Hydraulic cylinder leg left front
14. Sensor front leg left (B7219L)
15. Solenoid valve front knee out right (Y6056R)) or Solenoid valve front knee in right (Y6057R)
16. Hydraulic cylinder knee right front
17. Sensor front knee right (B7217R)
18. Solenoid valve front leg down right (Y6013R) or Solenoid valve front leg down right (Y6060R)
19. Hydraulic cylinder leg right front
20. Sensor front leg right (B7219R)
21. Indicator light front leg down (H580).

Hydraulic diagram combi attachment

https://truckmanualshub.com/

Raising/lowering of rear lift legs, function description

Condition	Reference value
Control switch	Not activated

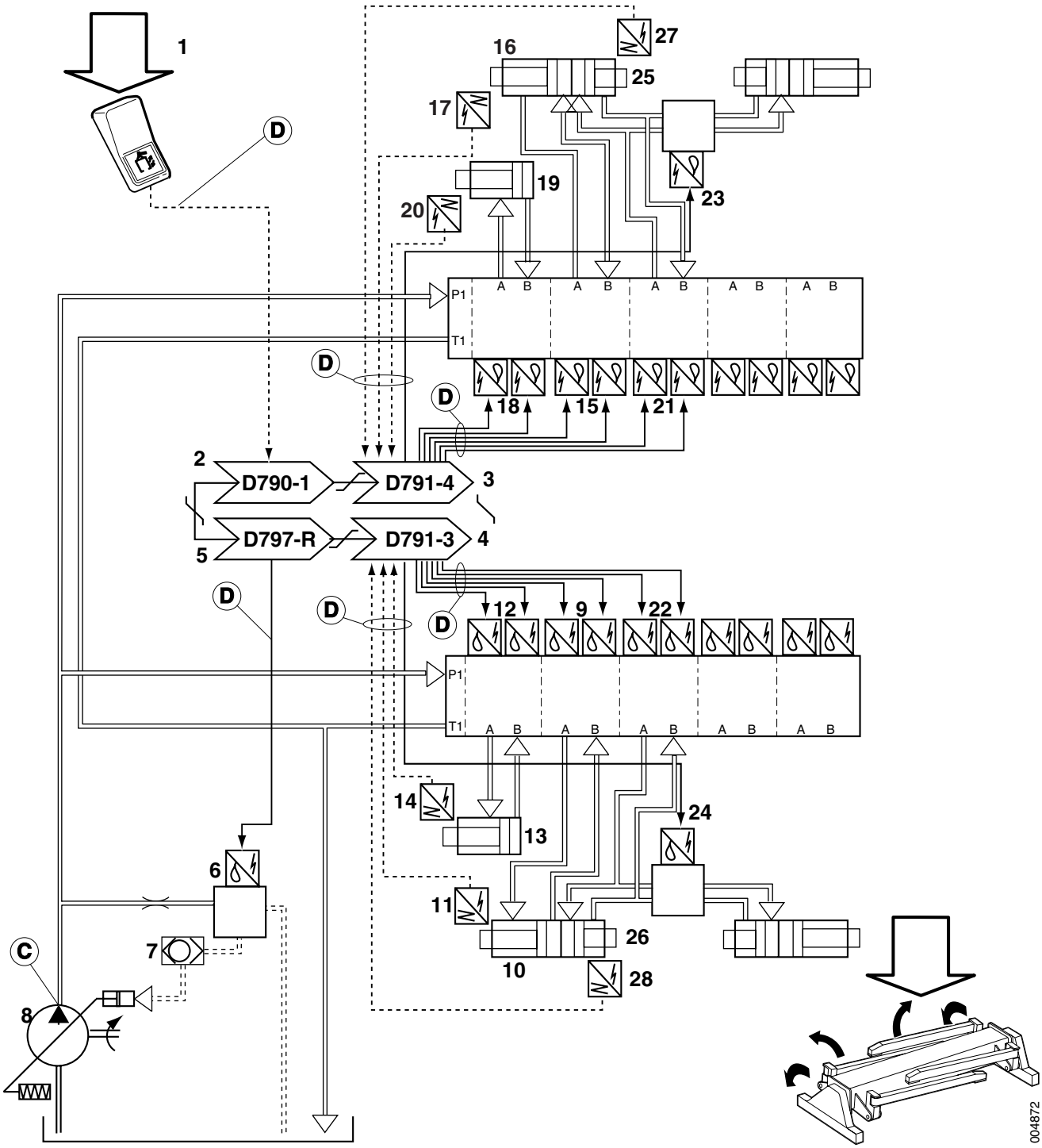

https://truckmanualshub.com/

1. Switch rear legs (S1007)
2. Control unit cab (D790-1)
3. Control unit attachment right leg pair (D791-4)
4. Control unit attachment left legs (D791-3)
5. Control unit frame rear (D797-R)
6. Solenoid valve, engagement of hydraulics for top lift (Y6003)
7. Shuttle valve
8. Hydraulic oil pump
9. Solenoid valve rear knee out left (Y6058L) or Solenoid valve rear knee in left (Y6059L)
10. Hydraulic cylinder knee left rear
11. Sensor rear knee left (B7218L)
12. Solenoid valve rear leg down left (Y6014L) or Solenoid valve rear leg up left (Y6061L)
13. Hydraulic cylinder leg left rear
14. Sensor rear leg left (B7220L)
15. Solenoid valve rear knee out right (Y6058R) or Solenoid valve rear knee in right (Y6059R)
16. Hydraulic cylinder knee right rear
17. Sensor rear knee right (B7218R)
18. Solenoid valve rear leg down right (Y6014R) or Solenoid valve rear leg up right (Y6061R)
19. Hydraulic cylinder leg right rear
20. Sensor rear leg right (B7220R)
21. Solenoid valve operating position right (Y6053R)
22. Solenoid valve operating position left (Y6053L)
23. Solenoid valve clamp in right (Y6054R)
24. Solenoid valve clamp in left (Y6054L)
25. Hydraulic cylinder clamp right rear
26. Hydraulic cylinder clamp left rear
27. Sensor operating position left (B7212L)
28. Sensor operating position right (B7212L)

Hydraulic diagram combi attachment

https://truckmanualshub.com/

Clamp with left legs, function description

Condition	Reference value
Control switch	Not activated
Lift legs	Lowered

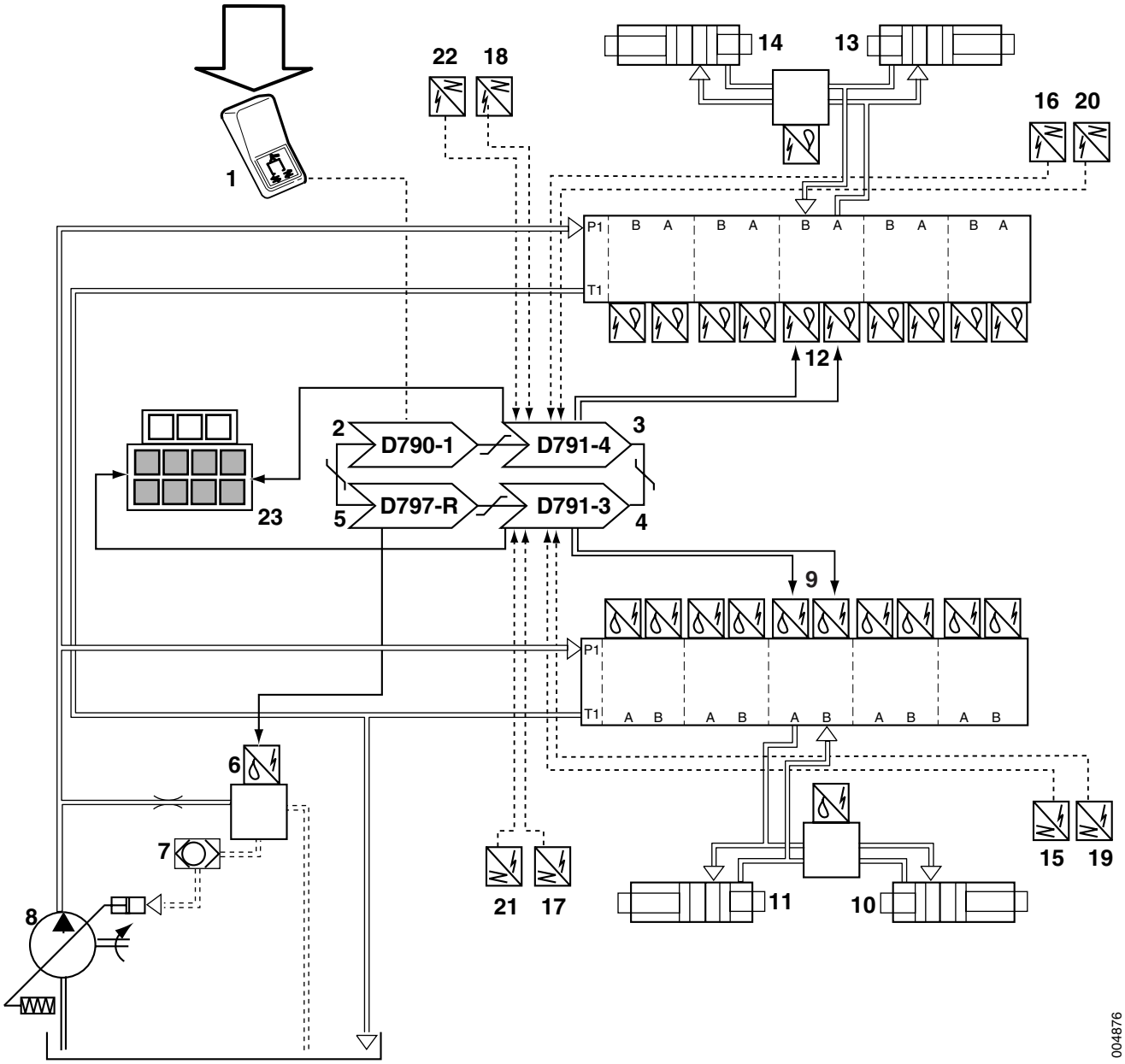

1. Switch clamp/release legs (S1008)
2. Control unit cab (D790-1)
3. Control unit attachment right leg pair (D791-4)
13. Hydraulic cylinder knee and clamp right front
14. Hydraulic cylinder knee and clamp right rear
15. Sensor clamping position front leg left (B7215L)

https://truckmanualshub.com/

4. Control unit attachment left legs (D791-3)
5. Control unit frame rear (D797-R)
6. Solenoid valve, engagement of hydraulics for top lift (Y6003)
7. Shuttle valve
8. Hydraulic oil pump
9. Solenoid valve clamp in left (Y6054L) or Solenoid valve clamp out left (Y6055L)
10. Hydraulic cylinder knee and clamp left front
11. Hydraulic cylinder knee and clamp left rear
12. Solenoid valve clamp in right (Y6054R) or Solenoid valve clamp out right (Y6055R)
16. Sensor clamping position front leg right (B7215R)
17. Sensor clamping position rear leg left (B7216L)
18. Sensor clamping position rear leg right (B7216R)
19. Sensor alignment front leg left (B7213L)
20. Sensor alignment front leg right (B7213R)
21. Sensor alignment rear leg left (B7214L)
22. Sensor alignment rear leg right (B7214R)
23. Indicator light alignment left front (H566L), Indicator light alignment left rear (H567L), Indicator light alignment right front (H566R) and Indicator light alignment right rear (H567R)

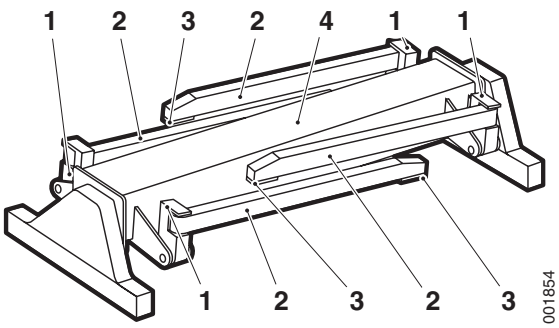

Hydraulic diagram combi attachment

Lift legs, component position

Main beam attachment, Knee, Hydraulic cylinder knee and clamp, Lift legs, Hydraulic cylinder leg, Lift shoe

1. Knee
2. Lift leg
3. Lift shoe
4. Main beam, attachment

Hydraulic oil pump, Shuttle valve

See *Lift and lower, component position page 6*.

Valve block top lift hydraulics, Relief valve attachment

See *Sideshift, component position page 15*.

https://truckmanualshub.com/

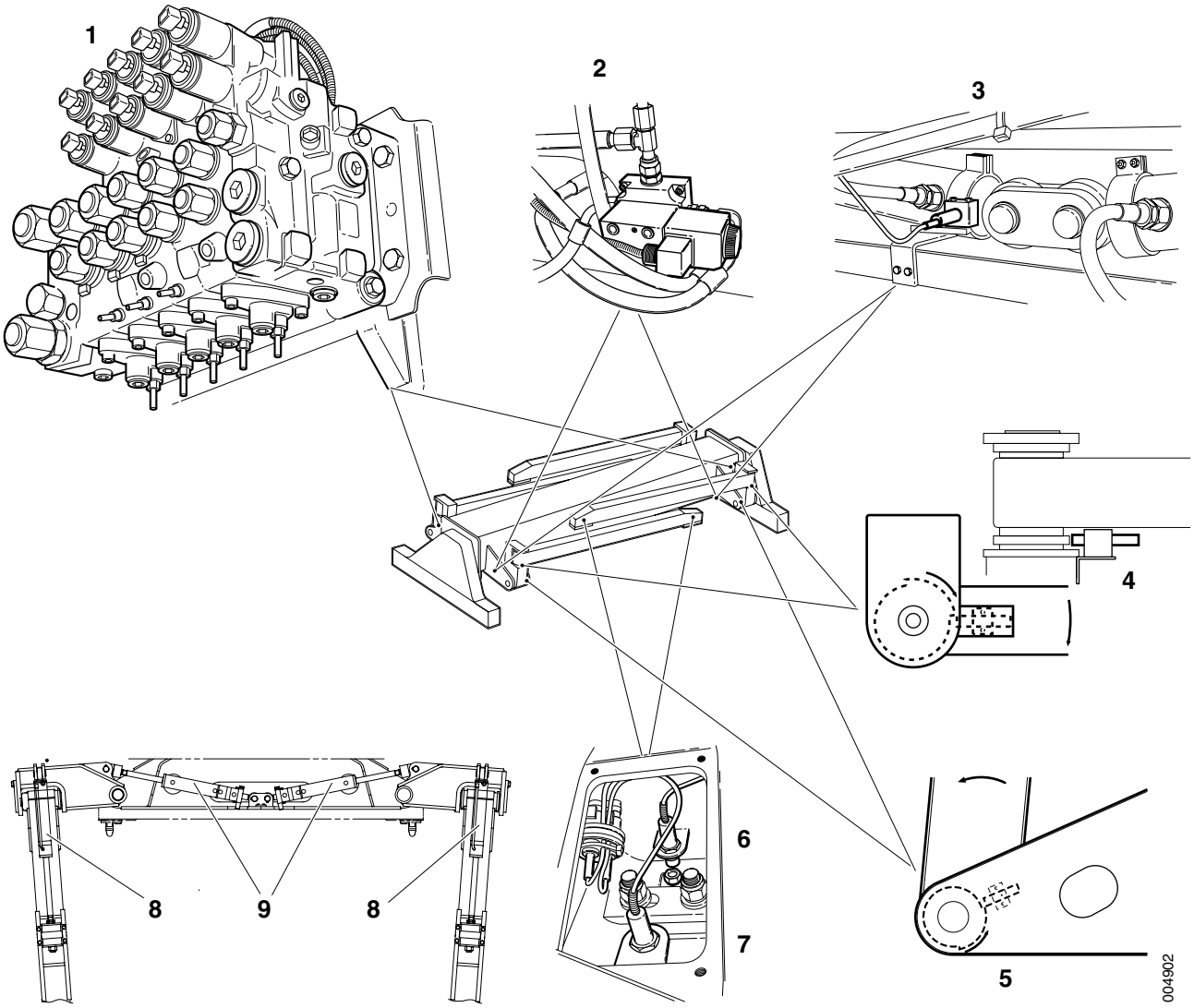

1. Control valve lift legs
2. Solenoid valve operating position (Y6053)
3. Sensor operating position left (B7212L) or Sensor operating position right (B7212R)
4. Sensor front leg (B7219) or Sensor rear lift leg (B7220)
5. Sensor front knee (B7217) or Sensor rear knee (B7218)
6. Sensor clamping position (B7215 or B7216)
7. Sensor alignment (B7213 or B7214)
8. Hydraulic cylinder lift leg
9. Hydraulic cylinder knee and clamp

https://truckmanualshub.com/

7.9.2.14 Lifting shoe

Lift shoe, checking

1 Lower all lift legs.

2 Check that the plate for clamping position and pin for alignment move freely and spring back to the basic position.

3 Press in the alignment pin so that the head is flush with the spreader beam's underside and check that the indicator light is activated.

NOTE

The alignment pin should move easily and spring back completely.

4 Press in the plate for clamping position and check that the plate moves easily and springs back completely, as well as that the indicator light for clamping position is activated.

NOTE

The plates for both lift legs (right and left) must be pressed in to achieve activation of the indicator light.

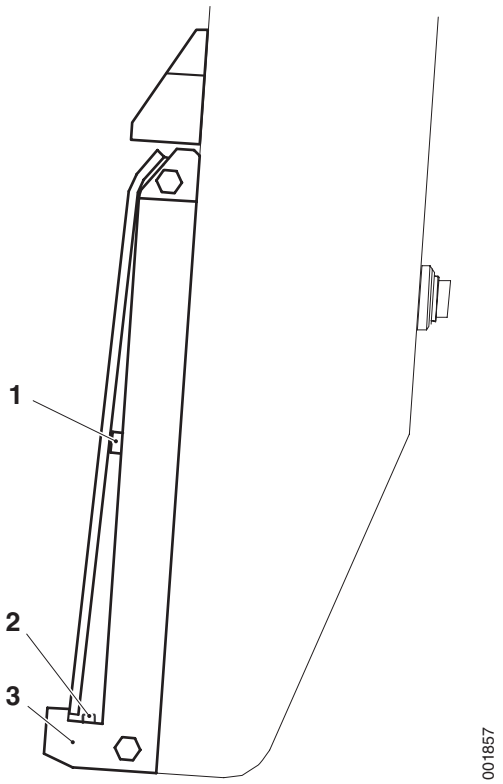

1. Indicator pin, alignment
2. Indicator pin, clamping position
3. Lift shoe

5 Check that the wear of the lift shoe is within the specified limits according to the illustration. Also check that the lift shoe does not show signs of cracking or other external wear. Change lift shoe if needed

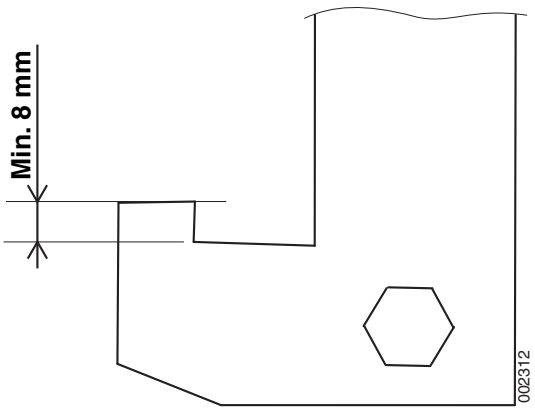

Wear limits, lift shoe.

https://truckmanualshub.com/

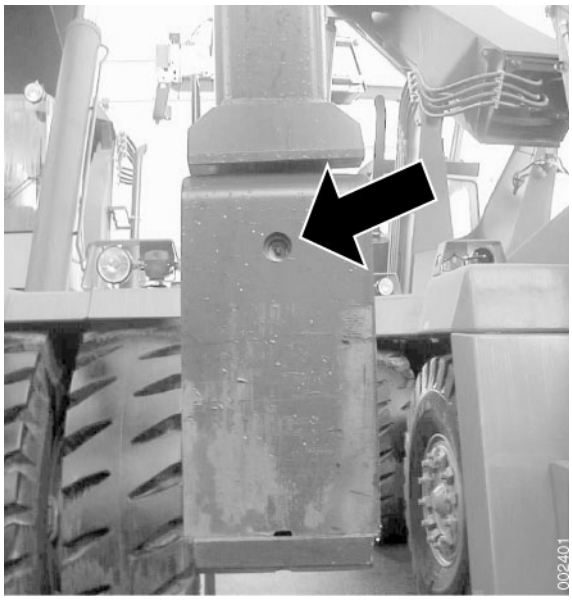

6 Clean the area around the grease cup.

7 Grease the bearings for the plate for clamping position with universal grease "EP2"

8 Repeat steps 2–7 on all lift legs.

Lift shoe, checking for cracks

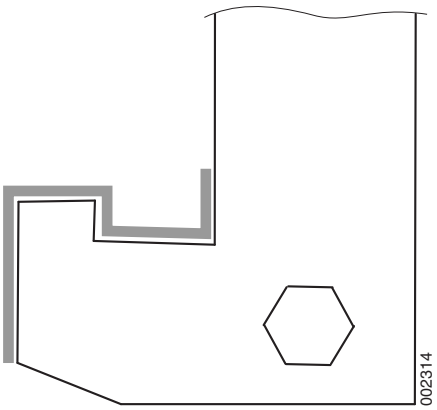

Area for checking for cracks on lift shoe.

DANGER

Material fatigue, reduced strength.

Fatal danger!

Change lift shoes that show signs of cracks, external damage or lift shoes with more than 10 000 operating hours.

NOTE

Crack checks shall take place every other year or every 5000 operating hours.

1 Remove the lift shoes from the lift legs.

NOTE

The lift shoes are heavy. Take care when removing.

2 Test for cracks within the marked area on the lift shoes without reworking or damaging the part.

3 Fit the lift shoes.

https://truckmanualshub.com/

7.10 Additional functions

7.10.1 Support jacks

Support jacks, function description

Support jacks increase the stability forward and thus the load capacity in the third container row or track two for railway goods. The support jacks are raised and lowered with hydraulic cylinders one cylinder per support jack. The support jacks are located on the frame between the drive wheels.

If the engine speed is increased to above 1000 rpm when the switch is activated, then automatic lowering of the support jacks. The automatic function works at both lowering and raising.

Condition	Reference value
Control switch	Not activated
Parking brake	Released
Transmission	Neutral position
Machine stationary	Speed = 0 km/h

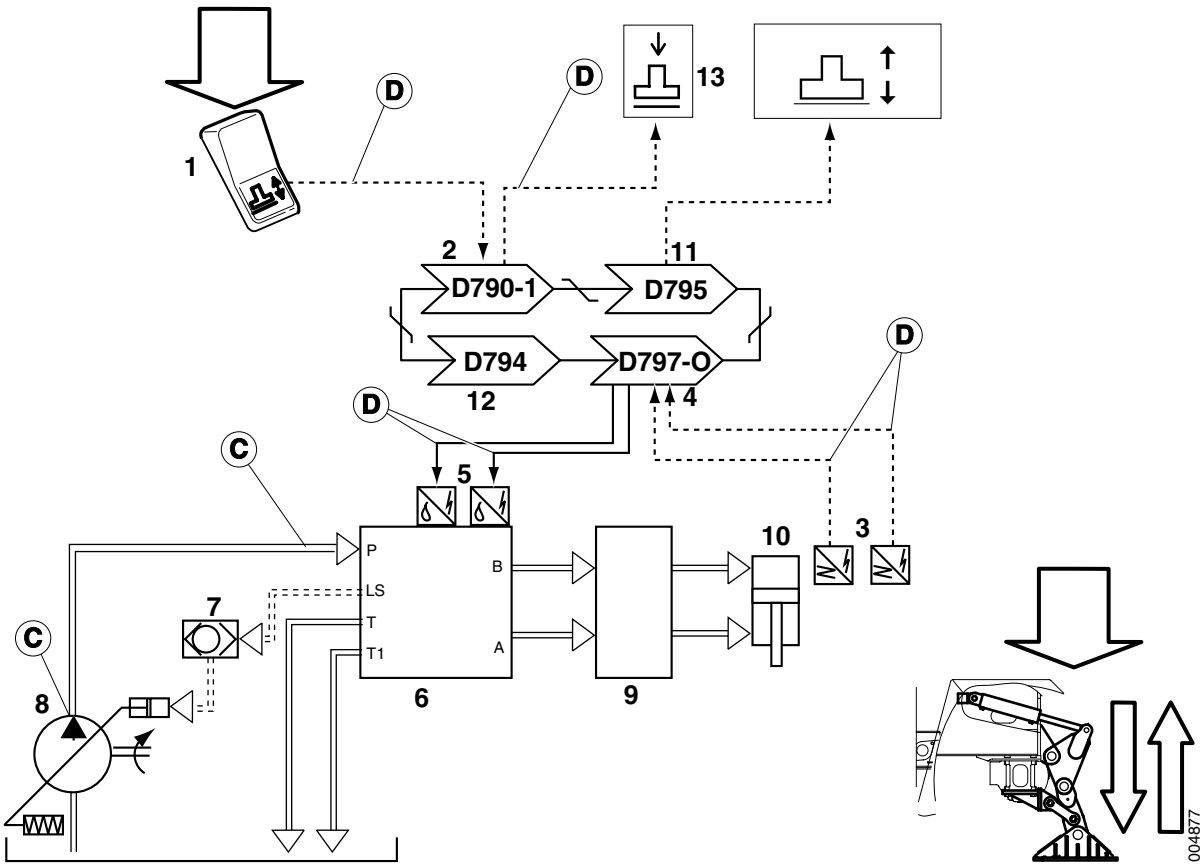

https://truckmanualshub.com/

1. Switch support jacks (S1013)
2. Control unit cab (D790-1)
3. Sensor support jacks up (B7222L and B7222R) or Sensor support jacks down (B7221L and B7221R)
4. Control unit frame option (D797-O)
5. Solenoid valve support jacks down (Y6064) or Solenoid valve support jacks up (Y6063)
6. Control valve option frame
7. Shuttle valve
8. Hydraulic oil pump 1 & 2
9. Valve block support jack cylinder
10. Hydraulic cylinder support jacks
11. Control unit KID (D795)
12. Control unit engine (D794)
13 Indicator light support jacks down (H517)

Support jacks, component position

Hydraulic oil pump and Shuttle valve, see *Lift and lower, component position page 6*.

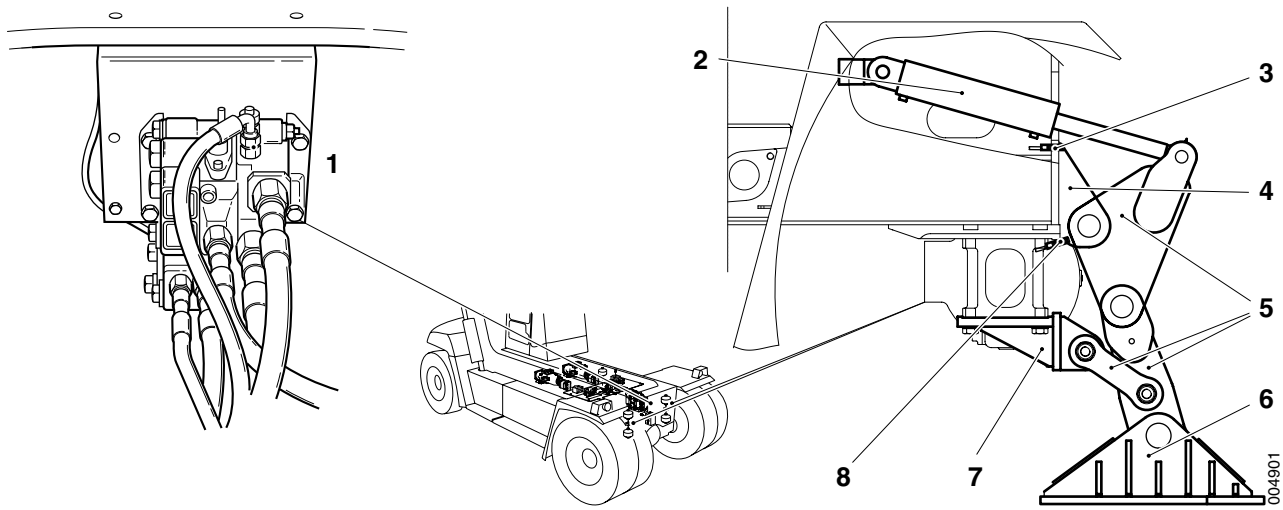

1. Control valve option frame
2. Hydraulic cylinder support jacks
3. Sensor support jacks up (B7222L and B7222R)
4. Upper bracket
5. Support jacks
6. Support foot
7. Lower bracket
8. Sensor support jacks down (B7221L and B7221R)

https://truckmanualshub.com/

7.10.2 Weight indicator

Weight indicator, function description (product alternative fixed scale)

The fixed scale makes it possible to weigh the load with boom and extension in a certain position.

The weight indicator uses Sensor hydraulic pressure lift cylinder (B768-10 and B768-12) to calculate the load.

For more information about sensors see section *8 Control system,* group *8.2.1 Overloading system*.

Condition	Reference value
Control switch	Not activated

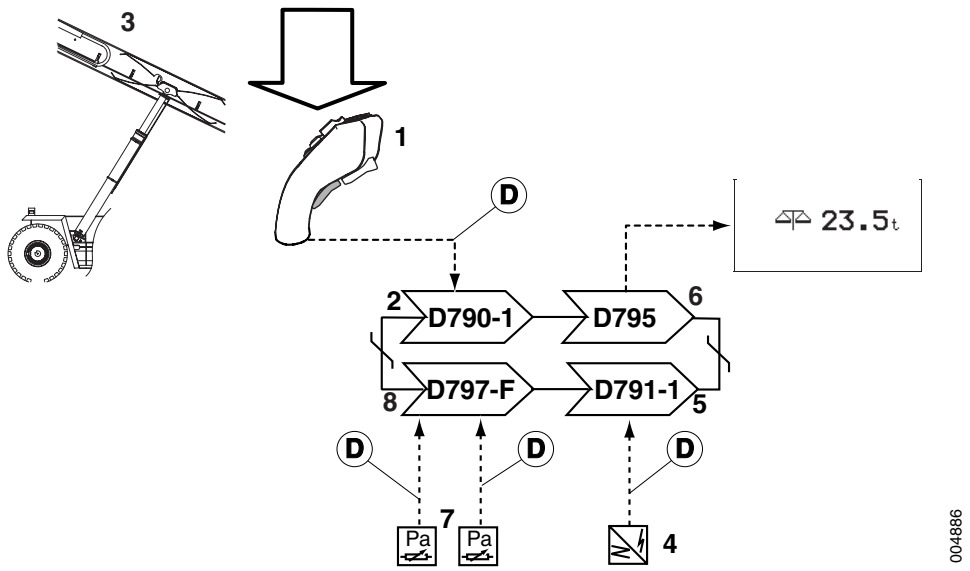

1. Control lever (S815-T4)
2. Control unit cab (D790-1)
3. Boom
4. Sensor boom length
5. Control unit attachment (D791-1)
6. Control unit KID (D795)
7. Sensor hydraulic pressure lift cylinder piston side left (B768-12) and Sensor hydraulic pressure lift cylinder piston side right (B768-10)
8. Control unit frame front (D797-F)

https://truckmanualshub.com/

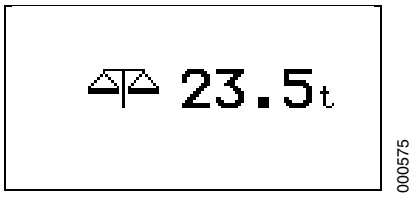

Event menu dynamic scale

Weight indicator, checking (product alternative fixed scale)

1 Lift a known weight.

2 Place the boom in horizontal position.

   A. Lift the boom so that the colour marking on the rod disappears in the pipe.

   B. Lower the boom until the colour marking can be seen.

   C. Press in the pistol trigger and extend the boom.

   The display now shows the scale symbol and a flashing weight value.

   When the boom is in the right position(approx. 0.5 m out) the boom stops by itself, the weight value stops flashing and the digits become larger.

3 Check that the weight indicator shows the correct weight ±0.5 ton. If the deviation is greater, calibrate the weight indicator.

Fixed scale, calibration

NOTE

It is very important for accuracy that all steps are performed in the specified order.

1 Park the machine on level ground without load and centre the attachment.

2 Navigate to the service menu and press ENTER.

3 Enter code for calibration.

   Code is obtained from Kalmar Industries Support.

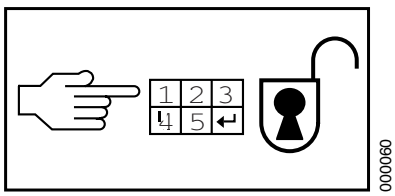

NOTE

The code determines which service menu is activated (Diagnostic test, Initiation or Calibration).

4 Scroll to SCALE with the arrow keys (1 and 2) and press ENTER.

   Every calibration consists of a sequence of a number of menus. The first menu for selected calibration appears in the display. Select the next menu with the arrow keys (1 and 2).

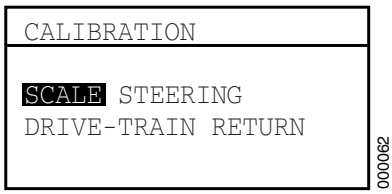

https://truckmanualshub.com/

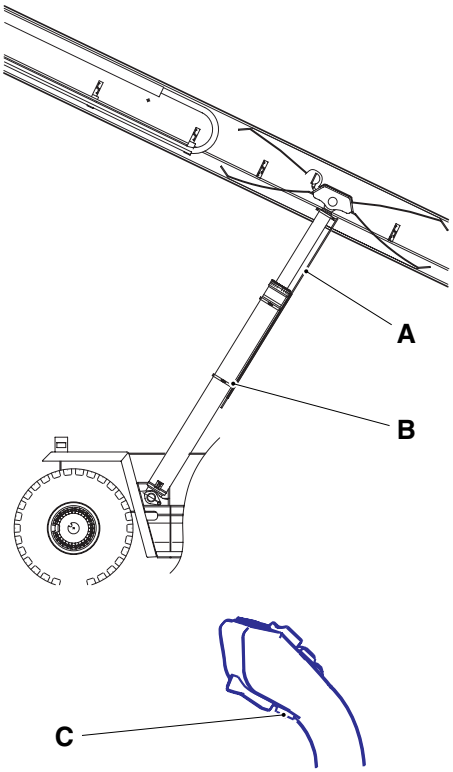

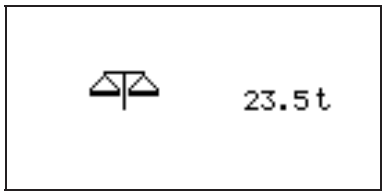

001132

5 Move the boom to measuring position.

A. Lift the boom so that the colour marking on the rod (pos A) disappears in the pipe.

B. Lower the boom until the colour marking can be seen at the pipe end (pos B).

C. Press in the pistol trigger (Pos C) and extend the boom.

The display now shows the scale symbol and a flashing weight value.

When the boom is in the right position(approx. 0.5 m out) the boom stops by itself, the weight value stops flashing and the digits become larger.

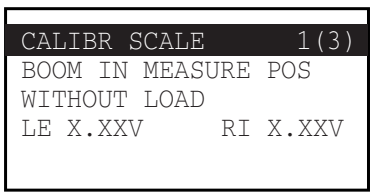

000071

6 CALIBR SCALE, menu 1, save the setting with ENTER.

7 Lift a known reference load and centre the attachment.

8 Park the machine on level ground.

9 Move the boom to measuring position, see step 5.

NOTE

It is very important for accuracy that the boom is raised first and then lowered to the measuring position.

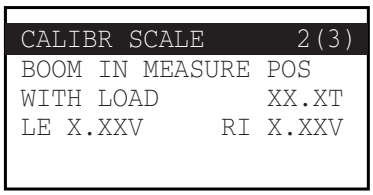

000072

10 Scroll to CALIBR SCALE, menu 2.

11 Enter the weight of the reference load with the + and - keys. Save the setting with ENTER.

The weight is given in tons, to one decimal.

12 Scroll back from the calibration mode with the R-key.

13 Check the calibration, see *Weight indicator, checking (product alternative fixed scale) page 59*.

https://truckmanualshub.com/

Weight indicator, function description (product alternative dynamic scale)

The weight indicator shows the weight of the lifted load. The dynamic scale shows the load, regardless of position of boom and extension.

The weight indicator uses Sensor boom length (R777), Sensor boom angle (R771) and Sensor hydraulic pressure lift cylinder (B768) to calculate weight of the load. For more information about sensors see section *8 Control system,* group *8.2.1 Overloading system*.

Condition	Reference value
Control switch	Not activated

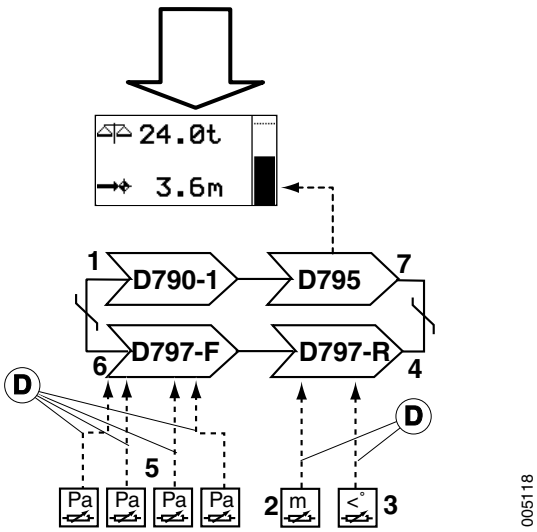

1. Control unit cab (D790-1)
2. Sensor boom length (B777)
3. Sensor boom angle (B771)
4. Control unit frame rear (D797-R)
5. Control unit frame front (D797-F)
6. Sensor hydraulic pressure lift cylinder piston side left (B768-12), Sensor hydraulic pressure lift cylinder rod side left (B768-11), Sensor hydraulic pressure lift cylinder piston side right (B768-10) and Sensor hydraulic pressure lift cylinder rod side right (B768-13).
7. Control unit KID (D795)

https://truckmanualshub.com/

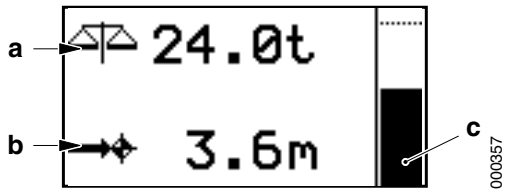

Operating menu dynamic scale
a. Measured weight of load
b. load-centre measured from drive axle's centre
c. use of load capacity at load-centre in question

Weight indicator, checking (product alternative dynamic scale)

1 Lift a known weight.

2 Check that the weight indicator shows the correct weight ±0.5 ton. If the deviation is greater, calibrate the weight indicator.

Dynamic scale, calibration

NOTE

It is very important for accuracy that all steps are performed in the specified order.

1 Park the machine on level ground without load and centre the attachment.

2 Navigate to the service menu and press ENTER.

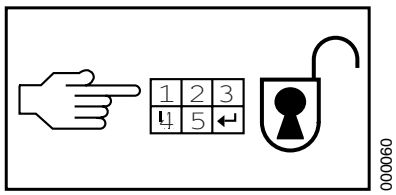

3 Enter code for calibration.

Code is obtained from Kalmar Industries Support.

NOTE

The code determines which service menu is activated (Diagnostic test, Initiation or Calibration).

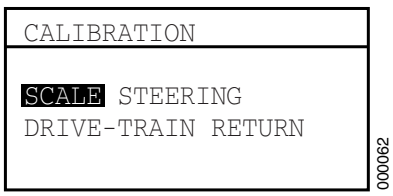

4 Scroll to SCALE with the arrow keys (1 and 2) and press ENTER.

Every calibration consists of a sequence of menus. Scroll between menus with the arrow keys.

5 Lower the boom to the lowest position (0°).

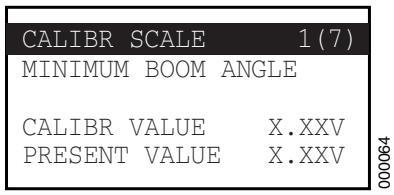

6 CALIBR SCALE, menu 1 and save the setting with ENTER.

7 Lift the boom to its highest angle.

https://truckmanualshub.com/


```
CALIBR SCALE      2(7)
MAXIMUM BOOM ANGLE

CALIBR VALUE    X.XXV
PRESENT VALUE   X.XXV
```

000065

8 Scroll to CALIBR SCALE, menu 2 and save the setting with ENTER.

9 Retract the boom completely.

```
CALIBR SCALE      3(7)
BOOM FULLY RETRACTED

CALIBR VALUE    X.XXV
PRESENT VALUE   X.XXV
```

000066

10 Scroll to CALIBR SCALE, menu 3 and save the setting with ENTER.

11 Extend the boom completely.

```
CALIBR SCALE      4(7)
BOOM FULLY EXTENDED

CALIBR VALUE    X.XXV
PRESENT VALUE   X.XXV
```

000067

12 Scroll to CALIBR SCALE, menu 4 and save setting with ENTER.

13 Lower and retract the boom completely.

14 Raise the boom approx. 4 cm (on the lift cylinders).

15 Lower the boom carefully approx. 2 cm (on the lift cylinders).

16 Wait approx. five seconds to stabilize the pressure.

17 Scroll to CALIBR SCALE, menu 5 and save the setting with ENTER.

```
CALIBR SCALE      5(7)
LOAD SENSOR BOOM
RETRACTED     LE    RI
CALIBR      XXXX  XXXX
PRESENT     XXXX  XXXX
```

000068

NOTE

Negative values indicate changed contacts on the pressure sensors.

Large variations between right and left indicate faults in the sensors' signals.

18 Extend the boom completely.

19 Wait approx. five seconds to stabilize the pressure.

20 Scroll to CALIBR SCALE, menu 6 and save the setting with ENTER.

```
CALIBR SCALE      6(7)
LOAD SENSOR BOOM   XX
EXTENDED      LE   RI
CALIBR      XXXX  XXXX
PRESENT     XXXX  XXXX
```

005119

Checking calibration

21 Scroll to CALIBR SCALE, menu 7.

22 Lift a reference weight and check that the control system calculates the correct weight of the load the machine is lifting, PRESENT LOAD.

```
CALIBR SCALE      7(7)
ALLOWED LOAD  XXXXXKg
PRESENT LOAD  XXXXXKg
PRES. ST.AXL. XXXXXKg
LOAD-CENTER   XXX.XXm
```

000070

23 If the weight is not quite correct, scroll to menu 6 and enter the weight of the reference load with the + and - keys. Save the setting with ENTER.

The weight is given in whole tons.

```
CALIBR SCALE      6(7)
LOAD SENSOR BOOM   XX
EXTENDED      LE   RI
CALIBR      XXXX  XXXX
PRESENT     XXXX  XXXX
```

005119

https://truckmanualshub.com/

24 Operate the machine without load, stop the machine and check that PRESENT LOAD = 00000 ± 250 kg.

NOTE

Check when stationary. (Operating generates dynamic forces.)

25 Scroll back from the calibration with the R-key.

Printer, description

Printer is an option the function for scale that makes it possible to save weights and print out lists of saved weights.

The printer is connected to Control unit KID (D795) and is located on the instrument panel on the right side of the steering wheel.

The printer is controlled via Operating menu printer in the display, where the operator selects which weights shall be saved and what is to be printed.

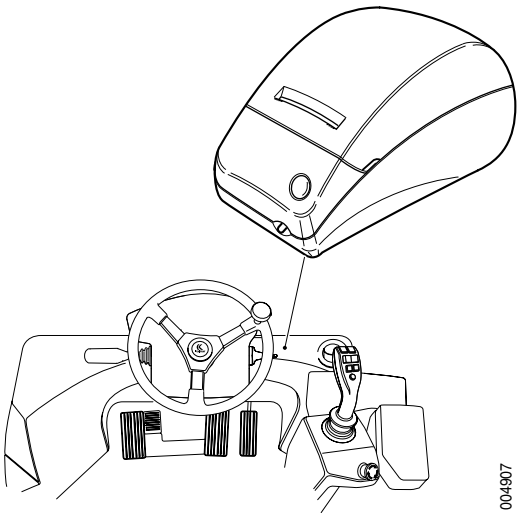

Position printer

https://truckmanualshub.com/

7.10.3 Container counter

Container counter, function description (product alternative top lift)

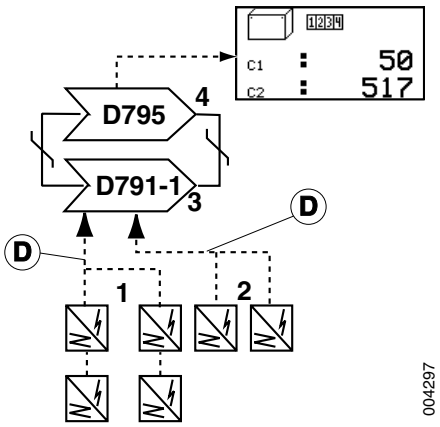

The container counter counts the number of lifts performed with the machine. The container has two separate counters that can be reset to zero separately.

The container counter uses Sensor alignment and Sensor twistlocks to decide when a container is lifted. The container counter counts lifts when alignment disappears with locked twistlocks and twistlocks are not opened again within 8 seconds.

Condition	Reference value
Control switch	Not activated

1. Sensor alignment left front (7202L), Sensor alignment right front (7202R), Sensor alignment left rear (Y7203L) and Sensor alignment right rear (Y7203R)
2. Sensor locked twistlocks left (B7205L)

   Sensor locked twistlocks right (B7205R)
3. Control unit attachment (D791-1)
4. Control unit KID (D795)

https://truckmanualshub.com/

Container counter, function description (product alternative bottom lift)

The container counter counts the number of lifts performed with the machine. The container counter has two separate counters that can be reset to zero separately.

The container counter counts lift when the clamping function is activated and lift is started, and release of clamping position is not activated within 10 seconds.

Condition	Reference value
Control switch	Not activated

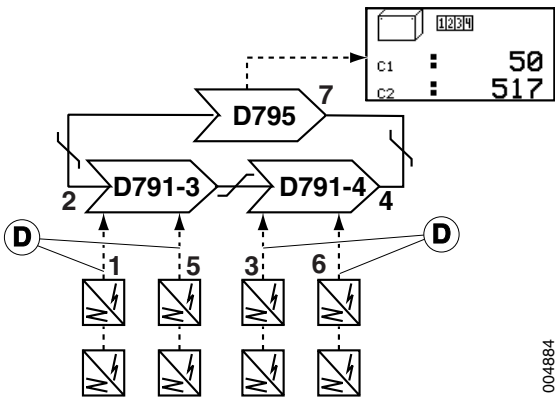

1. Sensor clamping position front leg left (B7215L) and Sensor clamping position rear leg left (B7216L)
2. Control unit attachment left legs (D791-3)
3. Sensor clamping position front leg right (B7215R) and Sensor clamping position rear leg right (B7216R)
4. Control unit attachment right leg pair (D791-4)
5. Sensor alignment front leg left (B7213L) and Sensor alignment rear leg left (B7214L)
6. Sensor alignment front leg right (B7213R) and Sensor alignment rear leg right (B7214R)
7. Control unit KID (D795)

https://truckmanualshub.com/

7.10.4 Synchronous lift

Synchronous lift, function description

Synchronized lift means that lift and extension are activated at the same time so that the lift is completely vertical. Synchronized lift is activated by pressing in the pistol trigger on the control lever at the same time as lift is activated.

Synchronized lift is controlled by the control system with signals from Sensor boom angle and Sensor boom length.

NOTE

The synchronized lift uses preset variables for the speed. The hydraulic oil pumps must be adjusted correctly for the function to work well.

For details on lift and extension, see *Lift and lower, function description page 4* and *Extension, function description page 10*.

Condition	Reference value
Control switch	Not activated

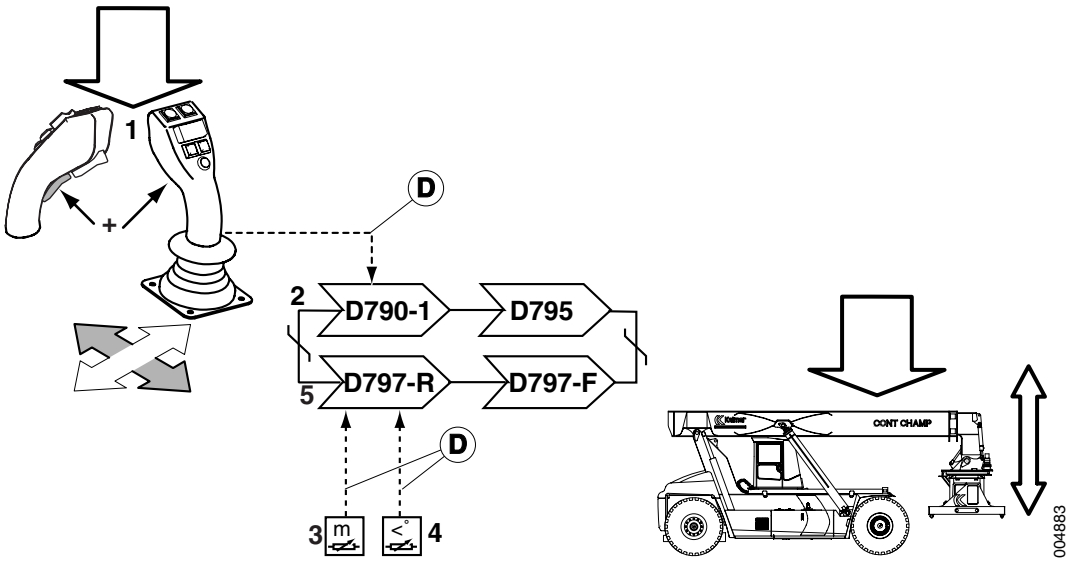

1. Control lever (S815)
2. Control unit cab (D790-1)
3. Sensor boom angle (B771)
4. Sensor boom length (B777)
5. Control unit frame rear (D797-R)

https://truckmanualshub.com/

https://truckmanualshub.com/

Table of Contents 8 Control system

8 Control system ... 3
8.2 Monitoring ... 6
8.2.1 Overloading system ... 6
8.2.2 By-passing ... 11
8.2.3 Load centre limitation ... 11
8.2.4 Height limitation ... 12
8.2.5 Speed limitation ... 12
8.2.6 Service indicator ... 12
8.3 Error codes ... 13
8.4 Diagnostics ... 15
8.4.1 CAN/POWER ... 18
8.4.2 LIGHTS ... 19
8.4.3 CAB ... 20
8.4.4 CLIMATE ... 21
8.4.5 HYD ... 21
8.4.6 ENGINE ... 22
8.4.7 TRANSM ... 23
8.4.8 BOOM ... 24
8.4.9 ATTACH ... 25
8.4.10 OP ... 26
8.4.11 EXTRA ... 27
8.5 Setup ... 31

https://truckmanualshub.com/

https://truckmanualshub.com/

8 Control system

Control system, general

Many of the machines functions are controlled electrically. The signals that control the machine are monitored to warn the operator or limit the machine's functions in certain dangerous situations or in case of machine malfunctions.

The function control system is divided into the following functions:

- Monitoring functions
- Error codes
- Diagnostic test
- Settings
- Software

Monitoring functions describe the machine’s monitoring functions that warn the operator or limit the machine’s functions in case of eventual dangerous situations.

Error codes notify operators and mechanics when malfunctions have been detected.

Diagnostic test is tool for performing service and troubleshooting with menus in the machine’s display.

Settings is the tool for setting and adapting the machine’s functions.

The software creates the functions in the control system.

Control system, description

The machine is equipped with an electronic system used for controlling and monitoring the machine’s different functions.

The system gives the operator information in the form of alarm information, operating information and event-controlled information. The information is presented on the steering wheel panel’s display (C) and on the panel for warning and indicator lights (B).

The function keys are used to navigate in the display menus for service and troubleshooting, for example.

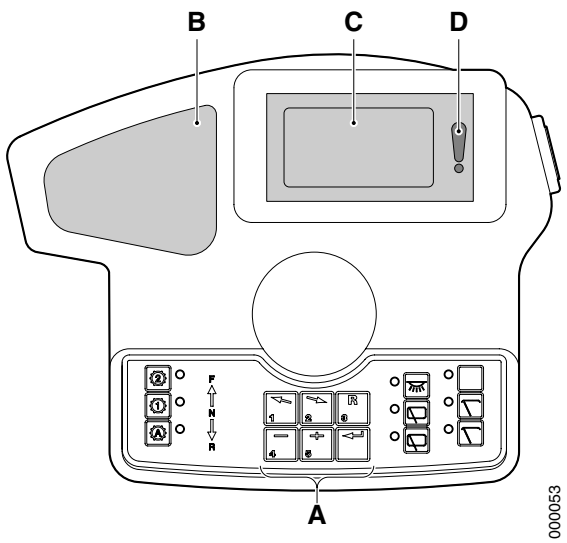

A. Function keys (KIT)
B. Warning and indicator lights
C. Display (KID)
D. Alarm indicator

https://truckmanualshub.com/

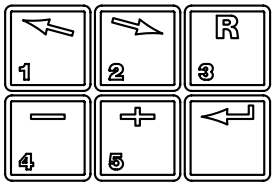

000055

Function keys

The function keys (A) are used to navigate in the menu system. Also used to enter values in the system, change light contrast in keys/indicator panel and to confirm alarms.

- Function key 1: Scroll counter-clockwise in menu system as well as enter value 1.
- Function key 2: Scroll clockwise in menu system as well as enter value 2.
- Function key 3 (Reset): Abort selection of menu/session in progress as well as enter value 3. Confirm alarm.
- Function key 4: Enter value 4, gradually adjust settings (for example, contrast in guide lights for function keys) and gradually change values in operating menus.
- Function key 5: Enter value 5, gradually adjust settings (for example, contrast in guide lights for function keys) and gradually change values in operating menus.
- Function key 6 (Return): Confirm selection of menu and submenu, as well as confirm entered value.

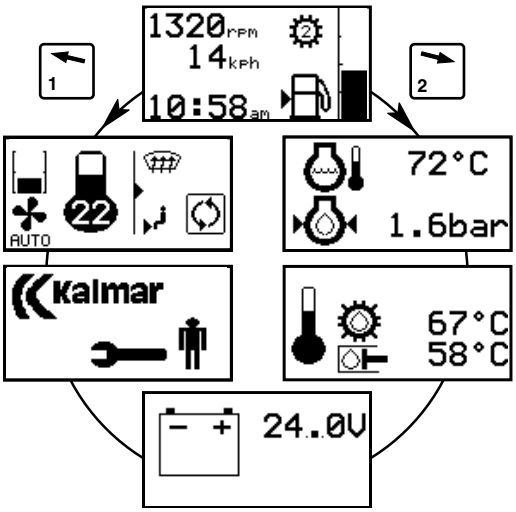

004732

Example of operating menus

Operating menus

When the machine is started the Operating menu engine and transmission is shown on the display. This menu is shown until another menu is selected or an event-controlled menu is shown (e.g., in case of error code of type "WARNING" and "STOP"). Other menus (see list below) are scrolled with the function keys 1 (arrow left) and 2 (arrow right).

The following operational menus are accessible for assisting operators:

- Operating menu engine and transmission
- Operational menu, engine
- Operating menu transmission and hydraulics
- Operating menu electrical system
- Service menu
- Operating menu heating and air conditioning
- Operating menu statistics ⊕
- Operating menu, dynamic scale ⊕
- Operating menu checking dynamic scale ⊕
- Operating menu load handling ⊕
- Operating menu service interval ⊕
- Operating menu printer ⊕
- Operating menu code lock ⊕

https://truckmanualshub.com/

Event-controlled information

Under certain conditions the control system draws the operator's attention to important information with figures on the display. Examples of warnings is warning for overloading when the overloading system is activated.

Warnings are described in connection with respective function. The following event menus are available:

- Overloading forward
- Overloading on steering axle
- Alignment top lift attachment
- Alignment bottom lift attachment ⊕
- Twistlock
- Support jacks ⊕
- Height limitation ⊕
- Fixed scale ⊕
- Open door ⊕
- Rotation stop ⊕
- Speed limitation at levelling lock or tilt lock ⊕
- Speed limitation at overloading on steering axle

Service menu

000056

The service menu is the gateway to the machine's diagnostic system. By pressing “Enter” and entering different codes, different parts of the service menus are accessible. The different service menus are:

- *Error codes, description page 13*.
- *Diagnostic test, general page 15*.
- *Settings, general page 31*.

https://truckmanualshub.com/

8.2 Monitoring

Monitoring functions, general

The machine is equipped with a number of control functions to increase safety during load handling:

- Overloading system
- By-passing
- Load-centre limitation
- Height limitation
- Speed limitation
- Service indicator

8.2.1 Overloading system

Overloading system, general

The machine is equipped with a warning system, LLMC (Longitudinal Load Moment Control). Warning systems shall ALWAYS be functional! The system shall be used for stationary load handling, so that the machine's forward stability is not jeopardized.

The following happens when the machine approaches the stability limit:

- the buzzer in the cab sounds (indication to operator)
- warning figure is shown in the display (indication to operator)
- boom movement is interrupted

  In this position the boom, and thus the load, can only be retracted until the buzzer stops sounding and the display figure disappears.

LLMC is not intended to control sideways stability or stability when operating. Also, it does not take angled ground conditions into account.

NOTE

Retract the boom before it is lowered! Applies to all load handling!

The overloading system is activated when the operator exceeds the machine's load handling capacity. When the overloading system is active all hydraulics are blocked, e.g., lift. With Switch by-pass, certain parts of the overloading system can be by-passed. This makes it possible to lower and retract the boom to avoid dangers.

There are three versions of overloading system:

- *Mechanical overloading system, function description page 8*
- *Mechanical overloading system with analogue position sensors, function description page 9*
- *Electrical overloading system, function description page 10*

https://truckmanualshub.com/

The different overloading systems use different combinations of sensors. The number of sensors is also controlled by the option weight indicator, see section *7 Load handling*, group *7.10.2 Weight indicator*.

	B768 -10	B768 -11	B768 -12	B768 -13	Ana-logue R777	Ana-logue R771	Digital B777	Digital B771	B7221	B7224
Mechanical overloading system			X				X	X	X	
Mechanical overloading system with analogue position sensors			X		X	X			X	
Electrical overloading system	X	X	X	X	X	X				
Mechanical overloading system and fixed scale	X		X				X	X	X	X
Mechanical overloading system with analogue position sensors and fixed scale	X		X		X	X			X	X
Mechanical overloading system and dynamic scale	X	X	X	X	X	X			X	

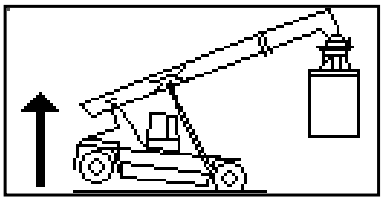

Display warning overloading forward

Overloading system, checking

1 Lift a loaded approx. 1 m.

2 Run out the boom and check that the overloading system is activated.

https://truckmanualshub.com/

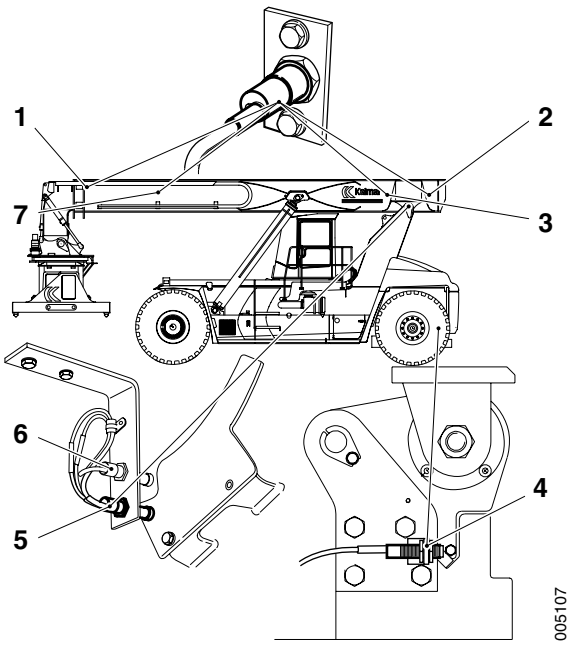

1. Position sensor boom length 60 cm (B7224) ⊕
2. Position sensor damping boom in (B769-3)
3. Position sensor boom length 1.5m (B777)
4. Sensor steering axle load (B7221)
5. Position sensor boom angle 35° (B771)
6. Position sensor damping lowering (B769-1)
7. Position sensor damping boom out (B769-4)

8.2.1.1 Mechanical overloading system

Mechanical overloading system, function description

This is the basic alternative for overloading system and it uses opening sensors to sense the load.

The mechanical overloading system is activated when:

- The steering axle springs up (overloading forward).

  In case of overloading forward the control system interrupts the functions lift and lower as well as extension. Using the by-pass, lower and extension can be activated to get out of the overloading situation.

- The boom angle exceed 35° at the same time as boom extension is less than 1.5 m when the machine operates faster than 10 km/h (overloading steering axle).

  In case of overloading on the steering axle the control system activates a warning for overloading on the steering axle.

NOTE

In case of overloading on the steering axle it is up to the operator to be careful when operating, no functions are interrupted. To reduce the load and regain full operational speed, the boom shall be lowered or extended.

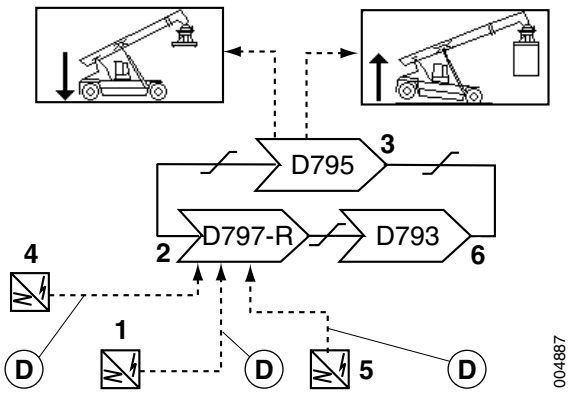

1. Sensor steering axle load (B7221)
2. Control unit frame rear (D797-R)
3. Control unit KID (D795)
4. Position sensor boom length 1.5 m (B777)
5. Position sensor boom angle 35° (B771)
6. Control unit transmission (D793)

https://truckmanualshub.com/

8.2.1.2 Mechanical overloading system with analogue sensors

Mechanical overloading system with analogue position sensors, function description

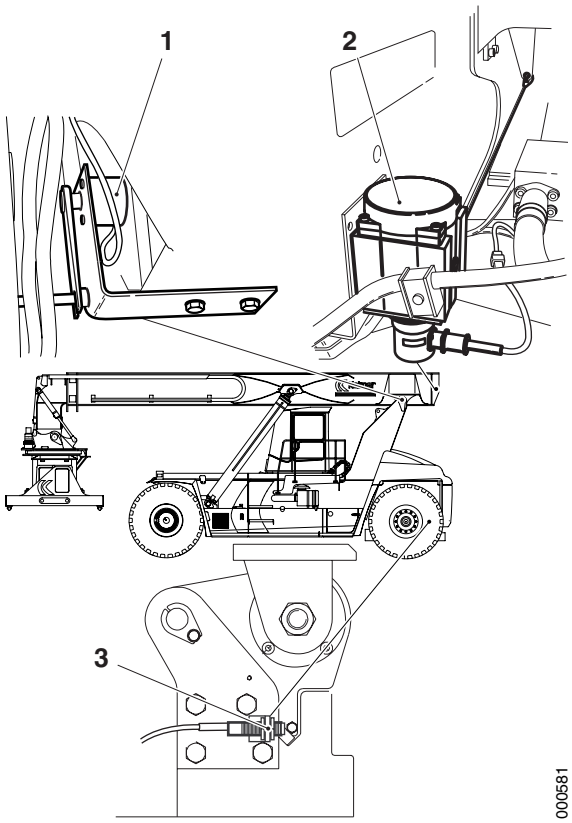

1. Sensor boom angle (R771)
2. Sensor boom length (R777)
3. Sensor, steering axle load (B7221)

This alternative for overloading system uses an opening sensor (on steering axle) to sense the load and also analogue sensors to sense boom length and angle.

The mechanical overloading system with analogue sensors is activated when:

- The steering axle springs up (overloading forward).

  In case of overloading forward the control system interrupts the functions lift and lower as well as extension. Using the by-pass, lower and extension can be activated to get out of the overloading situation.

- The boom angle exceed 35° at the same time as boom extension is less than 1.5 m when the machine operates faster than 10 km/h (overloading steering axle).

  In case of overloading on the steering axle the control system activates a warning for overloading on the steering axle.

NOTE

In case of overloading on the steering axle it is up to the operator to be careful when operating, no functions are interrupted. To reduce the load and regain full operational speed, the boom shall be lowered or extended.

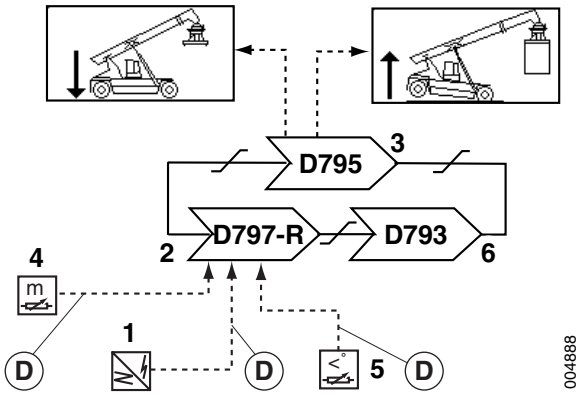

1. Sensor steering axle load (B7221)
2. Control unit frame rear (D797-R)
3. Control unit KID (D795)
4. Sensor boom length (R777)
5. Sensor boom angle (R771)
6. Control unit transmission (D793)

https://truckmanualshub.com/

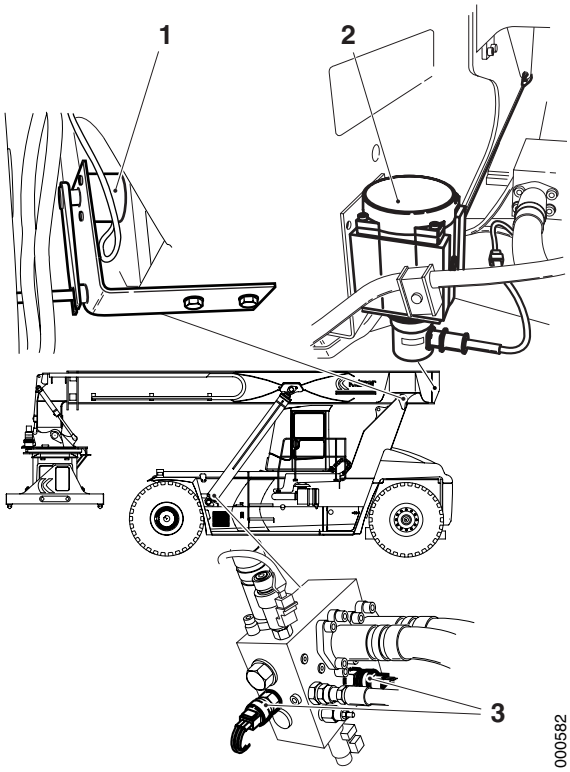

1. Sensor boom angle (R771)
2. Sensor boom length (R777)
3. Sensor hydraulic pressure lift cylinder (B768-10, -11, -12, -13)

8.2.1.3 Electrical overloading system

Electrical overloading system, function description

This overloading system is a part of the control system and performs calculations of the load with sensor values for boom length, boom angle and cylinder pressure in the lift cylinders.

The calculated load and the measured distance from the machine is compared to a load curve, if the load is outside permitted distance the overloading system is activated.

- In case of overloading forward the control system interrupts the functions lift and lower as well as extension. Using the by-pass, lower and extension can be activated to get out of the overloading situation.
- In case of overloading on the steering axle the control system activates a warning for overloading on the steering axle.

  Depending on how big the load is on the steering axle, the machine's speed is limited. A bar in the event menu shows the range of the limitation.

NOTE

In case of overloading on the steering axle it is up to the operator to be careful when operating, no functions are interrupted. To reduce the load and regain full operational speed, the boom shall be lowered or extended.

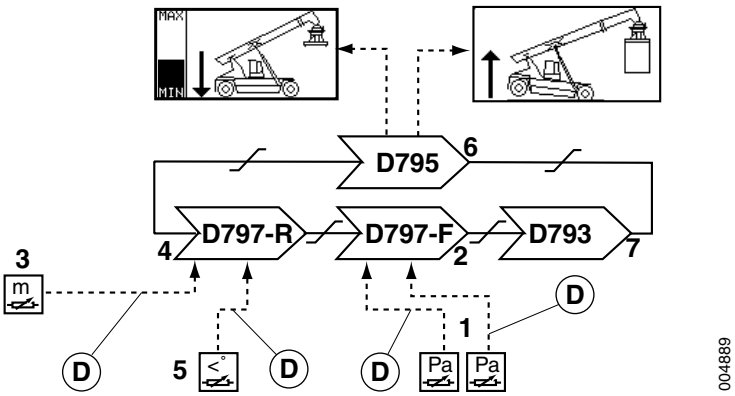

1. Sensor hydraulic pressure lift cylinder left (B768-10 and B768-11) as well as Sensor hydraulic pressure lift cylinder right (B768-12 and B768-13)
2. Control unit frame front (D797-F)
3. Sensor boom length (R777)
4. Control unit frame rear (D797-R)
5. Sensor boom angle (R771)
6. Control unit KID (D795)
7. Control unit transmission (D793)

https://truckmanualshub.com/

8.2.2 By-passing

By-passing, description

When the overloading system is activated and turns off the hydraulics it may be in a situation where it is necessary to by-pass the safety system.

By-pass is activated with a switch, there is one to three switches depending on the machine's equipment:

- Switch by-pass
- Switch by-pass of load centre and height limitation ⊕
- Switch rotation stop ⊕

By-passing the safety system makes it possible to:

- lowering of load in case of overloading
- locking and opening twistlocks without full alignment
- Spreading 20'-40' with locked twistlocks
- bottom lift without full alignment
- manual control of recirculation damper for ECC or EHC
- release of parking brake in case of malfunction of switch parking brake
- lift above height limitation
- rotation past rotation stop
- load handling past limitation for load centre limitation.
- lifting, lowering and extension with active error on overloading system

DANGER

By-passing the safety systems results in risk of tipping forward, use at your own risk.

8.2.3 Load centre limitation

Load centre limitation, description

⊕

Load centre limitation prevents the load from coming too close to the machine. The load centre limitation is controlled by the control system with signals from Sensor boom angle and Sensor boom length. For example, this is used in connection with cab lift to prevent that the container damages the cab.

For details about lift, lower and extension, see section *7 Load handling*.

https://truckmanualshub.com/

8.2.4 Height limitation

Height limitation, description

Height limitation is a part of the control system and prevents the machine from lifting higher than a pre-set height without the operator being informed.

Height limitation is controlled by the control system with signals from Sensor boom angle and Sensor boom length. When boom angle and extension indicate that permitted height is reached, lift and extension are blocked and display information height limitation is activated.

For details about lift, lower and extension, see section *7 Load handling*.

8.2.5 Speed limitation

Speed limitation, description

Speed limitation prevents the machine's speed from exceeding preset value by limiting gear position and engine rpm.

8.2.6 Service indicator

Service indicator, resetting

1 Machine in service position, see section *B Safety*.

2 Navigate first to the service menu and press Enter.

000056

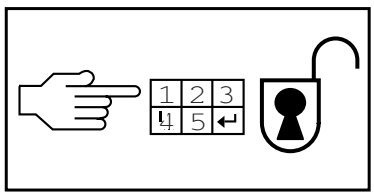

000060

3 Enter code for resetting service indicator.

The code is obtained via Kalmar Industries Support.

NOTE

The code determines which service menu shall be activated (Service, Diagnostic test, Initiation or Calibration).

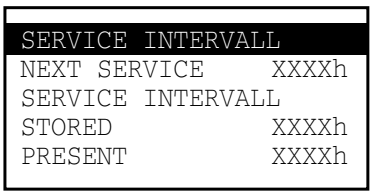

004908

4 Reset the service indication by pressing Enter. NEXT SERVICE is changed to given interval.

To change length of the service interval, set the desired interval with the plus and minus key.

https://truckmanualshub.com/

8.3 Error codes

Error codes, description

When a malfunction occurs in the machine error messages (error codes) are generated by the control unit in question that is sending the error code via the CAN-bus to Control unit KID (D795) that shows the error codes on the display and stores the error codes.

Explanation of error codes is available in section *D Error codes*.

Error code indication

Error code is indicated with activated Indicator for active error codes (position 36). The error codes are divided into three error code levels depending on how serious they are.

Error code levels are indicated as follows:

- STOP is indicated with a STOP-sign on the display together with a flashing red light from indicator for control system (position 54) and activated Indicator for active error codes (position 36).

  Error code with level STOP shown automatically on display.
- WARNING is indicated on the display, together with a flashing red light for control system (position 54) and activated Indicator for active error codes (position 36).

  Error code with level WARNING shown automatically on display.
- INFORMATION is indicated with activate Indicator for active error codes (position 36).

  Error code with level INFORMATION shown in error code list under operating menu for service.

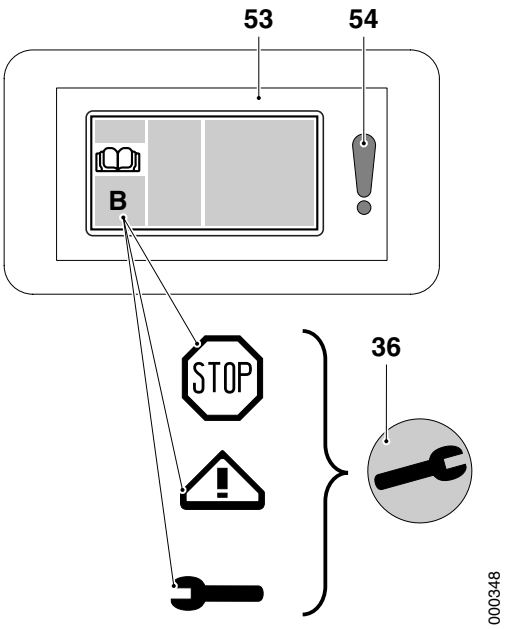

B. Symbol error code level
36. Indicator for active error codes
53. Display for control system
54. Indicator for control system

Error code display

Error code information is shown with display figures in two ways:

- Automatically on display.

  The error code is confirmed with function key Reset (R). When the error code is confirmed, the display returns to the previous selected menu. If the error code is active, it's stored in the error code list under operating menu for service.

  If the error code is active it is repeated to remind the operator of the error status, stop every 3rd minute, warnings every 5th minute.

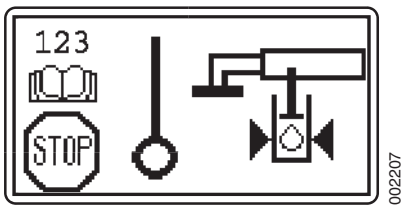

Example of automatic display figure

https://truckmanualshub.com/

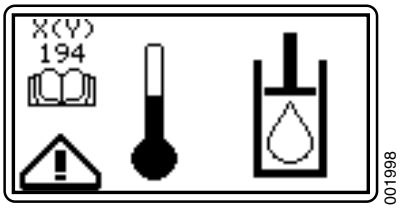

Example of display in error code list

- In the error code list under operating menu for service.

  Active error codes are stored in the error code list. Navigate to the operating menu for service. Display the error code list by pressing in function key Enter for two seconds. Navigate in the error code list with function keys arrow right and arrow left. Leave the error code list by pressing function key Reset (R).

NOTE

If error code isn't included in the error code list, it may be due to the following:

- output signal that generated error code is no longer active, for example, control lever is released or engine is off.

- loose connection/poor contact

https://truckmanualshub.com/

8.4 Diagnostics

Diagnostic test, general

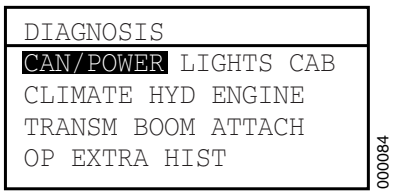

The machine has built-in functions for troubleshooting called diagnostic test. The diagnostic test consists of several menus that are shown on the display. The menus are grouped for faster access.

The following pages contain compilations of diagnostic menus. In the Workshop manual there are more detailed descriptions of each diagnostic menu.

The diagnostic test is divided into the following groups:

- *CAN/POWER, menu overview page 18*
- *LIGHTS, menu overview page 19*
- *CAB, menu overview page 20*
- *CLIMATE, menu overview page 21*
- *HYD, menu overview page 21*
- *ENGINE, menu overview page 22*
- *TRANSM, menu overview page 23*
- *BOOM, menu overview page 24*
- *ATTACH, menu overview page 25*
- *OP, menu overview page 26*
- EXTRA
  - *COMBI, menu overview page 27*
  - *SLIDING-CAB, menu overview page 28*
  - *SUPPORT-JACKS, menu overview page 29*
  - *EL-STEERING, menu overview page 30*
- HIST (not used)

Diagnostic menu, description

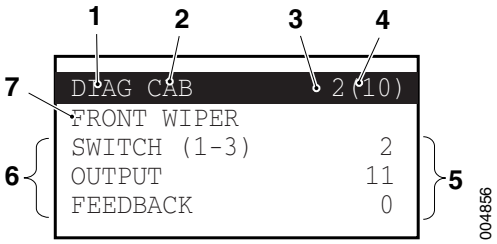

1. DIAG = Diagnostic menus
2. Menu group (CAB = cab functions)
3. Menu number
4. Total number of menus in loop
5. Signal value
6. Variable
7. Menu heading

The diagnostic tests are built up of menus. The menus are grouped according to logical areas. With the diagnostic menus it is possible to read how a control unit interprets input signals as well as what output signals it sends.

Signal values (position 5) in the menu indicate measured values for the control unit in question. Control units have internal voltmeters and ammeters that measure the signal on the connections out to components or in from components.

Output signals are triggering of solenoid valves, lights, relays, etc.

Input signals are sensor values, signals from controls and switches, feedback control signals, etc.

The figure shows an example of a menu, here for diagnosis of windshield wiper. The table below indicates what can be read out from the menu figure.

https://truckmanualshub.com/

Pos.	Designation	Description
1	DIAG	Indicates that diagnosis has been selected. There is also initiation (INIT) and calibration (CALIB).
2	CAB	Indicates which menu group is selected. These groups are available: CAN/POWER - for diagnosis of CAN-bus and power supply. LIGHTS - for diagnosis of lighting and lights. CAB - for diagnosis of components in cab. CLIMATE - for diagnosis heating and ventilation system. HYD - for diagnosis of common hydraulics and brakes. ENGINE - for diagnosis of engine. BOOM - for diagnosis of lift, lower and extension. ATTACH - for diagnosis of attachment. OP - for diagnosis of overloading system. EXTRA - for diagnosis of optional functions. HIST - not used.
3	2	Number of menu in question (menu group CAB contains several menus in a loop).
4	(10)	Total number of menus in the group CAB.
5	*Variable*	Signal that is measured. Here are a few examples. SWITCH refers to switch windshield wiper. OUTPUT refers to status for a supply, in this case supply of the wiper motor. FEEDBACK refers to a feedback signal, in case signal from wiper motor when it operates.
6	*Signal value*	Measured value or status of signal for variable on the same row.
7	FRONT WIPER	Name of the function that can be controlled. FRONT WIPER means windshield wiper front.

Diagnostic test, work instruction

To select diagnostic test, proceed as follows:

000056

1. Navigate to the service menu.
2. Press Enter.

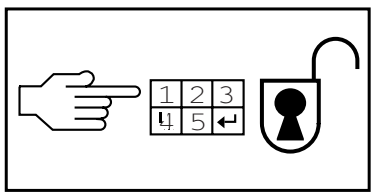

000060

3. Enter code for diagnostic test.
   Code is obtained from Kalmar Industries Support.

NOTE

The code determines which service menu is activated (Diagnostic test, Initiation or Calibration).

https://truckmanualshub.com/


```
DIAGNOSIS
CAN/POWER LIGHTS CAB
CLIMATE HYD ENGINE
TRANSM BOOM ATTACH
OP EXTRA HIST
```

000084

4 Select group by scrolling with the arrow keys (1 and 2) and confirm with Enter.

Each group consists of a sequence of numbered menus. The first menu for selected diagnostic menu is shown on the display, use arrow keys (1 and 2) to change menu.

https://truckmanualshub.com/

8.4.1 CAN/POWER

CAN/POWER, menu overview

```
DIAGNOSIS
CAN/POWER LIGHTS CAB
CLIMATE HYD ENGINE
TRANSM BOOM ATTACH
OP EXTRA HIST
```

```
DIAG CAN/POWER   1(20)
PRESENT REDCAN STATUS
COMMUNICATION MODE  X
NUMBERS OF UNITS    X
SEGMENT ERROR       X
```

```
DIAG CAN/POWER   2(20)
PRESENT REDCAN STATUS
RED.CON.CITIES
XYXYXYXY
1234ROFD
```

```
DIAG CAN/POWER   3(20)
PRESENT DRIVE-TRAIN
CAN BUS STATUS
ENGINE              X
TRANSMISSION        X
```

```
DIAG CAN/POWER   4(20)
IGNITION
KEY IN              X
RELAY K1           XY
```

```
DIAG CAN/POWER   5(20)
EMERGENCY STOP, SW  X
RELAY K2           XY
FEEDBACK            X
RELAY K3           XY
```

```
DIAG CAN/POWER   6(20)
790-1 CAB
POWER          XX.XXV
5V REF          X.XXV
```

```
DIAG CAN/POWER   7(20)
790-1 CAB
24V SENSOR SUPPLY  XY
24V SUPPLY,RPM>500 XY
```

```
DIAG CAN/POWER   8(20)
797-F FRAME
POWER          XX.XXV
RED.POWER    Le X Ri X
EME STOP POWER      X
```

```
DIAG CAN/POWER   9(20)
797-F FRAME
24V SENSOR SUPPLY  XY
5V REF          X.XXV
```

```
DIAG CAN/POWER  10(20)
797-R FRAME
POWER          XX.XXV
RED.POWER    Le X Ri X
```

```
DIAG CAN/POWER  11(20)
797-R FRAME
24V SENSOR SUPPLY  XY
5V REF          X.XXV
```

```
DIAG CAN/POWER  12(20)
797-O FRAME
POWER          XX.XXV
RED.POWER    Le X Ri X
EME STOP POWER      X
```

```
DIAG CAN/POWER  13(20)
797-O FRAME
24V SENSOR SUPPLY  XY
5V REF          X.XXV
```

```
DIAG CAN/POWER  14(20)
795 DISPLAY

RED.POWER    Le X Ri X
```

```
DIAG CAN/POWER  15(20)
793 TRANSMISSION
POWER          XX.XXV
IGNITION POWER XX.XXV
SENSOR SUPPLY  XX.XXV
```

```
DIAG CAN/POWER  16(20)
791-1 ATTACHMENT
POWER          XX.XXV
RED.POWER    Le X Ri X
```

```
DIAG CAN/POWER  17(20)
791-2 ATTACHMENT
POWER          XX.XXV
RED.POWER    Le X Ri X
```

```
DIAG CAN/POWER  18(20)
791-3 ATTACHMENT
POWER          XX.XXV
RED.POWER    Le X Ri X
```

```
DIAG CAN/POWER  19(20)
791-4 ATTACHMENT
POWER          XX.XXV
RED.POWER    Le X Ri X
```

```
DIAG CAN/POWER  20(20)
24V SENS.SUP 791-1 XY
24V SENS.SUP 791-2 XY
24V SENS.SUP 791-3 XY
24V SENS.SUP 791-4 XY
```

004739

https://truckmanualshub.com/

8.4.2 LIGHTS

LIGHTS, menu overview

```
DIAGNOSIS
CAN/POWER LIGHTS CAB
CLIMATE HYD ENGINE
TRANSM BOOM ATTACH
OP EXTRA HIST
```

```
DIAG LIGHTS      1(13)
WORKING LIGHT CAB
SWITCH              X
OUTPUT     LE XX RI XX
```

```
DIAG LIGHTS      2(13)
WORKING LIGHT ATTACH
SWITCH              X
OUTPUT     LE XY RI XX
OPTIONAL OUTPUT    XX
```

```
DIAG LIGHTS      3(13)
WORKING LIGHT BOOM
SWITCH              X
OUTPUT     LE XX RI XX
OPTIONAL OUTPUT    XX
```

```
DIAG LIGHTS      4(13)
MAIN LIGHT
SWITCH              X
```

```
DIAG LIGHTS      5(13)
PRESENT OUTPUT SIGNAL
SIDE-F     LE XX RI XX
SIDE-R     LE XX RI XX
REAR       LE XX RI XX
```

```
DIAG LIGHTS      6(13)
HEAD LIGHTS
SWITCH              X
HEAD       LE XX RI XX
DIMMED             XX
```

```
DIAG LIGHTS      7(13)
PRESENT INPUT SIGNAL
HAZARD SWITCH       X
FLASH.SW.    LE X RI X
```

```
DIAG LIGHTS      8(13)
PRESENT OUTPUT SIGNAL
HAZARD/FLASHER
FRONT      LE XX RI XX
REAR       LE XX RI XX
```

```
DIAG LIGHTS      9(13)
ROTATION BEACON
SWITCH              X
OUTPUT             XX
```

```
DIAG LIGHTS     10(13)
PRESENT INPUT SIGNAL
BRAKE LIGHT SWITCH  X
REVERSE LIGT SIGNAL X
```

```
DIAG LIGHTS     11(13)
PRESENT OUTPUT SIGNAL
BRAKE LIGHT  LEXX RIXX
REVERSE LGT  LEXX RIXX
REVERSE ALARM      XX
```

```
DIAG LIGHTS     12(13)
CAB LIGHT
MANUAL SWITCH       X
DOOR SWITCH         X
OUTPUT            XXX
```

```
DIAG LIGHTS     13(13)
SWITCH LIGHTS

OUTPUT            XXX
```

004840

https://truckmanualshub.com/

8.4.3 CAB

CAB, menu overview

```
DIAGNOSIS
CAN/POWER LIGHTS CA
CLIMATE HYD ENGINE
TRANSM BOOM ATTACH
OP EXTRA HIST
```

```
DIAG CAB          1(10)
WASHER
SWITCH              X
OUTPUT             XY
```

```
DIAG CAB          2(10)
FRONT WIPER
SWITCH (1-3)        X
OUTPUT             XY
FEEDBACK            X
```

```
DIAG CAB          3(10)
REAR WIPER
SWITCH              X
OUTPUT             XY
FEEDBACK            X
```

```
DIAG CAB          4(10)
ROOF WIPER
SWITCH              X
OUTPUT             XY
FEEDBACK            X
```

```
DIAG CAB          5(10)
HORN
SWITCH              X
OUTPUT             XY
```

```
DIAG CAB          6(10)
BUZZER             XY
SWITCH SEAT         X
ALARM               X
OP                  X
```

```
DIAG CAB          7(10)
FUEL
SENSOR VALUE    XXXOHM
PROC            XXX
```

004842

https://truckmanualshub.com/

8.4.4 CLIMATE

CLIMATE, menu overview

```
DIAGNOSIS
CAN/POWER LIGHTS CAB
CLIMATE HYD ENGINE
TRANSM BOOM ATTACH
OP EXTRA HIST
```

```
DIAG CLIMATE      1(8)
PRESENT INPUT SIGNAL
REQUIRED TEMP      XXX
PRESENT TEMP       XXX
WATER VALVE FEEDB. XXX
```

```
DIAG CLIMATE      2(8)
TEMP COIL          XXX
TEMP COOLANT       XXX
TEMP AMBIENT       XXX
TEMP DE-ICE        XXX
```

```
DIAG CLIMATE      3(8)
PRESENT  INPUT SIGNAL
PRESSURE SWITCH     X
```

```
DIAG CLIMATE      4(8)
PRESENT INPUT SIGNAL
WATER VALVE     XX.XXV
DRAUGHT VALVE   XX.XXV
```

```
DIAG CLIMATE      5(8)
PRESENT INPUT SIGNAL
REQUIRED TEMP   XX.XXV
REQ. DRAUGHT    XX.XXV
REQ. FAN SPEED  XX.XXV
```

```
DIAG CLIMATE      6(8)
PRESENT OUTPUT SIGNAL
FAN SPEED          XXX
RECIRKULATION       XY
COMPRESSOR          XY
```

```
DIAG CLIMATE      7(8)
OUTPUT WATER VALVE
CLOCKWISE        XY XY
ANTI-CLOCKWISE   XY XY
```

```
DIAG CLIMATE      8(8)
OUTPUT DRAUGHT VALVE
CLOCKWISE        XY XY
ANTI-CLOCKWISE   XY XY
```

004843

8.4.5 HYD

HYD, menu overview

```
DIAGNOSIS
CAN/POWER LIGHTS CAB
CLIMATE HYD ENGINE
TRANSM BOOM ATTACH
OP EXTRA HIST
```

```
DIAG HYD          1(6)
HYDRAULIC OIL
TEMP               XXX
FAN                 XY
```

```
DIAG HYD          2(6)
BRAKE COOLANT OIL
TEMP               XXX
FAN                 XY
```

```
DIAG HYD          3(6)
PRESSURE LIFTING CYL
             Le     Ri
C-          XXX    XXX
C+          XXX    XXX
```

```
DIAG HYD          4(6)
PRESSURE SWITCHES
BRAKE PRESSURE      X
BRAKE LIGHT PRESS.  X
DECLUTCH PRESSURE   X
```

```
DIAG HYD          5(6)
P-BRAKE
SWITCH            X/Y
FEEDBACK SWITCH     X
VALVE              XY
```

```
DIAG HYD          6(6)
PRESENT OUTPUT SIGNAL
PRESSURE TO ATTACHM.
VALVE               XY
```

004844

https://truckmanualshub.com/

8.4.6 ENGINE

ENGINE, menu overview

```
DIAGNOSIS
CAN/POWER LIGHTS CAB
CLIMATE HYD ENGINE
TRANSM BOOM ATTACH
OP EXTRA HIST
```

```
DIAG ENGINE        1(10)
PRESENT INPUT SIGNAL
ACCELERATOR       X.XXV
REQUIRED SPD KCU  XXXX
REQUIRED SPD TCU  XXXX
```

```
DIAG ENGINE        2(10)
PRESENT INPUT SIGNAL
ENGINE SPEED EDC  XXXX
ENGINE SPEED TCU  XXXX
```

```
DIAG ENGINE        3(10)
PRESENT INPUT SIGNAL
PRESENT TORQUE     XXX
REQUIRED TORQUE    XXX
```

```
DIAG ENGINE        4(10)
PRESENT INPUT SIGNAL
PREHEAT SWITCH       X
CRANK ENGINE SWITCH  X
D+                   X
```

```
DIAG ENGINE        5(10)
PRESENT OUTPUT SIGNAL
PREHEAT              X
CRANK ENGINE         X
```

```
DIAG ENGINE        6(10)
PRESENT INPUT SIGNAL
OIL PRESSURE       XXX
BOOST PRESSURE     XXX
```

```
DIAG ENGINE        7(10)
PRESENT INPUT SIGNAL
OIL TEMP           XXX
COOLANT TEMP       XXX
INTAKE MAIN.TEMP   XXX
```

```
DIAG ENGINE        8(10)
PRESENT EDC ERROR   XX
SPN/FMI 1      XXXX/XX
SPN/FMI 2      XXXX/XX
SPN/FMI 3      XXXX/XX
```

```
DIAG ENGINE        9(10)
AVERAGE FUEL CONS
CUMULATIVE           X
MOMENTARILY          X
```

```
DIAG ENGINE       10(10)
SERIAL NUMBERS
CONTROLLER         ???
S/W VERSION        ???
ENGINE             ???
```

004845

https://truckmanualshub.com/

8.4.7 TRANSM

TRANSM, menu overview

```
DIAGNOSIS
CAN/POWER LIGHTS CAB
CLIMATE HYD ENGINE
TRANSM BOOM ATTACH
OP EXTRA HIST
```

```
DIAG TRANSM.      1(15)
PRESENT INPUT SIGNAL
BRAKE PEDAL      X.XXV
DECLUTCH SWITCH      X
DECLUTCH PRESS SW.   X
```

```
DIAG TRANSM.      2(15)
SWITCHES
FORWARD              X
REVERSE              X
SHIFT MODE           X
```

```
DIAG TRANSM.      3(15)
PRESENT VALUE
FORWARD              X
REVERSE              X
GEAR                 X
```

```
DIAG TRANSM.      4(15)
OPERATING STATE
AUT/MAN MODE         X
WARNING              X
OPERATING MODE       X
```

```
DIAG TRANSM.      5(15)
OPERATING STATE
SHIFT IN PROGRESS    X
FAULT                X
OLD FAULT            X
```

```
DIAG TRANSM.      6(15)
DRUM SPEED       XXXXHz
OUTPUT SPEED     XXXXHz
ENGINE SPEED     XXXXHz
TURBINE SPEED    XXXXHz
```

```
DIAG TRANSM.      7(15)
OUTPUT STATUS
RSP DRIVE          X X
2/4 VFS SELECTION    X
1/3 VFS SELECTION    X
```

```
DIAG TRANSM.      8(15)
FWD SUPPLY           X
REV SUPPLY           X
2/4 SUPPLY           X
1/3 SUPPLY           X
```

```
DIAG TRANSM.      9(15)
FWD FEEDBACK      XXXX
REV FEEDBACK      XXXX
2/4 FEEDBACK      XXXX
1/3 FEEDBACK      XXXX
```

```
DIAG TRANSM.     10(15)
PRESENT SENSOR INPUT
PRESS FEEDBACK    XXXX
TRANSM.TEMP       XXXX
COOLER TEMP       XXXX
```

```
DIAG TRANSM.     11(15)
PRESENT VALUE
AXLE RATIO       XXXXX
RADIUS            XXXX
SPEED LIMITx10    XXXX
```

```
DIAG TRANSM.     12(15)
VEHICLE ID GEARBOX

                 ZXXXXX
```

```
DIAG TRANSM.     13(15)
ACT ERROR AREA     XXX
TYPE               XXX
NUMBER OF OCCU.  XXXXX
TIME AGO         XXXXX
```

```
DIAG TRANSM.     14(15)
INACT ERROR AREA   XXX
TYPE               XXX
NUMBER OF OCCU.  XXXXX
TIME AGO         XXXXX
```

```
DIAG TRANSM.     15(15)
SERIAL NUMBERS
CONTROLLER       XXXXXX
S/W VERSION        XXXX
TRANSMISSION     XXXXXX
```

004846

https://truckmanualshub.com/

8.4.8 BOOM

BOOM, menu overview

```
DIAGNOSIS
CAN/POWER LIGHTS CAB
CLIMATE HYD ENGINE
TRANSM BOOM ATTACH
OP EXTRA HIST
```

```
DIAG BOOM          1(8)
PRESENT INPUT SIGNALS
BOOM UP/DOWN    XX.XXV
BOOM IN/OUT     XX.XXV
```

```
DIAG BOOM          2(8)
BLOCK VALVES
UP/DOWN    LE XY RI XY
IN/OUT              XY
RELIEVE PRESS. IN   XY
```

```
DIAG BOOM          3(8)
BOOM HIGH SPEED
UP         LE XY RI XY
OUT                 XY
```

```
DIAG BOOM          4(8)
OUTPUT BOOM UP
REFERENCE           XY
REQUIRED VALUE     XXX
FEEDBACK           XXX
```

```
DIAG BOOM          5(8)
OUTPUT BOOM DOWN
REFERENCE           XY
REQUIRED VALUE     XXX
FEEDBACK           XXX
```

```
DIAG BOOM          6(8)
OUTPUT BOOM IN
REFERENCE           XY
REQUIRED VALUE     XXX
FEEDBACK           XXX
```

```
DIAG BOOM          7(8)
OUTPUT BOOM OUT
REFERENCE           XY
REQUIRED VALUE     XXX
FEEDBACK           XXX
```

```
DIAG BOOM          8(8)
PRESENT INPUT SIGNAL
BOOM LOW SPEED
UP/DOWN              X
IN/OUT             X/X
```

004847

https://truckmanualshub.com/

8.4.9 ATTACH

ATTACH, menu overview

```
DIAGNOSIS
CAN/POWER LIGHTS CAB
CLIMATE HYD ENGINE
TRANSM BOOM ATTACH
OP EXTRA HIST
```

```
DIAG ATTACHMENT  1(21)
PRESENT INPUT SIGNALS
ROT CW/CCW      XX.XXV
TILT IN/OUT     XX.XXV
```

```
DIAG ATTACHMENT  2(21)
PRESENT INPUT SIGNALS
SIDE SHIFT   LE X RI X
PISTOL              X
30/35 STOP          X
```

```
DIAG ATTACHMENT  3(21)
PRESENT INPUT SIGNALS
LOCK TW             X
UNLOCK TW           X
BY-PASS HEIGHT      X
```

```
DIAG ATTACHMENT  4(21)
PRESENT INPUT SIGNALS
TILT LOCKING        X
LEVELLING LOCKING   X
OPTIONAL            X
```

```
DIAG ATTACHMENT  5(21)
PRESENT INPUT SIGNALS
LOW SPEED 20/40     X
30/35 STOP          X
EXTENSION 60CM      X
```

```
DIAG ATTACHMENT  6(21)
PRESENT INPUT SIGNALS
ALIGNMENT     LE   RI
FRONT          X    X
REAR           X    X
```

```
DIAG ATTACHMENT  7(21)
PRESENT INPUT SIGNALS
              LE   RI
LOCKED TW      X    X
UNLOCKED TW    X    X
```

```
DIAG ATTACHMENT  8(21)
PRESENT OUTPUT SIGNAL
SIDE SHIFT LEFT    XY
SIDE SHIFT RIGHT   XY
```

```
DIAG ATTACHMENT  9(21)
PRESENT OUTPUT SIGNAL
LOCK TW            XY
UNLOCK TW          XY
```

```
DIAG ATTACHMENT 10(21)
PRESENT OUTPUT SIGNAL
IND. LOCKED TW     XY
IND. UNLOCKED TW   XY
IND. ALIGNMENT     XY
```

```
DIAG ATTACHMENT 11(21)
OUTPUT ROTATION C.W.
REFERENCE          XY
RQUIRED VALUE     XXX
FEEDBACK          XXX
```

```
DIAG ATTACHMENT 12(21)
OUTPUT ROTATION C.C.W.
REFERENCE          XY
REQUIRED VALUE    XXX
FEEDBACK          XXX
```

```
DIAG ATTACHMENT 13(21)
OUTPUT SPREADER OUT
REFERENCE          XY
REQUIRED VALUE    XXX
FEEDBACK          XXX
```

```
DIAG ATTACHMENT 14(21)
OUTPUT SPREADER IN
REFERENCE          XY
RQUIRED VALUE     XXX
FEEDBACK          XXX
```

```
DIAG ATTACHMENT 15(21)
PRESENT OUTPUT SIGNAL
TILT LOCKING 1     XY
TILT LOCKING 2     XY
```

```
DIAG ATTACHMENT 16(21)
OUTPUT TILT OUT
REFERENCE          XY
REQUIRED VALUE    XXX
FEEDBACK          XXX
```

```
DIAG ATTACHMENT 17(21)
OUTPUT TILT IN
REFERENCE          XY
REQUIRED VALUE    XXX
FEEDBACK          XXX
```

```
DIAG ATTACHMENT 18(21)
PRESENT OUTPUT SIGNAL
LOCK LEVELLING 1   XY
LOCK LEVELLING 2   XY
```

```
DIAG ATTACHMENT 19(21)
OUTPUT LEVELLING RI
REFERENCE          XY
RQUIRED VALUE     XXX
FEEDBACK          XXX
```

```
DIAG ATTACHMENT 20(21)
OUTPUT LEVELLING LEFT
REFERENCE          XY
RQUIRED VALUE     XXX
FEEDBACK          XXX
```

```
DIAG ATTACHMENT 21(21)
ROTATION STOP
SWITCH              X
SENSOR STOP CW/CCW  X
```

004848

https://truckmanualshub.com/

8.4.10 OP

OP, menu overview

```
DIAGNOSIS
CAN/POWER LIGHTS CAB
CLIMATE HYD ENGINE
TRANSM BOOM ATTACH
OP EXTRA HIST
```

```
DIAG OP          1(5)
PRESENT INPUT SIGNAL
STEERING AXLE       X
BOOM ANGLE          X
EXTENSION           X
```

```
DIAG OP          2(5)
PRESENT INPUT SIGNAL

BY-PASS             X
```

```
DIAG OP          3(5)
PRESENT INPUT SIGNAL
LIFT CYL  LE     RI
C-        X.XXV  X.XXV
C+        X.XXV  X.XXV
```

```
DIAG OP          4(5)
PRESENT INPUT SIGNAL
BOOM ANGLE      X.XXV
BOOM EXTENSION  X.XXV
```

```
DIAG OP          5(5)
ALLOWED LOAD    XX.XX
PRESENT LOAD    XX.XX
LOAD STR.ANGEL  XX.XX
LOAD-CENTER     XX.XX
```

004849

https://truckmanualshub.com/

8.4.11 EXTRA

8.4.11.1 COMBI

COMBI, menu overview

```
DIAGNOSIS
CAN/POWER LIGHTS CAB
CLIMATE HYD ENGINE
TRANSM BOOM ATTACH
OP EXTRA HIST
```

```
DIAGNOSIS EXTRA
COMBI SLIDING-CAB
SUPPORT-JACKS
EL-STEERING
```

```
DIAG COMBI        1(17)
SWITCHES
FRONT LEG UP/DOWN  X/Y
REAR LEG UP/DOWN   X/Y
CLAMP IN/OUT       X/Y
```

```
DIAG COMBI        2(17)
PRESENT INPUT SIGNAL
CLAMPING SENSORS
FRONT LEGS  LE X  RI X
REAR LEGS   LE X  RI X
```

```
DIAG COMBI        3(17)
PRESENT INPUT SIGNAL
ALIGNMENT SENSORS
FRONT LEGS  LE X  RI X
REAR LEGS   LE X  RI X
```

```
DIAG COMBI        4(17)
PRESENT INPUT SIGNAL
END POS SENSORS FRONT
KNEE        LE X  RI X
LEG         LE X  RI X
```

```
DIAG COMBI        5(17)
PRESENT INPUT SIGNAL
END POS SENSORS REAR
KNEE        LE X  RI X
LEG         LE X  RI X
```

```
DIAG COMBI        6(17)
PRESENT INPUT SIGNAL
LEGS IN DRIVE
POSITION    LE X  RI X
```

```
DIAG COMBI        7(17)
INDICATION LAMPS
ALIGNMENT
FRONT     LE XY  RI XY
REAR      LE XY  RI XY
```

```
DIAG COMBI        8(17)
INDICATION LAMPS
CLAMP
FRONT              XY
REAR               XY
```

```
DIAG COMBI        9(17)
INDICATION LAMPS

FRONT LEGS UP      XY
FRONT LEGS DOWN    XY
```

```
DIAG COMBI       10(17)
PRESENT OUTPUT SIGNAL
FRONT LEGS DOWN
KNEE      LE XY  RI XY
LEGS      LE XY  RI XY
```

```
DIAG COMBI       11(17)
PRESENT OUTPUT SIGNAL
FRONT LEGS UP
KNEE      LE XY  RI XY
LEGS      LE XY  RI XY
```

```
DIAG COMBI       12(17)
PRESENT OUTPUT SIGNAL
REAR LEGS DOWN
KNEE      LE XY  RI XY
LEGS      LE XY  RI XY
```

```
DIAG COMBI       13(17)
PRESENT OUTPUT SIGNAL
REAR LEGS UP
KNEE      LE XY  RI XY
LEGS      LE XY  RI XY
```

```
DIAG COMBI       14(17)
SEQUENCE MODE
              LE    RI
FRONT          X     X
REAR           X     X
```

```
DIAG COMBI       15(17)
PRESENT OUTPUT SIGNAL
CLAMP         LE    RI
OUT           XY    XY
IN            XY    XY
```

```
DIAG COMBI       16(17)
PRESENT OUTPUT SIGNAL
DRIVE POSITION

          LE XY  RI XY
```

```
DIAG COMBI       17(17)
FORCE CONTROL (+/-)

"VALVE"
```

004850

https://truckmanualshub.com/

8.4.11.2 SLIDING-CAB

SLIDING-CAB, menu overview

```
DIAGNOSIS
CAN/POWER LIGHTS CAB
CLIMATE HYD ENGINE
TRANSM BOOM ATTACH
OP EXTRA HIST
```

```
DIAGNOSIS EXTRA
COMBI SLIDING-CAB
SUPPORT-JACKS
EL-STEERING
```

```
DIAG SLID-CAB    1(4)
SWITCHES
FORWARD            X
REVERSE            X
OPENED DOORS       X
```

```
DIAG SLID-CAB    2(4)
PRESENT INPUT SIGNAL
LOW SPEED          X
CAB DOWN     (LIFT) X
```

```
DIAG SLID-CAB    3(4)
OUTPUT FORWARD
REFERENCE         XY
REQUIRED VALUE   XXX
FEEDBACK         XXX
```

```
DIAG SLID-CAB    4(4)
OUTPUT REVERSE
REFERENCE         XY
REQUIRED VALUE   XXX
FEEDBACK         XXX
```

004858

https://truckmanualshub.com/

8.4.11.3 SUPPORT-JACKS

SUPPORT-JACKS, menu overview

```
DIAGNOSIS
CAN/POWER LIGHTS CAB
CLIMATE HYD ENGINE
TRANSM BOOM ATTACH
OP EXTRA HIST
```

```
DIAGNOSIS EXTRA
COMBI SLIDING-CAB
SUPPORT-JACKS
EL-STEERING
```

```
DIAG S-JACKS      1(4)
SWITCHES
UP                   X
DOWN                 X
```

```
DIAG S-JACKS      2(4)
PRESENT INPUT SIGNALS

UP          LE X  RI X
DOWN        LE X  RI X
```

```
DIAG S-JACKS      3(4)
OUTPUT VALVE
S-J UP              XY
S-J DOWN            XY
```

```
DIAG S-JACKS      4(4)
INDICATOR LAMP

DOWN                XY
```

004859

https://truckmanualshub.com/

8.4.11.4 EL-STEERING

EL-STEERING, menu overview

```
DIAGNOSIS
CAN/POWER LIGHTS CAB
CLIMATE HYD ENGINE
TRANSM BOOM ATTACH
OP EXTRA HIST
```

```
DIAGNOSIS EXTRA
COMBI SLIDING-CAB
SUPPORT-JACKS
EL-STEERING
```

```
DIAG STEERING      1(5)
PRESENT INPUT SIGNAL
SIGNAL 1         X.XXV
SIGNAL 2         X.XXV
```

```
DIAG STEERING      2(5)
SWITCHES
ON/OFF               X
FORWARD              X
REVERSE              X
```

```
DIAG STEERING    3(5)
PRESENT INPUT SIGNAL
HORN                 X
STEER.WHEEL SIG. 1   X
STEER.WHEEL SIG. 2   X
```

```
DIAG STEERING    4(5)
OUTPUT STEERING LEFT
REFERENCE           XY
REQUIRED VALUE     XXX
FEEDBACK           XXX
```

```
DIAG STEERING    5(5)
OUTPUT STEERING RIGHT
REFERENCE           XY
REQUIRED VALUE     XXX
FEEDBACK           XXX
```

004860

https://truckmanualshub.com/

8.5 Setup

Settings, general

Settings are the possibilities to adapt the functions' features to each unique machine. Settings are performed via menus on the display. The settings are split up as Initiation and Calibration

Initiation is performed before the machine is used for work. This is to compensate for mechanical and electrical tolerances (variations between different machines).

Calibration should be performed for optimal use of important functions. Certain functions require calibration in order to work.

https://truckmanualshub.com/

https://truckmanualshub.com/

Table of Contents 9 Frame, body, cab and accessories

9 Frame, body, cab and accessories 3
9.1 Controls and instrumentation 4
9.2 Protection and emergency equipment 10
9.3 Seat 11
9.4 HVAC 12
9.4.1 Fresh air filter 17
9.4.8 Condenser 18
9.4.9 Humidity filter 18
9.5 Wiper/washer system 20
9.6 Lighting system 21
9.7 Communication systems 22
9.8 Entertainment and communication 23
9.9 Glass/windows/mirrors 24
9.10 Cab structure and suspension 25
9.10.4 Longitudinal displacement of cab 25
9.10.5 Vertically adjustable cab 28
9.11 Cab interior 31
9.12 Frame 32
9.13 Body 33
9.14 Central lubrication 34
9.15 Paint/coatings 35

https://truckmanualshub.com/

https://truckmanualshub.com/

9 Frame, body, cab and accessories

Frame, body, cab and accessories, description

The machine consists of frame, body and cab.

The **frame** (chassis) is the machine's structural part and is made of high strength steel.

The **body** comprises wings, engine cover, tanks and other parts mounted on the frame.

The **cab** is built separately and isolated from the frame using heavy-duty rubber dampers. The operator's seat, steering wheel and control lever for hydraulics can be adjusted for optimal individual operating position. Effective insulation results in minimal vibrations and a low sound level. The machine is equipped with a heating and ventilation system, and can be equipped with an optional air conditioning system.

https://truckmanualshub.com/

9.1 Controls and instrumentation

Controls and instruments, overview

Overview

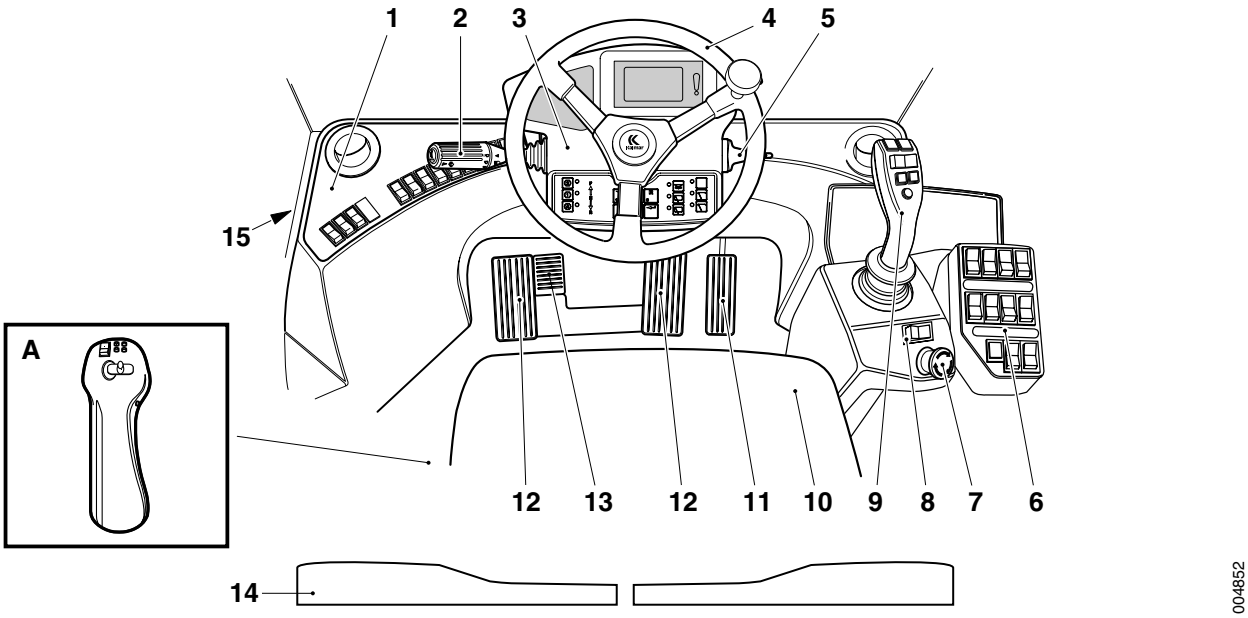

1 Left instrument panel
2 Gear and multi-function lever (S162)
3 Steering wheel panel
4 Steering wheel
5 Switch direction indicators (S161)
6 Panel for load handling functions
7 Switch control breaker (S250)
8 Switch parking brake (S107)
9 Control lever (S815)
10 Operator's seat
11 Accelerator pedal (B690)
12 Brake pedal
13 Declutch pedal (S220-1)
14 Electrical distribution box with fuses
15 Hour meter (P708)

A Steering joystick or mini-wheel ⊕

https://truckmanualshub.com/

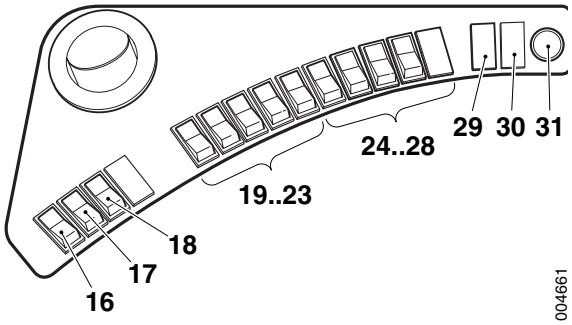

Left instrument panel

Left instrument panel

16 Switch fan (S118)
17 Switch temperature (S139)
18 Switch air distribution (S117)
19 Switch work lights cab roof (S105-1)
20 Switch work lights attachment (S105-2)
21 Switch work lights boom (S105-3)
22 Switch rotating beacon (S110)
23 Switch hazard flashers (S109)
24 Switch headlights (S100)
25 Switch seat heating (S143) ⊕
26 Spare
27 Spare
28 Switch pause heater ⊕
29 Spare
30 Spare
31 Socket 24 VDC ⊕
32 Spare
33 Spare

https://truckmanualshub.com/

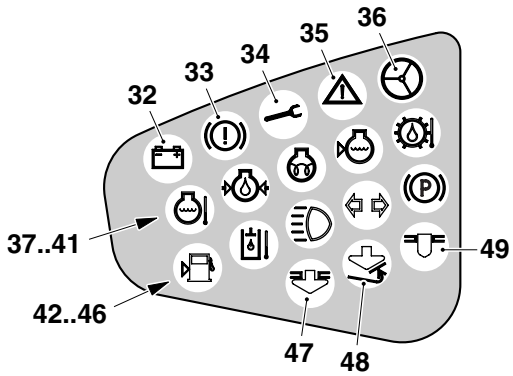

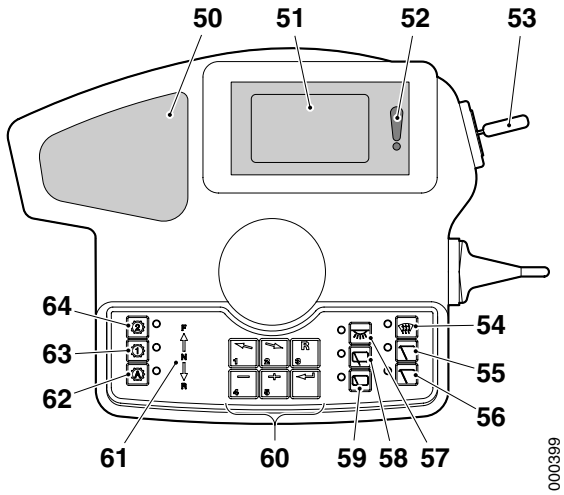

Steering wheel panel with panel for warning and indicator lights

Steering wheel panel

34 Warning light low battery charging
35 Warning light low brake pressure
36 Indicator active error codes
37 Warning light by-pass of hydraulic functions
38 Indicator light activated steering with joystick or mini-wheel
39 Warning light high coolant temperature
40 Warning light low oil pressure in engine
41 Indicator light preheating
42 Warning light low coolant level engine
43 Warning light high oil temperature in transmission
44 Warning light low fuel level
45 Warning light high temperature hydraulic oil
46 Indicator light high beams
47 Indicator light direction indicators
48 Indicator light parking brake
49 Indicator light locked twistlocks
50 Indicator light alignment
51 Indicator light unlocked twistlocks
52 Panel warning and indicator lights
53 Display control and monitoring system
54 Indicator control and monitoring system
55 Ignition (S150)
56 Switch defroster
57 Switch windshield wiper roof, interval
58 Switch windshield wiper roof, continuous
59 Switch interior lighting
60 Switch windshield wiper rear, interval
61 Switch windshield wiper rear, continuous
62 Function keys control and monitoring system
63 Travel direction indicator, Forward Neutral Reverse
64 Switch shifting program A, automatic shifting
65 Switch shifting program 1, locked to 1st gear
66 Switch shifting program 2, locked to 2nd gear

https://truckmanualshub.com/

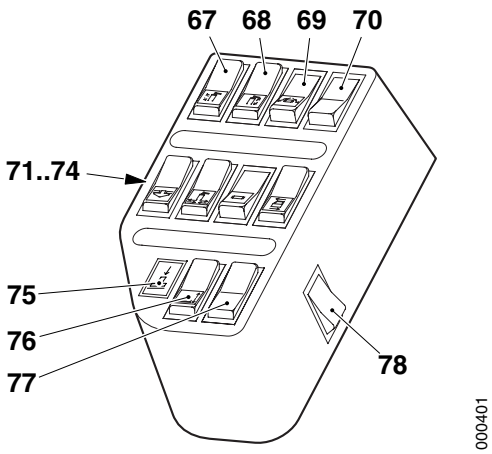

Panel for load handling functions

Panel for load handling functions

67 Switch lowering front legs (S1006) ⊕

68 Switch lowering rear legs (S1007) ⊕

69 Switch by-pass rotation stop (S1014) ⊕

Switch by-pass height limitation (S1015) ⊕

Switch by-pass LC-limitation (load-centre) (S1015) ⊕

70 Spare

71 Switch lock twistlocks (S1003)

72 Switch clamp/release clamping position legs (S1008) ⊕

73 Switch stop at 30' or 35' (S1004) ⊕

74 Switch hydraulic sliding cab (S177) ⊕

Switch hydraulic cab lift and lowering (S177) ⊕

75 Indicator light support jacks down (H517) ⊕

76 Switch support jacks (S1013) ⊕

77 Spare

78 Switch by-pass (S1005)

https://truckmanualshub.com/

Operating menus, overview

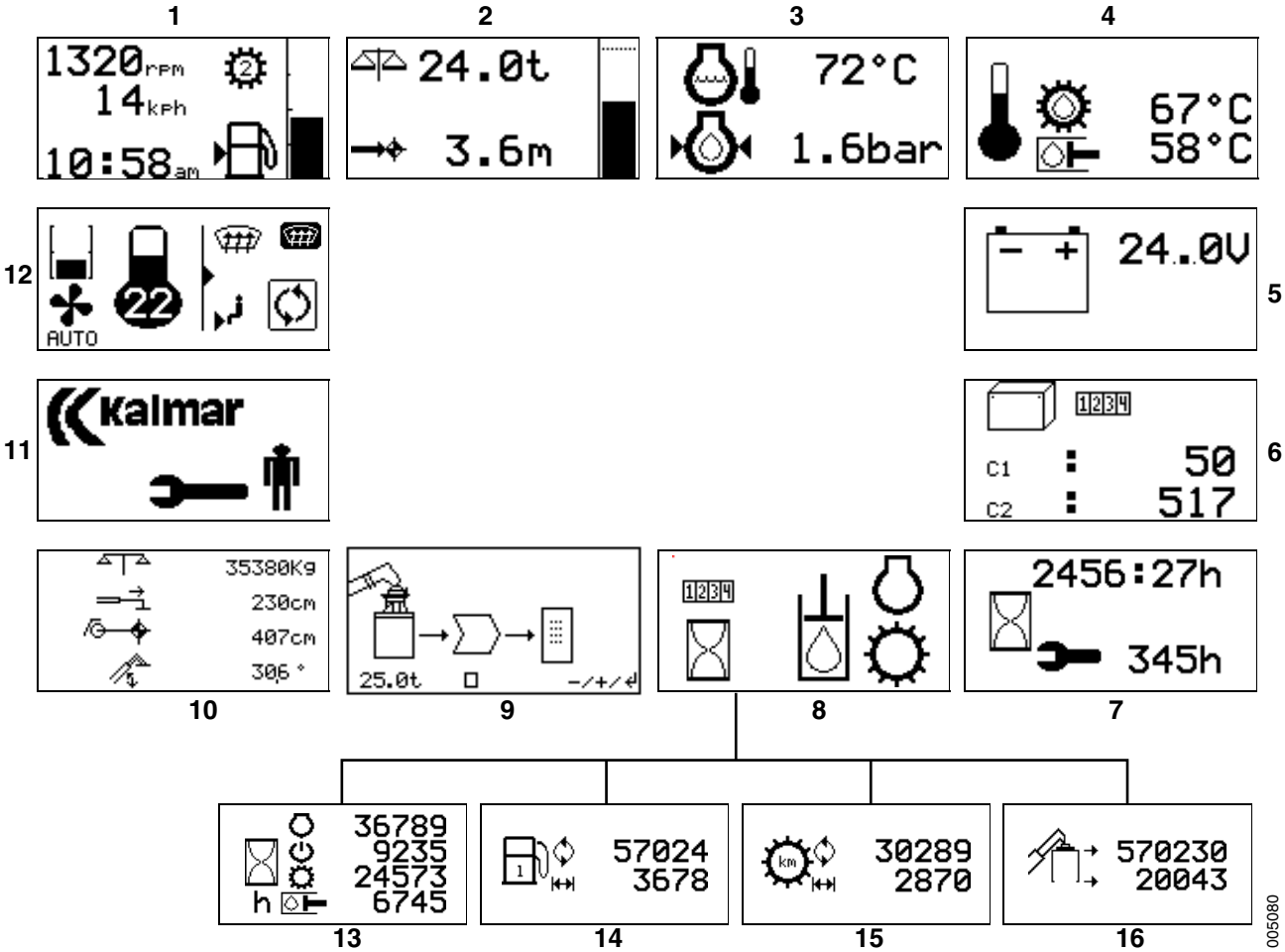

1. Operating menu engine and transmission
2. Operating menu dynamic scale ⊕
3. Operating menu engine
4. Operating menu transmission and hydraulics
5. Operating menu electrical system
6. Operating menu container counter ⊕
7. Operating menu service interval ⊕
8. Operating menu statistics ⊕
9. Operating menu printer ⊕
10. Operating menu checking dynamic scale ⊕
11. Operating menu service
12. Operating menu heating and air conditioning
13. Operating menu statistics, operating hours ⊕
14. Operating menu statistics, fuel consumption ⊕
15. Operating menu statistics, travelled distance ⊕
16. Operating menu statistics, lift statistics ⊕

https://truckmanualshub.com/

Event menus, overview

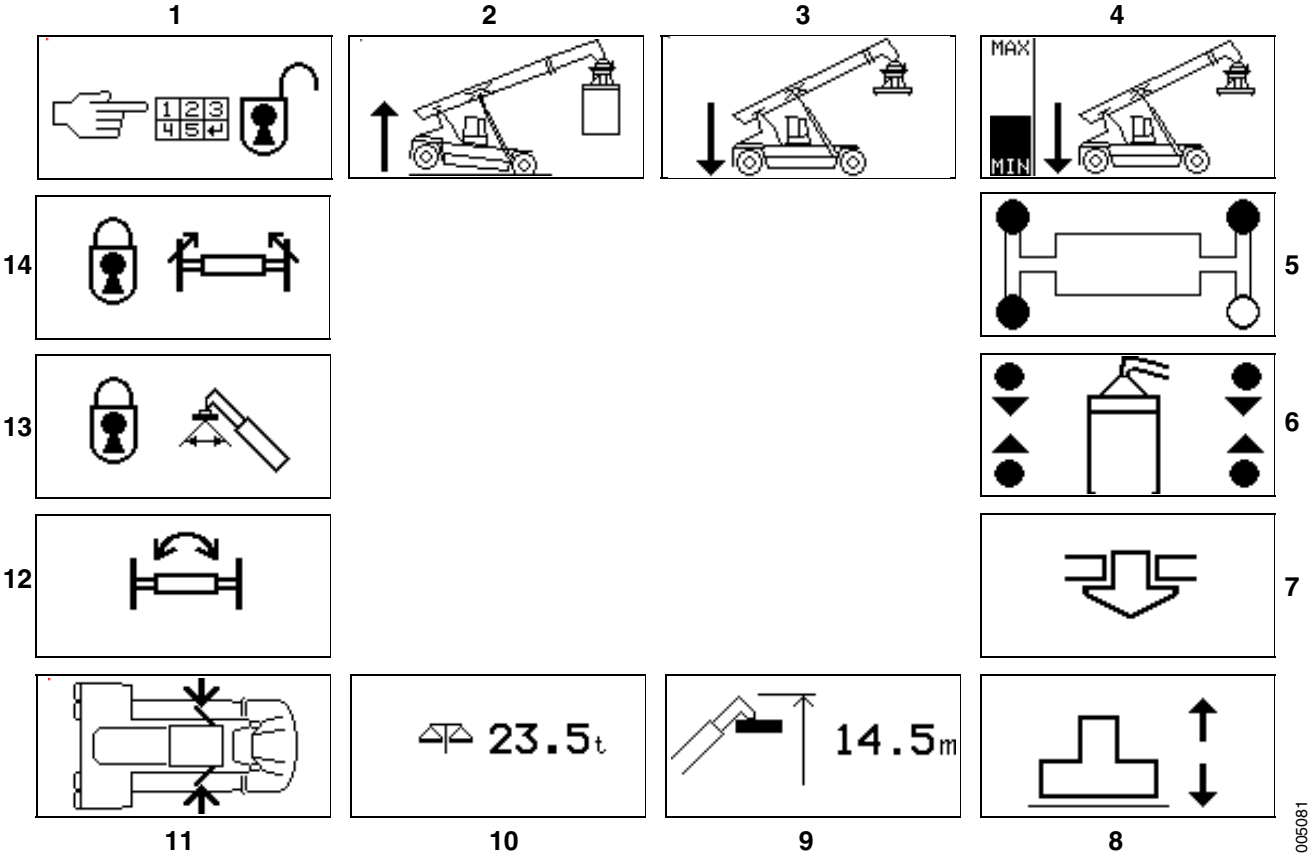

1. Event menu start interlock
2. Event menu overload forward
3. Event menu overload on steering axle
4. Event menu overload on steering axle ⊕
5. Event menu alignment top lift
6. Event menu alignment bottom lift ⊕
7. Event menu twistlocks
8. Event menu support jacks ⊕
9. Event menu height limitation ⊕
10. Event menu fixed scale ⊕
11. Event menu open door ⊕
12. Event menu rotation stop ⊕
13. Event menu tilt lock ⊕
14. Event menu levelling lock ⊕

https://truckmanualshub.com/

9.2 Protection and emergency equipment

Protective and emergency equipment, description

A good working environment has protective and warning equipment to make the operator's work safer.

The machine may be equipped with the following equipment:

1. Back-up alarm ⊕
2. Rotating beacon
3. Horn
4. Electric air horn ⊕
5. Fire extinguisher ⊕

   Fire extinguisher may also be located on the outside.

   If the machine is equipped with a fire extinguisher it should be of the type ABE acc. to EN 3 part 1, 2, 4 and 5. With such a fire extinguisher it is possible to extinguish fires in both solid organic materials and fluids. Adapted fire fighting equipment is available for order from Kalmar Industries.
6. Seat belt ⊕

   For a cab with cab lift and lower, there is always a seat belt as well as safety chains by the doors.
7. Buzzer to indicate alarm/forgotten action, e.g., if the operator has leaves the cab without first applying the parking brake.
8. TV camera with monitor ⊕

   Used to give improved visibility to the rear when operating the machine. The monitor is located inside the cab on the left side.

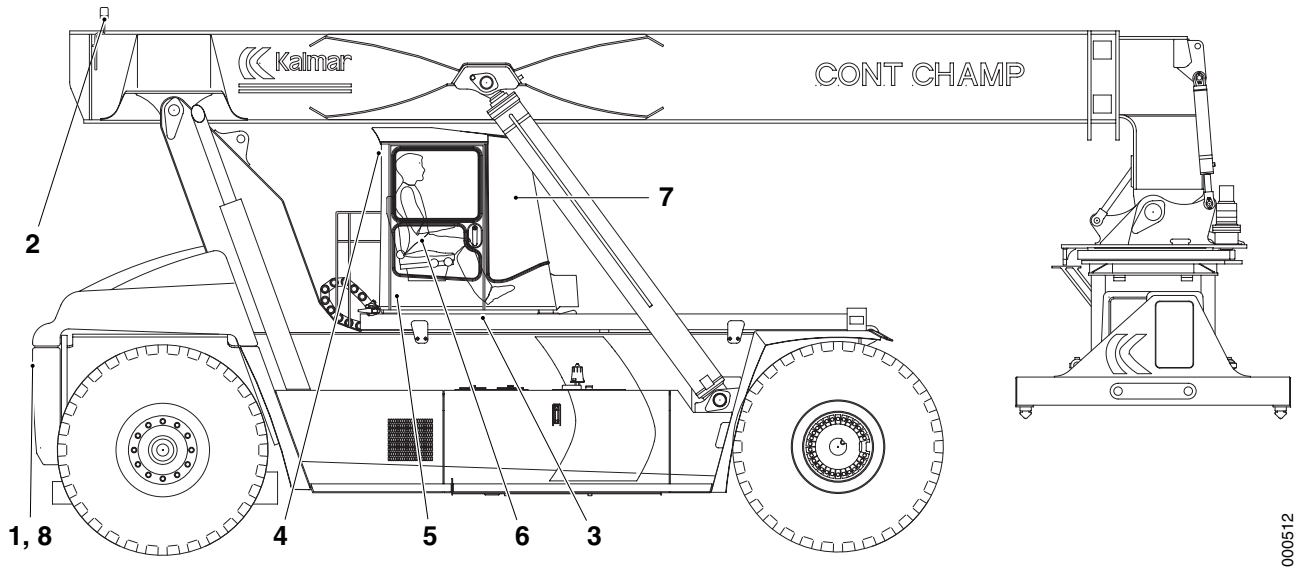

https://truckmanualshub.com/

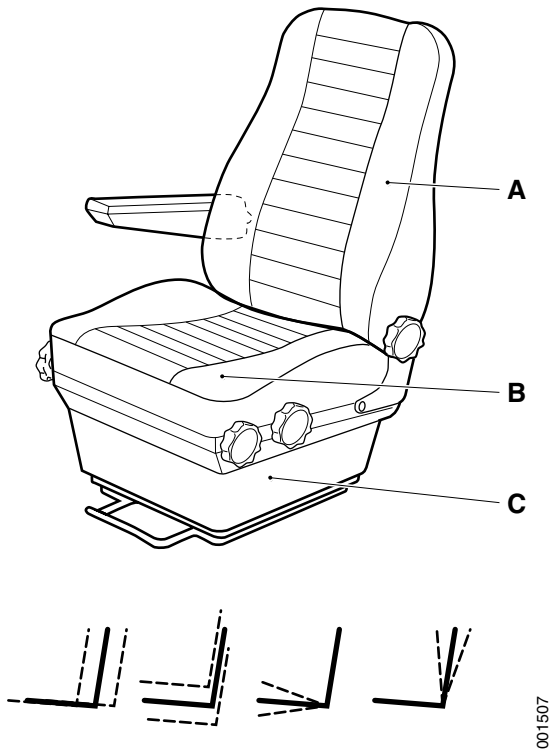

Operator’s seat Bege

9.3 Seat

Seats, description

The seat's function is to give the operator a good sitting position and contribute to a good work environment. The cab's seat has several adjustment possibilities and meets high comfort standards. For adjustment possibilities, see *Operator's manual DRF 400–450*.

The following alternative operator seats with equipment are available:

- Operator’s seat Bege. The seat is equipped with:
  - mechanical adjustment
  - air suspension (with integral compressor) ⊕
  - seat belt ⊕
  - head restraint ⊕
  - armrest left ⊕
  - seat heating ⊕
- Operator’s seat Isringhausen. The seat is equipped with:
  - head restraint
  - armrest
  - air suspension (with external compressor)
  - air-adjusted lower back (lumbar) support
  - seat belt ⊕
  - seat heating

The seat consists of:

A. Back cushion (as well as heating coil ⊕).

B. Seat cushion (as well as heating coil ⊕).

C. Shock absorber (as well as compressor and air suspension ⊕).

https://truckmanualshub.com/

9.4 HVAC

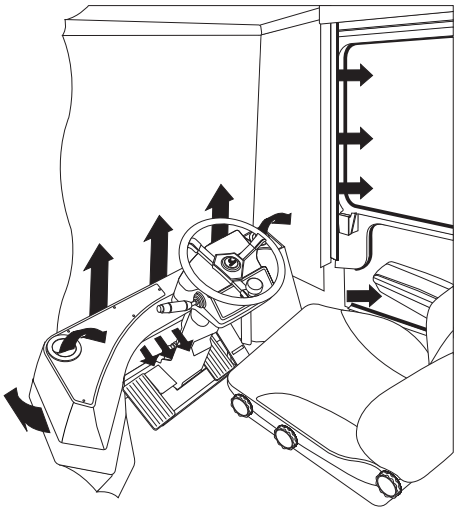

Air vents

Heating and ventilation system, function description (product alternative EHC)

The heating and ventilation system (EHC) handles heating and ventilation. (The heating and ventilation system cannot perform cooling.)

The temperature in the cab is thermostat-controlled by control unit, cab (D790-1). The cab temperature is controlled against set temperature. The temperature can be set between 16 and 28 °C. The unit is operated with controls on the instrument panel.

The heating and ventilation system uses heat from the engine's cooling system via a heating coil to warm the outside air. Outside air is forced by the fan through the heating coil and on through channels in the cab's interior, to be aimed at, e.g., the windshield (defroster) or at the feet.

At the air inlet before the cab fan there is a filter that cleans the air before it is forced into the machine.

The heating and ventilation system can:

- add fresh air to the cab
- clean the air from impurities
- warm the air when it is cold
- defrost the windows (defroster function)

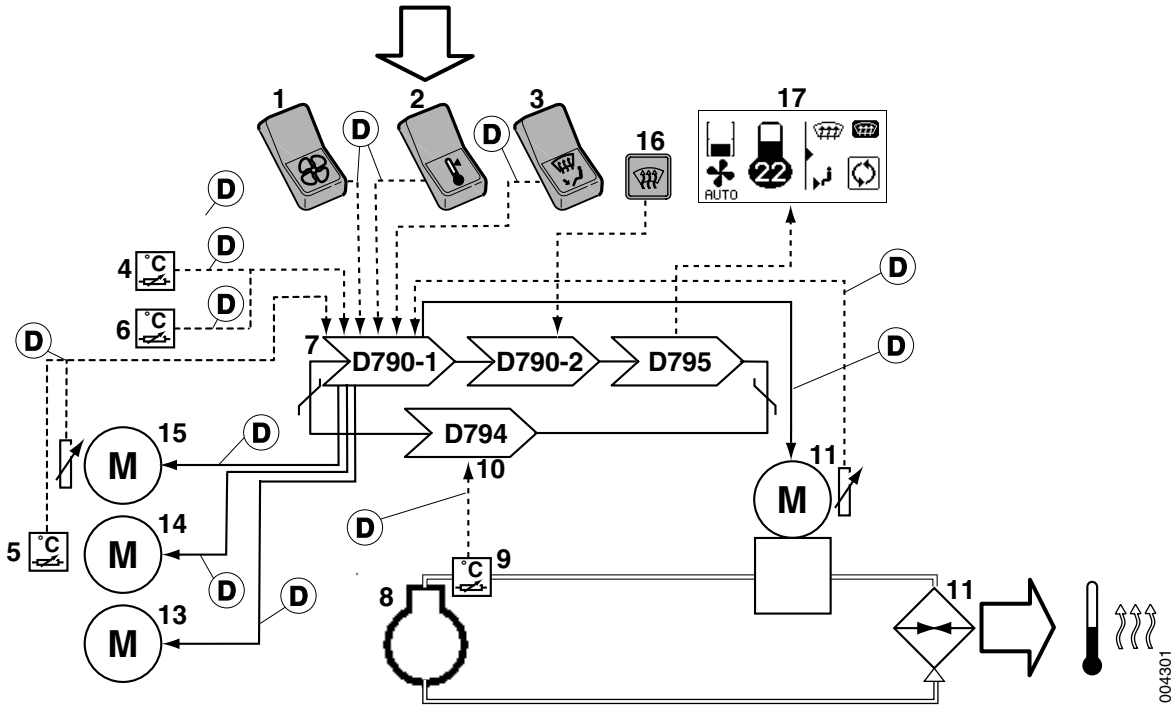

1. Switch fan (S118)
2. Switch temperature (S139)
3. Switch air distribution (S117)
10. Water valve (Y673)
11. Engine
12. Heat exchanger

https://truckmanualshub.com/

4. Sensor cab temperature (B775-1)
5. Sensor temperature outlet fan (B775-2)
6. Sensor outdoor temperature (B774)
7. Sensor engine temperature
8. Control unit cab (D790-1)
9. Sensor temperature in refrigerant circuit (B775-3)
13. Actuator recirculation (M612)
14. Fan motor heat (M657)
15. Damper motor (Y672)
16. Switch defroster on Control unit KIT (D790-2)
17. Operating menu on Control unit KID (D795)

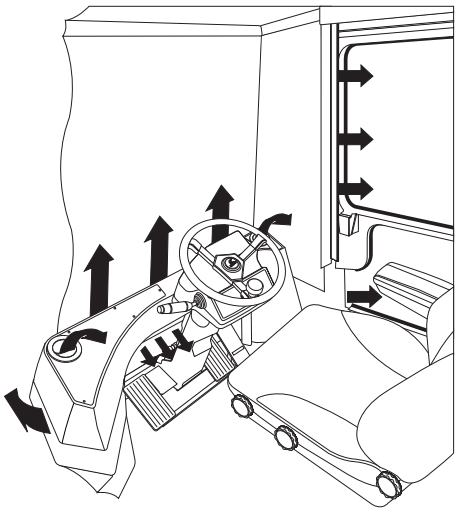

Air vents

Air conditioning, function description (product alternative ECC)

As an option for the heating system there is an air conditioning system, this combination is called (ECC) and handles heating, ventilation, cooling, and dehumidification.

The temperature in the cab is thermostat-controlled by control unit, cab (D790-1). The cab temperature is controlled against set temperature. The temperature can be set between 16 and 28 °C. The unit is operated with controls on the instrument panel.

For cooling the compressor is activated and compresses the refrigerant. The refrigerant evaporates in the evaporator in the cab. When the refrigerant evaporates cold is generated in the evaporator. When the cab air is forced through the evaporator by the cab fan, the air is cooled. Then the air can be controlled in the same way as for the heating system.

The air conditioning system adds the following functions to the heating and ventilation system:

- dehumidification of the air when it is moist (humid)
- cooling of the air when it is warm

https://truckmanualshub.com/

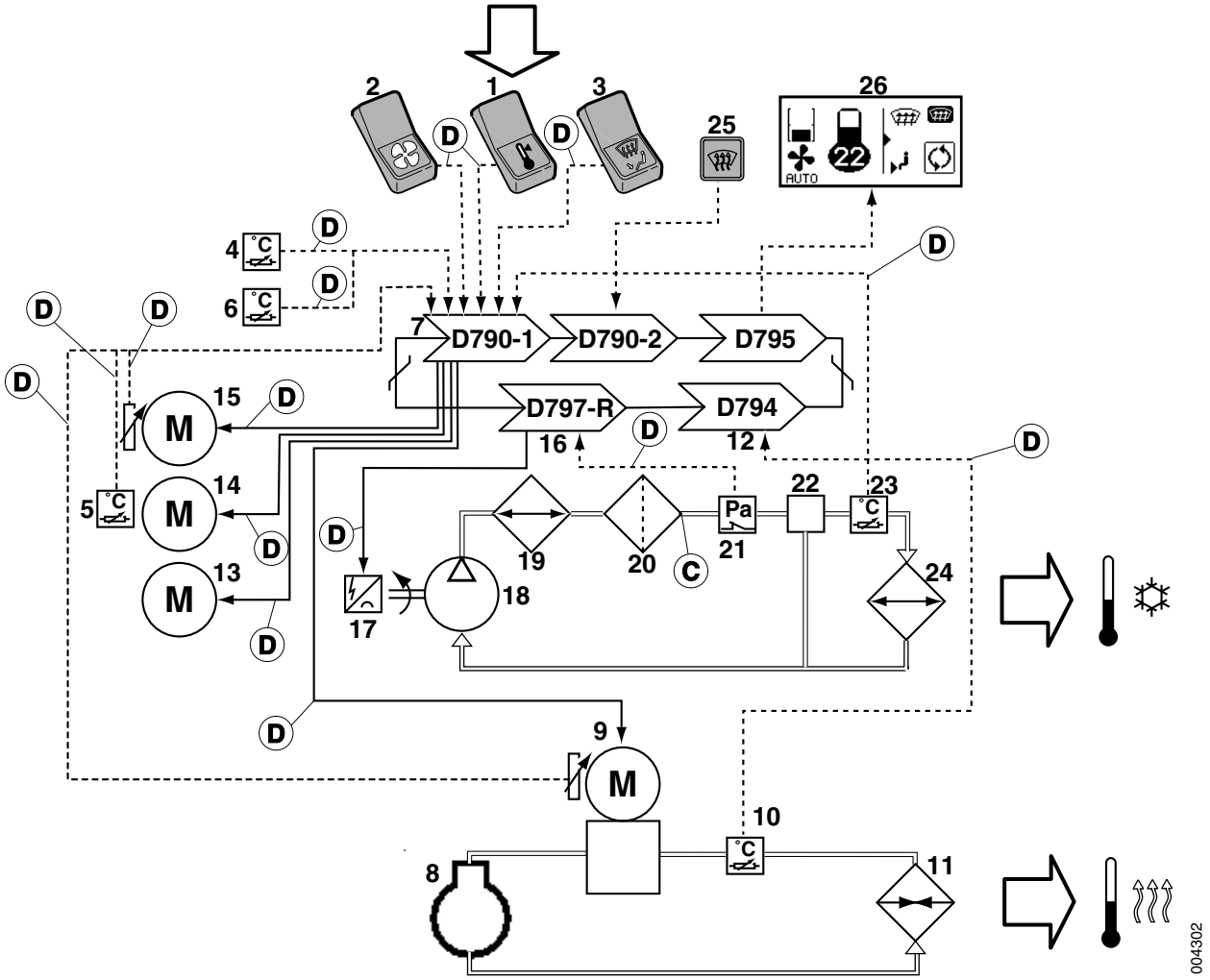

1. Switch temperature (S139)
2. Switch fan (S118)
3. Switch air distribution (S117)
4. Sensor cab temperature (B775-1)
5. Sensor temperature outlet fan (B775-2)
6. Sensor outdoor temperature (B774)
7. Control unit cab (D790-1)
8 Engine
9. Water valve (Y673)
10. Sensor engine temperature
11 Heat exchanger
12. Control unit engine (D794)
13. Actuator recirculation (M612)
14. Fan motor heat (M657)
15. Damper motor (Y672)
16. Control unit frame rear (D797-R)
17. Magnet clutch (M645)
18. Compressor
19. Condenser
20. Humidity filter
21. Pressure monitor (S246)
22. Expansion valve
23. Sensor temperature in refrigerant circuit (B775-3)
24. Heat exchanger for cold
25. Switch defroster on Control unit KIT (D790-2)
26. Operating menu on Control unit KID (D795)

https://truckmanualshub.com/

Heating, ventilation and air conditioning, component position

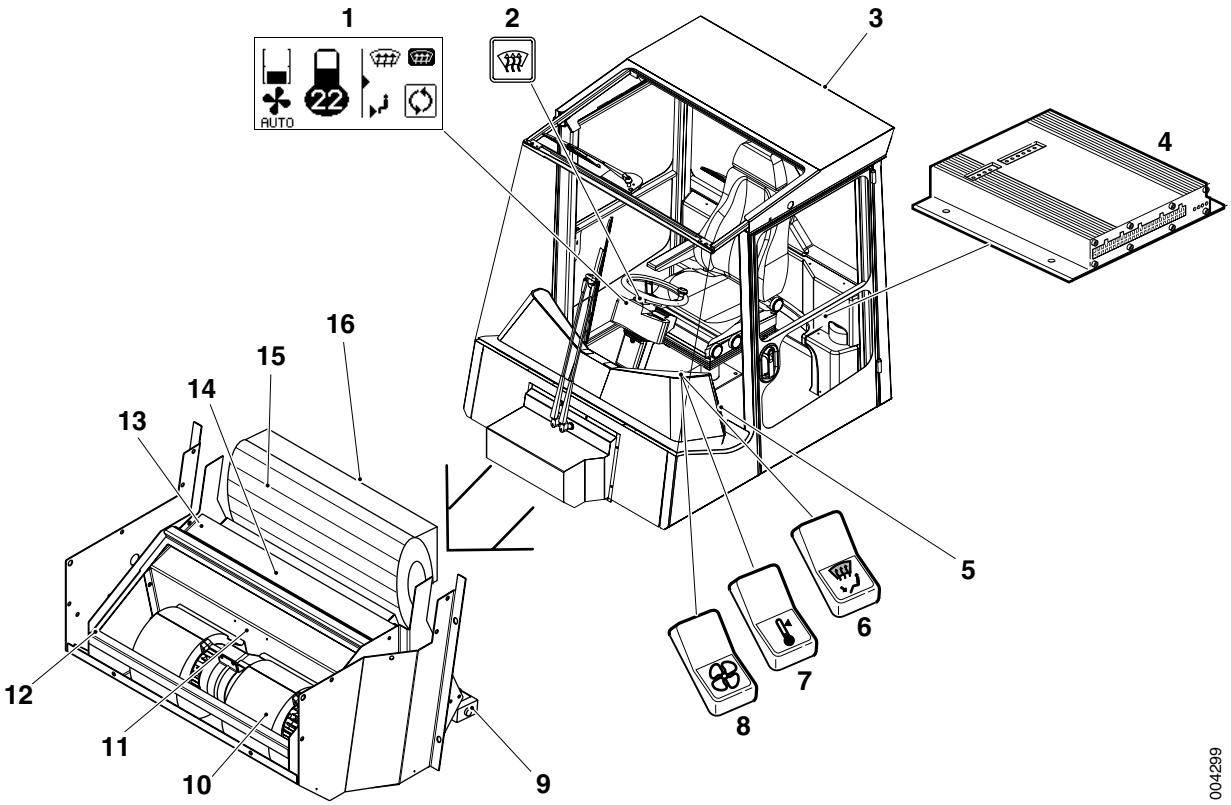

1. Operating menu on Control unit KID (D795)
2. Switch defroster on Control unit KIT (D790-2)
3. Sensor outdoor temperature (B774)
4. Control unit cab (D790-1)
5. Sensor cab temperature (B775-1) (inside the left control panel, behind a grating)
6. Switch air distribution (R8084)
7. Switch temperature (R8083)
8. Switch fan (R8082)
9. Expansion valve
10. Cab fan (M657)
11. Fresh air and recirculation damper (M612)
12. Fresh air filter
13. Heat exchanger (cold and heat)
14. Sensor refrigerant temperature (B775-3)
15. Air distributor (Y672)
16. Sensor temperature outlet fan (B775-2) (in air distributor)

https://truckmanualshub.com/

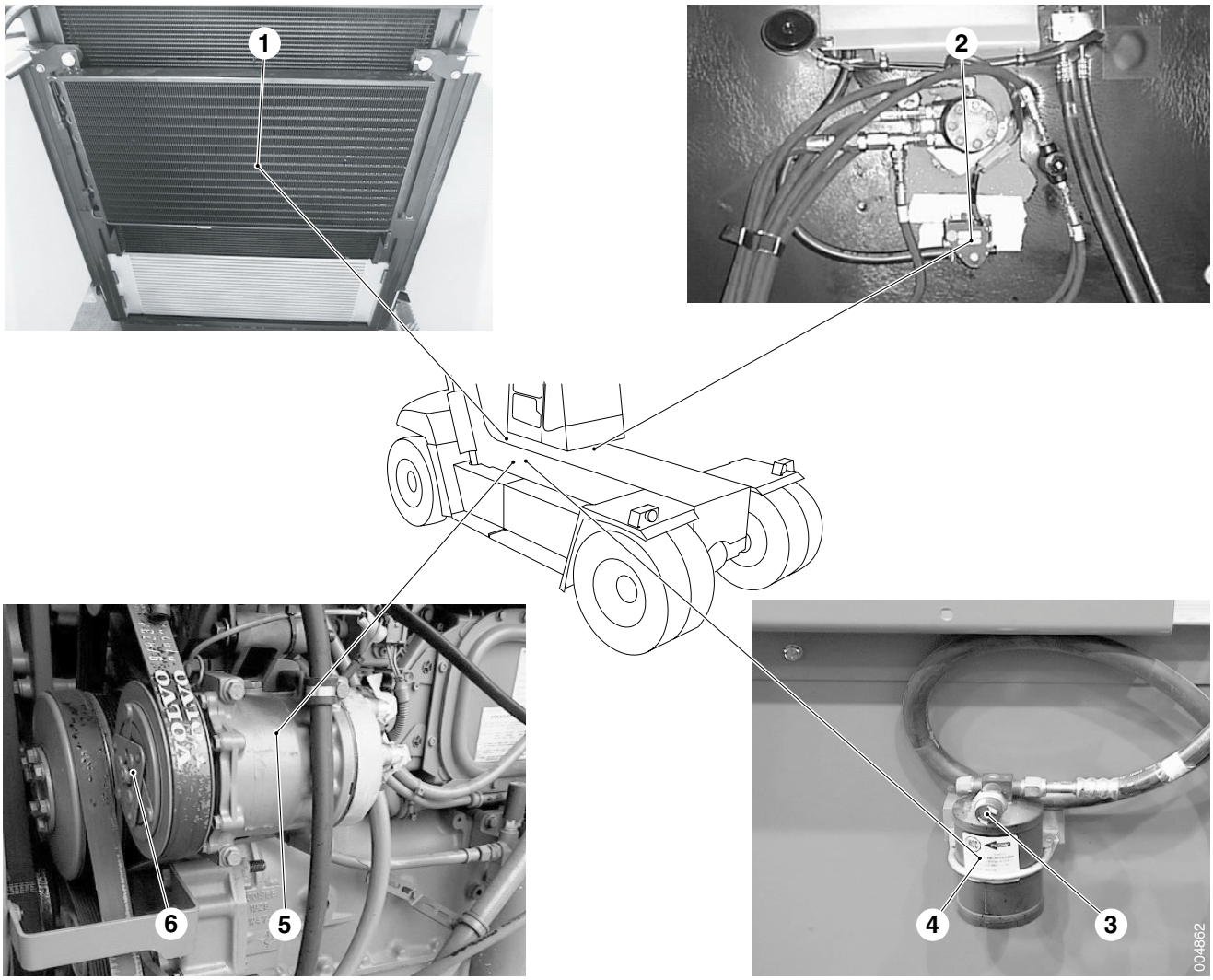

1. Condenser ⊞
2. Water valve (Y673)
3. Pressure monitor (S246) ⊞
4. Humidity filter ⊞
5. Compressor ⊞
6. Magnet clutch (M645) ⊞

https://truckmanualshub.com/

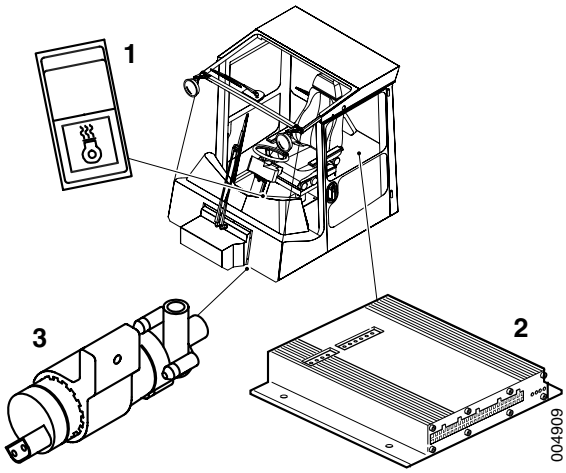

1. Switch pause heater (S0_OPT-1)
2. Control unit cab (D790-1)
3. Circulation pump pause heater (M667)

Pause heater, description

Pause heater is an option for the heating system that uses the surplus heat in the engine's cooling system to keep the cab warm.

An extra electrically driven water pump pumps the coolant through the heating system when the engine is off. The cab fan pumps air into the cab. The pause heater is turned off automatically when the temperature in the cab is six degrees below the set value on the air conditioning system. The pause heater is activated with Switch pause heater when the ignition is on.

9.4.1 Fresh air filter

Fresh air filter, changing

The fresh air filter is located at the front of the cab.

1 Remove the cover and change the fresh air filter.

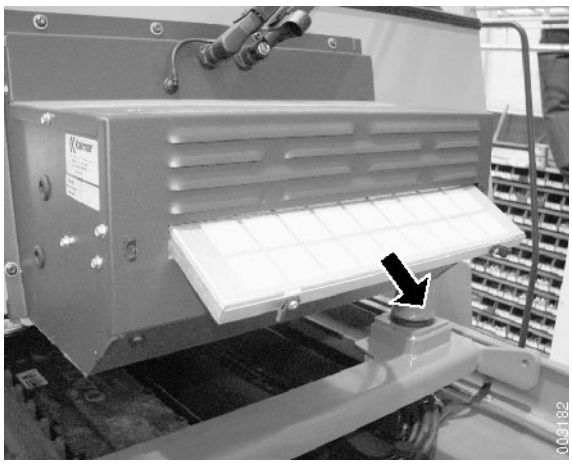

https://truckmanualshub.com/

9.4.8 Condenser

Condenser, cleaning

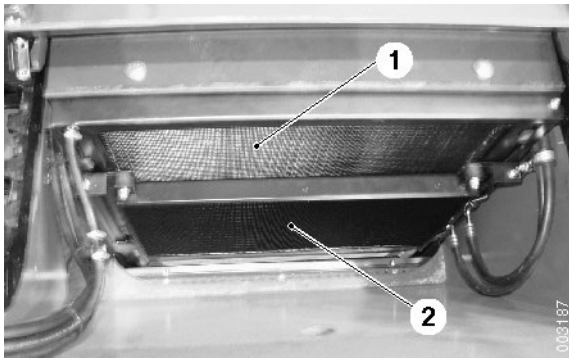

1. Cooler
2. Condenser

1 Machine in service position, see section *B Safety*.

2 Blow the condenser cooler clean using compressed air.

9.4.9 Humidity filter

Humidity filter, checking

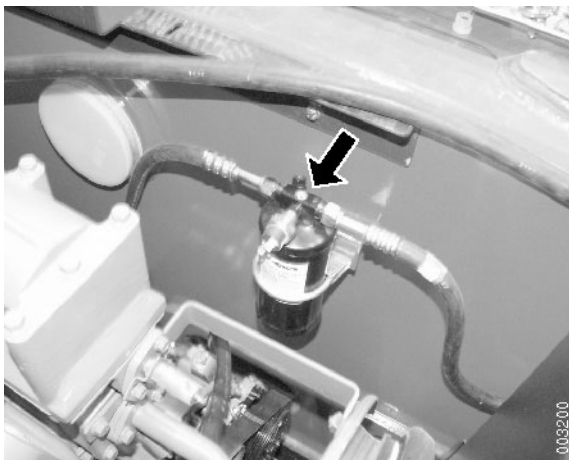

Indicator humidity filter

1 Machine in service position, see section *B Safety*.

2 Start the engine and let it idle.

3 Check the colour of the indicator on the humidity filter.

Blue indication = humidity filter ok.

Grey or pink indication = change humidity filter (see *Humidity filter, changing page 19*).

https://truckmanualshub.com/

Humidity filter, changing

WARNING

Personal injury, environmental damage

Read the safety instructions for refrigerant, see section *B Safety*.

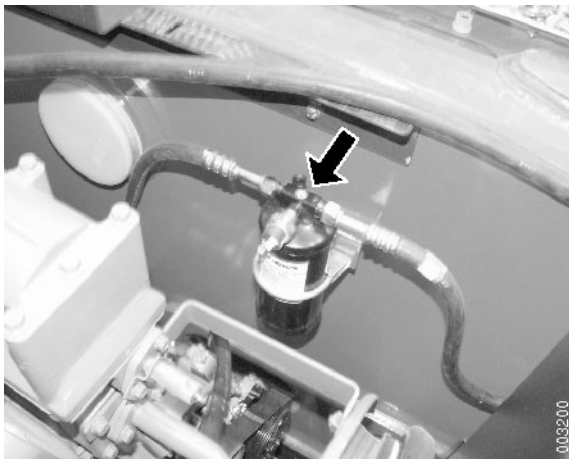

1 Machine in service position, see section *B Safety*.

2 Drain the air conditioning of refrigerant R134a, with the intended draining equipment.

IMPORTANT

Working on the air conditioning requires special authorization.

3 Disconnect hoses and cabling from the humidity filter.

4 Remove the humidity filter pressure switch from the humidity filter.

5 Change the humidity filter.

6 Fit the pressure switch and connect the hoses to the humidity filter.

7 Check for leaks and refill the machine with refrigerant R134a, with the intended equipment.

For volume, see section section *F Technical data*.

https://truckmanualshub.com/

9.5 Wiper/washer system

Wiping/cleaning of windows, description

On the cab, there are wipers for front and rear windshields as well as the roof windows. Its function is to clean the windows and to maintain good visibility from the cab.

The wiper arm is attached to the wiper motor's shaft over a splined cone. The shaft is made of hardened steel and the wiper arm’s attachment is made of mild die cast material.

When installing, it’s very important to make sure that the splines are free from metal filings and similar. Also, the nuts shall be tightened so hard that the splines are pressed into the attachment and act as a flange. Hold still the wiper arm when installing so that the torque isn’t transmitted to the motor, which may be damaged (16–20 Nm tightening torque).

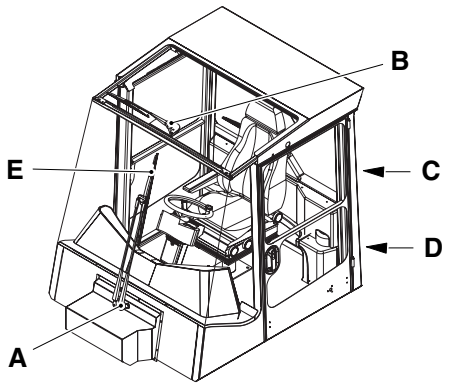

A. Wiper motor front
B. Wiper motor roof
C. Wiper motor rear
D. Washer motor and reservoir
E. Wiper front

https://truckmanualshub.com/

9.6 Lighting system

Lighting system, description

The function of the lighting is to increase safety during operation and load handling. The following lighting is fitted to the machine:

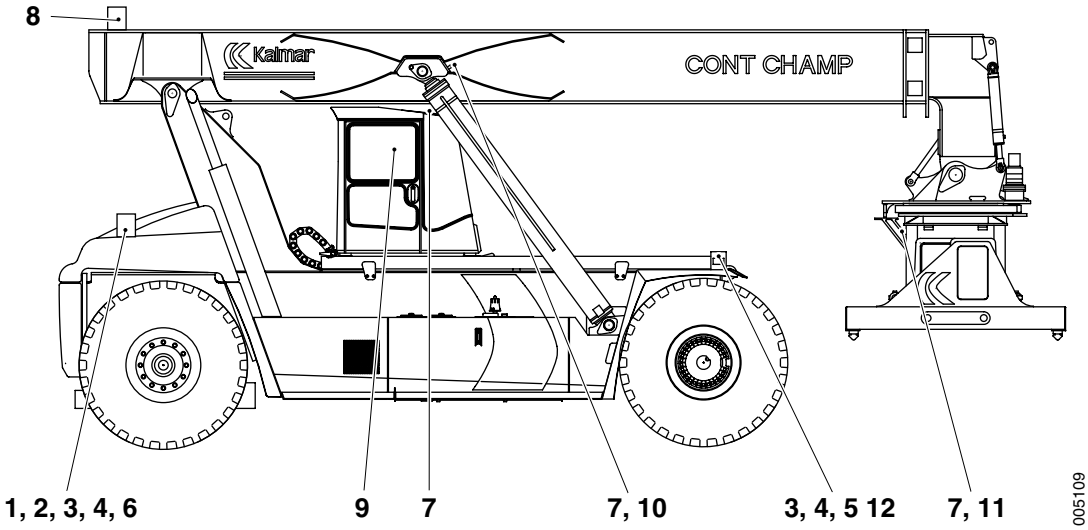

Lighting overview

1. Rear light, red
2. Brake lights
3. Direction indicators
4. Running lights
5. Headlights
6. Reversing light, white
7. Work lights for cab roof, attachment and boom
8. Rotating beacon
9. Interior lighting
10. Extra work lights boom ⊕
11. Extra work lights attachment ⊕
12. Extra work lights front fenders 20'-40' ⊕

NOTE

It is important that the right type of lamp is used for each respective area. See section F Technical data.

https://truckmanualshub.com/

9.7 Communication systems

Communication systems, description

The function of the signals is to increase safety during operation and load handling. This can be via light and sound. The following signal systems are fitted to the machine:

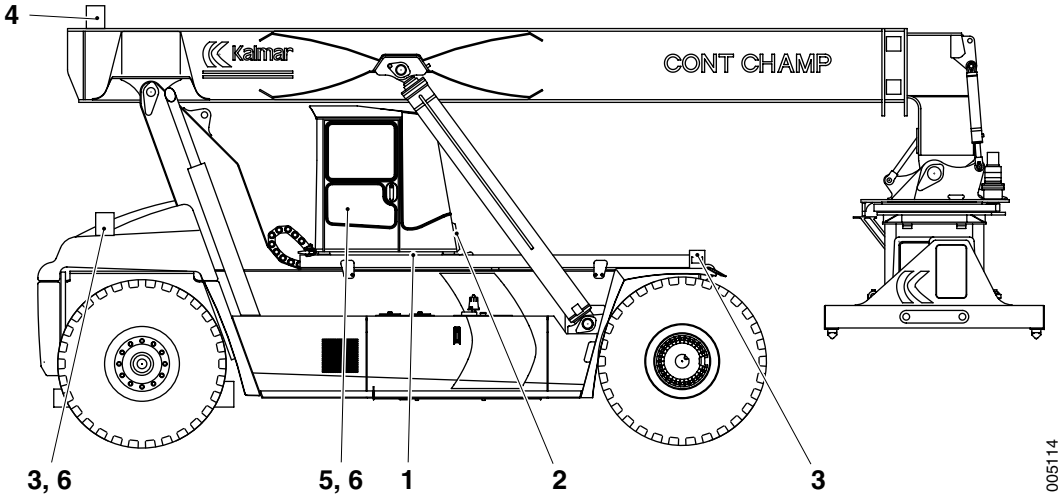

Communication system overview

1. Horn
2. Air horn ⊕
3. Warning light flashing hazard lights
4. Rotating warning light
5. Warning parking brake
6. Back-up alarm

NOTE

It is important that the right type of lamp is used for each respective area. See section F Technical data.

https://truckmanualshub.com/

9.8 Entertainment and communication

Entertainment and communication, general

For information and description of equipment, see supplier's documentation for respective product.

https://truckmanualshub.com/

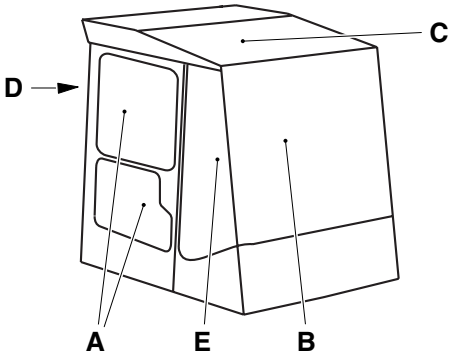

001512

A. Side windows
B. Windshield (front window)
C. Roof window
D. Rear window
E. Side windows front

9.9 Glass/windows/mirrors

Glass/windows/mirrors, component position

The function of the glass panes is to enclose the cab and to give the operator good visibility, the panes are tinted (✚).

The rear-view mirrors are of the type convex mirror. External rear-view mirrors are located on the chassis and the internal rear-view mirror is located in the cab.

✚

The following panes may be of laminated glass:

- Side windows front, position E
- Windshield (front window), position B

https://truckmanualshub.com/

9.10 Cab structure and suspension

Cab structure and suspension, description

The cab has a level floor with a bracket for the operator's seat. It is suspended in a cab undercarriage via heavy-duty rubber pads located on the bottom of the cab. This is to minimize vibrations from the frame to the cab. There are rubber pads at four points, one in each corner. Each rubber pad mounting has a rubber bushing and a bolt.

There are different types of cab suspensions.

- *Manual movement of cab, description page 25*
- *Hydraulic sliding cab, function description page 26*
- *Cab lift and lowering, function description page 28*

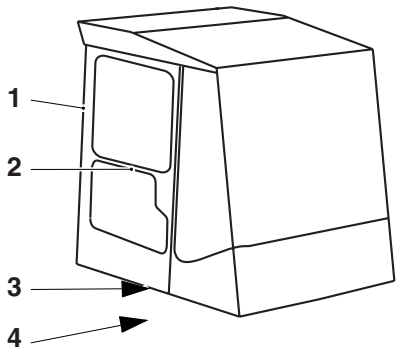

003206

Cab Spirit Delta
1. Cab frame
2. Door
3. Suspension of cab
4. Cab undercarriage

NOTE

Cab mounting does not affect the cab's version.

9.10.4 Longitudinal displacement of cab

Manual movement of cab, description

Manual cab movement means that the cab can be moved forward to facilitate access for service and maintenance in the engine compartment.

The cab is pushed for and aft by hand. Two cable chains on each side ensure that hoses and electric cabling to and from the cab are not damaged when the cab is moved. The cab is secured in the rear position during operation with two lock catches at the trailing edge of the cab.

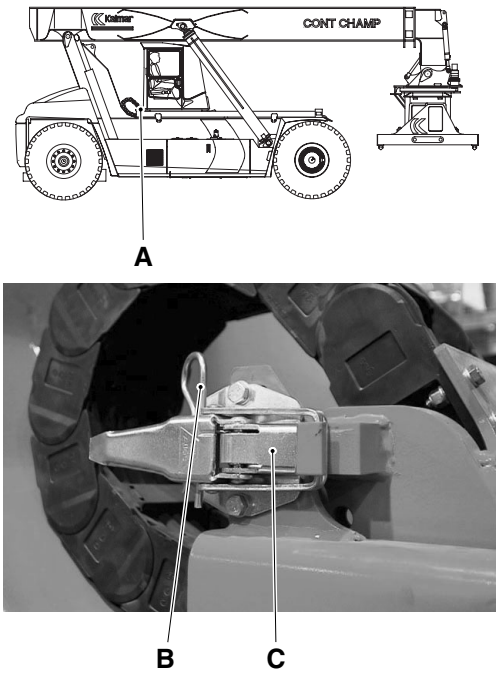

000270

A Position lock handle
B. Lock pin
C. Lock catch for securing cab

DANGER

The cab may start to move.

Fatal danger!

The cab is heavy. The machine must under no circumstances be moved with the cab unsecured. Secure the cab with the lock catches before operating the machine.

https://truckmanualshub.com/

WARNING

It is important that the lock catches are intact! They should be checked regularly. However, it is not included as part of the service schedule in preventive maintenance!

Hydraulic sliding cab, function description

The cab can be moved forward to facilitate access for service and maintenance in the engine compartment.

Hydraulic cab movement (sliding cab) also means that the cab can be moved hydraulically during operation to improve operator's visibility. The cab is pulled forward and backward by a hydraulic motor that is connected to a chain secured in the cab undercarriage. The cab's position is blocked automatically by the hydraulic motor when cab movement is not in use.

Damping

Damping means that the speed of functions is reduced automatically near the end-positions. This results in less stress on the mechanical parts when stopping in the end-positions.

Position sensors sense when damping should be activated. When damping is activated, the control unit in question reduces the control current to the solenoid valve for that function.

Condition	Reference value
Parking brake	Applied
Doors	Closed

https://truckmanualshub.com/

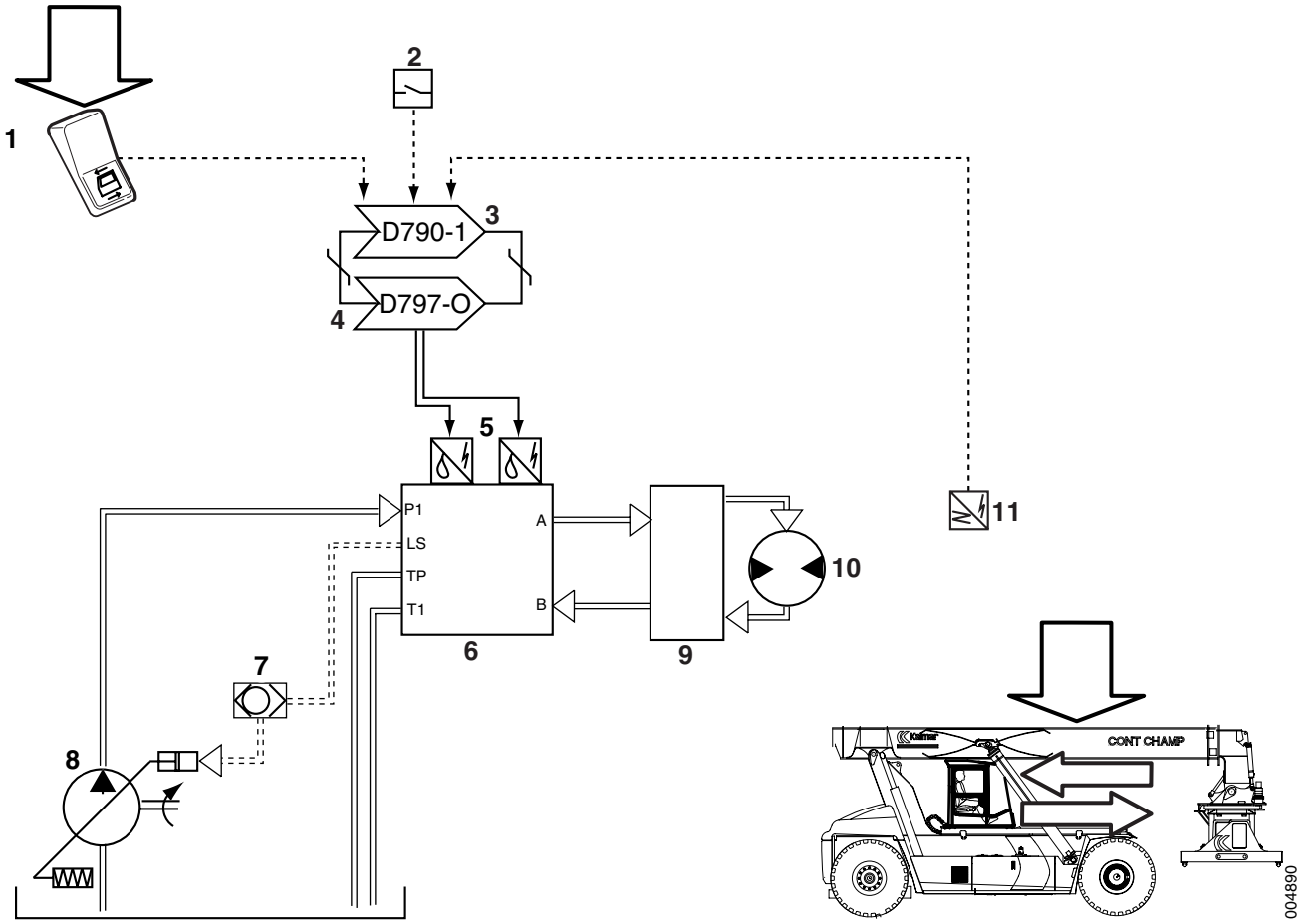

1. Switch (S197)
2. Contact closed door (one sensor for each door)
3. Control unit cab (D790-1)
4. Control unit frame option (D797-O)
5. Servo valve sliding cab forward *and servo valve sliding cab backward*
6. Control valve option frame
7. Shuttle valve
8. Main pumps
9. Valve block cab movement (sliding cab)
10. Hydraulic motor cab movement (sliding cab)
11. Sensor end-position (B769-2)

https://truckmanualshub.com/

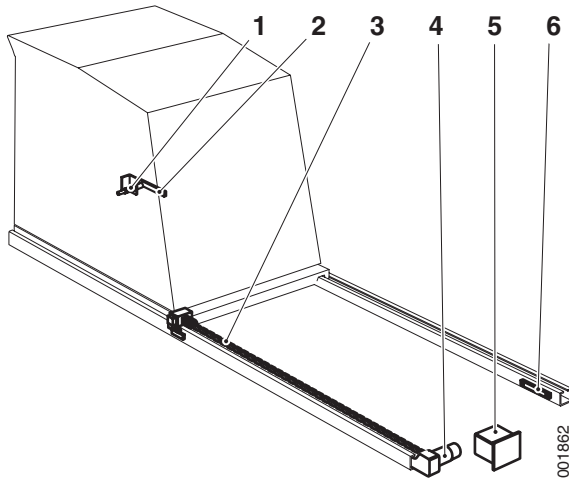

1. Sensor damping (trailing edge of cab on left side)
2. Indicator plate damping
3. Chain sliding cab
4. Hydraulic motor sliding cab
5. Control valve sliding cab
6. Indicator plate damping

Hydraulic cab movement (sliding cab), component position

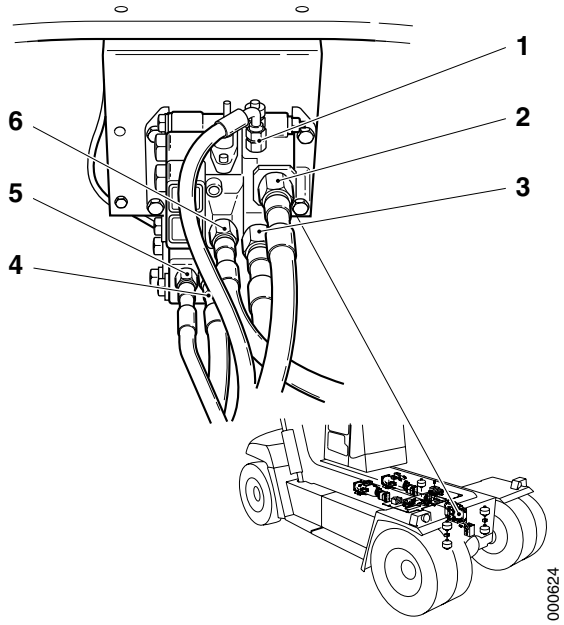

1. Load signal (LS)
2. Pressure supply (P)
3. Tank return (T1)
4. Connection hydraulic motor (B)
5. Tank return (TP)
6. Connection hydraulic motor (A)

9.10.5 Vertically adjustable cab

Cab lift and lowering, function description

Cab lift and lowering means that the cab can be raised or lowered hydraulically during operation to improve the operator's visibility. The cab's height is adjusted with a hydraulic cylinder in a frame that secures the cab. The cab can be secured in raised position with two safety locks.

For safety reasons, the machine's speed is reduced and the transmission is blocked in second gear when the cab is lifted.

Damping

Damping means that the speed of functions is reduced automatically near the end-positions. This results in less stress on the mechanical parts when stopping in the end-positions.

Position sensors sense when damping should be activated. When damping is activated, the control unit in question reduces the control current to the solenoid valve for that function.

https://truckmanualshub.com/

Condition	Reference value
Parking brake	Applied
Doors	Closed If the door is open with raised cab then lifting and lowering of the boom is limited.

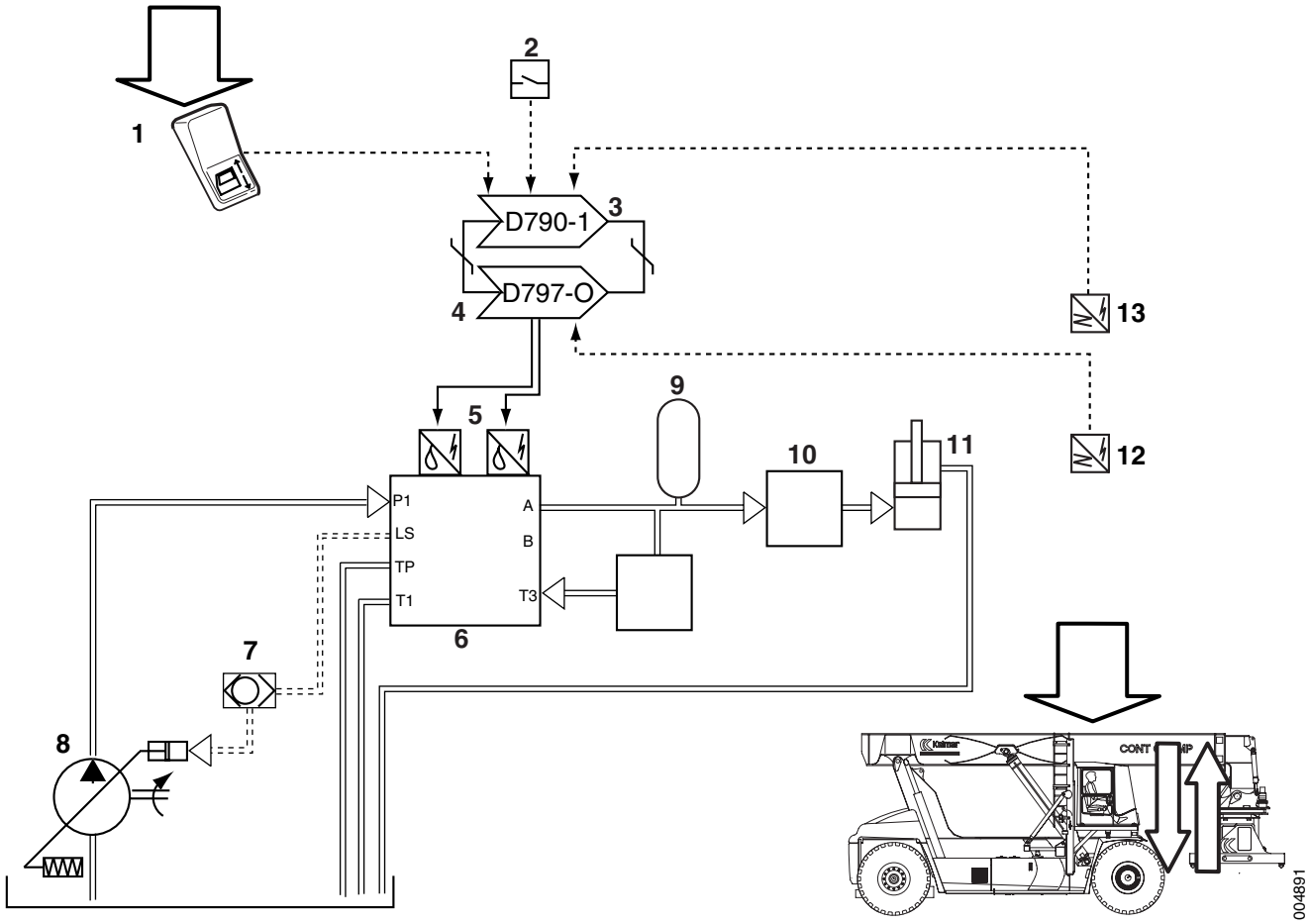

1. Switch cab lift and lowering (S)
2. Contact closed door (one sensor for each door)
3. Control unit cab (D790-1)
4. Control unit frame option (D797-O)
5. Servo valve raise cab (Y6016) *and servo valve lower cab (Y6017)*
6. Control valve option frame
7. Shuttle valve
8. Main pumps
9. Accumulator
10. Load control valve
11. Hydraulic cylinder cab lift and lowering
12. Sensor lowered cab (B777-2)
13. Sensor damping end-position (B769-2)

https://truckmanualshub.com/

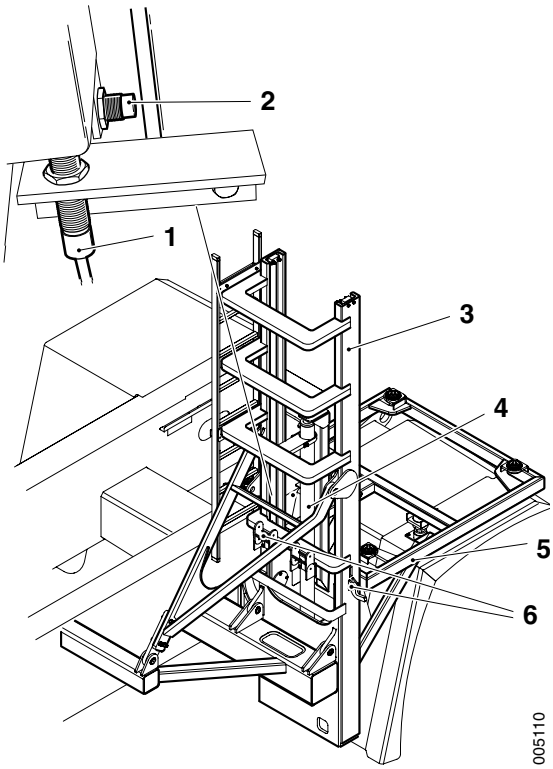

1. Sensor cab end-position lowered cab (B777-2)
2. Sensor damping end-position (B769-2)
3. Frame cab lift and lowering
4. Hydraulic cylinder cab lift and lowering
5 Cab undercarriage cab lift and lowering
6. Safety lock

Cab lift and lowering, component position

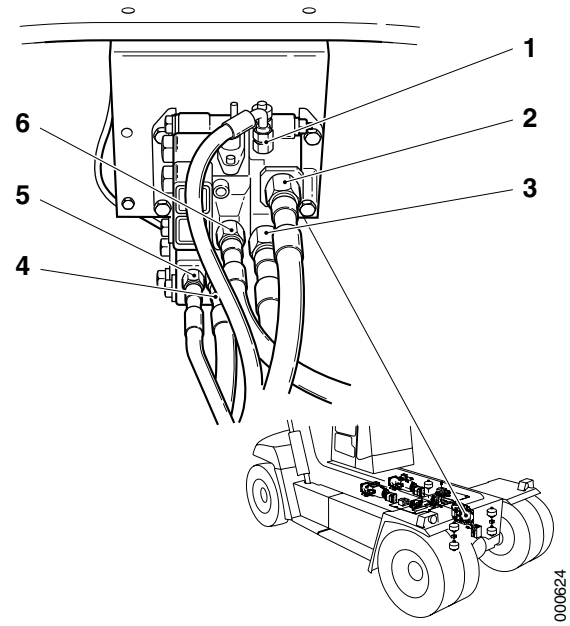

1. Load signal (LS)
2. Pressure supply (P)
3. Tank return (T1)
4. Connection hydraulic motor (B)
5. Tank return (TP)
6. Connection hydraulic motor (A)

https://truckmanualshub.com/

9.11 Cab interior

Cab interior, description

The cab is designed for optimal operator comfort. Switches, controls, warning and indicator lights are grouped on the instrument panels to give the operator a good operating environment.

Recyclable materials are used for all parts.

- Instrument panels
- Interior plastic parts
- Interior textile/fabric parts
- Insulation

https://truckmanualshub.com/

9.12 Frame

Chassis, description

The function of the chassis is to be the structural part for the machine's components.

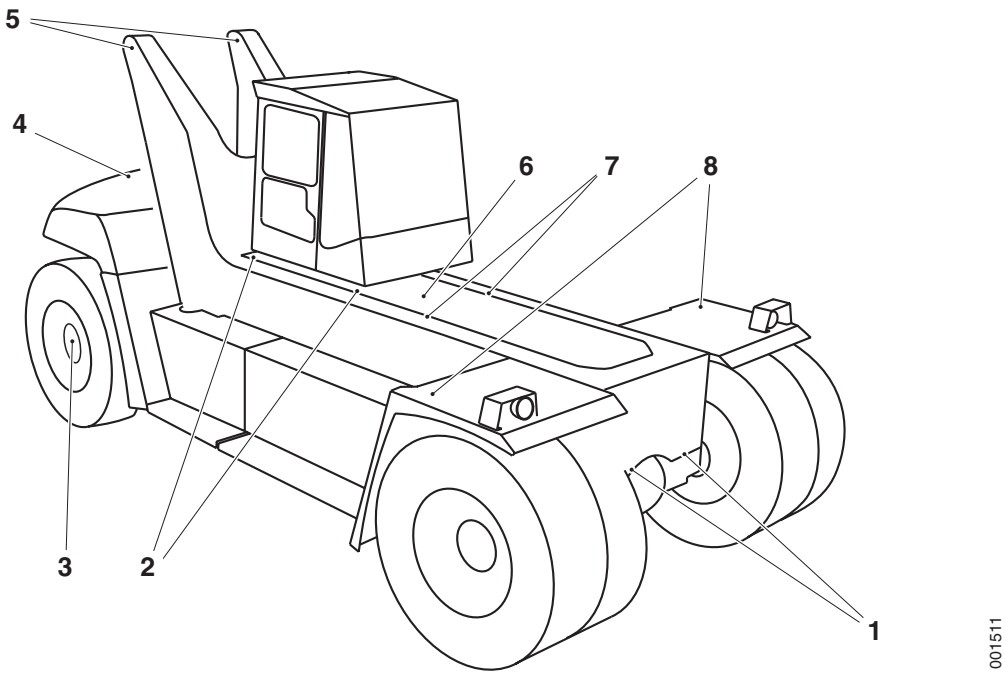

1. Frame's front part with drive axle mounting
2. Cab mounts (4 points)
3. Steering axle mounting
4. Frame's rear part with counterweights
5. Boom mounting
6. Engine compartment with mounts for engine and transmission
7. Member pair
8. Mounts front fenders

https://truckmanualshub.com/

9.13 Body

Body, description

The body's function is a part of the chassis. There are fenders to deflect dirt, footsteps and handrail to facilitate access on the chassis, hood to deflect dirt and objects from the engine compartment as well as a counterweight to balance the machine's lifting capacity.

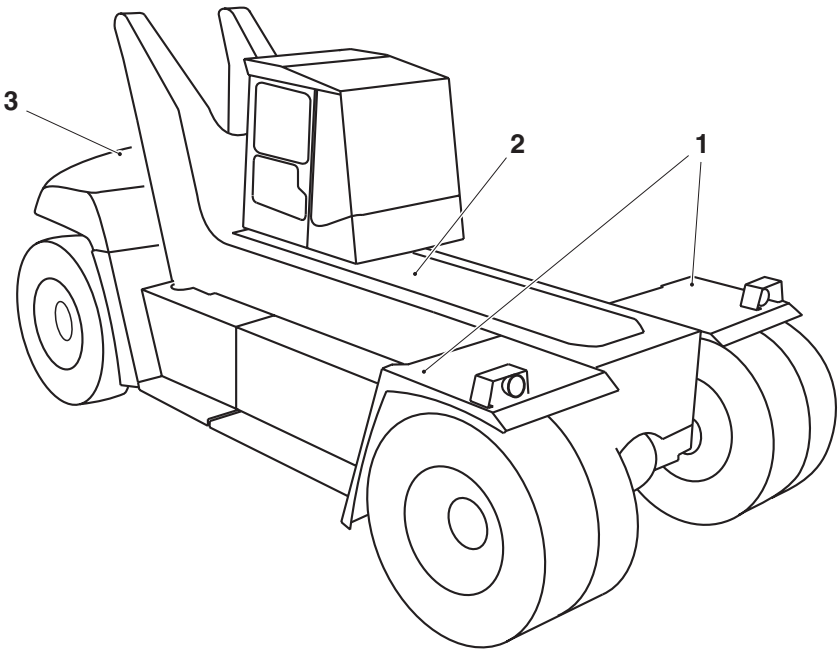

002213

1. Fenders
2. Hood engine compartment
3. Counterweight

https://truckmanualshub.com/

9.14 Central lubrication

Central lubrication, description

Central lubrication automatically lubricates the machine's grease points during operation according to scheduled intervals and replaces the greasing work during preventive maintenance. The machine has two separate central lubrication systems, one for the machine and one for the attachment.

The central lubrication is built up of the following components:

- Pump unit, with lubricant reservoir.
- Distribution block, with restrictions that distribute and dose grease between the different grease points. The distribution block's restrictions ensure that all points receive the right amount of grease.
- Lines, between main unit and distribution block as well as distribution block and grease nipples
- Grease nipples, at grease points.

On the pump unit it is possible to adjust the lubrication interval's frequency and length.

The central lubrication is supplied with voltage when the parking brake is released.

NOTE

The central lubrication does not grease the propeller shaft's universal joint or the brake pedal, these must still be greased during preventive maintenance.

https://truckmanualshub.com/

9.15 Paint/coatings

Paint/coatings, description

Single layer paint, thickness 120 my. For paint code of current machine (RAL), see machine card.

https://truckmanualshub.com/

https://truckmanualshub.com/

Table of Contents 10 Common hydraulics

10 Common hydraulics 3
10.2 Security valves 5
10.3 Tanks and accumulators 6
10.4 Pumps 7
10.4.2 Axial piston pump with variable displacement 8
10.5 Hoses, pipes and valves 11
10.6 Temperature control, cleaning and hydraulic oil 12
10.6.6 Breather filter hydraulic oil tank 14
10.6.7 Hydraulic oil filter 14
10.6.8 Hydraulic oil 17
10.6.9 Hydraulic oil fine-filter 18

https://truckmanualshub.com/

https://truckmanualshub.com/

10 Common hydraulics

Common hydraulics, description

Under the function common hydraulics there are hydraulic functions that are common for several of the machine's main functions. For example, the hydraulic oil pumps that supply load handling, steering and certain cab functions with hydraulic pressure.

The brake system is completely separate, and is found in section *4 Brakes*.

https://truckmanualshub.com/

Pressure plate

On the machine there is a pressure plate which is stamped with the most important pressure information. The pressure plate is located on the left side of the frame in front of the cab steps.

The pressure levels vary with the equipment and are therefore unique for each machine. When checking pressure, the pressures shall match the pressure plate.

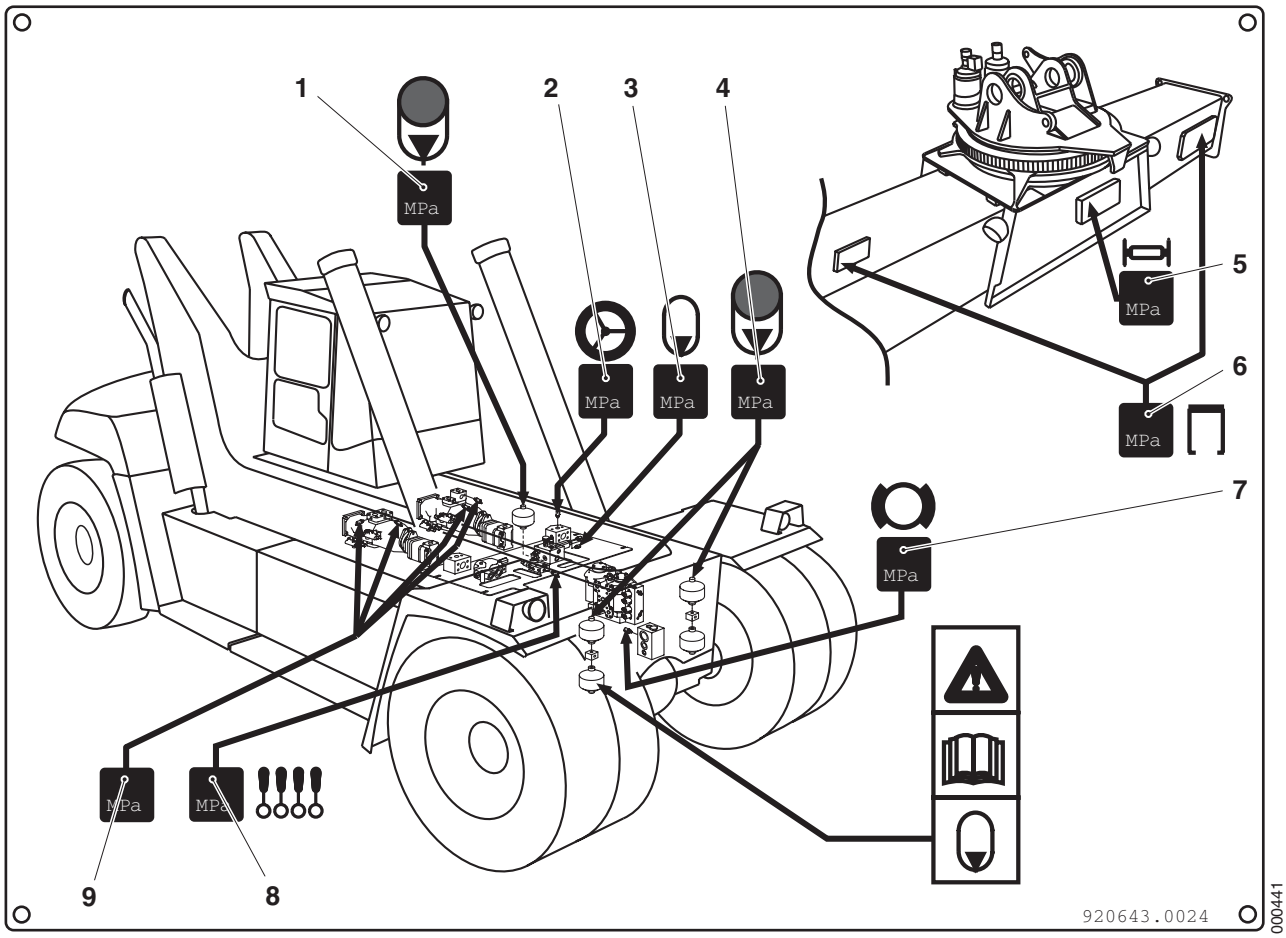

1. Gas pressure servo accumulator
2. Control pressure
3. Hydraulic oil pressure accumulators brake system
4. Gas pressure brake accumulators
5. Feed pressure control valve attachment
6. Feed pressure control valve lift legs ⊕
7. Max. brake pressure
8. Servo pressure lift and extension
9. Max. pressure hydraulic oil pumps

https://truckmanualshub.com/

10.2 Security valves

Security valves, component position

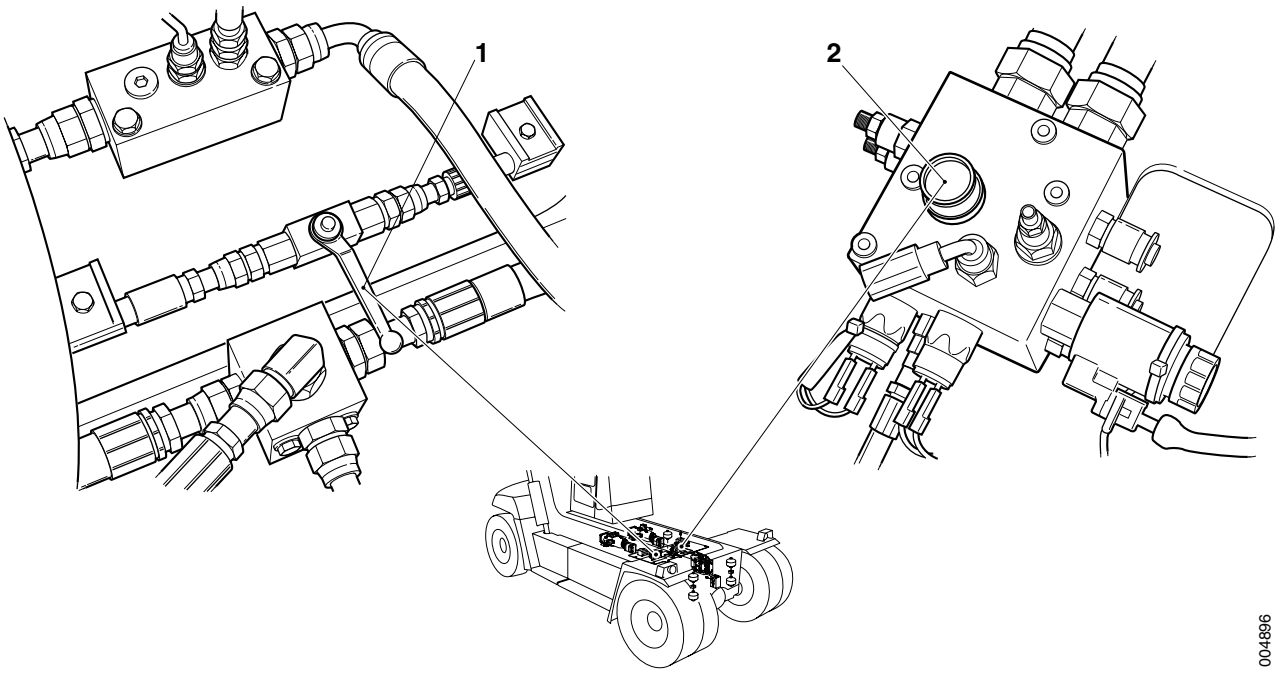

1. Relief valve attachment (illustration shows closed valve)
2. Accumulator drain valve

https://truckmanualshub.com/

10.3 Tanks and accumulators

Tanks and accumulators, component position

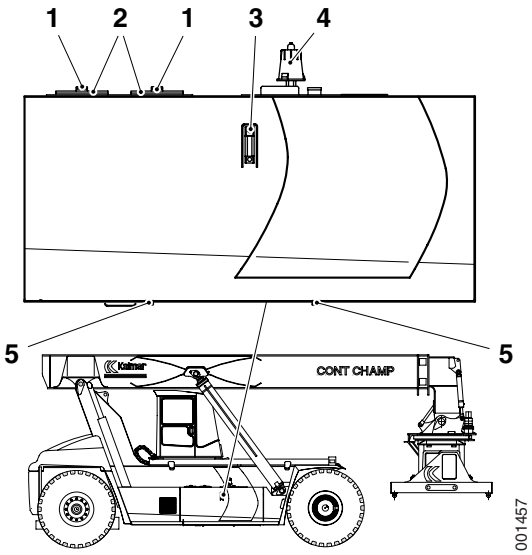

Tank

1. Filler plug hydraulic oil
2. Cap for hydraulic oil filter
3. Level glass hydraulic oil
4. Breather filter hydraulic oil tank
5. Drain plugs hydraulic oil

https://truckmanualshub.com/

10.4 Pumps

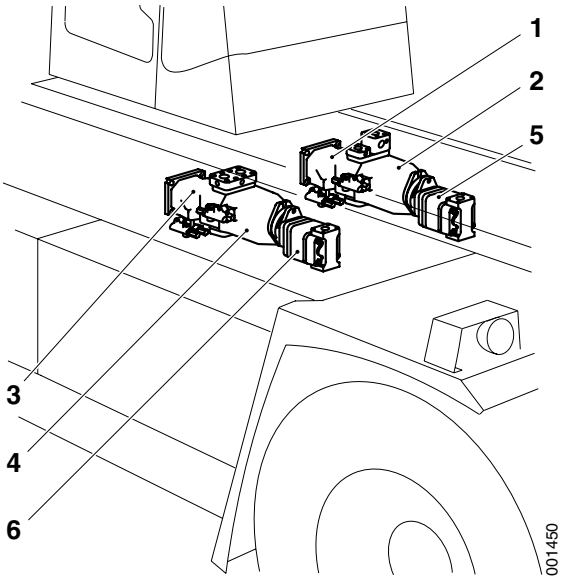

1. Hydraulic oil pump 1
2. Hydraulic oil pump 2
3. Hydraulic oil pump 3
4. Hydraulic oil pump 4
5. Brake oil pump
6. Pump cooling and filtering

Pumps, general

The machine's hydraulics are supplied from six pumps. Four of them for the working hydraulics, one for cooling and filtering of the hydraulic oil and one for the brake system. The pumps are assembled to 2 pump banks. Each pump bank consists of two axial piston pumps with variable displacement, and a gear pump with fixed displacement. The pump banks are mounted on the transmission's power take-off.

The axial pistons pumps are connected mechanically and hydraulically in pairs and can be considered as one pump (hydraulic oil pump unit). Non-return valves make sure that the pumps don't interfere with each other.

The left hydraulic oil pump unit (position 1 and 2) supplies the control valve for lift and extension, pump 2 also supplies the attachment's control valve. At boom in, pump 1 and 2 are disconnected.

The right hydraulic oil pump unit (position 3 and 4) supplies the steering system and the control valve for lift and extension. The priority valve ensures that there is always pressure to the steering system, the remaining flow goes to the control valve for lift and extension.

The left fixed pump (position 5) supplies the brake system's brake and cooling circuit across an accumulator charging valve, see section *4 Brakes* , group *4.3.1 Brake oil pump*.

The right fixed pump (position 6) continuously circulates the hydraulic oil through the cooler and hydraulic oil filter.

https://truckmanualshub.com/

10.4.2 Axial piston pump with variable displacement

Axial piston pump with variable displacement, function description

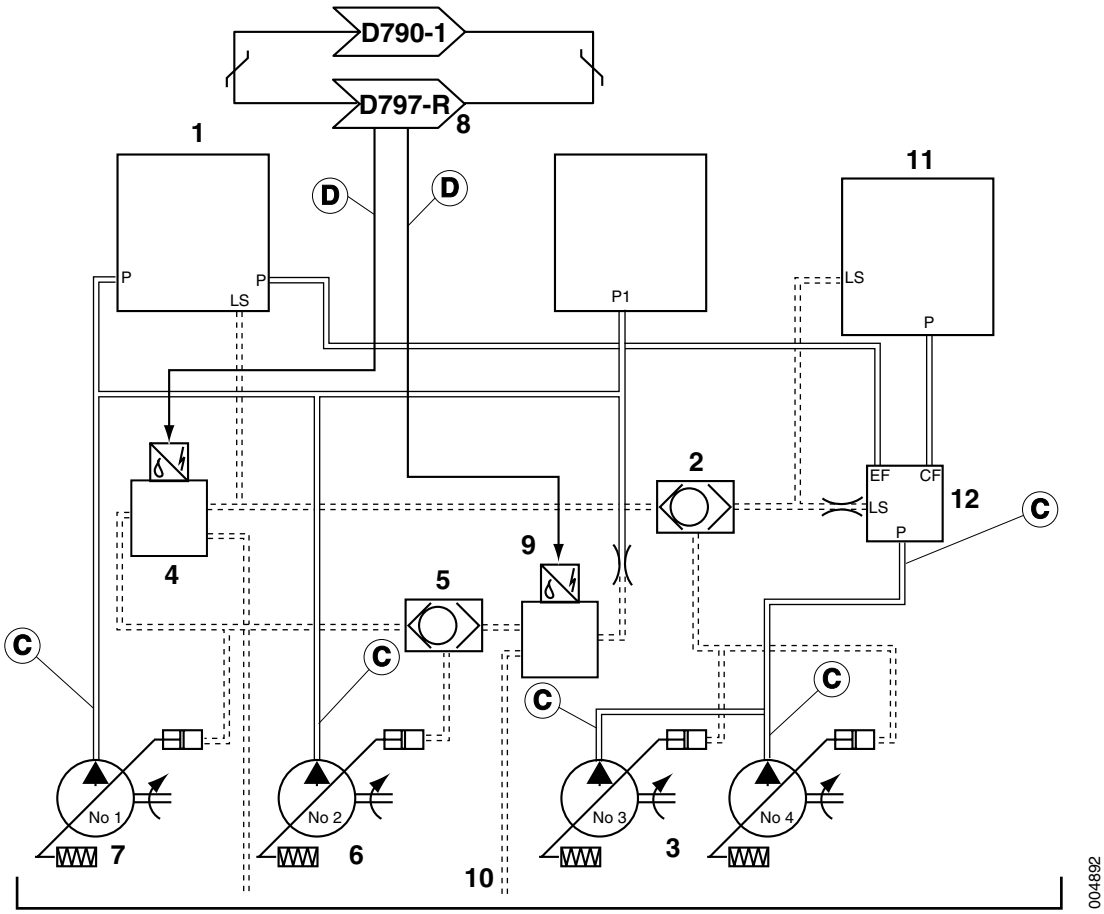

1. Control valve lift and extension
2. Shuttle valve
3. Hydraulic oil pump 3 and 4
4. Solenoid valve, unloading main pump (Y6062)
5. Shuttle valve
6. Hydraulic oil pump 2
7. Hydraulic oil pump 1
8. Control unit frame rear (D797-R)
9. Solenoid valve top hydraulics (Y6003)
10. Tank
11. Steering valve
12. Priority valve

https://truckmanualshub.com/

Hydraulic oil pump, checking

WARNING

Hot and pressurized oil.

Personal injury, burn injury, rash or irritation.

Always depressurize the hydraulic systems before starting to work in the hydraulic systems. Avoid skin contact with the oil, use protective gloves.

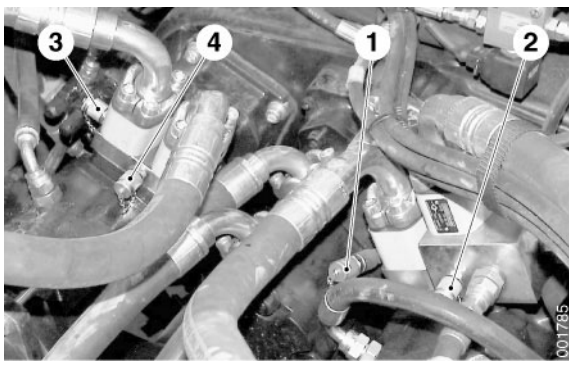

1. Hydraulic oil pump 1
2. Hydraulic oil pump 2
3. Hydraulic oil pump 3
4. Hydraulic oil pump 4

1 Operate and warm up the machine so that the hydraulic oil reaches operating temperature, approx. 50 °C.

2 Turn off the engine.

3 Connect pressure gauge to pressure connection on hydraulic oil pump 1.

4 Start the engine and let it idle.

5 Check the stand-by pressure for one pump at a time in the following order:

Hydraulic oil pump 1: 1.8 MPa

Hydraulic oil pump 2: 2.1 MPa

Hydraulic oil pump 3: 2.9 MPa

Hydraulic oil pump 4: 3.1 MPa

Settings apply to standard machine, certain machines may have higher stand-by pressure. For correct stand-by pressure, see pressure plate. However, the pressure difference between the pumps must always be maintained.

6 Increase engine speed to approx. 1100 r/min and run extension function against end-position (overflow).

Run out the boom to max and continue to request max. extension with the control lever. This will cause the overflow of the extension function.

https://truckmanualshub.com/

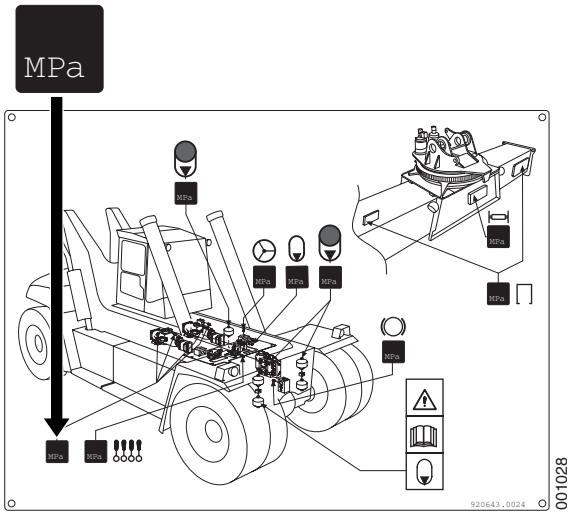

7 Check max. pressure on hydraulic oil pump 1, the pressure should match the value on the pressure plate.

All pumps should give the same pressure. The order in which the pumps are tested is not of any importance.

8 Turn off the engine.

9 Transfer the pressure gauge to the next pump and repeat steps 3–8 on all four pumps.

https://truckmanualshub.com/

10.5 Hoses, pipes and valves

Hoses, pipes and valves, component position

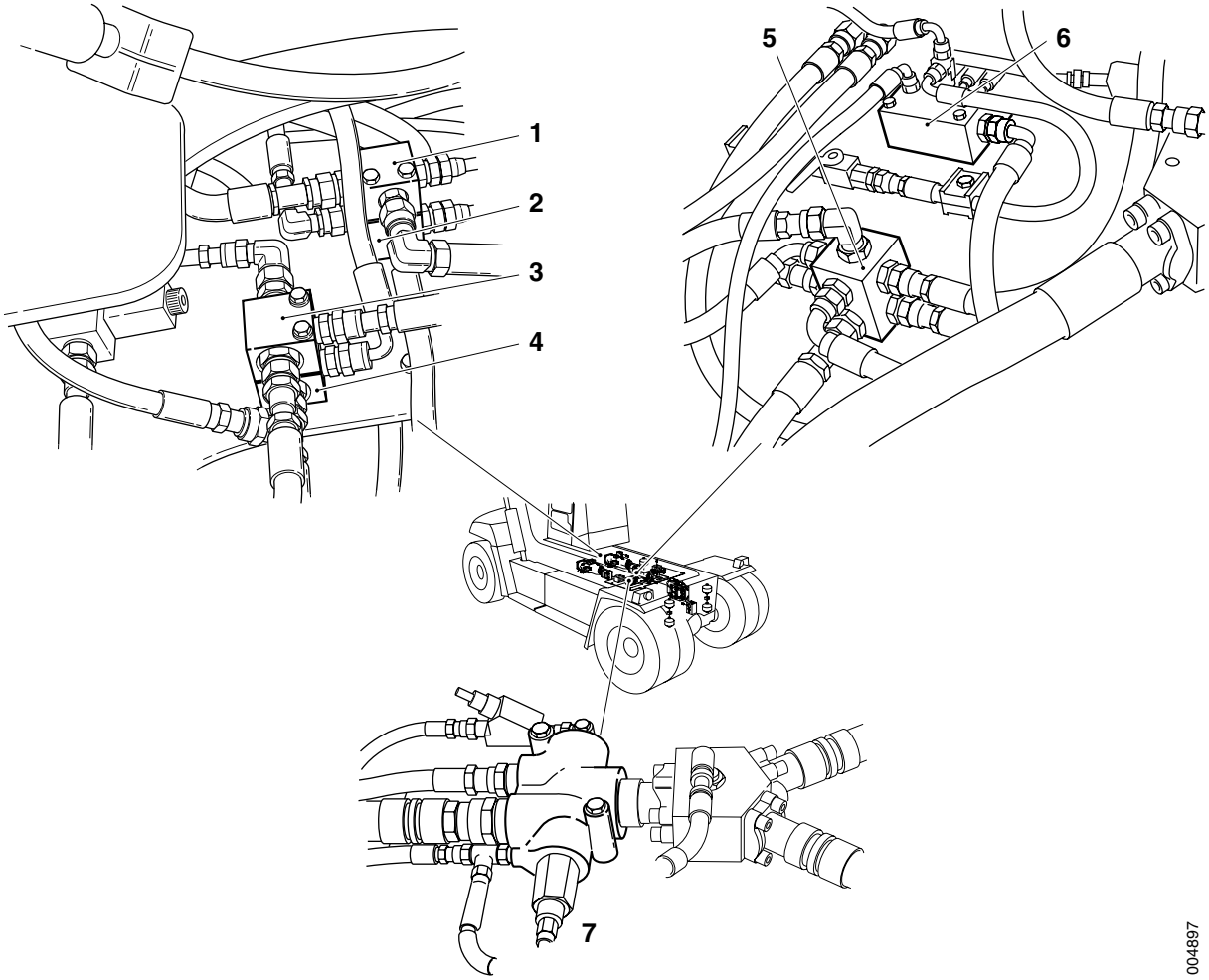

1. Shuttle valve attachment
2. Shuttle valve steering
3. Shuttle valve joystick steering or mini-wheel ⊕
4. Shuttle valve option frame ⊕
5. Collecting block unfiltered returns
6. Collecting block filtered returns
7. Priority valve

https://truckmanualshub.com/

10.6 Temperature control, cleaning and hydraulic oil

Temperature control, cleaning and hydraulic oil, function description

The hydraulic system's oil is cooled and cleaned by a separate pump circulating the oil through cooler and filter. The cooler has a temperature-controlled fan which counteracts overheating.

The temperature control consists of hydraulic oil tank, hydraulic oil pump, hydraulic oil cooler, cooling fan, hydraulic oil filter, fine filter, sensor hydraulic oil temperature and by-pass valve.

The hydraulic oil pump pumps oil (from the tank) that is cooled in the hydraulic oil cooler and is cleaned by the oil filters in the tank. Some of the oil is filtered by the fine filter. An electric cooling fan increased the air flow through the cooler when the temperature needs to be lowered. A by-pass valve leads the hydraulic oil past the cooler directly to the tank if the resistance through the cooler and filters becomes too high. The temperature sensor controls activation of fan and temperature display on the display.

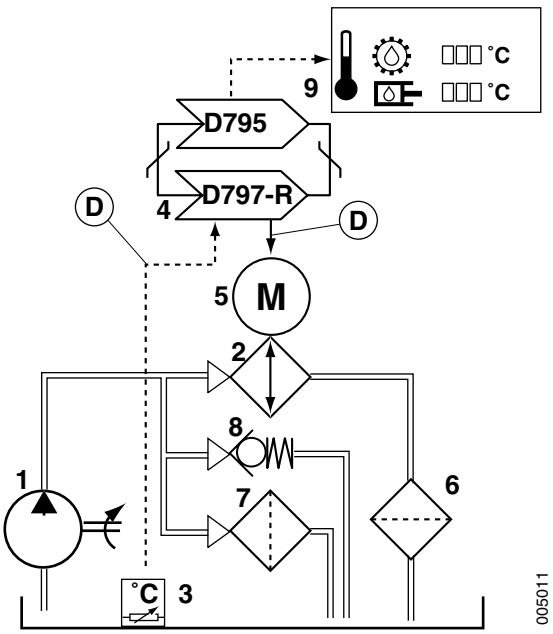

1. Hydraulic oil pump
2. Cooler hydraulic system
3. Temperature sensor (B776)
4. Control unit frame rear (D797-R)
5. Cooling fan (M668)
6. Hydraulic oil filter
7. Fine filter
8. By-pass valve
9. Control unit KID (D795)

https://truckmanualshub.com/

Temperature control, cleaning and hydraulic oil, component position

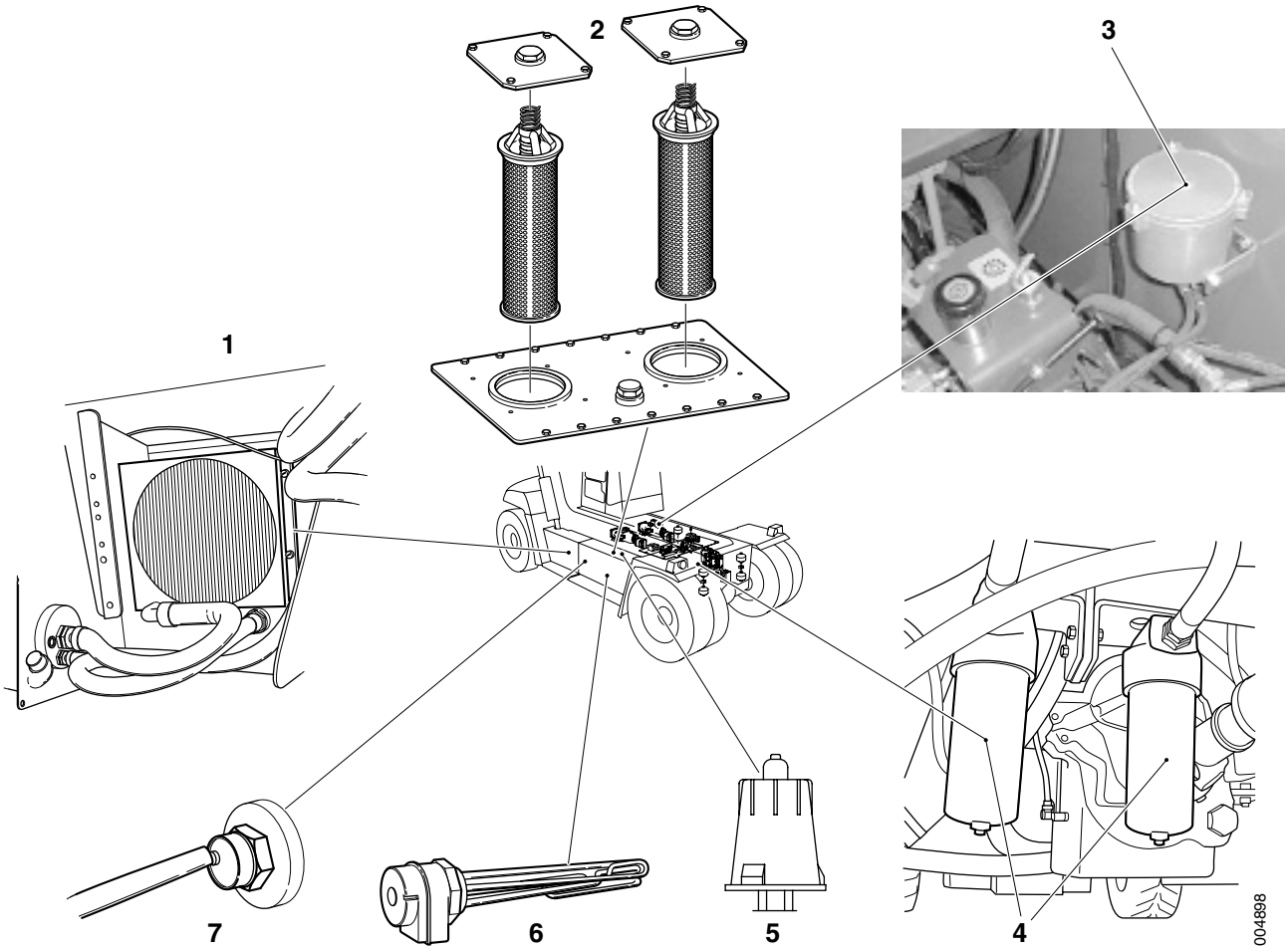

1. Cooling fan and cooler hydraulic oil
2. Hydraulic oil filter
3. Fine filter hydraulic oil
4. Hydraulic oil filter (high pressure filter) ⊕
5. Breather filter hydraulic oil tank
6. Tank heater ⊕
7. Sensor hydraulic oil temperature (B776)

https://truckmanualshub.com/

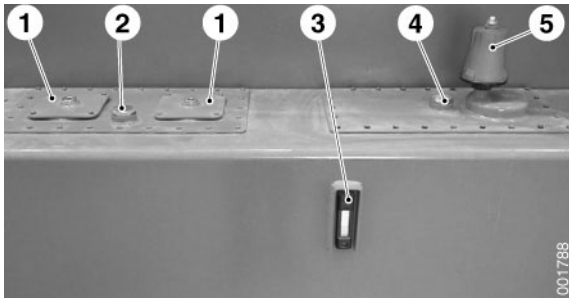

1. Cover plate for oil filter
2. Filler plug for hydraulic oil
3. Level glass, hydraulic oil
4. Filler plug for hydraulic oil
5. Breather filter, hydraulic oil tank

10.6.6 Breather filter hydraulic oil tank

Breather filter hydraulic oil tank, changing

1 Turn off the engine and the main electrical power.

2 Clean the area around the filter housing.

3 Remove the filter housing.

Press down and turn approx. 1/8 turn clockwise.

4 Change the filter cartridge.

Handle the filter cartridge as environmentally hazardous waste.

5 Fit the filter housing.

Press down and turn approx. 1/8 turn counter-clockwise.

6 Reset the filter indicator by pressing down the button in the middle on the glass centered on the filter cartridge.

10.6.7 Hydraulic oil filter

Hydraulic oil filter, changing

WARNING

Hot and pressurized oil.

Personal injury, burn injury, rash or irritation.

Always depressurize the hydraulic systems before starting to work in the hydraulic systems. Avoid skin contact with the oil, use protective gloves.

IMPORTANT

Ensure cleanliness around the filter and filling point when working on the hydraulic tank.

Dirt particles may cause machine damage.

1 Clean the area around the cover plates on the hydraulic oil tank.

2 Turn off the engine and the main electrical power.

https://truckmanualshub.com/

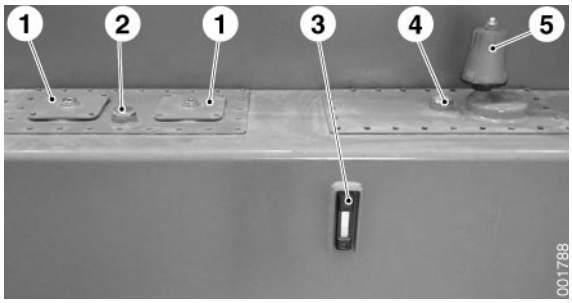

1. Cover plate for oil filter
2. Filler plug for hydraulic oil
3. Level glass, hydraulic oil
4. Filler plug for hydraulic oil
5. Breather filter, hydraulic oil tank

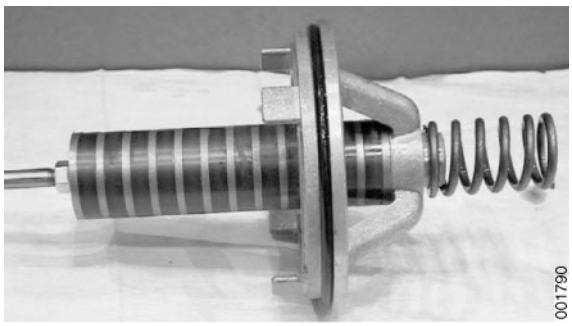

3 Remove the cover plates (position 1) over the hydraulic oil filters.

4 Have a receptacle ready to collect any oil spills.

5 Lift up the filter unit and place it in the receptacle. Let the hydraulic oil drain.

6 Part the filter unit and remove the filter cartridge. Handle the filter cartridge as environmentally hazardous waste. Note placement of the parts.

7 Clean the filter holder's parts. Be especially thorough with the magnetic rod.

8 Fit the new filters and assemble the filter units.

9 Fit the filter units and the cover plates. Tighten the bolts crosswise.

10 Check the oil level in the hydraulic oil tank. The oil level should be at the top of the level glass. Top up if needed.

NOTE

The hydraulic oil level is checked with the boom completely lowered and retracted.

https://truckmanualshub.com/

Hydraulic oil filter (high pressure filter), changing

WARNING

Hot and pressurized oil.

Personal injury, burn injury, rash or irritation.

Always depressurize the hydraulic systems before starting to work in the hydraulic systems. Avoid skin contact with the oil, use protective gloves.

IMPORTANT

Ensure cleanliness around the filter and filling point when working on the hydraulic tank.

Dirt particles may cause machine damage.

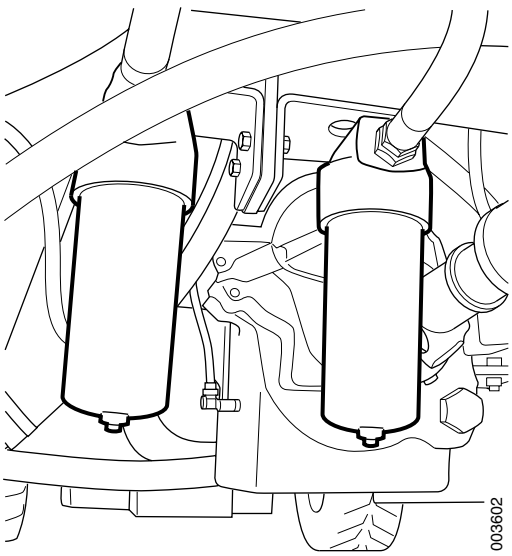

High pressure filter, under machine

1 Machine in service position, see section *B Safety*
2 Depressurize the hydraulic and brake systems, see section *B Safety*.
3 Place a receptacle under the oil filters to collect any oil spills.
4 Clean the outside of the hydraulic oil filters.
5 Remove the drain plugs in the bottom of the filters.
   Let the oil drain, wait awhile since the oil drains slowly.
6 Remove the filter brackets.

NOTE

The filter brackets are heavy, loosen them carefully.

7 Clean the filter brackets.
8 Remove the filter inserts.

NOTE

Note position of the O-rings.

9 Fit the O-rings on the filter inserts and filter brackets. Lubricate the O-rings with hydraulic oil.
10 Fit the new filter inserts on the filter bracket.
11 Fit the filter bracket and the drain plug.
12 Close the drain valve on the accumulator charging valve.
13 Turn on the main electric power and start the engine.
14 Check that the filter brackets do not leak.

https://truckmanualshub.com/

15 Remove the receptacle, handle filters and oil as environmentally hazardous waste.

16 Check the oil level in the hydraulic oil tank. The oil level should be at the top of the level glass. Top up if needed.

NOTE

The hydraulic oil level is checked with the boom completely lowered and retracted.

10.6.8 Hydraulic oil

Hydraulic oil, changing

WARNING

Hot and pressurized oil.

Personal injury, burn injury, rash or irritation.

Always depressurize the hydraulic systems before starting to work in the hydraulic systems. Avoid skin contact with the oil, use protective gloves.

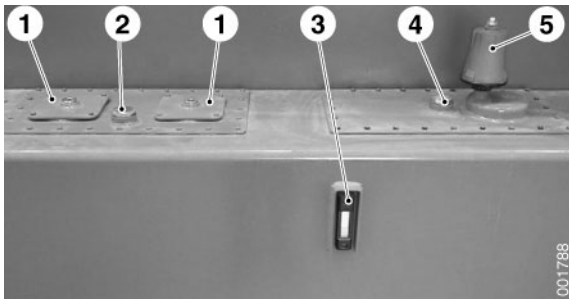

1. Cover plate for oil filter
2. Filler plug for hydraulic oil
3. Level glass, hydraulic oil
4. Filler plug for hydraulic oil
5. Breather filter, hydraulic oil tank

1 Machine in service position, see section *B Safety*.

2 Place a receptacle (700 l) under the hydraulic oil tank's drain plug.

3 Remove the plug and lead the oil into the receptacle.

4 Fit the drain plug when the oil has drained.

NOTE

Make sure that the seal washer is installed as well.

5 Handle the spent oil as environmentally hazardous waste.

6 If the hydraulic oil filters are to be changed, replace them before the tank is filled with oil, see *Hydraulic oil filter, changing page 14*.

7 Fill oil through the filling holes on the filters' cover plates.

This means the oil that is filled is filtered, and protects the hydraulic system from impurities.

8 Check the oil level in the hydraulic oil tank. The oil level should be visible in the level glass. Top up if needed.

NOTE

The hydraulic oil level is checked with the boom completely lowered and retracted.

https://truckmanualshub.com/

10.6.9 Hydraulic oil fine-filter

Fine filter hydraulic oil, changing

WARNING

Hot and pressurized oil.

Personal injury, burn injury, rash or irritation.

Always depressurize the hydraulic systems before starting to work in the hydraulic systems. Avoid skin contact with the oil, use protective gloves.

IMPORTANT

Ensure cleanliness around the filter when working.

Dirt particles may cause machine damage.

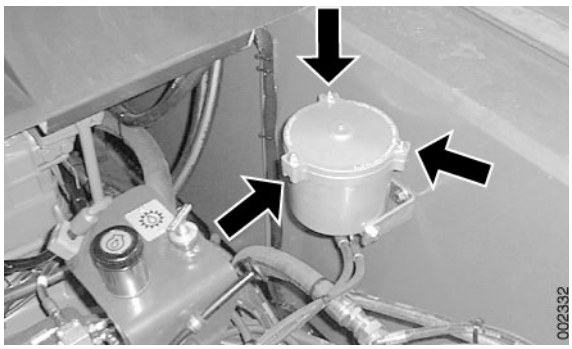

1 Machine in service position, see section *B Safety*.
2 Clean the area around the fine filter.
3 Remove the cover.
4 Have a receptacle ready.
5 Lift up the filter cartridge and place it in the receptacle and let the hydraulic oil drain.
6 Fit the new filter cartridge and fit the cover on the fine filter.

https://truckmanualshub.com/

Table of Contents 11 Common electrics

11 Common electrics 3
11.2 Electric protection 4
11.2.2 Fuses 5
11.3 Batteries 8
11.3.1 Start battery 8
11.4 Alternator 9
11.5 Distribution of electricity 10
11.5.1 Voltage feed 10
11.5.3 Control units 15
11.6 Communication 16
11.6.1 CAN-bus 16
11.6.2 Redundant CAN-bus 16
11.6.3 CAN-bus driveline 16

https://truckmanualshub.com/

https://truckmanualshub.com/

11 Common electrics

Common electrics, general

Under the function common electrics one finds electrical functions that are common to several of the machine's main functions. For example, voltage feed and CAN-bus.

https://truckmanualshub.com/

11.2 Electric protection

Electric protection, component position

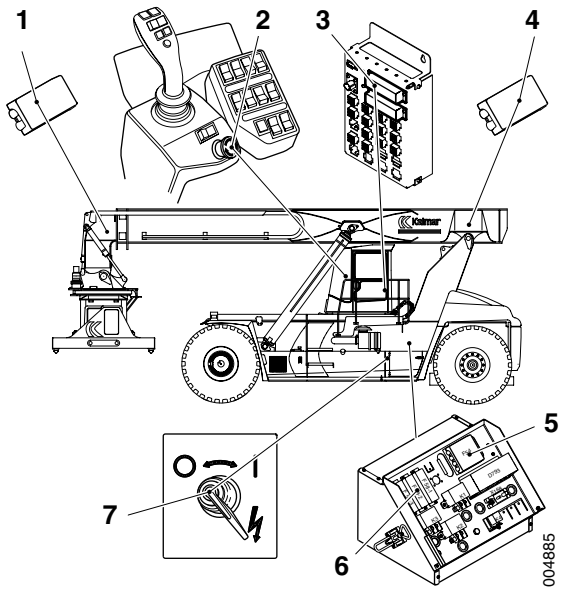

1. Main fuse, boom top
2. Control breaker
3. Circuit fuses, electrical distribution box cab
4. Main fuses, boom attachment
5. Main fuses, electrical distribution box frame
6. Circuit fuses, electrical distribution box frame
7. Battery disconnector

https://truckmanualshub.com/

11.2.2 Fuses

Fuses, description

IMPORTANT

Risk of cable damage and fire in cable harnesses!

Always use fuses with the correct ampere rating.

The electrical system has three main circuits (30, 15 and 15E voltage), see *Distribution of electricity, description page 10*. The main circuits are connected across fuses several times with main fuses and circuit fuses.

Main fuses

The main fuses divide the machine's voltage feed into smaller parts to maintain as many functions as possible in case of damage to cables harnesses.

By the cab's and frame's electrical distribution boxes there are fuse plates that describe the different fuses.

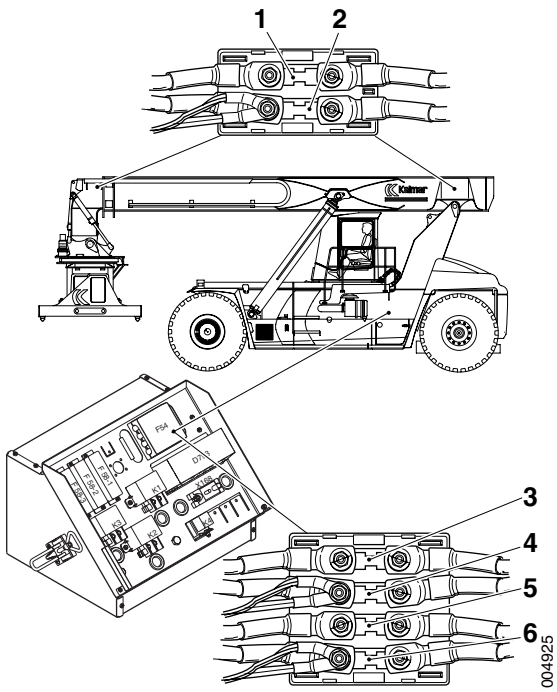

Main fuses
1. Control breaker voltage (15E) to control units on boom and attachment, (25 A)
2. Frame ground connections for boom and attachment, (25 A)
3. Electric power feed relay K1, electric power to ignition voltage (15), (50 A)
4. Battery voltage (30) to cab, engine and transmission, (50 A)
5. Electric power feed relay K2, electric power to control breaker voltage (15E), (50 A)
6. Ignition voltage (15) to control units on frame, engine and transmission, (50 A)

https://truckmanualshub.com/

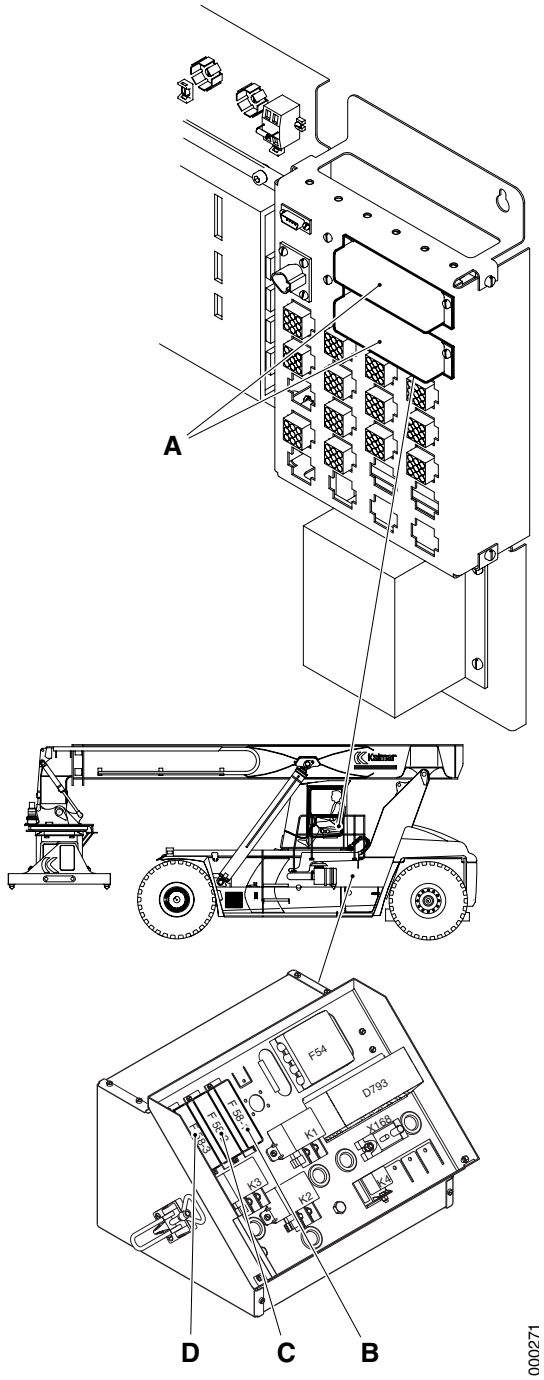

A. Circuit fuses in cab
B. 30-fuses (battery voltage)
C. 15-fuses (ignition voltage)
D. 15E-fuses (control breaker voltage)

Circuit fuses

Circuit fuses are grouped in fuse holders that are located in the electrical distribution box on the frame and the electrical distribution box in the cab.

By the fuse holders there are fuse plates with information about fused function and fuse rating.

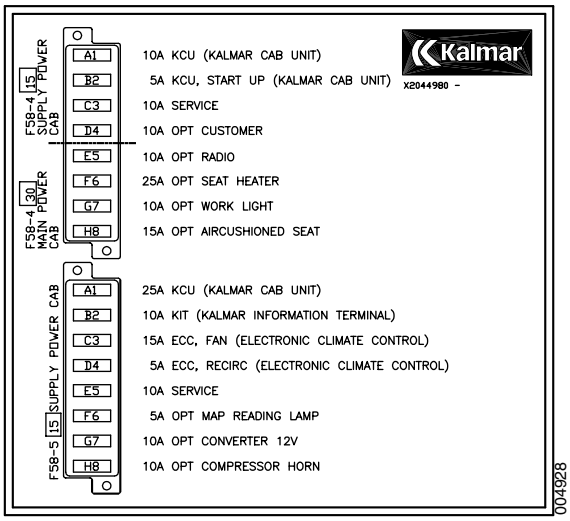

Circuit fuses electrical distribution box cab

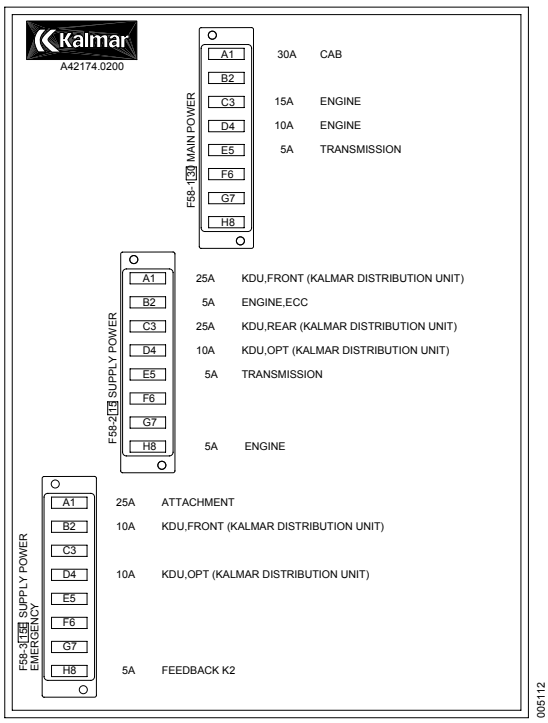

Circuit fuses electrical distribution box frame

https://truckmanualshub.com/

Fuses, changing

IMPORTANT

Risk of cable damage and fire in cable harnesses!

Always use fuses with the correct ampere rating.

1 Turn off the main electric power (battery disconnector).
2 Remove the cover from the fuse holder.
3 Check that fuses are intact. Change when needed.

https://truckmanualshub.com/

11.3 Batteries

11.3.1 Start battery

Start battery, checking

WARNING

Battery electrolyte contains corrosive sulphuric acid.

Risk of corrosive injuries, health hazard!

Electrolyte on skin should be removed immediately. Wash with soap and plenty of water. If electrolyte has splashed into the eyes, rinse immediately with plenty of water and seek immediate medical attention.

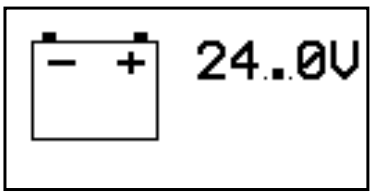

000354

Operating menu for electrical system

1 Check the battery voltage from the operating menu for electrical system.

   With the engine off, the battery voltage should be 23–25 V.

   With engine at max. engine speed (2000 rpm), the battery voltage should be 27–29 V.

2 Turn off the engine and the main electric power.

3 Check that the battery terminals are free from dirt. If needed, grease the battery terminals with terminal grease.

4 Check the fluid level in the battery cells. Top up with battery water if needed.

   The electrolyte level should be 10 mm above the cells.

NOTE

Only use distilled water for topping up.

https://truckmanualshub.com/

11.4 Alternator

Alternator, component position

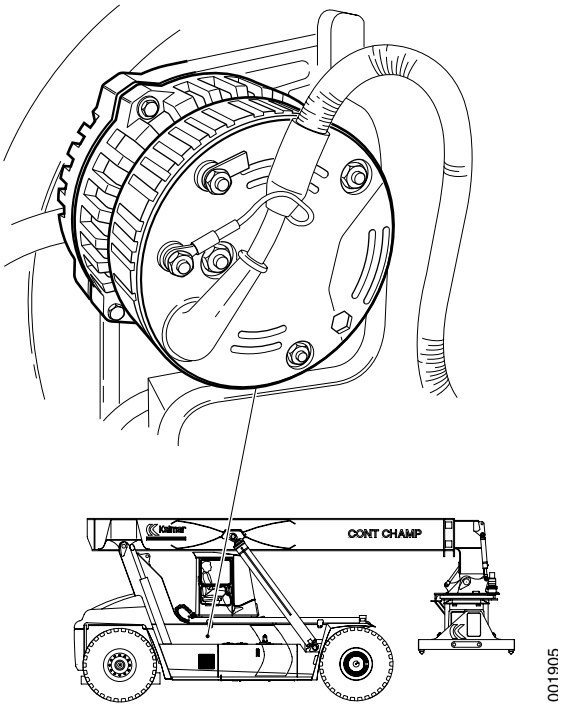

Alternator, changing

See *supplier documentation engine*.

https://truckmanualshub.com/

11.5 Distribution of electricity

Distribution of electricity, description

This section describes the distribution of electric power and communication between the control units. The distribution of electric power describes the basics of the electrical system and the network of control units.

11.5.1 Voltage feed

Start-up of electrical system, description

When the machine isn't in use, the electrical system is in a powerless mode, that is, neither power electronics nor controls units are supplied with voltage. When the machine is started, voltage feed is activated and the redundant CAN bus is initiated. Start-up is handled by control unit cab (D790-1).

The first pre-requisite for the machine to be able to perform any action is to first establish the redundant voltage feed for control units and then establish CAN-bus communication to administer control signals for functions.

Control units establish communication when:

- Operator's door is opened
- Interior lighting is lit
- Flashing hazard lights are activated
- Start key in position I

Start-up

The following takes place at start-up:

1. Start-up signal to Control unit cab (D790-1).
2. Control unit cab (D790-1) initiates connection of redundant voltage feed. See *Redundant voltage feed of control units, description page 12*.

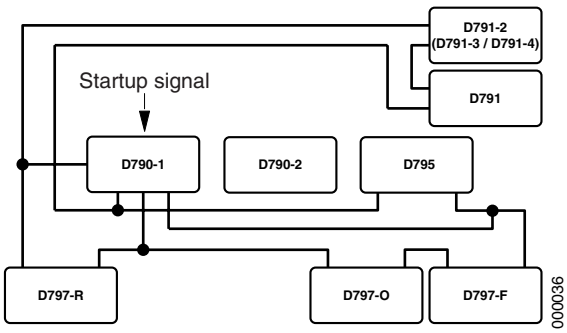

Start-up signal is sent

https://truckmanualshub.com/

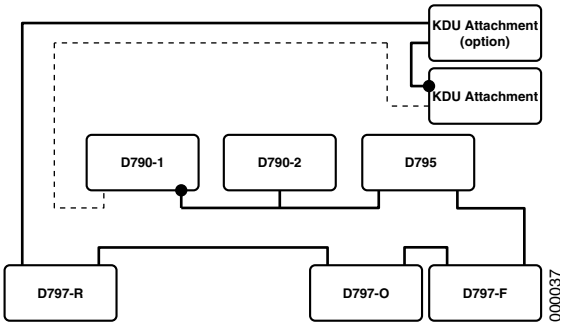

Redundant CAN-bus communication

3. Control unit cab (D790-1) establishes of redundant CAN-bus.

   See *Redundant CAN-bus, description page 16*.
4. Control unit cab (D790-1) activates ignition voltage (15). See *Ignition voltage (15), description page 13*.
5. Control unit cab (D790-1) activates CAN-bus drivetrain. See *CAN-bus drivetrain, description page 16*.
6. Control unit cab (D790-1) activates manoeuvre switch voltage (15E). See *Manoeuvre switch voltage (15E), description page 14*.

System down in powerless mode

The system goes down in powerless mode when:

- Start key in position 0 and no activity signal has been sent.
- Start key in position 0 and hold circuit's run time has expired and no activity signal has been sent. ⊕
- Start key in position 1 and automatic engine shut-down has been activated. ⊕

The following takes place when the system goes down in powerless mode.

1. Control unit cab (D790-1) cuts off manoeuvre switch voltage(15E).

   See *Manoeuvre switch voltage (15E), description page 14*.
2. Control unit cab (D790-1) cuts off ignition voltage (15).

   See *Ignition voltage (15), description page 13*.
3. Redundant voltage feed to control units is cut off.
4. Control unit cab (D790-1) disconnects the redundant CAN bus.

   See *Redundant CAN-bus, description page 16*.
5. Control unit cab (D790-1) disconnects redundant voltage feed.

   See *Redundant voltage feed of control units, description page 12*.
6. Control unit cab (D790-1) awaits start-up signal. Other electronics are without electric power.

11.5.1.1 Battery voltage (30)

Battery voltage 30-voltage, description

The battery voltage feeds voltage:

- Control and monitoring system at start up. See *Start-up of electrical system, description page 10*.
- Starter motor
- Main relays (15-voltage)
- Control breaker relays (15E-voltage)
- Engine
- Transmission

https://truckmanualshub.com/

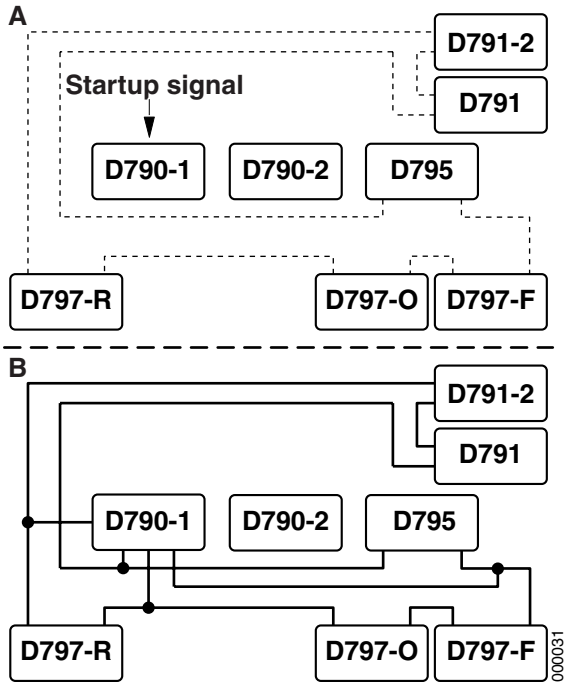

A. Start-up signal is sent
B. All control units are supplied with voltage

11.5.1.2 Redundant voltage feed of control units

Redundant voltage feed of control units, description

The redundant voltage feed only supplies the control units' control logic and buses, and is completely controlled by Control unit cab (D790-1). The control units' outputs remain without electric power and are first supplied with voltage when the ignition voltage is activated.

The redundant voltage feed for each control unit is independent of the other control units. If a control unit is non-functional, it does not interfere with the voltage feed to the other control units.

When all control units have redundant voltage feed and bus communication, the system is ready to receive, process signals.

When redundant voltage feed is activated the following takes place.

1. Start-up signal is sent to Control unit cab (D790-1), see A in illustration.
2. A hold circuit is activated in Control unit cab (D790-1) which activates the control unit's control logic.
3. Control unit cab (D790-1) activates redundant voltage feed to the other control units, see B in illustration.

   Control unit cab (D790-1) has 4 outputs for voltage feed, other control units have two inputs for redundant voltage feed. In case of malfunction of one feed, the control unit is supplied from the other feed.

https://truckmanualshub.com/

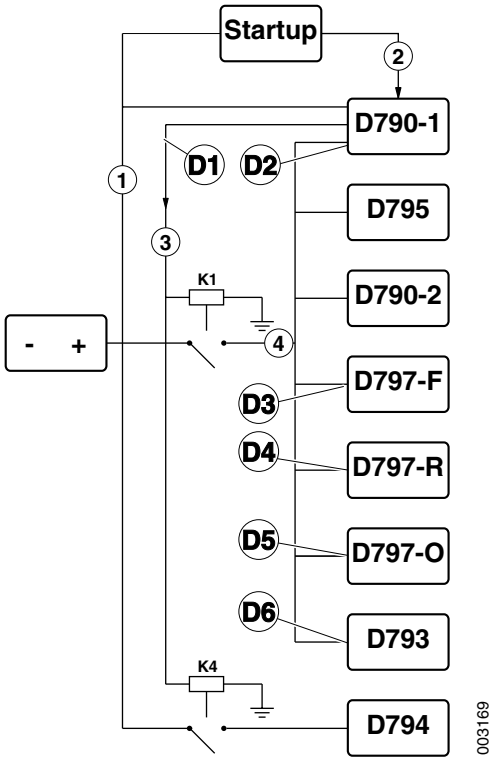

Power feed ignition circuit
D1. Diagnostic menu 8.4.1.4
D2. Diagnostic menu 8.4.1.6
D3. Diagnostic menu 8.4.1.8
D4. Diagnostic menu 8.4.1.10
D5. Diagnostic menu 8.4.1.12
D6. Diagnostic menu 8.4.1.15

11.5.1.3 Ignition voltage (15)

Ignition voltage (15), description

The ignition voltage feeds the power electronics.

The ignition voltage is activated by:

- Start key in position I
- Flashing hazard lights (Hazard) activated

When ignition voltage is activated the following takes place.

1. Battery disconnector in position 1. Voltage feed to Control unit cab (D790-1), ignition, switch flashing hazard lights, door switch and interior lighting.
2. Switch for start-up signal gives pulse to Control unit cab (D790-1).

   CAN-bus communication is established (not drivetrain).
3. Start key in position I or flashing hazard lights activated.
4. Control unit cab (D790-1) supplies voltage to power relay K1 in electrical distribution box frame
5. Ignition voltage supplies control units, relays, solenoid valves and other electronics.

   Drivetrain's CAN-bus establishes communication.

https://truckmanualshub.com/

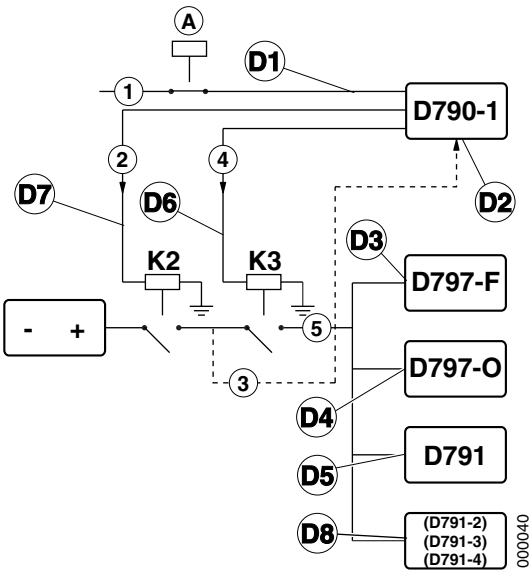

Power feed, control switch circuit

D1. Diagnostic menu 8.4.1.5
D2. Diagnostic menu 8.4.1.5
D3. Diagnostic menu 8.4.1.8
D4. Diagnostic menu 8.4.1.12
D5. Diagnostic menu 8.4.1.16
D6. Diagnostic menu 8.4.1.5
D7. Diagnostic menu 8.4.1.5
D8.1 Diagnostic menu 8.4.1.17
D8.2 Diagnostic menu 8.4.1.18
D8.3 Diagnostic menu 8.4.1.19

11.5.1.4 Manoeuvre switch voltage

Manoeuvre switch voltage (15E), description

The manoeuvre switch voltage supplies functions which require a control switch, e.g. working hydraulics.

The control breaker is activated with Switch control breaker.

Condition to activate control breaker voltage is that Switch control breaker is not pressed in.

- Start key in position I
- Ignition voltage (15)
- Switch, control switch not activated.

When control switch voltage is activated the following takes place.

1. Ignition voltage is connected to Control unit cab (D790-1).
2. Control unit cab (D790-1) activates power relay K2 in electrical distribution box frame and control breaker voltage (15E), feeds the circuit to relay K3 in electrical distribution box frame.
3. 15E-feed sends a voltage signal to Control unit cab (D790-1) and verifies that relay K2 is active but that relay K3 is inactive.

   This verifies that the operation breaker is working.
4. Control unit cab (D790-1) activates power relay K3 in the electrical distribution box and the control breaker voltage feeds voltage to the control units (not drivetrain).
5. When Switch control breaker (position A) is pressed down, the ignition voltage is interrupted to Control unit cab (D790-1) and thus the control current to relay K2 and relay K3. Electric power feed to the control units is interrupted and the functions stop.

   As an additional safety feature, Control unit cab (D790-1) also sends the status of the control breaker on the CAN-bus. This means that the functions are also stopped at signal level.

https://truckmanualshub.com/

11.5.3 Control units

Control units, general

The control units are allotted responsibility for parts of functions. Therefore, a certain function cannot be connected to a special control unit, instead it is created in cooperation between control units, sensors, valves, etc.

Control units, position

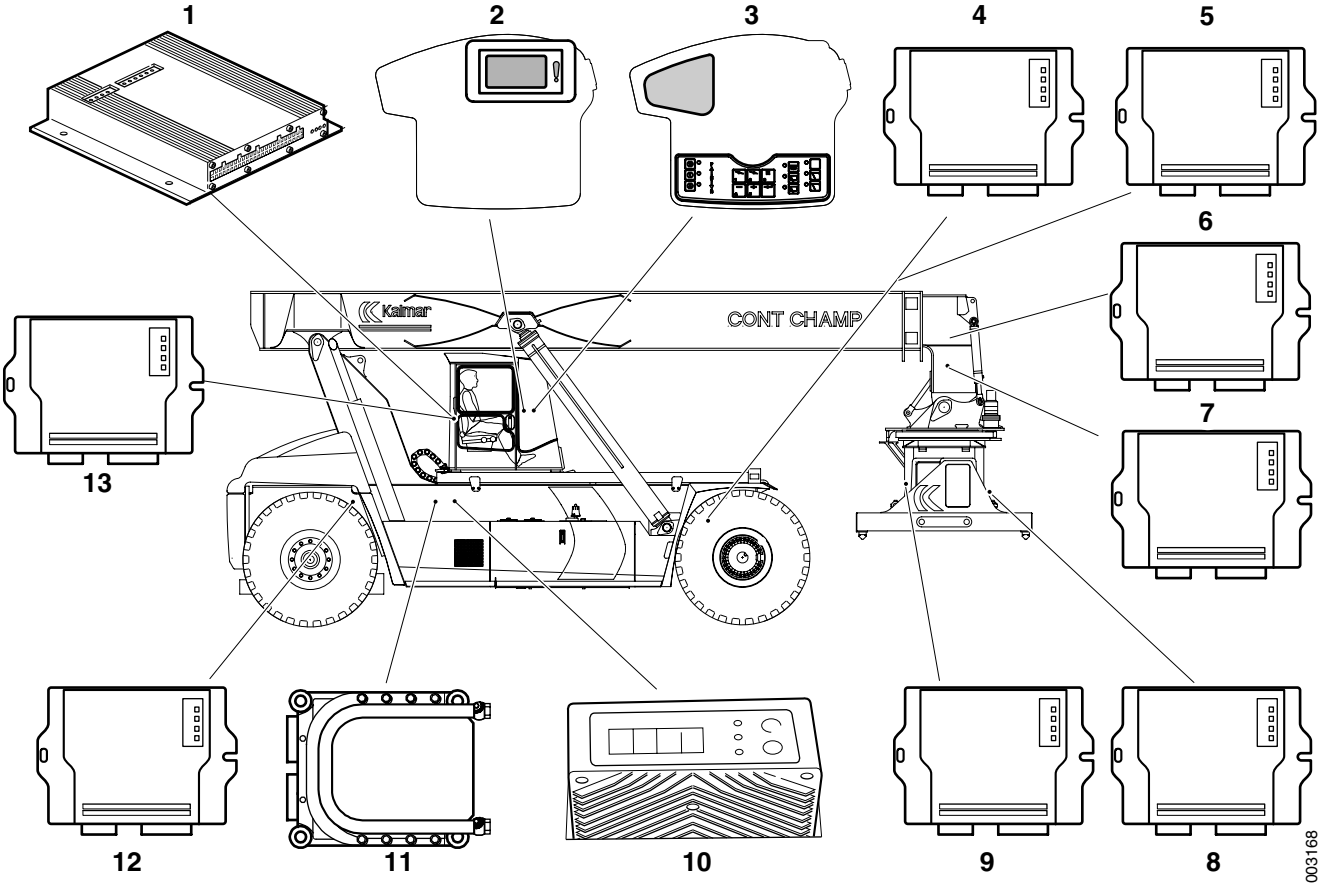

1. Control unit cab (D790-1)
2. Control unit KID (D795)
3. Control unit KIT (D790-2)
4. Control unit frame front (D797-F)
5. Control unit frame option (D797-O) ⊕
6. Control unit attachment (D791-1)
7. Control unit attachment option (D791-2) ⊕
8. Control unit attachment left legs (D791-3) ⊕
9. Control unit attachment right leg pair (D791-4) ⊕
10. Control unit transmission (D793)
11. Control unit engine (D794)
12. Control unit frame rear (D797-R)
13. Control unit cab option (D790-3) ⊕

Only on machines with both combi attachment and mini-wheel or combi attachment and joystick steering

https://truckmanualshub.com/

11.6 Communication

Communication, general

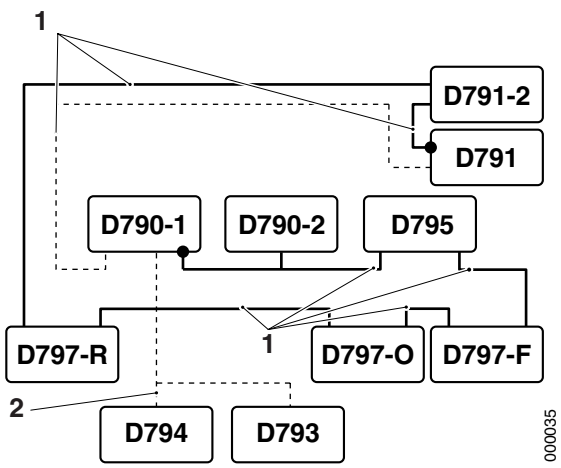

1. Segment
2. CAN-bus drivetrain

The machine's communication is handled by a so-called CAN-bus system. The CAN-bus system consists of control units connected to form a network.

The idea with a network is to share information. Signal values are sent out by the control unit that, e.g., is connected to a sensor, other controls units can use the signal for their functions.

The network consists of control units and segments. Segment is the CAN-bus between the control units.

11.6.1 CAN-bus

CAN bus, description

The CAN bus consists of two twisted paired leads (twisted pair).

11.6.2 Redundant CAN-bus

Redundant CAN-bus, description

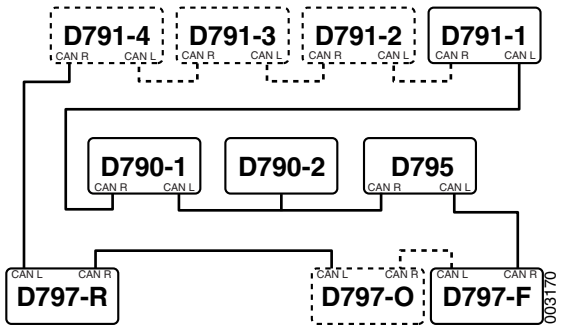

Principle illustration redundant CAN-bus

Redundant CAN-bus means that every control unit has two connections for communication. The CAN-bus is connected in series between the control units. This means that the CAN-bus can handle loss of a segment. If several segments are lost, some control unit(s) lose contact with the network and work independently, often with limited capacity to perform its task.

The signals can be checked with diagnostic menu.

11.6.3 CAN-bus driveline

CAN-bus drivetrain, description

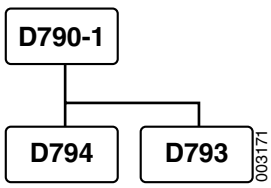

Principle illustration CAN-bus drivetrain

Communication with Control unit engine (D794) and Control unit transmission (D793) is separated from the redundant CAN-bus.

The signals can be checked with diagnostic menu.

https://truckmanualshub.com/

Table of Contents D Error codes

Error codes **3**
Error codes, explanation 3
Reading out error code 4
1 Engine **6**
Error codes engine alternative Volvo 6
Error codes engine alternative Cummins 23
2 Transmission **39**
Error codes transmission 39
8 Control system **54**
Error codes machine 54

https://truckmanualshub.com/

https://truckmanualshub.com/

Error codes

Error codes, explanation

The error codes are explained in table form for Engine, Transmission as well as Control system. They are sorted according to error code number.

The error code table has the following information:

- Code, error code's number, shown in field C on display.
- Description, explanation of the error code and when it's generated.
- Limitation, in case of certain error codes certain functions are impaired or limited to protect the machine and operator.
- Action, information of what should be checked to find the cause of the error code.
- Diagnostic menu, reference to suitable diagnostic menu to fix the problem, read signal value or check the function.

  In the description of the diagnostic menus there are, in addition to the explanation of the display figure, reference to circuit diagrams that are found in section *E Diagrams* and reference to function group for further information about functions and components.
- Function group, is a reference to which function group that the error code is connected, this field shall be sued to search for more information when needed. With the function group, different types of information can be found.

  In sections 0-12 there is a description of the function and its components, component position and work instructions for different work.

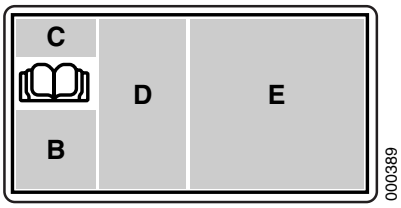

B. Error code level (symbol)
C. Error code number
D. Cause of error (symbol)
E. Function (symbol)

https://truckmanualshub.com/

Reading out error code

NOTE

In case of an error code, perform the recommended actions according to the error code table to find the problem.

Error codes are stored as active or inactive. Active errors are shown in the error code menu.

Always use error code menus for reading out error codes, otherwise there's a risk of missing error codes.

1 Turn the start key to position I.

WARNING

Risk of machine damage.

In case of error codes of level "WARNING" and "STOP", serious machine damage may result if the engine is started.

Do not start the engine until the cause of the error code has been identified or repaired.

000056

2 Navigate to the service menu and press Enter.

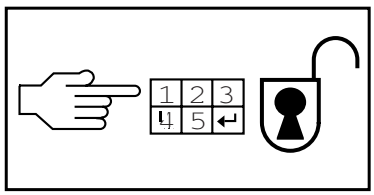

000060

3 Safety menu is shown. Hold Enter pressed in for at least two seconds.

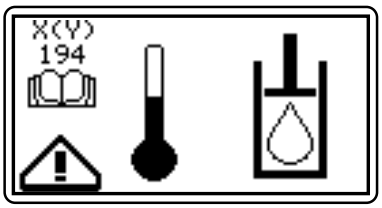

001998

4 The error code list is shown on the display. Active error code is shown on display where field C shows error code number together with X(Y). X shows sequence number for shown error code and (Y) shows number of active error codes.

Scroll between error codes with key 1 and 2 (arrow function).

Error codes disappear from list when the cause has been repaired.

https://truckmanualshub.com/

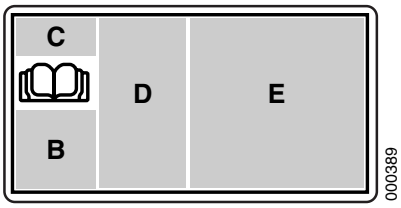

5 Note error code number (field C) to not forget.
- Error code level is shown with a symbol in field B
- Error code is shown in field C
- Error cause is shown with a symbol in field D
- Function affected by the error, shown with a symbol in field E

  The book symbol encourages the operator to read the operator's manual.

6 Use the error code tables to find more information about the error code.
- *Error codes engine alternative Volvo page 6*
- *Error codes engine alternative Cummins page 23*
- *Error codes transmission page 39*
- *Error codes machine page 54*

7 After action, check that no active error codes remain for the function in question.

https://truckmanualshub.com/

1 Engine

Error codes engine alternative Volvo

Code	Volvo code	Description	Limitation	Action	Connection and component	Diagnostic menu	Function group
91/3	23 DTC 2.7	Throttle pedal connected to the engine's control unit, cable short-circuited to voltage or open circuit.	Engine goes to idle. If the throttle pedal is released and then pressed down again, the engine can go to Limp-home by using the idle switch.	Check that the control's connection is installed correctly. Check that the cables to the sensor are not damaged. Check the sensor. Check that the 23-pin connector is installed correctly. Check pin C and socket C in the 23-pin connector. Check connection 3 in the red connector on the engine's control unit.	D794/ Red:3	-	1.1.2 Throttle pedal
91/4	24 DTC 2.7	Throttle pedal connected to the engine's control unit, cable short-circuited to ground.	Engine goes to idle. If the throttle pedal is released and then pressed down again, the engine can go to Limp-home by using the idle switch.	Check that the potentiometer is installed correctly. Check that the cables to the potentiometer are not damaged. Check the potentiometer.	-	-	1.1.2 Throttle pedal
97/1	175 DTC 2.1	Water in fuel	No limitation.	Drain water trap. Clean metal filter in fuel feed's hose connection on the engine. Check fuel filter and fuel pre-filter.	-	-	1.2.3 Fuel pre-filter

https://truckmanualshub.com/

Code	Volvo code	Description	Limitation	Action	Connection and component	Diagnostic menu	Function group
97/3	176 DTC -	Water in fuel or clogged fuel line (low fuel pressure).	No limitation.	Drain water trap. Clean metal filter in feed line's hose connection on the engine. Check fuel filter and fuel pre-filter.	-	-	1.2.3 Fuel pre-filter
100/1	180 DTC 6.6	Low engine oil pressure.	Engine is shut off.	Check the oil level. Check that filters are not clogged. Check the system pressure valves and the safety valve in the lubrication system. Check the sensor function.	-	ENGINE, menu 6	1.8 Lubrication system
100/3	181 DTC 3.1	Sensor oil pressure cable short-circuited to voltage.	No limitation.	Check cabling between control unit and component. Check that sensor is installed correctly.	D794/ Black:14	ENGINE, menu 6	1.8.3 Sensor oil pressure
100/4	182 DTC 3.1	Sensor oil pressure, open circuit or short-circuited to ground.	No limitation.	Check cabling between control unit and component. Check that sensor is installed correctly. Check connection 14 in the black connector on the engine's control unit.	D794/ Black:14	ENGINE, menu 6	1.8.3 Sensor oil pressure
102/0	57 DTC -	High boost pressure.	No limitation.	Check turbocharger. Check sensor boost pressure. Check fuel quality and unit injectors.	-	ENGINE, menu 6	1.6 Air inlet and exhaust system
102/1	58 DTC -	Low boost pressure.	Reduced engine power.	Check air filter. Check turbocharger Check sensor boost pressure. Check fuel feed pressure.	-	ENGINE, menu 6	1.6 Air inlet and exhaust system

https://truckmanualshub.com/

Code	Volvo code	Description	Limitation	Action	Connection and component	Diagnostic menu	Function group
102/3	67 DTC 3.4	Sensor boost pressure, cable short-circuited to voltage.	Engine smokes more than normal when accelerating/loaded.	Check cabling between control unit and component. Check sensor boost pressure.	D794/ Black:3	ENGINE, menu 7	1.6.5 Sensor boost pressure
102/4	68 DTC 3.4	Sensor boost pressure, cable short-circuited to ground or open circuit.	Engine smokes more than normal when accelerating/loaded.	Check that sensor boost pressure is installed correctly and connected. Check cabling between control unit and component. Check sensor boost pressure. Check connection 3 in the black connector on the engine's control unit.	D794/ Black:3	ENGINE, menu 7	1.6.5 Sensor boost pressure
105/0	31 DTC 6.1	High coolant temperature.	Engine is shut off.	Check coolant level. Check that radiator is clean. Check that there's no air in coolant system. Check the cap on the expansion tank. Check sensor coolant temperature. Check thermostat.	-	ENGINE, menu 7	1.7 Cooling system
105/3	25 DTC 3.2	Sensor charge-air temperature, cable short-circuited to voltage or open circuit.	No limitation.	Check that sensor charge-air temperature is installed correctly and connected. Check cabling between control unit and component. Check sensor charge-air temperature. Check connection 2 in the black connector on the engine's control unit.	D794/ Black:2	ENGINE, menu 7	1.6.6 Sensor charge-air temperature

https://truckmanualshub.com/

Code	Volvo code	Description	Limitation	Action	Connection and component	Diagnostic menu	Function group
105/4	26 DTC 3.3	Sensor charge-air temperature, cable short-circuited to ground or open circuit.	No limitation.	Check cabling between control unit and component. Check that sensor charge-air temperature is installed correctly and connected. Check sensor charge-air temperature.	D794/ Black:2	ENGINE, menu 7	1.6.6 Sensor charge-air temperature
110/0	31 DTC 6.1	High coolant temperature.	Engine is shut off.	Check coolant level. Check that radiator is clean. Check if there's air in coolant system. Check the cap on the expansion tank. Check sensor coolant temperature. Check thermostat.	-	ENGINE, menu 7	1.7 Cooling system
110/3	27 DTC 3.3	Sensor coolant temperature, cable short-circuited to voltage or open circuit.	Preheating activated even when engine is warm.	Check that sensor coolant temperature is installed correctly and connected. Check cabling between control unit and component. Check sensor coolant temperature.	D794/ Black:25	ENGINE, menu 7	1.7.9 Sensor coolant temperature
110/4	28 DTC 3.3	Sensor coolant temperature, cable short-circuited to ground.	Preheating activated even when engine is warm.	Check cabling between control unit and component. Check that sensor coolant temperature is connected correctly. Check sensor coolant temperature.	D794/ Black:25	ENGINE, menu 7	1.7.9 Sensor coolant temperature
111/1	191 DTC 2.2	Low coolant level.	Engine is shut off.	Check the coolant level, top up if needed. Check sensor coolant level.	-	-	1.7 Cooling system

https://truckmanualshub.com/

Code	Volvo code	Description	Limitation	Action	Connection and component	Diagnostic menu	Function group
1485/3	43 DTC 5.1	Main relay, cable short-circuited to voltage.	Instrument panel loses voltage when ignition key is turned to start position. Engine doesn't start.	Check that cables to relay aren't damaged. Check relay's function.	-	-	11.5.3 Power supply
175/0	183 DTC 5.8	High engine oil temperature.	Reduced engine power.	Check the oil level. Check oil temperature. Check lubrication system's thermostat. Check sensor oil temperature.	-	ENGINE, menu 7	1.8 Lubrication system
175/3	184 DTC 3.7	Sensor oil temperature, cable short-circuited to voltage or open circuit.	None.	Check cabling between control unit and component. Check that sensor oil temperature is connected correctly. Check connection 1 in the black connector on the engine's control unit.	D794/ Black:1	ENGINE, menu 7	1.8.7 Sensor oil temperature
175/4	185 DTC 3.7	Sensor oil temperature, cable short-circuited to ground.	None.	Check cabling between control unit and component. Check that sensor oil temperature is connected correctly.	D794/ Black:1	ENGINE, menu 7	1.8.7 Sensor oil temperature

https://truckmanualshub.com/

Code	Volvo code	Description	Limitation	Action	Connection and component	Diagnostic menu	Function group
620/3	63 DTC - -	Voltage feed to sensor, cable short-circuited to voltage.	Several error codes for defective sensor.	Check connection 5 in the black connector on the engine's control unit.	D794/ Black:5	-	1.6.5 Sensor boost pressure 1.6.6 Sensor charge-air temperature 1.7.9 Sensor coolant temperature 1.8.3 Sensor oil pressure 1.8.7 Sensor oil temperature
620/4	64 DTC - -	Voltage feed to sensor, cable short-circuited to ground.	Several error codes for defective sensor.	Check connection 4 in the black connector on the engine's control unit.	D794/ Black:4	-	1.6.5 Sensor boost pressure 1.6.6 Sensor charge-air temperature 1.7.9 Sensor coolant temperature 1.8.3 Sensor oil pressure 1.8.7 Sensor oil temperature
626/3	76 DTC 5.4	Preheating relay, cable short-circuited to voltage.	Preheating cannot be activated.	Check cabling between control unit and component. Check relay's function.	D794/ Red:36	ENGINE, menu 5	1.10.1 Preheating
626/4	75 DTC 5.4	Preheating relay, cable short-circuited to ground.	Preheating constantly activated.	Check cabling between control unit and component. Check relay's function.	D794/ Red:36	ENGINE, menu 5	1.10.1 Preheating

https://truckmanualshub.com/

Code	Volvo code	Description	Limitation	Action	Connection and component	Diagnostic menu	Function group
626/5	74 DTC 5.4	Preheating relay open circuit on cable or defective component.	Preheating cannot be activated.	Check cabling between control unit and component. Check relay's function. Check connection 36 in the red connector on the engine's control unit.	D794/ Red:36	ENGINE, menu 5	1.10.1 Preheating
628/ 12	255 DTC 9.9	Memory error in control unit engine (D794).	Engine does not start (varies).	Change control unit engine (D794)	-	-	11.5.3.10 Control unit engine
628/2	256 DTC 9.9	Electric malfunction engine.	Reduced engine power.	Troubleshoot engine with supplier's troubleshooting tools	-	-	-
629/ 11	186 DTC 9.9	Memory error in control unit engine (D794).	Engine doesn't start.	Change control unit engine (D794)	-	-	11.5.3.10 Control unit engine
629/ 12	187 DTC 9.9	Memory error in control unit engine (D794).	Engine doesn't start.	Change control unit engine (D794)	-	-	11.5.3.10 Control unit engine
629/ 13	186 DTC 9.9	Memory error in control unit engine (D794).	Engine doesn't start.	Change control unit engine (D794)	-	-	11.5.3.10 Control unit engine
629/2	187 DTC 9.9	Memory error in control unit engine (D794).	Engine doesn't start.	Change control unit engine (D794)	-	-	11.5.3.10 Control unit engine
629/8	186 DTC 9.9	Memory error in control unit engine (D794).	Engine doesn't start.	Change control unit engine (D794)	-	-	11.5.3.10 Control unit engine

https://truckmanualshub.com/

Code	Volvo code	Description	Limitation	Action	Connection and component	Diagnostic menu	Function group
630/12	- DTC -	Electric malfunction engine.	Reduced engine power.	Troubleshoot engine with supplier's troubleshooting tools	-	-	-
630/2	- DTC -	Electric malfunction engine.	Reduced engine power.	Troubleshoot engine with supplier's troubleshooting tools	-	-	-
636/3	102 DTC 2.5	Tachometer sensor, camshaft. No signal.	Engine takes longer time to start than normal. Engine runs normal when started.	Check that sensor installed correctly and connected. Check cabling between control unit and component. Check the sensor. Check connection in 7 and 18 in the black connector on the engine's control unit.	D794/ Black:7, D794/ Black:18	-	1.9.3 Sensor camshaft rpm
636/8	103 DTC 2.5	Sensor engine rpm, camshaft. Abnormal frequency.	Engine takes longer time to start than normal. Engine runs normal when started.	Check that sensor is installed correctly and connected. Check cabling between control unit and component. Check the sensor.	D794/ Black:7, D794/ Black:18	-	1.9.3 Sensor camshaft rpm
637/2	101 DTC 2.4	Sensor engine rpm, flywheel. Irregular signal.	Engine is extremely difficult to start and runs rough, if it runs.	Check that sensor is installed correctly and connected. Check cabling between control unit and component. Check the sensor. Check contact pressure in sockets 30 and 31 in the black connector on the engine's control unit.	D794/ Black:30, D794/ Black:31	-	1.9.2. Sensor engine rpm

https://truckmanualshub.com/

Code	Volvo code	Description	Limitation	Action	Connection and component	Diagnostic menu	Function group
637/3	18 DTC 2.4	Sensor engine rpm, flywheel. Abnormal frequency.	Engine is extremely difficult to start and runs rough, if it runs.	Check that sensor is installed correctly and connected. Check cabling between control unit and component. Check the sensor.	D794/ Black:30, D794/ Black:31	-	1.9.2. Sensor engine rpm
637/8	18 DTC 2.4	Sensor engine rpm, flywheel. Abnormal frequency.	Engine is extremely difficult to start and runs rough, if it runs.	Check that sensor is installed correctly and connected. Check cabling between control unit and component. Check the sensor.	D794/ Black:30, D794/ Black:31	-	1.9.2. Sensor engine rpm
639/ 11	38 DTC 6.5	Communication error with Control unit engine (D794), configuration error.	Engine off: engine cannot be started. Engine on: engine goes to idle and can only be stopped with emergency stop.	Check that the 8-pin connector isn't damaged. Check that cables between CIU and engine's control unit aren't damaged. Check that connection 11 and 12 in CIU-connector are intact. Check connection 1 and 2 in the red connector on the engine's control unit.	D794/ Red:1, Red:2	CAN/ POWER, menu 2	1.6.3 CAN-bus drivetrain
639/ 12	38 DTC 6.5	Communication error with Control unit engine (D794), configuration error.	Engine off: engine cannot be started. Engine on: engine goes to idle and can only be stopped with emergency stop.	Check that the 8-pin connector isn't damaged. Check that cables between CIU and engine's control unit aren't damaged. Check that connection 11 and 12 in CIU-connector are intact. Check connection 1 and 2 in the red connector on the engine's control unit.	D794/ Red:1, Red:2	CAN/ POWER, menu 2	1.6.3 CAN-bus drivetrain

https://truckmanualshub.com/

Code	Volvo code	Description	Limitation	Action	Connection and component	Diagnostic menu	Function group
639/2	106 DTC 6.5	Communication error with Control unit engine (D794).	Engine off: engine cannot be started. Engine on: engine goes to idle and can only be stopped with emergency stop.	Check that the 8-pin connector isn't damaged. Check that the 8-pin cable between machine and engine's control unit isn't damaged. Check connection 11 and 12 in CIU-connection aren't damaged. Check connection 1 and 2 in the red connector on the engine's control unit.	D794/ Red:1, Red:2	CAN/ POWER, menu 2	1.6.3 CAN-bus drivetrain
639/9	106 DTC 6.5	Communication error with Control unit engine (D794).	Engine off: engine cannot be started. Engine on: engine goes to idle and can only be stopped with emergency stop.	Check that the 8-pin connector isn't damaged. Check that cables between CIU and engine's control unit aren't damaged. Check that connection 11 and 12 in CIU-connector are intact. Check connection 1 and 2 in the red connector on the engine's control unit.	D794/ Red:1, Red:2	CAN/ POWER, menu 2	1.6.3 CAN-bus drivetrain
651/ 11	113 DTC 7.1	Electric malfunction, injector cylinder 1.	Engine runs on 5 cylinders, sounds rough and has reduced power.	Check cabling between control unit and component. Check unit injector connected correctly.	D794/ Black:11, Black:12	-	1.2.8 Injectors
651/2	110 DTC 7.1	Electric malfunction, injector cylinder 1.	Engine runs on 5 cylinders, sounds rough and has reduced power.	Check cabling between control unit and component. Check unit injector connected correctly.	D794/ Black:11, Black:12	-	1.2.8 Injectors
651/3	112 DTC 7.1	Electric malfunction, injector cylinder 1.	Engine runs on 5 cylinders, sounds rough and has reduced power.	Check cabling between control unit and component. Check unit injector connected correctly.	D794/ Black:11, Black:12	-	1.2.8 Injectors

https://truckmanualshub.com/

Code	Volvo code	Description	Limitation	Action	Connection and component	Diagnostic menu	Function group
651/4	111 DTC 7.1	Electric malfunction, injector cylinder 1.	Engine runs on 5 cylinders, sounds rough and has reduced power.	Check cabling between control unit and component. Check unit injector connected correctly.	D794/ Black:11, Black:12	-	1.2.8 Injectors
651/5	115 DTC 7.1	Electric malfunction, injector cylinder 1.	Engine runs on 5 cylinders, sounds rough and has reduced power.	Check connection 11 in the black connector in the engine's control unit. Check cabling between control unit and component. Check unit injector connected correctly.	D794/ Black:11, Black:12	-	1.2.8 Injectors
651/7	114 DTC 7.1	Defective compression or unit injector on cylinder 1.	Rough running at low rpms and low load.	Check fuel feed pressure. Check valve's clearance. Check that unit injector and cable harness aren't damaged. Perform compression test and check cylinder 1.	D794/ Black:11, Black:12	-	1.2.8 Injectors 1.5 Engine mechanical parts
652/ 11	123 DTC 7.2	Electric malfunction, injector cylinder 2.	Engine runs on 5 cylinders, sounds rough and has reduced power.	Check cabling between control unit and component. Check unit injector connected correctly.	D794/ Black:22, Black:12	-	1.2.8 Injectors
652/2	120 DTC 7.2	Electric malfunction, injector cylinder 2.	Engine runs on 5 cylinders, sounds rough and has reduced power.	Check cabling between control unit and component. Check unit injector connected correctly.	D794/ Black:22, Black:12	-	1.2.8 Injectors
652/3	122 DTC 7.2	Electric malfunction, injector cylinder 2.	Engine runs on 5 cylinders, sounds rough and has reduced power.	Check cabling between control unit and component. Check unit injector connected correctly.	D794/ Black:22, Black:12	-	1.2.8 Injectors

https://truckmanualshub.com/

Code	Volvo code	Description	Limitation	Action	Connection and component	Diagnostic menu	Function group
652/4	121 DTC 7.2	Electric malfunction, injector cylinder 2.	Engine runs on 5 cylinders, sounds rough and has reduced power.	Check cabling between control unit and component. Check unit injector connected correctly.	D794/ Black:22, Black:12	-	1.2.8 Injectors
652/5	125 DTC 7.2	Electric malfunction, injector cylinder 2.	Engine runs on 5 cylinders, sounds rough and has reduced power.	Check connection 22 in the black connector in the engine's control unit. Check cabling between control unit and component. Check unit injector connected correctly.	D794/ Black:22, Black:12	-	1.2.8 Injectors
652/7	124 DTC 7.2	Defective compression or unit injector on cylinder 2.	Rough running at low rpms and low load.	Check fuel feed pressure. Check valve's clearance. Check that unit injector and cable harness aren't damaged. Perform compression test and check cylinder 2.	D794/ Black:22, Black:12	-	1.2.8 Injectors 1.5 Engine mechanical parts
653/ 11	133 DTC 7.3	Electric malfunction, injector cylinder 3.	Engine runs on 5 cylinders, sounds rough and has reduced power.	Check cabling between control unit and component. Check unit injector connected correctly.	D794/ Black:23, Black:12	-	1.2.8 Injectors
653/2	130 DTC 7.3	Electric malfunction, injector cylinder 3.	Engine runs on 5 cylinders, sounds rough and has reduced power.	Check cabling between control unit and component. Check unit injector connected correctly.	D794/ Black:23, Black:12	-	1.2.8 Injectors
653/3	132 DTC 7.3	Electric malfunction, injector cylinder 3.	Engine runs on 5 cylinders, sounds rough and has reduced power.	Check cabling between control unit and component. Check unit injector connected correctly.	D794/ Black:23, Black:12	-	1.2.8 Injectors

https://truckmanualshub.com/

Code	Volvo code	Description	Limitation	Action	Connection and component	Diagnostic menu	Function group
653/4	131 DTC 7.3	Electric malfunction, injector cylinder 3.	Engine runs on 5 cylinders, sounds rough and has reduced power.	Check cabling between control unit and component. Check unit injector connected correctly.	D794/ Black:23, Black:12	-	1.2.8 Injectors
653/5	135 DTC 7.3	Electric malfunction, injector cylinder 3.	Engine runs on 5 cylinders, sounds rough and has reduced power.	Check connection 23 in the black connector in the engine's control unit. Check cabling between control unit and component. Check unit injector connected correctly.	D794/ Black:23, Black:12	-	1.2.8 Injectors
653/7	134 DTC 7.3	Defective compression or unit injector on cylinder 3.	Rough running at low rpms and low load.	Check fuel feed pressure. Check valve's clearance. Check that unit injector and cable harness aren't damaged. Perform compression test and check cylinder 3.	D794/ Black:23, Black:12	-	1.2.8 Injectors 1.5 Engine mechanical parts
654/ 11	143 DTC 7.4	Electric malfunction, injector cylinder 4.	Engine runs on 5 cylinders, sounds rough and has reduced power.	Check cabling between control unit and component. Check unit injector connected correctly.	D794/ Black:34, Black:24	-	1.2.8 Injectors
654/2	140 DTC 7.4	Electric malfunction, injector cylinder 4.	Engine runs on 5 cylinders, sounds rough and has reduced power.	Check cabling between control unit and component. Check unit injector connected correctly.	D794/ Black:34, Black:24	-	1.2.8 Injectors
654/3	142 DTC 7.4	Electric malfunction, injector cylinder 4.	Engine runs on 5 cylinders, sounds rough and has reduced power.	Check cabling between control unit and component. Check unit injector connected correctly.	D794/ Black:34, Black:24	-	1.2.8 Injectors

https://truckmanualshub.com/

Code	Volvo code	Description	Limitation	Action	Connection and component	Diagnostic menu	Function group
654/4	141 DTC 7.4	Electric malfunction, injector cylinder 4.	Engine runs on 5 cylinders, sounds rough and has reduced power.	Check cabling between control unit and component. Check unit injector connected correctly.	D794/ Black:34, Black:24	-	1.2.8 Injectors
654/5	145 DTC 7.4	Electric malfunction, injector cylinder 4.	Engine runs on 5 cylinders, sounds rough and has reduced power.	Check connection 34 in the black connector in the engine's control unit. Check cabling between control unit and component. Check unit injector connected correctly.	D794/ Black:34, Black:24	-	1.2.8 Injectors
654/7	144 DTC 7.4	Defective compression or unit injector on cylinder 4.	Rough running at low rpms and low load.	Check fuel feed pressure. Check valve's clearance. Check that unit injector and cable harness aren't damaged. Perform compression test and check cylinder 4.	D794/ Black:34, Black:24	-	1.2.8 Injectors 1.5 Engine mechanical parts
655/ 11	153 DTC 7.5	Electric malfunction, injector cylinder 5.	Engine runs on 5 cylinders, sounds rough and has reduced power.	Check cabling between control unit and component. Check unit injector connected correctly.	D794/ Black:35, Black:24	-	1.2.8 Injectors
655/2	150 DTC 7.5	Electric malfunction, injector cylinder 5.	Engine runs on 5 cylinders, sounds rough and has reduced power.	Check cabling between control unit and component. Check unit injector connected correctly.	D794/ Black:35, Black:24	-	1.2.8 Injectors
655/3	152 DTC 7.5	Electric malfunction, injector cylinder 5.	Engine runs on 5 cylinders, sounds rough and has reduced power.	Check cabling between control unit and component. Check unit injector connected correctly.	D794/ Black:35, Black:24	-	1.2.8 Injectors

https://truckmanualshub.com/

Code	Volvo code	Description	Limitation	Action	Connection and component	Diagnostic menu	Function group
655/4	151 DTC 7.5	Electric malfunction, injector cylinder 5.	Engine runs on 5 cylinders, sounds rough and has reduced power.	Check cabling between control unit and component. Check unit injector connected correctly.	D794/ Black:35, Black:24	-	1.2.8 Injectors
655/5	155 DTC 7.5	Electric malfunction, injector cylinder 5.	Engine runs on 5 cylinders, sounds rough and has reduced power.	Check connection 35 in the black connector in the engine's control unit. Check cabling between control unit and component. Check unit injector connected correctly.	D794/ Black:35, Black:24	-	1.2.8 Injectors
655/7	154 DTC 7.5	Defective compression or unit injector on cylinder 5.	Engine runs on 5 cylinders, sounds rough and has reduced power.	Check that cables to unit injectors aren't damaged. Check that connections to unit injectors aren't damaged. Perform compression test and check cylinder 5.	D794/ Black:35, Black:24	-	1.2.8 Injectors 1.5 Engine mechanical parts
656/ 11	163 DTC 7.6	Electric malfunction, injector cylinder 6.	Engine runs on 5 cylinders, sounds rough and has reduced power.	Check cabling between control unit and component. Check unit injector connected correctly.	D794/ Black:36, Black:24	-	1.2.8 Injectors
656/2	160 DTC 7.6	Electric malfunction, injector cylinder 6.	Engine runs on 5 cylinders, sounds rough and has reduced power.	Check cabling between control unit and component. Check unit injector connected correctly.	D794/ Black:36, Black:24	-	1.2.8 Injectors
656/3	162 DTC 7.6	Electric malfunction, injector cylinder 6.	Engine runs on 5 cylinders, sounds rough and has reduced power.	Check cabling between control unit and component. Check unit injector connected correctly.	D794/ Black:36, Black:24	-	1.2.8 Injectors

https://truckmanualshub.com/

Code	Volvo code	Description	Limitation	Action	Connection and component	Diagnostic menu	Function group
656/4	161 DTC 7.6	Electric malfunction, injector cylinder 6.	Engine runs on 5 cylinders, sounds rough and has reduced power.	Check cabling between control unit and component. Check unit injector connected correctly.	D794/ Black:36, Black:24	-	1.2.8 Injectors
656/5	165 DTC 7.6	Electric malfunction, injector cylinder 6.	Engine runs on 5 cylinders, sounds rough and has reduced power.	Check connection 36 in the black connector in the engine's control unit. Check cabling between control unit and component. Check unit injector connected correctly.	D794/ Black:36, Black:24	-	1.2.8 Injectors
656/7	164 DTC 7.6	Defective compression or unit injector on cylinder 6.	Rough running at low rpms and low load.	Check fuel feed pressure. Check valve's clearance. Check that unit injector and cable harness aren't damaged. Perform compression test and check cylinder 6.	D794/ Black:36, Black:24	-	1.2.8 Injectors 1.5 Engine mechanical parts
677/3	41 DTC 4.6	Start relay on starter motor, cable short-circuited to voltage.	Engine doesn't start.	Check cabling between control unit and component. Check relay.	-	-	1.11.1 Starter motor
677/4	42 DTC 4.6	Start relay on starter motor, cable short-circuited to ground.	Starter motor is activated, but no start is performed when ignition is turned on or off when engine is running.	Check cabling between control unit and component. Check relay.	-	-	1.11.1 Starter motor

https://truckmanualshub.com/

		Description	Limitation	Action	Connection and component	Diagnostic menu	Function group
Code	Volvo code						
677/5	107 DTC 4.6	Starter motor relay, open circuit on cable or defective component.	Engine doesn't start.	Check that cable to starter motor (yellow/black) is connected correctly. Check that cable to starter motor (yellow/black) isn't damaged. Check that relay on starter motor is intact. Check connection 31 in the red connector on the engine's control unit.	R31	-	1.11.1 Starter motor

https://truckmanualshub.com/

Error codes engine alternative Cummins

Code	Cummins code	Description	Limitation	Action	Connection and component	Diagnostic menu	Function group
84/10	242	Electric malfunction sensor speed, manipulation of signal detected.	Engine rpm restricted to max rpm without gear.	Check cabling between Control unit and component. Check component.	-	-	1.9 Control system engine
84/2	241	Electric malfunction sensor speed, data invalid.	Engine rpm restricted to max rpm without gear.	Check cabling between Control unit and component. Check component.	-	-	1.9 Control system engine
91/19	287	Communication error with Control unit cab (D790-1), electric malfunction throttle pedal.	Engine only runs at idle.	Use diagnostic menu to localize incorrect segment	-	CAN/ POWER, menu 2	1.9 Control system engine
91/3	131	Electric malfunction throttle pedal, cable short-circuited to voltage.	Engine doesn't respond to throttle application.	Check cabling between Control unit and component. Check component.	-	-	1.1.2 Throttle pedal
91/4	132	Electric malfunction throttle pedal, cable short-circuited to ground.	Engine doesn't respond to throttle application.	Check cabling between Control unit and component. Check component.	-	-	1.1.2 Throttle pedal
91/8	147	Electric malfunction throttle pedal, frequency too low.	Engine doesn't respond to throttle application.	Check cabling between Control unit and component. Check component.	-	-	1.1.2 Throttle pedal

https://truckmanualshub.com/

Code	Cummins code	Description	Limitation	Action	Connection and component	Diagnostic menu	Function group
91/8	148	Electric malfunction throttle pedal, frequency too high.	Engine doesn't respond to throttle application.	Check cabling between Control unit and component. Check component.	-	-	1.1.2 Throttle pedal
93/2	528	Electric malfunction switch torque limitation, data error.	-	Check cabling between Control unit and component. Check component.	-	-	1.9 Control system engine
97/15	418	Water in fuel.	Risk of white exhaust smoke and reduced engine power.	Drain water from fuel filter.	-	-	1.2.4 Fuel filter
97/3	428	Electric malfunction water in fuel, cable short-circuited to voltage.	No limitation.	Check cabling between Control unit and component. Check component.	D794/ Sensor:09	-	1.2.10 Make-contact water in fuel
97/4	429	Electric malfunction water in fuel, cable short-circuited to ground.	No limitation.	Check cabling between Control unit and component. Check component.	D794/ Sensor:09	-	1.2.10 Make-contact water in fuel
100/1	415	Low engine oil pressure.	Engine power is reduced successively, engine shuts off after 30 seconds.	Check the oil level in the engine, top up if needed.	-	ENGINE, menu 6	1.8 Lubrication system
100/18	143	Low engine oil pressure.	Engine power is reduced successively, engine shuts off after 30 seconds.	Check the oil level in the engine, fill as necessary. Check sensor oil pressure engine.	-	ENGINE, menu 6	1.8 Lubrication system

https://truckmanualshub.com/

Code	Cummins code	Description	Limitation	Action	Connection and component	Diagnostic menu	Function group
100/2	435	Sensor oil pressure, data error.	No warning for low oil pressure engine.	Check sensor oil pressure engine.	D794/ Sensor:44	ENGINE, menu 6	1.8.3 Sensor oil pressure
100/3	135	Sensor oil pressure cable short-circuited to voltage.	No warning for low oil pressure engine.	Check cabling between Control unit and component. Check sensor oil pressure engine.	D794/ Sensor:44	ENGINE, menu 6	1.8.3 Sensor oil pressure
100/4	141	Sensor oil pressure, open circuit or short-circuited to ground.	No warning for low oil pressure engine.	Check cabling between Control unit and component. Check sensor oil pressure engine.	D794/ Black:14	ENGINE, menu 6	1.8.3 Sensor oil pressure
102/2	433	Sensor boost pressure indicates heard boost pressure but other engine data indicate that pressure should be low.	Reduced engine power.	Check cabling between control unit and component. Check sensor boost pressure.	D794/ Sensor:39	ENGINE, menu 7	1.6.5 Sensor boost pressure
102/3	122	Sensor boost pressure, cable short-circuited to voltage.	Reduced engine power.	Check cabling between control unit and component. Check sensor boost pressure.	D794/ Sensor:39	ENGINE, menu 7	1.6.5 Sensor boost pressure
102/4	123	Sensor boost pressure, cable short-circuited to ground or open circuit.	Reduced engine power.	Check cabling between control unit and component. Check sensor boost pressure.	D794/ Black:3	ENGINE, menu 7	1.6.5 Sensor boost pressure

https://truckmanualshub.com/

		Description	Limitation	Action	Connection and component	Diagnostic menu	Function group
Code	Cummins code						
105/0	155	Warm inlet air	Engine power is reduced successively, engine shuts off after 30 seconds.	Check coolant level in the engine, top up if needed. Check that intercooler is clean, clean if needed. Check that fan belts are intact. Check sensor inlet temperature.	-	ENGINE, menu 7	1.6 Air inlet and exhaust system
105/3	153	Sensor charge-air temperature, cable short-circuited to voltage or open circuit.	Risk of white exhaust smoke. No warning for hear coolant temperature.	Check cabling between control unit and component. Check that sensor charge-air temperature is installed correctly and connected. Check sensor charge-air temperature.	D794/ Sensor:38	ENGINE, menu 7	1.6.6 Sensor charge-air temperature
105/4	154	Sensor charge-air temperature, cable short-circuited to ground or open circuit.	Risk of white exhaust smoke. No warning for hear coolant temperature.	Check cabling between control unit and component. Check that sensor charge-air temperature is installed correctly and connected. Check sensor charge-air temperature.	D794/ Sensor:38	ENGINE, menu 7	1.6.6 Sensor charge-air temperature
108/2	295	Electric malfunction air pressure, data error.	Reduced engine power.	Check component.	-	-	1.6.5 Sensor boost pressure
108/3	221	Electric malfunction air pressure, cable short-circuited to voltage.	Reduced engine power.	Check cabling between Control unit and component. Check component.	D794/ Sensor:06	-	1.6.5 Sensor boost pressure
108/4	222	Electric malfunction air pressure, cable short-circuited to ground.	Reduced engine power.	Check cabling between Control unit and component. Check component.	D794/ Sensor:06	-	1.6.5 Sensor boost pressure

https://truckmanualshub.com/

Code	Cummins code	Description	Limitation	Action	Connection and component	Diagnostic menu	Function group
110/0	151	High coolant temperature.	Engine power is reduced successively, engine shuts off after 30 seconds.	Check coolant level. Check that radiator is clean. Check if there's air in coolant system. Check the cap on the expansion tank. Check sensor coolant temperature. Check thermostat.	-	ENGINE, menu 7	1.7 Cooling system
110/3	144	Sensor coolant temperature, cable short-circuited to voltage or open circuit.	No display of engine temperature.	Check cabling between Control unit and component. Check component.	D794/ Sensor:02	ENGINE, menu 7	1.7.9 Sensor coolant temperature
110/4	145	Sensor coolant temperature, cable short-circuited to ground.	No display of engine temperature.	Check cabling between control unit and component. Check that sensor coolant temperature is connected correctly. Check sensor coolant temperature.	D794/ Sensor:02	ENGINE, menu 7	1.7.9 Sensor coolant temperature
111/1	235	Low coolant level.	Engine power is reduced successively, engine shuts off after 30 seconds.	Check the coolant level, top up if needed. Check sensor coolant level.	-	-	1.7 Cooling system
111/2	422	Electric malfunction coolant level, data error.	No warning for low coolant level.	Check cabling between Control unit and component. Check component.	D794/ Sensor:09	-	1.7.8 Make-contact coolant level

https://truckmanualshub.com/

Code	Cummins code	Description	Limitation	Action	Connection and component	Diagnostic menu	Function group
166/2	951	Power imbalance between cylinders.	Rough idling.	Check fuel quality. If the fuel system has been opened air may have entered the system, the error code may be generated. Troubleshoot the engine.	-	-	1.2 Fuel system, 1.5 Engine's mechanical parts
167/1	598	Low battery voltage.	Warning active until voltage is correct.	Check batteries and alternator.	D794/ OEM:7, OEM:8, OEM:17 , OEM:18 , OEM:28	-	11.5.1.3 Ignition voltage (15)
167/ 16	596	Low battery voltage.	Warning active until voltage is correct.	Check fuses. Check batteries and alternator.	D794/ OEM:7, OEM:8, OEM:17 , OEM:18 , OEM:28	-	11.5.1.3 Ignition voltage (15)
167/ 18	597	High battery voltage.	Warning active until voltage is correct, engine runs at high idle to increase voltage.	Check batteries and alternator.	D794/ OEM:7, OEM:8, OEM:17 , OEM:18 , OEM:28	-	11.5.1.3 Ignition voltage (15)
168/ 16	442	Voltage feed to control unit high.	No limitation.	Check fuses. Check batteries and alternator.	D794/ OEM:7, OEM:8, OEM:17 , OEM:18 , OEM:28	-	11.5.1.3 Ignition voltage (15)

https://truckmanualshub.com/

Code	Cummins code	Description	Limitation	Action	Connection and component	Diagnostic menu	Function group
168/18	441	Voltage feed to control unit low.	Rough idling.	Check fuses. Check batteries and alternator.	D794/ OEM:7, OEM:8, OEM:17, OEM:18, OEM:28	-	11.5.1.3 Ignition voltage (15)
175/0	214	High engine oil temperature.	Engine power is reduced successively, engine shuts off after 30 seconds.	Check coolant and oil level in the engine, top up if needed. Check that oil cooler is clean, clean if needed. Check that fan belts are intact. Check sensor oil temperature	-	ENGINE, menu 7	1.8 Lubrication system
175/3	212	Sensor oil temperature, cable short-circuited to voltage or open circuit.	No display of engine oil temperature.	Check cabling between control unit and component. Check that sensor oil temperature is connected correctly.	D794/ Sensor:42	ENGINE, menu 7	1.8.7 Sensor oil temperature
175/4	213	Sensor oil temperature, cable short-circuited to ground.	No display of engine oil temperature.	Check cabling between Control unit and component. Check component.	D794/ Sensor:42	ENGINE, menu 7	1.8.7 Sensor oil temperature
190/0	234	Engine rpm too high.	Fuel supply is restricted until engine rpm is below permitted rpm.	-	-	-	-
190/10	121	Electric malfunction rpm/ ignition position, one of two signals missing.	No limitation.	Check cabling between Control unit and component. Check component.	D794/ Sensor:47, Sensor:50	-	1.9 Control system engine

https://truckmanualshub.com/

Code	Cummins code	Description	Limitation	Action	Connection and component	Diagnostic menu	Function group
190/2	115	Electric malfunction rpm/ ignition position, no signal from any of the sensors.	Engine stops and cannot be started.	Check cabling between Control unit and component. Check component.	D794/ Sensor:47, Sensor:50	-	1.9 Control system engine
191/0	349	Speed limitation activated.	Speed is reduced.	-	-	-	-
191/ 18	489	Speed warning for low speed.	Engine only runs at idle.	-	-	-	-
251/2	319	Internal error Control unit engine.	-	-	-	-	11.5.3.10 Control unit engine
558/ 13	432	Electric malfunction sensor throttle pedal, idle switch calibration error.	Engine only runs at idle.	Check cabling between Control unit and component. Check component.	-	-	1.1.2 Throttle pedal
558/2	431	Electric malfunction sensor throttle pedal, idle switch data error.	No limitation.	Check cabling between Control unit and component. Check component.	-	-	1.1.2 Throttle pedal
558/4	551	Electric malfunction sensor throttle pedal, idle switch cable short-circuited to ground.	Engine doesn't respond to throttle application.	Check cabling between Control unit and component. Check component.	-	-	1.1.2 Throttle pedal

https://truckmanualshub.com/

		Description	Limitation	Action	Connection and component	Diagnostic menu	Function group
Code	Cummins code						
620/3	227	Electric malfunction reference voltage to sensor short-circuited to voltage.	Reduced engine power. No warning for low oil pressure or low coolant level.	Check cabling between Control unit and component. Check component.	D794/ Sensor:18, Sensor:25, Sensor:45	-	1.7.8 Make-contact coolant level 1.8.3 Sensor oil pressure 1.8.7 Sensor oil temperature
620/4	187	Electric malfunction reference voltage to sensor short-circuited to ground.	Reduced engine power. No warning for low oil pressure or low coolant level.	Check cabling between Control unit and component. Check component.	D794/ Sensor:18, Sensor:25, Sensor:45	-	1.7.8 Make-contact coolant level 1.8.3 Sensor oil pressure 1.8.7 Sensor oil temperature
626/ 11	381	Electric malfunction of control of relay preheating.	Preheating not working. Risk of white smoke	Check cabling between Control unit and component. Check component.	D794/ Actuator:34	ENGINE, menu 5	1.10.1 Preheating
627/2	434	Voltage feed to control unit disappears without ignition off.	Reduced engine power, engine difficult to start or engine stops.	Check fuses. Check batteries and alternator.	D794/ OEM:7, OEM:8, OEM:17 , OEM:18 , OEM:28	-	11.5.1.3 Ignition voltage (15)
629/ 12	111	Internal error Control unit engine.	Engine doesn't start.	-	-	-	1.9 Control system engine
629/ 12	343	Internal error Control unit engine.	-	-	-	-	11.5.3.10 Control unit engine
630/ 12	346	Software error control unit engine (D794).	-	-	-	-	11.5.3.10 Control unit engine

https://truckmanualshub.com/

Code	Cummins code	Description	Limitation	Action	Connection and component	Diagnostic menu	Function group
630/2	341	Software error control unit engine (D794).	Reduced engine power, engine difficult to start or engine stops.	Reprogram software in Control unit engine (D794).	-	-	11.5.3.10 Control unit engine
632/3	255	Electric malfunction solenoid valve fuel shut-off, cable short-circuited to voltage.	No limitation.	Check cabling between Control unit and component. Check component.	D794/ Actuator:33	-	1.2 Fuel system
632/4	254	Electric malfunction solenoid valve fuel shut-off, cable short-circuited to ground.	Engine is shut off.	Check cabling between Control unit and component. Check component.	D794/ Actuator:33	-	1.2 Fuel system
639/ 13	286	Communication error with Control unit engine (D794), configuration error.	-	Use diagnostic menu to localize incorrect segment	-	CAN/ POWER, menu 2	1.9 Control system engine
639/2	426	Communication error with Control unit engine (D794).	Functions via CAN-bus not working.	Use diagnostic menu to localize incorrect segment	-	CAN/ POWER, menu 2	1.9 Control system engine
639/9	427	Communication error with Control unit engine (D794).	Functions via CAN-bus not working.	Use diagnostic menu to localize incorrect segment	-	CAN/ POWER, menu 2	1.9 Control system engine
639/9	285	Communication error with Control unit engine (D794), time-out error.	-	Use diagnostic menu to localize incorrect segment	-	CAN/ POWER, menu 2	1.9 Control system engine

https://truckmanualshub.com/

Code	Cummins code	Description	Limitation	Action	Connection and component	Diagnostic menu	Function group
644/2	237	Electric malfunction throttle pedal, signal outside valid range.	Engine is shut off.	Check cabling between Control unit and component. Check component.	-	-	1.1.2 Throttle pedal
647/4	245	Electric malfunction fan connection, cable short-circuited to ground.	Cooling fan constantly driven.	Check cabling between Control unit and component. Check component.	D794/ Actuator:10, Actuator:9	-	1.7 Cooling system
651/5	322	Electric malfunction cylinder 1, open circuit on cable.	Engine runs on 5 cylinders, sounds rough and has reduced power.	Check cabling between Control unit and component. Check component.	D794/ Actuator:10, Actuator:9	-	1.2.8 Injectors
651/6	311	Electric malfunction injector cylinder 1, cable short-circuited to ground.	Engine runs on 5 cylinders, sounds rough and has reduced power.	Check cabling between Control unit and component. Check component.	D794/ Actuator:10, Actuator:9	-	1.2.8 Injectors
652/5	331	Electric malfunction cylinder 2, open circuit on cable.	Engine runs on 5 cylinders, sounds rough and has reduced power.	Check cabling between Control unit and component. Check component.	D794/ Actuator:7, Actuator:8	-	1.2.8 Injectors
652/6	315	Electric malfunction injector cylinder 2, cable short-circuited to ground.	Engine runs on 5 cylinders, sounds rough and has reduced power.	Check cabling between Control unit and component. Check component.	D794/ Actuator:7, Actuator:8	-	1.2.8 Injectors
653/5	324	Electric malfunction cylinder 3, open circuit on cable.	Engine runs on 5 cylinders, sounds rough and has reduced power.	Check cabling between Control unit and component. Check component.	D794/ Actuator:6, Actuator:16	-	1.2.8 Injectors

https://truckmanualshub.com/

		Description	Limitation	Action	Connection and component	Diagnostic menu	Function group
Code	Cummins code						
653/6	313	Electric malfunction injector cylinder 3, cable short-circuited to ground.	Engine runs on 5 cylinders, sounds rough and has reduced power.	Check cabling between Control unit and component. Check component.	D794/ Actuator:6, Actuator:16	-	1.2.8 Injectors
654/5	332	Electric malfunction cylinder 4, open circuit on cable.	Engine runs on 5 cylinders, sounds rough and has reduced power.	Check cabling between Control unit and component. Check component.	D794/ Actuator:26, Actuator:36	-	1.2 Fuel system
654/6	321	Electric malfunction injector cylinder 4, cable short-circuited to ground.	Engine runs on 5 cylinders, sounds rough and has reduced power.	Check cabling between Control unit and component. Check component.	D794/ Actuator:26, Actuator:36	-	1.2 Fuel system
655/5	323	Electric malfunction cylinder 5, open circuit on cable.	Engine runs on 5 cylinders, sounds rough and has reduced power.	Check cabling between Control unit and component. Check component.	D794/ Actuator:3, Actuator:4	-	1.2.8 Injectors
655/6	312	Electric malfunction injector cylinder 5, cable short-circuited to ground.	Engine runs on 5 cylinders, sounds rough and has reduced power.	Check cabling between Control unit and component. Check component.	D794/ Actuator:3, Actuator:4	-	1.2.8 Injectors
656/5	325	Electric malfunction cylinder 6, open circuit on cable.	Engine runs on 5 cylinders, sounds rough and has reduced power.	Check cabling between Control unit and component. Check component.	D794/ Actuator:1, Actuator:2	-	1.2.8 Injectors
656/6	314	Electric malfunction injector cylinder 6, cable short-circuited to ground.	Engine runs on 5 cylinders, sounds rough and has reduced power.	Check cabling between Control unit and component. Check component.	D794/ Actuator:1, Actuator:2	-	1.2.8 Injectors

https://truckmanualshub.com/

Code	Cummins code	Description	Limitation	Action	Connection and component	Diagnostic menu	Function group
702/3	527	Electric malfunction extra input / output 2, cable short-circuited to voltage.	No limitation.	Check cabling between Control unit and component. Check component.	-	-	1.9 Control system engine
703/3	529	Electric malfunction extra input / output 2, cable short-circuited to voltage.	No limitation.	Check cabling between Control unit and component. Check component.	-	-	1.9 Control system engine
974/19	288	Communication error with Control unit cab (D790-1), electric malfunction throttle pedal.	Engine doesn't respond to throttle application.	Use diagnostic menu to localize incorrect segment	-	CAN/POWER, menu 2	1.9 Control system engine
974/3	133	Electric malfunction extra throttle pedal, cable short-circuited to voltage.	Engine doesn't respond to throttle application.	Check cabling between Control unit and component. Check component.	-	-	1.1.2 Throttle pedal
974/4	134	Electric malfunction extra throttle pedal, cable short-circuited to ground.	Engine doesn't respond to throttle application.	Check cabling between Control unit and component. Check component.	-	-	1.1.2 Throttle pedal
1043/3	387	Electric malfunction throttle pedal reference voltage, cable short-circuited to voltage.	Engine only runs at idle.	Check cabling between Control unit and component. Check component.	-	-	1.1.2 Throttle pedal

https://truckmanualshub.com/

		Description	Limitation	Action	Connection and component	Diagnostic menu	Function group
Code	Cummins code						
1043/4	443	Electric malfunction throttle pedal reference voltage, cable short-circuited to ground.	Engine only runs at idle.	Check cabling between Control unit and component. Check component.	-	-	1.1.2 Throttle pedal
1079/3	386	Electric malfunction reference voltage to sensor short-circuited to voltage.	Reduced engine power.	Check cabling between Control unit and component. Check component.	D794/Sensor:17, Sensor:37	-	1.9 Control system engine
1079/4	352	Electric malfunction reference voltage to sensor short-circuited to ground.	Reduced engine power.	Check cabling between Control unit and component. Check component.	D794/Sensor:17, Sensor:37	-	1.9 Control system engine
1083/3	293	Electric malfunction extra sensor temperature, cable short-circuited to voltage.	No protection for temperature (customer-specific option).	Check cabling between Control unit and component. Check component.	-	-	1.9 Control system engine
1083/4	294	Electric malfunction extra sensor temperature, cable short-circuited to ground.	No protection for temperature (customer-specific option).	Check cabling between Control unit and component. Check component.	-	-	1.9 Control system engine

https://truckmanualshub.com/

Code	Cummins code	Description	Limitation	Action	Connection and component	Diagnostic menu	Function group
1084/3	297	Electric malfunction extra sensor pressure, cable short-circuited to voltage.	No protection for pressure (customer-specific option).	Check cabling between Control unit and component. Check component.	-	-	1.9 Control system engine
1084/4	298	Electric malfunction extra sensor pressure, cable short-circuited to ground.	No protection for pressure (customer-specific option).	Check cabling between Control unit and component. Check component.	-	-	1.9 Control system engine
1265/4	223	Electric malfunction solenoid valve oil-burn, cable short-circuited to ground.	No limitation.	Check cabling between Control unit and component. Check component.	-	-	1.9 Control system engine
1319/2	419	Electric malfunction sensor boost pressure.	Reduced engine power.	Check component.	D794/Sensor:09	-	1.6.5 Sensor boost pressure
1380/1	219	Low oil level engine.	No limitation.	Check the oil level in the engine, top up if needed.	-	-	1.8 Lubrication system
1381/18	583	Low fuel pressure.	-	Change fuel filter.	-	-	1.2 Fuel system
1381/3	581	Electric malfunction fuel pressure, cable short-circuited to voltage.	-	Check cabling between Control unit and component. Check component.	-	-	1.2.7 Sensor fuel pressure

https://truckmanualshub.com/

		Description	Limitation	Action	Connection and component	Diagnostic menu	Function group
Code	Cummins code						
1381/4	582	Electric malfunction fuel pressure, cable short-circuited to ground.	-	Check cabling between Control unit and component. Check component.	-	-	1.2.7 Sensor fuel pressure
1383/31	611	Engine shut off in another way than via start key with for load.	No limitation.	Turn off the engine with start key.	-	-	-
1384/31	299	Engine shut off in another way than via start key with for load.	No limitation.	Turn off the engine with start key.	-	-	-
1484/31	211	Error codes in other control units.	No limitation.	Check error codes in other control units on the machine, especially Control unit cab (D790-1) and Control unit transmission (D793).	-	-	8.3 Error codes

https://truckmanualshub.com/

2 Transmission

Error codes transmission

In case of serious transmission malfunctions the control unit uses two modes with reduced functionality to protect the transmission against damage, Limp-home mode and Shut-down mode.

For more detailed description see section *2 Transmission*, group *2.8 Control system transmission*.

Code	Dana code	Description	Limitation	Action	Connection and component	Diagnostic menu	Function group
00.50	00.50	Memory error in control unit transmission.	Transmission in locked neutral position (Shut-down mode).	Contact Kalmar Industries AB for more information	-	-	11.5.3.9 Control unit transmission
00.51	00.51	Memory error in control unit transmission.	Transmission in locked neutral position (Shut-down mode).	Contact Kalmar Industries AB for more information	-	-	11.5.3.9 Control unit transmission
00.52	00.52	Memory error in control unit transmission.	Transmission in locked neutral position (Shut-down mode).	Contact Kalmar Industries AB for more information.	-	-	11.5.3.9 Control unit transmission
00.53	00.53	Memory error in control unit transmission.	Transmission in locked neutral position (Shut-down mode).	Contact Kalmar Industries AB for more information.	-	-	11.5.3.9 Control unit transmission
20.60	20.60	Signal from sensor oil pressure indicates low oil pressure when there should be pressure.	Transmission in locked neutral position (Shut-down mode).	Check cabling to sensor oil pressure. Check sensor oil pressure (with engine on/off).	D793/A:2 - B253	TRANSM, menu 10	2.6.2 Sensor oil pressure
20.61	20.61	Signal from sensor oil pressure indicates low oil pressure when there should be pressure.	Transmission in locked neutral position (Shut-down mode).	Check cabling to sensor oil pressure. Check sensor oil pressure (with engine on/off).	D793/A:2 - B253	TRANSM, menu 10	2.6.2 Sensor oil pressure

https://truckmanualshub.com/

Code	Dan a code	Description	Limitation	Action	Con-nec-tion and compo-nent	Diag-nostic menu	Function group
20.62	20.62	Electric mal-function sensor oil pressure.	Control unit acti-vates, Limp-home mode.	Performs checks acc. to error code 50.xx.	D793/A:2 - B253	TRANSM , menu 10	2.6.2 Sensor oil pressure
20.63	20.63	Electric mal-function sole-noid valve drive.	Transmission in locked neutral po-sition (Shut-down mode).	-	D793/K2 - Y6066	TRANSM , menu 7	2.3.4 Valve block trans-mission con-trol
20.64	20.64	Electric mal-function sole-noid valve drive.	Transmission in locked neutral po-sition (Shut-down mode).	-	D793/K2 - Y6066	TRANSM , menu 7	2.3.4 Valve block trans-mission con-trol
20.65	20.65	Solenoid valve drive reacts too slow.	Transmission in locked neutral po-sition (Shut-down mode).	-	D793/K2 - Y6066	TRANSM , menu 7	2.3.4 Valve block trans-mission con-trol
30.04	30.04	Low battery voltage.	Control unit saves stored informa-tion to flash mem-ory and restarts to clear memory.	Check cabling to control unit. Check alternator, battery and cabling between battery and alternator.	-	-	11.5.1.3 Igni-tion voltage (15)
30.05	30.05	High battery voltage.	Control unit re-ceives reduced proportional con-trol precision de-pending on reduced PWM work cycle.	Check voltage feed. If auxiliary start equipment is con-nected, discon-nect it.	-	-	11.5.1.3 Igni-tion voltage (15)
31.00	31.00	Reference volt-age to sensors, (8V) is too low.	Control unit re-ceives reduced sensor signals.	Check voltage feed. Check control unit.	-	-	11.5.3.9 Con-trol unit trans-mission
31.01	31.01	Reference volt-age to sensors, (8V) is too high.	Control unit re-ceives reduced sensor signals.	Check voltage feed. Check control unit.	-	-	11.5.3.9 Con-trol unit trans-mission
40.06	40.06	Incorrect direc-tion from gear selector.	Control unit locks transmission in neutral.	Check cabling to gear selector with regards to forward and reverse signal.	-	-	2.1.1 Gear and multi-func-tion lever

https://truckmanualshub.com/

Code	Dana code	Description	Limitation	Action	Connection and component	Diagnostic menu	Function group
41.06	41.06	Incorrect gear selection from gear selector.	Control unit doesn't allow change of range, however, operation of machine is possible.	Check cabling to gear selector with regards to signal range.	-	-	2.1.1 Gear and multi-function lever
42.04	42.04	Actual gear ratio too low.	Control unit indicates that one or several clutches are slipping.	Check transmission with purpose to understand if and, if that is the case, which clutch is slipping. Check the set transmission ratio for the control unit.	-	-	2.3 Mechanical transmission
42.05	42.05	Actual gear ratio too high.	Control unit indicates that one or several clutches are slipping.	Check transmission with purpose to understand if and, if that is the case, which clutch is slipping. Check the set transmission ratio for the control unit.	-	-	2.3 Mechanical transmission
43.03	43.03	Signal from Sensor engine rpm and oil temperature transmission outside valid range.	Control unit indicates the error.	Check cabling to sensor temperature torque converter. Check sensor temperature torque converter.	D793/H3 - B758/766	TRANSM, menu 10	2.2.5 Sensor engine rpm and oil temperature transmission
43.07	43.07	Torque converter temperature exceeds 100 °C.	Control unit indicates the error to make operator aware of the warning's level.	Check cabling to sensor temperature torque converter. Check sensor temperature torque converter.	D793/H3 - B758/766	TRANSM, menu 10	2.2.5 Sensor engine rpm and oil temperature transmission

https://truckmanualshub.com/

Code	Dana code	Description	Limitation	Action	Connection and component	Diagnostic menu	Function group
43.08	43.08	Torque converter temperature exceeds 125 °C.	The control unit protects the transmission and doesn't allow the temperature in the torque converter to exceed the limit value. The control unit locks the transmission in neutral, engine is restricted to 50% of max. rpm.	Check cabling to sensor temperature torque converter. Check sensor temperature torque converter.	D793/H3 - B758/766	TRANSM, menu 10	2.2.5 Sensor engine rpm and oil temperature transmission
50.00	50.00	Sensor oil pressure short-circuited to ground.	Control unit activates, Limp-home mode.	Check cabling to sensor oil pressure (B253). Check sensor oil pressure (B253).	D793/A:2 - B253	TRANSM, menu 10	2.6.2 Sensor oil pressure
50.01	50.01	Sensor oil pressure not connected or open circuit.	Control unit activates, Limp-home mode.	Check cabling to sensor oil pressure (B253). Check sensor oil pressure (B253).	D793/A:2 - B253	TRANSM, menu 10	2.6.2 Sensor oil pressure
51.00	51.00	Sensor engine rpm and oil temperature transmission short-circuited to ground.	The control unit limits the transmission's temperature measurement to the lowest value in its settings, which results in poor temperature compensation.	Check cabling to sensor oil sump temperature transmission. Check Sensor engine rpm and oil temperature transmission (B758/766).	D793/H3 - B758/766	TRANSM, menu 10	2.2.5 Sensor engine rpm and oil temperature transmission

https://truckmanualshub.com/

Code	Dana code	Description	Limitation	Action	Connection and component	Diagnostic menu	Function group
51.01	51.01	Sensor engine rpm and oil temperature transmission not connected or short-circuited to ground.	The control unit limits the transmission's temperature measurement to the highest value in its settings, which results in poor temperature compensation.	Check cabling to sensor oil sump temperature transmission. Check Sensor engine rpm and oil temperature transmission (B758/766).	D793/H3 - B758/766	TRANSM, menu 10	2.2.5 Sensor engine rpm and oil temperature transmission
52.00	52.00	Sensor oil temperature short-circuited to ground.	The control unit limits the transmission's temperature measurement to the highest value in its settings, which results in poor temperature compensation.	Check cabling to sensor oil sump temperature transmission. Check Sensor oil temperature (S221).	D793/J3 - S221	TRANSM, menu 10	2.7.2 Sensor oil temperature
52.01	52.01	Sensor oil temperature short-circuited to ground.	The control unit limits the transmission's temperature measurement to the highest value in its settings, which results in poor temperature compensation.	Check cabling to sensor oil sump temperature transmission. Check Sensor oil temperature (S221).	D793/J3 - S221	TRANSM, menu 10	2.7.2 Sensor oil temperature
53.00	53.00	Analogue input 3 short-circuited to ground.	-	-	D793/R3	-	-
53.01	53.01	Analogue input 3 not connected.	-	-	D793/R3	-	-

https://truckmanualshub.com/

Code	Dan a code	Description	Limitation	Action	Con-nec-tion and compo-nent	Diag-nostic menu	Function group
54.00	54.00	Analogue input 4 short-circuited to ground.	-	-	D793/ M1- S221	-	2.7.2 Sensor oil tempera-ture
54.01	54.01	Analogue input 4 not connect-ed.	-	-	D793/ M1- S221	-	2.7.2 Sensor oil tempera-ture
55.00	55.00	Analogue input 5 short-circuited to ground.	-	-	D793/P1	-	-
55.01	55.01	Analogue input 5 not connect-ed.	-	-	D793/P1	-	-
56.00	56.00	Analogue input 6 short-circuited to ground.	-	-	D793/S1	-	-
56.01	56.01	Analogue input 6 not connect-ed.	-	-	D793/S1	-	-
60.00	60.00	Sensor drum rpm short-circuited to ground.	When only one rpm signal which isn't the engine rpm signal is in-correct, the con-trol unit calculates the missing rpm. If several rpm sig-nals or the engine rpm signal is in-correct the con-trol unit activates, Limp home mode.	Check cabling be-tween Control unit and component. Check component.	D793/C3 - B752	TRANSM , menu 6	2.3.6. Sensor rpm drum

https://truckmanualshub.com/

Code	Dana code	Description	Limitation	Action	Connection and component	Diagnostic menu	Function group
60.01	60.01	Sensor rpm drum not connected.	When only one rpm signal which isn't the engine rpm signal is incorrect, the control unit calculates the missing rpm. If several rpm signals or the engine rpm signal is incorrect the control unit activates, Limp home mode.	Check cabling between Control unit and component. Check component.	D793/C3 - B752	TRANSM , menu 6	2.3.6. Sensor rpm drum
61.00	61.00	Sensor rpm output shaft short-circuited to ground.	When only one rpm signal which isn't the engine rpm signal is incorrect, the control unit calculates the missing rpm. If several rpm signals or the engine rpm signal is incorrect the control unit activates, Limp home mode.	Check cabling between Control unit and component. Check component.	D793/D3 - B758	TRANSM , menu 6	2.3.8 Sensor rpm output shaft
61.01	61.01	Sensor rpm output shaft not connected.	When only one rpm signal which isn't the engine rpm signal is incorrect, the control unit calculates the missing rpm. If several rpm signals or the engine rpm signal is incorrect the control unit activates, Limp home mode.	Check cabling between Control unit and component. Check component.	D793/D3 - B758	TRANSM , menu 6	2.3.8 Sensor rpm output shaft

https://truckmanualshub.com/

Code	Dana code	Description	Limitation	Action	Connection and component	Diagnostic menu	Function group
62.00	62.00	Sensor engine rpm short-circuited to ground.	When only one rpm signal which isn't the engine rpm signal is incorrect, the control unit calculates the missing rpm. If several rpm signals or the engine rpm signal is incorrect the control unit activates, Limp home mode.	Check cabling between Control unit and component. Check component.	D793/F3 - B758/766	TRANSM, menu 6	2.2.5 Sensor engine rpm and oil temperature transmission
62.01	62.01	Sensor engine rpm not connected or open circuit.	When only one rpm signal which isn't the engine rpm signal is incorrect, the control unit calculates the missing rpm. If several rpm signals or the engine rpm signal is incorrect the control unit activates, Limp home mode.	Check cabling between Control unit and component. Check component.	D793/F3 - B758/766	TRANSM, menu 6	2.2.5 Sensor engine rpm and oil temperature transmission
63.00	63.00	Sensor rpm turbine short-circuited to ground.	When only one rpm signal which isn't the engine rpm signal is incorrect, the control unit calculates the missing rpm. If several rpm signals or the engine rpm signal is incorrect the control unit activates, Limp home mode.	Check cabling between Control unit and component. Check component.	D793/R2 - B751	TRANSM, menu 6	2.3.5. Sensor turbine

https://truckmanualshub.com/

Code	Dana code	Description	Limitation	Action	Connection and component	Diagnostic menu	Function group
63.01	63.01	Sensor turbine not connected.	When only one rpm signal which isn't the engine rpm signal is incorrect, the control unit calculates the missing rpm. If several rpm signals or the engine rpm signal is incorrect the control unit activates, Limp home mode.	Check cabling between Control unit and component. Check component.	D793/R2 - B751	TRANSM, menu 6	2.3.5. Sensor turbine
70.00	70.00	Electric malfunction solenoid valve forward, cables are short-circuited to each other, signal cable short-circuited to voltage or positive cable short-circuited to ground.	Control unit activates, Limp-home mode.	Check cabling to solenoid valve forward (Y630).	D793/B1 - Y630, C1 - Y630	TRANSM, menu 8	2.3.4 Valve block transmission control
70.01	70.01	Electric malfunction solenoid valve forward or short-circuited voltage .	Control unit activates, Limp-home mode.	Check cabling to solenoid valve forward (Y630). Check solenoid valve forward (Y630).	D793/B1 - Y630, C1 - Y630	TRANSM, menu 8	2.3.4 Valve block transmission control
70.02	70.02	Electric malfunction solenoid valve forward, control current above 1400mA.	Control unit activates, Limp-home mode.	Check cabling to solenoid valve forward (Y630). Check solenoid valve forward (Y630).	D793/B1 - Y630, C1 - Y630	TRANSM, menu 9	2.3.4 Valve block transmission control

https://truckmanualshub.com/

Code	Dana code	Description	Limitation	Action	Connection and component	Diagnostic menu	Function group
70.03	70.03	Electric malfunction solenoid valve forward, control current outside approved interval. Incorrect impedance.	Control unit activates, Limp-home mode.	Check cabling to solenoid valve forward (Y630). Check solenoid valve forward (Y630).	D793/B1 - Y630, C1 - Y630	TRANSM, menu 9	2.3.4 Valve block transmission control
71.00	71.00	Electric malfunction gear 2/4, cables short-circuited to each other, signal cable short-circuited to voltage or positive cable short-circuited to ground.	Control unit activates, Limp-home mode.	Check cabling to solenoid valve gear 2/4 (Y6069).	D793/D1 - Y6069, E1 - Y6069	TRANSM, menu 8	2.3.4 Valve block transmission control
71.01	71.01	Electric malfunction gear 2/4, open circuit or short-circuited voltage.	Control unit activates, Limp-home mode.	Check cabling to solenoid valve gear 2/4 (Y6069). Check solenoid valve gear 2/4 (Y6069).	D793/D1 - Y6069, E1 - Y6069	TRANSM, menu 8	2.3.4 Valve block transmission control
71.02	71.02	Electric malfunction gear 2/4, control current above 1400mA.	Control unit activates, Limp-home mode.	Check cabling to solenoid valve gear 2/4 (Y6069). Check solenoid valve gear 2/4 (Y6069).	D793/D1 - Y6069, E1 - Y6069	TRANSM, menu 9	2.3.4 Valve block transmission control
71.03	71.03	Electric malfunction solenoid valve gear 2/4, control current outside approved interval (incorrect impedance).	Control unit activates, Limp-home mode.	Check cabling to solenoid valve gear 2/4 (Y6069). Check solenoid valve gear 2/4 (Y6069).	D793/D1 - Y6069, E1 - Y6069	TRANSM, menu 9	2.3.4 Valve block transmission control

https://truckmanualshub.com/

Code	Dana code	Description	Limitation	Action	Connection and component	Diagnostic menu	Function group
72.00	72.00	Electric malfunction reverse (Analogue output signal 2), cables short-circuited to each other, signal cable short-circuited to voltage or positive cable short-circuited to ground.	Control unit activates, Limp-home mode.	Check cabling to solenoid valve reverse (Y631).	D793/F1 - Y631, G1 - Y631	TRANSM, menu 8	2.3.4 Valve block transmission control
72.01	72.01	Electric malfunction solenoid valve reverse, open circuit or short-circuited voltage.	Control unit activates, Limp-home mode.	Check cabling to solenoid valve reverse (Y631). Check solenoid valve reverse (Y631).	D793/F1 - Y631, G1 - Y631	TRANSM, menu 8	2.3.4 Valve block transmission control
72.02	72.02	Electric malfunction solenoid valve reverse, control current above 1400mA.	Control unit activates, Limp-home mode.	Check cabling to solenoid valve reverse (Y631). Check solenoid valve reverse (Y631).	D793/F1 - Y631, G1 - Y631	TRANSM, menu 9	2.3.4 Valve block transmission control
72.03	72.03	Electric malfunction solenoid valve reverse, control current outside approved interval (incorrect impedance).	Control unit activates, Limp-home mode.	Check cabling to solenoid valve reverse (Y631). Check solenoid valve reverse (Y631).	D793/F1 - Y631, G1 - Y631	TRANSM, menu 9	2.3.4 Valve block transmission control

https://truckmanualshub.com/

Code	Dana code	Description	Limitation	Action	Connection and component	Diagnostic menu	Function group
73.00	73.00	Electric malfunction gear 1/3, cables short-circuited to each other, signal cable short-circuited to voltage or positive cable short-circuited to ground.	Control unit activates, Limp-home mode.	Check cabling to solenoid valve gear 1/3 (Y6067).	D793/H1 - Y6067, J1 - Y6067	TRANSM, menu 8	2.3.4 Valve block transmission control
73.01	73.01	Electric malfunction gear 1/3, open circuit or short-circuited voltage.	Control unit activates, Limp-home mode.	Check cabling to solenoid valve gear 1/3 (Y6067). Check solenoid valve gear 1/3 (Y6067).	D793/H1 - Y6067, J1 - Y6067	TRANSM, menu 8	2 Transmission
73.02	73.02	Electric malfunction gear 1/3, control current above 1400mA.	Control unit activates, Limp-home mode.	Check cabling to solenoid valve gear 1/3 (Y6067). Check solenoid valve gear 1/3 (Y6067).	D793/H1 - Y6067, J1 - Y6067	TRANSM, menu 9	2 Transmission
73.03	73.03	Electric malfunction solenoid valve gear 1/3, control current outside approved interval (incorrect impedance).	Control unit activates, Limp-home mode.	Check cabling to solenoid valve gear 1/3 (Y6067). Check solenoid valve gear 1/3 (Y6067).	D793/H1 - Y6067, J1 - Y6067	TRANSM, menu 9	2 Transmission
74.00	74.00	Analogue output signal 4 related error: output signal short-circuited to ground.	-	-	D793/B01	-	-

https://truckmanualshub.com/

Code	Dan a code	Description	Limitation	Action	Con-nec-tion and compo-nent	Diag-nostic menu	Function group
74.01	74.01	Analogue out-put signal 4 out-put signal not connected or short-circuited to voltage.	-	-	D793/ B01	-	-
74.02	74.02	Analogue out-put signal 4 control current above 1400mA.	-	-	D793/ B01	-	-
74.03	74.03	Analogue out-put signal 4 control current outside ap-proved interval (incorrect im-pedance).	-	-	D793/ B01	-	-
75.00	75.00	Analogue out-put signal 5 out-put signal short-circuited to ground.	-	-	D793/ B03	-	-
75.01	75.01	Analogue out-put signal 5 out-put signal not connected or short-circuited to voltage.	-	-	D793/ B03	-	-
75.02	75.02	Analogue out-put signal 5 control current above 1400mA.	-	-	D793/ B03	-	-
75.03	75.03	Analogue out-put signal 5 control current outside ap-proved interval (incorrect im-pedance).	-	-	D793/ B03	-	-

https://truckmanualshub.com/

Code	Dana code	Description	Limitation	Action	Connection and component	Diagnostic menu	Function group
76.00	76.00	Electric malfunction brake, cable short-circuited to ground.	Control unit indicates the error, no limitation.	Check cabling to solenoid valve brake (Y602).	D793/R1 - Y602	-	2.3.4 Valve block transmission control
76.01	76.01	Electric malfunction brake, cable not connected or short-circuited to voltage.	Control unit indicates the error, no limitation.	Check cabling to solenoid valve brake (Y602).	D793/R1 - Y602	-	2.3.4 Valve block transmission control
76.02	76.02	Electric malfunction brake, control current above 1400mA.	Control unit indicates the error, no limitation.	Check cabling to solenoid valve brake (Y602). Check solenoid valve brake (Y602).	D793/R1 - Y602	-	2.3.4 Valve block transmission control
76.03	76.03	Electric malfunction brake, control current outside approved interval (incorrect impedance).	Control unit indicates the error, no limitation.	Check cabling to solenoid valve brake (Y602). Check solenoid valve brake (Y602).	D793/R1 - Y602	-	2.3.4 Valve block transmission control
80.00	80.00	Electric malfunction drive, cable short-circuited to ground.	Transmission in locked neutral position (Shut-down mode).	Check cabling to solenoid valve drive (Y6066). Check solenoid valve drive (Y6066).	D793/K1 - Y6066	TRANSM, menu 7	2.3.4 Valve block transmission control
80.01	80.01	Electric malfunction drive, cable not connected or short-circuited to voltage.	Transmission in locked neutral position (Shut-down mode).	Check cabling to solenoid valve drive (Y6066). Check solenoid valve drive (Y6066).	D793/K1 - Y6066	TRANSM, menu 7	2.3.4 Valve block transmission control
81.00	81.00	Electric malfunction gear selection 2/4, cable short-circuited to ground.	Control unit activates, Limp-home mode.	Check cabling to solenoid valve 2/4 (Y6074). Check solenoid valve gear selection 2/4 (Y6074).	D793/E2 - Y6074	TRANSM, menu 7	2.3.4 Valve block transmission control

https://truckmanualshub.com/

Code	Dana code	Description	Limitation	Action	Connection and component	Diagnostic menu	Function group
81.01	81.01	Electric malfunction gear selection 2/4, cable not connected or short-circuited to voltage.	Control unit activates, Limp-home mode.	Check cabling to solenoid valve 2/4 (Y6074). Check solenoid valve gear selection 2/4 (Y6074).	D793/E2 - Y6074	TRANSM, menu 7	2.3.4 Valve block transmission control
82.00	82.00	Electric malfunction gear selection 1/3, cable short-circuited to ground.	Control unit activates, Limp-home mode.	Check cabling to solenoid valve gear selection 1/3 (Y6075). Check solenoid valve 1/3-selection (Y6075).	D793/F2 - Y6075	TRANSM, menu 7	2.3.4 Valve block transmission control
82.01	82.01	Electric malfunction gear selection 1/3, cable not connected or short-circuited to voltage.	Control unit activates, Limp-home mode.	Check cabling to solenoid valve gear selection 1/3 (Y6075). Check solenoid valve 1/3-selection (Y6075).	D793/F2 - Y6075	TRANSM, menu 7	2.3.4 Valve block transmission control
83.00	83.00	Electric malfunction drive, cable short-circuited to ground.	Transmission in locked neutral position (Shut-down mode).	Check cabling to solenoid valve drive Check solenoid valve drive.	D793/K2 - Y6066	TRANSM, menu 7	2.3.4 Valve block transmission control
83.01	83.01	Electric malfunction drive, cable not connected or short-circuited to voltage.	Transmission in locked neutral position (Shut-down mode).	Check cabling to solenoid valve drive Check solenoid valve drive.	D793/K2 - Y6066	TRANSM, menu 7	2.3.4 Valve block transmission control
90.xx - 99.xx	90.xx - 99.xx	System error.	Transmission in locked neutral position (Shut-down mode).	Contact Kalmar Industries AB for more information.	D793/ A:20	-	11.5.3.9 Control unit transmission

https://truckmanualshub.com/

8 Control system

Error codes machine

Code	Description	Limitation	Action	Connection and component	Diagnostic menu	Function group
1	Communication error with control unit, attachment (D791-1).	Attachment functions not working.	Use diagnostic menu to localise incorrect segment.	Varies depending on machine configuration.	CAN/ POWER, menu 2	11.6.2 Redundant CAN bus
2	Communication error with control unit, attachment option (D791-2).	Levelling, tilt, over-height extension not working.	Use diagnostic menu to localise incorrect segment.	Varies depending on machine configuration.	CAN/ POWER, menu 2	11.6.2 Redundant CAN bus
3	Communication error with control unit, attachment left leg pair (D791-3).	Left side of combi attachment not working.	Use diagnostic menu to localise incorrect segment.	Varies depending on machine configuration.	CAN/ POWER, menu 2	11.6.2 Redundant CAN bus
4	Communication error with control unit, attachment right leg pair (D791-4).	Right side of combi attachment not working.	Use diagnostic menu to localise incorrect segment.	Varies depending on machine configuration.	CAN/ POWER, menu 2	11.6.2 Redundant CAN bus
5	Communication error with Control unit frame rear (D797-R).	Lighting rear, hydraulic oil cooling, overload system, extension not working.	Use diagnostic menu to localise incorrect segment.	Varies depending on machine configuration.	CAN/ POWER, menu 2	11.6.2 Redundant CAN bus
6	Communication error with Control unit frame front (D797-F).	Front lighting, lift, extension, brake lights, brake cooling not working.	Use diagnostic menu to localise incorrect segment.	Varies depending on machine configuration.	CAN/ POWER, menu 2	11.6.2 Redundant CAN bus

https://truckmanualshub.com/

Code	Description	Limitation	Action	Connection and component	Diagnostic menu	Function group
7	Communication error with Control unit frame option (D797-O).	Hydraulic sliding cab, support jacks, joystick steering mini-wheel, cab lift and cab tilt not working.	Use diagnostic menu to localise incorrect segment.	Varies depending on machine configuration.	CAN/ POWER, menu 2	11.6.2 Redundant CAN bus
8	Communication error with Control unit KID (D795).	Controls in steering wheel panel and display not working.	Use diagnostic menu to localise incorrect segment.	Varies depending on machine configuration.	CAN/ POWER, menu 2	11.6.2 Redundant CAN bus
11	Cable harness error CAN-net segment 1.	No limitation.	Use diagnostic menu to localise incorrect segment.	Varies depending on machine configuration.	CAN/ POWER, menu 2	11.6.2 Redundant CAN bus
12	Cable harness error CAN-net segment 2.	No limitation.	Use diagnostic menu to localise incorrect segment.	Varies depending on machine configuration.	CAN/ POWER, menu 2	11.6.2 Redundant CAN bus
13	Cable harness error CAN-net segment 3.	No limitation.	Use diagnostic menu to localise incorrect segment.	Varies depending on machine configuration.	CAN/ POWER, menu 2	11.6.2 Redundant CAN bus
14	Cable harness error CAN-net segment 4.	No limitation.	Use diagnostic menu to localise incorrect segment.	Varies depending on machine configuration.	CAN/ POWER, menu 2	11.6.2 Redundant CAN bus
15	Cable harness error CAN-net segment 5.	No limitation.	Use diagnostic menu to localise incorrect segment.	Varies depending on machine configuration.	CAN/ POWER, menu 2	11.6.2 Redundant CAN bus

https://truckmanualshub.com/

Code	Description	Limitation	Action	Connection and component	Diagnostic menu	Function group
16	Cable harness error CAN-net segment 6.	No limitation.	Use diagnostic menu to localise incorrect segment.	Varies depending on machine configuration.	CAN/ POWER, menu 2	11.6.2 Redundant CAN bus
17	Cable harness error CAN-net segment 7.	No limitation.	Use diagnostic menu to localise incorrect segment.	Varies depending on machine configuration.	CAN/ POWER, menu 2	11.6.2 Redundant CAN bus
18	Cable harness error CAN-net segment 8.	No limitation.	Use diagnostic menu to localise incorrect segment.	Varies depending on machine configuration.	CAN/ POWER, menu 2	11.6.2 Redundant CAN bus
21	Communication error with Control unit transmission (D793)	Gear selection not working.	Use diagnostic menu to check communication. Check the wiring between control unit, cab (D790-1) and control unit, transmission (D793).	D790-1/ K13:1, K13:2	CAN/ POWER, menu 3	11.6.3 CAN-bus drivetrain
22	Communication error with Control unit engine (D794)	Engine does not respond to commands from the cab.	Use diagnostic menu to check communication. Check the wiring between control unit, cab (D790-1) and control unit, engine (D794).	D790-1/ K13:1, K13:2	CAN/ POWER, menu 3	11.6.3 CAN-bus drivetrain
23	No set-up file in control system.	No controls in cab working.	Turn the ignition off and on. Perform software download to Control unit cab (D790-1).	–	–	11.5.3.1 Control unit cab
24	Voltage feed to cab fan below 18 V.	Cab fan not working.	Check fuse F58-5:C3.	D790-1/ K2:8	–	9.4.3 Cab fan
25	Interference during software download	–	Turn the ignition off and on. Perform software download again.	D794	–	11.5.3.10 Control unit engine
26	Interference during software download	–	Turn the ignition off and on. Perform software download again.	D794	–	11.5.3.10 Control unit engine

https://truckmanualshub.com/

Code	Description	Limitation	Action	Connection and component	Diagnostic menu	Function group
27	Interference during software download	–	Turn the ignition off and on. Perform software download again.	D794	–	11.5.3.10 Control unit engine
28	Interference during software download	–	Turn the ignition off and on. Perform software download again.	D794	–	11.5.3.10 Control unit engine
29	Interference during software download	–	Turn the ignition off and on. Perform software download again.	D794	–	11.5.3.10 Control unit engine
30	Interference during software download	–	Turn the ignition off and on. Perform software download again.	D794	–	11.5.3.10 Control unit engine
31	Voltage feed to Control unit cab (D790-1) below 18 V or above 32 V.	Controls in cab not working.	Check fuse F58-4:1. Check cabling between the control unit and component with diagnostic menu. Check component.	D790-1/ K1:2, K1:3, K1:4	CAN/ POWER, menu 6	11.5.1.3 Ignition voltage (15)
32	5 V feed voltage to control below 4.9 V or above 5.1 V.	Certain controls in the cab do not work.	Check cabling between the control unit and component with diagnostic menu. Check component.	D790-1/ K4:5, K 5:1, K17:2, K 9:7, K10:3	CAN/ POWER, menu 6	11.5.3.1 Control unit cab
33	No feed of control breaker voltage to control unit cab from battery.	Control breaker cannot be released. All hydraulic functions are blocked.	Check fuse F58-3:8. Check cabling between the control unit and component with diagnostic menu.	D790-1/ K11:13 – K2	CAN/ POWER, menu 5	11.5.1.4 Control switch voltage (15E)
34	Signal error from Switch parking brake, indicates released or applied at same time or nothing at all.	Parking brake cannot be released.	Check cabling between the control unit and component with diagnostic menu. Check component.	D791-1/ K8:5 - S107, K8:13 - S107	HYD, menu 5	4.1.2 Parking brake control

https://truckmanualshub.com/

Code	Description	Limitation	Action	Connection and component	Diagnostic menu	Function group
35	Interference during software download. Buffer for error codes from transmission, some transmission error has been active.	–	Turn the ignition off and on. Perform software download again.	D793	–	11.5.3.9 Control unit transmission
36	Interference during software download. Buffer for error codes from transmission, some transmission error has been active.	–	Turn the ignition off and on. Perform software download again.	D793	–	11.5.3.9 Control unit transmission
37	Interference during software download. Buffer for error codes from transmission, some transmission error has been active.	–	Turn the ignition off and on. Perform software download again.	D793	–	11.5.3.9 Control unit transmission
38	Interference during software download. Buffer for error codes from transmission, some transmission error has been active.	–	Turn the ignition off and on. Perform software download again.	D793	–	11.5.3.9 Control unit transmission
39	Interference during software download. Buffer for error codes from transmission, some transmission error has been active.	–	Turn the ignition off and on. Perform software download again.	D793	–	11.5.3.9 Control unit transmission
40	Interference during software download. Buffer for error codes from transmission, some transmission error has been active.	–	Turn the ignition off and on. Perform software download again.	D793	–	11.5.3.9 Control unit transmission

https://truckmanualshub.com/

Code	Description	Limitation	Action	Connection and component	Diagnostic menu	Function group
41	Transistor has been triggered due to short circuit or open circuit in circuit for Wiper motor, rear (M650).	Windshield wiper rear not working.	Check cabling between the control unit and component with diagnostic menu. Check component.	D790-1/ K2:4 – M650-2	CAB, menu 3	9.5.7 Wiper motor rear
42	Transistor has been triggered due to short circuit or open circuit in circuit for Rotating beacon (H428).	Rotating beacon not working.	Check cabling between the control unit and component with diagnostic menu. Check component.	D790-1/ K2:5 – H428	LIGHTS, menu 9	9.6.9 Rotating beacon
43	Transistor has been triggered due to short-circuit or open circuit in circuit for Work lights cab (H404).	Work lights cab not working.	Check cabling between the control unit and component with diagnostic menu. Check component.	D790-1/ K2:6 – H404-1	LIGHTS, menu 1	9.6.10 Work lights cab
44	Transistor has been triggered due to short-circuit or open circuit in circuit for Work lights cab (H404).	Work lights cab not working.	Check cabling between the control unit and component with diagnostic menu. Check component.	D790-1/ K2:7 – H404-2	LIGHTS, menu 1	9.6.10 Work lights cab
45	Transistor has been triggered due to short circuit or open circuit in circuit for Wiper motor front (M650).	Windshield wiper front not working.	Check cabling between the control unit and component with diagnostic menu. Check component.	D790-1/ K2:1 – M650-1	CAB, menu 2	9.5.1 Wiper front
46	Transistor has been triggered due to short-circuit or open circuit in circuit for Cab fan (M675).	Cab fan not working.	Check cabling between the control unit and component with diagnostic menu. Check component.	D790-1/ K2:2 – M675-1/2	CLIMATE, menu 6	9.4.3 Cab fan
55	Transistor has been triggered due to short circuit or open circuit in circuit for background lighting in switches and instruments.	Reduced or no background lighting in instruments and controls.	Check bulbs for background lighting, change if needed. Check the wiring to the background lighting.	D7901/ K6:1, K 8:15, K 9:2, K 10:5, all inputs type A Digital in	LIGHTS, menu 13	9.1 Controls and instruments

https://truckmanualshub.com/

Code	Description	Limitation	Action	Connection and component	Diagnostic menu	Function group
66	Transistor has been triggered due to short-circuit or open circuit in circuit for Washer motor (M651).	Windshield washer not working.	Check the wiring to the washer motor.	D790-1/ K10:13 – M651	CAB, menu 1	9.5.4 Washer motor and reservoir
67	Transistor has been triggered due to short circuit or open circuit in circuit for Wiper motor, roof (M650-3).	Wiper roof not working.	Check the wiring to wiper motor, roof.	D790-1/ K10:14 – M650-3	CAB, menu 4	9.5.6 Wiper motor roof
70	Transistor has been triggered due to short-circuit or open circuit in circuit for interior lights cab (H434).	Interior lights cab not working.	Check bulbs for interior lighting, change if needed. Check the wiring to interior lighting.	D790-1/ K11:5 – H434	LIGHTS, menu 12	9.6.13 Interior lighting cab
80	No signal from Pressure switch air conditioning (S246).	Air conditioning not working.	Check drive belt for compressor for air conditioning. Check that compressor for air conditioning is activated. Check signals and cabling with diagnostic menu.	D797-R/ K1:23 – S246	CLIMATE, menu 3 and CLIMATE, menu 2	9.4.10 Pressure monitor
81	Incorrect position signal from Damper motor (Y672).	Air distribution cannot be changed.	Check cabling between the control unit and component with diagnostic menu. Check component.	D790-1/ K4:7 – Y672	CLIMATE, menu 4	9.4.6 Fresh air and recirculation damper
82	Signal error from Control fan speed (R8082).	Cab fan not working.	Check cabling between the control unit and component with diagnostic menu. Check component.	D790-1/ K5:7 – R8082	CLIMATE, menu 5	9.1.4 Control fan
83	Signal error from Control for temperature (R8083).	The temperature is set to 22 °C.	Check cabling between the control unit and component with diagnostic menu. Check component.	D790-1/ K5:8 – R8083	CLIMATE, menu 5	9.1.6 Control heating
84	Signal error from Control for air distribution (R8084).	Air distribution cannot be changed.	Check cabling between the control unit and component with diagnostic menu. Check component.	D790-1/ K5:9 – R8084	CLIMATE, menu 5	9.1.7 Control air distribution

https://truckmanualshub.com/

Code	Description	Limitation	Action	Connection and component	Diagnostic menu	Function group
85	Signal error from accelerator pedal (R690).	Engine rpm restricted to idle.	Check cabling between the control unit and component with diagnostic menu. Check component.	D790-1/ K6:11 – R690	ENGINE, menu 1	1.1.2 Throttle pedal
87	Signal error from Control lever (S815-P1) for lift and lower.	Lift and lower not working.	Check cabling between the control unit and component with diagnostic menu. Check component.	D790-1/ K7:3 – S815.P1	BOOM, menu 1	7.1.1 Control lever
88	Signal error from Control lever (S815-P2) for extension	Extension not working.	Check cabling between the control unit and component with diagnostic menu. Check component.	D790-1/ K7:4 – S815-P2	BOOM, menu 1	7.1.1 Control lever
89	Signal error from Control lever (S815-P3) for rotation.	Rotation not working.	Check cabling between the control unit and component with diagnostic menu. Check component.	D790-1/ K7:5 – S815.P3	ATTACH, menu 1	7.1.1 Control lever
90	Signal error from Control lever (S815-P4) for tilt.	Controllable tilt not working.	Check cabling between the control unit and component with diagnostic menu. Check component.	D790-1/ K7:6 – S815.P4	ATTACH, menu 1	7.1.1 Control lever
92	Signal error from joystick or mini-wheel (R825-1).	Joystick steering or mini-wheel not working.	Check cabling between the control unit and component with diagnostic menu. Check component.	D790-1/ K9:8 – R825-1	STEERING, menu 1	5.1 Controls and instruments
93	Signal error from joystick or mini-wheel (R825-2).	Joystick steering or mini-wheel not working.	Check cabling between the control unit and component with diagnostic menu. Check component.	D790-1/ K9:9 – R825-2	STEERING, menu 1	5.1 Controls and instruments
94	Signal error from Water valve cab heat (Y673).	Cab heat cannot be adjusted.	Check cabling between the control unit and component with diagnostic menu. Check component.	D790-1/ K10:4 – Y673	CLIMATE, menu 4	9.4.1 Water valve
96	Signal error from Sensor cab temperature (B775-1).	Air conditioning not working.	Check cabling between the control unit and component with diagnostic menu. Check component.	D790-1/ K4:8 – B775-1	CLIMATE, menu 1	9.4.17 Sensor cab temperature
97	Signal error from Sensor outside temperature (B774).	Air conditioning not working.	Check cabling between the control unit and component with diagnostic menu. Check component.	D790-1/ K4:9 – B774	CLIMATE, menu 2	9.4.18 Sensor outside temperature

https://truckmanualshub.com/

Code	Description	Limitation	Action	Connection and component	Diagnostic menu	Function group
98	Signal error from Sensor temperature outlet fan (B775-2).	Air conditioning not working.	Check cabling between the control unit and component with diagnostic menu. Check component.	D790-1/ K4:10 – B775-2	CLIMATE, menu 2	9.4.16 Sensor temperature outlet fan
99	Signal error from Sensor temperature refrigerant (B775-3).	Air conditioning not working.	Check cabling between the control unit and component with diagnostic menu. Check component.	D790-1/ K4:11 – B775-3	CLIMATE, menu 2	9.4.12 Sensor temperature refrigerant
101	Redundant voltage feed left to control unit frame front (D797-F) does not arrive.	–	Check cabling between the control unit and component with diagnostic menu. Check component.	D797-F/ K2:7	CAN/ POWER, menu 8	11.5.1.2 Redundant voltage feed of control units
102	Redundant voltage feed right to control unit frame front (D797-F) does not arrive.	–	Check cabling between the control unit and component with diagnostic menu. Check component.	D797-F/ K2:8	CAN/ POWER, menu 8	11.5.1.2 Redundant voltage feed of control units
103	Voltage feed to Control unit frame front (D797-F) below 18 V or above 32 V.	–	Check fuse F58-2:1, change if needed. Check cabling between the control unit and component with diagnostic menu.	D797-F/ K2:1/9/10	CAN/ POWER, menu 8	11.5.1.3 Ignition voltage (15)
104	Incorrect control breaker voltage to Control unit frame front (D797-F)	Control breaker cannot be released. All hydraulic functions blocked.	Check fuse F58-3:2, change if needed. Check cabling between the control unit and component with diagnostic menu. Check component.	D797-F/ K2:11	CAN/ POWER, menu 8	11.5.1.4 Control switch voltage (15E)
105	5 V supply voltage to sensor below 4.9 V or above 5.1 V.	–	Check cabling between the control unit and component with diagnostic menu. Check component.	D797-F/ K1:8	CAN/ POWER, menu 9	11.5.3.2 Control unit frame front
106	Incorrect values for load curve.	Lift and lower as well as extension not working.	Contact Kalmar Industries AB	–	–	7.2 Lift and lower 7.3 Extension

https://truckmanualshub.com/

Code	Description	Limitation	Action	Connection and component	Diagnostic menu	Function group
110	Transistor has been triggered due to short-circuit or open circuit in circuit for Cooling fan, brake oil (M674).	Cooling fan brake oil not working.	Check light. Check cabling between the control unit and component with diagnostic menu. Check bulb socket.	D797-F/ K1:14 – M674	HYD, menu 2	4.8.9 Cooling fan
111	Transistor has been triggered due to short-circuit or open circuit in circuit for High beam light left (H402L).	Left high beam not working.	Check light. Check cabling between the control unit and component with diagnostic menu. Check bulb socket.	D797-F/ K1:1 – H402L	LIGHTS, menu 6	9.6.2 High beams
112	Transistor has been triggered due to short-circuit or open circuit in circuit for High beam light right (H402R).	Right high beam not working.	Check light. Check cabling between the control unit and component with diagnostic menu. Check bulb socket.	D797-F/ K1:15 – H402R	LIGHTS, menu 6	9.6.2 High beams
113	Transistor has been triggered due to short-circuit or open circuit in circuit for central lubrication unit (M693-1).	Central lubrication machine not working.	Check cabling between the control unit and component with diagnostic menu. Check component.	D797-F/ K1:28 - M693-1	CAB, menu 9	9.14.1 Pump unit
114	Transistor has been triggered due to short circuit or open circuit in circuit for low beams (H400L/ H400R)	Low beams not working.	Check cabling between the control unit and component with diagnostic menu. Check component.	D797-F/ K1:42 – H400L/ H400R	LIGHTS, menu 6	9.6.1 Low beams
115	Transistor has been triggered due to short-circuit or open circuit in circuit for solenoid valve boom up (Y6005).	Lift not working.	Check cabling between the control unit and component with diagnostic menu. Check component.	D797-F/ K1:2 – Y6005	BOOM, menu 4	7.2.3 Control valve lift, lower and extension

https://truckmanualshub.com/

Code	Description	Limitation	Action	Connection and component	Diagnostic menu	Function group
116	Transistor has been triggered due to short-circuit or open circuit in circuit for solenoid valve boom down (Y6004).	Lower not working.	Check cabling between the control unit and component with diagnostic menu. Check component.	D797-F/ K1:3 – Y6004	BOOM, menu 5	7.2.3 Control valve lift, lower and extension
117	Transistor has been triggered due to short-circuit or open circuit in circuit for solenoid valve boom out (Y6006).	Extension out not working.	Check cabling between the control unit and component with diagnostic menu. Check component.	D797-F/ K1:4 – Y6006	BOOM, menu 7	7.3.3. Control valve lift, lower and extension
118	Transistor has been triggered due to short-circuit or open circuit in circuit for solenoid valve boom in (Y6007).	Extension in not working.	Check cabling between the control unit and component with diagnostic menu. Check component.	D797-F/ K1:5 – Y6007	BOOM, menu 8	7.3.3. Control valve lift, lower and extension
119	Transistor has been triggered due to short-circuit or open circuit in circuit for solenoid valve blocking lift left (Y6002).	Lift and lower not working.	Check cabling between the control unit and component with diagnostic menu. Check component.	D797-F/ K1:30 – Y6002	BOOM, menu 2	7.2.7 Valve block lift cylinder
120	Transistor has been triggered due to short-circuit or open circuit in circuit for solenoid valve blocking lift right (Y6001).	Lift and lower not working.	Check cabling between the control unit and component with diagnostic menu. Check component.	D797-F/ K1:31 – Y6001	BOOM, menu 2	7.2.7 Valve block lift cylinder
121	Transistor has been triggered due to short-circuit or open circuit in circuit for brake light bulb front left (US).	Brake light front left not working (only US).	Check light. Check cabling between the control unit and component with diagnostic menu. Check bulb socket.	D797-F/ K1:32 – H???	–	9.6.5 Brake light

https://truckmanualshub.com/

Code	Description	Limitation	Action	Connection and component	Diagnostic menu	Function group
122	Transistor has been triggered due to short-circuit or open circuit in circuit for brake light bulb front left (US).	Brake light front right not working (only US).	Check light. Check cabling between the control unit and component with diagnostic menu. Check bulb socket.	D797-F/ K1:33 – H???	–	9.6.5 Brake light
123	Transistor has been triggered due to short circuit or open circuit in circuit for Solenoid valve parking brake (Y642).	Parking brake cannot be released.	Check cabling between the control unit and component with diagnostic menu. Check component.	D797-F/ K1:7 – Y642	HYD, menu 5	4.5.3 Parking brake valve
124	Transistor has been triggered due to short-circuit or open circuit in circuit for light for direction indicator left front (H422).	Direction indicator front left not working.	Check light. Check cabling between the control unit and component with diagnostic menu. Check bulb socket.	D797-F/ K1:9 – H422	LIGHTS, menu 8	9.6.7 Direction indicators
125	Transistor has been triggered due to short-circuit or open circuit in circuit for light for direction indicator right front (H423).	Direction indicator front right not working.	Check light. Check cabling between the control unit and component with diagnostic menu. Check bulb socket.	D797-F/ K1:10 – H423	LIGHTS, menu 8	9.6.7 Direction indicators
126	Transistor has been triggered due to short-circuit or open circuit in circuit for light for running light left front (H416-1).	Running light front left not working.	Check light. Check cabling between the control unit and component with diagnostic menu. Check bulb socket.	D797-F/ K1:25 – H416-1	LIGHTS, menu 5	9.6.3 Running lights
127	Transistor has been triggered due to short-circuit or open circuit in circuit for light for running light right front (H417-1).	Running light front right not working.	Check light. Check cabling between the control unit and component with diagnostic menu. Check bulb socket.	D797-F/ K1:29 – H417-1	LIGHTS, menu 5	9.6.3 Running lights

https://truckmanualshub.com/

Code	Description	Limitation	Action	Connection and component	Diagnostic menu	Function group
129	Transistor has been triggered due to short-circuit or open circuit in circuit for solenoid valve regeneration lift left (Y6052).	Regeneration lift not working.	Check cabling between the control unit and component with diagnostic menu. Check component.	D797-F/ K1:11 – Y6052	BOOM, menu 3	7.2.7 Valve block lift cylinder
130	Transistor has been triggered due to short-circuit or open circuit in circuit for solenoid valve regeneration lift right (Y6051).	Regeneration lift not working.	Check cabling between the control unit and component with diagnostic menu. Check component.	D797-F/ K1:12 – Y6051	BOOM, menu 3	7.2.7 Valve block lift cylinder
133	Signal error from Sensor hydraulic pressure lift cylinder left (B768-12).	Overload system not working. All lift functions operate at reduced speed. Error code 150 activated.	Check cabling between the control unit and component with diagnostic menu. Check component.	D797-F/ K1:21 – B768-12	OP, menu 3	7.2.9 Sensor hydraulic pressure lift cylinder
134	Signal error from Sensor hydraulic pressure lift cylinder left (B768-13).	Overload system not working. All lift functions operate at reduced speed. Error code 150 activated.	Check cabling between the control unit and component with diagnostic menu. Check component.	D797-F/ K1:22 – B768-13	OP, menu 3	7.2.9 Sensor hydraulic pressure lift cylinder
135	Signal error from Sensor hydraulic pressure lift cylinder right (B768-10).	Overload system not working. All lift functions operate at reduced speed. Error code 150 activated.	Check cabling between the control unit and component with diagnostic menu. Check component.	D797-F/ K1:23 – B768-10	OP, menu 3	7.2.9 Sensor hydraulic pressure lift cylinder

https://truckmanualshub.com/

Code	Description	Limitation	Action	Connection and component	Diagnostic menu	Function group
136	Signal error from Sensor hydraulic pressure lift cylinder right (B768-11).	Overload system not working. All lift functions operate at reduced speed. Error code 150 activated.	Check cabling between the control unit and component with diagnostic menu. Check component.	D797-F/ K1:24 – B768-11	OP, menu 3	7.2.9 Sensor hydraulic pressure lift cylinder
137	Transistor has been triggered due to short-circuit or open circuit in circuit for solenoid valve boom up (Y6005).	Lift not working.	Check cabling between the control unit and component with diagnostic menu. Check component.	D797-F/ K1:16 – Y6005	BOOM, menu 4	7.2.3 Control valve lift, lower and extension
138	Transistor has been triggered due to short-circuit or open circuit in circuit for solenoid valve boom down (Y6004).	Lower not working.	Check cabling between the control unit and component with diagnostic menu. Check component.	D797-F/ K1:17 – Y6004	BOOM, menu 5	7.2.3 Control valve lift, lower and extension
139	Transistor has been triggered due to short-circuit or open circuit in circuit for solenoid valve boom out (Y6006).	Extension out not working.	Check cabling between the control unit and component with diagnostic menu. Check component.	D797-F/ K1:18 – Y6006	BOOM, menu 7	7.3.3. Control valve lift, lower and extension
140	Transistor has been triggered due to short-circuit or open circuit in circuit for solenoid valve boom in (Y6007).	Extension in not working.	Check cabling between the control unit and component with diagnostic menu. Check component.	D797-F/ K1:19 – Y6007	BOOM, menu 8	7.3.3. Control valve lift, lower and extension

https://truckmanualshub.com/

Code	Description	Limitation	Action	Connection and component	Diagnostic menu	Function group
144	High brake oil temperature.	Reduced braking performance.	Check that the cooling fan works. Check that cooler isn't clogged. Check cabling between the control unit and component with diagnostic menu.	–	HYD, menu 2	4.8 Temperature control, cleaning and brake oil
145	Unreasonable value Sensor brake oil temperature (B762).	–	Check that the cooling fan works. Check that cooler isn't clogged. Check cabling between the control unit and component with diagnostic menu.	D797-F/ K2:13 – B762	HYD, menu 2	4.8.10 Sensor brake oil temperature
150	Malfunction in overload protection.	Overload protection not working. All lift functions operate at reduced speed.	Check if there are error codes for sensors in the overload system. Check components and wiring with diagnostic menu.	–	OP, menu 1 – 5	8.2.1 Overload system
151	Redundant voltage feed left to control unit frame rear (D797-R) does not arrive.	–	Check cabling between the control unit and component with diagnostic menu. Check component.	D797-R/ K2:7	CAN/ POWER, menu 8	11.5.1.2 Redundant voltage feed of control units
152	Redundant voltage feed right to control unit frame rear (D797-R) does not arrive.	–	Check cabling between the control unit and component with diagnostic menu. Check component.	D797-R/ K2:8	CAN/ POWER, menu 8	11.5.1.2 Redundant voltage feed of control units
153	Voltage feed to Control unit frame rear (D797-F) below 18 V or above 32 V.	–	Check fuse F58-2:3, change if needed. Check cabling between the control unit and component with diagnostic menu.	D797-R/ K2:1/9/10	CAN/ POWER, menu 8	11.5.1.3 Ignition voltage (15)

https://truckmanualshub.com/

Code	Description	Limitation	Action	Connection and component	Diagnostic menu	Function group
154	Incorrect control breaker voltage to Control unit frame rear (D797-F).	–	Check cabling between the control unit and component with diagnostic menu. Check component.	D797-R/ K2:11	CAN/ POWER, menu 8	11.5.1.4 Control switch voltage (15E)
155	5 V supply voltage to sensor below 4.9 V or above 5.1 V.	–	Check cabling between the control unit and component with diagnostic menu. Check component.	D797-R/ K1:8	CAN/ POWER, menu 9	11.5.1 Voltage feed
160	Transistor has been triggered due to short circuit or open circuit in circuit for Cooling fan hydraulic oil (M668).	Cooling fan hydraulic oil not working.	Check cabling between the control unit and component with diagnostic menu. Check component.	D797-R/ K1:14 – M668	HYD, menu 1	10.6.4 Cooling fan
161	Transistor has been triggered due to short-circuit or open circuit in circuit for light work light boom left (H406L-1).	Work light boom left not working.	Check light. Check cabling between the control unit and component with diagnostic menu. Check bulb socket.	D797-R/ K1:1 – H406L-1	LIGHTS, menu 3	9.6.11 Work light boom
162	Transistor has been triggered due to short-circuit or open circuit in circuit for light work light boom right (H406R-1).	Work light boom right not working.	Check light. Check cabling between the control unit and component with diagnostic menu. Check bulb socket.	D797-R/ K1:15 – H406R-1	LIGHTS, menu 3	9.6.11 Work light boom
163	Transistor has been triggered due to short-circuit or open circuit in circuit for light back-up light left (H405L).	Back-up light left not working.	Check light. Check cabling between the control unit and component with diagnostic menu. Check bulb socket.	D797-R/ K1:28 – H405L	LIGHTS, menu 11	9.6.6 Back-up light
164	Transistor has been triggered due to short-circuit or open circuit in circuit for light back-up light right (H405R).	Back-up light right not working.	Check light. Check cabling between the control unit and component with diagnostic menu. Check bulb socket.	D797-R/ K1:42 – H405R	LIGHTS, menu 11	9.6.6 Back-up light

https://truckmanualshub.com/

Code	Description	Limitation	Action	Connection and component	Diagnostic menu	Function group
167	Transistor has been triggered due to short-circuit or open circuit in circuit for solenoid valve regeneration extension (Y6046).	Regeneration extension not working.	Check cabling between the control unit and component with diagnostic menu. Check component.	D797-R/ K1:4 – Y6046	BOOM, menu 3	7.3.6 Valve block extension cylinder
168	Transistor has been triggered due to short-circuit or open circuit in circuit for Solenoid valve blocking extension (Y6050).	Extension not working.	Check cabling between the control unit and component with diagnostic menu. Check component.	D797-R/ K1:5 – Y6050	BOOM, menu 3	7.3.6 Valve block extension cylinder
169	Transistor has been triggered due to short-circuit or open circuit in circuit for Back-up warning unit (965).	Back-up alarm not working.	Check cabling between the control unit and component with diagnostic menu. Check component.	D797-R/ K1:30 - H965	LIGHTS, menu 11	9.7.2 Back-up alarm
170	Transistor has been triggered due to short-circuit or open circuit in circuit for Solenoid valve top hydraulics (Y6003).	Attachment functions not working.	Check cabling between the control unit and component with diagnostic menu. Check component.	D797-R/ K1:31 – Y6003	HYD, menu 6	7.4.2 Valve block top lift hydraulics
171	Transistor has been triggered due to short-circuit or open circuit in circuit for light brake light left (H411L).	Brake light left not working.	Check light. Check cabling between the control unit and component with diagnostic menu. Check bulb socket.	D797-R/ K1:32 – H411L	LIGHTS, menu 11	9.6.5 Brake light
172	Transistor has been triggered due to short-circuit or open circuit in circuit for light brake light right (H411R).	Brake light right not working.	Check light. Check cabling between the control unit and component with diagnostic menu. Check bulb socket.	D797-R/ K1:33 – H411R	LIGHTS, menu 11	9.6.5 Brake light

https://truckmanualshub.com/

Code	Description	Limitation	Action	Connection and component	Diagnostic menu	Function group
173	Transistor has been triggered due to short-circuit or open circuit in circuit for light running light left (H416-2).	Running light left rear not working.	Check light. Check cabling between the control unit and component with diagnostic menu. Check bulb socket.	D797-R/ K1:7 – H416-2	LIGHTS, menu 5	9.6.3 Running lights
174	Transistor has been triggered due to short-circuit or open circuit in circuit for light running light right (H417-2).	Running light right rear not working.	Check light. Check cabling between the control unit and component with diagnostic menu. Check bulb socket.	D797-R/ K1:9 – H416-2 (417)	LIGHTS, menu 5	9.6.3 Running lights
175	Transistor has been triggered due to short-circuit or open circuit in circuit for light rear light left (H421L).	Rear light left not working.	Check light. Check cabling between the control unit and component with diagnostic menu. Check bulb socket.	D797-R/ K1:10 – H412L	LIGHTS, menu 5	9.6.4 Rear light
176	Transistor has been triggered due to short-circuit or open circuit in circuit for light rear light right (H421R).	Rear light left not working.	Check light. Check cabling between the control unit and component with diagnostic menu. Check bulb socket.	D797-R/ K1:25 – H412R	LIGHTS, menu 5	9.6.4 Rear light
177	Transistor has been triggered due to short-circuit or open circuit in circuit for light direction indicator left rear (H426).	Direction indicator rear left not working.	Check light. Check cabling between the control unit and component with diagnostic menu. Check bulb socket.	D797-R/ K1:29 – H426	LIGHTS, menu 8	9.6.7 Direction indicators
178	Transistor has been triggered due to short-circuit or open circuit in circuit for light direction indicator right rear (H426).	Direction indicator rear right not working.	Check light. Check cabling between the control unit and component with diagnostic menu. Check bulb socket.	D797-R/ K1:39 – H427	LIGHTS, menu 8	9.6.7 Direction indicators

https://truckmanualshub.com/

Code	Description	Limitation	Action	Connection and component	Diagnostic menu	Function group
179	Transistor has been triggered due to short-circuit or open circuit in circuit for Magnetic clutch on AC compressor (M677).	Air conditioning not working.	Check if error code 181 is generated, error code 179 and 181 belong to the same user. Check cabling between the control unit and component with diagnostic menu. Check component.	D797-R/ K1:11 – M677	CLIMATE, menu 6	9.4.8 Compressor
181	Transistor has been triggered due to short-circuit or open circuit in circuit for Magnetic clutch on AC compressor (M677).	Air conditioning not working.	Check if error code 179 is generated, error code 179 and 181 belong to the same user. Check cabling between the control unit and component with diagnostic menu. Check component.	D797-R/ K1:26 – M677	CLIMATE, menu 6	9.4.8 Compressor
182	Transistor has been triggered due to short-circuit or open circuit in circuit for solenoid valve pump unloading (Y6062).	Unloading of hydraulic oil pumps at boom in not working.	Check cabling between the control unit and component with diagnostic menu. Check component.	D797-R/ K1:40 – Y6062	BOOM, menu 2	7.3.8 Valve block pump unloading
183	Abnormal signal from Sensor boom angle (771).	Overload system not working.	Check cabling between the control unit and component with diagnostic menu. Check component.	D797-R/ K1:21 – R771	OP, menu 4	7.2.12 Sensor boom angle
184	Abnormal signal from Sensor length (777).	Overload system not working.	Check cabling between the control unit and component with diagnostic menu. Check component.	D797-R/ K1:22 – R777	OP, menu 4	7.3.11 Sensor boom length
194	High temperature hydraulic oil.	–	Check function of cooling fan. Check that cooler isn't clogged. Check cabling between the control unit and component with diagnostic menu. Check component.	–	HYD, menu 1	10.6 Temperature control, cleaning and hydraulic oil

https://truckmanualshub.com/

Code	Description	Limitation	Action	Connection and component	Diagnostic menu	Function group
195	Abnormal signal from Sensor hydraulic oil temperature (B776).	Incorrect temperature display.	Check cabling between the control unit and component with diagnostic menu. Check component.	D797-R/ K2:13 – B776	HYD, menu 1	10.6 Temperature control, cleaning and hydraulic oil
196	Abnormal signal from Sensor fuel level (B757).	Incorrect display of fuel amount (empty or full).	Check cabling between the control unit and component with diagnostic menu. Check component.	D797-R/ K2:15 – B757	CAB, menu 7	1.2.2. Sensor, fuel level
201	Redundant voltage feed left not reaching control unit, frame, option (D797-O).	–	Check cabling between the control unit and component with diagnostic menu. Check component.	D797-O/ K2:7	CAN/ POWER, menu 8	11.5.1.2 Redundant voltage feed of control units
202	Redundant voltage feed right not reaching control unit, frame, option (D797-O).	–	Check cabling between the control unit and component with diagnostic menu. Check component.	D797-O/ K2:8	CAN/ POWER, menu 8	11.5.1.2 Redundant voltage feed of control units
203	Voltage feed to control unit, frame, option (D797-O) below 18 V or above 32 V.	–	Check fuse F58-2:4, change if needed. Check cabling between the control unit and component with diagnostic menu.	D797-O/ K2:1/9/10	CAN/ POWER, menu 8	11.5.1.3 Ignition voltage (15)
204	Incorrect control breaker voltage to Control unit frame option (D797-O)	Control breaker cannot be released. All hydraulic functions blocked.	Check fuse F58-3:4, change if needed. Check cabling between the control unit and component with diagnostic menu.	D797-O/ K2:11	CAN/ POWER, menu 8	11.5.1.4 Control switch voltage (15E)
215	Transistor has been triggered due to short-circuit or open circuit in circuit for solenoid valve cab forward/ up (Y6016).	Hydraulic sliding cab or cab lift not working	Check cabling between the control unit and component with diagnostic menu. Check component.	D797-O/ K1:2 – Y6016	SLIDING CAB, menu 3	9.10 Cab structure and suspension

https://truckmanualshub.com/

Code	Description	Limitation	Action	Connection and component	Diagnostic menu	Function group
216	Transistor has been triggered due to short-circuit or open circuit in circuit for solenoid valve cab backward/down (Y6017).	Hydraulic sliding cab or cab lift not working	Check cabling between the control unit and component with diagnostic menu. Check component.	D797-O/ K1:3– Y6017	EXTRA / SLIDING CAB, menu 4	9.10 Cab structure and suspension
217	Transistor has been triggered due to short-circuit or open circuit in circuit for solenoid valve steering left (Y636L).	Joystick steering or mini-wheel not working.	Check cabling between the control unit and component with diagnostic menu. Check component.	D797-O/ K1:4 – Y636L	EXTRA / EL-STEERING, menu 4	5.2.10 Control valve, joystick control/ mini-wheel
218	Transistor has been triggered due to short-circuit or open circuit in circuit for solenoid valve steering right (Y636R).	Joystick steering or mini-wheel not working.	Check cabling between the control unit and component with diagnostic menu. Check component.	D797-O/ K1:5 – Y636R	EL-STEERING, menu 5	5.2.10 Control valve, joystick control/ mini-wheel
219	Transistor has been triggered due to short-circuit or open circuit in circuit for solenoid valve support jacks up (Y6053)	Support jacks not working.	Check cabling between the control unit and component with diagnostic menu. Check component.	D797-O/ K1:30 – Y6063	SUPPORT JACKS, menu 3	7.10.1.2 Control valve option frame
220	Transistor has been triggered due to short-circuit or open circuit in circuit for solenoid valve support jacks down (Y6064)	Support jacks not working.	Check cabling between the control unit and component with diagnostic menu. Check component.	D797-O/ K1:31 – Y6064	SUPPORT JACKS, menu 3	7.10.1.2 Control valve option frame
221	Transistor has been triggered due to short-circuit or open circuit in circuit for solenoid valve cab tilt up (Y6047)	Cab tilt not working.	Check cabling between the control unit and component with diagnostic menu. Check component.	D797-O/ K1:32 – Y6047	SLIDING CAB, menu 3	9.10 Cab structure and suspension

https://truckmanualshub.com/

Code	Description	Limitation	Action	Connection and component	Diagnostic menu	Function group
222	Transistor has been triggered due to short-circuit or open circuit in circuit for solenoid valve cab tilt down (Y6048).	Cab tilt not working.	Check cabling between the control unit and component with diagnostic menu. Check component.	D797-O/ K1:33 – Y6048	SLIDING CAB, menu 4	9.10 Cab structure and suspension
223	Transistor has been triggered due to short-circuit or open circuit in circuit for solenoid valve disengagement of hydraulic oil pumps (Y6057).	Disengagement of hydraulic oil pumps when lowering cab tilt not working.	Check cabling between the control unit and component with diagnostic menu. Check component.	D797-O/ K1:7 – Y6057	HYD, menu 6	9.10 Cab structure and suspension
237	Transistor has been triggered due to short-circuit or open circuit in circuit for solenoid valve cab forward/ up (Y6016).	Hydraulic sliding cab or cab lift not working.	Check cabling between the control unit and component with diagnostic menu. Check component.	D797-O/ K1:16 – Y6016	SLIDING CAB, menu 3	9.10 Cab structure and suspension
238	Transistor has been triggered due to short-circuit or open circuit in circuit for solenoid valve cab backward/down (Y6017).	Hydraulic sliding cab or cab lift not working.	Check cabling between the control unit and component with diagnostic menu. Check component.	D797-O/ K1:17 – Y6017	SLIDING CAB, menu 4	9.10 Cab structure and suspension
239	Transistor has been triggered due to short-circuit or open circuit in circuit for solenoid valve steering left (Y636L).	Joystick steering or mini-wheel not working.	Check cabling between the control unit and component with diagnostic menu. Check component.	D797-O/ K1:18 – Y636L	EL-STEERING, menu 4	5.2.10 Control valve option frame
240	Transistor has been triggered due to short-circuit or open circuit in circuit for solenoid valve steering right (Y636R).	Joystick steering or mini-wheel not working.	Check cabling between the control unit and component with diagnostic menu. Check component.	D797-O/ K1:19 – Y636R	EL-STEERING, menu 5	5.2.10 Control valve option frame

https://truckmanualshub.com/

Code	Description	Limitation	Action	Connection and component	Diagnostic menu	Function group
251	Redundant voltage feed left to Control unit attachment (D971-1) does not arrive.	–	Check cabling between the control unit and component with diagnostic menu. Check component.	D791-1/ K2:7	CAN/ POWER, menu 8	11.5.1.2 Redundant voltage feed of control units
252	Redundant voltage feed left to Control unit attachment (D791-1) does not arrive.	–	Check cabling between the control unit and component with diagnostic menu. Check component.	D791-1/ K2:8	CAN/ POWER, menu 8	11.5.1.2 Redundant voltage feed of control units
253	Control breaker voltage to Control unit attachment (D791-1) below 18 V or above 32 V.	–	Check fuse F58-3:1, change if needed. Check cabling between the control unit and component with diagnostic menu.	D791-1/ K2:1/9/10	CAN/ POWER, menu 8	11.5.1.4 Control switch voltage (15E)
254	Incorrect control breaker voltage to Control unit attachment (D791-1)	Control breaker cannot be released. All hydraulic functions blocked.	Check fuse F58-3:1, change if needed. Check cabling between the control unit and component with diagnostic menu.	D791-1/ K2:11	CAN/ POWER, menu 8	11.5.1.4 Control switch voltage (15E)
260	Transistor has been triggered due to short-circuit or open circuit in circuit for central unit central lubrication (M693-2).	Central lubrication attachment not working.	Check cabling between the control unit and component with diagnostic menu. Check component.	D791-1/ K1:14 – M693-2	CAB, menu 10	9.14.1 Pump unit
261	Transistor has been triggered due to short-circuit or open circuit in circuit for light work light attachment right (H406R-2).	Work light attachment right not working.	Check cabling between the control unit and component with diagnostic menu. Check component.	D791-1/ K1:1 – H406R-2	LIGHTS, menu 2	9.6.12 Work light attachment
262	Transistor has been triggered due to short-circuit or open circuit in circuit for light work light attachment left (H406L-2).	Work light attachment left not working.	Check light. Check cabling between the control unit and component with diagnostic menu. Check bulb socket.	D791-1/ K1:15 – H406L-2	LIGHTS, menu 2	9.6.12 Work light attachment

https://truckmanualshub.com/

Code	Description	Limitation	Action	Connection and component	Diagnostic menu	Function group
263	Transistor has been triggered due to short-circuit or open circuit in circuit for light extra work light attachment (H404-4L).	Extra work light attachment not working.	Check light. Check cabling between the control unit and component with diagnostic menu. Check bulb socket.	D791-1/ K1:28 – H404-4L	LIGHTS, menu 2	9.6.12 Work light attachment
264	Transistor has been triggered due to short-circuit or open circuit in circuit for light extra work light attachment (H404-4R).	Extra work light attachment not working.	Check light. Check cabling between the control unit and component with diagnostic menu. Check bulb socket.	D791-1/ K1:42 – H404-4R	LIGHTS, menu 2	9.6.12 Work light attachment
265	Transistor has been triggered due to short-circuit or open circuit in circuit for solenoid valve rotation clockwise (Y6008).	Rotation of attachment not working.	Check cabling between the control unit and component with diagnostic menu. Check component.	D791-1/ K1:2 – Y6008	ATTACH, menu 9	7.6.3 Control valve attachment
266	Transistor has been triggered due to short-circuit or open circuit in circuit for solenoid valve rotation counter-clockwise (Y6009).	Rotation of attachment not working.	Check cabling between the control unit and component with diagnostic menu. Check component.	D791-1/ K1:3 – Y6009	ATTACH, menu 10	7.6.3 Control valve attachment
267	Transistor has been triggered due to short circuit or open circuit in circuit for solenoid valve spreader out (Y6018).	Spreader not working.	Check cabling between the control unit and component with diagnostic menu. Check component.	D791-1/ K1:4 – Y6018	ATTACH, menu 11	7.5.3 Control valve attachment
268	Transistor has been triggered due to short-circuit or open circuit in circuit for solenoid valve Spreader in (Y6019).	Spreader not working.	Check cabling between the control unit and component with diagnostic menu. Check component.	D791-1/ K1:5 – Y6019	ATTACH, menu 12	7.5.3 Control valve attachment

https://truckmanualshub.com/

Code	Description	Limitation	Action	Connection and component	Diagnostic menu	Function group
269	Transistor has been triggered due to short circuit or open circuit in circuit for solenoid valve sideshift right (Y6021).	Sideshift of attachment not working.	Check cabling between the control unit and component with diagnostic menu. Check component.	D791-1/ K1:30 – Y6021	ATTACH, menu 6	7.4.3 Control valve attachment
270	Transistor has been triggered due to short circuit or open circuit in circuit for solenoid valve sideshift left (Y6020).	Sideshift of attachment not working.	Check cabling between the control unit and component with diagnostic menu. Check component.	D791-1/ K1:31 – Y6020	ATTACH, menu 6	7.4.3 Control valve attachment
271	Transistor has been triggered due to short-circuit or open circuit in circuit for solenoid valve lock twistlock (Y6040).	Twistlock not working.	Check cabling between the control unit and component with diagnostic menu. Check component.	D791-1/ K1:32 – Y6040	ATTACH, menu 7	7.9.1.3 Control valve attachment
272	Transistor has been triggered due to short-circuit or open circuit in circuit for solenoid valve open twistlock (Y6039).	Twistlock not working.	Check cabling between the control unit and component with diagnostic menu. Check component.	D791-1/ K1:33 – Y6039	ATTACH, menu 7	7.9.1.3 Control valve attachment
273	Transistor has been triggered due to short-circuit or open circuit in circuit for solenoid valve tilt 1 (Y6012-1).	Tilt lock not working.	Check cabling between the control unit and component with diagnostic menu. Check component.	D791-1/ K1:7 – Y6012-1	ATTACH, menu 13	7.7.4 Lock valve tilt
274	Transistor has been triggered due to short-circuit or open circuit in circuit for solenoid valve tilt 2 (Y6012-2).	Tilt lock not working.	Check cabling between the control unit and component with diagnostic menu. Check component.	D791-1/ K1:9 – Y6012-2	ATTACH, menu 13	7.7.4 Lock valve tilt

https://truckmanualshub.com/

Code	Description	Limitation	Action	Connection and component	Diagnostic menu	Function group
276	Transistor has been triggered due to short-circuit or open circuit in circuit for indicator light twistlocks open (H562).	Indicator light open twistlock not working.	Check light. Check cabling between the control unit and component with diagnostic menu. Check bulb socket.	D791-1/ K1:25 – H562	ATTACH, menu 8	7.1.14 Light panel boom
277	Transistor has been triggered due to short-circuit or open circuit in circuit for indicator light alignment (H564).	Indicator light alignment twistlock not working.	Check light. Check cabling between the control unit and component with diagnostic menu. Check bulb socket.	D791-1/ K1:29 – H564	ATTACH, menu 8	7.1.14 Light panel boom
278	Transistor has been triggered due to short-circuit or open circuit in circuit for indicator light twistlocks locked (H563).	Indicator light locked twistlocks not working.	Check light. Check cabling between the control unit and component with diagnostic menu. Check bulb socket.	D791-1/ K1:39 – H563	ATTACH, menu 8	7.1.14 Light panel boom
287	Transistor has been triggered due to short-circuit or open circuit in circuit for solenoid valve rotation clockwise (Y6008)	Rotation of attachment not working.	Check cabling between the control unit and component with diagnostic menu. Check component.	D791-1/ K1:16 – Y6008	ATTACH, menu 9	7.6.3 Control valve attachment
288	Transistor has been triggered due to short-circuit or open circuit in circuit for solenoid valve rotation counter-clockwise (Y6009)	Rotation of attachment not working.	Check cabling between the control unit and component with diagnostic menu. Check component.	D791-1/ K1:17 – Y6009	ATTACH, menu 10	7.6.3 Control valve attachment
289	Transistor has been triggered due to short-circuit or open circuit in circuit for solenoid valve spreader out (Y6018)	Spreader not working.	Check cabling between the control unit and component with diagnostic menu. Check component.	D791-1/ K1:18 – Y6018	ATTACH, menu 11	7.5.3 Control valve attachment

https://truckmanualshub.com/

Code	Description	Limitation	Action	Connection and component	Diagnostic menu	Function group
290	Transistor has been triggered due to short-circuit or open circuit in circuit for solenoid valve Spreader in (Y6019)	Spreader not working.	Check cabling between the control unit and component with diagnostic menu. Check component.	D791-1/ K1:19 – Y6019	ATTACH, menu 12	7.5.3 Control valve attachment
298	Sensor twistlock indicates that twistlock left is between open and locked position.	Lift and extension not working.	Check that Sensors twistlock are clean and correctly adjusted. Check cabling between the control unit and component with diagnostic menu.	–	ATTACH, menu 8	7.9.1.9 Sensor twistlock
299	Sensor twistlock indicates that twistlock right is between open and locked position.	Lift and extension not working.	Check that Sensors twistlock are clean and correctly adjusted. Check cabling between the control unit and component with diagnostic menu.	–	ATTACH, menu 8	7.9.1.9 Sensor twistlock
300	Sensor alignment indicates unreasonable distance.	Twistlock not working.	Check that Sensors alignment are clean and correctly adjusted. Check that alignment pin runs smoothly. Check cabling between the control unit and component with diagnostic menu.	–	ATTACH, menu 8	7.9.1.8 Sensor alignment
301	Redundant voltage feed left to Control unit attachment (D971-2) does not arrive.	–	Check cabling between the control unit and component with diagnostic menu. Check component.	D791-2/ K2:7	CAN/ POWER, menu 8	11.5.1.2 Redundant voltage feed of control units
302	Redundant voltage feed left to Control unit attachment (D791-2) does not arrive.	–	Check cabling between the control unit and component with diagnostic menu. Check component.	D791-2/ K2:8	CAN/ POWER, menu 8	11.5.1.2 Redundant voltage feed of control units

https://truckmanualshub.com/

Code	Description	Limitation	Action	Connection and component	Diagnostic menu	Function group
303	Emergency voltage to Control unit attachment (D791-2) below 18 V or above 32 V.	Control breaker cannot be released. All hydraulic functions blocked.	Check fuse F58-3:1, change if needed. Check cabling between the control unit and component with diagnostic menu.	D791-2/ K2:1/9/10	CAN/ POWER, menu 8	11.5.1.4 Control switch voltage (15E)
304	Incorrect control breaker voltage to Control unit attachment (D791-2)	Control breaker cannot be released. All hydraulic functions blocked.	Check fuse F58-3:1, change if needed. Check cabling between the control unit and component with diagnostic menu.	D791-2/ K2:11	CAN/ POWER, menu 8	11.5.1.4 Control switch voltage (15E)
315	Transistor has been triggered due to short-circuit or open circuit in circuit for Solenoid valve levelling right (Y6035).	Levelling not working.	Check cabling between the control unit and component with diagnostic menu. Check component.	D791-2/ K1:2 – Y6035	ATTACH, menu 17	7.8.3 Control valve attachment
316	Transistor has been triggered due to short-circuit or open circuit in circuit for Solenoid valve levelling left (Y6036).	Levelling not working.	Check cabling between the control unit and component with diagnostic menu. Check component.	D791-2/ K1:3 – Y6036	ATTACH, menu 18	7.8.3 Control valve attachment
317	Transistor has been triggered due to short-circuit or open circuit in circuit for Solenoid valve tilt out (Y6010).	Controllable tilt not working.	Check cabling between the control unit and component with diagnostic menu. Check component.	D791-2/ K1:4 – Y6010	ATTACH, menu 14	7.7.5 Control valve attachment
318	Transistor has been triggered due to short-circuit or open circuit in circuit for Solenoid valve tilt in (Y6011).	Controllable tilt not working.	Check cabling between the control unit and component with diagnostic menu. Check component.	D791-2/ K1:5 – Y6011	ATTACH, menu 15	7.7.5 Control valve attachment

https://truckmanualshub.com/

Code	Description	Limitation	Action	Connection and component	Diagnostic menu	Function group
319	Transistor has been triggered due to short-circuit or open circuit in circuit for Solenoid valve levelling (Y6034-1).	Levelling not working.	Check cabling between the control unit and component with diagnostic menu. Check component.	D791-2/ K1:30 – Y6034-1	ATTACH, menu 16	7.8.6 Valve block levelling cylinders
320	Transistor has been triggered due to short-circuit or open circuit in circuit for Solenoid valve levelling (Y6034-2).	Levelling not working.	Check cabling between the control unit and component with diagnostic menu. Check component.	D791-2/ K1:31 – Y6034-2	ATTACH, menu 16	7.8.6 Valve block levelling cylinders
337	Transistor has been triggered due to short-circuit or open circuit in circuit for Solenoid valve levelling right (Y6035).	Levelling not working.	Check cabling between the control unit and component with diagnostic menu. Check component.	D791-2/ K1:16 – Y6035	ATTACH, menu 17	7.8.3 Control valve attachment
338	Transistor has been triggered due to short-circuit or open circuit in circuit for Solenoid valve levelling left (Y6036).	Levelling not working.	Check cabling between the control unit and component with diagnostic menu. Check component.	D791-2/ K1:17 – Y6036	ATTACH, menu 18	7.8.3 Control valve attachment
339	Transistor has been triggered due to short-circuit or open circuit in circuit for Solenoid valve tilt out (Y6010).	Controllable tilt not working.	Check cabling between the control unit and component with diagnostic menu. Check component.	D791-2/ K1:18 – Y6010	ATTACH, menu 14	7.7.5 Control valve attachment
340	Transistor has been triggered due to short-circuit or open circuit in circuit for Solenoid valve tilt in (Y6011).	Controllable tilt not working.	Check cabling between the control unit and component with diagnostic menu. Check component.	D791-2/ K1:19 – Y6011	ATTACH, menu 15	7.7.5 Control valve attachment

https://truckmanualshub.com/

Code	Description	Limitation	Action	Connection and component	Diagnostic menu	Function group
351	Redundant voltage feed left to Control unit combi attachment left (D971-3) does not arrive.	–	Check cabling between the control unit and component with diagnostic menu. Check component.	D791-3/ K2:7	CAN/ POWER, menu 8	11.5.1.2 Redundant voltage feed of control units
352	Redundant voltage feed right to Control unit combi attachment left (D971-3) does not arrive.	–	Check cabling between the control unit and component with diagnostic menu. Check component.	D791-3/ K2:8	CAN/ POWER, menu 8	11.5.1.2 Redundant voltage feed of control units
353	Control breaker voltage to Control unit combi attachment left (D791-3) below 18 V or above 32 V.	Control breaker cannot be released. All hydraulic functions blocked.	Check fuse F58-3:1, change if needed. Check cabling between the control unit and component with diagnostic menu.	D791-3/ K2:1/9/10	CAN/ POWER, menu 8	11.5.1.4 Control switch voltage (15E)
354	Incorrect control breaker voltage to Control unit combi attachment left (D791-3).	Control breaker cannot be released. All hydraulic functions blocked.	Check fuse F58-3:1, change if needed. Check cabling between the control unit and component with diagnostic menu.	D791-3/ K2:11	CAN/ POWER, menu 8	11.5.1.4 Control switch voltage (15E)
361	Transistor has been triggered due to short-circuit or open circuit in circuit for Work light left lift leg (H406).	Work light left lift leg not working.	Check light. Check cabling between the control unit and component with diagnostic menu. Check bulb socket.	D791-3/ K1:1 – H404-6L	LIGHTS, menu 2	9.6.12 Work light attachment
362	Transistor has been triggered due to short-circuit or open circuit in circuit for Solenoid valve levelling right (Y6035) or Solenoid valve levelling left (Y6036).	Levelling not working.	Check cabling between the control unit and component with diagnostic menu. Check component.	D791-3/ K1:15 – Y6035/ Y6036	ATTACH, menu 17 - 18	7.8.3 Control valve attachment

https://truckmanualshub.com/

Code	Description	Limitation	Action	Connection and component	Diagnostic menu	Function group
364	Transistor has been triggered due to short-circuit or open circuit in circuit for Solenoid valve operating position (Y6053L).	Left lift leg not working.	Check cabling between the control unit and component with diagnostic menu. Check component.	D791-3/ K1:42 – Y6053L	COMBI, menu 16	7.9.2.5 Valve operating position
365	Transistor has been triggered due to short-circuit or open circuit in circuit for Solenoid valve levelling right (Y6035).	Levelling not working.	Check cabling between the control unit and component with diagnostic menu. Check component.	D791-3/ K1:2 - Y6035	ATTACH, menu 17	7.9.2.3 Control valve lift leg
366	Transistor has been triggered due to short-circuit or open circuit in circuit for Solenoid valve levelling left (Y6036).	Levelling not working.	Check cabling between the control unit and component with diagnostic menu. Check component.	D791-3/ K1:3 - Y6036	ATTACH, menu 18	7.9.2.3 Control valve lift leg
367	Transistor has been triggered due to short-circuit or open circuit in circuit for Solenoid valve front knee in (Y6057L).	Left lift leg not working.	Check cabling between the control unit and component with diagnostic menu. Check component.	D791-3/ K1:4 – Y6057L	COMBI, menu 11	7.9.2.3 Control valve lift leg
368	Transistor has been triggered due to short-circuit or open circuit in circuit for Solenoid valve front knee out (Y6056L).	Left lift leg not working.	Check cabling between the control unit and component with diagnostic menu. Check component.	D791-3/ K1:5 – Y6056L	COMBI, menu 10	7.9.2.3 Control valve lift leg
369	Transistor has been triggered due to short-circuit or open circuit in circuit for Solenoid valve rear knee in (Y6059L).	Left lift leg not working.	Check cabling between the control unit and component with diagnostic menu. Check component.	D791-3/ K1:30 – Y6059L	COMBI, menu 13	7.9.2.3 Control valve lift leg

https://truckmanualshub.com/

Code	Description	Limitation	Action	Connection and component	Diagnostic menu	Function group
370	Transistor has been triggered due to short-circuit or open circuit in circuit for Solenoid valve rear knee out (Y6058L).	Left lift leg not working.	Check cabling between the control unit and component with diagnostic menu. Check component.	D791-3/ K1:31 – Y6058L	COMBI, menu 12	7.9.2.3 Control valve lift leg
371	Transistor has been triggered due to short-circuit or open circuit in circuit for Solenoid valve lowering front leg (Y6013L).	Left lift leg not working.	Check cabling between the control unit and component with diagnostic menu. Check component.	D791-3/ K1:32 – Y6013L	COMBI, menu 10	7.9.2.3 Control valve lift leg
372	Transistor has been triggered due to short-circuit or open circuit in circuit for Solenoid valve front leg up (Y6060L).	Left lift leg not working.	Check cabling between the control unit and component with diagnostic menu. Check component.	D791-3/ K1:33 – Y6060L	COMBI, menu 11	7.9.2.3 Control valve lift leg
373	Transistor has been triggered due to short-circuit or open circuit in circuit for Solenoid valve lowering rear leg (Y6014L).	Left lift leg not working.	Check cabling between the control unit and component with diagnostic menu. Check component.	D791-3/ K1:7 – Y6014L	COMBI, menu 12	7.9.2.3 Control valve lift leg
374	Transistor has been triggered due to short-circuit or open circuit in circuit for Solenoid valve rear leg up (Y6061L).	Left lift leg not working.	Check cabling between the control unit and component with diagnostic menu. Check component.	D791-3/ K1:9 – Y6061L	COMBI, menu 13	7.9.2.3 Control valve lift leg
375	Transistor has been triggered due to short-circuit or open circuit in circuit for Indicator light (H566R).	Indicator light alignment lift leg right front not working.	Check light. Check cabling between the control unit and component with diagnostic menu. Check bulb socket.	D791-3/ K1:10 – H566R	COMBI, menu 7	7.1.14 Light panel boom

https://truckmanualshub.com/

Code	Description	Limitation	Action	Connection and component	Diagnostic menu	Function group
376	Transistor has been triggered due to short-circuit or open circuit in circuit for Indicator light (H567R).	Indicator light alignment lift leg right rear not working.	Check light. Check cabling between the control unit and component with diagnostic menu. Check bulb socket.	D791-3/ K1:25 – H567R	COMBI, menu 7	7.1.14 Light panel boom
377	Transistor has been triggered due to short-circuit or open circuit in circuit for Indicator light (H556L).	Indicator light alignment lift leg left front not working.	Check light. Check cabling between the control unit and component with diagnostic menu. Check bulb socket.	D791-3/ K1:29 – H566L	COMBI, menu 7	7.1.14 Light panel boom
378	Transistor has been triggered due to short-circuit or open circuit in circuit for Indicator light (H556L).	Indicator light alignment lift leg left rear not working.	Check light. Check cabling between the control unit and component with diagnostic menu. Check bulb socket.	D791-3/ K1:39 – H567L	COMBI, menu 7	7.1.14 Light panel boom
379	Transistor has been triggered due to short-circuit or open circuit in circuit for Solenoid valve clamp close (Y6054L).	Left lift leg not working.	Check cabling between the control unit and component with diagnostic menu. Check component.	D791-3/ K1:11 - Y6054L	COMBI, menu 15	7.9.2.3 Control valve lift leg
380	Transistor has been triggered due to short-circuit or open circuit in circuit for Solenoid valve clamp open (Y6055L).	Left lift leg not working.	Check cabling between the control unit and component with diagnostic menu. Check component.	D791-3/ K1:12 - Y6055L	COMBI, menu 15	7.9.2.3 Control valve lift leg
387	Transistor has been triggered due to short-circuit or open circuit in circuit for Solenoid valve levelling left (Y6036).	Levelling not working.	Check cabling between the control unit and component with diagnostic menu. Check component.	D791-3/ K1:16 – Y6036	ATTACH, menu 17	7.8.3 Control valve attachment

https://truckmanualshub.com/

Code	Description	Limitation	Action	Connection and component	Diagnostic menu	Function group
388	Transistor has been triggered due to short-circuit or open circuit in circuit for Solenoid valve levelling right (Y6035).	Levelling not working.	Check cabling between the control unit and component with diagnostic menu. Check component.	D791-3/ K1:17 – Y6035	ATTACH, menu 17	7.8.3 Control valve attachment
401	Redundant voltage feed left to Control unit combi attachment right (D971-4) does not arrive.	–	Check cabling between the control unit and component with diagnostic menu. Check component.	D791-4/ K2:7	CAN/ POWER, menu 8	11.5.1.2 Redundant voltage feed of control units
402	Redundant voltage feed right to Control unit combi attachment right (D971-4) does not arrive.	–	Check cabling between the control unit and component with diagnostic menu. Check component.	D791-4/ K2:8	CAN/ POWER, menu 8	11.5.1.2 Redundant voltage feed of control units
403	Control breaker voltage to Control unit combi attachment right (D791-4) below 18 V or above 32 V.	Control breaker cannot be released. All hydraulic functions blocked.	Check fuse F58-3:1, change if needed. Check cabling between the control unit and component with diagnostic menu.	D791-4/ K2:1/9/10	CAN/ POWER, menu 8	11.5.1.3 Ignition voltage (15)
404	Incorrect control breaker voltage to Control unit combi attachment right (D791-4).	Control breaker cannot be released. All hydraulic functions blocked.	Check fuse F58-3:1, change if needed. Check cabling between the control unit and component with diagnostic menu.	D791-4/ K2:11	CAN/ POWER, menu 8	11.5.1.4 Control switch voltage (15E)
411	Transistor has been triggered due to short-circuit or open circuit in circuit for Work light left lift leg (H406).	Work light left lift leg not working.	Check light. Check cabling between the control unit and component with diagnostic menu. Check bulb socket.	D791-4/ K1:1 – H406???	LIGHTS, menu 2	9.1.12 Work light attachment

https://truckmanualshub.com/

Code	Description	Limitation	Action	Connection and component	Diagnostic menu	Function group
412	Transistor has been triggered due to short-circuit or open circuit in circuit for Solenoid valve tilt out (Y6010) or Solenoid valve tilt in (Y6010).	Controllable tilt not working.	Check cabling between the control unit and component with diagnostic menu. Check component.	D791-4/ K1:15 – Y6010/ Y6011	ATTACH, menu 14 - 15	7.7.5 Control valve attachment
413	Transistor has been triggered due to short-circuit or open circuit in circuit for Solenoid valve levelling (Y6034).	Levelling lock not working.	Check cabling between the control unit and component with diagnostic menu. Check component.	D791-4/ K1:28 – Y6034-1/2	ATTACH, menu 16	7.8.6 Valve block levelling cylinders
414	Transistor has been triggered due to short-circuit or open circuit in circuit for Solenoid valve operating position (Y6053R).	Right lift leg not working.	Check cabling between the control unit and component with diagnostic menu. Check component.	D791-4/ K1:42 – Y6053R	COMBI, menu 16	7.9.2.5 Valve operating position
415	Transistor has been triggered due to short-circuit or open circuit in circuit for Solenoid valve clamp closed (Y6054R).	Right lift leg not working.	Check cabling between the control unit and component with diagnostic menu. Check component.	D791-4/ K1:2 – Y6054R	COMBI, menu 15	7.9.2.3 Control valve lift leg
416	Transistor has been triggered due to short-circuit or open circuit in circuit for Solenoid valve clamp open (Y6055R).	Right lift leg not working.	Check cabling between the control unit and component with diagnostic menu. Check component.	D791-4/ K1:3 – Y6055R	COMBI, menu 15	7.9.2.3 Control valve lift leg
417	Transistor has been triggered due to short-circuit or open circuit in circuit for Solenoid valve front knee in (Y6057R).	Right lift leg not working.	Check cabling between the control unit and component with diagnostic menu. Check component.	D791-4/ K1:4 – Y6057R	COMBI, menu 11	7.9.2.3 Control valve lift leg

https://truckmanualshub.com/

Code	Description	Limitation	Action	Connection and component	Diagnostic menu	Function group
418	Transistor has been triggered due to short-circuit or open circuit in circuit for Solenoid valve front knee out (Y6056R).	Right lift leg not working.	Check cabling between the control unit and component with diagnostic menu. Check component.	D791-4/ K1:5 – Y6056R	COMBI, menu 10	7.9.2.3 Control valve lift leg
419	Transistor has been triggered due to short-circuit or open circuit in circuit for Solenoid valve rear knee in (Y6059R).	Right lift leg not working.	Check cabling between the control unit and component with diagnostic menu. Check component.	D791-4/ K1:30 – Y6059R	COMBI, menu 13	7.9.2.3 Control valve lift leg
420	Transistor has been triggered due to short-circuit or open circuit in circuit for Solenoid valve rear knee out (Y6058L).	Right lift leg not working.	Check cabling between the control unit and component with diagnostic menu. Check component.	D791-4/ K1:31 – Y6058R	COMBI, menu 12	7.9.2.3 Control valve lift leg
421	Transistor has been triggered due to short-circuit or open circuit in circuit for Solenoid valve lowering front leg (Y6013R).	Right lift leg not working.	Check cabling between the control unit and component with diagnostic menu. Check component.	D791-4/ K1:32 – Y6013R	COMBI, menu 10	7.9.2.3 Control valve lift leg
422	Transistor has been triggered due to short-circuit or open circuit in circuit for Solenoid valve front leg up (Y6060R).	Right lift leg not working.	Check cabling between the control unit and component with diagnostic menu. Check component.	D791-4/ K1:33 – Y6060R	COMBI, menu 11	7.9.2.3 Control valve lift leg
423	Transistor has been triggered due to short-circuit or open circuit in circuit for Solenoid valve lowering rear leg (Y6014R).	Right lift leg not working.	Check cabling between the control unit and component with diagnostic menu. Check component.	D791-4/ K1:7 – Y6014R	COMBI, menu 12	7.9.2.3 Control valve lift leg

https://truckmanualshub.com/

Code	Description	Limitation	Action	Connection and component	Diagnostic menu	Function group
424	Transistor has been triggered due to short-circuit or open circuit in circuit for Solenoid valve rear leg up (Y6061R).	Right lift leg not working.	Check cabling between the control unit and component with diagnostic menu. Check component.	D791-4/ K1:9 – Y6061R	COMBI, menu 13	7.9.2.3 Control valve lift leg
425	Transistor has been triggered due to short-circuit or open circuit in circuit for Indicator light (H580).	Indicator light front legs raised not working.	Check light. Check cabling between the control unit and component with diagnostic menu. Check bulb socket.	D791-4/ K1:10 – H580	COMBI, menu 9	7.1.14 Light panel boom
426	Transistor has been triggered due to short-circuit or open circuit in circuit for Indicator light (H581).	Indicator light front legs lowered not working.	Check light. Check cabling between the control unit and component with diagnostic menu. Check bulb socket.	D791-4/ K1:25 – H581	COMBI, menu 9	7.1.14 Light panel boom
427	Transistor has been triggered due to short-circuit or open circuit in circuit for Indicator light (H578).	Indicator light clamping position lift leg front not working.	Check light. Check cabling between the control unit and component with diagnostic menu. Check bulb socket.	D791-4/ K1:29 – H578	COMBI, menu 8	7.1.14 Light panel boom
428	Transistor has been triggered due to short-circuit or open circuit in circuit for Indicator light (H579).	Indicator light clamping position lift leg rear not working.	Check light. Check cabling between the control unit and component with diagnostic menu. Check bulb socket.	D791-4/ K1:39 – H579	COMBI, menu 8	7.1.14 Light panel boom
451	Redundant voltage feed left to Control unit KID (D795) does not arrive.	–	Check cabling between the control unit and component with diagnostic menu. Check component.	795/K1:7	CAN/ POWER, menu 8	11.5.1.2 Redundant voltage feed of control units
452	Redundant voltage feed right to Control unit KID (D795) does not arrive.	–	Check cabling between the control unit and component with diagnostic menu. Check component.	795/K1:8	CAN/ POWER, menu 8	11.5.1.2 Redundant voltage feed of control units
460	No messages are received on CAN buffer 1.	Incorrect values in operating menus.	Use diagnostic menu to check CAN bus	–	CAN/ POWER, menu 1 – 2	11.6.2 Redundant CAN bus

https://truckmanualshub.com/

Code	Description	Limitation	Action	Connection and component	Diagnostic menu	Function group
461	No messages are received on CAN buffer 2.	Error codes from other control units cannot be shown.	Use diagnostic menu to check CAN bus	–	CAN/ POWER, menu 1 – 2	11.6.2 Redundant CAN bus
500	Service interval reached.	No limitation.	Check that service has been completed. If service is performed according to Kalmar Industries service schedule, reset the service indicator	–	–	Preventive maintenance

https://truckmanualshub.com/

https://truckmanualshub.com/

Table of Contents E Schematics

10 Common hydraulics 3
Hydraulic diagrams, compilation 3
Hydraulic diagram basic machine 4
Hydraulic diagram top lift 6
Hydraulic diagram top lift, tilt lock and controllable tilt 8
Hydraulic diagram top lift, tilt lock, controllable tilt and hydraulic levelling 10
Hydraulic diagram joystick steering 12
Hydraulic diagram sliding cab 14
Hydraulic diagram cab lift and support jacks 16
Hydraulic diagram sliding cab and support jacks 18
Hydraulic diagram combi attachment (part 1 of 3) 20
Hydraulic diagram combi attachment (part 2 of 3) 22
Hydraulic diagram combi attachment (part 3 of 3) 24
11 Common electrics 26
Circuit diagrams, description 26
Component designations 27
Circuit diagrams, compilation 28

https://truckmanualshub.com/

https://truckmanualshub.com/

10 Common hydraulics

Hydraulic diagrams, compilation

Designation	Drawing number
Hydraulic diagram basic machine page 4	A40740.0100
Hydraulic diagram top lift page 6	A40853.0100
Hydraulic diagram top lift, tilt lock and controllable tilt page 8	A40853.0200
Hydraulic diagram top lift, tilt lock, controllable tilt and hydraulic levelling page 10	A43123.0100
Hydraulic diagram joystick steering page 12	A48056.0100
Hydraulic diagram sliding cab page 14	A40855.0100
Hydraulic diagram cab lift and support jacks page 16	A43276.0100
Hydraulic diagram sliding cab and support jacks page 18	A40854.0100
Hydraulic diagram combi attachment (part 1 of 3) page 20	A41791.0100
Hydraulic diagram combi attachment (part 2 of 3) page 22	A41791.0100
Hydraulic diagram combi attachment (part 3 of 3) page 24	A41791.0100

https://truckmanualshub.com/

Hydraulic diagram basic machine

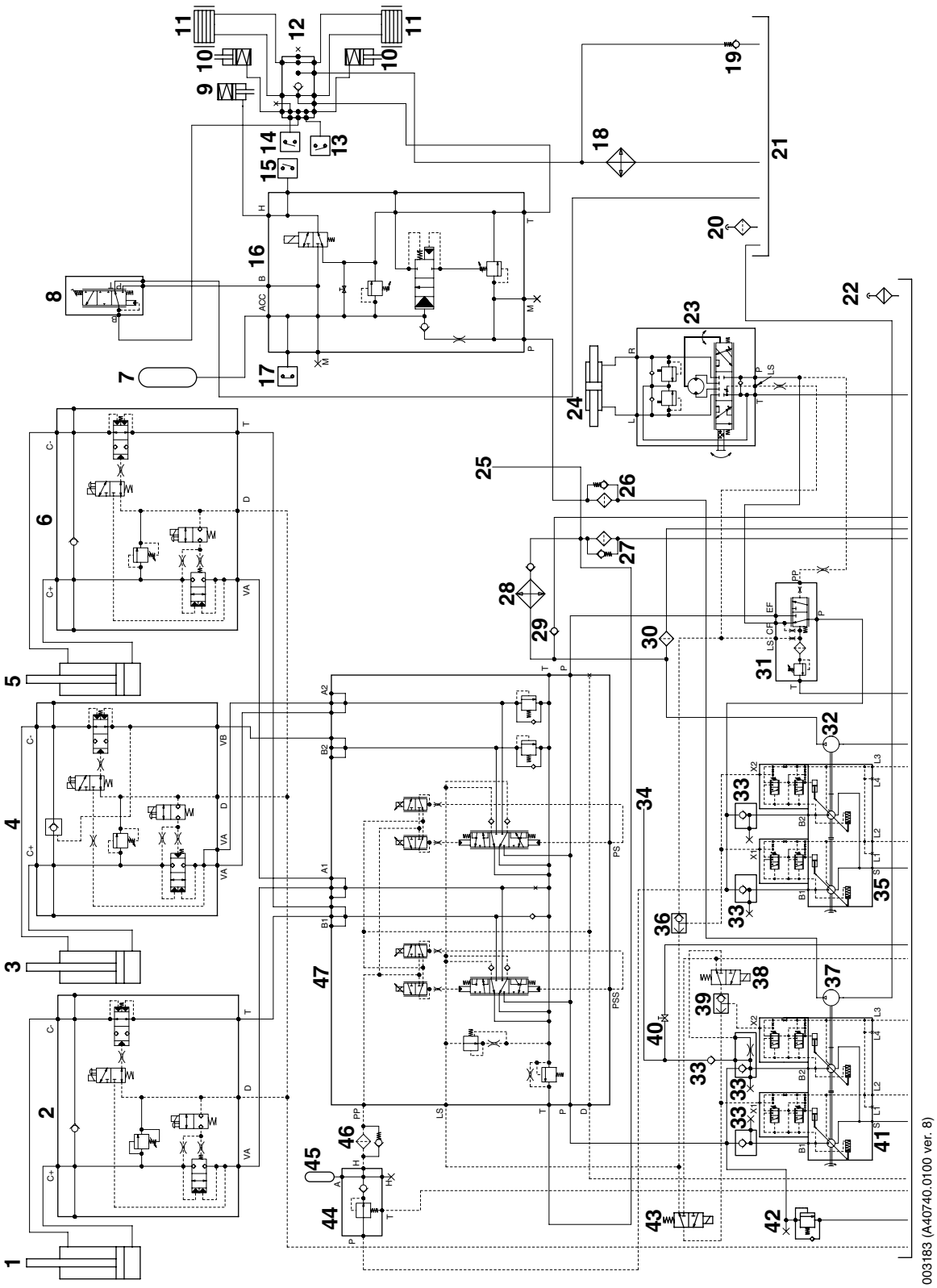

https://truckmanualshub.com/

1. Lift cylinder
2. Valve block lift cylinder
3. Extension cylinder
4. Valve block extension cylinder
5. Lift cylinder
6. Valve block lift cylinder
7. Accumulator brake pressure
8. Brake valve
9. Parking brake caliper
10. Brake cylinder
11. Wheel brake
12. Drive axle block
13. Make-contact declutch
14. Make-contact brake light
15. Make-contact parking brake
16. Accumulator charging valve
17. Breaking contact brake pressure
18. Cooler brake oil
19. Thermal by-pass valve
20. Breather filter brake oil tank
21. Brake oil tank
22. Breather filter hydraulic oil tank
23. Steering valve
24. Steering cylinder
25. Oil return from attachment
26. Brake oil filter
27. Hydraulic oil filter
28. Cooler hydraulic oil
29. By-pass valve hydraulic oil cooler
30. Fine filter hydraulic oil
31. Priority valve
32. Pump cooling and filtering of hydraulic oil
33. Non-return valve
34. Pressure feed to attachment
35. Hydraulic oil pump 3 and 4
36. Shuttle valve
37. Pump brake system
38. Valve block top lift hydraulics
39. Shuttle valve
40. Unloading valve attachment
41. Hydraulic oil pump 1 and 2
42. Pressure limiting valve
43. Valve block pump unloading
44. Pressure reducer
45. Accumulator servo pressure
46. Servo filter
47. Control valve lift and lower as well as extension

https://truckmanualshub.com/

Hydraulic diagram top lift

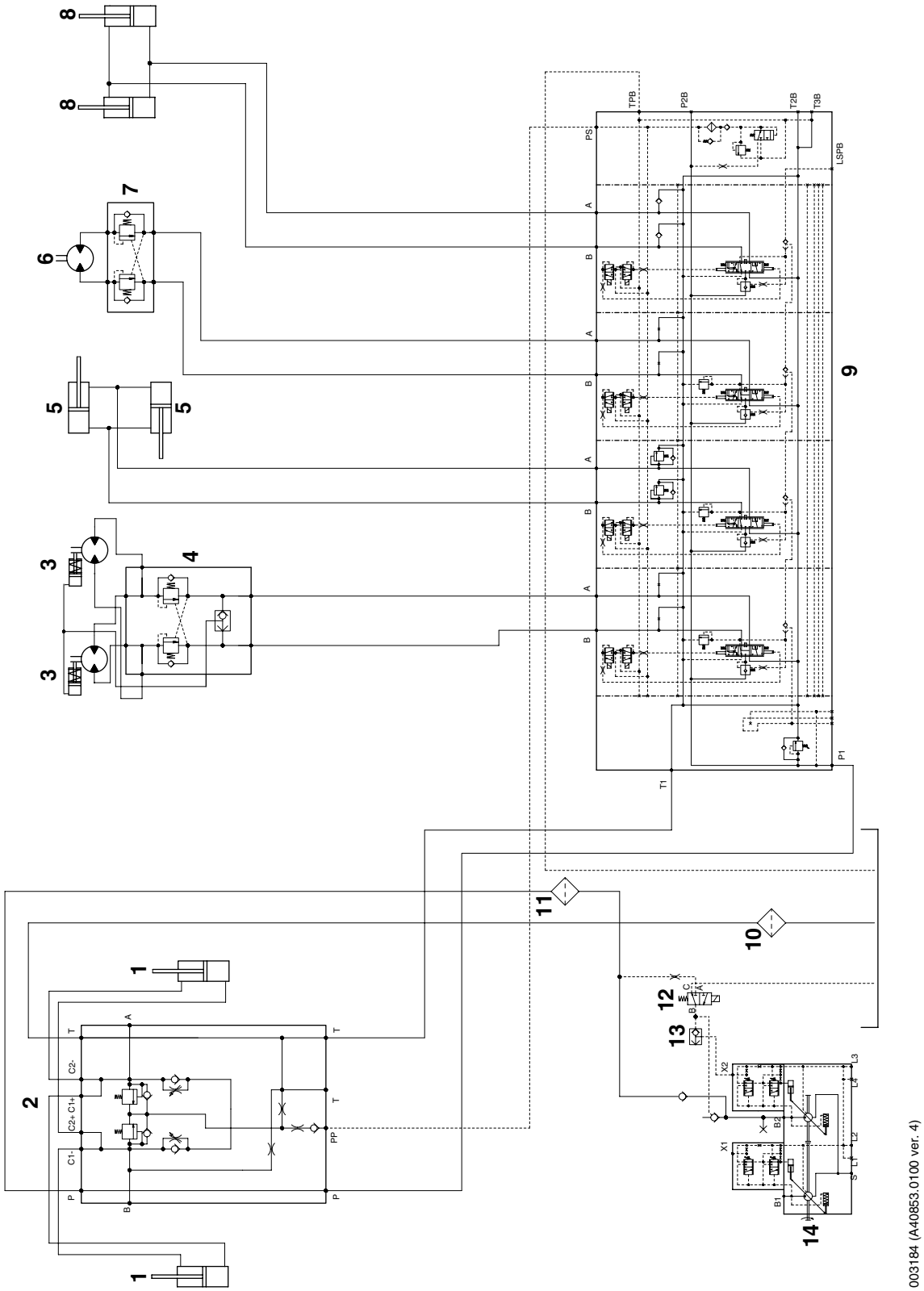

https://truckmanualshub.com/

1. Tilt cylinder
2. Damping block
3. Rotation motor unit
4. Valve block rotation motor
5. Sideshift cylinders
6. Spreader motor
7. Valve block spreader motor
8. Twistlock cylinders
9. Control valve attachment
10. Filter hydraulic oil
11. Filter hydraulic oil (high pressure filter) ⊕
12. Solenoid valve engagement hydraulic pressure
13. Shuttle valve
14. Hydraulic oil pump 1 and 2

https://truckmanualshub.com/

Hydraulic diagram top lift, tilt lock and controllable tilt

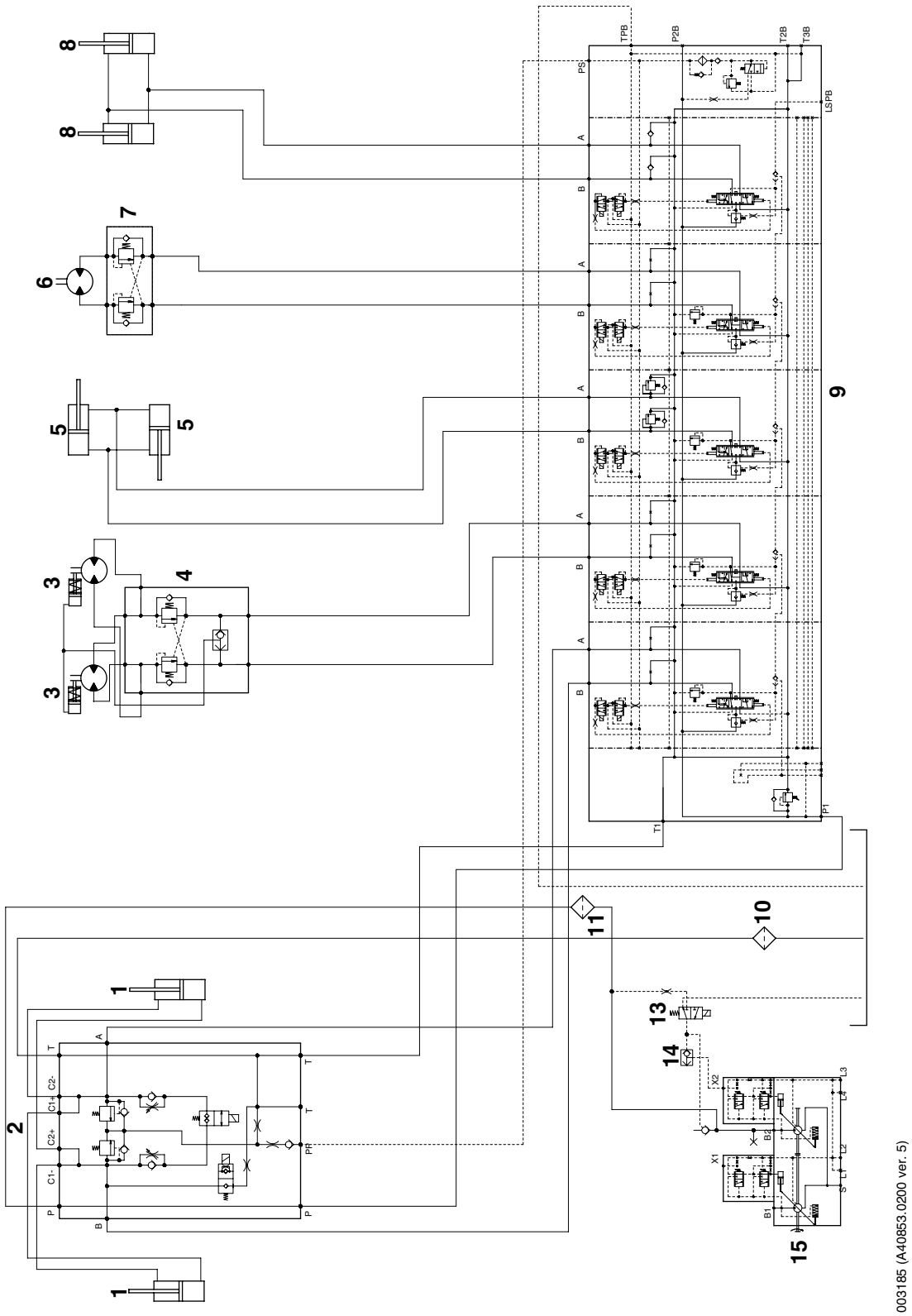

https://truckmanualshub.com/

1. Tilt cylinder
2. Damping block
3. Rotation motor unit
4. Valve block rotation motor
5. Sideshift cylinders
6. Spreader motor
7. Valve block spreader motor
8. Twistlock cylinders
9. Control valve attachment
10. Filter hydraulic oil
11. Filter hydraulic oil (high pressure filter) ⊕
12. Solenoid valve engagement hydraulic pressure
13. Shuttle valve
14. Hydraulic oil pump 1 and 2

https://truckmanualshub.com/

Hydraulic diagram top lift, tilt lock, controllable tilt and hydraulic levelling

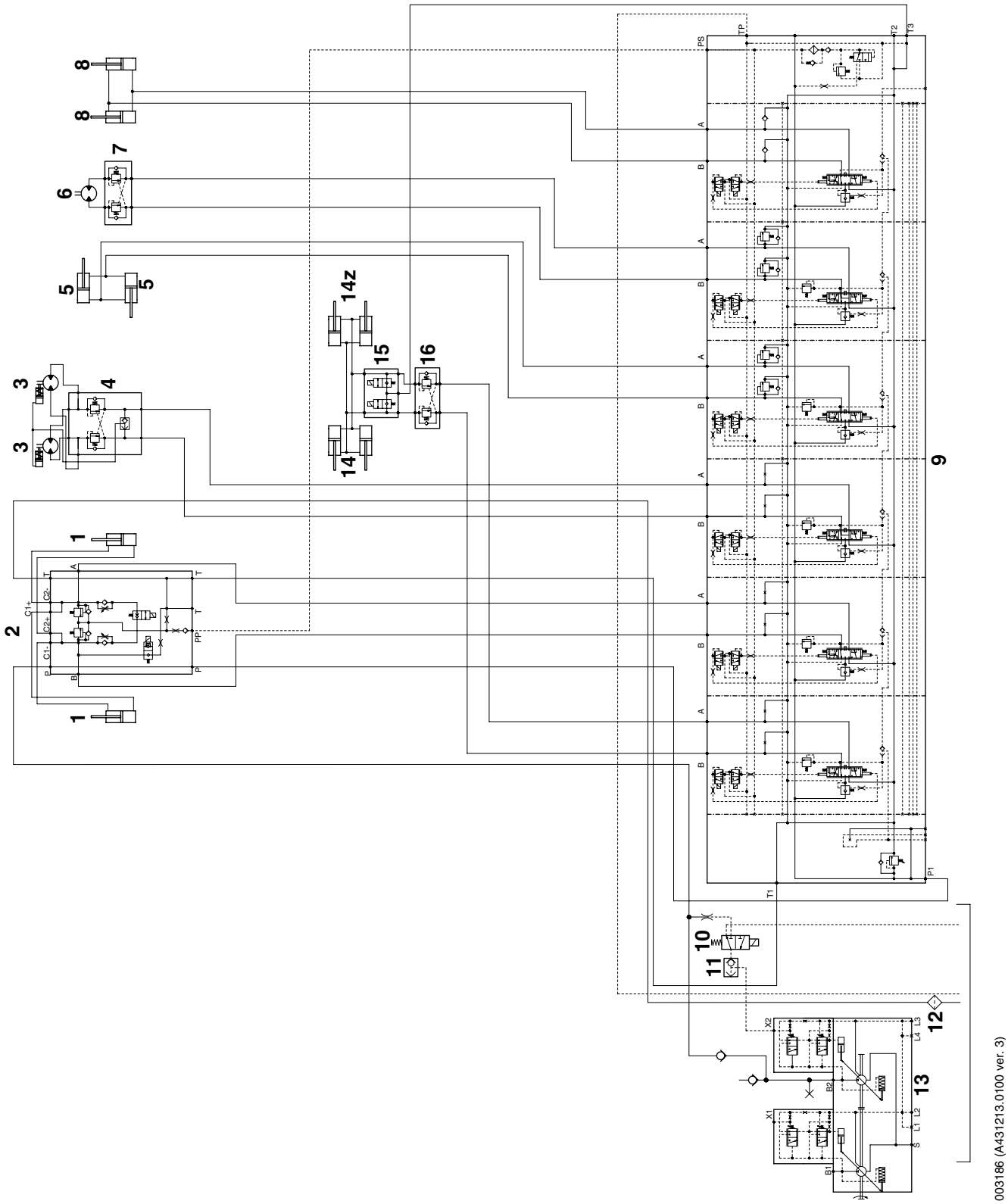

https://truckmanualshub.com/

1. Tilt cylinder
2. Damping block
3. Rotation motor unit
4. Valve block rotation motor
5. Sideshift cylinders
6. Spreader motor
7. Valve block spreader motor
8. Twistlock cylinders
9. Control valve attachment
10. Solenoid valve engagement hydraulic pressure
11. Shuttle valve
12. Hydraulic oil filter
13. Hydraulic oil pump 1 and 2
14. Levelling cylinders
15. Valve block levelling cylinders
16. Over-centre valve levelling

https://truckmanualshub.com/

Hydraulic diagram joystick steering

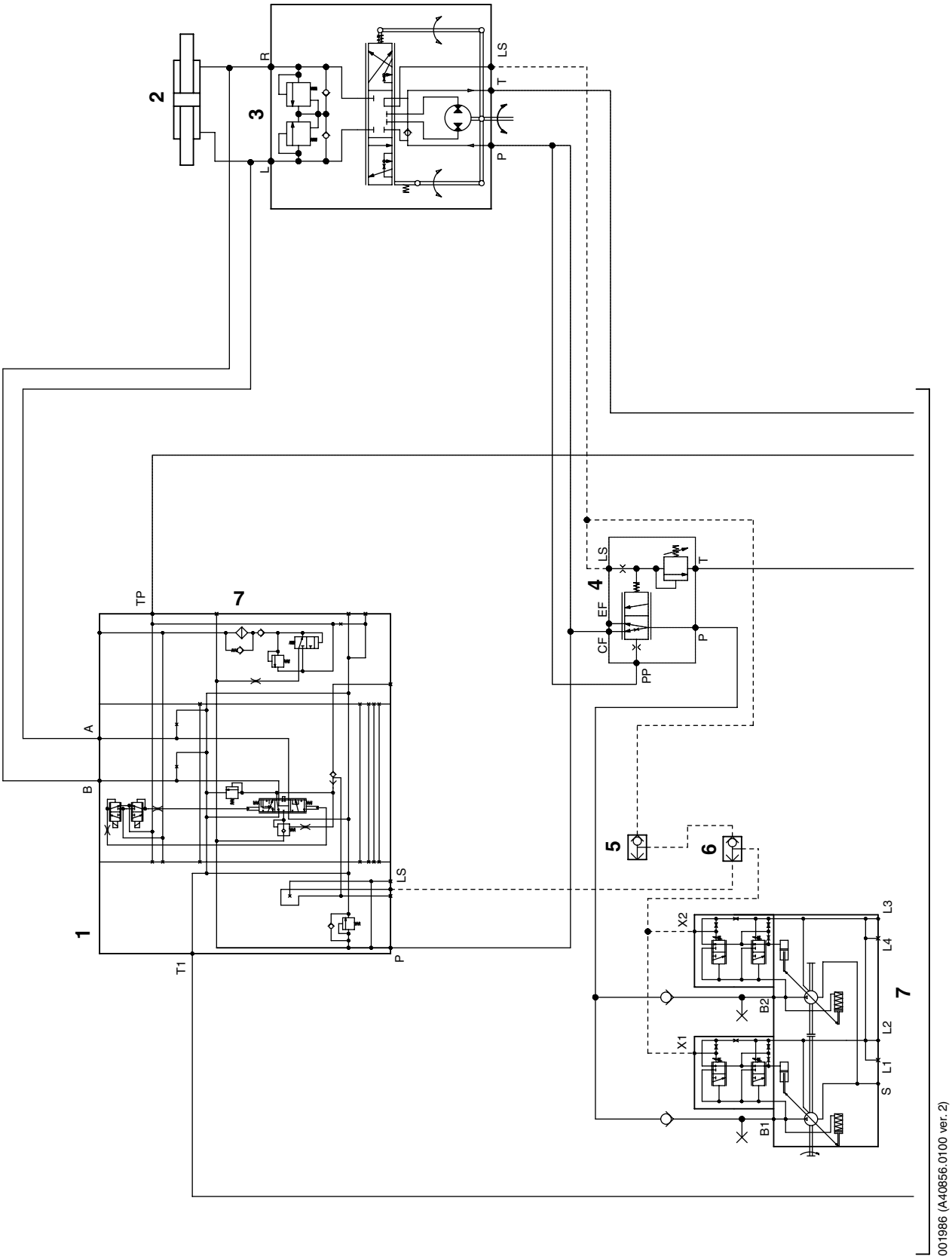

https://truckmanualshub.com/

1. Control valve option frame
2. Steering cylinder
3. Steering valve
4. Priority valve
5. Shuttle valve
6. Shuttle valve joystick steering
7. Hydraulic oil pumps 3 and 4

https://truckmanualshub.com/

Hydraulic diagram sliding cab

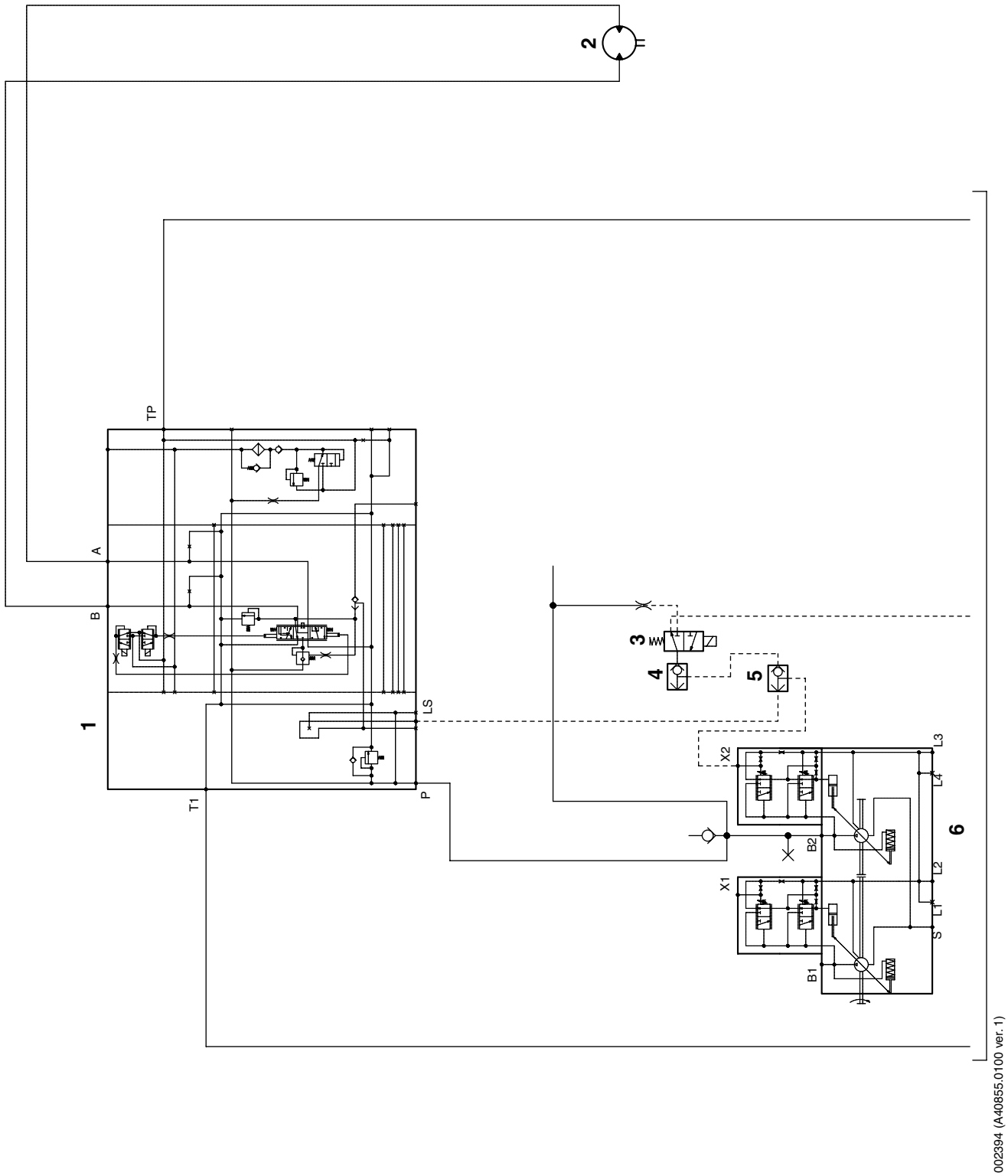

https://truckmanualshub.com/

1. Control valve option frame
2. Hydraulic motor sliding cab
3. Solenoid valve engagement hydraulic pressure
4. Shuttle valve
5. Shuttle valve option
6. Hydraulic oil pump 1 and 2

https://truckmanualshub.com/

Hydraulic diagram cab lift and support jacks

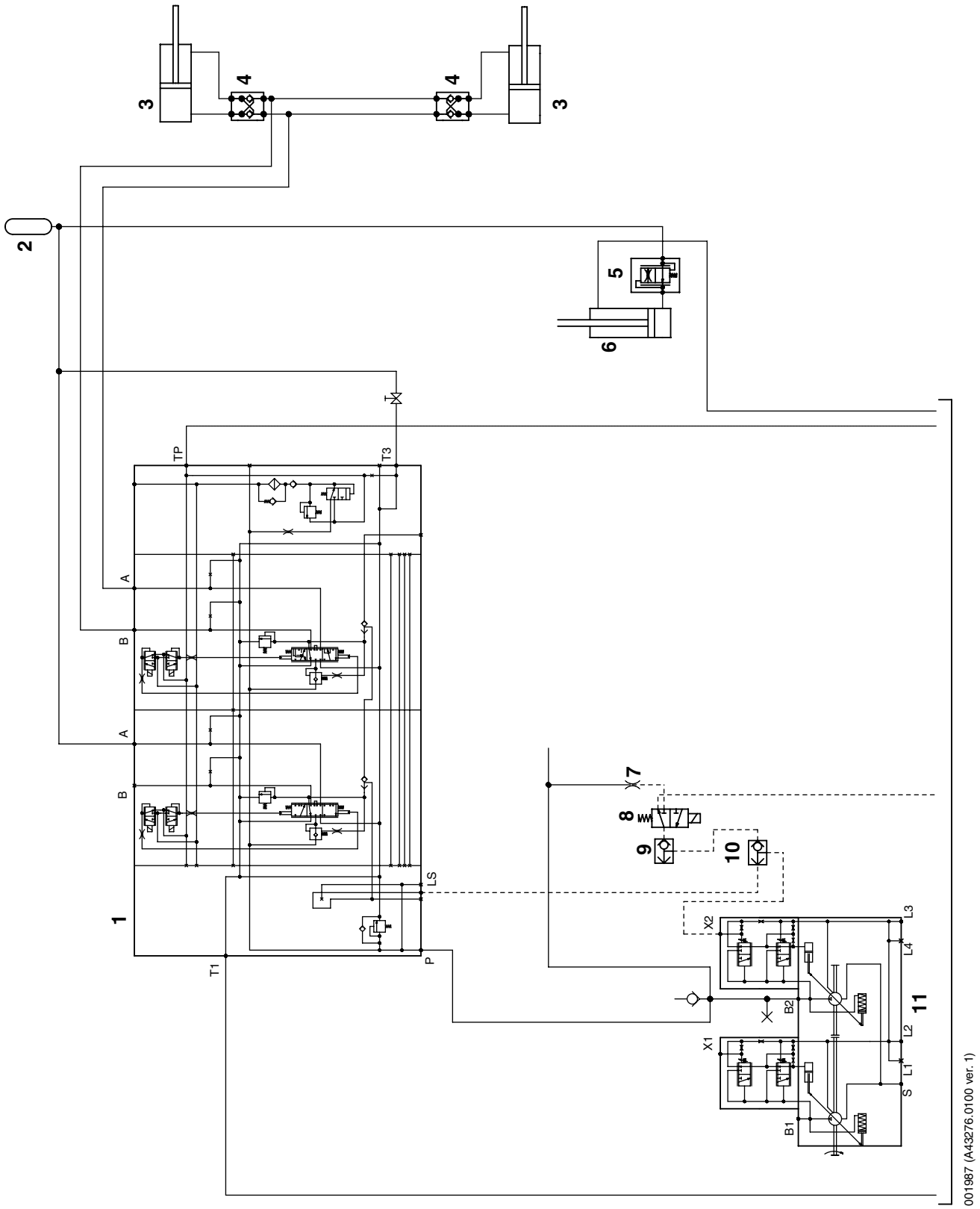

https://truckmanualshub.com/

1. Control valve option frame
2. Accumulator
3. Hydraulic cylinder support jacks
4. Valve block support jacks
5. Load control valve
6. Hydraulic cylinder cab lift/lowering
7. Restriction
8. Valve block top lift hydraulics
9. Shuttle valve
10. Shuttle valve option frame
11. Hydraulic oil pump 1 and 2

https://truckmanualshub.com/

Hydraulic diagram sliding cab and support jacks

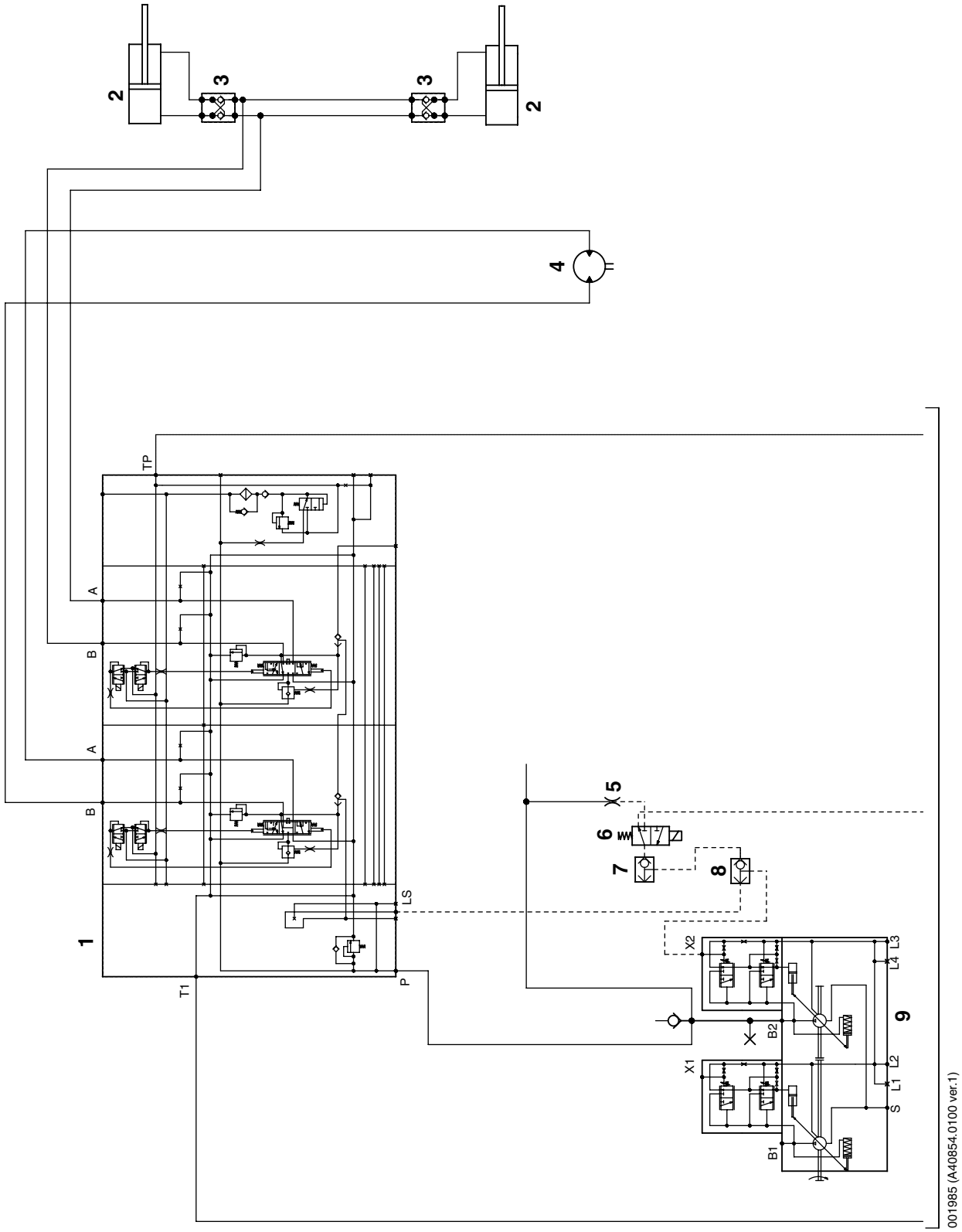

https://truckmanualshub.com/

1. Control valve option frame
2. Hydraulic cylinder support jacks
3. Over-centre valve support jacks
4. Hydraulic motor sliding cab
5. Restriction
6. Solenoid valve engagement hydraulic pressure
7. Shuttle valve
8. Shuttle valve option
9. Hydraulic oil pump 1 and 2

https://truckmanualshub.com/

Hydraulic diagram combi attachment (part 1 of 3)

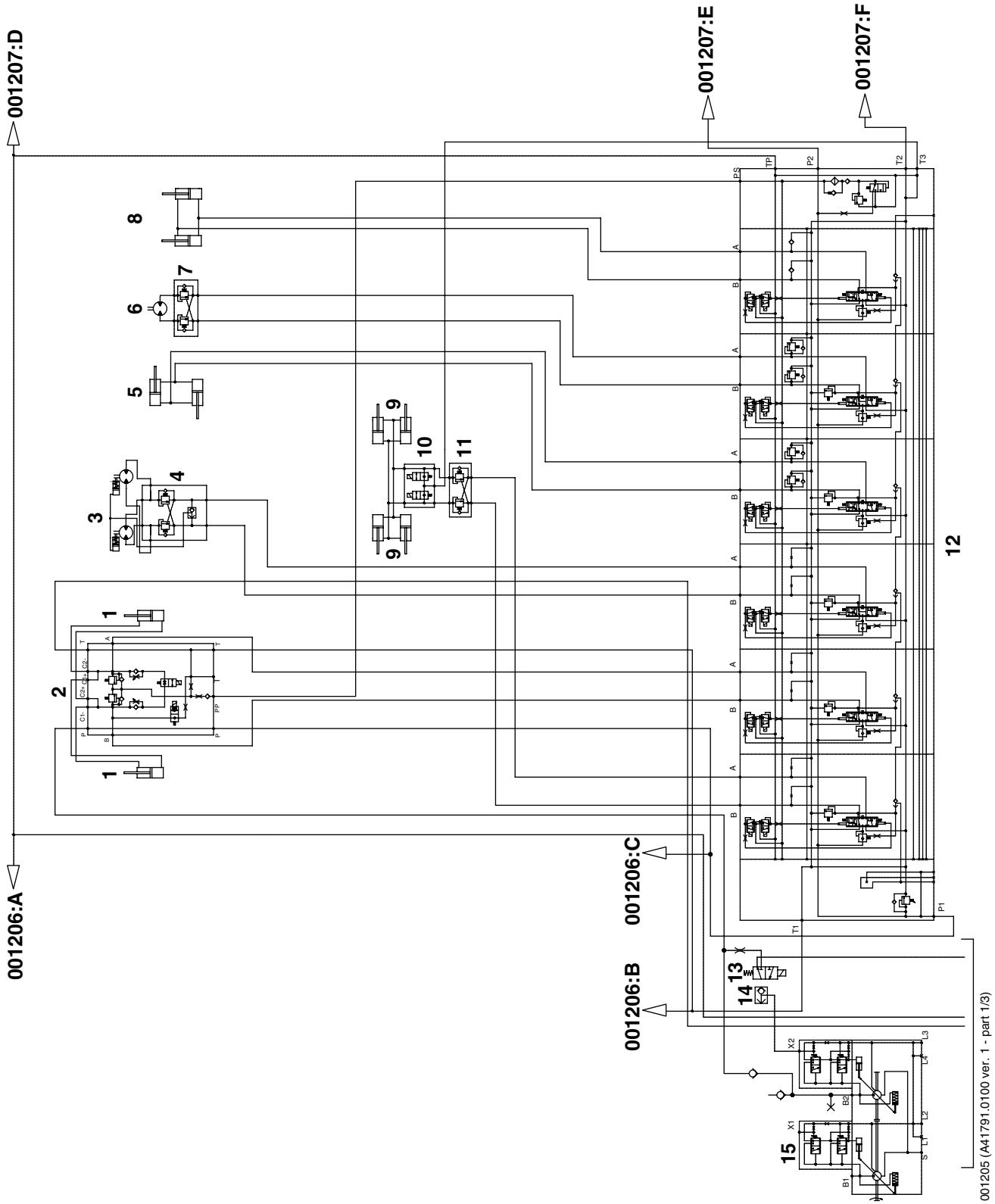

https://truckmanualshub.com/

1. Tilt cylinder
2. Damping block
3. Rotation motor unit
4. Valve block rotation motor
5. Sideshift cylinders
6. Spreader motor
7. Valve block spreader motor
8. Twistlock cylinders
9. Valve block levelling cylinders
10. Over-centre valve levelling
11. Levelling cylinders
12. Control valve attachment
13. Solenoid valve engagement hydraulic pressure
14. Shuttle valve
15. Hydraulic oil pump 1 and 2

https://truckmanualshub.com/

Hydraulic diagram combi attachment (part 2 of 3)

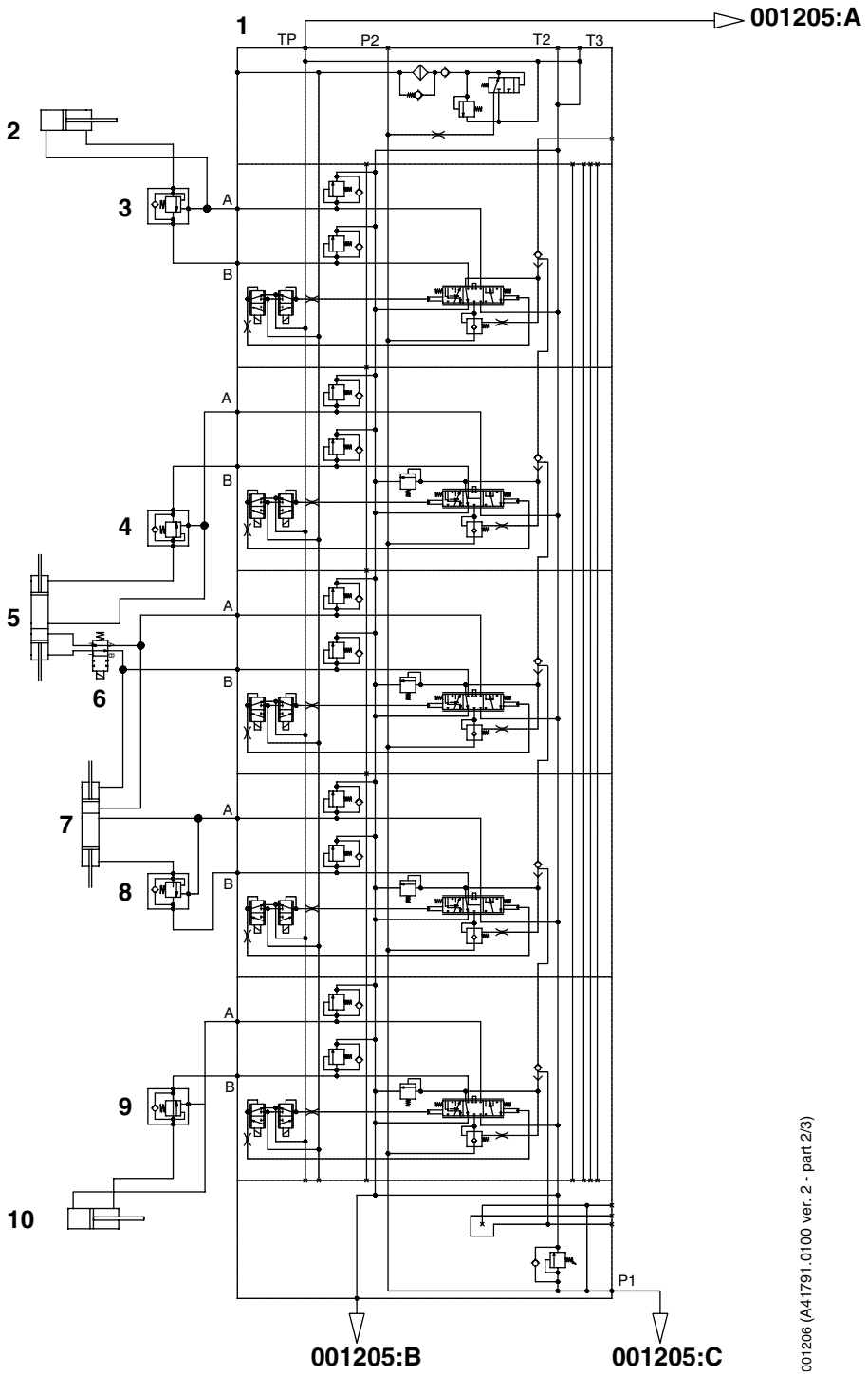

https://truckmanualshub.com/

1. Control valve lift leg left
2. Lowering cylinder front lift leg
3. Valve block lowering front lift leg
4. Valve block lowering front lift leg
5. Clamping cylinder front lift leg
6. Valve block operating position front lift leg
7. Clamping cylinder rear lift leg
8. Valve block lowering rear lift leg
9. Valve block lowering rear lift leg
10. Lowering cylinder rear lift leg

https://truckmanualshub.com/

Hydraulic diagram combi attachment (part 3 of 3)

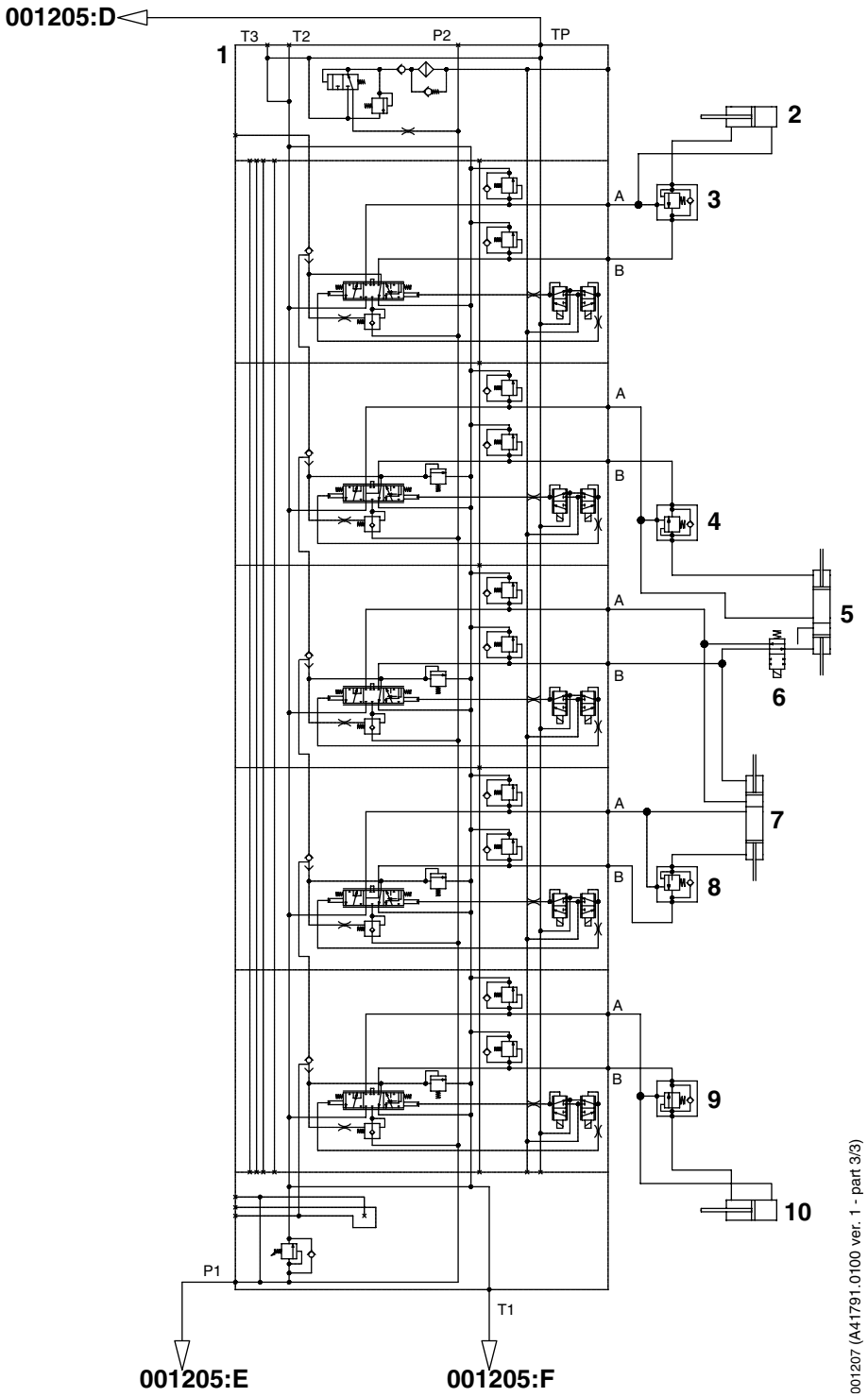

https://truckmanualshub.com/

1. Control valve lift leg right
2. Lowering cylinder front lift leg
3. Valve block lowering front lift leg
4. Valve block lowering front lift leg
5. Clamping cylinder front lift leg
6. Valve block operating position front lift leg
7. Clamping cylinder rear lift leg
8. Valve block lowering rear lift leg
9. Valve block lowering rear lift leg
10. Lowering cylinder rear lift leg

https://truckmanualshub.com/

11 Common electrics

Circuit diagrams, description

A circuit diagram is divided into circuit name(drawing number) and consists of a number of pages.

The following is an explanation of the symbols used in circuit diagrams:

- X is connection terminal (followed by number)
- Designation 353-2

  353 is component designation (see *Component designations page 27* for description of respective component). 2 indicates that it is the second component of this type in the specific diagram.
- Sensors, etc. are drawn in resting position on circuit, powerless mode
- Colour cable harness:

  White cable = ground signal

  Grey cable = Other cable harness
- Fuse box, e.g., F58, means fuse box with 8 fuses
- An arrow symbol means a reference to another circuit diagram
- 20015.0001 wiring diagrams-item designations K-standard.

  K-standard 1: norms, rules

  K-standard 2: cable harness, general physical

  K-standard 5: Designation and marking systems, item designations wiring diagrams
- Ground connection:

  1: X37-A is ground connection in the electrical distribution box. A connection terminal for ground. Frame ground connection - connection terminal to chassis.

  2: Zero reference found in control units.

https://truckmanualshub.com/

Component designations

The components in circuit diagrams have a prefix and number, the prefix describes the type of component, the number which component.

Component list with component number, prefix and designation is provided as an appendix after the circuit diagrams.

Prefix	Description
B	Converter from non-electric to electric signals or vice versa. Example: inductive sensor.
D	Binary element, delay unit, memory. Example: control unit.
F	Protective device. Example: fuse.
G	Alternator, power supply device. Example: battery.
H	Signal device. Example indicator light.
K	Relay, contactor.
M	Motor. Example: electric motor.
P	Measuring instrument, testing equipment. Example: operating hour gauge.
R	Resistor. Example: potentiometer.
S	Electric switch for control circuit, selector. Example: switch.
X	Outlet/socket, connecting device: Example: connection terminal
Y	Electrically controlled mechanical device: Example: solenoid valve, hydraulic valve.

https://truckmanualshub.com/

Circuit diagrams, compilation

Circuit diagrams are included as an appendix in the following order.

Designation	Group	Drawing number	DRF	DRF 2004	DRF 2005
Circuit CAN-BUS KDU	11.6	A43032.0100	X	X	X
Circuit CAN-BUS opt. frame KDU	11.6	A43032.0200	X	X	X
Circuit Current	11.5	A43033.0100	X	X	X
Circuit current KDO opt	11.5	A43033.0200	X	X	X
Circuit work lights	9.6	A43034.0100	X	X	X
Circuit extra work lights attachment	9.6	A43035.0100	X	X	X
Circuit extra work lights boom	9.6	A43036.0100	X	X	X
Circuit lighting	9.6	A43037.0100	X	X	X
Circuit sensors instr.	9.1	A43038.0100	X	X	X
Circuit extra sensors instr.	9.1	A43039.0100	X	X	X
Circuit joystick	7.1	A43040.0100	X	X	X
Circuit sliding cab/vertically adjustable cab	9.10	A43041.0100	X	X	X
Circuit brake system	4.0	A43042.0100	X	X	X
Circuit attachment twistlock	7.9	A43043.0100	X	X	X
Circuit cross-references	0.0	A43044.0100	X	X	X
Circuit cross-references opt.	0.0	A43044.0200	X	X	X
Circuit cross-references attachment	0.0	A43044.0300	X	X	X
Circuit cross-references attachment	0.0	A43044.0400	X	X	X
Circuit cross-references attachment combi	0.0	A43044.0500	X	X	X
Circuit OP + scale	8.2	A43045.0100	X	X	X
Circuit drivetrain	2.1	A43046.0100	X	X	X
Circuit drivetrain opt.	2.1	A43046.0200	X	X	X
Circuit wipers	9.5	A43047.0100	X		
		A46089.0100		X	X
Circuit boom up/down	7.2	A43048.0100	X		
		A46090.0100		X	X
Circuit boom in/out	7.3	A43049.0100	X	X	X
Circuit attachment rotation	7.6	A43050.0100	X	X	X
Circuit attachment function	7.5	A43051.0100	X	X	X
Circuit hydraulics	10.6	A43053.0100	X	X	X
Circuit optional equipment	9.1	A43054.0100	X	X	X

https://truckmanualshub.com/

Designation	Group	Drawing number	DRF	DRF 2004	DRF 2005
Circuit by-passing	8.2	A43055.0100	X	X	X
Circuit alarms, audible signals	9.7	A43056.0100	X	X	X
Circuit hyd. support jacks	7.10	A43057.0100	X	X	X
Circuit central lubrication	9.14	A43058.0100	X	X	X
Circuit operator's seat	9.3	A43059.0100	X	X	X
Circuit direction indicators, hazard flashers	9.7	A43060.0100	X	X	X
Circuit climate system	9.4	A43061.0100	X		
		A46087.0100		X	
		A46091.0100			X
Circuit radio	9.14	A43062.0100	X	X	X
Circuit 24 V	11.5	A43063.0100	X	X	X
Circuit 12 V + com. radio	11.6	A43063.0200	X	X	X
Circuit tilt lock	7.7	A43064.0100	X	X	X
Circuit cab tilt	9.10	A43065.0100	X	X	X
Circuit steering joystick/mini-wheel	5.2	A43066.0100	X	X	X
Circuit steering joystick/mini-wheel and combi attachment	5.2	A43066.0200	X	X	X
Circuit, reversing alarm	9.7	A43067.0100	X	X	X
Circuit combi attachment	7.9	A43068.0100	X	X	X
Circuit CAN-bus attachment	11.6	A44875.0100	X	X	X
Circuit CAN-bus attachment	11.6	A44875.0200	X	X	X
Circuit CAN-bus attachment	11.6	A44875.0300	X	X	X
Circuit engine Volvo	1.0	A44878.0100	X	X	X
Circuit engine Cummins	1.0	A44878.0200	X	X	X
Circuit Dana TE 32000	2.0	A44879.0100	X	X	X
Circuit current attachment	11.5	A44880.0100	X	X	X
Circuit attachment tilt + levelling	7.7	A44910.0100	X	X	X
Circuit attachment tilt + levelling	7.7	A44910.0200	X	X	X
Circuit over-height	7.1	A45043.0100	X	X	X
Circuit camera	9.8	A45769.0100	X	X	X
Circuit printer	7.10	A45792.0100	X	X	X
Circuit Cab steps	9.4	A46088.0100		X	X

https://truckmanualshub.com/

https://truckmanualshub.com/

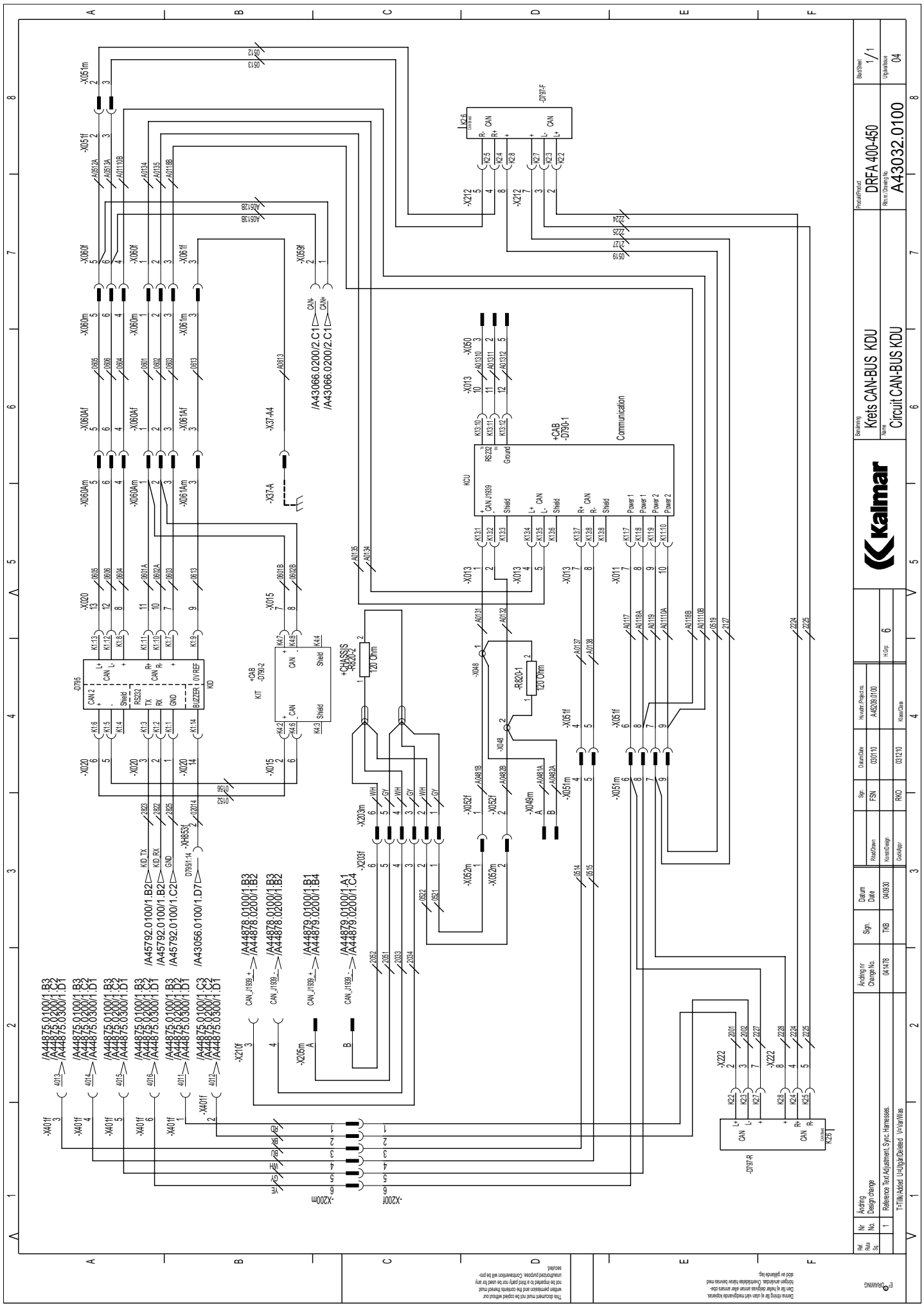

Denna ritning är vårt intellektuella kopierar. Den får ej heller delgivas annan eller annars utan tillstånd av oss. Kopiering av ritningen, i hela eller delar, är förbjuden utan vårt skriftliga godkännande.

This document must not be copied without our written permission and the contents thereof must not be imparted to a third party nor be used for any unauthorized purpose. Contravention will be prosecuted.

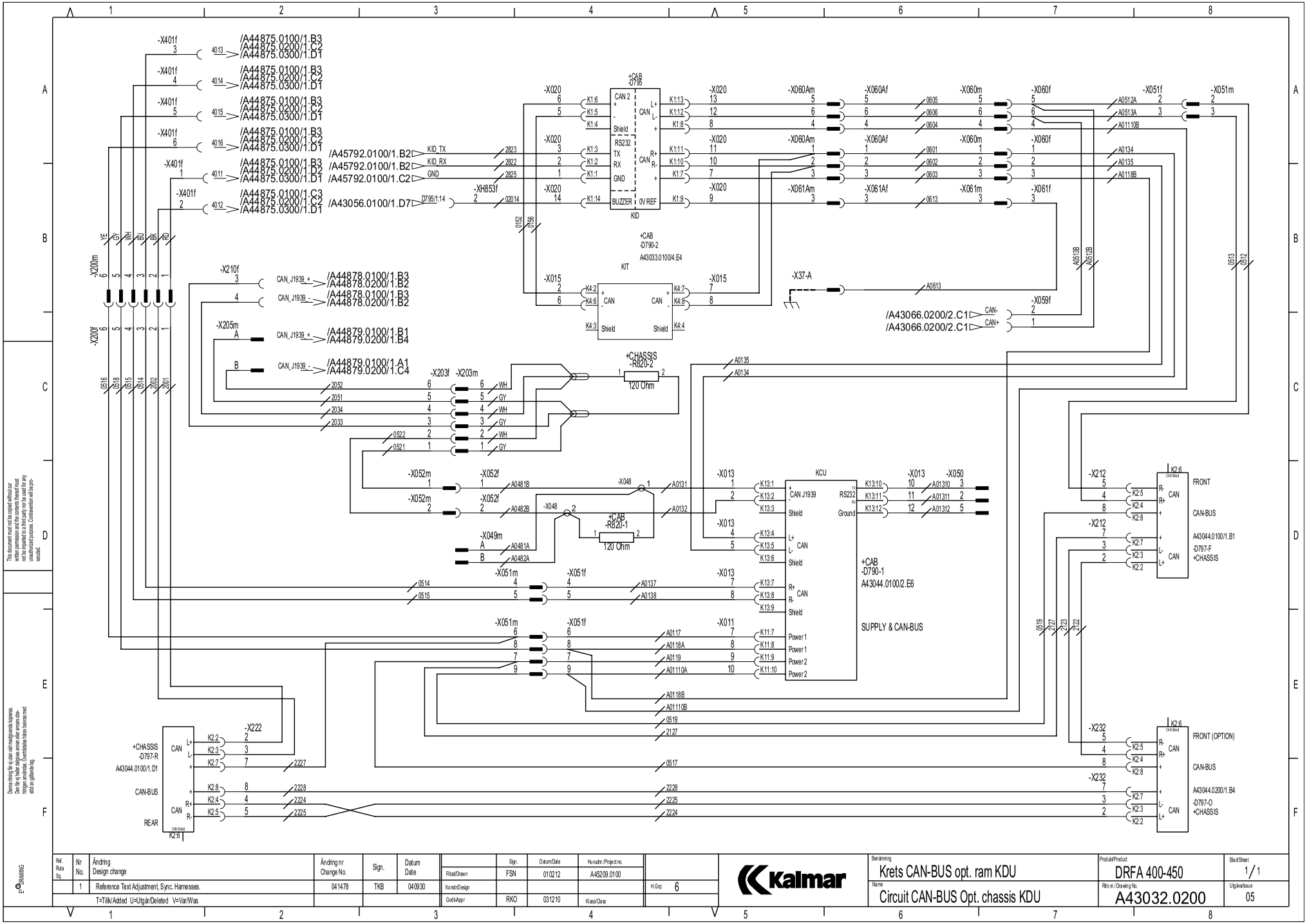

Ref. Ruta Sq.	Nr No.	Ändring Design change	Ändring nr Change No.	Sign.	Datum Date		Sign.	Datum/Date	Hv.vudnr./Project no.		
	1	Reference Text Adjustment, Sync. Harnesses.	041478	TKB	040930	Ritad/Drawn	FSN	010212	A45209.0100		
						Konstr/Design				H.Grp:	6
		T=Tillk/Added U=Utgår/Deleted V=Var/Was				Godk/Appr	RKO	031210	Klass/Class		

Kalmar

Benämning: Krets CAN-BUS opt. ram KDU
Name: Circuit CAN-BUS Opt. chassis KDU

Produkt/Product: DRFA 400-450
Ritn.nr./Drawing No.: A43032.0200

Blad/Sheet: 1/1
Utgåva/Issue: 05

This document must not be copied without our written permission and the contents thereof must not be imparted to a third party nor be used for any unauthorised purpose. Contravention will be prosecuted.

Denna ritning får ej utan vårt medgivande kopieras. Den får ej hållas tillgänglig annan eller annars obehörigen användas. Överträdelse kommer att beivras med stöd av gällande lag.

https://truckmanualshub.com/

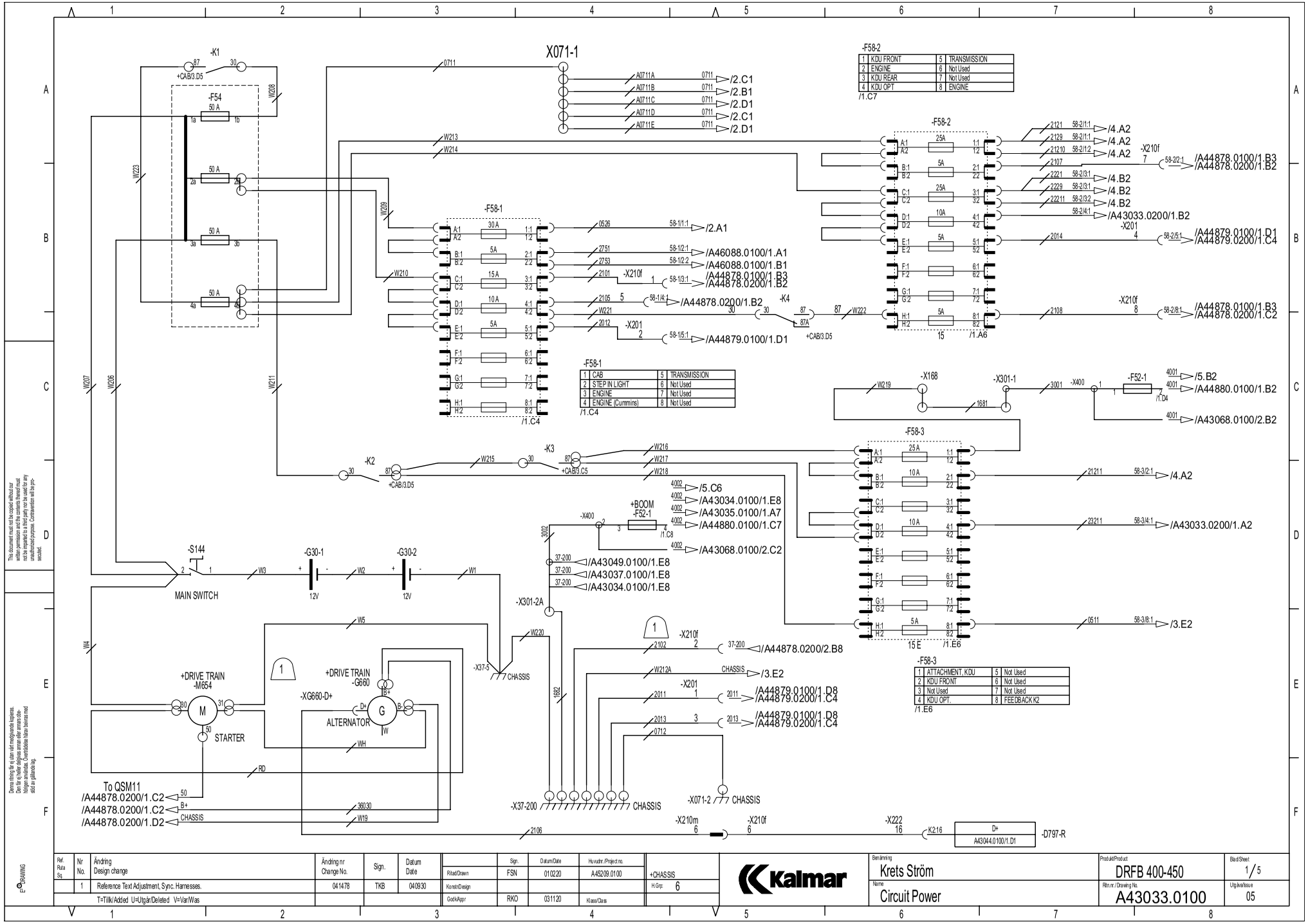
-K1
+CAB/3.D5
-F54
50 A
X071-1
-F58-2
1 KDU FRONT
2 ENGINE
3 KDU REAR
4 KDU OPT
5 TRANSMISSION
6 Not Used
7 Not Used
8 ENGINE
/1.C7
-F58-1
1 CAB
2 STEP IN LIGHT
3 ENGINE
4 ENGINE (Cummins)
5 TRANSMISSION
6 Not Used
7 Not Used
8 Not Used
/1.C4
-F58-3
1 ATTACHMENT, KDU
2 KDU FRONT
3 Not Used
4 KDU OPT.
5 Not Used
6 Not Used
7 Not Used
8 FEEDBACK K2
/1.E6
-K2
-K3
-K4
+CAB/3.C5
+BOOM
-F52-1
-X168
-X301-1
-X400
-X301-2A
-S144
MAIN SWITCH
-G30-1
-G30-2
12V
+DRIVE TRAIN
-M654
STARTER
+DRIVE TRAIN
-G660
ALTERNATOR
-XG660-D+
-X37-5
CHASSIS
-X37-200
-X071-2
To QSM11
/A44878.0200/1.C2
/A44878.0200/1.C2
/A44878.0200/1.D2
-X210m
-X210f
-X222
-D797-R
D+
A43044.0100/1.D1
/A44878.0100/1.B3
/A44878.0200/1.B2
/A44879.0100/1.D1
/A44879.0200/1.C4
/A44878.0100/1.B3
/A44878.0200/1.C2
/A43033.0200/1.B2
/A46088.0100/1.A1
/A46088.0100/1.B1
/A44878.0200/1.B2
/A44879.0100/1.D1
/A44880.0100/1.B2
/A43068.0100/2.B2
/A43034.0100/1.E8
/A43035.0100/1.A7
/A44880.0100/1.C7
/A43068.0100/2.C2
/A43049.0100/1.E8
/A43037.0100/1.E8
/A43034.0100/1.E8
/A44878.0200/2.B8
/A44879.0100/1.D8
/A44879.0200/1.C4
/A43033.0200/1.A2
/A43068.0100/2.B2
/A44880.0100/1.B2
/A44878.0100/1.B3
/A44878.0200/1.C2
/A44879.0100/1.D1
/A44879.0200/1.C4
/A44879.0100/1.D8
/A44879.0200/1.C4
/A44878.0200/1.B8
/A43033.0200/1.A2
/A43068.0100/2.B2
/A44880.0100/1.B2
/A44878.0100/1.B3
/A44878.0200/1.C2
/A43033.0200/1.B2
/A44879.0100/1.D1
/A44879.0200/1.C4
/A44878.0200/1.B2
/A44878.0200/1.B2
/A44878.0200/1.B2

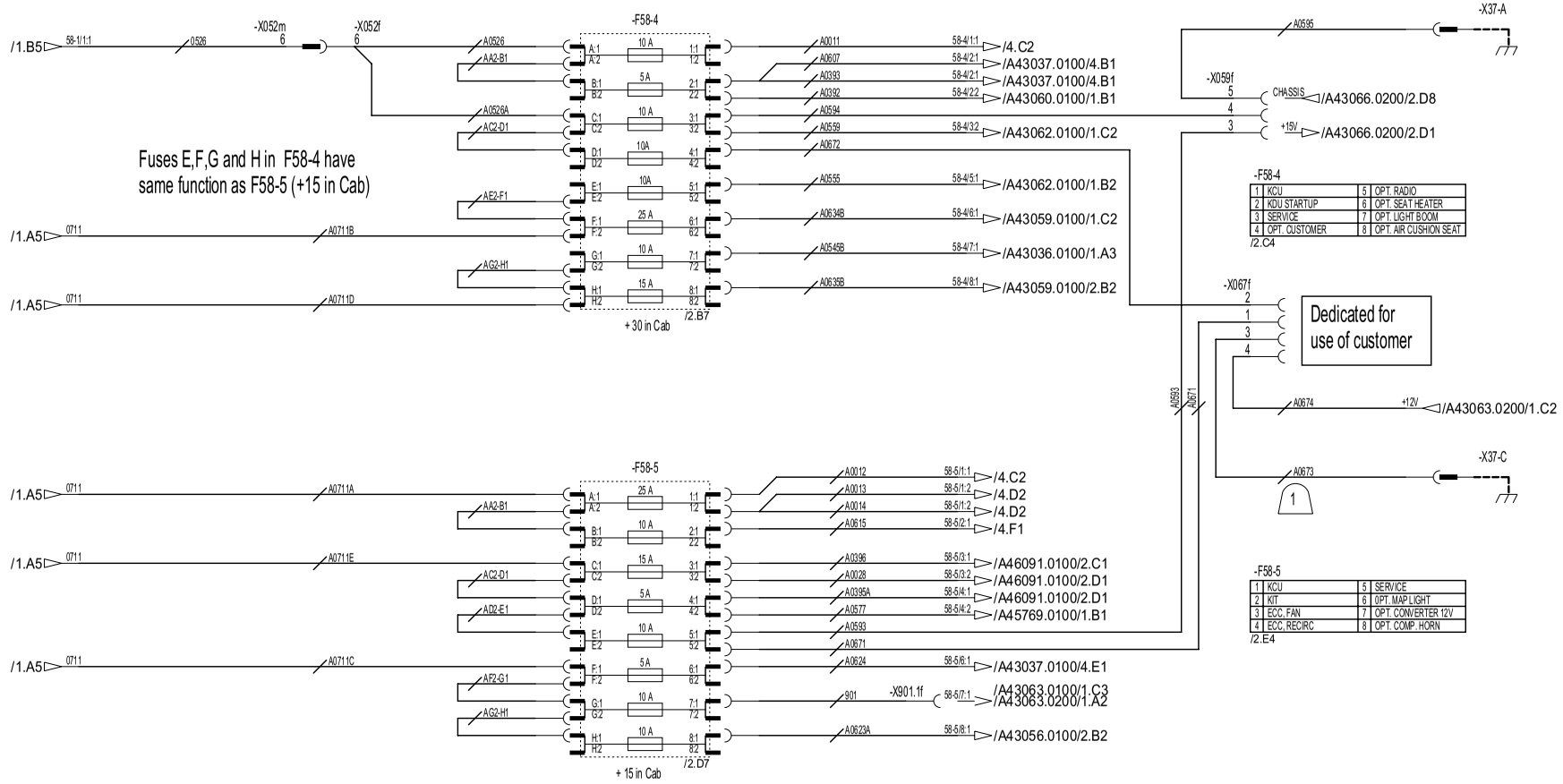

Fuses E,F,G and H in F58-4 have same function as F58-5 (+15 in Cab)

Ref. Ruta Sq.	Nr No.	Ändring Design change	Ändring nr Change No.	Sign.	Datum Date
	1	Reference Text Adjustment, Sync. Harnesses.	041478	TKB	040930
		T=Tillk/Added U=Utgår/Deleted V=Var/Was			

	Sign.	Datum/Date	Hv.vuodnr./Project no.
Ritad/Drawn	FSN	010220	A45209.0100
Konstr/Design			
Godk/Appr	RKO	031120	Klass/Class

+CAB
H.Grp: 6

Kalmar

Benämning: Krets Ström
Name: Circuit Power

Produkt/Product: DRFB 400-450
Ritn.nr./Drawing No.: A43033.0100

Blad/Sheet: 2/5
Utgåva/Issue: 05

This document must not be copied without our written permission and the contents thereof must not be imparted to a third party nor be used for any unauthorised purpose. Contravention will be prosecuted.

Denna ritning får ej utan vårt medgivande kopieras. Den får ej hållas tillgänglig annan eller annars obehörigen användas. Överträdelse kommer att beivras med stöd av gällande lag.

https://truckmanualshub.com/

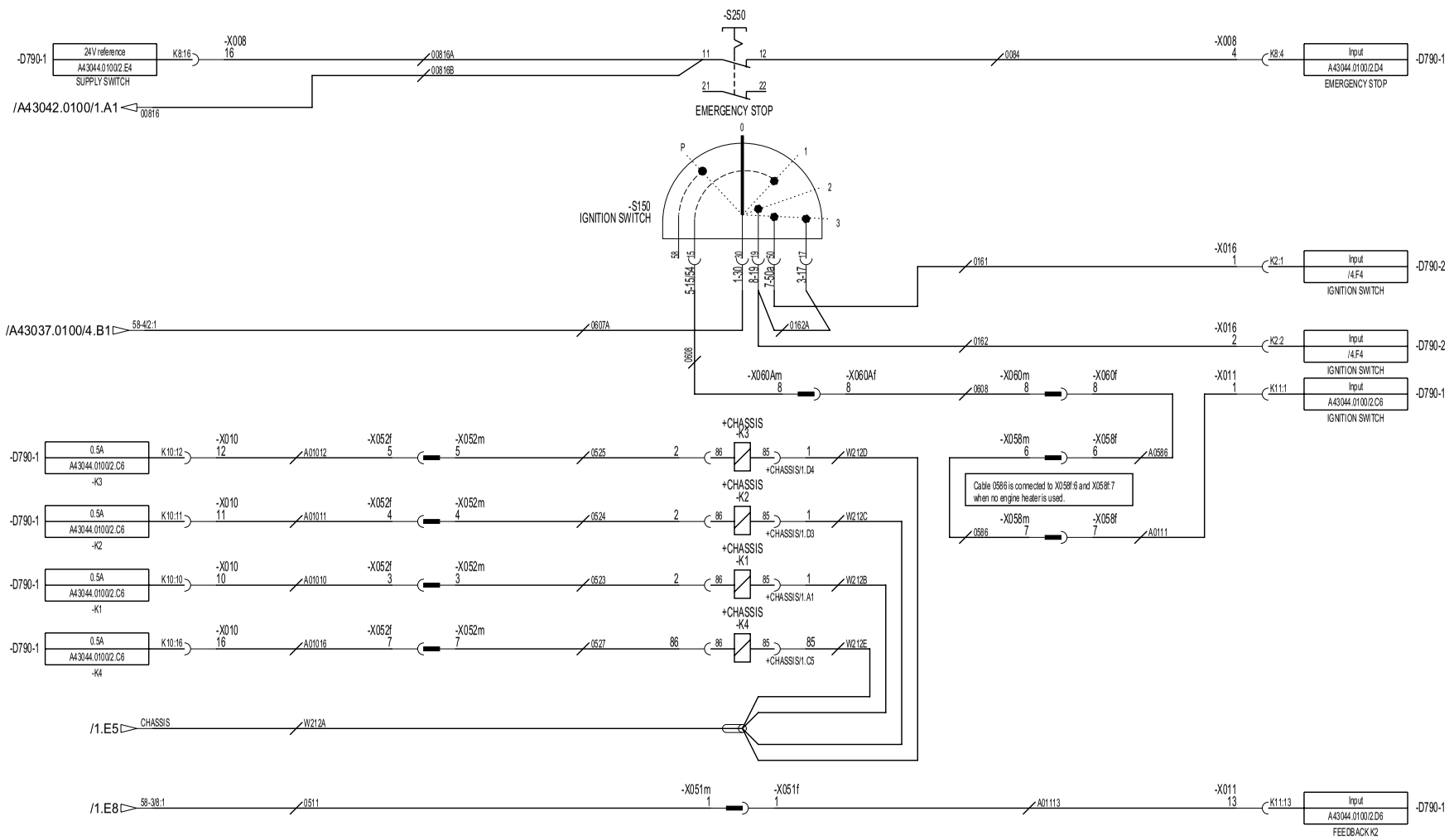

Ref. Ruta Sq.	Nr No.	Ändring Design change	Ändring nr Change No.	Sign.	Datum Date
	1	Reference Text Adjustment, Sync. Harnesses.	041478	TKB	040930
		T=Tillk/Added U=Utgår/Deleted V=Var/Was			

	Sign.	Datum/Date	Huvudnr./Project no.
Ritad/Drawn	FSN	010220	A452/09.0100
Konstr/Design			
Godk/Appr	RKO	031120	Klass/Class

+CAB
H.Grp: 6

Kalmar

Benämning: Krets Ström
Name: Circuit Power

Produkt/Product: DRFB 400-450
Ritn.nr./Drawing No.: A43033.0100

Blad/Sheet: 3/5
Utgåva/Issue: 05

This document must not be copied without our written permission and the contents thereof must not be imparted to a third party nor be used for any unauthorized purpose. Contravention will be prosecuted.

Denna ritning får ej utan vårt medgivande kopieras. Den får ej hållas tillgänglig annan eller annars obehörigen användas. Överträdelse kommer att beivras med stöd av gällande lag.

DRAWING

https://truckmanualshub.com/

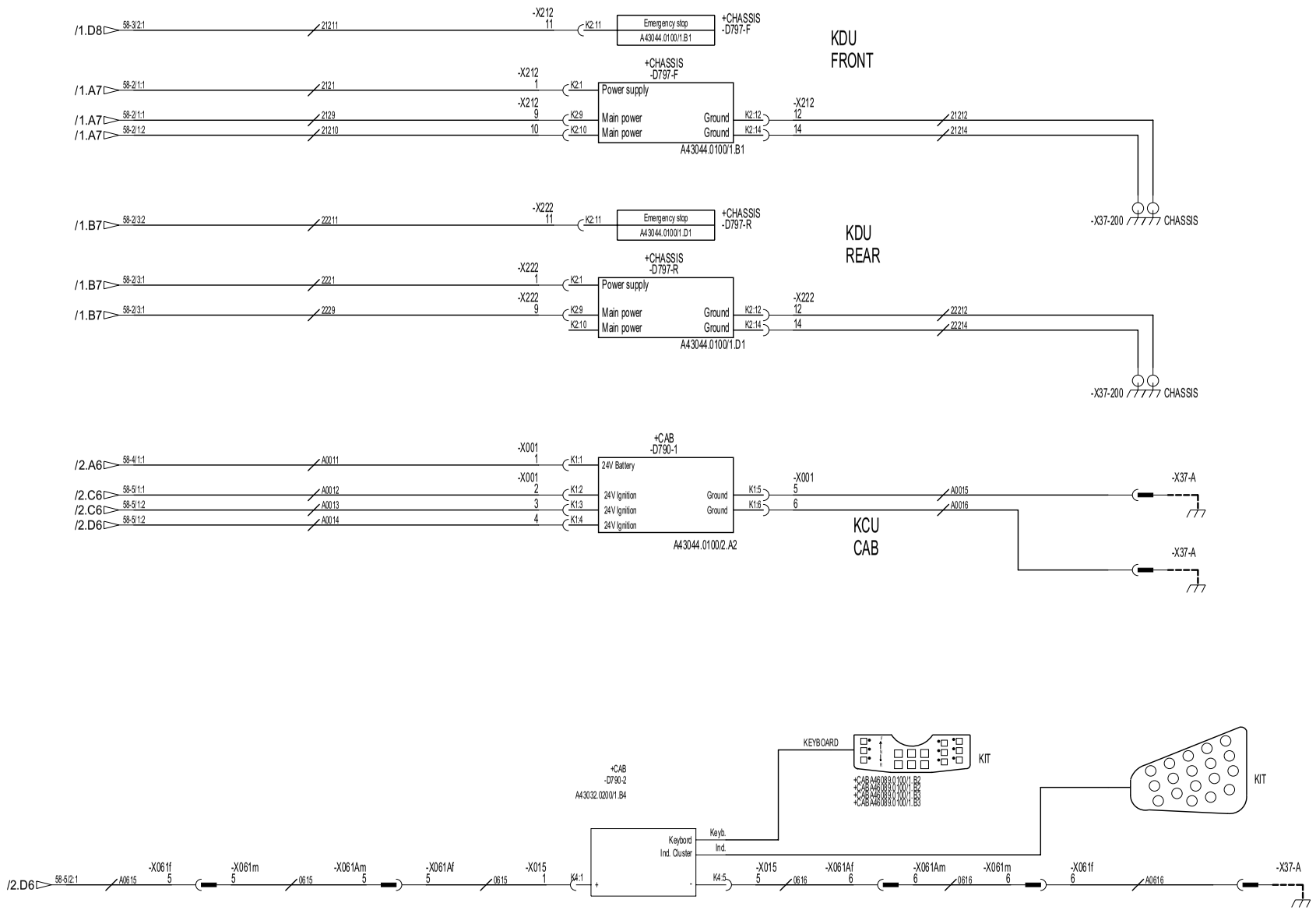

This document must not be copied without our written permission and the contents thereof must not be imparted to a third party nor be used for any unauthorised purpose. Contravention will be prosecuted.

Denna ritning får ej utan vårt medgivande kopieras. Den får ej hållas tillgänglig annan eller annars obehörigen användas. Överträdelse härav skiljas med stöd av gällande lag.

Ref. Ruta Sq.	Nr No.	Ändring Design change	Ändring nr Change No.	Sign.	Datum Date
	1	Reference Text Adjustment, Sync. Harnesses.	041478	TKB	040930
		T=Tillk/Added U=Utgår/Deleted V=Var/Was			

	Sign.	Datum/Date	Huvudnr./Project no.
Ritad/Drawn	FSN	010220	A452089.0100
Konstr/Design			
Godk/Appr	RKO	031120	Klass/Class

H.Grp: 6

Kalmar

Benämning: Krets Ström
Name: Circuit Power

Produkt/Product: DRFA 400-450
Ritn.nr./Drawing No.: A43033.0100

Blad/Sheet: 4/5
Utgåva/Issue: 05

DRAWING

https://truckmanualshub.com/

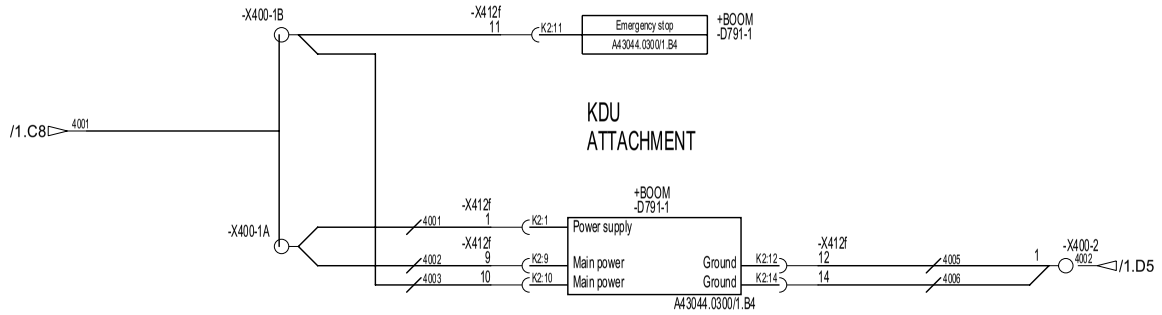

This document must not be copied without our written permission and the contents thereof must not be imparted to a third party nor be used for any unauthorized purpose. Contravention will be prosecuted.

Denna ritning får ej utan vårt medgivande kopieras. Den får ej hållas tillgänglig annan eller annars obehörigen användas. Överträdelse kommer att beivras med stöd av gällande lag.

Ref. Ruta Sq.	Nr No.	Ändring Design change	Ändring nr Change No.	Sign.	Datum Date
	1	Reference Text Adjustment, Sync. Harnesses.	041478	TKB	040930
		T=Tillk/Added U=Utgår/Deleted V=Var/Was			

	Sign.	Datum/Date	Huvudnr./Project no.
Ritad/Drawn	FSN	010220	A45209.0100
Konstr/Design			
Godk/Appr	RKO	031120	Klass/Class

H.Grp: 6

Kalmar

Benämning: Krets Ström Agg

Name: Circuit Power Att

Produkt/Product: DRFA 400-450

Ritn.nr./Drawing No.: A43033.0100

Blad/Sheet: 5/5

Utgåva/Issue: 05

https://truckmanualshub.com/

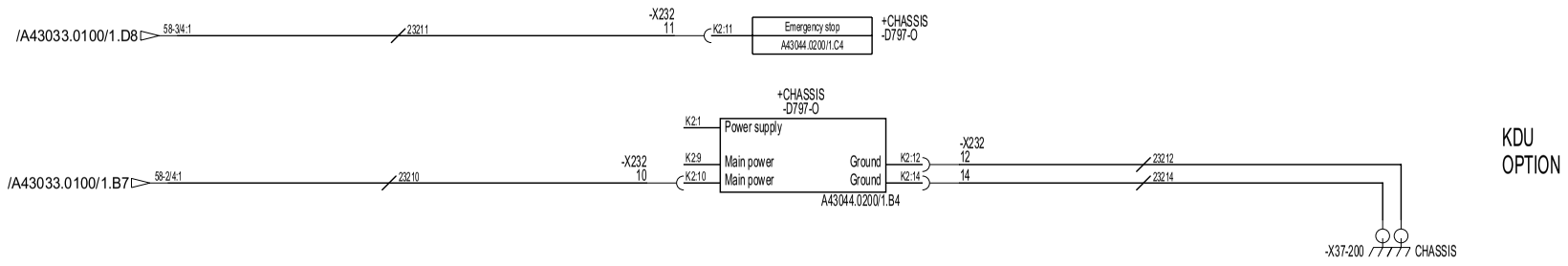

KDU
OPTION

This document must not be copied without our written permission and the contents thereof must not be imparted to a third party nor be used for any unauthorized purpose. Contravention will be prosecuted.

Denna ritning får ej utan vårt medgivande kopieras. Den får ej hållas tillgänglig annan eller annars obehörigen användas. Överträdelse kommer att beivras med stöd av gällande lag.

Ref. Ruta Sq.	Nr No.	Ändring Design change	Ändring nr Change No.	Sign.	Datum Date
	1	Reference Text Adjustment, Sync. Harnesses.	041478	TKB	040930
		T=Tillk/Added U=Utgår/Deleted V=Var/Was			

	Sign.	Datum/Date	Huvudnr./Project no.
Ritad/Drawn	FSN	010220	A452/09.0100
Konstr/Design			
Godk/Appr	RKO	031009	Klass/Class

H.Grp: 6

Kalmar

Benämning: Krets Ström KDU OPT

Name: Circuit Power KDU OPT

Produkt/Product: DRFA 400-450

Ritn.nr./Drawing No.: A43033.0200

Blad/Sheet: 1/1

Utgåva/Issue: 03

DRAWING

https://truckmanualshub.com/

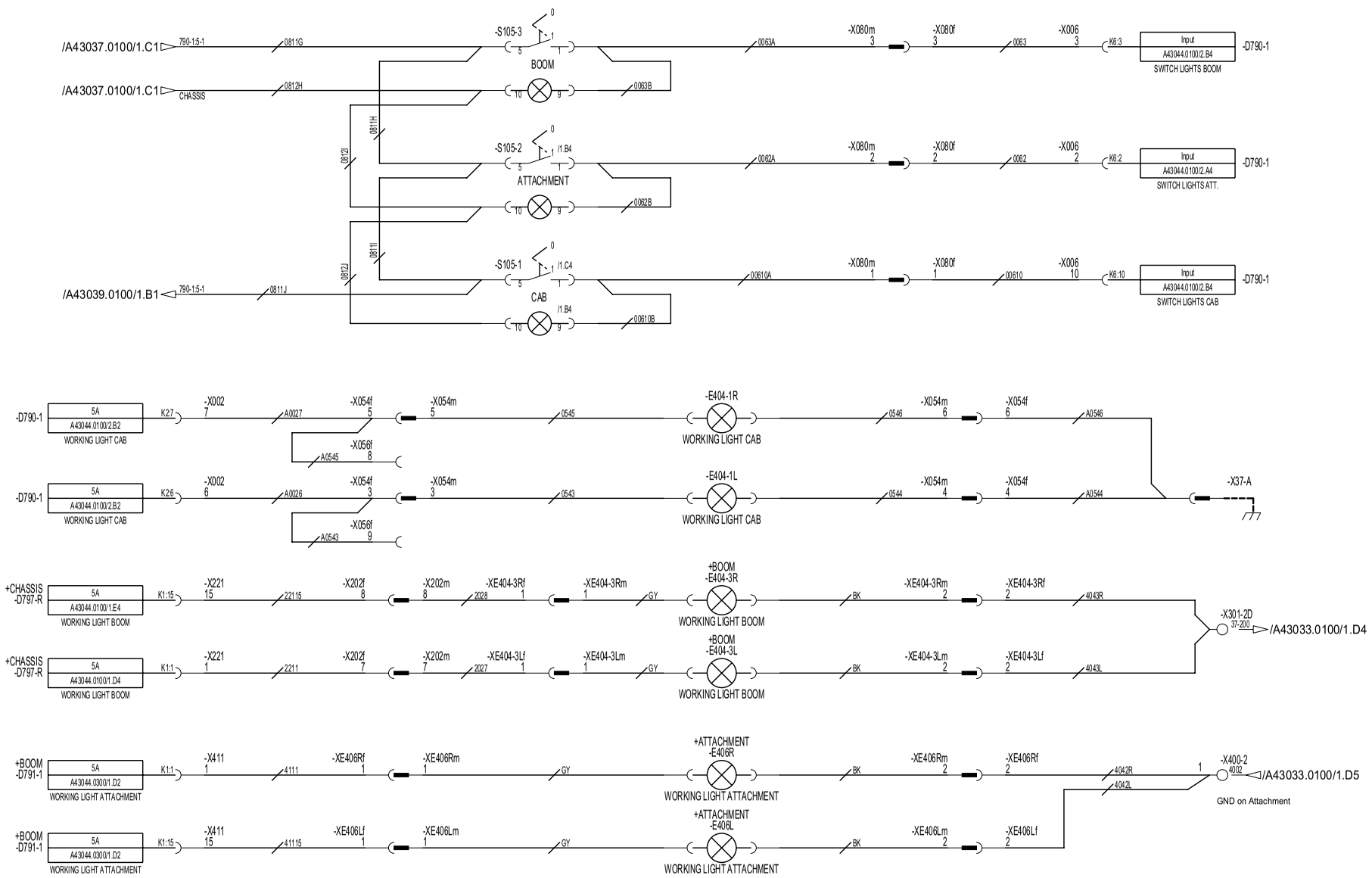

This document must not be copied without our written permission and the contents thereof must not be imparted to a third party nor be used for any unauthorized purpose. Contravention will be prosecuted.

Denna ritning får ej utan vårt medgivande kopieras. Den får ej hållas tillgänglig annan eller annars obehörigen användas. Överträdelse kan komma att bestraffas av gällande lag.

Ref. Ruta Sq.	Nr No.	Ändring Design change	Ändring nr Change No.	Sign.	Datum Date
	1	Reference Text Adjustment, Sync. Harnesses.	041478	TKB	040930
T=Tillk/Added U=Utgår/Deleted V=Var/Was					

	Sign.	Datum/Date	Hv.vuodnr./Project no.
Ritad/Drawn	FSN	010305	A45209.0100
Konstr/Design			
Godk/Appr	RKO	031009	Klass/Class

+CAB
H.Grp: 6

Kalmar

Benämning: Krets Arbetsljus
Name: Circuit Work Light

Produkt/Product: DRFA 400-450
Ritn.nr./Drawing No.: A43034.0100

Blad/Sheet: 1/1
Utgåva/Issue: 04

https://truckmanualshub.com/

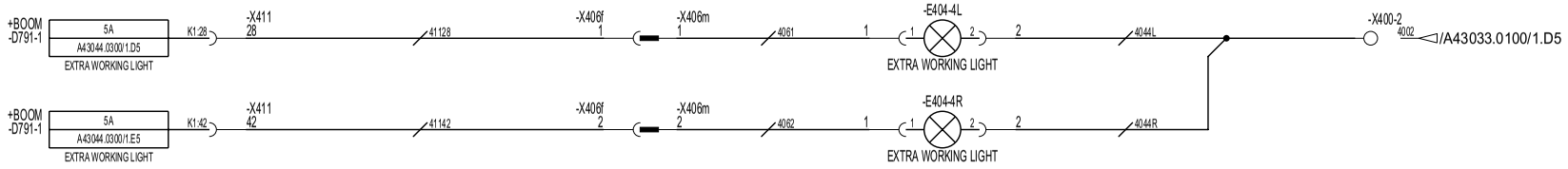

OPTION WORKING LIGHT ON ATTACHMENT

This document must not be copied without our written permission and the contents thereof must not be imparted to a third party nor be used for any unauthorized purpose. Contravention will be prosecuted.

Denna ritning får ej utan vårt medgivande kopieras. Den får ej hållas tillgänglig annan eller annars obehörigen användas. Överträdelse kommer att beivras med stöd av gällande lag.

Ref. Ruta Sq.	Nr No.	Ändring Design change	Ändring nr Change No.	Sign.	Datum Date
	1	Reference Text Adjustment, Sync. Harnesses.	041478	TKB	040930
		T=Tillk/Added U=Utgår/Deleted V=Var/Was			

	Sign.	Datum/Date	Huvudnr./Project no.
Ritad/Drawn	FSN	010613	A45209.0100
Konstr/Design			
Godk/Appr	RKO	031009	Klass/Class

+ATTACHMENT
H.Grp: 6

Kalmar

Benämning: Krets Extra Arb.bel. Agg
Name: Circuit Opt. Work Light Att

Produkt/Product: DRFA 400-450
Ritn.nr./Drawing No.: A43035.0100

Blad/Sheet: 1/1
Utgåva/Issue: 04

https://truckmanualshub.com/

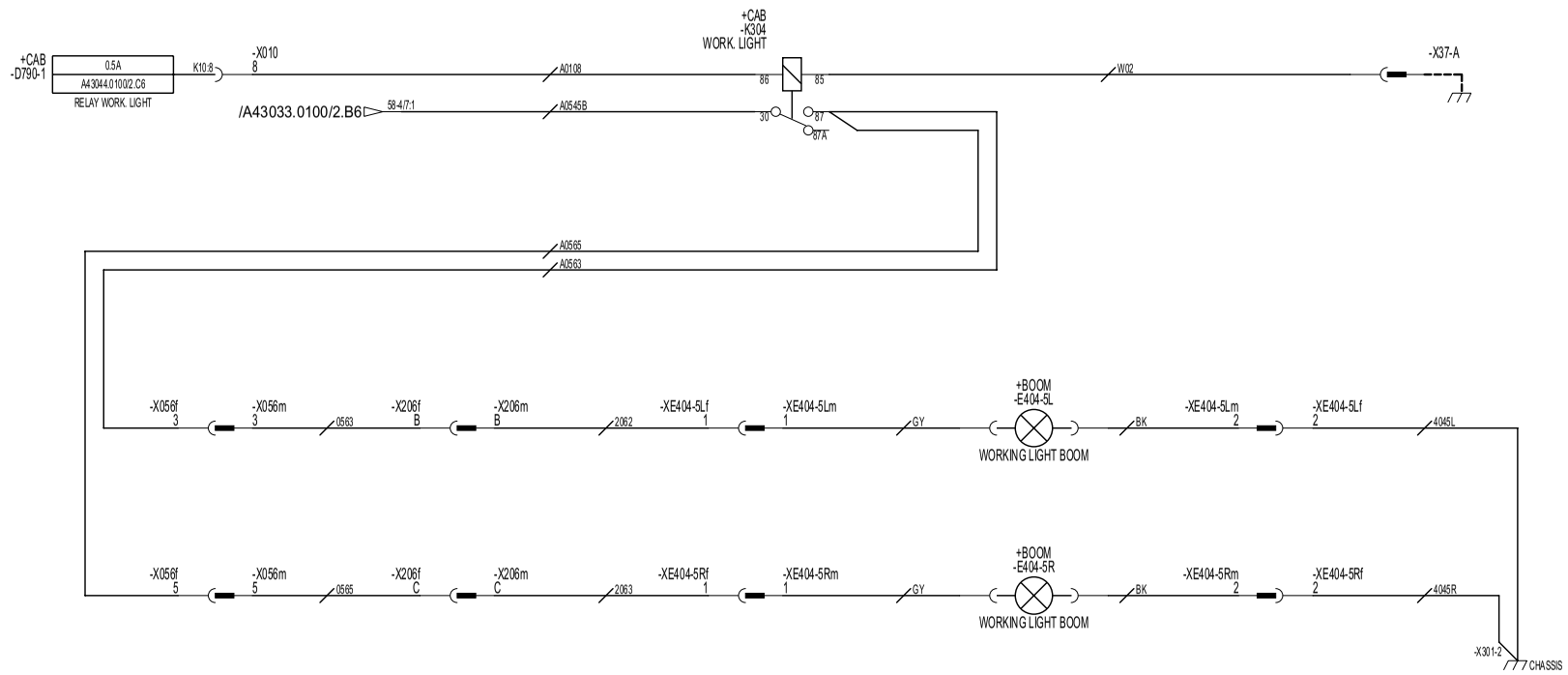

This document must not be copied without our written permission and the contents thereof must not be imparted to a third party nor be used for any unauthorised purpose. Contravention will be prosecuted.

Denna ritning får ej utan vårt medgivande kopieras. Den får ej hållas tillgänglig annan eller annars obehörigen användas. Överträdelse kommer att beivras med stöd av gällande lag.

Ref. Ruta Sq.	Nr No.	Ändring Design change	Ändring nr Change No.	Sign.	Datum Date
	1	Reference Text Adjustment, Sync. Harnesses.	041478	TKB	040930
		T=Tillk/Added U=Utgår/Deleted V=Var/Was			

	Sign.	Datum/Date	Huvudnr./Project no.
Ritad/Drawn	FSN	010830	A452/09.0100
Konstr/Design			
Godk/Appr	RKO	031009	Klass/Class

H.Grp: 6

Kalmar

Benämning: Krets Extra Arb.bel. Bom

Name: Circuit OPT Work Light Boom

Produkt/Product: DRFA 400-450

Ritn.nr./Drawing No.: A43036.0100

Blad/Sheet: 1/1

Utgåva/Issue: 04

https://truckmanualshub.com/

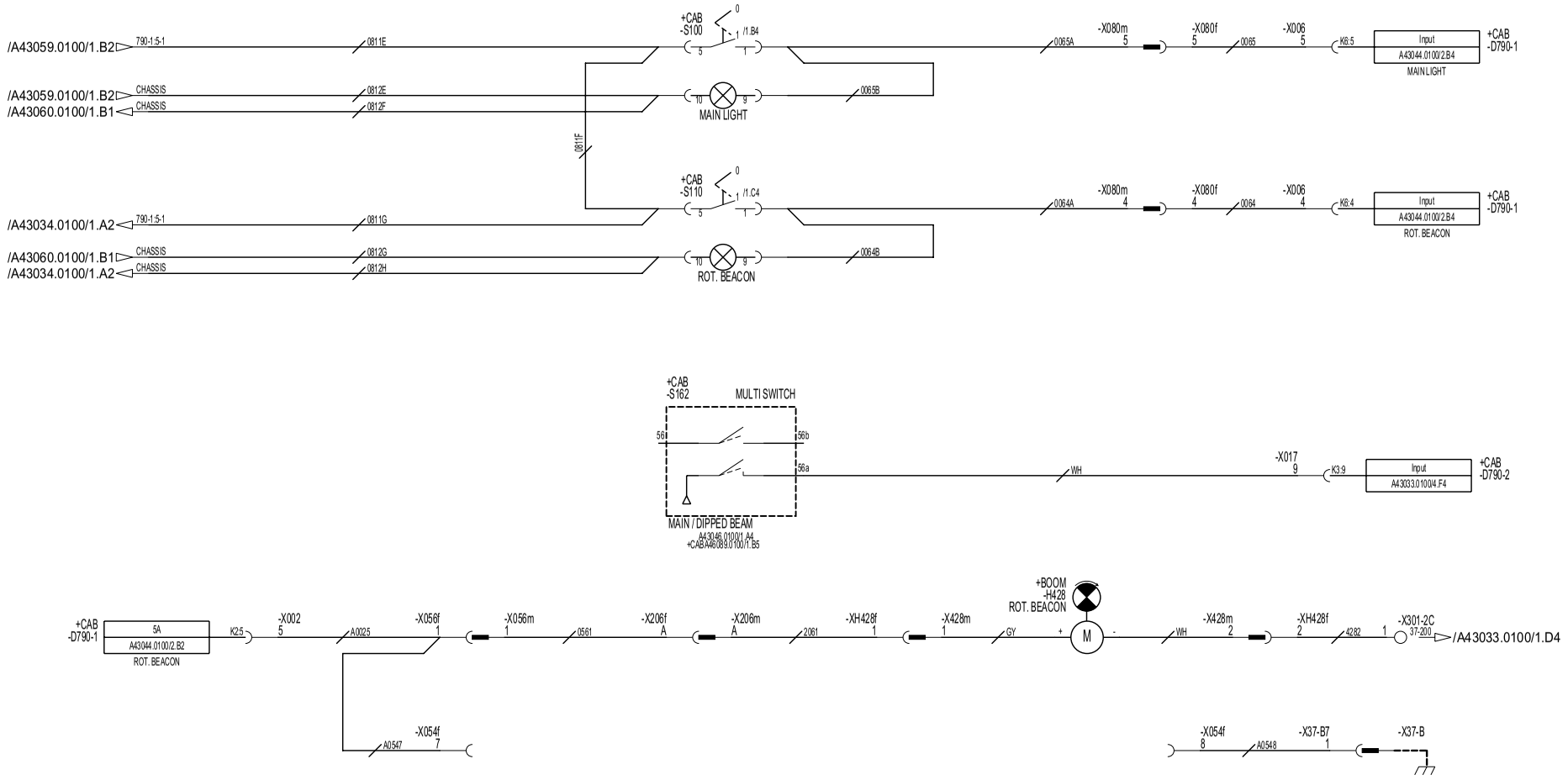

Ref. Ruta Sq.	Nr No.	Ändring Design change	Ändring nr Change No.	Sign.	Datum Date
	1	Reference Text Adjustment, Sync. Harnesses.	041478	TKB	040930
T=Tillk/Added U=Utgår/Deleted V=Var/Was					

	Sign.	Datum/Date	Hv.vudnr./Project no.
Ritad/Drawn	FSN	010702	A45209.0100
Konstr/Design			
Godk/Appr	RKO	031009	Klass/Class

H.Grp: 6

Kalmar

Benämning: Krets Belysning
Name: Circuit Lights

Produkt/Product: DRFA 400-450
Ritn.nr./Drawing No.: A43037.0100

Blad/Sheet: 1/4
Utgåva/Issue: 04

This document must not be copied without our written permission and the contents thereof must not be imparted to a third party nor be used for any unauthorized purpose. Contravention will be prosecuted.

Denna ritning får ej utan vårt medgivande kopieras. Den får ej hållas tillgänglig annan eller annars obehörigen användas. Överträdelse kommer att beivras med stöd av gällande lag.

DRAWING

https://truckmanualshub.com/

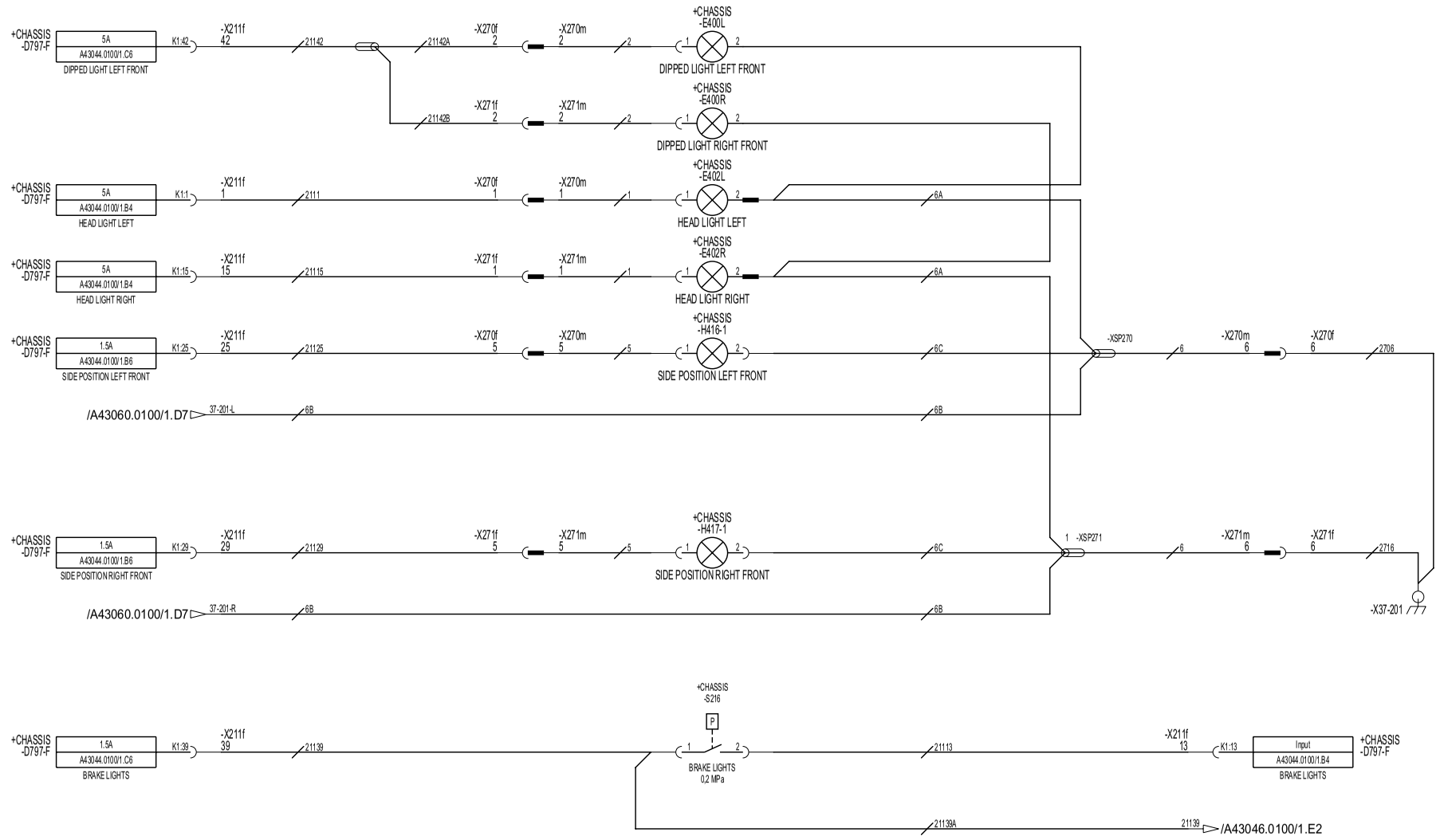

This document must not be copied without our written permission and the contents thereof must not be imparted to a third party nor be used for any unauthorized purpose. Contravention will be prosecuted.

Denna ritning får ej utan vårt medgivande kopieras. Den får ej hållas tillgänglig annan eller annars obehörigen användas. Överträdelse kommer att beivras enligt gällande lag.

Ref. Ruta Sq.	Nr No.	Ändring Design change	Ändring nr Change No.	Sign.	Datum Date
	1	Reference Text Adjustment, Sync. Harnesses.	041478	TKB	040930
T=Tillk/Added U=Utgår/Deleted V=Var/Was					

	Sign.	Datum/Date	Hu vudnr./Project no.
Ritad/Drawn	FSN	010702	A45209.0100
Konstr/Design			
Godk/Appr	RKO	031009	

H.Grp: 6

Kalmar

Benämning: Krets Belysning
Name: Circuit Lights

Produkt/Product: DRFA 400-450
Ritn.nr./Drawing No.: A43037.0100

Blad/Sheet: 2/4
Utgåva/Issue: 04

https://truckmanualshub.com/

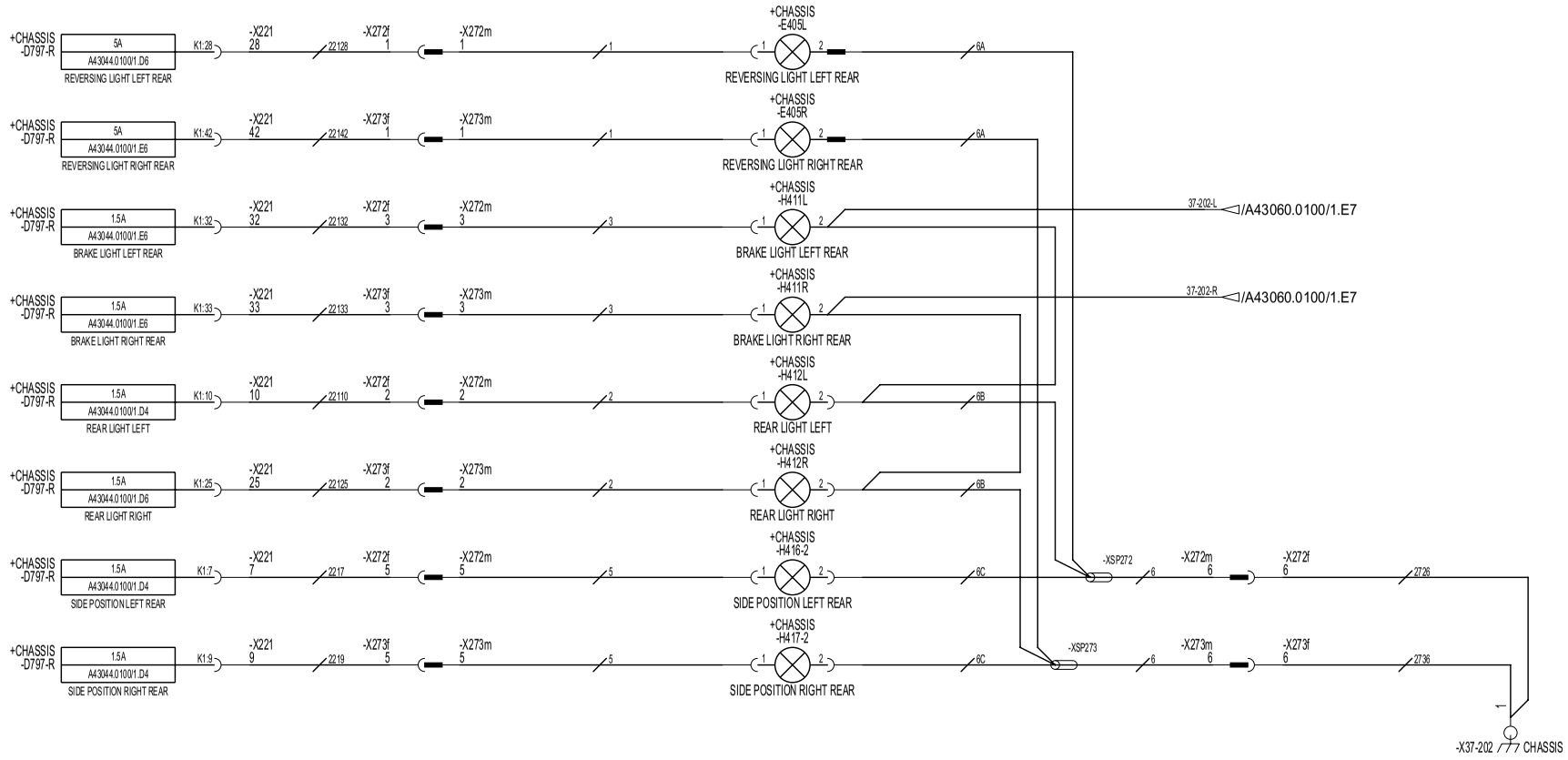

This document must not be copied without our written permission and the contents thereof must not be imparted to a third party nor be used for any unauthorized purpose. Contravention will be prosecuted.

Denna ritning får ej utan vårt medgivande kopieras. Den får ej heller delgivas annan eller annars obehörigen användas. Överträdelse kommer att beivras med stöd av gällande lag.

Ref. Ruta Sq.	Nr No.	Ändring Design change	Ändring nr Change No.	Sign.	Datum Date
	1	Reference Text Adjustment, Sync. Harnesses.	041478	TKB	040930
		T=Tillk/Added U=Utgår/Deleted V=Var/Was			

	Sign.	Datum/Date	Huvudnr./Project no.
Ritad/Drawn	FSN	010702	A45209.0100
Konstr/Design			
Godk/Appr	RKO	031009	Klass/Class

H.Grp: 6

Kalmar

Benämning: Krets Belysning
Name: Circuit Lights

Produkt/Product: DRFA 400-450
Ritn.nr./Drawing No.: A43037.0100

Blad/Sheet: 3/4
Utgåva/Issue: 04

https://truckmanualshub.com/

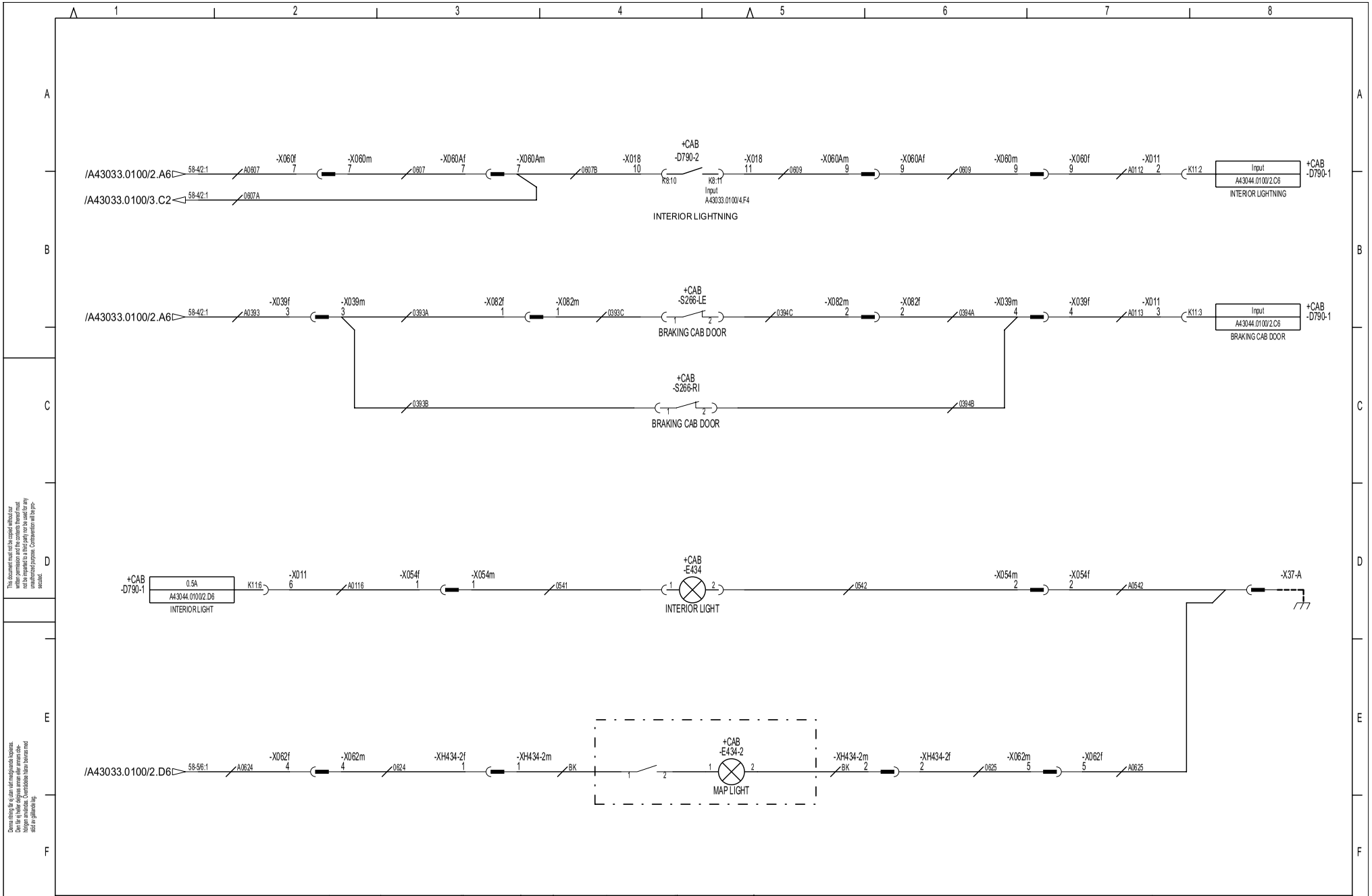

This document must not be copied without our written permission and the contents thereof must not be imparted to a third party nor be used for any unauthorized purpose. Contravention will be prosecuted.

Denna ritning får ej utan vårt medgivande kopieras. Den får ej hållas tillgänglig annan eller annars obehörigen användas. Överträdelse kommer att beivras med stöd av gällande lag.

Ref. Ruta Sq.	Nr No.	Ändring Design change	Ändring nr Change No.	Sign.	Datum Date
	1	Reference Text Adjustment, Sync. Harnesses.	041478	TKB	040930
T=Tillk/Added U=Utgår/Deleted V=Var/Was					

	Sign.	Datum/Date	Huvudnr./Project no.
Ritad/Drawn	FSN	010702	A45209.0100
Konstr/Design			
Godk/Appr	RKO	031009	Klass/Class

H.Grp: 6

Kalmar

Benämning: Krets Belysning
Name: Circuit Lights

Produkt/Product: DRFA 400-450
Ritn.nr./Drawing No.: A43037.0100

Blad/Sheet: 4/4
Utgåva/Issue: 04

https://truckmanualshub.com/

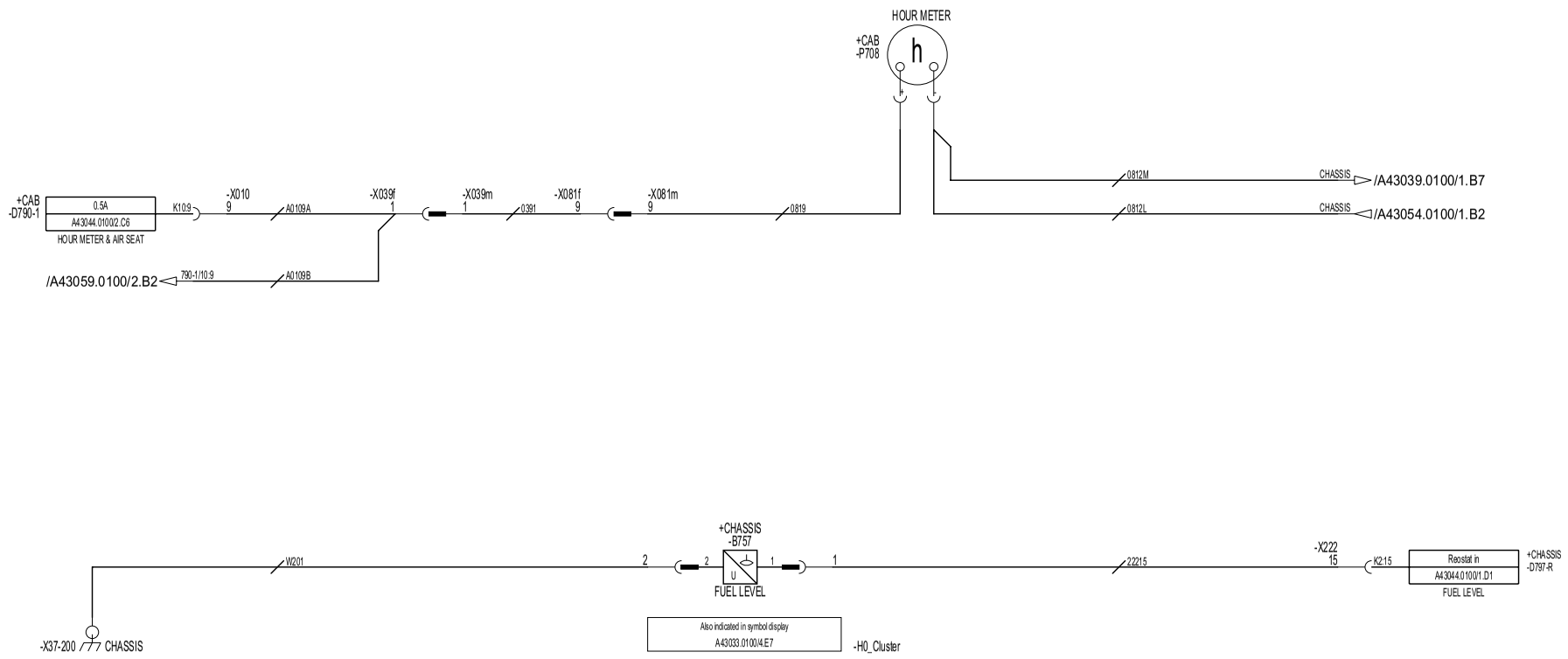

This document must not be copied without our written permission and the contents thereof must not be imparted to a third party nor be used for any unauthorised purpose. Contravention will be prosecuted.

Denna ritning får ej utan vårt medgivande kopieras. Den får ej hållas tillgänglig annan eller annars obehörigen användas. Överträdelse kommer att beivras med stöd av gällande lag.

Ref. Ruta Sq.	Nr No.	Ändring Design change	Ändring nr Change No.	Sign.	Datum Date
	1	Reference Text Adjustment, Sync. Harnesses.	041478	TKB	040930
		T=Tillk/Added U=Utgår/Deleted V=Var/Was			

	Sign.	Datum/Date	Huvudnr./Project no.
Ritad/Drawn	FSN	010329	A45209.0100
Konstr/Design			
Godk/Appr	RKO	031009	Klass/Class

H.Grp: 6

Kalmar

Benämning: Krets Givare Instr.

Name: Circuit Sensors Instr.

Produkt/Product: DRFB 400-450

Ritn.nr./Drawing No.: A43038.0100

Blad/Sheet: 1/1

Utgåva/Issue: 04

https://truckmanualshub.com/

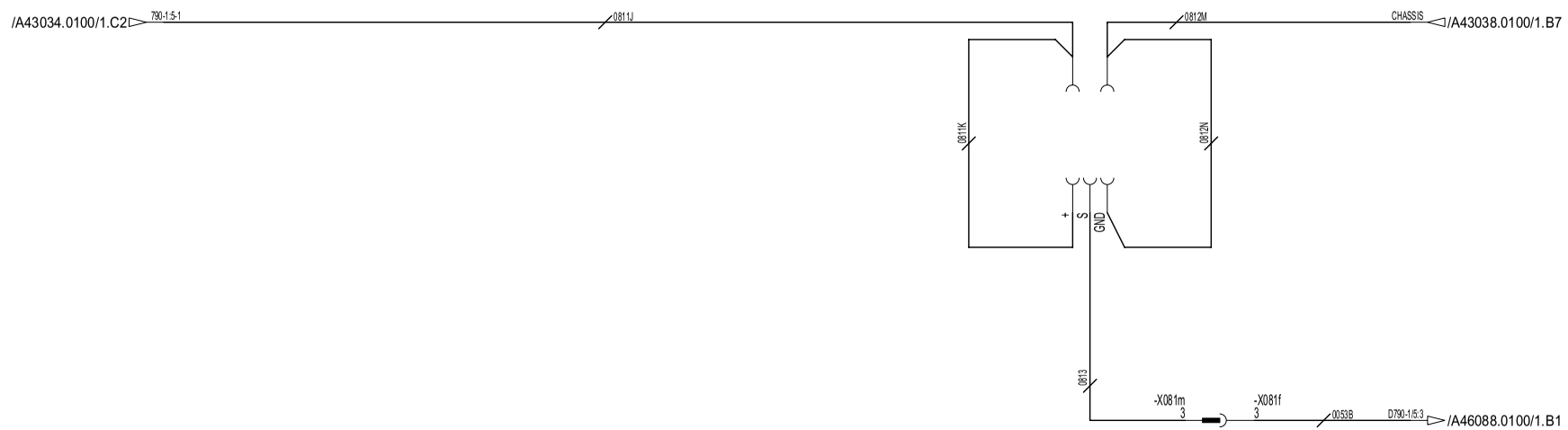

This document must not be copied without our written permission and the contents thereof must not be imparted to a third party nor be used for any unauthorized purpose. Contravention will be prosecuted.

Denna ritning får ej utan vår medgivande kopieras. Den får ej hållas tillgänglig annan eller annars obehörigen användas. Överträdelse kommer att beivras med stöd av gällande lag.

Ref. Ruta Sq.	Nr No.	Ändring Design change	Ändring nr Change No.	Sign.	Datum Date
	1	Reference Text Adjustment, Sync. Harnesses.	041478	TKB	040930
		T=Tillk/Added U=Utgår/Deleted V=Var/Was			

	Sign.	Datum/Date	Huvudnr./Project no.
Ritad/Drawn	FSN	011121	A452/09.0100
Konstr/Design			
Godk/Appr	RKO	031009	Klass/Class

H.Grp: 6

Kalmar

Benämning: Krets Extra Givare Instr.

Name: Circuit OPT Sensors Instr.

Produkt/Product: DRFB 400-450

Ritn.nr./Drawing No.: A43039.0100

Blad/Sheet: 1/1

Utgåva/Issue: 04

https://truckmanualshub.com/

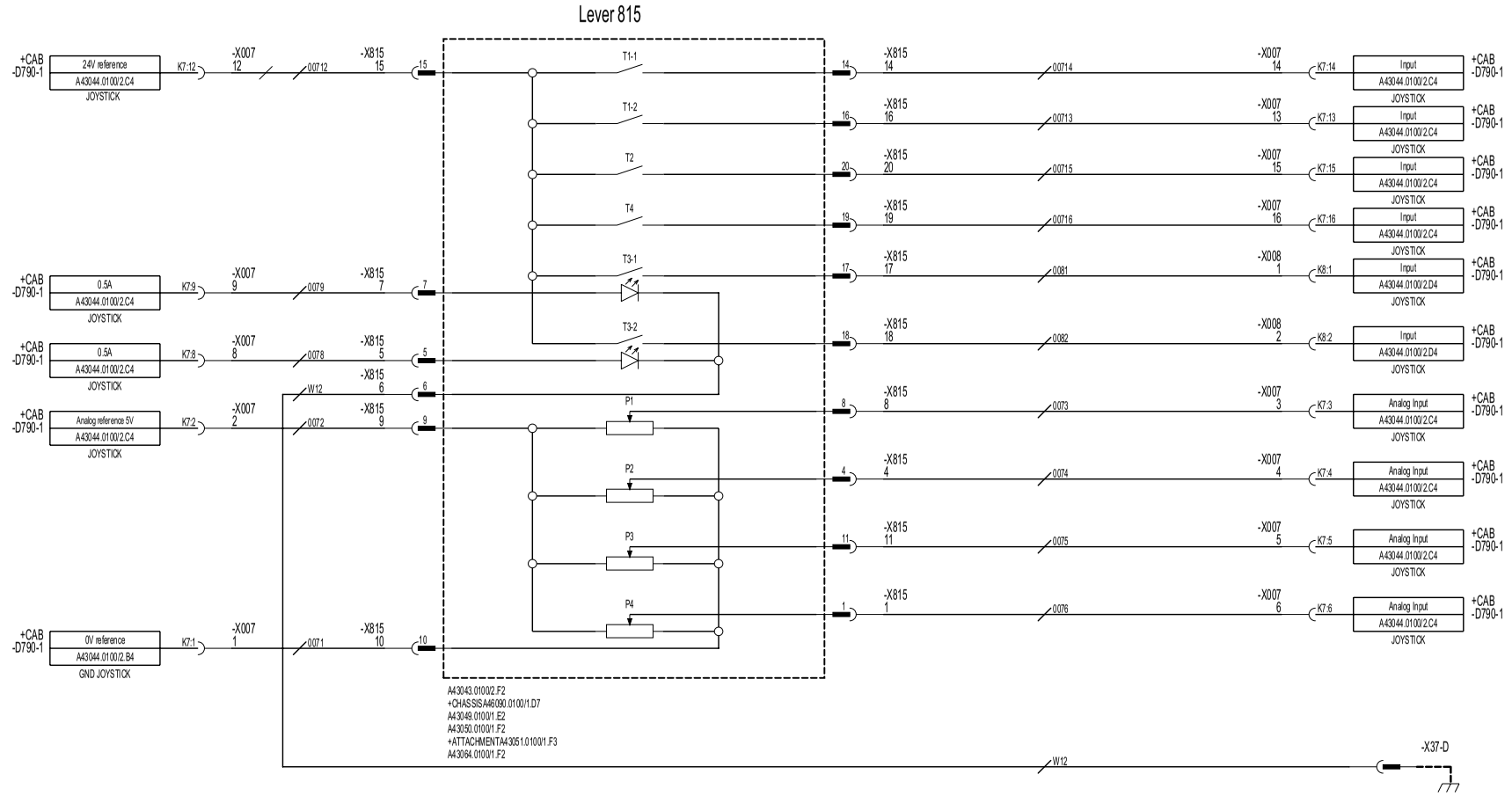

This document must not be copied without our written permission and the contents thereof must not be imparted to a third party nor be used for any unauthorized purpose. Contravention will be prosecuted.

Denna ritning får ej utan vårt medgivande kopieras. Den får ej hållas tillgänglig annan eller annars obehörigen användas. Överträdelse härav skiljas med stöd av gällande lag.

Ref. Ruta Sq.	Nr No.	Ändring Design change	Ändring nr Change No.	Sign.	Datum Date
	1	Reference Text Adjustment, Sync. Harnesses.	041478	TKB	040930
		T=Tillk/Added U=Utgår/Deleted V=Var/Was			

	Sign.	Datum/Date	Huvudnr./Project no.
Ritad/Drawn	FSN	010308	A45209.0100
Konstr/Design			
Godk/Appr	RKO	031009	Klass/Class

H.Grp: 6

Kalmar

Benämning: Krets Joystick
Name: Circuit Joystick

Produkt/Product: DRFA 400-450

Ritn.nr./Drawing No.: A43040.0100

Blad/Sheet: 1/1

Utgåva/Issue: 04

https://truckmanualshub.com/

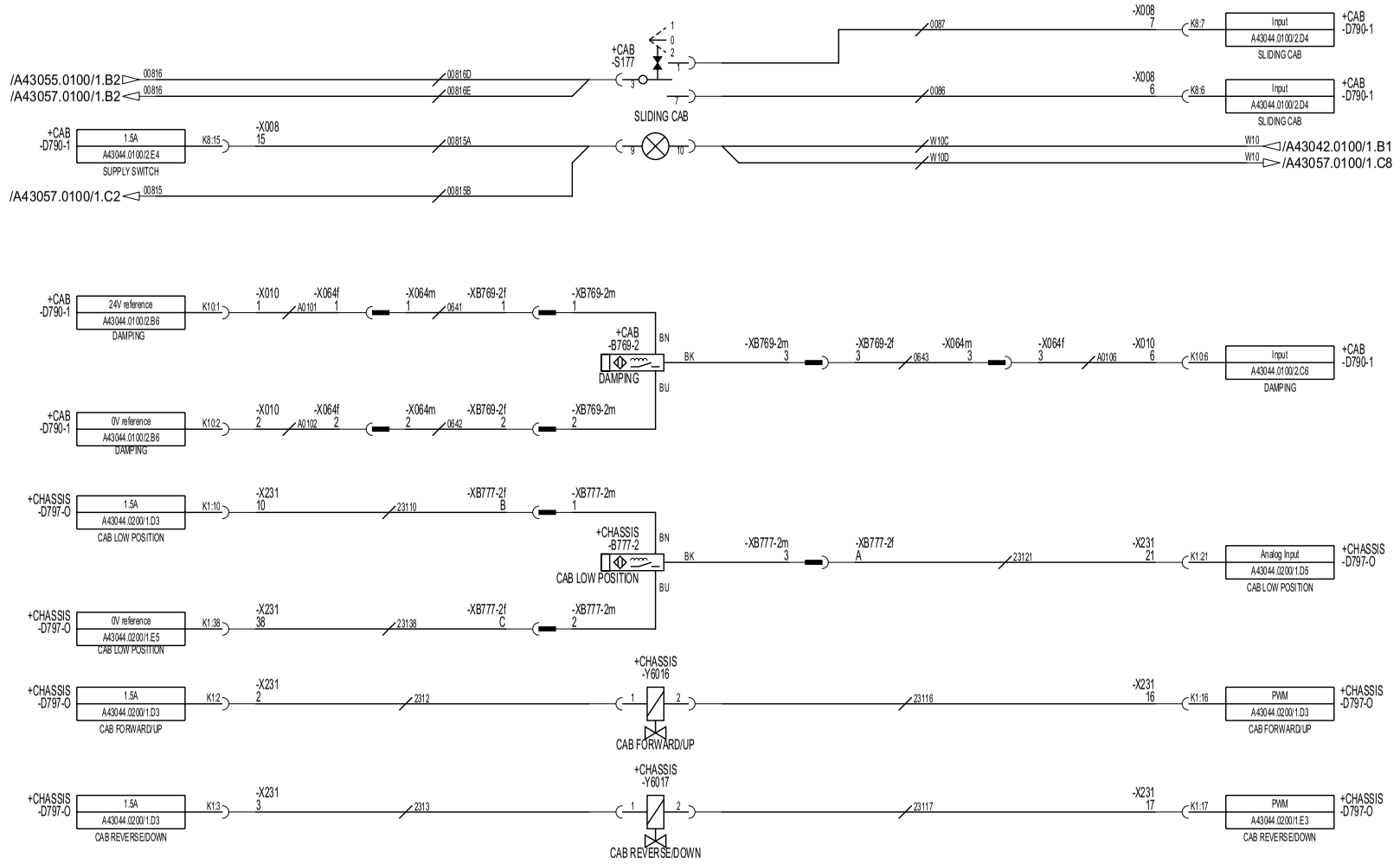

This document must not be copied without our written permission and the contents thereof must not be imparted to a third party nor be used for any unauthorized purpose. Contravention will be prosecuted.

Denna ritning får ej utan vårt medgivande kopieras. Den får ej hållas tillgänglig annan eller annars obehörigen användas. Överträdelse kommer att beivras med stöd av gällande lag.

Ref. Ruta Sq.	Nr No.	Ändring Design change	Ändring nr Change No.	Sign.	Datum Date
	1	Reference Text Adjustment, Sync. Harnesses.	041478	TKB	040930
		T=Tillk/ Added U=Utgår/Deleted V=Var/Was			

	Sign.	Datum/Date	Huvudnr./Project no.
Ritad/Drawn	FSN	010308	A45209.0100
Konstr/Design			
Godk/Appr	RKO	031009	Klass/Class

H.Grp: 6

Kalmar

Benämning: Krets Skjutbar/Vertikalt justerbar Hytt
Name: Circuit Sliding/Vertically adjustable Cab

Produkt/Product: DRFA 400-450
Ritn.nr./Drawing No.: A43041.0100

Blad/Sheet: 1/1
Utgåva/Issue: 04

https://truckmanualshub.com/

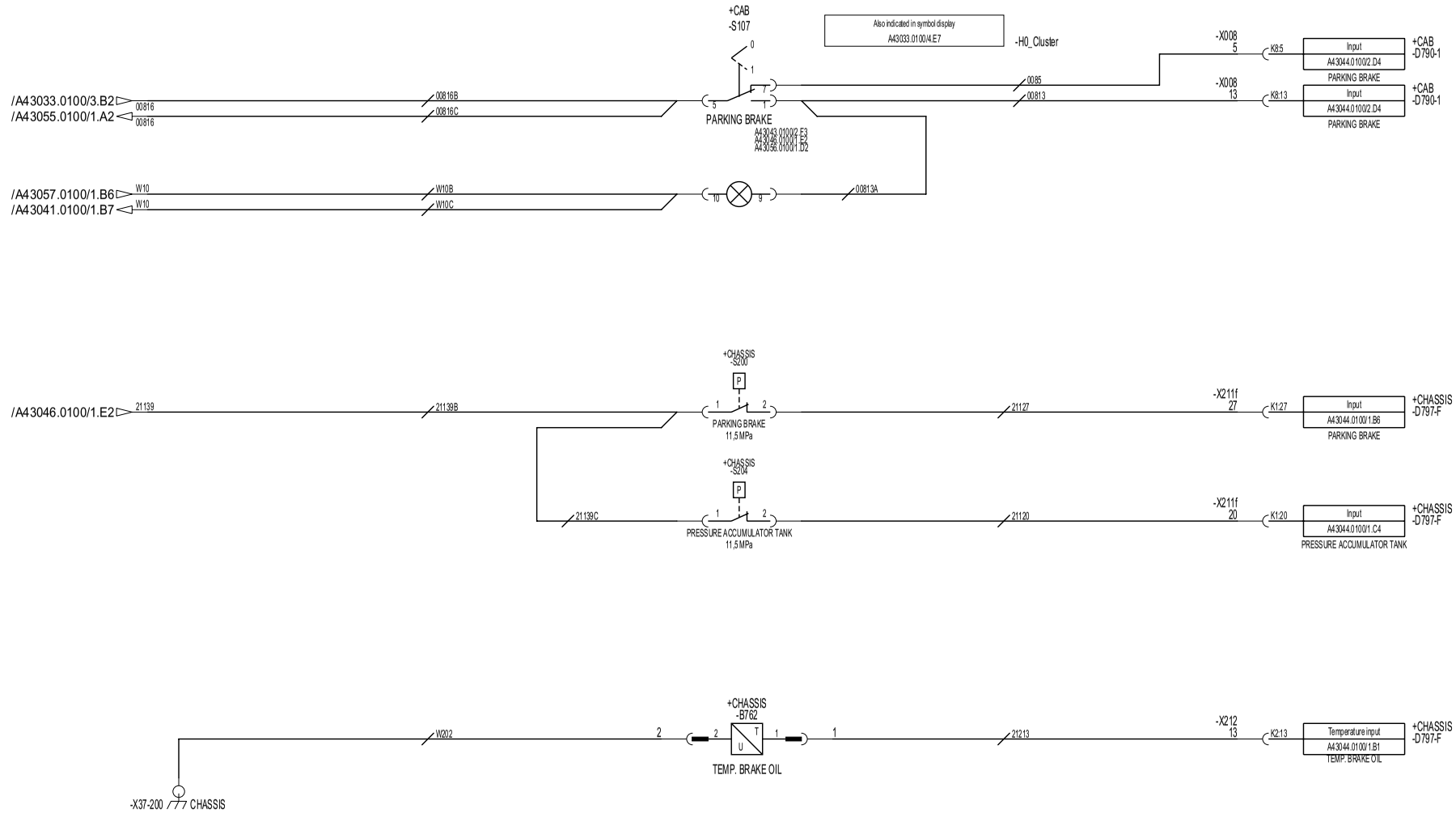

This document must not be copied without our written permission and the contents thereof must not be imparted to a third party nor be used for any unauthorized purpose. Contravention will be prosecuted.

Denna ritning får ej utan vårt medgivande kopieras. Den får ej hållas tillgänglig annan eller annars obehörigen användas. Överträdelse kommer att beivras med stöd av gällande lag.

Ref. Ruta Sq.	Nr No.	Ändring Design change	Ändring nr Change No.	Sign.	Datum Date
	1	Reference Text Adjustment, Sync. Harnesses.	041478	TKB	040930
		T=Tillk/Added U=Utgår/Deleted V=Var/Was			

	Sign.	Datum/Date	Huvudnr./Project no.
Ritad/Drawn	FSN	010308	A45209.0100
Konstr/Design			
Godk/Appr	RKO	031009	Klass/Class

H.Grp: 6

Kalmar

Benämning: Krets Bromssystem
Name: Circuit Brakes

Produkt/Product: DRFA 400-450
Ritn.nr./Drawing No.: A43042.0100

Blad/Sheet: 1/2
Utgåva/Issue: 04

https://truckmanualshub.com/

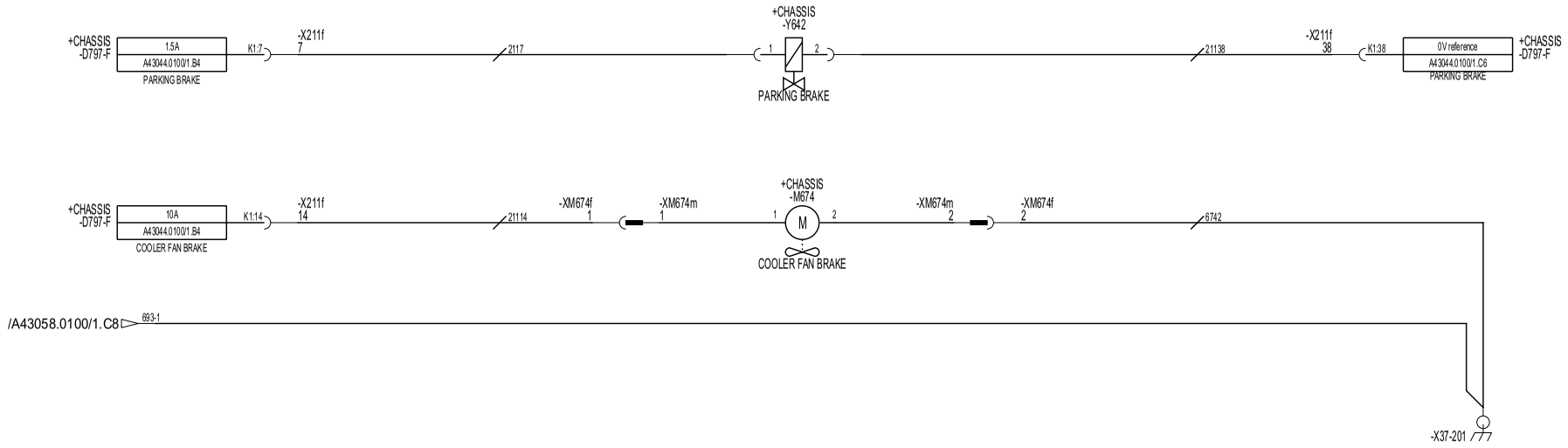

This document must not be copied without our written permission and the contents thereof must not be imparted to a third party nor be used for any unauthorized purpose. Contravention will be prosecuted.

Denna ritning får ej utan vårt medgivande kopieras. Den får ej hållas tillgänglig annan eller annars obehörigen användas. Överträdelse kommer att beivras med stöd av gällande lag.

Ref. Ruta Sq.	Nr No.	Ändring Design change	Ändring nr Change No.	Sign.	Datum Date
	1	Reference Text Adjustment, Sync. Harnesses.	041478	TKB	040930
		T=Tillk/Added U=Utgår/Deleted V=Var/Was			

	Sign.	Datum/Date	Huvudnr./Project no.
Ritad/Drawn	FSN	010308	A45209.0100
Konstr/Design			
Godk/Appr	RKO	031009	Klass/Class

H.Grp: 6

Kalmar

Benämning: Krets Bromssystem
Name: Circuit Brakes

Produkt/Product: DRFA 400-450
Ritn.nr./Drawing No.: A43042.0100

Blad/Sheet: 2/2
Utgåva/Issue: 04

https://truckmanualshub.com/

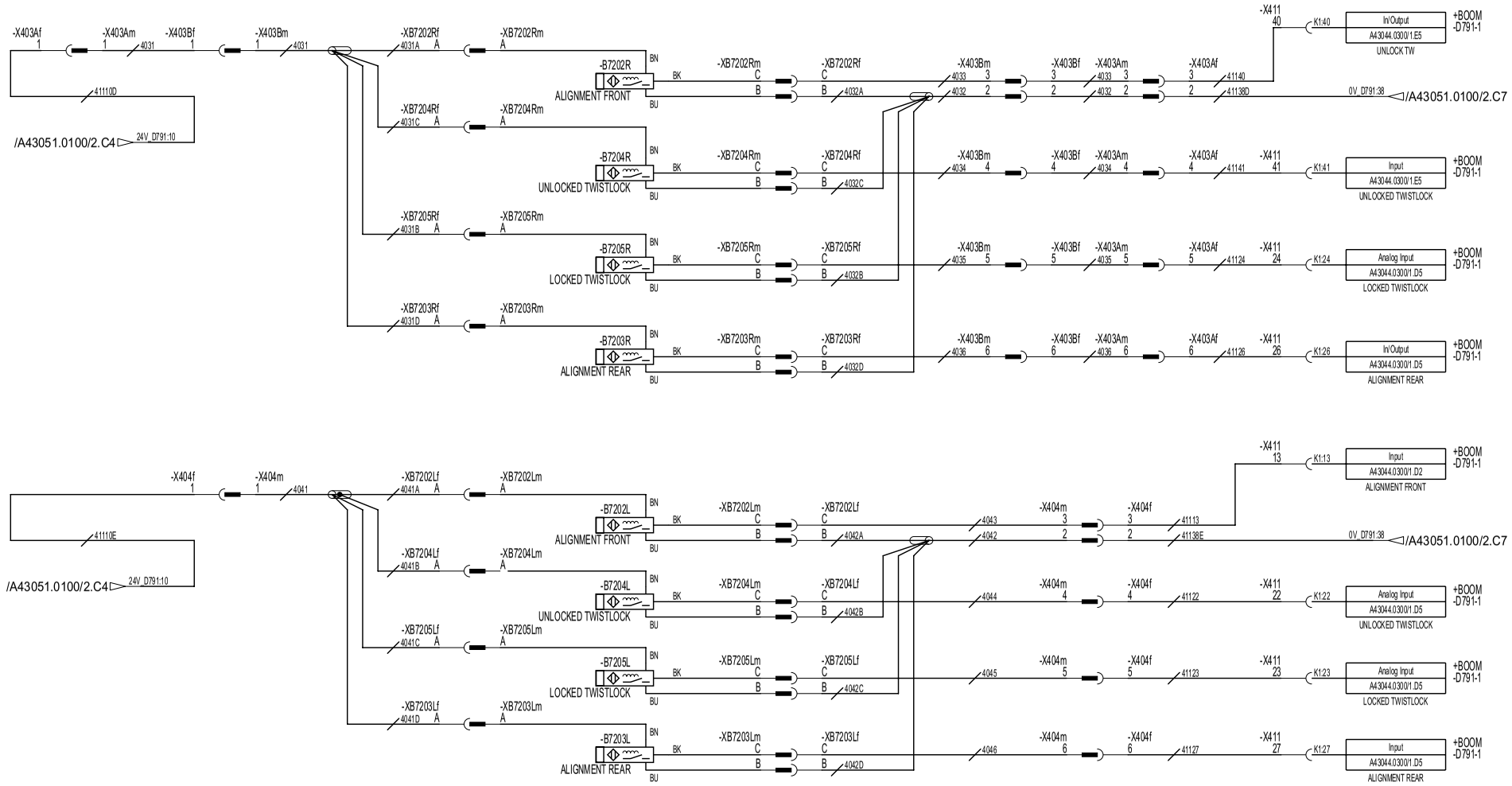

This document must not be copied without our written permission and the contents thereof must not be imparted to a third party nor be used for any unauthorised purpose. Contravention will be prosecuted.

Denna ritning får ej utan vårt medgivande kopieras. Den får ej hållas tillgänglig annan eller annars obehörigen användas. Överträdelse kommer att beivras med stöd av gällande lag.

Ref. Ruta Sq.	Nr No.	Ändring Design change	Ändring nr Change No.	Sign.	Datum Date
	1	Reference Text Adjustment, Sync. Harnesses.	041478	TKB	040930
T=Tillk/Added U=Utgår/Deleted V=Var/Was					

	Sign.	Datum/Date	Huvudnr./Project no.
Ritad/Drawn	FSN	010308	A45209.0100
Konstr/Design			
Godk/Appr	RKO	031009	Klass/Class

+ATTACHMENT
H.Grp: 6

Kalmar

Benämning: Krets Agg. Twistlock
Name: Circuit Att. Twistlock

Produkt/Product: DRFA 400-450
Ritn.nr./Drawing No.: A43043.0100

Blad/Sheet: 1/2
Utgåva/Issue: 04

https://truckmanualshub.com/

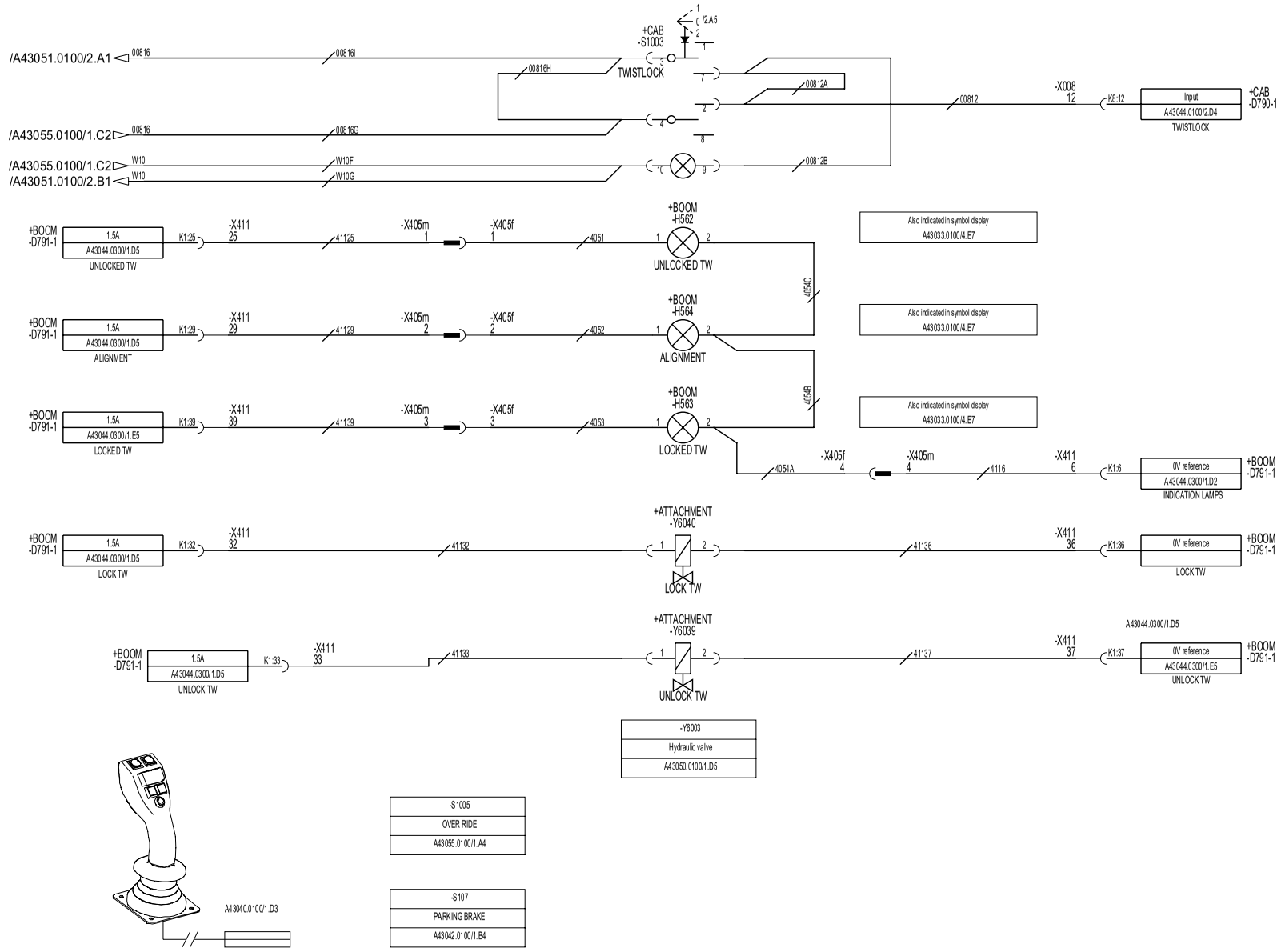

Ref. Ruta Sq.	Nr No.	Ändring Design change	Ändring nr Change No.	Sign.	Datum Date
	1	Reference Text Adjustment, Sync. Harnesses.	041478	TKB	040930
		T=Tillk/Added U=Utgår/Deleted V=Var/Was			

	Sign.	Datum/Date	Hv.vudnr./Project no.
Ritad/Drawn	FSN	020607	A45209.0100
Konstr/Design			
Godk/Appr	RKO	031009	Klass/Class

H.Grp: 6

Kalmar

Benämning: Krets Agg. Twistlock
Name: Circuit Att. Twistlock

Produkt/Product: DRFA 400-450
Ritn.nr./Drawing No.: A43043.0100

Blad/Sheet: 2/2
Utgåva/Issue: 04

This document must not be copied without our written permission and the contents thereof must not be imparted to a third party nor be used for any unauthorized purpose. Contravention will be prosecuted.

Denna ritning får ej utan vårt medgivande kopieras. Den får ej hållas tillgänglig annan eller annars obehörigen användas. Överträdelse kan komma med stöd av gällande lag.

https://truckmanualshub.com/

KDU FRONT

+CHASSIS
-D797-F

	Pin Number	Drawing	Function	Type
KDU contact K2	Power	A43033.0100/4.B5		
	CAN	A43032.0200/1.D8	CAN-BUS	
	2:11	A43033.0100/4.A5		Emergency stop
	2:13	A43042.0100/1.E8	TEMP. BRAKE OIL	Temperature input
	2:15			
	2:16			

	Pin Number	Drawing	Function	Type
KDU contact K1	1:1	A43037.0100/2.B1	HEAD LIGHT LEFT	5A
	1:2	+CHASSISA46090.0100/1.E2	BOOM LIFT	1.5A
	1:3	+CHASSISA46090.0100/1.B2	BOOM LOWER	1.5A
	1:4	A43049.0100/1.C2	BOOM OUT	1.5A
	1:5	A43049.0100/1.C2	BOOM IN	1.5A
	1:6	+CHASSISA43045.0100/2.D1	SENSORS OILPRESSURE	0V reference
	1:7	A43042.0100/2.A1	PARKING BRAKE	1.5A
	1:8	+CHASSISA43045.0100/2.D1	SUPPLY SENSORS OILPRESSURE	Analog reference 5V
	1:9	A43060.0100/1.D1	DIRECTION LEFT FRONT	1.5A
	1:10	A43060.0100/1.D1	DIRECTION RIGHT FRONT	1.5A
	1:11	A43054.0100/2.B2	OPTION FRONT	In/Output
	1:12	A43054.0100/2.B2	OPTION FRONT	In/Output
	1:13	A43037.0100/2.E8	BRAKE LIGHTS	Input
	1:14	A43042.0100/2.B1	COOLER FAN BRAKE	10A
	1:15	A43037.0100/2.B1	HEAD LIGHT RIGHT	5A
	1:16	+CHASSISA46090.0100/1.E8	BOOM LIFT	PWM
	1:17	+CHASSISA46090.0100/1.B8	BOOM LOWER	PWM
	1:18	A43049.0100/1.C8	BOOM OUT	PWM
	1:19	A43049.0100/1.C8	BOOM IN	PWM
	1:20	A43042.0100/1.D8	PRESSURE ACCUMULATOR TANK	Input

+CHASSIS
-D797-F

	Pin Number	Drawing	Function	Type
KDU contact K1	1:21	+CHASSISA43045.0100/2.E8	0-250bar	Analog Input
	1:22	+CHASSISA43045.0100/2.F8	0-250bar	Analog Input
	1:23	+CHASSISA43045.0100/2.D8	0-250bar	Analog Input
	1:24	+CHASSISA43045.0100/2.E8	0-250bar	Analog Input
	1:25	A43037.0100/2.C1	SIDE POSITION LEFT FRONT	1.5A
	1:26	A43054.0100/2.A2	OPTION FRONT	In/Output
	1:27	A43042.0100/1.C8	PARKING BRAKE	Input
	1:28	A43058.0100/1.C2	CENTRAL LUBRICATION	5A
	1:29	A43037.0100/2.D1	SIDE POSITION RIGHT FRONT	1.5A
	1:30	+CHASSISA46090.0100/1.D2	BLOCKING LEFT	1.5A
	1:31	+CHASSISA46090.0100/1.C2	BLOCKING RIGHT	1.5A
	1:32	+CHASSISA46090.0100/1.E2	REGENERATION RIGHT	1.5A
	1:33	+CHASSISA46090.0100/1.F2	REGENERATION LEFT	1.5A
	1:34	+CHASSISA46090.0100/1.F8	VALVES REGENERATION LEFT	0V reference
	1:35	+CHASSISA46090.0100/1.E8	VALVES REGENERATION RIGHT	0V reference
	1:36			
	1:37			
	1:38	A43042.0100/2.A8	PARKING BRAKE	0V reference
	1:39	A43037.0100/2.E1	BRAKE LIGHTS	1.5A
	1:40	A43054.0100/2.C2	OPTION FRONT	In/Output
	1:41	A43046.0100/1.E7	DECLUCHING	Input
	1:42	A43037.0100/2.A1	DIPPED LIGHT LEFT FRONT	5A

KDU REAR

+CHASSIS
-D797-R

	Pin Number	Drawing	Function	Type
KDU contact K2	Power	A43033.0100/4.C5		
	CAN	A43032.0200/1.F1	CAN-BUS	
	2:11	A43033.0100/4.B5		Emergency stop
	2:13	A43053.0100/1.B7	HYDRAULIC TEMPERATURE	Temperature input
	2:15	A43038.0100/1.D8	FUEL LEVEL	Reostat in
	2:16	+CHASSISA43033.0100/1.F7	ALTERNATOR	

	Pin Number	Drawing	Function	Type
KDU contact K1	1:1	+CABA43034.0100/1.E1	WORKING LIGHT BOOM	5A
	1:2	+CHASSISA43045.0100/2.A1	SENSOR STEERING AXLE	1.5A
	1:3	+CHASSISA43045.0100/1.A1	POWER SUPPLY SENSORS	1.5A
	1:4	A43049.0100/1.E3	REGENERATING, PROJECTING	1.5A
	1:5	A43049.0100/1.E3	BLOCKING PROJECTING	1.5A
	1:6	+CHASSISA43045.0100/1.B7	SENSORS	0V reference
	1:7	A43037.0100/3.D1	SIDE POSITION LEFT REAR	1.5A
	1:8			Analog reference 5V
	1:9	A43037.0100/3.D1	SIDE POSITION RIGHT REAR	1.5A
	1:10	A43037.0100/3.C1	REAR LIGHT LEFT	1.5A
	1:11	+CABA46091.0100/2.E1	MAGNETIC CLUTCH, COMPRESSOR	In/Output
	1:12	A43046.0100/1.E2		In/Output
	1:13	+CHASSISA43045.0100/2.B8	SENSOR STEERING AXLE	Input
	1:14	A43053.0100/1.B2	COOLING FAN HYDRAULIC OIL	10A
	1:15	+CABA43034.0100/1.D1	WORKING LIGHT BOOM	5A
	1:16			
	1:17			
	1:18			
	1:19			
	1:20	A43049.0100/1.B8	DAMPING FRONT	Input

+CHASSIS
-D797-R

	Pin Number	Drawing	Function	Type
KDU contact K1	1:21	+CHASSISA43045.0100/1.A7	BOOM ANGLE	Analog Input
	1:22	+CHASSISA43045.0100/1.B7	BOOM POSITION	Analog Input
	1:23	+CABA46091.0100/1.A8	PRESSURE REFRIGERANT	Analog Input
	1:24	A43054.0100/2.C2	OPTION REAR	Analog Input
	1:25	A43037.0100/3.C1	REAR LIGHT RIGHT	1.5A
	1:26	+CABA46091.0100/2.F1	MAGNETIC CLUTCH, COMPRESSOR	In/Output
	1:27	A43049.0100/1.A8	DAMPING BACK	Input
	1:28	A43037.0100/3.A1	REVERSING LIGHT LEFT REAR	5A
	1:29	A43060.0100/1.E1	DIRECTION LEFT REAR	1.5A
	1:30	A43067.0100/1.B2	REVERSING ALARM	1.5A
	1:31	A43050.0100/1.D1	ACTIVATION OF TOPLIFT HYDRAULICS	1.5A
	1:32	A43037.0100/3.B1	BRAKE LIGHT LEFT REAR	1.5A
	1:33	A43037.0100/3.C1	BRAKE LIGHT RIGHT REAR	1.5A
	1:34	+CHASSISA43045.0100/2.B8	SENSOR STEERING AXLE	0V reference
	1:35	A43050.0100/1.D8	VALVES	0V reference
	1:36	A43067.0100/1.B2	REVERSING ALARM	0V reference
	1:37	A43054.0100/2.D2	OPTION REAR	0V reference
	1:38			
	1:39	A43060.0100/1.E1	DIRECTION RIGHT REAR	1.5A
	1:40	A43049.0100/1.D2	INTERRUPTION PUMP	In/Output
	1:41	+CHASSISA46090.0100/1.A8	BOOM DAMPING UP/DOWN	Input
	1:42	A43037.0100/3.B1	REVERSING LIGHT RIGHT REAR	5A

This document must not be copied without our written permission and the contents thereof must not be imparted to a third party nor be used for any unauthorised purpose. Contravention will be prosecuted.

Denna ritning får ej utan vårt medgivande kopieras. Den får ej hållas tillgänglig annan eller annars obehörigen användas. Överträdelse kan komma att bestrafas enligt gällande lag.

Ref. Ruta Sq.	Nr No.	Ändring Design change	Ändring nr Change No.	Sign.	Datum Date
	1	Reference Text Adjustment, Sync. Harnesses.	041478	TKB	040930
		T=Tillk/Added U=Utgår/Deleted V=Var/Was			

	Sign.	Datum/Date	Hv.vuodnr./Project no.
Ritad/Drawn	FSN	010308	A45209.0100
Konstr/Design			
Godk/Appr	RKO	040223	Klass/Class

H.Grp: 6

Kalmar

Benämning: Krets Korsreferenser
Name: Circuit Cross References

Produkt/Product: DRFA 400-450
Ritn.nr./Drawing No.: A43044.0100

Blad/Sheet: 1/2
Utgåva/Issue: 05

https://truckmanualshub.com/

+CAB
-D790-1

K1	1:1-1:6	A43033.0100/4.D5		
K2	2:1	+CABA46089.0100/1.C1	FRONT WIPER	5A
	2:2	+CABA46091.0100/2.D1	HEATING FAN	PWM
	2:3	+CABA46091.0100/2.E1	MOTOR, RECIRCULATION	1,5A
	2:4	+CABA46089.0100/1.D1	REAR WIPER	5A
	2:5	A43037.0100/1.E1	ROT. BEACON	5A
	2:6	+CABA43034.0100/1.D1	WORKING LIGHT CAB	5A
	2:7	+CABA43034.0100/1.C1	WORKING LIGHT CAB	5A
	2:8	+CABA46091.0100/2.D8	HEATING FAN	Supply
K4	4:1	+CABA46091.0100/2.C1	WATER VALVE	0.5A
	4:2	+CABA46091.0100/2.B1	WATER VALVE	0.5A
	4:3	+CABA46091.0100/2.B1	DRAUGHT VALVE	0.5A
	4:4	+CABA46091.0100/2.A1	DRAUGHT VALVE	0.5A
	4:5	+CABA46091.0100/2.B1	DRAUGHT & WATER VALVE	Analog reference 5V
	4:6	+CABA46091.0100/2.B8	DRAUGHT & WATER VALVE	0V reference
	4:7	+CABA46091.0100/2.B8	DRAUGHT VALVE	Analog Input
	4:8	+CABA46091.0100/1.D8	TEMP. INDOOR	Reostat in
	4:9	+CABA46091.0100/1.F8	TEMP. AMBIENT	Reostat in
	4:10	+CABA46091.0100/1.E8	TEMP. FAN AIR	Reostat in
	4:11	+CABA46091.0100/1.E8	DEICING SENSOR	Reostat in
	4:12	+CABA46091.0100/1.F1	TEMP SENSORS CAB	0V reference
	4:13	+CABA46089.0100/1.C8	FRONT WIPER	Input
	4:14	+CABA46089.0100/1.C1	FRONT WIPER	24V reference
K5	5:1	A43054.0100/1.B1	DECLUCHING, OPTION	24V reference
	5:2			Input
	5:3	A46088.0100/1.B7	OPTION, STEP IN LIGHT	PWM Output
	5:4	+CABA46089.0100/1.F8	WASHER ROOF&REAR	PWM Output
	5:5	A43060.0100/1.B1	SUPPLY SWITCH LIGHTS	Output
	5:6	A43060.0100/1.B8	HAZARD	Input
	5:7	+CABA46091.0100/1.B8	FAN SPEED	Analog Input
	5:8	+CABA46091.0100/1.C8	TEMEPERATURE	Analog Input
	5:9	+CABA46091.0100/1.B8	DRAUGHT VALVE	Analog Input
	5:10	+CABA46091.0100/1.D8	CLIMATE CONTROL	0V reference
	5:11	+CABA46091.0100/1.A1	CLIMATE CONTROL	Analog reference 5V
	5:12	A43046.0100/1.C7	GND PEDALS	0V reference
	5:13	A43046.0100/1.B2	SUPPLY PEDALS	Analog reference 5V
	5:14			Input

K6	6:1	+CABA46091.0100/1.B1	INST. ILLUMINATION	PWM
	6:2	+CABA43034.0100/1.B7	SWITCH LIGHTS ATT.	Input
	6:3	+CABA43034.0100/1.A7	SWITCH LIGHTS BOOM	Input
	6:4	A43037.0100/1.C8	ROT. BEACON	Input
	6:5	A43037.0100/1.B8	MAIN LIGHT	Input
	6:6	+CABA43059.0100/1.B7	SEAT HEATER	Input
	6:7	A43054.0100/1.E8	OPTION	Input
	6:8	A43054.0100/1.D8	OPTION	Input
	6:9	A43054.0100/1.B8	OPTION	Input
	6:10	+CABA43034.0100/1.C7	SWITCH LIGHTS CAB	Input
	6:11	A43046.0100/1.C7	ACCELERATOR PEDAL	Analog Input
	6:12	A43046.0100/1.B7	BRAKE PEDAL / INCHING	Analog Input
	6:13			0V reference
	6:14	A43046.0100/1.D7	DECLUCHING	Input
	6:15			Analog Input
	6:16			Analog Input
K7	7:1	A43040.0100/1.D1	GND JOYSTICK	0V reference
	7:2	A43040.0100/1.C1	JOYSTICK	Analog reference 5V
	7:3	A43040.0100/1.C8	JOYSTICK	Analog Input
	7:4	A43040.0100/1.C8	JOYSTICK	Analog Input
	7:5	A43040.0100/1.D8	JOYSTICK	Analog Input
	7:6	A43040.0100/1.D8	JOYSTICK	Analog Input
	7:7			0.5A
	7:8	A43040.0100/1.C1	JOYSTICK	0.5A
	7:9	A43040.0100/1.B1	JOYSTICK	0.5A
	7:10			Input
	7:11	A43057.0100/1.A1	SUPPORT JACK DOWN	0.5A
	7:12	A43040.0100/1.A1	JOYSTICK	24V reference
	7:13	A43040.0100/1.A8	JOYSTICK	Input
	7:14	A43040.0100/1.A8	JOYSTICK	Input
	7:15	A43040.0100/1.B8	JOYSTICK	Input
	7:16	A43040.0100/1.B8	JOYSTICK	Input
K8	8:1	A43040.0100/1.B8	JOYSTICK	Input
	8:2	A43040.0100/1.C8	JOYSTICK	Input
	8:3	A43055.0100/1.A7	OVER RIDE	Input
	8:4	+CABA43033.0100/3.A8	EMERGENCY STOP	Input
	8:5	A43042.0100/1.A8	PARKING BRAKE	Input
	8:6	A43041.0100/1.A7	SLIDING CAB	Input
	8:7	A43041.0100/1.A7	SLIDING CAB	Input
	8:8	A43057.0100/1.C8	SUPPORT JACKS	Input
	8:9	A43057.0100/1.B8	SUPPORT JACKS	Input
	8:10	A43051.0100/2.A7	30-35 STOP	Input
	8:11	A43054.0100/1.C8	OPTION	Input
	8:12	A43043.0100/2.A7	TWISTLOCK	Input
	8:13	A43042.0100/1.A8	PARKING BRAKE	Input
	8:14	A43055.0100/1.C7	OVER RIDE	Input
	8:15	A43041.0100/1.B2	SUPPLY SWITCH	1.5A
	8:16	+CABA43033.0100/3.A1	SUPPLY SWITCH	24V reference

K9	9:1	+CABA43068.0100/1.A2	SUPPLY SWITCH LEGS	24V reference
	9:2	+CABA43068.0100/1.B2	SUPPLY SWITCH LEGS	1.5A
	9:3	+CABA43068.0100/1.A7	FRONT LEGS DOWN	Input
	9:4	+CABA43068.0100/1.A7	FRONT LEGS DOWN	Input
	9:5	+CABA43068.0100/1.C7	REAR LEGS DOWN	Input
	9:6	+CABA43068.0100/1.B7	GND SWITCH LEGS	0V reference
	9:7			24V reference
	9:8	+CABA43068.0100/1.D7	CLAMP./ RELEASING LEGS	Analog Input
	9:9	+CABA43068.0100/1.E7	CLAMP./ RELEASING LEGS	Analog Input
	9:10	+CABA43068.0100/1.C7	REAR LEGS DOWN	Input
K10	10:1	A43041.0100/1.B2	DAMPING	24V reference
	10:2	A43041.0100/1.C2	DAMPING	0V reference
	10:3			0.5A
	10:4	+CABA46091.0100/2.C8	WATER VALVE	Analog Input
	10:5			0.5A
	10:6	A43041.0100/1.C7	DAMPING	Input
	10:7	+CABA43059.0100/1.C2	SEAT HEATER	0.5A
	10:8	A43036.0100/1.A2	RELAY WORK. LIGHT	0.5A
	10:9	A43038.0100/1.C1	HOUR METER & AIR SEAT	0.5A
	10:10	+CABA43033.0100/3.D1	-K1	0.5A
	10:11	+CABA43033.0100/3.D1	-K2	0.5A
	10:12	+CABA43033.0100/3.C1	-K3	0.5A
	10:13	+CABA46089.0100/1.E1	WASHER	3A
	10:14	+CABA46089.0100/1.E1	ROOF WIPER	1.5A
	10:15			Input
	10:16	+CABA43033.0100/3.D1	-K4	0.5A
K11	11:1	+CABA43033.0100/3.C8	IGNITION SWITCH	Input
	11:2	A43037.0100/4.B8	INTERIOR LIGHTNING	Input
	11:3	A43037.0100/4.B8	BRAKING CAB DOOR	Input
	11:4	A46088.0100/1.A7	OPTION, STEP IN LIGHT	Input
	11:5			1.5A
	11:6	A43037.0100/4.D1	INTERIOR LIGHT	0.5A
	11:7	See K13	Redundant power	Dig out
	11:8	See K13	Redundant power	Dig out
	11:9	See K13	Redundant power	Dig out
	11:10	See K13	Redundant power	Dig out
	11:11	A43056.0100/1.B2	HORN	3A
	11:12	A43056.0100/1.C2	SEAT SWITCH	24V reference
	11:13	+CABA43033.0100/3.E8	FEEDBACK K2	Input
	11:14	A43056.0100/1.C8	SEAT SWITCH	Input
K12	12:1	+CABA46089.0100/1.D1	REAR WIPER	24V reference
	12:2	+CABA46089.0100/1.D8	REAR WIPER	Input
	12:3	+CABA46089.0100/1.E1	ROOF WIPER	24V reference
	12:4	+CABA46089.0100/1.E8	ROOF WIPER	Input
K13	13:1-13:12	A43032.0200/1.D6	SUPPLY & CAN-BUS	CAN with power

This document must not be copied without our written permission and the contents thereof must not be imparted to a third party nor be used for any unauthorised purpose. Contravention will be prosecuted.

Denna ritning får ej utan vårt medgivande kopieras. Den får ej hållas tillgänglig annan eller annars obehörigen användas. Överträdelse kommer att beivras med stöd av gällande lag.

Ref. Ruta Sq.	Nr No.	Ändring Design change	Ändring nr Change No.	Sign.	Datum Date
	1	Reference Text Adjustment, Sync. Harnesses.	041478	TKB	040930
T=Tillk/ Added U=Utgår/Deleted V=Var/Was					

	Sign.	Datum/Date	Hu vudnr./Project no.
Ritad/Drawn	FSN	010308	A45209.0100
Konstr/Design			
Godk/Appr	RKO	040223	Klass/Class

H.Grp: 6

Kalmar

Benämning: Krets Korsreferenser
Name: Circuit Cross References

Produkt/Product: DRFA 400-450
Ritn.nr./Drawing No.: A43044.0100

Blad/Sheet: 2/2
Utgåva/Issue: 05

https://truckmanualshub.com/

KDU
OPTION

+CHASSIS
-D797-O

	Pin Number	Drawing	Function	Type
KDU contact K2	Power	A43033.0200/1.B5	CAN-BUS	
	CAN	A43032.0200/1.F8		
	2:11	A43033.0200/1.A5		Emergency stop
	2:13			
	2:15			
	2:16			

+CHASSIS
-D797-O

	Pin Number	Drawing	Function	Type
KDU contact K1	1:1			
	1:2	A43041.0100/1.D2	CAB FORWARD/UP	1.5A
	1:3	A43041.0100/1.E2	CAB REVERSE/DOWN	1.5A
	1:4	A43066.0100/2.A2	MICROLEVER STEERING LEFT	1.5A
	1:5	A43066.0100/2.B2	MICROLEVER STEERING RIGHT	1.5A
	1:6	A43057.0100/2.D1	SENSORS SUPPORT JACK	0V reference
	1:7	A43065.0100/1.E2	TILT CAB, UNLOAD HYDRAULIC OIL	1.5A
	1:8			
	1:9	A43057.0100/2.A1	SUPPLY SENSORS SUPPORT JACK	1.5A
	1:10	A43041.0100/1.C2	CAB LOW POSITION	1.5A
	1:11			
	1:12			
	1:13	A43057.0100/2.A8	LEFT SUPPORT JACK, UPPER POS	Input
	1:14			
	1:15			
	1:16	A43041.0100/1.D7	CAB FORWARD/UP	PWM
	1:17	A43041.0100/1.E7	CAB REVERSE/DOWN	PWM
	1:18	A43066.0100/2.A8	MICROLEVER STEERING LEFT	PWM
	1:19	A43066.0100/2.B8	MICROLEVER STEERING RIGHT	PWM
	1:20	A43057.0100/2.B8	LEFT SUPPORT JACK, LOWER POS	Input

	Pin Number	Drawing	Function	Type
KDU contact K1	1:21	A43041.0100/1.D7	CAB LOW POSITION	Analog Input
	1:22	A43065.0100/1.B8	TILT CAB, UNLOAD HYDRAULIC OIL	Analog Input
	1:23			
	1:24			
	1:25	A43065.0100/1.A2	TILT CAB, UNLOAD HYDRAULIC OIL	1.5A
	1:26			
	1:27	A43057.0100/2.C8	RIGHT SUPPORT JACK, UPPER POS	Input
	1:28			
	1:29			
	1:30	A43057.0100/1.C1	SUPPORT JACKS UP	1.5A
	1:31	A43057.0100/1.D1	SUPPORT JACKS DOWN	1.5A
	1:32	A43065.0100/1.C2	TILT CAB UP	1.5A
	1:33	A43065.0100/1.D2	TILT CAB DOWN	1.5A
	1:34	A43057.0100/1.C8	SUPPORT JACKS UP	0V reference
	1:35	A43057.0100/1.D8	SUPPORT JACKS DOWN	0V reference
	1:36	A43065.0100/1.C8	TILT CAB	0V reference
	1:37	A43065.0100/1.B8	TILT CAB, UNLOAD HYDRAULIC OIL	0V reference
	1:38	A43041.0100/1.D2	CAB LOW POSITION	0V reference
	1:39			
	1:40			
	1:41	A43057.0100/2.D8	RIGHT SUPPORT JACK, LOWER POS	Input
	1:42			

This document must not be copied without our written permission and the contents thereof must not be imparted to a third party nor be used for any unauthorised purpose. Contravention will be prosecuted.

Denna ritning får ej utan vårt medgivande kopieras. Den får ej hållas tillgänglig annan eller annars obehörigen användas. Överträdelse kommer att beivras med stöd av gällande lag.

Ref. Ruta Sq.	Nr No.	Ändring Design change	Ändring nr Change No.	Sign.	Datum Date
	1	Reference Text Adjustment, Sync. Harnesses.	041478	TKB	040930
T=Tillk/Added U=Utgår/Deleted V=Var/Was					

	Sign.	Datum/Date	Huvudnr./Project no.
Ritad/Drawn	FSN	010308	A45209.0100
Konstr/Design			
Godk/Appr	RKO	031009	Klass/Class

H.Grp: 6

Kalmar

Benämning: Krets Korsreferenser Opt
Name: Circuit Cross References Opt

Produkt/Product: DRFA 400-450
Ritn.nr./Drawing No.: A43044.0200

Blad/Sheet: 1/1
Utgåva/Issue: 03

https://truckmanualshub.com/

KDU
ATTACHMENT

+BOOM
-D791-1

	Pin Number	Drawing	Function	Type
KDU contact K2	Power	A43033.0100/5.C5		
	CAN	A44875.0100/1.B4		
	2:11	A43033.0100/5.B5		Emergency stop
	2:13			
	2:15			
	2:16			

+BOOM
-D791-1

	Pin Number	Drawing	Function	Type
KDU contact K1	1:1	+CABA43034.0100/1.E1	WORKING LIGHT ATTACHMENT	5A
	1:2	A43050.0100/1.A1	ROTATION C.W.	1.5A
	1:3	A43050.0100/1.B1	ROTATION C.C.W.	1.5A
	1:4	+ATTACHMENTA43051.0100/1.B1	20-40 OUT	1.5A
	1:5	+ATTACHMENTA43051.0100/1.B1	40-20 IN	1.5A
	1:6	A43043.0100/2.C7	INDICATION LAMPS	0V reference
	1:7	A43064.0100/1.B2	TILT LOCK	1.5A
	1:8			
	1:9	A43064.0100/1.B2	TILT LOCK	1.5A
	1:10	A43051.0100/2.C1	POWER SUPPLY SENSORS	1.5A
	1:11	A43050.0100/1.C8	ROTATION STOP	In/Output
	1:12	A43051.0100/2.D7	DAMPING 20-40	In/Output
	1:13	+ATTACHMENTA43043.0100/1.C8	ALIGNMENT FRONT	Input
	1:14	A43058.0100/1.D2	CENTRAL LUBRICATION, ATT.	10A
	1:15	+CABA43034.0100/1.F1	WORKING LIGHT ATTACHMENT	5A
	1:16	A43050.0100/1.A8	ROTATION C.W.	PWM
	1:17	A43050.0100/1.B8	ROTATION C.C.W.	PWM
	1:18	+ATTACHMENTA43051.0100/1.B8	20-40 OUT	PWM
	1:19	+ATTACHMENTA43051.0100/1.B8	40-20 IN	PWM
	1:20	A43051.0100/2.E7	30-35 STOP	Input

	Pin Number	Drawing	Function	Type
KDU contact K1	1:21	+CHASSISA43045.0100/2.C8	MEASUREPOINT SCALE	Analog Input
	1:22	+ATTACHMENTA43043.0100/1.D8	UNLOCKED TWISTLOCK	Analog Input
	1:23	+ATTACHMENTA43043.0100/1.E8	LOCKED TWISTLOCK	Analog Input
	1:24	+ATTACHMENTA43043.0100/1.B8	LOCKED TWISTLOCK	Analog Input
	1:25	A43043.0100/2.B1	UNLOCKED TW	1.5A
	1:26	+ATTACHMENTA43043.0100/1..C8	ALIGNMENT REAR	In/Output
	1:27	+ATTACHMENTA43043.0100/1.E8	ALIGNMENT REAR	Input
	1:28	+ATTACHMENTA43035.0100/1.A2	EXTRA WORKING LIGHT	5A
	1:29	A43043.0100/2.C1	ALIGNMENT	1.5A
	1:30	+ATTACHMENTA43051.0100/1.D1	SIDESHIFT RIGHT	1.5A
	1:31	+ATTACHMENTA43051.0100/1.C1	SIDESHIFT LEFT	1.5A
	1:32	A43043.0100/2.D1	LOCK TW	1.5A
	1:33	A43043.0100/2.D2	UNLOCK TW	1.5A
	1:34	+ATTACHMENTA43051.0100/1.D8	SIDESHIFT RIGHT	0V reference
	1:35	+ATTACHMENTA43051.0100/1.C8	SIDESHIFT LEFT	0V reference
	1:36	A43043.0100/2.D7	LOCK TW	0V reference
	1:37	A43043.0100/2.D7	UNLOCK TW	0V reference
	1:38	A43051.0100/2.C7	SENSORS	0V reference
	1:39	A43043.0100/2.C1	LOCKED TW	1.5A
	1:40	+ATTACHMENTA43043.0100/1.A8	UNLOCK TW	In/Output
	1:41	+ATTACHMENTA43043.0100/1.B8	UNLOCKED TWISTLOCK	Input
	1:42	+ATTACHMENTA43035.0100/1.B2	EXTRA WORKING LIGHT	5A

This document must not be copied without our written permission and the contents thereof must not be imparted to a third party nor be used for any unauthorised purpose. Contravention will be prosecuted.

Denna ritning får ej utan vårt medgivande kopieras. Den får ej hållas tillgänglig annan eller annars obehörigen användas. Överträdelse kommer att beivras med stöd av gällande lag.

Ref. Ruta Sq.	Nr No.	Ändring Design change	Ändring nr Change No.	Sign.	Datum Date
	1	Reference Text Adjustment, Sync. Harnesses.	041478	TKB	040930
		T=Tillk/Added U=Utgår/Deleted V=Var/Was			

	Sign.	Datum/Date	Huvudnr./Project no.
Ritad/Drawn	FSN	010308	A452/09.0100
Konstr/Design			
Godk/Appr	RKO	031009	Klass/Class

H.Grp: 6

Kalmar

Benämning: Krets Korsreferenser Agg
Name: Circuit Cross References Att

Produkt/Product: DRFA 400-450
Ritn.nr./Drawing No.: A43044.0300

Blad/Sheet: 1/1
Utgåva/Issue: 03

https://truckmanualshub.com/

+BOOM
-D791-2

	Pin Number	Drawing	Function	Type
KDU contact K2	Power	A44880.0100/1.C4		
	CAN	A44875.0200/1.D7		
	2:11	A44880.0100/1.C4		Emergency stop
	2:13			
	2:15			
	2:16			

+BOOM
-D791-2

	Pin Number	Drawing	Function	Type
KDU contact K1	1:1			
	1:2	A44910.0100/1.A2	LEVELLING RIGHT	1.5A
	1:3	A44910.0100/1.B2	LEVELLING LEFT	1.5A
	1:4	A44910.0100/1.C2	TILT OUT	1.5A
	1:5	A44910.0100/1.C2	TILT IN	1.5A
	1:6	A44910.0100/1.D7	LEVELLING	0V reference
	1:7			
	1:8			
	1:9	A45043.0100/2.E1	Over Height leg upper pos	1.5A
	1:10	A45043.0100/2.C1	Over Height leg upper pos	1.5A
	1:11			
	1:12			
	1:13	A45043.0100/2.C8	Over Height, Leg upper position	Input
	1:14			
	1:15			
	1:16	A44910.0100/1.A7	LEVELLING RIGHT	PWM
	1:17	A44910.0100/1.B7	LEVELLING LEFT	PWM
	1:18	A44910.0100/1.C7	TILT OUT	PWM
	1:19	A44910.0100/1.C7	TILT IN	PWM
	1:20	A45043.0100/2.D8	Over Height, Leg upper position	Input

	Pin Number	Drawing	Function	Type
KDU contact K1	1:21			
	1:22			
	1:23			
	1:24			
	1:25			
	1:26			
	1:27			
	1:28			
	1:29			
	1:30	A44910.0100/1.D2	LEVELLING	1.5A
	1:31	A44910.0100/1.E2	LEVELLING	1.5A
	1:32	A45043.0100/2.B1	Over height down	1.5A
	1:33	A45043.0100/2.A1	Over height up	1.5A
	1:34	A44910.0100/1.E7	LEVELLING	0V reference
	1:35			
	1:36			
	1:37			
	1:38			
	1:39			
	1:40			
	1:41			
	1:42			

This document must not be copied without our written permission and the contents thereof must not be imparted to a third party nor be used for any unauthorised purpose. Contravention will be prosecuted.

Denna ritning får ej utan vårt medgivande kopieras. Den får ej hållas tillgänglig annan eller annars obehörigen användas. Överträdelse kommer att beivras med stöd av gällande lag.

Ref. Ruta Sq.	Nr No.	Ändring Design change	Ändring nr Change No.	Sign.	Datum Date
	1	Reference Text Adjustment, Sync. Harnesses.	041478	TKB	040930
T=Tillk/Added U=Utgår/Deleted V=Var/Was					

	Sign.	Datum/Date	Huvudnr./Project no.
Ritad/Drawn	FSN	030218	A45209.0100
Konstr/Design			
Godk/Appr	RKO	031009	Klass/Class

H.Grp: 6

Kalmar

Benämning: Krets Korsreferenser Agg

Name: Circuit Cross References Att

Produkt/Product: DRFA 400-450

Ritn.nr./Drawing No.: A43044.0400

Blad/Sheet: 1/1

Utgåva/Issue: 03

https://truckmanualshub.com/

Left side

+ATTACHMENT
-D791-3

	Pin Number	Drawing	Function	Type
KDU contact K2	Power	+ATTACHMENTA43068.0100/2.E7		
	CAN	A44875.0300/1.B7	CAN CIRCUIT	
	2:11	+ATTACHMENTA43068.0100/2.D6	POWER SUPPLY	Emergencystop
	2:13			
	2:15			
	2:16			

+ATTACHMENT
-D791-3

	Pin Number	Drawing	Function	Type
KDU contact K1	1:1	+ATTACHMENTA43068.0100/12.C2	WORK LIGHT	5A
	1:2	A44910.0200/1.D2	LEVELLING REIGHT	1.5A
	1:3	A44910.0200/1.E2	LEVELLING LEFT	1.5A
	1:4	+ATTACHMENTA43068.0100/5.C2	FRONT KNEE IN	1.5A
	1:5	+ATTACHMENTA43068.0100/5.C2	FRONT KNEE OUT	1.5A
	1:6	+ATTACHMENTA43068.0100/5.A8	0V FOR PIN 2, 3, 4, 5, 30, 31	0V reference
	1:7	+ATTACHMENTA43068.0100/6.C2	LOWERING REAR LEG	1.5A
	1:8			
	1:9	+ATTACHMENTA43068.0100/6.C2	REAR LEG UP	1.5A
	1:10	+ATTACHMENTA43068.0100/11.C2	IND. ALIGNMENT RIGHT FRONT	1.5A
	1:11	+ATTACHMENTA43068.0100/5.A2	CLAMPING IN	In/Output
	1:12	+ATTACHMENTA43068.0100/5.B2	CLAMPING OUT	In/Output
	1:13	+ATTACHMENTA43068.0100/9.E8	ALIGNMENT FRONT LEG	Input
	1:14			
	1:15	A44910.0200/1.C2	LEVELLING	5A
	1:16	A44910.0200/1.D8	LEVELLING RIGHT	PWM
	1:17	A44910.0200/1.E8	LEVELLING LEFT	PWM
	1:18			
	1:19			
	1:20	+ATTACHMENTA43068.0100/10.E8	ALIGNMENT REAR LEG	Input

	Pin Number	Drawing	Function	Type
KDU contact K1	1:21	+ATTACHMENTA43068.0100/9.B8	FRONT KNEE	Analog Input
	1:22	+ATTACHMENTA43068.0100/10.C8	REAR LEG	Analog Input
	1:23	+ATTACHMENTA43068.0100/9.C8	FRONT LEG	Analog Input
	1:24	+ATTACHMENTA43068.0100/10.C8	REAR LEG	Analog Input
	1:25	+ATTACHMENTA43068.0100/11.D2	IND. ALIGNMENT RIGHT REAR	1.5A
	1:26	+ATTACHMENTA43068.0100/9.A2	POWER SUPPLY FOR SENSORS	In/Output
	1:27	+ATTACHMENTA43068.0100/9.D8	CLAMP FRONT LEG	Input
	1:28			
	1:29	+ATTACHMENTA43068.0100/11.D2	IND. ALIGNMENT LEFT FRONT	1.5A
	1:30	+ATTACHMENTA43068.0100/5.D2	REAR KNEE IN	1.5A
	1:31	+ATTACHMENTA43068.0100/5.D2	REAR KNEE OUT	1.5A
	1:32	+ATTACHMENTA43068.0100/6.A2	LOWERING FRONT LEG	1.5A
	1:33	+ATTACHMENTA43068.0100/6.B2	FRONT LEG UP	1.5A
	1:34	+ATTACHMENTA43068.0100/6.A8	0V FOR PIN 7, 9, 32, 33, 42	0V reference
	1:35			
	1:36	+ATTACHMENTA43068.0100/9.B8	SENSORS FRONT KNEE AND LEG	0V reference
	1:37	+ATTACHMENTA43068.0100/10.C8	SENSORS REAR KNEE AND LEG	0V reference
	1:38	+ATTACHMENTA43068.0100/11.C8	0V FOR ALIGNMENT LAMPS	0V reference
	1:39	+ATTACHMENTA43068.0100/11.E2	IND. ALIGNMENT LEFT REAR	1.5A
	1:40	+ATTACHMENTA43068.0100/10.A8	DRIVING POSITION	In/Output
	1:41	+ATTACHMENTA43068.0100/10.D8	CLAMP REAR LEG	Input
	1:42	+ATTACHMENTA43068.0100/6.D2	DRIVING POSITION	5A

Right side

+ATTACHMENT
-D791-4

	Pin Number	Drawing	Function	Type
KDU contact K2	Power	+ATTACHMENTA43068.0100/2.B7		
	CAN	A44875.0300/1.D7	CAN CIRCUIT	
	2:11	+ATTACHMENTA43068.0100/2.B6	POWER SUPPLY	Emergencystop
	2:13			
	2:15			
	2:16			

+ATTACHMENT
-D791-4

	Pin Number	Drawing	Function	Type
KDU contact K1	1:1	+ATTACHMENTA43068.0100/12.B2	WORK LIGHT	5A
	1:2	A44910.0200/1.B2	TILT OUT	1.5A
	1:3	A44910.0200/1.B2	TILT IN	1.5A
	1:4	+ATTACHMENTA43068.0100/3.C2	FRONT KNEE IN	1.5A
	1:5	+ATTACHMENTA43068.0100/3.C2	FRONT KNEE OUT	1.5A
	1:6	+ATTACHMENTA43068.0100/3.A8	0V FOR PIN 2, 3, 4, 5, 30, 31	0V reference
	1:7	+ATTACHMENTA43068.0100/4.C2	LOWERING REAR LEG	1.5A
	1:8			
	1:9	+ATTACHMENTA43068.0100/4.C2	REAR LEG UP	1.5A
	1:10	+ATTACHMENTA43068.0100/11.A2	FRONT LEGS UPPER POSITION	1.5A
	1:11	+ATTACHMENTA43068.0100/3.A2	CLAMPING IN	In/Output
	1:12	+ATTACHMENTA43068.0100/3.B2	CLAMPING OUT	In/Output
	1:13	+ATTACHMENTA43068.0100/7.E8	ALIGNMENT FRONT LEG	Input
	1:14			
	1:15			
	1:16	A44910.0200/1.B8	TILT OUT	PWM
	1:17	A44910.0200/1.B8	TILT IN	PWM
	1:18			
	1:19			
	1:20	+ATTACHMENTA43068.0100/8.E8	ALIGNMENT REAR LEG	Input

	Pin Number	Drawing	Function	Type
KDU contact K1	1:21	+ATTACHMENTA43068.0100/7.B8	FRONT KNEE	Analog Input
	1:22	+ATTACHMENTA43068.0100/8.C8	REAR LEG	Analog Input
	1:23	+ATTACHMENTA43068.0100/7.C8	FRONT LEG	Analog Input
	1:24	+ATTACHMENTA43068.0100/8.C8	REAR LEG	Analog Input
	1:25	+ATTACHMENTA43068.0100/11.B2	FRONT LEGS LOWER POSITION	1.5A
	1:26	+ATTACHMENTA43068.0100/7.A2	POWER SUPPLY FOR SENSORS	In/Output
	1:27	+ATTACHMENTA43068.0100/7.D8	CLAMP FRONT LEG	Input
	1:28			
	1:29	+ATTACHMENTA43068.0100/11.B2	CLAMP POSITION FRONT LEGS	1.5A
	1:30	+ATTACHMENTA43068.0100/3.D2	REAR KNEE IN	1.5A
	1:31	+ATTACHMENTA43068.0100/3.E2	REAR KNEE OUT	1.5A
	1:32	+ATTACHMENTA43068.0100/4.A2	LOWERING FRONT LEG	1.5A
	1:33	+ATTACHMENTA43068.0100/4.B2	FRONT LEG UP	1.5A
	1:34	+ATTACHMENTA43068.0100/4.A8	0V FOR PIN 7, 9, 32, 33, 42	0V reference
	1:35			
	1:36	+ATTACHMENTA43068.0100/7.B8	SENSORS FRONT KNEE AND LEG	0V reference
	1:37	+ATTACHMENTA43068.0100/8.C8	SENSORS REAR KNEE AND LEG	0V reference
	1:38	+ATTACHMENTA43068.0100/11.A8	0V FOR INDICATION LAMPS	0V reference
	1:39	+ATTACHMENTA43068.0100/11.C2	CLAMP POSITION REAR LEGS	1.5A
	1:40	+ATTACHMENTA43068.0100/8.A8	DRIVING POSITION	In/Output
	1:41	+ATTACHMENTA43068.0100/8.D8	CLAMP REAR LEG	Input
	1:42	+ATTACHMENTA43068.0100/4.D2	DRIVING POSITION	5A

This document must not be copied without our written permission and the contents thereof must not be imparted to a third party nor be used for any unauthorised purpose. Contravention will be prosecuted.

Denna ritning får ej utan vårt medgivande kopieras. Den får ej hållas tillgänglig annan eller annars obehörigen användas. Överträdelse kommer att beivras med stöd av gällande lag.

Ref. Ruta Sq.	Nr No.	Ändring Design change	Ändring nr Change No.	Sign.	Datum Date
	1	Reference Text Adjustment, Sync. Harnesses.	041478	TKB	040930
		T=Tillk/ Added U=Utgår/Deleted V=Var/Was			

	Sign.	Datum/Date	Huvudnr./Project no.
Ritad/Drawn	FSN	030218	A452/09.0100
Konstr/Design			
Godk/Appr	RKO	031009	Klass/Class

H.Grp: 6

Kalmar

Benämning: Krets Korsreferenser Agg Kombi

Name: Circuit Cross References Att Combi

Produkt/Product: DRFA 400-450

Ritn.nr./Drawing No.: A43044.0500

Blad/Sheet: 1/1

Utgåva/Issue: 03

https://truckmanualshub.com/

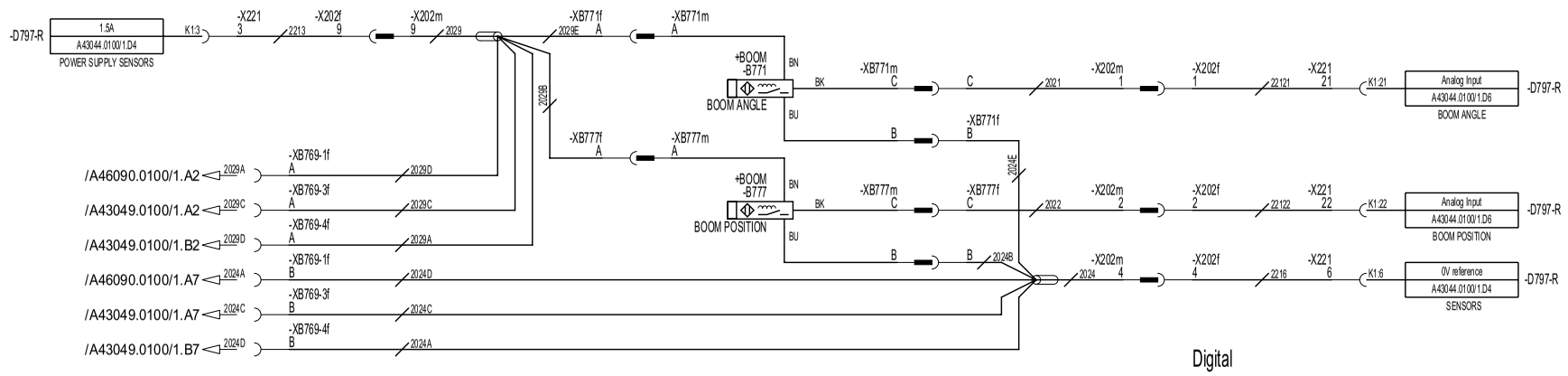

Digital

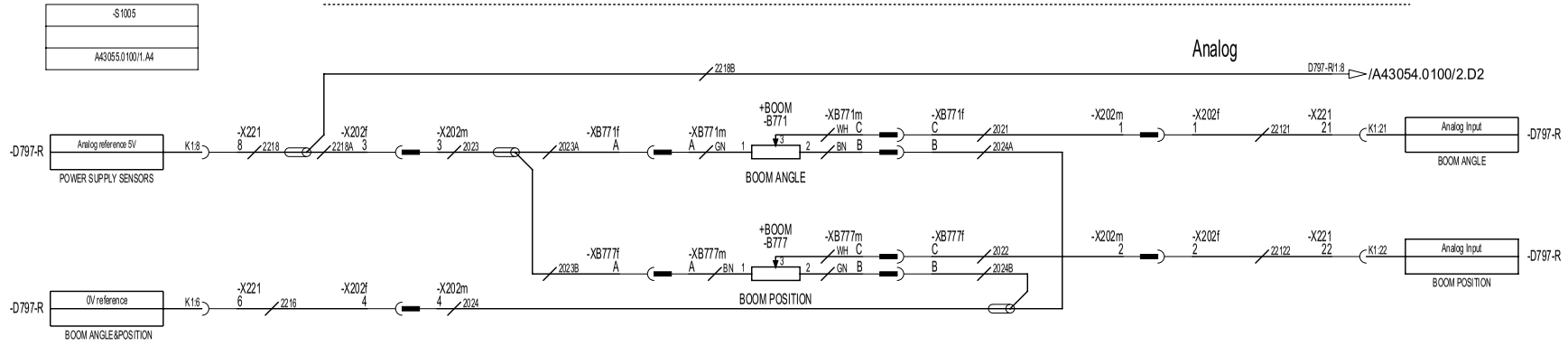

Function \ Sensor		768-10	768-11	768-12	768-13	Analog 777	Analog 771	Digital 777	Digital 771	7221	7224
1	Mechanical. OP			X				X	X	X	
2	Electrical. OP	X	X	X	X	X	X				
3	Dyn. scale + Mec. OP	X	X	X	X	X	X			X	
4	Fix scale + Mec. OP	X		X				X	X	X	X
5	Fix scale + Analog boom + Mec. OP	X		X		X	X			X	X
6	Analog boom + Mec. OP			X		X	X			X	

This document must not be copied without our written permission and the contents thereof must not be imparted to a third party nor be used for any unauthorized purpose. Contravention will be prosecuted.

Denna ritning får ej utan vårt medgivande kopieras. Den får ej hållas tillgänglig annan eller annars obehörigen användas. Överträdelse kan leva med stöd av gällande lag.

Ref. Ruta Sq.	Nr No.	Ändring Design change	Ändring nr Change No.	Sign.	Datum Date
	1	Reference Text Adjustment, Sync. Harnesses.	041478	TKB	040930
		T=Tillk/Added U=Utgår/Deleted V=Var/Was			

	Sign.	Datum/Date	Hv.vuodnr./Project no.
Ritad/Drawn	FSN	030131	A45209.0100
Konstr/Design			
Godk/Appr	RKO	031009	Klass/Class

+CHASSIS
H.Grp: 6

Kalmar

Benämning: Krets OP + Våg
Name: Circuit OP + Scale

Produkt/Product: DRFA 400-450
Ritn.nr./Drawing No.: A43045.0100

Blad/Sheet: 1/2
Utgåva/Issue: 04

https://truckmanualshub.com/

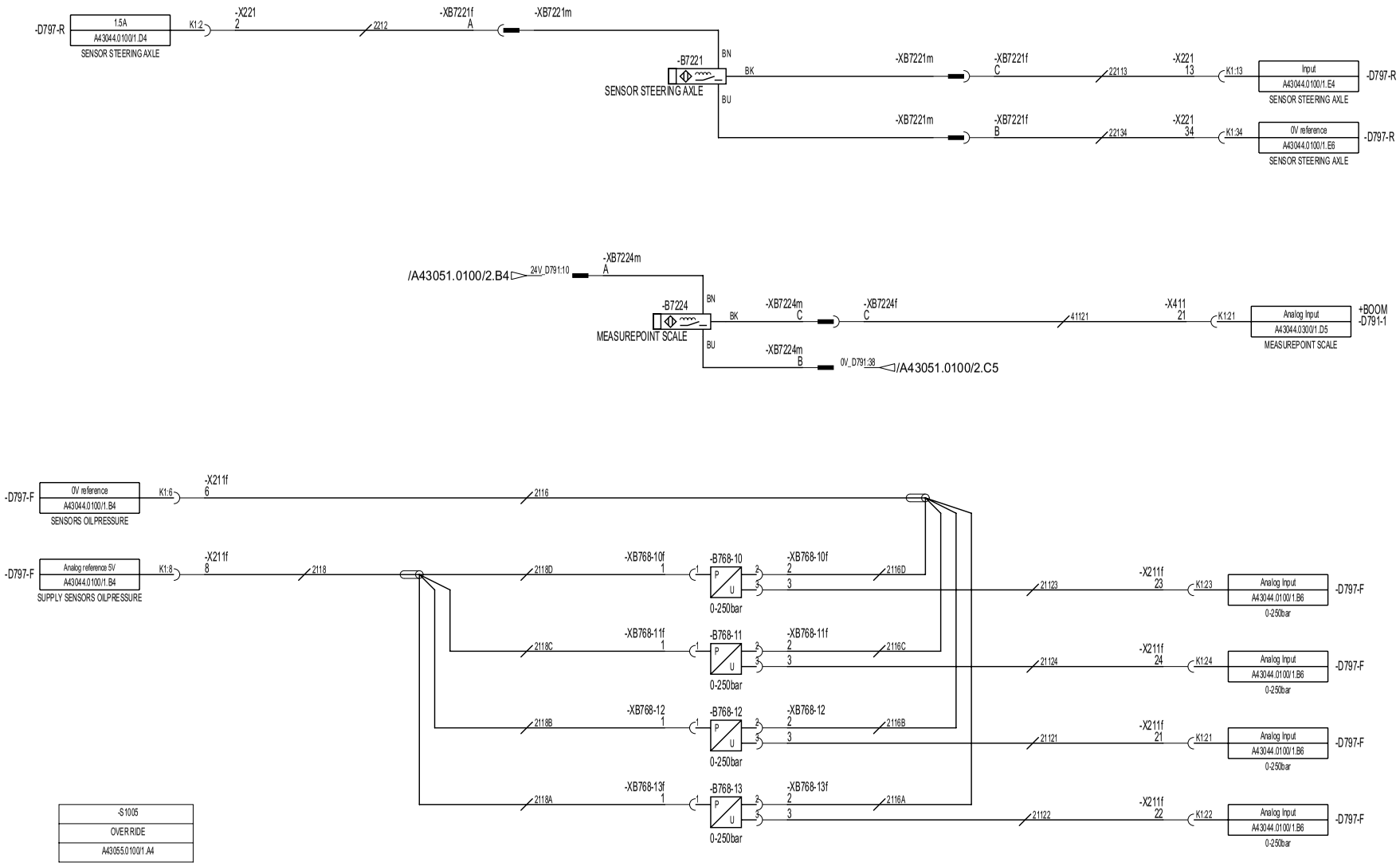

Ref. Ruta Sq.	Nr No.	Ändring Design change	Ändring nr Change No.	Sign.	Datum Date
	1	Reference Text Adjustment, Sync. Harnesses.	041478	TKB	040930
		T=Tillk/Added U=Utgår/Deleted V=Var/Was			

	Sign.	Datum/Date	Huvudnr./Project no.
Ritad/Drawn	FSN	010605	A45209.0100
Konstr/Design			
Godk/Appr	RKO	031009	Klass/Class

+CHASSIS
H.Grp: 6

Kalmar

Benämning: Krets OP + Våg
Name: Circuit OP + Scale

Produkt/Product: DRFA 400-450
Ritn.nr./Drawing No.: A43045.0100

Blad/Sheet: 2/2
Utgåva/Issue: 04

This document must not be copied without our written permission and the contents thereof must not be imparted to a third party nor be used for any unauthorised purpose. Contravention will be prosecuted.

Denna ritning får ej utan vårt medgivande kopieras. Den får ej hållas tillgänglig annan eller annars obehörigen användas. Överträdelse kommer att beivras med stöd av gällande lag.

https://truckmanualshub.com/

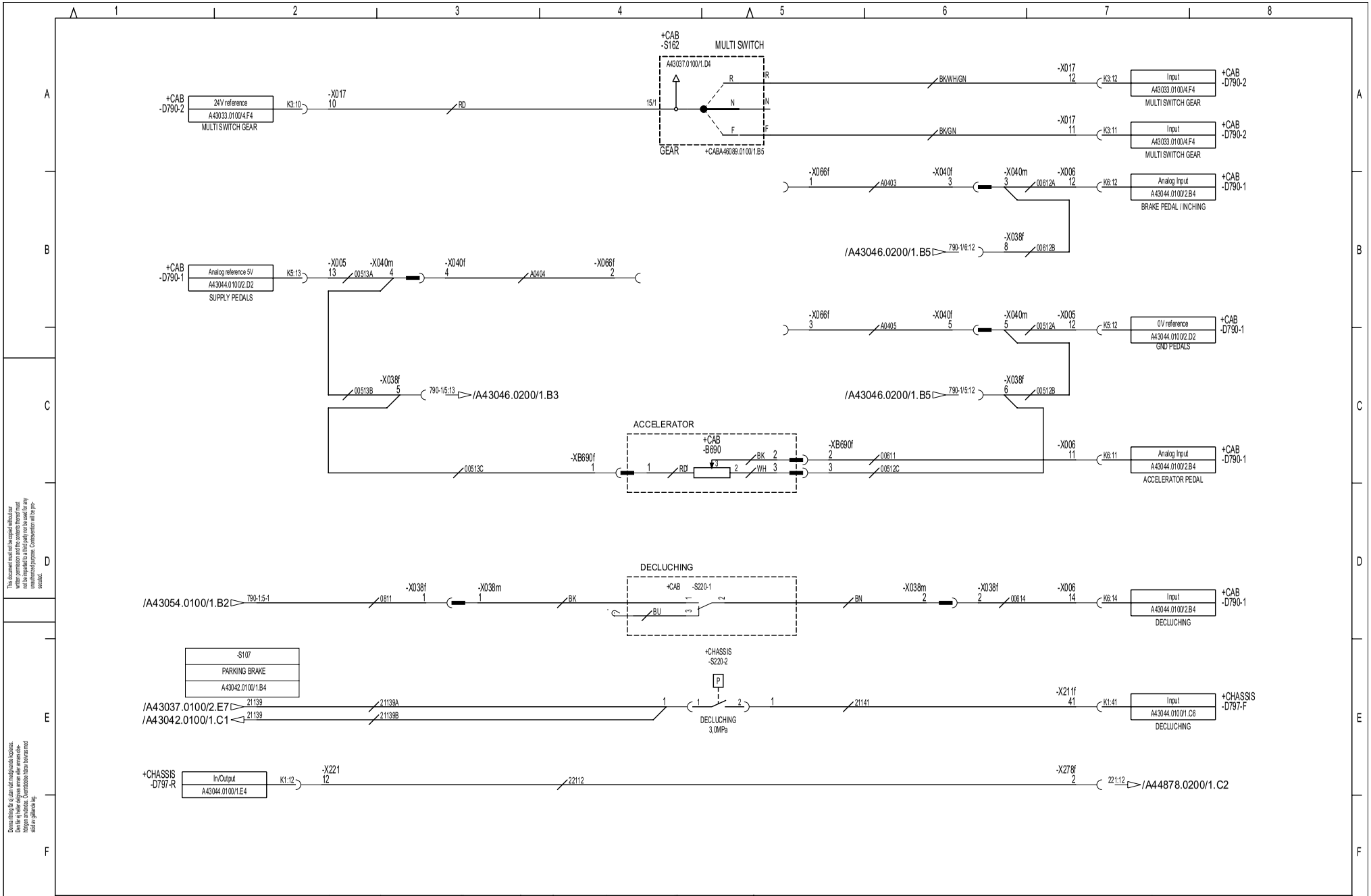

This document must not be copied without our written permission and the contents thereof must not be imparted to a third party nor be used for any unauthorized purpose. Contravention will be prosecuted.

Denna ritning får ej utan vårt medgivande kopieras. Den får ej hållas tillgänglig annan eller annars obehörigen användas. Överträdelse kränks och skall av gällande lag.

Ref. Ruta Sq.	Nr No.	Ändring Design change	Ändring nr Change No.	Sign.	Datum Date
	1	Reference Text Adjustment, Sync. Harnesses.	041478	TKB	040930
		T=Tillk/Added U=Utgår/Deleted V=Var/Was			

	Sign.	Datum/Date	Hv.vudnr./Project no.
Ritad/Drawn	FSN	010411	A45209.0100
Konstr/Design			
Godk/Appr	RKO	031009	Klass/Class

H.Grp: 6

Kalmar

Benämning: Krets Drivlina
Name: Circuit Drivetrain

Produkt/Product: DRFB 400-450
Ritn.nr./Drawing No.: A43046.0100

Blad/Sheet: 1/1
Utgåva/Issue: 04

https://truckmanualshub.com/

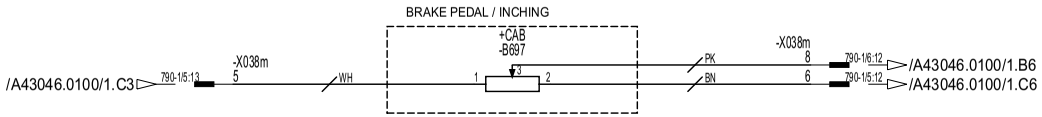

This document must not be copied without our written permission and the contents thereof must not be imparted to a third party nor be used for any unauthorized purpose. Contravention will be prosecuted.

Denna ritning får ej utan vårt medgivande kopieras. Den får ej hållas tillgänglig annan eller annars obehörigen användas. Överträdelse kommer att beivras med stöd av gällande lag.

Ref. Ruta Sq.	Nr No.	Ändring Design change	Ändring nr Change No.	Sign.	Datum Date
	1	Reference Text Adjustment, Sync. Harnesses.	041478	TKB	040930
		T=Tillk/Added U=Utgår/Deleted V=Var/Was			

	Sign.	Datum/Date	Huvudnr./Project no.
Ritad/Drawn	FSN	020919	A45209.0100
Konstr/Design			
Godk/Appr	RKO	031009	Klass/Class

H.Grp: 6

Kalmar

Benämning: Krets Drivlina Opt.

Name: Circuit Drivetrain Opt.

Produkt/Product: DRFB 400-450

Ritn.nr./Drawing No.: A43046.0200

Blad/Sheet: 1/1

Utgåva/Issue: 03

https://truckmanualshub.com/

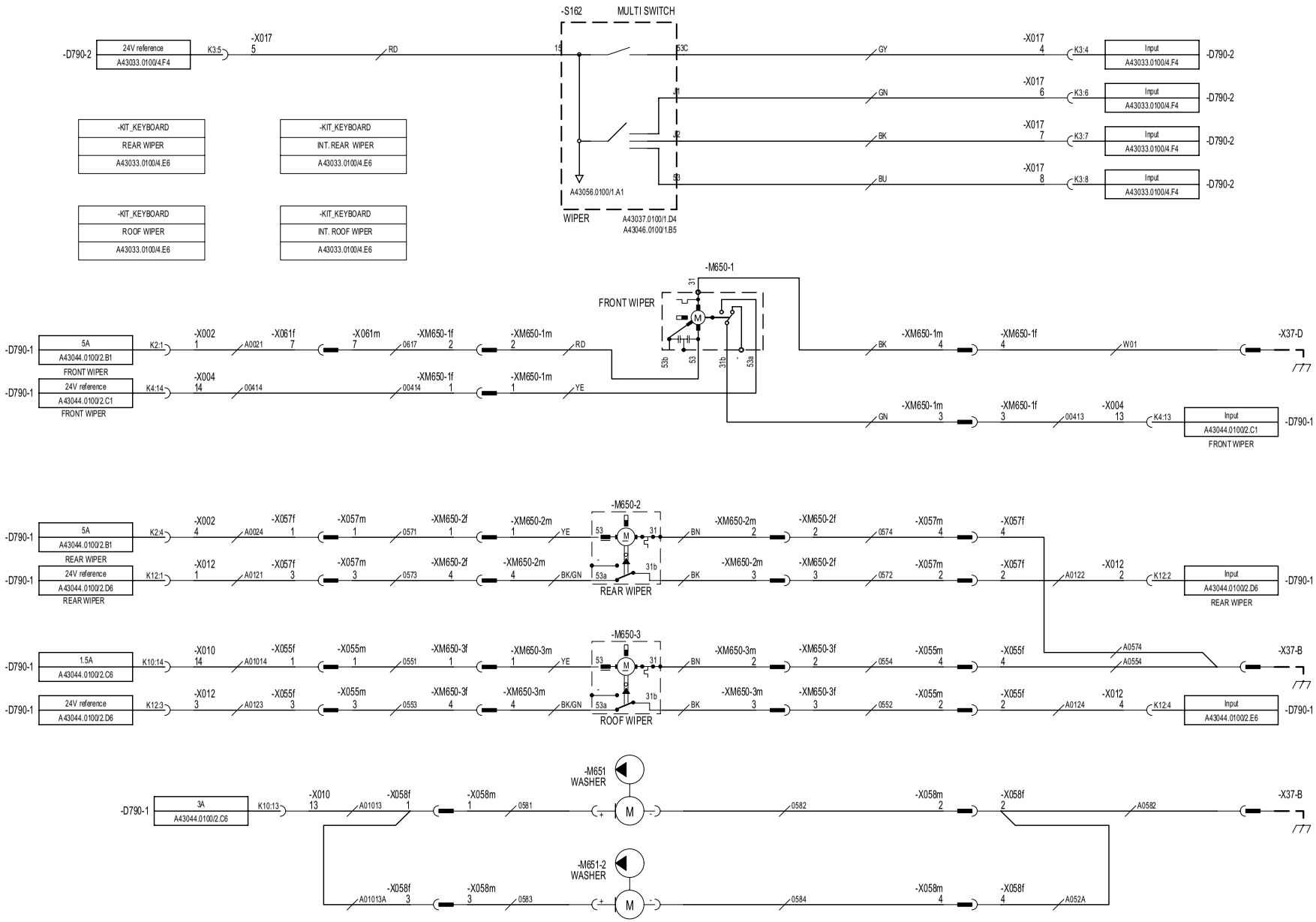

This document must not be copied without our written permission and the contents thereof must not be imparted to a third party nor used for any unauthorized purpose. Contravention will be prosecuted.

Denna ritning får ej utan vårt medgivande kopieras. Det är ej heller tillåtet att använda innehållet för annan ändamål eller att det lämnas ut till tredje man.

Ref. Ruta Sq.	Nr No.	Ändring Design change	Ändring nr Change No.	Sign.	Datum Date
	1	moving the whole project to prod	030735	TKB	030618
		T=Tillik/Added U=Utgår/Deleted V=Var/Was			

	Sign.	Datum/Date
Ritad/Drawn	FSN	010321
Konstr/Design		
Godk/Appr	RKO	010321

+CAB
Hi.Grp: 6
Klass/Class

Kalmar

Benämning: Krets Torkare
Name: Circuit Wiper function

Produkt/Product: DRFA 400-450
Rit.nr / Drawing No.: A43047.0100

Blad/Sheet: 1/1
Utgåva/Issue: 02

E DRAWING

https://truckmanualshub.com/

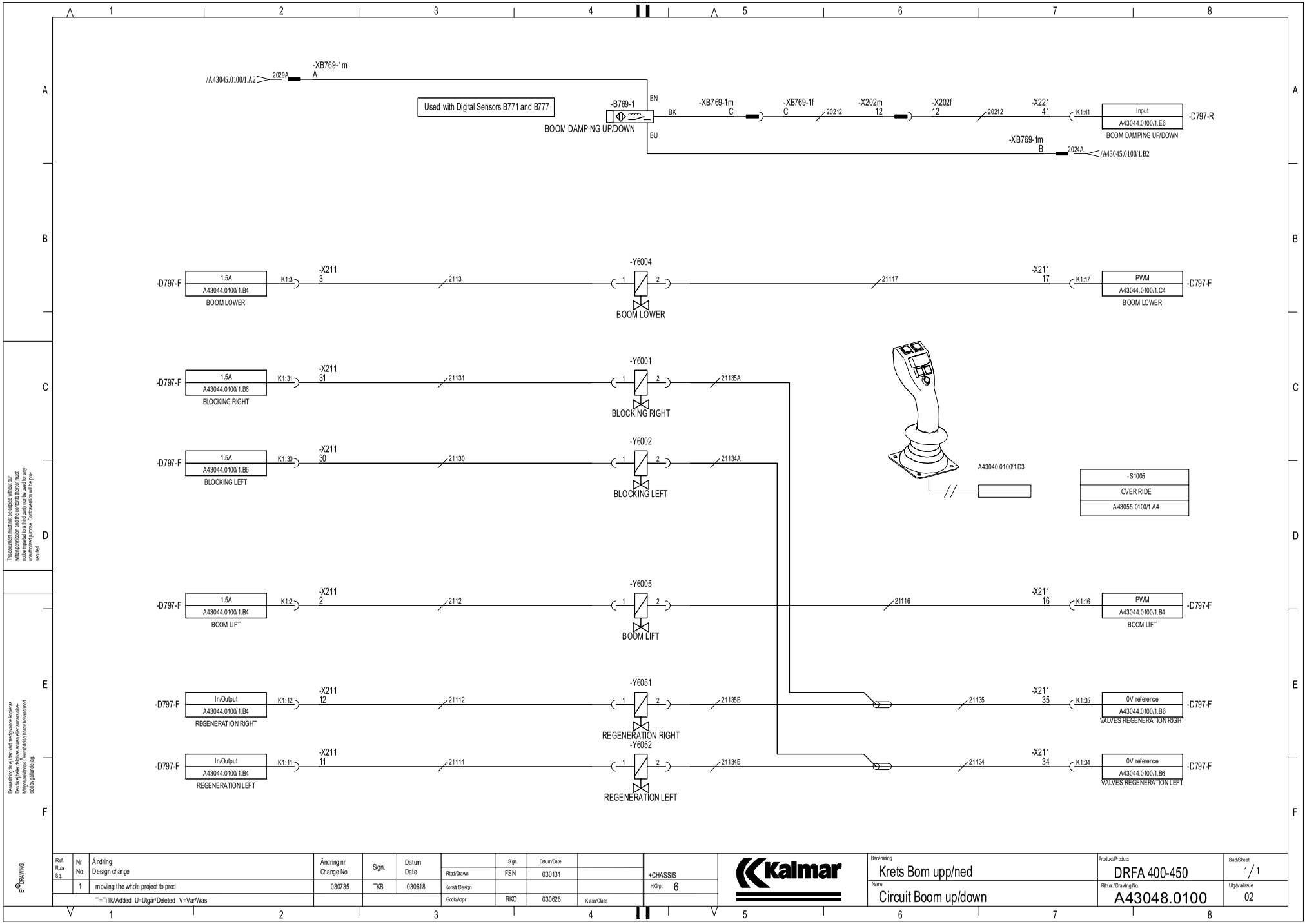

This document must not be copied without our written permission and the contents thereof must not be imparted to a third party nor be used for any unauthorized purpose. Contravention will be prosecuted.

Denna ritning får ej utan vårt medgivande kopieras. Den får ej heller delgivas annan eller annars obehörigen användas. Överträdelse härav beivras med stöd av gällande lag.

Ref. Ruta Sq.	Nr No.	Ändring Design change	Ändring nr Change No.	Sign.	Datum Date
	1	moving the whole project to prod	030735	TKB	030618
		T=Tillik/Added U=Utgår/Deleted V=Var/Was			

	Sign.	Datum/Date
Ritad/Drawn	FSN	030131
Konstr/Design		
Godk/Appr	RKO	030626

+CHASSIS
H.Grp: 6
Klass/Class

Kalmar

Benämning
Krets Bom upp/ned
Name
Circuit Boom up/down

Produkt/Product
DRFA 400-450
Ritn.nr / Drawing No.
A43048.0100

Blad/Sheet 1/1
Utgåva/Issue 02

E DRAWING

https://truckmanualshub.com/

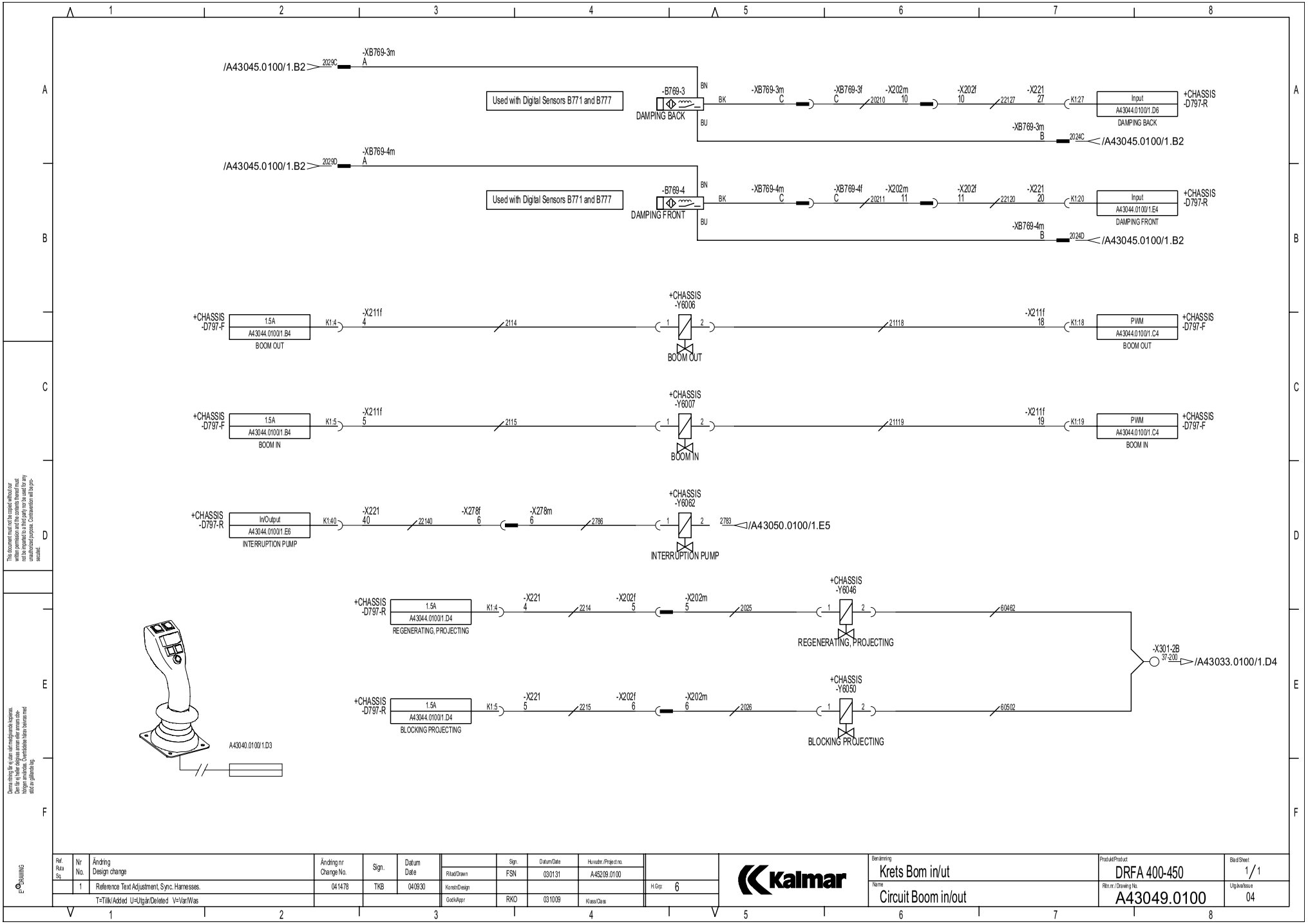

This document must not be copied without our written permission and the contents thereof must not be imparted to a third party nor be used for any unauthorized purpose. Contravention will be prosecuted.

Denna ritning får ej utan vårt medgivande kopieras. Den får ej hållas tillgänglig annan eller annars obehörigen användas. Överträdelse kommer att beivras med stöd av gällande lag.

Ref. Ruta Sq.	Nr No.	Ändring Design change	Ändring nr Change No.	Sign.	Datum Date
	1	Reference Text Adjustment, Sync. Harnesses.	041478	TKB	040930
		T=Tillk/Added U=Utgår/Deleted V=Var/Was			

	Sign.	Datum/Date	Huvudnr./Project no.
Ritad/Drawn	FSN	030131	A45209.0100
Konstr/Design			
Godk/Appr	RKO	031009	Klass/Class

H.Grp: 6

Kalmar

Benämning: Krets Bom in/out
Name: Circuit Boom in/out

Produkt/Product: DRFA 400-450
Ritn.nr./Drawing No.: A43049.0100

Blad/Sheet: 1/1
Utgåva/Issue: 04

https://truckmanualshub.com/

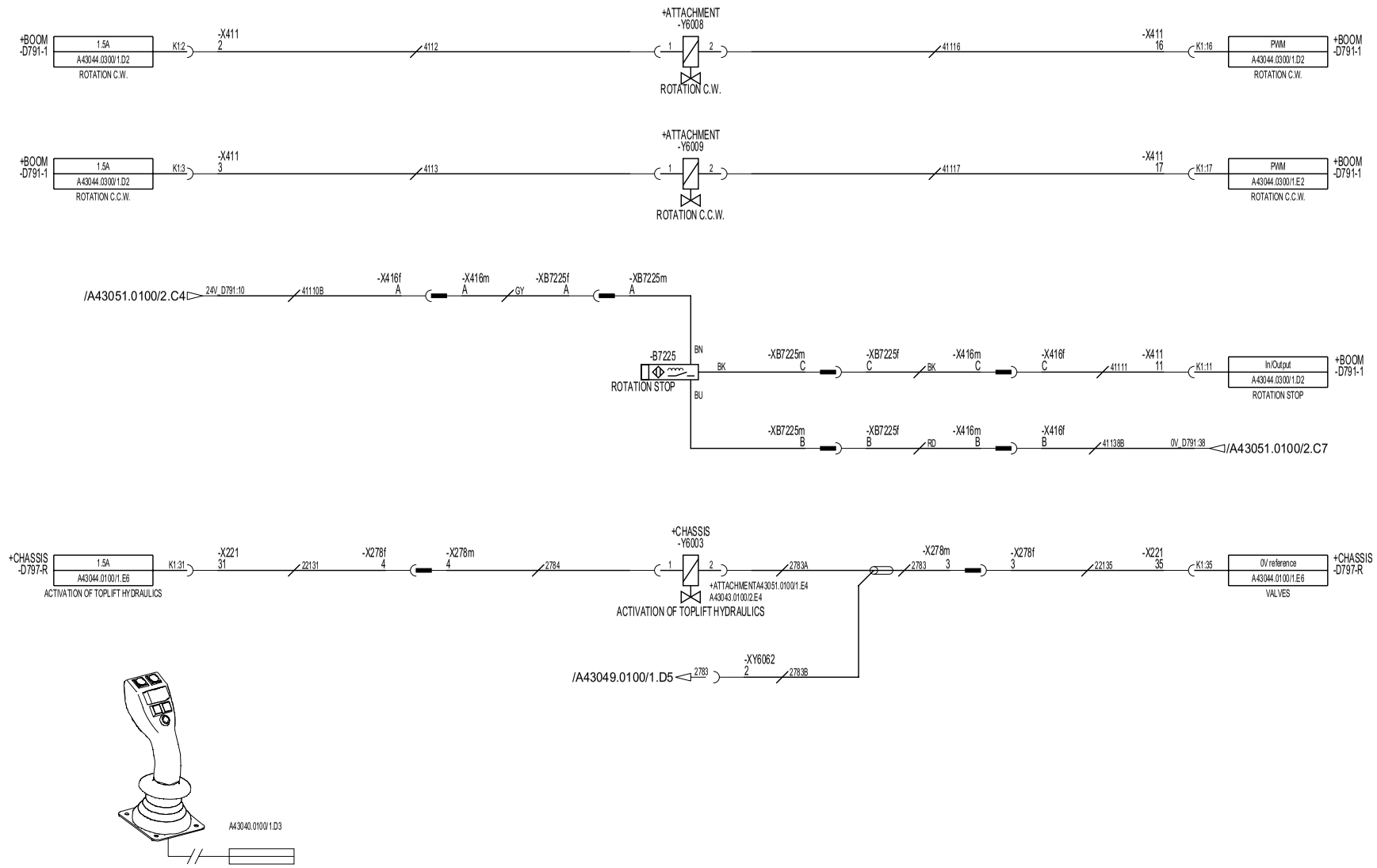

This document must not be copied without our written permission and the contents thereof must not be imparted to a third party nor be used for any unauthorised purpose. Contravention will be prosecuted.

Denna ritning får ej utan vårt medgivande kopieras. Den får ej hållas tillgänglig annan eller annars obehörigen användas. Överträdelse kommer att beivras med stöd av gällande lag.

Ref. Ruta Sq.	Nr No.	Ändring Design change	Ändring nr Change No.	Sign.	Datum Date
	1	Reference Text Adjustment, Sync. Harnesses.	041478	TKB	040930
		T=Tillk/Added U=Utgår/Deleted V=Var/Was			

	Sign.	Datum/Date	Huvudnr./Project no.
Ritad/Drawn	FSN	010327	A45209.0100
Konstr/Design			
Godk/Appr	RKO	031009	Klass/Class

H.Grp: 6

Kalmar

Benämning: Krets Agg rotation
Name: Circuit Att rotation

Produkt/Product: DRFA 400-450
Ritn.nr./Drawing No.: A43050.0100

Blad/Sheet: 1/1
Utgåva/Issue: 04

https://truckmanualshub.com/

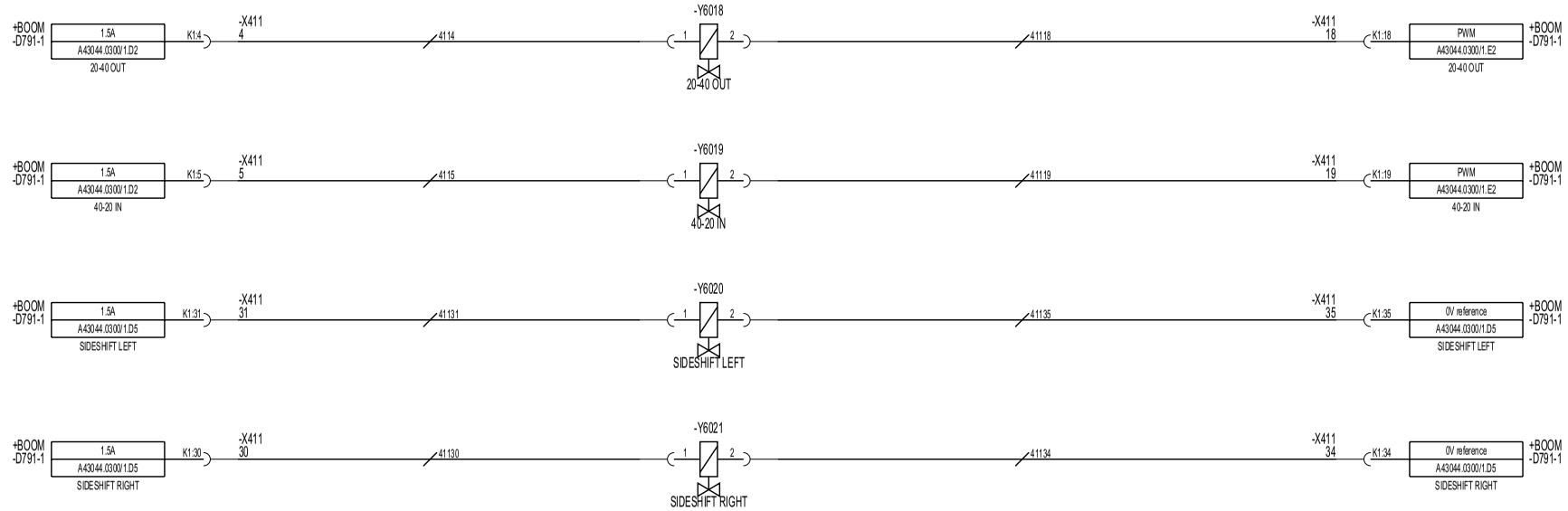

Ref. Ruta Sq.	Nr No.	Ändring Design change	Ändring nr Change No.	Sign.	Datum Date
	1	Reference Text Adjustment, Sync. Harnesses.	041478	TKB	040930
		T=Tillk/Added U=Utgår/Deleted V=Var/Was			

	Sign.	Datum/Date	Huvudnr./Project no.
Ritad/Drawn	FSN	010327	A45209.0100
Konstr/Design			
Godk/Appr	RKO	031009	Klass/Class

+ATTACHMENT
H.Grp: 6

Kalmar

Benämning: Krets Agg. funktion
Name: Circuit Att. function

Produkt/Product: DRFA 400-450
Ritn.nr./Drawing No.: A43051.0100

Blad/Sheet: 1/2
Utgåva/Issue: 04

This document must not be copied without our written permission and the contents thereof must not be imparted to a third party nor be used for any unauthorised purpose. Contravention will be prosecuted.

Denna ritning får ej utan vårt medgivande kopieras. Den får ej hållas tillgänglig annan eller annars obehörigen användas. Överträdelse kommer att beivras med stöd av gällande lag.

https://truckmanualshub.com/

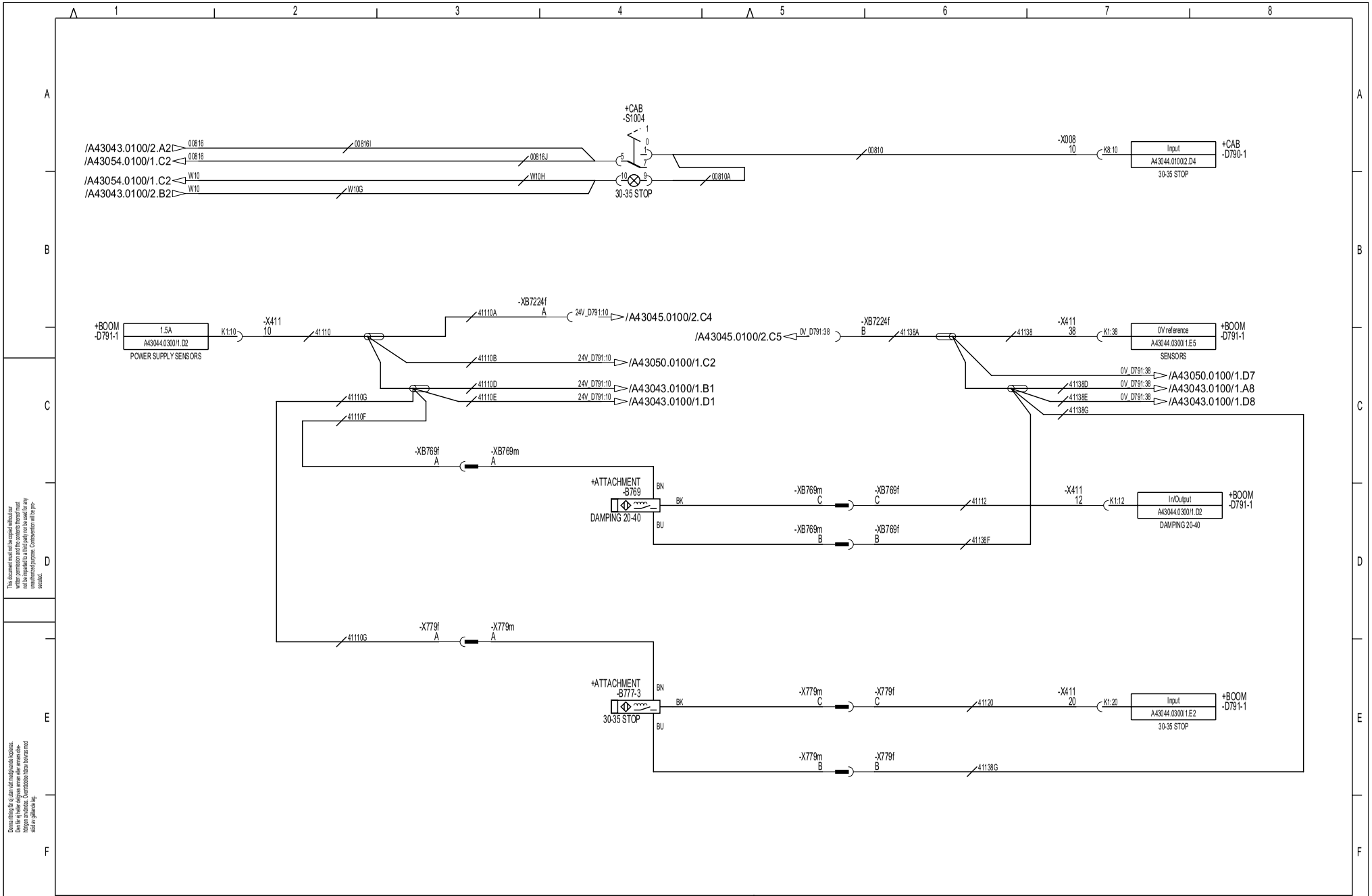

This document must not be copied without our written permission and the contents thereof must not be imparted to a third party nor be used for any unauthorised purpose. Contravention will be prosecuted.

Denna ritning får ej utan vårt medgivande kopieras. Den får ej hållas tillgänglig annan eller annars obehörigen användas. Överträdelse kan leviras med stöd av gällande lag.

Ref. Ruta Sq.	Nr No.	Ändring Design change	Ändring nr Change No.	Sign.	Datum Date
	1	Reference Text Adjustment, Sync. Harnesses.	041478	TKB	040930
		T=Tillk/Added U=Utgår/Deleted V=Var/Was			

	Sign.	Datum/Date	Huvudnr./Project no.
Ritad/Drawn	FSN	030224	A45209.0100
Konstr/Design			
Godk/Appr	RKO	031009	Klass/Class

H.Grp: 6

Kalmar

Benämning: Krets Agg. funktion
Name: Circuit Att. function

Produkt/Product: DRFA 400-450
Ritn.nr./Drawing No.: A43051.0100

Blad/Sheet: 2/2
Utgåva/Issue: 04

https://truckmanualshub.com/

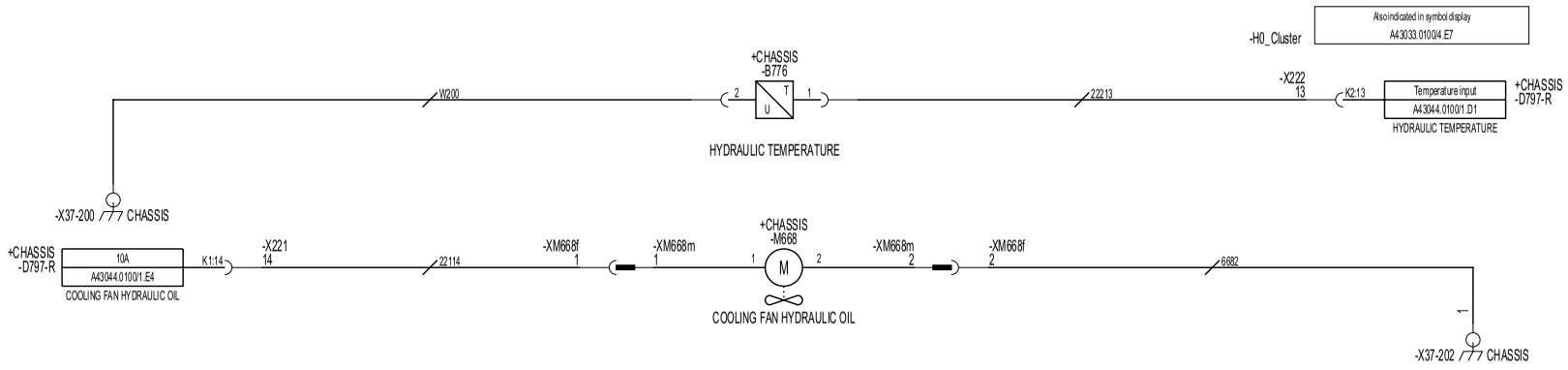

This document must not be copied without our written permission and the contents thereof must not be imparted to a third party nor be used for any unauthorised purpose. Contravention will be prosecuted.

Denna ritning får ej utan vårt medgivande kopieras. Den får ej hållas tillgänglig annan eller annars obehörigen användas. Överträdelse kommer att beivras med stöd av gällande lag.

Ref. Ruta Sq.	Nr No.	Ändring Design change	Ändring nr Change No.	Sign.	Datum Date
	1	Reference Text Adjustment, Sync. Harnesses.	041478	TKB	040930
		T=Tillk/Added U=Utgår/Deleted V=Var/Was			

	Sign.	Datum/Date	Huvudnr./Project no.
Ritad/Drawn	FSN	010327	A45209.0100
Konstr/Design			
Godk/Appr	RKO	031009	Klass/Class

H.Grp: 6

Kalmar

Benämning: Krets Hydraulik
Name: Circuit Hydraulics

Produkt/Product: DRFA 400-450
Ritn.nr./Drawing No.: A43053.0100

Blad/Sheet: 1/1
Utgåva/Issue: 04

https://truckmanualshub.com/

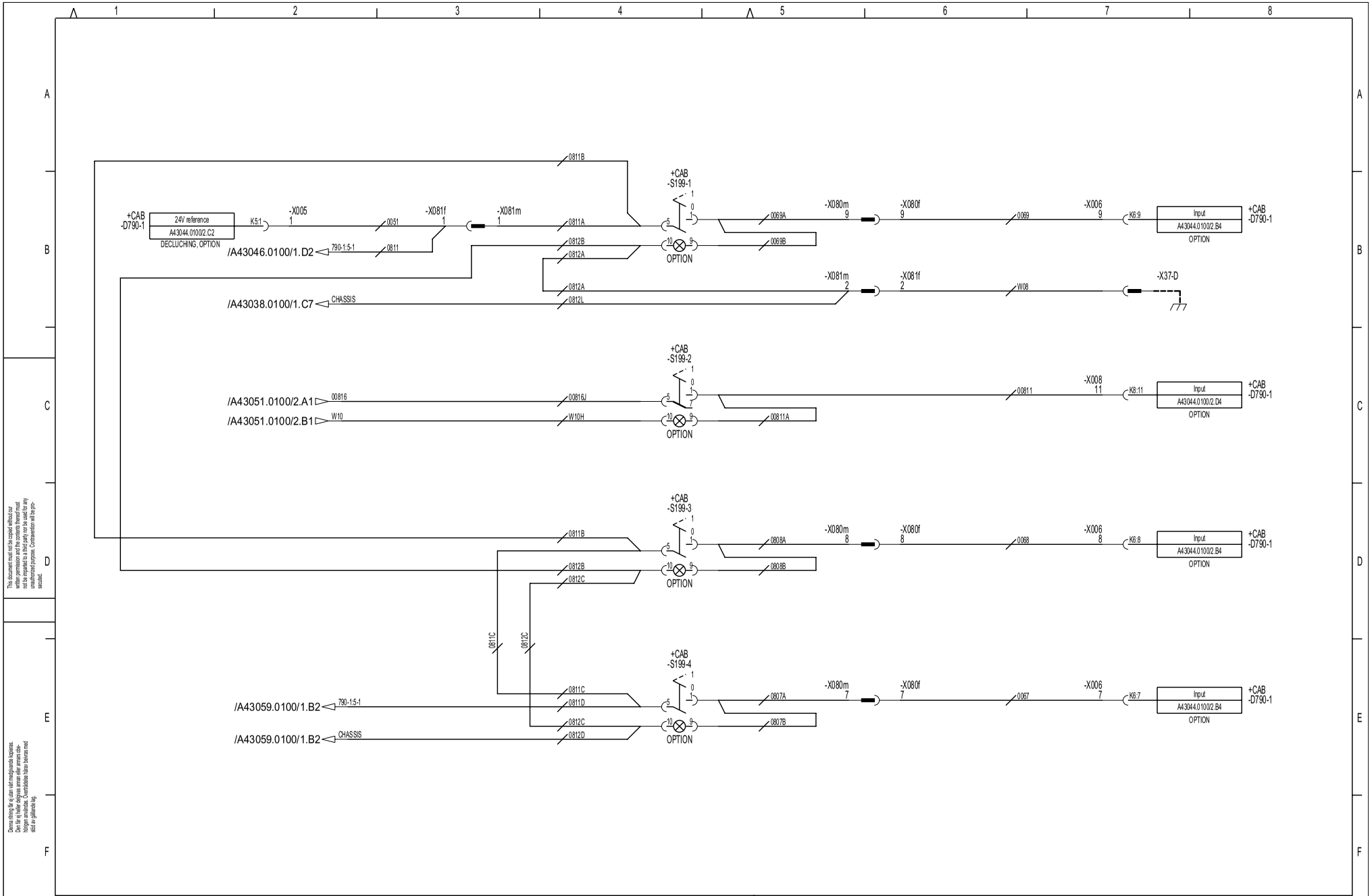

Ref. Ruta Sq.	Nr No.	Ändring Design change	Ändring nr Change No.	Sign.	Datum Date
	1	Reference Text Adjustment, Sync. Harnesses.	041478	TKB	040930
		T=Tillk/Added U=Utgår/Deleted V=Var/Was			

	Sign.	Datum/Date	Huvudnr./Project no.
Ritad/Drawn	FSN	010307	A45209.0100
Konstr/Design			
Godk/Appr	RKO	040223	Klass/Class

H.Grp: 6

Kalmar

Benämning: Krets Extra Utrustning
Name: Circuit Option

Produkt/Product: DRFB 400-450
Ritn.nr./Drawing No.: A43054.0100

Blad/Sheet: 1/2
Utgåva/Issue: 05

This document must not be copied without our written permission and the contents thereof must not be imparted to a third party nor be used for any unauthorised purpose. Contravention will be prosecuted.

Denna ritning får ej utan vårt medgivande kopieras. Den får ej hållas tillgänglig annan eller annars obehörigen användas. Överträdelse kommer att beivras med stöd av gällande lag.

DRAWING

https://truckmanualshub.com/

This document must not be copied without our written permission and the contents thereof must not be imparted to a third party nor be used for any unauthorised purpose. Contravention will be prosecuted.

Denna ritning får ej utan vårt medgivande kopieras. Den får ej hållas tillgänglig annan eller annars obehörigen användas. Överträdelse kommer att beivras med stöd av gällande lag.

Ref. Ruta Sq.	Nr No.	Ändring Design change	Ändring nr Change No.	Sign.	Datum Date
	1	Reference Text Adjustment, Sync. Harnesses.	041478	TKB	040930
		T=Tillk/Added U=Utgår/Deleted V=Var/Was			

	Sign.	Datum/Date	Huvudnr./Project no.
Ritad/Drawn	TKB	030815	A452089.0100
Konstr/Design			
Godk/Appr	RKO	040223	Klass/Class

H.Grp: 6

Kalmar

Benämning: Krets Extra Utrustning
Name: Circuit Option

Produkt/Product: DRFB 400-450
Ritn.nr./Drawing No.: A43054.0100

Blad/Sheet: 2/2
Utgåva/Issue: 05

https://truckmanualshub.com/

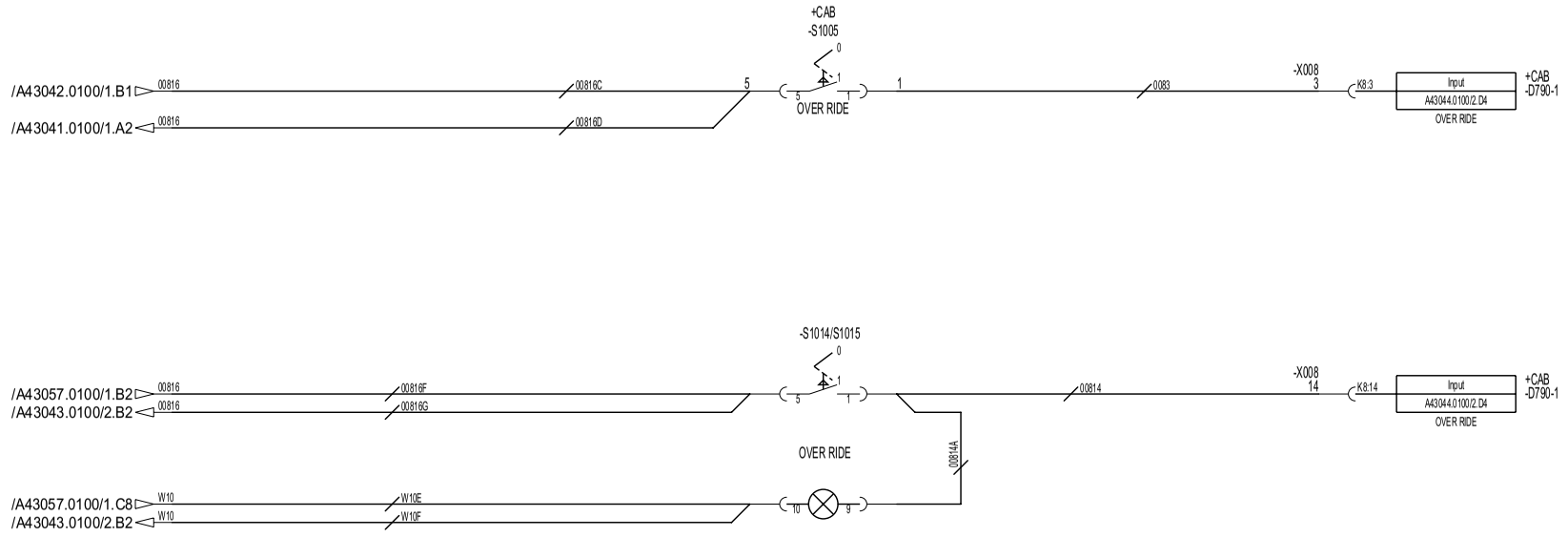

This document must not be copied without our written permission and the contents thereof must not be imparted to a third party nor be used for any unauthorized purpose. Contravention will be prosecuted.

Denna ritning får ej utan vårt medgivande kopieras. Den får ej hållas tillgänglig annan eller annars obehörigen användas. Överträdelse kan leva med stöd av gällande lag.

Ref. Ruta Sq.	Nr No.	Ändring Design change	Ändring nr Change No.	Sign.	Datum Date
	1	Reference Text Adjustment, Sync. Harnesses.	041478	TKB	040930
		T=Tillk/Added U=Utgår/Deleted V=Var/Was			

	Sign.	Datum/Date	Huvudnr./Project no.
Ritad/Drawn	FSN	020110	A45209.0100
Konstr/Design			
Godk/Appr	RKO	031009	Klass/Class

H.Grp: 6

Kalmar

Benämning: Krets Förbikoppling
Name: Circuit Override

Produkt/Product: DRFA 400-450
Ritn.nr./Drawing No.: A43055.0100

Blad/Sheet: 1/1
Utgåva/Issue: 04

https://truckmanualshub.com/

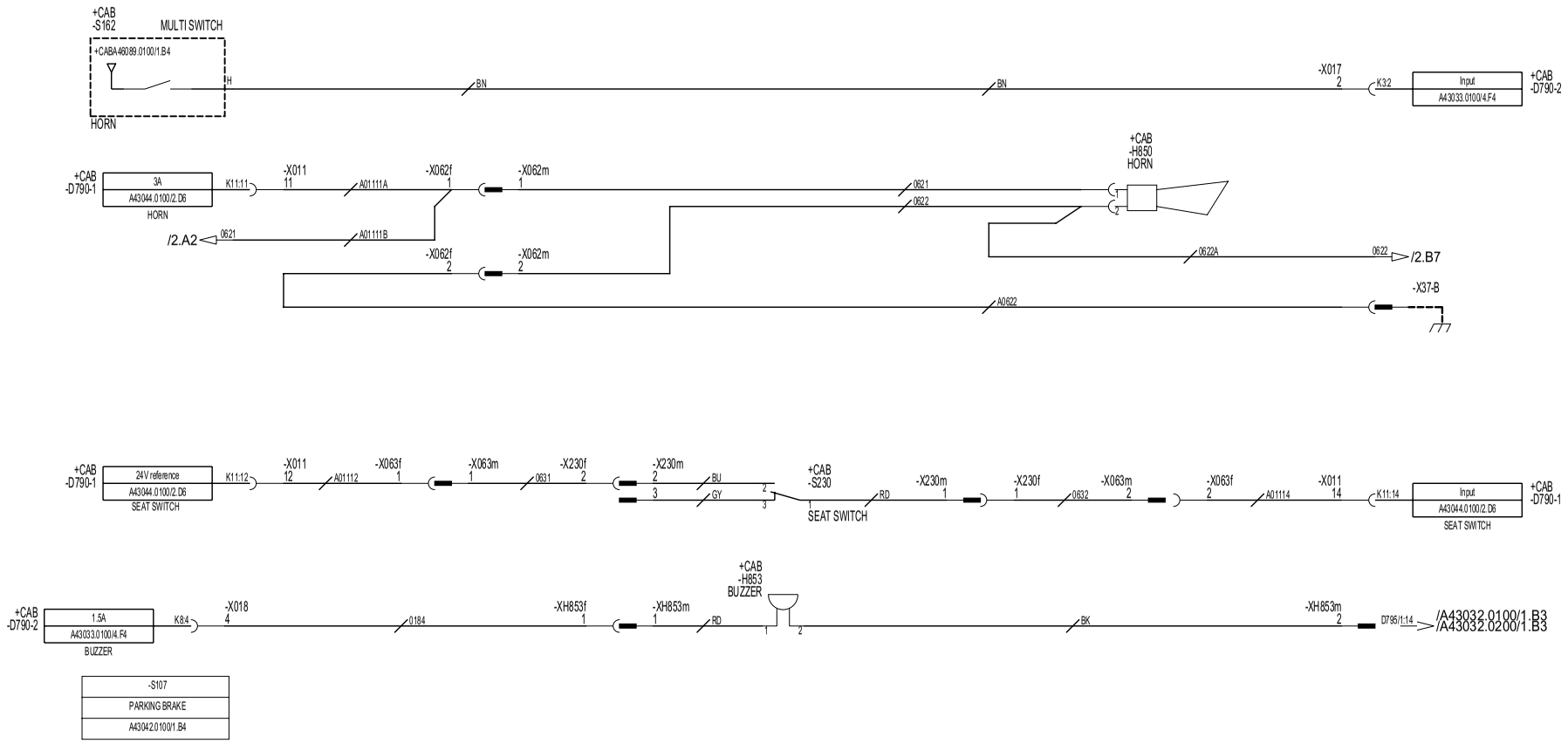

This document must not be copied without our written permission and the contents thereof must not be imparted to a third party nor be used for any unauthorized purpose. Contravention will be prosecuted.

Denna ritning får ej utan vårt medgivande kopieras. Den får ej hållas tillgänglig annan eller annars obehörigen användas. Överträdelse kommer att beivras med stöd av gällande lag.

Ref. Ruta Sq.	Nr No.	Ändring Design change	Ändring nr Change No.	Sign.	Datum Date
	1	Reference Text Adjustment, Sync. Harnesses.	041478	TKB	040930
		T=Tillk/Added U=Utgår/Deleted V=Var/Was			

	Sign.	Datum/Date	Huvudnr./Project no.
Ritad/Drawn	FSN	010327	A45209.0100
Konstr/Design			
Godk/Appr	RKO	031009	Klass/Class

H Grp: 6

Kalmar

Benämning: Krets Larm, Ljudsignaler

Name: Circuit Alarm, Soundsignals

Produkt/Product: DRFA 400-450

Ritn.nr./Drawing No.: A43056.0100

Blad/Sheet: 1/2

Utgåva/Issue: 04

https://truckmanualshub.com/

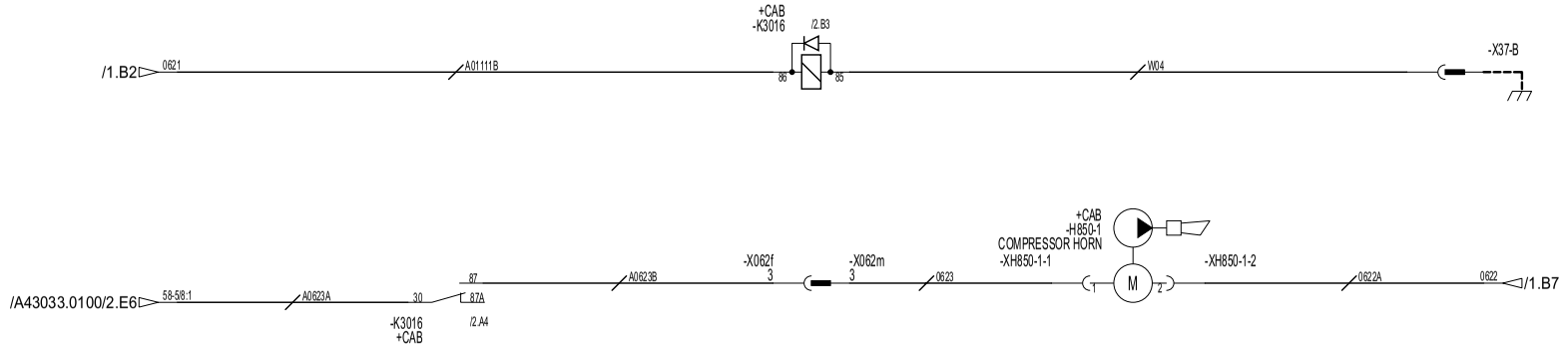

This document must not be copied without our written permission and the contents thereof must not be imparted to a third party nor be used for any unauthorized purpose. Contravention will be prosecuted.

Denna ritning får ej utan vårt medgivande kopieras. Den får ej hållas tillgänglig annan eller annars obehörigen användas. Överträdelse kommer att beivras med stöd av gällande lag.

Ref. Ruta Sq.	Nr No.	Ändring Design change	Ändring nr Change No.	Sign.	Datum Date
	1	Reference Text Adjustment, Sync. Harnesses.	041478	TKB	040930
		T=Tillk/Added U=Utgår/Deleted V=Var/Was			

	Sign.	Datum/Date	Huvudnr./Project no.
Ritad/Drawn	FSN	010327	A45209.0100
Konstr/Design			
Godk/Appr	RKO	031009	Klass/Class

H.Grp: 6

Kalmar

Benämning: Krets Larm, Ljudsignaler

Name: Circuit Alarm, Soundsignals

Produkt/Product: DRFA 400-450

Rit.nr./Drawing No.: A43056.0100

Blad/Sheet: 2/2

Utgåva/Issue: 04

https://truckmanualshub.com/

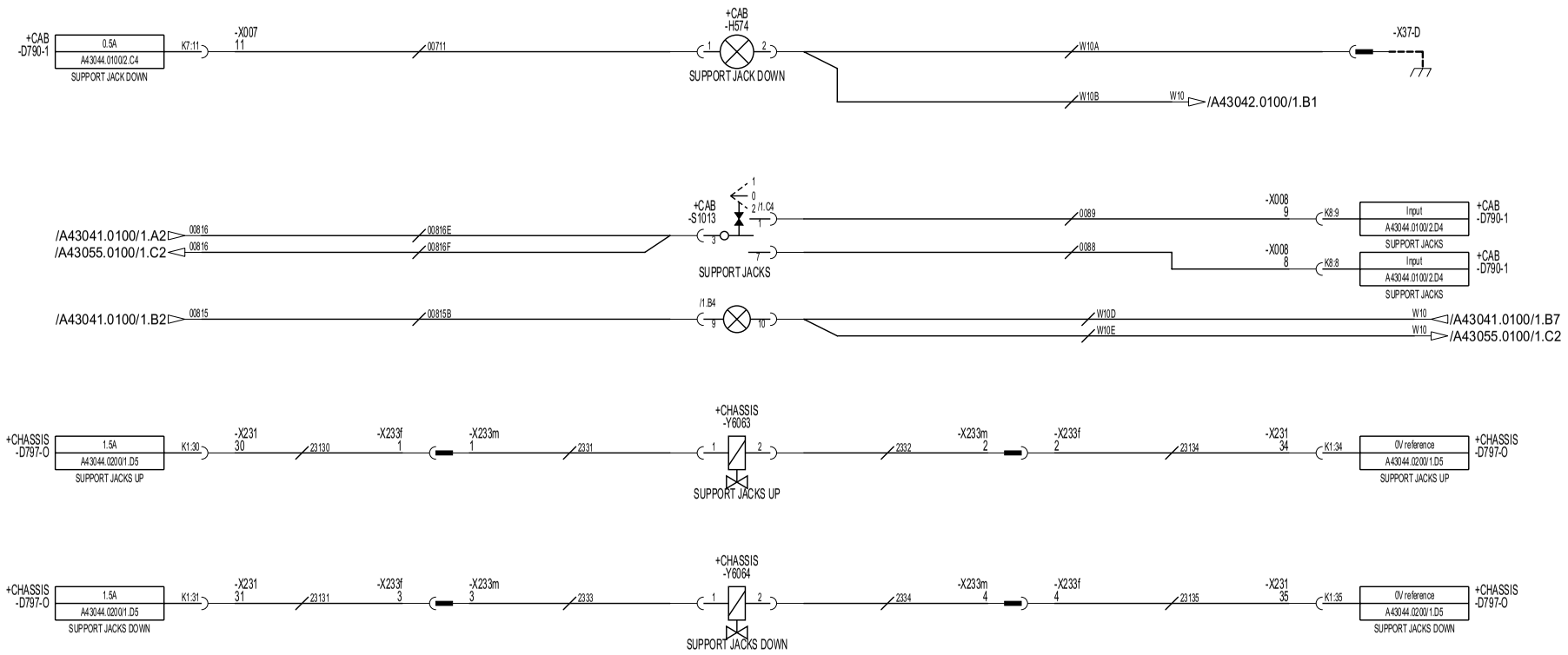

This document must not be copied without our written permission and the contents thereof must not be imparted to a third party nor be used for any unauthorised purpose. Contravention will be prosecuted.

Denna ritning får ej utan vårt medgivande kopieras. Den får ej hållas tillgänglig annan eller annars obehörigen användas. Överträdelse kan komma att bestraffas enligt gällande lag.

Ref. Ruta Sq.	Nr No.	Ändring Design change	Ändring nr Change No.	Sign.	Datum Date
	1	Reference Text Adjustment, Sync. Harnesses.	041478	TKB	040930
		T=Tillk/Added U=Utgår/Deleted V=Var/Was			

	Sign.	Datum/Date	Huvudnr./Project no.
Ritad/Drawn	FSN	010731	A45209.0100
Konstr/Design			
Godk/Appr	RKO	031009	Klass/Class

H.Grp: 6

Kalmar

Benämning: Krets Hyd Stödben
Name: Circuit Hyd Support jacks

Produkt/Product: DRFA 400-450
Ritn.nr./Drawing No.: A43057.0100

Blad/Sheet: 1/2
Utgåva/Issue: 04

https://truckmanualshub.com/

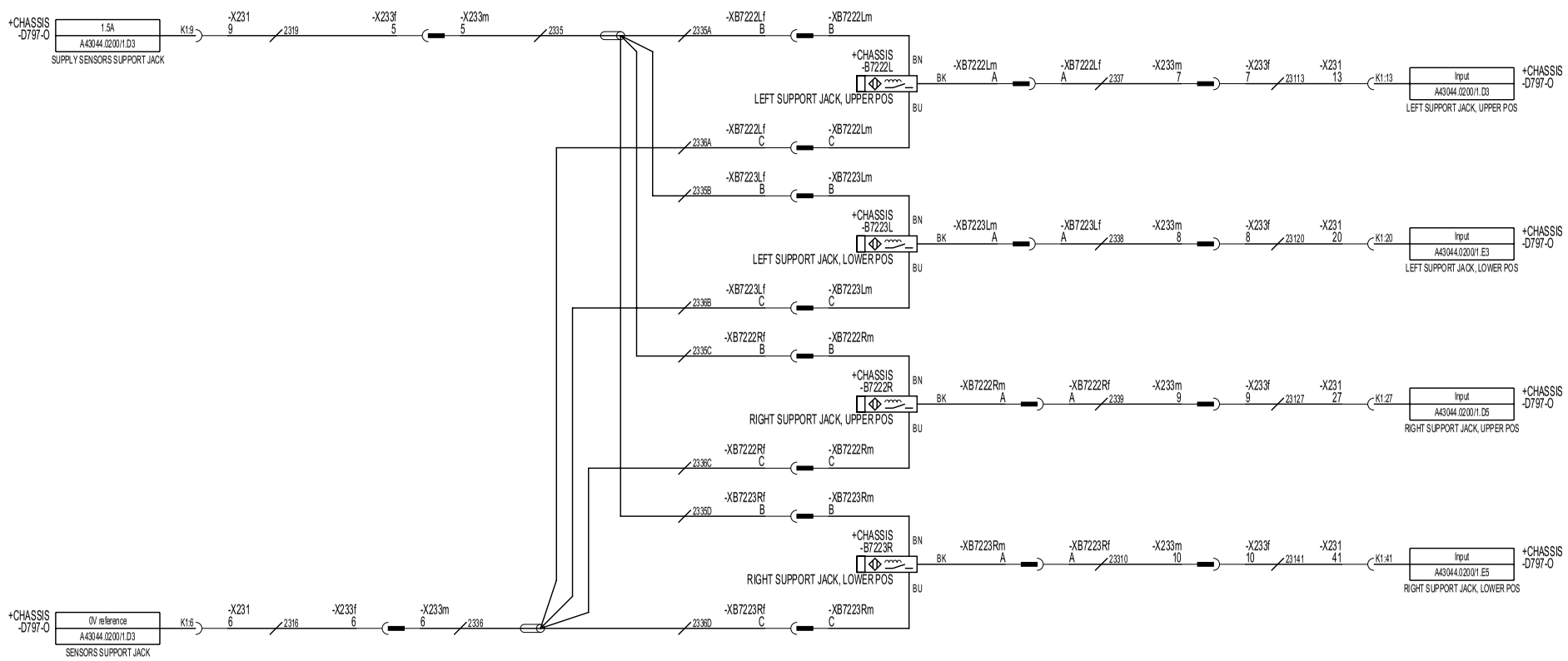

This document must not be copied without our written permission and the contents thereof must not be imparted to a third party nor be used for any unauthorised purpose. Contravention will be prosecuted.

Denna ritning får ej utan vårt medgivande kopieras. Den får ej hållas tillgänglig annan eller annars obehörigen användas. Överträdelse kommer att beivras med stöd av gällande lag.

Ref. Ruta Sq.	Nr No.	Ändring Design change	Ändring nr Change No.	Sign.	Datum Date
	1	Reference Text Adjustment, Sync. Harnesses.	041478	TKB	040930
		T=Tillk/Added U=Utgår/Deleted V=Var/Was			

	Sign.	Datum/Date	Huvudnr./Project no.
Ritad/Drawn	FSN	010731	A45209.0100
Konstr/Design			
Godk/Appr	RKO	031009	Klass/Class

H.Grp: 6

Kalmar

Benämning / Name: Krets Hyd Stödben
Circuit Hyd Support jacks

Produkt/Product: DRFA 400-450

Ritn.nr./Drawing No.: A43057.0100

Blad/Sheet: 2/2

Utgåva/Issue: 04

https://truckmanualshub.com/

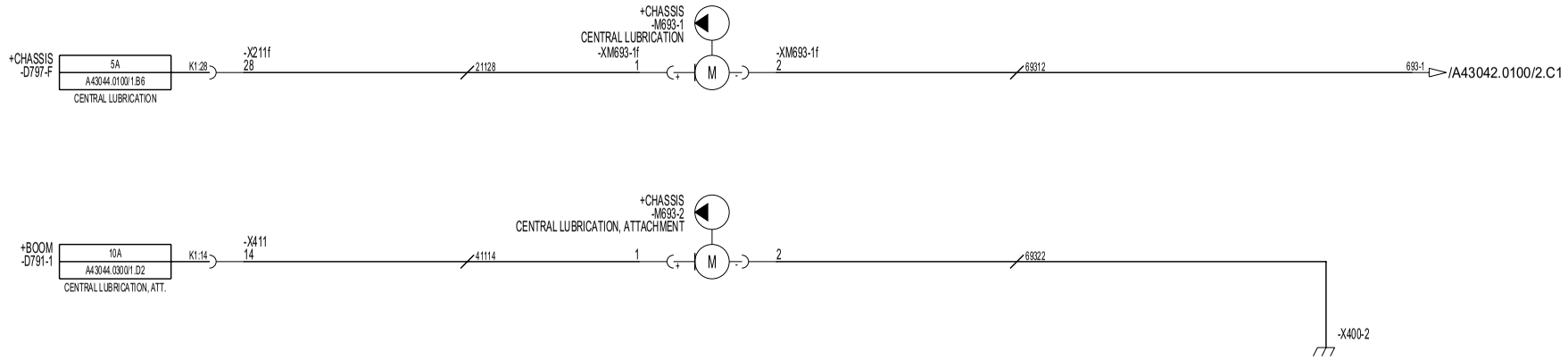

This document must not be copied without our written permission and the contents thereof must not be imparted to a third party nor be used for any unauthorized purpose. Contravention will be prosecuted.

Denna ritning får ej utan vårt medgivande kopieras. Den får ej hållas tillgänglig annan eller annars obehörigen användas. Överträdelse kan komma med stöd av gällande lag.

Ref. Ruta Sq.	Nr No.	Ändring Design change	Ändring nr Change No.	Sign.	Datum Date
	1	Reference Text Adjustment, Sync. Harnesses.	041478	TKB	040930
		T=Tillk/Added U=Utgår/Deleted V=Var/Was			

	Sign.	Datum/Date	Huvudnr./Project no.
Ritad/Drawn	FSN	010329	A45209.0100
Konstr/Design			
Godk/Appr	RKO	031009	Klass/Class

H.Grp: 6

Kalmar

Benämning: Krets Centralsmörjning

Name: Circuit Central lubrication

Produkt/Product: DRFA 400-450

Ritn.nr./Drawing No.: A43058.0100

Blad/Sheet: 1/1

Utgåva/Issue: 04

https://truckmanualshub.com/

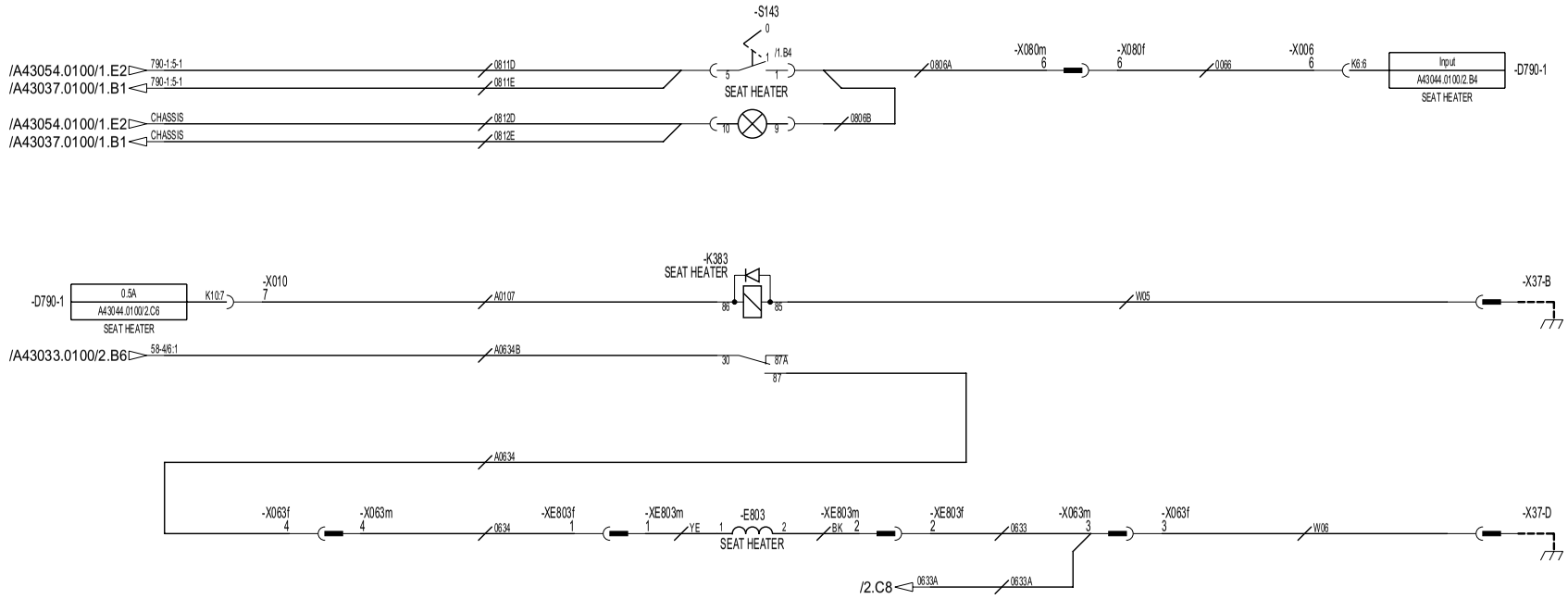

ELECTRICAL HEAT

This document must not be copied without our written permission and the contents thereof must not be imparted to a third party nor be used for any unauthorized purpose. Contravention will be prosecuted.

Denna ritning får ej utan vårt medgivande kopieras. Den får ej hållas tillgänglig annan eller annars obehörigen användas. Överträdelse kommer att beivras med stöd av gällande lag.

Ref. Ruta Sq.	Nr No.	Ändring Design change	Ändring nr Change No.	Sign.	Datum Date
	1	Reference Text Adjustment, Sync. Harnesses.	041478	TKB	040930
T=Tillk/Added U=Utgår/Deleted V=Var/Was					

	Sign.	Datum/Date	Huvudnr./Project no.
Ritad/Drawn	FSN	010410	A45209.0100
Konstr/Design			
Godk/Appr	RKO	031210	Klass/Class

+CAB
H.Grp: 6

Kalmar

Benämning: Krets Hytt Förarstol
Name: Circuit Cab Seat OPT

Produkt/Product: DRFA 400-450
Ritn.nr./Drawing No.: A43059.0100

Blad/Sheet: 1/2
Utgåva/Issue: 05

https://truckmanualshub.com/

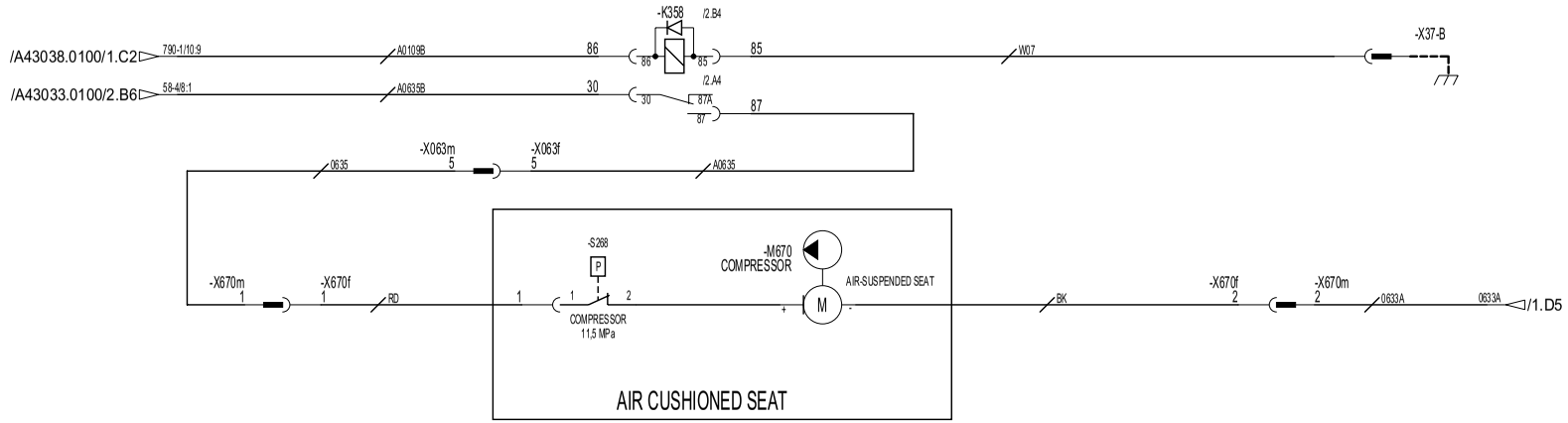

This document must not be copied without our written permission and the contents thereof must not be imparted to a third party nor be used for any unauthorized purpose. Contravention will be prosecuted.

Denna ritning får ej utan vårt medgivande kopieras. Den får ej hållas tillgänglig annan eller annars obehörigen användas. Överträdelse kommer att beivras med stöd av gällande lag.

Ref. Ruta Sq.	Nr No.	Ändring Design change	Ändring nr Change No.	Sign.	Datum Date
	1	Reference Text Adjustment, Sync. Harnesses.	041478	TKB	040930
		T=Tillk/Added U=Utgår/Deleted V=Var/Was			

	Sign.	Datum/Date	Huvudnr./Project no.
Ritad/Drawn	FSN	010410	A45209.0100
Konstr/Design			
Godk/Appr	RKO	031210	Klass/Class

+CAB
H.Grp: 6

Kalmar

Benämning: Krets Hytt Förarstol
Name: Circuit Cab Seat OPT

Produkt/Product: DRFA 400-450
Ritn.nr./Drawing No.: A43059.0100

Blad/Sheet: 2/2
Utgåva/Issue: 05

https://truckmanualshub.com/

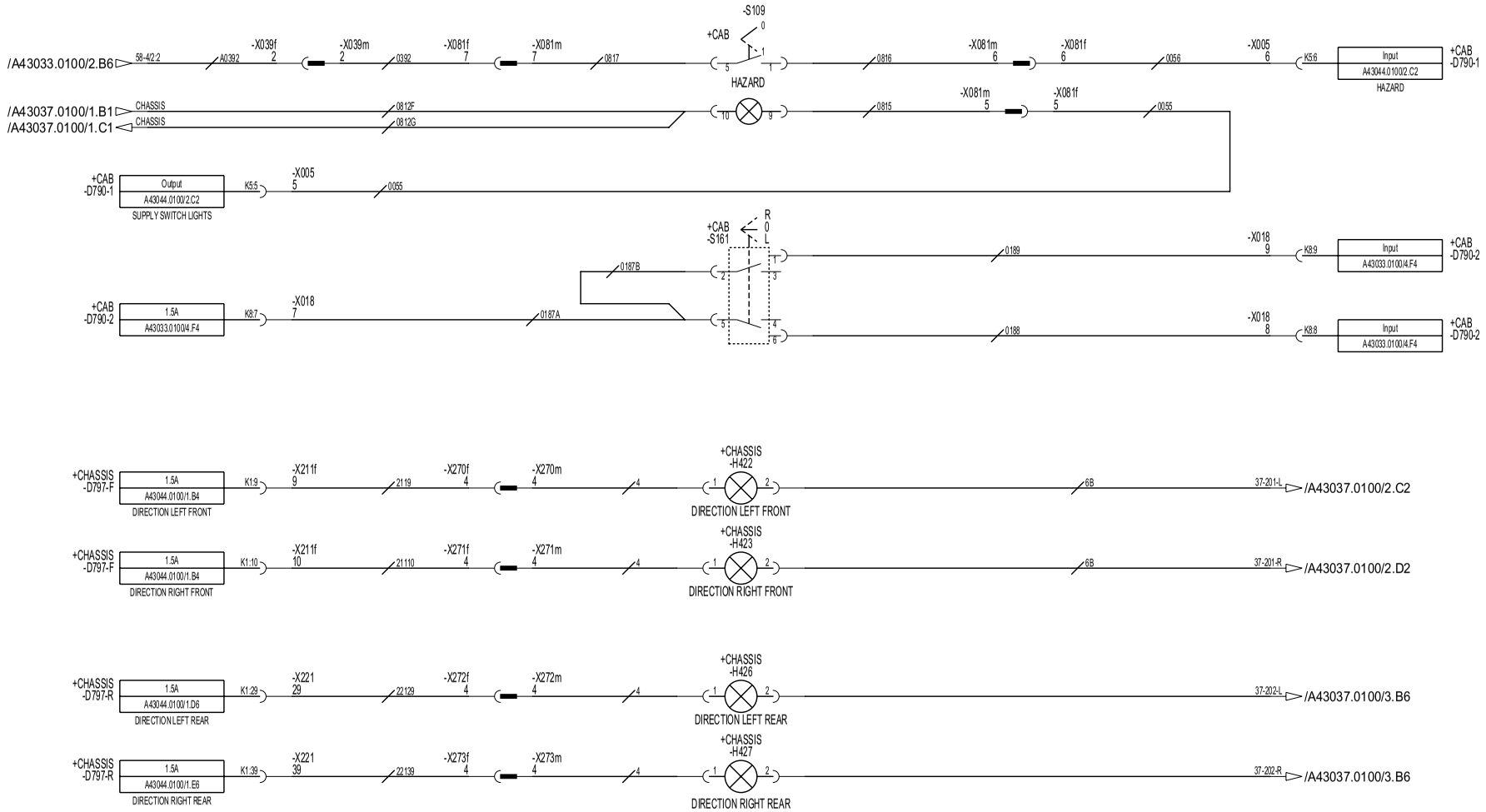

This document must not be copied without our written permission and the contents thereof must not be imparted to a third party nor be used for any unauthorized purpose. Contravention will be prosecuted.

Denna ritning får ej utan vårt medgivande kopieras. Den får ej hållas tillgänglig annan eller annars obehörigen användas. Överträdelse kommer att beivras enligt gällande lag.

Ref. Ruta Sq.	Nr No.	Ändring Design change	Ändring nr Change No.	Sign.	Datum Date
	1	Reference Text Adjustment, Sync. Harnesses.	041478	TKB	040930
		T=Tillk/Added U=Utgår/Deleted V=Var/Was			

	Sign.	Datum/Date	Huvudnr./Project no.
Ritad/Drawn	FSN	010329	A45209.0100
Konstr/Design			
Godk/Appr	RKO	031209	Klass/Class

H.Grp: 6

Kalmar

Benämning: Krets Blinkers, Varningsblinkers

Name: Circuit Flashing indicator, Hazard

Produkt/Product: DRFA 400-450

Ritn.nr./Drawing No.: A43060.0100

Blad/Sheet: 1/1

Utgåva/Issue: 05

https://truckmanualshub.com/

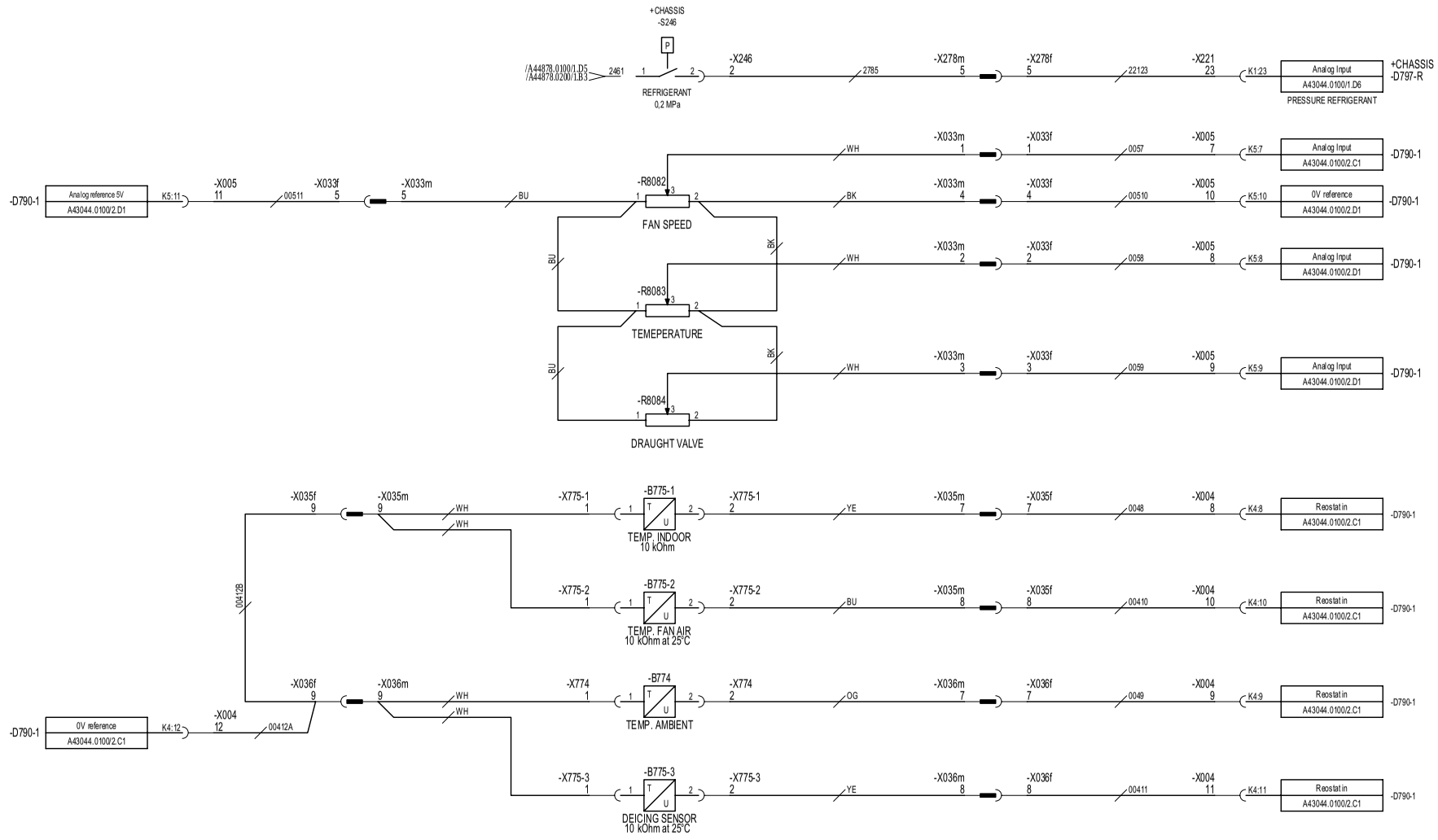

This document must not be copied without our written permission and the contents thereof must not be imparted to a third party nor be used for any unauthorized purpose. Contravention will be prosecuted.

Denna ritning får ej utan vårt medgivande kopieras. Det är ej heller tillåtet att annan eller annars obehörigen användas. Överträdelse härav beivras med stöd av gällande lag.

Ref. Ruta Sq.	Nr No.	Ändring Design change	Ändring nr Change No.	Sign.	Datum Date
	1	moving the whole project to prod	030735	TKB	030618
T=Tillk/Added U=Utgår/Deleted V=Var/Was					

	Sign.	Datum/Date
Ritad/Drawn	FSN	010412
Konstr/Design		
Godk/Appr	RKO	010412

+CAB
Hi.Grp: 6
Klass/Class

Kalmar

Benämning / Name: Krets Klimatsystem / Circuit Climate Control

Produkt/Product: DRFA 400-450

Ritn.nr / Drawing No.: A43061.0100

Blad/Sheet: 1/2

Utgåva/Issue: 02

E DRAWING

https://truckmanualshub.com/

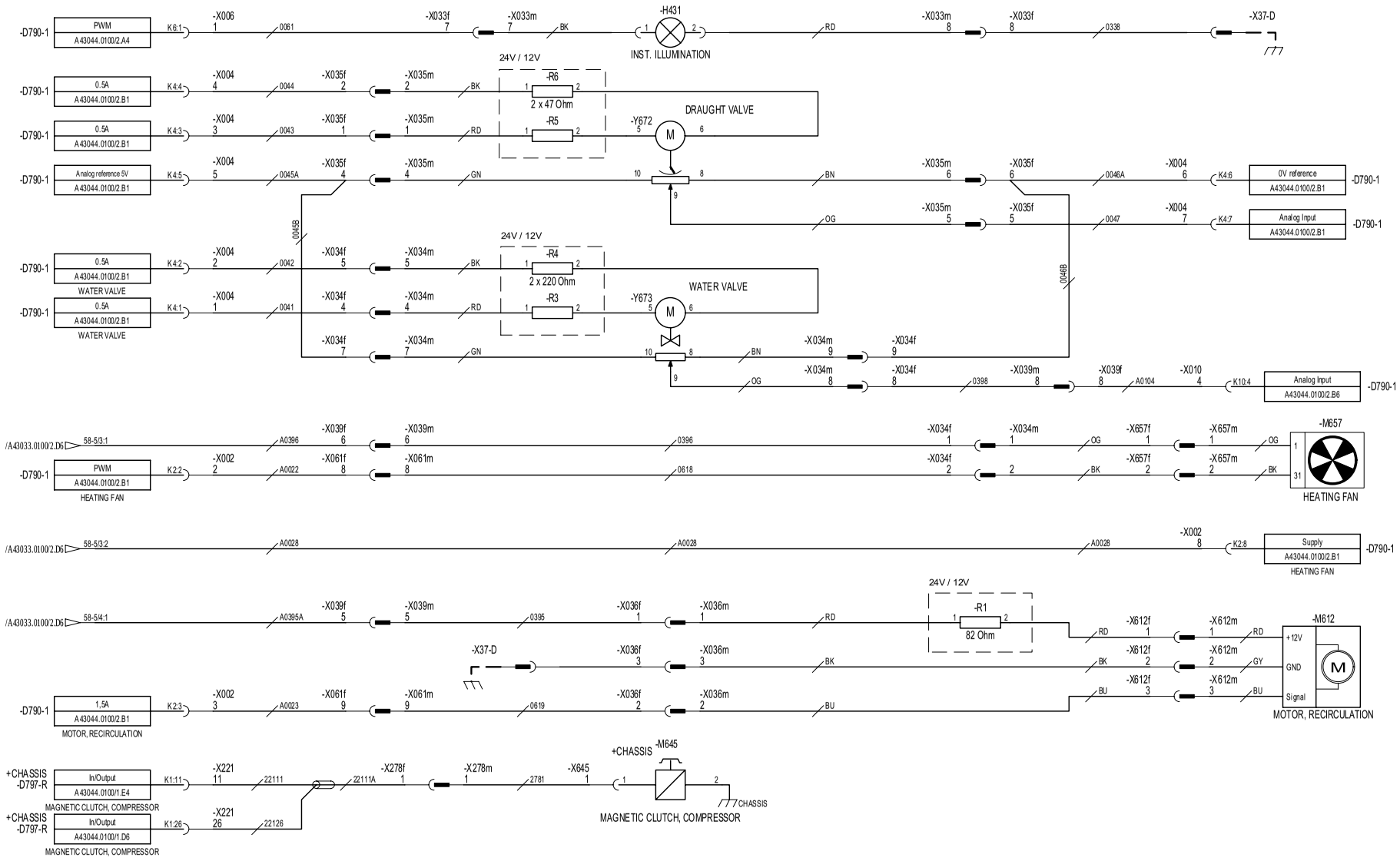

Ref. Ruta Sq.	Nr No.	Ändring Design change	Ändring nr Change No.	Sign.	Datum Date
	1	moving the whole project to prod	030735	TKB	030618
		T=Tillk/Added U=Utgår/Deleted V=Var/Was			

	Sign.	Datum/Date
Ritad/Drawn	FSN	010412
Konstr/Design		
Godk/Appr	RKO	010412

+CAB
Hi.Grp: 6
Klass/Class

Kalmar

Benämning: Krets Klimatsystem
Name: Circuit Climate control

Produkt/Product: DRFA 400-450
Rit.nr / Drawing No.: A43061.0100

Blad/Sheet: 2/2
Utgåva/Issue: 02

E DRAWING

This document must not be copied without our written permission and the contents thereof must not be imparted to a third party nor be used for any unauthorized purpose. Contravention will be prosecuted.

Denna ritning får ej utan vårt medgivande kopieras. Den får ej heller delgivas annan eller annars obehörigen användas. Överträdelse härav beivras med stöd av gällande lag.

https://truckmanualshub.com/

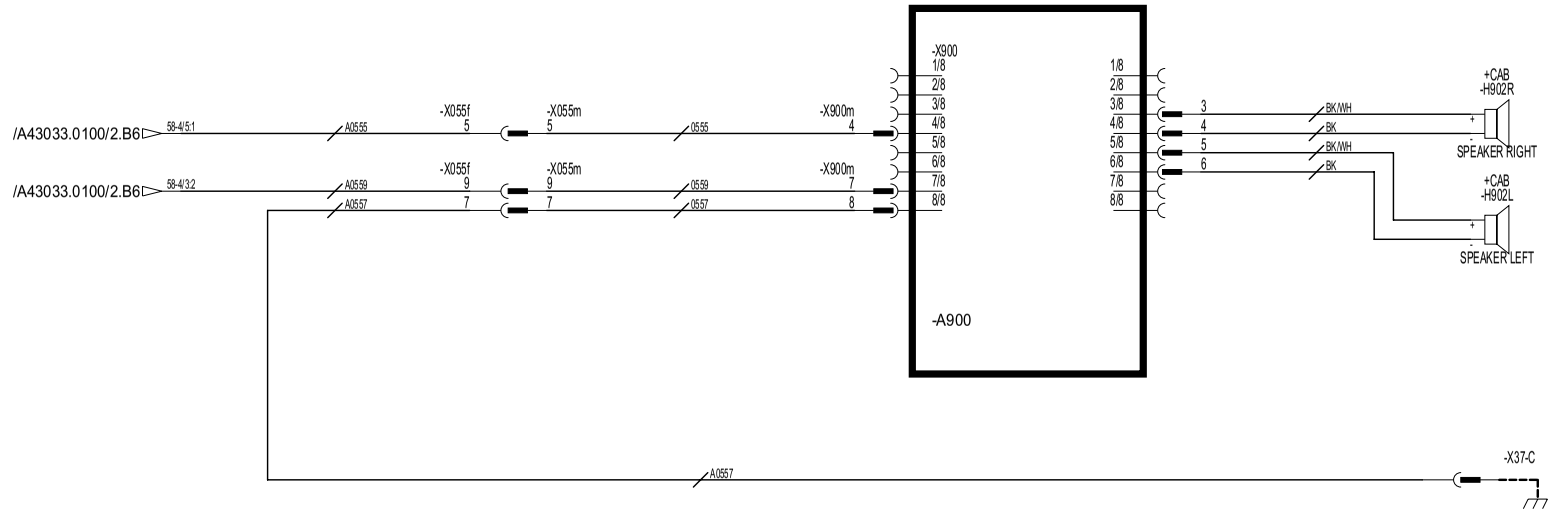

This document must not be copied without our written permission and the contents thereof must not be imparted to a third party nor be used for any unauthorized purpose. Contravention will be prosecuted.

Denna ritning får ej utan vårt medgivande kopieras. Den får ej hållas tillgänglig annan eller annars obehörigen användas. Överträdelse kommer att beivras med stöd av gällande lag.

Ref. Ruta Sq.	Nr No.	Ändring Design change	Ändring nr Change No.	Sign.	Datum Date
	1	Reference Text Adjustment, Sync. Harnesses.	041478	TKB	040930
		T=Tillk/Added U=Utgår/Deleted V=Var/Was			

	Sign.	Datum/Date	Huvudnr./Project no.
Ritad/Drawn	FSN	010517	A45209.0100
Konstr/Design			
Godk/Appr	RKO	031009	Klass/Class

H.Grp: 6

Kalmar

Benämning: Krets Radio
Name: Circuit Radio

Produkt/Product: DRFB 400-450
Ritn.nr./Drawing No.: A43062.0100

Blad/Sheet: 1/1
Utgåva/Issue: 04

https://truckmanualshub.com/

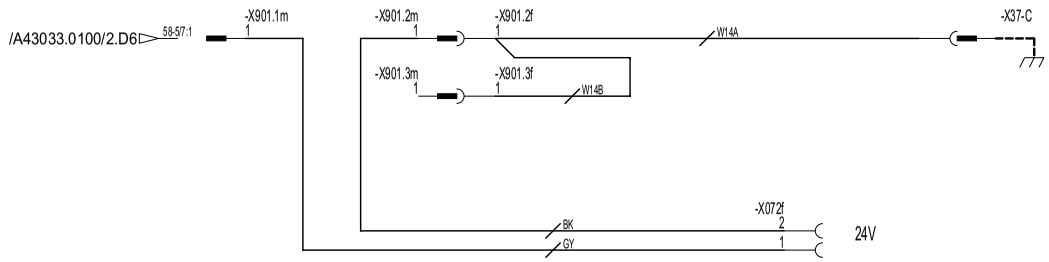

This document must not be copied without our written permission and the contents thereof must not be imparted to a third party nor be used for any unauthorized purpose. Contravention will be prosecuted.

Denna ritning får ej utan vårt medgivande kopieras. Den får ej hållas tillgänglig annan eller annars obehörigen användas. Överträdelse kommer att beivras med stöd av gällande lag.

Ref. Ruta Sq.	Nr No.	Ändring Design change	Ändring nr Change No.	Sign.	Datum Date
	1	Reference Text Adjustment, Sync. Harnesses.	041478	TKB	040930
		T=Tillk/Added U=Utgår/Deleted V=Var/Was			

	Sign.	Datum/Date	Huvudnr./Project no.
Ritad/Drawn	FSN	030124	A45209.0100
Konstr/Design			
Godk/Appr	RKO	031009	Klass/Class

H.Grp: 6

Kalmar

Benämning: Krets 24V
Name: Circuit 24V

Produkt/Product: DRFA 400-450
Ritn.nr./Drawing No.: A43063.0100

Blad/Sheet: 1/1
Utgåva/Issue: 04

https://truckmanualshub.com/

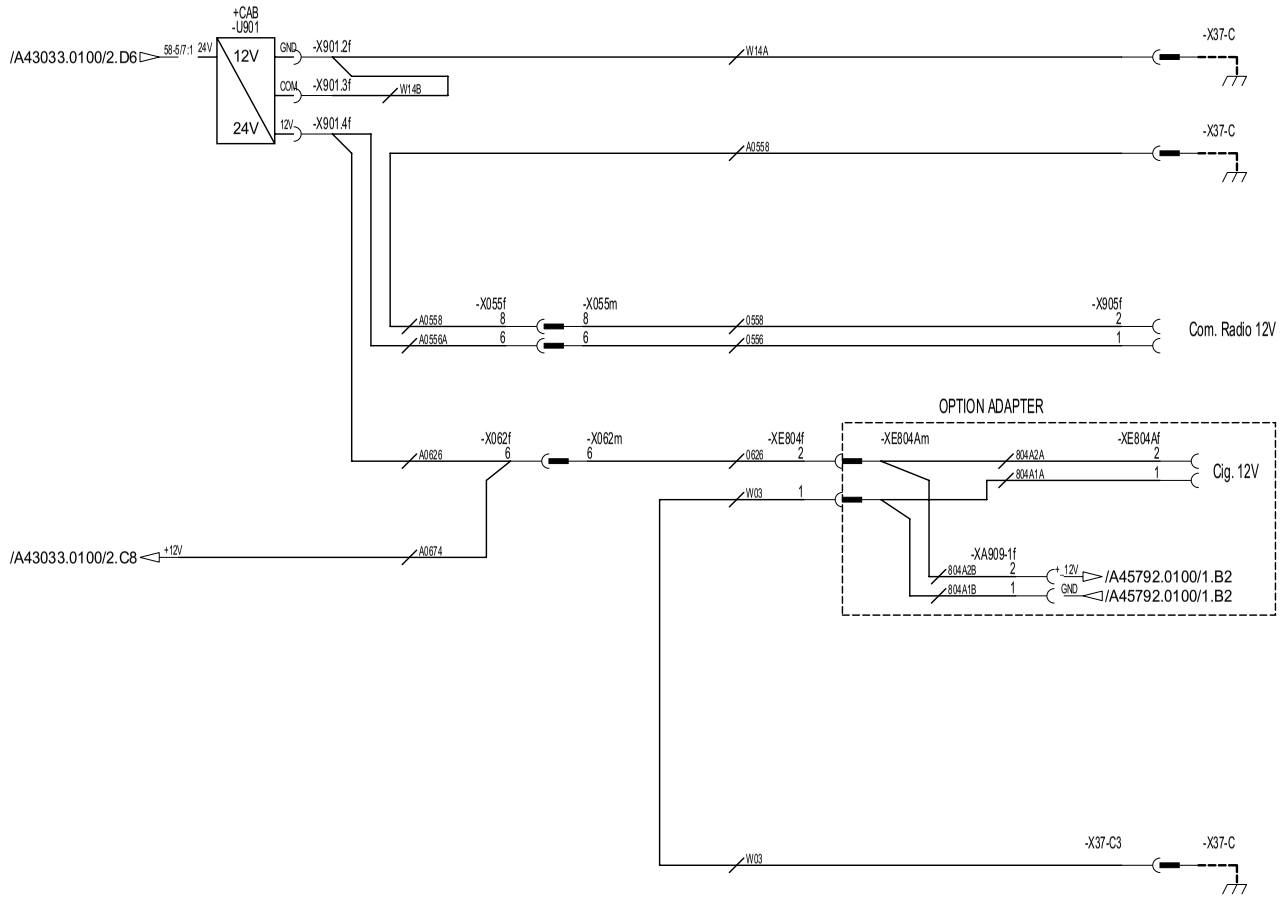

Ref. Ruta Sq.	Nr No.	Ändring Design change	Ändring nr Change No.	Sign.	Datum Date
	1	Reference Text Adjustment, Sync. Harnesses.	041478	TKB	040930
		T=Tillk/Added U=Utgår/Deleted V=Var/Was			

	Sign.	Datum/Date	Huvudnr./Project no.
Ritad/Drawn	FSN	010531	A45209.0100
Konstr/Design			
Godk/Appr	RKO	040225	Klass/Class

H.Grp: 6

Kalmar

Benämning: Krets 12V + Kom. Radio

Name: Circuit 12V + Com. Radio

Produkt/Product: DRFB 400-450

Ritn.nr./Drawing No.: A43063.0200

Blad/Sheet: 1/1

Utgåva/Issue: 04

This document must not be copied without our written permission and the contents thereof must not be imparted to a third party nor be used for any unauthorised purpose. Contravention will be prosecuted.

Denna ritning får ej utan vårt medgivande kopieras. Den får ej hållas tillgänglig annan eller annars obehörigen användas. Överträdelse kommer att beivras med stöd av gällande lag.

https://truckmanualshub.com/

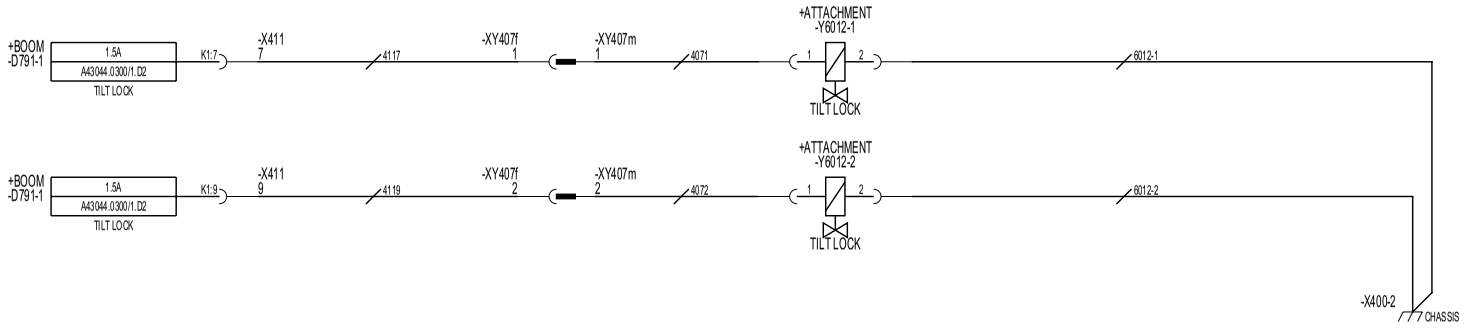

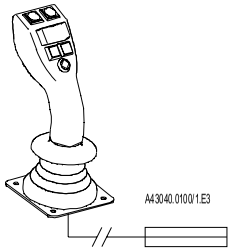

This document must not be copied without our written permission and the contents thereof must not be imparted to a third party nor be used for any unauthorized purpose. Contravention will be prosecuted.

Denna ritning får ej utan vårt medgivande kopieras. Den får ej hållas tillgänglig annan eller annars obehörigen användas. Överträdelse kommer att beivras med stöd av gällande lag.

Ref. Ruta Sq.	Nr No.	Ändring Design change	Ändring nr Change No.	Sign.	Datum Date
	1	Reference Text Adjustment, Sync. Harnesses.	041478	TKB	040930
		T=Tillk/Added U=Utgår/Deleted V=Var/Was			

	Sign.	Datum/Date	Huvudnr./Project no.
Ritad/Drawn	FSN	010613	A45209.0100
Konstr/Design			
Godk/Appr	RKO	031009	Klass/Class

H.Grp: 6

Kalmar

Benämning: Krets Tiltlåsning
Name: Circuit Tilt lock

Produkt/Product: DRFA 400-450
Ritn.nr./Drawing No.: A43064.0100

Blad/Sheet: 1/1
Utgåva/Issue: 04

https://truckmanualshub.com/

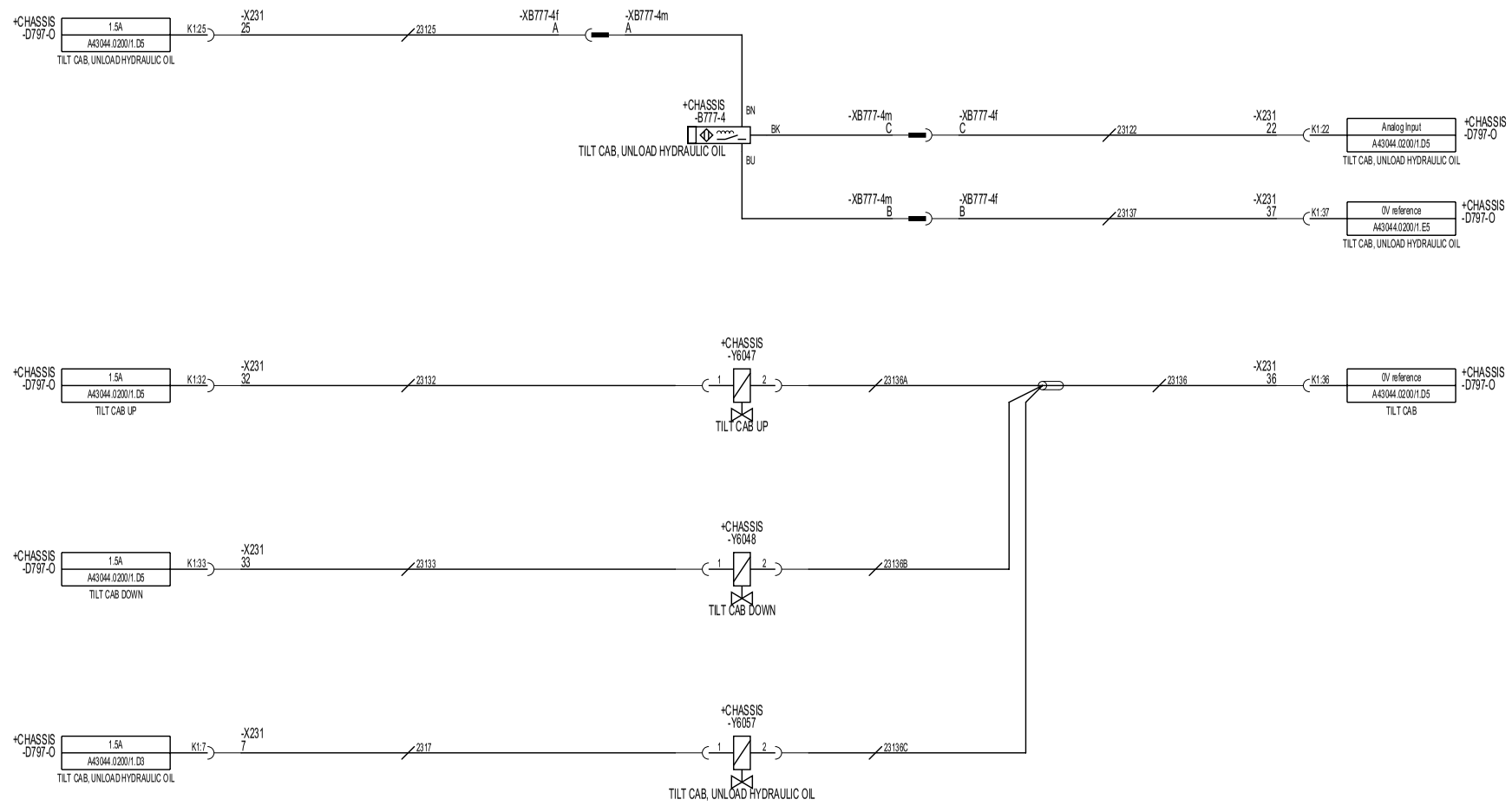

This document must not be copied without our written permission and the contents thereof must not be imparted to a third party nor be used for any unauthorised purpose. Contravention will be prosecuted.

Denna ritning får ej utan vårt medgivande kopieras. Den får ej hållas tillgänglig annan eller annars obehörigen användas. Överträdelse kommer att beivras med stöd av gällande lag.

Ref. Ruta Sq.	Nr No.	Ändring Design change	Ändring nr Change No.	Sign.	Datum Date
	1	Reference Text Adjustment, Sync. Harnesses.	041478	TKB	040930
		T=Tillk/Added U=Utgår/Deleted V=Var/Was			

	Sign.	Datum/Date	Huvudnr./Project no.
Ritad/Drawn	FSN	010731	A45209.0100
Konstr/Design			
Godk/Appr	RKO	031009	Klass/Class

H.Grp: 6

Kalmar

Benämning: Krets Tiltbar hytt

Name: Circuit Cab tilt

Produkt/Product: DRFA 400-450

Ritn.nr./Drawing No.: A43065.0100

Blad/Sheet: 1/1

Utgåva/Issue: 04

DRAWING

https://truckmanualshub.com/

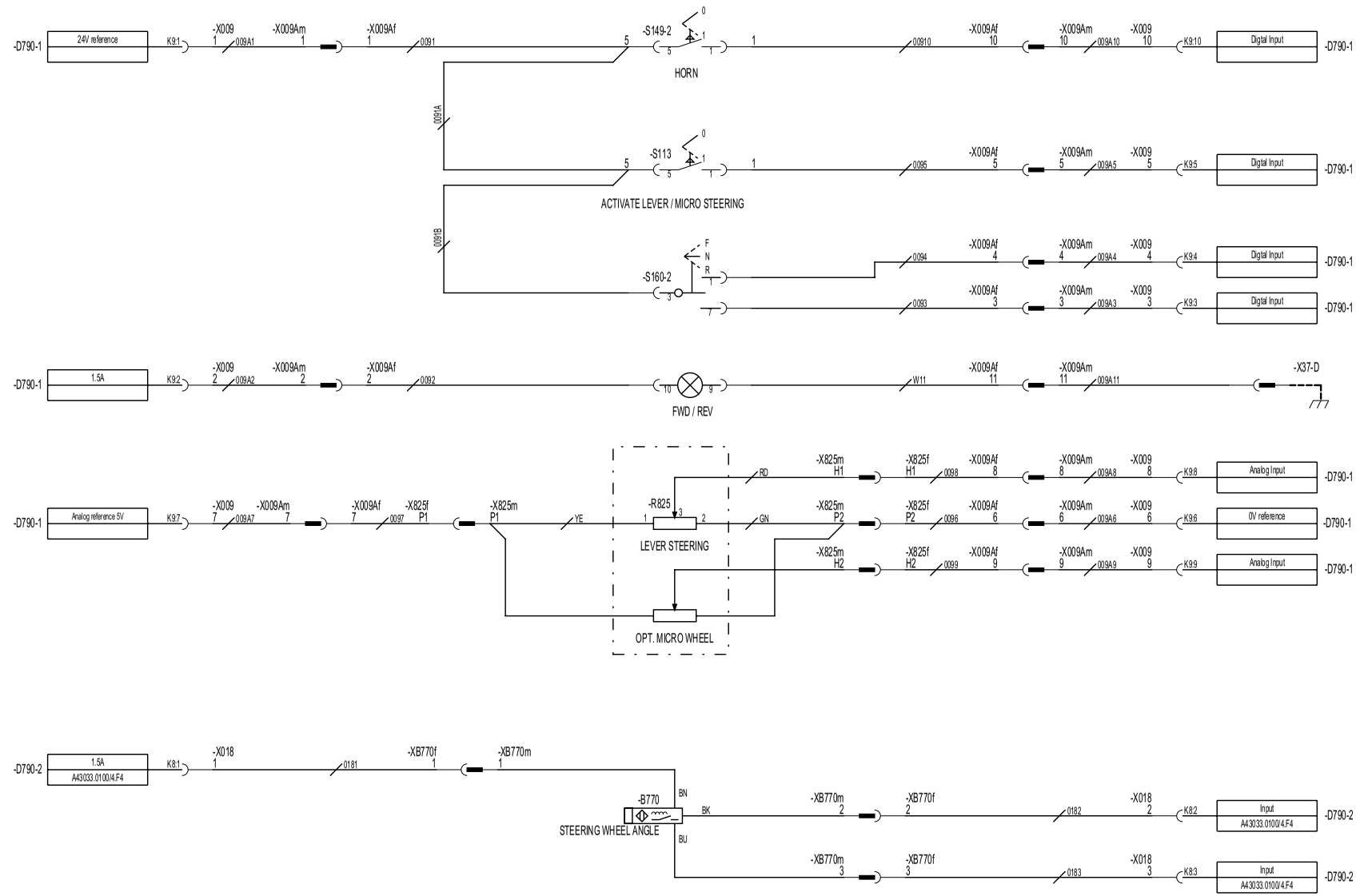

This document must not be copied without our written permission and the contents thereof must not be imparted to a third party nor be used for any unauthorized purpose. Contravention will be prosecuted.

Denna ritning får ej utan vårt medgivande kopieras. Den får ej hållas tillgänglig annan eller annars obehörigen användas. Överträdelse kommer att beivras enligt gällande lag.

Ref. Ruta Sq.	Nr No.	Ändring Design change	Ändring nr Change No.	Sign.	Datum Date
	1	Reference Text Adjustment, Sync. Harnesses.	041478	TKB	040930
T=Tillk/Added U=Utgår/Deleted V=Var/Was					

	Sign.	Datum/Date	Hv.vudnr./Project no.
Ritad/Drawn	FSN	011122	A45209.0100
Konstr/Design			
Godk/Appr	RKO	031210	Klass/Class

+CAB
H.Grp: 6

Kalmar

Benämning: Krets Styrn spak/miniratt
Name: Circuit Micro lever/wheel

Produkt/Product: DRFA 400-450
Ritn.nr./Drawing No.: A43066.0100

Blad/Sheet: 1/2
Utgåva/Issue: 05

https://truckmanualshub.com/

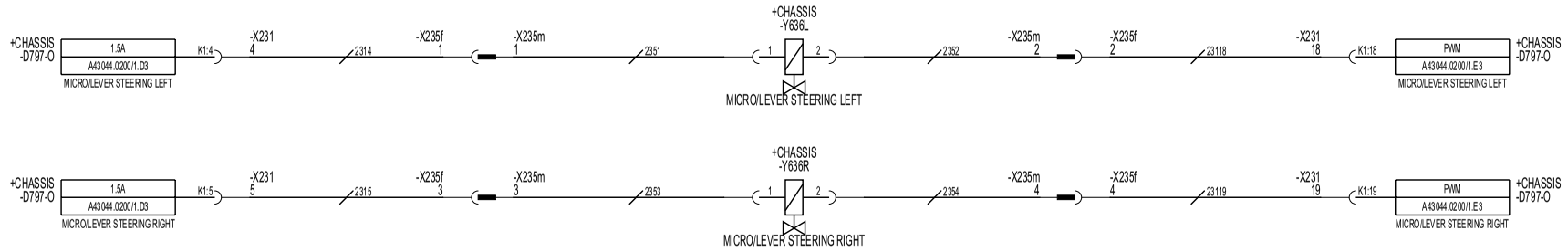

This document must not be copied without our written permission and the contents thereof must not be imparted to a third party nor be used for any unauthorized purpose. Contravention will be prosecuted.

Denna ritning får ej utan vårt medgivande kopieras. Den får ej hållas tillgänglig annan eller annars obehörigen användas. Överträdelse kommer att beivras med stöd av gällande lag.

Ref. Ruta Sq.	Nr No.	Ändring Design change	Ändring nr Change No.	Sign.	Datum Date
	1	Reference Text Adjustment, Sync. Harnesses.	041478	TKB	040930
		T=Tillk/Added U=Utgår/Deleted V=Var/Was			

	Sign.	Datum/Date	Huvudnr./Project no.
Ritad/Drawn	FSN	011122	A452/09.0100
Konstr/Design			
Godk/Appr	RKO	031210	Klass/Class

H.Grp: 6

Kalmar

Benämning: Krets Styrn spak/miniratt

Name: Circuit Micro lever/wheel

Produkt/Product: DRFA 400-450

Ritn.nr./Drawing No.: A43066.0100

Blad/Sheet: 2/2

Utgåva/Issue: 05

https://truckmanualshub.com/

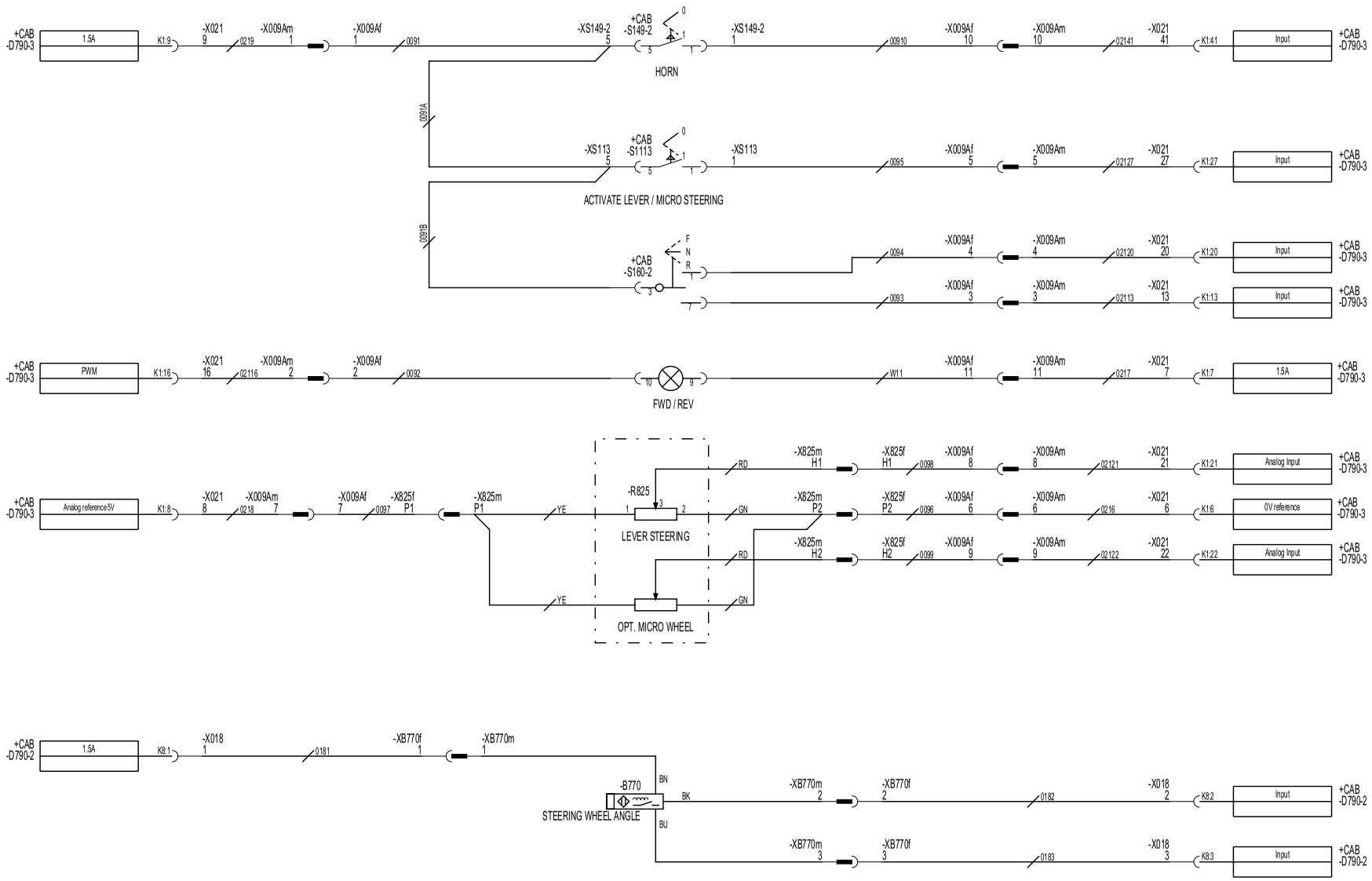

Ref. Ruta Sq.	Nr No.	Ändring Design change	Ändring nr Change No.	Sign.	Datum Date
	1	Reference Text Adjustment, Sync. Harnesses.	041478	TKB	040930
		T=Tillk/Added U=Utgår/Deleted V=Var/Was			

	Sign.	Datum/Date	Hv.vudnr./Project no.
Ritad/Drawn	TKB	030428	A452/09.0100
Konstr/Design			
Godk/Appr	RKO	031210	Klass/Class

H.Grp: 6

Kalmar

Benämning: Krets Styrn spak/miniratt och Kombiagg
Name: Circuit Micro lever/wheel and Combi Att

Produkt/Product: DRFA 400-450
Ritn.nr./Drawing No.: A43066.0200

Blad/Sheet: 1/2
Utgåva/Issue: 04

This document must not be copied without our written permission and the contents thereof must not be imparted to a third party nor be used for any unauthorised purpose. Contravention will be prosecuted.

Denna ritning får ej utan vårt medgivande kopieras. Den får ej hållas tillgänglig annan eller annars obehörigen användas. Överträdelse kommer att beivras enligt gällande lag.

https://truckmanualshub.com/

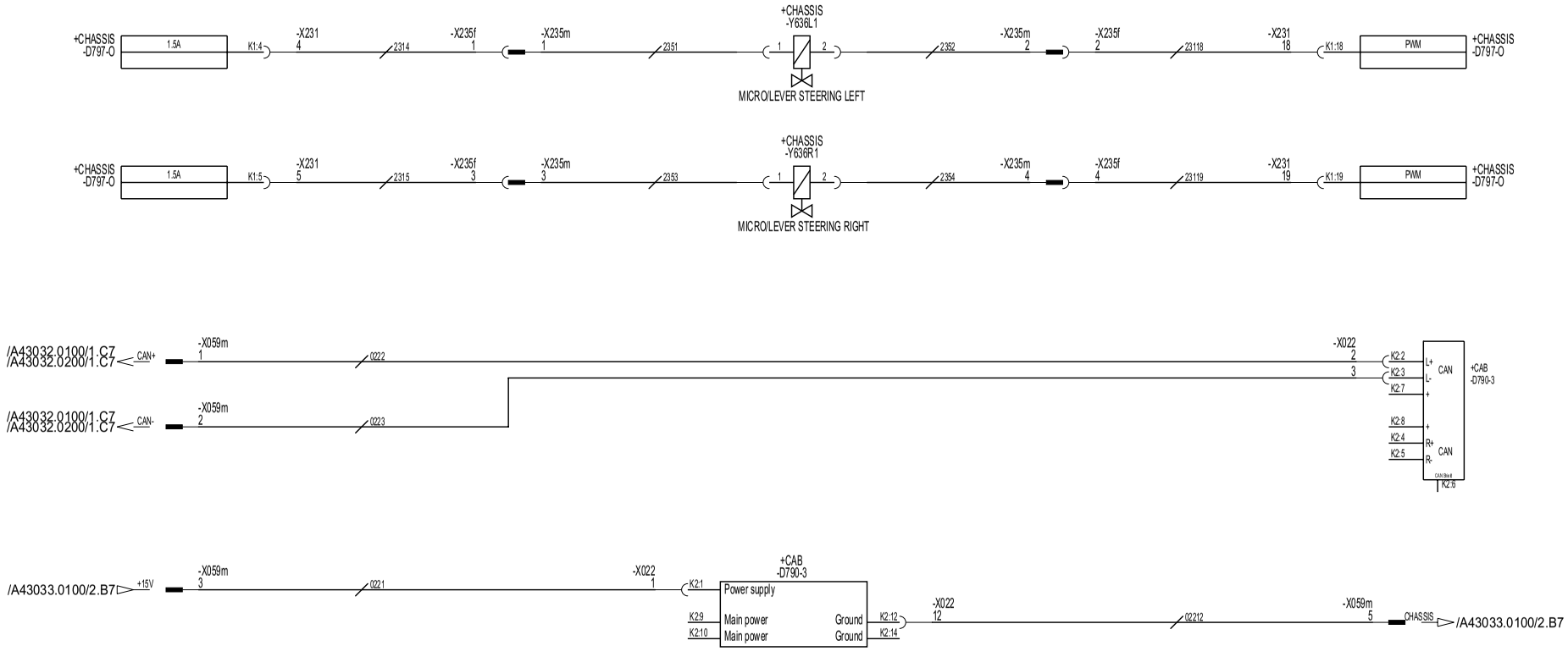

This document must not be copied without our written permission and the contents thereof must not be imparted to a third party nor be used for any unauthorised purpose. Contravention will be prosecuted.

Denna ritning får ej utan vårt medgivande kopieras. Den får ej hållas tillgänglig annan eller annars obehörigen användas. Överträdelse kan komma att bestraffas av gällande lag.

Ref. Ruta Sq.	Nr No.	Ändring Design change	Ändring nr Change No.	Sign.	Datum Date
	1	Reference Text Adjustment, Sync. Harnesses.	041478	TKB	040930
T=Tillk/Added U=Utgår/Deleted V=Var/Was					

	Sign.	Datum/Date	Hv.vuodnr./Project no.
Ritad/Drawn	TKB	030428	A452/09.0100
Konstr/Design			
Godk/Appr	RKO	031210	Klass/Class

H.Grp: 6

Kalmar

Benämning: Krets Styrn spak/miniratt och Kombiagg
Name: Circuit Micro lever/wheel and Combi Att

Produkt/Product: DRFA 400-450
Ritn.nr./Drawing No.: A43066.0200

Blad/Sheet: 2/2
Utgåva/Issue: 04

https://truckmanualshub.com/

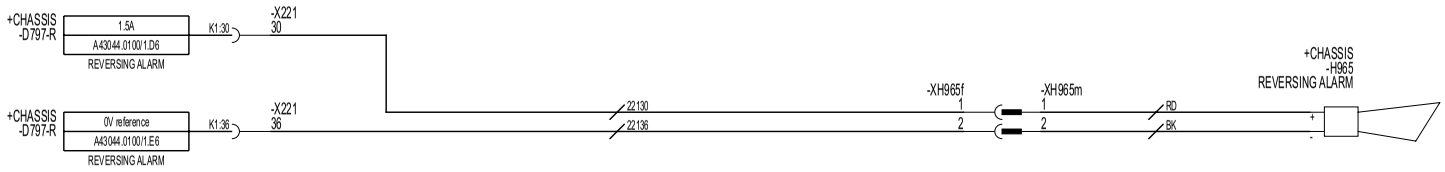

This document must not be copied without our written permission and the contents thereof must not be imparted to a third party nor be used for any unauthorized purpose. Contravention will be prosecuted.

Denna ritning får ej utan vårt medgivande kopieras. Den får ej hållas tillgänglig annan eller annars obehörigen användas. Överträdelse kommer att beivras med stöd av gällande lag.

Ref. Ruta Sq.	Nr No.	Ändring Design change	Ändring nr Change No.	Sign.	Datum Date
	1	Reference Text Adjustment, Sync. Harnesses.	041478	TKB	040930
		T=Tillk/Added U=Utgår/Deleted V=Var/Was			

	Sign.	Datum/Date	Huvudnr./Project no.
Ritad/Drawn	FSN	011121	A45209.0100
Konstr/Design			
Godk/Appr	RKO	031009	Klass/Class

H.Grp: 6

Kalmar

Benämning: Krets Backlarm

Name: Circuit Reverse alarm

Produkt/Product: DRFA 400-450

Ritn.nr./Drawing No.: A43067.0100

Blad/Sheet: 1/1

Utgåva/Issue: 04

https://truckmanualshub.com/

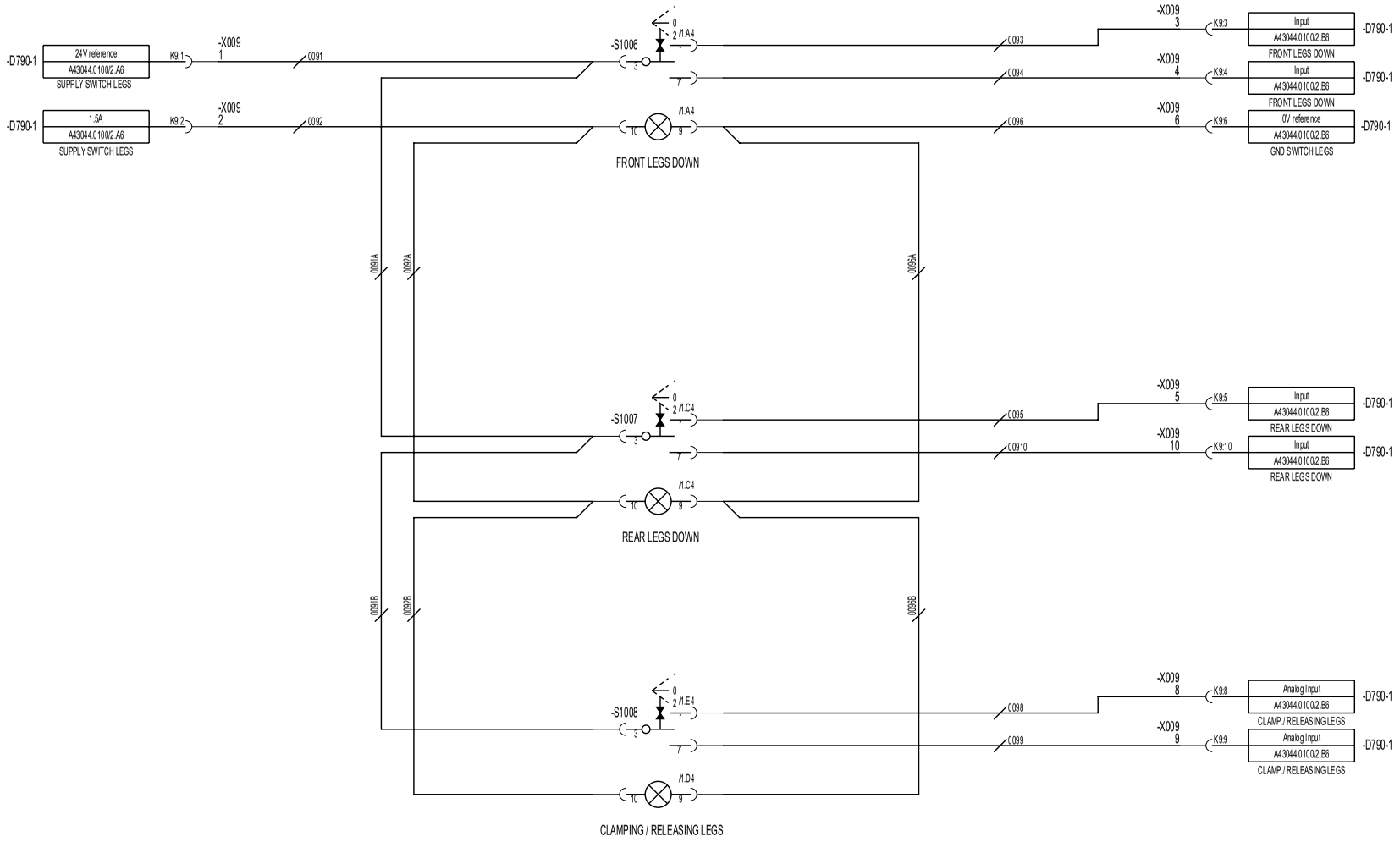

This document must not be copied without our written permission and the contents thereof must not be imparted to a third party nor be used for any unauthorized purpose. Contravention will be prosecuted.

Denna ritning får ej utan vårt medgivande kopieras. Den får ej hållas tillgänglig annan eller annars obehörigen användas. Överträdelse kommer att beivras med stöd av gällande lag.

Ref. Ruta Sq.	Nr No.	Ändring Design change	Ändring nr Change No.	Sign.	Datum Date
	1	Reference Text Adjustment, Sync. Harnesses.	041478	TKB	040930
T=Tillk/Added U=Utgår/Deleted V=Var/Was					

	Sign.	Datum/Date	Huvudnr./Project no.
Ritad/Drawn	FSN	011122	A45209.0100
Konstr/Design			
Godk/Appr	RKO	031009	Klass/Class

+CAB
H.Grp: 6

Kalmar

Benämning: Krets Kombi Agg
Name: Circuit Combi Att

Produkt/Product: DRFA 400-450
Ritn.nr./Drawing No.: A43068.0100

Blad/Sheet: 1/12
Utgåva/Issue: 04

https://truckmanualshub.com/

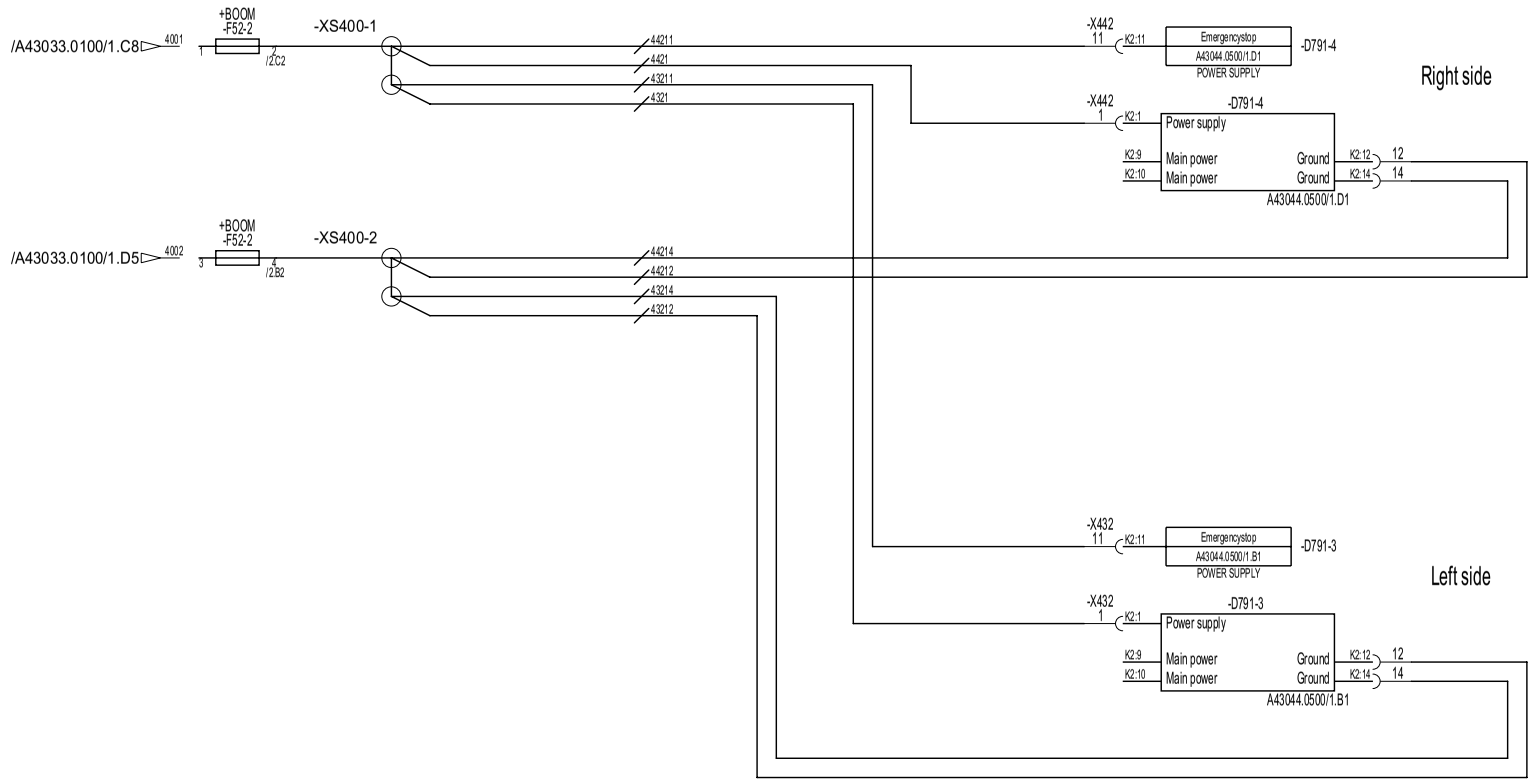

This document must not be copied without our written permission and the contents thereof must not be imparted to a third party nor be used for any unauthorized purpose. Contravention will be prosecuted.

Denna ritning får ej utan vårt medgivande kopieras. Den får ej hållas tillgänglig annan eller annars obehörigen användas. Överträdelse kommer att beivras med stöd av gällande lag.

Ref. Ruta Sq.	Nr No.	Ändring Design change	Ändring nr Change No.	Sign.	Datum Date
	1	Reference Text Adjustment, Sync. Harnesses.	041478	TKB	040930
		T=Tillk/Added U=Utgår/Deleted V=Var/Was			

	Sign.	Datum/Date	Huvudnr./Project no.
Ritad/Drawn	FSN	020530	A452/09.0100
Konstr/Design			
Godk/Appr	RKO	031009	Klass/Class

+ATTACHMENT
H.Grp: 6

Kalmar

Benämning: Krets Kombi Agg
Name: Circuit Combi Att

Produkt/Product: DRFA 400-450
Ritn.nr./Drawing No.: A43068.0100

Blad/Sheet: 2/12
Utgåva/Issue: 04

https://truckmanualshub.com/

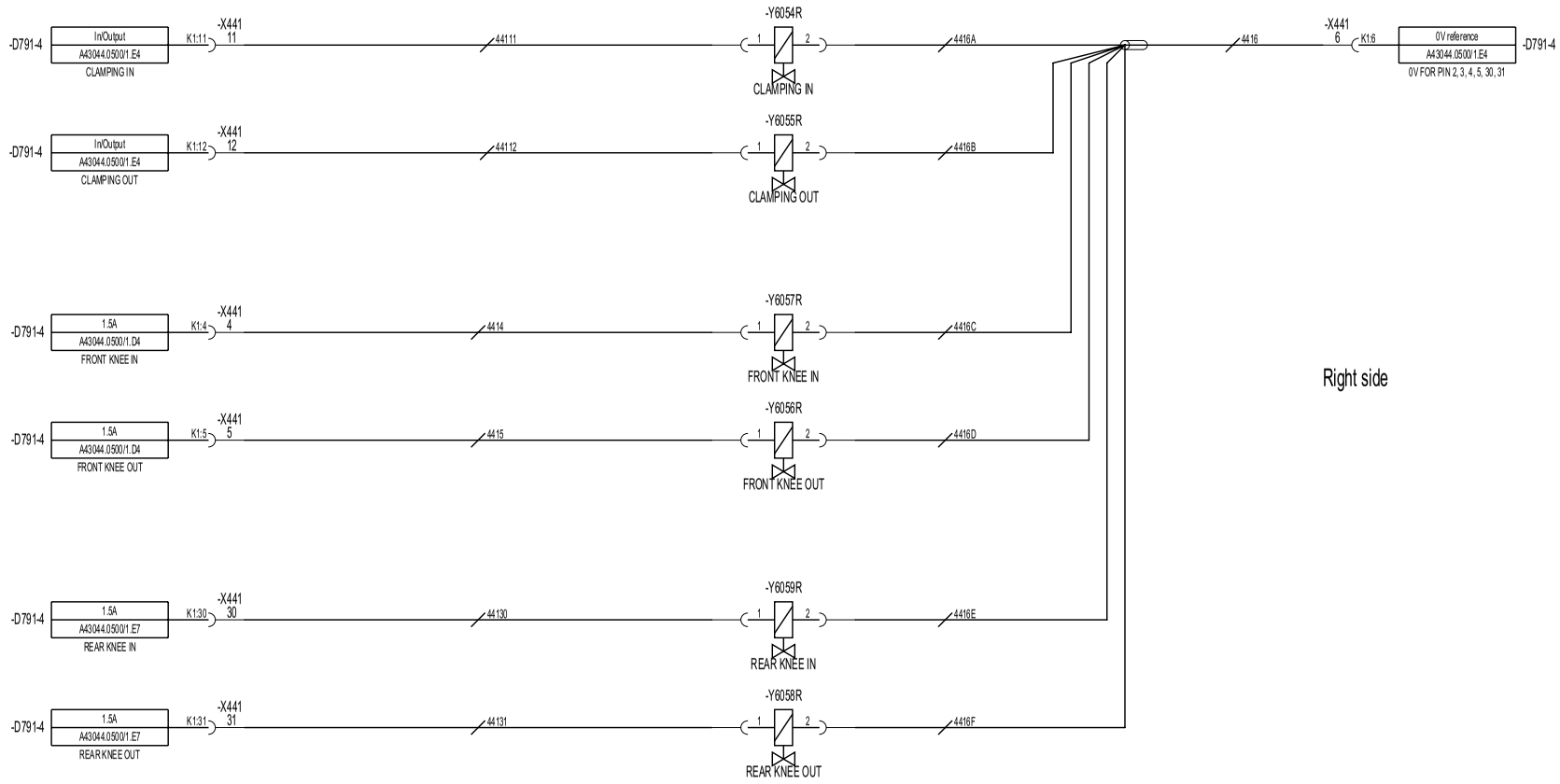

This document must not be copied without our written permission and the contents thereof must not be imparted to a third party nor be used for any unauthorized purpose. Contravention will be prosecuted.

Denna ritning är vårt utan medgivande kopierad. Den får ej hållas tillgänglig annan eller annars obehörigen användas. Överträdelse kommer att beivras med stöd av gällande lag.

Ref. Ruta Sq.	Nr No.	Ändring Design change	Ändring nr Change No.	Sign.	Datum Date
	1	Reference Text Adjustment, Sync. Harnesses.	041478	TKB	040930
		T=Tillk/Added U=Utgår/Deleted V=Var/Was			

	Sign.	Datum/Date	Huvudnr./Project no.
Ritad/Drawn	FSN	020530	A45209.0100
Konstr/Design			
Godk/Appr	RKO	031009	Klass/Class

+ATTACHMENT
H.Grp: 6

Kalmar

Benämning: Krets Kombi Agg
Name: Circuit Combi Att

Produkt/Product: DRFA 400-450
Ritn.nr./Drawing No.: A43068.0100

Blad/Sheet: 3 / 12
Utgåva/Issue: 04

https://truckmanualshub.com/

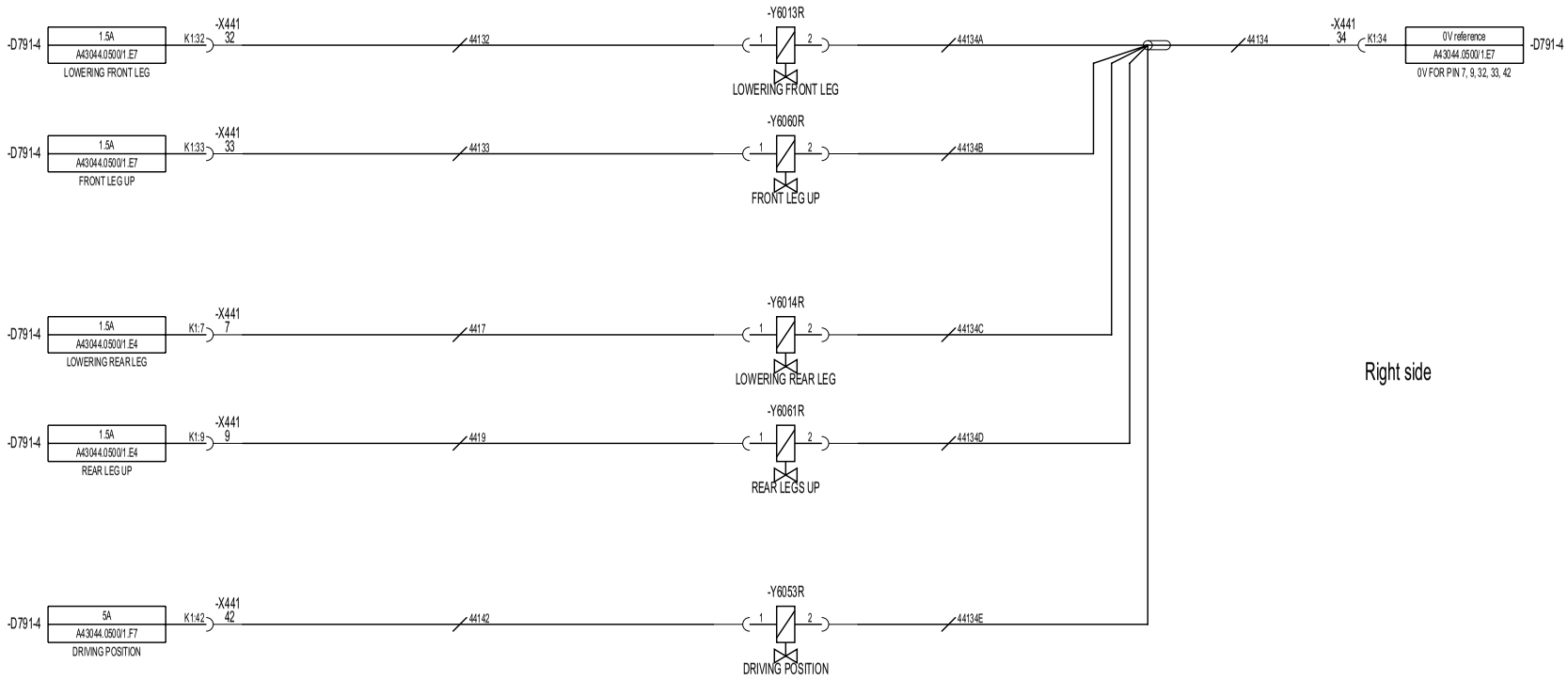

This document must not be copied without our written permission and the contents thereof must not be imparted to a third party nor be used for any unauthorized purpose. Contravention will be prosecuted.

Denna ritning får ej utan vårt medgivande kopieras. Den får ej hållas tillgänglig annan eller annars obehörigen användas. Överträdelse kan komma att bestraffas enligt gällande lag.

Ref. Ruta Sq.	Nr No.	Ändring Design change	Ändring nr Change No.	Sign.	Datum Date
	1	Reference Text Adjustment, Sync. Harnesses.	041478	TKB	040930
T=Tillk/Added U=Utgår/Deleted V=Var/Was					

	Sign.	Datum/Date	Huvudnr./Project no.
Ritad/Drawn	FSN	020530	A45209.0100
Konstr/Design			
Godk/Appr	RKO	031009	Klass/Class

+ATTACHMENT
H.Grp: 6

Kalmar

Benämning: Krets Kombi Agg
Name: Circuit Combi Att

Produkt/Product: DRFA 400-450
Ritn.nr./Drawing No.: A43068.0100

Blad/Sheet: 4 / 12
Utgåva/Issue: 04

https://truckmanualshub.com/

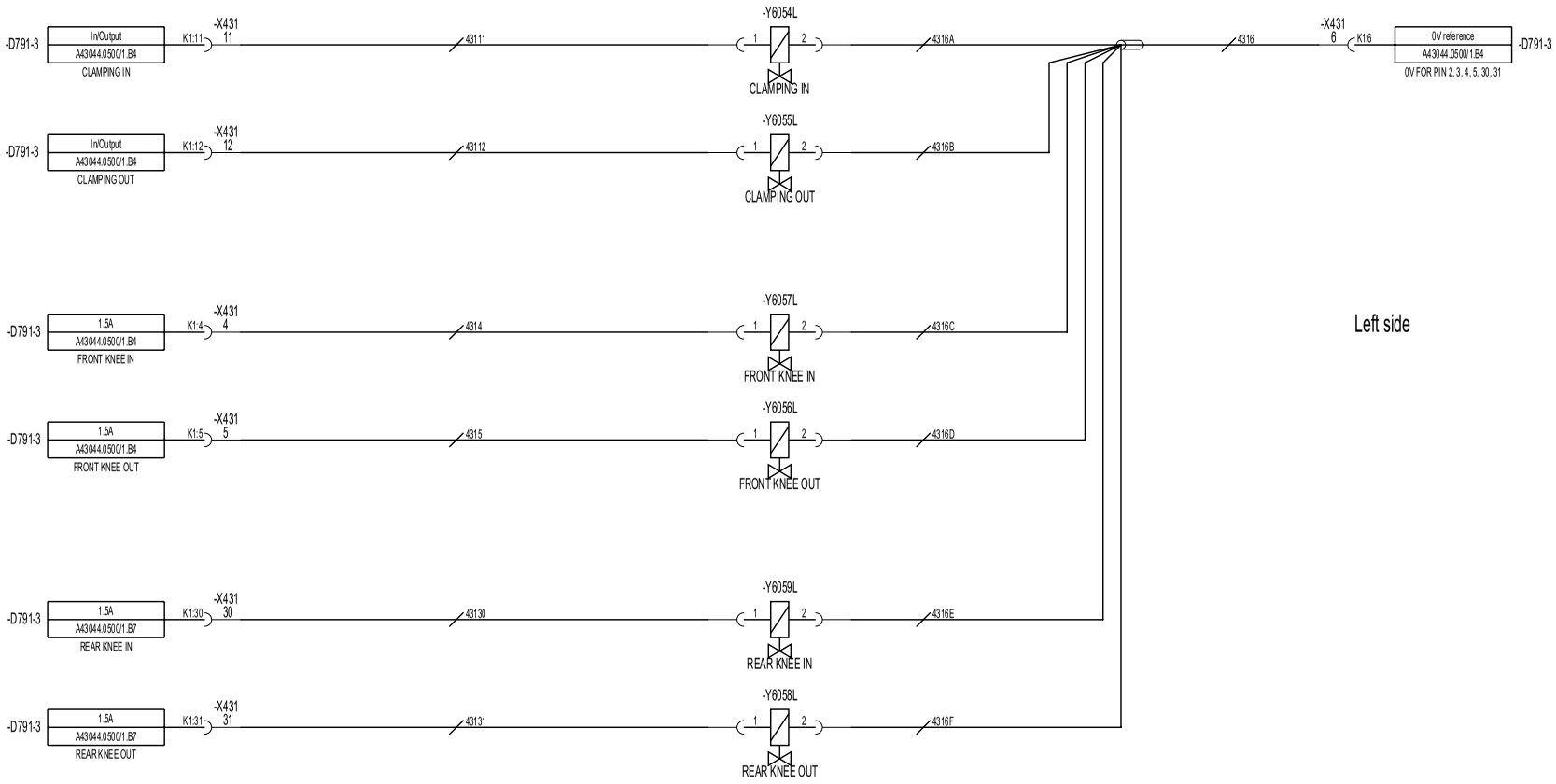

This document must not be copied without our written permission and the contents thereof must not be imparted to a third party nor be used for any unauthorised purpose. Contravention will be prosecuted.

Denna ritning får ej utan vårt medgivande kopieras. Den får ej hållas tillgänglig annan eller annars obehörigen användas. Överträdelse kommer att beivras med stöd av gällande lag.

Ref. Ruta Sq.	Nr No.	Ändring Design change	Ändring nr Change No.	Sign.	Datum Date
	1	Reference Text Adjustment, Sync. Harnesses.	041478	TKB	040930
T=Tillk/Added U=Utgår/Deleted V=Var/Was					

	Sign.	Datum/Date	Huvudnr./Project no.
Ritad/Drawn	FSN	020530	A45209.0100
Konstr/Design			
Godk/Appr	RKO	031009	Klass/Class

+ATTACHMENT
H.Grp: 6

Kalmar

Benämning: Krets Kombi Agg
Name: Circuit Combi Att

Produkt/Product: DRFA 400-450
Ritn.nr./Drawing No.: A43068.0100

Blad/Sheet: 5 / 12
Utgåva/Issue: 04

https://truckmanualshub.com/

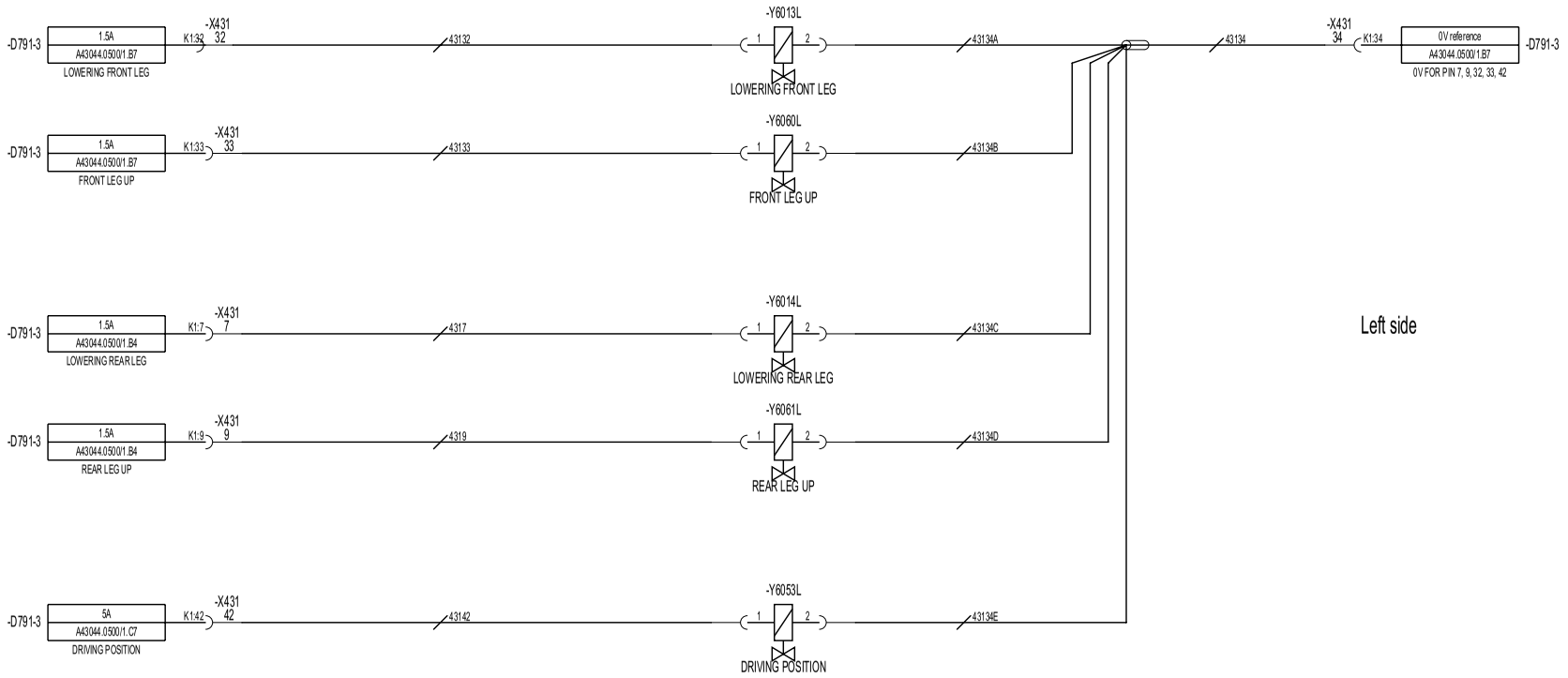

This document must not be copied without our written permission and the contents thereof must not be imparted to a third party nor be used for any unauthorized purpose. Contravention will be prosecuted.

Denna ritning får ej utan vårt medgivande kopieras. Den får ej hållas tillgänglig annan eller annars obehörigen användas. Överträdelse kommer att beivras med stöd av gällande lag.

Ref. Ruta Sq.	Nr No.	Ändring Design change	Ändring nr Change No.	Sign.	Datum Date
	1	Reference Text Adjustment, Sync. Harnesses.	041478	TKB	040930
T=Tillk/Added U=Utgår/Deleted V=Var/Was					

	Sign.	Datum/Date	Huvudnr./Project no.
Ritad/Drawn	FSN	020530	A45209.0100
Konstr/Design			
Godk/Appr	RKO	031009	Klass/Class

+ATTACHMENT
H.Grp: 6

Kalmar

Benämning: Krets Kombi Agg
Name: Circuit Combi Att

Produkt/Product: DRFA 400-450
Ritn.nr./Drawing No.: A43068.0100

Blad/Sheet: 6 / 12
Utgåva/Issue: 04

https://truckmanualshub.com/

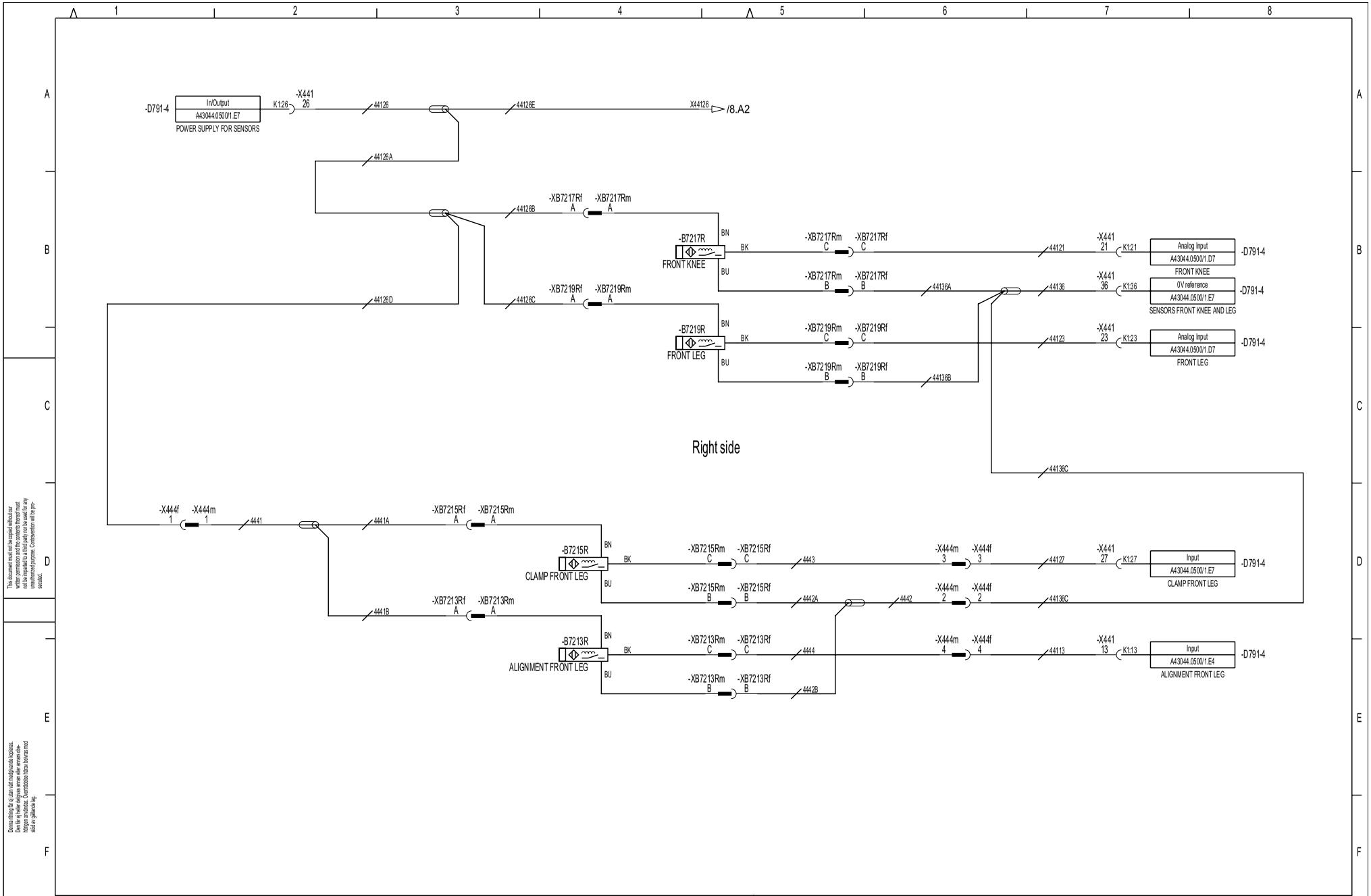

This document must not be copied without our written permission and the contents thereof must not be imparted to a third party nor be used for any unauthorized purpose. Contravention will be prosecuted.

Denna ritning får ej utan vår medgivande kopieras. Den får ej hållas tillgänglig annan eller annars obehörigen användas. Överträdelse kommer att beivras med stöd av gällande lag.

Ref. Ruta Sq.	Nr No.	Ändring Design change	Ändring nr Change No.	Sign.	Datum Date
	1	Reference Text Adjustment, Sync. Harnesses.	041478	TKB	040930
		T=Tillk/Added U=Utgår/Deleted V=Var/Was			

	Sign.	Datum/Date	Hv.vuodnr./Project no.
Ritad/Drawn	FSN	020530	A45209.0100
Konstr/Design			
Godk/Appr	RKO	031009	Klass/Class

+ATTACHMENT
H.Grp: 6

Kalmar

Benämning: Krets Kombi Agg
Name: Circuit Combi Att

Produkt/Product: DRFA 400-450
Ritn.nr./Drawing No.: A43068.0100

Blad/Sheet: 7 / 12
Utgåva/Issue: 04

https://truckmanualshub.com/

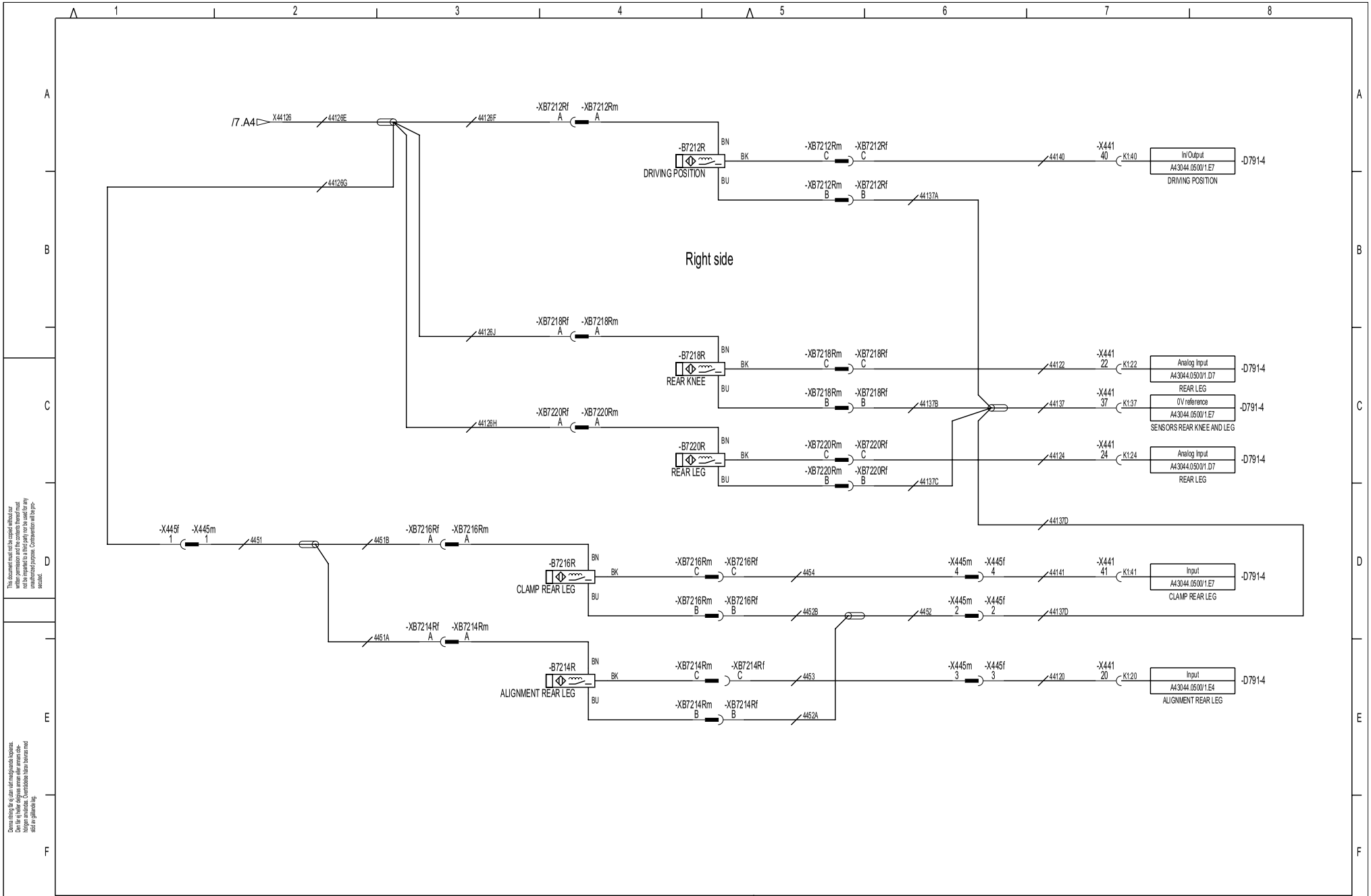

This document must not be copied without our written permission and the contents thereof must not be imparted to a third party nor be used for any unauthorised purpose. Contravention will be prosecuted.

Denna ritning får ej utan vårt medgivande kopieras. Den får ej hållas tillgänglig annan eller annars obehörigen användas. Överträdelse kommer att beivras med stöd av gällande lag.

Ref. Ruta Sq.	Nr No.	Ändring Design change	Ändring nr Change No.	Sign.	Datum Date
	1	Reference Text Adjustment, Sync. Harnesses.	041478	TKB	040930
		T=Tillk/Added U=Utgår/Deleted V=Var/Was			

	Sign.	Datum/Date	Huvudnr./Project no.
Ritad/Drawn	FSN	020530	A45209.0100
Konstr/Design			
Godk/Appr	RKO	031009	Klass/Class

+ATTACHMENT
H.Grp: 6

Kalmar

Benämning: Krets Kombi Agg
Name: Circuit Combi Att

Produkt/Product: DRFA 400-450
Ritn.nr./Drawing No.: A43068.0100

Blad/Sheet: 8 / 12
Utgåva/Issue: 04

https://truckmanualshub.com/

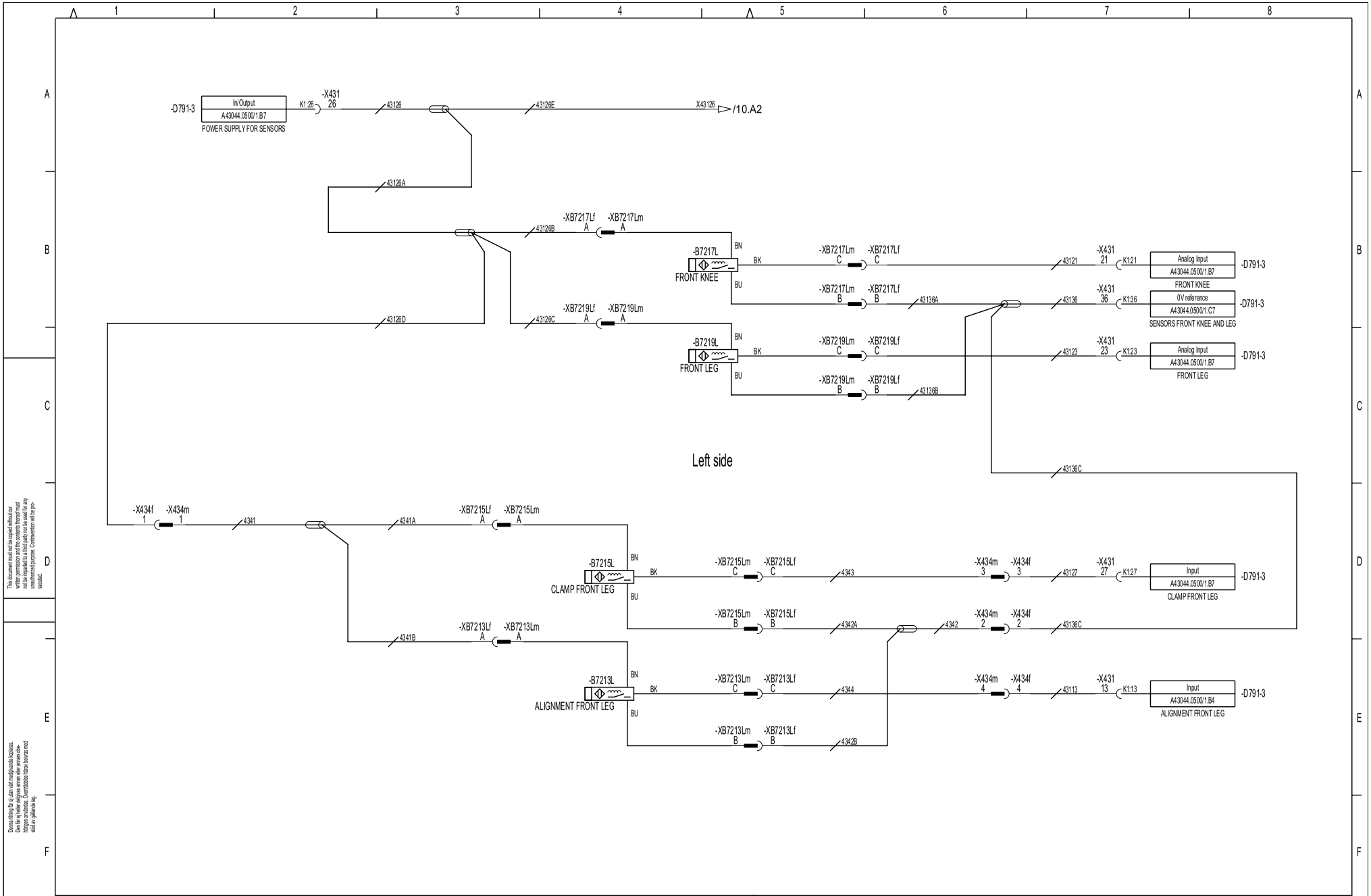

This document must not be copied without our written permission and the contents thereof must not be imparted to a third party nor be used for any unauthorised purpose. Contravention will be prosecuted.

Denna ritning får ej utan vårt medgivande kopieras. Den får ej hållas tillgänglig annan eller annars obehörigen användas. Överträdelse kommer att beivras med stöd av gällande lag.

Ref. Ruta Sq.	Nr No.	Ändring Design change	Ändring nr Change No.	Sign.	Datum Date
	1	Reference Text Adjustment, Sync. Harnesses.	041478	TKB	040930
		T=Tillk/Added U=Utgår/Deleted V=Var/Was			

	Sign.	Datum/Date	Huvudnr./Project no.
Ritad/Drawn	FSN	020530	A45209.0100
Konstr/Design			
Godk/Appr	RKO	031009	Klass/Class

+ATTACHMENT
H.Grp: 6

Kalmar

Benämning: Krets Kombi Agg
Name: Circuit Combi Att

Produkt/Product: DRFA 400-450
Ritn.nr./Drawing No.: A43068.0100

Blad/Sheet: 9 / 12
Utgåva/Issue: 04

https://truckmanualshub.com/

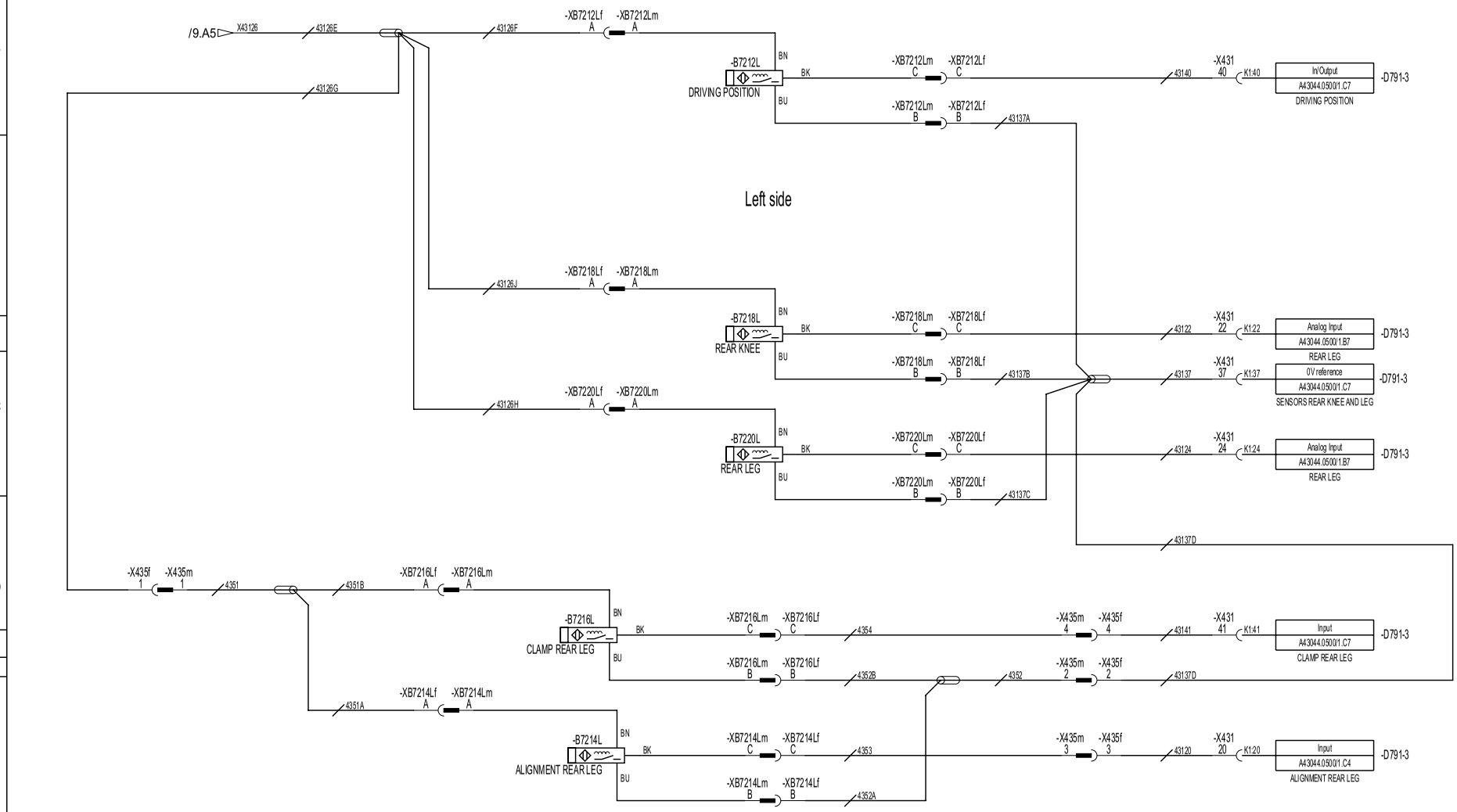

This document must not be copied without our written permission and the contents thereof must not be imparted to a third party nor be used for any unauthorized purpose. Contravention will be prosecuted.

Denna ritning får ej utan vårt medgivande kopieras. Den får ej hållas tillgänglig annan eller annars obehörigen användas. Överträdelse kommer att beivras med stöd av gällande lag.

Ref. Ruta Sq.	Nr No.	Ändring Design change	Ändring nr Change No.	Sign.	Datum Date
	1	Reference Text Adjustment, Sync. Harnesses.	041478	TKB	040930
		T=Tillk/Added U=Utgår/Deleted V=Var/Was			

	Sign.	Datum/Date	Hv.vuodnr./Project no.
Ritad/Drawn	FSN	020530	A45209.0100
Konstr/Design			
Godk/Appr	RKO	031009	Klass/Class

+ATTACHMENT
H.Grp: 6

Kalmar

Benämning: Krets Kombi Agg
Name: Circuit Combi Att

Produkt/Product: DRFA 400-450
Ritn.nr./Drawing No.: A43068.0100

Blad/Sheet: 10 / 12
Utgåva/Issue: 04

DRAWING

https://truckmanualshub.com/

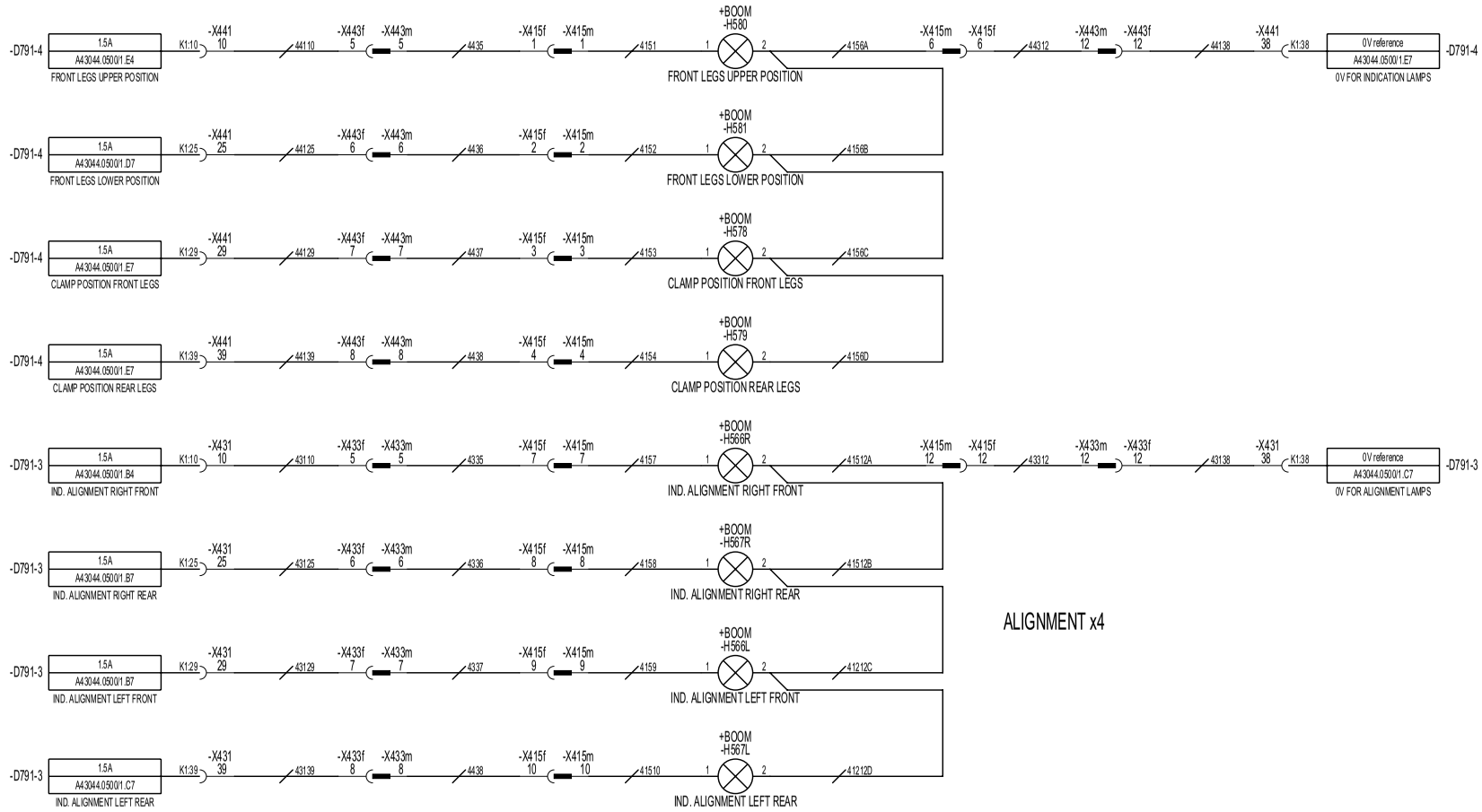

This document must not be copied without our written permission and the contents thereof must not be imparted to a third party nor be used for any unauthorised purpose. Contravention will be prosecuted.

Denna ritning får ej utan vårt medgivande kopieras. Den får ej hållas tillgänglig annan eller annars obehörigen användas. Överträdelse kommer att beivras med stöd av gällande lag.

Ref. Ruta Sq.	Nr No.	Ändring Design change	Ändring nr Change No.	Sign.	Datum Date
	1	Reference Text Adjustment, Sync. Harnesses.	041478	TKB	040930
		T=Tillk/Added U=Utgår/Deleted V=Var/Was			

	Sign.	Datum/Date	Huvudnr./Project no.
Ritad/Drawn	FSN	020530	A45209.0100
Konstr/Design			
Godk/Appr	RKO	031009	Klass/Class

+ATTACHMENT
H.Grp: 6

Kalmar

Benämning: Krets Kombi Agg
Name: Circuit Combi Att

Produkt/Product: DRFA 400-450
Ritn.nr./Drawing No.: A43068.0100

Blad/Sheet: 11/12
Utgåva/Issue: 04

https://truckmanualshub.com/

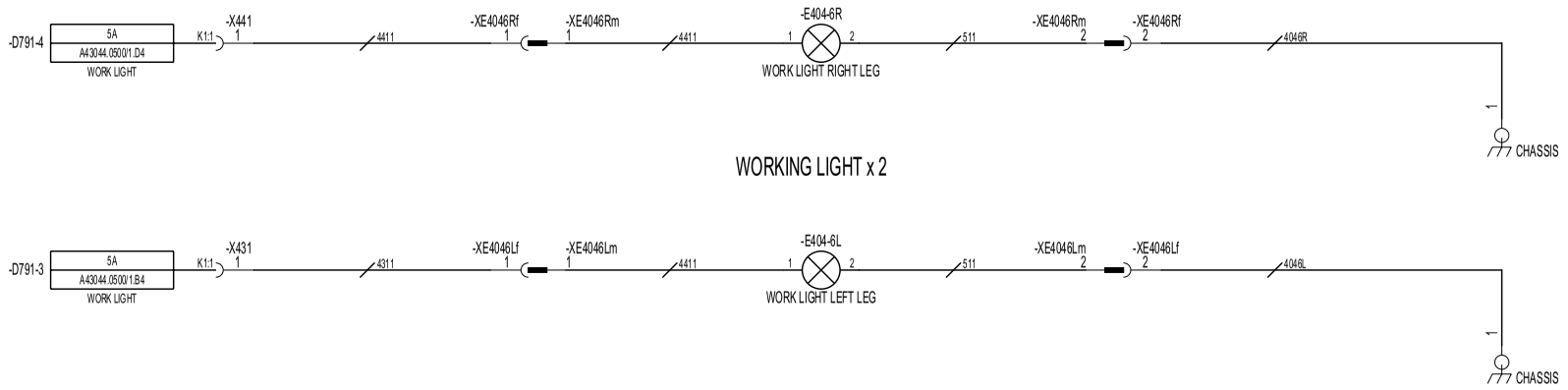

This document must not be copied without our written permission and the contents thereof must not be imparted to a third party nor be used for any unauthorized purpose. Contravention will be prosecuted.

Denna ritning får ej utan vårt medgivande kopieras. Den får ej hållas tillgänglig annan eller annars obehörigen användas. Överträdelse kommer att beivras med stöd av gällande lag.

Ref. Ruta Sq.	Nr No.	Ändring Design change	Ändring nr Change No.	Sign.	Datum Date
	1	Reference Text Adjustment, Sync. Harnesses.	041478	TKB	040930
		T=Tillk/Added U=Utgår/Deleted V=Var/Was			

	Sign.	Datum/Date	Huvudnr./Project no.
Ritad/Drawn	FSN	020530	A45209.0100
Konstr/Design			
Godk/Appr	RKO	031009	Klass/Class

+ATTACHMENT
H.Grp: 6

Kalmar

Benämning: Krets Kombi Agg
Name: Circuit Combi Att

Produkt/Product: DRFA 400-450
Ritn.nr./Drawing No.: A43068.0100

Blad/Sheet: 12 / 12
Utgåva/Issue: 04

https://truckmanualshub.com/

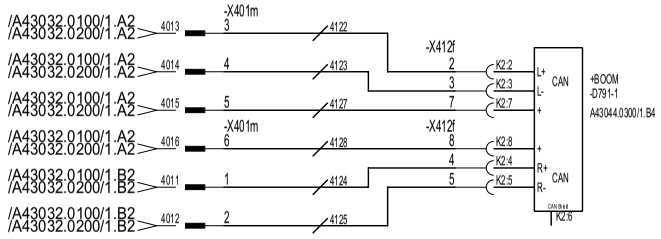

This document must not be copied without our written permission and the contents thereof must not be imparted to a third party nor be used for any unauthorized purpose. Contravention will be prosecuted.

Denna ritning får ej utan vårt medgivande kopieras. Den får ej hållas tillgänglig annan eller annars obehörigen användas. Överträdelse kommer att beivras med stöd av gällande lag.

Ref. Ruta Sq.	Nr No.	Ändring Design change	Ändring nr Change No.	Sign.	Datum Date
	1	Reference Text Adjustment, Sync. Harnesses.	041478	TKB	040930
		T=Tillk/Added U=Utgår/Deleted V=Var/Was			

	Sign.	Datum/Date	Huvudnr./Project no.
Ritad/Drawn	FSN	030110	A45209.0100
Konstr/Design			
Godk/Appr	RKO	031009	Klass/Class

H.Grp: 6

Kalmar

Benämning: Krets CAN-BUS AGG

Name: Circuit CAN-BUS ATT

Produkt/Product: DRFA 400-450

Ritn.nr./Drawing No.: A44875.0100

Blad/Sheet: 1/1

Utgåva/Issue: 03

https://truckmanualshub.com/

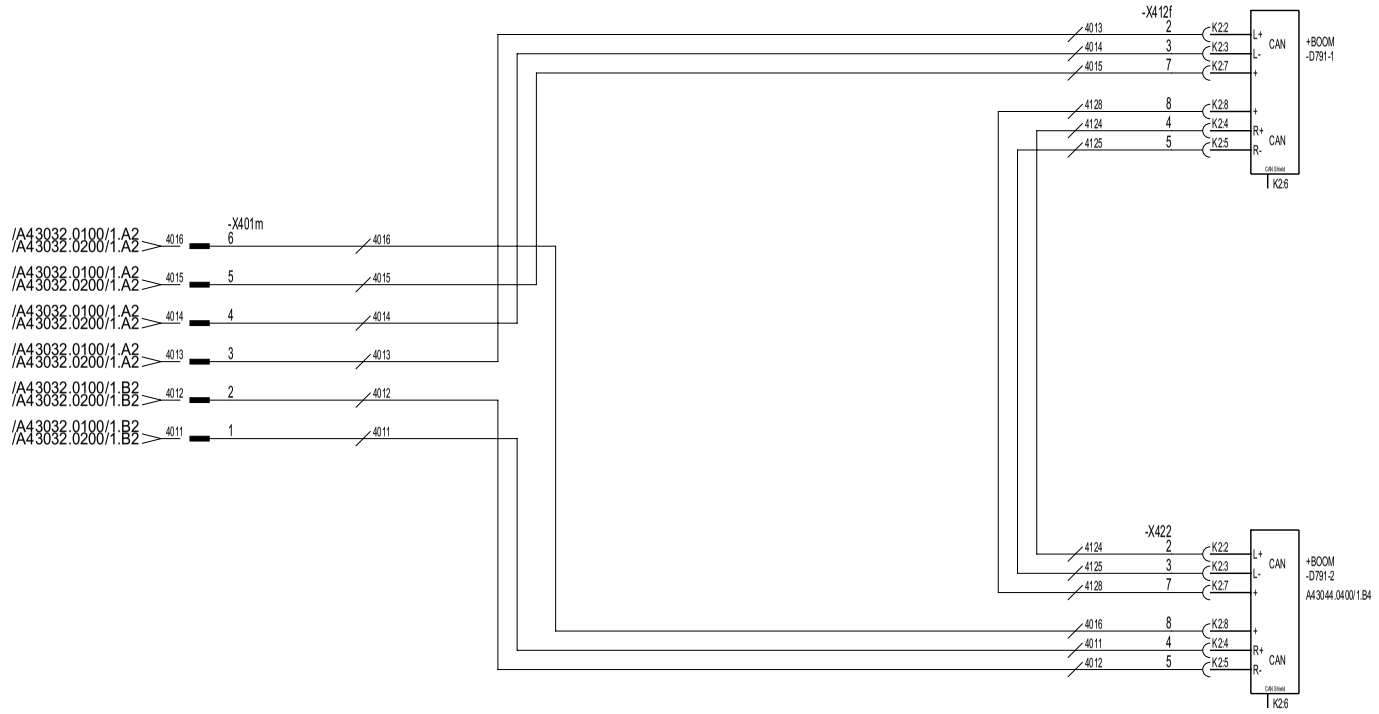

This document must not be copied without our written permission and the contents thereof must not be imparted to a third party nor be used for any unauthorized purpose. Contravention will be prosecuted.

Denna ritning får ej utan vårt medgivande kopieras. Den får ej hållas tillgänglig annan eller annars obehörigen användas. Överträdelse kommer att beivras med stöd av gällande lag.

Ref. Ruta Sq.	Nr No.	Ändring Design change	Ändring nr Change No.	Sign.	Datum Date
	1	Reference Text Adjustment, Sync. Harnesses.	041478	TKB	040930
		T=Tillk/Added U=Utgår/Deleted V=Var/Was			

	Sign.	Datum/Date	Huvudnr./Project no.
Ritad/Drawn	FSN	030110	A45209.0100
Konstr/Design			
Godk/Appr	RKO	031009	Klass/Class

H.Grp: 6

Kalmar

Benämning: Krets CAN-BUS AGG

Name: Circuit CAN-BUS ATT

Produkt/Product: DRFA 400-450

Ritn.nr./Drawing No.: A44875.0200

Blad/Sheet: 1/1

Utgåva/Issue: 03

https://truckmanualshub.com/

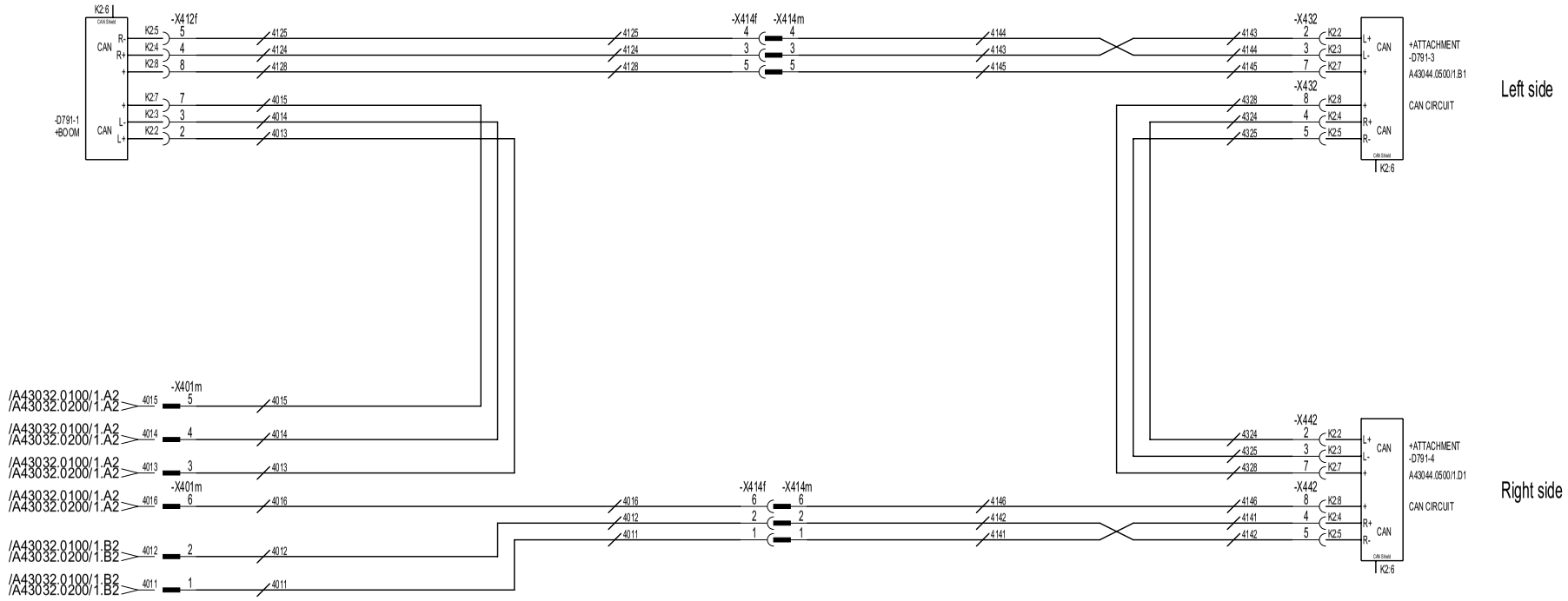

Ref. Ruta Sq.	Nr No.	Ändring Design change	Ändring nr Change No.	Sign.	Datum Date
	1	Reference Text Adjustment, Sync. Harnesses.	041478	TKB	040930
		T=Tillk/Added U=Utgår/Deleted V=Var/Was			

	Sign.	Datum/Date	Hv.vuodnr./Project no.
Ritad/Drawn	FSN	030224	A45209.0100
Konstr/Design			
Godk/Appr	RKO	031009	Klass/Class

H.Grp: 6

Kalmar

Benämning: Krets CAN-BUS AGG

Name: Circuit CAN-BUS ATT

Produkt/Product: DRFA 400-450

Ritn.nr./Drawing No.: A44875.0300

Blad/Sheet: 1/1

Utgåva/Issue: 03

This document must not be copied without our written permission and the contents thereof must not be imparted to a third party nor be used for any unauthorized purpose. Contravention will be prosecuted.

Denna ritning är vår upphovsrätt skyddad. Den får ej kopiera eller delgivas annan eller annars obehörigen användas. Överträdelse kan komma att bestraffas av gällande lag.

DRAWING

https://truckmanualshub.com/

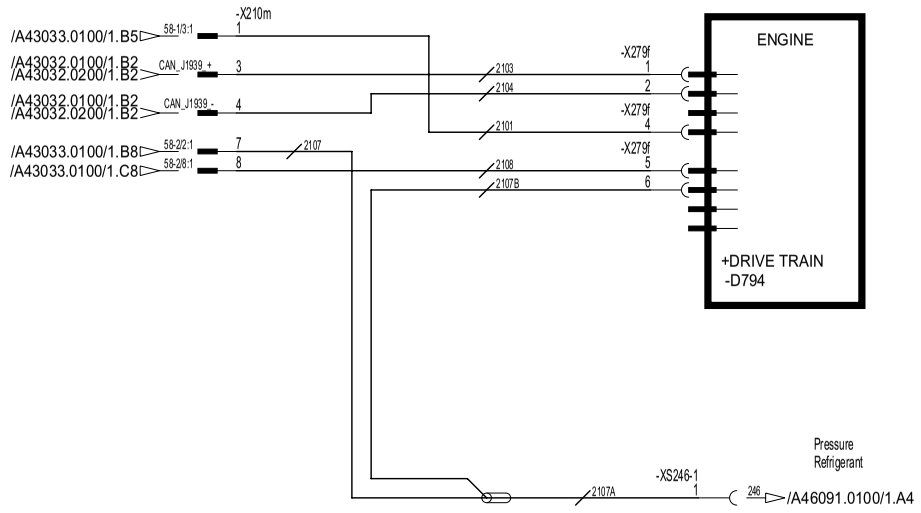

Ref. Ruta Sq.	Nr No.	Ändring Design change	Ändring nr Change No.	Sign.	Datum Date
	1	Reference Text Adjustment, Sync. Harnesses.	041478	TKB	040930
		T=Tillk/Added U=Utgår/Deleted V=Var/Was			

	Sign.	Datum/Date	Huvudnr./Project no.
Ritad/Drawn	FSN	010411	A45209.0100
Konstr/Design			
Godk/Appr	TKB	031204	Klass/Class

H.Grp: 6

Kalmar

Benämning: Krets Motor Volvo

Name: Circuit Motor Volvo

Produkt/Product: DRFA 400-450

Ritn.nr./Drawing No.: A44878.0100

Blad/Sheet: 1/1

Utgåva/Issue: 04

This document must not be copied without our written permission and the contents thereof must not be imparted to a third party nor be used for any unauthorized purpose. Contravention will be prosecuted.

Denna ritning får ej utan vårt medgivande kopieras. Den får ej hållas tillgänglig annan eller annars obehörigen användas. Överträdelse kommer att beivras med stöd av gällande lag.

https://truckmanualshub.com/

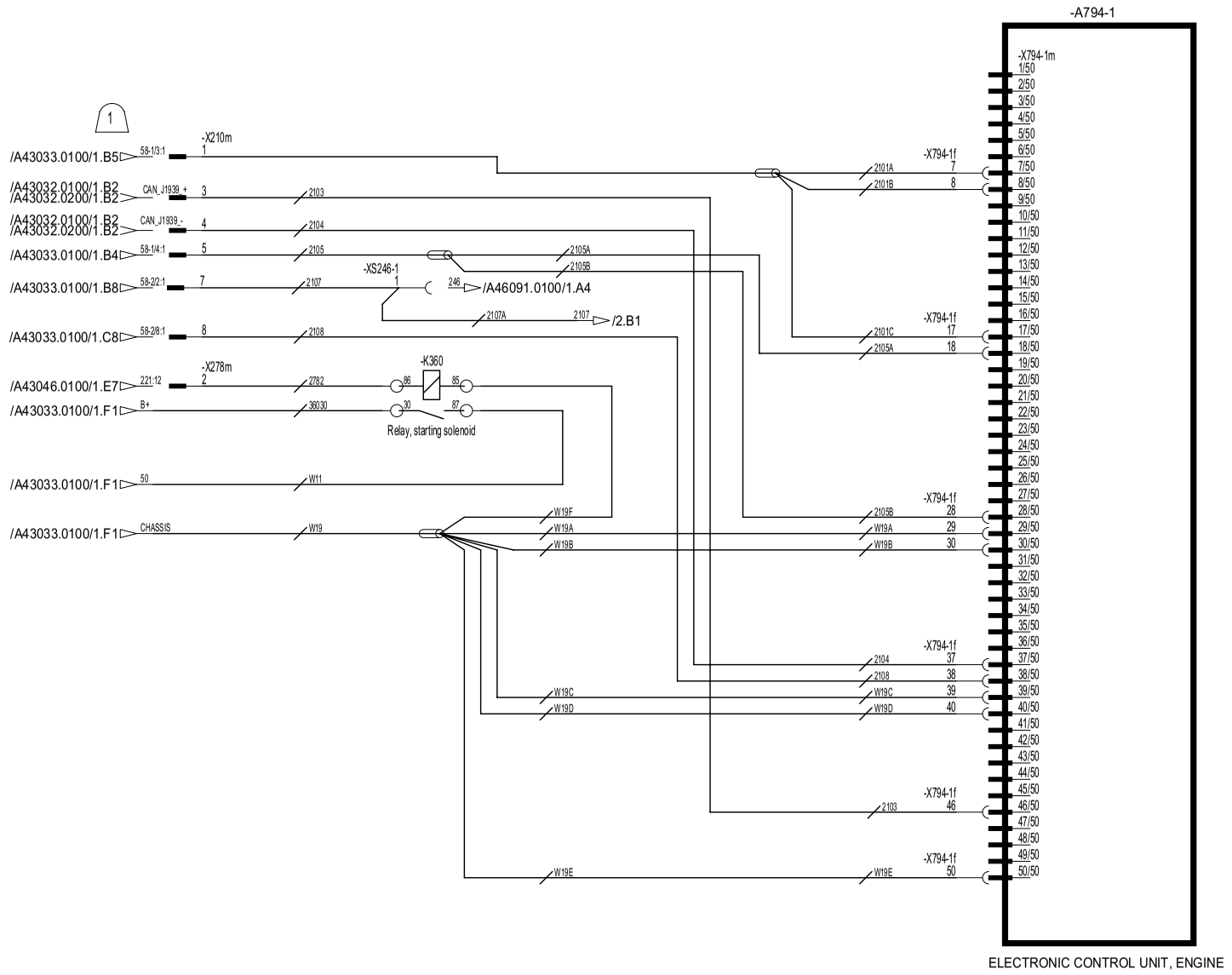

Ref. Ruta Sq.	Nr No.	Ändring Design change	Ändring nr Change No.	Sign.	Datum Date
	1	Reference Text Adjustment, Sync. Harnesses.	041478	TKB	040930
		T=Tillk/Added U=Utgår/Deleted V=Var/Was			

	Sign.	Datum/Date	Huvudnr./Project no.
Ritad/Drawn	FSN	030117	A45209.0100
Konstr/Design			
Godk/Appr	RKO	031121	Klass/Class

H.Grp: 6

Kalmar

Benämning: Krets Motor Cummins
Name: Circuit Motor Cummins

Produkt/Product: DRFB 400-450
Ritn.nr./Drawing No.: A44878.0200

Blad/Sheet: 1/2
Utgåva/Issue: 04

This document must not be copied without our written permission and the contents thereof must not be imparted to a third party nor be used for any unauthorized purpose. Contravention will be prosecuted.

Denna ritning får ej utan vårt medgivande kopieras. Den får ej hållas tillgänglig annan eller annars obehörigen användas. Överträdelse kommer att beivras med stöd av gällande lag.

https://truckmanualshub.com/

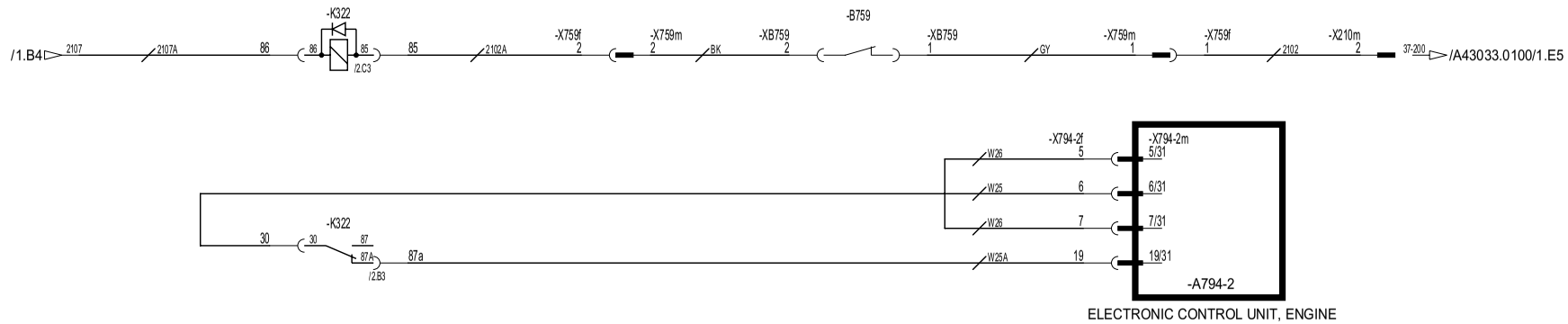

This document must not be copied without our written permission and the contents thereof must not be imparted to a third party nor be used for any unauthorized purpose. Contravention will be prosecuted.

Denna ritning får ej utan vårt medgivande kopieras. Den får ej hållas tillgänglig annan eller annars obehörigen användas. Överträdelse kommer att beivras med stöd av gällande lag.

Ref. Ruta Sq.	Nr No.	Ändring Design change	Ändring nr Change No.	Sign.	Datum Date
	1	Reference Text Adjustment, Sync. Harnesses.	041478	TKB	040930
		T=Tillk/Added U=Utgår/Deleted V=Var/Was			

	Sign.	Datum/Date	Huvudnr./Project no.
Ritad/Drawn	TKB	030929	A45209.0100
Konstr/Design			
Godk/Appr	RKO	031121	Klass/Class

H.Grp: 6

Kalmar

Benämning: Krets Motor Cummins

Name: Circuit Motor Cummins

Produkt/Product: DRFB 400-450

Ritn.nr./Drawing No.: A44878.0200

Blad/Sheet: 2/2

Utgåva/Issue: 04

https://truckmanualshub.com/

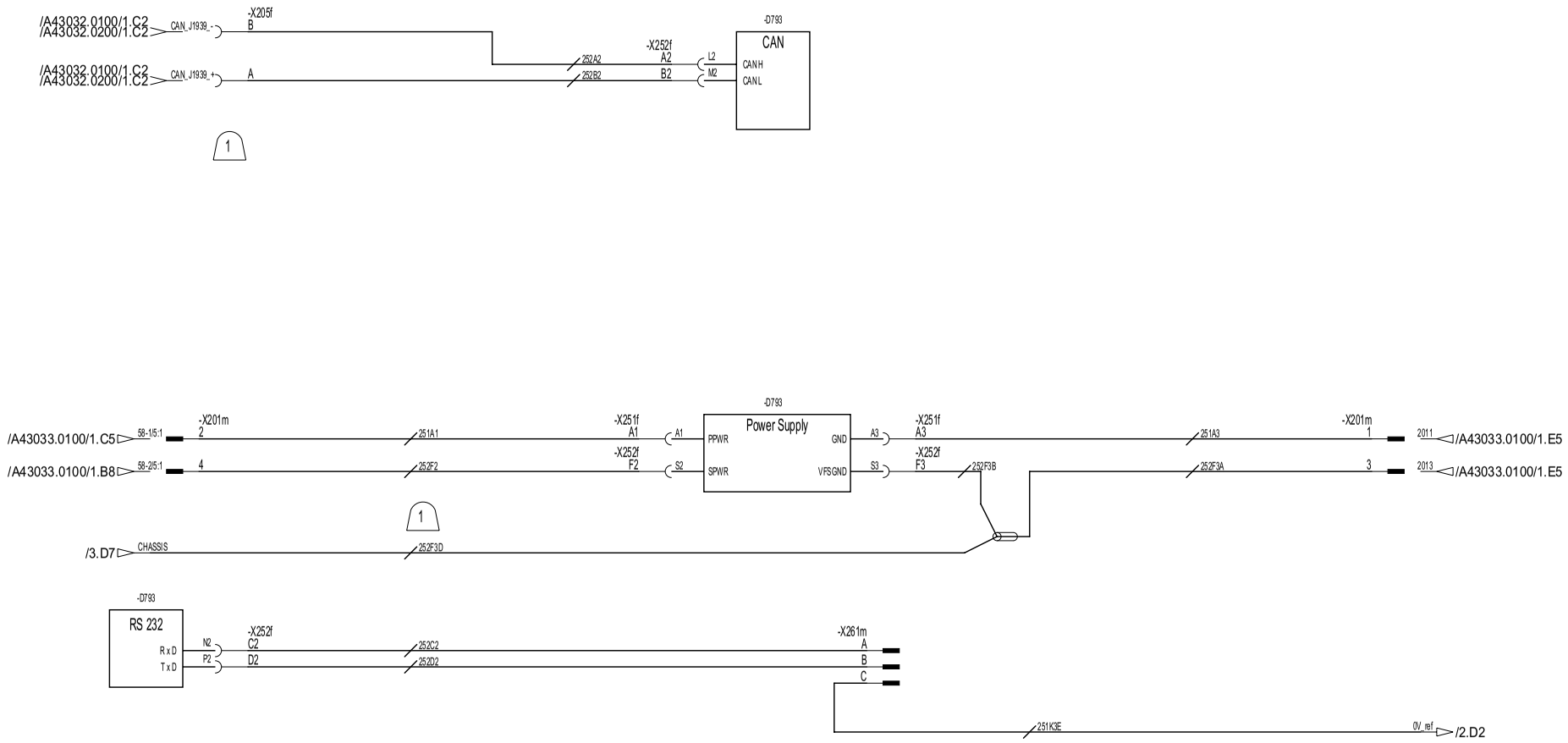

This document must not be copied without our written permission and the contents thereof must not be imparted to a third party nor be used for any unauthorized purpose. Contravention will be prosecuted.

Denna ritning får ej utan vårt medgivande kopieras. Den får ej hållas tillgänglig annan eller annars obehörigen användas. Överträdelse kan komma med stöd av gällande lag.

Ref. Ruta Sq.	Nr No.	Ändring Design change	Ändring nr Change No.	Sign.	Datum Date
	1	Reference Text Adjustment, Sync. Harnesses.	041478	TKB	040930
		T=Tillk/Added U=Utgår/Deleted V=Var/Was			

	Sign.	Datum/Date	Huvudnr./Project no.
Ritad/Drawn	TKB	030516	A45209.0100
Konstr/Design			
Godk/Appr	RKO	031201	Klass/Class

H.Grp: 6

Kalmar

Benämning: Krets Dana TE 32000

Name: Circuit Dana TE 32000

Produkt/Product: DRFA 400-450

Ritn.nr./Drawing No.: A44879.0100

Blad/Sheet: 1/3

Utgåva/Issue: 04

https://truckmanualshub.com/

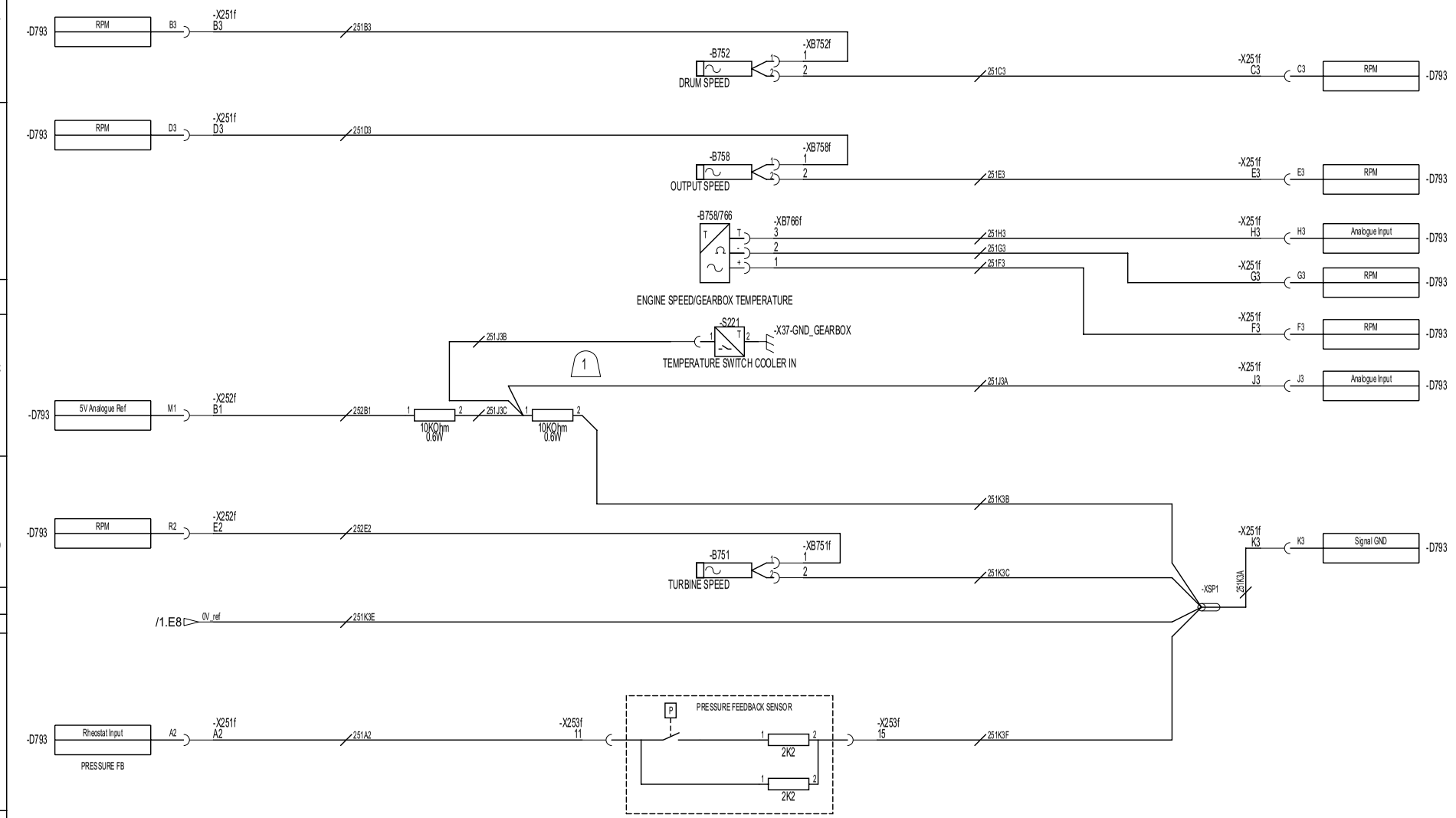

Ref. Ruta Sq.	Nr No.	Ändring Design change	Ändring nr Change No.	Sign.	Datum Date
	1	Reference Text Adjustment, Sync. Harnesses.	041478	TKB	040930
		T=Tillk/Added U=Utgår/Deleted V=Var/Was			

	Sign.	Datum/Date	Huvudnr./Project no.
Ritad/Drawn	TKB	030516	A45209.0100
Konstr/Design			
Godk/Appr	RKO	031201	Klass/Class

H.Grp: 6

Kalmar

Benämning: Krets Dana TE 32000
Name: Circuit Dana TE 32000

Produkt/Product: DRFA 400-450
Ritn.nr./Drawing No.: A44879.0100

Blad/Sheet: 2/3
Utgåva/Issue: 04

This document must not be copied without our written permission and the contents thereof must not be imparted to a third party nor be used for any unauthorised purpose. Contravention will be prosecuted.

Denna ritning får ej utan vårt medgivande kopieras. Den får ej hållas tillgänglig annan eller annars obehörigen användas. Överträdelse kommer att beivras med stöd av gällande lag.

https://truckmanualshub.com/

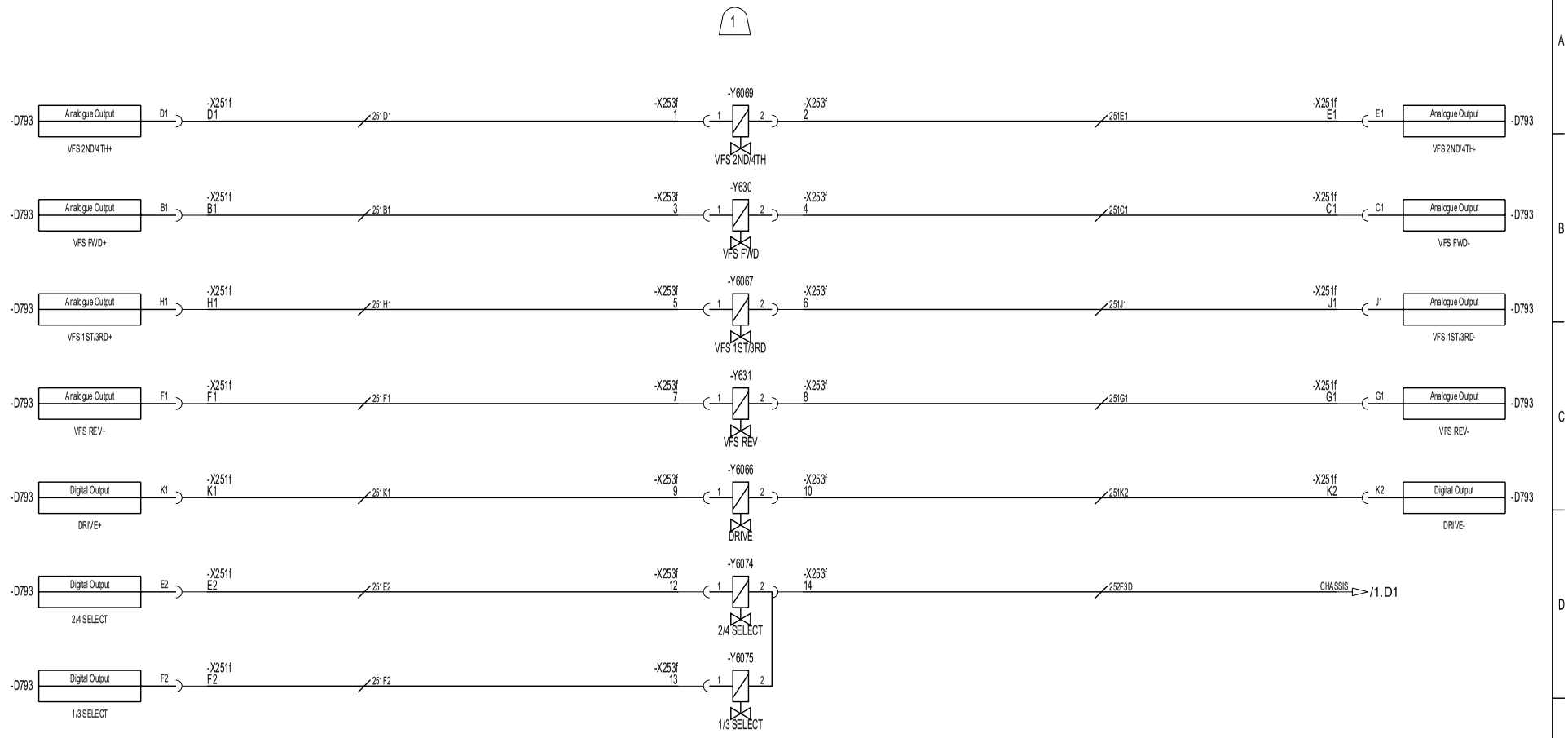

This document must not be copied without our written permission and the contents thereof must not be imparted to a third party nor be used for any unauthorized purpose. Contravention will be prosecuted.

Denna ritning får ej utan vårt medgivande kopieras. Den får ej hållas tillgänglig annan eller annars obehörigen användas. Överträdelse kan komma med stöd av gällande lag.

Ref. Ruta Sq.	Nr No.	Ändring Design change	Ändring nr Change No.	Sign.	Datum Date
	1	Reference Text Adjustment, Sync. Harnesses.	041478	TKB	040930
		T=Tillk/Added U=Utgår/Deleted V=Var/Was			

	Sign.	Datum/Date	Huvudnr./Project no.
Ritad/Drawn	TKB	030516	A45209.0100
Konstr/Design			
Godk/Appr	RKO	031201	Klass/Class

H.Grp: 6

Kalmar

Benämning: Krets Dana TE 32000

Name: Circuit Dana TE 32000

Produkt/Product: DRFA 400-450

Ritn.nr./Drawing No.: A44879.0100

Blad/Sheet: 3/3

Utgåva/Issue: 04

https://truckmanualshub.com/

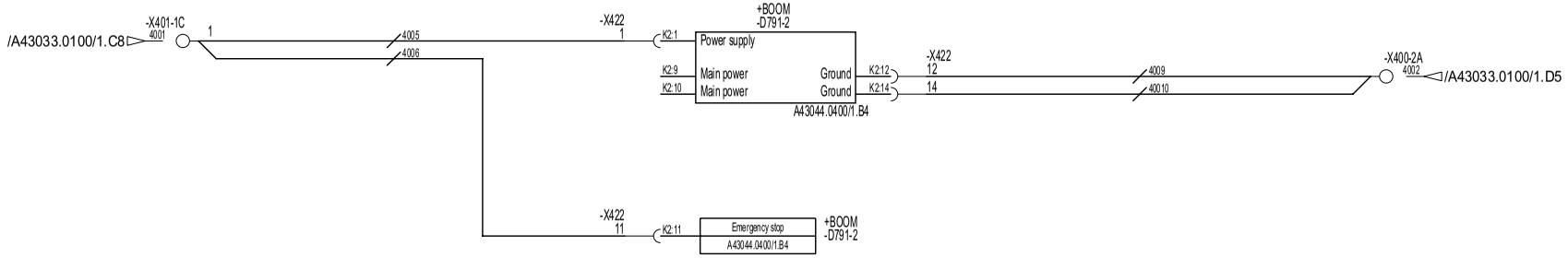

This document must not be copied without our written permission and the contents thereof must not be imparted to a third party nor be used for any unauthorized purpose. Contravention will be prosecuted.

Denna ritning får ej utan vårt medgivande kopieras. Den får ej hållas tillgänglig annan eller annars obehörigen användas. Överträdelse kommer att beivras med stöd av gällande lag.

Ref. Ruta Sq.	Nr No.	Ändring Design change	Ändring nr Change No.	Sign.	Datum Date
	1	Reference Text Adjustment, Sync. Harnesses.	041478	TKB	040930
		T=Tillk/Added U=Utgår/Deleted V=Var/Was			

	Sign.	Datum/Date	Huvudnr./Project no.
Ritad/Drawn	FSN	020204	A452/09.0100
Konstr/Design			
Godk/Appr	RKO	031009	Klass/Class

H.Grp: 6

Kalmar

Benämning: Krets Ström Agg

Name: Circuit Power Att

Produkt/Product: DRFA 400-450

Rit.nr./Drawing No.: A44880.0100

Blad/Sheet: 1/1

Utgåva/Issue: 03

https://truckmanualshub.com/

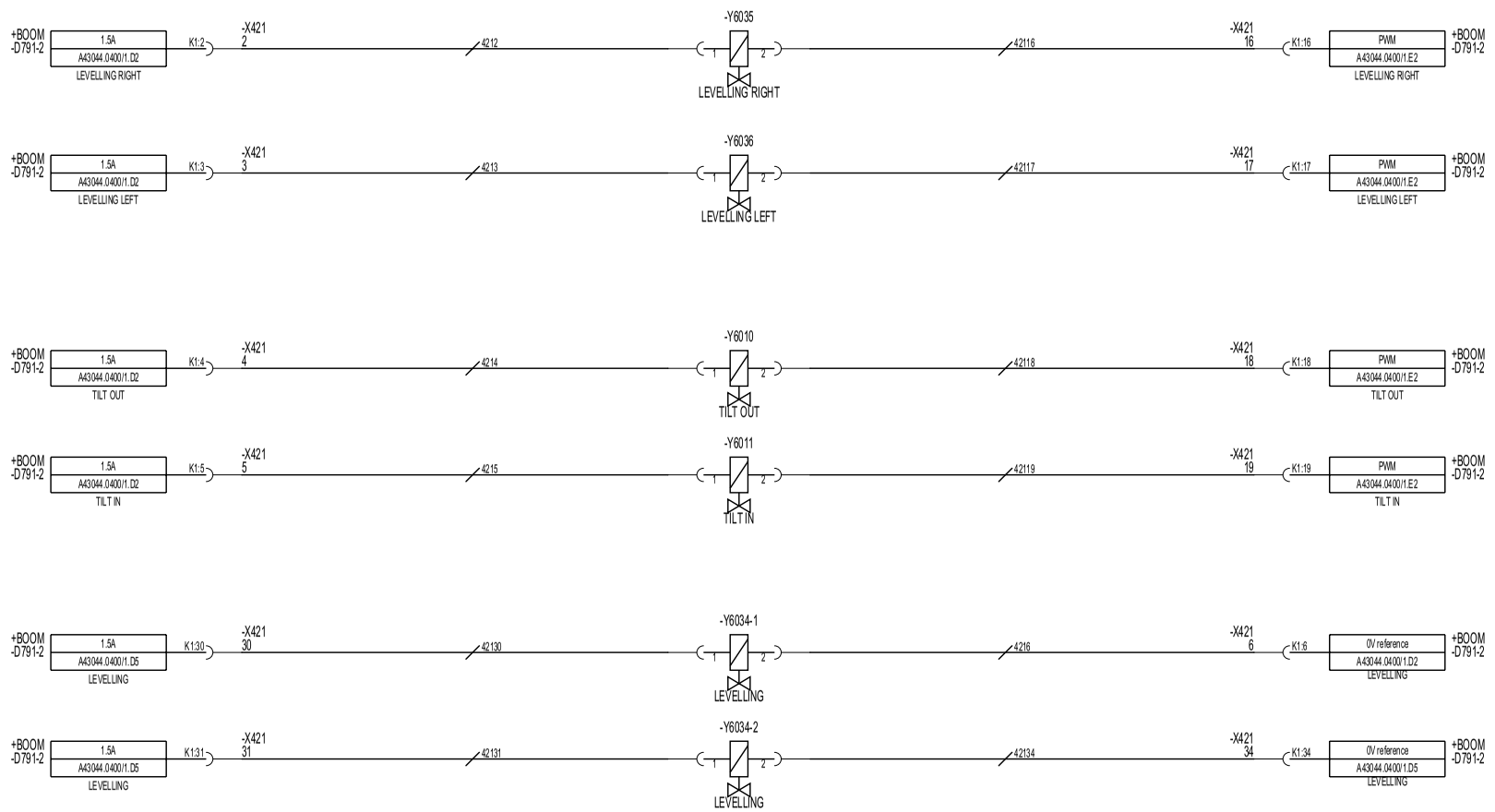

Tilt and levelling with OPT KDU

This document must not be copied without our written permission and the contents thereof must not be imparted to a third party nor be used for any unauthorized purpose. Contravention will be prosecuted.

Denna ritning är ej utan vår medgivande kopierad. Den får ej hållas tillgänglig annan eller annars obehörigen användas. Överträdelse kommer att beivras med stöd av gällande lag.

Ref. Ruta Sq.	Nr No.	Ändring Design change	Ändring nr Change No.	Sign.	Datum Date
	1	Reference Text Adjustment, Sync. Harnesses.	041478	TKB	040930
		T=Tillk/Added U=Utgår/Deleted V=Var/Was			

	Sign.	Datum/Date	Hv.vudnr./Project no.
Ritad/Drawn	FSN	020204	A45209.0100
Konstr/Design			
Godk/Appr	RKO	031009	Klass/Class

H.Grp: 6

Kalmar

Benämning: Krets Agg. Tilt + Skevning

Name: Circuit Att. Tilt + Levelling

Produkt/Product: DRFA 400-450

Ritn.nr./Drawing No.: A44910.0100

Blad/Sheet: 1/1

Utgåva/Issue: 03

https://truckmanualshub.com/

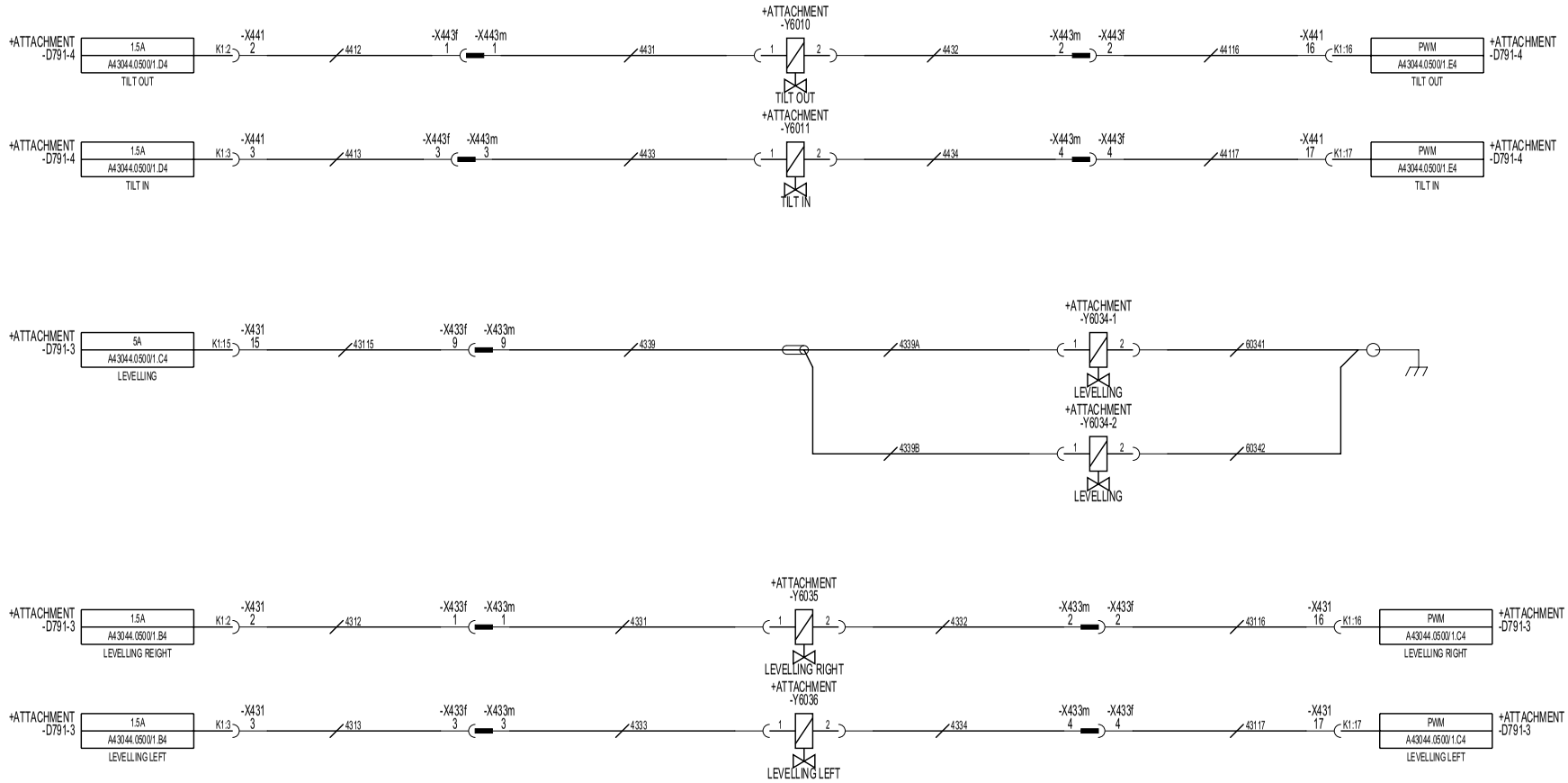

Tilt and levelling with Combi Attachment

This document must not be copied without our written permission and the contents thereof must not be imparted to a third party nor be used for any unauthorised purpose. Contravention will be prosecuted.

Denna ritning får ej utan vårt medgivande kopieras. Den får ej hållas tillgänglig annan eller annars obehörigen användas. Överträdelse kommer att beivras med stöd av gällande lag.

Ref. Ruta Sq.	Nr No.	Ändring Design change	Ändring nr Change No.	Sign.	Datum Date
	1	Reference Text Adjustment, Sync. Harnesses.	041478	TKB	040930
T=Tillk/ Added U=Utgår/Deleted V=Var/Was					

	Sign.	Datum/Date	Huvudnr./Project no.
Ritad/Drawn	FSN	030224	A452/09.0100
Konstr/Design			
Godk/Appr	RKO	031009	Klass/Class

H.Grp: 6

Kalmar

Benämning: Krets Agg. Tilt + Skevning

Name: Circuit Att. Tilt + Levelling

Produkt/Product: DRFA 400-450

Rit.nr./Drawing No.: A44910.0200

Blad/Sheet: 1/1

Utgåva/Issue: 03

https://truckmanualshub.com/

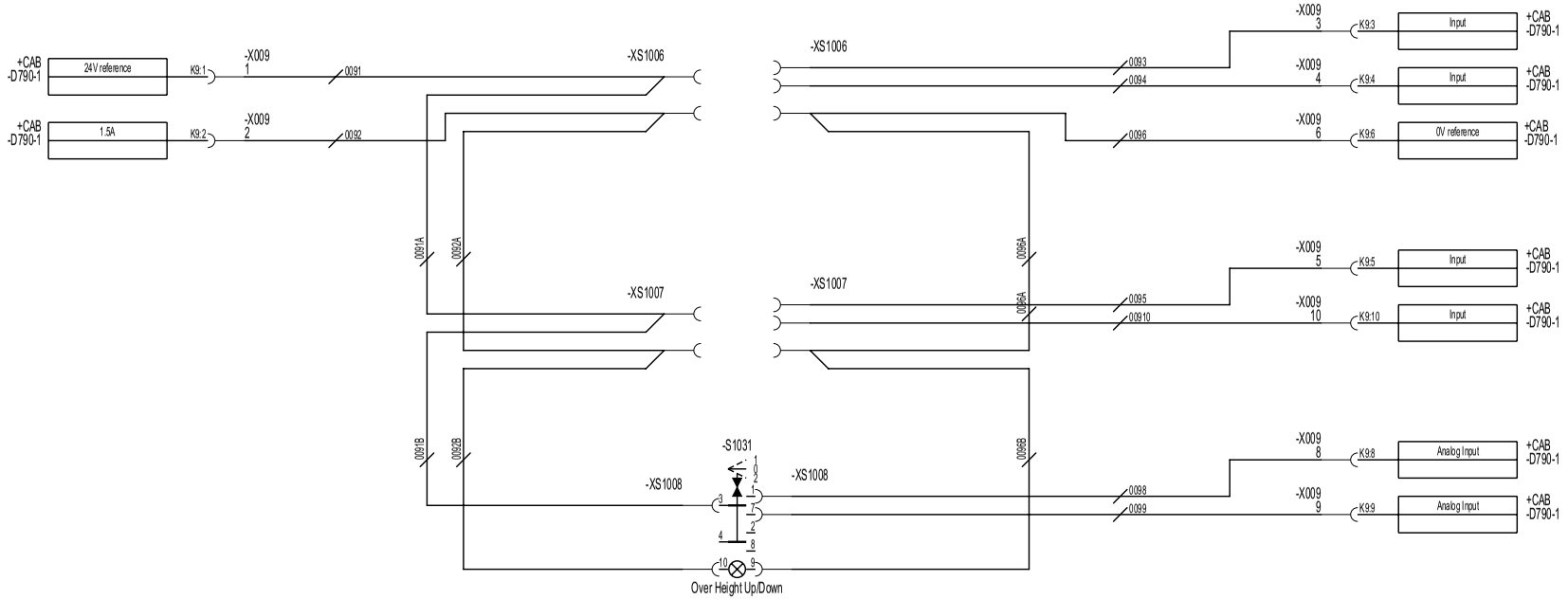

This document must not be copied without our written permission and the contents thereof must not be imparted to a third party nor be used for any unauthorised purpose. Contravention will be prosecuted.

Denna ritning får ej utan vårt medgivande kopieras. Den får ej hållas tillgänglig annan eller annars obehörigen användas. Överträdelse kommer att beivras med stöd av gällande lag.

Ref. Ruta Sq.	Nr No.	Ändring Design change	Ändring nr Change No.	Sign.	Datum Date
	1	Sync. Harness	041583	TKB	041027
T=Tillk/Added U=Utgår/Deleted V=Var/Was					

	Sign.	Datum/Date	Huvudnr./Project no.
Ritad/Drawn	FSN	030206	A45209.0100
Konstr/Design			
Godk/Appr	RKO	031009	Klass/Class

H.Grp: 6

Kalmar

Benämning: Krets Over Height
Name: Circuit Over Height

Produkt/Product: DRFA 400-450
Ritn.nr./Drawing No.: A45043.0100

Blad/Sheet: 1/2
Utgåva/Issue: 04

https://truckmanualshub.com/

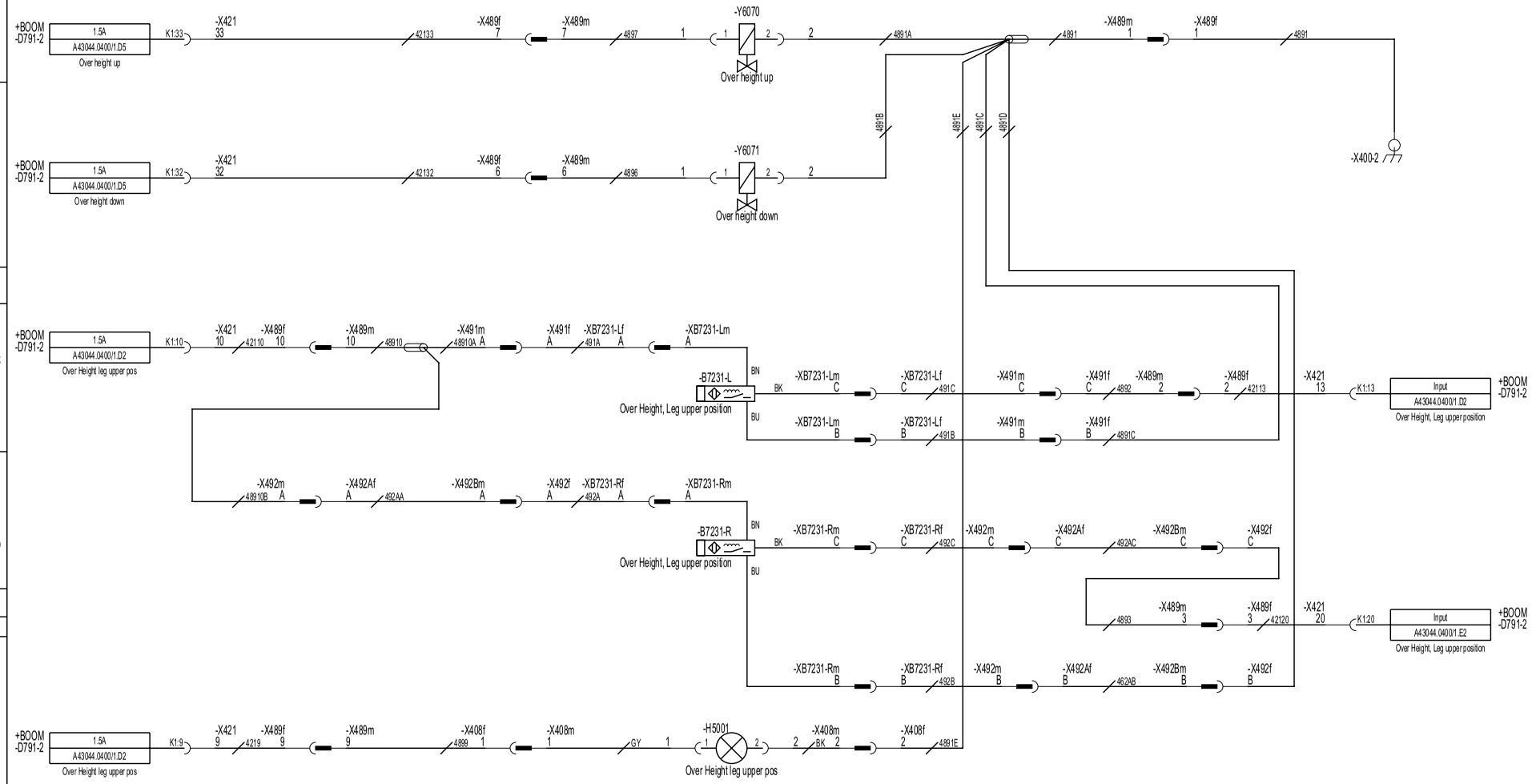

Ref. Ruta Sq.	Nr No.	Ändring Design change	Ändring nr Change No.	Sign.	Datum Date
	1	Sync. Harness	041583	TKB	041027
		T=Tillk/Added U=Utgår/Deleted V=Var/Was			

	Sign.	Datum/Date	Huvudnr./Project no.
Ritad/Drawn	FSN	030206	A45209.0100
Konstr/Design			
Godk/Appr	RKO	031009	Klass/Class

H.Grp: 6

Kalmar

Benämning: Krets Over Height
Name: Circuit Over Height

Produkt/Product: DRFA 400-450
Ritn.nr./Drawing No.: A45043.0100

Blad/Sheet: 2/2
Utgåva/Issue: 04

This document must not be copied without our written permission and the contents thereof must not be imparted to a third party nor be used for any unauthorised purpose. Contravention will be prosecuted.

Denna ritning får ej utan vårt medgivande kopieras. Den får ej hållas tillgänglig annan eller annars obehörigen användas. Överträdelse kommer att beivras med stöd av gällande lag.

https://truckmanualshub.com/

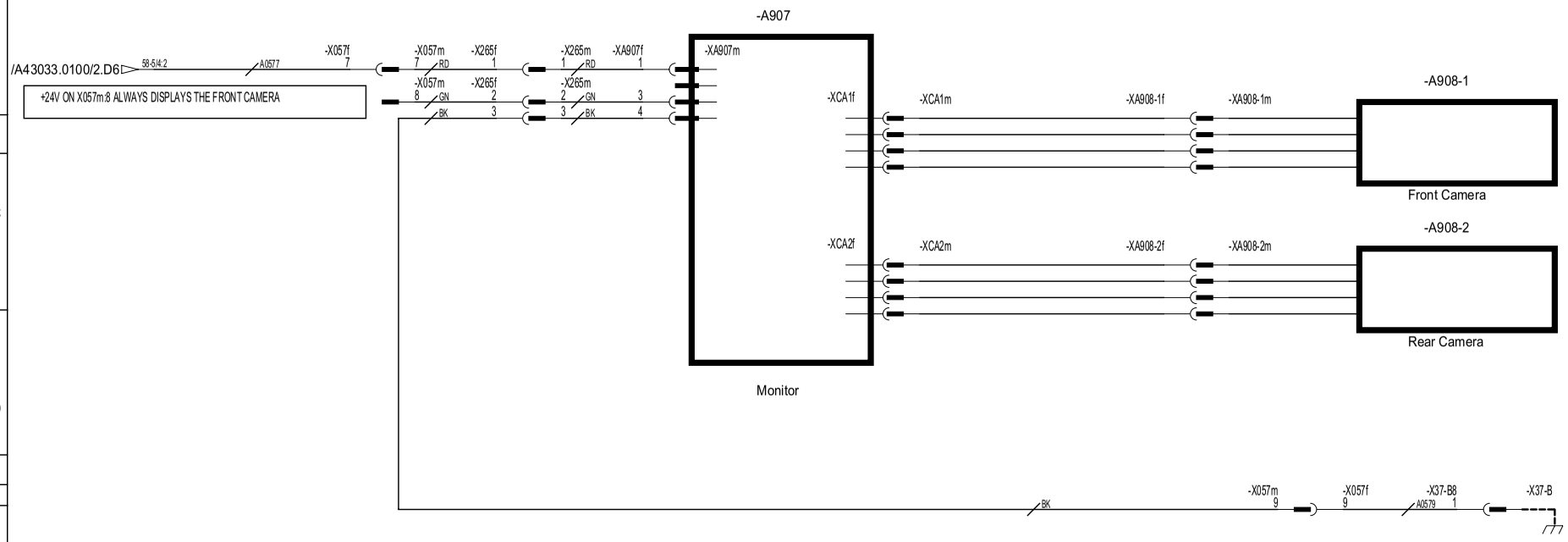

This document must not be copied without our written permission and the contents thereof must not be imparted to a third party nor be used for any unauthorized purpose. Contravention will be prosecuted.

Denna ritning är vårt utan medgivande kopierats. Den får ej hållas tillgänglig annan eller annars obehörigen användas. Överträdelse kommer att beivras med stöd av gällande lag.

Ref. Ruta Sq.	Nr No.	Ändring Design change	Ändring nr Change No.	Sign.	Datum Date
	1	Reference Text Adjustment, Sync. Harnesses.	041478	TKB	040930
		T=Tillk/Added U=Utgår/Deleted V=Var/Was			

	Sign.	Datum/Date	Huvudnr./Project no.
Ritad/Drawn	TKB	030526	A45209.0100
Konstr/Design			
Godk/Appr	RKO	031009	Klass/Class

H.Grp: 6

Kalmar

Benämning: Krets Kamera
Name: Circuit Camera

Produkt/Product: DRFA 400-450
Ritn.nr./Drawing No.: A45769.0100

Blad/Sheet: 1/1
Utgåva/Issue: 03

https://truckmanualshub.com/

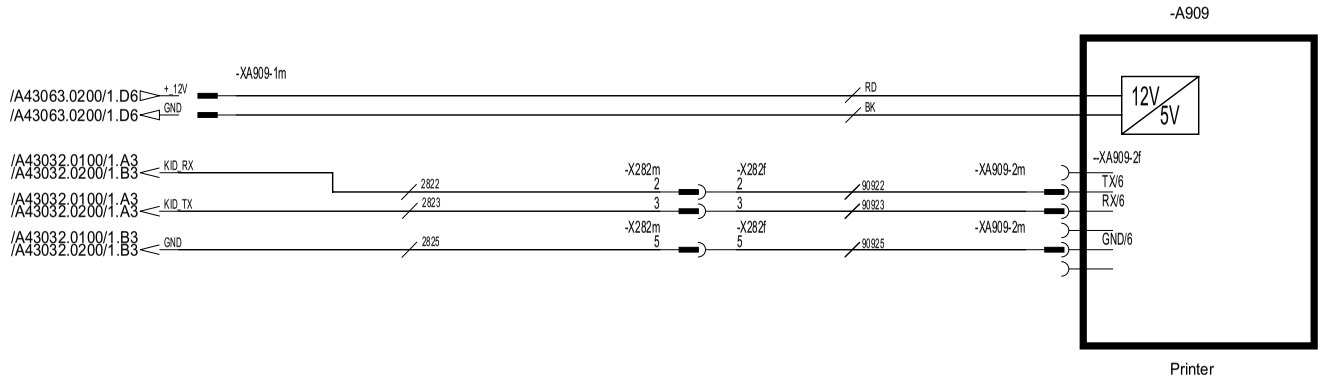

This document must not be copied without our written permission and the contents thereof must not be imparted to a third party nor be used for any unauthorized purpose. Contravention will be prosecuted.

Denna ritning får ej utan vårt medgivande kopieras. Den får ej hållas tillgänglig annan eller annars obehörigen användas. Överträdelse kommer att beivras med stöd av gällande lag.

Ref. Ruta Sq.	Nr No.	Ändring Design change	Ändring nr Change No.	Sign.	Datum Date
	1	Reference Text Adjustment, Sync. Harnesses.	041478	TKB	040930
		T=Tillk/Added U=Utgår/Deleted V=Var/Was			

	Sign.	Datum/Date	Huvudnr./Project no.
Ritad/Drawn	TKB	030604	A45209.0100
Konstr/Design			
Godk/Appr	RKO	031009	Klass/Class

H.Grp: 6

Kalmar

Benämning: Krets Skrivare
Name: Circuit Printer

Produkt/Product: DRFA 400-450
Ritn.nr./Drawing No.: A45792.0100

Blad/Sheet: 1/1
Utgåva/Issue: 03

https://truckmanualshub.com/

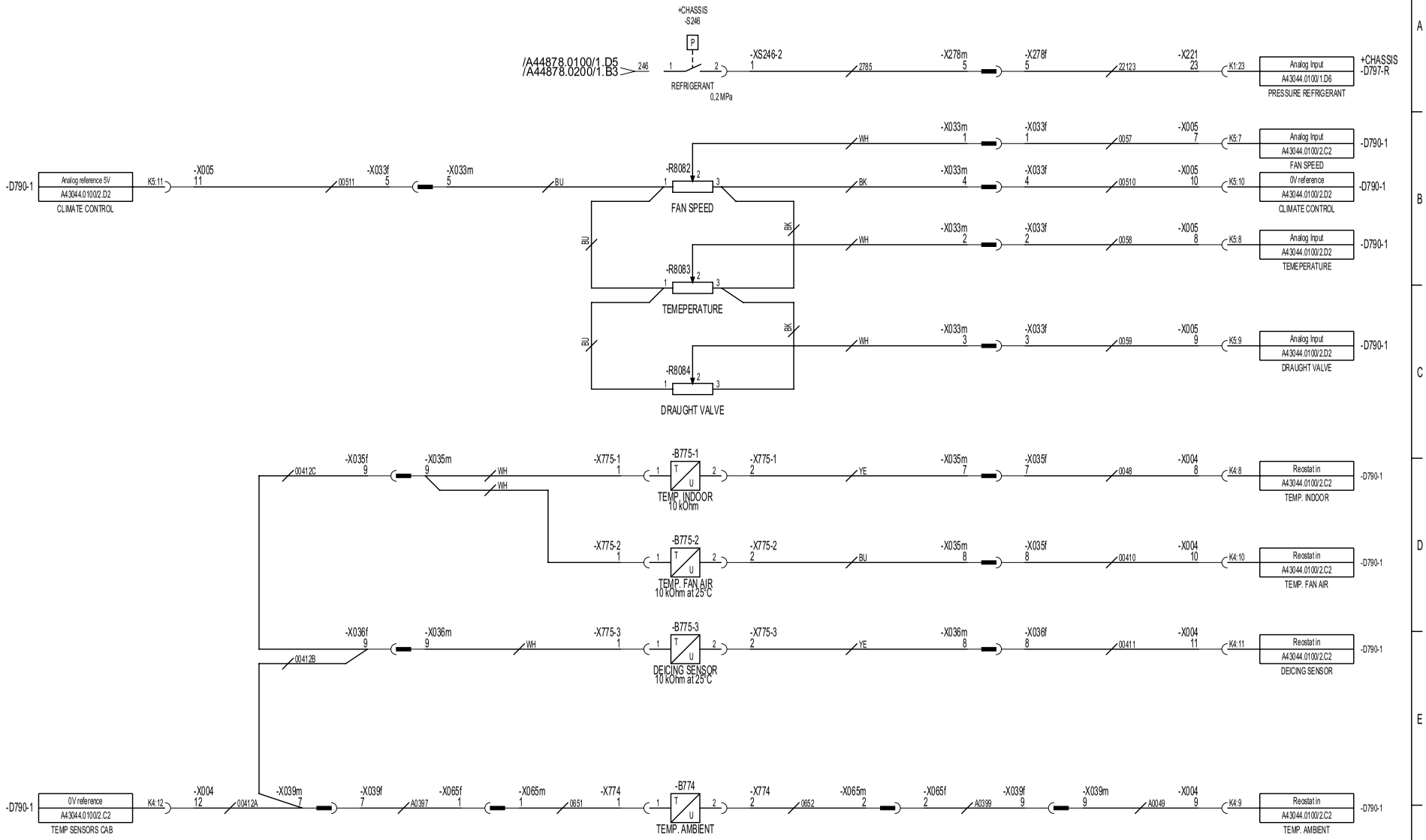

Ref. Ruta Sq.	Nr No.	Ändring Design change	Ändring nr Change No.	Sign.	Datum Date
	1	Reference Text Adjustment, Sync. Harnesses.	041478	TKB	040930
T=Tillk/Added U=Utgår/Deleted V=Var/Was					

	Sign.	Datum/Date	Hv.vudnr./Project no.
Ritad/Drawn	FSN	010412	A45209.0100
Konstr/Design			
Godk/Appr	RKO	031210	Klass/Class

+CAB
H.Grp: 6

Kalmar

Benämning: Krets Klimatsystem
Name: Circuit Climate Control

Produkt/Product: DRFB 400-450
Ritn.nr./Drawing No.: A46087.0100

Blad/Sheet: 1/2
Utgåva/Issue: 03

This document must not be copied without our written permission and the contents thereof must not be imparted to a third party nor be used for any unauthorised purpose. Contravention will be prosecuted.

Denna ritning får ej utan vårt medgivande kopieras. Den får ej hållas tillgänglig annan eller annars obehörigen användas. Överträdelse kommer att beivras med stöd av gällande lag.

https://truckmanualshub.com/

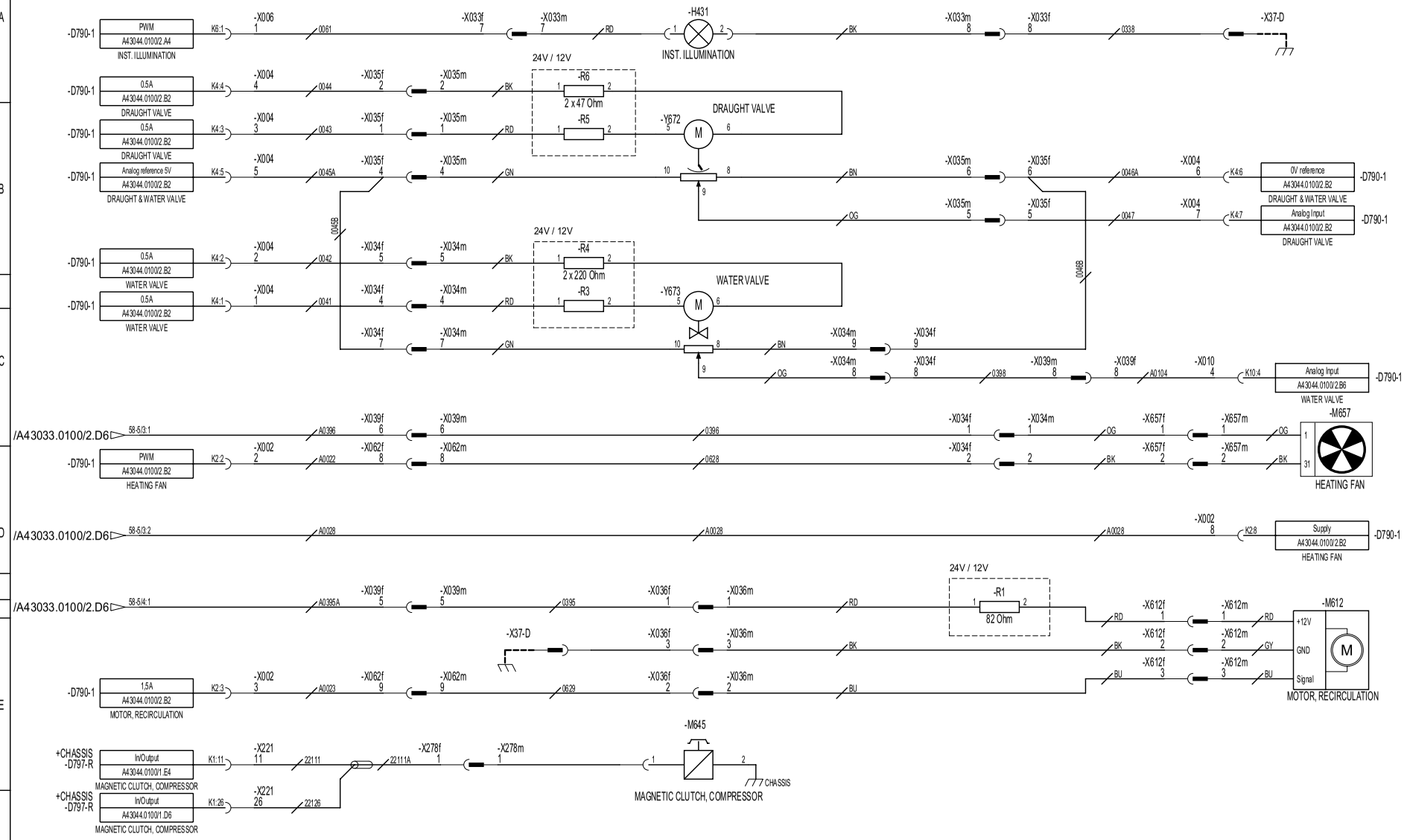

Ref. Ruta Sq.	Nr No.	Ändring Design change	Ändring nr Change No.	Sign.	Datum Date
	1	Reference Text Adjustment, Sync. Harnesses.	041478	TKB	040930
		T=Tillk/Added U=Utgår/Deleted V=Var/Was			

	Sign.	Datum/Date	Hv.vuodnr./Project no.
Ritad/Drawn	FSN	010412	A45209.0100
Konstr/Design			
Godk/Appr	RKO	031210	Klass/Class

+CAB
H.Grp: 6

Kalmar

Benämning: Krets Klimatsystem
Name: Circuit Climate control

Produkt/Product: DRFB 400-450
Ritn.nr./Drawing No.: A46087.0100

Blad/Sheet: 2/2
Utgåva/Issue: 03

This document must not be copied without our written permission and the contents thereof must not be imparted to a third party nor be used for any unauthorised purpose. Contravention will be prosecuted.

Denna ritning får ej utan vårt medgivande kopieras. Den får ej hållas tillgänglig annan eller annars obehörigen användas. Överträdelse kommer att beivras enligt gällande lag.

https://truckmanualshub.com/

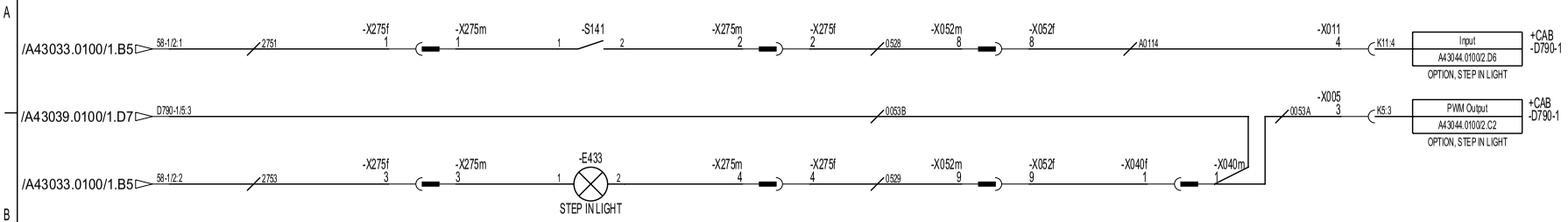

This document must not be copied without our written permission and the contents thereof must not be imparted to a third party nor be used for any unauthorized purpose. Contravention will be prosecuted.

Denna ritning får ej utan vårt medgivande kopieras. Den får ej hållas tillgänglig annan eller annars obehörigen användas. Överträdelse kommer att beivras med stöd av gällande lag.

Ref. Ruta Sq.	Nr No.	Ändring Design change	Ändring nr Change No.	Sign.	Datum Date
	1	Reference Text Adjustment, Sync. Harnesses.	041478	TKB	040930
		T=Tillk/Added U=Utgår/Deleted V=Var/Was			

	Sign.	Datum/Date	Huvudnr./Project no.
Ritad/Drawn	TKB	030901	A45209.0100
Konstr/Design			
Godk/Appr	RKO	031009	Klass/Class

H.Grp: 6

Kalmar

Benämning: Krets Instegsbelysning

Name: Circuit Step In Light

Produkt/Product: DRFB 400-450

Ritn.nr./Drawing No.: A46088.0100

Blad/Sheet: 1/1

Utgåva/Issue: 02

https://truckmanualshub.com/

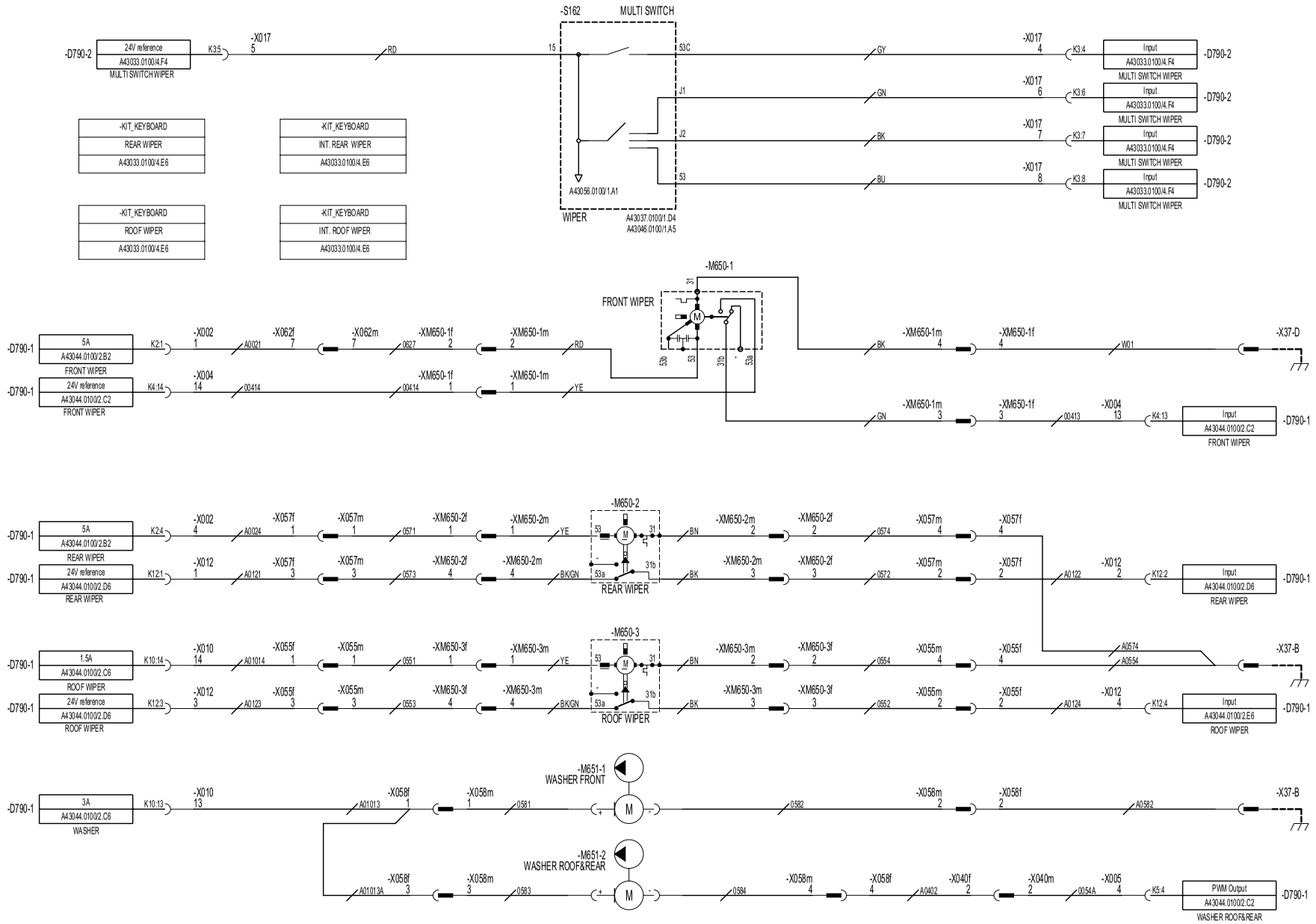

Ref. Ruta Sq.	Nr No.	Ändring Design change	Ändring nr Change No.	Sign.	Datum Date
	1	Reference Text Adjustment, Sync. Harnesses.	041478	TKB	040930
T=Tillk/Added U=Utgår/Deleted V=Var/Was					

	Sign.	Datum/Date	Huvudnr./Project no.
Ritad/Drawn	FSN	010321	A45209.0100
Konstr/Design			
Godk/Appr	RKO	031009	Klass/Class

+CAB
H.Grp: 6

Kalmar

Benämning: Krets Torkare
Name: Circuit Wiper function

Produkt/Product: DRFB 400-450
Ritn.nr./Drawing No.: A46089.0100

Blad/Sheet: 1/1
Utgåva/Issue: 02

DRAWING

This document must not be copied without our written permission and the contents thereof must not be imparted to a third party nor be used for any unauthorised purpose. Contravention will be prosecuted.

Denna ritning får ej utan vårt medgivande kopieras. Den får ej hållas tillgänglig annan eller annars obehörigen användas. Överträdelse kommer att beivras med stöd av gällande lag.

https://truckmanualshub.com/

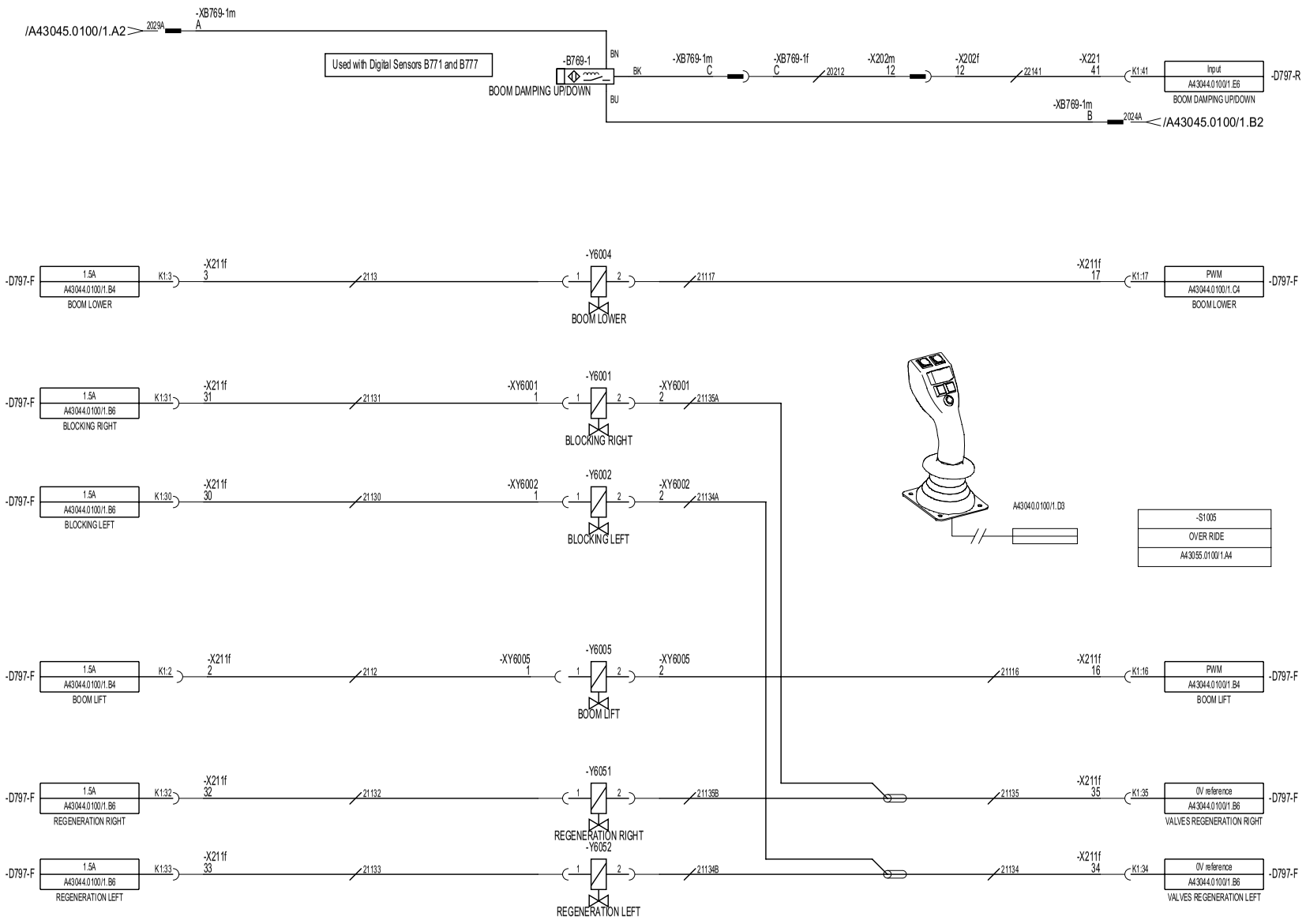

This document must not be copied without our written permission and the contents thereof must not be imparted to a third party nor be used for any unauthorized purpose. Contravention will be prosecuted.

Denna ritning får ej utan vårt medgivande kopieras. Den får ej hållas tillgänglig annan än annars obehörigen annvändas. Överträdelse kommer att beivras enligt gällande lag.

Ref. Ruta Sq.	Nr No.	Ändring Design change	Ändring nr Change No.	Sign.	Datum Date
	1	Reference Text Adjustment, Sync. Harnesses.	041478	TKB	040930
T=Tillk/Added U=Utgår/Deleted V=Var/Was					

	Sign.	Datum/Date	Hv.vudnr./Project no.
Ritad/Drawn	FSN	030131	A45209.0100
Konstr/Design			
Godk/Appr	RKO	031201	Klass/Class

+CHASSIS
H.Grp: 6

Kalmar

Benämning: Krets Bom Upp/Ned
Name: Circuit Boom Up/Down

Produkt/Product: DRFB 400-450
Ritn.nr./Drawing No.: A46090.0100

Blad/Sheet: 1/1
Utgåva/Issue: 03

https://truckmanualshub.com/

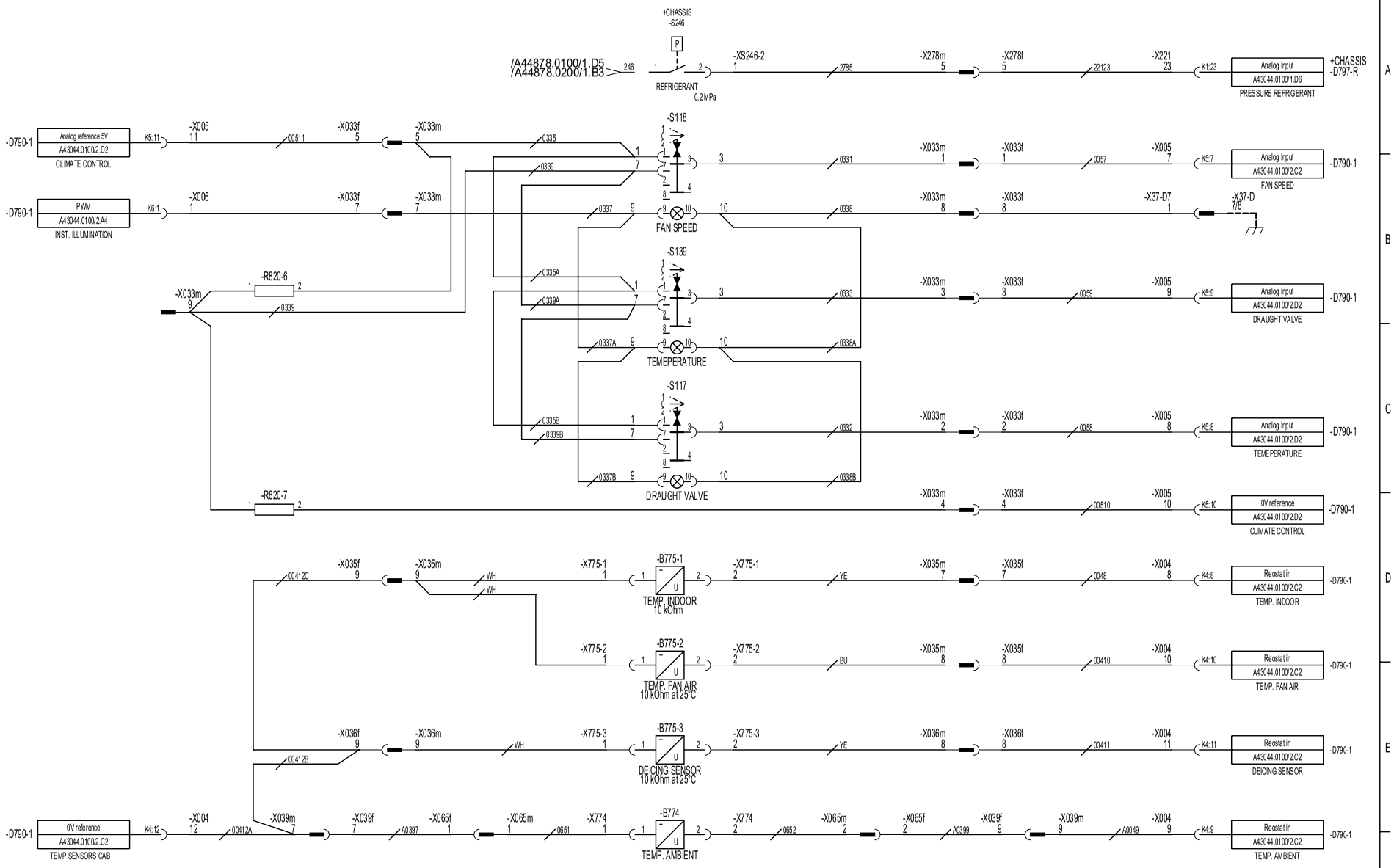

Ref. Ruta Sq.	Nr No.	Ändring Design change	Ändring nr Change No.	Sign.	Datum Date
	1	New Climate Control Switches.	041583	TKB	041026
		T=Tillk/Added U=Utgår/Deleted V=Var/Was			

	Sign.	Datum/Date	Hv.vuodnr./Project no.
Ritad/Drawn	FSN	010412	A45209.0100
Konstr/Design			
Godk/Appr	RKO	031210	Klass/Class

+CAB
H.Grp: 6

Kalmar

Benämning / Name: Krets Klimatsystem
Circuit Climate Control

Produkt/Product: DRFB05 400-450
Ritn.nr./Drawing No.: A46091.0100

Blad/Sheet: 1/2
Utgåva/Issue: 01

DRAWING

This document must not be copied without our written permission and the contents thereof must not be imparted to a third party nor be used for any unauthorised purpose. Contravention will be prosecuted.

Denna ritning får ej utan vårt medgivande kopieras. Den får ej hållas tillgänglig annan eller annars obehörigen användas. Överträdelse kommer att beivras med stöd av gällande lag.

https://truckmanualshub.com/

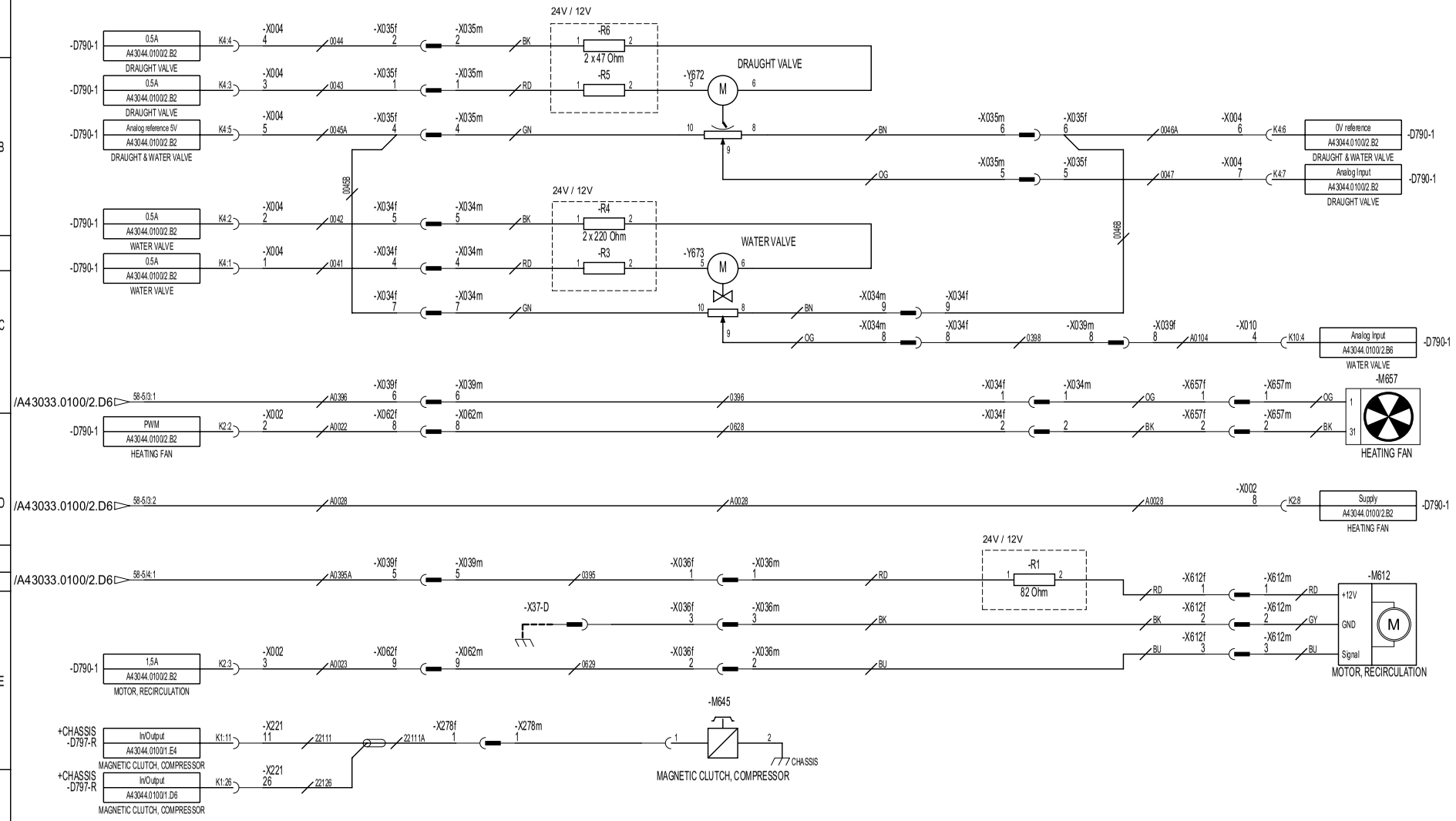

Ref. Ruta Sq.	Nr No.	Ändring Design change	Ändring nr Change No.	Sign.	Datum Date
	1	New Climate Control Switches.	041583	TKB	041026
		T=Tillk/Added U=Utgår/Deleted V=Var/Was			

	Sign.	Datum/Date	Hv.vuodnr./Project no.
Ritad/Drawn	FSN	010412	A45209.0100
Konstr/Design			
Godk/Appr	RKO	031210	Klass/Class

+CAB
H.Grp: 6

Kalmar

Benämning: Krets Klimatsystem
Name: Circuit Climate control

Produkt/Product: DRFB05 400-450
Ritn.nr./Drawing No.: A46091.0100

Blad/Sheet: 2/2
Utgåva/Issue: 01

This document must not be copied without our written permission and the contents thereof must not be imparted to a third party nor be used for any unauthorised purpose. Contravention will be prosecuted.

Denna ritning får ej utan vårt medgivande kopieras. Den får ej hållas tillgänglig annan eller annars obehörigen användas. Överträdelse kommer att beivras enligt gällande lag.

https://truckmanualshub.com/

Kalmar

Komponentförteckning / List of Components / Komponentenverzeichnis / Liste de composants

No.	CAT.	SVENSKA	ENGLISH	DEUTSCH	FRANCAISE
30	G	Batteri	Battery	Batterie	Batterie
32	A	Kretskort elcentral	Printed circuit board, Junction box	Leiterplatte, Elektrozentrale	Circuit imprimé, centrale électrique
37	X	Terminal stomanslutning	Earthing terminal on chassis	Terminal, masseanschluss	Borne, mis á la masse
39	X	Terminal minusanslutning	Terminal, negative terminal	Terminal, Minus-Anschluss	Borne, connexion moins
51	F	Säkringshållare 1-polig	Fuse holder, 1-pole	Sicherungshalter, 1polig	Porte-fusible, 1 pôle
52	F	Säkringshållare 2-polig	Fuse holder, 2-pole	Sicherungshalter, 2polig	Porte-fusible, 2 pôles
56	F	Säkringshållare 6-polig	Fuse holder, 6-pole	Sicherungshalter, 6polig	Porte-fusible, 6 pôles
58	F	Säkringshållare 8-polig	Fuse holder, 8-pole	Sicherungshalter, 8polig	Porte-fusible, 8 pôles
59	F	Säkringshållare 12-polig	Fuse holder, 12-pole	Sicherungshalter, 12polig	Porte-fusible, 12 pôles
62	F	Batterihandske 2-polig	Battery connector, 2-pole	Batteriestecker, 2polig	Connecteur de charge de batterie, 2 pôles
64	F	Batterihandske 4-polig	Battery connector, 4-pole	Batteriestecker, 4polig	Connecteur de charge de batterie, 4 pôles
72	X	Stickuttag 2-polig	Outlet, 2-pole	Buchse 2polig	Prise, 2 pôles
77	X	Stickuttag 7-polig	Outlet, 7-pole	Buchse 7polig	Prise, 7 pôles
78	X	Stickuttag extra 7-polig	Outlet, extra, 7-pole	Buchse Extra, 7-polig	Prise supplémentaire, 7 pôles
100	S	Strömställare ljus	Switch, light	Schalter, Beleuchtung	Interrupteur, feux
101	S	Strömställare omk hel/halvljus	Switch, main/dipped beam	Schalter, Umschalter Fern-/Abblendlicht	Interrupteur, commutation route-croisement
102	S	Strömställare dimljus	Switch, fog light	Schalter, Nebelscheinwerfer	Interrupteur, feux de brouillard
103	S	Strömställare fjärrljus	Switch, distance light	Schalter, Fernscheinwerfer	Interrupteur, feux longue porte´e
104	S	Strömställare lastljus	Switch, mast lights	Schalter, Ladescheinwerfer	Interrupteur, feux de travail
105	S	Strömställare arbetsljus	Switch, working lights	Schalter, Arbeitsbeleuchtung	Interrupteur, feux de travail
106	S	Strömställare containerljus	Switch, container light	Schalter, Containerbeleuchtung	Interrupteur, élairage conteneur
107	S	Strömställare park broms	Switch, parking brake	Schalter, Feststellbremse	Interrupteur, frein de stationnement
108	S	Strömställare centr smörjning	Switch, central lubricator	Schalter, Zentralschmierung	Interrupteur, graissage centralise´
109	S	Strömställare varningsljus	Switch, hazard lights	Schalter, Warnblinkanlage	Interrupteur, feux de de´tresse
110	S	Strömställare rot varningsljus	Switch, rotating hazard beacon	Schalter, Rundum-Kennleuchte	Interrupteur, gyrophares
111	S	Strömställare fönsterhiss	Switch, window regulator	Schalter, Fensterheber	Interrupteur, lève-glace
112	S	Strömställare kylanläggning (AC)	Switch, air conditioner (AC)	Schalter, Klimaanlage (AC)	Interrupteur, groupe de refroidissement climatisation, (AC)
113	S	Strömställare styrning alt	Switch, alternative steering	Schalter, Lenkung Alt.	Interrupteur, type commande de direction
114	S	Strömställare låsbelysning	Switch, reading light	Schalter, Leselampe	Interrupteur, éclairage lecture
115	S	Strömställare instr belysning	Switch, instrument illumination	Schalter, Instrumentenbeleuchtung	Interrupteur, éclairage des instruments
116	S	Strömställare innerbelysning	Switch, interior lighting	Schalter, Innenbeleuchtung	Interrupteur, éclairage inte´rieur

https://truckmanualshub.com/

Komponentförteckning / List of Components / Komponentenverzeichnis / Liste de composants

No.	CAT.	SVENSKA	ENGLISH	DEUTSCH	FRANCAISE
117	S	Strömställare värme	Switch, heating	Schalter, Heizung	Interrupteur, chauffage
118	S	Strömställare fläktm värme	Switch, heater fan	Schalter, Lüftermotor Heizung	Interrupteur, motoventilateur chauffage
119	S	Strömställare vindrutetorkare	Switch, wiper	Schalter, Scheibenwischer	Interrupteur, essuie-glace
120	S	Strömställare spolare	Switch, washer	Schalter, Waschanlage	Interrupteur, lave-glace
121	S	Strömställare blackout	Switch, blackout	Schalter, Ausfall	Interrupteur, blackout
122	S	Strömställare nöd hydraulpump	Switch, emergency hydraulic pump	Notschalter , hydraulikpumpe	Interrupteur , urgence pour la pompe
123	S	Strömställare backspegel	Switch, observation mirror	Schalter, Rückspiegel	Interrupteur, rétroviseur
124	S	Strömställare kallstart	Switch, cold start	Schalter, kaltstart	Interrupteur, démarrage á froid
125	S	Strömställare avgasbroms	Switch, exhaust brake	Schalter, Motorbremse	Interrupteur, ralentisseur sur échappement
126	S	Strömställare diff spärr/broms	Switch, diff. Block	Schalter, Differentialsperre/Bremse	Interrupteur, blocage de différentiel/frein
127	S	Strömställare värmesystem diesel	Switch, heating system diesel	Schalter, Heizsystem Diesel	Interrupteur pour circuit de chauffage diesel
128	S	Strömställare kraftuttag sida	Switch, power take off side	Schalter, Nebenantrieb Seite	Interrupteur, prise de puissance latérale
129	S	Strömställare kraftuttag bak	Switch, power take off rear	Schalter, Nebenantrieb hinten	Interrupteur, prise de puissance arrière
130	S	Strömställare hög/lågväxel	Switch, high/low gear	Schalter, Rangegetriebe Hoch/Niedrig	Interrupteur, petite/grande vitesse
131	S	Strömställare färdväljare fram	Switch, gear selector forward	Schalter, Fahrtrichtungswähler vorwärts	Interrupteur, marche avant
132	S	Strömställare färdväljare bak	Switch, gear selector rear	Schalter, Fahrtrichtungswähler rückwärts	Interrupteur, marche arrière
135	S	Strömställare växelväljare	Switch, gear shift	Schalter, Schalthebel	Interrupteur, sélecteur de vitesse
136	S	Strömställare framhjuls styrning	Switch, forward wheel steering	Schalter, Vorderrad Lenkung	Interrupteur, roues avant directrices
137	S	Strömställare 4-hjuls styrning	Switch, 4-wheel steering	Schalter, Vierradlenkung	Interrupteur, 4 roues directrices
138	S	Strömställare crab styrning	Switch, crab steering	Schalter, Diagonal Lenkung	Interrupteur, deplacement en diagonale
139	S	Strömställare defroster	Switch, defroster		
141	S	Strömställare Stegbelysning	Switch, Steplight		
142	S	Strömställare fot	Switch, foot	Fußschalter	Interrupteur, pédale
143	S	Strömställare sitsvärme	Switch, seat heater	Schalter, Sitzheizung	Interrupteur, chauffage d¿assise
144	S	Batterifrånskiljare	Battery disconnecting switch	Batterietrennschalter	Interrupteur, général
145	S	Strömställare AT-regulator	Switch, AT-regulator	Schalter, Abgasdruckregler	Interrupteur, régulateur AT
147	S	Strömställare körvisare	Switch, direction indicators	Schalter, Fahrtrichtungsanzeiger	Interrupteur, clignotants
149	S	Strömställare signalhorn	Switch, horn	Schalter, Signalhorn	Interrupteur, avertisseur sonore

https://truckmanualshub.com/

Kalmar

Komponentförteckning / List of Components / Komponentenverzeichnis / Liste de composants

No.	CAT.	SVENSKA	ENGLISH	DEUTSCH	FRANCAISE
150	S	Strömställare startlås/ellas	Switch, main key switch	Schalter, Startschloß/E-Sperre	Interrupteur, contacteur antivol/verrou électrique
152	S	Strömställare intervalltorkare	Switch, intermittent wiper	Schalter, Intervallwischer	Interrupteur, balayage intermittent
156	S	Strömställare kupevärmare	Switch, cab heating	Schalter, Kabinenheizung	Interrupteur, chauffage habitacle
157	S	Strömställare stoltilt	Switch, seat tilt	Schalter, Kippen des Sitzes	Interrupteur, basculement du siège
158	S	Strömställare dimbakljus	Switch, rear fog light	Schalter, Nebelschlußleuchte	Interrupteur, feux de brouillard arrière
159	S	Strömställare extra fram/back väljare	Switch, extra direction selector	Schalter,	Interrupteur,
160	S	Strömställare komb fram/back	Switch, combi-forward/reverse	Schalter, Kombi - vorn/rückwärts	Interrupteur, sélecteur marche avant/marche arrière
161	S	Strömställare komb signal, ljus hel/halv spol,torkare m intervall körvisare	Switch, combi-horn, light main/dipped beam, washer, wiper (intermittent), direction indicator	Schalter, Kombi-Signal, Beleuchtung Fern-/Abblendlicht, Waschanlage, Intervallwischer, Fahrtrichtungsanzeiger	Interrupteur, avertisseur, feux de route et de croisement, lave-glace,essuie-glace a` balayage intermittent, clignotants
162	S	Strömställare komb signal ljus hel/halv, spol, torkare m 2 int, fram/bacK	Switch, combi horn, light main/dipped beam, washer, wiper w 2int., forward/revers	Schalter, Kombi-Signal, Beleuchtung Fern-/Abblendlicht, Waschanlage, 2 Intervallwischer, vor/rückwärts	Interupteur,avertisseur,feux de route et de croisement,essuie glace à balayage intermittent
163	S	Strömställare start på 2-an	Switch, start 2nd gear	Schalter, Start 2-gang	Interrupteur, démarrage 2-trans.
165	S	Strömställare stolvärme	Switch, seat heater	Schalter, Sitzheizung	Interrupteur, chauffage du siège
166	S	Strömställare låsning vändskiva	Switch, interlocking of turntable	Schalter, Sperren Sattelkupplung	Interrupteur, verrouillage de la sellette
167	S	Strömställare luftfjädring	Switch, pneumatic springing	Schalter, Luftfederung	Interrupteur, suspension pneumatique
168	S	Strömställare låsn stol	Switch, interlocking of seat	Schalter, Sitzverriegelung	Interrupteur, verrouillage du siège
169	S	Strömställare stolsvändning	Switch, reversible seat	Schalter, Drehen des Sitzes	Interrupteur, pivotement du siège
170	S	Strömställare förångare (LPG)	Switch, evaporator (LPG)	Schalter, Verdampfer (LPG)	Interrupteur, évaporateur (GPL)
171	S	Strömställare v-skiva upp/ner	Switch, fifth wheel up/down	Schalter, Sattelkupplung, aufwärts/abwärts	Interrupteur, sellette montée/descente
172	S	Strömställare v-skiva fr/back	Switch, fifth wheel forward/reverse	Schalter, Sattelkupplung, vorn/hinten	Interrupteur, sellette marche avant/marche arrière
173	S	Strömställare v-skiva skevning	Switch, fifth wheel, levelling	Schalter, Sattelkupplung, Niveauausgleich	Interrupteur, sellette marché, corr-niveau
174	S	Strömställare,utskjut	Switch, projecting	Schalter, Lengengeber	Interrupteur, pour le réglage du déploiement
175	S	Strömställare hyttlyft upp	Switch, cab hoist up	Schalter, Kabinenhub, aufwärts	Interrupteur, élevation de cabine, montée

https://truckmanualshub.com/

Kalmar

Komponentförteckning / List of Components / Komponentenverzeichnis / Liste de composants

No.	CAT.	SVENSKA	ENGLISH	DEUTSCH	FRANCAISE
176	S	Strömställare hyttlyft ner	Switch, cab hoist down	Schalter, Kabinenhub, abwärts	Interrupteur, élevation de cabine, descente
177	S	Strömställare hyttskjutning	Switch, cab movement	Schalter, Kabinenversetzung	Interrupteur, mouvement cabine
178	S	Strömställare nollställning	Switch, reset	Schalter, Nullstellung	"Interrupteur ""reset"""
179	S	Strömställare Aut/man växling	Switch Aut/man gearshifting	Schalter Aut/man getriebe	
180	S	Strömställare fyrhjulsdrift	Switch, 4-WD	Schalter, Vierradantrieb (4WD)	Interrupteur, 4 roues motrices
190	S	Strömställare klimatanläggning	Switch, air conditioner	Schalter, Frischluftheizung	Interrupteur, climatisation
191	S	Strömställare recirkulation	Switch, re-circulation	Schalter, Re-zirkulation	Interrupteur, re-circulation
192	S	Strömställare vattenavskiljare		Switch, waterseparator	Schalter, Wasserabscheider
195	S	Strömställare joy-stick X	Switch, joy-stick X	Schalter, Joy-stick X	Interrupteur, Joy-stick X
196	S	Strömställare joy-stick X+Y	Switch, joy-stick X+Y	Schalter, Joy-stick X+Y	Interrupteur, Joy-stick X+Y
197	S	Strömställare längs/tvärskörning	Switch, length/sideways driwing	Schalter, Längs-/Querfahren	Interrupteur, sens longitudinal/transversal
198	S	Strömställare flytläge skevning	Switch, equalizing fifth wheel	Schalter, Ausgleich der Sattelkupplung	Interrupteur, équililbré de la selette
199	S	Strömställare option	Switch, option	Schalter, Option	Interrupteur, option
200	S	Brytkontakt lampa park broms	Contact, breaking,warning lamp,parking brake	Unterbrecherkontakt,Warnlampe,Feststellb remse	Contact à ouverture, voyant, frein de stationnement
201	S	Brytkontakt lampa färdbroms	Contact, breaking, warning lamp, brake	Unterbrecherkontakt,Warnlampe,Betriebsb remse	Contact à ouverture,voyant,frein de service
202	S	Brytkontakt lampa oljetryck motor	Contact, breaking, warning lamp, oil pressure engine	Unterbrecherkontakt,Warnlampe,Öldruck Motor	Contact à ouverture,voyant,pression d¿huile moteur
204	S	Brytkontakt tryck ackumulator	Contact, breaking, pressure accumulatortank	Unterbrecherkontakt,Druck Akkumulatorbehälter	Contact à ouverture,pression réservoir accumulateur
205	S	Brytkontakt innerbelysning	Contact, breaking, interior lighting	Unterbrecherkontakt, Innenbeleuchtung	Contact à ouverture, éclairage intérieur
206	S	Brytkontakt handskfack belysning	Contact, breaking, glove	Unterbrecherkontakt, Handschuhfachbeleuchtung	Contact à ouverture, éclairage de la boite à gants
207	S	Slutkontakt diff spärr	Contact, making, diff. interlock	Schließkontakt, Differentialsperre	Contact à fermeture, blocage du différentiel
208	S	Slutkontakt lampa temperatur spolkrets bromsar	Contact, making, warning lamp temperature brake	Schließkontakt, Warnlampe, Temperatur,Spulenkreis Bremsen	Contact à fermeture, voyant température circuit d¿arrosage des freins
214	S	Slutkontakt överväxel	Contact, making, over drive	Schließkontakt, Overdrive	Contact à fermeture, overdrive
215	S	Slutkontakt temp motor	Contact, making, temperature engine	Schließkontakt, Temperatur Motor	Contact à fermeture, température du moteur

https://truckmanualshub.com/

Komponentförteckning / List of Components / Komponentenverzeichnis / Liste de composants

No.	CAT.	SVENSKA	ENGLISH	DEUTSCH	FRANCAISE
216	S	Slutkontakt bromsljus	Contact, making, brake lights	Schließkontakt, Bremslicht	Contact à fermeture, feux stop
217	S	Slutkontakt backljus	Contact, making, reversing light	Schließkontakt, Rueckfahrscheinwerfer	Contact à fermeture, feux de recul
218	S	Slutkontakt AT-regulator	Contact, making, AT-control	Schließkontakt, Abgasdruckregler	Contact à fermeture, régulateur AT
219	S	Slutkontakt lampa luftfilter	Contact, making, indicating light air filter	Schließkontakt, Kontrollampe Luftfilter	Contact à fermeture, témoin filtre à air
220	S	Brytkontakt drivning	Contact, breaking, drive cut off	Unterbrecherkontakt, Antrieb	Contact à ouverture, transmission
221	S	Slutkontakt temp växellåda	Contact, making, temperature gear box	Schließkontakt, Temperatur Getriebe	Contact à fermeture, température de la bôite de vitesses
222	S	Slutkontakt lampa temp moment - förstärkare	Contact, making, warning lamp temperature torque amplifier.	Schließkontakt, Warnlampe Temperatur Drehmomentwandler	Contact à fermeture, voyant température convertisseur
223	S	Släpkontakt signal	Contact, brush, horn	Schließkontakt, Signal	Curseur, avertisseur
224	S	Slutkontakt insprutningspump	Contact, making, injection pump	Schließkontakt, Einspritzpumpe	Contact à fermeture, pompe d¿injection
225	S	Brytkontakt säkerhetsbälte	Contact, breaking, seat belt	Unterbrecherkontakt, Sicherheitsgurt	Contact à ouverture, ceinture de sécurité
228	S	Slutkontakt hyttlåsning	Contact, making, cab locking	Schließkontakt, Kabinenverriegelung	Contact à fermeture, verrouillage de la cabine
229	S	Slutkontakt stolslåsning	Contact, making, seat locking	Schließkontakt, Sitzsperre	Contact àfermeture, verrouillage du siège
230	S	Brytkontakt stol	Contact, breaking, seat	Unterbrecherkontakt, Sitz	Contact à ouverture, siège
231	S	Slutkontakt fotkontroll stolvändning	Contact, making, seat rotation, foot switch	Endkontakt, Drehen des Sitzes, Fußschalter	Contact à fermeture, pivotement du siège contact au plancher
232	S	Brytkontakt lampa luftanslutning släp	Contact, breaking, warning lamp air connection	Unterbrecherkontakt, Warnlampe, Luftanschluß Anhänger	Contact à ouverture, voyant connexion pneumatique remorque
233	S	Slutkontakt lampa låsning vändskiva	Contact, warning, interlocking of turntable	Endkontakt, Warnanzeige, Sperren Sattelkupplung	Contact à ouverture, voyant verrouillage sellette ,
235	S	Slutkontakt sidoskjutning stol	Contact, making, side shifting of seat	Endkontakt, Seitl. Sitzverstellung	Contact à ouverture, de´placement latéral du siège
236	S	Slutkontakt vattennivå	Contact, water level	Endkontakt, Wasserstand	Contact à ouverture,niveauoéan
239	S	Brytkontakt termisk	Contact, breaking, thermic	Unterbrecherkontakt, thermisch	Contact à ouverture, thermique
240	S	Slutkontakt termisk	Contact, making, thermic	Schließkontakt, thermisch	Contact à fermeture, thermique
241	S	Brytkontakt lampa luftmatning släp	Contact, breaking, warning lamp air supply to trailer	Unterbrecherkontakt, Warnlampe Förderluft Anhänger	Contact à ouverture, témoin air d¿alimentation remorque
242	S	Slutkontakt lampa oljetryck v-låda	Contact, making, warning lamp, oil pressure gear box	Schließkontakt, Warnlampe, Öldruck Getriebe	Contact à fermeture, voyant, pression d¿huile boîte de vitesses

https://truckmanualshub.com/

Komponentförteckning / List of Components / Komponentenverzeichnis / Liste de composants

No.	CAT.	SVENSKA	ENGLISH	DEUTSCH	FRANCAISE
243	S	Brytkontakt tryck kylmedia AC	Contact, breaking, coolant pressure (air condition)	Unterbrecherkontakt, Druck Kühlmittel (Klimaanlage)	Contact à ouverture, pression frigorigène (climatisation)
244	S	Slutkontakt hydraulik aktiverad	Contact, making, hydraulics	Schließkontakt, Hydraulik aktiviert	Contact à fermeture, hydraulique actionnée
245	S	Slutkontakt hydraultryck styrning	Contact, making, hydraulic pressure control	Schließkontakt Hydraulikdruck Lenkung	Contacteur pression hydraulique de la direction
246	S	Slutkontakt tryck kylmedia	Contact, pressure refrigerant	Schließkontakt, Druck Kühlmittel	Contact à ouverture, pression liquide de refroidissement
250	S	Manöverbrytare	Operating Switch		
251	S	Slutkontakt vändbar förarstol	Contact, making, VBFS	Schließkontakt, drehbarer Fahrersitz	Contact à fermeture, siège pivotant
260	S	Slutkontakt lyft steg 1	Contact, making, hoist step 1	Schließkontakt, Hub Stufe 1	Contact à fermeture, élévation e´tape 1
261	S	Slutkontakt lyft steg 2	Contact, making, hoist step 2	Schließkontakt, Hub Stufe 2	Contact à fermeture, élévation e´tape 2
262	S	Slutkontakt tilt	Contact, making, tilting	Schließkontakt, Neigung	Contact à fermeture, inclinaison
263	S	Slutkontakt gaffelspridning	Contact, making, fork positioning	Schließkontakt, Gabelverstellung	Contact à fermeture, écartement des bras de fourche
264	S	Slutkontakt sidoföring	Contact, making, sideshift	Schließkontakt, Seitenverschiebung	Contact à fermeture, déplacement latéral
265	S	Slutkontakt stativ in/ut	Contact, making, lifting mast in-out	Schließkontakt, Hubgerüst ein-aus	Contact à fermeture, mat de lev. ext-ret.
266	S	Brytkontakt hyttdörr	Contact, breaking cab door	Unterbrecherkontakt, Kabinetür	Contact à ouverture, portiere de cabine
267	S	Slutkontakt bromstryck	Contact, making, brake pressure	Schließkontakt, Bremsdruck	Contact à fermeture, pression de frein
268	S	Slutkontakt kompressor	Contact, making, Compressor	Schließkontakt, Kompressor	Contact à fermeture, Pou´le compresseur
269	S	Slutkontakt sax inne	Contact, making extender in		
270	S	Slutkontakt överlastskydd	Contact, making, overload protection		
299	S	Slut/brytkontakt option	Contact, making/braking option	Schließ-Unterbrecherkontakt, (option)	Contact à fermeture/ouverture, (option)
300	K	Relä hel/halvljus	Relay, main/dipped beam	Relais, Fem-/Abblendlicht	Relais, route-croisement
301	K	Relä dimljus	Relay, fog light	Relais, Nebelscheinwerfer	Relais, feux antibrouillard
302	K	Relä fjärrljus	Relay, distance light	Relais, Fernscheinwerfer	Relais, feux longue portée
303	K	Relä lastljus	Relay, mast light	Relais, Ladescheinwerfer	Relais, projecteur de chargement
304	K	Relä arbetsljus	Relay, working light	Relais, Arbeitsbeleuchtung	Relais, projecteur de travail
305	K	Relä backljus	Relay, reversing light	Relais, Rückfahrscheinwerfer	Relais, feux de recul
306	K	Relä helljus	Relay, main beam	Relais, Fernlicht	Relais, feux de route

https://truckmanualshub.com/

Komponentförteckning / List of Components / Komponentenverzeichnis / Liste de composants

No.	CAT.	SVENSKA	ENGLISH	DEUTSCH	FRANCAISE
307	K	Relä halvljus	Relay, dipped beam	Relais, Abblendlicht	Relais, feux de croisement
308	K	Relä bromsljus	Relay, brake light	Relais, Bremslicht	Relais, feux stop
309	K	Relä parkeringsbroms	Relay, parking light	Relais, Standlicht	Relais, feux de stationnement
310	K	Relä körvisare vä	Relay, direction indicator left	Relais, Fahrtrichtungsanzeiger, L	Relais, clignotant supplémentaire, ga.
311	K	Relä körvisare hö	Relay, direction indicator right	Relais, Fahrtrichtungsanzeiger, R	Relais, clignotant supplémentaire, dr.
312	K	Relä startelement	Relay,element preheater	Relais, Startelement	Relais, élément de démarrage
313	K	Relä vändbar förarstol	Relay, rotating driver´s seat (VBFS)	Relais, drehbarer Fahrersitz	Relais, siège pivotant
314	K	Relä parkeringsbroms	Relay, parking brake	Relais, Feststellbremse	Relais, frein de stationnement
315	K	Relä startlås	Relay, starting key	Relais, Startschloß	Relais, démarreur antivol
316	K	Relä torkare	Relay, wiper	Relais, Wischer	Relais, essuie-glace
317	K	Relä strålkastartorkare	Relay, roading lights wiper	Relais, Scheinwerferwischer	Relais, essuie-phare
318	K	Relä AT-regulator	Relay, AT-regulator	Relais, Abgasdruckregler	Relais, régulateur AT
319	K	Relä varningsblinkers	Relay, hazard blinkers	Relais, Warnblinker	Relais, feux de détresse
320	K	Relä elektrisk stopp	Relay, electical stop	Relais, elektrischer Stopp	Relais, arrêt électrique
321	K	Relä intervalltorkare	Relay, intermittent wiper	Relais, Intervallwischer	Relais, balayage intermittent
322	K	Relä kylvätskenivå	Relay, coolant level	Relais, Kühlflüßigkeitsstand	Relais, niveau radiateur
323	K	Relä blinkers	Relay, blinkers	Relais, Blinker	Relais, clignotants
324	K	Relä rangespärr	Relay, range interlock	Relais, Rangesperre	Relais, blocage doubleur
325	K	Relä blinkande bromsljus (back)	Relay, flashing brake lights (reversing)	Relais, blinkendes Bremslicht (beim Zurücksetzen)	Relais, feux stop clignotants (en marche arrière)
326	K	Relä blinkande bromsljus (runt)	Relay, flashing hazard brake lights	Relais, blinkendes Bremslicht (Rund-um)	Relais, feux stop clignotants (gyrophare)
327	K	Relä växel neutral	Relay, gear neutral	Relais, Wechsel neutral	Relais, changement neutre
328	K	Relä växelskifte	Relay, gear shift	Relais, Wechselschaltung	Relais, changement de rapports
329	K	Relä växel hög/låg	Relay, high/low gear	Relais, Wechsel hoch niedrig	Relais, petite/grande vitesse
330	K	Relä startspärr	Relay, start interlock	Relais, Startsperre	Relais, blocage démarrage
331	K	Relä drivning fram	Relay, forward driving	Relais, Antrieb vorn (LPG, Diesel)	Relais, marche avant
332	K	Relä drivning bak	Relay, reversing driving	Relais, Antrieb hinten (LPG, Diesel)	Relais, marche arrière
333	K	Tidrelä förvärmning	Time relay, automatically preheating	Zeitrelais, Vorwärmautomatik	Relais, temporise´, préchauffage automatique
334	K	Relä frikoppling/drivbrytning	Relay, free wheel/drive disconnection	Relais, Auskuppeln/Antriebsabschaltung	Relais, débrayage/arrêt d¿entraînement
335	K	Relä växelventil 1:a (diesel, gas)	Relay, gear change valve 1-gear (diesel,LPG)	Relais, Schaltventil 1 Getriebe (Diesel, LPG)	Relais, distributeur de changement, boîte à 1 rapport (gazole, GPL)

https://truckmanualshub.com/

Komponentförteckning / List of Components / Komponentenverzeichnis / Liste de composants

No.	CAT.	SVENSKA	ENGLISH	DEUTSCH	FRANCAISE
336	K	Relä växelventil 2:a (diesel, gas)	Relay, gear change valve 2-gear (diesel,LPG)	Relais, Schaltventil 2 Getriebe (Diesel, LPG)	Relais, distributeur de changement, boîte à 2 rapports (gazole, GPL)
337	K	Relä drivriktning motor	Relay, motor drive direction	Relais, Antriebsrichtung Motor	Relais, sens de marche moteur
338	K	Relä kylfläkt drivmotor	Relay, cooling fan drive motor	Relais, Lüfter Antriebsmotor	Relais, moteur du ventilateur
339	K	Relä kylfläkt elskåp	Relay, cooling fan electrical box	Relais, Lüfter Schaltschrank	Relais, boîtier électrique du ventilateur
340	K	Tidrelä fördröjt tillslag	Time relay, start delay	Zeitrelais, verzögerte Einschaltung	Relais, temporise´, mise en marche temporiseé
341	K	Tidrelä fördröjt frånslag	Time relay, stop delay	Zeitrelais, verzögerte Ausschaltung	Relais, temporise´, arrêt temporisée
342	K	Relä drivning 2/4 hjul	Relay, switching 2/4 WD	Relais, 2-Rad/4-Rad-Antrieb	Relais, commutation 2/4 roues motrices
343	K	Relä dimbakljus	Relay, fog light rear	Relais, Nebelschlußleuchte	Relais, feux de brouillard arrière
344	K	Relä momentförstärkare	Relay, torque amplifier	Relais, Drehmomentwandler	Relais, convertisseur de couple
345	K	Relä låsning vändskiva	Relay, interlocking of turntable	Relais, Sperren der Sattelkupplung	Relais, verrouillage de la sellette
346	K	Relä frikoppling stollåsning	Relay, releasing of seat interlocking	Relais, Freigabe Sitzverriegelung	Relais, déverrouillage du siège
347	K	Relä stolvändning/ljussignal	Relay, multifunction, seat rotation/light signal	Relais, Multifunktion, Sitzdrehen/Lichtsignal	Relais, multifonction siège/appel de phare
348	K	Relä fläktmotor värmare	Relay, fan heating	Relais, Gebläsemotor Heizung	Relais, chauffage du moteur de ventilateur
349	K	Relä fartreglage	Relay, speed control	Relais, Geschwindigkeitsregelung	Relais, commande de vitesse
350	K	Relä pumpkontaktor/pumpkontroll	Relay, pump contactor/pump control	Relais, Pumpenkontrolle	Relais, commande de pompe
351	K	Relä hyttlyft upp	Relay, cab hoist up	Relais, Kabinenhub, aufwärts	Relais, élevation de cabine, montée
352	K	Relä hyttlyft ner	Relay, cab hoist down	Relais, Kabinenhub, abwärts	Relais, élevation de cabine, descente
353	K	Relä säkerhetsslinga	Relay, safety loop	Relais, Sicherheitsschleife	Relais, boucle de sécurité
354	K	Relä styrsystem	Relay, signal control system	Relais, Signal Lenkung	Relais, signal système de commande
355	K	Relä sensorstyrning	Relay, sensor control	Relais, Sensorsteuerung	Relais, commande capteurs
356	K	Skiftrelä längskörning/tvärskörning	Shift relay, length/sideways driving	Schaltrelais, Längs-/Querfahren	Relais, de commutation, sens longitudinal/transversal
357	K	Relä roterande varningsljus	Relay, hazard beacon	Relais, rotierende Rund-um-Kennleuchte	Relais, gyrophare
358	K	Relä komressor luft	Relay, compressor air	Relais, kompressor luft	Relais,compresseur du air
359	K	Relä Hydrauloljekylare	Relay hydraulic oil cooler	Relais, Hydraulik Ölkühler	Relais, radiateur huile hydraulique
360	K	Relä startsolenoid	Relay, starting solenoid	Relais, Anlaßermagnet	Relais, solénoîde démarreur
361	K	Relä kompressor AC	Relay, compressor air conditione	Relais, kompressor klimaanlage	Relais, compresseur climatisation

https://truckmanualshub.com/

Komponentförteckning / List of Components / Komponentenverzeichnis / Liste de composants

No.	CAT.	SVENSKA	ENGLISH	DEUTSCH	FRANCAISE
362	K	Relä vattenventil AC	Relay, water valve air conditioner	Relais, Wasser Ventil für Klimaanlage	Relais, soupape pour l¿eau du climatiseur
363	K	Relä kondensor AC	Relay, condenser air conditione	Relais, kondensor klimaanlage	Relais, condenseur climatisation
364	K	Relä stolsbrytare	Relay seat switch		
365	K	Relä fönsterhiss upp	Relay, electrical screen elevator up	Relais, elektrischer Fensterheber aufwärts	Relais, montée du lève-glace électrique
366	K	Relä fönsterhiss ner	Relay, electrical screen elevator down	Relais, elektrischer Fensterheber abwärts	Relais, descente du lève-glace électrique
367	K	Relä styrning	Relay, steerin	Relais, Lenkung	Relais, direction
368	K	Relä lågt bromstryck	Relay, low brake pressure	Relais, niedrieger Bremsdruck	Relais, pression de frein petite
369	K	Relä centralsmörjning	Relay, central lubrication	Relais, zentralschmierung	Relais, graissage centralisé
370	K	Relä centralsmörjning, aggregat	Relay, central lubrication, attatchment	Relais, zentralschmierung,Aggregat	Relais, graissage centralisé et accessories
371	K	Relä lyfthöjd	Relay, liftheight	Relais, hubhöhe	Relais, élevation
372	K	Relä blinkande varn.ljus, höjdbegränsn.	Relay, flashing beacon, lifting height limiter	Relais, blinkende Rundumleuchte, Höhebegrenzung	Relais lampe clignotante,limiteur de hauteur
373	K	Relä bakljus	Relay light	Relais, beleuchtung	Relais, feux
375	K	Huvudkontaktor reglersystem	Main contactor, operating control	Hauptschütz, Regelsystem	Contacteur principal, système de régulation
376	K	Kontaktor fram reglersystem	Contactor, forward operating control	Schütz, vom Regelsystem	Contacteur, régulation avant
377	K	Kontaktor bak reglersystem	Contactor, reversing operating control	Schütz, hinten Reglersystem	Contacteur, régulation arrière
378	K	Kontaktor by-pass reglersystem/Fältförsvagning	Contactor, ¿by-pass¿ operating control/ Field weakening	Schütz, Bypass Reglersystem/ Feldschwächung	Contacteur, système de régulation by-pass/ Affaiblissement de champ
379	K	Kontaktor pumpmotor	Contactor, pump motor	Schütz, Pumpenmotor	Contacteur, moteur de la pompe
380	K	Kontaktor	Contactor	Schütz	Contacteur
381	K	Kontaktor återladdning	Contactor, recharging	Schütz, Aufladung	Contacteur, recharge
382	K	Relä, förbikoppling säkerhetssystem	Relay, by-pass safety system	Relais, überbrückung des Sicherheitssystems	Relais, shunt sécurité
383	K	Relä, Stolsvärme	Relay, heated seat	Relais, Sitzheizung	Relais, siège chauffant
384	K	Relä vattenseparator	Relay, waterseparator	Relais, Wasserabscheider	Relais, séparateur d¿eau
385	K	Relä bränslepump insprutning	Relay, fuel injection pump		
386	K	Relä, hög motortemperatur.	Relay, high motor temperature	Relais, hohe motor temperatur	

https://truckmanualshub.com/

Komponentförteckning / List of Components / Komponentenverzeichnis / Liste de composants

No.	CAT.	SVENSKA	ENGLISH	DEUTSCH	FRANCAISE
387	K	Relä alternativ gaspedal	Relay alternative throttle pedal		
399	K	Relä option	Relay, option	Relais, Option	Relais, option
400	E	G-lampa vä fram	Light bulb, roading light left hand front	Glühlampe, Scheinwerfer links vorn	Ampoule, projecteur avant gauche
400	E	G-lampa hö fram	Light bulb, roading light right hand rear	Glühlampe, Scheinwerfer rechts vorn	Ampoule, projecteur avant droite
401	E	G-lampa vä bak	Light bulb, roading light left hand front	Glühlampe, Scheinwerfer links hinten	Ampoule, projecteur arrière gauche
401	E	G-lampa hö bak	Light bulb, roading light right hand rear	Glühlampe, Scheinwerfer rechts hinten	Ampoule, projecteur arrière droite
402	E	G-lampa fjärrljus	Light bulb, distance light	Glühlampe, Fernscheinwerfer	Ampoule, feux longue portée
403	E	G-lampa lastljus	Light bulb, mast light	Glühlampe, Ladescheinwerfer	Ampoule, projecteur de chargement
404	E	G-lampa arbetsljus	Light bulb, working light	Glühlampe, Arbeitsbeleuchtung	Ampoule, projecteur de travail
405	E	G-lampa backljus	Light bulb, rear light	Glühlampe, Rückfahrscheinwerfer	Ampoule, feux de recul
406	E	G-lampa cont belysning vänster	Container light left-hand	Containerbeleuchtung links	Eclairage conteneur gauche
406	E	G-lampa cont belysning höger	Container light right-hand	Containerbeleuchtung rechts	Eclairage conteneur droite
408	E	G-lampa park ljus vä fram	Light bulb, parking light, left-hand forward	Glühlampe, Standlicht, links vorn	Ampoule, feux de stationnement, avant gauche
408	E	G-lampa park ljus hö fram	Light bulb, parking light, right-hand forward	Glühlampe, Standlicht, rechts vorn	Ampoule, feux de stationnement, avant droite
410	H	G-lampa broms ljus vä fram	Light bulb, brake light, left-hand forward	Glühlampe, Bremslicht, links vorn	Ampoule, feu stop, avant gauche
410	H	G-lampa broms ljus hö fram	Light bulb, brake light, right-hand forward	Glühlampe, Bremslicht, rechts vorn	Ampoule, feu stop, avant droite
411	H	G-lampa broms ljus vä bak	Light bulb, brake light, left-hand rear	Glühlampe, Bremslichts, links hinten	Ampoule, feu stop, arrière gauche
411	H	G-lampa broms ljus hö bak	Light bulb, brake light, right-hand rear	Glühlampe, Bremslicht, rechts hinten	Ampoule, feu stop, arrière droite
412	H	G-lampa bak ljus vä bak	Light bulb, rear light, left-hand rear	Glühlampe, Rücklicht, links hinten	Ampoule, feu arrière gauche
412	H	G-lampa bak ljus hö bak	Light bulb, rear light right-hand rear	Glühlampe, Rücklicht, rechts hinten	Ampoule, feu arrière droite
413	H	G-lampa bak ljus vä fram (VBFS)	Light bulb, rear light, left-hand forward (VBFS)	Glühlampe, Rücklicht, links vorn (drehbarer Fahrersitz)	Ampoule, feu arrière, avant gauche

https://truckmanualshub.com/

Komponentförteckning / List of Components / Komponentenverzeichnis / Liste de composants

No.	CAT.	SVENSKA	ENGLISH	DEUTSCH	FRANCAISE
413	H	G-lampa bak ljus hö fram (VBFS)	Light bulb, rear light,right-hand forward (VBFS)	Glühlampe, Rücklicht, rechts vorn (drehbarer Fahrersitz)	Ampoule, feu arrière, avant droite
416	H	G-lampa sidomarkering vä fram	Light bulb, side position light, left-hand forward	Glühlampe, seitliche Begrenzungsleuchte, links vorn	Ampoule, feu de position latérale avant gauche
416	H	G-lampa sidomarkering vä bak	Light bulb, side position light, left-hand rear	Glühlampe, seitliche Begrenzungsleuchte, links hinten	Ampoule, feu de position latérale arrière gauche
417	H	G-lampa sidomarkering hö fram	Light bulb, side position light, right - hand forward	Glühlampe, seitliche Begrenzungsleuchte, rechts vorn	Ampoule, feu de position latérale avant droite
417	H	G-lampa sidomarkering hö bak	Light bulb, side position light, right-hand rear	Glühlampe, seitliche Begrenzungsleuchte, rechts hinten	Ampoule, feu de position arrière droite
420	H	G-lampa positionsljus vänster	Light bulb, position light, left-hand	Glühlampe, Positionsleuchte links	Ampoule, feu de position gauche
421	H	G-lampa positionsljus höger	Light bulb, position light, right-hand	Glühlampe, Positionsleuchte rechts	Ampoule, feu de position droite
422	H	G-lampa körvisare vä fram	Light bulb, direction indicator left-hand forward	Glühlampe, Fahrtrichtungsanzeiger links	Ampoule, clignotant avant gauche
423	H	G-lampa körvisare hö fram	Light bulb, direction indicator right-hand forwrd	Glühlampe, Fahrtrichtungsanzeiger rechts vorn	Ampoule, clignotant avant droite
426	H	G-lampa körvisare vä bak	Light bulb, direction indicator left-hand rear	Glühlampe, Fahrtrichtungsanzeiger links hinten	Ampoule, clignotant arrière gauche
427	H	G-lampa körvisare hö bak	Light bulb, direction indicator right-hand rear	Glühlampe, Fahrtrichtungsanzeiger rechts hinten	Ampoule, clignotant arrière droite
428	H	G-lampa roterande varningsljus	Light bulb, flashing beacon lamp	Glühlampe, Rundum-Kennleuchte	Ampoule, gyrophare
429	E	G-lampa cigarettändare belysning	Light bulb, cigarett lighter illumination	Glühlampe, Zigarettenanzünder-Beleuchtung	Ampoule, éclairage allume-cigares
431	E	G-lampa instrument belysning	Light bulb, instrument illumination	Glühlampe, Instrumentenbeleuchtung	Ampoule, éclairage des instruments
432	E	G-lampa handsfack belysning	Light bulb, glove pocket light	Glühlampe, Handschuhfachbeleuchtung	Ampoule, éclairage de la boïte à gants
433	E	G-lampa instegs belysning	Light bulb, step-in lighting	Glühlampe, Einstiegbeleuchtung	Ampoule, éclairage de l¿emmarchement
434	E	G-lampa innerbelysning	Light bulb, interior lighting	Glühlampe, Innenbeleuchtung	Ampoule, éclairage intérieur
435	E	G-lampa låsbelysning	Light bulb, reading lighting	Glühlampe, Leselampe	Ampoule, éclairage de lecture
436	E	G-lampa identifikationsljus	Light bulb, identification light	Glühlampe, Identifikationsleuchte	Ampoule, éclairage de plaque
437	E	G-lampa identifikationsljus/takskylt	Light bulb, identification light/roof sign	Glühlampe, ID-Beleuchtung/Dachschild	Ampoule, signalisation toitet interieur cabine
438	E	G-lampa motorrumsbelysning	Light bulb, engine compartment light	Glühlampe, Motorraumbeleuchtung	Ampoule, éclairage compartiment moteur

https://truckmanualshub.com/

Komponentförteckning / List of Components / Komponentenverzeichnis / Liste de composants

No.	CAT.	SVENSKA	ENGLISH	DEUTSCH	FRANCAISE
439	E	Nummerskyltsbelysning	Light license plate	Kennzeichenbeleuchtung	
440	E	G-lampa värmereglage belysning	Light bulb, heating control light	Glühlampe, Beleuchtung für Heizungsbedieung	Ampoule, éclairage commande chauffage
445	H	G-lampa körvisare vä (extra)	Light bulb, extra direction indicator left	Glühlampe, Fahrtrichtungsanzeiger links, Extra	Ampoule,clignotant supplémentaire gauche
446	H	G-lampa körvisare hö (extra)	Light bulb, extra direction indicator right	Glühlampe, Fahrtrichtungsanzeiger, rechts, Extra	Ampoule, clignotant supplémentaire droite
451	H	G-lampa dimbakljus vänster	Light bulb, fog light rear left	Glühlampe, Nebelschlußleuchte links	Ampoule, feu de brouillard arrière gauche
452	H	G-lampa dimbakljus höger	Light bulb, fog light rear right	Glühlampe, Nebelschlußleuchte rechts	Ampoule, feu de brouillard arrière droite
453	H	G-lampa bromsljus/körvisare vänster	Light bulb, brake light/dir. indicator left-hand	Glühlampe, Bremslicht/ Fahrrichtung links	Ampoule, feux stop/ clingnotant gauche
453	H	G-lampa bromsljus/körvisare höger	Light bulb, brake light/dir. indicator right-hand	Glühlampe, Bremslicht/ Fahrrichtung rechts	Ampoule, feux stop/ clingnotant droit
454	H	G-lampa bromsljus blackout vänster	Light bulb, brake light blackout left-hand	Glühlampe, Bremslicht/ Ausfall links	Ampoule, feux stop/ clingnotant gauche blackout
454	H	G-lampa bromsljus blackout höger	Light bulb, brake light blackout right-hand	Glühlampe, Bremslicht/ Ausfall rechts	Ampoule, feux stop/ clingnotant droit blackout
456	E	G-lampa backljus blackout IR vänster	Light bulb, rear light blackout IR left-hand	Glühlampe, Rueckfahrtleuchte Ausfall IR links	Ampoule, feux de recul blackout infra rouge gauche
456	E	G-lampa backljus blackout IR höger	Light bulb, rear light blackout IR right-hand	Glühlampe, Rueckfahrtleuchte Ausfall IR rechts	Ampoule, feux de recul blackout infra rouge droit
457	H	G-lampa positionsljus blackout vänster	Light bulb, position light blackout left-hand	Glühlampe, Positionslampe Ausfall links	Ampoule, feux de position blackout gauche
457	H	G-lampa positionsljus blackout höger	Light bulb, position light blackout right-hand	Glühlampe, Positionslampe Ausfall rechts	Ampoule, feux de position blackout droit
458	E	G-lampa fram blackout vänster	Light bulb, roading light blackout left-hand	Glühlampe, Abblendlicht Ausfall links	Ampoule, feux de route blackout gauche
458	E	G-lampa fram blackout höger	Light bulb, roading light blackout right-hand	Glühlampe, Abblendlicht Ausfall rechts	Ampoule, feux de route blackout droit
459	E	G-lampa fram blackout IR vänster	Light bulb, roading light blackout IR left-hand	Glühlampe, Abblendlicht Ausfall IR links	Ampoule, feux de route blackout infra rouge gauche
459	E	G-lampa fram blackout IR höger	Light bulb, roading light blackout IR right-hand	Glühlampe, Abblendlicht Ausfall IR rechts	Ampoule, feux de route blackout infra rouge droit

https://truckmanualshub.com/

Komponentförteckning / List of Components / Komponentenverzeichnis / Liste de composants

No.	CAT.	SVENSKA	ENGLISH	DEUTSCH	FRANCAISE
460	E	G-lampa arb.belysning hytt blackout IR vä	Light bulb, working light cab blackout IR left	Glühlampe, Arbeitsbeleuchtung kabine Ausfall links	Ampoule, eclairage cbine blackout infra rouge gauche
460	E	G-lampa arb.belysning hytt blackout IR hö	Light bulb, working light cab blackout IR right	Glühlampe, Arbeitsbeleuchtung kabine Ausfall rechts	Ampoule, eclairage cbine blackout infra rouge draoit
461	E	G-lampa arb.bel. bom 20' blackout IR vä	Light bulb, working light boom20' b.out IR left	Glühlampe, Arbeitsbeleuchtung Ausleger 20¿ Ausfall IR links	Ampoule, feux de travail gauche sur la poutre pour les 20¿ blackout infra rouge
461	E	G-lampa arb.bel. bom 20' blackout IR hö	Light bulb, working light boom20' b.out IR right	Glühlampe, Arbeitsbeleuchtung Ausleger 20¿ Ausfall IR rechts	Ampoule, feux de travail droit sur la poutre pour les 20¿ blackout infra rouge
462	E	G-lampa arb.bel. bom 40' blackout IR vä	Light bulb, working light boom40' b.out IR left	Glühlampe, Arbeitsbeleuchtung Ausleger 40¿ Ausfall IR links	Ampoule, feux de travail gauche sur la poutre pour les 40¿ blackout infra rouge
462	E	G-lampa arb.bel. bom 40' blackout IR hö	Light bulb, working light boom40' b.out IR right	Glühlampe, Arbeitsbeleuchtung Ausleger 40¿ Ausfall IR rechts	Ampoule, feux de travail droit sur la poutre pour les 40¿ blackout infra rouge
463	H	G-lampa bak ljus vänster bak, blackout	Light bulb, rear light left-hand rear, blackout	Glühlampe, Rueckfahrtleuchte links hinten,Ausfall	Ampoule, feux de recul gauche blackout
463	H	G-lampa bak ljus höger bak, blackout	Light bulb, rear light right-hand rear, blackout	Glühlampe, Rueckfahrtleuchte rechts hinten,Ausfall	Ampoule, feux de recul droit blackout
464	E	G-lampa cont belysning IR vänster	Light bulb,Container light IR left-hand	Glühlampe, Container Beleuchtung IR links	Ampoule, eclairage conteneurs infra rouge gauche
464	E	G-lampa cont belysning IR höger	Light bulb,Container light IR right-hand	Glühlampe, Contanier Beleuchtung IR rechts	Ampoule, eclairage conteneurs infra rouge droit
465	H	G-lampa röd saxagregat ute	Light-bulb, red extender exended		
466	H	G-lampa orange vertikalhålning på	Light bulb, orange vertical hold on		
467	H	G-lampa grön klämtryck OK	Light bulb, green clamp pressure OK		
468		G-Lampa Röd Maxlast	Light bulb,Red Overload		
500	H	Kont lampa körvisare	Indicating lamp, direction indicator	Kontrollampe, Fahrtrichtungsanzeiger	Témoin, clignotants
501	H	Kont lampa körvisare (extra)	Indicating lamp, direction indicator extra	Kontrollampe, Fahrtrichtungsanzeiger, Extra	Témoin, clignotant supplémentaire
503	H	Varn lampa oljetryck motor	Warning lamp, oil pressure engine	Warnlampe, Öldruck Motor	Voyant, pression d¿huile moteur
504	H	Kont lampa helljus	Indicating lamp, main beam	Kontrollampe, Fernlicht	Témoin, feux de route
505	H	Varn lampa laddning	Warning lamp, loading	Warnlampe, Ladestrom	Voyant, charge

https://truckmanualshub.com/

Komponentförteckning / List of Components / Komponentenverzeichnis / Liste de composants

No.	CAT.	SVENSKA	ENGLISH	DEUTSCH	FRANCAISE
506	H	Varn lampa laddning (extra)	Warning lamp, loading extra	Warnlampe, Ladestrom Extra	Voyant, charge supplémentaire
507	H	Varn lampa färdbroms	Warning lamp, brake	Warnlampe, Betriebsbremse	Voyant, frein de service
508	H	Varn lampa parkerings broms	Warning lamp, parking brake	Warnlampe, Feststellbremse	Voyant, frein de stationnement
509	H	Varn lampa nivå kylvatten	Warning lamp, coolant level	Warnlampe, Kühlflüssigkeitsstand	Voyant, niveau liquide de refroidissement
510	H	Kont lampa diff spärr	Indicating lamp, diff. interlock	Kontrollampe, Differentialsperre	Témoin, blocage du différentiel
512	H	Varn lampa temp momentförst	Warning lamp, temperature converter	Warnlampe, Temperatur Drehmomentwandler	Voyant, température du convertisseur
514	H	Kont lampa överväxel	Indicating lamp, overdrive clutch	Kontrollampe, Overdrive	Témoin, overdrive
519	H	Kont lampa halvljus	Indicating lamp, dipped lights	Kontrolleuchte, Abblendlicht	Témoin, feu de croisement
524	H	Kont lampa luftfilter	Indicating lamp, air filter	Kontrollampe, Luftfilter	Témoin, filtre à air
525	H	Kont lampa UNIKAT	Indicating lamp, UNIKAT	Kontrollampe, UNIKAT	Témoin, UNIKAT
528	H	Kont lampa förvärmning	Indicating lamp, preheating	Kontrollampe, Vorwärmung	Témoin, préchauffage
530	H	Kont lampa framhjuls styrning	Indicating lamp, forward wheel steering	Kontrollampe, Vorderrad lenkung	Témoin, roue avant directrice
531	H	Kont lampa 4-hjuls styrning	Indicating lamp, 4-wheel steering	Kontrollampe, Vierradlenkung	Témoin, 4 roues drectrices
532	H	Kont lampa crab styrning	Indicating lamp, crab steering	Kontrollampe, Diagonal lenkung	Témoin, dépacement en diagonal
533	H	Kont lampa hyd.pump	Indicating lamp, emergency hyd. pump	Kontrollampe, Ackumulatorladepumpe	Témoin, pompe hydrzulique d¿urgence
547	H	Varn lampa centralvarning	Warning lamp, central warning	Warnleuchte, Zentrales Warnsystem	Voyant, signalisation centralisée
549	H	Varn lampa oljetryck v-låda	Warning lamp, oil pressure gear box	Warnlampe, Öldruck Getriebe	Voyant, pression d¿huile de la boîte
550	H	Varn lampa hyttlåsning	Warning lamp, cab lock	Warnlampe, Kabinenverriegelung	Voyant, verrouillage de la cabine
551	H	Varn lampa temp v-låda	Warning lamp, temperature gear box	Warnlampe, Temperatur Getriebe	Voyant, température de la boîte de vitesses
552	H	Varn lampa bromstryck	Warning lamp, brake pressure	Warnlampe, Bremsdruck	Voyant, pression de freinage
554	H	Varn lampa temp spolkrets bromsar	Warning lamp, temp. cooling system brakes	Warnlampe, Temperatur Spülkreis Bremsen	Voyant, température circuit de freins
555	H	Varn lampa temp kylvatten mot	Warning lamp, temperature coolant engine	Warnlampe, Temperatur Kühlwasser Motor	Voyant, température refroidissement moteur
556	H	Varn lampa låsning vändskiva	Warning lamp, interlocking of turntable	Warnleuchte, Sperren der Sattelkupplung	Voyant, verrouillage de la sellette
560	H	Varn lampa temp drivmotor el	Warning lamp, temperature, drive motor	Warnleuchte, Temperatur Antriebsmotor, el.	Voyant, temp.moteur propulsion, élect.

https://truckmanualshub.com/

Komponentförteckning / List of Components / Komponentenverzeichnis / Liste de composants

No.	CAT.	SVENSKA	ENGLISH	DEUTSCH	FRANCAISE
561	H	Varn lampa temp pumpmotor el	Warning lamp, temperature, pump motor	Warnleuchte, Temperatur Pumpenmotor el.	Voyant, temp.moteur pompe, élect.
562	H	Varn lampa öppen twistlock	Warning lamp, unlocked twist lock	Warnleuchte, Twistlock offen	Voyant, verrous non verouillés
563	H	Varn lampa låst twistlock	Warning lamp, locked twist lock	Warnleuchte, Twistlock geschlossen	Voyant, verrous verouillés
564	H	Varn lampa anliggning	Warning lamp, alignement	Warnleuchte, Auflage	Voyant, d¿aligemert
565	H	Varn lampa temp motor el	Warning lamp ,temperature motor	Warnleuchte, Temperatur , el.	Voyant, temp.moteur, élect.
569	H	Kont lampa elvärme	Indicating lamp, electric heater	Kontrolleuchte, Elektroheizung	Témoin, chauffage électrique
569	H	Kont lampa elvärme	Indicating lamp, electric heater	Kontrolleuchte, Elektroheizung	Témoin, chauffage électrique
570	H	Varn lampa överkoppling säkerhetssystem	Warning lamp, by-pass safety system	Warnleuchte, Sicherheitssystem umgeschaltet	Voyant, surconnection du systémede securité
571	H	Kont lampa bränslenivå	Indicating lamp, fuel level	Kontrollampe, Kraftstoff	Témoin, niveau de carburant
572	H	Varningslampa lyfthöjd	Warning lamp lifting height	Warnlampe Hubhöhe	Lampe alarme, hauteur de levée
573	H	Kontroll lampa motor information	Indicator lamp engine information	Kontrolllampe Motor-Information	Lampe de contrôl, information moteur
574	H	Kontroll lampa stödben nere	Indicator lamp support jacks down	Kontrollampe Stuetzbein unten	Lampe de contrôl, beqilles abaissées
575	H	Kontroll lampa stödben ur arb.läge	Indicator lamp support jacks out of working pos	Kontrollampe Stuetzbein außerhalb Arbeitsposition	Lampe de contrôl, béquille relevées
576	H	Kontroll lampa anliggning främre ben	Indicator lamp, alignment front legs	Kontrollampe Auflage vorderes Bein	Lampe de contrôl, allignement jambes avants
577	H	Kontroll lampa anliggning bakre ben	Indicator lamp, alignment rear legs	Kontrollampe Auflage hinteres Bein	Lampe de contrôl, allignement jambes arriéres
578	H	Kontroll lampa klämläge främre ben	Indicator lamp, clamp position front legs	Kontrollampe Klemmposition vordere Beine	Lampe de contrôl, position de vérouillage jambes avants
579	H	Kontroll lampa klämläge bakre ben	Indicator lamp, clamp position rear legs	Kontrollampe Klemmposition hintere Beine	Lampe de contrôl, position de vérouillage jambes arriéres
580	H	Kontroll lampa främre ben uppe	Indicator lamp, front legs upper position	Kontrollampe vorderes Bein oben	Lampe de contrôl, position haute jambes avants
581	H	Kontroll lampa främre ben nere	Indicator lamp, front legs lower position	Kontrollampe vorderes Bein unten	Lampe de contrôl, position basse jambes arrières
582	H	Varningslampa överlast	Warning lamp overload		
583	H	Kontroll lampa anliggning ett ben	Indicator lamp, alignment one leg		
584	H	Kontroll lampa anliggning alla ben	Indicator lamp, alignment all legs		

https://truckmanualshub.com/

Komponentförteckning / List of Components / Komponentenverzeichnis / Liste de composants

No.	CAT.	SVENSKA	ENGLISH	DEUTSCH	FRANCAISE
599	H	Kont lampa option	Indicating lamp, option	Kontrollampe, Option	Témoin, option
600	Y	M-ventil avgasbroms	Solenoid valve, exhaust brake	Magnetventil, Motorbremse	Electrovanne, ralentisseur sur échappement
601	Y	M-ventil diff spärr	Solenoid valve, diff. interlock	Magnetventil, Differentialsperre	Electrovanne, blocage du différentiel
602	Y	M-ventil broms	Solenoid valve, brake	Magnetventil, Bremse	Electrovanne, frein
603	Y	M-ventil värme	Solenoid valve, heater	Magnetventil, Heizung	Electrovanne, chaleur
604	Y	M-ventil kraftuttag sida	Solenoid valve, power take off, side	Magnetventil, Nebenantrieb Seite	Electrovanne, prise de force latérale
605	Y	M-ventil kraftuttag bak	Solenoid valve, power take off, rear	Magnetventil, Nebenantrieb hinten	Electrovanne, prise de force arrière
606	Y	M-ventil 2/4 hjulsdrift	Solenoid valve, 2/4WD	Magnetventil, 2-Rad/4-Rad-Antriebe	Electrovanne, 2/4 roues motrices
607	Y	M-ventil hög/låg växel	Solenoid valve, high/low gear	Magnetventil, Wechsel hoch/niedrig	Electrovanne, petite/grande vitesse
608	M	Pumpaggregat hyttlyft	Pump unit, cab hoist	Pumpenanlage, Kabinenhub	Groupe pompe-moteur, élevation de cabine
609	M	Ställmotor gaspådrag	Regulating motor, throttle	Stellmotor, Gasgeben	Moteur de commande de gaz
610	Y	M-ventil hydraulsystem allm	Solenoid valve, hydraulics, general	Magnetventil, hydraulische Anlage allgemein	Electrovanne,système hydraulique, général
611	Y	M-ventil flödesbegränsning	Solenoid valve, flow restriction	Magnetventil, Fließbegrenzung	Electrovanne, limiteur de débit
612	M	Ställmotor recirkulation	Regulating motor, re-circulation	Stellmotor, Re-zirkulation	Moteur de commande, re-circulation
613	Y	M-ventil momentförstärkare	Solenoid valve, torque amplifier	Magnetventil, Drehmomentwandler	Electrovanne, convertisseur de couple
614	Y	M-ventil rangespärr	Solenoid valve, ranging interlock	Magnetventil, Rangesperre	Electrovanne, blocage du doubleur
615	Y	M-ventil hjulvridning	Solenoid valve, wheel turning	Magnetventil, Radeinschlag	Electrovanne, pivotement roues
616	Y	M-ventil kallstart	Solenoid valve, cold start aid	Magnetventil, kaltstarthilfe	Electrovanne,pour le demarrage afroid
617	Y	M-ventil AT-regulator by-pass	Solenoid valve, AT-regulator ¿by-pass¿	Magnetventil, Abgasdruckregler ¿Bypass¿	Electrovanne, by-pass du régulateur AT
618	Y	M-ventil vatten klimatanläggning	Solenoid valve, water air conditioner	Magnetventil, wasser klimaanlage	Electrovanne, pour l¿eau du climatiseur
620	Y	M-ventil vändskiva upp	Solenoid valve, fifth wheel up	Magnetventil, Sattelkupplung, aufwärts	Electrovanne, sellette, montée
621	Y	M-ventil vändskiva ner	Solenoid valve, fifth wheel down	Magnetventil, Sattelkupplung, abwärts	Electrovanne, sellette, descente
622	Y	M-ventil vändskiva fram	Solenoid valve, fifth wheel forward	Magnetventil, Sattelkupplung, vorn	Electrovanne, sellette, marche avant
623	Y	M-ventil vändskiva bak	Solenoid valve, fifth wheel rear	Magnetventil, Sattelkupplung, hinten	Electrovanne, sellette, marche arrière
624	Y	M-ventil skevning hö	Solenoid valve, levelling right hand	Magnetventil, Niveauausgleich rechts	Electrovanne, corr.-niveau droits

https://truckmanualshub.com/

Komponentförteckning / List of Components / Komponentenverzeichnis / Liste de composants

No.	CAT.	SVENSKA	ENGLISH	DEUTSCH	FRANCAISE
625	Y	M-ventil skevning vä	Solenoid valve, levelling left hand	Magnetventil, Niveauausgleich links	Electrovanne, corr.-niveau gauche
626	Y	M-ventil AT-regulator	Solenoid valve, AT-regulator	Magnetventil, Abgasdruckregler	Electrovanne, régulateur AT
630	Y	M-ventil v-låda fram	Solenoid valve, gear box, forward gear	Magnetventil, Getriebe Vorwärtsgang	Electrovanne, boîte de vitesses marche avant
631	Y	M-ventil v-låda back	Solenoid valve, gear box, rear gear	Magnetventil, Getriebe Rückwärtsgang	Electrovanne, boîte de vitesses marche arrière
632	Y	M-ventil v-låda spole 1	Solenoid valve, gear box, 1 gear	Magnetventil, Getriebe Schaltstufe I	Electrovanne, boîte vitesses rapport I
633	Y	M-ventil v-låda spole 2	Solenoid valve, gear box, 2 gear	Magnetventil, Getriebe Schaltstufe II	Electrovanne, boîte de vitesses rapport II
634	Y	M-ventil v-låda spole 3	Solenoid valve, gear box, 3 gear	Magnetventil, Getriebe Schaltstufe III	Electrovanne, boîte de vitesses rapport III
635	Y	M-ventil klämtryck	Solenoid valve, clamping pressure	Magnetventil, Anliegedruck	Electrovanne, pression de serrage
636	Y	M-ventil styrning	Solenoid valve, steering	Magnetventil, Lenkung	Electrovanne, direction
637	Y	M-ventil flytläge skevning	Solenoid valve, equalizing fifth wheel	Magnetventil, Ausgleich der Sattelkupplung	Electrovanne, équilibré de la selette
638	Y	M-ventil stopp insprut pump	Solenoid valve, stop injection pump	Magnetventil, Abstellung Einspritzpumpe	Electrovanne, arrêt de la pompe d¿injection
639	Y	M-ventil låsning orbitrol ls	Solenoid valve, locking LS orbitrol	Magnetventil, Sperren LS Orbitrol	Electrovanne, verrouillage de LS Orbitrol
640	Y	M-ventil gasol	Solenoid valve, LPG	Magnetventil, LPG	Electrovanne, GPL
641	Y	M-ventil förångare (LPG)	Solenoid valve, evaporator (LPG)	Magnetventil, Verdampfer (LPG)	Electrovanne, évaporateur (GPL)
642	Y	M-ventil park broms	Solenoid valve, parking brake	Magnetventil, Feststellbremse	Eelectrovanne, frein de stationnement
643	Y	M-ventil låsning stol (VBFS)	Solenoid valve, seat locking (VBFS)	Magnetventil, Sitzsperre (VBFS)	Electrovanne, verrouillage du siège (VBFS)
644	Y	M-ventil låsning vändskiva	Solenoid valve, fifth wheel locking	Magnetventil, Sperren Sattelkupplung	Electrovanne, verrouillage de la sellette
645	Y	Magnetkoppling komp AC	Magnetic clutch, compressor AC	Magnetkupplung, Kompressor Klimaanlage	Coupleur magnétique, compresseur climatisation
646	Y	M-ventil stolsvändning	Solenoid valve, seat rotation	Magnetventil, Drehen des Sitzes	Electrovanne, pivotement du siège
647	Y	M-ventil stolstilt	Solenoid valve, seat tilt	Magnetventil, Kippen des Sitzes	Electrovanne, basculement du siège
648	Y	M-ventil luftfjädring	Solenoid valve, pneumatic springing	Magnetventil, Luftfederung	Electrovanne, suspension pneumatique
649	B	Termostat klimatannläggning	Thermostat, air condition	Thermostat, Klimaanlage	Thermostat, climatisation
650	M	Torkarmotor fram	Wiper motor forward	Scheibenwischermotor vorn	Moteur essuie-glace avant
650	M	Torkarmotor bak	Wiper motor rear	Scheibenwischermotor hinten	Moteur essuie-glace arrière
650	M	Torkarmotor tak	Wiper motor roof	Scheibenwischermotor Dach	Moteur essuie-glace pavillon
650	M	Torkarmotor tak (option)	Wiper motor roof (option)	Scheibenwischermotor Dach (Option)	Moteur essuie-glace pavillon (option)

https://truckmanualshub.com/

Komponentförteckning / List of Components / Komponentenverzeichnis / Liste de composants

No.	CAT.	SVENSKA	ENGLISH	DEUTSCH	FRANCAISE
651	M	Vindrutespolarmotor	Washer motor	Motor für Scheibenwaschanlage	Moteur lave-glace
652	M	Strålkastarmotor	Light motor	Motor für Scheinwerfer	Moteur projecteurs
653	M	Strålkastarspolarmotor	Light washer motor	Motor für Scheinwerferreinigungsanlage	Moteur lave-phares
654	M	Startmotor	Starter motor	Anlasser	Démarreur
655	M	Kylfläkt drivmotor (EC)	Cooling fan, main motor (EC)	Lüfter Antriebsmotor (EC)	Moteur du ventilateur (EC)
656	M	Kylfläkt elskåp (EC)	Cooling fan, electrical box (EC)	Lüfter Schaltschrank (EC)	Boîtier électrique du ventilateur (EC)
657	M	Fläktmotor värme	Heating fan	Gebläsemotor (Heizung)	Moteur du ventilateur (chauffage)
658	G	Generator (extra)	Alternator extra	Generator, Extra	Alternateur supplémentaire
659	G	Generator utan laddregulator	Alternator without loading regulator	Generator ohne angebauten Reglerschalter	Alternateur sans régulateur de charge
660	G	Generator med laddregulator	Alternator with loading regulator	Generator mit angebauten Reglerschalter	Alternateur avec régulateur de charge
661	M	Fönsterhissmotor	Screenelevator motor	Fensterhebermotor	Moteur lève-glaces
662	G	Laddregulator	Loading regulator	Reglerschalter	Régulateur de charge
663	M	Doseringspump klimatanläggning	Dosage pump, air condition	Dosierpumpe, Klimaanlage	Pompe de dosage, climatisation
664	M	Cirk pump klimatanläggning	Circulating pump, air condition	Umwälzpumpe, Klimaanlage	Pompe de circulation, climatisation
665	V	Diod	Diode	Diode	Diode
666	M	Fläktmotor cirkulation	Circulation fan	Umluftgebläser	Moteur du ventilateur (circulation)
667	M	Cirkulationspump värmesystem	Circulation pump heating system	Wärmetauscher Heizsystem	Pompe de circulation circuit de chauffage
668	M	Kylfläkt hydraulolja	Cooling fan, hydraulic oil	Gebläse, Hydrauliköl	Ventilateur, radiateur huile hydraulique
669	E	Värmare kupe/ motor diesel	Heater compartment/engine diesel	Innenheizung/ Dieselmotor	Réchauffeur pour habitacle et moteur
670	M	Kompressor	Compressor	Kompressor	Compresseur
671	M	Doseringspump diesel	Dosage pump diesel	Einspritzpumpe Diesel	Pompe de dosage pour diesel
672	M	Spjäll motor, ECC	Draught valve motor, ECC	Drosselventil Motor, ECC	Valve de traction pour moteur,ECC
673	Y	Vatten ventil motor, ECC	Water valve motor, ECC	Wasserventil Motor, ECC	Soupape pour refroidissement moteur,ECC
674	M	Kylfläkt bromsolja	Cooling fan, brake fluid	Gebläser, Bremsöl	Refroidisseur, huile de frein
685	A	Reglerenhet termostat AC	Control unit, termostat AC	Reglereinheit, Thermostat AC	Unité de régulation, Thermostat AC
690	B	Fartreglage (EC)	Speed control (EC)	Geschwindigkeitsregler (EC)	Régulation de la vitesse (EC)
693	M	Pump centralsmörjning	Pump, central lubrication	Pumpe, Zentralschmierung	Pompe, graissage centralisé
694	M	Styrmotor	Steering motor	Steuermotor	Moteur de direction
695	M	Drivmotor (EC)	Drive motor (EC)	Antriebsmotor (EC)	Moteur d¿entraînement (EC)

https://truckmanualshub.com/

Komponentförteckning / List of Components / Komponentenverzeichnis / Liste de composants

No.	CAT.	SVENSKA	ENGLISH	DEUTSCH	FRANCAISE
696	M	Pumpaggregate nödstyrning	Pump, emergency steering	Pumpe, Notlenkung	Pompe, direction de secours
697	B	Elbroms	Electric brake	E-Bremse	Frein électrique
698	M	Pumpmotor (EC)	Pump motor (EC)	Pumpenmotor (EC)	Moteur de la pompe (EC)
699	Y	M-ventil option	Solenoid valve, option	Magnetventil (option)	Electrovanne, (option)
700	P	Hastighetsmätare	Speedometer	Tachometer	Compteur de vitesse
701	P	Mätare oljetemp v-låda	Gear box oil temperature gauge	Meßinstrument, Öltemperatur Getriebe	Thermomètre, huile de la boîte
702	P	Klocka	Clock	Uhr	Montre
703	P	Varvtalsmätare	Engine rev meter	Drehzahlmesser	Compte-tours
704	P	Tryckluftsmätare	Air pressure gauge	Druckluftmesser	Manomètre, air
705	P	Mätare oljetryck v-låda	Gear box oil pressure gauge	Meßinstrument, Öldruck Getriebe	Manomètre, huile de la boîte
706	P	Termometer temp kylvätska motor	Temperature gauge, engine coolant	Thermometer, Temperatur Kühlflüssigkeit Motor	Thermomètre, temp. liquide refroidissement moteur
707	P	Bränslemätare	Fuel gauge	Kraftstoffanzeiger	Jauge de carburant
708	P	Timräknare	Hour meter	Betriebsstundenzähler	Compteur horaire
709	P	Kapacitetsmätare batteri	Capacity gauge, battery	Kapazitätsmesser	Indicateur de capacité, batterie
710	P	Tidur motor/kupevärmare	Timer, engine- and cab heater	Schaltuhr, motor- und Kabinenheizung	Minuterie, chauffage moteur et habitacle
711	P	Räknare, impuls	Counter, impulse	Zähler, Impuls	Compteur d' impulsion
712	P	Mätare oljetryck motor	Motor oil pressure gauge	Maßinstrument, Öldruck Motor	Minuterie, prèssion d¿huile moteur
714	P	Mätare, temp. Hydraulolja	Hydraulic fluidtemperature, guage	Maßinstrument, temperatur hydrauliköl	Minuterie, température huile hydraulique
715	P	Extra instrument allm	Extra instrument, general	Zusatzinstrument, allgemein	Instruments supplémentaires, général
720	S	Givare vändbar förarstol	Transmitter, revolving driver´s seat (VBFS)	Geber, drehbarer Fahrersitz (VBFS)	Capteur, siège de conduite pivotant (VBFS)
740	D	FleetManager kontrollenhet	FleetManager control unit		
741	U	FleetManager batterifilter	FleetManager battery filter		
742	D	FleetManager kortläsare	FleetManager card device		
743	D	FleetManager accelerations givare	FleetManager acceleration sensor		
751	B	Givare varvtal turbin	Transmitter, speed turbin	Geber, Drehzahl Tubine	Capteur, nombre de tour tubine
752	B	Givare varvtal inre växellåda	Transmitter, speed internal gear chain	Geber, Getriebe Schaltpunkt	Capteur, nombre de tour à lintérieur de la boite de vitesse
753	B	Varvtalsgivare motor	Transmitter, engine revolution	Drehzahlgeber Motor	Capteur de régime moteur
754	B	Givare lufttryck	Transmitter, air pressure	Geber, Luftdruck	Capteur, pression d¿air

https://truckmanualshub.com/

Komponentförteckning / List of Components / Komponentenverzeichnis / Liste de composants

No.	CAT.	SVENSKA	ENGLISH	DEUTSCH	FRANCAISE
755	B	Givare hydraulfilter indikering	Transmitter, hydraulics filter indication	Geber, Hydralikfilter Anzeige	Capteur, indication filtre à l¿huile
756	B	Temperatur kylvätska motor	Transmitter, engine coolant temperature	Temperaturgeber, Kühlflüssigkeit Motor	Capteur de température, liquide de refroidissement
757	B	Bränslenivågivare	Transmitter, fuel level	Kraftstoffstandgeber	Capteur de niveau de carburant
758	B	Varvtalsgivare v-låda	Transmitter, gear box revolution	Drehzahlgeber Getriebe	Capteur de régime boîte de vitesses
759	B	Nivåindikator kylvätska	Transmitter, coolant level	Flüssigkeitsstandanzeiger, Kühlflüssigkeit	Indicateur de niveau, liquide de refroidissement
760	B	Givare rev-spärr/aut-vxl trans	Transmitter, reversing interlock / automatic gear change system (on gearbox output shaft)	Geber Umkehrsperre/automatische Schaltung Transmission	Capteur blocage marche arrière/ changement automatique transmission
761	B	Givare rev-spärr/aut-vxl motor	Transmitter, reversing interlock / automatic gear changing system (engine speed)	Geber Umkehrsperre/automatische Schaltung Motor	Capteur blocage marche arrière/changement automatique moteur
762	B	Givare temp,spolkrets bromsar	Transmitter, brake flushing circuit	Geber, Temperatur Spülkreis Bremsen	Capteur, temp. circuit refroidiss. freins
763	B	Givare nivå hydraulolja	Transmitter, hydraulic fluid level	Geber, Hydraulikölfüllstand	Capteur, niveau huile hydraulique
764	B	Givare servotryck växellåda	Transmitter, gear box servo pressure	Geber, Servodruck, Getriebe	Capteur, pression servo de la boîte
765	B	Givare oljetryck v-låda	Transmitter, oil pressure gear box	Geber, Öldruck Getriebe	Capteur, pression d¿huile de la boîte
766	B	Givare oljetemp. v-låda	Transmitter, oil temperature gear box	Geber, Öltemperatur Getriebe	Capteur, température d¿huile de la boîte
767	B	Givare oljetryck motor	Transmitter, oil pressure engine	Geber, Öldruck Motor	Capteur, pression d¿huile moteur
768	B	Givare oljetryck hydraulik	Transmitter, hydraulic pressure	Geber, Öldruck, Hydraulik	Capteur, pression d¿huile hydraulique
769	B	Givare ändläge	Transmitter, end position	Geber, Anschlag	Capteur fin de course
770	B	Givare rattutslag	Transmitter, steering wheel angle	Geber, lenkradeinschlag	Capteur, braquage
771	B	Givare vinkel	Transmitter, angle	Geber, Winkel	Capteur, angle
772	B	Givare temp bromsolja	Transmitter, temperature brake fluid	Geber, Temperatur Bremskuehlöl	Capteur température liquide de frein
773	B	Givare närvaro	Transmitter, presence	Geber, Präsenz	Capteur, présence
774	B	Givare utomhustemp	Transmitter, ambient temperature	Geber, Außentemperatur	Capteur, température extérieure
775	B	Givare temp klimatanläggning	Transmitter, temperature air condition	Geber, Temperatur, Klimaanlage	Capteur, de températeur, climatisation

https://truckmanualshub.com/

Komponentförteckning / List of Components / Komponentenverzeichnis / Liste de composants

No.	CAT.	SVENSKA	ENGLISH	DEUTSCH	FRANCAISE
776	B	Givare temp hydraulolja	Transmitter, hydraulic temperature	Geber, Temperatur, Hydrauliköl	Capteur, température huile hydraulique
777	B	Givare läge	Transmitter, position	Geber, Position	Capteur, position
778	B	Givare drivbrytning	Transmitter, drive break	Geber, Antriebsabschaltung	Capteur, arrêt d¿entraînement
779	A	Reglersystem återladdning (EC)	Control system, recharging (EC)	Steuersystem, Aufladung (EC)	Système de régulation de recharge (EC)
780	A	Reglersystem åkmotor (EC)	Control system main motor (EC)	Regelsystem, Fahrmotor (EC)	Système de régulation moteur d¿avancement (EC)
781	A	Reglersystem pumpmotor (EC)	Control system pump motor (EC)	Regelsystem Pumpenmotor (EC)	Système de régulation moteur de la pompe (EC)
782	A	Logik interface 2 drivmotorer	Logic (interface) two main motors (EC)	Logik (Schnittstelle) zwei Antriebsmotoren	Interface deux moteurs de propulsion
783	A	Logik interface gaspådrag	Logic (interface) throttle	Logik (Interface) Gasgeben	Interface d¿accélérateur
784	A	Logik interface bromsregl	Logic (interface) brake control	Logik (Interface) Bremssteuerung	Interface de commande de frein
785	A	Logik interface styrsystem	Logic (interface) control system	Logik (Interface) Lenkung	Interface de système de commande
786	A	Servoförstärkare styrsystem	Servo amplifier steering system	Servoverstärker, Steuerungssystem	Amplificateur pour le servo commande du systeme de direction
789	B	Givare allmän	Transmitter, common	Geber, allgemein	Capteur, général
790	D	Elektronisk kontrollenhet ECU, hytt	Electronic Control Unit ECU, cab	Elektronische Kontrolleinheit ECU, Kabine	Unite de control électronique ECU, cabine
791	D	Elektronisk kontrollenhet aggregat	Electronic Control Unit, attachment	Elektronische Kontrolleinheit, Aggregat	Unite éléctronique de control accessoire
792	D	Elektronisk kontrollenhet styrning	Electronic Control Unit, steering system	Elektronische Kontrolleinheit, Lenkung	Unite éléctronique de control systéme de direction
793	D	Elektronisk kontrollenhet växellåda	Electronic Control Unit, gearbox	Elektronische Kontrolleinheit, Getriebe	Unite éléctronique de control boite de vitesse
794	D	Elektronisk kontrollenhet motor	Electronic Control Unit, engine	Elektronische Kontrolleinheit,Motor	Unite éléctronique de control boite moteur
795	P	Display	Display	Display	Afficheur
796	D	Elektronisk kontrollenhet, lasthantering	Electronic Control Unit, Loadhandling	Elektronische Kontrolleinheit, Ladengerät	Unité éléctronique de control pour la manutention de la charge
797	D	Elektronisk kontrollenhet, ram	Electronic Control Unit, frame	Elektronische Kontrolleinheit, Rahmen	Unité de contrôl éléctronic ECU, chassis
799	A	Logik allm (option)	Logic, general (option)	Logik, allgemein (option)	Circuit logique, général (option)
800	S	Startelement	Start element	Startelement	Réchauffeur de démarrage

https://truckmanualshub.com/

Komponentförteckning / List of Components / Komponentenverzeichnis / Liste de composants

No.	CAT.	SVENSKA	ENGLISH	DEUTSCH	FRANCAISE
802	E	Eluppvärmd backspegel	Electrical heated observation mirror	Elektrisch beheizter Rückspiegel	Rétroviseur à chauffage électrique
803	E	Eluppvärmd stol	Electrical heated seat	Elektrisch beheizter Sitz	Siège à chauffage électrique
804	E	Cigarettändare	Cigarett lighter	Zigarettenanzünder	Allume-cigares
805	E	Elvärme hytt	Electrical heating cab	Elektrische Heizung Kabine	Chauffage électrique cabine
806	A	Aggregat klimatanläggning	Aggregate, air conditioner	Aggregat, Klimaanlage	Groupe climatisation
807	R	Potentiometer	Potentiometer	Potentiometer	Potentiomètre
808	E	Eluppvärmd lufttorkare	Electrical heater air dryer	Elektrisch beheizer Lufttrockner	Séchage à l¿air, à chauffage électrique
810	A	Kondensor AC, fläkt	Condensor AC, fan	Kondensor Klimaanlage, Gebläse	Condenseur climatisation, ventilateur
815	S	Manöverspak	Control lever	Bedienungshebel	Levier de commande
820	R	Motstånd	Resistor	Widerstand	Résistance
821	C	KONDENSATOR	CAPACITOR		
822	Z	Signalfilter	Signal filter	Signalfilter	Filtre de signal
823	U	Signalomvandlare höger	Signal amplifier, right	Signalverstärker, rechts	Amplificateur de signaux, droit
824	U	Signalomvandlare vänster	Signal amplifier, left	Signalverstärker, links	Amplificateur de signaux, gauche
825	R	Reglage spakstyrning	Controls, (steering with control levers).	Regler, Hebelsteuerung	Commande, leviers
826	Y	Ventil spakstyrning	Valve, (steering with control levers).	Ventil, Hebelsteuerung	Distributeur, leviers
827	A	Växellåda	Gearbox	Getriebe	Bolt de vitesse
828	R	Shuntmotstånd	Shunt-resitor		
830	L	Tändspole	Ignition coil	Zündspule	Bobine d¿allumage
835	E	Tändstift	Ignition plug	Zündkerze	Bougie
840	S	Strömfördelare	Distributor	Stromverteiler	Distributeur
850	H	Signalhorn	Horn	Signalhorn	Avertisseur sonore
853	H	Summer	Buzzer	Summer	Signal sonore
888	E	Lufttork, kompressor	Air Dryer, Compressor	Luft trocknen, Kompressoren	
900	A	Radio/bandspelare	Radio/tape recorder	Radio/Kassettengerät	Radio/lecteur
901	U	Spänningsomvandlare	Voltage converter	Spannungsumwandler	Convertisseur de tension
902	B	Högtalare	Loud speaker	Lautsprecher	Haut-parleur
903	W	Antenn radio	Aerial, radio	Antenne, Radio	Antenne radio
905	A	Kommunikationsradio	Communication radio	CB-Funk	Radiotéléphone
906	W	Antenn kommunikationsradio	Aerial, communication radio	Antenne, CB-Funk	Antenne radiotéléphone
907	A	Monitor	Monitor		

https://truckmanualshub.com/

Komponentförteckning / List of Components / Komponentenverzeichnis / Liste de composants

No.	CAT.	SVENSKA	ENGLISH	DEUTSCH	FRANCAISE
908	A	Kamera	Camera		
909	A	Skrivare	Printer		
910	U	Spänningsomvandlare 80V/24V	Voltage converter 80 V / 24 V	Spannungsumwandler 80 V/24 V	Convertisseur de tension 80 V/24 V
911	A	Dataterminal	Dataterminal		
940	A	Logik batterivakt	Logic switch , battery watch	Logik Batteriewächter	Circuit logique de surveillance batterie
950	A	Logik transistortändning	Logic transistor ignition	Logik Transistorzündung	Circuit logique allumage transistorisé
955	A	Logik övervarvningsskydd (LPG)	Logic overspeed protection (LPG)	logik Überdrehungsschutz (LPG)	Circuit logique protection de surrégime (GPL)
960	A	Logik rev-spärr/aut-vxl	Logic unit, reversing interlock/automatic gear changing	Logikeinheit Umkehrsperre/automatische Schaltung	Unité logique blocage de marche arrière/ changement automatique
961	A	Motor/kupevärmare	Engine- and cab heater	Motor- und Kabinenheizung	Chauffeur moteur et habitacle
962	E	Logik slitageind kol elmotor	Logic indication of wear, brush electrical motor	Logik Verschleißanzeige Kohle, Elektromotor	Circuit logique indicateur d¿usure des balais, moteur électrique
965	H	Backvarnare	Reversing alarm	Rückfahrwarner	Avertisseur de recul
1001	S	Strömställare, TW	Switch, TW	Schalter, TW	Interrupteur, TW
1002	S	Strömställare, lossa TW	Switch, unlocking of TW	Schalter, Lösen der TW	Interrupteur, deverroulliage TW
1003	S	Strömställare, låsa TW	Switch, locking of TW	Schalter, Verriegelung der TW	Interrupteur, verroulliage TW
1004	S	Strömställare, stopp vid 30'-35'	Switch, stop at 30 -35¿	Schalter, Stopp bei 30-35¿	Interrupteur, arrêt á 30-35¿
1005	S	Strömställare, förbikoppling av säkerhetssystem	Switch, overriding of the safety system	Schalter, überbrückung des sicherheitssystem	Interrupteur, Dérivation du système de sécurité
1006	S	Strömställare, fällning främre ben	Switch, front legs down	Schalter, vorderes Bein ab	Interrupteur, béquille avant baisse
1007	S	Strömställare, fällning bakre ben	Switch, rear legs down	Schalter, hinteres Bein ab	Interrupteur, béquille arrière baisse
1008	S	Strömställare, klämma/lossa ben	Switch, clamping/-releasing legs	Schalter, Klemmen/Lösen der Beine	Interrupteur, serrage/-deserrage béquilles
1009	S	Strömställare, Motor information	Switch, Engine information	Schalter, Motor Information	Interrupteur, information moteur
1010	S	Srömställare, tilt av hytt	Switch, tilt of cab	Schalter, Kabinenneigung	Interrupteur, arrêt inclinaison de la cabine
1011	S	Strömställare IR ljus	Switch IR light	Schalter, IR Licht	Interrupteur, lampe IR
1012	S	Strömställare aut.utskjut 20¿-40¿	Switch, Aut. Extension 20¿-40¿	Schalter, automatische Teleskopiere 20¿-40¿	Interrupteur,extention automatique 20¿40¿
1013	S	Strömställare stödben	Switch, Support jacks	Schalter, Stuetzbein	Interrupteur, bequilles
1014	S	Strömställare förbikoppling rotationstopp	Switch, over ride rotation stop	Schalter, überbrückung Rotation stopp	Interrurpteur pour shunt ¿stop rotation¿

https://truckmanualshub.com/

Komponentförteckning / List of Components / Komponentenverzeichnis / Liste de composants

No.	CAT.	SVENSKA	ENGLISH	DEUTSCH	FRANCAISE
1015	S	Strömställare förbikoppling höjdbeg/tp-beg	Switch, over ride height limit/tp-limit	Schalter, überbrückung Höhenbegrenzung/ LSP- Begrenzung	Interrupteur shunt pour hauteur et CDG maxi
1016					
1017	S	Strömställare diagnostik öka/minska	Switch, diagnostics increase/decrease		
1018	S	Strömställare diagnostik on/off	Switch, diagnostics on/off		
1019	S	Strömställare rastvärme	Switch, paus heat		
1020	S	Strömställare automatisk släpp/kläm funktion	Switch automatic release/clamp funktion		
1021	S	Strömställare sax	Switch extender		
1022	S	Strömställare vertikalhållning	Switch, vertical position		
1023	S	Strömställare låsning övre arm	Switch, lock upper arm		
1024	S	Strömställare Korta Armen av/på	Switch, Short Arm on/off		
1025	S	Strömställare pappersfunktioner av/på	Switch, paper funktions on/off		
1026	S	Strömställare omkoppling pappers/klämmagregat	Switch, switch papper/bale clamp		
1027	S	Strömställare lyfthöjdsförval	Switch, lift height selection		
1028	S	Strömställare lyfthöjdsförval öka	Switch, lift height selection increase		
1029	S	Strömställare lyfthöjdsförval minska	Switch, lift height selection decrease		
1030	S	Strömställare läraringång givare ultraljud	Switch, teaching ultrasonic sensor		
1031	S	Strömställare, Over Height Upp/Ned	Switch, Over Height Up/Down		
1032	S	Brytare backljus	Switch reverse light.		
1033	S	Flytta korta armen	Move short arm		
1034	S	Strömställare förbikoppling startspärr	Switch Override Start interlock		
1035	S	Strömställare Val av klämtryck	Switch, Clamp pressure selection		
1036	S	Strömställare Korta Armen av/på	Switch , Short Arm on/off		
1037	S	Strömställare Arm kontroll	Switch , Arm Control		

https://truckmanualshub.com/

Komponentförteckning / List of Components / Komponentenverzeichnis / Liste de composants

No.	CAT.	SVENSKA	ENGLISH	DEUTSCH	FRANCAISE
2000	D	Elektronisk kontrollenhet, proportionalventil	Electronic control unit, propotional valve		
3001	K	Relä rotation	Relay, rotation	Relais, rotation	Relais, rotation
3002	K	Relä tilt	Relay, tilt	Relais, neigung	Relais, inclinaison
3003	K	Relä sidoföring	Relay, side shifting	Relais, seitenverstellung	Relais, translation laterale
3004	K	Relä längdinställning	Relay, length adjustment	Relais, längeneinstellung	Relais, dispersion
3005	K	Relä twist lock	Relay, twist lock	Relais, twist lock	Relais, twist lock
3006	K	Relä spridning	Relay, spreading	Relais, verstellung	Relais, dispersion
3007	K	Relä lyft/sänk	Relay, lifting/lowering	Relais, heben/senken	Relais,élévation/descente
3008	K	Relä hydraulfunktion extra	Relay, extra hydraulic function	Relais,extra hydraulisch funktion	Relais,
3009	K	Relä nödstopp	Relay, emergency stop	Relais, Nothalt	Relais, arrêt d¿urgence
3010	K	Relä bromsljus vxl std/blackout	Relay, brake light shift std/blackout	Relais, Bremslicht, Schaltung std/Ausfall	Relais, normal/blackout pour les feux de stop
3011	K	Relä backljus vxl std/blackout	Relay, reversing light shift std/blackout	Relais, Rueckfahrtleuchte, Schaltung std/ Ausfall	Relais, normal/blackout pour les feux de recul
3012	K	Relä arb.bel hytt vxl std/blackout	Relay, working light cab, shift std/blackout	Relais, Arbeitsbeleuchtung,schaltung std/ Ausfall	Relais, normal/blackout pour l¿éclai âge de la cabine
3013	K	Relä arb.bel. bom 20' vxl std/blackout	Relay,working light boom20' shift std/b.out	Relais, Arbeitsbeleuchtung,Ausleger 20¿, Schaltung std/ Ausfall	Relais, normal/blackout pour les feux de travail sur la poutre pour les 20¿
3014	K	Relä arb.bel. bom 40' vxl std/blackout	Relay,working light boom40' shift std/b.out	Relais, Arbeitsbeleuchtung,Ausleger 40¿,Schaltung std/Ausfall	Relais, normal/blackout pour les feux de travail sur la poutre pour les 40¿
3015	K	Relä vxl bromsljus/blinkers vä	Relay, shift brake light/direction indicator left	Relais, Bremslicht/ Blinker links	Relais, feux de stop clignotant gauche
3015	K	Relä vxl bromsljus/blinkers hö	Relay, shift brake light/direction indicator right	Relais, Bremslicht/ Blinker rechts	Relais, feux de stop clignotant droit
3016	K	Relä signalhorn	relay, horn	Relais, Hube	Relais, avertsseur
3017	K	Relä containerbelysning	Relay, Container light	Relais, Container Beleuchtung	Relais, ecairzge des conteneurs
3018	K	Relä containerbelysning IR	Relay, Container light IR	Relais, Container Beleuchtung IR	Relais, ecairzge des conteneurs infra rouge
3305	K	Relä VBFS, backljus	Relay, rotating driver´s seat, reversing light	Relais, drehbarer Fahrersitz, Rückfahrscheinwerfer	Relais, siège pivotant, feux de recul
3306	K	Relä VBFS, helljus	Relay, rotating driver´s seat, main beam	Relais, drehbarer Fahrersitz, Fernlicht	Relais, siège pivotant, feux de route

https://truckmanualshub.com/

Komponentförteckning / List of Components / Komponentenverzeichnis / Liste de composants

No.	CAT.	SVENSKA	ENGLISH	DEUTSCH	FRANCAISE
3307	K	Relä VBFS, halvljus	Relay, rotating driver´s seat, dipped beam	Relais, drehbarer Fahrersitz, Abblendlicht	Relais, siège pivotant, feux de croisement
3308	K	Relä VBFS, bromsljus	Relay, rotating driver´s seat, brake light	Relais, drehbarer Fahrersitz, Bremslicht	Relais, siège pivotant, feux stop
3310	K	Relä VBFS, körvisare vä	Relay, rotating driver´s seat, direction indicator left	Relais, drehbarer Fahrersitz, Fahrtrichtungsanzeiger, L	Relais, siège pivotant, clignotant supplémentaire, ga.
3311	K	Relä VBFS, körvisare hö	Relay, rotating driver´s seat, direction indicator right	Relais, drehbarer Fahrersitz, Fahrtrichtungsanzeiger, R	Relais, siège pivotant, clignotant supplémentaire, dr.
3330	K	Relä, säkerhetsbälte	Relay, seat belt	Relais, sicherheitsgurt	Relais, ceinture de sécurité
3331	K	Relä VBFS, drivning fram	Relay, rotating driver´s seat, forward driving	Relais, drehbarer Fahrersitz, Antrieb vorn (LPG, Diesel)	Relais, siège pivotant, marche avant
3332	K	Relä VBFS, drivning bak	Relay, rotating driver´s seat, reversing driving	Relais, drehbarer Fahrersitz, Antrieb hinten (LPG, Diesel)	Relais, siège pivotant, marche arrière
3349	K	Relä VBFS, fartreglage	Relay, rotating driver´s seat, speed control	Relais, drehbarer Fahrersitz, Geschwindigkeitsregelung	Relais, siège pivotant, commande de vitesse
3404	K	Relä VBFS, mastljus	Relay, rotating driver´s seat, mast light	Relais, drehbarer Fahrersitz, Ladescheinwerfer	Relais, siège pivotant, feux de travail
3412	K	Relä bak ljus	Relay, rotating driver´s seat, rear light	Relais, drehbarer Fahrersitz, Rücklicht	Relais, siège pivotant, feu arrière
3768	K	Relä oljetryck hydraulik	Relay, hydraulic pressure	Relais, Öldruck, Hydraulik	Relais, pression d¿huile hydraulique
3769	K	Relä, blockering av hyttilt	Relay, blocking of cab tilt	Relais, Kabinenneigung stop	Relais, blocage inclinaison de la cabine
3770	K	Relä anliggning	Relay, alignment		
3771	K	Relä Krok	Relay, Hook		
3772	K	Relä laddsignal (D+)	Relay, charge signal (D+)		
3773	K	Relä 12V för minne radio	Relay 12V for radio memory		
3774		Relä kylfläkt olja	Relay, cooling fan oil		
3775					
5000	H	Kont lampa tryck lyfttång	Indicating lamp, pressure lift tong		
5001	H	Varn lampa, Over Height ben uppe	Warn. Lamp, Over Height leg upper pos		
6001	Y	M-ventil blockering höger	Solenoid valve, blocking right	Magnetventil, Blockierung rechts	Electrovanne, blocage droit
6002	Y	M-ventil blockering vänster	Solenoid valve, blocking left	Magnetventil, Blockierung links	Electrovanne, blocage gauche
6003	Y	M-ventil inkoppling av hydraulik till topplyft	Solenoid valve, activation of toplift hydraulics	Magnetventil, Aktivierung von Oberhubhydraulik	Electrovanne, alimentation hydraulique du levage supèrieur

https://truckmanualshub.com/

Komponentförteckning / List of Components / Komponentenverzeichnis / Liste de composants

No.	CAT.	SVENSKA	ENGLISH	DEUTSCH	FRANCAISE
6004	Y	M-ventil sänk	Solenoid valve, lower	Magnetventil, Senken	Electrovanne, descente
6005	Y	M-ventil lyft	Solenoid valve, lift	Magnetventil, Heben	Electrovanne, levage
6006	Y	M-ventil bom ut	Solenoid valve, boom out	Magnetventil, Ausleger aus	Electrovanne, fléche sortie
6007	Y	M-ventil bom in	Solenoid valve, boom in	Magnetventil, Ausleger ein	Electrovanne, fleche rentrée
6008	Y	M-ventil vridning medsols	Solenoid valve, rotation clockwise	Magnetventil, Rotation im Uhrzeigersinn	Electrovanne, rotation horaire
6009	Y	M-ventil vridning motsols	Solenoid valve, rotation counter-clockwise	Magnetventil, Rotation entgenen Uhrzeigersinn	Electrovanne, rotation anti-horaire
6010	Y	M-ventil tilt ut	Solenoid valve, tilt out	Magnetventil, Neigung aus	Electrovanne, inclinaison sortie
6011	Y	M-ventil tilt in	Solenoid valve, tilt in	Magnetventil, Neigung ein	Electrovanne, inclinaison rentrée
6012	Y	M-ventil tilt	Solenoid valve, tilt	Magnetventil, Neigung	Electrovanne, inclinaison
6013	Y	M-ventil fällning främre ben	Solenoid valve, lowering front legs	Magnetventil, vorderes Bein ab	Electrovanne, béquille avant baisse
6014	Y	M-ventil fällning bakre ben	Solenoid valve, lowering rear legs	Magnetventil, hinteres Bein ab	Electrovanne, béquille arrière baisse
6015	Y	M-ventil klämma/lossa ben	Solenoid valve, clamping/releasing legs	Magnetventil, Klemmen/-Lösen der Beine	Electrovanne, serrage/deserrage béquilles
6016	Y	M-ventil Hyttskjutning fram	Solenoid valve, cab movement forward	Elektro-Magnetventil, Kabinenversetzung vorwärts	Electrovanne, mouvement avant de la cabine
6017	Y	M-ventil Hyttskjutning bak	Solenoid valve, cab movement reverse	Elektro-Magnetventil, Kabinenversetzung hinten	Electrovanne, mouvement arriere de la cabine
6018	Y	M-ventil spridning ut	Solenoid valve, spreading out	Elektro-Magnetventil, verstellung auswärts	Electrovanne, dispersion en dehors
6019	Y	M-ventil spridning in	Solenoid valve, spreading in	Elektro-Magnetventil, verstellung einwärts	Electrovanne, dispersion en dedans
6020	Y	M-ventil sidoföring vänster	Solenoid valve, side shift left	Elektro-Magnetventil schiebeträger links	Electrovanne, translation laterale à gauche
6021	Y	M-ventil sidoföring höger	Solenoid valve, side shift right	Elektro-Magnetventil schiebeträger rechts	Electrovanne, translation laterale à droite
6022	Y	M-ventil extra hydraulfunktion ut	Solenoid valve, extra hydraulic function out	Elektro-Magnetventil extra auswärts	Electrovanne, supplémentaire en dehors
6023	Y	M-ventil extra hydraulfunktion in	Solenoid valve, extra hydraulic function in	Elektro-Magnetventil extra einwärts	Electrovanne, supplémentaire en dedans
6024	Y	M-ventil stativ ut	Solenoid valve, mast out	Elektro-Magnetventil hubgerüst aus	Electrovanne mat de lev. ret.
6025	Y	M-ventil stativ in	Solenoid valve, mast in	Elektro-Magnetventil hubgerüst ein	Electrovanne mat de lev. ext.

https://truckmanualshub.com/

Komponentförteckning / List of Components / Komponentenverzeichnis / Liste de composants

No.	CAT.	SVENSKA	ENGLISH	DEUTSCH	FRANCAISE
6026	Y	M-ventil höger framhjul styrning vänster	Solenoid valve, right front wheel, steering left	Magnetventil, Vorderrad rechts,Lenkung links	Electrovanne, rouecavant droite/ direction gauche
6027	Y	M-ventil höger framhjul styrning höger	Solenoid valve, right front wheel, steering right	Magnetventil, Vorderrad rechts,Lenkung rechts	Electrovanne, roue avant droite/ direction droite
6028	Y	M-ventil vänster framhjul styrning vänster	Solenoid valve, left front wheel, steering left	Magnetventil, Vorderrad links,Lenkung links	Electrovanne, roue avant gauche/direction gauche
6029	Y	M-ventil vänster framhjul styrning höger	Solenoid valve, left front wheel, steering right	Magnetventil, Vorderrad links,Lenkung rechts	Electrovanne, roue avant gauche/direction droite
6030	Y	M-ventil höger bakhjul styrning vänster	Solenoid valve, right rear wheel, steering left	Magnetventil, Hinterrad rechts, Lenkung links	Electrovanne, roue arrière droite/ direction gauche
6031	Y	M-ventil höger bakhjul styrning höger	Solenoid valve, right rear wheel, steering right	Magnetventil, Hinterrad rechts,Lenkung rechts	Electrovanne, roue arrière droite/ direction droite
6032	Y	M-ventil vänster bakhjul styrning vänster	Solenoid valve, left rear wheel, steering left	Magnetventil, Hinterrad links,Lenkung rechts	Electrovanne, roue arrière gauche/ direction gauche
6033	Y	M-ventil vänster bakhjul styrning höger	Solenoid valve, left rear wheel, steering right	Magnetventil, Hinterrad links, Lenkung rechts	Electrovanne, roue arrière gauche/ direction droite
6034	Y	M-ventil skevning	Solenoid valve, levelling	Magnetventil, Niveausgleich	Electrovanne, levage
6035	Y	M-ventil skevning höger	Solenoid valve, levelling right	Magnetventil, Niveausgleich rechts	Electrovanne, levage droit
6036	Y	M-ventil skevning vänster	Solenoid valve, levelling left	Magnetventil, Niveausgleich links	Electrovanne, levage gauche
6037	Y	M-ventil kylfläkt	Solenoid valve, Cooling fan	Magnetventil, Gebläse	Electrovanne, ventilatur de refroidissement
6038	Y	M-ventil frikoppling koppling	Solenoid valve, lockup clutch	Magnetventil, Auskuppeln	Electrovanne, embrayage ¿point mort¿
6039	Y	M-ventil öppna twistlock	Solenoid valve, unlocked twist lock	Magnetventil, Twistlock öffnen	Electrovanne, verrous non verouillés
6040	Y	M-ventil låsa twistlock	Solenoid valve, locked twist lock	Magnetventil, Twistlock schliessen	Electrovanne, verrous verouillés
6041	Y	M-ventil nöd, twistlock	Solenoid valve, emergency, twistlock	Magnetventil, Twistlock ueberbrueck	Electrovanne, ungence verrous
6042	Y	M-ventil mellan bom	Solenoid valve, middle boom	Magnetventil, Mast mittlerer	Electrovanne, millieu de la poutre téléscop´que
6043	Y	Magnetventil, fällning torn (RTCH)	Solenoid valve, boom lowering (RTCH)	Magnetventil, Ausleger senken (RTCH)	Electrovanne, abaissement du support AR de la poutre téléscopique (RTCH)
6044	Y	M-ventil blockering twistlock	Solenoid valve, blocking twistlock	Magnetventil, Twistlock überbrücken	Electrovanne, blocage des twistlocks
6045	Y	M-ventil blockering lyft	Solenoid valve, blocking lift	Magnetventil, Heben überbrücken	Electrovanne, blocage de la levée

https://truckmanualshub.com/

Komponentförteckning / List of Components / Komponentenverzeichnis / Liste de composants

No.	CAT.	SVENSKA	ENGLISH	DEUTSCH	FRANCAISE
6046	Y	M-ventil utskjut	Solenoid valve, projecting	Magnetventil, Lengengeber	Electrovanne, pour réglage du déploiement
6047	Y	M-ventil, hyttilt upp	Solenoid valve, cab tilt up	Magnetventil, Kabinenneigung oben	Electrovanne, inclinaison cab position haute
6048	Y	M-ventil, hyttilt ner	Solenoid valve, cab tilt down	Magnetventil, Kabinenneigung unten	Electrovanne, inclinaison cab position basse
6049	Y	M-ventil, kylkrets broms	Solenoid valve, cooling cicuit brake	Magnetventil, Kühlkreislauf Bremse	Electrovanne, refroidissement des freins
6050	Y	M-ventil blockering utskjut	Solenoid valve, blocking projecting	Magnetventil, Blockierung teleskopieren	Electrovanne pour blocage extension
6051	Y	M-ventil, regenerering höger	Solenoid valve, regeneration right	Magnetventil, regeneration rechts	Electrovanne regeneration droite
6052	Y	M-ventil, regenerering vänster	Solenoid valve, regeneration left	Magnetventil, regeneration links	Electrovanne,regeneration gauche
6053	Y	M-ventil, körläge	Solenoid valve, driving position	Magnetventil, Fahrposition	Electrovanne,en position de conduite
6054	Y	M-ventil, klämma ihop	Solenoid valve, clambing in	Magnetventil, zuklammern	Electrovanne, serrage
6055	Y	M-ventil, klämma isär	Solenoid valve, clambing out	Magnetventil, aufklammern	Electrovanne,déserrage
6056	Y	M-ventil, främre knä ut	Solenoid valve, front knee out	Magnetventil, vorderes Knie ausklappen	Electrovanne, sortie d¿articulation avant
6057	Y	M-ventil, främre knä in	Solenoid valve, front knee in	Magnetventil, vorderes Knie einklappen	Electrovanne,rentrée d¿articulation avant
6058	Y	M-ventil, bakre knä ut	Solenoid valve, rear knee out	Magnetventil, hinteres Knie ausklappen	Electrovanne,sortie d¿articulation arrière
6059	Y	M-ventil, bakre knä in	Solenoid valve, rear knee in	Magnetventil, hinteres Knie einklappen	Electrovanne,rentrée d¿articulation arriére
6060	Y	M-ventil, främre ben upp	Solenoid valve, front legs up	Magnetventil, vorderes Bein hoch	Electrovanne, position haute jambes avants
6061	Y	M-ventil, bakre ben upp	Solenoid valve, rear legs up	Magnetventil, hinteres Bein hoch	Electrovanne,position haute jambes arrières
6062	Y	M-ventil, urkoppling hydraulpump	Solenoid valve interruption hydraulic pump	Magnetventil, auskuppeln Pumpe	Eléctrovanne, coupure de pompe
6063	Y	M-ventil, stödben upp	Solenoid valve, brace up	Magnetventil, Stuetzbein oben	Eléctrovanne béquille levée
6064	Y	M-ventil, stödben ner	Solenoid valve, brace down	Magnetventil, Stuetzbein unten	Eléctrovanne béquille baissée
6065	Y	M-ventil, frikoppling vridbroms	Solenoid valve, lockup rotation brake		
6066	Y	M-ventil, v-låda, drivning	Solenoid valve, gearbox, drive		

https://truckmanualshub.com/

Komponentförteckning / List of Components / Komponentenverzeichnis / Liste de composants

No.	CAT.	SVENSKA	ENGLISH	DEUTSCH	FRANCAISE
6067	Y	M-ventil, v-låda, oljetryck till 1:a/3:e växeln	Solenoid valve, gearbox,oilpressure to 1st/3rd gear		
6068	Y	M-ventil sax/rotation	Solenoid valve externder/rotation		
6069	Y	M-ventil, v-låda, oljetryck till 2:a/4:e växeln	Solenoid valve, gearbox,oilpressure to 2nd/4th gear		
6070	Y	M-ventil Over Height upp	Solenoid valve, Over Height up		
6071	Y	M-ventil Over Height ner	Solenoid valve, Over Height down		
6072	Y	M-ventil klämtryck	Solenoid valve clamp pressure		
6073	Y	Propertional ventil, Opti speed	Proportional valve, Opti speed		
6074	Y	M-ventil, v-låda, växelväljare för 2:a/4:e växeln	Solenoid valve, gearbox, gearswitch for 2nd/4th gear		
6075	Y	M-ventil, v-låda, växelväljare för 1:a/3:e växeln	Solenoid valve, gearbox, gearswitch for 1st/3rd gear		
6076	Y	M-ventil blockering sänk	Solenoid valve, blocking lower		
6077	Y	M-ventil Inching	Solenoid valve, Inching	Magnetventil,Inching	Electrovanne, Inching
6078	Y	M-ventil,Avstängning Övre klämarm	Solenoid valve, upper arm off	Magnetventil	Electrovanne
7200	S	Givare, axeltryck höger	Sensor, axle pressure right	Drucksensor, Achsdruck rechts	Capteur de pression, arbre du vérin du levage droit
7201	S	Givare, axeltryck vänster	Sensor, axle pressure left	Drucksensor, Achsdruck links	Capteur de pression, arbre du vérin du lévage gauche
7202	S	Givare, anliggning vänster fram	Sensor, alignment left front	Geber,Auflage links vorne	Capteur de pression, alignement avant gauche
7202	S	Givare, anliggning höger fram	Sensor, alignment right front	Geber,Auflage rechts vorne	Capteur de pression, alignement avant droit
7203	S	Givare, anliggning vänster bak	Sensor, alignment left rear	Geber,Auflage links hinten	Capteur de pression, alignement arriére gauche
7203	S	Givare, anliggning höger bak	Sensor, alignment right rear	Geber,Auflage rechts hinten	Capteur de pression, alignement arriére droit
7204	S	Givare, öppen vänster twistlock	Sensor, unlocked twistlock left	Geber, Twistlock links offen	Capteur de position, verrous non verouillés gauche

https://truckmanualshub.com/

Komponentförteckning / List of Components / Komponentenverzeichnis / Liste de composants

No.	CAT.	SVENSKA	ENGLISH	DEUTSCH	FRANCAISE
7204	S	Givare, öppen höger twistlock	Sensor, unlocked twistlock right	Geber, Twistlock rechts offen	Capteur de position, verrous non verouillés droit
7205	S	Givare, låst vänster twistlock	Sensor, locked twistlock left	Geber, Twistlock links geschlossen	Capteur de position,verrous verouillés gauche
7205	S	Givare, låst höger twistlock	Sensor, locked twistlock right	Geber, Twistlock rechts geschlossen	Capteur de position, verrous verouillés droit
7206	S	Givare, gaffel aggregat	Sensor, fork attachment	Geber, Gabel Aggregat	Capteur de position, accessoire fourches
7207	S	Givare, 2WD/4WD	Sensor, 2WD/4WD	Geber, 2WD/4WD	Capteur de position , 2 ou 4 roues motrices
7208	S	Givare, hytt i körläge	Sensor, Cab in drive position	Geber, kabinverstellung	Capteur, Cabine eu position de conduite
7209	S	Givare, oljefilter indikering	Sensor, Oil filter indication	Geber, Olfilter indication	Capteur, indication filtre á huile
7210	S	Givare, hytt i transportläge	Sensor, Cab in transportation position	Geber, Kabine im Position	Capteur, cabine en position de transport
7211	S	Givare, lyfthöjd	Sensor, lifting height	Geber, Hubhöhe	Capteur , hauteur de levée
7212	S	Givare, körläge	Sensor, driving position	Geber, Fahrposition	Capteur, position de conduite
7213	S	Givare, Anliggning främre ben	Sensor, Alignment front legs	Geber, Anliegen vordere Beine	Capteur, alignement jambes avants
7214	S	Givare, Anliggning bakre ben	Sensor, Alignment rear legs	Geber, Anliegen hinten Beine	Capteur, alignement jambes arriéres
7215	S	Givare, kläm främre ben	Sensor, Clamp front legs	Geber, Anliegen Beine vorne	Capteur, position de vérouillage jambes avants
7216	S	Givare, kläm bakre ben	Sensor, Clamp rear legs	Geber, Anliegen Beine hinten	Capteur, position vérouillage jambes arrieres
7217	S	Givare, främnre knä	Sensor, front knee	Geber, vorderes Knie	Capteur, articulation avant
7218	S	Givare, bakre knä	Sensor, rear knee	Geber, hinteres Knie	Capteur articulation arriere
7219	S	Givare, främre ben	Sensor, front legs	Geber, vorderes Bein	Capteur jambes avants
7220	S	Givare, bakre ben	Sensor, rear legs	Geber, hinteres Bein	Capteur, jambes arrières
7221	S	Givare, styraxel	Sensor, steering axle	Geber, Lenkachse	Capteur,essieu directeur
7222	S	Givare, stödben uppe	Sensor, brace up	Geber, Stuetzbein oben	Capteur béquille levée
7223	S	Givare, stödben nere	Sensor, brace down	Geber, Stuetzbein unten	Capteur béquille baissée
7224	B	Givare, mätläge våg	Sensor, measurepoint scale		
7225	B	Givare, rotationsstopp	Sensor, rotation stop		
7226	B	Givare, tryck lyftcylinder	Sensor, pressure lift cylinder		
7227	B	Givare, tryck klämma	Sensor, pressure clamp		
7228	B	Givare lyfthöjd analog	Sensor lift height analogue		
7229	B	Givare tiltvinkel analog	Sensor tilt angle analogue		

https://truckmanualshub.com/

Komponentförteckning / List of Components / Komponentenverzeichnis / Liste de composants

No.	CAT.	SVENSKA	ENGLISH	DEUTSCH	FRANCAISE
7230	B	Givare ultraljud last position	Sensor, ultrasonic load position		
7231	B	Givare, Over Height, Ben uppe	Sensor, Over Height, Leg upper position		
7232	B	Givare,IR Last position	Givare,IR Load position		
8071	R	Potentiometer lyft/sänk	Potentiometer lift/lower	Potentiometer heben/senken	Potentiomètre levage/descente
8072	R	Potentiometer tilt	Potentiometer tilt	Potentiometer neigen	Potentiomètre inclinaison
8073	R	Potentiometer sidoföring	Potentiometer side shifting	Potentiometer schiebeträger	Potentiomètre translation laterale
8074	R	Potentiometer spridning	Potentiometer spreading	Potentiometer verstellung	Potentiomètre dispersion
8075	R	Potentiometer extra	Potentiometer extra	Potentiometer extra	Potentiomètre supplémentaire
8076	R	Potentiometer mast in/ut	Potentiometer reach in/out	Potentiometer ein/aus-fahren	Potentiomètre, mat de lev ext-ret.
8077	R	Potentiometer höger framhjul	Potentiometer right front wheel	Potentiometer vorderrad rechts	Potentiometre, roue avant droite
8078	R	Potentiometer vänster framhjul	Potentiometer left front wheel	Potentiometer vorderrad links	Potentiometre , roue avant gauche
8079	R	Potentiometer höger bakhjul	Potentiometer right rear wheel	Potentiometer hinterrad rechts	Potentiometre , roue arrière droite
8080	R	Potentiometer vänster bakhjul	Potentiometer left rear wheel	Potentiometer hinterrad links	Potentiometre , roue arrière gauche
8081	R	Potentiometer tiltvinkel	Potentiometer tilt angle	Potentiometer niegungswinkel	Potentiometre , incllnason
8082	R	Potentiometer fläkthastighet, ECC	Potentiometer fan speed, ECC	Potentiometer Gebläsegeschwindigkeit, ECC	Potentiomètre, vitesse ventilateur,ECC
8083	R	Potentiometer temperatur, ECC	Potentiometer temperature, ECC	Potentiometer Temperatur, ECC	Potentiomètre, température,ECC
8084	R	Potentiometer spjäll, ECC	Potentiometer draught valve, ECC	Potentiometer Drossel, ECC	Potentiomètre pour valve de traction ECC
8085	R	Potentiometer rotation	Potentiometer rotation		
8086	R	Potentiometer sax	Potentiometer extender		
8087	R	Potentiometer klämma	Potentiometer clamp		
8088	R	Potentiometer skevning	Potentiometer levelling		
8089	R	Potentiometer kroklåsning	Potentiometer flaps		
8090	V	Laser, pappersaggretgat	Lase, Pulp an Paper		
8091					
9000	M	Motor höj/sänkbar stolspelare	Motor rise/lower seat column		
9001	D	Åkerströms fjärrkontroll	Åkerströms Remote Control		
9002					

https://truckmanualshub.com/

https://truckmanualshub.com/

Table of Contents F Technical data

Technical data **3**
Specifications for data and volume 3
Specifications for lift capacity and dimensions 5
Oils and lubricants, recommendation 8
Tightening torques, recommendations 10
Tightening torques, ORFS-couplings 11
Unit explanations 13
Conversion table, SI-units 14
Conversion table, length 15
Conversion table, area 15
Conversion table, volume 15
Conversion table, weight 16
Conversion table, pressure 16

https://truckmanualshub.com/

https://truckmanualshub.com/

Technical data

Specifications for data and volume

Data

1 Engine	Volvo TWD1240VE	Cummins QSM11
Power acc. to ISO 3046 (net power)	256 kW at 2000 rpm	280 kW at 2000 rpm
Torque ISO 3046	1751 Nm at 1200 rpm	1898 Nm at 1100-1400 rpm
Alternator	2240 W	2800 W
Battery	2x12 V - 140 Ah	2x12 V - 140 Ah

2 Transmission	Dana TE32000
No. of gears forward – reverse	4-4

3 Driveline/axle	Meritor PRC7534	Kessler D102

4 Brakes	Wet Disc Brakes - Drive wheels
Parking brake	Spring brake - Drive wheels

5 Steering	Hydraulic servo

6 Suspension	DRF420	DRF400/450	DRF450, X
Dimensions front - rear	18.00x25/36	18.00x25/40	18.00x33/36
Tyre pressure (also see pressure plate)	1.0 MPa		

9.6 Frame, body, cab and accessories, lighting system		
Light	**Rating (W)**	**Socket**
Control lights	1.2	W2x4.6d
Interior lighting	10	S8.5
Rear lights	5	BA15s
Brake lights	21	BA15s
Direction indicators	21	BA15s
Running lights	5	W2.1x9.5d
Headlights (high and low beams)	75/70	P43t-38
Back-up lights	70	PK22s
Work lights	70	PK22s

https://truckmanualshub.com/

9.6 Frame, body, cab and accessories, lighting system		
Rotating beacon	70	PK22s

Volumes

For oil types see *Oils and lubricants, recommendation page 8*.

1 Engine	Volvo TWD1240VE	Cummins QSM11
Engine oil	35 l	34 l
Cooling system	68 l	40 l
Fuel tank	550 l	
Fuel quality	Diesel according to EN590	

2 Transmission	Dana TE32000
Transmission oil	60 l when changing (80 l total)

3 Driveline/axle	Meritor PRC7534	Kessler D102
Differential	50 l	65 l
Hub reduction	2x10 l	2x12 l

4 Brakes	
Brake system	140 l

7 Load handling	
Planetary gear hydraulic motor attachment	1.6 l
Brake hydraulic motor attachment	0.6 l

9 Frame, body, cab and accessories	Volvo TWD1240VE	Cummins QSM11
Washer fluid	5 l	
Air conditioning, refrigerant	2000 g, R134a	
Air conditioning, lubricant	Prefilled to correct volume.	1.7 dl ZXL100 PAG-oil

10 Common hydraulics	
Hydraulic oil tank	600 l
Hydraulic system	940 l (total incl. tank)

https://truckmanualshub.com/

Specifications for lift capacity and dimensions

Capacity (tons)

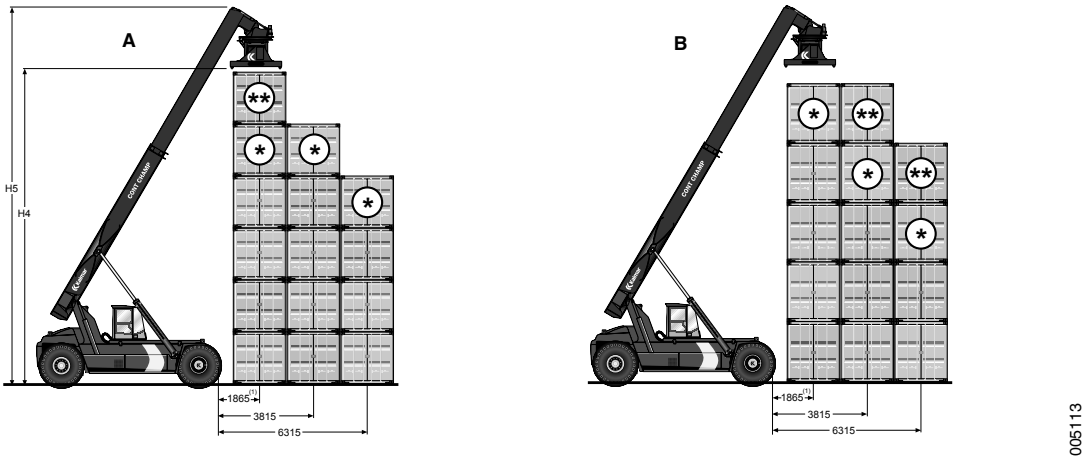

A. Container 8'6''

B. Container 9'6''

Model	Container 8'6''			Container 9'6''			Lifting height top lift attachment	
	Row 1	Row 2	Row 3	Row 1	Row 2	Row 3	H4 (mm)	H5 (mm)
DRF420-60S5	41*/42	25*	11*	40*/42	25*	11*	15100	18100
DRF450-60S5	43*/45	27*	13*	42*/45	27*	13*	15100	18100
DRF450-60S5X	43*/45	35*	18*	42*/45	35*	18*	15200	18200
DRF420-65S5	41*/42	28*	13*	40*/42	28*	13*	15100	18100
DRF420-65S6	39**/41*/42	28*	13*	40*/42	28**	13**	16200	19250
DRF450-65S5	43*/45	30*	15*	42*/45	30*	15*	15100	18100
DRF450-65S6	42**/44*/45	30*	15*	43*/45	30**	15**	16200	19250
DRF450-65S5X	45*	36*/38*	21*	43*/45	37*/38	21*	15200	18200
DRF450-65S6X	42**/45*	35*/38	21*	43*/45	34**/36*/38	21**	16300	19350
DRF420-70S5	41*/42	30*	15*	40*/42	30*	15*	15100	18100
DRF450-70S5X	45*	39*/41	23*	45*	40*/41	23*	15100	18200
DRF450-70S5XS	45*	39*/41	23*/(31*)	45*	40*/41	23*/(31*)	15100	18200
DRF450-705XS	45*	43*/45	26*/(34*)	45	45*	26*/(34*)	15200	18400
DRD450-80S4X	45*	45	35	45	45*	35	13500	17000

https://truckmanualshub.com/

Model	Container 8'6''			Container 9'6''			Lifting height top lift attach-ment	
DRD450-80S4XS	45*	45	35/(45)	45	45*	35/(45)	13500	17000
DRD450-80S5XS	Information can be obtained when ordering							

(**)= Support jacks down, (1)= May vary depending on model

Dimensions

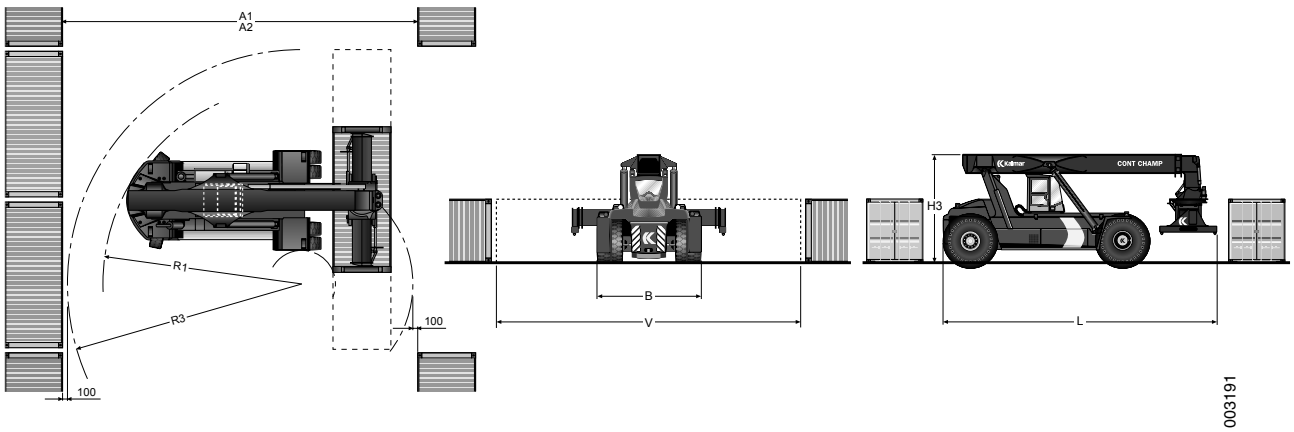

Model	Aisle width (mm)		Turning radius (mm)		Main dimensions (mm)						Service weight (kg)
	A1 - 20 ft	A2 - 40 ft	R1 - 20 ft	R3 - 40 ft	B	V	L	H3	Ground clearance	Tyres	
DRF420-60S5	11200	13600	8100	9400	4150	6055-12185	11200	4500	250	18.00x25/36	64500
DRF450-60S5	11200	13600	8100	9400	4150	6055-12185	11200	4500	250	18.00x25/40	66400
DRF450-60S5X	11200	13600	8100	9400	4150	6055-12185	11200	4600	300	18.00x33/36	76500
DRF420-65S5	11600	13600	8500	9400	4150	6055-12185	11700	4500	250	18.00x25/36	65000
DRF420-65S6	11900	13900	8500	9450	4150	6055-12185	12000	4500	250	18.00x25/36	66200
DRF450-65S5	11600	13600	8500	9400	4150	6055-12185	11700	4500	250	18.00x25/40	66800

https://truckmanualshub.com/

Model	Aisle width (mm)		Turning radius (mm)		Main dimensions (mm)						Service weight (kg)
DRF450-65S6	11900	13900	8500	9450	4150	6055-12185	12000	4500	250	18.00x25/40	67800
DRF450-65S5X	11600	13600	8500	9400	4150	6055-12185	11700	4600	300	18.00x33/36	76300
DRF450-65S6X	11900	13900	8500	9450	4150	6055-12185	12000	4600	300	18.00x33/36	77200
DRF420-70S5	12100	13600	9000	9400	4150	6055-12185	12200	4500	250	18.00x25/36	65800
DRF450-70S5X	12100	13600	9000	9400	4150	6055-12185	12200	4700	300	18.00x33/36	77800
DRF450-70S5XS	12100	13600	9000	9400	4150	6055-12185	12200	4700	300	18.00x33/36	79300
DRF450-705XS	12500	13600	9400	9400	4150	6055-12185	12700	4750	300	18.00x33/36	82100
DRD450-80S4X	14900	15300	11000	11250	4500	6055-12185	14200	5150	425	21.00x35/36	102600
DRD450-80S4XS	14900	15300	11000	11250	4500	6055-12185	14200	5150	425	21.00x35/36	103100
DRD450-80S5XS	Information can be obtained when ordering										

https://truckmanualshub.com/

Oils and lubricants, recommendation

The service intervals indicated by Kalmar Industries in the maintenance manual only apply if oils are selected according to the table below. The table indicates recommended viscosity for different oil types and qualities depending on the ambient temperature.

Any deviation from this table must be approved in writing by Kalmar Industries, and may mean changed service intervals.

Oil type, quality	°C	-40	-30	-20	-10	0	+10	+20	+30	+40
	°F	-40	-22	-4	+14	+32	+50	+68	+86	+104
1.8 Engine, lubrication system *) VDS-2 AND ACEA E3										
							SAE 15W40 (engine oil)			
				SAE 5W30 (engine oil)						
2.6 Transmission, lubrication system ATF DEXRON III										
							DEXRON III			
3.3 Power transmission, drive axle API GL-5										
							SAE 80W140			
				SAE 75W90						
4 Brakes (UTTO-oil) **) GM Allison C-4, John Deere J20 C, D, Caterpillar TO-4										
							SAE 5W30 (transmission oil)			
7 Load handling Planetary gear hydraulic motor, hypoid oil API GL-5										
							SAE 80W140			
				SAE 75W90						
Disc brake hydraulic motor See "10 Common hydraulics" below.										
10 Common hydraulics DIN 51524 Part 3 HVLP										
							ISO VG 68			
						ISO VG 46 HV				
					ISO VG 32					

https://truckmanualshub.com/

*) The lubrication oil must meet both standards. **NOTE!** API: CG-4 or CH-4 is approved for markets outside Europe (Instead of ACEA E3).

**) The oil in the brake system must meet one of the quality standards as well as be a UTTO-oil (Universal Tractor Transmission Oil).

Grease

Use a universal grease type EP according to NLGI Grade 2 with 3-5% molybdenum sulphide content for all lubrication points except for glide plates where lubrication paste Gleitmo 805 or equivalent shall be used.

Sealant silicone

Use Loctite 5972 or Loctite 598 (or equivalent). If uncertain, contact Kalmar Industries.

https://truckmanualshub.com/

Tightening torques, recommendations

The tightening torques in the following table are recommendations when tightening bolts and nuts.

When torquing using a machine, for example, bolt runner, the tightening torque should be reduced by approx. 5%.

For mild surfaces (hardness below 200 HB), washer shall be used under both bolt head and nut. Alternatively, use flange bolt or flange nut.

Tighten to the prescribed torque without stopping.

Recommended tightening torque may vary depending on surface treatment. Certain combinations of nut and bolt require lubrication according to the table below.

State	Bolt	Nut	Lubrication
1	untreated	untreated	oil
2	bright-galvanized	untreated or bright-galvanized	dry or oil
3	hot-galvanized	untreated	dry or oil

Quality	8.8			10.9	12.9
State	**1**	**2**	**3**	**1**	**1**
Fine M-thread					
M81	27 Nm	24 Nm	30 Nm	39 Nm	46 Nm
M101,25	54 Nm	48 Nm	61 Nm	78 Nm	91 Nm
M121,25	96 Nm	85 Nm	108 Nm	135 Nm	162 Nm
M161.5	230 Nm	205 Nm	260 Nm	323 Nm	388 Nm
M181.5	330 Nm	294 Nm	373 Nm	466 Nm	559 Nm
M-thread					
M4	3.2 Nm	2.9 Nm	3.6 Nm	4.6 Nm	5.5 Nm
M5	6.4 Nm	5.7 Nm	7.2 Nm	9.1 Nm	11 Nm
M6	11 Nm	9.8 Nm	12.5 Nm	16 Nm	19 Nm
M8	26 Nm	24 Nm	30 Nm	38 Nm	45 Nm
M10	52 Nm	47 Nm	59 Nm	74 Nm	89 Nm
M12	91 Nm	81 Nm	103 Nm	128 Nm	154 Nm
M16	220 Nm	198 Nm	250 Nm	313 Nm	375 Nm
M20	430 Nm	386 Nm	490 Nm	620 Nm	732 Nm
M24	750 Nm	668 Nm	848 Nm	1050 Nm	1270 Nm
M30	1480 Nm	1317 Nm	1672 Nm	2080 Nm	2500 Nm

https://truckmanualshub.com/

Quality	8.8			10.9	12.9
UNC-thread					
1/4	12.5 Nm	11.1 Nm	14.1 Nm	17.6 Nm	20 Nm
5/16	25 Nm	22.3 Nm	28.3 Nm	35 Nm	42 Nm
3/8	44 Nm	39 Nm	50 Nm	62 Nm	73 Nm
7/16	70 Nm	62 Nm	79 Nm	100 Nm	118 Nm
1/2	107 Nm	95 Nm	121 Nm	151 Nm	178 Nm
9/16	153 Nm	136 Nm	173 Nm	216 Nm	255 Nm
5/8	210 Nm	187 Nm	237 Nm	298 Nm	353 Nm
3/4	370 Nm	390 Nm	418 Nm	524 Nm	619 Nm
7/8	594 Nm	528 Nm	671 Nm	839 Nm	990 Nm
1	889 Nm	791 Nm	1005 Nm	1260 Nm	1480 Nm
1 1/8	1260 Nm	1120 Nm	1424 Nm	1780 Nm	2100 Nm
1 1/4	1760 Nm	1565 Nm	1990 Nm	2490 Nm	2940 Nm
1 3/8	2320 Nm	2065 Nm	2620 Nm	3280 Nm	3870 Nm
1 1/2	3060 Nm	2720 Nm	3455 Nm	4320 Nm	5100 Nm

Tightening torques, ORFS-couplings

Pipe and hose coupling

Pipe diameter		Tightening torques
mm	**inch**	**Nm**
6	1/4	23-25
8	5/16	33-38
10	3/8	
12	1/2	51-57
14	-	80-90
15	-	
16	5/8	
18	3/4	120-130
20	-	
22	7/8	150-170
25	1"	

https://truckmanualshub.com/

Pipe diameter		Tightening torques
mm	**inch**	**Nm**
28	-	180-200
30	-	
32	1"1/4	
35	-	200-240
38	1"1/2	

Socket width		Tightening torques
mm	**inch**	**Nm**
17	11/16	23-25
22	13/16	33-38
24	15/16	51-57
36	1 3/8	120-130
41	1 5/8	150-170

Flange coupling

UNF-UN		Metric-ISO		BSSP	
Thread (inch)	Tightening torques (Nm)	Thread (mm)	Tightening torques (Nm)	Thread (inch)	Tightening torques (Nm)
7/16-20	21	10x1	20	1/8-28	20
1/2-20	27	12x1,5	35	1/4-19	35
9/16-18	40	14x1,5	45	3/8-19	70
3/4-16	78	16x1.5	55	1/2-14	100
7/8-14	110	18x1.5	68	3/4-14	190
1"1/16-12	180	20x1.5	80	1"-11	300
1"3/16-12	230	22x1.5	98	1"1/4-11	330
1"5/16-12	285	26x1.5	170	1"1/2-11	400
1"5/8-12	320	27x2	180		
1"7/8-12	400	33x2	310		
		42x2	330		
		48x2	400		

https://truckmanualshub.com/

Unit explanations

Unit	Abbreviation
Newton metre	Nm
Kilo pound metre	kpm
Kilo pascal	kPa
Mega pascal	MPa
Kilowatt	kW
kilojoule	kJ
British termel unit	Btu
Calorie	ca
Inch	in
Feet	ft
Yard	yd
Mile	mile
Centimetre	cm
Metre	m
Kilometre	km

https://truckmanualshub.com/

Conversion table, SI-units

SI-unit	Recalculation factor	Non-SI	Recalculation factor	SI
Torque				
Nm	x 10,2	= kg·cm	x 0,8664	= lb·in
Nm	x 0,74	= lbf·ft	x 1,36	= Nm
Nm	x 0,102	= kg·m	x 7,22	= lb·ft
Pressure (Pa = N/m ^{2})				
kPa	x 4,0	= in.H_2O	x 0,249	= kPa
kPa	x 0,30	= in.Hg	x 3,38	= kPa
kPa	x 0,145	= psi	x 6,89	= kPa
bar	x 14,5	= psi	x 0,069	= bar
kp/cm ^{2}	x 14,22	= psi	x 0,070	= kp/cm ^{2}
N/mm ^{2}	x 145,04	= psi	x 0,069	= bar
MPa	x 145	= psi	x 0,00689	= MPa
Power (W = J/s)				
kW	x 1,36	= hp (cv)	x 0,736	= kW
kW	x 1,34	= bhp	x 0,746	= kW
kW	x 0,948	= Btu/s	x 1,055	= kW
W	x 0,74	= ft·lb/s	x 1,36	= W
Energy (J = Nm)				
kJ	x 0,948	= Btu	x 1,055	= kJ
J	x 0,239	= calorie	x 4,19	= J
Speed and acceleration				
m/s^2	x 3,28	= ft/s ^{2}	x 0,305	= m/s ^{2}
m/s	x 3,28	= ft/s	x 0,305	= m/s
km/h	x 0,62	= mph	x 1,61	= km/h
Horsepower/torque				
Bhp x 5252 rpm= TQ (lb·ft)			TQ x rpm 5252 = bhp	
Temperature				
^{o}C = (^{o}F – 32)/1,8	^{o}F = (^{o}C x 1,8) + 32			
Flow factor				
l/min (dm ^{3} /min)	x 0,264	= US gal/min x 3,785		= liter/min

https://truckmanualshub.com/

Conversion table, length

Unit	cm	m	km	in	ft	yd	mile
cm	1	0,01	0,00001	0,3937	0,03281	0,01094	0,000006
m	100	1	0,001	39,37	3,2808	1,0936	0,00062
km	100000	1000	1	39370,7	3280,8	1093,6	0,62137
in	2,54	0,0254	0,000025	1	0,08333	0,02777	0,000015
ft	30,48	0,3048	0,000304	12	1	0,3333	0,000189
yd	91,44	0,9144	0,000914	36	3	1	0,000568
mile	160930	1609,3	1,6093	63360	5280	1760	1
1 mm = 0,1 cm - 1 mm = 0,001 mm							

Conversion table, area

Unit	cm^2	m^2	km^2	a	ft^2	yd^2	in^2
cm^2	1	0,0001	-	0,000001	0,001076	0,000012	0,155000
m^2	10000	1	0,000001	0,01	10,764	1,1958	1550,000
km^2	-	1000000	1	10000	1076400	1195800	-
a	0,01	100	0,0001	1	1076,4	119,58	-
ft^2	-	0,092903	-	0,000929	1	0,1111	144,000
yd^2	-	0,83613	-	0,008361	9	1	1296,00
in^2	6,4516	0,000645	-	-	0,006943	0,000771	1
1ha = 100a - 1mile^2 = 259ha = 2,59km ^{2}							

Conversion table, volume

Unit	cm^3 = cc	m^3	l	in^3	ft^3	yd^3
cm^3 = ml	1	0,000001	0,001	0,061024	0,000035	0,000001
m^3	1000000	1	1000	61024	35,315	1,30796
dm^3 (l)	1000	0,001	1	61,024	0,035315	0,001308
in^3	16,387	0,000016	0,01638	1	0,000578	0,000021
ft^3	28316,8	0,028317	28,317	1728	1	0,03704
yd^3	764529,8	0,76453	764,53	46656	27	1
1gal (US) = 3785,41cm ^{3} = 231in^3 = 0,83267gal (UK)						

https://truckmanualshub.com/

Conversion table, weight

Unit	g	kg	t	oz	lb
g	1	0,001	0,000001	0,03527	0,0022
kg	1000	1	0,001	35,273	2,20459
t	1000000	1000	1	35273	2204,59
oz	28,3495	0,02835	0,000028	1	0,0625
lb	453,592	0,45359	0,000454	16	1
1 ton (metric) = 1,1023 ton (US) = 0,9842 ton (UK)					

Conversion table, pressure

Unit	kp/cm^2	bar	Pa = N/m^2	kPa	lbf/in^2	lbf/ft^2
kp/cm^2	1	0,98067	98066,5	98,0665	14,2233	2048,16
bar	1,01972	1	100000	100	14,5037	2088,6
Pa = N/m^2	0,00001	0,001	1	0,001	0,00015	0,02086
kPa	0,01020	0,01	1000	1	0,14504	20,886
lbf/in^2	0,07032	0,0689	6894,76	6,89476	1	144
lbf/ft^2	0,00047	0,00047	47,88028	0,04788	0,00694	1
kg/cm^2 = 735,56 Torr (mmHg) = 0,96784 atm						

https://truckmanualshub.com/

Table of Contents G Terminology and index

Terminology and index **3**
Terminology 3
Index 6

https://truckmanualshub.com/

https://truckmanualshub.com/

Terminology and index

Terminology

Term	Description
Accumulator	Reservoir that stores (accumulates) pressure for i.e. hydraulic functions.
Anti-corrosion compound	Prevents oxidation, in simple terms, rustproofing.
Attachment	Part of the machine that grabs the load when lifting.
Axle distance	Distance between drive axle and steering axle.
Bar	Unit to express pressure.
Battery disconnector	Cuts off current from battery.
Boom	Lift beam moveable vertically and in-out. Bracket for attachment.
Bottom lift attachment	“Lift legs” that can be raised/lowered for handling loads. Grabs load from below.
Buzzer	Acoustic alarm to catch the operator’s attention.
Control valve	Valves that can be used to control something, for example, to release pressure and thus lower a boom or a fork. See also control valve.
Daily inspection	The actions that should be performed daily to ensure the machine’s functionality.
Decitonne	Tenth of a tonne, measure of the machine’s lift capacity.
Display	“Window” showing digital information on steering wheel panel in cab.
Drive axle	Driving axle that receives the torque from the drivetrain.
Drivetrain	Parts in machine involved in power transmission; engine, torque converter, transmission, propeller shaft and drive axle with differential and hub reduction.
Dust reservoir	The air filter collects the coarsest particles in a dust reservoir, emptied automatically during operation.
ECC	Electric Climate Control. Climate unit with thermostat-controlled cooling, dehumidification and heating.
EHC	Electric Heat Control. Heater unit with automatic heat control.
Electrolyte level	Fluid level in battery cells.
Environmental waste	Used oils, filters, etc., must be handled according to governing national laws and regulations.
Expansion tank	Tank for coolant.
Fixed displacement	Pump with fixed pump volume.
Hanging load	Lifted load.
Hub reduction	Type of final drive (often next to drive wheel) that reduces rpm and increases torque from the drivetrain.
Hydraulic oil	Oil for hydraulic system. See specifications in section *F Technical data*.
Hydraulic oil pump	Pump in hydraulic system.

https://truckmanualshub.com/

Term	Description
Hydraulic system	System that uses oil pressure to transfer power to different functions.
Indicator	Manual “sensor”, for example, shows that a filter is clogged and needs to be changed.
LC	Load centre.
Levelling	Attachment is tilted, for example, if load stands on uneven ground.
Lift capacity	Indicates machine’s maximal lift capacity.
Lifting point	Attaching point for lift device when lifting an object.
Low-emission engine	Engine with low emissions of hazardous substances. Manufactured according to regulations.
Machine model	Machine type. Indicated, for example: DRF 400-450. See also type designation.
Main fuse	Located by battery. Cuts off current all systems in machine.
Maintenance	Periodic maintenance actions so that machine functions safely and for long life.
Mast	Carrier of attachment and load.
OP	Overload Protection. Overloading system to warn when machine is overloaded.
Operating hours	Number of hours machine has been in operation, shown on hour meter in cab.
Option	Optional equipment for machine.
Overloading system	See OP (Overload Protection).
Pilot oil pressure	A low control pressure to, for example, a valve.
Planetary gear	Type of transmission with gears in constant engagement.
Product alternative	One of several alternatives is selected for a machine, i.e. engine alternative.
Proportional valve	An electro-magnetically controlled valve. If a current is applied, the valve is activated in proportion to the current’s amplitude. In simple terms, infinitely variable valve, as opposed to on/off valve. For example, on transmission’s valve housing.
Reachstacker	Machine with special top lift attachment for containers.
Refrigerant	Fluid/gas in air conditioning. May only be handled by authorized trained person.
Rotation yoke	Rotating unit on attachment, rotates attachment in relation to lift boom.
Securing machine for transport	Actions before transporting machine.
Serial number	Unique machine designation. On machine plate.
Service position	How machine should be safely positioned before service may be started.
Servo	A small user movement results in a big machine movement, i.e. power steering.
Servo pressure	A low control pressure to control a higher pressure, for example, to a valve.
Sideshift	Parallel sideways movement of attachment.
Solenoid valve	An electro-magnetically controlled valve. See also proportional valve.
Spirit Delta	Enclosed type of cab.
Spreading	Widening of attachment.

https://truckmanualshub.com/

Term	Description
Start up	Start procedure for control and monitoring system (from powerless to supplied with voltage).
Steering axle	Wheel axle with steering.
Tilting	Load is leaned forward or backward.
Torque converter	Hydraulic, variable clutch.
Transmission oil	Oil for transmission and torque converter. See specifications in section *F Technical data*.
Twistlocks	Four lock pins, one in each corner of the attachment, pushed down in corresponding holes in container and twisted to lock the container when lifting.
Type designation	Indicates machine type and capacity. See also machine model.
Valve slide	Moveable part in valve. Determines oil's path.
Variable displacement	Adjustable volume (capacity) of a pump.
Variable pump	Pump with adjustable flow rate.
Wet brakes	Brake discs in oil-bath.
Working hydraulics	All load handling functions, i.e. lift and lower, tilt, sideshift, spreader and levelling.

https://truckmanualshub.com/

Index

Title	Tab	Functiongroup
50h-check	C Preventive Maintenance	-
A near-accident is a warning signal!	B Safety	-
About the documentation	A Foreword	-
About the machine version	A Foreword	-
About the Maintenance Manual	A Foreword	-
Accumulator	4 Brakes	4.3.4
Additional functions	7 Load handling	7.10
Air cleaning system	1 Engine	1.6.1
Air intake and exhaust outlet	1 Engine	1.6
Air pollution	B Safety	-
Alternator (generation)	11 Common electrics	11.4
ATTACH	8 Control system	8.4.9
Axial piston pump with variable displacement	10 Common hydraulics	10.4.2
Batteries (storage)	11 Common electrics	11.3
Body structure	9 Frame, body, cab and accessories	9.13
BOOM	8 Control system	8.4.8
Brake oil filter	4 Brakes	4.8.12
Brake oil pump	4 Brakes	4.3.1
Brake pedal	4 Brakes	4.1.1
Brakes	4 Brakes	4
Breather filter	4 Brakes	4.8.11
Breather filter hydraulic oil tank	10 Common hydraulics	10.6.6
By-passing	8 Control system	8.2.2
CAB	8 Control system	8.4.3
Cab interia	9 Frame, body, cab and accessories	9.11
Cab structure and suspension	9 Frame, body, cab and accessories	9.10
CAN/POWER	8 Control system	8.4.1
CAN-bus	11 Common electrics	11.6.1
CAN-bus driveline	11 Common electrics	11.6.3
Central lubrication	9 Frame, body, cab and accessories	9.14
Check and service log	C Preventive Maintenance	-
Circuit diagrams, compilation	E Schematics	11

https://truckmanualshub.com/

Title	Tab	Functiongroup
Circuit diagrams, description	E Schematics	11
CLIMATE	8 Control system	8.4.4
Clothing etc.	B Safety	-
Common electrics	11 Common electrics	11
Common hydraulics	10 Common hydraulics	10
Communication	11 Common electrics	11.6
Communication system	9 Frame, body, cab and accessories	9.7
Complete machine	0 Complete machine	-
Complete machine, description	0 Complete machine	-
Component designations	E Schematics	11
Condenser	9 Frame, body, cab and accessories	9.4.8
Conditions	A Foreword	-
Container counter	7 Load handling	7.10.3
Control system	8 Control system	8
Control system engine	1 Engine	1.9
Control system transmission	2 Transmission	2.8
Control units	11 Common electrics	11.5.3
Controls and instrumentation	4 Brakes	4.1
Controls and instrumentation	9 Frame, body, cab and accessories	9.1
Conversion table, area	F Technical data	-
Conversion table, length	F Technical data	-
Conversion table, pressure	F Technical data	-
Conversion table, SI-units	F Technical data	-
Conversion table, weight	F Technical data	-
Conversion table, volume	F Technical data	-
Coolant	1 Engine	1.7.7
Coolant	B Safety	-
Coolant filter	1 Engine	1.7.2
Cooling	2 Transmission	2.7
Cooling fan	1 Engine	1.7.5
Cooling system	1 Engine	1.7
Copyright	A Foreword	-
Diagnostics	8 Control system	8.4
Distribution of electricity	11 Common electrics	11.5

https://truckmanualshub.com/

Title	Tab	Functiongroup
Documentation sections	A Foreword	-
Drive axle	3 Driveline/Axle	3.3
Driveline/axle	3 Driveline/Axle	3
Electric motors	B Safety	-
Electric protection	11 Common electrics	11.2
Engine	1 Engine	1
ENGINE	8 Control system	8.4.6
Entertainment and communication	9 Frame, body, cab and accessories	9.8
Environment	B Safety	-
Error codes	D Error codes	-
Error codes	8 Control system	8.3
Error codes engine alternative Cummins	D Error codes	1
Error codes engine alternative Volvo	D Error codes	1
Error codes machine	D Error codes	8
Error codes transmission	D Error codes	2
Error codes, explanation	D Error codes	-
EXTRA	8 Control system	8.4.11
Feedback	A Foreword	-
Fire and explosion risks	B Safety	-
Fluid or gas under pressure	B Safety	-
Foreword	A Foreword	-
Form for copying	A Foreword	-
Frame	9 Frame, body, cab and accessories	9.12
Frame, body, cab and accessories	9 Frame, body, cab and accessories	9
Fresh air filter	9 Frame, body, cab and accessories	9.4.1
Fuel filter	1 Engine	1.2.4
Fuel pre-filter	1 Engine	1.2.3
Fuel system	1 Engine	1.2
Function descriptions	A Foreword	-
Function group structure	A Foreword	-
Fuses	11 Common electrics	11.2.2
General	A Foreword	-
General	B Safety	-
General	B Safety	-

https://truckmanualshub.com/

Title	Tab	Functiongroup
General safety information	B Safety	-
Glass/windows/mirrors	9 Frame, body, cab and accessories	9.9
Height limitation	8 Control system	8.2.4
Hoses, pipes and valves	10 Common hydraulics	10.5
Humidity filter	9 Frame, body, cab and accessories	9.4.9
HVAC	9 Frame, body, cab and accessories	9.4
HYD	8 Control system	8.4.5
Hydraulic and brake systems, depressurizing	B Safety	-
Hydraulic diagram basic machine	E Schematics	10
Hydraulic diagram cab lift and support jacks	E Schematics	10
Hydraulic diagram combi attachment (part 1 of 3)	E Schematics	10
Hydraulic diagram combi attachment (part 2 of 3)	E Schematics	10
Hydraulic diagram combi attachment (part 3 of 3)	E Schematics	10
Hydraulic diagram joystick steering	E Schematics	10
Hydraulic diagram sliding cab	E Schematics	10
Hydraulic diagram sliding cab and support jacks	E Schematics	10
Hydraulic diagram top lift	E Schematics	10
Hydraulic diagram top lift, tilt lock and controllable tilt	E Schematics	10
Hydraulic diagram top lift, tilt lock, controllable tilt and hydraulic levelling	E Schematics	10
Hydraulic diagrams, compilation	E Schematics	10
Hydraulic oil	10 Common hydraulics	10.6.8
Hydraulic oil filter	10 Common hydraulics	10.6.7
Hydraulic oil fine-filter	10 Common hydraulics	10.6.9
Ignition/heating	1 Engine	1.10
Important information	A Foreword	-
Levelling	7 Load handling	7.8
Lift boom	7 Load handling	7.3.10
Lift legs	7 Load handling	7.9.2
Lifting heavy components	B Safety	-
Lifting/lowering	7 Load handling	7.2
Lighting system	9 Frame, body, cab and accessories	9.6
LIGHTS	8 Control system	8.4.2
Load carrying	7 Load handling	7.9

https://truckmanualshub.com/

Title	Tab	Functiongroup
Load centre limitation	8 Control system	8.2.3
Load handling	7 Load handling	7
Longitudinal displacement of cab	9 Frame, body, cab and accessories	9.10.4
Lubrication	1 Engine	1.8
Lubrication	2 Transmission	2.6
Lubrication 1000 hours	C Preventive Maintenance	-
Lubrication 500 hours	C Preventive Maintenance	-
Machine card	A Foreword	-
Main beam attachment	7 Load handling	7.4.7
Maintenance manual's content	A Foreword	-
Mechanical transmission	2 Transmission	2.3
Monitoring	8 Control system	8.2
Noise	B Safety	-
Oil brake system	4 Brakes	4.8.14
Oils and lubricants, recommendation	F Technical data	-
OP	8 Control system	8.4.10
Ordering of documentation	A Foreword	-
Overloading system	8 Control system	8.2.1
Paint/coatings	9 Frame, body, cab and accessories	9.15
Parking brake system	4 Brakes	4.5
Parking brake unit	4 Brakes	4.5.4
Positioning	7 Load handling	7.5
Positioning beam	7 Load handling	7.5.8
Positioning chains	7 Load handling	7.5.7
Positioning motor	7 Load handling	7.5.6
Power-assisted system	5 Steering	5.2
Pressure reducer	7 Load handling	7.2.3
Preventive maintenance	C Preventive Maintenance	-
Preventive maintenance, general	C Preventive Maintenance	-
Preventive maintenance, work instructions	C Preventive Maintenance	-
Product alternatives and optional equipment	A Foreword	-
Propeller shaft	3 Driveline/Axle	3.2
Protection and emergency equipment	9 Frame, body, cab and accessories	9.2
Protruding	7 Load handling	7.3

https://truckmanualshub.com/

Title	Tab	Functiongroup
Pumps	10 Common hydraulics	10.4
Read maintenance manual	A Foreword	-
Read operator's manual	A Foreword	-
Reading instructions	A Foreword	-
Reading out error code	D Error codes	-
Redundant CAN-bus	11 Common electrics	11.6.2
References between different information types	A Foreword	-
Refrigerant	B Safety	-
Rims	6 Suspension	6.3.2
Rotating components and tools	B Safety	-
Rotation	7 Load handling	7.6
Rotation motor unit	7 Load handling	7.6.6
Safety	B Safety	-
Safety concerns everyone!	B Safety	-
Safety instructions	B Safety	-
Seat	9 Frame, body, cab and accessories	9.3
Security valves	10 Common hydraulics	10.2
Service brake system	4 Brakes	4.3
Service indicator	8 Control system	8.2.6
Service position	B Safety	-
Service schedule	C Preventive Maintenance	-
Servo filter	7 Load handling	7.2.2
Setup	8 Control system	8.5
Several mechanics on the same machine	B Safety	-
Side-shift	7 Load handling	7.4
Sideshift frame	7 Load handling	7.4.6
Solvents	B Safety	-
Specifications for data and volume	F Technical data	-
Specifications for lift capacity and dimensions	F Technical data	-
Speed limitation	8 Control system	8.2.5
Start battery	11 Common electrics	11.3.1
Start/stopp	1 Engine	1.11
Steering	5 Steering	5
Steering axle cradle	6 Suspension	6.2.1

https://truckmanualshub.com/

Title	Tab	Functiongroup
Storage	A Foreword	-
Support jacks	7 Load handling	7.10.1
Suspension	6 Suspension	6
Suspension mounting	6 Suspension	6.2
Synchronous lift	7 Load handling	7.10.4
Tanks and accumulators	10 Common hydraulics	10.3
Technical data	F Technical data	-
Temperature control, cleaning and hydraulic oil	10 Common hydraulics	10.6
Temperature control, filtration and brake fluid	4 Brakes	4.8
Tensioned springs	B Safety	-
Tightening torques, ORFS-couplings	F Technical data	-
Tightening torques, recommendations	F Technical data	-
Tilt	7 Load handling	7.7
Torque converter/clutch system	2 Transmission	2.2
TRANSM	8 Control system	8.4.7
Transmission	2 Transmission	2
Troubleshooting cable harness	0 Complete machine	-
Troubleshooting hydraulic hoses	0 Complete machine	-
Troubleshooting with error code, example	0 Complete machine	-
Troubleshooting without an error code, example	0 Complete machine	-
Troubleshooting, general work instructions	0 Complete machine	-
Twistlocks	7 Load handling	7.9.1
Tyre and rim system	6 Suspension	6.3
Tyre system	B Safety	-
Tyres	6 Suspension	6.3.1
Unit explanations	F Technical data	-
Warning information	A Foreword	-
Washing	C Preventive Maintenance	-
Weight indicator	7 Load handling	7.10.2
Vertically adjustable cab	9 Frame, body, cab and accessories	9.10.5
Wheel hub	6 Suspension	6.2.3
Wheel spindle	6 Suspension	6.2.2
Vibrations	B Safety	-
Wiper/washer system	9 Frame, body, cab and accessories	9.5

https://truckmanualshub.com/

Title	Tab	Functiongroup
Voltage feed	11 Common electrics	11.5.1
Working under machine	B Safety	-

https://truckmanualshub.com/