8 Control and monitoring system

Error codes machine

Code	Description	Limitation	Action	Connection and component	Diagnostic menu	Group
1	Communication error with Control unit attachment (D791-1).	Attachment functions not working.	Use diagnostic menu to find incorrect segment.	D791-1	CAN/ POWER, menu 2	11.6.2 Redundant CAN-bus
2	Communication error with Control unit attachment option (D791-2).	Levelling, tilt, overheight extension not working.	Use diagnostic menu to find incorrect segment.	D791-2	CAN/ POWER, menu 2	11.6.2 Redundant CAN-bus
3	Communication error with Control unit attachment left legs (D791-3).	Left side of bottom lift not working.	Use diagnostic menu to find incorrect segment.	D791-3	CAN/ POWER, menu 2	11.6.2 Redundant CAN-bus
4	Communication error with Control unit attachment right leg pair (D791-4).	Right side of bottom lift not working.	Use diagnostic menu to find incorrect segment.	D791-4	CAN/ POWER, menu 2	11.6.2 Redundant CAN-bus
5	Communication error with Control unit frame rear (D797-R).	Lighting rear, hydraulic oil cooling, overload system, extension not working.	Use diagnostic menu to find incorrect segment.	D797-R	CAN/ POWER, menu 2	11.6.2 Redundant CAN-bus
6	Communication error with Control unit frame front (D797-F).	Front lighting, lift, extension, brake light, brake cooling not working.	Use diagnostic menu to find incorrect segment.	D797-F	CAN/ POWER, menu 2	11.6.2 Redundant CAN-bus
7	Communication error with Control unit frame option (D797-O).	Sliding cab, support jacks, joystick steering mini-wheel, cab lift and cab tilt not working.	Use diagnostic menu to find incorrect segment.	D797-O	CAN/ POWER, menu 2	11.6.2 Redundant CAN-bus
8	Communication error with Control unit KID (D795).	Controls in steering wheel panel and display not working.	Use diagnostic menu to find incorrect segment.	D795	CAN/ POWER, menu 2	11.6.2 Redundant CAN-bus

Code	Description	Limitation	Action	Connection and component	Diagnostic menu	Group
9	Communication error with Control unit cab option (D790-3).	Mini-wheel or joystick steering not working	Use diagnostic menu to find incorrect segment.	D790-3	CAN/ POWER, menu 2	11.6.2 Redundant CAN-bus
11	Cable defect CAN-net segment 1.	No limitation.	Use diagnostic menu to find incorrect segment.	Varies depending on machine configuration.	CAN/ POWER, menu 1 and 21	11.6.2 Redundant CAN-bus
12	Cable defect CAN-net segment 2.	No limitation.	Use diagnostic menu to find incorrect segment.	Varies depending on machine configuration.	CAN/ POWER, menu 1 and 21	11.6.2 Redundant CAN-bus
13	Cable defect CAN-net segment 3.	No limitation.	Use diagnostic menu to find incorrect segment.	Varies depending on machine configuration.	CAN/ POWER, menu 1 and 21	11.6.2 Redundant CAN-bus
14	Cable defect CAN-net segment 4.	No limitation.	Use diagnostic menu to find incorrect segment.	Varies depending on machine configuration.	CAN/ POWER, menu 1 and 21	11.6.2 Redundant CAN-bus
15	Cable defect CAN-net segment 5.	No limitation.	Use diagnostic menu to find incorrect segment.	Varies depending on machine configuration.	CAN/ POWER, menu 1 and 21	11.6.2 Redundant CAN-bus
16	Cable defect CAN-net segment 6.	No limitation.	Use diagnostic menu to find incorrect segment.	Varies depending on machine configuration.	CAN/ POWER, menu 1 and 21	11.6.2 Redundant CAN-bus
17	Cable defect CAN-net segment 7.	No limitation.	Use diagnostic menu to find incorrect segment.	Varies depending on machine configuration.	CAN/ POWER, menu 1 and 21	11.6.2 Redundant CAN-bus
18	Cable defect CAN-net segment 8.	No limitation.	Use diagnostic menu to find incorrect segment.	Varies depending on machine configuration.	CAN/ POWER, menu 1 and 21	11.6.2 Redundant CAN-bus

Code	Description	Limitation	Action	Connection and component	Diagnostic menu	Group
20	Accelerator pedal (B690) not calibrated.	Poor sensitivity in accelerator pedal.	Calibrate the accelerator pedal, see tab *8 Control system,* group *8.5.2.3 Calibrate DRIVE-TRAIN*.	D790-1/ K6:11 – B690	CALIBRATION: DRIVE-TRAIN, menu 1 and 2	1. Engine
21	Communication error with Control unit transmission (D793).	Gear selection not working.	Use diagnostic menu to check communication. Check cable harness between Control unit cab (D790-1) and Control unit transmission (D793).	D790-1/ K13:1 – D793/M2 D790-1/ K13:2 – D793/L2	CAN/ POWER, menu 3	11.6.3 CAN-bus drivetrain
22	Communication error with Control unit engine (D794).	Engine does not react to commands from cab.	Use diagnostic menu to check communication. Check cable harness between Control unit cab (D790-1)and Control unit engine (D794).	Volvo: D790-1/ K13:1, K13:2 – D794/2, 1 Cummins: D790-1/ K13:1, K13:2 – D794/46, 37	CAN/ POWER, menu 3	11.6.3 CAN-bus drivetrain
23	The setup file cannot be read in Control unit cab (D790-1).	No controls working in cab.	Contact Kalmar Industries AB.	D790-1	-	11.5.3.1 Control unit cab
24	Electric power feed to cab fan less than 18 V.	Cab fan not working.	Check fuse F58-5/3.	D790-1/ K2:8 – 58-5/3:2	-	9.4.3 Cab fan
25	Interference during soft- ware download. Buffer for error codes from Control unit engine (D794), active error code when download- ing.	Error code is stored in Control unit engine (D794).	Turn the ignition off and on. Repeat software download.	D794	ENGINE, menu 8	11.5.3.10 Control unit engine
26						
27						
28						
29						
30						

Code	Description	Limitation	Action	Connec-tion and compo-nent	Diag-nostic menu	Group
31	Incorrect electric power feed toControl unit cab (D790-1). Voltage lower than 18 V or higher than 32 V.	Control in cab not working.	Check fuse F58-5/1. Check cable harness between the control unit and the component with diagnostic menu. Check the control unit.	D790-1/ K1:2, K1:3, K1:4 – F58-5/1:1, 1:2	CAN/ POWER, menu 6	11.5.1.3 Ig-nition volt-age (15)
32	Incorrect 5 V reference voltage to analogue controls in the cab. Volt-age lower than 4.9 V or higher than 5.1 V.	Analogue con-trols in the cab not working (mini-wheel/joy-stick, control le-ver and controls for air condition-ing).	Check cable harness between the control unit and the component with diagnostic menu. Check the component.	D790-1/ K4:5, K 5:11, K5:13, K7:2, K 9:7, K10:3	CAN/ POWER, menu 6	11.5.3.1 Control unit cab
33	No feedback signal for control breaker voltage from Relay control breaker voltage (K3009-1).	Control breaker cannot be disen-gaged. All hy-draulic functions are blocked.	Check fuse F58-3/8. Check cable harness between the control unit and the component with diagnostic menu.	D790-1/ K11:13 – K3009-1/ 87	CAN/ POWER, menu 5	11.5.1.4 Control breaker voltage (15E)
34	Incorrect signal from Switch parking brake (S107), indicates re-leased and applied at same time or not at all.	Parking brake cannot be re-leased.	Check cable harness between the control unit and the component with diagnostic menu. Check the switch.	D791-1/ K8:5 – S107/7 D791-1/ K8:13 – S107/1	HYD, menu 5	4.5 Park-ing brake
35 36 37 38 39 40	Interference during soft-ware download. Buffer for error codes from Control unit transmis-sion (D793), active error code when download-ing.	Error code is stored in Control unit transmis-sion (D793).	Turn the ignition off and on. Repeat software down-load.	D793	TRANSM, menu 13	11.5.3.9 Control unit transmis-sion
41	The transistor has been triggered due to short-circuiting in the circuit to Wiper motor, rear (M650-2).	Windshield wip-er rear not work-ing.	Check cable harness between the control unit and the component with diagnostic menu. Check the motor.	D790-1/ K2:4 – M650-2/53	CAB, menu 3	9.5.7 Wiper motor rear

Code	Description	Limitation	Action	Connection and component	Diagnostic menu	Group
42	The transistor has been triggered due to short-circuiting in the circuit to Rotating beacon (H428).	Rotating beacon not working.	Check cable harness between the control unit and the component with diagnostic menu. Check the component.	D790-1/ K2:5 – H428	LIGHTS, menu 9	9.6.8 Rotating beacon
43	The transistor has been triggered due to short-circuiting in the circuit to Work light cab left (E404-1L).	Work light cab left not working.	Check the light. Check cable harness between the control unit and the component with diagnostic menu.	D790-1/ K2:6 – E404-1L	LIGHTS, menu 1	9.6.9 Work lights cab
44	The transistor has been triggered due to short-circuiting in the circuit to Work light cab right (E404-1R).	Work light cab right not working.	Check the light. Check cable harness between the control unit and the component with diagnostic menu.	D790-1/ K2:7 – E404-1R	LIGHTS, menu 1	9.6.9 Work lights cab
45	The transistor has been triggered due to short-circuiting in the circuit to Wiper motor, front (M650-1).	Windshield wiper front not working.	Check cable harness between the control unit and the component with diagnostic menu. Check the motor.	D790-1/ K2:1 – M650-1/53	CAB, menu 2	9.5.1 Wiper front
46	The transistor has been triggered due to short-circuiting in the circuit to Fan motor (M657-1).	Cab fan not working.	Check cable harness between the control unit and the component with diagnostic menu. Check the motor.	D790-1/ K2:2 – M657-1/2	CLIMATE, menu 6	9.4.3 Cab fan
47	The transistor has been triggered due to short-circuiting in the circuit to Actuator recirculation (M612).	The recirculation damper for ventilation is not working.	Check cable harness between the control unit and the component with diagnostic menu. Check the motor.	D790-1/ K2:3 – M612/3	CLIMATE, menu 6	9.4.2 Fresh air and recirculation damper
48	The transistor has been triggered due to short-circuiting in the circuit to Water valve (Y673).	Heat in cab cannot be adjusted.	Check cable harness between the control unit and the component with diagnostic menu. Check the motor.	D790-1/ K4:1 – Y673/5	CLIMATE, menu 7	9.4.5 Water valve
49	The transistor has been triggered due to short-circuiting in the circuit to Water valve (Y673).	Heat in cab cannot be adjusted.	Check cable harness between the control unit and the component with diagnostic menu. Check the motor.	D790-1/ K4:2 – Y673/6	CLIMATE, menu 7	9.4.5 Water valve

Code	Description	Limitation	Action	Connection and component	Diagnostic menu	Group
50	The transistor has been triggered due to short-circuiting in the circuit to Damper motor (Y672)	Air distribution in cab cannot be adjusted.	Check cable harness between the control unit and the component with diagnostic menu. Check the motor.	D790-1/ K4:3 – Y672/5	CLIMATE, menu 8	9.4.14 Air distributor
51	The transistor has been triggered due to short-circuiting in the circuit to Damper motor (Y672).	Air distribution in cab cannot be adjusted.	Check cable harness between the control unit and the component with diagnostic menu. Check the motor.	D790-1/ K4:4 – Y672/6	CLIMATE, menu 8	9.4.14 Air distributor
53	The transistor has been triggered due to short-circuiting in the circuit to Washer motor roof and rear (M651-2).	Windshield washer rear and roof not working.	Check cable harness between the control unit and the component with diagnostic menu. Check the motor.	D790-1/ K5:4 – M651-2	CAB, menu 1	9.5.4 Washer motor and reservoir
54	The transistor has been triggered due to short-circuiting or open circuit in the circuit to Switch flashing hazard lights (S109).	Flashing hazard lights not working.	Check cable harness between the control unit and the component with diagnostic menu. Check the switch.	D790-1/ K5:5 – S109/	LIGHTS, menu 7	9.6.7 Flashing hazard lights
55	The transistor has been triggered due to short-circuiting in the circuit to background lighting in switches and instruments.	Reduced or no background lighting in switches and instruments	Check bulbs for background lighting, change if needed. Check cable harness to background lighting.	D7901/ K6:1, K 8:15, K9:2, K 10:5, all inputs type A Digital in	LIGHTS, menu 13	9.1 Controls and instruments
56	The transistor has been triggered due to short-circuiting or open circuit in the circuit to LED-indication for tilt lock in control lever (S815).	Indication for tilt lock in control lever is not illuminated.	Check cable harness between the control unit and the component with diagnostic menu. Check the switch.	D790-1/ K7:8 – S815/5	-	7.1.1 Control lever
57	The transistor has been triggered due to short-circuiting or open circuit in the circuit to LED-indication for levelling lock in control lever (S815).	Indication for levelling lock in control lever is not illuminated.	Check cable harness between the control unit and the component with diagnostic menu. Check the switch.	D790-1/ K7:9 – S815/7	-	7.1.1 Control lever

Code	Description	Limitation	Action	Connection and component	Diagnostic menu	Group
60	The transistor has been triggered due to short-circuiting or open circuit in the circuit to Relay seat heater (K383).	Seat heater not working.	Check cable harness between the control unit and the component with diagnostic menu. Check the component.	D790-1/ K10:7 – K383/86	CAB, menu 8	9.3.3 Heating coils
61	The transistor has been triggered due to short-circuiting or open circuit in the circuit to Relay extra work light boom (K304).	Extra work light boom not working.	Check cable harness between the control unit and the component with diagnostic menu. Check the component.	D790-1/ K10:8 – K304/86	LIGHTS, menu 3	9.6.10 Work light boom
62	The transistor has been triggered due to short-circuiting or open circuit in the circuit to simulated D+ feed to hour meter (P708) and Relay compressor air-suspended seat (K358).	Hour meter and air-suspended seat not working.	Check cable harness between the control unit and the component with diagnostic menu. Check the component.	D790-1/ K10:9 – P708, K358/86	CAN/ POWER, menu 7	9.3.5 Air suspension
63	The transistor has been triggered due to short-circuiting or open circuit in the circuit to Relay ignition voltage (K315-1).	No ignition voltage to the machine's Control units.	Check cable harness between the control unit and the component with diagnostic menu. Check the component.	D790-1/ K10:10 – K315-1/86	CAN/ POWER, menu 4	11.5.1.3 Ignition voltage (15)
64	The transistor has been triggered due to short-circuiting or open circuit in the circuit to Relay control breaker voltage (K3009-1).	No control breaker voltage to the machine's Control units.	Check cable harness between the control unit and the component with diagnostic menu. Check the component.	D790-1/ K10:11 – K3009-1/ 86	CAN/ POWER, menu 5	11.5.1.4 Control breaker voltage
65	The transistor has been triggered due to short-circuiting or open circuit in the circuit to Relay control breaker voltage (K3009-2).	No control breaker voltage to the machine's Control units.	Check cable harness between the control unit and the component with diagnostic menu. Check the component.	D790-1/ K10:11 – K3009-1/ 86	CAN/ POWER, menu 5	11.5.1.4 Control breaker voltage
66	The transistor has been triggered due to short-circuiting in the circuit to Washer motor windshield (M651-1).	Windshield washer not working.	Check cable harness between the control unit and the component with diagnostic menu. Check the component.	D790-1/ K10:13 – M651-1	CAB, menu 1	9.5.4 Washer motor and reservoir

Code	Description	Limitation	Action	Connection and component	Diagnostic menu	Group
67	The transistor has been triggered due to short-circuiting or open circuit in the circuit to Wiper motor, roof (M650-3).	Wiper roof not working.	Check cable harness between the control unit and the component with diagnostic menu. Check the motor.	D790-1/ K10:14 – M650-3/53	CAB, menu 4	9.5.6 Wiper motor roof
68	The transistor has been triggered due to short-circuiting or open circuit in the circuit to Circulation pump pause heater (M667).	Pause heater not working.	Check cable harness between the control unit and the component with diagnostic menu. Check the motor.	D790-1/ K10:15 – M667	-	9.4 Heating, ventilation and air conditioning
69	The transistor has been triggered due to short-circuiting or open circuit in the circuit to Relay ignition voltage drivetrain (K315-2).	No voltage feed to engine and transmission.	Check cable harness between the control unit and the component with diagnostic menu. Check the component.	D790-1/ K10:16 – K315-2/86	CAN/ POWER, menu 4	11.5.1.3 Ignition voltage (15)
71	The transistor has been triggered due to short-circuiting in the circuit to Interior lighting cab (E434-1).	Interior lighting in cab not working.	Check the light. Check cable harness between the control unit and the component with diagnostic menu.	D790-1/ K11:6 – E434-1	LIGHTS, menu 12	9.6.12 Interior lighting cab
74	The transistor has been triggered due to short-circuiting in the circuit to Horn (H850) or Relay compressed air horn (K3016)	Horn / compressed air horn not working.	Check cable harness between the control unit and the component with diagnostic menu. Check the component.	D790-1/ K11:11 – H850/1, K3016/86	CAB, menu 5	9.7.1 Horn
75	Relay ignition voltage (K315-1) has jammed in position on.	Control unit cab (D790-1) is still supplied with voltage and thus active.	Check cable harness between the control unit and the component with diagnostic menu. Check the component.	-	CAN/ POWER, menu 4	11.5.1.3 Ignition voltage
80	No signal from Pressure switch air conditioning (S246), despite the AC compressor being activated.	Air conditioning not working.	Check drive belt for air conditioning compressor. Check that compressor for air conditioning is activated. Check cable harness between the control unit and the component with diagnostic menu.	D797-R/ K1:37 – S246	CLIMATE, menu 3	9.4.10 Pressure monitor

Code	Description	Limitation	Action	Connection and component	Diagnostic menu	Group
81	Incorrect signal from-Damper motor (Y672). Signal voltage lower than 0.2 V or higher than 4.8 V.	Air distribution cannot be changed.	Check cable harness between the control unit and the component with diagnostic menu. Check the motor.	D790-1/ K4:7 – Y672/9	CLIMATE, menu 4	9.4.6 Fresh air and recirculation damper
85	Incorrect signal from accelerator pedal (R690). Signal voltage lower than 0.2 V or higher than 4.8 V.	Engine rpm limited to idle.	Check cable harness between the control unit and the component with diagnostic menu. Check the component.	D790-1/ K6:11 – R690/2	ENGINE, menu 1	1 Engine
87	Incorrect signal from Control lever (S815-P1) for lift and lower. Signal voltage lower than 0.2 V or higher than 4.8 V.	Lift and lower not working.	Check cable harness between the control unit and the component with diagnostic menu. Check the switch.	D790-1/ K7:3 – S815-P1/8	BOOM, menu 1	7.1.1 Control lever
88	Incorrect signal from Control lever (S815-P2) for extension. Signal voltage lower than 0.2 V or higher than 4.8 V.	Extension not working.	Check cable harness between the control unit and the component with diagnostic menu. Check the switch.	D790-1/ K7:4 – S815-P2/4	BOOM, menu 1	7.1.1 Control lever
89	Incorrect signal from Control lever (S815-P3) for rotation. Signal voltage lower than 0.2 V or higher than 4.8 V.	Rotation not working.	Check cable harness between the control unit and the component with diagnostic menu. Check the switch.	D790-1/ K7:5 – S815-P3/ 11	ATTACH, menu 1	7.1.1 Control lever
90	Incorrect signal from Control lever (S815-P4) for tilt. Signal voltage lower than 0.2 V or higher than 4.8 V.	Controllable tilt not working.	Check cable harness between the control unit and the component with diagnostic menu. Check the switch.	D790-1/ K7:6 – S815-P4/1	ATTACH, menu 1	7.1.1 Control lever
92	Incorrect signal from Joystick (R825-1) or Mini-wheel (R825-1). Signal voltage lower than 0.2 V or higher than 4.8 V.	Joystick steering or mini-wheel not working.	Check cable harness between the control unit and the component with diagnostic menu. Check the switch.	D790-1/ K9:8 – R825-1/P2	STEERING, menu 1	5.1.2 Mini-wheel 5.1.3 Joystick
93	Incorrect signal from Mini-wheel (R825-2). Signal voltage lower than 0.2 V or higher than 4.8 V.	Joystick steering or mini-wheel not working.	Check cable harness between the control unit and the component with diagnostic menu. Check the switch.	D790-1/ K9:9 – R825-2/H2	STEERING, menu 1	5.1.2 Mini-wheel

Code	Description	Limitation	Action	Connection and component	Diagnostic menu	Group
94	Incorrect signal from Water valve cab heat (Y673). Signal voltage lower than 0.2 V or higher than 4.8 V.	Cab heat cannot be adjusted.	Check cable harness between the control unit and the component with diagnostic menu. Check the motor.	D790-1/ K10:4 – Y673/9	CLIMATE, menu 4	9.4.5 Water valve
96	Incorrect signal from Sensor cab temperature (B775-1). The sensor indicates temperature below -43 °C or above 105 °C.	Air conditioning not working.	Check cable harness between the control unit and the component with diagnostic menu. Check the sensor.	D790-1/ K4:8 – B775-1/2	CLIMATE, menu 1	9.4.17 Sensor cab temperature
97	Incorrect signal from Sensor outdoor temperature (B774). Temperature signal above 105 °C.	Air conditioning not working.	Check cable harness between the control unit and the component with diagnostic menu. Check the sensor.	D790-1/ K4:9 – B774/2	CLIMATE, menu 2	9.4.18 Sensor outdoor temperature
98	Incorrect signal from Sensor temperature outlet fan (B775-2). The sensor indicates temperature below -43 °C or above 105 °C.	Air conditioning not working.	Check cable harness between the control unit and the component with diagnostic menu. Check the sensor.	D790-1/ K4:10 – B775-2/2	CLIMATE, menu 2	9.4.16 Sensor temperature outlet fan
99	Incorrect signal from Sensor temperature refrigerant (B775-3). The sensor indicates temperature below -43 °C or above 105 °C.	Air conditioning not working.	Check cable harness between the control unit and the component with diagnostic menu. Check the sensor.	D790-1/ K4:11 – B775-3/2	CLIMATE, menu 2	9.4.12 Sensor temperature refrigerant
101	Redundant voltage feed left to Control unit frame front (D797-F) does not arrive.	-	Check cable harness between the control unit and the component with diagnostic menu. Check the control unit.	D797-F/ K2:7	CAN/ POWER, menu 8	11.5.1.2 Redundant voltage feed of Control units
102	Redundant voltage feed right to Control unit frame front (D797-F) does not arrive.	-	Check cable harness between the control unit and the component with diagnostic menu. Check the control unit.	D797-F/ K2:8	CAN/ POWER, menu 8	11.5.1.2 Redundant voltage feed of Control units

Code	Description	Limitation	Action	Connection and component	Diagnostic menu	Group
103	Incorrect electric power feed to Control unit frame front (D797-F). Voltage lower than 18 V or higher than 32 V.	No electric power feed to components.	Check fuse F58-2/1, change if needed. Check cable harness between the control unit and the component with diagnostic menu.	D797-F/ K2:1, K2:9, K2:10 – F58-2/1:1, 1:2	CAN/ POWER, menu 8	11.5.1.3 Ignition voltage (15)
104	Incorrect control breaker voltage to Control unit frame front (D797-F).	Functions supplied with control breaker voltage have no feed. All hydraulic functions are blocked.	Check fuse F58-3/2, change if needed. Check cable harness between the control unit and the component with diagnostic menu.	D797-F/ K2:11 – F58-3/2:1	CAN/ POWER, menu 8	11.5.1.4 Control breaker voltage
105	Incorrect 5 V reference voltage to pressure sensor. Voltage lower than 4.9 V or higher than 5.1 V.	Regeneration lift, weight indicator and overload system not working.	Check cable harness between the control unit and the component with diagnostic menu. Check the sensor.	D797-F/ K1:8 – B768-R1/1, B768-R2/1, B768-L1/1, B768-L2/1	CAN/ POWER, menu 9	8.2.1.7 Sensor hydraulic pressure lift cylinder
106	The transistor has been triggered due to short-circuiting in the circuit to Cooling fan, brake oil (M674).	Cooling fan brake oil not working.	Check cable harness between the control unit and the component with diagnostic menu. Check the motor.	D797-F/ K1:14 – M674/1	HYD, menu 2	4.8.8 Cooling fan
107	The transistor has been triggered due to short-circuiting or open circuit in the circuit to High beam light left (E402L).	Left high beam not working.	Check the light. Check the bulb holder. Check cable harness between the control unit and the component with diagnostic menu.	D797-F/ K1:1 – E402L/1	LIGHTS, menu 6	9.6.1 Headlights
108	The transistor has been triggered due to short-circuiting or open circuit in the circuit to High beam light right (E402R).	Right high beam not working.	Check the light. Check the bulb holder. Check cable harness between the control unit and the component with diagnostic menu.	D797-F/ K1:15 – E402R/1	LIGHTS, menu 6	9.6.1 Headlights
110	The transistor has been triggered due to short-circuiting or open circuit in the circuit toLow beam light (E400L/ E400R).	Low beams not working.	Check the light. Check the bulb holder. Check cable harness between the control unit and the component with diagnostic menu.	D797-F/ K1:42 – E400L/1, E400R/1	LIGHTS, menu 6	9.6.1 Headlights

Code	Description	Limitation	Action	Connection and component	Diagnostic menu	Group
111	The transistor has been triggered due to short-circuiting in the circuit to Solenoid valve boom up (Y6005).	Lift not working.	Check cable harness between the control unit and the component with diagnostic menu. Check the solenoid valve.	D797-F/ K1:2 – Y6005/1	BOOM, menu 4	7.2.5 Control valve lift, lower and extension
112	The transistor has been triggered due to short-circuiting in the circuit to Solenoid valve boom down (Y6004).	Lower not working.	Check cable harness between the control unit and the component with diagnostic menu. Check the solenoid valve.	D797-F/ K1:3 – Y6004/1	BOOM, menu 5	7.2.5 Control valve lift, lower and extension
113	The transistor has been triggered due to short-circuiting in the circuit to Solenoid valve boom out (Y6006).	Extension out not working.	Check cable harness between the control unit and the component with diagnostic menu. Check the solenoid valve.	D797-F/ K1:4 – Y6006/1	BOOM, menu 7	7.3.5 Control valve lift, lower and extension
114	The transistor has been triggered due to short-circuiting in the circuit to Solenoid valve boom in (Y6007).	Extension in not working.	Check cable harness between the control unit and the component with diagnostic menu. Check the solenoid valve.	D797-F/ K1:5 – Y6007/1	BOOM, menu 6	7.3.5 Control valve lift, lower and extension
115	The transistor has been triggered due to short-circuiting or open circuit in the circuit to Solenoid valve blocking lift left (Y6002).	Lift and lower not working.	Check cable harness between the control unit and the component with diagnostic menu. Check the solenoid valve.	D797-F/ K1:30 – Y6002/1	BOOM, menu 2	7.2.7 Valve block lift cylinder
116	The transistor has been triggered due to short-circuiting or open circuit in the circuit to Solenoid valve blocking lift right (Y6001).	Lift and lower not working.	Check cable harness between the control unit and the component with diagnostic menu. Check the solenoid valve.	D797-F/ K1:31 – Y6001/1	BOOM, menu 2	7.2.7 Valve block lift cylinder
117	The transistor has been triggered due to short-circuiting or open circuit in the circuit to Solenoid valve regeneration lift right (Y6051).	Regenerating lift not working.	Check cable harness between the control unit and the component with diagnostic menu. Check the solenoid valve.	D797-F/ K1:32 – Y6051/1	BOOM, menu 3	7.2.7 Valve block lift cylinder

Code	Description	Limitation	Action	Connec-tion and compo-nent	Diag-nostic menu	Group
118	The transistor has been triggered due to short-circuiting or open circuit in the circuit to Solenoid valve regeneration lift left (Y6052).	Regenerating lift not working.	Check cable harness between the control unit and the component with diagnostic menu. Check the solenoid valve.	D797-F/ K1:33 – Y6052/1	BOOM, menu 3	7.2.7 Valve block lift cylinder
119	The transistor has been triggered due to short-circuiting or open circuit in the circuit to Solenoid valve parking brake (Y642).	Parking brake cannot be re-leased.	Check cable harness between the control unit and the component with diagnostic menu. Check the solenoid valve.	D797-F/ K1:7 – Y642/1	HYD, menu 5	4.5.3 Sole-noid valve parking brake
120	The transistor has been triggered due to short-circuiting or open circuit in the circuit to Light bulb direction indicator left front (H422).	Direction indica-tor left front not working.	Check the light. Check the bulb holder. Check cable harness between the control unit and the component with diagnostic menu.	D797-F/ K1:9 – H422/1	LIGHTS, menu 8	9.6.6 Direc-tion indica-tors
121	The transistor has been triggered due to short-circuiting or open circuit in the circuit to Light bulb direction indicator right front (H423).	Direction indica-tor right front not working.	Check the light. Check the bulb holder. Check cable harness between the control unit and the component with diagnostic menu.	D797-F/ K1:10 – H423/1	LIGHTS, menu 8	9.6.6 Direc-tion indica-tors
122	The transistor has been triggered due to short-circuiting or open circuit in the circuit to Light bulb running light left front H416-1).	Running light left front not work-ing.	Check the light. Check the bulb holder. Check cable harness between the control unit and the component with diagnostic menu.	D797-F/ K1:25 – H416-1/1	LIGHTS, menu 5	9.6.2 Run-ning lights
123	The transistor has been triggered due to short-circuiting or open circuit in the circuit to Light bulb running light right front (H417-1).	Running light right front not working.	Check the light. Check the bulb holder. Check cable harness between the control unit and the component with diagnostic menu.	D797-F/ K1:29 – H417-1/1	LIGHTS, menu 5	9.6.2 Run-ning lights

Code	Description	Limitation	Action	Connection and component	Diagnostic menu	Group
124	Incorrect 24 V reference voltage to Break-contact parking brake (S200), Break-contact low brake pressure (S204), Make-contact brake lights (S216) and Break-contact declutch (S220-2).	Indicator light parking brake and warning for low brake pressure do not go off. Brake lights and declutch not working. Gear cannot be engaged since the signal for released parking brake is not working.	Check cable harness between the control unit and the component with diagnostic menu. Check the sensor.	D797-F/ K1:39 – S200/1, S204/1, S216/1, S220/1	CAN/ POWER, menu 9	4.5.5 Break-contact parking brake 4.3.8 Make-contact brake lights 4.3.7 Break-contact brake pressure
133	Incorrect signal from Sensor hydraulic pressure lift cylinder left (B768-L1). Signal voltage lower than 0.2 V or higher than 4.8 V.	Overload system not working. All lift functions operate with reduced speed. Error code 150 is activated.	Check cable harness between the control unit and the component with diagnostic menu. Check the sensor.	D797-F/ K1:21 – B768-L1/3	OP, menu 3 [V] HYD, menu 6 [bar]	7.2.9 Sensor hydraulic pressure lift cylinder
134	Incorrect signal from Sensor hydraulic pressure lift cylinder left (B768-L2). Signal voltage lower than 0.2 V or higher than 4.8 V.	Overload system not working. All lift functions operate with reduced speed. Error code 150 is activated.	Check cable harness between the control unit and the component with diagnostic menu. Check the sensor.	D797-F/ K1:22 – B768-L2/3	OP, menu 3 [V] HYD, menu 6 [bar]	7.2.9 Sensor hydraulic pressure lift cylinder
135	Incorrect signal from Sensor hydraulic pressure lift cylinder right (B768-R1). Signal voltage lower than 0.2 V or higher than 4.8 V.	Overload system not working. All lift functions operate with reduced speed. Error code 150 is activated.	Check cable harness between the control unit and the component with diagnostic menu. Check the sensor.	D797-F/ K1:23 – B768-R1/3	OP, menu 3 [V] HYD, menu 6 [bar]	7.2.9 Sensor hydraulic pressure lift cylinder
136	Incorrect signal from Sensor hydraulic pressure lift cylinder right (B768-R2). Signal voltage lower than 0.2 V or higher than 4.8 V.	Overload system not working. All lift functions operate with reduced speed. Error code 150 is activated.	Check cable harness between the control unit and the component with diagnostic menu. Check the sensor.	D797-F/ K1:24 – B768-R2/3	OP, menu 3 [V] HYD, menu 6 [bar]	7.2.9 Sensor hydraulic pressure lift cylinder

Code	Description	Limitation	Action	Connection and component	Diagnostic menu	Group
137	Incorrect signal fromSolenoid valve boom up (Y6005). The return current does not match the control current.	Lift not working.	Check cable harness between the control unit and the component with diagnostic menu. Check the solenoid valve.	D797-F/ K1:16 – Y6005/2	BOOM, menu 4	7.2.5 Control valve lift, lower and extension
138	Incorrect signal fromSolenoid valve boom down (Y6004). The return current does not match the control current.	Lower not working.	Check cable harness between the control unit and the component with diagnostic menu. Check the solenoid valve.	D797-F/ K1:17 – Y6004/2	BOOM, menu 5	7.2.5 Control valve lift, lower and extension
139	Incorrect signal from Solenoid valve boom out (Y6006). The return current does not match the control current.	Extension out not working.	Check cable harness between the control unit and the component with diagnostic menu. Check the solenoid valve.	D797-F/ K1:18 – Y6006/2	BOOM, menu 7	7.3.5 Control valve lift, lower and extension
140	Incorrect signal from Solenoid valve boom in (Y6007). The return current does not match the control current.	Extension in not working.	Check cable harness between the control unit and the component with diagnostic menu. Check the solenoid valve.	D797-F/ K1:19 – Y6007/2	BOOM, menu 6	7.3.5 Control valve lift, lower and extension
145	Incorrect signal from Sensor boom angle (B771). Logic error, signal does not change when lift or lower is activated.	Overload system not working. All lift functions operate with reduced speed. Error code 150 is activated.	Check sensor arm's attachment. Check the sensor. Check cable harness between the control unit and the component with diagnostic menu.	-	OP, menu 4	8.2.1.5 Sensor boom angle
146	Incorrect signal from Sensor boom length (B777). Logic error, signal does not change when extension is activated.	Overload system not working. All lift functions operate with reduced speed. Error code 150 is activated.	Check the line to the sensor. Check the sensor. Check cable harness between the control unit and the component with diagnostic menu.	-	OP, menu 4	8.2.1.6 Sensor boom length

Code	Description	Limitation	Action	Connection and component	Diagnostic menu	Group
147	High brake oil temperature.	Reduced braking capacity.	Check that cooling fan is working. Check that cooler isn't clogged. Check the sensor.	D797-F/ K2:13 – B762/1	HYD, menu 2	4.8 Temperature control, cleaning and brake oil
148	Incorrect signal from Sensor brake oil temperature (B762). Signal voltage lower than 0.2 V or higher than 4.8 V.	-	Check the sensor. Check cable harness between the control unit and the component with diagnostic menu.	D797-F/ K2:13 – B762/1	HYD, menu 2	4.8.10 Sensor brake oil temperature
149	Incorrect load curve or load curve missing.	Lift, lower and extension not working.	Contact Kalmar Industries AB.	-	-	7.2 Lift and lower. 7.3 Extension
150	Defective overload protection. This error code cannot be removed with Reset.	Overload system not working. All lift functions operate with reduced speed.	Check if there are error codes for sensors in the overload system.	-	OP, menu 1 - 5	8.2.1 Overload system
151	Redundant voltage feed left to Control unit frame rear (D797-R) does not arrive.	-	Check cable harness between the control unit and the component with diagnostic menu. Check the control unit.	D797-R/ K2:7	CAN/ POWER, menu 10	11.5.1.2 Redundant voltage feed of Control units
152	Redundant voltage feed right to Control unit frame rear (D797-R) does not arrive.	-	Check cable harness between the control unit and the component with diagnostic menu. Check the control unit.	D797-R/ K2:8	CAN/ POWER, menu 10	11.5.1.2 Redundant voltage feed of Control units
153	Incorrect electric power feed to Control unit frame rear (D797-R). Voltage lower than 18 V or higher than 32 V.	-	Check fuse F58-2/3, change if needed. Check cable harness between the control unit and the component with diagnostic menu.	D797-R/ K2:1, K2:9, K2:10 – F58-2/3:1	CAN/ POWER, menu 10	11.5.1.3 Ignition voltage (15)
154	Incorrect electric power feed to Control unit frame rear (D797-R).	-	Check fuse F58-2/3, change if needed. Check cable harness between the control unit and the component with diagnostic menu.	D797-R/ K2:11 – F58-2/3:2	CAN/ POWER, menu 10	11.5.1.4 Control breaker voltage

Code	Description	Limitation	Action	Connection and component	Diagnostic menu	Group
155	Incorrect 5 V reference voltage to analogue sensor. Voltage lower than 4.9 V or higher than 5.1 V.	Overload system and weight indicator not working.	Check cable harness between the control unit and the component with diagnostic menu. Check the sensor.	D797-R/ K1:8 – B771/1, B777/1	CAN/ POWER, menu 11	8.2.1.5 Sensor boom angle 8.2.1.6 Sensor boom length (analogue sensor)
156	The transistor has been triggered due to short-circuiting in the circuit to Cooling fan hydraulic oil (M668).	Cooling fan hydraulic oil not working.	Check cable harness between the control unit and the component with diagnostic menu. Check the motor.	D797-R/ K1:14 – M668/1	HYD, menu 1	10.6.3 Cooling fan
157	The transistor has been triggered due to short-circuiting or open circuit in the circuit to Light bulb work light boom left (E404-3L).	Work light boom left not working.	Check the light. Check the bulb holder. Check cable harness between the control unit and the component with diagnostic menu.	D797-R/ K1:1 – E404-3L	LIGHTS, menu 3	9.6.10 Work light boom
158	The transistor has been triggered due to short-circuiting or open circuit in the circuit to Light bulb work light boom right (E404-3R).	Work light boom right not working.	Check the light. Check the bulb holder. Check cable harness between the control unit and the component with diagnostic menu.	D797-R/ K1:15 – E404-3R	LIGHTS, menu 3	9.6.10 Work light boom
159	The transistor has been triggered due to short-circuiting or open circuit in the circuit to Light bulb back-up light left (E405L).	Back-up light left not working.	Check the light. Check the bulb holder. Check cable harness between the control unit and the component with diagnostic menu.	D797-R/ K1:28 – E405L	LIGHTS, menu 11	9.6.5 Back-up light
160	The transistor has been triggered due to short-circuiting or open circuit in the circuit to Light bulb back-up light right (E405R).	Back-up light right not working.	Check the light. Check the bulb holder. Check cable harness between the control unit and the component with diagnostic menu.	D797-R/ K1:42 – E405R	LIGHTS, menu 11	9.6.5 Back-up light

Code	Description	Limitation	Action	Connec-tion and compo-nent	Diag-nostic menu	Group
161	The transistor has been triggered due to short-circuiting or open circuit in the circuit to Sensor steering axle load (B7221L and b7221R).	Overload sys-tem indicates overload.	Check cable harness between the control unit and the component with diagnostic menu. Check the sensor.	D797-R/ K1:2 – B7221L/A, B7221R/A	OP, menu 1	8.2.1.4 Sensor steering axle load
162	The transistor has been triggered due to short-circuiting or open circuit in the circuit to Sensor position sensor boom length	Damping in/out/ 1.5m not work-ing.	Check cable harness between the control unit and the component with diagnostic menu. Check the sensor.	D797-R/ K1:2 – B777/A, B769-3/A, B769-4/A	OP, menu 1 BOOM, menu 8	8.2.1.6 Sensor boom length de-scription (position sensor)
163	The transistor has been triggered due to short-circuiting or open circuit in the circuit to Solenoid valve regeneration ex-tension (Y6046).	Regeneration extension not working.	Check cable harness between the control unit and the component with diagnostic menu. Check the solenoid valve.	D797-R/ K1:4 – Y6046/1	BOOM, menu 3	7.3.7 Valve block ex-tension cyl-inder
164	The transistor has been triggered due to short-circuiting or open circuit in the circuit to Solenoid valve blocking exten-sion (Y6050).	Extension not working.	Check cable harness between the control unit and the component with diagnostic menu. Check the solenoid valve.	D797-R/ K1:5 – Y6050/1	BOOM, menu 2	7.3.7 Valve block ex-tension cyl-inder
165	The transistor has been triggered due to short-circuiting or open circuit in the circuit to Back-up warning (H965).	Back-up alarm not working.	Check cable harness between the control unit and the component with diagnostic menu. Check the component.	D797-R/ K1:30 – H965/1	LIGHTS, menu 11	9.7.5 Back-up alarm
166	The transistor has been triggered due to short-circuiting or open circuit in the circuit to Solenoid valve top hydraulics (Y6003).	Attachment functions not working.	Check cable harness between the control unit and the component with diagnostic menu. Check the solenoid valve.	D797-R/ K1:31 – Y6003/1	HYD, menu 6	7.4.2 Valve block top lift hydraulics
167	The transistor has been triggered due to short-circuiting or open circuit in the circuit to Light bulb brake light left (H411L).	Brake light left not working.	Check the light. Check the bulb holder. Check cable harness between the control unit and the component with diagnostic menu.	D797-R/ K1:32 – H411L/1	LIGHTS, menu 11	9.6.4 Brake lights

Code	Description	Limitation	Action	Connection and component	Diagnostic menu	Group
168	The transistor has been triggered due to short-circuiting or open circuit in the circuit to Light bulb brake light right (H411R).	Brake light right not working.	Check the light. Check the bulb holder. Check cable harness between the control unit and the component with diagnostic menu.	D797-R/ K1:33 – H411R/1	LIGHTS, menu 11	9.6.4 Brake lights
169	The transistor has been triggered due to short-circuiting or open circuit in the circuit to Light bulb running light left (H416-2).	Running light left rear not working.	Check the light. Check the bulb holder. Check cable harness between the control unit and the component with diagnostic menu.	D797-R/ K1:7 – H416-2/1	LIGHTS, menu 5	9.6.2 Running lights
170	The transistor has been triggered due to short-circuiting or open circuit in the circuit to Light bulb running light right (H417-2).	Running light right rear not working.	Check the light. Check the bulb holder. Check cable harness between the control unit and the component with diagnostic menu.	D797-R/ K1:9 – H417-2/1	LIGHTS, menu 5	9.6.2 Running lights
171	The transistor has been triggered due to short-circuiting or open circuit in the circuit to Light bulb rear light left (H421L).	Rear light left not working.	Check the light. Check the bulb holder. Check the bulb holder.	D797-R/ K1:10 – H412L/1	LIGHTS, menu 5	9.6.3 Rear lights
172	The transistor has been triggered due to short-circuiting or open circuit in the circuit to Light bulb rear light right (H421R).	Rear light left not working.	Check the light. Check the bulb holder. Check cable harness between the control unit and the component with diagnostic menu.	D797-R/ K1:25 – H412R/1	LIGHTS, menu 5	9.6.3 Rear lights
173	The transistor has been triggered due to short-circuiting or open circuit in the circuit to Light bulb direction indicator left rear (H426).	Direction indicator left rear not working.	Check the light. Check the bulb holder. Check cable harness between the control unit and the component with diagnostic menu.	D797-R/ K1:29 – H426/1	LIGHTS, menu 8	9.6.6 Direction indicators

Code	Description	Limitation	Action	Connection and component	Diagnostic menu	Group
174	The transistor has been triggered due to short-circuiting or open circuit in the circuit to Light bulb direction indicator right rear (H426).	Direction indicator right rear not working.	Check the light. Check the bulb holder. Check cable harness between the control unit and the component with diagnostic menu.	D797-R/ K1:39 – H427/1	LIGHTS, menu 8	9.6.6 Direction indicators
175	Different signal from Sensor steering axle load (B7221L and B722R) for more than 10 seconds.	Overload system indicates overload.	Check sensor's adjustment. Check the sensor.	D797-R/ K1:11 – B7221L/C D797-R/ K1:12 – B7221R/C	OP, menu 1	8.2.1.4 Sensor steering axle load
178	The transistor has been triggered due to short-circuiting or open circuit in the circuit toSolenoid valve pump unloading (Y6062).	Unloading of hydraulic oil pumps at boom in not working.	Check cable harness between the control unit and the component with diagnostic menu. Check the solenoid valve.	D797-R/ K1:40 – Y6062/1	BOOM, menu 2	7.3.8 Valve block pump unloading
183	Incorrect signal from Sensor boom angle (771). Signal voltage lower than 0.2 V or higher than 4.8 V.	Overload system not working. All lift functions operate with reduced speed. Error code 150 is activated.	Check cable harness between the control unit and the component with diagnostic menu. Check the sensor.	D797-R/ K1:21 – B771/3	OP, menu 4	8.2.1.5 Sensor boom angle
184	Incorrect signal from Sensor length (777). Signal voltage lower than 0.2 V or higher than 4.8 V.	Overload system not working. All lift functions operate with reduced speed. Error code 150 is activated.	Check cable harness between the control unit and the component with diagnostic menu. Check the sensor.	D797-R/ K1:22 – B777/3	OP, menu 4	8.2.1.6 Sensor boom length
191	The transistor has been triggered due to short-circuiting or open circuit in the circuit toMagnetic clutch on AC compressor (M677). **NOTE!** Error code 191 and 192 here go to the same user.	Air conditioning not working.	Check cable harness between the controlunit and the component with diganostic menu. Check the component.	D797-R/ K1:11 – M645/1	CLIMATE, menu 6	9.4.8 Compressor
192				D797-R/ K1:26 – M645/1		

Code	Description	Limitation	Action	Connection and component	Diagnostic menu	Group
193	Only engine alternative Cummins QSM11: The transistor has been triggered due to short-circuiting or open circuit in the circuit to Relay starter motor (K360).	Starter motor not working.	Check cable harness between the control unit and the component with diagnostic menu. Check the component.	D797-R/ K1:36 – K360/86	ENGINE, menu 5	1 Engine
197	High temperature hydraulic oil.	No limitation.	Check that cooling fan is working. Check that cooler isn't clogged. Check the sensor.	D797-R/ K2:13 – B776/1	HYD, menu 1	10.6 Temperature control, cleaning and hydraulic oil
198	Incorrect signal from-Sensor hydraulic oil temperature (B776).	Incorrect temperature display.	Check the sensor. Check cable harness between the control unit and the component with diagnostic menu.	D797-R/ K2:13 – B776/1	HYD, menu 1	10.6.4 Sensor hydraulic oil temperature
199	Incorrect signal from Sensor fuel level (B757). Resistance higher than 180 ∧.	Incorrect display of fuel amount (empty or full).	Check the sensor. Check cable harness between the control unit and the component with diagnostic menu.	D797-R/ K2:15 – B757	CAB, menu 7	1.2.2 Sensor fuel level
201	Redundant voltage feed left to Control unit frame option (D797-O) does not arrive.	-	Check cable harness between the control unit and the component with diagnostic menu. Check the control unit.	D797-O/ K2:7	CAN/ POWER, menu 12	11.5.1.2 Redundant voltage feed of Control units
202	Redundant voltage feed right to Control unit frame option (D797-O) does not arrive.	-	Check cable harness between the control unit and the component with diagnostic menu. Check the control unit.	D797-O/ K2:8	CAN/ POWER, menu 12	11.5.1.2 Redundant voltage feed of Control units
203	Incorrect electric power feed to Control unit frame option (D797-O). Voltage lower than 18 V or higher than 32 V.	-	Check fuse F58-2/4, change if needed. Check cable harness between the control unit and the component with diagnostic menu.	D797-O/ K2:10 – F58-2/4:1	CAN/ POWER, menu 12	11.5.1.3 Ignition voltage (15)

Code	Description	Limitation	Action	Connection and component	Diagnostic menu	Group
204	Incorrect control breaker voltage to Control unit frame option (D797-O).	Functions supplied with control breaker voltage have no feed. All hydraulic functions are blocked.	Check fuse F58-3/4, change if needed. Check cable harness between the control unit and the component with diagnostic menu.	D797-O/ K2:11 – F58-3/4:1	CAN/ POWER, menu 12	11.5.1.4 Control breaker voltage
211	The transistor has been triggered due to short-circuiting in the circuit to Solenoid valve cab front/up (Y6016).	Hydraulic sliding cab or cab lift not working	Check cable harness between the control unit and the component with diagnostic menu. Check the solenoid valve.	D797-O/ K1:2 – Y6016/1	SLIDING CAB, menu 3	9.10.4.3 Control valve option frame 9.10.5.2 Control valve option frame
212	The transistor has been triggered due to short-circuiting in the circuit to Solenoid valve cab rear/ down (Y6017).	Hydraulic sliding cab or cab lift not working	Check cable harness between the control unit and the component with diagnostic menu. Check the solenoid valve.	D797-O/ K1:3 – Y6017/1	SLIDING CAB, menu 4	9.10.4.3 Control valve option frame 9.10.5.2 Control valve option frame
213	The transistor has been triggered due to short-circuiting in the circuit to Solenoid valve steering left (Y636L).	Joystick steering or mini-wheel not working.	Check cable harness between the control unit and the component with diagnostic menu. Check the solenoid valve.	D797-O/ K1:4 – Y636L1/1	EL-STEERING, menu 4	5.2.10 Control valve joystick steering/mini-wheel
214	The transistor has been triggered due to short-circuiting in the circuit to Solenoid valve steering right (Y636R).	Joystick steering or mini-wheel not working.	Check cable harness between the control unit and the component with diagnostic menu. Check the solenoid valve.	D797-O/ K1:5 – Y636R1/1	EL-STEERING, menu 5	5.2.10 Control valve joystick steering/mini-wheel
215	The transistor has been triggered due to short-circuiting or open circuit in the circuit to Solenoid valve support jacks up (Y6053).	Support jacks not working.	Check cable harness between the control unit and the component with diagnostic menu. Check the solenoid valve.	D797-O/ K1:30 – Y6063/1	SUPPORT JACKS, menu 3	7.10.1.2 Control valve option frame

Code	Description	Limitation	Action	Connection and component	Diagnostic menu	Group
216	The transistor has been triggered due to short-circuiting or open circuit in the circuit to Solenoid valve support jacks down (Y6064).	Support jacks not working.	Check cable harness between the control unit and the component with diagnostic menu. Check the solenoid valve.	D797-O/ K1:31 – Y6064/1	SUPPORT JACKS, menu 3	7.10.1.2 Control valve option frame
217	Solenoid valve cab tilt up (Y6047).	Cab tilt not working.	Check cable harness between the controlunit and the component with diganostic menu. Check the solenoid valve.	D797-O/ K1:32 – Y6047/1	SLIDING CAB, menu 3	MISSING
218	Solenoid valve cab tilt down (Y6048).	Cab tilt not working.	Check cable harness between the controlunit and the component with diganostic menu. Check the solenoid valve.	D797-O/ K1:33 – Y6048/1	SLIDING CAB, menu 4	MISSING
219	Solenoid valve disengagement of hydraulic oil pumps (Y6057).	Disengagement of hydraulic oil pump when lowering tiltable cab not working.	Check cable harness between the controlunit and the component with diganostic menu. Check the solenoid valve.	D797-O/ K1:7 – Y6057/1	HYD, menu 6	MISSING
220	Incorrect 24 V reference voltage to Position sensor support jacks (B7222L, B7222R, B7223L and B7223R).	Indication support jacks up not working. Gear cannot be selected to operate the machine.	Check cable harness between the control unit and the component with diagnostic menu. Check the sensor.	D797-O/ K1:9 – B7222L, B7222R, B7223L, B7223R	SUPPORT JACKS, menu 2	7.10.1.5 Sensor raised support jacks 7.10.1.6 Sensor lowered support jacks
221	Incorrect 24 V reference voltage to Position sensor cab lift (B777-2).	Indication Lowered cab not working. Door must be closed to allow lowering of boom. Speed limitation is activated.	Check cable harness between the control unit and the component with diagnostic menu. Check the sensor.	D797-O/ K1:10 – B777-2/1	SLIDING CAB, menu 4	9.10.5.8 Sensor lowered cab

Code	Description	Limitation	Action	Connection and component	Diagnostic menu	Group
237	Incorrect signal from Solenoid valve cab front/up (Y6016). The return current does not match the control current.	Hydraulic sliding cab or cab lift not working.	Check cable harness between the control unit and the component with diagnostic menu. Check the solenoid valve.	D797-O/ K1:16 – Y6016/2	SLIDING CAB, menu 3	9.10.4.3 Control valve option frame 9.10.5.2 Control valve option frame
238	Incorrect signal from Solenoid valve cab rear/ down (Y6017). The return current does not match the control current.	Hydraulic sliding cab or cab lift not working.	Check cable harness between the control unit and the component with diagnostic menu. Check the solenoid valve.	D797-O/ K1:17 – Y6017/2	SLIDING CAB, menu 4	9.10.4.3 Control valve option frame 9.10.5.2 Control valve option frame
239	Incorrect signal from Solenoid valve steering left (Y636L). The return current does not match the control current.	Joystick steering or mini-wheel not working.	Check cable harness between the control unit and the component with diagnostic menu. Check the solenoid valve.	D797-O/ K1:18 – Y636L/2	EL-STEERING, menu 4	5.2.10 Control valve joystick steering/mini-wheel
240	Incorrect signal from Solenoid valve steering right (Y636R). The return current does not match the control current.	Joystick steering or mini-wheel not working.	Check cable harness between the control unit and the component with diagnostic menu. Check the solenoid valve.	D797-O/ K1:19 – Y636R/2	EL-STEERING, menu 5	5.2.10 Control valve joystick steering/mini-wheel
251	Redundant voltage feed left to Control unit attachment (D791-1) does not arrive.	-	Check cable harness between the control unit and the component with diagnostic menu.	D791-1/ K2:7	CAN/ POWER, menu 16	11.5.1.2 Redundant voltage feed of Control units
252	Redundant voltage feed left to Control unit attachment (D791-1) does not arrive.	-	Check cable harness between the control unit and the component with diagnostic menu.	D791-1/ K2:8	CAN/ POWER, menu 16	11.5.1.2 Redundant voltage feed of Control units

Code	Description	Limitation	Action	Connection and component	Diagnostic menu	Group
253	Incorrect electric power feed to Control unit attachment (D791-1). Voltage lower than 18 V or higher than 32 V.	Functions supplied with control breaker voltage have no feed. No attachment functions working.	Check fuse F58-3/1, change if needed. Check fuse F52-1, change if needed. Check cable harness between the control unit and the component with diagnostic menu.	D791-1/ K2:1/9/10 – F52-1 – F58-3/1:1	CAN/ POWER, menu 16	11.5.1.4 Control breaker voltage
254	Incorrect control breaker voltage to Control unit attachment (D791-1).	Functions supplied with control breaker voltage have no feed. No attachment functions working.	Check fuse F58-3/1, change if needed. Check fuse F52-1, change if needed. Check cable harness between the control unit and the component with diagnostic menu.	D791-1/ K2:11 – F58-3/1	CAN/ POWER, menu 16	11.5.1.4 Control breaker voltage
257	The transistor has been triggered due to short-circuiting or open circuit in the circuit to Light bulb work light attachment right (E406R).	Work light attachment right not working.	Check the light. Check the bulb holder. Check cable harness between the control unit and the component with diagnostic menu.	D791-1/ K1:1 – E406R	LIGHTS, menu 2	9.6.11 Work light attachment
258	The transistor has been triggered due to short-circuiting or open circuit in the circuit to Light bulb work light attachment left (E406L).	Work light attachment left not working.	Check bulb. Check the bulb holder. Check cable harness between the control unit and the component with diagnostic menu.	D791-1/ K1:15 – E406L	LIGHTS, menu 2	9.6.11 Work light attachment
259	The transistor has been triggered due to short-circuiting or open circuit in the circuit to Buzzer automatic positioning 20’-40’ (H4009).	Automatic positioning 20'-40' not working.	Check cable harness between the control unit and the component with diagnostic menu. Check the component.	D791-1/ K1:28 – H9003/1	ATTACH, menu 15	7.5 Spreading
260	The transistor has been triggered due to short-circuiting or open circuit in the circuit to Light bulb extra work light attachment (E404-4L and E404-4R).	Extra work light attachment not working.	Check the light. Check the bulb holder. Check cable harness between the control unit and the component with diagnostic menu.	D791-1/ K1:42 – E404-4L, E404-4R	LIGHTS, menu 2	9.6.11 Work light attachment

Code	Description	Limitation	Action	Connection and component	Diagnostic menu	Group
261	The transistor has been triggered due to short-circuiting in the circuit to Solenoid valve rotation clockwise (Y6008).	Rotation of attachment not working.	Check cable harness between the control unit and the component with diagnostic menu. Check the solenoid valve.	D791-1/ K1:2 – Y6008/1	ATTACH, menu 11	7.6.3 Control valve attachment
262	The transistor has been triggered due to short-circuiting in the circuit to Solenoid valve rotation counter-clockwise (Y6009)	Rotation of attachment not working.	Check cable harness between the control unit and the component with diagnostic menu. Check the solenoid valve.	D791-1/ K1:3 – Y6009/1	ATTACH, menu 12	7.6.3 Control valve attachment
263	The transistor has been triggered due to short-circuiting in the circuit to Solenoid valve positioning out (Y6018).	Spreading not working.	Check cable harness between the control unit and the component with diagnostic menu. Check the solenoid valve.	D791-1/ K1:4 – Y6018/1	ATTACH, menu 13	7.5.3 Control valve attachment
264	The transistor has been triggered due to short-circuiting in the circuit to Solenoid valve positioning in (Y6019).	Spreading not working.	Check cable harness between the control unit and the component with diagnostic menu. Check the solenoid valve.	D791-1/ K1:5 – Y6019/1	ATTACH, menu 14	7.5.3 Control valve attachment
265	The transistor has been triggered due to short-circuiting or open circuit in the circuit to Solenoid valve sideshift right (Y6021).	Sideshift of attachment not working.	Check cable harness between the control unit and the component with diagnostic menu. Check the solenoid valve.	D791-1/ K1:30 – Y6021/1	ATTACH, menu 8	7.4.3 Control valve attachment
266	The transistor has been triggered due to short-circuiting or open circuit in the circuit to Solenoid valve sideshift left (Y6020).	Sideshift of attachment not working.	Check cable harness between the control unit and the component with diagnostic menu. Check the solenoid valve.	D791-1/ K1:31 – Y6020/1	ATTACH, menu 8	7.4.3 Control valve attachment
267	The transistor has been triggered due to short-circuiting or open circuit in the circuit to Solenoid valve lock twistlock (Y6040).	Twistlock not working.	Check cable harness between the control unit and the component with diagnostic menu. Check the solenoid valve.	D791-1/ K1:32 – Y6040/1	ATTACH, menu 9	7.9.1.3 Control valve attachment

Code	Description	Limitation	Action	Connection and component	Diagnostic menu	Group
268	The transistor has been triggered due to short-circuiting or open circuit in the circuit to Solenoid valve open twistlock (Y6039).	Twistlock not working.	Check cable harness between the control unit and the component with diagnostic menu. Check the solenoid valve.	D791-1/ K1:33 – Y6039/1	ATTACH, menu 9	7.9.1.3 Control valve attachment
269	The transistor has been triggered due to short-circuiting or open circuit in the circuit to Solenoid valve tilt lock 1 (Y6012-1).	Tilt locked, tilt damping and controllable tilt not working.	Check cable harness between the control unit and the component with diagnostic menu. Check the solenoid valve.	D791-1/ K1:7 – Y6012-1/1	ATTACH, menu 15	7.7.4 Lock valve tilt
270	The transistor has been triggered due to short-circuiting or open circuit in the circuit to Solenoid valve tilt lock 2 (Y6012-2).	Tilt locked, tilt damping and controllable tilt not working.	Check cable harness between the control unit and the component with diagnostic menu. Check the solenoid valve.	D791-1/ K1:9 – Y6012-2/1	ATTACH, menu 15	7.7.4 Lock valve tilt
271	The transistor has been triggered due to short-circuiting or open circuit in the circuit to Voltage feed Position sensor attachment.	Twistlocks, rotation stop, and positioning not working.	Check cable harness between the control unit and the component with diagnostic menu. Check the sensor.	D791-1/ K1:10 – B769/A, B777-2/A, B7225/A, B7202R/A, B7204R/A, B7205R/A, B7203R/A, B7202L/A, B7204L/A, B7205L/A, B7203L/A, B7224/A	ATTACH, menu 5, 6, 7, 21	7.5.10 Position sensor positioning 7.6.10 Sensor rotation stop 7.9.1.8 Sensor alignment 7.9.1.9 Sensor twistlocks 8.2.1.6 Sensor boom length description (position sensor)

Code	Description	Limitation	Action	Connec-tion and compo-nent	Diag-nostic menu	Group
272	The transistor has been triggered due to short-circuiting or open circuit in the circuit to Indicator light twistlock open (H562).	Indicator light open twistlock not working.	Check the light. Check the bulb holder. Check cable harness between the control unit and the component with diagnostic menu.	D791-1/ K1:25 – H562/1	ATTACH, menu 10	7.9.1 Twist-locks
273	The transistor has been triggered due to short-circuiting or open circuit in the circuit to Indicator light alignment (H564).	Indicator light alignment twist-lock not working.	Check the light. Check the bulb holder. Check cable harness between the control unit and the component with diagnostic menu.	D791-1/ K1:29 – H564/1	ATTACH, menu 10	7.9.1 Twist-locks
274	The transistor has been triggered due to short-circuiting or open circuit in the circuit to Indicator light twistlock locked (H563).	Indicator light locked twistlock not working.	Check the light. Check the bulb holder. Check cable harness between the control unit and the component with diagnostic menu.	D791-1/ K1:39 – H563/1	ATTACH, menu 10	7.9.1 Twist-locks
287	Incorrect signal from Solenoid valve rotation clockwise (Y6008). The return current does not match the control cur-rent.	Rotation of at-tachment not working.	Check cable harness between the control unit and the component with diagnostic menu. Check the solenoid valve.	D791-1/ K1:16 – Y6008/2	ATTACH, menu 11	7.6.3 Con-trol valve attachment
288	Incorrect signal from Solenoid valve rotation counter-clockwise (Y6009). The return cur-rent does not match the control current.	Rotation of at-tachment not working.	Check cable harness between the control unit and the component with diagnostic menu. Check the solenoid valve.	D791-1/ K1:17 – Y6009/2	ATTACH, menu 12	7.6.3 Con-trol valve attachment
289	Incorrect signal from Solenoid valve position-ing out (Y6018). The re- turn current does not match the control cur- rent.	Spreading not working.	Check cable harness between the control unit and the component with diagnostic menu. Check the solenoid valve.	D791-1/ K1:18 – Y6018/2	ATTACH, menu 13	7.5.3 Con-trol valve attachment

Code	Description	Limitation	Action	Connection and component	Diagnostic menu	Group
290	Incorrect signal from Solenoid valve positioning in (Y6019). The return current does not match the control current.	Spreading not working.	Check cable harness between the control unit and the component with diagnostic menu. Check the solenoid valve.	D791-1/ K1:19 – Y6019/2	ATTACH, menu 14	7.5.3 Control valve attachment
298	Sensor twistlock indicates that left twistlock is between open and locked position.	Lift and extension not working.	Check that Sensors twistlock are clean and correctly adjusted. Check cable harness between the control unit and the component with diagnostic menu.	-	ATTACH, menu 7	7.9.1.9 Sensor twistlocks
299	Sensor twistlock indicates that right twistlock is between open and locked position.	Lift and extension not working.	Check that Sensors twistlock are clean and correctly adjusted. Check cable harness between the control unit and the component with diagnostic menu.	-	ATTACH, menu 7	7.9.1.9 Sensor twistlocks
300	Sensor alignment indicates unreasonable condition.	Twistlock not working.	Check that Sensors alignment are clean and correctly adjusted. Check that contact pin runs freely. Check cable harness between the control unit and the component with diagnostic menu.	-	ATTACH, menu 6	7.9.1.8 Sensor alignment
301	Redundant voltage feed left to Control unit attachment option (D791-2) does not arrive.	-	Check cable harness between the control unit and the component with diagnostic menu. Check the control unit.	D791-2/ K2:7	CAN/ POWER, menu 17	11.5.1.2 Redundant voltage feed of Control units
302	Redundant voltage feed left to Control unit attachment option (D791-2) does not arrive.	-	Check cable harness between the control unit and the component with diagnostic menu. Check the control unit.	D791-2/ K2:8	CAN/ POWER, menu 17	11.5.1.2 Redundant voltage feed of Control units

Code	Description	Limitation	Action	Connection and component	Diagnostic menu	Group
303	Incorrect electric power feed to Control unit attachment option (D791-2). Voltage lower than 18 V or higher than 32 V.	Levelling, tilt and special function not working.	Check fuse F58-3/1 and F52-1, change if needed. Check cable harness between the control unit and the component with diagnostic menu.	D791-2/ K2:1, K2:9, K2:10 – F52-1 – F58-3/1	CAN/ POWER, menu 17	11.5.1.4 Control breaker voltage
304	Incorrect control breaker voltage to Control unit attachment option (D791-2).	Functions supplied with control breaker voltage have no feed. Levelling, tilt and special function not working.	Check fuse F58-3/1 and F52-1, change if needed. Check cable harness between the control unit and the component with diagnostic menu.	D791-2/ K2:11 – F52-1 – F58-3/1	CAN/ POWER, menu 17	11.5.1.4 Control breaker voltage
311	The transistor has been triggered due to short-circuiting in the circuit to Solenoid valve levelling right (Y6035).	Levelling not working.	Check cable harness between the control unit and the component with diagnostic menu. Check the solenoid valve.	D791-2/ K1:2 – Y6035/1	ATTACH, menu 19	7.8.3 Control valve attachment
312	The transistor has been triggered due to short-circuiting in the circuit to Solenoid valve levelling left (Y6036).	Levelling not working.	Check cable harness between the control unit and the component with diagnostic menu. Check the solenoid valve.	D791-2/ K1:3 – Y6036/1	ATTACH, menu 20	7.8.3 Control valve attachment
313	The transistor has been triggered due to short-circuiting in the circuit to Solenoid valve tilt out (Y6010).	Controllable tilt not working.	Check cable harness between the control unit and the component with diagnostic menu. Check the solenoid valve.	D791-2/ K1:4 – Y6010/1	ATTACH, menu 16	7.7.5 Control valve attachment
314	The transistor has been triggered due to short-circuiting in the circuit to Solenoid valve tilt in (Y6011).	Controllable tilt not working.	Check cable harness between the control unit and the component with diagnostic menu. Check the solenoid valve.	D791-2/ K1:5 – Y6011/1	ATTACH, menu 17	7.7.5 Control valve attachment

Code	Description	Limitation	Action	Connection and component	Diagnostic menu	Group
315	The transistor has been triggered due to short-circuiting or open circuit in the circuit to Solenoid valve levelling lock (Y6034-1).	Levelling is locked, controllable levelling and float mode not working.	Check cable harness between the control unit and the component with diagnostic menu. Check the solenoid valve.	D791-2/ K1:30 – Y6034-1/1	ATTACH, menu 18	7.8.6 Valve block levelling cylinders
316	The transistor has been triggered due to short-circuiting or open circuit in the circuit to Solenoid valve levelling lock (Y6034-2).	Levelling is locked, controllable levelling and float mode not working.	Check cable harness between the control unit and the component with diagnostic menu. Check the solenoid valve.	D791-2/ K1:31 – Y6034-2/1	ATTACH, menu 18	7.8.6 Valve block levelling cylinders
317	Incorrect output signal special function.		WARNING	D791-2/ K1:32		
318	Incorrect output signal special function.		WARNING	D791-2/ K1:33		
319	Incorrect output signal special function.		WARNING	D791-2/ K1:7		
320	Incorrect output signal special function.		WARNING	D791-2/ K1:9		
321	Incorrect output signal special function.		WARNING	D791-2/ K1:10		
322	Incorrect output signal special function.		WARNING	D791-2/ K1:25		
337	Incorrect signal from Solenoid valve levelling right (Y6035). The return current does not match the control current.	Levelling not working.	Check cable harness between the control unit and the component with diagnostic menu. Check the solenoid valve.	D791-2/ K1:16 – Y6035/2	ATTACH, menu 17	7.8.3 Control valve attachment
338	Incorrect signal from Solenoid valve levelling left (Y6036). The return current does not match the control current.	Levelling not working.	Check cable harness between the control unit and the component with diagnostic menu. Check the solenoid valve.	D791-2/ K1:17 – Y6036/2	ATTACH, menu 18	7.8.3 Control valve attachment

Code	Description	Limitation	Action	Connection and component	Diagnostic menu	Group
339	Incorrect signal from Solenoid valve tilt out (Y6010). The return current does not match the control current.	Controllable tilt not working.	Check cable harness between the control unit and the component with diagnostic menu. Check the solenoid valve.	D791-2/ K1:18 – Y6010/2	ATTACH, menu 14	7.7.5 Control valve attachment
340	Incorrect signal from Solenoid valve tilt in (Y6011). The return current does not match the control current.	Controllable tilt not working.	Check cable harness between the control unit and the component with diagnostic menu. Check the solenoid valve.	D791-2/ K1:19 – Y6011/2	ATTACH, menu 15	7.7.5 Control valve attachment
351	Redundant voltage feed left to Control unit attachment left legs (D791-3) does not arrive.	-	Check cable harness between the control unit and the component with diagnostic menu. Check the control unit.	D791-3/ K2:7	CAN/ POWER, menu 18	11.5.1.2 Redundant voltage feed of Control units
352	Redundant voltage feed right to Control unit attachment left legs (D791-3) does not arrive.	-	Check cable harness between the control unit and the component with diagnostic menu. Check the control unit.	D791-3/ K2:8	CAN/ POWER, menu 18	11.5.1.2 Redundant voltage feed of Control units
353	Incorrect electric power feed to Control unit attachment left legs (D791-3). Voltage lower than 18 V or higher than 32 V.	Left lift leg not working.	Check fuse F58-3/1 and F52-2, change if needed. Check cable harness between the control unit and the component with diagnostic menu.	D791-3/ K2:1 – F52-2 – F58-3/1	CAN/ POWER, menu 18	11.5.1.4 Control breaker voltage
354	Incorrect control breaker voltage to Control unit attachment left legs (D791-3).	Functions supplied with control breaker voltage have no feed. Left lift leg not working.	Check fuse F58-3/1 and F52-2, change if needed. Check cable harness between the control unit and the component with diagnostic menu.	D791-3/ K2:11 – F52-2 – F58-3/1	CAN/ POWER, menu 18	11.5.1.4 Control breaker voltage

Code	Description	Limitation	Action	Connection and component	Diagnostic menu	Group
357	The transistor has been triggered due to short-circuiting or open circuit in the circuit to Work light left lift leg (E404-6L).	Work light left lift leg not working.	Check the light. Check the bulb holder. Check cable harness between the control unit and the component with diagnostic menu.	D791-3/ K1:1 – E404-6L/1	-	9.6.11 Work light attachment
358	The transistor has been triggered due to short-circuiting or open circuit in the circuit to Solenoid valve levelling lock (Y6034-1) and Solenoid valve levelling lock (Y6034-2).	Levelling is locked, controllable levelling and float mode not working.	Check cable harness between the control unit and the component with diagnostic menu. Check the solenoid valve.	D791-3/ K1:15 – Y6034-1/1, Y6034-2/1	ATTACH, menu 18	7.8.6 Valve block levelling cylinders
360	The transistor has been triggered due to short-circuiting or open circuit in the circuit to Solenoid valve operating position (Y6053L).	Left lift leg not working.	Check cable harness between the control unit and the component with diagnostic menu. Check the solenoid valve.	D791-3/ K1:42 – Y6053L/1	COMBI, menu 16	7.9.2.5 Valve operating position
361	The transistor has been triggered due to short-circuiting in the circuit to Solenoid valve levelling right (Y6035).	Levelling not working.	Check cable harness between the control unit and the component with diagnostic menu. Check the solenoid valve.	D791-3/ K1:2 – Y6035/1	ATTACH, menu 19	7.8.3 Control valve attachment
362	The transistor has been triggered due to short-circuiting in the circuit to Solenoid valve levelling left (Y6036).	Levelling not working.	Check cable harness between the control unit and the component with diagnostic menu. Check the solenoid valve.	D791-3/ K1:3 – Y6036/1	ATTACH, menu 20	7.8.3 Control valve attachment
363	The transistor has been triggered due to short-circuiting or open circuit in the circuit to Solenoid valve front knee in (Y6057L).	Left lift leg not working.	Check cable harness between the control unit and the component with diagnostic menu. Check the solenoid valve.	D791-3/ K1:4 – Y6057L/1	COMBI, menu 11	7.9.2.3 Control valve lift legs

Code	Description	Limitation	Action	Connec-tion and compo-nent	Diag-nostic menu	Group
364	The transistor has been triggered due to short-circuiting or open circuit in the circuit to Solenoid valve front knee out (Y6056L).	Left lift leg not working.	Check cable harness between the control unit and the component with diagnostic menu. Check the solenoid valve.	D791-3/ K1:5 – Y6056L/1	COMBI, menu 10	7.9.2.3 Control valve lift legs
365	The transistor has been triggered due to short-circuiting or open circuit in the circuit to Solenoid valve rear knee in (Y6059L).	Left lift leg not working.	Check cable harness between the control unit and the component with diagnostic menu. Check the solenoid valve.	D791-3/ K1:30 – Y6059L/1	COMBI, menu 13	7.9.2.3 Control valve lift legs
366	The transistor has been triggered due to short-circuiting or open circuit in the circuit to Solenoid valve rear knee out (Y6058L).	Left lift leg not working.	Check cable harness between the control unit and the component with diagnostic menu. Check the solenoid valve.	D791-3/ K1:31 – Y6058L/1	COMBI, menu 12	7.9.2.3 Control valve lift legs
367	The transistor has been triggered due to short-circuiting or open circuit in the circuit to Solenoid valve lowering front leg (Y6013L).	Left lift leg not working.	Check cable harness between the control unit and the component with diagnostic menu. Check the solenoid valve.	D791-3/ K1:32 – Y6013L/1	COMBI, menu 10	7.9.2.3 Control valve lift legs
368	The transistor has been triggered due to short-circuiting or open circuit in the circuit to Solenoid valve front leg up (Y6060L).	Left lift leg not working.	Check cable harness between the control unit and the component with diagnostic menu. Check the solenoid valve.	D791-3/ K1:33 – Y6060L/1	COMBI, menu 11	7.9.2.3 Control valve lift legs
369	The transistor has been triggered due to short-circuiting or open circuit in the circuit to Solenoid valve lowering rear leg (Y6014L).	Left lift leg not working.	Check cable harness between the control unit and the component with diagnostic menu. Check the solenoid valve.	D791-3/ K1:7 – Y6014L/1	COMBI, menu 12	7.9.2.3 Control valve lift legs
370	The transistor has been triggered due to short-circuiting or open circuit in the circuit to Solenoid valve rear leg up (Y6061L).	Left lift leg not working.	Check cable harness between the control unit and the component with diagnostic menu. Check the solenoid valve.	D791-3/ K1:9 – Y6061L/1	COMBI, menu 13	7.9.2.3 Control valve lift legs

Code	Description	Limitation	Action	Connec-tion and compo-nent	Diag-nostic menu	Group
371	The transistor has been triggered due to short-circuiting or open circuit in the circuit toIndicator light (H566R).	Indicator light alignment lift leg right front not working.	Check the light. Check the bulb holder. Check cable harness between the control unit and the component with diagnostic menu.	D791-3/ K1:10 – H566R/1	COMBI, menu 7	7.9.2 Lift legs
372	The transistor has been triggered due to short-circuiting or open circuit in the circuit to Indicator light (H567R).	Indicator light alignment lift leg right rear not working.	Check the light. Check the bulb holder. Check cable harness between the control unit and the component with diagnostic menu.	D791-3/ K1:25 – H567R/1	COMBI, menu 7	7.9.2 Lift legs
373	The transistor has been triggered due to short-circuiting or open circuit in the circuit to Indicator light (H556L).	Indicator light alignment lift leg left front not working.	Check the light. Check the bulb holder. Check cable harness between the control unit and the component with diagnostic menu.	D791-3/ K1:29 – H566L/1	COMBI, menu 7	7.9.2 Lift legs
374	The transistor has been triggered due to short-circuiting or open circuit in the circuit to Indicator light (H556L).	Indicator light alignment lift leg left rear not working.	Check the light. Check the bulb holder. Check cable harness between the control unit and the component with diagnostic menu.	D791-3/ K1:39 – H567L/1	COMBI, menu 7	7.9.2 Lift legs
375	The transistor has been triggered due to short-circuiting or open circuit in the circuit to Solenoid valve clamp shut (Y6054L).	Left lift leg not working.	Check cable harness between the control unit and the component with diagnostic menu. Check the solenoid valve.	D791-3/ K1:11 – Y6054L/1	COMBI, menu 15	7.9.2.3 Control valve lift legs
376	The transistor has been triggered due to short-circuiting or open circuit in the circuit to Solenoid valve clamp open (Y6055L).	Left lift leg not working.	Check cable harness between the control unit and the component with diagnostic menu. Check the solenoid valve.	D791-3/ K1:12 – Y6055L/1	COMBI, menu 15	7.9.2.3 Control valve lift legs

Code	Description	Limitation	Action	Connection and component	Diagnostic menu	Group
377	The transistor has been triggered due to short-circuiting or open circuit in the circuit to voltage feed position sensor left leg pair.	Left lift leg not working.	Check cable harness between the control unit and the component with diagnostic menu. Check the sensor.	D791-3/ K1:26 – B7212L/A, B7213L/A, B7214L/A, B7215L/A, B7216L/A, B7217L/A, B7218L/A, B7219L/A, B7220L/A	COMBI, menu 2, 3, 4, 5, 6	7.9.2.9 Sensor operating position 7.9.2.10 Sensor knee 7.9.2.13 Sensor lift leg 7.9.2.15 Sensor alignment 7.9.2.16 Sensor clamping position
387	Incorrect signal from Solenoid valve levelling right (Y6035). The return current does not match the control current.	Levelling not working.	Check cable harness between the control unit and the component with diagnostic menu. Check the solenoid valve.	D791-3/ K1:16 – Y6035/2	ATTACH, menu 19	7.8.3 Control valve attachment
388	Incorrect signal from Solenoid valve levelling left (Y6036). The return current does not match the control current.	Levelling not working.	Check cable harness between the control unit and the component with diagnostic menu. Check the solenoid valve.	D791-3/ K1:17 – Y6036/2	ATTACH, menu 20	7.8.3 Control valve attachment
401	Redundant voltage feed left to Control unit attachment right leg pair (D791-4) does not arrive.	-	Check cable harness between the control unit and the component with diagnostic menu. Check the control unit.	D791-4/ K2:7	CAN/ POWER, menu 19	11.5.1.2 Redundant voltage feed of Control units
402	Redundant voltage feed right to Control unit attachment right leg pair (D791-4) does not arrive.	-	Check cable harness between the control unit and the component with diagnostic menu. Check the control unit.	D791-4/ K2:8	CAN/ POWER, menu 19	11.5.1.2 Redundant voltage feed of Control units

Code	Description	Limitation	Action	Connection and component	Diagnostic menu	Group
403	Incorrect electric power feed to Control unit attachment right leg pair (D791-4). Voltage lower than 18 V or higher than 32 V.	Right lift leg and controllable tilt not working.	Check fuse F58-3/1 and F52-2, change if needed. Check cable harness between the control unit and the component with diagnostic menu.	D791-4/ K2:1 – F52-2 – F58-3/1	CAN/ POWER, menu 19	11.5.1.4 Control breaker voltage
404	Incorrect control breaker voltage to Control unit attachment right leg pair (D791-4).	Control breaker cannot be disengaged. Right lift leg and controllable tilt not working.	Check fuse F58-3/1 and F52-2, change if needed. Check cable harness between the control unit and the component with diagnostic menu.	D791-4/ K2:11 – F52-2 – F58-3/1	CAN/ POWER, menu 19	11.5.1.4 Control breaker voltage
407	The transistor has been triggered due to short-circuiting or open circuit in the circuit to Work light left lift leg (E404-6R).	Work light left lift leg not working.	Check the light. Check the bulb holder. Check cable harness between the control unit and the component with diagnostic menu.	D791-4/ K1:1 – E404-6R	-	9.1.11 Work light attachment
410	The transistor has been triggered due to short-circuiting or open circuit in the circuit to Solenoid valve operating position (Y6053R).	Right lift leg not working.	Check cable harness between the control unit and the component with diagnostic menu. Check the solenoid valve.	D791-4/ K1:42 – Y6053R/1	COMBI, menu 16	7.9.2.5 Valve operating position
411	The transistor has been triggered due to short-circuiting in the circuit to Solenoid valve tilt out (Y6010).	Controllable tilt not working.	Check cable harness between the control unit and the component with diagnostic menu. Check the solenoid valve.	D791-4/ K1:15 – Y6010/1	ATTACH, menu 16	7.7.5 Control valve attachment
412	The transistor has been triggered due to short-circuiting in the circuit to Solenoid valve tilt in (Y6010).	Controllable tilt not working.	Check cable harness between the control unit and the component with diagnostic menu. Check the solenoid valve.	D791-4/ K1:15 – Y6011/1	ATTACH, menu 17	7.7.5 Control valve attachment

Code	Description	Limitation	Action	Connec-tion and compo-nent	Diag-nostic menu	Group
413	The transistor has been triggered due to short-circuiting or open circuit in the circuit to Solenoid valve front knee in (Y6057R).	Right lift leg not working.	Check cable harness between the control unit and the component with diagnostic menu. Check the solenoid valve.	D791-4/ K1:4 – Y6057R/1	COMBI, menu 11	7.9.2.3 Control valve lift legs
414	The transistor has been triggered due to short-circuiting or open circuit in the circuit to Solenoid valve front knee out (Y6056R).	Right lift leg not working.	Check cable harness between the control unit and the component with diagnostic menu. Check the solenoid valve.	D791-4/ K1:5 – Y6056R/1	COMBI, menu 10	7.9.2.3 Control valve lift legs
415	The transistor has been triggered due to short-circuiting or open circuit in the circuit to Solenoid valve rear knee in (Y6059R).	Right lift leg not working.	Check cable harness between the control unit and the component with diagnostic menu. Check the solenoid valve.	D791-4/ K1:30 – Y6059R/1	COMBI, menu 13	7.9.2.3 Control valve lift legs
416	The transistor has been triggered due to short-circuiting in the circuit to Solenoid valve rear knee out (Y6058L).	Right lift leg not working.	Check cable harness between the control unit and the component with diagnostic menu. Check the solenoid valve.	D791-4/ K1:31 – Y6058R/1	COMBI, menu 12	7.9.2.3 Control valve lift legs
417	The transistor has been triggered due to short-circuiting or open circuit in the circuit to Solenoid valve lowering front leg (Y6013R).	Right lift leg not working.	Check cable harness between the control unit and the component with diagnostic menu. Check the solenoid valve.	D791-4/ K1:32 – Y6013R/1	COMBI, menu 10	7.9.2.3 Control valve lift legs
418	The transistor has been triggered due to short-circuiting or open circuit in the circuit to Solenoid valve front leg up (Y6060R).	Right lift leg not working.	Check cable harness between the control unit and the component with diagnostic menu. Check the solenoid valve.	D791-4/ K1:33 – Y6060R/1	COMBI, menu 11	7.9.2.3 Control valve lift legs
419	The transistor has been triggered due to short-circuiting or open circuit in the circuit to Solenoid valve lowering rear leg (Y6014R).	Right lift leg not working.	Check cable harness between the control unit and the component with diagnostic menu. Check the solenoid valve.	D791-4/ K1:7 – Y6014R/1	COMBI, menu 12	7.9.2.3 Control valve lift legs

Code	Description	Limitation	Action	Connection and component	Diagnostic menu	Group
420	The transistor has been triggered due to short-circuiting or open circuit in the circuit to Solenoid valve rear leg up (Y6061R).	Right lift leg not working.	Check cable harness between the control unit and the component with diagnostic menu. Check the solenoid valve.	D791-4/ K1:9 – Y6061R/1	COMBI, menu 13	7.9.2.3 Control valve lift legs
421	The transistor has been triggered due to short-circuiting or open circuit in the circuit to Indicator light (H580).	Indicator light front legs raised not working.	Check the light. Check the bulb holder. Check cable harness between the control unit and the component with diagnostic menu.	D791-4/ K1:10 – H580/1	COMBI, menu 9	7.9.2 Lift legs
422	The transistor has been triggered due to short-circuiting or open circuit in the circuit to Indicator light (H581).	Indicator light front legs lowered not working.	Check the light. Check the bulb holder. Check cable harness between the control unit and the component with diagnostic menu.	D791-4/ K1:25 – H581/1	COMBI, menu 9	7.9.2 Lift legs
423	The transistor has been triggered due to short-circuiting or open circuit in the circuit to Indicator light (H578).	Indicator light clamping position lift legs front not working.	Check the light. Check the bulb holder. Check cable harness between the control unit and the component with diagnostic menu.	D791-4/ K1:29 – H578/1	COMBI, menu 8	7.9.2 Lift legs
424	The transistor has been triggered due to short-circuiting or open circuit in the circuit to Indicator light (H579).	Indicator light clamping position lift legs rear not working.	Check the light. Check the bulb holder. Check cable harness between the control unit and the component with diagnostic menu.	D791-4/ K1:39 – H579/1	COMBI, menu 8	7.9.2 Lift legs
425	The transistor has been triggered due to short-circuiting or open circuit in the circuit to Solenoid valve clamp shut (Y6054R).	Right lift leg not working.		D791-4/ K1:2 – Y6054R	COMBI, menu 15	7.9.2.3 Control valve lift legs
426	The transistor has been triggered due to short-circuiting or open circuit in the circuit to Solenoid valve clamp open (Y6055R).	Right lift leg not working.		D791-4/ K1:3 – Y6055R	COMBI, menu 15	7.9.2.3 Control valve lift legs

Code	Description	Limitation	Action	Connec-tion and compo-nent	Diag-nostic menu	Group
427	The transistor has been triggered due to short-circuiting or open circuit in the circuit to Voltage feed position sensor right leg pair.	Right lift leg not working.	Check cable harness between the control unit and the component with diagnostic menu. Check the sensor.	D791-4/ K1:26 – B7212R/A, B7213R/A, B7214R/A, B7215R/A, B7216R/A, B7217R/A, B7218R/A, B7219R/A, B7220R/A	COMBI, menu 2, 3, 4, 5, 6	7.9.2.9 Sensor op-erating po-sition 7.9.2.10 Sensor knee 7.9.2.13 Sensor lift leg 7.9.2.15 Sensor alignment 7.9.2.16 Sensor clamping position
437	Incorrect signal from Solenoid valve tilt out (Y6010). The return cur-rent does not match the control current.	Controllable tilt not working.	Check cable harness between the control unit and the component with diagnostic menu. Check the solenoid valve.	D791-4/ K1:16 – Y6010/2	ATTACH, menu 16	7.7.5 Con-trol valve attachment
438	Incorrect signal from Solenoid valve tilt in (Y6010). The return cur-rent does not match the control current.	Controllable tilt not working.	Check cable harness between the control unit and the component with diagnostic menu. Check the solenoid valve.	D791-4/ K1:17 – Y6011/2	ATTACH, menu 17	7.7.5 Con-trol valve attachment
451	Redundant voltage feed left to Control unit KID (D795) does not arrive.	-	Check cable harness between the control unit and the component with diagnostic menu.	795/K1:7	CAN/ POWER, menu 14	11.5.1.2 Redundant voltage feed of Control units
452	Redundant voltage feed right to Control unit KID (D795) does not arrive.	-	Check cable harness between the control unit and the component with diagnostic menu.	795/K1:8	CAN/ POWER, menu 14	11.5.1.2 Redundant voltage feed of Control units

Code	Description	Limitation	Action	Connection and component	Diagnostic menu	Group
460	No messages received on CAN-buffer 1.	Incorrect values in operating menus.	Use diagnostic menu to check CAN-bus	D795/ K1:10, K1:11, K1:12, K1:13	CAN/ POWER, menu 1, 2, 21	11.6.2 Redundant CAN-bus
461	No messages received on CAN-buffer 2.	Error codes from other Control units cannot be shown.	Use diagnostic menu to check CAN-bus	D795/K1:5, K1:6	CAN/ POWER, menu 1, 2, 21	11.6.2 Redundant CAN-bus
500	Time for service.	-	Check that service has been performed. If service is done according to Kalmar Industries service intervals, reset the service indicator, see tab *8 Control system,* group *8.2.6 Service indicator*.	-	-	8.2.6 Service indicator

Table of Contents E Schematics

10 Common hydraulics. 3
Hydraulic diagrams, compilation 3
Hydraulic diagram basic machine 4
Hydraulic diagram top lift 6
Hydraulic diagram top lift, tilt lock and controllable tilt 8
Hydraulic diagram top lift, tilt lock, controllable tilt and hydraulic levelling 10
Hydraulic diagram joystick steering 12
Hydraulic diagram sliding cab 14
Hydraulic diagram cab lift and support jacks 16
Hydraulic diagram sliding cab and support jacks 18
Hydraulic diagram combi attachment (part 1 of 3) 20
Hydraulic diagram combi attachment (part 2 of 3) 22
Hydraulic diagram combi attachment (part 3 of 3) 24
11 Common electric....26
Wiring diagrams, description 26
Component designations 27
Circuit diagrams, compilation 28

10 Common hydraulics

Hydraulic diagrams, compilation

Designation	Drawing number
Hydraulic diagram basic machine page 4	A40740.0100
Hydraulic diagram top lift page 6	A40853.0100
Hydraulic diagram top lift, tilt lock and controllable tilt page 8	A40853.0200
Hydraulic diagram top lift, tilt lock, controllable tilt and hydraulic levelling page 10	A43123.0100
Hydraulic diagram joystick steering page 12	A48056.0100
Hydraulic diagram sliding cab page 14	A40855.0100
Hydraulic diagram cab lift and support jacks page 16	A43276.0100
Hydraulic diagram sliding cab and support jacks page 18	A40854.0100
Hydraulic diagram combi attachment (part 1 of 3) page 20	A41791.0100
Hydraulic diagram combi attachment (part 2 of 3) page 22	A41791.0100
Hydraulic diagram combi attachment (part 3 of 3) page 24	A41791.0100

Hydraulic diagram basic machine

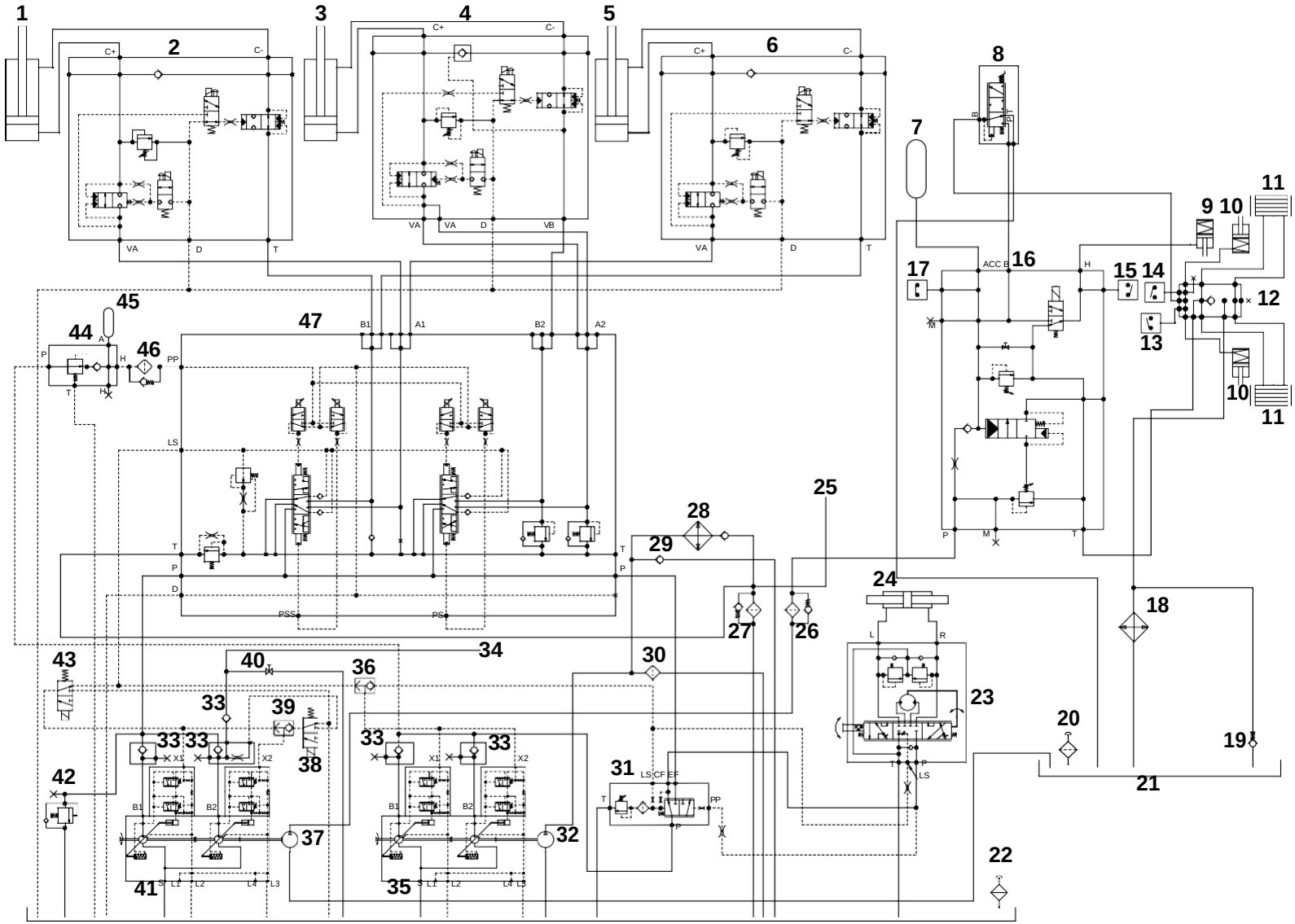

1. Lift cylinder
2. Valve block lift cylinder
3. Extension cylinder
4. Valve block extension cylinder
5. Lift cylinder
6. Valve block lift cylinder
7. Accumulator brake pressure
8. Brake valve
9. Parking brake caliper
10. Brake cylinder
11. Wheel brake
12. Drive axle block
13. Make-contact declutch
14. Make-contact brake light
15. Make-contact parking brake
16. Accumulator charging valve
17. Breaking contact brake pressure
18. Cooler brake oil
19. Thermal by-pass valve
20. Breather filter brake oil tank
21. Brake oil tank
22. Breather filter hydraulic oil tank
23. Steering valve
24. Steering cylinder
25. Oil return from attachment
26. Brake oil filter
27. Hydraulic oil filter
28. Cooler hydraulic oil
29. By-pass valve hydraulic oil cooler
30. Fine filter hydraulic oil
31. Priority valve
32. Pump cooling and filtering of hydraulic oil
33. Non-return valve
34. Pressure feed to attachment
35. Hydraulic oil pump 3 and 4
36. Shuttle valve
37. Pump brake system
38. Valve block top lift hydraulics
39. Shuttle valve
40. Unloading valve attachment
41. Hydraulic oil pump 1 and 2
42. Pressure limiting valve
43. Valve block pump unloading
44. Pressure reducer
45. Accumulator servo pressure
46. Servo filter
47. Control valve lift and lower as well as extension

003183 (A40740.0100 ver. 8)

Hydraulic diagram top lift

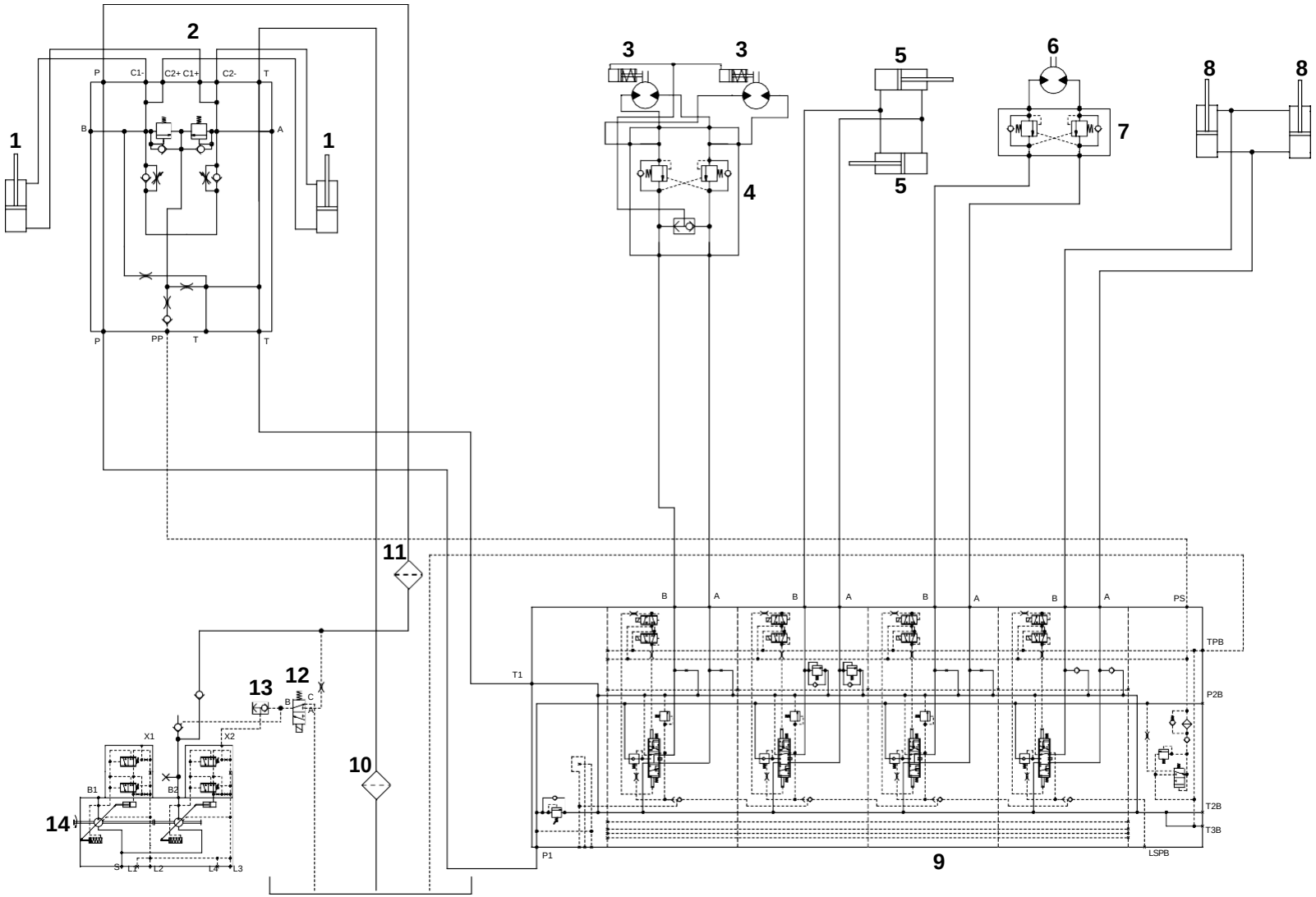

1. Tilt cylinder
2. Damping block
3. Rotation motor unit
4. Valve block rotation motor
5. Sideshift cylinders
6. Spreader motor
7. Valve block spreader motor
8. Twistlock cylinders
9. Control valve attachment
10. Filter hydraulic oil
11. Filter hydraulic oil (high pressure filter) ⊕
12. Solenoid valve engagement hydraulic pressure
13. Shuttle valve
14. Hydraulic oil pump 1 and 2

003184 (A40853.0100 ver. 4)

Hydraulic diagram top lift, tilt lock and controllable tilt

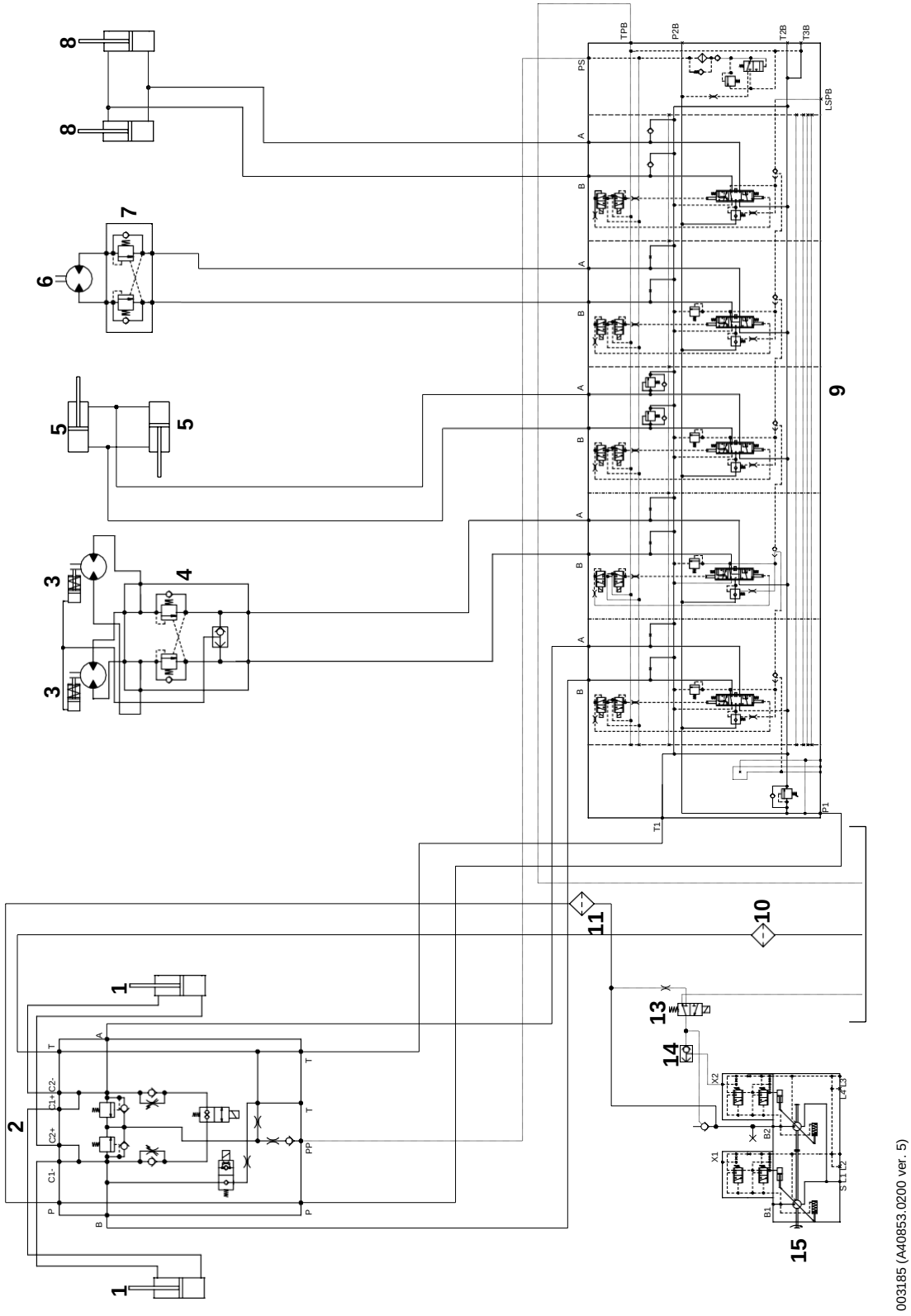

1. Tilt cylinder
2. Damping block
3. Rotation motor unit
4. Valve block rotation motor
5. Sideshift cylinders
6. Spreader motor
7. Valve block spreader motor
8. Twistlock cylinders
9. Control valve attachment
10. Filter hydraulic oil
11. Filter hydraulic oil (high pressure filter) ⊕
12. Solenoid valve engagement hydraulic pressure
13. Shuttle valve
14. Hydraulic oil pump 1 and 2

Hydraulic diagram top lift, tilt lock, controllable tilt and hydraulic levelling

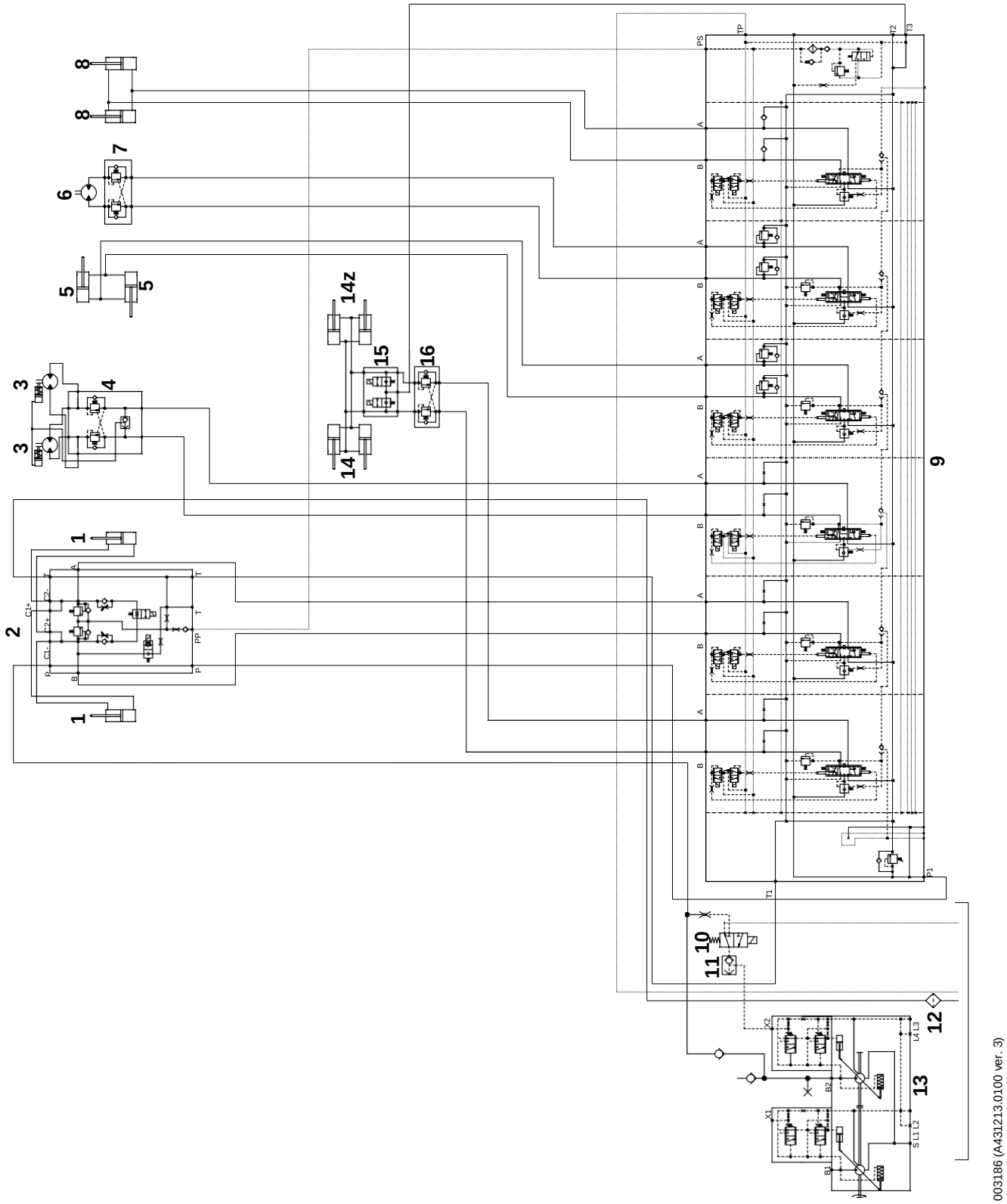

1. Tilt cylinder
2. Damping block
3. Rotation motor unit
4. Valve block rotation motor
5. Sideshift cylinders
6. Spreader motor
7. Valve block spreader motor
8. Twistlock cylinders
9. Control valve attachment
10. Solenoid valve engagement hydraulic pressure
11. Shuttle valve
12. Hydraulic oil filter
13. Hydraulic oil pump 1 and 2
14. Levelling cylinders
15. Valve block levelling cylinders
16. Over-centre valve levelling

Hydraulic diagram joystick steering

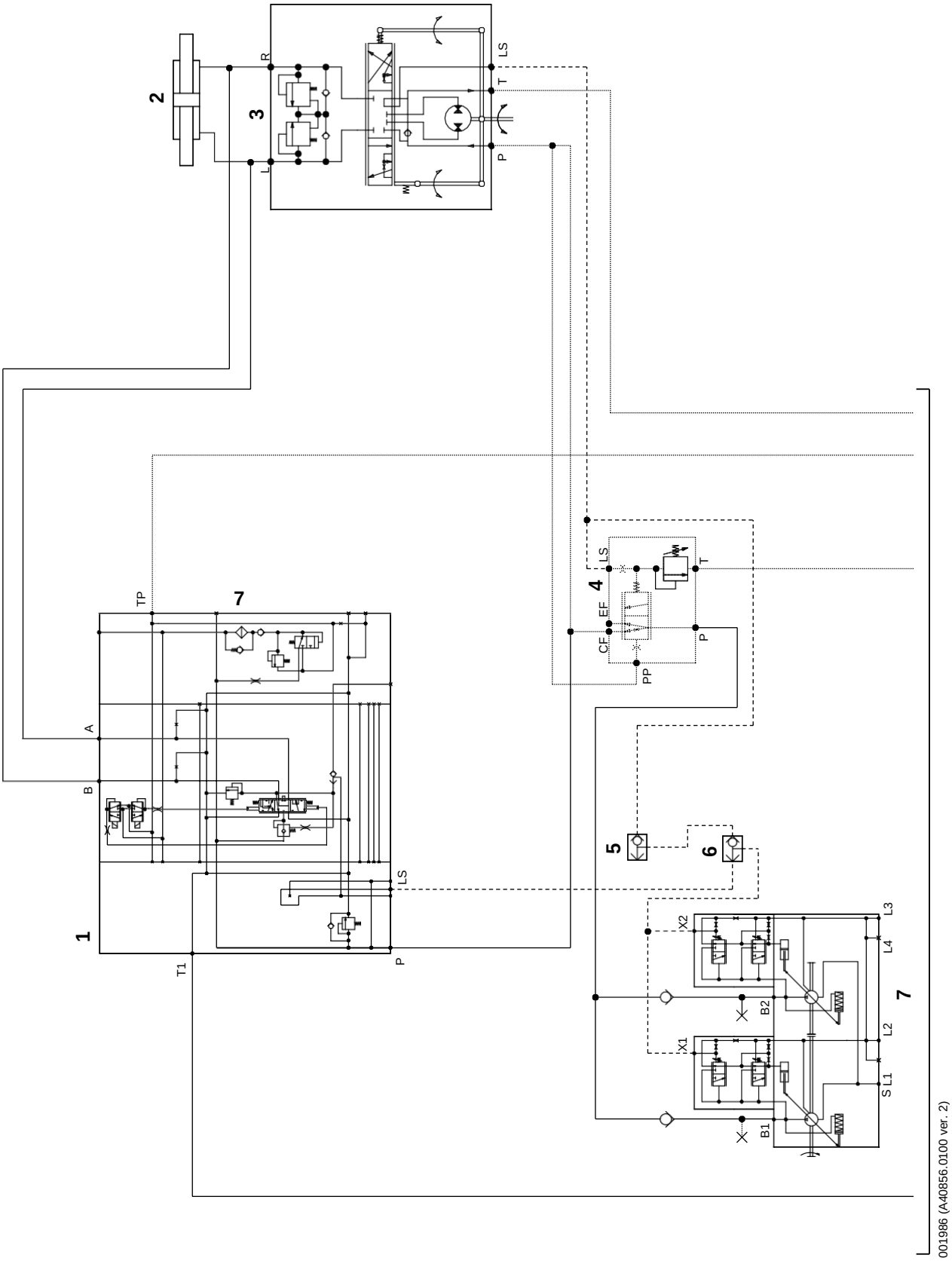

1. Control valve option frame
2. Steering cylinder
3. Steering valve
4. Priority valve
5. Shuttle valve
6. Shuttle valve joystick steering
7. Hydraulic oil pumps 3 and 4

Hydraulic diagram sliding cab

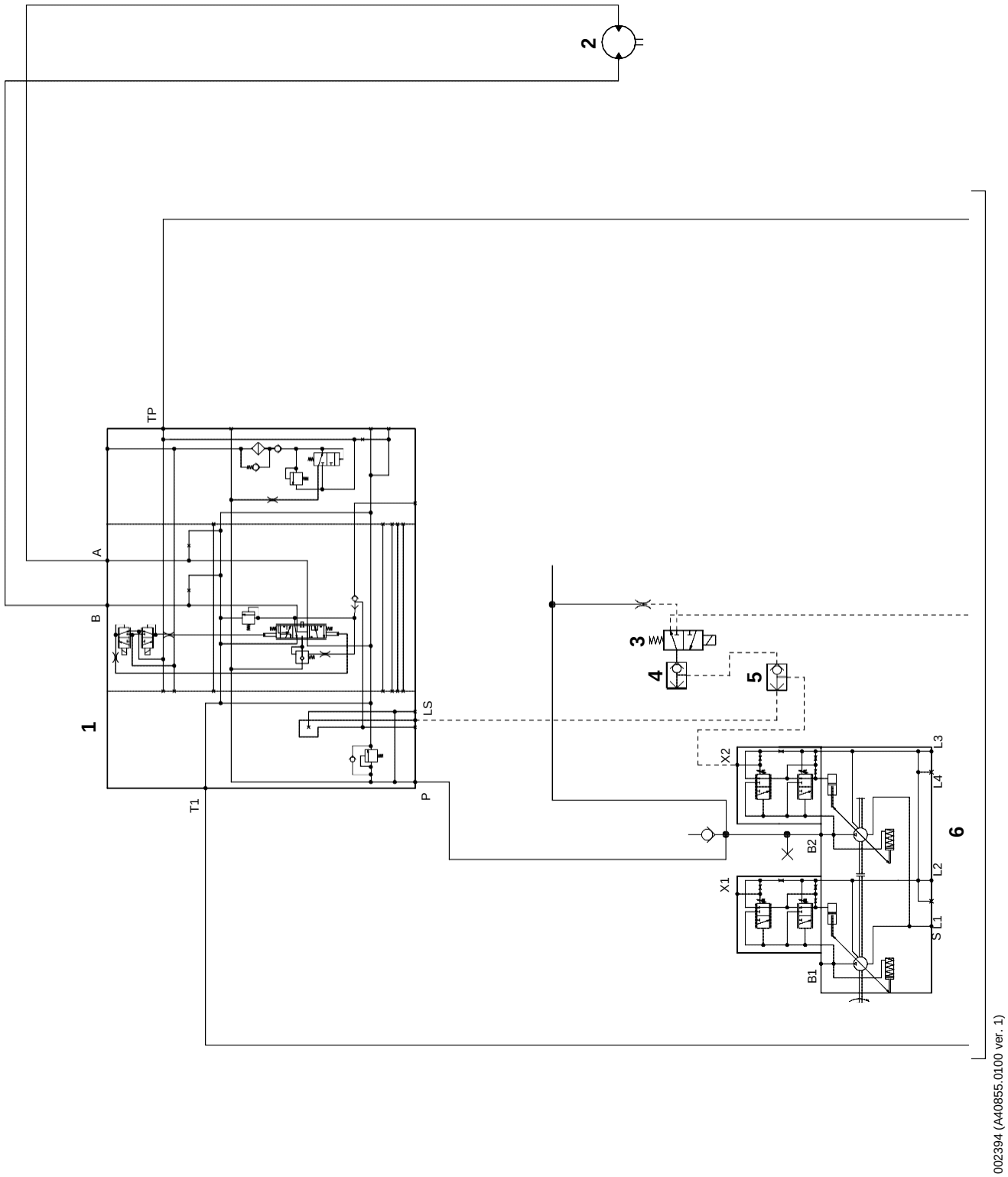

1. Control valve option frame
2. Hydraulic motor sliding cab
3. Solenoid valve engagement hydraulic pressure
4. Shuttle valve
5. Shuttle valve option
6. Hydraulic oil pump 1 and 2

Hydraulic diagram cab lift and support jacks

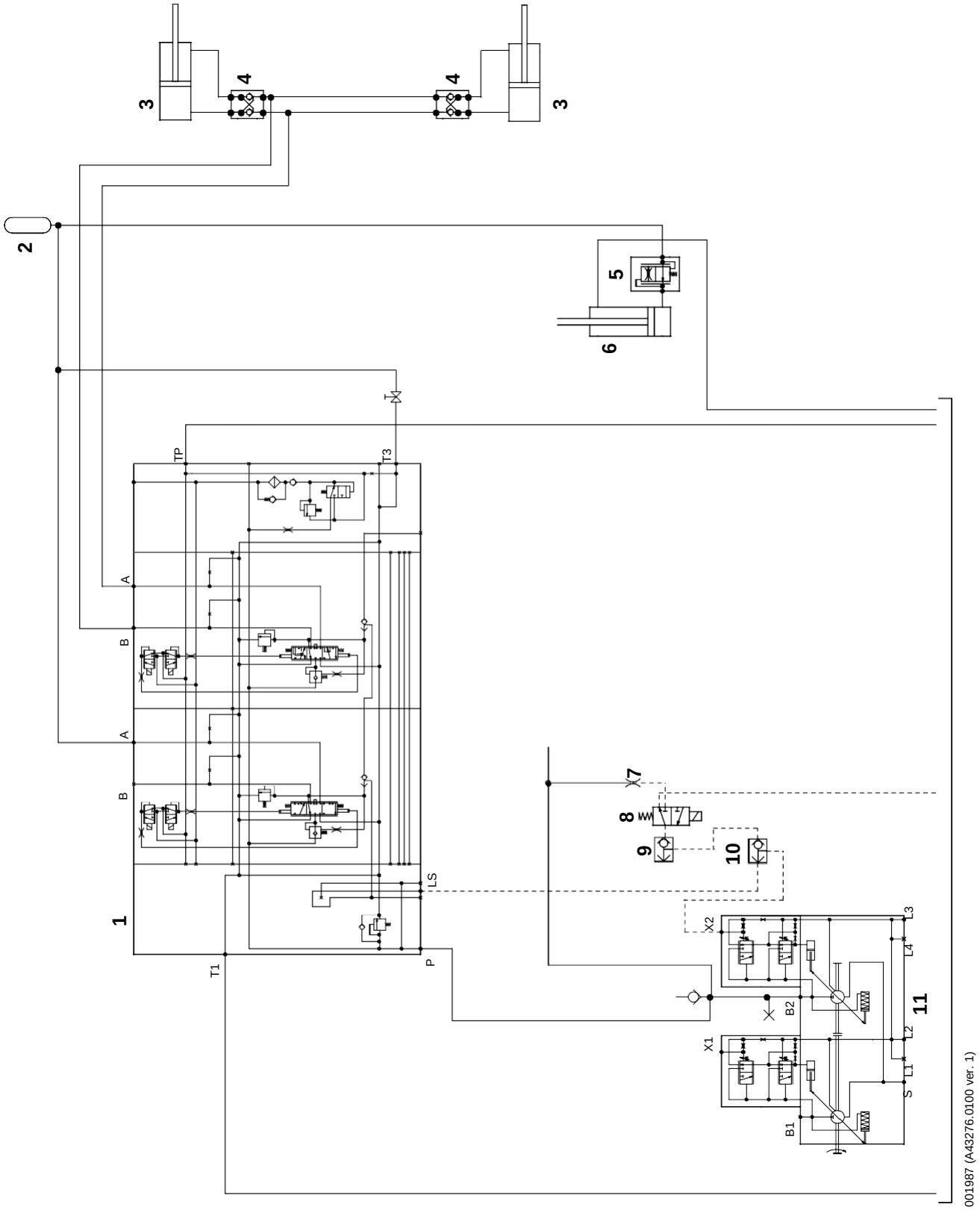

1. Control valve option frame
2. Accumulator
3. Hydraulic cylinder support jacks
4. Valve block support jacks
5. Load control valve
6. Hydraulic cylinder cab lift/lowering
7. Restriction
8. Valve block top lift hydraulics
9. Shuttle valve
10. Shuttle valve option frame
11. Hydraulic oil pump 1 and 2

Hydraulic diagram sliding cab and support jacks

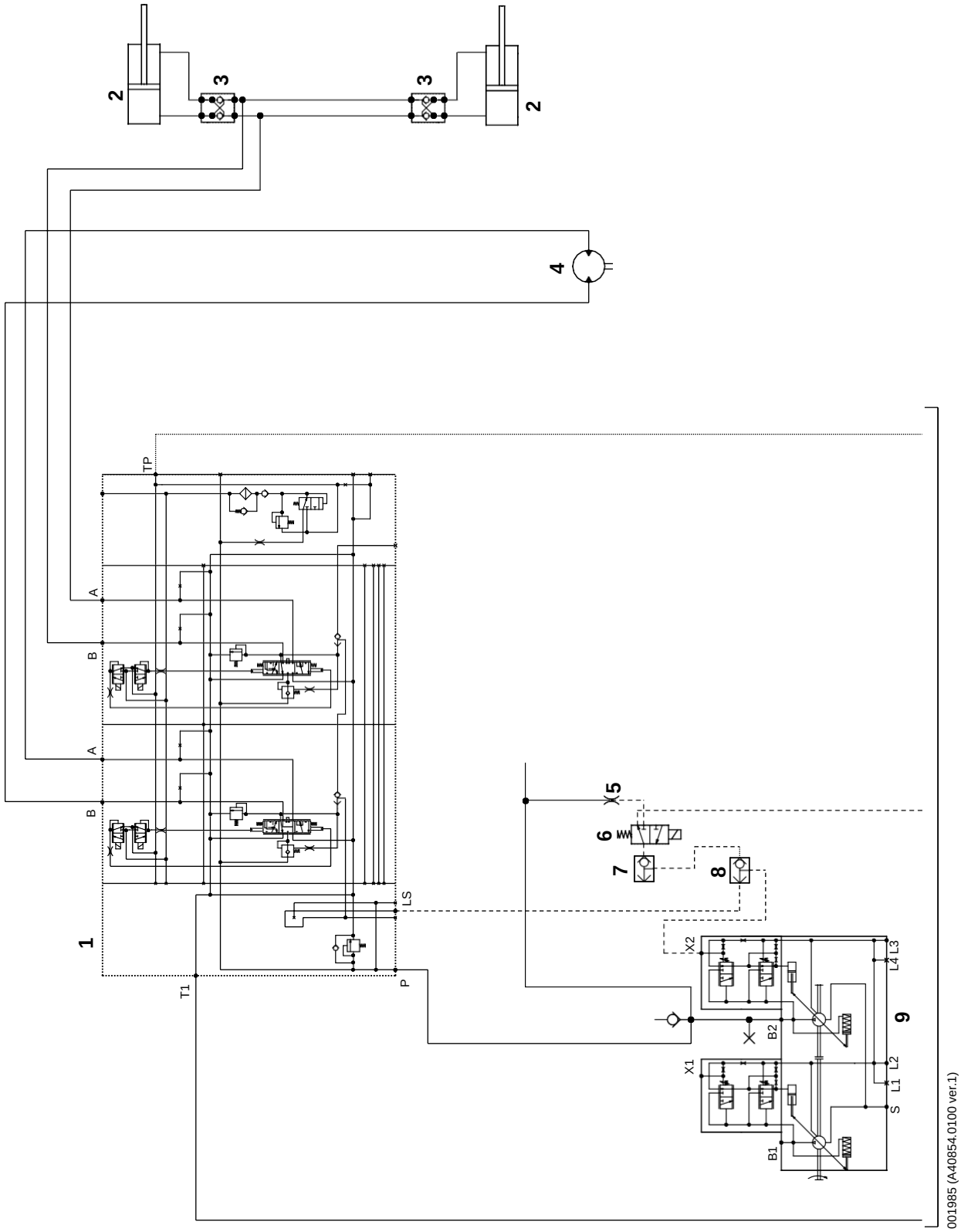

1. Control valve option frame
2. Hydraulic cylinder support jacks
3. Over-centre valve support jacks
4. Hydraulic motor sliding cab
5. Restriction
6. Solenoid valve engagement hydraulic pressure
7. Shuttle valve
8. Shuttle valve option
9. Hydraulic oil pump 1 and 2

Hydraulic diagram combi attachment (part 1 of 3)

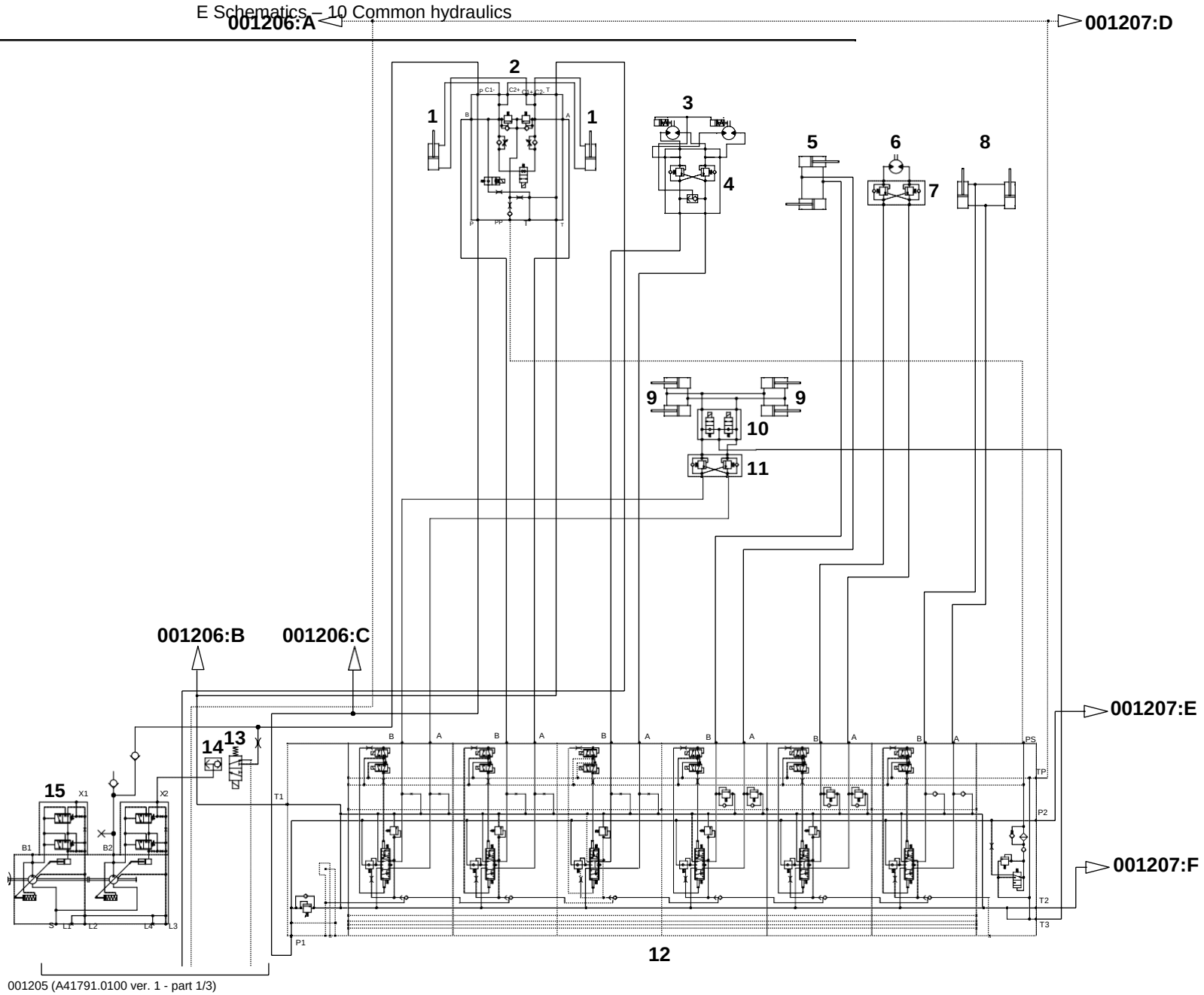

001205 (A41791.0100 ver. 1 - part 1/3)

20
E Schematics – 10 Common hydraulics

1. Tilt cylinder
2. Damping block
3. Rotation motor unit
4. Valve block rotation motor
5. Sideshift cylinders
6. Spreader motor
7. Valve block spreader motor
8. Twistlock cylinders
9. Valve block levelling cylinders
10. Over-centre valve levelling
11. Levelling cylinders
12. Control valve attachment
13. Solenoid valve engagement hydraulic pressure
14. Shuttle valve
15. Hydraulic oil pump 1 and 2

Hydraulic diagram combi attachment (part 2 of 3)

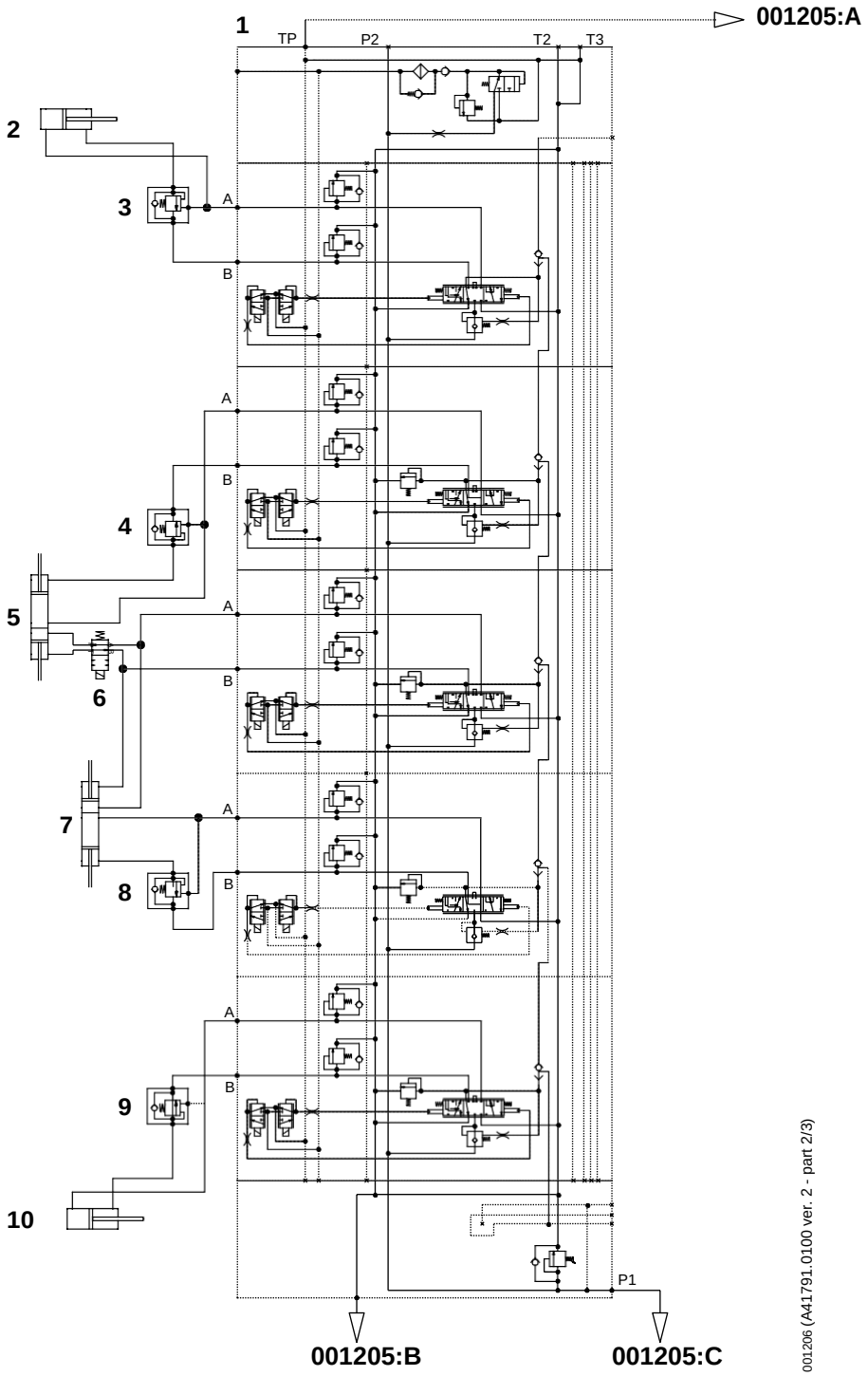

1. Control valve lift leg left
2. Lowering cylinder front lift leg
3. Valve block lowering front lift leg
4. Valve block lowering front lift leg
5. Clamping cylinder front lift leg
6. Valve block operating position front lift leg
7. Clamping cylinder rear lift leg
8. Valve block lowering rear lift leg
9. Valve block lowering rear lift leg
10. Lowering cylinder rear lift leg

Hydraulic diagram combi attachment (part 3 of 3)

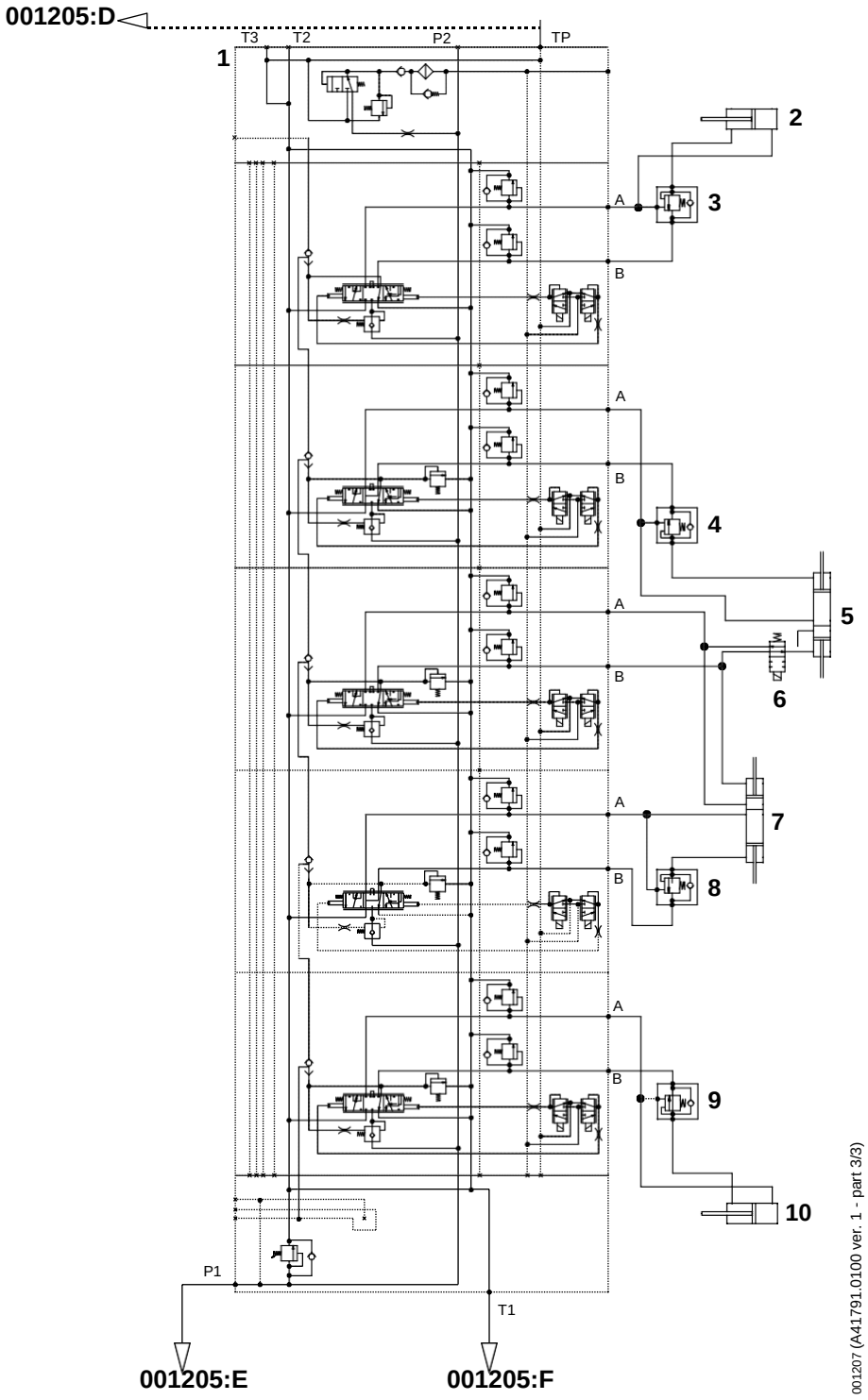

1. Control valve lift leg right
2. Lowering cylinder front lift leg
3. Valve block lowering front lift leg
4. Valve block lowering front lift leg
5. Clamping cylinder front lift leg
6. Valve block operating position front lift leg
7. Clamping cylinder rear lift leg
8. Valve block lowering rear lift leg
9. Valve block lowering rear lift leg
10. Lowering cylinder rear lift leg

11 Common electric

Wiring diagrams, description

A wiring diagram is divided into circuit name(drawing number) and consists of a number of pages.

The following is an explanation of the symbols used in circuit diagrams:

- X is connection terminal (followed by number)
- Designation 353-2

  353 is component designation (see *Component designations page 27* for description of respective component). 2 indicates that it is the second component of this type in the specific diagram.
- Sensors, etc. are drawn in resting position on circuit, powerless mode
- Colour cable harness:

  White cable = ground signal

  Grey cable = Other cable harness
- Fuse box, e.g., F58, means fuse box with 8 fuses
- An arrow symbol means a reference to another circuit diagram
- 20015.0001 wiring diagrams-item designations K-standard.

  K-standard 1: norms, rules

  K-standard 2: cable harness, general physical

  K-standard 5: Designation and marking systems, item designations wiring diagrams
- Ground connection:

  1: X37-A is ground connection in the electrical distribution box. A connection terminal for ground. Frame ground connection - connection terminal to chassis.

  2: Zero reference found in control units.

Component designations

The components in circuit diagrams have a prefix and number, the prefix describes the type of component, the number which component.

Component list with component number, prefix and designation is provided as an appendix after the circuit diagrams.

Prefix	Description
B	Converter from non-electric to electric signals or vice versa. Example: inductive sensor.
D	Binary element, delay unit, memory. Example: control unit.
E	White light. Example: work lights.
F	Protective device. Example: fuse.
G	Alternator, power supply device. Example: battery.
H	Signal device. Example horn, brake lights.
K	Relay, contactor. Example: power relay ignition.
M	Motor. Example: electric motor.
P	Measuring instrument, testing equipment. Example: operating hour gauge.
R	Resistor. Example: potentiometer.
S	Electric switch for control circuit, selector. Example: switch.
X	Outlet/socket, connecting device: Example: connection terminal
Y	Electrically controlled mechanical device: Example: solenoid valve, hydraulic valve.

Circuit diagrams, compilation

Circuit diagrams are provided as an appendix in the following order.

Sheet	Designation
0.0-1	Circuit Cross-references
0.0-2	Circuit Cross-references
0.0-3	Circuit Cross-references Opt.
0.0-4	Circuit Cross-references Attch.
0.0-5	Circuit Cross-references Attch.
0.0-6	Circuit Cross-references Combi attch.
1.0-1	Circuit Engine 1240&1250
1.0-2	Circuit Engine Cummins
1.0-3	Circuit Engine Cummins
1.1-1	Circuit Drivetrain
2.0-1	Circuit Dana TE 32000
2.0-2	Circuit Dana TE 32000
2.0-3	Circuit Dana TE 32000
2.1-1	Circuit Drivetrain
4.0-1	Circuit Brake system
4.0-2	Circuit Brake system
5.2-1	Circuit Steering joystick/mini-wheel
5.2-2	Circuit Steering joystick/mini-wheel
5.2-3	Circuit Steering joystick/mini-wheel and Combi attch.
5.2-4	Circuit Steering joystick/mini-wheel and Combi attch.
7.1-1	Circuit Joystick
7.2-1	Circuit Boom Up/Down
7.3-1	Circuit Boom In/Out
7.5-1	Circuit Spreading Valves
7.5-2	Circuit Spreading Auto
7.5-3	Circuit Spreading Sensors
7.6-1	Circuit Rotation
7.7-1	Circuit Tilt lock
7.7-2	Circuit Tilt + Levelling
7.7-3	Circuit Tilt + Levelling
7.9-1	Circuit Twistlocks

Sheet	Designation
7.9-2	Circuit Twistlocks
7.9-3	Circuit Combi Attch.
7.9-4	Circuit Combi Attch.
7.9-5	Circuit Combi Attch.
7.9-6	Circuit Combi Attch.
7.9-7	Circuit Combi Attch.
7.9-8	Circuit Combi Attch.
7.9-9	Circuit Combi Attch.
7.9-10	Circuit Combi Attch.
7.9-11	Circuit Combi Attch.
7.9-12	Circuit Combi Attch.
7.9-13	Circuit Combi Attch.
7.9-14	Circuit Combi Attch.
7.9-15	Circuit Overheight
7.9-16	Circuit Overheight
7.9-17	Circuit Combi Attch.
7.10-1	Circuit Hyd Support Jacks
7.10-2	Circuit Hyd Support Jacks
7.10-3	Circuit Printer
8.2-1	Circuit OP + Scales
8.2-2	Circuit OP + Scales
8.2-3	Circuit By-passing
8.2-4	Circuit RMI
9.1-1	Circuit Extra Sensor Instr.
9.1-2	Circuit Optional Equipment
9.1-3	Circuit Optional Equipment
9.1-4	Circuit Sensor Instr.
9.1-5	Circuit Option Cab
9.3-1	Circuit Cab Operator's Seat
9.3-2	Circuit Cab Operator's Seat
9.4-1	Circuit Climate System
9.4-2	Circuit Climate System
9.5-1	Circuit Wipers
9.6-1	Circuit Work Lights

Sheet	Designation
9.6-2	Circuit Extra Work Lights Attch.
9.6-3	Circuit Extra Work Lights Boom
9.6-5	Circuit Lighting
9.6-6	Circuit Lighting
9.6-7	Circuit Lighting
9.6-8	Circuit Lighting
9.6-9	Circuit Courtesy lighting
9.6-10	Circuit Extra Work Lights Frame
9.7-1	Circuit Alarms, Audible signals
9.7-2	Circuit Alarms, Audible signals
9.7-3	Circuit Direction Indicators, Flashing Hazard Lights
9.7-4	Circuit Back-up Alarm
9.8-1	Circuit Radio
9.9-9	Circuit Camera
9.10-1	Circuit Sliding/Vertical adjustable Cab
9.10-2	Circuit Cab Tilt
9.14	Circuit Central Lubrication
10.0-1	Circuit Hydraulics
11.5-1	Circuit Current
11.5-2	Circuit Current
11.5-3	Circuit Current
11.5-4	Circuit Current
11.5-5	Circuit Current Attch.
11.5-6	Circuit Current KDU OPT
11.5-7	Circuit 24 V
11.5-8	Circuit 12 V + Com. Radio
11.5-9	Circuit Current Attch.
11.6-3	Circuit CAN-BUS opt. Frame KDU
11.6-4	Circuit CAN-BUS AGG
11.6-5	Circuit CAN-BUS AGG
11.6-6	Circuit CAN-BUS AGG

'5)&400-450

.UHWVDU/:LULQJ

1U bQGULQJ		bQGULQJ QU	6LJQ.	'DWXP		6LJQ.	'DWXP/'DWH	+XYXGQU./3URMHFW QR.	
1R.	'HVLJQ FKDQJH	&KDQJH1R.		'DWH	3LWDG/UDZQ	7.%	050809	$50000.0600	
1	$GGHG 9.1B5 & 8.2B4 &;059-2.	060600	7.%	060615	.RQWUL/HVLJQ				+.*US: 6
77LOON/$GGHG 88WJnU/'HOHWHG 99DU/:DV					*RGN/SSSU	7.%	050809	.ODVV/&ODVV	

Kalmar

%HQIPQLQJ .UHWVDU '5)&400-450	3URGXNW/3URGXFW '5)&400-450	%ODG/6KHHW 0/
1DPH :LULQJ '5)&400-450	3LWQ.QU/'UDZLQJ 1R. $50001.0100	8WJnYD/,VVXH 05

.'8
)5217

+&+$66,6
-'797-)

	3LQ 1XPEHU	'UDZLQJ	)XQFWLRQ	7\SH
.'8 FRQWDFW .2	3RZHU	/11.5B4.%5		
	&$1	/11.6B3.'8		
	2:6			7HPSHUDWXUH,QSXW
	2:11	/11.5B4.$5		(PHUJHQF\ VWRS
	2:13	/4.0B1.(1	7(03. %5$.(2,/	7HPSHUDWXUH,QSXW
	2:15			5HRVWDW,Q
	2:16			'+

	3LQ 1XPEHU	'UDZLQJ	)XQFWLRQ	7\SH
.'8 FRQWDFW .1	1:1	/9.6B6.%1	+($' /,*+7 /()7	6$
	1:2	+&+$66,6/7.2B1.(2	%220 /,)7	1.5$
	1:3	+&+$66,6/7.2B1.%2	%220 /2:(5	1.5$
	1:4	/7.3B1.&2	%220 287	1.5$
	1:5	/7.3B1.&2	%220 ,1	1.5$
	1:6	+&+$66,6/8.2B2.'8	6(16256 2,/35(6685(	09 5HI
	1:7	/4.0B2.$1	3$5.,1* %5$.(	1.5$
	1:8	+&+$66,6/8.2B2.'1	6833/< 6(16256 2,/35(6685(	$QDORJ 5HI 59
	1:9	/9.7B3.'1	',5(&7,21 /()7)5217	1.5$
	1:10	/9.7B3.'1	',5(&7,21 5,*+7)5217	1.5$
	1:11	/9.1B3.%1	237,21)5217	'LJ ,Q / 1.5$
	1:12	/9.1B3.%1	237,21)5217	'LJ ,Q / 1.5$
	1:13	/9.6B6.(8	%5$.(/,*+76	$QDORJ ,Q 0-59
	1:14	/4.0B2.%1	&22/(5)$1 %5$.(	10$
	1:15	/9.6B6.%1	+($' /,*+7 5,*+7	6$
	1:16	+&+$66,6/7.2B1.(8	%220 /,)7	3:0
	1:17	+&+$66,6/7.2B1.%8	%220 /2:(5	3:0
	1:18	/7.3B1.&8	%220 287	3:0
	1:19	/7.3B1.&8	%220 ,1	3:0
	1:20	/4.0B1.'8	35(6685($&&808/$725 7$1.	$QDORJ ,Q 0-59

+&+$66,6
-'797-)

	3LQ 1XPEHU	'UDZLQJ	)XQFWLRQ	7\SH
.'8 FRQWDFW .1	1:21	+&+$66,6/8.2B2.(8	0-250EDU	$QDORJ ,Q 0-59
	1:22	+&+$66,6/8.2B2.)8	0-250EDU	$QDORJ ,Q 0-59
	1:23	+&+$66,6/8.2B2.(8	0-250EDU	$QDORJ ,Q 0-59
	1:24	+&+$66,6/8.2B2.(8	0-250EDU	$QDORJ ,Q 0-59
	1:25	/9.6B6.&1	6,'(326,7,21 /()7)5217	1.5$
	1:26	/9.1B3.$1	237,21)5217	'LJ ,Q / 1.5$
	1:27	/4.0B1.&8	3$5.,1* %5$.(	$QDORJ ,Q 0-59
	1:28	/9.14.&2	&(175$/ /8%5,&$7,21	6$
	1:29	/9.6B6.'1	6,'(326,7,21 5,*+7)5217	1.5$
	1:30	+&+$66,6/7.2B1.'2	%/2&.,1* /()7	2.5$
	1:31	+&+$66,6/7.2B1.&2	%/2&.,1* 5,*+7	2.5$
	1:32	+&+$66,6/7.2B1.(2	5(*(1(5$7,21 5,*+7	1.5$
	1:33	+&+$66,6/7.2B1.)2	5(*(1(5$7,21 /()7	1.5$
	1:34			1.5$
	1:35			1.5$
	1:36			'LJ ,Q / 1.5$
	1:37			'LJ ,Q / 1.5$
	1:38	/4.0B2.$8	3$5.,1* %5$.(	09 5HI
	1:39	/9.6B6.(1	%5$.(/,*+76	1.5$
	1:40	/9.1B3.&1	237,21)5217	'LJ ,Q / 1.5$
	1:41	/2.1B1.'7	'(&/8&+,1*	$QDORJ ,Q 0-59
	1:42	/9.6B6.$1	',33(' /,*+7 /()7)5217	6$

.'8
5($5

+&+$66,6
-'797-5

	3LQ 1XPEHU	'UDZLQJ	)XQFWLRQ	7\SH
.'8 FRQWDFW .2	3RZHU	/11.5B4.&5		
	&$1	/11.6B3.)1		
	2:6			7HPSHUDWXUH,QSXW
	2:11	/11.5B4.%5		(PHUJHQF\ VWRS
	2:13	/10.0B1.%2	+<'5$8/,& 7(03(5$785(	7HPSHUDWXUH,QSXW
	2:15	/9.1B4.'8	)8(/ /(9(/	5HRVWDW,Q
	2:16	+&+$66,6/11.5B1.)7	$/7(51$725	'+

	3LQ 1XPEHU	'UDZLQJ	)XQFWLRQ	7\SH
.'8 FRQWDFW .1	1:1	+&$%/9.6B1.(1	:25.,1* /,*+7 %220	6$
	1:2	+&+$66,6/8.2B2.$1	6(1625 67((5,1* $;/(	1.5$
	1:3	+&+$66,6/8.2B1.$1	32:(5 6833/< 6(16256	1.5$
	1:4	/7.3B1.(3	32:(5 6833/< 6(16256	1.5$
	1:5	/7.3B1.(3	%/2&.,1* 352-(&7,1*	1.5$
	1:6	+&+$66,6/8.2B1.'7	6(16256	09 5HI
	1:7	/9.6B7.'1	6,'(326,7,21 /()7 5($5	1.5$
	1:8	+&+$66,6/8.2B1.&1		$QDORJ 5HI 59
	1:9	/9.6B7.'1	6,'(326,7,21 5,*+7 5($5	1.5$
	1:10	/9.6B7.&1	5($5 /,*+7 /()7	1.5$
	1:11	+&+$66,6/8.2B2.%8	6(1625 67((5,1* $;/(, /()7 6,'(	'LJ ,Q / 1.5$
	1:12	+&+$66,6/8.2B2.%8	6(1625 67((5,1* $;/(, 5,*+7 6,'(	'LJ ,Q / 1.5$
	1:13	/9.1B3.&8	237,21 5($5	$QDORJ ,Q 0-59
	1:14	/10.0B1.%2	&22/,1*)$1 +<'5$8/,& 2,/	10$
	1:15	+&$%/9.6B1.'1	:25.,1* /,*+7 %220	6$
	1:16			3:0
	1:17			3:0
	1:18			3:0
	1:19			3:0
	1:20	/9.1B3.'8	237,21 5($5	$QDORJ ,Q 0-59

+&+$66,6
-'797-5

	3LQ 1XPEHU	'UDZLQJ	)XQFWLRQ	7\SH
.'8 FRQWDFW .1	1:21	+&+$66,6/8.2B1.&7	%220 $1*/(	$QDORJ ,Q 0-59
	1:22	+&+$66,6/8.2B1.'7	%220 326,7,21	$QDORJ ,Q 0-59
	1:23	/7.3B1.%8	'$03,1* %220 287	$QDORJ ,Q 0-59
	1:24			$QDORJ ,Q 0-59
	1:25	/9.6B7.&1	5($5 /,*+7 5,*+7	1.5$
	1:26	/7.3B1.$8	'$03,1* %220 ,1	'LJ ,Q / 1.5$
	1:27	/9.1B3.'8	237,21 5($5	$QDORJ ,Q 0-59
	1:28	/9.6B7.$1	5(9(56,1* /,*+7 /()7 5($5	6$
	1:29	/9.7B3.(1	',5(&7,21 /()7 5($5	1.5$
	1:30	/9.7B4.%1	5(9(56,1* $/$50	2.5$
	1:31	/7.6B1.'1	$&7,9$7,21 2) 723/,)7 +<'5$8/,&6	2.5$
	1:32	/9.6B7.%1	%5$.(/,*+7 /()7 5($5	1.5$
	1:33	/9.6B7.&1	%5$.(/,*+7 5,*+7 5($5	1.5$
	1:34	+&$%/9.4B2.(1	0$*1(7,& &/87&+, &2035(6625	1.5$
	1:35	+&$%/9.4B2.)1	0$*1(7,& &/87&+, &2035(6625	1.5$
	1:36	/2.1B1.(2	5HOD\, VWDUWLQJ VROHQRLG	'LJ ,Q / 1.5$
	1:37	+&$%/9.4B1.$8	35(6685(5()5,*(5$17	'LJ ,Q / 1.5$
	1:38	+&+$66,6/8.2B2.%8	6(1625 67((5,1* $;/(	09 5HI
	1:39	/9.7B3.(1	',5(&7,21 5,*+7 5($5	1.5$
	1:40	/7.3B1.'2	,17(55837,21 3803	'LJ ,Q / 1.5$
	1:41	/9.1B3.(8	237,21 5($5	$QDORJ ,Q 0-59
	1:42	/9.6B7.%1	5(9(56,1* /,*+7 5,*+7 5($5	6$

5HI. 5XWD 6T.	1U bQGULQJ 1R.	'HVLJQ FKDQJH	bQGULQJ QU &KDQJH1R.	6LJQ.	'DWXP 'DWH		6LJQ.	'DWXP/'DWH	+XYXGQU./3URMHFW QR.	
						5LWDG/UDZQ	7.%	050511	$50000.0600	
	1	$GGHG 9.1B5 & 8.2B4 & ;059-2.	060600	7.%	060615	.RQWU/'HVLJQ				+.*US: 6
		77LOON/$GGHG 88WJnU/'HOHWHG 99DU/:DV				*RGN/$SSU	7.%	050511	.ODVV/&ODVV	

%HQlPQLQJ	3URGXNW/3URGXFW	%ODG/6KHHW
.UHWV .RUVUHIHUHQVHU	'5)& 400-450	0.0B1/
1DPH: :LULQJ &URVV 5HIHUHQFHV	5LWQ.QU./'UDZLQJ 1R.: $50001.0100	8WJnYD/,VVXH: 05

+&$%
-'790-1

.1	1:1-1:6	/11.5B4.'5		
.2	2:1 2:2 2:3 2:4 2:5 2:6 2:7 2:8	+&$%/9.5B1.&1 +&$%/9.4B2.'1 +&$%/9.4B2.(1 +&$%/9.5B1.'1 /9.6B5.(1 +&$%/9.6B1.'1 +&$%/9.6B1.&1 +&$%/9.4B2.'8	)5217 :,3(5 +($7,1*)$1 02725, 5(&,5&8/$7,21 5($5 :,3(5 527. %($&21 :25.,1* /,*+7 &$% :25.,1* /,*+7 &$% +($7,1*)$1	5$ 3:0 1,5$ 5$ 5$ 5$ 5$ 6XSSO\
.4	4:1 4:2 4:3 4:4 4:5 4:6 4:7	+&$%/9.4B2.&1 +&$%/9.4B2.%1 +&$%/9.4B2.%1 +&$%/9.4B2.$1 +&$%/9.4B2.%1 +&$%/9.4B2.%8 +&$%/9.4B2.%8	:$7(5 9$/9(:$7(5 9$/9('5$8*+7 9$/9('5$8*+7 9$/9('5$8*+7 & :$7(5 9$/9('5$8*+7 & :$7(5 9$/9('5$8*+7 9$/9(	0.5$ 0.5$ 0.5$ 0.5$ $QDORJ UHIHUHQFH 59 09 UHIHUHQFH $QDORJ ,QSXW
	4:8 4:9 4:10 4:11 4:12 4:13 4:14	+&$%/9.4B1.'8 +&$%/9.4B1.)8 +&$%/9.4B1.(8 +&$%/9.4B1.(8 +&$%/9.4B1.)1 +&$%/9.5B1.&8 +&$%/9.5B1.&1	7(03. ,1'225 7(03. $0%,(17 7(03.)$1 $,5 '(,&,1* 6(1625 7(03 6(16256 &$%)5217 :,3(5)5217 :,3(5	5HRVWDW LQ 5HRVWDW LQ 5HRVWDW LQ 5HRVWDW LQ 09 UHIHUHQFH ,QSXW 249 UHIHUHQFH
.5	5:1 5:2 5:3 5:4 5:5 5:6 5:7	/9.1B2.%1 /9.6B9.%7 +&$%/9.5B1.)8 /9.7B3.%1 /9.7B3.%8 +&$%/9.4B1.%8	'(&/8&+,1*, 237,21 237,21, 67(3 ,1 /,*+7 :$6+(5 522)&5($5 6833/< 6:,7&+ /,*+76 +$=$5')$1 63(('	249 UHIHUHQFH ,QSXW 3:0 2XWSXW 3:0 2XWSXW 2XWSXW ,QSXW $QDORJ ,QSXW
	5:8 5:9 5:10 5:11 5:12 5:13 5:14	+&$%/9.4B1.&8 +&$%/9.4B1.%8 +&$%/9.4B1.'8 +&$%/9.4B1.$1 /1.1B1.%8 /1.1B1.%1	7(0(3(5$785('5$8*+7 9$/9(&/,0$7(&21752/ &/,0$7(&21752/ *1' 3('$/6 6833/< 3('$/6	$QDORJ ,QSXW $QDORJ ,QSXW 09 UHIHUHQFH $QDORJ UHIHUHQFH 59 09 UHIHUHQFH $QDORJ UHIHUHQFH 59 ,QSXW

.6	6:1 6:2 6:3 6:4 6:5 6:6 6:7 6:8	+&$%/9.4B1.%1 +&$%/9.6B1.%7 +&$%/9.6B1.$7 /9.6B5.&8 /9.6B5.%8 +&$%/9.3B1.%7 /9.1B2.(8 /9.1B2.'8	,167. ,//80,1$7,21 6:,7&+ /,*+76 $77. 6:,7&+ /,*+76 %220 527. %($&21 0$,1 /,*+7 6($7 +($7(5 237,21 237,21	3:0 ,QSXW ,QSXW ,QSXW ,QSXW ,QSXW ,QSXW ,QSXW
	6:9 6:10 6:11 6:12 6:13 6:14 6:15 6:16	/9.1B2.%8 +&$%/9.6B1.&7 /1.1B1.(8 /2.1B1.%7 /2.1B1.'7	237,21 6:,7&+ /,*+76 &$% $&&(/(5$725 3('$/ %5$.(3('$/ / ,1&+,1* '(&/8&+,1*	,QSXW ,QSXW $QDORJ ,QSXW $QDORJ ,QSXW 09 UHIHUHQFH ,QSXW $QDORJ ,QSXW $QDORJ ,QSXW
.7	7:1 7:2 7:3 7:4 7:5 7:6 7:7 7:8	/7.1B1.'1 /7.1B1.&1 /7.1B1.&8 /7.1B1.&8 /7.1B1.'8 /7.1B1.'8 /7.1B1.&1	*1' -2<67,&. -2<67,&. -2<67,&. -2<67,&. -2<67,&. -2<67,&. -2<67,&.	09 UHIHUHQFH $QDORJ UHIHUHQFH 59 $QDORJ ,QSXW $QDORJ ,QSXW $QDORJ ,QSXW $QDORJ ,QSXW 0.5$ 0.5$
	7:9 7:10 7:11 7:12 7:13 7:14 7:15 7:16	/7.1B1.%1 /7.10B1.$1 /7.1B1.$1 /7.1B1.$8 /7.1B1.$8 /7.1B1.%8 /7.1B1.%8	-2<67,&. 6833257 -$&. '2:1 -2<67,&. -2<67,&. -2<67,&. -2<67,&. -2<67,&.	0.5$,QSXW 0.5$ 249 UHIHUHQFH ,QSXW ,QSXW ,QSXW ,QSXW
.8	8:1 8:2 8:3 8:4 8:5 8:6 8:7 8:8	/7.1B1.%8 /7.1B1.&8 /8.2B3.$7 +&$%/11.5B3.$8 /4.0B1.$8 /9.10B1.$7 /9.10B1.$7 /7.10B1.&8	-2<67,&. -2<67,&. 29(5 5,'((0(5*(1&< 6723 3$5.,1* %5$.(6/,',1* &$% 6/,',1* &$% 6833257 -$&.6	,QSXW ,QSXW ,QSXW ,QSXW ,QSXW ,QSXW ,QSXW ,QSXW
	8:9 8:10 8:11 8:12 8:13 8:14 8:15 8:16	/7.10B1.%8 /7.5B3.$7 /9.1B2.&8 /7.9B2.$7 /4.0B1.$8 /8.2B3.&7 /9.10B1.%2 +&$%/11.5B3.$1	6833257 -$&.6 30-35 6723 237,21 7:,67/2&. 3$5.,1* %5$.(29(5 5,'(6833/< 6:,7&+ 6833/< 6:,7&+	,QSXW ,QSXW ,QSXW ,QSXW ,QSXW ,QSXW 1.5$ 249 UHIHUHQFH

.9	9:1 9:2 9:3 9:4 9:5	+&$%/7.9B3.$2 +&$%/7.9B3.%2 +&$%/7.9B3.$7 +&$%/7.9B3.$7 +&$%/7.9B3.&7	6833/< 6:,7&+ /(*6 6833/< 6:,7&+ /(*6)5217 /(*6 '2:1)5217 /(*6 '2:1 5($5 /(*6 '2:1	249 UHIHUHQFH 1.5$,QSXW ,QSXW ,QSXW
	9:6 9:7 9:8 9:9 9:10	+&$%/7.9B3.%7 +&$%/7.9B3.'7 +&$%/7.9B3.(7 +&$%/7.9B3.&7	*1'6:,7&+/(*6 &/$03./5/($6,1* /(*6 &/$03./5/($6,1* /(*6 5($5 /(*6 '2:1	09 UHIHUHQFH 249 UHIHUHQFH $QDORJ ,QSXW $QDORJ ,QSXW ,QSXW
.10	10:1 10:2 10:3 10:4 10:5 10:6 10:7 10:8	/9.10B1.%2 /9.10B1.&2 +&$%/9.4B2.&8 /9.10B1.&7 +&$%/9.3B1.&2 /9.6B3.$2	'$03,1* '$03,1* :$7(5 9$/9('$03,1* 6($7 +($7(5 5(/$< :25.. /,*+7	249 UHIHUHQFH 09 UHIHUHQFH 0.5$ $QDORJ ,QSXW 0.5$,QSXW 0.5$ 0.5$
	10:9 10:10 10:11 10:12 10:13 10:14 10:15 10:16	/9.1B4.&1 +&$%/11.5B3.'1 +&$%/11.5B3.'1 +&$%/11.5B3.&1 +&$%/9.5B1.(1 +&$%/9.5B1.(1 +&$%/11.5B3.'1	+285 0(7(5 & $,5 6($7 -.1 -.2 -.3 :$6+(5 522) :,3(5 -.4	0.5$ 0.5$ 0.5$ 0.5$ 3$ 1.5$,QSXW 0.5$
.11	11:1 11:2 11:3 11:4 11:5 11:6 11:7	+&$%/11.5B3.&8 /9.6B8.%8 /9.6B8.%8 /9.6B9.$7 /9.6B8.'1 6HH .13	,*1,7,21 6:,7&+ ,17(5,25 /,*+71,1* %5$.,1* &$% '225 237,21, 67(3 ,1 /,*+7 ,17(5,25 /,*+7 5HGXQGDQW SRZHU	,QSXW ,QSXW ,QSXW ,QSXW 1.5$ 0.5$ 'LJ RXW
	11:8 11:9 11:10 11:11 11:12 11:13 11:14	6HH .13 6HH .13 6HH .13 /9.7B1.%2 /9.7B1.&2 +&$%/11.5B3.(8 /9.7B1.&8	5HGXQGDQW SRZHU 5HGXQGDQW SRZHU 5HGXQGDQW SRZHU +251 6($7 6:,7&+)(('%$&. .2 6($7 6:,7&+	'LJ RXW 'LJ RXW 'LJ RXW 3$ 249 UHIHUHQFH ,QSXW ,QSXW
.12	12:1 12:2 12:3 12:4	+&$%/9.5B1.'1 +&$%/9.5B1.'8 +&$%/9.5B1.(1 +&$%/9.5B1.(8	5($5:,3(5 5($5:,3(5 522) :,3(5 522) :,3(5	249 UHIHUHQFH ,QSXW 249 UHIHUHQFH ,QSXW
.13	13:1-13:12	/11.6B3.'6	6833/< & &$1-%86	&$1 ZLWK SRZHU

5HY	1U bQGULQJ	bQGULQJ QU	6LJQ	'DWXP		6LJQ	'DWXP/'DWH	+XYXGULWQLQJ/'RFXPHQW QR.
5HYG 6T.	1R. 'HVLJQ FKDQJH	&KDQJH 1R.		'DWH	3LWDG/'UDZQ	7.%	050511	$50000.0600
1	1 $GGHG 9.1B5 & 8.2B4 & ;059-2.	060600	7.%	060615	.RQWUROO/&KHFNHG			
	77LOON/$GGHG 88WJnU/'HOHWHG 99DU/:DV				*RGN/$SSU	7.%	050511	.DOPDU &DUJRWHF

+*US: 6

Kalmar

%HQlPQLQJ .UHWV .RUVUHIHUHQVHU
1DPH :LULQJ &URVV 5HIHUHQFHV
'5)& 400-450
$50001.0100
0.0B2/
05

.'8
237,21

+&+$66,6
-'797-2

.'8 FRQWDFW .2	3LQ 1XPEHU	'UDZLQJ	)XQFWLRQ	7\SH
	3RZHU	/11.5B6.%5		
	&$1	/11.6B3.'8		&$1-%86
	2:6			7HPSHUDWXUH ,QSXW
	2:11	/11.5B6.$5		(PHUJHQF\ VWRS
	2:13			7HPSHUDWXUH ,QSXW
	2:15			5HRVWDW ,Q
	2:16			'+

+&+$66,6
-'797-2

.'8 FRQWDFW .1	3LQ 1XPEHU	'UDZLQJ	)XQFWLRQ	7\SH
	1:1			6$
	1:2	/9.10B1.'2	&$%)25:$5'/83	1.5$
	1:3	/9.10B1.(2	&$% 5(9(56(/'2:1	1.5$
	1:4	/5.2B2.$2	0,&52//(9(5 67((5,1* /()7	1.5$
	1:5	/5.2B2.%2	0,&52//(9(5 67((5,1* 5,*+7	1.5$
	1:6	/7.10B2.(8	6(16256 6833257 -$&.	09 5HI
	1:7		7,/7 &$%, 81/2$' +<'5$8/,& 2,/	1.5$
	1:8			$QDORJ 5HI 59
	1:9	/7.10B2.$1	6833/< 6(16256 6833257 -$&.	1.5$
	1:10	/9.10B1.&2	&$% /2: 326,7,21	1.5$
	1:11			'LJ ,Q / 1.5$
	1:12			'LJ ,Q / 1.5$
	1:13	/7.10B2.$8	/()7 6833257 -$&., 833(5 326	$QDORJ ,Q 0-59
	1:14			10$
	1:15			6$
	1:16	/9.10B1.'7	&$%)25:$5'/83	3:0
	1:17	/9.10B1.(7	&$% 5(9(56(/'2:1	3:0
	1:18	/5.2B2.$8	0,&52//(9(5 67((5,1* /()7	3:0
	1:19	/5.2B2.%8	0,&52//(9(5 67((5,1* 5,*+7	3:0
	1:20	/7.10B2.%8	/()7 6833257 -$&., /2:(5 326	$QDORJ ,Q 0-59

.'8 FRQWDFW .1	3LQ 1XPEHU	'UDZLQJ	)XQFWLRQ	7\SH
	1:21		&$% /2: 326,7,21	$QDORJ ,Q 0-59
	1:22		7,/7 &$%, 81/2$' +<'5$8/,& 2,/	$QDORJ ,Q 0-59
	1:23			$QDORJ ,Q 0-59
	1:24			$QDORJ ,Q 0-59
	1:25		7,/7 &$%, 81/2$' +<'5$8/,& 2,/	1.5$
	1:26			'LJ ,Q / 1.5$
	1:27	/7.10B2.&8	5,*+7 6833257 -$&., 833(5 326	$QDORJ ,Q 0-59
	1:28			6$
	1:29			1.5$
	1:30	/7.10B1.&1	6833257 -$&.6 83	2.5$
	1:31	/7.10B1.'1	6833257 -$&.6 '2:1	2.5$
	1:32		7,/7 &$% 83	1.5$
	1:33		7,/7 &$% '2:1	1.5$
	1:34			1.5$
	1:35			1.5$
	1:36			'LJ ,Q / 1.5$
	1:37			'LJ ,Q / 1.5$
	1:38		&$% /2: 326,7,21	09 5HI
	1:39			1.5$
	1:40			'LJ ,Q / 1.5$
	1:41	/7.10B2.'8	5,*+7 6833257 -$&., /2:(5 326	$QDORJ ,Q 0-59
	1:42			6$

5HI. 5WD 6T.	1U bQGULQJ	bQGULQJ QU	6LJQ.	'DWXP		6LJQ.	'DWXP/'DWH	+XYXGQU./3URMHFW QR.	
1R.	'HVLJQ FKDQJH	&KDQJH 1R.		'DWH	5LWDG/'UDZQ	7.%	050511	$50000.0600	
1	$GGHG 9.1B5 & 8.2B4 & ;059-2.	060600	7.%	060615	.RQVWU/'HVLJQ				+*US: 6
	77LOON/$GGHG 88WJnU/'HOHWHG 99DU/:DV				*RGN/$SSU	7.%	050511	.ODVV/&ODVV	

%HQlPQLQJ: .UHWV .RUVUHIHUHQVHU 2SW

1DPH: :LULQJ &URVV 5HIHUHQFHV 2SW

3URGXNW/3URGXFW: '5)& 400-450

%ODG/6KHHW: 0.0B3/

5LWQLQJV/'UDZLQJ 1R.: $50001.0100

8WJnYD/,VVXH: 05

.'8
77&+0(17

+%220
-'791-1

	3LQ 1XPEHU	'UDZLQJ	)XQFWLRQ	7\SH
'8 FRQWDFW .2	3RZHU	/11.5B5.&5		
	&$1	/11.6B4.%4		
	2:6			7HPSHUDWXUH ,QSXW
	2:11	/11.5B5.%5		(PHUJHQF\ VWRS
	2:13			7HPSHUDWXUH ,QSXW
	2:15			5HRVWDW ,Q
	2:16			'+

+%220
-'791-1

	3LQ 1XPEHU	'UDZLQJ	)XQFWLRQ	7\SH
'8 FRQWDFW .1	1:1	+&$%/9.6B1.(1	:25.,1* /,*+7 77&+0(17	6$
	1:2	/7.6B1.$1	527$7,21 &.:.	1.5$
	1:3	/7.6B1.%1	527$7,21 &.&.:.	1.5$
	1:4	+77&+0(17/7.5B1.%1	20-40 287	1.5$
	1:5	+77&+0(17/7.5B1.%1	40-20 ,1	1.5$
	1:6	/7.9B2.&7	,1',&$7,21 /$036	09 5HI
	1:7	/7.7B1.%2	7,/7 /2&.	1.5$
	1:8			$QDORJ 5HI 59
	1:9	/7.7B1.%2	7,/7 /2&.	1.5$
	1:10	/7.5B3.&1	32:(5 6833/< 6(16256	1.5$
	1:11	/7.6B1.&8	527$7,21 6723	'LJ ,Q / 1.5$
	1:12	/7.5B3.'7	'$03,1* 20-40	'LJ ,Q / 1.5$
	1:13	+77&+0(17/7.9B1.&8	$/,*10(17)5217	$QDORJ ,Q 0-59
	1:14	/9.14.'2	&(175$/ /8%5,&$7,21, $77.	10$
	1:15	+&$%/9.6B1.)1	:25.,1* /,*+7 77&+0(17	6$
	1:16	/7.6B1.$8	527$7,21 &.:.	3:0
	1:17	/7.6B1.%8	527$7,21 &.&.:.	3:0
	1:18	+77&+0(17/7.5B1.%8	20-40 287	3:0
	1:19	+77&+0(17/7.5B1.%8	40-20 ,1	3:0
	1:20	/7.5B3.(7	30-35 6723	$QDORJ ,Q 0-59

	3LQ 1XPEHU	'UDZLQJ	)XQFWLRQ	7\SH
'8 FRQWDFW .1	1:21	+&+$66,6/8.2B2.&8	0($685(32,17 6&$/(	$QDORJ ,Q 0-59
	1:22	+77&+0(17/7.9B1.'8	81/2&.(' 7:,67/2&.	$QDORJ ,Q 0-59
	1:23	+77&+0(17/7.9B1.(8	/2&.(' 7:,67/2&.	$QDORJ ,Q 0-59
	1:24	+77&+0(17/7.9B1.%8	/2&.(' 7:,67/2&.	$QDORJ ,Q 0-59
	1:25	/7.9B2.%1	81/2&.(' 7:	1.5$
	1:26	+77&+0(17/7.9B1.&8	$/,*10(17 5($5	'LJ ,Q / 1.5$
	1:27	+77&+0(17/7.9B1.(8	$/,*10(17 5($5	$QDORJ ,Q 0-59
	1:28	/7.5B2.%1	:$51,1* $/$50 $872 635($',1*	6$
	1:29	/7.9B2.&1	$/,*10(17	1.5$
	1:30	+77&+0(17/7.5B1.'1	6,'(6+,)7 5,*+7	2.5$
	1:31	+77&+0(17/7.5B1.&1	6,'(6+,)7 /()7	2.5$
	1:32	/7.9B2.'1	/2&. 7:	1.5$
	1:33	/7.9B2.'1	81/2&. 7:	1.5$
	1:34			1.5$
	1:35			1.5$
	1:36			'LJ ,Q / 1.5$
	1:37			'LJ ,Q / 1.5$
	1:38	/7.5B3.&7	6(16256	09 5HI
	1:39	/7.9B2.&1	/2&.(' 7:	1.5$
	1:40	+77&+0(17/7.9B1.$8	$/,*10(17)5217	'LJ ,Q / 1.5$
	1:41	+77&+0(17/7.9B1.%8	81/2&.(' 7:,67/2&.	$QDORJ ,Q 0-59
	1:42	+77&+0(17/9.6B2.%2	(;75$:25.,1* /,*+7	6$

5HI. 5XWD 6T.	1U bQGULQJ 1R.	'HVLJQ FKDQJH	bQGULQJ QU &KDQJH1R.	6LJQ.	'DWXP 'DWH
	1	$GGHG 9.1B5 & 8.2B4 & ;059-2.	060600	7.%	060615
		77LOON/$GGHG 88WJnU/'HOHWHG 99DU/:DV			

	6LJQ.	'DWXP/'DWH	+XYXGQU./3URMHFW QR.
5LWDG/'UDZQ	7.%	050511	$50000.0600
.RQWU/'HVLJQ			
*RGN/$SSU	7.%	050511	.ODVV/&ODVV

+.*US: 6

Kalmar

%HQPQLQJ	3URGXNW/3URGXFW	%ODG/6KHHW
.UHWV .RUVUHIHUHQVHU $JJ	'5)& 400-450	0.0B4/
1DPH	**5LWQ.QU./ 'UDZLQJ 1R.**	**8WJnYD/,VVXH**
:LULQJ &URVV 5HIHUHQFHV $WW	$50001.0100	05

+%220
-'791-2

'8 FRQWDFW .2	3LQ 1XPEHU	'UDZLQJ	)XQFWLRQ	7\SH
	3RZHU	/11.5B9.&5		
	&$1	/11.6B5.'7		
	2:6			7HPSHUDWXUH ,QSXW
	2:11	/11.5B9.&4		(PHUJHQF\ VWRS
	2:13			7HPSHUDWXUH ,QSXW
	2:15			5HVLVWDW ,Q
	2:16			'+

+%220
-'791-2

'8 FRQWDFW .1	3LQ 1XPEHU	'UDZLQJ	)XQFWLRQ	7\SH
	1:1			6$
	1:2	/7.7B2.$2	/(9(//,1* 5,*+7	1.5$
	1:3	/7.7B2.%2	/(9(//,1* /()7	1.5$
	1:4	/7.7B2.&2	7,/7 287	1.5$
	1:5	/7.7B2.&2	7,/7 ,1	1.5$
	1:6		/(9(//,1*	09 5HI
	1:7			1.5$
	1:8			$QDORJ 5HI 59
	1:9	/7.9B16.(1	29(5+(,*+7/(*833(5326	1.5$
	1:10	/7.9B16.&1	29(5+(,*+7/(*833(5326	1.5$
	1:11			'LJ ,Q / 1.5$
	1:12			'LJ ,Q / 1.5$
	1:13	/7.9B16.&8	29(5+(,*+7/(*833(5326	$QDORJ ,Q 0-59
	1:14			10$
	1:15			6$
	1:16	/7.7B2.$7	/(9(//,1* 5,*+7	3:0
	1:17	/7.7B2.%7	/(9(//,1* /()7	3:0
	1:18	/7.7B2.&7	7,/7 287	3:0
	1:19	/7.7B2.&7	7,/7 ,1	3:0
	1:20	/7.9B16.'8	29(5 +(,*+7 /(* 833(5 326	$QDORJ ,Q 0-59

'8 FRQWDFW .1	3LQ 1XPEHU	'UDZLQJ	)XQFWLRQ	7\SH
	1:21			$QDORJ ,Q 0-59
	1:22			$QDORJ ,Q 0-59
	1:23			$QDORJ ,Q 0-59
	1:24			$QDORJ ,Q 0-59
	1:25			1.5$
	1:26			'LJ ,Q / 1.5$
	1:27			$QDORJ ,Q 0-59
	1:28			6$
	1:29			1.5$
	1:30	/7.7B2.'2	/(9(//,1*	2.5$
	1:31	/7.7B2.(2	/(9(//,1*	2.5$
	1:32	/7.9B16.%1	29(5 +(,*+7 '2:1	1.5$
	1:33	/7.9B16.$1	29(5 +(,*+7 833	1.5$
	1:34			1.5$
	1:35			1.5$
	1:36			'LJ ,Q / 1.5$
	1:37			'LJ ,Q / 1.5$
	1:38			09 5HI
	1:39			1.5$
	1:40			'LJ ,Q / 1.5$
	1:41			$QDORJ ,Q 0-59
	1:42			6$

5HI. 5XWD 6T.	1U bQGULQJ 1R.	'HVLJQ FKDQJH	bQGULQJ QU &KDQJH1R.	6LJQ.	'DWXP 'DWH
	1	$GGHG 9.1B5 & 8.2B4 & ;059-2.	060600	7.%	060615
		77LOON/$GGHG 88WJnU/'HOHWHG 99DU/:DV			

	6LJQ.	'DWXP/'DWH	+XYXGQU./3URMHFW QR.
5LWDG/UDZQ	7.%	050511	$50000.0600
.RQVWU/'HVLJQ			
*RGN/$SSU	7.%	050511	.ODVV/&ODVV

+.*US: 6

Kalmar

%HQlPQLQJ: .UHWV .RUVUHIHUHQVHU $JJ

1DPH: :LULQJ &URVV 5HIHUHQFHV $WW

3URGXNW/3URGXFW: '5)& 400-450

5LWQ.QU./'UDZLQJ 1R.: $50001.0100

%ODG/6KHHW: 0.0B5/

8WJnYD/,VVXH: 05

/HIW VLGH

+77&+0(17
-'791-3

	3LQ 1XPEHU	'UDZLQJ	)XQFWLRQ	7\SH
'8 FRQWDFW .2	3RZHU	+77&+0(17/7.9B4.(7		
	&$1	/11.6B6.%7	&$1-%86	
	2:6		32:(5 6833/<	7HPSHUDWXUH ,QSXW
	2:11	+77&+0(17/7.9B4.'6	32:(5 6833/<	(PHUJHQF\ VWRS
	2:13			7HPSHUDWXUH ,QSXW
	2:15			5HVHUYDW ,Q
	2:16			'+

+77&+0(17
-'791-3

	3LQ 1XPEHU	'UDZLQJ	)XQFWLRQ	7\SH
'8 FRQWDFW .1	1:1	+77&+0(17/7.9B14.&2	:25. /,*+7	6$
	1:2	/7.7B3.'2	/(9(//,1* 5,*+7	1.5$
	1:3	/7.7B3.(2	/(9(//,1* /()7	1.5$
	1:4	+77&+0(17/7.9B7.&2	)5217 .1((,1	1.5$
	1:5	+77&+0(17/7.9B7.&2	)5217 .1((287	1.5$
	1:6	+77&+0(17/7.9B11.%8	6(16256)5217 .1(($1' /(*	09 5HI
	1:7	+77&+0(17/7.9B8.&1	/2:(5,1* 5($5 /(*	1.5$
	1:8	/7.9B17.%1	237,21	$QDORJ 5HI 59
	1:9	+77&+0(17/7.9B8.&1	5($5 /(* 83	1.5$
	1:10	+77&+0(17/7.9B13.&2	,1'. $/,*10(17 5,*+7)5217	1.5$
	1:11	+77&+0(17/7.9B7.$2	&/$03,1* ,1	'LJ ,Q / 1.5$
	1:12	+77&+0(17/7.9B7.%2	&/$03,1* 287	'LJ ,Q / 1.5$
	1:13	+77&+0(17/7.9B11.(8	$/,*10(17)5217 /(*	$QDORJ ,Q 0-59
	1:14			10$
	1:15	/7.7B3.&2	/(9(//,1*	6$
	1:16	/7.7B3.'8	/(9(//,1* 5,*+7	3:0
	1:17	/7.7B3.(8	/(9(//,1* /()7	3:0
	1:18			3:0
	1:19			3:0
	1:20	+77&+0(17/7.9B12.(8	$/,*10(17 5($5 /(*	$QDORJ ,Q 0-59

+77&+0(17
-'791-3

	3LQ 1XPEHU	'UDZLQJ	)XQFWLRQ	7\SH
'8 FRQWDFW .1	1:21	+77&+0(17/7.9B11.%8	)5217 .1((	$QDORJ ,Q 0-59
	1:22	+77&+0(17/7.9B12.&8	5($5 .1((	$QDORJ ,Q 0-59
	1:23	+77&+0(17/7.9B11.&8	)5217/(*	$QDORJ ,Q 0-59
	1:24	+77&+0(17/7.9B12.'8	5($5 /(*	$QDORJ ,Q 0-59
	1:25	+77&+0(17/7.9B13.'2	,1'. $/,*10(17 5,*+7 5($5	1.5$
	1:26	+77&+0(17/7.9B11.$2	32:(5 6833/<)25 6(16256	'LJ ,Q / 1.5$
	1:27	/7.9B17.%8	237,21	$QDORJ ,Q 0-59
	1:28			6$
	1:29	+77&+0(17/7.9B13.'2	,1'. $/,*10(17 /()7)5217	1.5$
	1:30	+77&+0(17/7.9B7.'2	5($5 .1((,1	2.5$
	1:31	+77&+0(17/7.9B7.'2	5($5 .1((287	2.5$
	1:32	+77&+0(17/7.9B8.$1	/2:(5,1*)5217 /(*	1.5$
	1:33	+77&+0(17/7.9B8.%1	)5217 /(* 83	1.5$
	1:34			1.5$
	1:35			1.5$
	1:36	+77&+0(17/7.9B11.'8	&/$03)5217 /(*	'LJ ,Q / 1.5$
	1:37	+77&+0(17/7.9B12.(8	&/$03 5($5 /(*	'LJ ,Q / 1.5$
	1:38	+77&+0(17/7.9B12.&8	6(16256 5($5 .1(($1' /(*	09 5HI
	1:39	+77&+0(17/7.9B13.(2	,1'. $/,*10(17 /()7 5($5	1.5$
	1:40	+77&+0(17/7.9B12.%8	'5,9,1* 326,7,21	'LJ ,Q / 1.5$
	1:41	/7.9B17.&8	237,21	$QDORJ ,Q 0-59
	1:42	+77&+0(17/7.9B8.'1	'5,9,1* 326,7,21	6$

5LJKW VLGH

+77&+0(17
-'791-4

	3LQ 1XPEHU	'UDZLQJ	)XQFWLRQ	7\SH
'8 FRQWDFW .2	3RZHU	+77&+0(17/7.9B4.%7		
	&$1	/11.6B6.'7	&$1-%86	
	2:6		32:(5 6833/<	7HPSHUDWXUH ,QSXW
	2:11	+77&+0(17/7.9B4.%6	32:(5 6833/<	(PHUJHQF\ VWRS
	2:13			7HPSHUDWXUH ,QSXW
	2:15			5HVHUYDW ,Q
	2:16			'+

	3LQ 1XPEHU	'UDZLQJ	)XQFWLRQ	7\SH
'8 FRQWDFW .1	1:1	+77&+0(17/7.9B14.%2	:25. /,*+7	6$
	1:2	/7.7B3.%2	7,/7 287	1.5$
	1:3	/7.7B3.%2	7,/7 ,1	1.5$
	1:4	+77&+0(17/7.9B5.&2	)5217 .1((,1	1.5$
	1:5	+77&+0(17/7.9B5.&2	)5217 .1((287	1.5$
	1:6	+77&+0(17/7.9B9.%8	6(16256)5217 .1(($1' /(*	09 5HI
	1:7	+77&+0(17/7.9B6.&2	/2:(5,1* 5($5 /(*	1.5$
	1:8	/7.9B17.'1	237,21	$QDORJ 5HI 59
	1:9	+77&+0(17/7.9B6.&2	5($5 /(* 83	1.5$
	1:10	+77&+0(17/7.9B13.$2	)5217 /(*6 833(5 326,7,21	1.5$
	1:11	+77&+0(17/7.9B5.$2	&/$03,1* ,1	'LJ ,Q / 1.5$
	1:12	+77&+0(17/7.9B5.%2	&/$03,1* 287	'LJ ,Q / 1.5$
	1:13	+77&+0(17/7.9B9.(8	$/,*10(17)5217 /(*	$QDORJ ,Q 0-59
	1:14			10$
	1:15			6$
	1:16	/7.7B3.%8	7,/7 287	3:0
	1:17	/7.7B3.%8	7,/7 ,1	3:0
	1:18			3:0
	1:19			3:0
	1:20	+77&+0(17/7.9B10.(8	$/,*10(17 5($5 /(*	$QDORJ ,Q 0-59

+77&+0(17
-'791-4

	3LQ 1XPEHU	'UDZLQJ	)XQFWLRQ	7\SH
'8 FRQWDFW .1	1:21	+77&+0(17/7.9B9.%8	)5217 .1((	$QDORJ ,Q 0-59
	1:22	+77&+0(17/7.9B10.&8	5($5 /(*	$QDORJ ,Q 0-59
	1:23	+77&+0(17/7.9B9.&8	)5217 /(*	$QDORJ ,Q 0-59
	1:24	+77&+0(17/7.9B10.&8	5($5 /(*	$QDORJ ,Q 0-59
	1:25	+77&+0(17/7.9B13.%2	)5217/(*6/2:(5326,7,21	1.5$
	1:26	+77&+0(17/7.9B9.$2	32:(56833/<)256(16256	'LJ ,Q / 1.5$
	1:27	/7.9B17.'8	237,21	$QDORJ ,Q 0-59
	1:28			6$
	1:29	+77&+0(17/7.9B13.%2	&/$03 326,7,21)5217 /(*6	1.5$
	1:30	+77&+0(17/7.9B5.'2	5($5 .1((,1	2.5$
	1:31	+77&+0(17/7.9B5.(2	5($5 .1((287	2.5$
	1:32	+77&+0(17/7.9B6.$2	/2:(5,1*)5217 /(*	1.5$
	1:33	+77&+0(17/7.9B6.%2	)5217 /(* 83	1.5$
	1:34			1.5$
	1:35			1.5$
	1:36	+77&+0(17/7.9B9.'8	&/$03)5217 /(*	'LJ ,Q / 1.5$
	1:37	+77&+0(17/7.9B10.'8	&/$03 5($5 /(*	'LJ ,Q / 1.5$
	1:38	+77&+0(17/7.9B10.&8	6(16256 5($5 .1(($1' /(*	09 5HI
	1:39	+77&+0(17/7.9B13.&2	&/$03 326,7,21 5($5 /(*6	1.5$
	1:40	+77&+0(17/7.9B10.$8	'5,9,1* 326,7,21	'LJ ,Q / 1.5$
	1:41	/7.9B17.'8	237,21	$QDORJ ,Q 0-59
	1:42	+77&+0(17/7.9B6.'2	'5,9,1* 326,7,21	6$

5HI. 5XWD 6T.	1U bQGULQJ 1R.	'HVLJQ FKDQJH	bQGULQJ QU &KDQJH1R.	6LJQ.	'DWXP 'DWH
	1	$GGHG 9.1B5 & 8.2B4 & ;059-2.	060600	7.%	060615
		77LOON/$GGHG 88WJnU/'HOHWHG 99DU/:DV			

	6LJQ.	'DWXP/'DWH	+XYXGQU./3URMHFW QR.
5LWDG/UDZQ	7.%	050511	$50000.0600
.RQWU/'HVLJQ			
*RGN/$SSU	7.%	050511	.ODVV/&ODVV

+.*US: 6

Kalmar

%HQPQLQJ	3URGXNW/3URGXFW	%ODG/6KHHW
.UHWV .RUVVHIHUHQVHU $JJ .RPEL	'5)& 400-450	0.0B6/
1DPH: :LULQJ &URVV 5HIHUHQFHV $WW &RPEL	5LWQ.QU./'UDZLQJ 1R.: $50001.0100	8WJnYD/,VVXH: 05

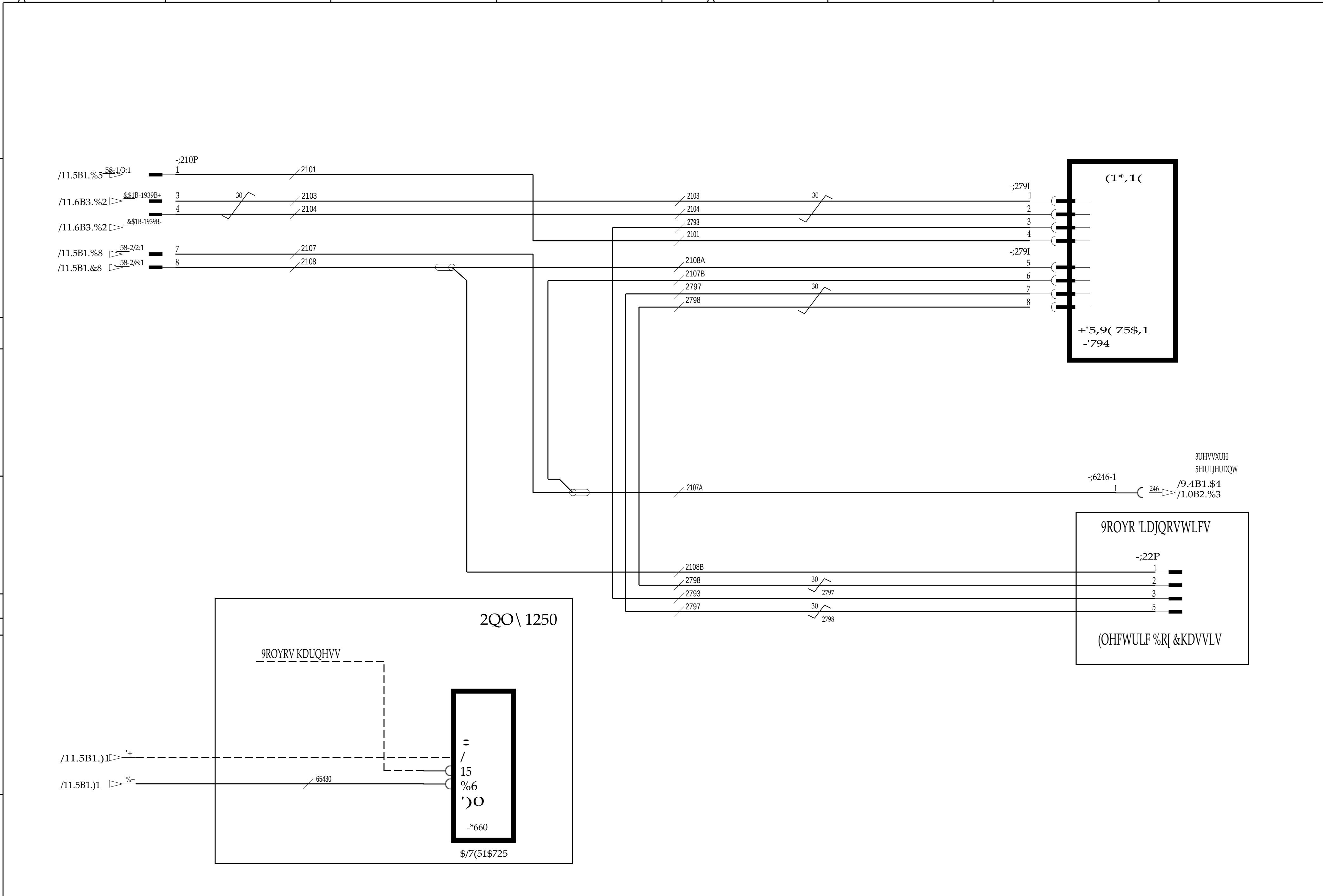

5HY	1U bQGULQJ		bQGULQJ QU	6LJQ	'DWXP		6LJQ	'DWXP/'DWH	+YXGQU/2ULJLQDO QR			%HQlPQLQJ		3URGXNW/3URGXFW	%ODGQXPPHU
5HY 6T.	1R.	'HVLJQ FKDQJH	&KDQJH 1R.		'DWH	5LWDG/'UDZQ	7.%	050511	$50000.0600		Kalmar	.UHWV 0RWRU 9ROYR 1240&1250		'5)& 400-450	1.0B1/
	1	$GGHG 9.1B5 & 8.2B4 & ;059-2.	060600	7.%	060615	.RQVWU/'HVLJQ				+*US: 6		1DPH		5LWQLQJVQU/'UDZLQJ 1R	6WJnYD/,VVXH
		77LOON/$GGHG 88WJnU/'HOHWHG 99DU/:DV				*RGN/$SSU	7.%	050511	.DOVV/&ODVV			:LULQJ 0RWRU 9ROYR 1240&1250		$50001.0100	05

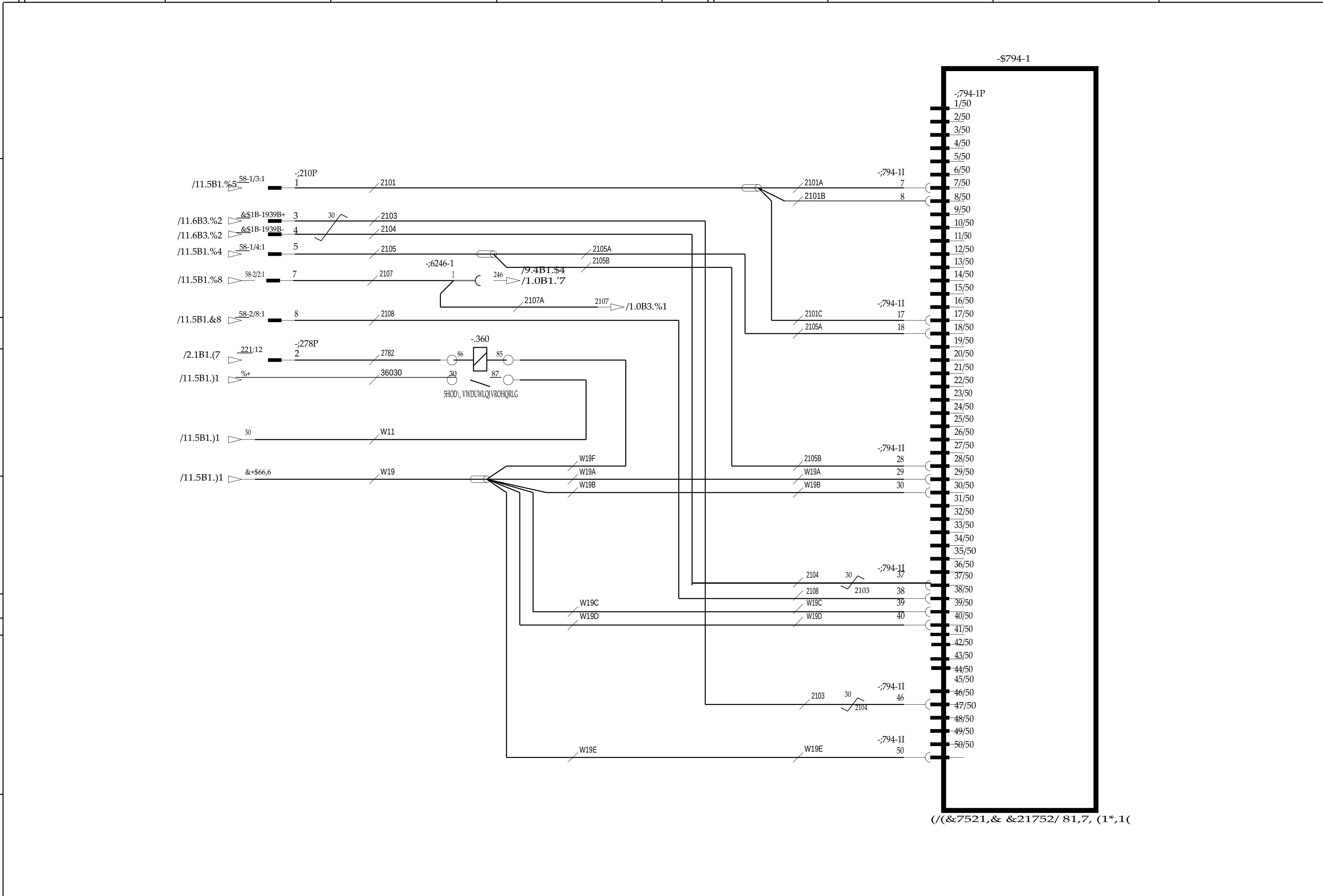

5HI.	1U bQGULQJ	bQGULQJ QU	6LJQ.	'DWXP		6LJQ.	'DWXP/'DWH	+\YXGQU./0DLQ GRF. QR.		%HQlPQLQJ	3URGXNW/3URGXFW	%ODG/6KHHW
6T.	1R. 'HVLJQ FKDQJH	&KDQJH 1R.		'DWH	5LWDG/'UDZQ	7.%	050511	$50000.0600		.UHWV 0RWRU &XPPLQV	'5)& 400-450	1.0B2/
1	$GGHG 9.1B5 & 8.2B4 & ;059-2.	060600	7.%	060615	.RQVWU/+HVLJQ				+.*US: 6	:LULQJ 0RWRU &XPPLQV	$50001.0100	05
	7 7LOON/$GGHG 8 8WJnU/'HOHWHG 9 9DU/:DV				*RGN/$SSU	7.%	050511	.ODVV/&ODVV				

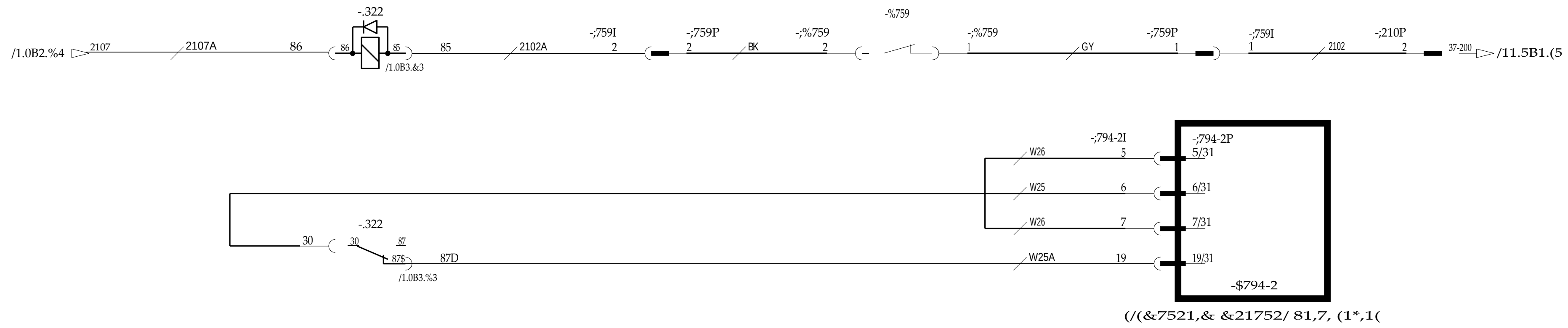

5HI. 5WD 6T.	1U bQGULQJ	bQGULQJ QU	6LJQ.	'DWXP		6LJQ.	'DWXP/'DWH	+XYXGQU./'URMHFW QR.		
	1R. 'HVLJQ FKDQJH	&KDQJH 1R.		'DWH	5LWDG/'UDZQ	7.%	050511	$50000.0600		
	1 $GGHG 9.1B5 & 8.2B4 & ;059-2.	060600	7.%	060615	.RQVWU/'HVLJQ				+.*US: 6	
	77LOON/$GGHG 88WJnU/'HOHWHG 99DU/:DV				*RGN/$SSU	7.%	050511	.ODVV/&ODVV		

Kalmar

%HQlPQLQJ: .UHWV 0RWRU &XPPLQV
1DPH: :LULQJ 0RWRU &XPPLQV
3URGXNW/3URGXFW: '5)& 400-450
5LWQLQJV / 'UDZLQJ 1R.: $50001.0100
%ODG/6KHHW: 1.0B3/
6WJnYD/,VVXH: 05

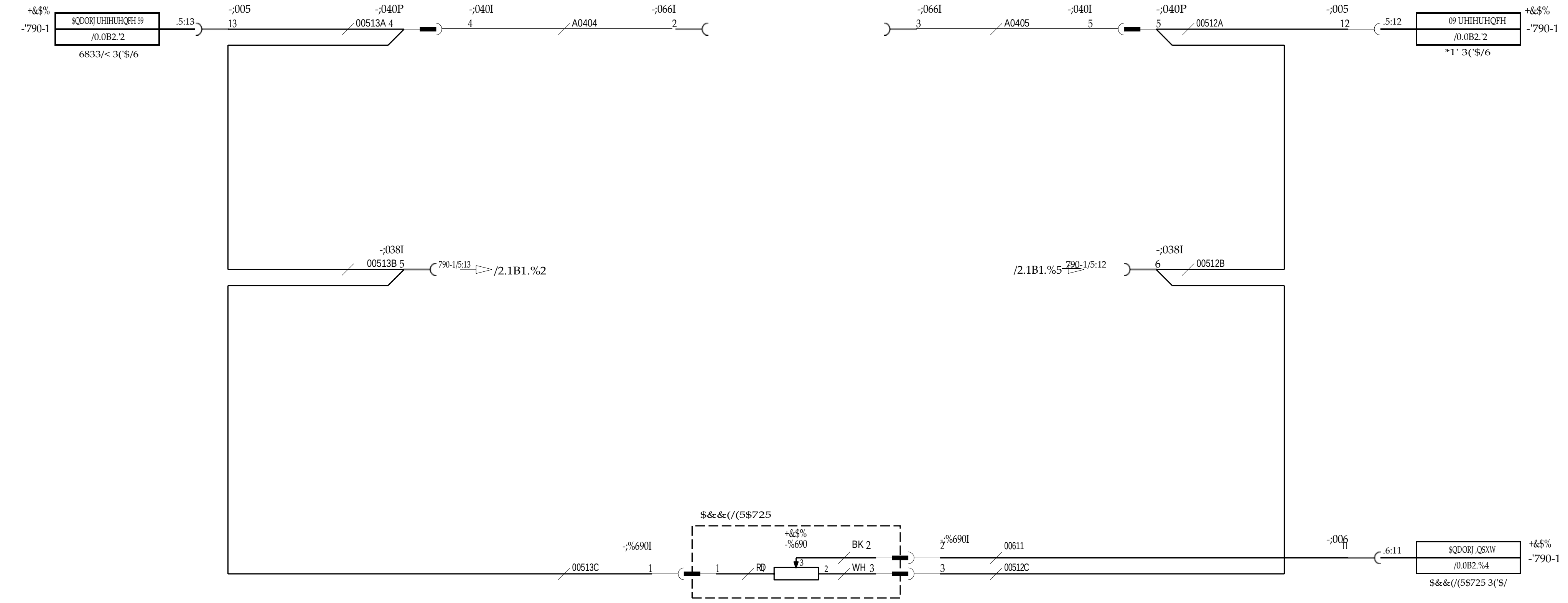

5HI.	1U bQGULQJ		bQGULQJ QU	6LJQ.	'DWXP		6LJQ.	'DWXP/'DWH	+\YXGQU./'URZLQJ 1R.		%HQlPQLQJ	3URGXNW/3URGXFW	%ODG/6KHHW
5DG 6T.	1R.	'HVLJQ FKDQJH	&KDQJH 1R.		'DWH	5LWDG/'UDZQ	7.%	050511	$50000.0600		.UHWV 'ULYOLQD	'5)& 400-450	1.1B1/
	1	$GGHG 9.1B5 & 8.2B4 & ;059-2.	060600	7.%	060615	.RQVWU/'HVLJQ				+.*US: 6	1DPH	5LWQLQJ / 'UDZLQJ 1R.	6WJnYD/,VVXH
		77LOON/$GGHG 88WJnU/'HOHWHG 99DU/:DV				*RGN/$SSU	7.%	050511	.ODVV/&ODVV		:LULQJ 'LDJUDP	$50001.0100	05

Kalmar

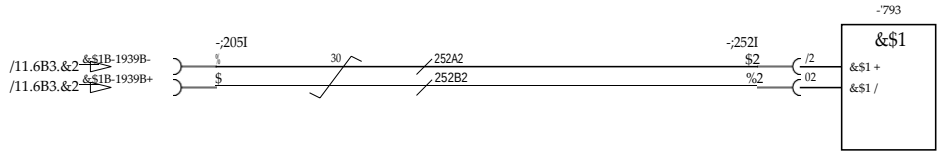

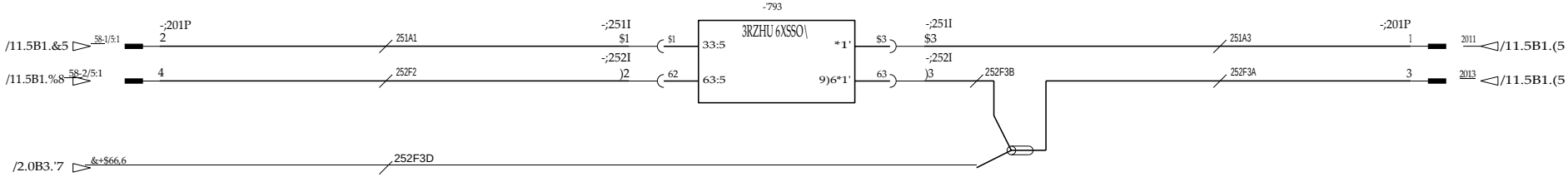

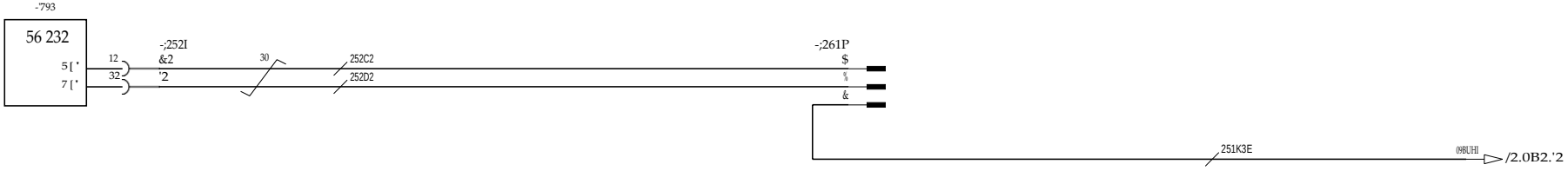

5HL. 5WD 6T.	1U bQGULQJ	bQGULQJ QU	6LJQ.	'DWXP		6LJQ.	'DWXP/'DWH	+VXXQQL,JUIBHFW QR.		%HQPQLQJ	3URGXXW/3URGXFW	%ODG&&HHW
1R.	'HVLJQ FKDQJH	&KDQJH1R.		'DWH	5LWDG/'UDQ	7.%	05U511	$50000.0600		.UHWV 'DQ 7(32000	'5)& 400-450	2.0B1
1	3GGHG 9.1B5 & 8.2B4 &,059-2.	060600	7.%	060615	,RQVWU/'HVLJQ				*.'Us: 6	,DPH	5HQQ&&'/ UDZ.Qq 1R.	8WqjnIDq/VVaH
	77LOON/$GGHG 88WJnU/'HOHWHG 99DU;:DV				*RGN/$55U	7.%	05U511	,DDVV/&&DVV		:LULQJ'DQD7(32000	$50001.0100	05

Kalmar

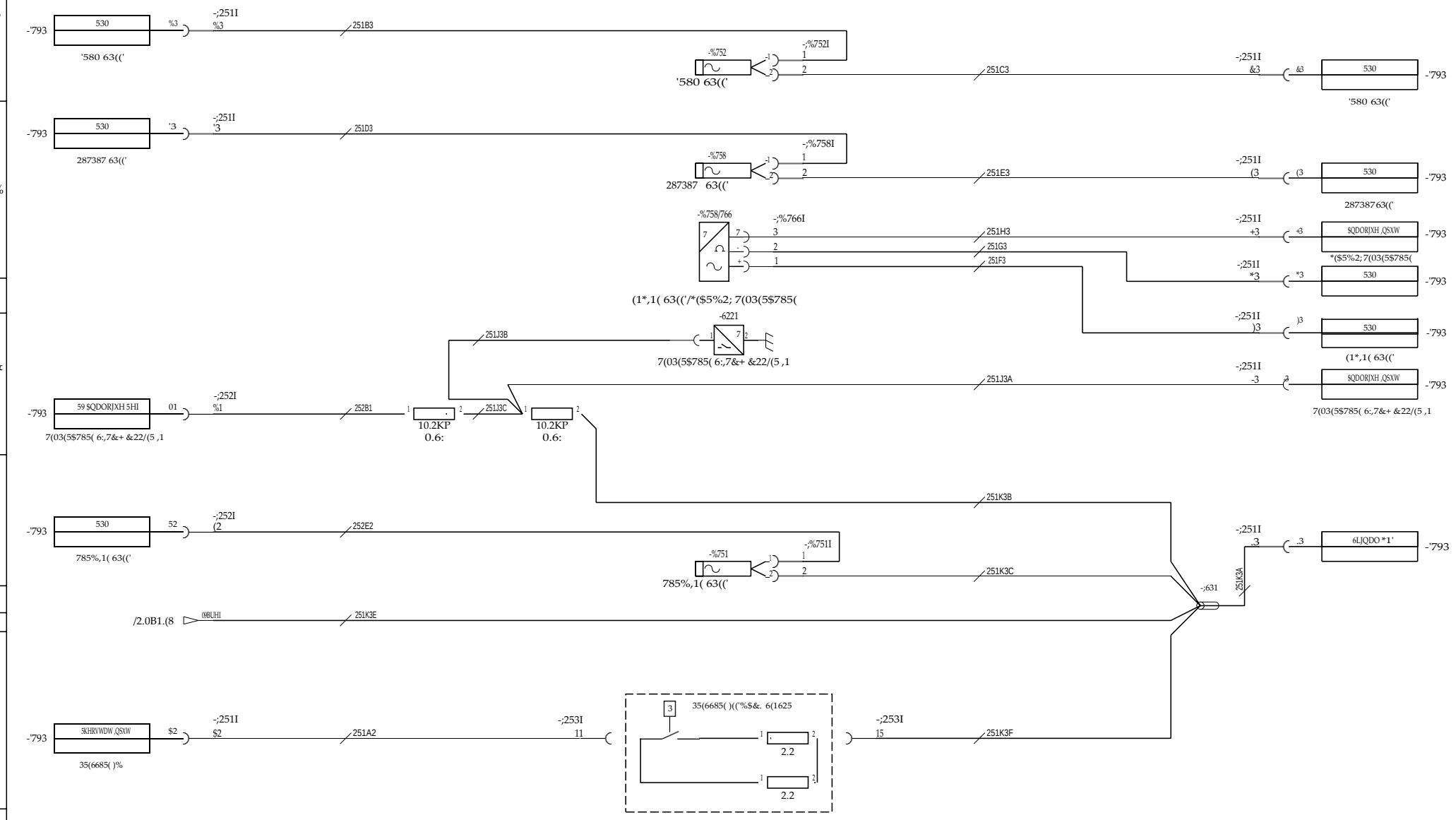

5HI. 5WD 6T.	1U bQGULQJ 1R. 'HVLJQ FKDQJH	bQGULQJ QU &KDQJH 1R.	6LJQ.	'DWXP 'DWH	6LWDG/UDZQ	6LJQ.	'DWXP/DWH	+XYNGQU,/UURMHFW QR.		%HQIPQLQJ .UHWV 'DQD 7(32000	3URGXNW(3URGXFW '5)& 400-450	%ODG,&KEHHW 2.0B2/
	1 $GGHG 9.1B5 & 8.2B4 & ;059-2.	060600	7.%	060615	.RQVWU/HVLJQ	7.%	050511	$50000.0600	+.*US: 6	1DPH :LULQJ 'DQD7(32000	5LWQ.QU / UDZLQJ 1R. $50001.0100	8W]nYD/VVXH 05
	7 7LOON/$GGHG 8 8W]nU/'HOHWHG 9 9DU/:DV				*RGN/$SSU	7.%	050511	.ODVV/&ODVV				

Kalmar

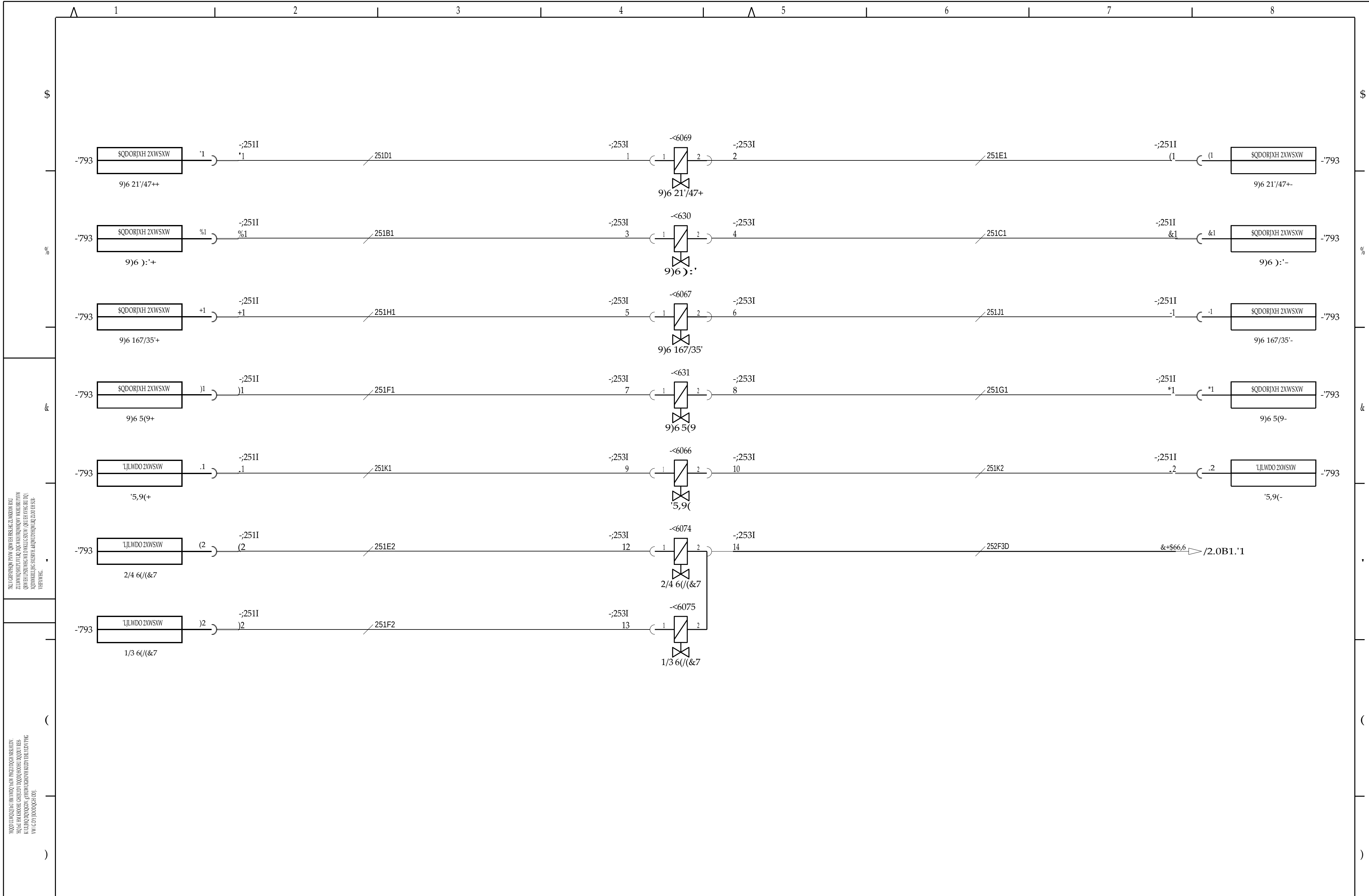

5HI. 5HYLVLRQ 6T.	1U bQGULQJ 1R.	'HVLJQ FKDQJH	bQGULQJ QU &KDQJH 1R.	bLJQ.	'DWXP 'DWH		bLJQ.	'DWXP 'DWH	+\YHGQU./XUMHNW QR.
	1	$GGHG 9.1B5 & 8.2B4 & ;059-2.	060600	7.%	060615	5LWDG/UDZQ	7.%	050511	$50000.0600
		7 7LOON/$GGHG 8 8WJnU/'HOHWHG 9 9DU/:DV				.RQVWU/HVLJQ			
						*RGN/$SSU	7.%	050511	.ODVV/&ODVV

+*US: 6

Kalmar

%HQlPQLQJ .UHWV 'DQD 7(32000

1DPH :LULQJ 'DQD7(32000

3URGXNW/3URGXFW '5)& 400-450

5LWQLQJV/'UDZLQJ 1R. $50001.0100

%ODG/6KHHW 2.0B3/

$QWDO/9VXH 05

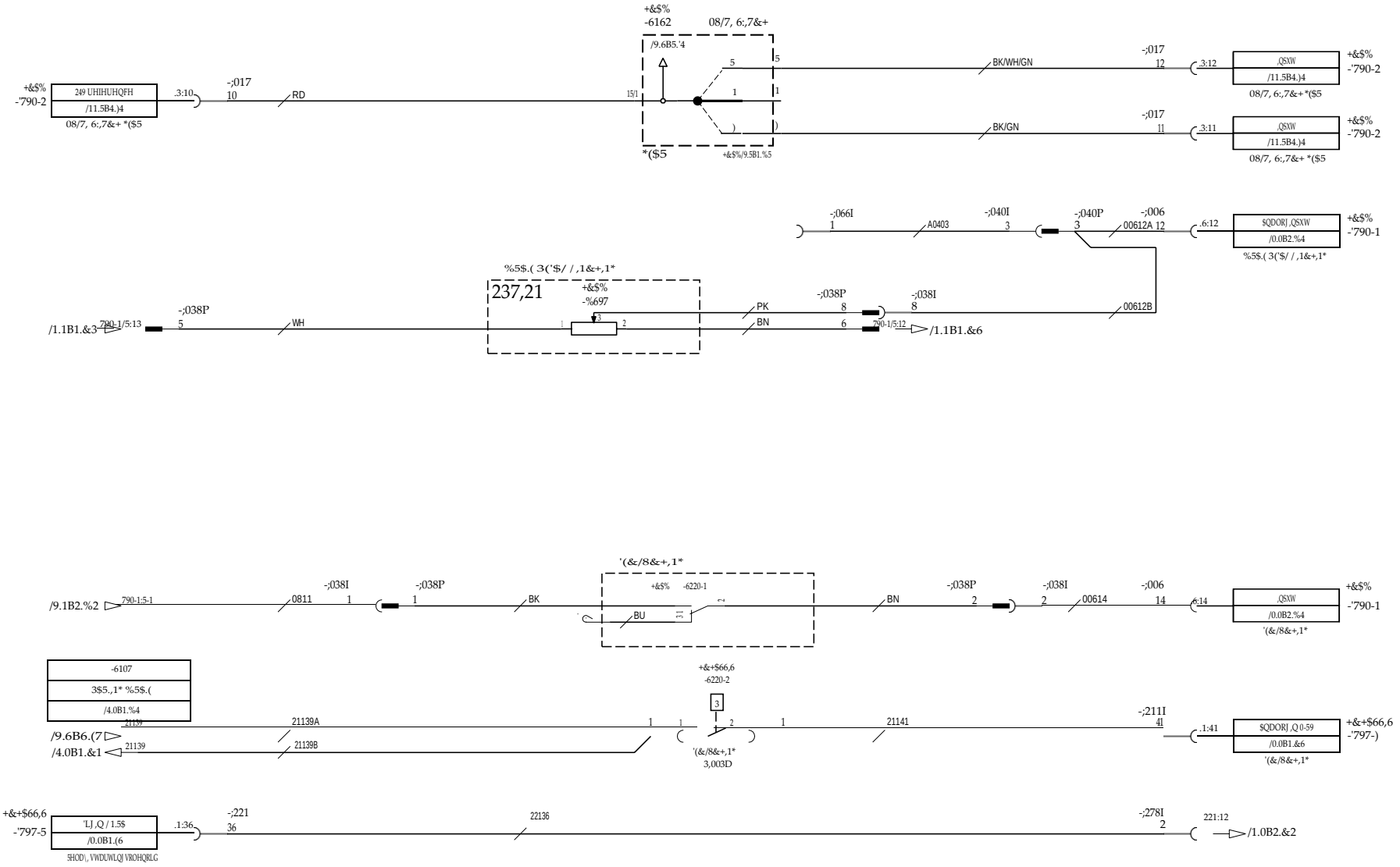

5HI. 5WD 6T.	1U bQGULQJ 1R.	'HVLJQ FKDQJH	bQGULQJ QU &KDQJH 1R.	6LJ.Q.	'DWXP 'DWH	SLWDG/UDZQ	6LJ.Q.	DWXP/DWH	×XXGQU,ßUBNHFW QR.		%HQHPQLQJ .UHWV'ULYOLQD	SURGXNW(ßURGXFW '5)& 400-450	%ODG,nßKEHHW 2.1B1/
	1	$GGHG 9.1B5 & 8.2B4 & ;059-2.	060600	7.%	060615	.RQVWU/HVVLJQ				×.*US: 6	1DPH :LULQJ'ULYHWUDLQ	SLWQ QU / UDZLQJ 1R. $50001.0100	8WnYD,VVXH 05
		7 7LOON/$GGHG 8 8WJnU/'HOHWHG 9 9DU/:DV				*RGN/$SSU	7.%	050511	$50000.0600 .ODVV/&ODVV				

Kalmar

(1*5$&.1*

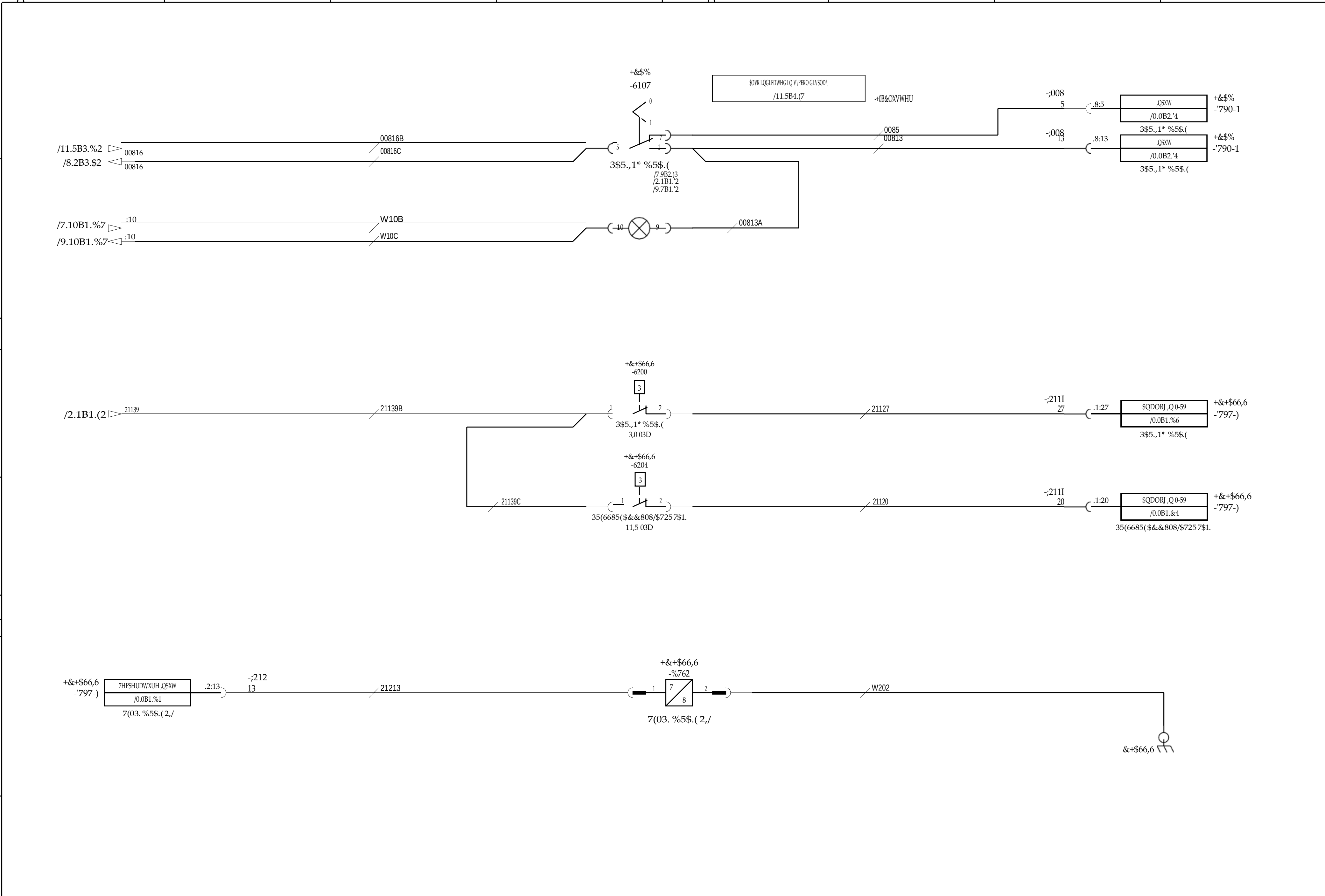

5HI.	1U bQGULQJ	bQGULQJ QU &KDQJH 1R.	6LJQ.	'DWXP 'DWH		6LJ.	'DWXP/'DWH	+XYXGULWQLQJ QR.		
5HWD 6T.	1R. 'HVLJQ FKDQJH				5LWDG/'UDZQ	7.%	050511	$50000.0600		
	1 $GGHG 9.1B5 & 8.2B4 & ;059-2.	060600	7.%	060615	.RQVWU/'HVLJQ				+,*US:	6
	7 7LOON/$GGHG 8 8WJnU/'HOHWHG 9 9DU/:DV				*RGN/$SSU	7.%	050511	.ODVV/&ODVV		

Kalmar

%HQlPQLQJ: .UHWV %URPVV\VWHP
1DPH: :LULQJ %UDNHV
3URGXNW/3URGXFW: '5)& 400-450
5LWQLQJV/'UDZLQJ 1R.: $50001.0100
%ODG/6KHHW: 4.0B1/
6SWnYD/,VVXH: 05

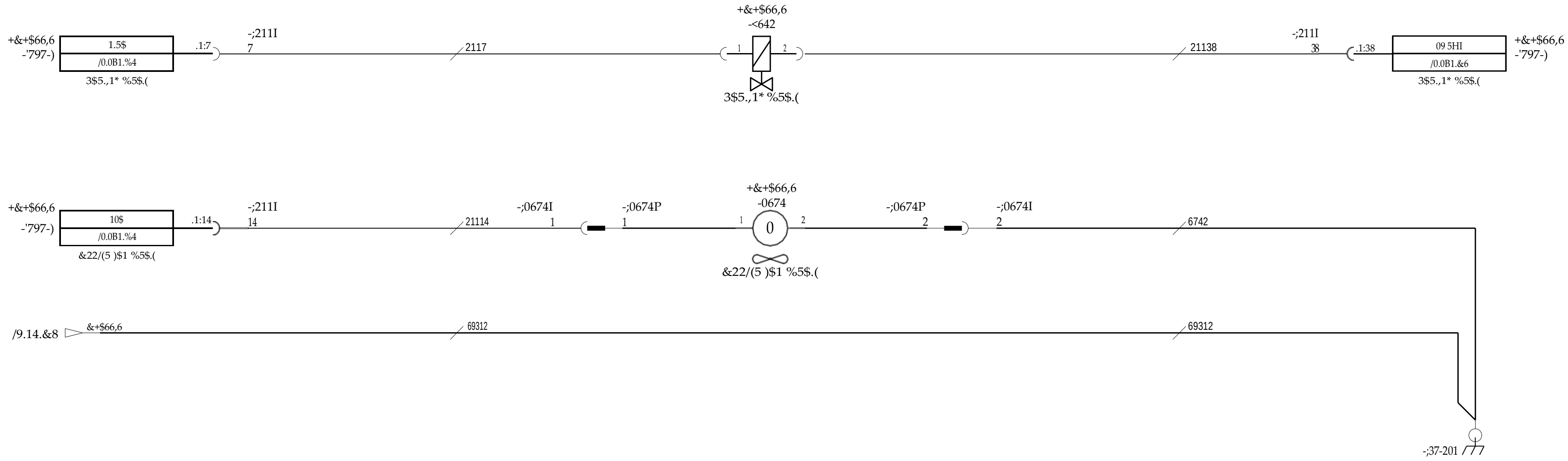

Kalmar

%HQHQQLQJ	.UHWV %URPVV\ VWHP	'HQ 400-450	4.0B2
1DPH	:LULQJ %UDNHV	$50001.0100	05

1U	'HVLJQ FKDQJH	bQGULQJ QU	6LJQ	'DWXP		6LJQ	'DWXP/'DWH	+\YXGQU
1	$GGHG 9.1B5 & 8.2B4 & ;059-2.	060600	7.%	060615	5LWDG/UDZQ	7.%	050511	$50000.0600
	77LOON/$GGHG 88WJnU/'HOHWHG 99DU/:DV				*RGN/$SSU	7.%	050511	

+*US: 6

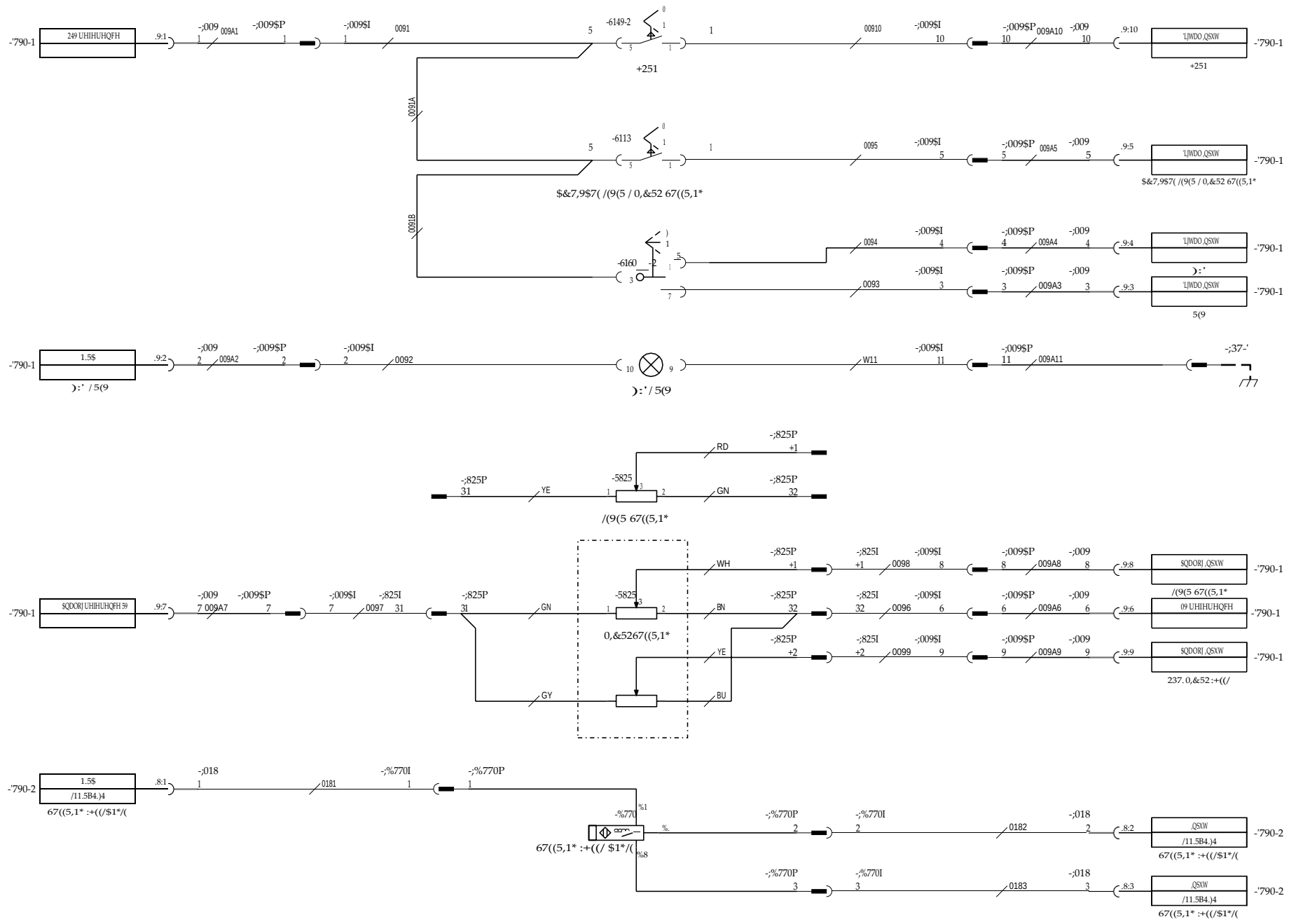

5HL. 5WWD 6T.	1U bQGULQJ 1R.	'HVLJQ FKDQJH	bQGULQJ QU &KDQJH 1R.	6LJQ.	'DWXP 'DWH		6LJQ.	'DWXP/'DWH	+XYXGQU /SURMHFW QR.		%HQIPQLQJ .UHWV 6W\UQ VSDN/PLQLUDWW	3URGXNW/3URGXFW '5)& 400-450	%ODG/&KEHW 5.2B1/
	1.	$GGHG 9.1B5 & 8.2B4 & ;059-2.	060600	7.%	060615	6LWDG/UDZQ	7.%	050511	$50000.0600	+&$% 6	1DPH :LULQJ 0LFUR OHYHU/ZKHHO	6LWQ QU / UDZLQJ 1R. $50001.0100	8WWnYD/VVXH 05
		7 7LOON/$GGHG 8 8WjnU/'HOHWHG 9 9DU/:DV				.RQVWU/HVLJQ				+.*US:			
						*RGN/$$SU	7.%	050511	.ODVV/&ODVV				

Kalmar

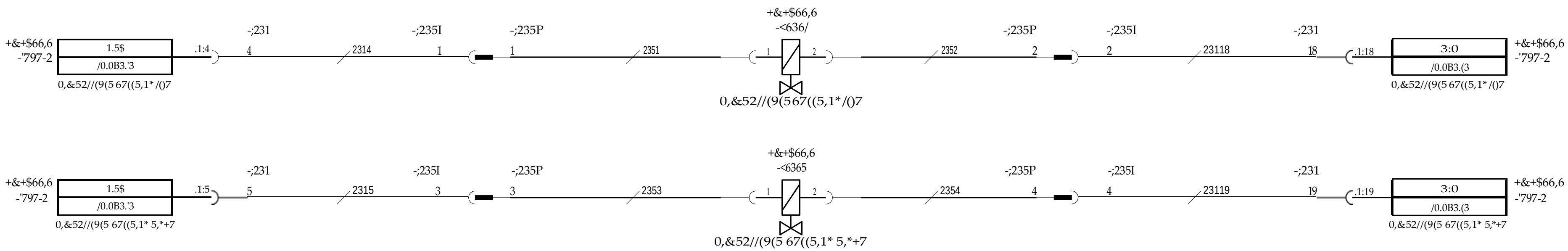

5HI.	1U bQGULQJ	bQGULQJ QU	6LJQ.	'DWXP		6LJQ.	'DWXP/'DWH	+\YAGQU/ 3URMHFW QR.		
5HID 6T.	1R. 'HVLJQ FKDQJH	&KDQJH 1R.		'DWH	3LWDG/UDZQ	7.%	050511	$50000.0600		
	1 $GGHG 9.1B5 & 8.2B4 & ;059-2.	060600	7.%	060615	5RQVWU/'HVLJQ				+.*US:	6
	77LOON/$GGHG 88WJnU/'HOHWHG 99DU/:DV				*RGN/$SSU	7.%	050511	.DOVV/&ODVV		

Kalmar

%HQIPQLQJ
.UHWV 6W\UQ VSDN/PLQLUDWW
1DPH
:LULQJ 0LFUR OHYHU/ZKHHO
3URGXNW/3URGXFW
'5)& 400-450
5LWQLQJ / 'UDZLQJ 1R.
$50001.0100
%ODG/6KHHW
5.2B2/
6WJnYD/,VVXH
05

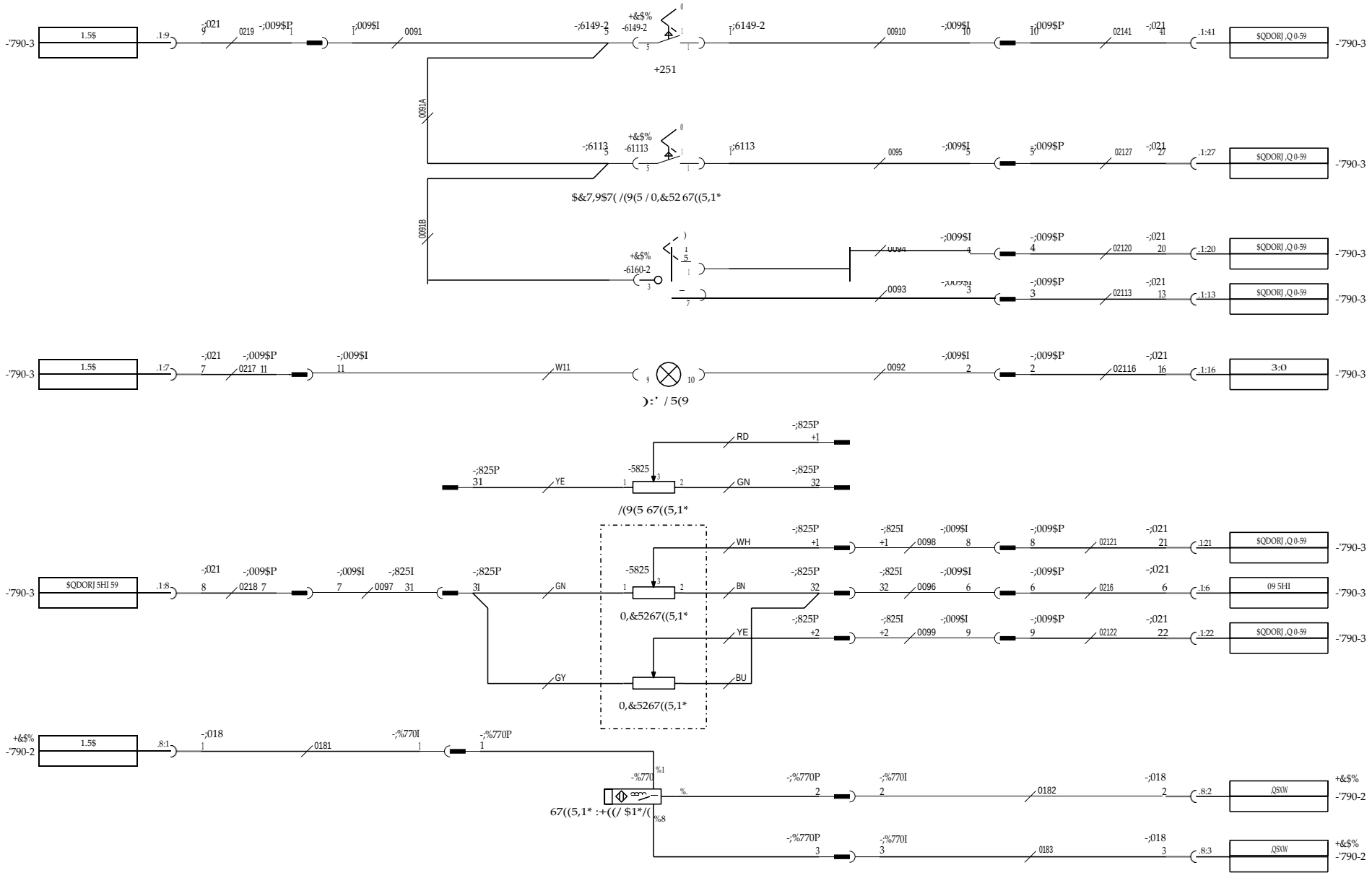

5HI. 5WWD 6T.	1U bQGULQJ 1R.	'HVLJQ FKDQJH	bQGULQJ QU &KDQJH 1R.	bLJ.Q.	'DWXP 'DWH	SLWDG/UDZQ	6LJ.Q	'DWXP/'DWH	÷XXQGLU,ÓUBMHFW QR.		%HQIPQLQJ .UHWV 6W\UQ VSDN/PLQLUDWW RFK .RPELDJJ	3URGXNW/3URGXFW '5)& 400-450	%ODG,&KHHW 5.2B3/
	1	$GGHG 9.1B5 & 8.2B4 & ;059-2.	060600	7.%	060615	.RQVWU/HVLJQ				÷.*US: 6	1DPH :LULQJ 0LFUR OHYHU/ZKHO DQG &RPEL $WW	SLWQ QU / UDZLQJ 1R. $50001.0100	8WjnYD/VVXH 05
		7 7LOON/$GGHG 8 8WjnU/'HOHWHG 9 9DU/:DV				*RGN/$SSU	7.%	050511	.ODVV/&ODVW				

Kalmar

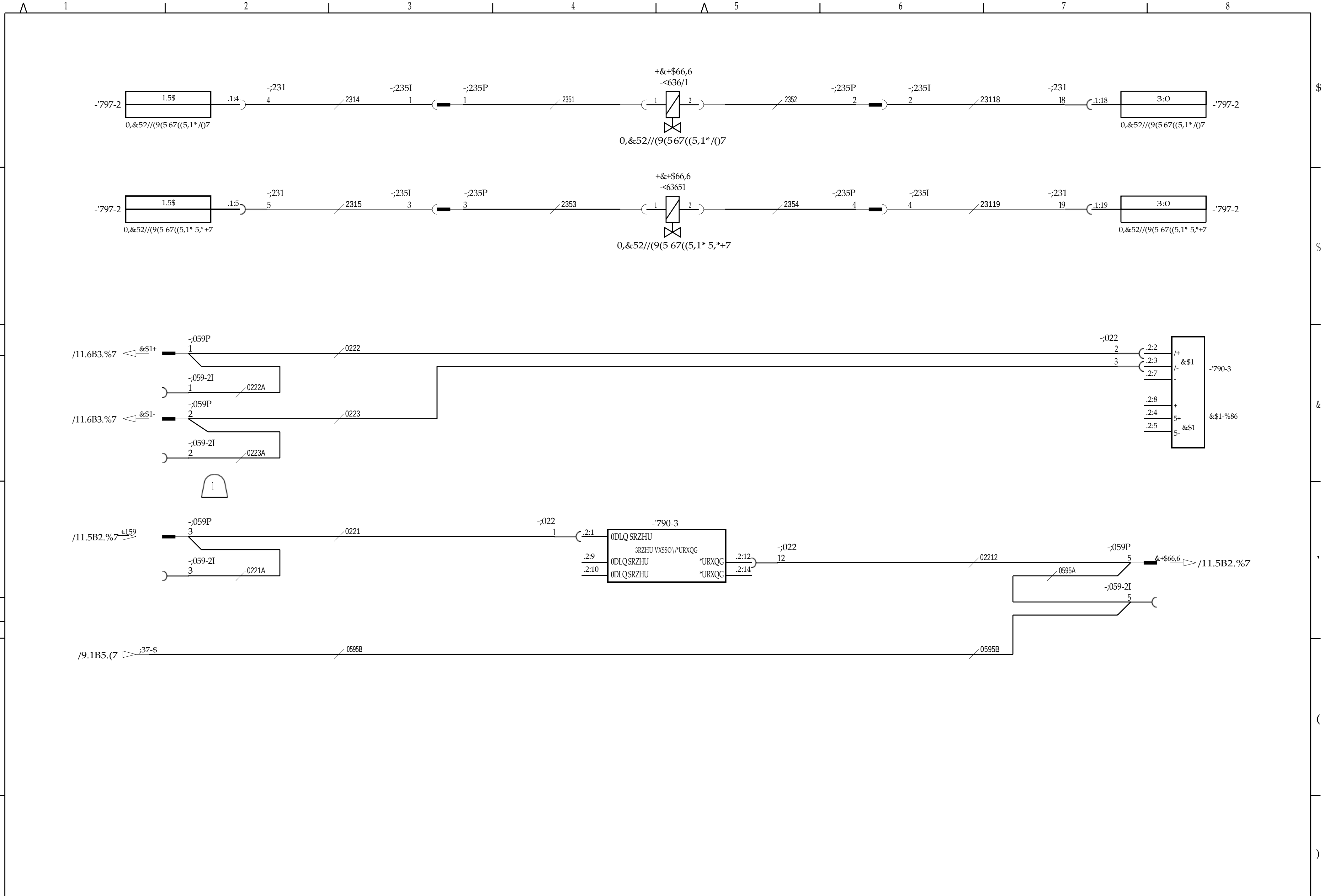

5HY. 5XWD 6T.	1U bQ. 1R.	GULQJ 'HVLJQ FKDQJH	bQGULQJ QU &KDQJH 1R.	bLJQ.	'DWXP 'DWH			
	1	$GGHG 9.1B5 & 8.2B4 & ;059-2.	060600	7.%	060615			
		7 7LOON/$GGHG 8 8WJnU/'HOHWHG 9 9DU/:DV						

	bLJQ.	'DWXP/'DWH	+XYXGQU./3URMHFW QR.
5LWDG/'UDZQ	7.%	050511	$50000.0600
.RQWU/5HYLHZ			
*RGN/$SSU	7.%	050511	.ODVV/&ODVV

+.*US: 6

Kalmar

%HQlPQLQJ: .UHWV 6W\U VSDN/PLQLUDWW RFK .RPELQJ

1DPH: :LULQJ 0LFUR OHYHU/ZKHHO DQG &RPE $WW

3URGXNW/3URGXFW: '5)& 400-450

5LWQLQJV QU./'UDZLQJ 1R.: $50001.0100

%ODG/6KHHW: 5.2B4/

6WnYDUV/Sheet: 05

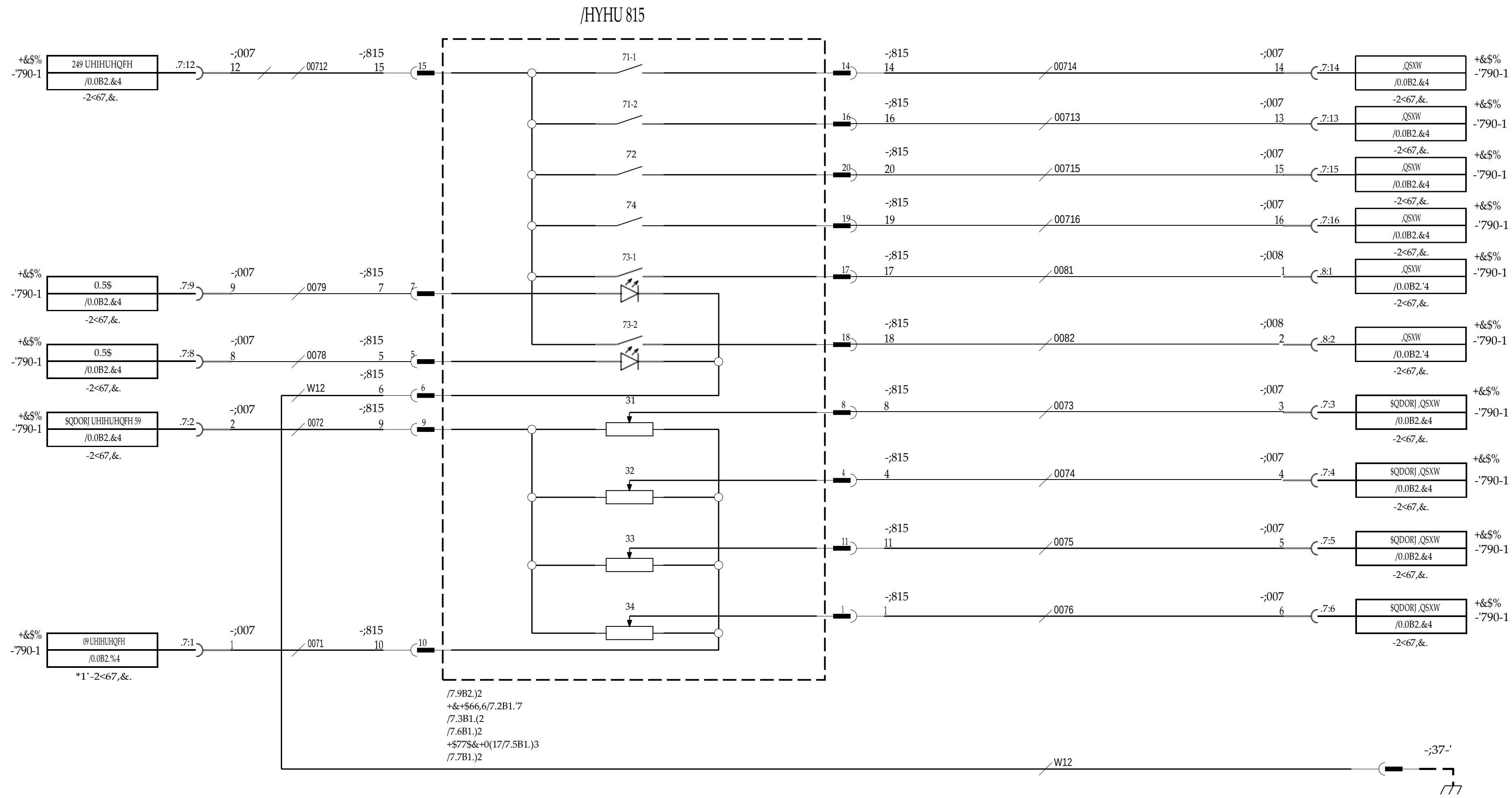

5HI. SXWD 6T.	1U bQGULQJ 1R.	'HVLJQ FKDQJH	bQGULQJ QU &KDQJH 1R.	bLJQ.	'DWXP 'DWH
	1	$GGHG 9.1B5 & 8.2B4 & ;059-2.	060600	7.%	060615
		7 7LOON/$GGHG 8 8WJnU/'HOHWHG 9 9DU/:DV			

	bLJQ.	'DWXP/'DWH	+XYGGU./GURMHFW QR.
5LWDG/UDZQ	7.%	050511	$50000.0600
.RQWUROO/HVLJQ			
*RGN/$SSU	7.%	050511	.ODVV/&ODVV

+.*US: 6

Kalmar

%HQlPQLQJ: .UHWV -R\VWLFN
1DPH: :LULQJ -R\VWLFN
3URGXNW/3URGXFW: '5)& 400-450
5LWQ.QU./'UDZLQJ 1R.: $50001.0100
%ODG/6KHHW: 7.1B1/
6WJnYD/,VVXH: 05

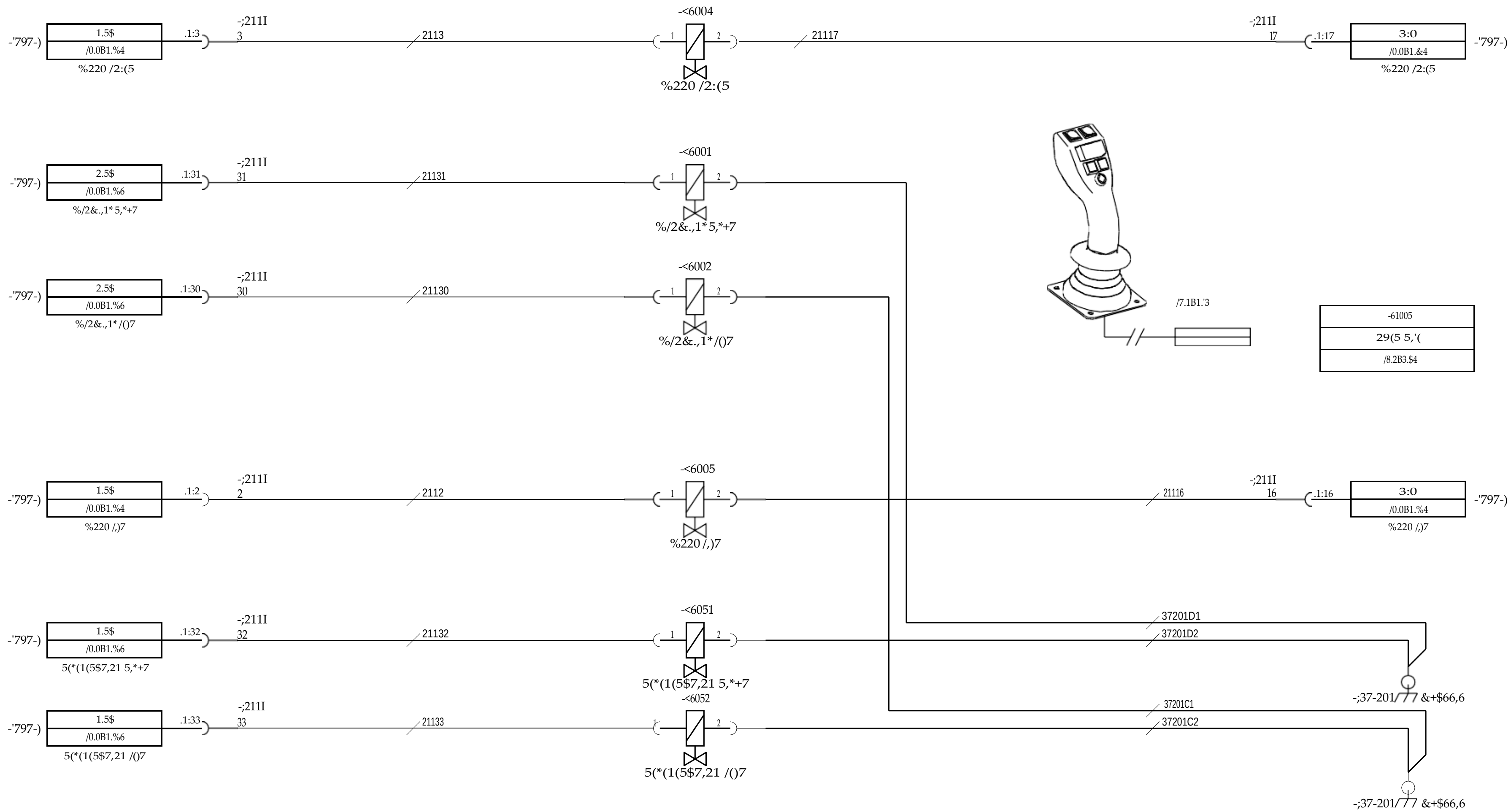

5HL. 9|WD 6T.	1U b|GULQJ 1R.	'HVLJQ FKDQJH	bQGULQJ QU &KDQJH 1R.	6LJQ.	'DWXP 'DWH
	1	$GGHG 9.1B5 & 8.2B4 & ;059-2.	060600	7.%	060615
		7 7LOON/$GGHG 8 8WJnU/'HOHWHG 9 9DU/:DV			

	6LJQ.	'DWXP/'DWH	+|YXGQU./6URMHFW QR
5LWDG/'UDZQ	7.%	050511	$50000.0600
.RQVWU/'HVLJQ			
*RGN/$SSU	7.%	050511	.ODVV/&ODVV

+&+$66,6
+,*US: 6

Kalmar

%HQlPQLQJ .UHWV %RP 8SS/1HG
1DPH :LULQJ %RRP 8S/'RZQ
3URGXNW/3URGXFW '5)& 400-450
5LWQ.QU/'UDZLQJ 1R. $50001.0100
%ODG/6KHHW 7.2B1/
8WJnYD/,VVXH 05

7KLV GRFXPHQW PXVW QRW EH FRSLHG ... VKHZQ.

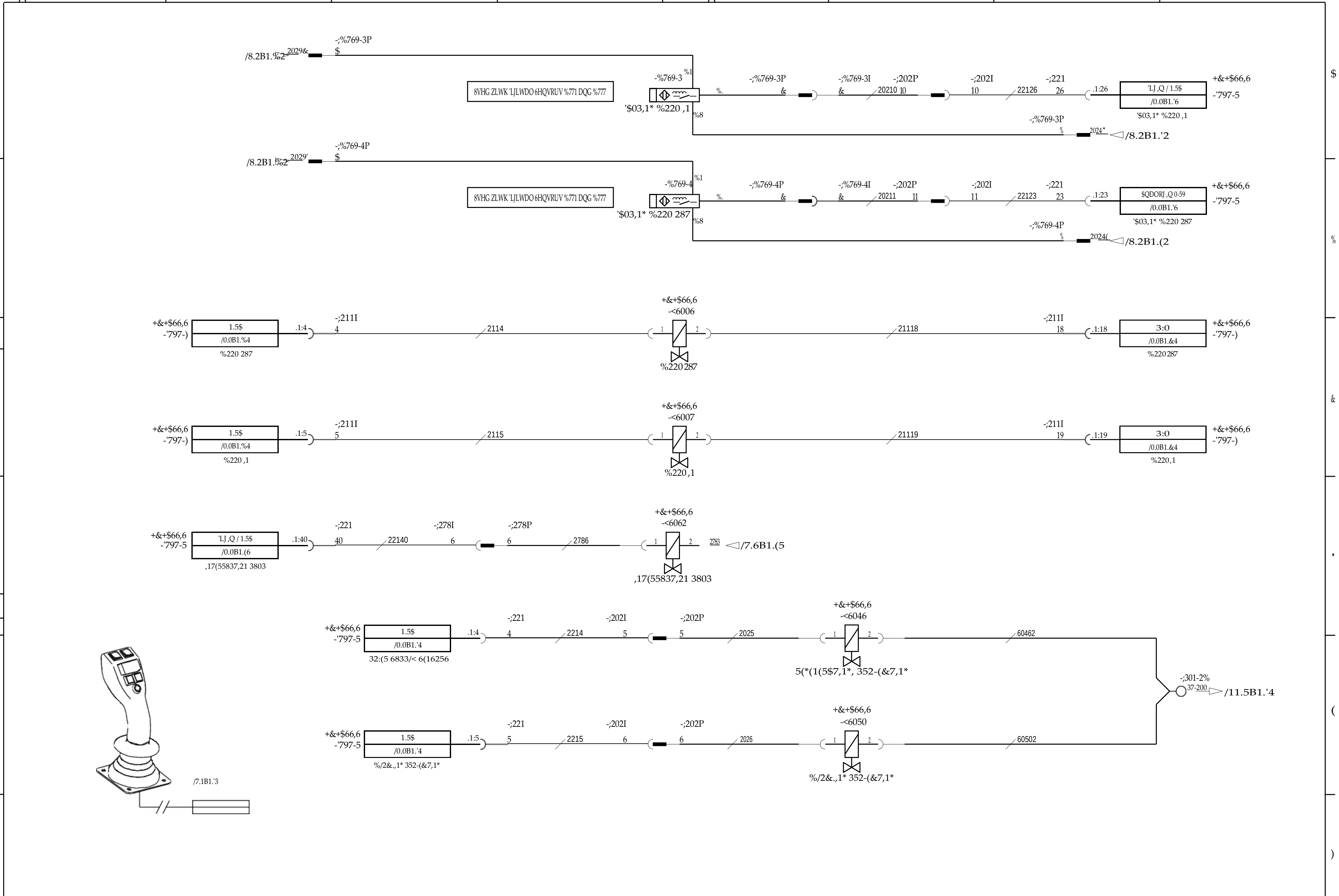

5HI. 6WDWH 6T.	1U bQGULQJ 1R.	'HVLJQ FKDQJH	bQGULQJ QU &KDQJH 1R.	6LJQ.	'DWXP 'DWH	
	1	$GGHG 9.1B5 & 8.2B4 & ;059-2.	060600	7.%	060615	
		7 7LOON/$GGHG 8 8WJnU/'HOHWHG 9 9DU/:DV				

	6LJQ.	'DWXP/'DWH	+YXGGRNXPHQW QR.
5LWDG/'UDZQ	7.%	050511	$50000.0600
.RQWUROO/&KHFN			
*RGN/$SSU	7.%	050511	.ODVV/&ODVV

+.*US: 6

Kalmar

%HQlPQLQJ: .UHWV %RPLQ/XW
1DPH: :LULQJ %RRP LQ/RXW

3URGXNW/3URGXFW: '5)& 400-450
5LWQLQJV/'UDZLQJ 1R.: $50001.0100
%ODG/6KHHW: 7.3B1/
6WnYDUVLVVH: 05

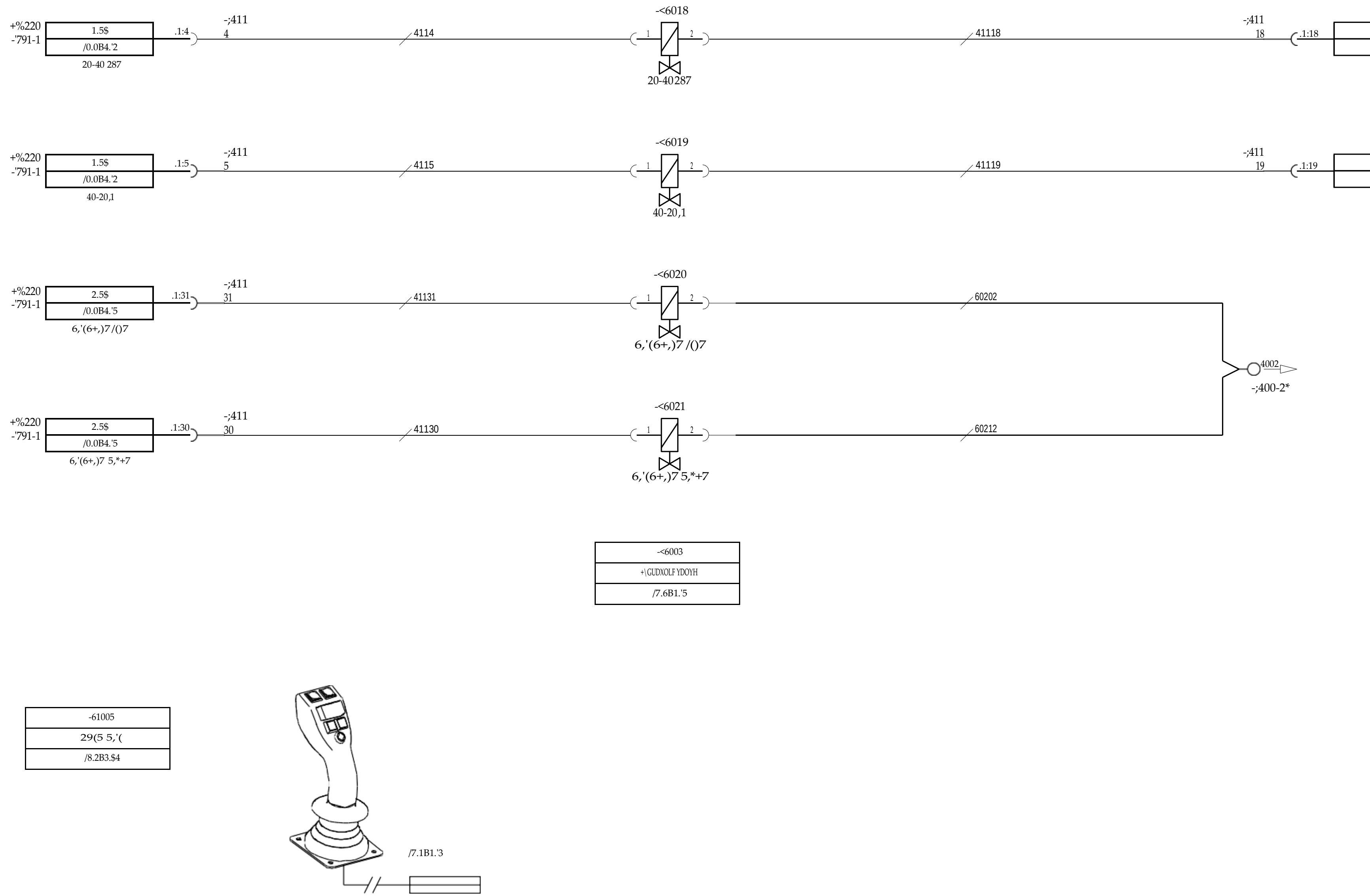

5HI.	1U bQGULQJ		bQGULQJ QU	6LJQ.	'DWXP		6LJQ.	'DWXP/'DWH	+\YAGQU./5URMHNW QU.	
5HSD 6T.	1R.	'HVLJQ FKDQJH	&KDQJH1R.		'DWH	3LWDG/UDZQ	7.%	050511	$50000.0600	+77&+0(17
	1	$GGHG 9.1B5 & 8.2B4 &;059-2.	060600	7.%	060615	.RQWUROO/HVLJQ				+,*US: 6
		77LOON/$GGHG 88WJnU/'HOHWHG 99DU/:DV				*RGN/$SSU	7.%	050511	.ODVV/&ODVV	

%HQHPQLQJ: .UHWV 6SULGQLQJ 9HQWLOHU
1DPH: :LULQJ 6SUHDGLQJ 9DOYHV
3URGXNW/3URGXFW: '5)& 400-450
6LWXQLQJ/'UDZLQJ 1R: $50001.0100
%ODG/6KHHW: 7.5B1/
6WjnYD/$VVHV: 05

Ω (n°58;,1*)

1	2	3	4	5	6	7	8

$ % & ' ( )

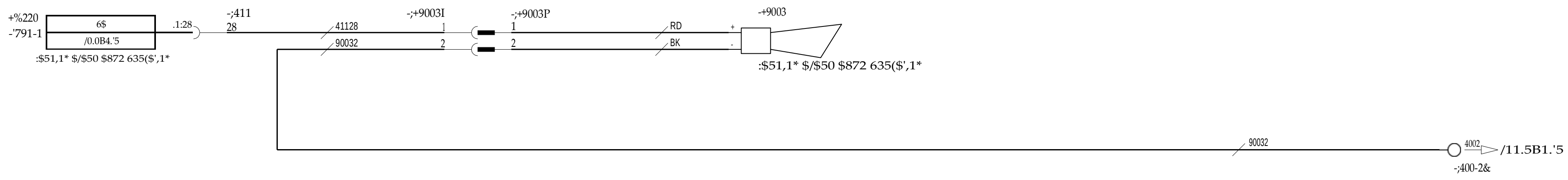

5HI.	1U bQGULQJ	bQGULQJ QU	6LJQ.	'DWXP		6LJQ.	'DWXP/'DWH	+\\YXGQU./3URMHFW QR.			%HQHQQLQJ	3URGXNW/3URGXFW	%ODG/6KHHW
5HI. 6T.	1R. 'HVLJQ FKDQJH	&KDQJH 1R.		'DWH	5LWDG/'UDZQ	7.%	050511	$50000.0600		Kalmar	.UHWV 6SULGQLQJ $XWR	'5)& 400-450	7.5B2/
	1 $GGHG 9.1B5 & 8.2B4 & ;059-2.	060600	7.%	060615	.RQVWU/'HVLJQ				+,*US: 6		1DPH	5LWQLQJ/'UDZLQJ 1R.	8WJnYD/,VVXH
	77LOON/$GGHG 88WJnU/'HOHWHG 99DU/:DV				*RGN/$SSU	7.%	050511	.ODVV/&ODVV			:LULQJ 6SUHDGLQJ $XWR	$50001.0100	05

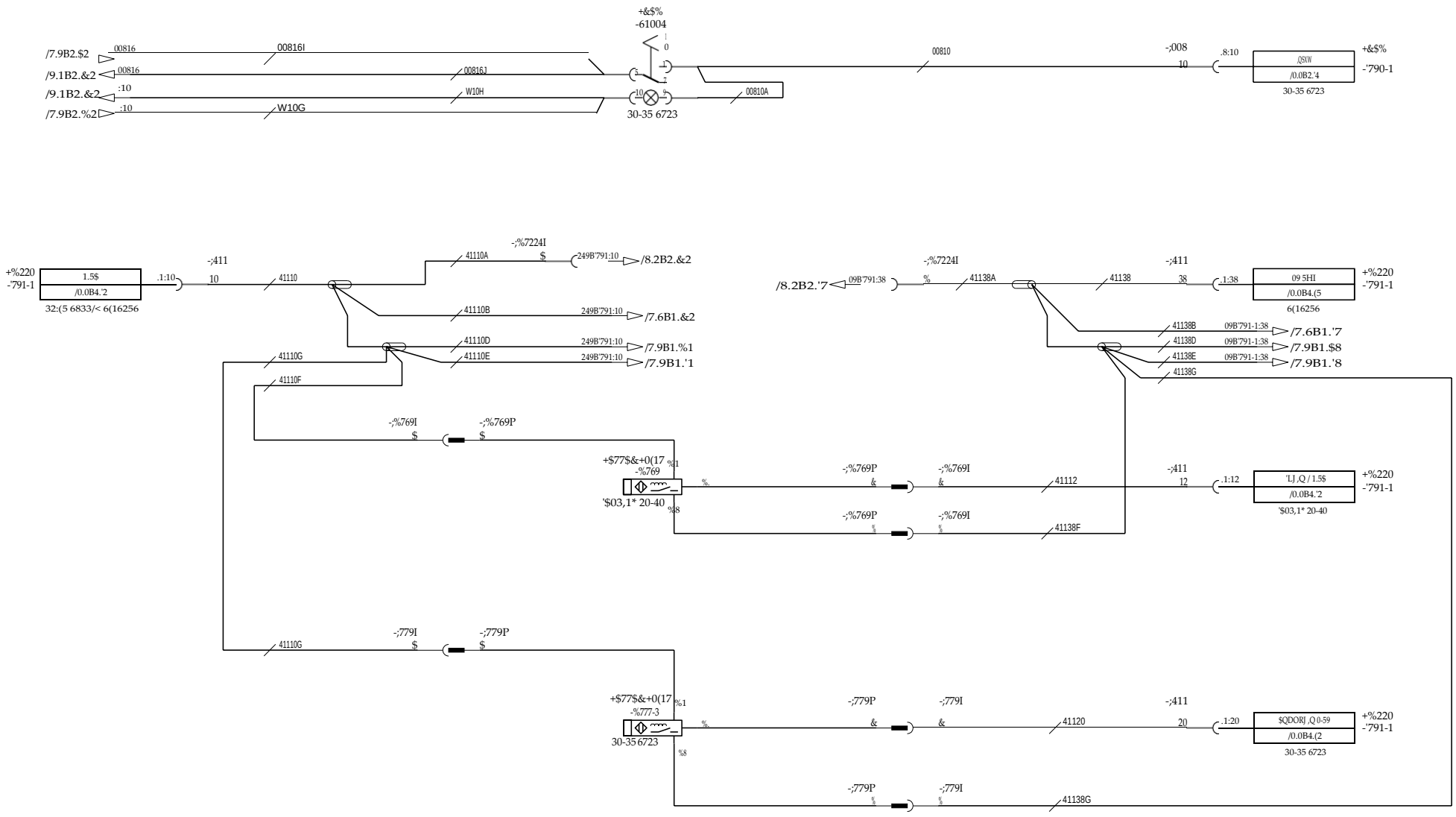

5HI. 5WD 6T.	1U bQGULQJ 1R.	'HVLJQ FKDQJH	bQGULQJ QU &KDQJH 1R.	6LJ.Q.	'DWXP 'DWH		6LJ.Q.	'DWX2Y/'DWH	+XYNGQU./SUBMHFW QR.		%HQIPQLQJ	.UHWV 6SULGQLQJ*LYDUH	3URGXNW(3URGXFW	%ODG,&KEHHW
						5LWDG/UDZQ	7.%	050511	$50000.0600		1DPH	:LULQJ 6SUHDGLQJ 6HQVRUV	'5)& 400-450	7.5B3/
	1	$GGHG 9.1B5 & 8.2B4 & ;059-2.	060600	7.%	060615	.RQVWU/HVLJQ				+.*US: 6			5LWQ.QU./ÚDZLQJ 1R.	8W]nYD/VVXH
		7 7LOON/$GGHG 8 8W]nU/'HOHWHG 9 9DU/:DV				*RGN/$$SU	7.%	050511	.ODVV/&ODVV				$50001.0100	05

Kalmar

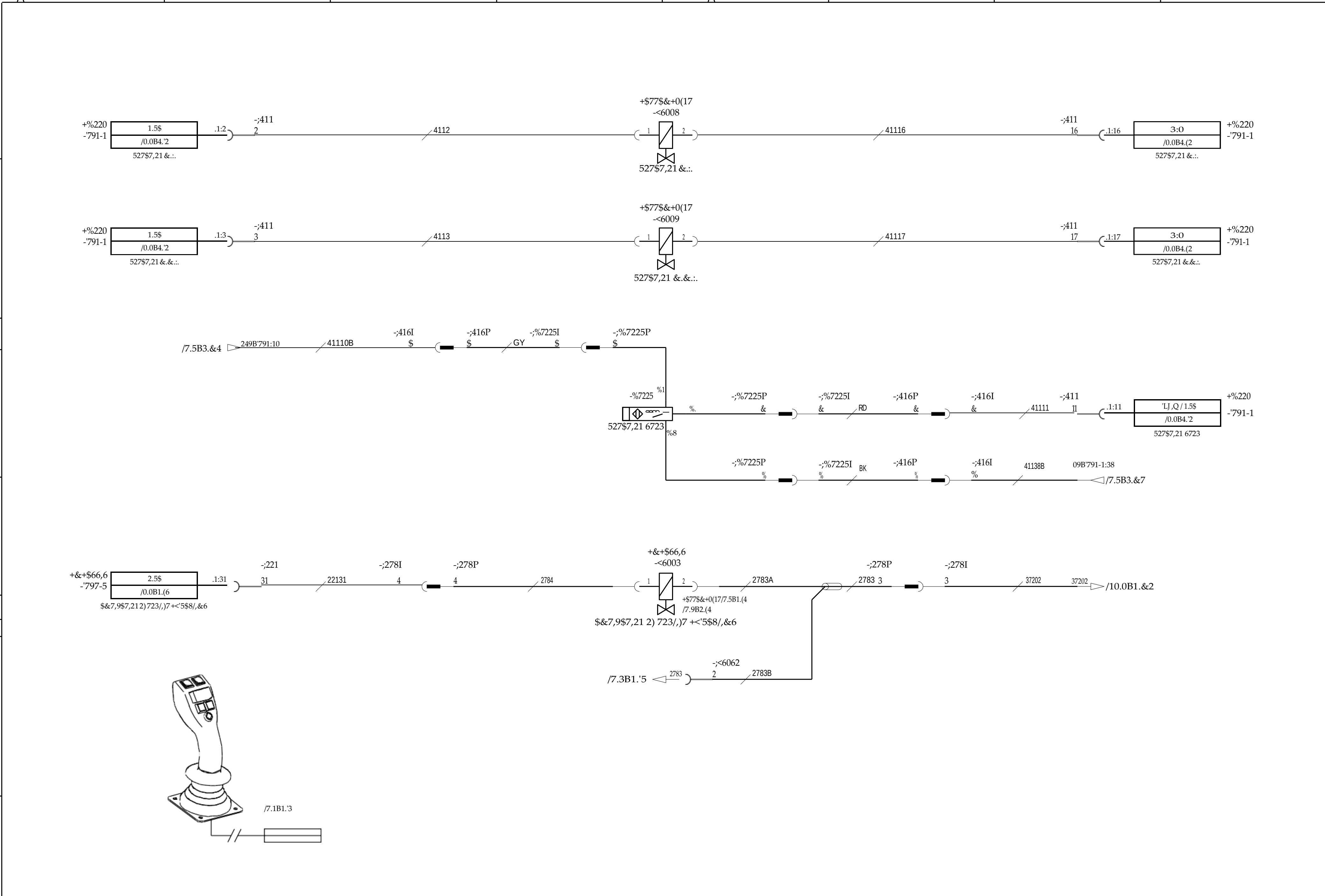

5HY. 6W.	1U bQGULQJ 1R.	'HVLJQ FKDQJH	bQGULQJ QU &KDQJH 1R.	6LJQ.	'DWXP 'DWH		6LJQ.	'DWXP/'DWH	+XYXGQU./)URUHIHU QR
		$GGHG 9.1B5 & 8.2B4 & ;059-2.	060600	7.%	060615	5LWDG/'UDZQ	7.%	050511	$50000.0600
		7 7LOON/$GGHG 8 8WJnU/'HOHWHG 9 9DU/:DV				.RQVWU/'HVLJQ			
						*RGN/$SSU	7.%	050511	0DWV/&0DWV

+.*US: 6

Kalmar

%HQlPQLQJ .UHWV 5RWDWLRQ

1DPH :LULQJ 5RWDWLRQ

3URGXNW/3URGXFW '5)& 400-450

5LWQLQJV/'UDZLQJ 1R. $50001.0100

%ODG/6KHHW 7.6B1/

8WJnYD/,VVXH 05

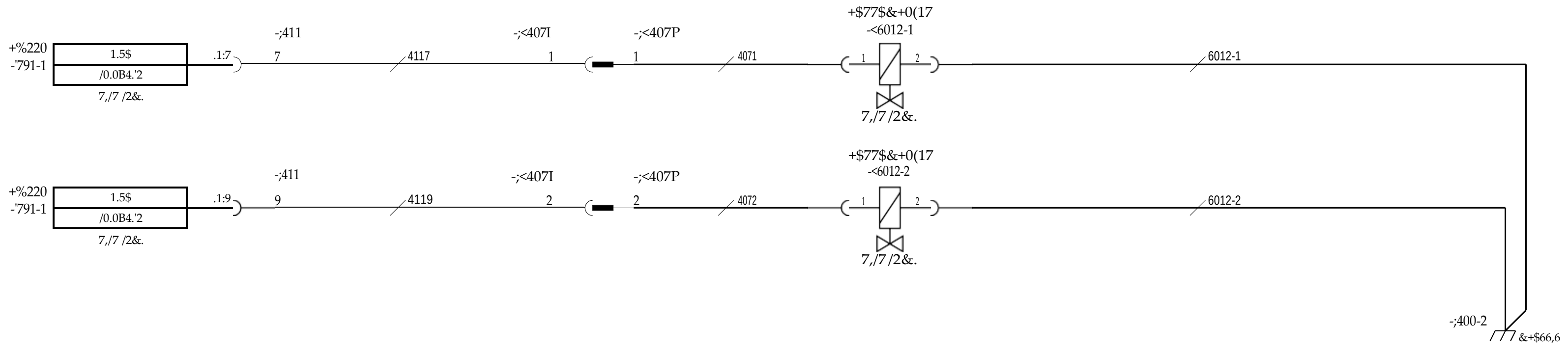

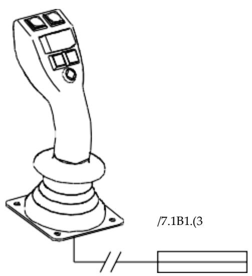

5HI.	1U bQ	GULQJ	bQGULQJ QU	6LJQ.	'DWXP		6LJQ.	'DWXP/'DWH	+\YXGQU./'UDZLQJ QR.
5HI. 6T.	1R.	'HVLJQ FKDQJH	&KDQJH 1R.		'DWH	5LWDG/'UDZQ	7.%	050511	$50000.0600
	1	$GGHG 9.1B5 & 8.2B4 &;059-2.	060600	7.%	060615	.RQVWU./'HVLJQ			
		77LOON/$GGHG 88WJnU/'HOHWHG 99DU/:DV				*RGN/$SSU	7.%	050511	.DVV/&ODVV

+*US: 6

Kalmar

.UHWV 7LOWnVQLQJ
:LULQJ 7LOW ORFN

'5)& 400-450
$50001.0100
7.7B1/
05

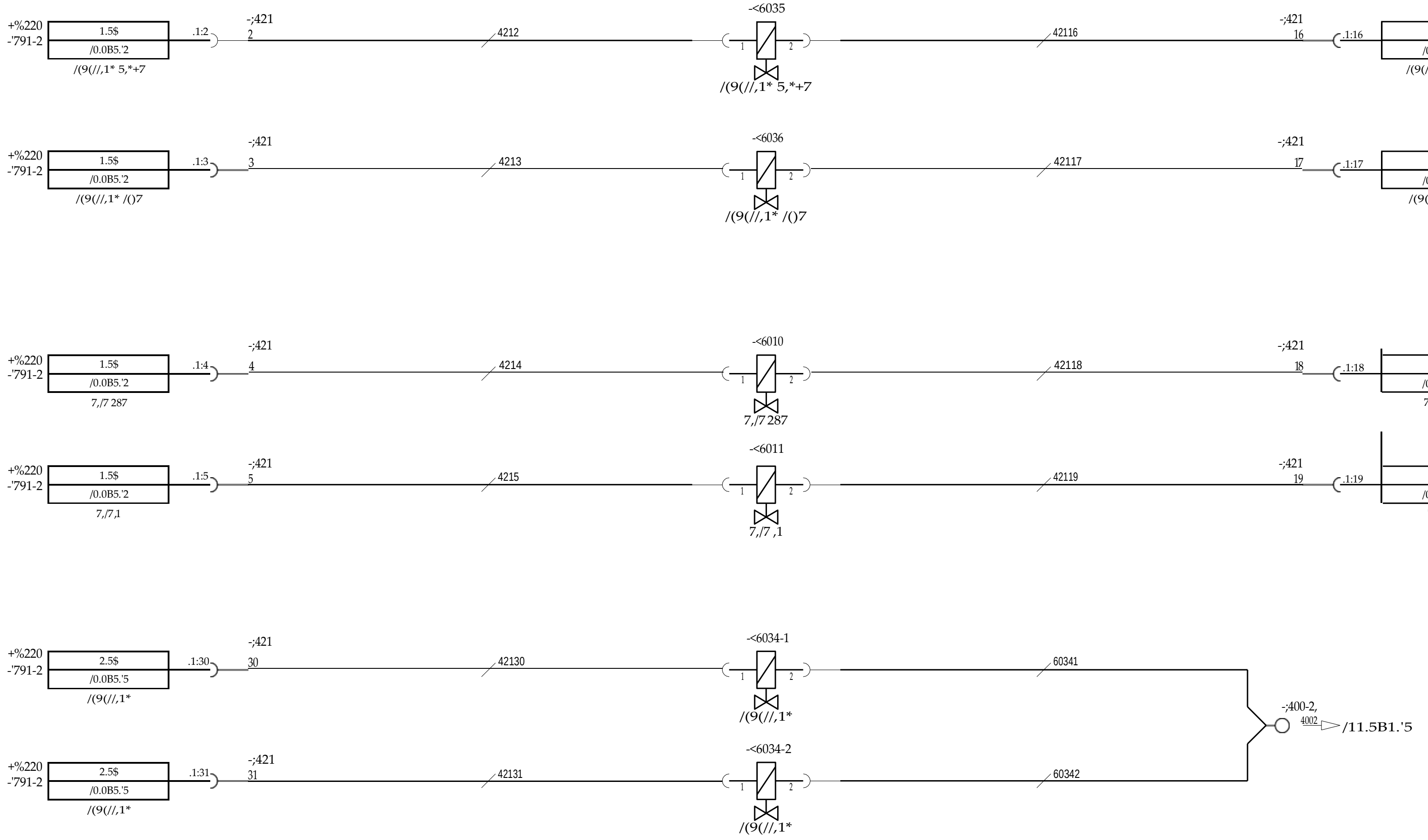

7LOW DQG OHYHOOLQJ ZLWK 237 .'8

5HI. SXWD 6T.	1U bQGULQJ 1R.	'HVLJQ FKDQJH	bQGULQJ QU &KDQJH 1R.	bLJQ.	'DWXP 'DWH		bLJQ.	'DWXP/'DWH	+XYGQU./GURMHFW QR.
	1	$GGHG 9.1B5 & 8.2B4 & ;059-2.	060600	7.%	060615	5LWDG/UDZQ	7.%	050511	$50000.0600
		7 7LOON/$GGHG 8 8WJnU/'HOHWHG 9 9DU/:DV				.RQWUROO/HVLJQ			
						*RGN/$SSU	7.%	050511	.ODVV/&ODVV

+*US: 6

Kalmar

%HQHPQLQJ: .UHWV 7LOW + 6NHYQLQJ
1DPH: :LULQJ 7LOW + /HYHOOLQJ
3URGXNW/3URGXFW: '5)& 400-450
5LWQLQJV QU./'UDZLQJ 1R.: $50001.0100
%ODG/6KHHW: 7.7B2/
6WJnYD/VVXH: 05

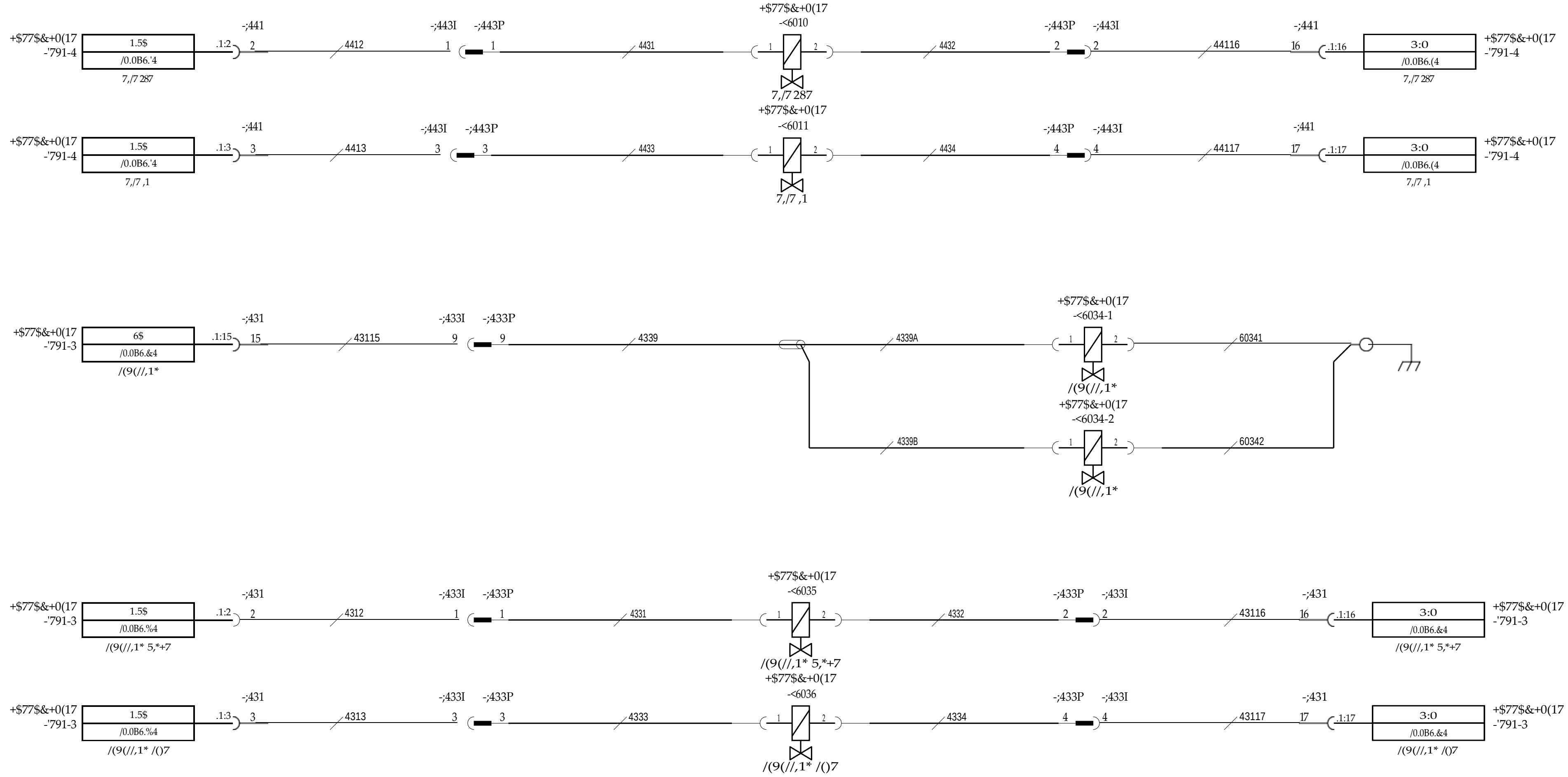

7LOW DQG OHYHOOLQJ ZLWK &RPEL $WWDFKPHQW

5HL 5HYLV 6T.	1U bQGULQJ 1R.	'HVLJQ FKDQJH	bQGULQJ QU &KDQJH 1R.	bLJQ.	'DWXP 'DWH		bLJQ.	'DWXP/'DWH	+Y.GQU./GURMHFW QR.	
						5LWDG/UDZQ	7.%	050511	$50000.0600	
	1	$GGHG 9.1B5 & 8.2B4 & ;059-2.	060600	7.%	060615	.RQWUROO/&KHFNLQJ				+.*US: 6
		7 7LOON/$GGHG 8 8WJnU/'HOHWHG 9 9DU/:DV				*RGN/$SSU	7.%	050511	.ODVV/&ODVV	

Kalmar

%HQHPQLQJ: .UHWV 7LOW + 6NHYQLQJ
1DPH: :LULQJ 7LOW + /HYHOOLQJ
3URGXNW/3URGXFW: '5)& 400-450
5LWQLQJVQU./'UDZLQJ 1R.: $50001.0100
%ODGnKHHW: 7.7B3/
6WJnYD/'VVXH: 05

'HQQD ULWQLQJ InU HM NRSLHUDV ... (rotated margin notices, illegible)

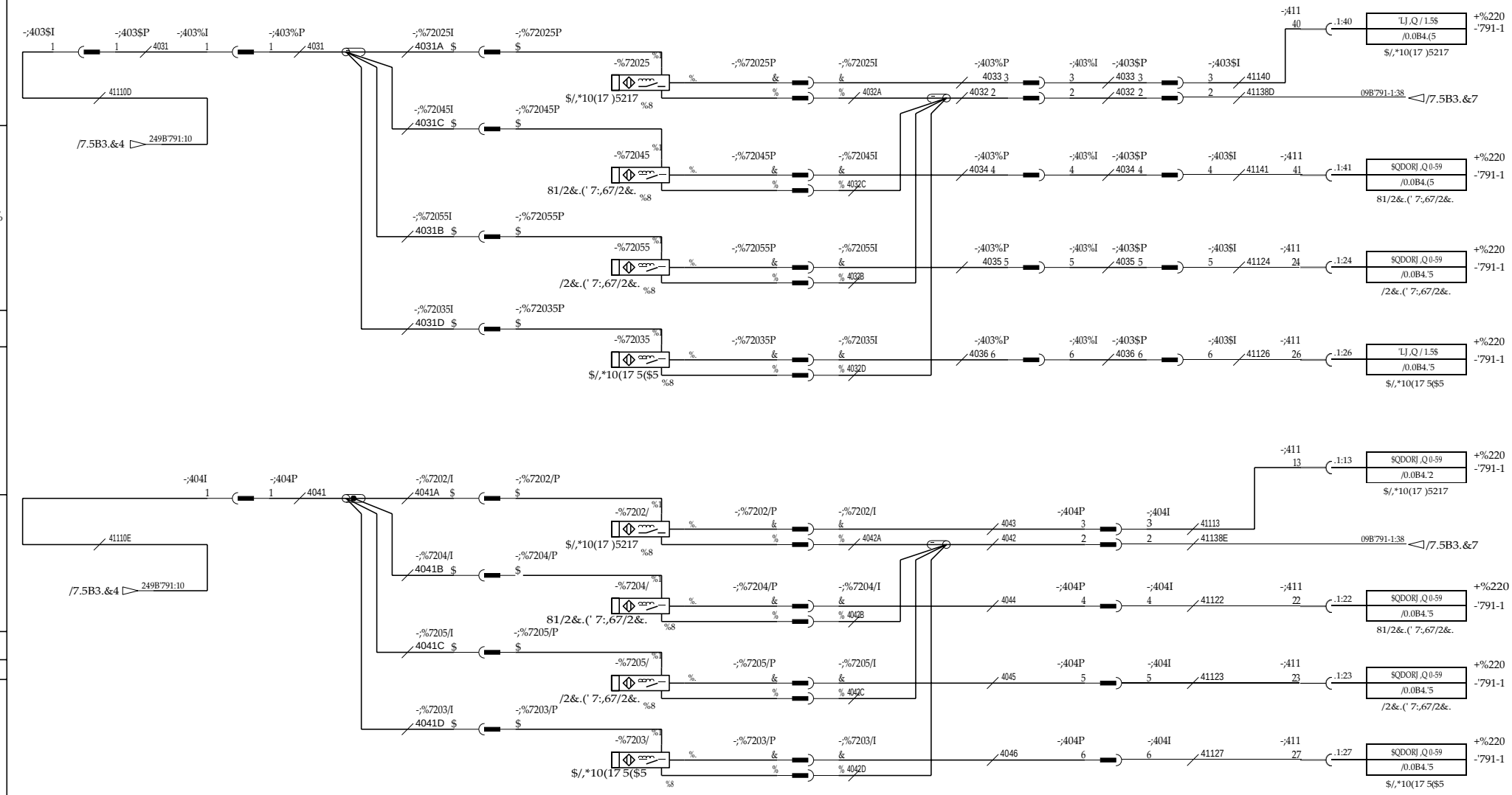

5HI. 5WD 6T.	1U bQGULQJ 1R. 'HVLJQ FKDQJH	bQGULQJ QU &KDQJH 1R.	6LJQ.	'DWXP 'DWH	SLWDG/UDZQ	6LJQ.	'DWXP/DWH	‹XYXQQLU,SURMHFW QR.
		$GGHG 9.1B5 & 8.2B4 & ;059-2.	060600	7.%	060615	,RQVWUXFWLRQ	7.%	050511	$50000.0600
		7 7LOON/$GGHG 8 8W]nU/'HOHWHG 9 9DU/:DV				*RGN/$SSU	7.%	050511	,ODVV/&ODVV

+77&+0(17 6
+.*US:

Kalmar

%HQIPQLQJ
.UHWV 7ZLVWORFN

1DPH
:LULQJ 7ZLVWORFN

3URGXNW/3URGXFW
'5)& 400-450

SLW Q QU,' UDZLQJ 1R
$50001.0100

%ODG&&KEHW
7.9B1/

8W]nYD/VVXH
05

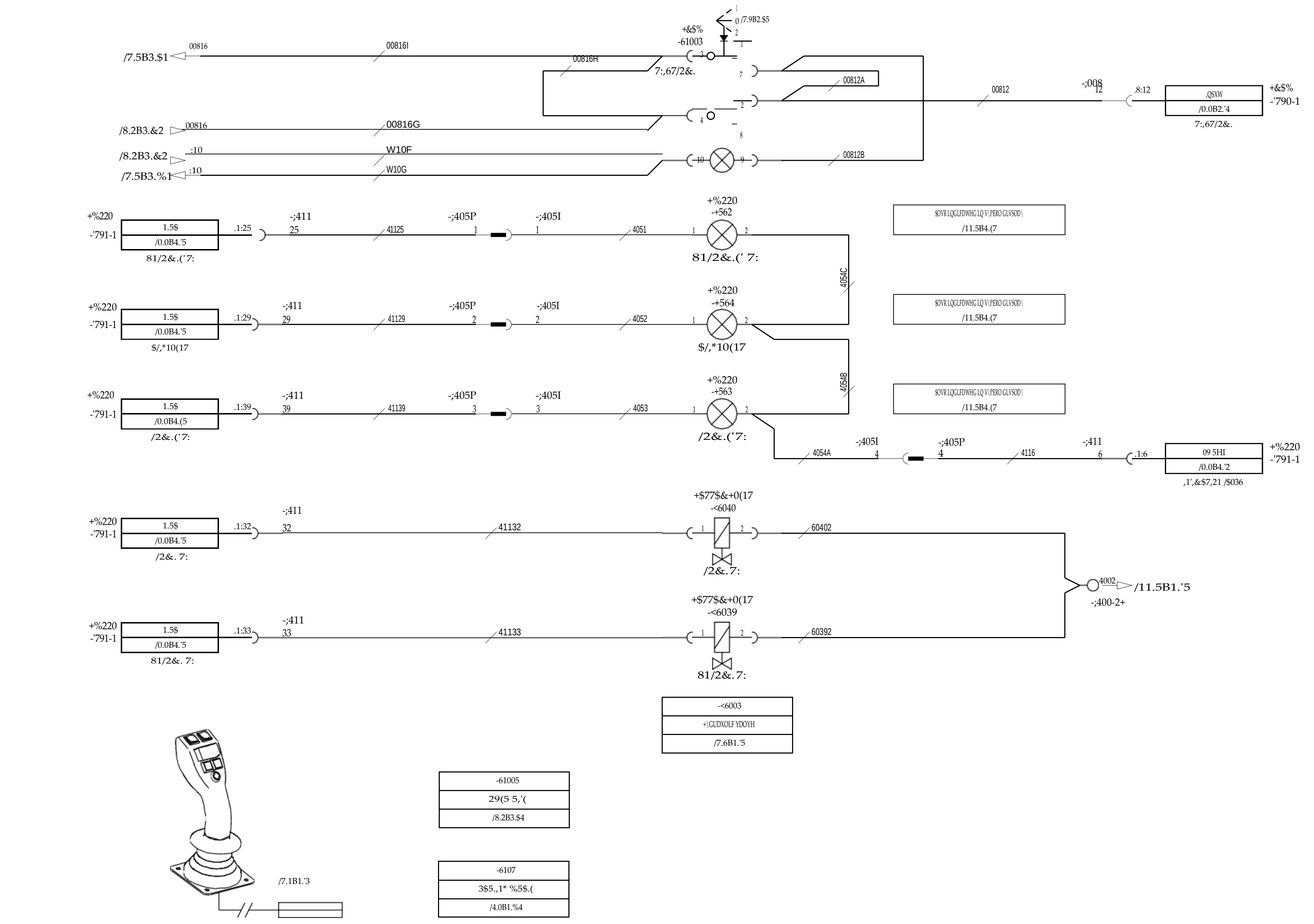

5HI. SXWD 6T.	1U b\ 1R.	GULQJ 'HVLLQ FKDQJH	bQGULQJ QU &KDQJH 1R.	bLJQ.	'DWXP 'DWH		bLJQ.	'DWXP/'DWH	+XYXGQU./SURMHFW QR.
	1	$GGHG 9.1B5 & 8.2B4 & ;059-2.	060600	7.%	060615	5LWDG/UDZQ	7.%	050511	$50000.0600
		7 7LOON/$GGHG 8 8WJnU/'HOHWHG 9 9DU/:DV				.RQVWU/'HVLJQ			
						*RGN/$SSU	7.%	050511	.ODVV/&ODVV

+,*US: 6

Kalmar

%HQlPQLQJ: .UHWV 7ZLVWORFN

1DPH: :LULQJ 7ZLVWORFN

3URGXNW/3URGXFW: '5)& 400-450

5LWQLQJ/'UDZLQJ 1R.: $50001.0100

%ODG/6KHHW: 7.9B2/

6SnUYD/(VVXH: 05

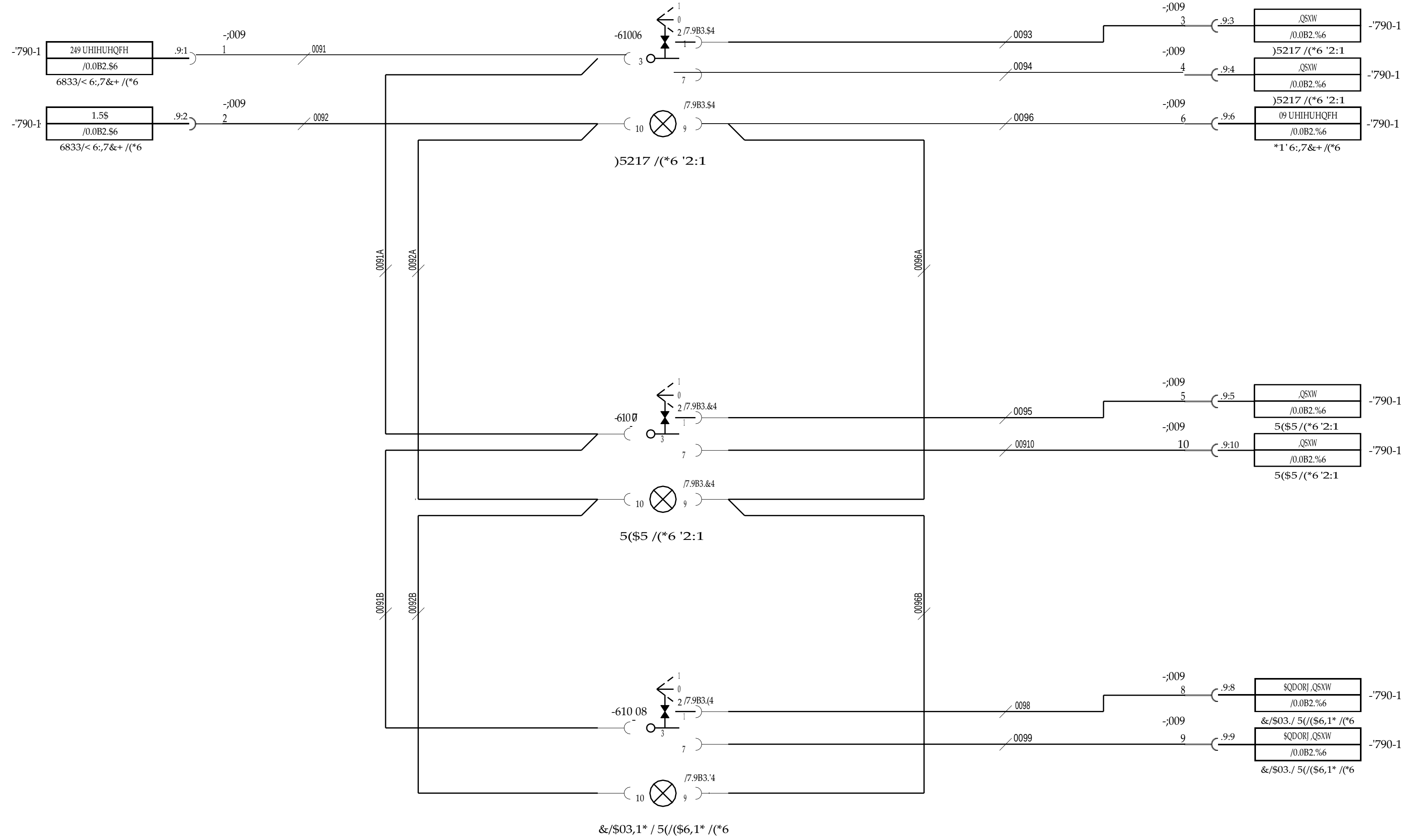

1U bQGULQJ 'HVLJQ FKDQJH	bQGULQJ QU &KDQJH 1R.	6LJQ.	'DWXP 'DWH		
1	$GGHG 9.1B5 & 8.2B4 & ;059-2.	060600	7.%	060615	
	7 7LOON/$GGHG 8 8WJnU/'HOHWHG 9 9DU/:DV				

	6LJQ.	'DWXP/'DWH	+XYXGQU./3URMHFW QR.
5LWDG/'UDZQ	7.%	050511	$50000.0600
.RQWUROO/&KHFNHG			
*RGN/$SSU	7.%	050511	

+&$% 6

Kalmar

.UHWV .RPEL$JJ
:LULQJ &RPEL $WW

'5)& 400-450
$50001.0100

7.9B3/
05

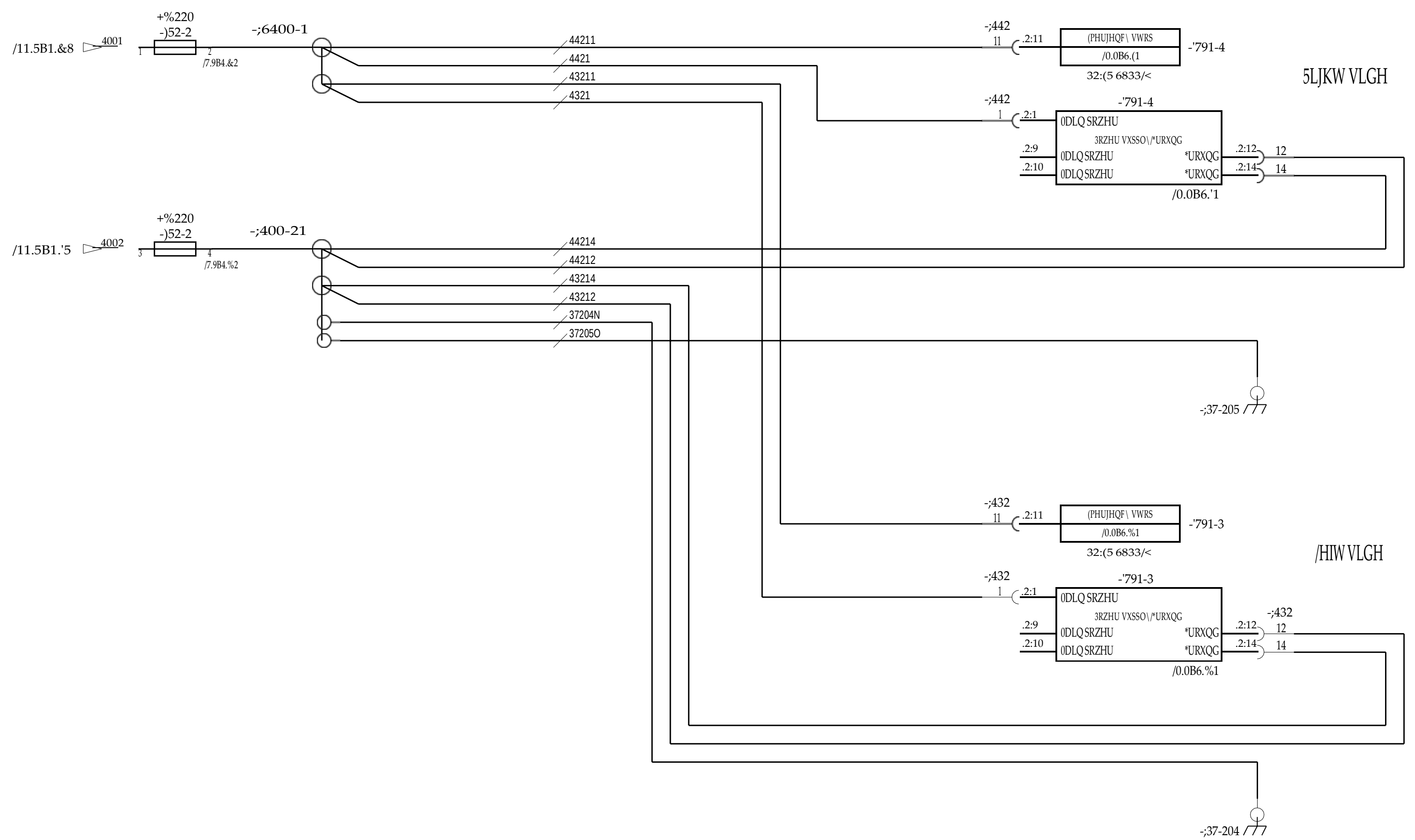

1U bQGULQJ	bQGULQJ QU	6LJQ	'DWXP		6LJQ	'DWXP/'DWH	+XYXGQU/3URMHFW QR.	+77&+0(17
1R. 'HVLJQ FKDQJH	&KDQJH 1R.		'DWH	5LWDG/'UDZQ	7.%	050511	$50000.0600	+.*US: 6
1 $GGHG 9.1B5 & 8.2B4 & ;059-2.	060600	7.%	060615	.RQWUROO/&KHFNHG				
77LOON/$GGHG 88WJnU/'HOHWHG 99DU/:DV				*RGN/$SSU	7.%	050511	.ODVV/&ODVV	

Kalmar

.UHWV .RPEL$JJ
:LULQJ &RPEL$WW
'5)& 400-450
$50001.0100
7.9B4/
05

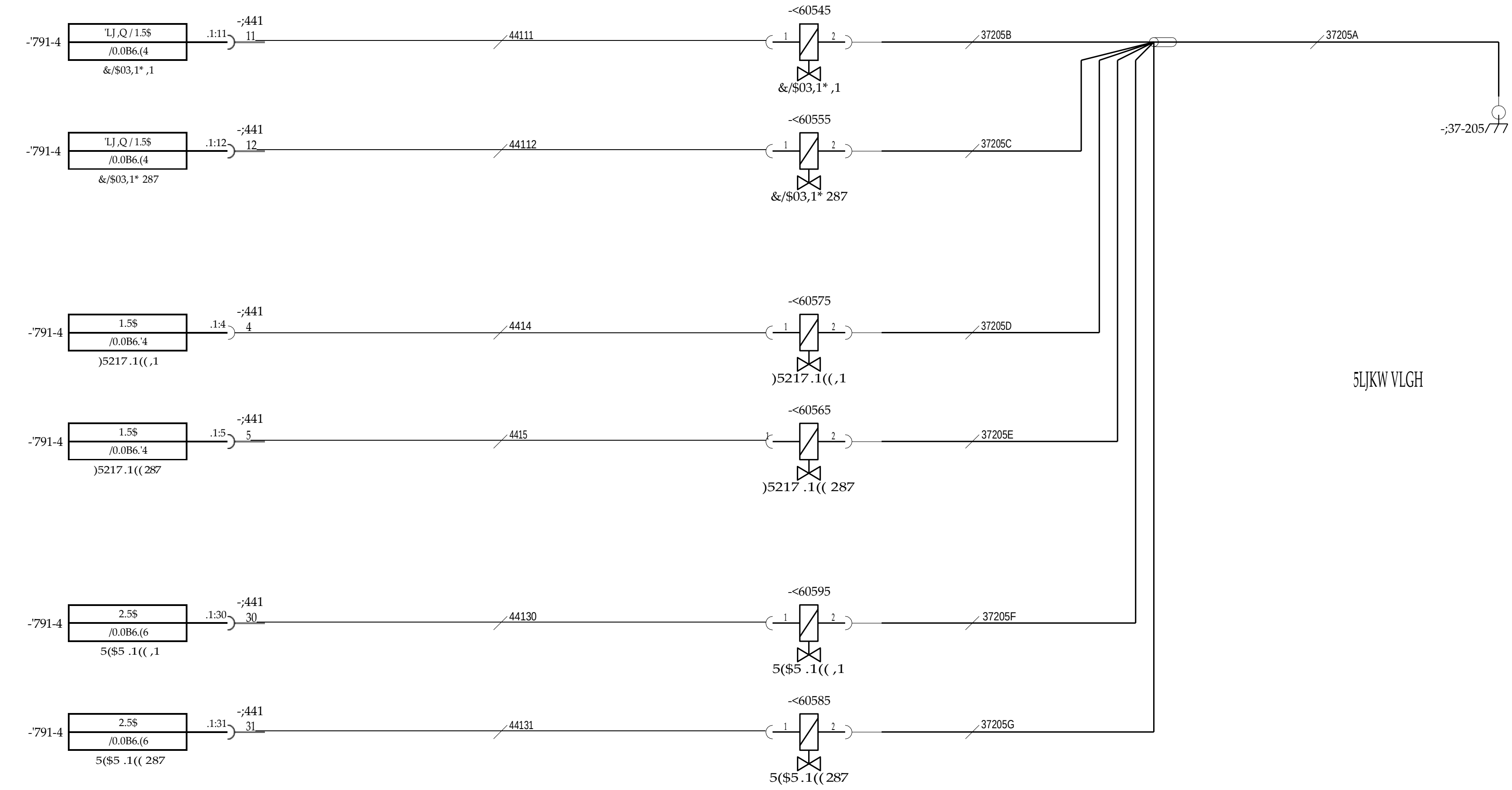

5HI. 3RVLWLRQ 6T.	1U bQGULQJ 1R.	'HVLJQ FKDQJH	bQGULQJ QU &KDQJH 1R.	6LJQ.	'DWXP 'DWH
	1	$GGHG 9.1B5 & 8.2B4 & ;059-2.	060600	7.%	060615
		7 7LOON/$GGHG 8 8WJnU/'HOHWHG 9 9DU/:DV			

	6LJQ.	'DWXP/'DWH	+XYXGQU./3URMHFW QR
5LWDG/UDZQ	7.%	050511	$50000.0600
.RQWUROO/HVLJQ			
*RGN/$SSU	7.%	050511	.ODVV/&ODVV

+77&+0(17
+,*US: 6

Kalmar

%HQlPQLQJ: .UHWV .RPEL$JJ
1DPH: :LULQJ &RPEL $WW
3URGXNW/3URGXFW: '5)& 400-450
5LWQLQJV 1R: $50001.0100
%ODG/6KHHW: 7.9B5/
8WJnYD/,VVXH: 05

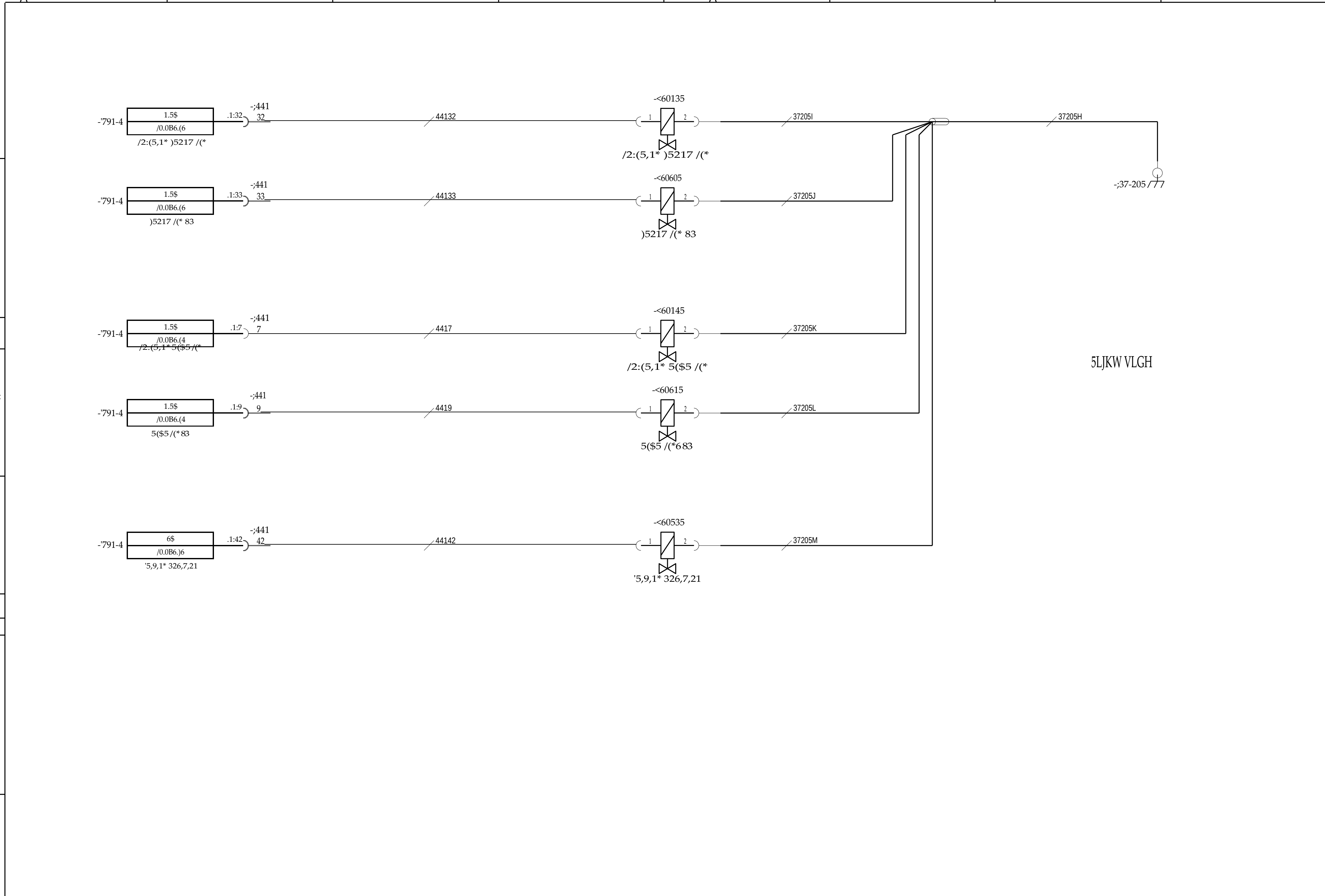

5HI. 6YPERO 6T.	1U bQGULQJ 1R.	'HVLJQ FKDQJH	bQGULQJ QU &KDQJH 1R.	6LJQ.	'DWXP 'DWH
	1	$GGHG 9.1B5 & 8.2B4 & ;059-2.	060600	7.%	060615
		7 7LOON/$GGHG 8 8WJnU/'HOHWHG 9 9DU/:DV			

	6LJQ.	'DWXP/'DWH	+XYXGQU./GURMHFW QR
5LWDG/UDZQ	7.%	050511	$50000.0600
.RQVWU/HVLJQ			
*RGN/$SSU	7.%	050511	.ODVV/&ODVV

+77&+0(17
+,*US: 6

Kalmar

%HQPQLQJ .UHWV .RPEL$JJ

1DPH :LULQJ &RPEL $WW

3URGXNW/3URGXFW '5)& 400-450

5LWQLQJ / UDZLQJ 1R. $50001.0100

%ODG/6KHHW 7.9B6/

8WJnYD/,VVXH 05

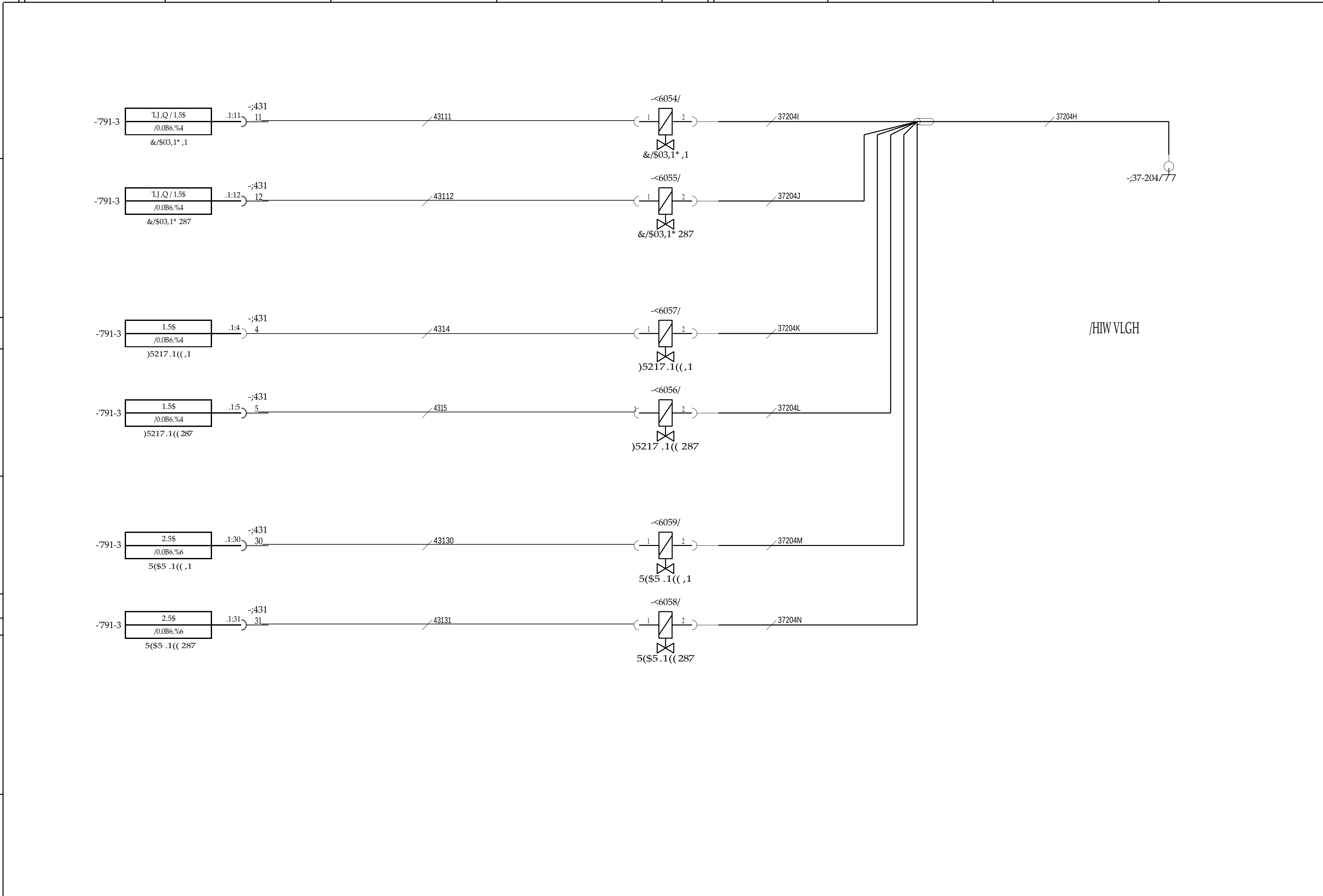

5HL SVWD 6T.	1U bQGULQJ 1R.	'HVLJQ FKDQJH	bQGULQJ QU &KDQJH 1R.	6LJQ.	'DWXP 'DWH		6LJQ.	'DWXP/'DWH	+XYXGQU./XUMHEW QR	+77&+0(17 +,*US: 6
	1	$GGHG 9.1B5 & 8.2B4 & ;059-2.	060600	7.%	060615	5LWDG/UDZQ	7.%	050511	$50000.0600	
		7 7LOON/$GGHG 8 8WJnU/'HOHWHG 9 9DU/:DV				.RQVWU/'HVLJQ				
						*RGN/$SSU	7.%	050511	.ODVV/&ODVV	

Kalmar

%HQlPQLQJ .UHWV .RPEL$JJ

1DPH :LULQJ &RPEL $WW

3URGXNW/3URGXFW '5)& 400-450

5LWQLQJ / 'UDZLQJ 1R. $50001.0100

%ODG/6KHHW 7.9B7/

8WJnYD/,VVXH 05

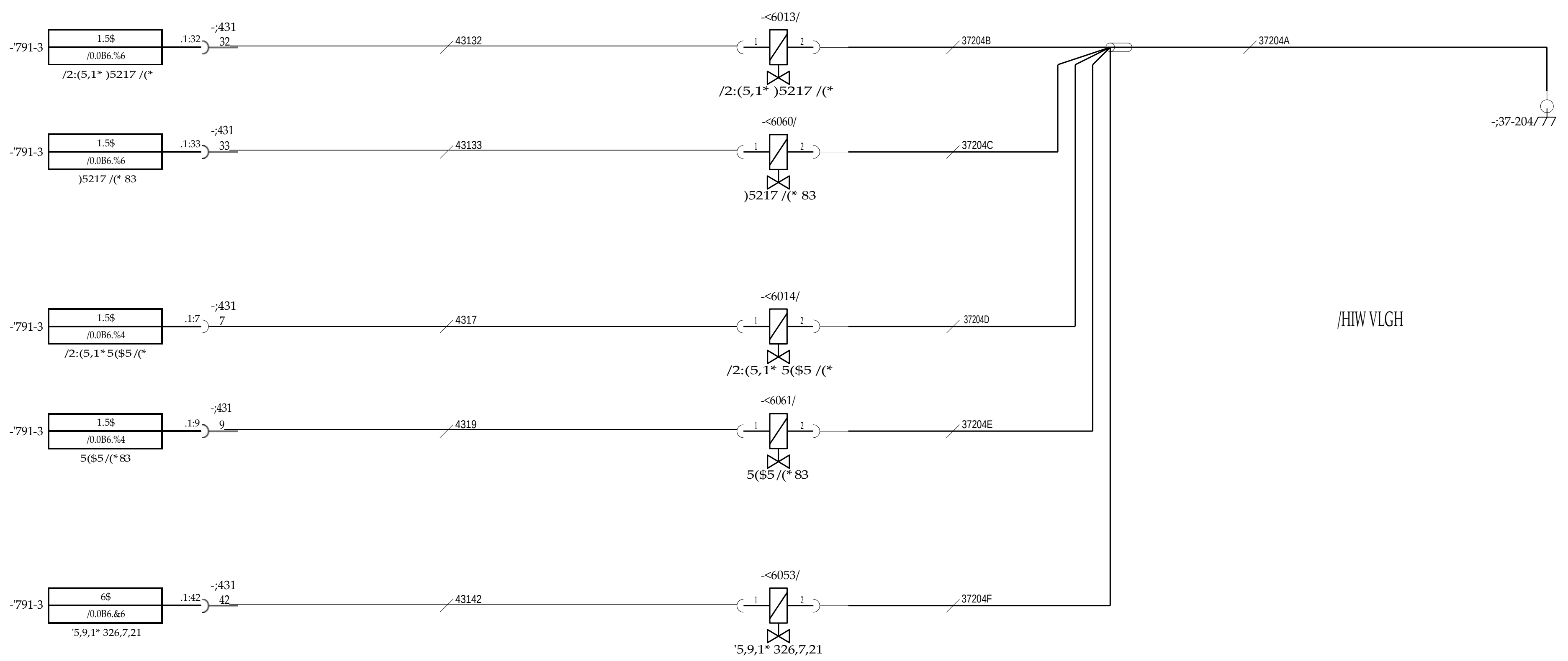

5HI. 5WD 6T.	1U bQGULQJ	bQGULQJ QU	6LJQ.	'DWXP		6LJQ.	'DWXP/'DWH	+XYXGQU./3URMHFW QR.		%HQlPQLQJ .UHWV .RPEL$JJ
1R.	'HVLJQ FKDQJH	&KDQJH 1R.		'DWH	5LWDG/'UDZQ	7.%	050511	$50000.0600	+77&+0(17	'5)& 400-450
1	$GGHG 9.1B5 & 8.2B4 & ;059-2.	060600	7.%	060615	.RQWUROO/&KHFNHG				+,*US: 6	1DPH :LULQJ &RPEL$WW
	77LOON/$GGHG 88WJnU/'HOHWHG 99DU/:DV				*RGN/$SSU	7.%	050511	.ODVV/&ODVV		$50001.0100

Kalmar

%ODG/6KHHW 7.9B8/
6WjnYD/,VVXH 05

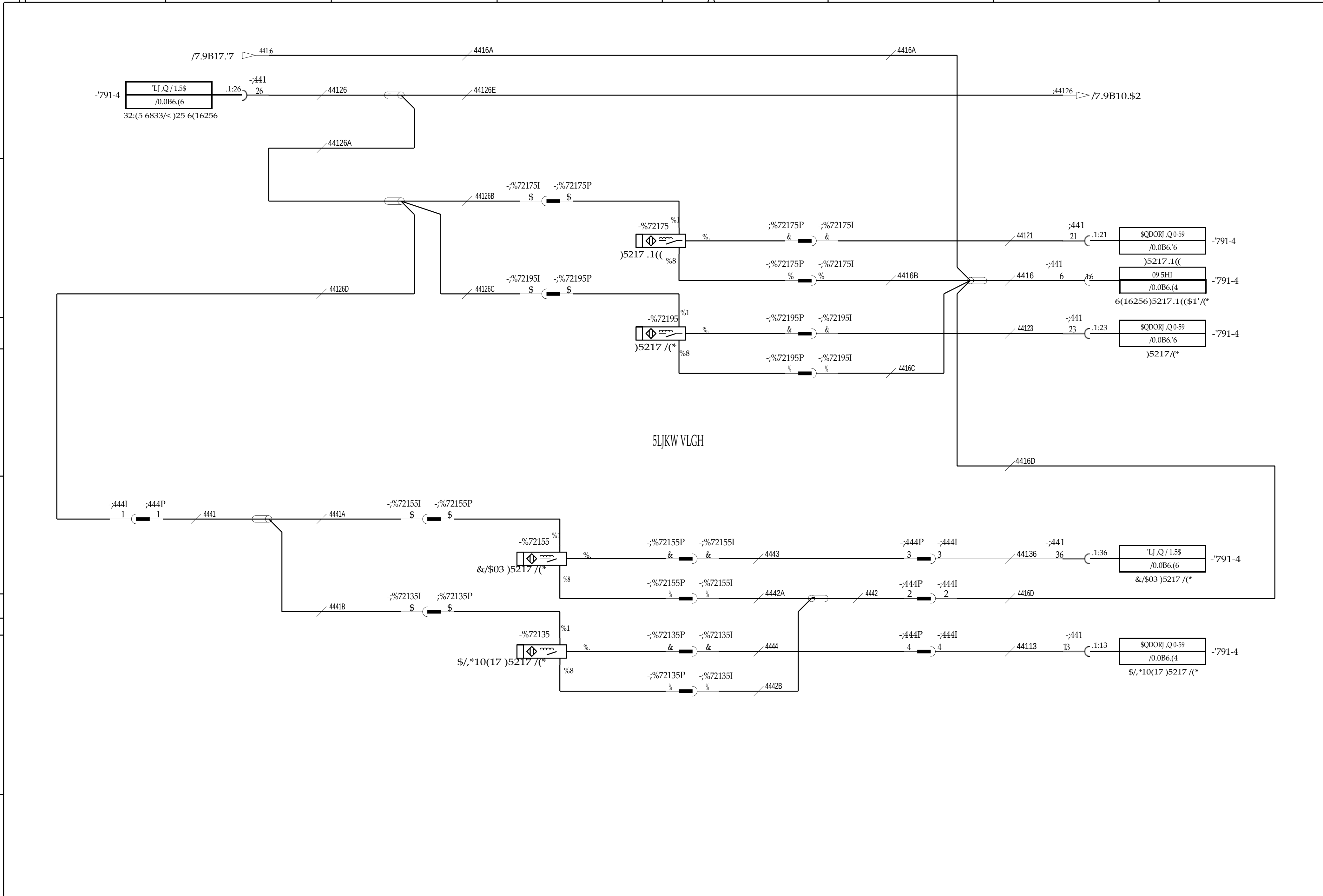

5HI. 3XQNW 6T.	1U bQGULQJ 1R.	'HVLJQ FKDQJH	bQGULQJ QU &KDQJH 1R.	6LJQ.	'DWXP 'DWH		6LJQ.	'DWXP/'DWH	+XYXGQU./GURMHFW QR.
	1	$GGHG 9.1B5 & 8.2B4 & ;059-2.	060600	7.%	060615	5LWDG/'UDZQ	7.%	050511	$50000.0600
		7 7LOON/$GGHG 8 8WJnU/'HOHWHG 9 9DU/:DV				.RQWUROO/&KHFNHG			
						*RGN/$SSU	7.%	050511	.ODVV/&ODVV

+77&+0(17 +,*US: 6

Kalmar

%HQlPQLQJ .UHWV .RPEL$JJ

1DPH :LULQJ &RPE $WW

3URGXNW/3URGXFW '5)& 400-450

5LWQLQJVQU./'UDZLQJ 1R. $50001.0100

%ODG/6KHHW 7.9B9/

8WJnYD/,VVXH 05

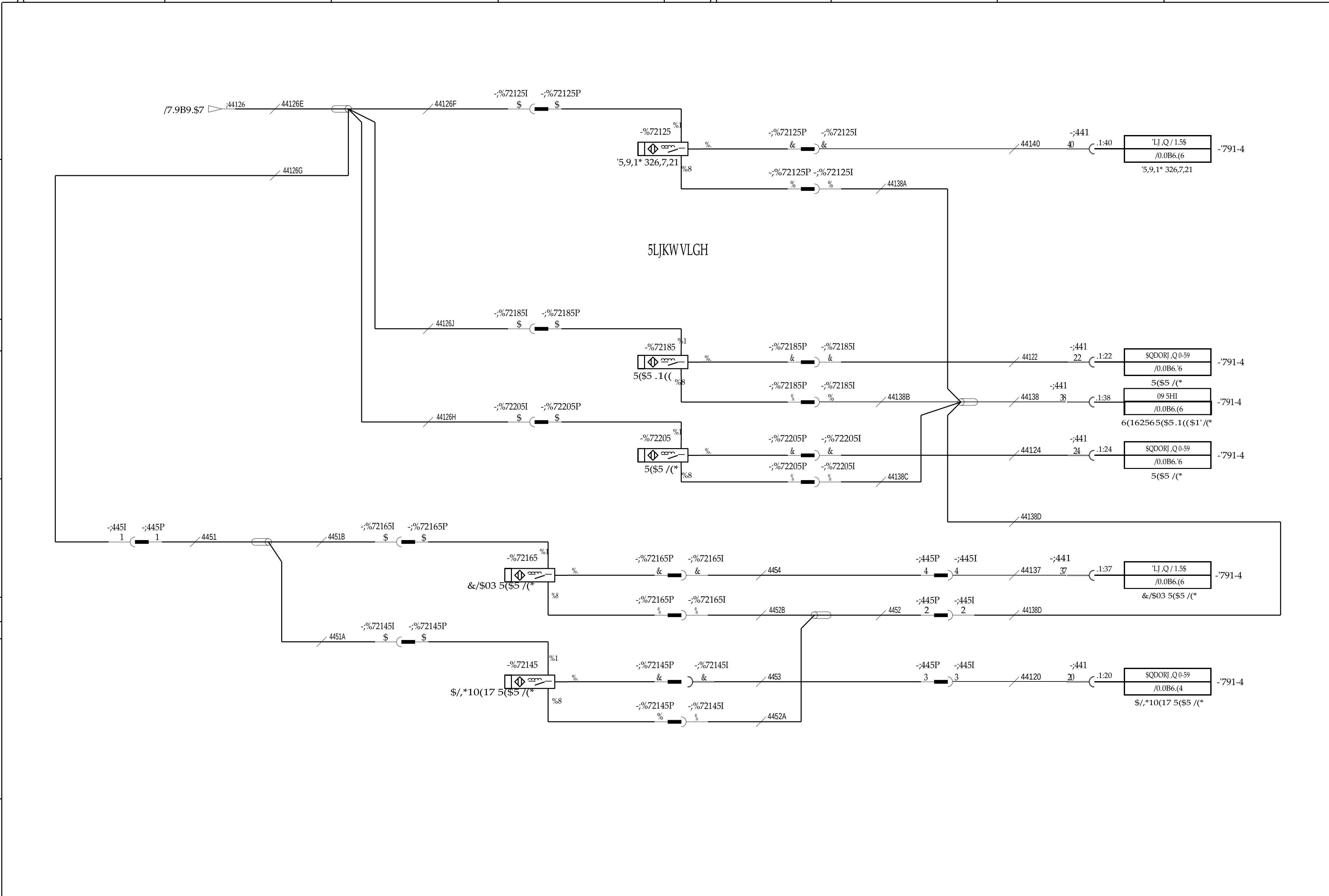

5HI. 5WDWXV 6T.	1U bQGULQJ 1R.	'HVLJQ FKDQJH	bQGULQJ QU &KDQJH 1R.	6LJQ.	'DWXP 'DWH
	1	$GGHG 9.1B5 & 8.2B4 & ;059-2.	060600	7.%	060615
		7 7LOON/$GGHG 8 8WJnU/'HOHWHG 9 9DU/:DV			

	6LJQ.	'DWXP/'DWH	+XYXGQU./SURMHFW QR
5LWDG/UDZQ	7.%	050511	$50000.0600
.RQVWU/'HVLJQ			
*RGN/$SSU	7.%	050511	.ODVV/&ODVV

+77&+0(17 +,*US: 6

%HQlPQLQJ: .UHWV .RPEL$JJ

1DPH: :LULQJ &RPEL $WW

3URGXNW/3URGXFW: '5)& 400-450

5LWQLQJVQU./'UDZLQJ 1R.: $50001.0100

%ODG/6KHHW: 7.9B10

8WJnYD/,VVXH: 05

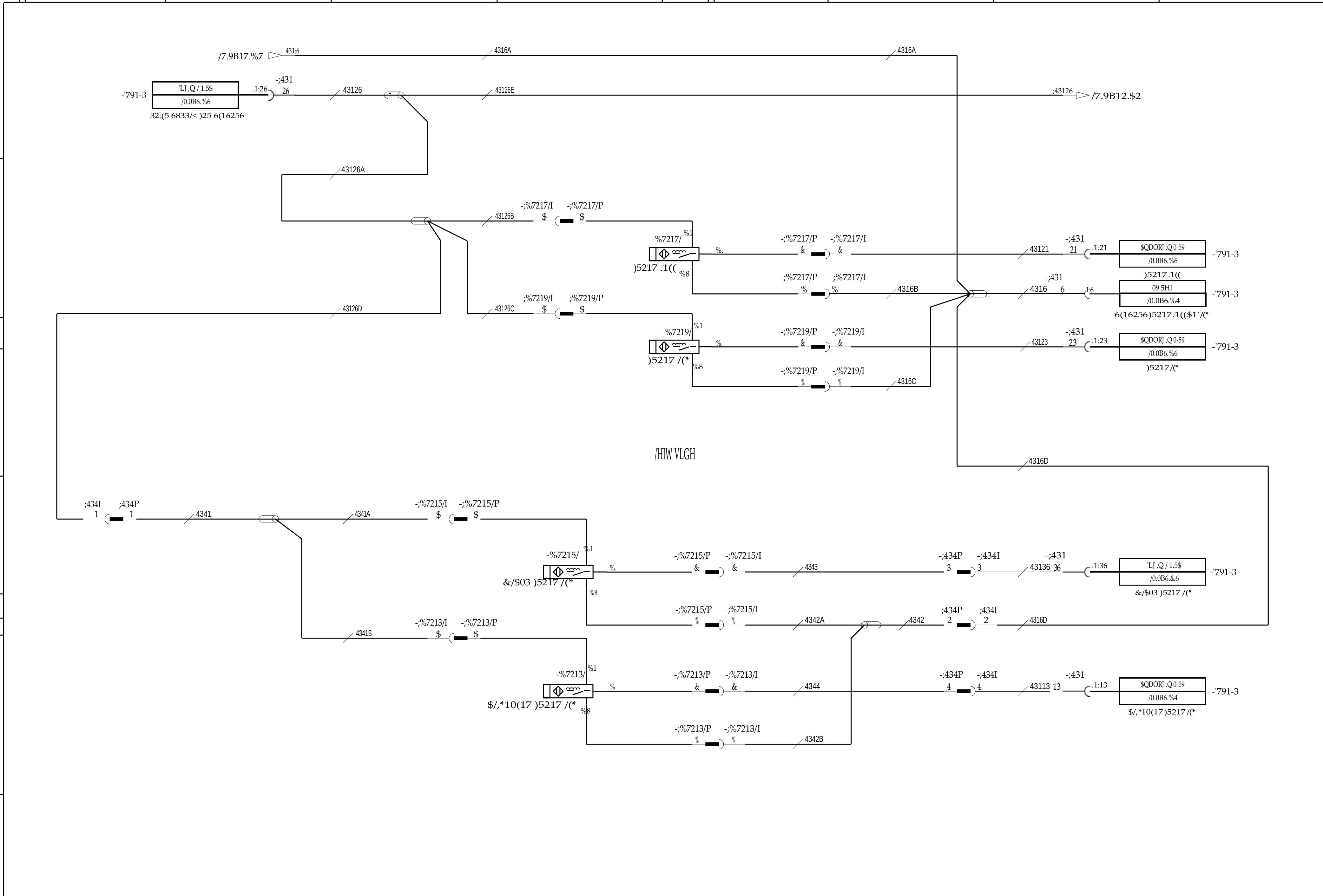

5HI. 6T.	1U bQGULQJ 1R.	'HVLJQ FKDQJH	bQGULQJ QU &KDQJH 1R.	6LJQ.	'DWXP 'DWH
	1	$GGHG 9.1B5 & 8.2B4 & ;059-2.	060600	7.%	060615
		7 7LOON/$GGHG 8 8WJnU/'HOHWHG 9 9DU/:DV			

	6LJQ.	'DWXP/'DWH	+XYXGQU./'UDZLQJ QR
5LWDG/'UDZQ	7.%	050511	$50000.0600
.RQWUROO/&KHFNHG			
*RGN/$SSU	7.%	050511	.ODVV/&ODVV

+77&+0(17 +,*US: 6

Kalmar

%HQlPQLQJ .UHWV .RPEL$JJ
1DPH :LULQJ &RPE $WW

3URGXNW/3URGXFW '5)& 400-450
5LWQLQJ/'UDZLQJ 1R. $50001.0100

%ODGHKHW 7.9B11
8WJnYD/,VVXH 05

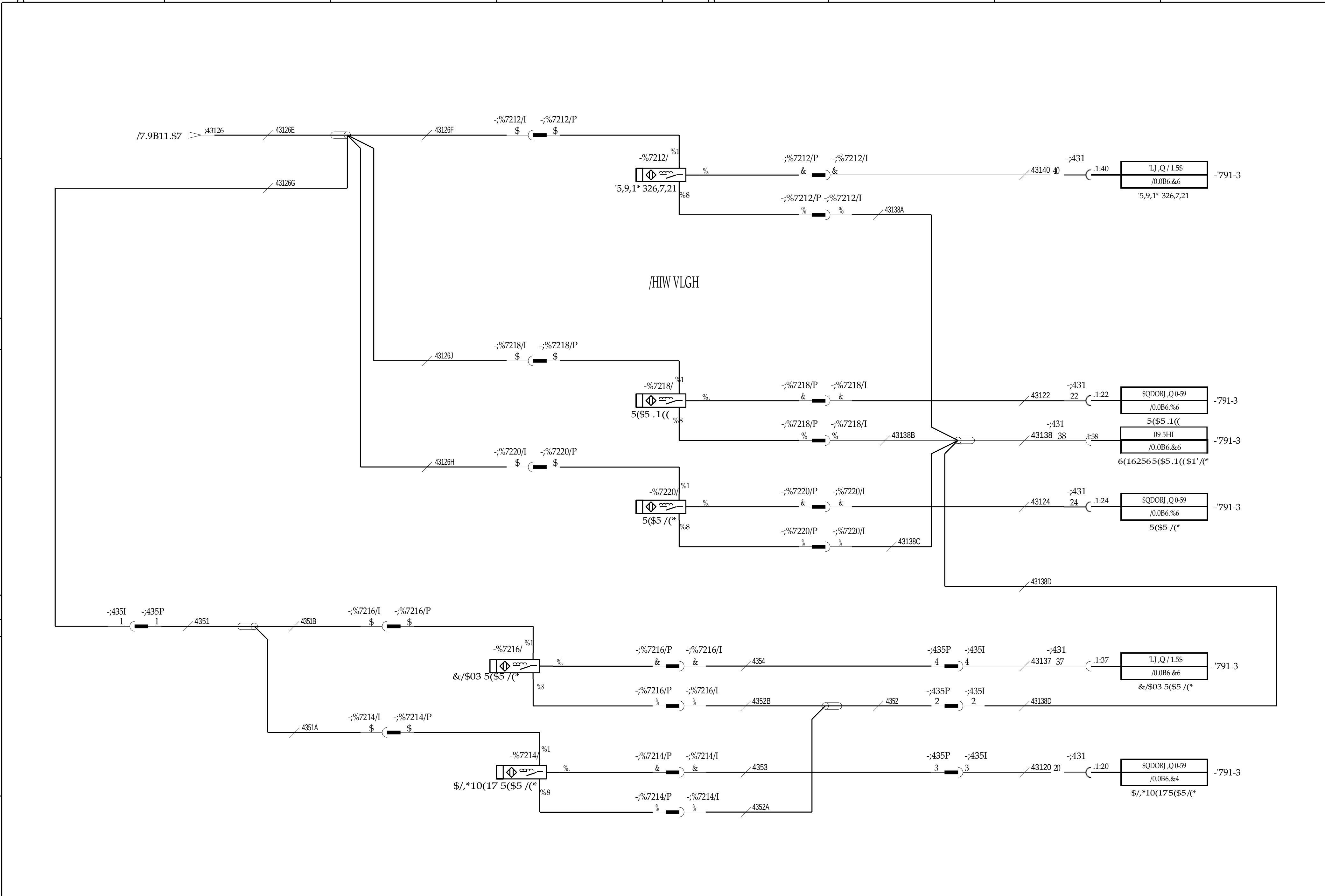

5HI. 5XWD 6T.	1U bQGULQJ 1R.	'HVLJQ FKDQJH	bQGULQJ QU &KDQJH 1R.	6LJQ.	'DWXP 'DWH
	1	$GGHG 9.1B5 & 8.2B4 & ;059-2.	060600	7.%	060615
		7 7LOON/$GGHG 8 8WJnU/'HOHWHG 9 9DU/:DV			

	6LJQ.	'DWXP/'DWH	+XYXGQU/3URMHFW QR
5LWDG/'UDZQ	7.%	050511	$50000.0600
.RQVWU/'HVLJQ			
*RGN/$SSU	7.%	050511	.ODVV/&ODVV

+77&+0(17 +,*'US. 6

Kalmar

%HQlPQLQJ .UHWV .RPEL$JJ
1DPH :LULQJ &RPEL $WW

3URGXNW/3URGXFW '5)& 400-450
5LWQLQJV QU/'UDZLQJ 1R. $50001.0100

%ODG/6KHHW 7.9B12/
8WJnYD/,VVXH 05

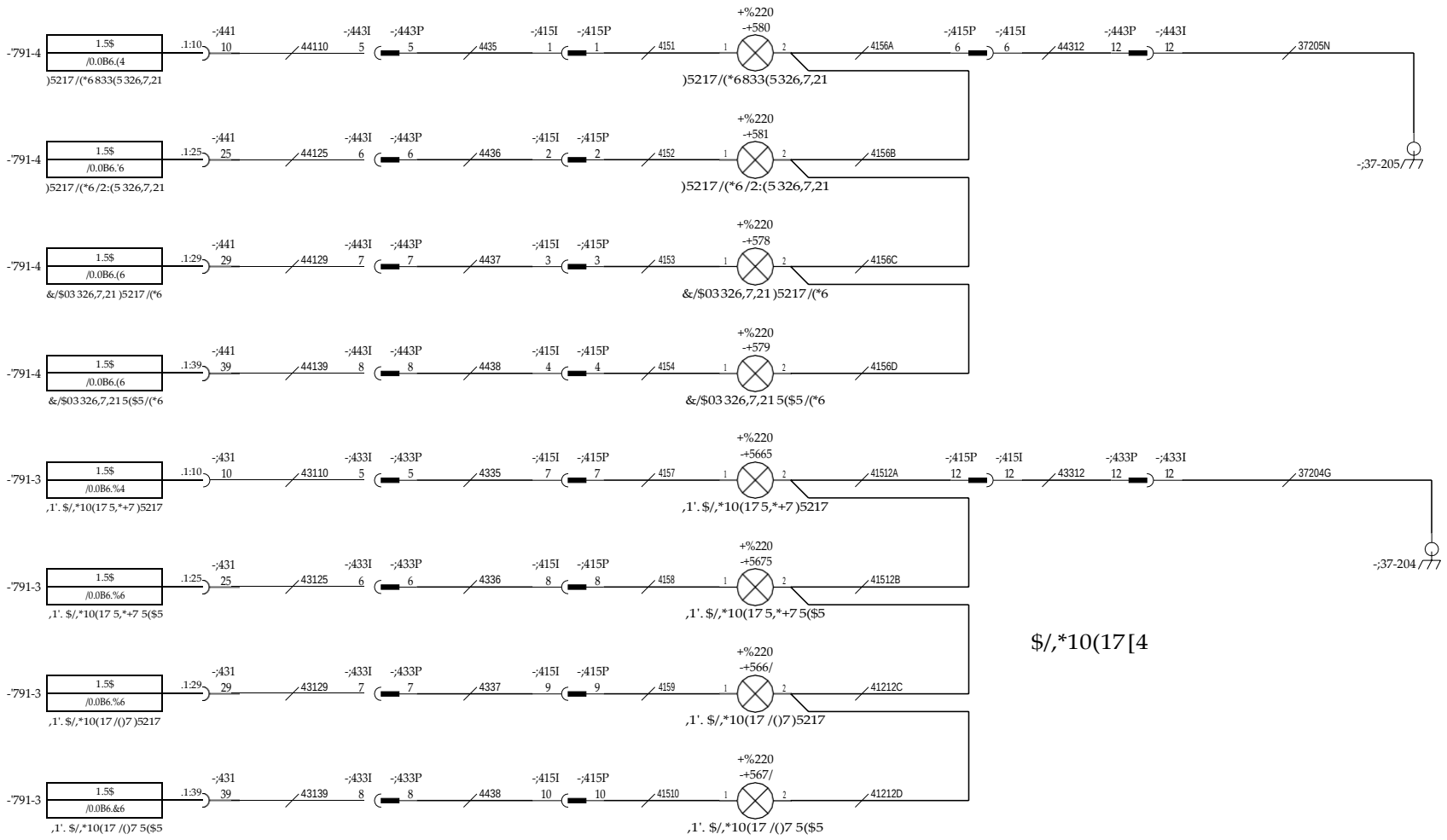

5HI. 5WD 6T.	1U bQGULQJ 1R.	'HVLJQ FKDQJH	bQGULQJ QU &KDQJH 1R.	6LJQ.	'DWXP 'DWH		6LJQ.	'DWXP/'DWH	‹XYXQQLU,JURMHFW QR.		
		SLWDG/UDZQ	7.%	050511	$50000.0600	+77&+0(17 *.*US: 6					
		$GGHG 9.1B5 & 8.2B4 & ;059-2.	060600	7.%	060615						
		7 7LOON/$GGHG 8 8W]nU/'HOHWHG 9 9DU/:DV				.RQVWU/'HVLJQ					
						*RGN/$SSU	7.%	050511	.ODVV/&ODVV		

Kalmar

%.HQIPQLQJ
.UHWV .RPEL$JJ

IDPH
:LULQJ &RPEL $WW

3URGXNW(3URGXFW
'5)& 400-450

SLW(Q QU,/ UDZLQJ 1R.
$50001.0100

%ODG&&HHHW
7.9B13/

8W]nYD(/VVXH
05

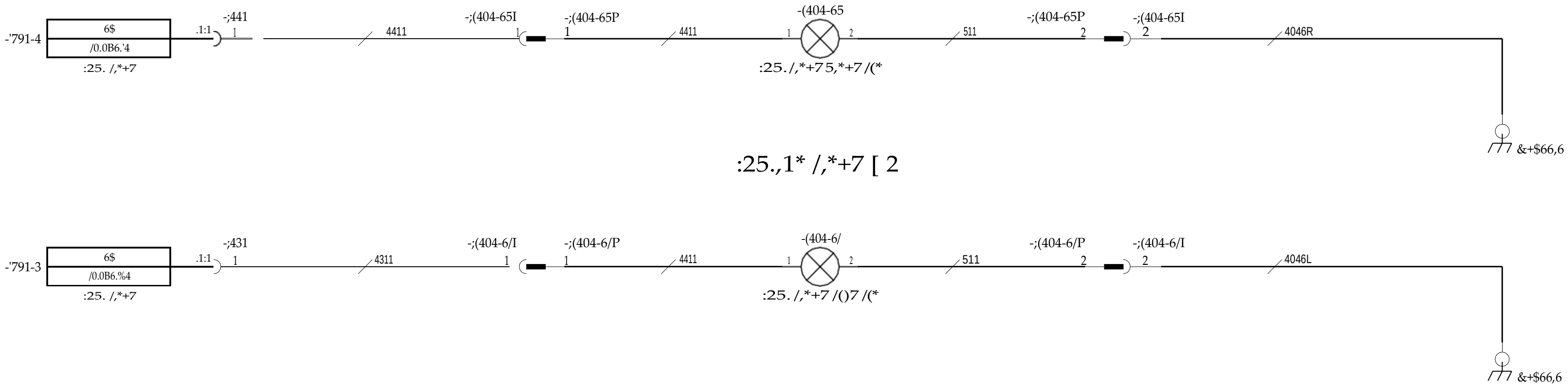

5HL	1U bQGULQJ		bQGULQJ QU	6LJQ	'DWXP		6LJQ	'DWXP/'DWH	+XYXGQU./'URMHFW QR		%HQlPQLQJ	3URGXNW/3URGXFW
1R.	'HVLJQ FKDQJH		&KDQJH1R.		'DWH	5LWDG/'UDZQ	7.%	050511	$50000.0600	+77&+0(17	.UHWV .RPEL$JJ	'5)& 400-450
1	$GGHG 9.1B5 & 8.2B4 & ;059-2.		060600	7.%	060615	.RQVWU/'HVLJQ				+,*US: 6	1DPH	5LWQLQJV/'UDZLQJ 1R
	77LOON/$GGHG 88WJnU/'HOHWHG 99DU/:DV					*RGN/$SSU	7.%	050511	.ODVV/&ODVV		:LULQJ &RPEL $WW	$50001.0100

%ODG/6KHHW 7.9B14/
6WJnYD/,VVXH 05

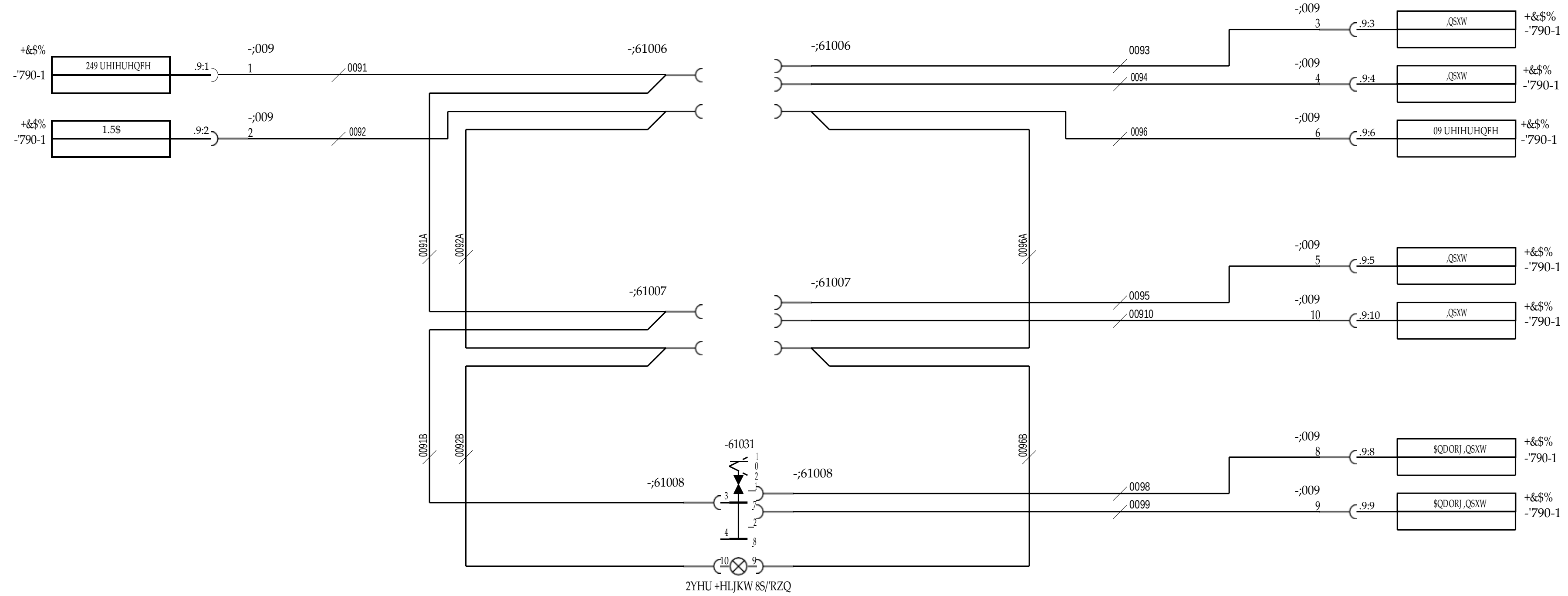

5HI.	1U bQGULQJ		bQGULQJ QU	6LJQ.	'DWXP		6LJQ.	'DWXP/'DWH	+\$VGQU./'UDZLQJ QR.		%HQHQQLQJ	3URGXNWJUXSSH	0DWHULDO
5HYD 6T.	1R.	'HVLJQ FKDQJH	&KDQJH 1R.		'DWH	3LWDG/UDZQ	7.%	050511	$50000.0600		.UHWV 2YHU+HLJKW	'5)& 400-450	7.9B15/
	1	$GGHG 9.1B5 & 8.2B4 & ;059-2.	060600	7.%	060615	.RQVWU/'HVLJQ				+,*US: 6	1DPH	3LWDQ QU./'UDZLQJ 1R.	6WJnYDj/VVXH
		77LOON/$GGHG 88WJnU/'HOHWHG 99DU/:DV				*RGN/$SSU	7.%	050511	ODVV/&ODVV		:LULQJ 2YHU +HLJKW	$50001.0100	05

Kalmar

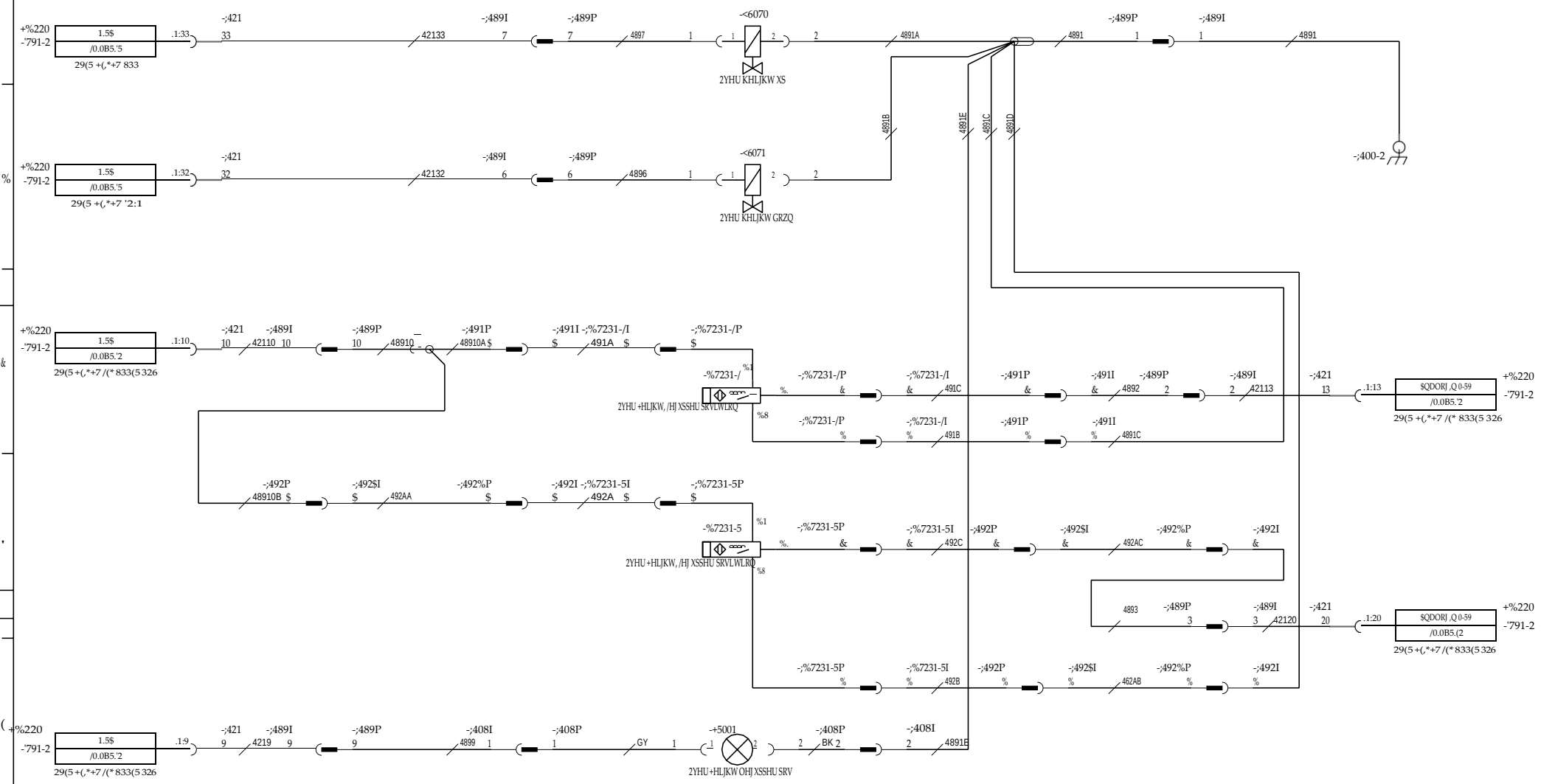

5HI. 5WD 6T.	1U bQGULQJ 1R. 'HVLJQ FKDQJH	bQGULQJ QU &KDQJH 1R.	6LJQ.	'DWXP 'DWH	SLWDG/'UDZQ	6LJQ.	'DWXP/'DWH	+VYQ;QU,JURMHFW QR.		%HQIPQL.QJ .UHWV 2YHU+HLJKW	3URGXNW(3URG/VFW '5)& 400-450	%ODG/6KHHW 7.9B16/
	1	$GGHG 9.1B5 & 8.2B4 & ;059-2.	060600	7.%	060615	.RQVWU/'HVLJQ				1DPH :LULQJ 2YHU +HLJKW	SLWQ QU / UDZLQJ 1R. $50001.0100	8WjnYD/VVXH 05
		7 7LOON/$GGHG 8 8WjnU/'HOHWHG 9 9DU/;DV			*RGN/$SSU	7.%	050511	,ODVV/&6DVV				

Kalmar

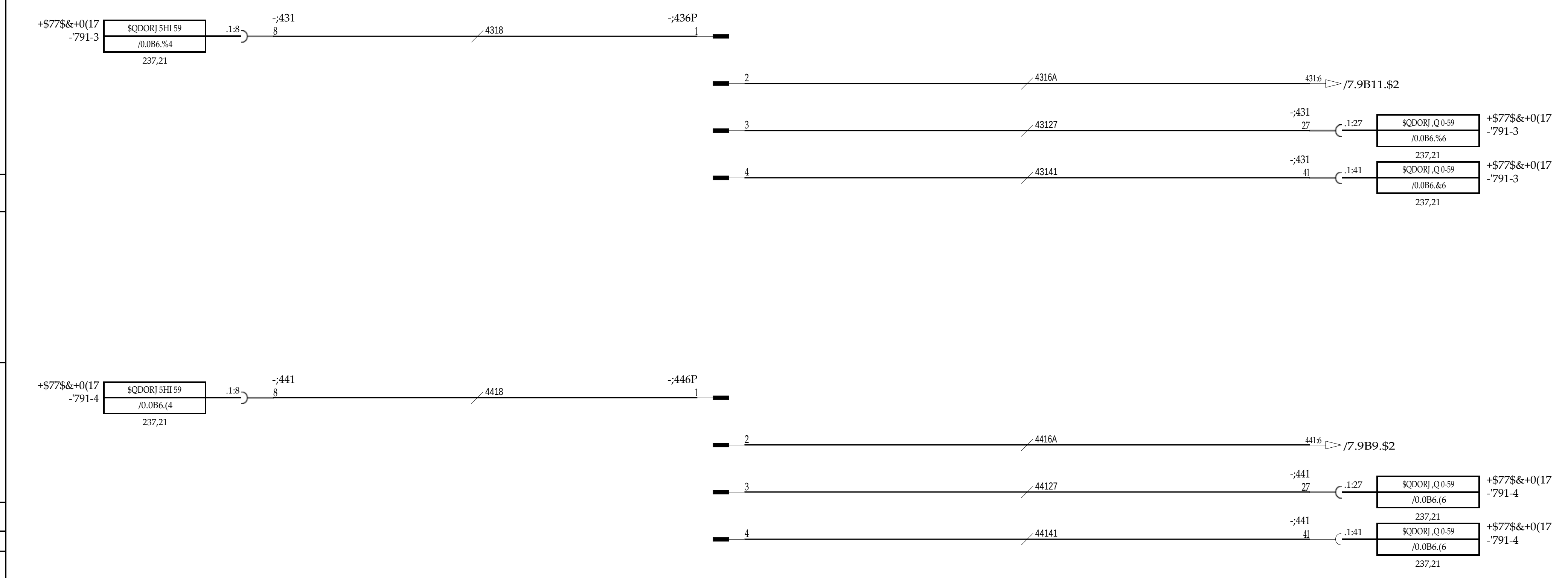

5HI. 3WD 6T.	1U b(GULQJ	bQGULQJ QU	6LJQ.	'DWXP		6LJQ.	'DWXP/'DWH	+\YXGQU./3URMHFW QR.			%HQHPQLQJ	3URGXNW/3URGXFW	%ODG/6KHHW
1R.	'HVLJQ FKDQJH	&KDQJH 1R.		'DWH	3LWDG/8UDZQ	7.%	050602	$50000.0600		Kalmar	.UHWV .RPEL$JJ	'5)& 400-450	7.9B17
1	$GGHG 9.1B5 & 8.2B4 & ;059-2.	060600	7.%	060615	.RQVWU/'HVLJQ				+,*US: 6		1DPH	3LWQQU / 'UDZLQJ 1R.	8WJnYD/,VVXH
	77LOON/$GGHG 88WJnU/'HOHWHG 99DU/:DV				*RGN/$SSU	7.%	050602	.ODVV/&ODVV			:LULQJ &RPEL $WW	$50001.0100	05

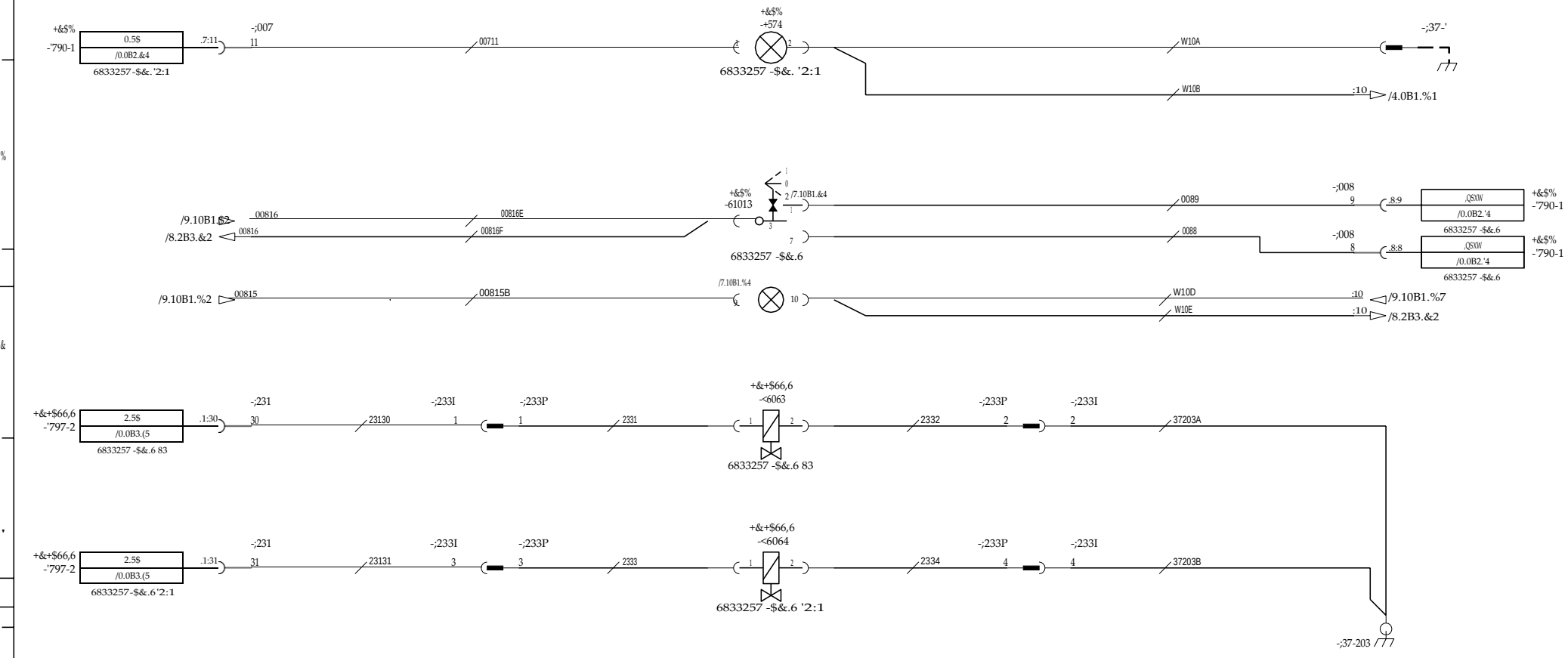

5HI. 5WD 6T.	1U bQGULQJ 1R.	'HVLJQ FKDQJH	bQGULQJ QU &KDQJH 1R.	6LJQ.	'DWXP 'DWH		6LJQ.	'DWXP/'DWH	+XYXGQU,5UBMHFW QR		%HQIPQLQJ .UHWV +\G 6W\GEHQ	5URGXNW(5URGXFW '5)& 400-450	%ODG&&HHHW 7.10B1/
						SLWDG/UDZQ	7.%	050511	$50000.0600		1DPH :LULQJ +\G 6XSSRUW MDFNV	SLWQ.QU / UDZLQJ 1R. $50001.0100	8WiYD(/VVXH 05
	1	$GGHG 9.1B5 & 8.2B4 & ;059-2.	060600	7.%	060615	.RQVWU/HVLJQ				+.*US: 6			
	7 7LOON/$GGHG 8 8W]nU/'HOHWHG 9 9DU/:DV					*RGN/$SSU	7.%	050511	.ODVV/&ODVV				

Kalmar

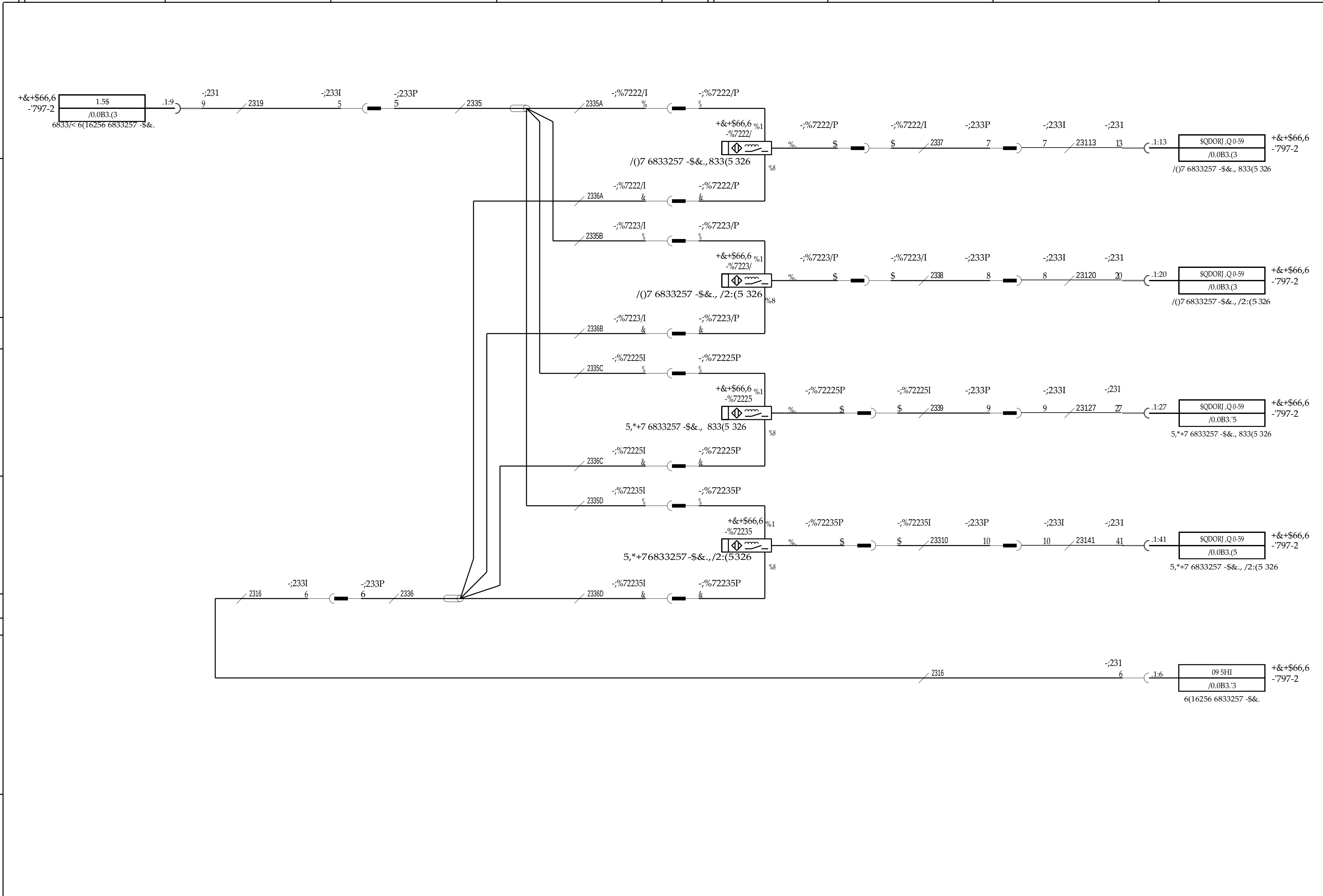

5HI.	1U bQGULQJ	bQGULQJ QU	6LJQ.	'DWXP
1R.	'HVLJQ FKDQJH	&KDQJH 1R.		'DWH
1	$GGHG 9.1B5 & 8.2B4 & ;059-2.	060600	7.%	060615
	7 7LOON/$GGHG 8 8WJnU/'HOHWHG 9 9DU/:DV			

	6LJQ.	'DWXP/'DWH	+XYXGQU/3URMHFW QR.
5LWDG/'UDZQ	7.%	050511	$50000.0600
.RQVWU/'HVLJQ			
*RGN/$SSU	7.%	050511	.ODVV/&ODVV

+.*US: 6

Kalmar

%HQlPQLQJ: .UHWV +\G 6W\GEHQ
1DPH: :LULQJ +\G 6XSSRUW MDFNV

3URGXNW/3URGXFW: '5)& 400-450
5LWQLQJ/'UDZLQJ 1R.: $50001.0100
%ODG/6KHHW: 7.10B2
8WJnYD/,VVXH: 05

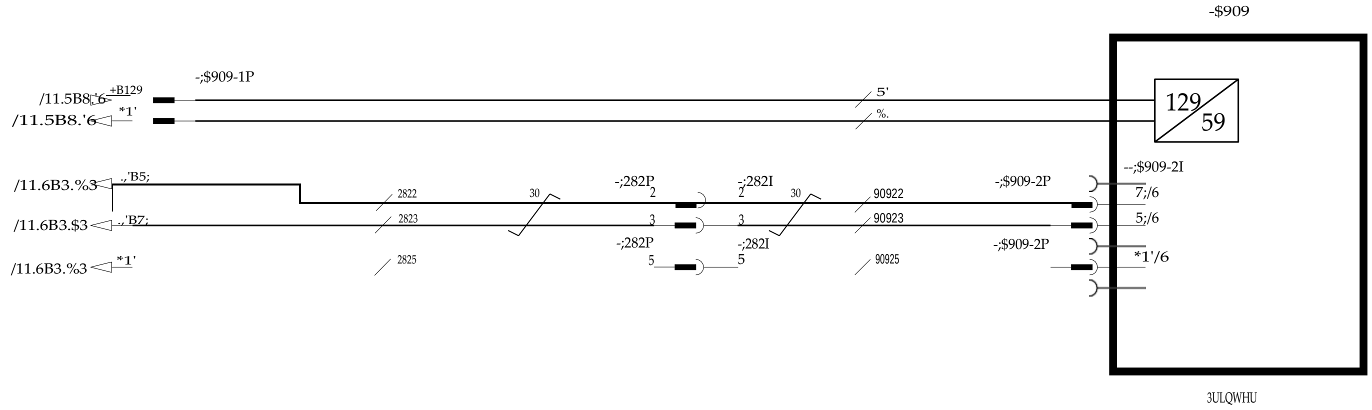

5HI.	1U bQGULQJ	bQGULQJ QU	6LJQ.	'DWXP		6LJQ.	'DWXP/'DWH	+\YXGQU./3URMHFW QR.	
5HID 6T. 1R.	'HVLJQ FKDQJH	&KDQJH 1R.		'DWH	5LWDG/'UDZQ	7.%	050511	$50000.0600	
1	$GGHG 9.1B5 & 8.2B4 & ;059-2.	060600	7.%	060615	.RQWURU/'HVLJQ				+.*USS. 6
	77LOON/$GGHG 88WJnU/'HOHWHG 99DU/:DV				*RGN/$SSU	7.%	050511	.DOVV/&ODVV	

Kalmar

%HQlPQLQJ: .UHWV 6NULYDUH

1DPH: :LULQJ 3ULQWHU

3URGXNW/3URGXFW: '5)& 400-450

5LWQLQJ / 'UDZLQJ 1R.: $50001.0100

%ODG/6KHHW: 7.10B3

6WJnYD/,VVXH: 05

1	2	3	4	5	6	7	8

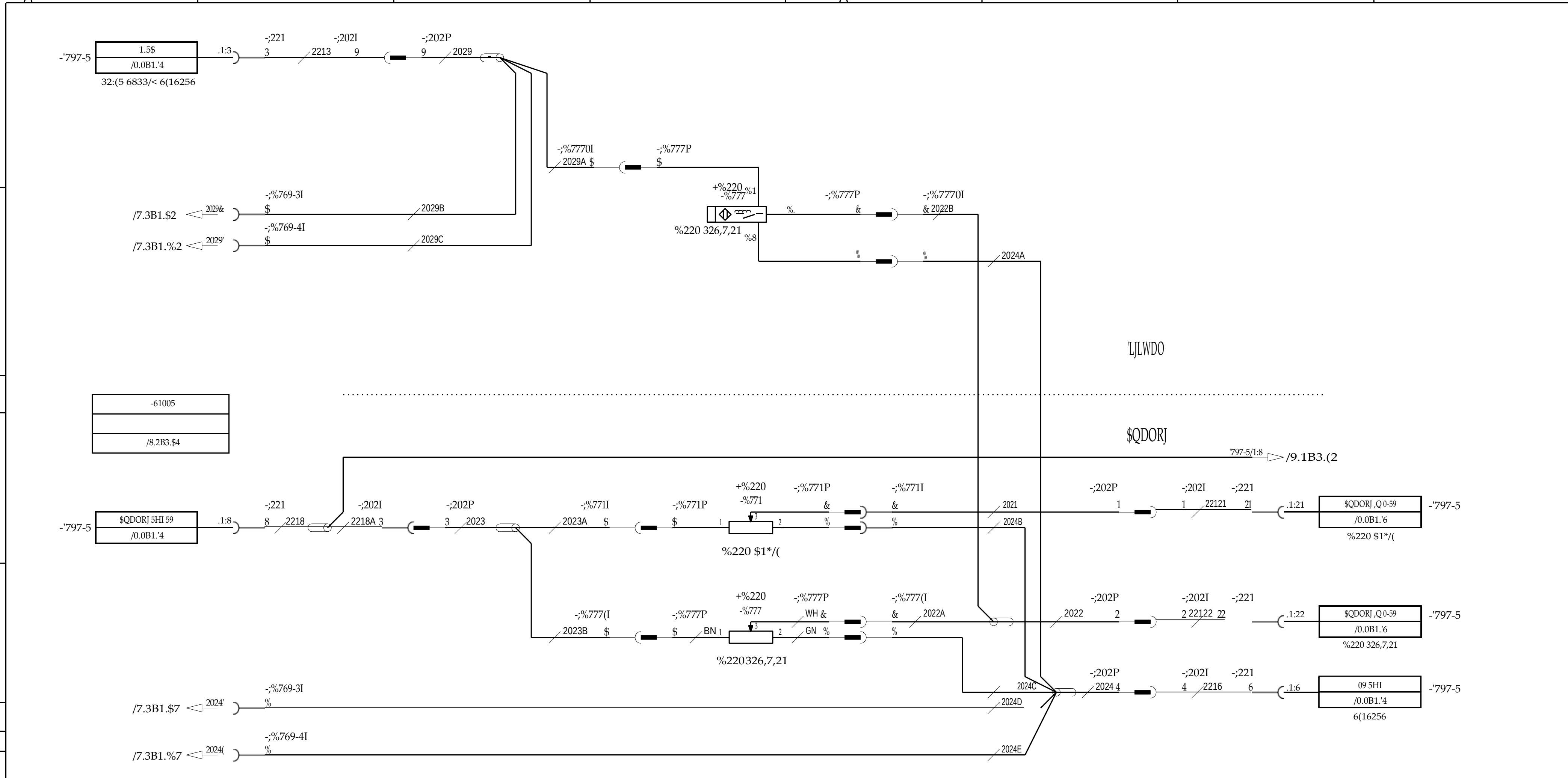

)XQFWLRQ / 6HQVRU		768-51	768-52	768-/1	768-/2	$QDORJ 777	$QDORJ 771	'LJLWDO 777	7221/ 72215	7224
1	0HFKDQLFDO. 23			;			;	;	;	
2	(OHFWULFDO. 23	;	;	;	;	;	;			
3	'\Q. VFDOH + 0HF. 23	;	;	;	;	;	;		;	
4	)L[VFDOH + 0HF. 23	;		;			;	;	;	;
5	)L[VFDOH + $QDORJ ERRP + 0HF. 23	;		;		;	;		;	;
6	$QDORJ ERRP + 0HF. 23			;		;	;		;	

5HI. 6T.	1U bQGULQJ / 1R. 'HVLJQ FKDQJH	bQGULQJ QU &KDQJH 1R.	6LJQ.	'DWXP 'DWH
1	$GGHG 9.1B5 & 8.2B4 & ;059-2.	060600	7.%	060615
	7 7LOON/$GGHG 8 8WJnU/'HOHWHG 9 9DU/:DV			

	6LJQ.	'DWXP/'DWH	+XYXGQU./'URMHFW QR
5LWDG/UDZQ	7.%	050511	$50000.0600
.RQWUROO/&KHFNHG			
*RGN/$SSU	7.%	050511	.ODVV/&ODVV

+&+$66,6
+*US: 6

Kalmar

%HQlPQLQJ .UHWV 23+9nJ
1DPH :LULQJ 23+6FDOH
3URGXNW/3URGXFW '5)& 400-450
5LWQLQJV/'UDZLQJ 1R. $50001.0100
%ODG/6KHHW 8.2B1/
8WJnYD/,VVXH 05

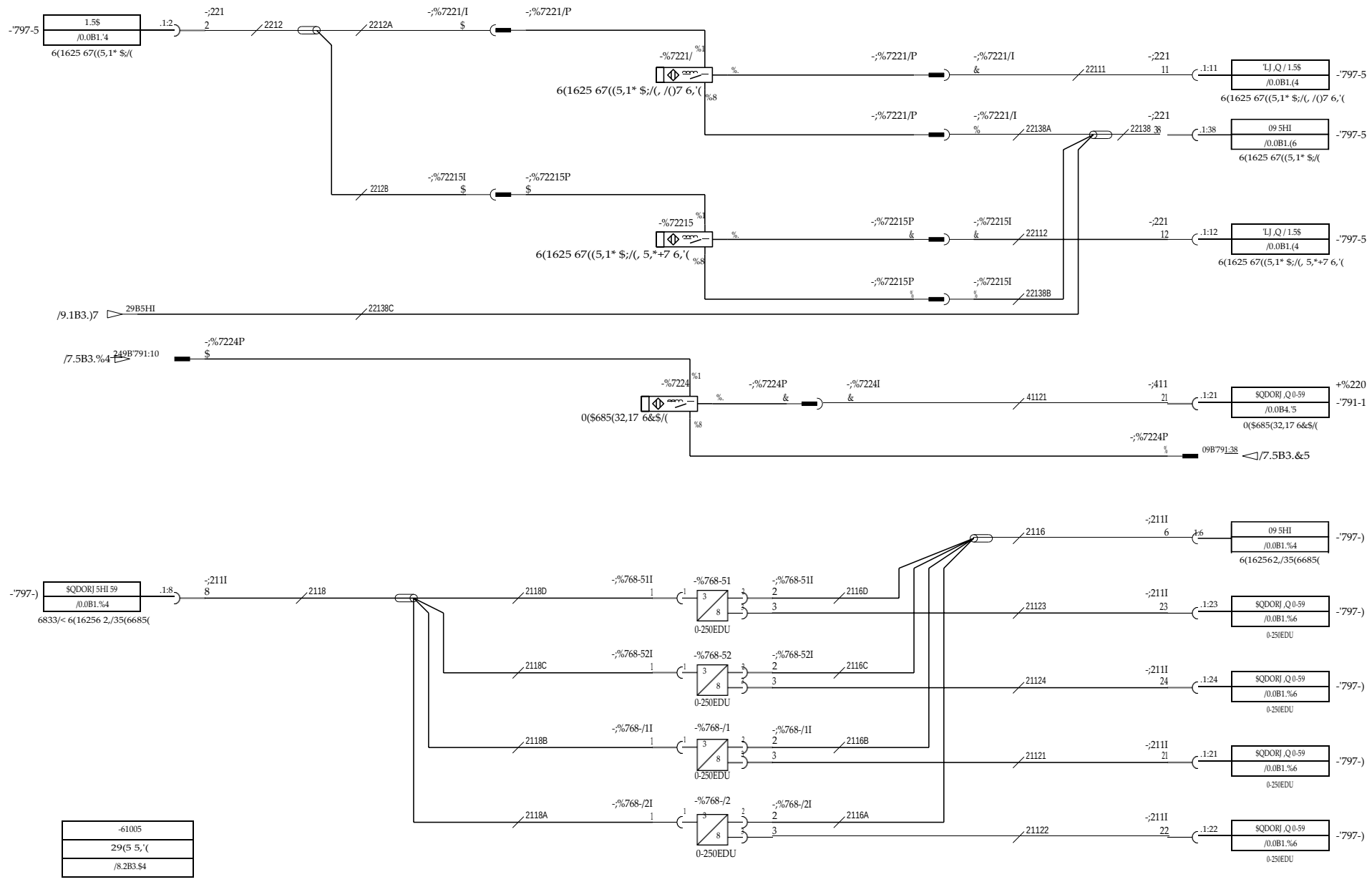

5HI. 5WD 6T.	1U bQGULQJ 1R.	'HVLJQ FKDQJH	bQGULQJ QU &KDQJH 1R.	6LJQ.	'DWXP 'DWH		6LJQ.	'DWXP/'DWH	+XYXGQU,JURXHBFW QR.	+&+$66,6 +*US: 6	
						SLWDG/'UDZQ	7.%	050511	$50000.0600		
		$GGHG 9.1B5 & 8.2B4 & ;059-2.	060600	7.%	060615	.RQVWU/'HVLJQ					
		7 7LOON/$GGHG 8 8W]nU/'HOHWHG 9 9DU/:DV				*RGN/$SSU	7.%	050511	.ODVV/&ODVV		

Kalmar

%HQIPQLQJ
.UHWV23+9nJ

1DPH
:LULQJ23+6FDOH

3URGXNW(3URGXFW
'5)& 400-450

6LWQQL/'UDZLQJ 1R.
$50001.0100

%ODG,&KHHW
8.2B2/

&KDQJH1R
05

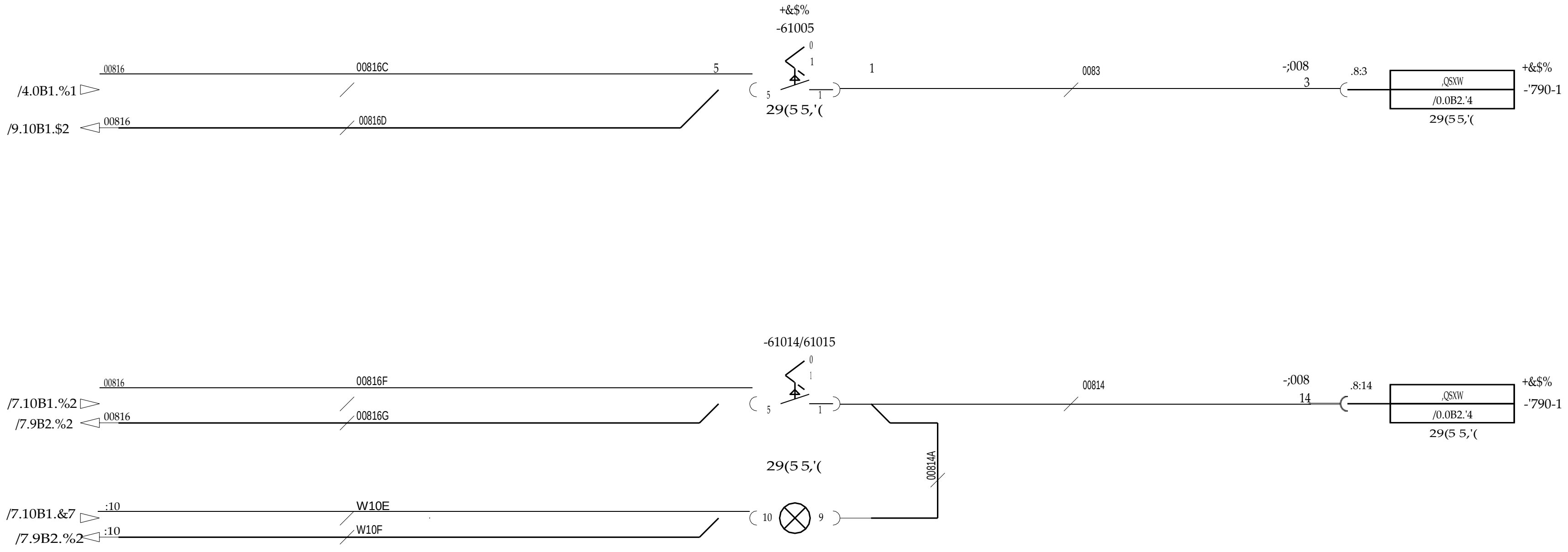

5HI.	1U bQGULQJ	bQGULQJ QU	6LJQ.	'DWXP		6LJQ.	'DWXP/'DWH	+\YXGQU./3URMHFW QR.
5HI. 6T.	1R. 'HVLJQ FKDQJH	&KDQJH 1R.		'DWH	5LWDG/'UDZQ	7.%	050511	$50000.0600
	1 $GGHG 9.1B5 & 8.2B4 & ;059-2.	060600	7.%	060615	.RQVWU/'HVLJQ			
	77LOON/$GGHG 88WJnU/'HOHWHG 99DU/:DV				*RGN/$SSU	7.%	050511	.ODVV/&ODVV

+.*US: 6

Kalmar

%HQlPQLQJ: .UHWV)|UELNRSSOLQJ
1DPH: :LULQJ 2YHUULGH
3URGXNW/3URGXFW: '5)& 400-450
5LWQLQJ/'UDZLQJ 1R: $50001.0100
%ODG/6KHHW: 8.2B3/
6WlnYDlVVH: 05

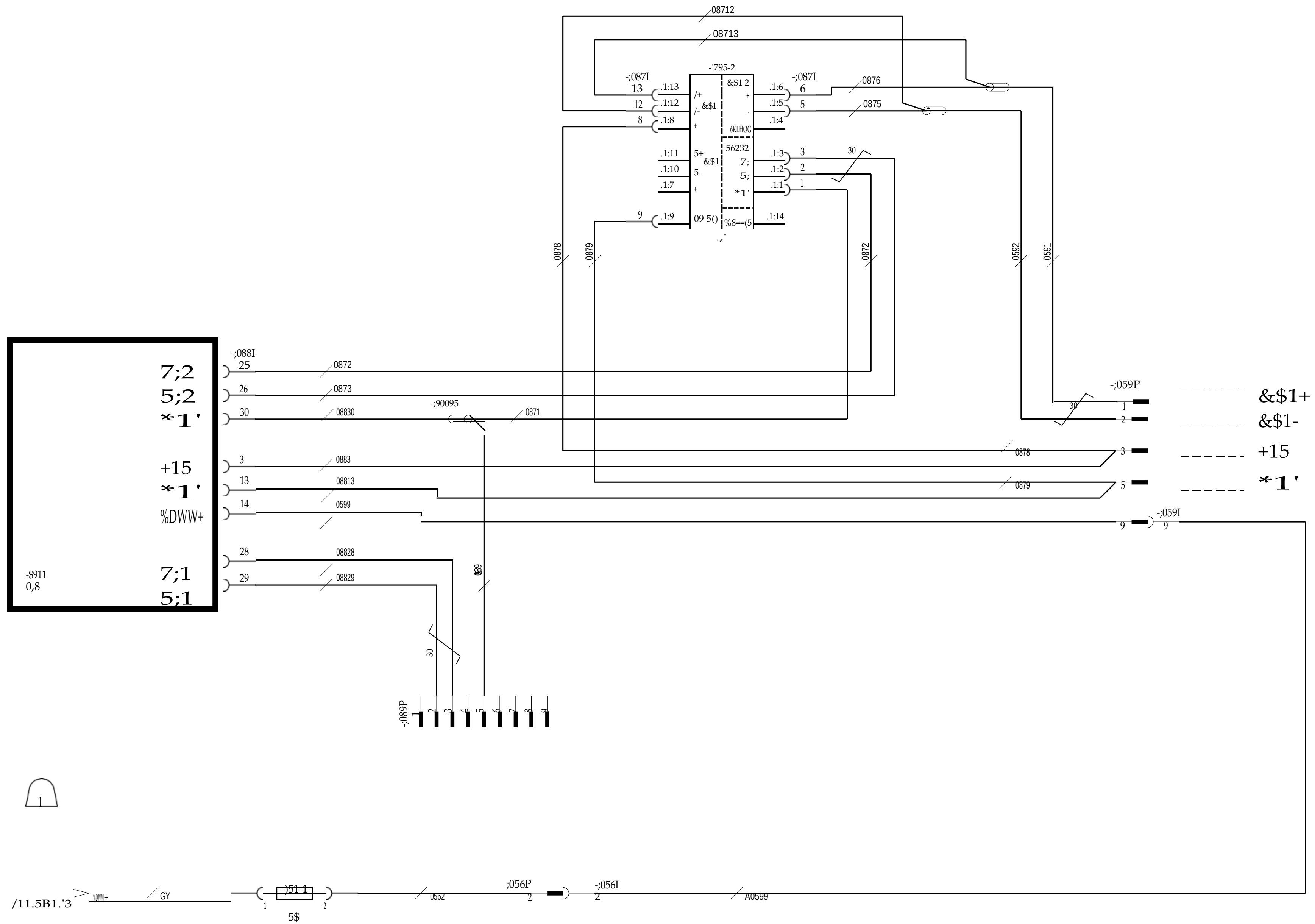

5HL.	1U bQGULQJ	bQGULQJ QU	6LJQ	'DWXP
1R	'HVLJQ FKDQJH	&KDQJH 1R		'DWH
1	$GGHG 9.1B5 & 8.2B4 & ;059-2	060600	7 %	060615

77LOON/$GGHG 88WjnU/ HOHWHG 99DU/DV

6LJQ	'DWXP/'DWH	'RNXPHQWQXPPHU	
6LWXDWLRQ	&-6	060601	$50000.0600
&KHFNHG	&-6	060601	

+*US: 6

Kalmar

.UHWV 50,
:LULQJ50,

'5)& 400-450
$50001.0100

8.2B4
05

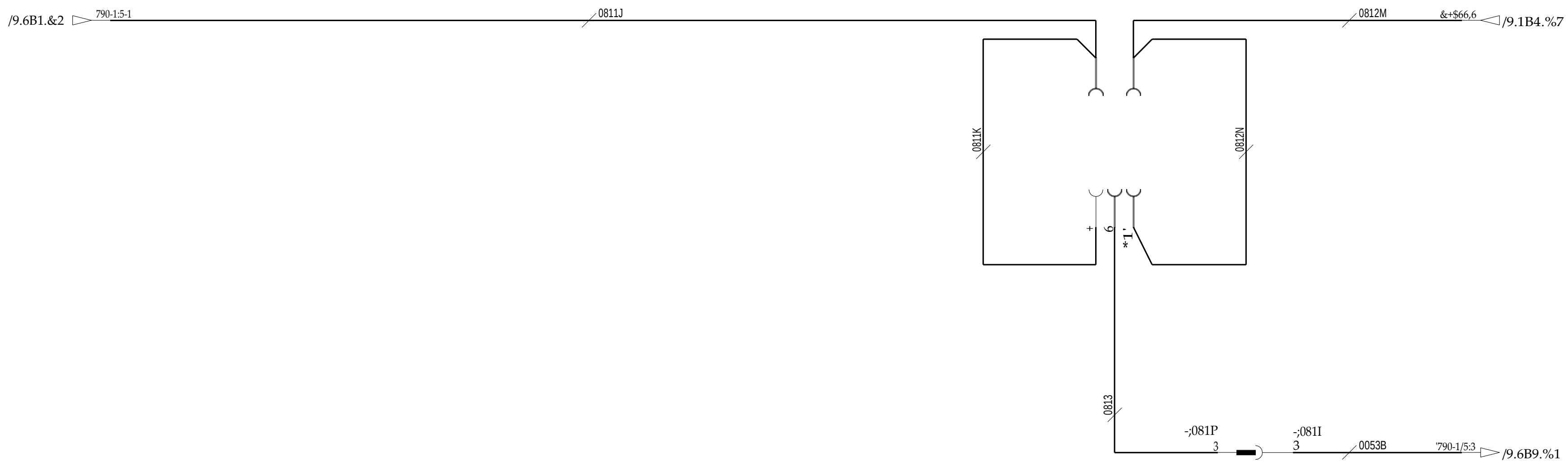

5HL.	1U bQ	GULQJ	bQGULQJ QU	6LJQ.	'DWXP
5HYD 6T.	1R.	'HVLJQ FKDQJH	&KDQJH1R.		'DWH
	1	$GGHG 9.1B5 & 8.2B4 &;059-2.	060600	7.%	060615
		77LOON/$GGHG 88WJnU/'HOHWHG 99DU/:DV			

	6LJQ.	'DWXP/'DWH	+XYXGULWQLQJ/UHYLVLRQ
5LWDG/UDZQ	7.%	050511	$50000.0600
.RQVWU/'HVLJQ			
*RGN/$SSU	7.%	050511	.ODVV/&ODVV

+*US: 6

Kalmar

%HQlPQLQJ: .UHWV ([WUD *LYDUH ,QVWU.
1DPH: :LULQJ 237 6HQVRUV ,QVWU.
3URGXNW/3URGXFW: '5)& 400-450
5LWQLQJ 1U/'UDZLQJ 1R: $50001.0100
%ODG/6KHHW: 9.1B1/
6WnYD/VVXH: 05

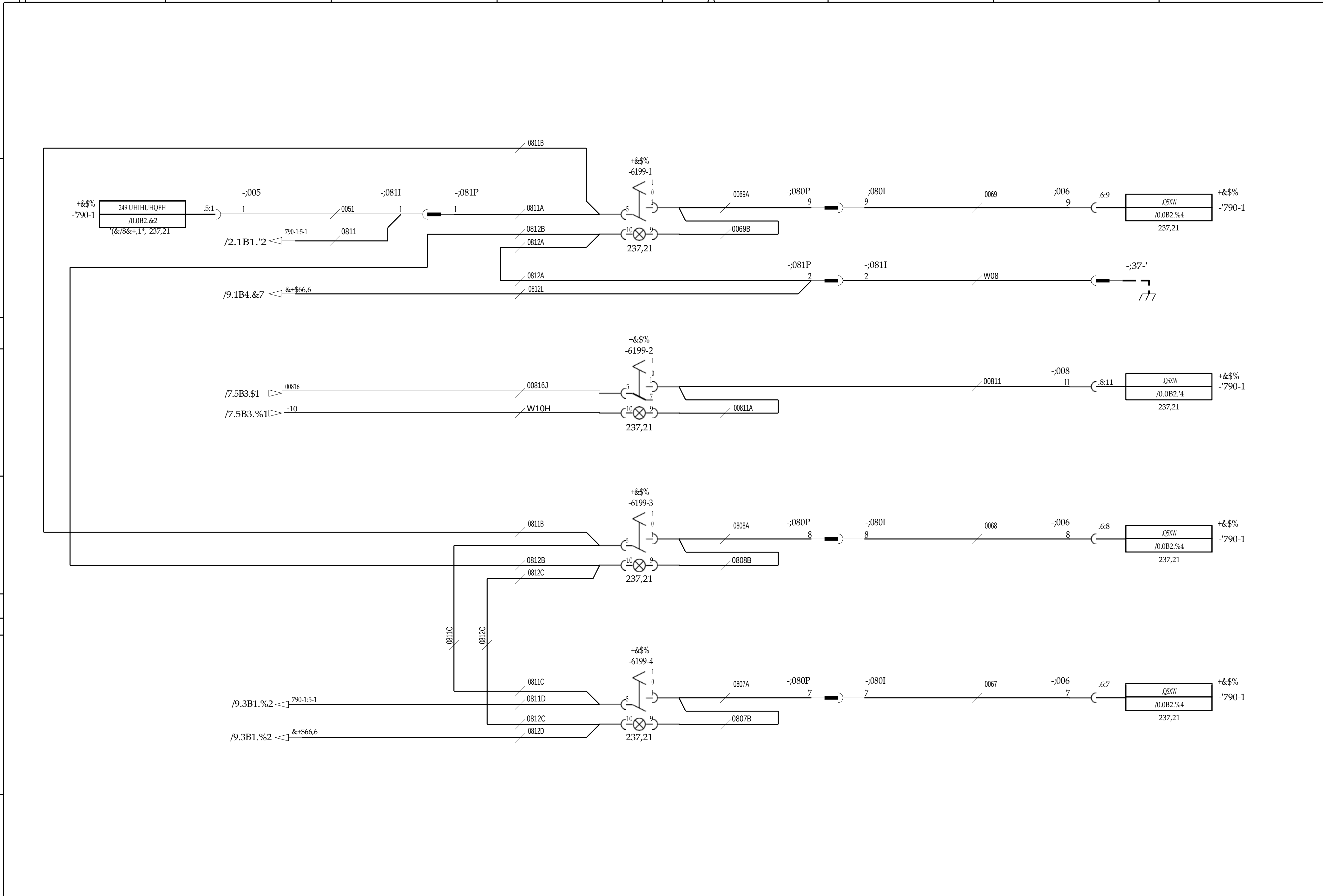

5HI. 3RWD 6T.	1U bQGULQJ / 1R.	'HVLJQ FKDQJH	bQGULQJ QU &KDQJH 1R.	bLJQ.	'DWXP 'DWH			
	1	$GGHG 9.1B5 & 8.2B4 & ;059-2.	060600	7.%	060615			
		7 7LOON/$GGHG 8 8WJnU/'HOHWHG 9 9DU/:DV						

	6LJQ	'DWXP/'DWH	+XYXGQU/3URMHFW QR.
5LWDG/'UDZQ	7.%	050511	$50000.0600
.RQWURO/&KHFNHG			
*RGN/$SSU	7.%	050511	.ODVV/&ODVV

+*US: 6

%HQlPQLQJ: .UHWV ([WUD 8WUXVWQLQJ

1DPH: :LULQJ 2SWLRQ

3URGXNW/3URGXFW: '5)& 400-450

5LWQQU / 'UDZLQJ 1R: $50001.0100

%ODG/6KHHW: 9.1B2/

8WJnYD/,VVXH: 05

+&+$66,6
-'797-)
'LJ ,Q / 1.5$
/0.0B1.%6
237,21)5217
.1:26
-;211I
26
21126
-;274I
3

+&+$66,6
-'797-)
'LJ ,Q / 1.5$
/0.0B1.%4
237,21)5217
.1:12
-;211I
12
21112
-;274I
1

+&+$66,6
-'797-)
'LJ ,Q / 1.5$
/0.0B1.%4
237,21)5217
.1:11
-;211I
11
21111
-;274I
2

+&+$66,6
-'797-)
'LJ ,Q / 1.5$
/0.0B1.&6
237,21)5217
.1:40
-;211I
40
21140
-;274I
4

-;277I
1
22113
-;221
13
.1:13
$QDORJ ,Q 0-59
/0.0B1.(4
237,21 5($5
+&+$66,6
-'797-5

-;277I
2
22120
-;221
20
.1:20
$QDORJ ,Q 0-59
/0.0B1.(4
237,21 5($5
+&+$66,6
-'797-5

-;277I
3
22127
-;221
27
.1:27
$QDORJ ,Q 0-59
/0.0B1.'6
237,21 5($5
+&+$66,6
-'797-5

-;277I
4
22141
-;221
41
.1:41
$QDORJ ,Q 0-59
/0.0B1.(6
237,21 5($5
+&+$66,6
-'797-5

/8.2B1.&7
'797-5/1:8
2218B
-;277I
5

-;277I
6
22138C
29B5HI
/8.2B2.&2

5HI. 5WD 6T.	1U bQGULQJ 1R.	'HVLJQ FKDQJH	bQGULQJ QU &KDQJH 1R.	6LJQ.	'DWXP 'DWH		6LJQ.	'DWXP/'DWH	+XYNGQU./SUBMHFW QR.		%HQIPQLQJ	3URGXNW(3URGXFW	%ODG&&KEHHW
						5LWDG/UDZQ	7.%	050511	$50000.0600		.UHWV ([WUD 8WUXVWQLQJ	'5)& 400-450	9.1B3/
	1	$GGHG 9.1B5 & 8.2B4 & ;059-2.	060600	7.%	060615	.RQVWU/HVLJQ				+.*US: 6	1DPH	5LWQ.QU./ UDZLQJ 1R.	8W]nYD)/VVXH
		7 7LOON/$GGHG 8 8W]nU/'HOHWHG 9 9DU/:DV				*RGN/$SSU	7.%	050511	.ODVV/&ODVV		:LULQJ2SWLRQ	$50001.0100	05

Kalmar

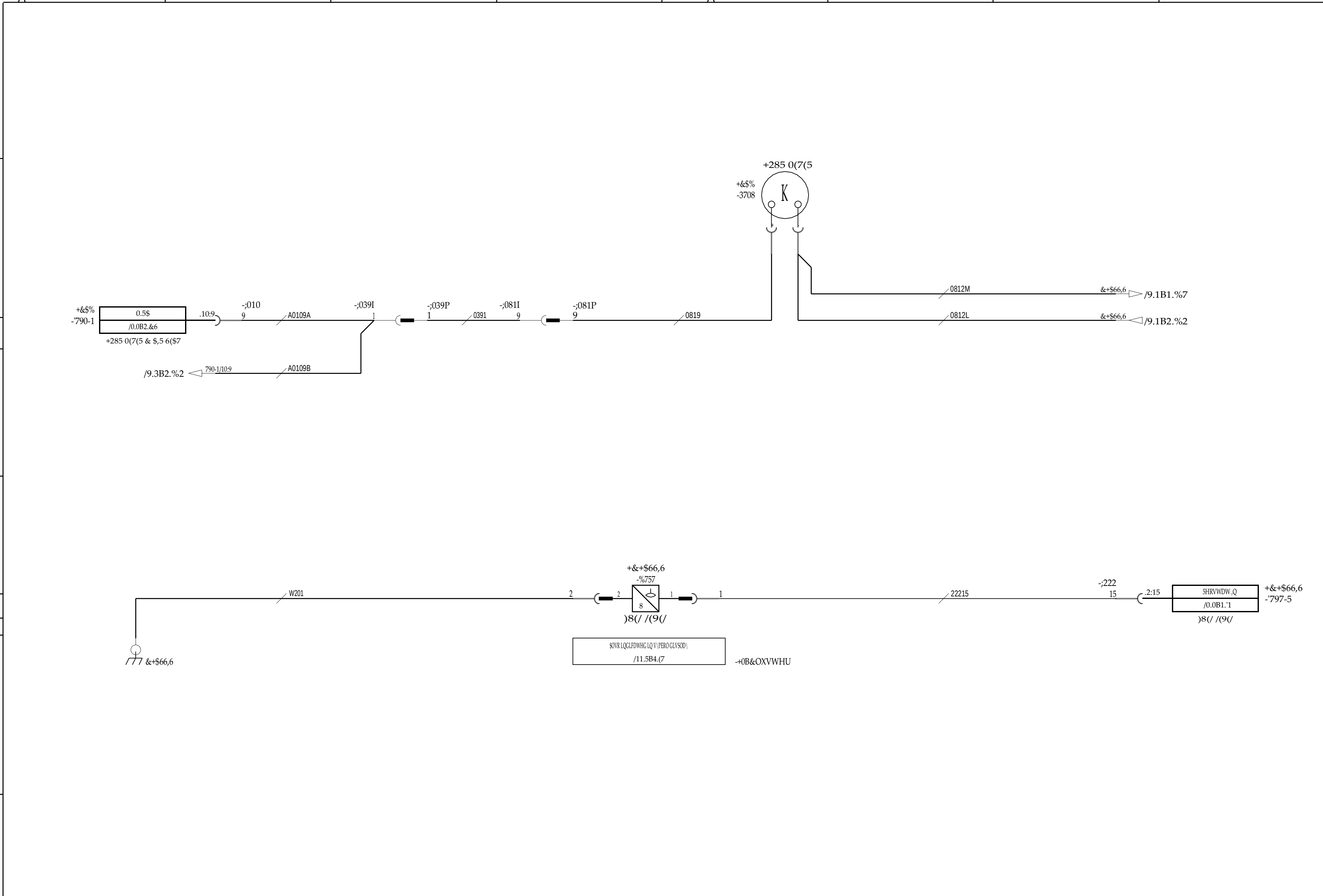

5HI.	1U bQGULQJ		bQGULQJ QU	6LJQ.	'DWXP		6LJQ.	'DWXP/'DWH	+\YXGQU./'UDZLQJ QR.		%HQlPQLQJ	3URGXNW/3URGXFW	%OdG/6KHHW
5HI. 6T.	1R.	'HVLJQ FKDQJH	&KDQJH 1R.		'DWH	5LWDG/'UDZQ	7.%	050511	$50000.0600		.UHWV *LYDUH ,QVWU.	'5)& 400-450	9.1B4
	1	$GGHG 9.1B5 & 8.2B4 & ;059-2.	060600	7.%	060615	.RQVWU./'HVLJQ				+.*US: 6	1DPH	5LWQLQJ / 'UDZLQJ 1R.	6WjUVD/,VVXHV
		77LOON/$GGHG 88WJnU/'HOHWHG 99DU/:DV				*RGN/$SSU	7.%	050511	.DOVV/&ODVV		:LULQJ 6HQVRUV ,QVWU.	$50001.0100	05

Kalmar

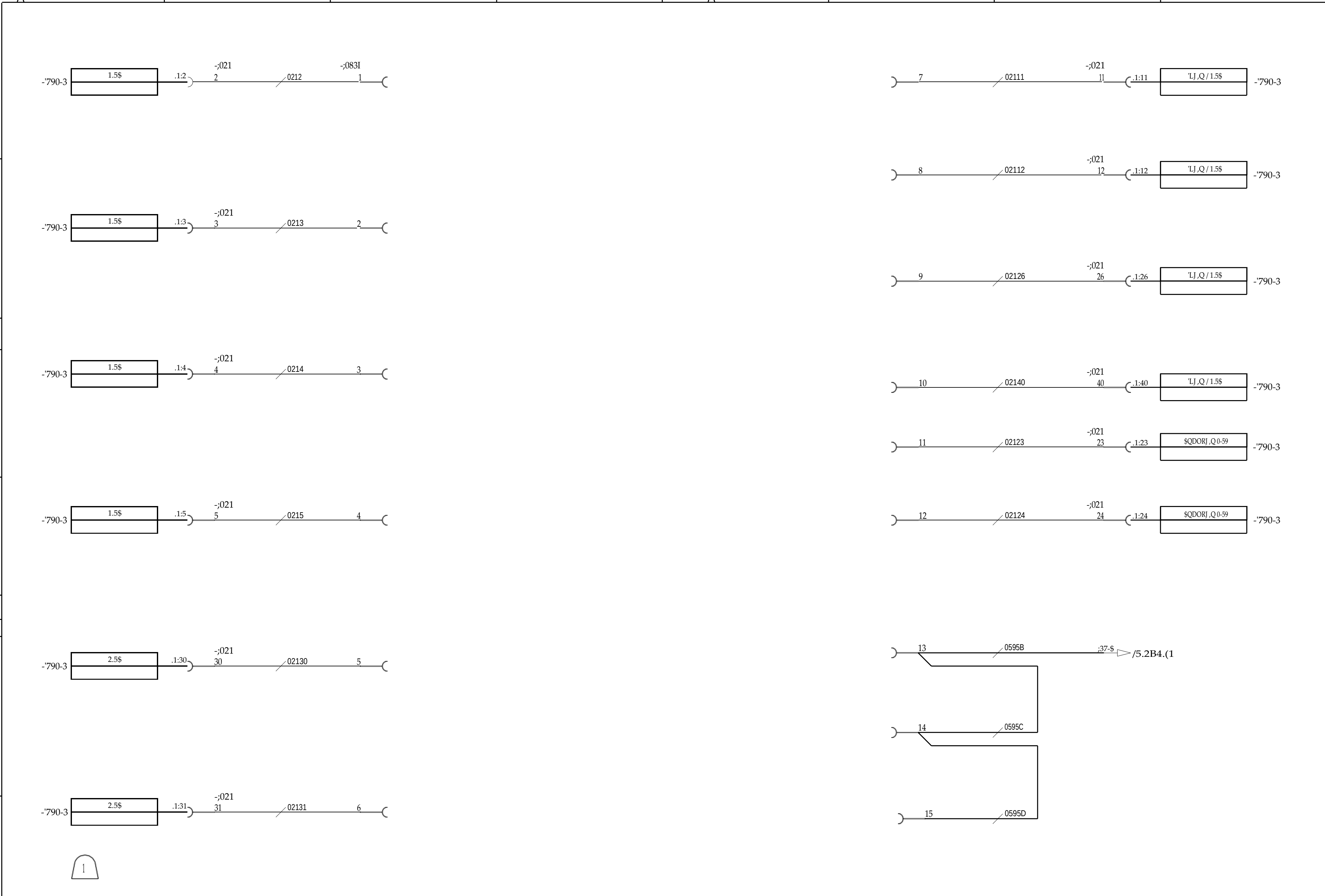

5HI. SWVD 6T.	1U bQGULQJ 1R.	'HVLJQ FKDQJH	bQGULQJ QU &KDQJH 1R.	bLJQ.	'DWXP 'DWH
	1	$GGHG 9.1B5 & 8.2B4 & ;059-2.	060600	7.%	060615
		7 7LOON/$GGHG 8 8WJnU/'HOHWHG 9 9DU/:DV			

	bLJQ.	'DWXP/'DWH	+XYXGQU/3URMHFW QR.
5LWDG/UDZQ	7.%	060522	$50000.0600
.RQVWU/HVLJQ			
*RGN/$SSU	7.%	060522	.ODVV/&ODVV

+.*US: 6

Kalmar

%HQIPQLQJ: .UHWV 2SWLRQ +\WW

1DPH: :LULQJ 2SWLRQ &DELQ

3URGXNW/3URGXFW: '5)& 400-450

5LWQLQJ/'UDZLQJ 1R.: $50001.0100

%ODG/6KHHW: 9.1B5/

6WJnYD/VVXH: 05

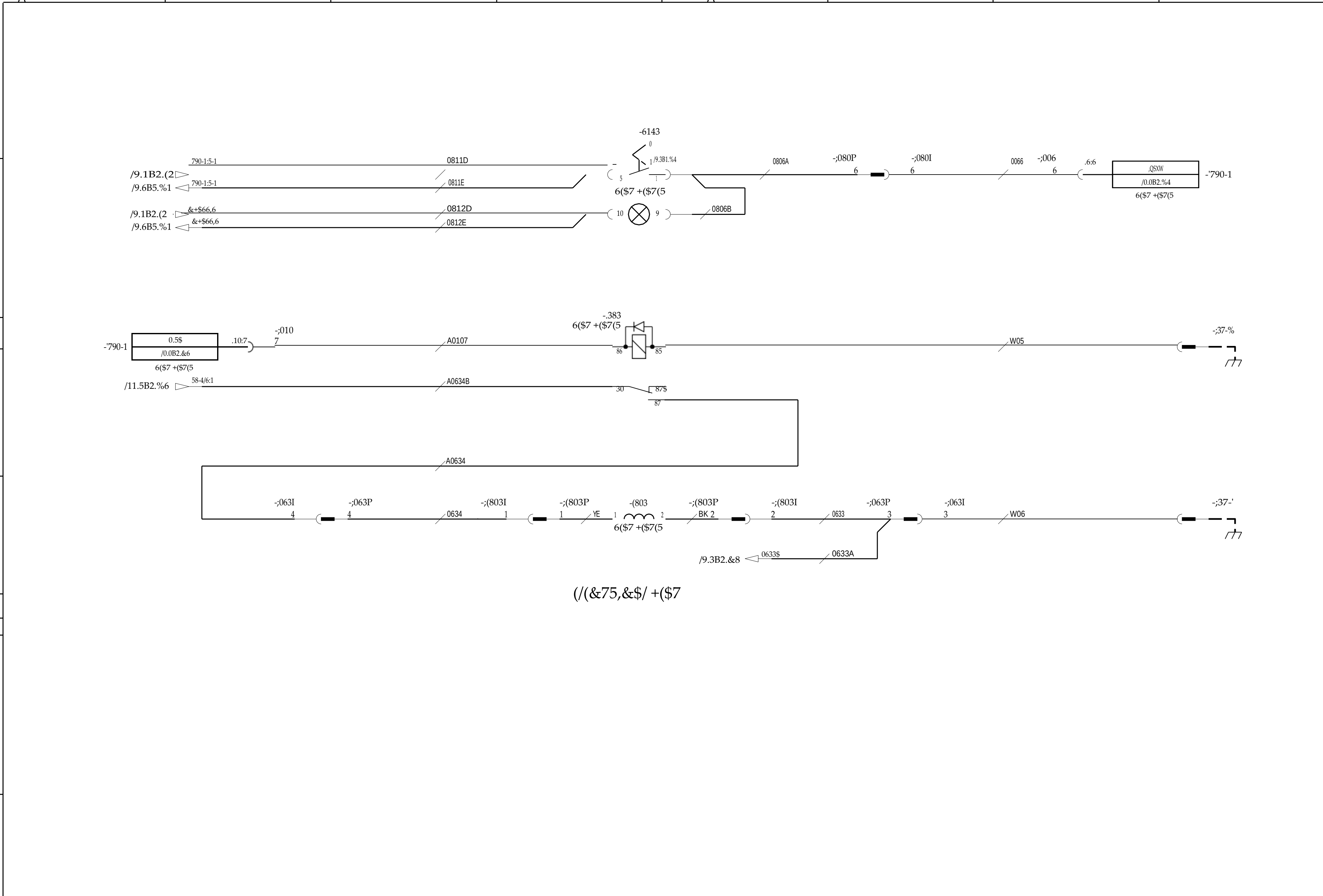

5HL.	1U 1R.	bQGULQJ 'HVLJQ FKDQJH	bQGULQJ QU &KDQJH 1R.	'DWXP 'DWH		6LJQ.	'DWXP/'DWH	+XYXGQU./3URMHFW QR.	
	1	$GGHG 9.1B5 & 8.2B4 & ;059-2.	060600	7.%	060615	5LWDG/'UDZQ	7.%	050511	$50000.0600 +&$%
		7 7LOON/$GGHG 8 8WJnU/'HOHWHG 9 9DU/:DV				.RQVWU/'HVLJQ			+.*US: 6
						*RGN/$SSU	7.%	050511	.ODVV/&ODVV

Kalmar

%HQlPQLQJ .UHWV +\WW)|UDUVWRO

1DPH :LULQJ &DE 6HDW 237

3URGXNW/3URGXFW '5)& 400-450

5LWQLQJV 'UDZLQJ 1R. $50001.0100

%ODG/6KHHW 9.3B1/

6WlnYDUVVH 05

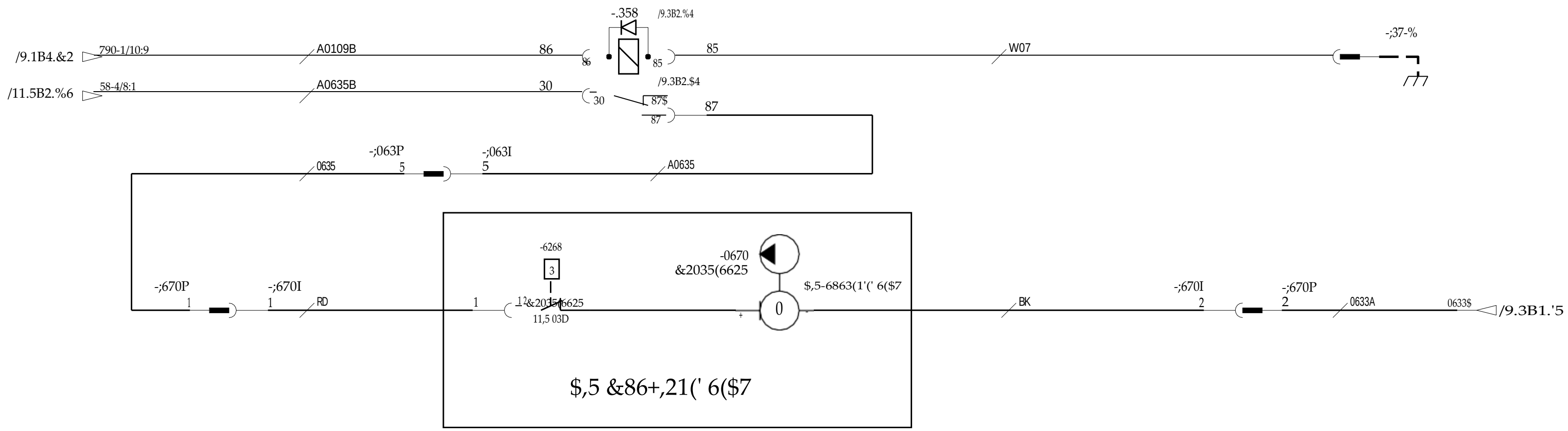

5HI.	1U	bQGULQJ	bQGULQJ QU		'DWXP		6LJQ.	'DWXP/'DWH	+XYXGQU./3URMHFW QR.			%HQHQQLQJ	3URGXNW/3URGXFW	%ODG/6KHHW
6T.	1R.	'HVLJQ FKDQJH	&KDQJH 1R.	6LJQ.	'DWH	5LWDG/'UDZQ	7.%	050511	$50000.0600	+&$%		.UHWV+\WW)IUDUVWRO	'5)& 400-450	9.3B2
	1	$GGHG 9.1B5 & 8.2B4 & ;059-2.	060600	7.%	060615	.RQVWU/'HVLJQ				+*US:	6	:LULQJ &DE 6HDW 237	$50001.0100	05
		7 7LOON/$GGHG 8 8WJnU/'HOHWHG 9 9DU/:DV				*RGN/$SSU	7.%	050511	.ODVV/&ODVV					

Kalmar

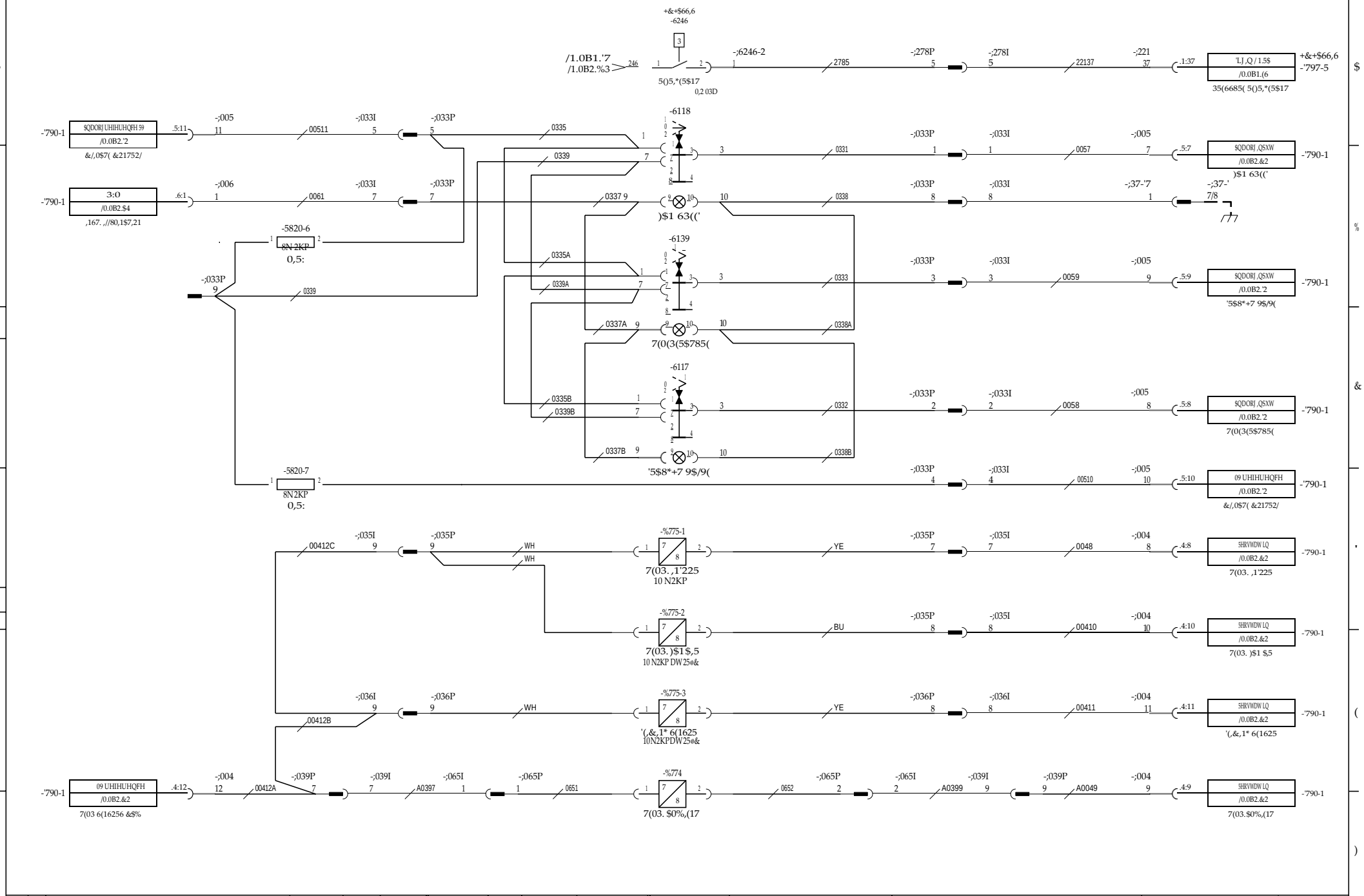

5HI. 5WWD 6T.	1U bQGULQJ 1R. 'HVLJQ FKDQJH	bQGULQJ QU &KDQJH 1R.	bLJU.	'DWXP 'DWH	SLWDG/UDZQ	&LJ.Q	'DWXP/'DWH	+XYXG.QL./SURMHFW QR.
						7.%	050511	$50000.0600
	$GGHG 9.1B5 & 8.2B4 & ;059-2.	060600	7.%	060615	.RQVWU/HVLJQ			
	7 7LOON/$GGHG 8 8WjnU/'HOHWHG 9 9DU/:DV				*RGN/$SSU	7.%	050511	.ODVV/&ODVV

+&+$%%

+.*US: 6

Kalmar

%HQIPQL.QJ
.UHWV .OLPDWV\VWHP

1DPH
:LULQJ &OLPDWH &RQWURO

3URGXNW/3URG/KFW
'5)& 400-450

SLWQ.QL / UDZLQJ 1R.
$50001.0100

%ODG/&KHHW
9.4B1/

8WjnVD/VVXH
05

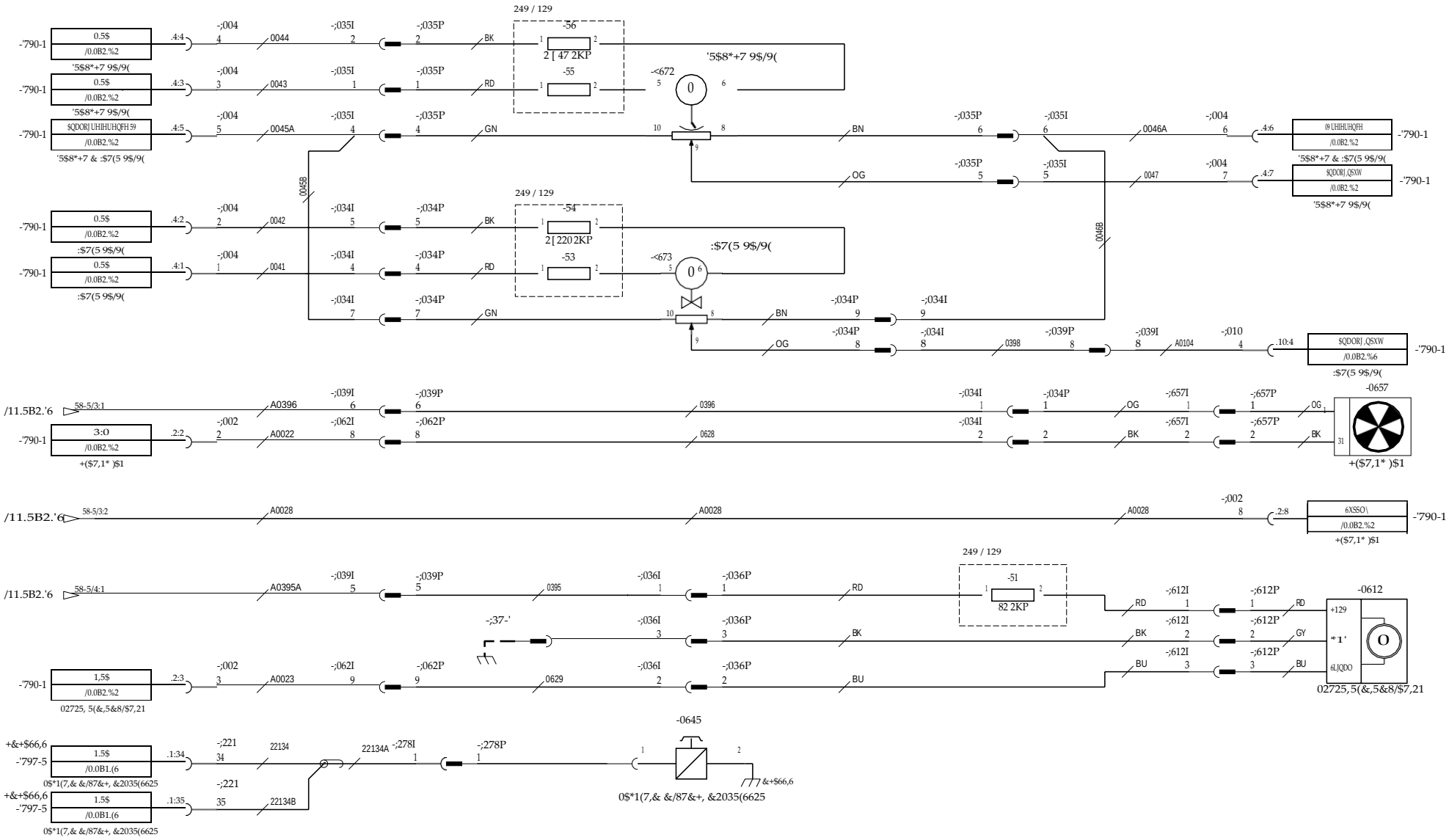

5HL 5WD 6T.	1U bQGULQJ 1R. 'HVLJQ FKDQJH	bQGULQJ QU &KDQJH 1R.	6LJQ.	'DWXP 'DWH	SLWDG/UDZQ	7.%	050511	$50000.0600
	$GGHG 9.1B5 & 8.2B4 & ;059-2.	060600	7.%	060615	,RQVWU/HVLJQ			
	7 7LOON/$GGHG 8 8W]nU/'HOHWHG 9 9DU/:DV				*RGN/$SSU	7.%	050511	

+&$% 6

+.*US:

Kalmar

%HQIPQLQJ

.UHWV .OLPDWV\VWHP

1DPH

:LULQJ &OLPDWH &RQWURO

3URJ.NW0/3URG.VFW

'5)& 400-450

SLWQ QU / UDZLQJ 1R.

$50001.0100

%ODG&KHHW

9.4B2/

SWJ 1D/VVAH

05

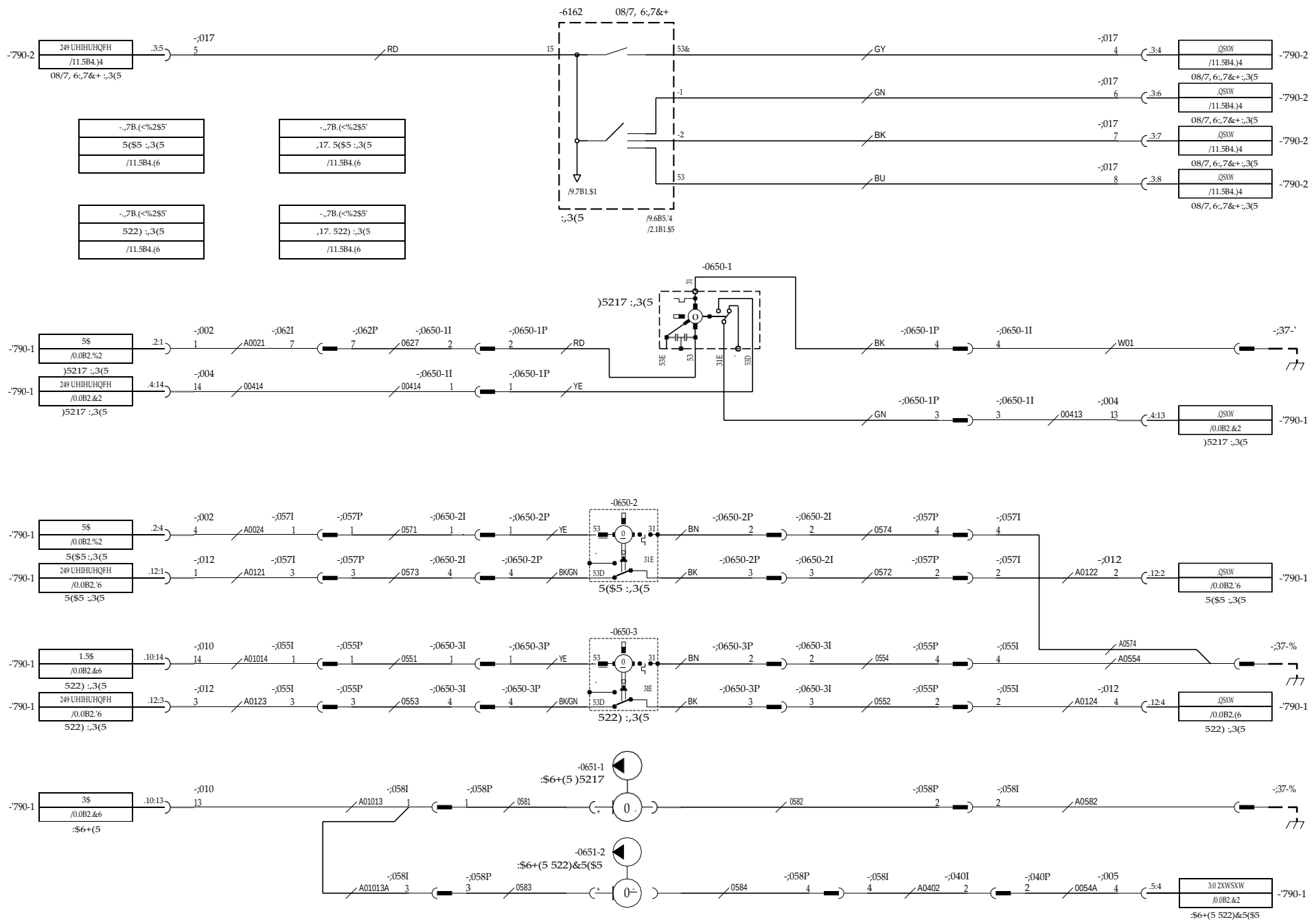

5HL. 5WKD 6T.	1U bQGULQJ 1R.	'HVLJQ FKDQJH	bQGULQJ QU &KDQJH 1R.	6LJQ.	'DWXP 'DWH	SLWDG/UDZQ	6LJQ.	'DWXP/'DWH	+XYXGQU /SURMHFW QR.
							7.%	050511	$50000.0600
		$GGHG 9.1B5 & 8.2B4 & ;059-2.	060600	7.%	060615	.RQVWU/HVLJQ			
		7 7LOON/$GGHG 8 8WjnU/'HOHWHG 9 9DU/:DV				*RGN/$$SU	7.%	050511	.ODVV/&ODVV

+&$%
+.*US:
6

Kalmar

%HQIPQLQJ
.UHWV 7RUNDUH

1DPH
:LULQJ :LSHU IXQFWLRQ

3URGXNW/3URGXNFW
'5)& 400-450

SLWQ QU / UDZLQJ 1R.
$50001.0100

%ODG/&KEHW
9.5B1/

8WjnYD/VVXH
05

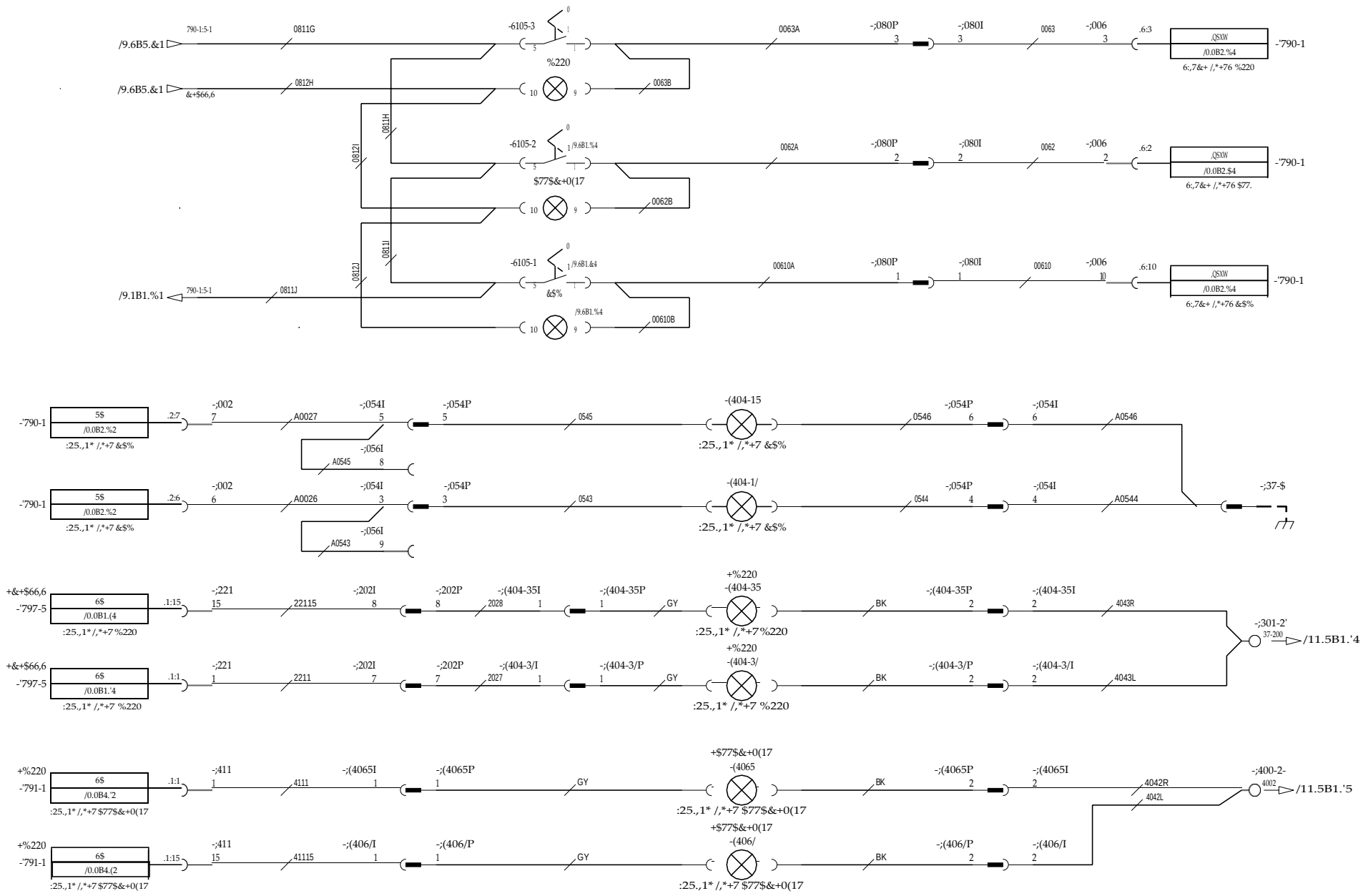

5HL 5WD 6T.	1U bQGULQJ 1R. 'HVLJQ FKDQJH	bQGULQJ QU &KDQJH 1R.	6LJQ.	'DWXP 'DWH		6LJQ.	'DWXP/'DWH	+XYXGQU,RUBMHFW QR.	
					SLWDG/'UDZQ	7.%	050511	$50000.0600	+&$%
	1	$GGHG 9.1B5 & 8.2B4 & ;059-2.	060600	7.%	060615	.RQVWU/'HVLJQ			+*US: 6
		7 7LOON/$GGHG 8 8W]nU/'HOHWHG 9 9DU/:DV				*RGN/$SSU	7.%	050511	.ODVV/&ODVV

Kalmar

%HQPQLQJ

.UHWV $UEHWVUMXV

1DPH

:LULQJ:KUN/LJKW

3URGXXW/3URGXFW

'5)& 400-450

6LWQ.QU./ 'UDZLQJ 1R.

$50001.0100

%ODG&&KHHW

9.6B1/

8WnbYD/VVXH

05

(#'5$-,*

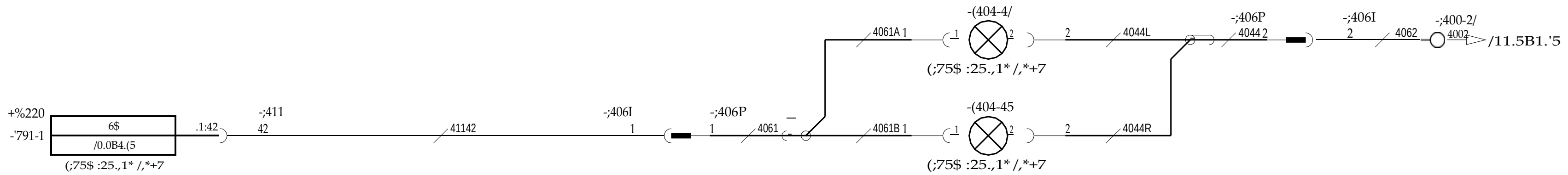

237,21 :25.,1* /,*+7 21 77&+0(17

5HL 5WDQ 6T.	1U bQGULQJ		bQGULQJ QU	6LJQ	'DWXP		6LJQ	'DWXP/'DWH	+XYXGQU/3URMHFW QR.	+77&+0(17
	1R.	'HVLJQ FKDQJH	&KDQJH 1R.		'DWH	6LWDG/UDZQ	7.%	050511	$50000.0600	+.*US: 6
	1	$GGHG 9.1B5 & 8.2B4 & ;059-2.	060600	7.%	060615	.RQWU/+HVLJQ				
	77LOON/$GGHG 88WJnU/'HOHWHG 99DU/:DV					*RGN/$SSU	7.%	050511	.ODVV/&ODVV	

Kalmar

%HQlPQLQJ .UHWV ([WUD $UE.EHO. $JJ	'URGXNW/'URGXFW '5)& 400-450	%ODG/6KHHW 9.6B2/
1DPH :LULQJ 2SW. :RUN /LJKW $WW	6LWQLQJ/'UDZLQJ 1R. $50001.0100	6WJnYD/,VVXH 05

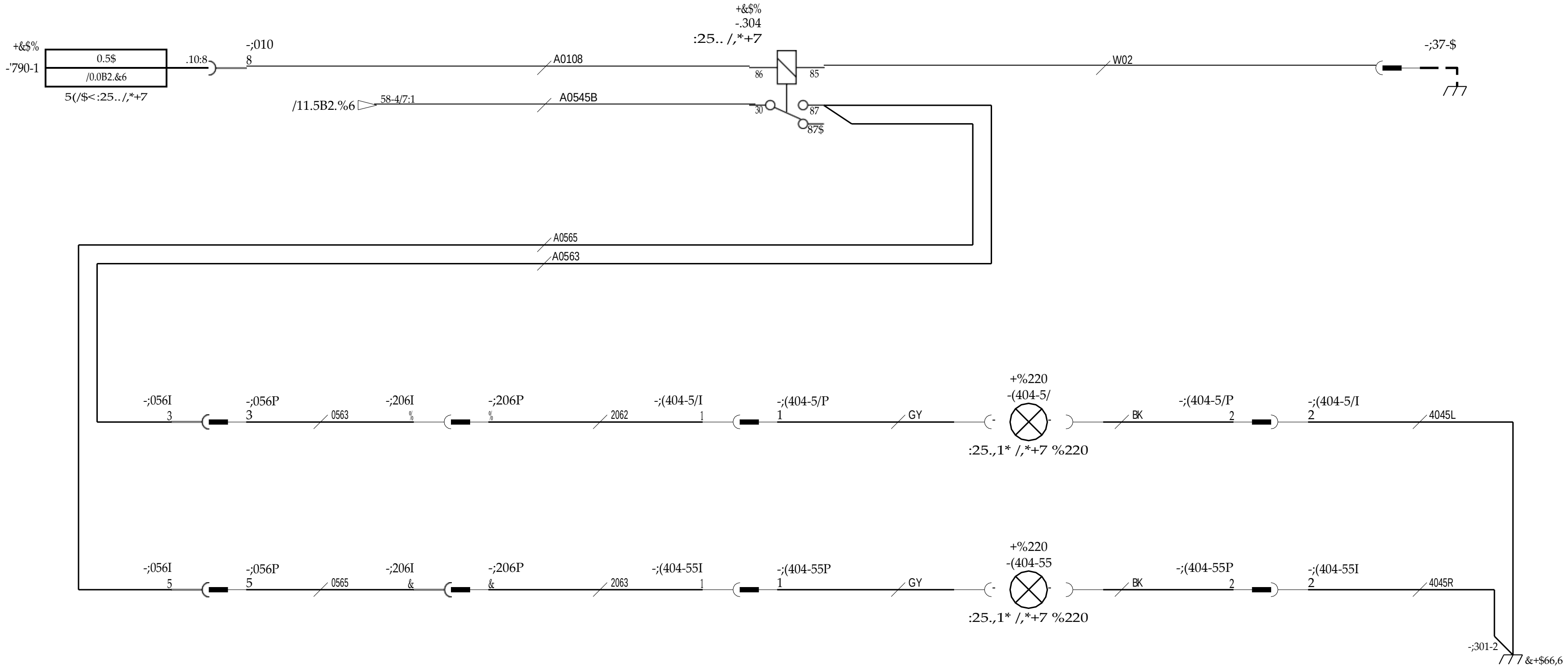

5HY. 1R.	1U bQGULQJ 'HVLJQ FKDQJH	bQGULQJ QU &KDQJH1R.	6LJQ.	'DWXP 'DWH		6LJQ.	'DWXP/'DWH	+|YXGQU./3URMHFW QR.
1	$GGHG 9.1B5 & 8.2B4 & ;059-2.	060600	7.%	060615	3LWDG/UDZQ	7.%	050511	$50000.0600
	77LOON/$GGHG 88WJnU/'HOHWHG 99DU/:DV				.RQWUROO/&KHFNHG			
					*RGN/$SSU	7.%	050511	.ODVV/&ODVV

+.*US: 6

Kalmar

%HQlPQLQJ: .UHWV ([WUD $UE.EHO. %RP

1DPH: :LULQJ 237 :RUN /LJKW %RRP

'5)& 400-450

$50001.0100

9.6B3/

05

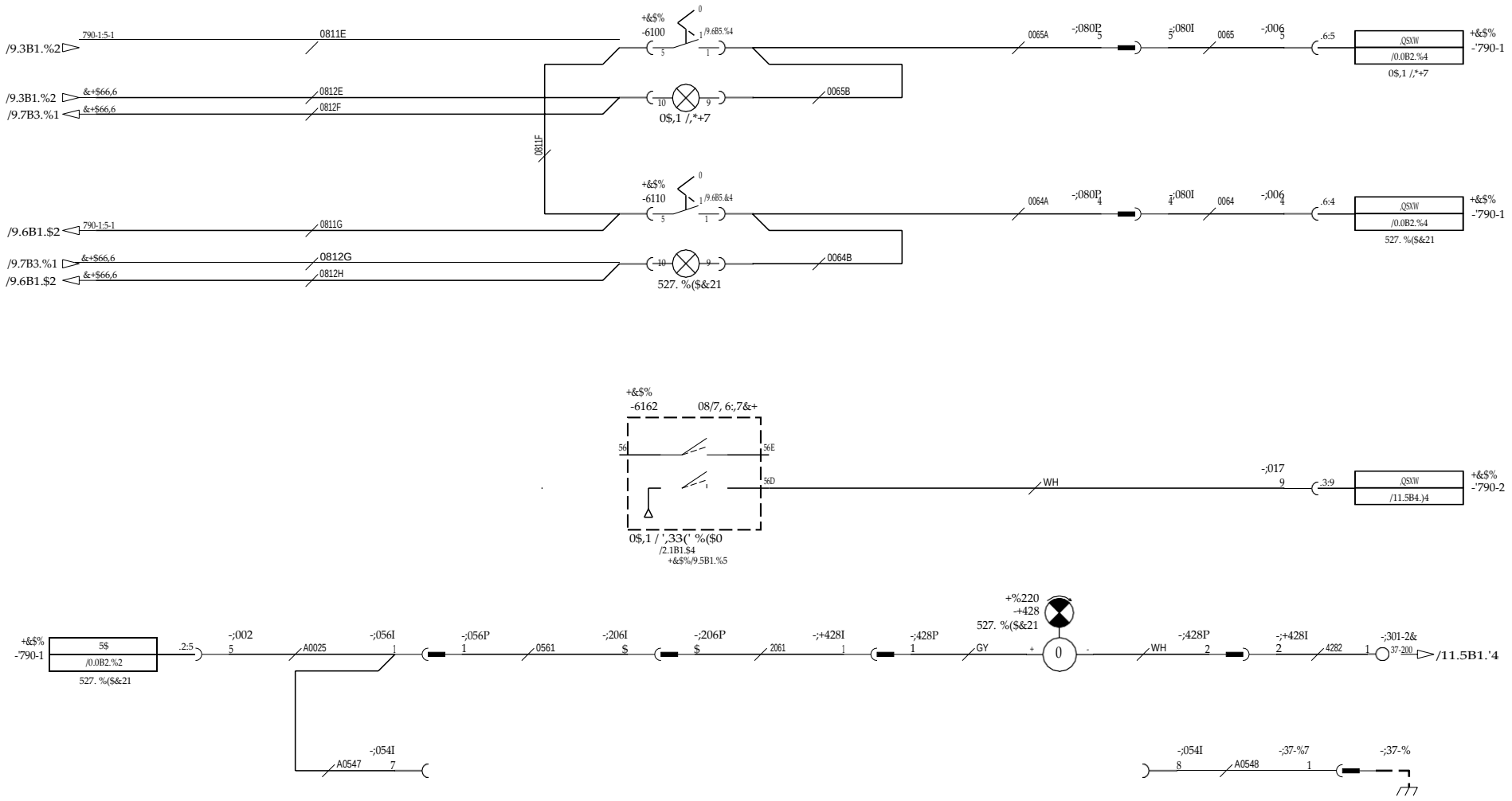

SHI. 1U bQGULQJ									%HQIPQLQJ	3URGXNW(3URGXFW	%ODG,&KEHHW
5WWD 6T. 1R.	'HVLJQ FKDQJH	bQGULQJ QU &KDQJH 1R.	6LJQ.	'DWXP 'DWH		6LJQ.	'DWXP/'DWH	+XNGQLJ,3URMHFW QR.	.UHWV %HO\VQLQJ	'5)& 400-450	9.6B5/
					5LWDG/UDZQ	7.%	050511	$50000.0600	1DPH	5LWQ.QU/ UDZLQJ 1R.	8W)nVD/VVXH
1	$GGHG 9.1B5 & 8.2B4 & ;059-2.	060600	7.%	060615	.RQVWU/'HVLJQ				:LULQJ/LJKWV	$50001.0100	05
	7 7LOON/$GGHG 8 8W]nU/'HOHWHG 9 9DU/:DV				*RGN/5U	7.%	050511	.ODVV/&ODVV			

+&$%/9.5B1.%5

Kalmar

+.*US: 6

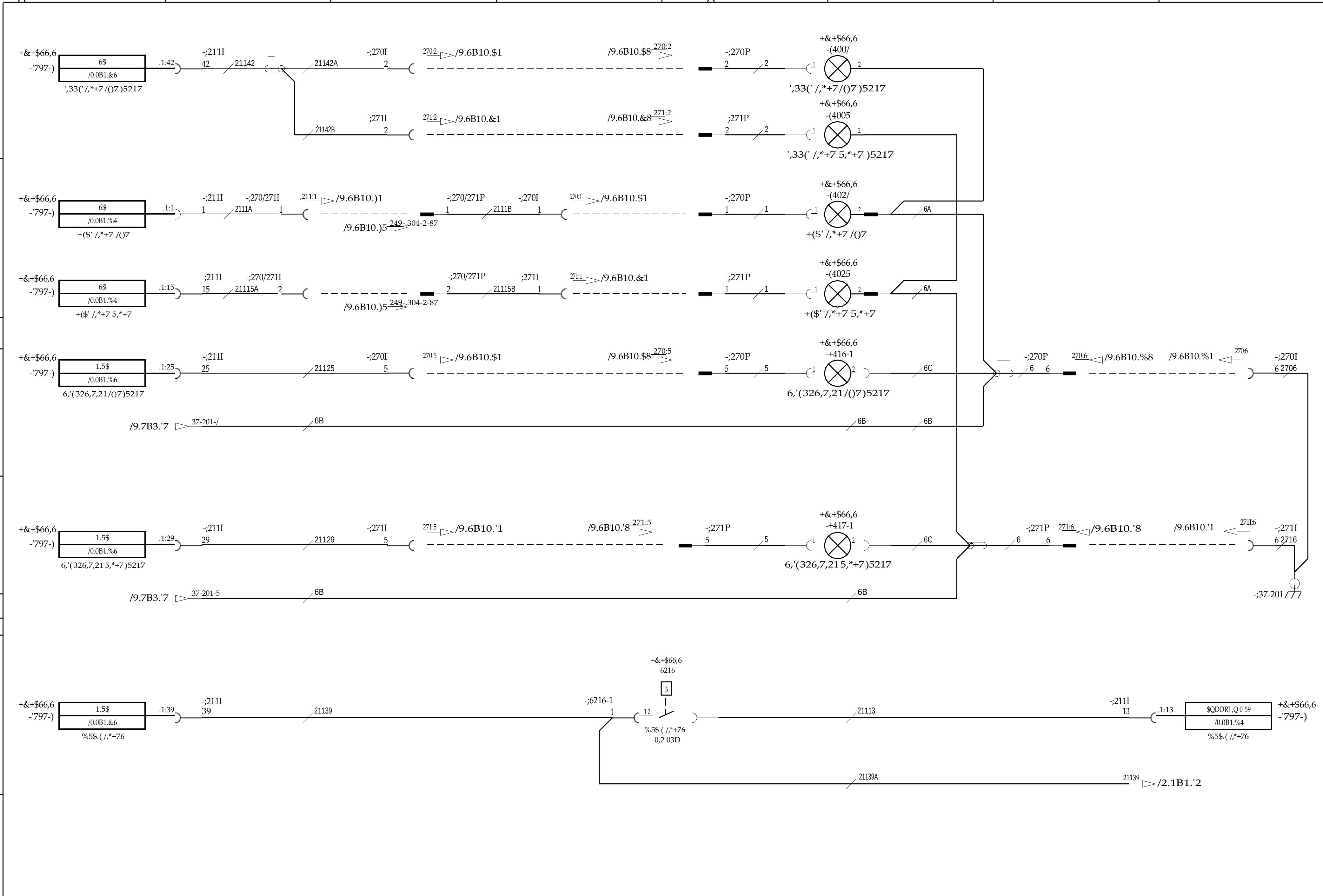

5HI. 6WDWXV 6T.	1U bQGULQJ 1R.	'HVLQJ FKDQJH	bQGULQJ QU &KDQJH 1R.	6LJQ.	'DWXP 'DWH
1		$GGHG 9.1B5 & 8.2B4 & ;059-2.	060600	7.%	060615
		7 7LOON/$GGHG 8 8WJnU/'HOHWHG 9 9DU/:DV			

	6LJQ.	'DWXP/'DWH	+XYXGQU/5HIHUHQFH QR.
5LWDG/UDZQ	7.%	050511	$50000.0600
.RQVWU/'HVLJQ			
*RGN/$SSU	7.%	050511	.ODVV/&ODVV

+.*US: 6

Kalmar

%HQlPQLQJ: .UHWV %HO\VQLQJ

1DPH: :LULQJ/LJKWV

3URGXNW/3URGXFW: '5)& 400-450

5LWQLQJV / UDZLQJ 1R.: $50001.0100

%ODG/6KHHW: 9.6B6/

6WjnYD/(VVXH: 05

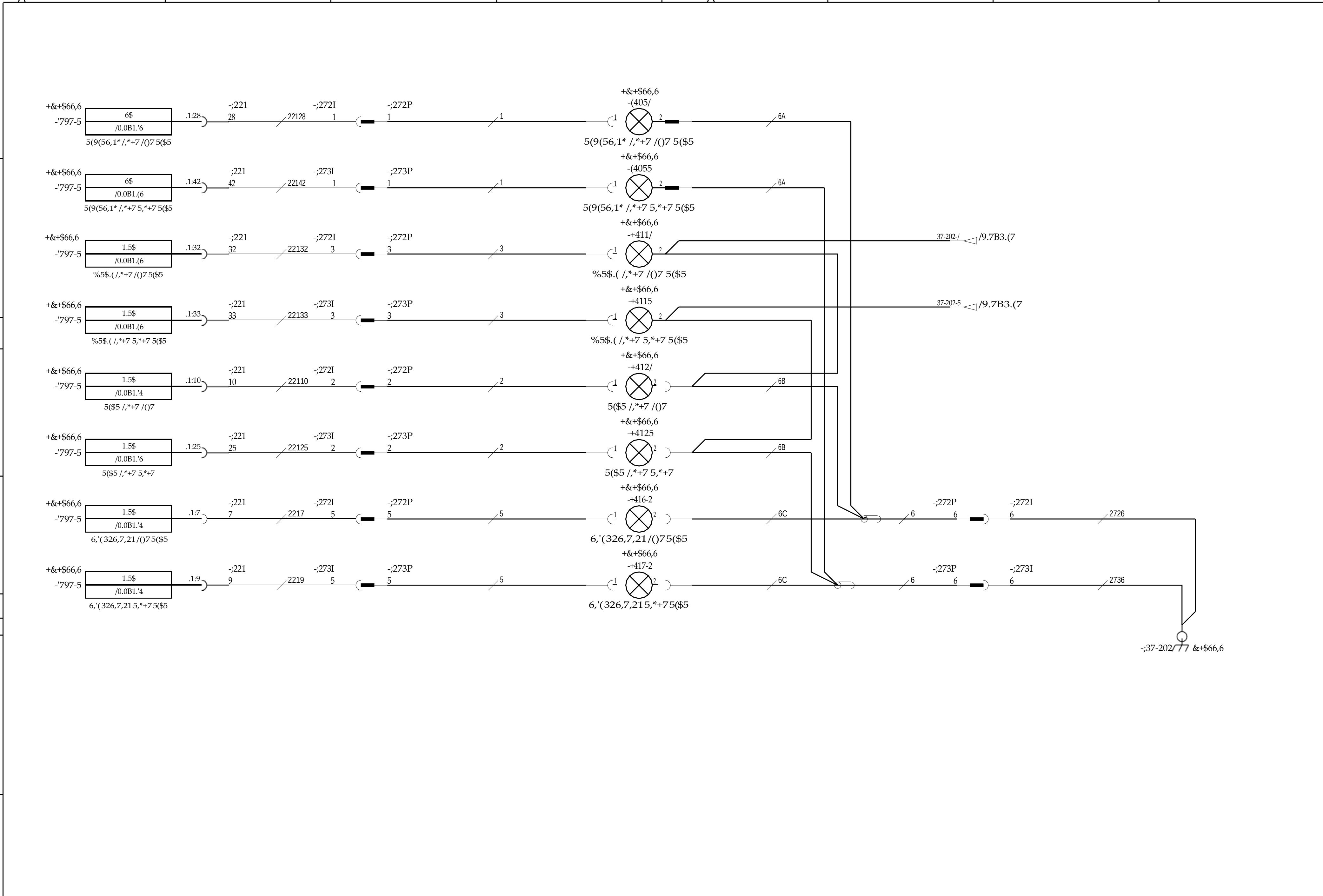

5HI. 5YWD 6T.	1U bQGULQJ 1R.	'HVLJQ FKDQJH	bQGULQJ QU &KDQJH 1R.	6LJQ.	'DWXP 'DWH		6LJQ.	'DWXP/'DWH	+\YGQU/3URMHFW QR.
	1	$GGHG 9.1B5 & 8.2B4 & ;059-2.	060600	7.%	060615	5LWDG/UDZQ	7.%	050511	$50000.0600
		7 7LOON/$GGHG 8 8WJnU/'HOHWHG 9 9DU/:DV				.RQVWU/'HVLJQ			
						*RGN/$SSU	7.%	050511	.ODVV/&ODVV

+*US: 6

%HQHPQLQJ: .UHWV %HO\VQLQJ

1DPH: :LULQJ/LJKWV

3URGXNW/3URGXFW: '5)& 400-450

5LWQLQJVQU/'UDZLQJ 1R.: $50001.0100

%ODG/6KHHW: 9.6B7/

8WJnYD/,VVXH: 05

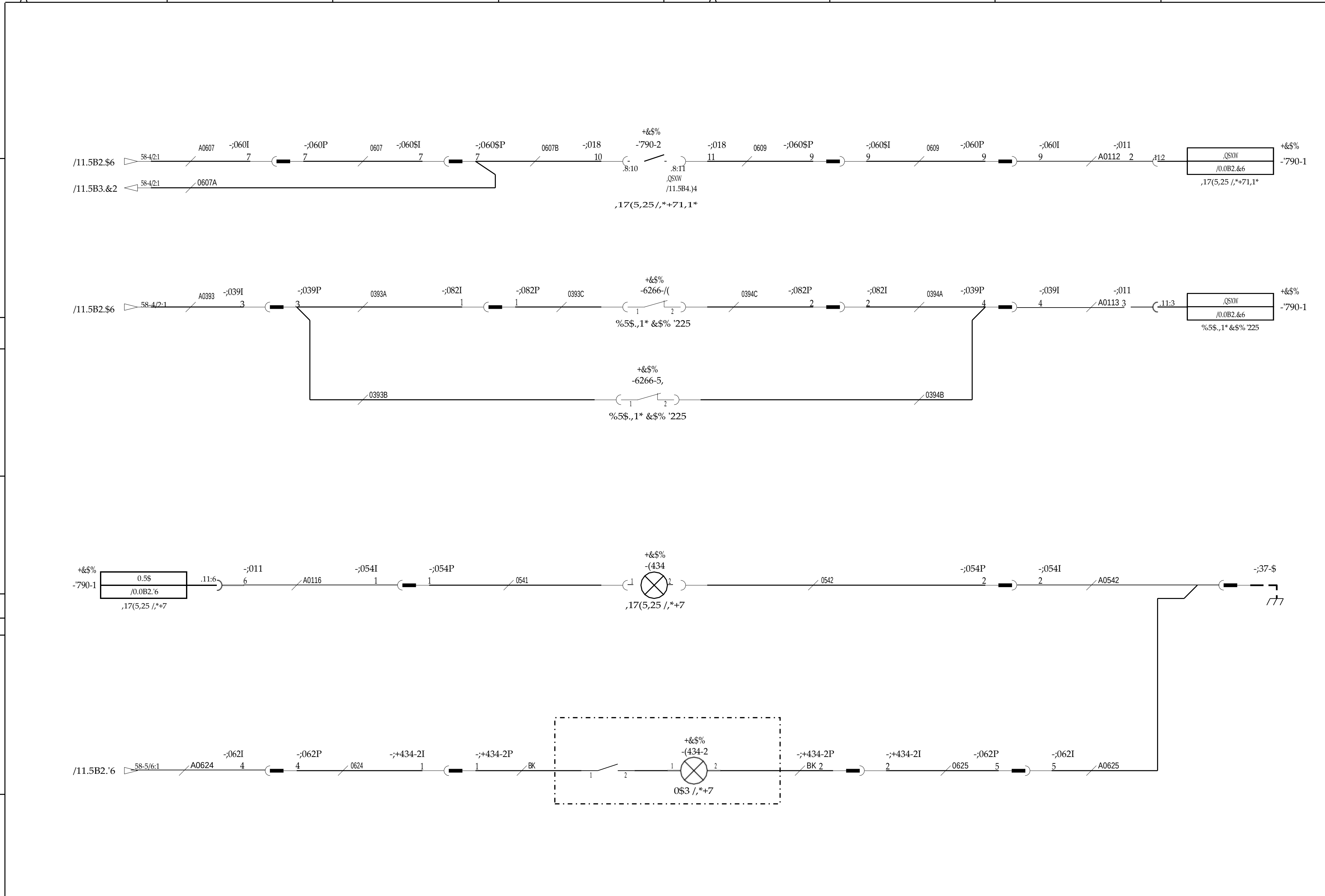

5HI. 3XQNW 6T.	1U bQGULQJ 1R.	'HVLJQ FKDQJH	bQGULQJ QU &KDQJH 1R.	bLJQ.	'DWXP 'DWH		bLJQ.	'DWXP/'DWH	+XYXGQU./3URMHFW QR.
	1	$GGHG 9.1B5 & 8.2B4 & ;059-2.	060600	7.%	060615	5LWDG/'UDZQ	7.%	050511	$50000.0600
		7 7LOON/$GGHG 8 8WJnU/'HOHWHG 9 9DU/:DV				.RQWUROO/&KHFNHG			
						*RGN/$SSU	7.%	050511	.ODVV/&ODVV

+*US: 6

Kalmar

%HQlPQLQJ: .UHWV %HO\VQLQJ
1DPH: :LULQJ/LJKWV

3URGXNW/3URGXFW: '5)& 400-450
5LWQLQJV/'UDZLQJ 1R.: $50001.0100

%ODG/6KHHW: 9.6B8/
6WlnYDUVH: 05

5HY.	1U bQGULQJ	bQGULQJ QU	6LJQ.	'DWXP		6LJQ.	'DWXP/'DWH	+XYXGQU./'UDZLQJ 1R.		%HQHPQLQJ	5LWQLQJ	%ODG
5HY/ 6T.	1R. 'HVLJQ FKDQJH	&KDQJH 1R.		'DWH	5LWDG/'UDZQ	7.%	050511	$50000.0600		.UHWV ,QVWHJVEHO\VQLQJ	'5)& 400-450	9.6B9/
	1 $GGHG 9.1B5 & 8.2B4 & ;059-2.	060600	7.%	060615	.RQVWU/'HVLJQ				+.*US: 6	1DPH :LULQJ 6WHS ,Q /LJKW	5LWQLQJ 1R. $50001.0100	6WjnYDj/VVXH 05
	77LOON/$GGHG 88WjnU/'HOHWHG 99DU/:DV				*RGN/$SSU	7.%	050511	/DQV/&ODVV				

Kalmar

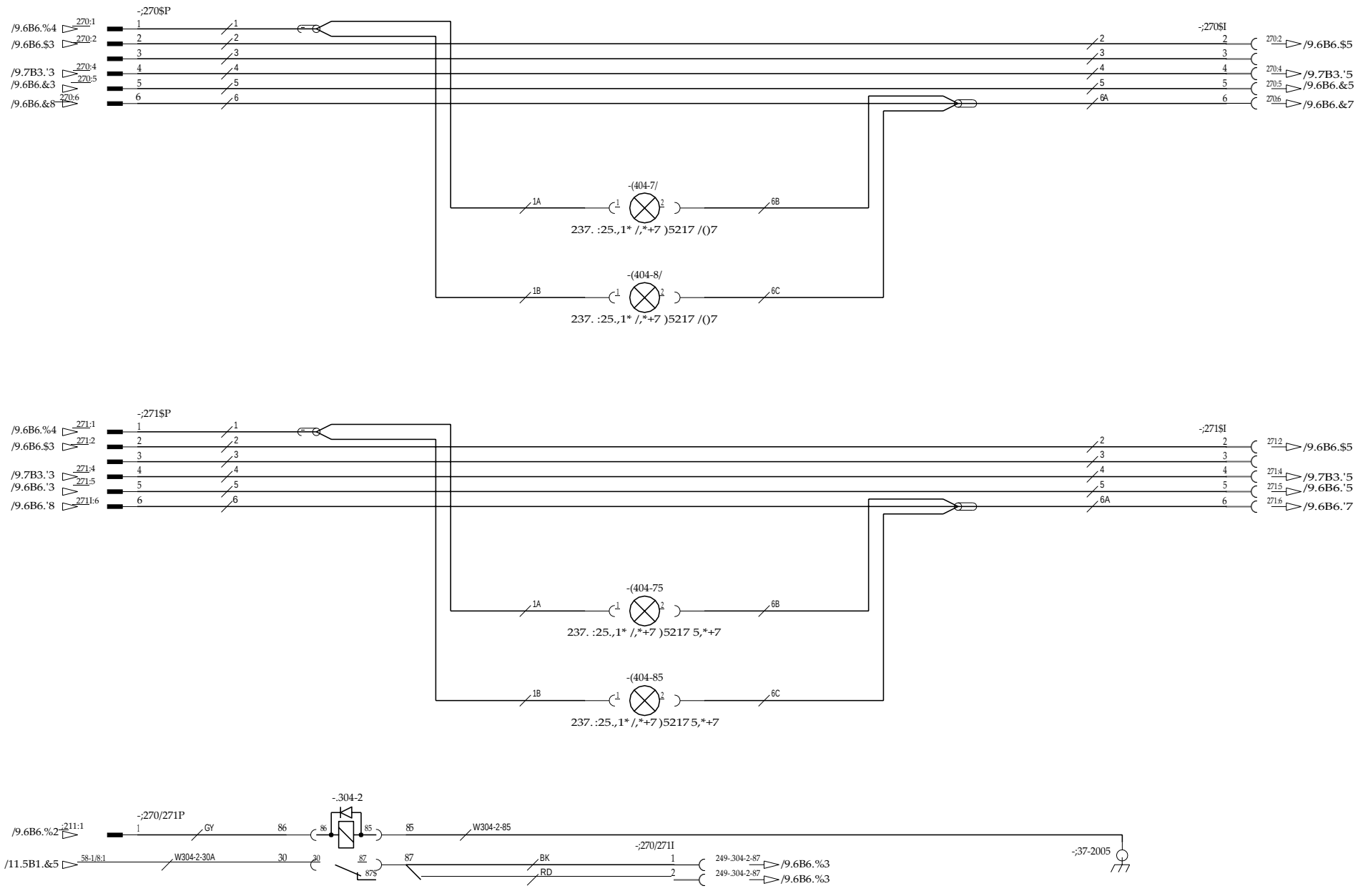

5HI. 5WWD 6T.	1U bQGULQJ 1R. 'HVLJQ FKDQJH	bQGULQJ QU &KDQJH 1R.	bLJU.	'DWXP 'DWH		6LJQ.	'DWXP/'DWH	•XYXGQU;JUBNHFW QR.	
					SLWDG/'UDZQ	7.%	050511	$50000.0600	
		$GGHG 9.1B5 & 8.2B4 & ;059-2.	060600	7.%	060615	.RQVWU/'HVLJQ			•.*US: 6
		7 7LOON/$GGHG 8 8WjnU/'HOHWHG 9 9DU/:DV				*RGN/$SSU	7.%	050511	.ODVV/&ODVV

Kalmar

%HQIPQLQJ
.UHWV ([WUD $UE.%HO. 5DP

1DPH
:LULQJ 2SW. :RUN /LJKW &KDVVLV

3URGXNW/3URGXFW
'5)& 400-450

SUWQQQU / UDZLQJ 1R.
$50001.0100

%ODG&KHHW
9.6B10/

8WjnYDU/VVXH
05

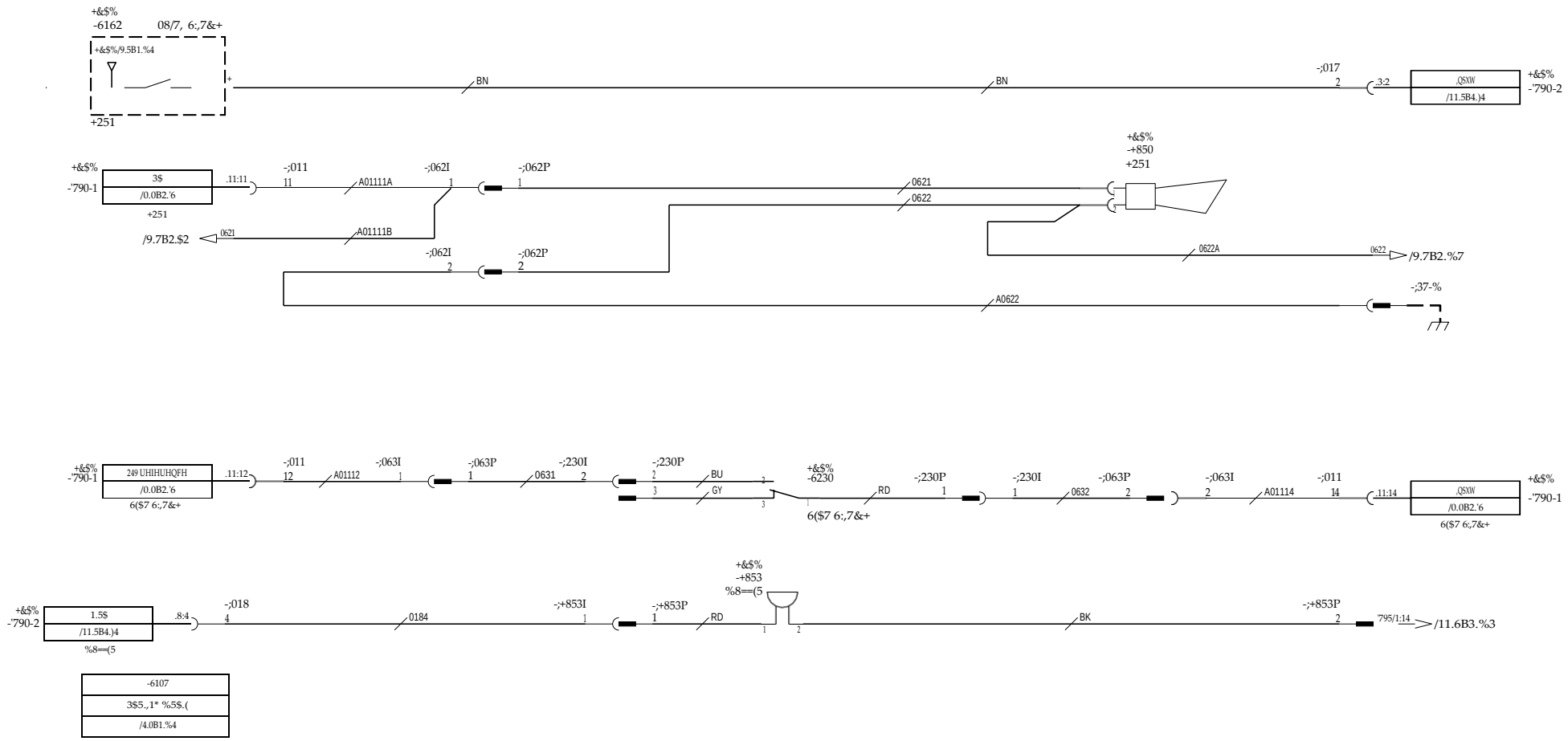

5HI. 5WD 6T.	1U bQGULQJ 1R.	'HVLJQ FKDQJH	bQGULQJ QU &KDQJH 1R.	6LJQ.	'DWXP 'DWH	6LWDG/UDZQ	6LJQ.	'DWXP/DWH	,XXNGQLU,ßUBMHFW QR		%HQIPQLLQJ .UHWV /DUP, /MXGVLJQDOHU	3URGXNW(ßURGXFW '5)& 400-450	%ODG,nßKEHHW 9.7B1/
	1	$GGHG 9.1B5 & 8.2B4 & ;059-2.	060600	7.%	060615	,RQVWU/HVLJQ				,-*US: 6	1DPH :LULQJ $ODUP, 6RXQGVLJQDOV	SLWQ.QU / UDZLQJ 1R. $50001.0100	8WnYD/VVXH 05
		7 7LOON/$GGHG 8 8WJnU/'HOHWHG 9 9DU/:DV				*RGN/$SSU	7.%	050511	.ODVV/&ODVV				

Kalmar

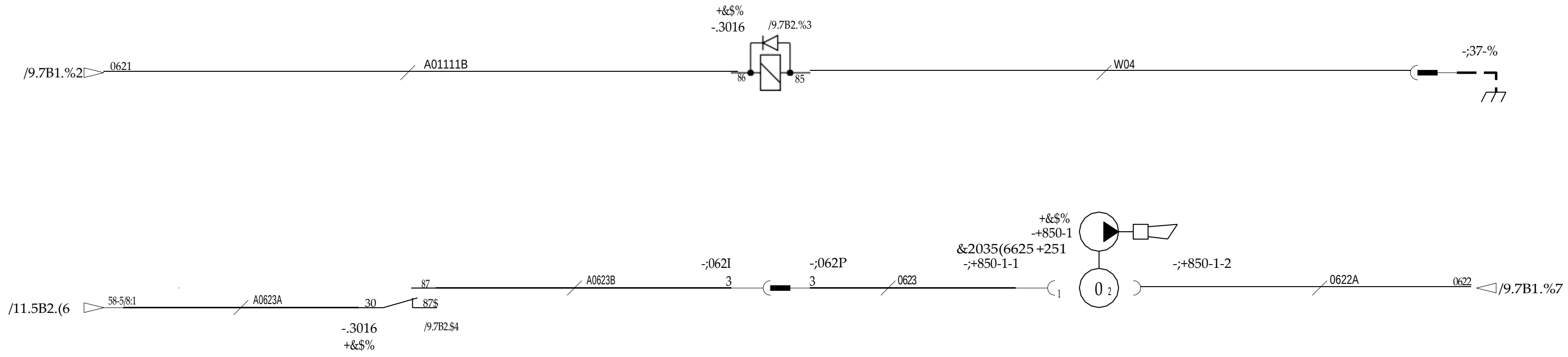

5HI. 5WD 6T.	1U bQGULQJ		bQGULQJ QU	6LJQ.	'DWXP		6LJQ.	'DWXP/'DWH	+\YXGQU./'URMHFW QR.	
	1R.	'HVLJQ FKDQJH	&KDQJH1R.		'DWH	5LWDG/UDZQ	7.%	050511	$50000.0600	
	1	$GGHG 9.1B5 & 8.2B4 & ;059-2.	060600	7.%	060615	.RQVWU/'HVLJQ				+.*US: 6
		77LOON/$GGHG 88WJnU/'HOHWHG 99DU/:DV				*RGN/$SSU	7.%	050511	.DOVV/&ODVV	

Kalmar

%HQHPQLQJ
.UHWV /DUP, /MXGVLJQDOHU
1DPH
:LULQJ $ODUP, 6RXQGVLJQDOV

'URGXNW/'URGXFW
'5)& 400-450
5LWQLQJV/'UDZLQJ 1R.
$50001.0100

%ODG/6KHHW
9.7B2/
8WJnYD/,VVXH
05

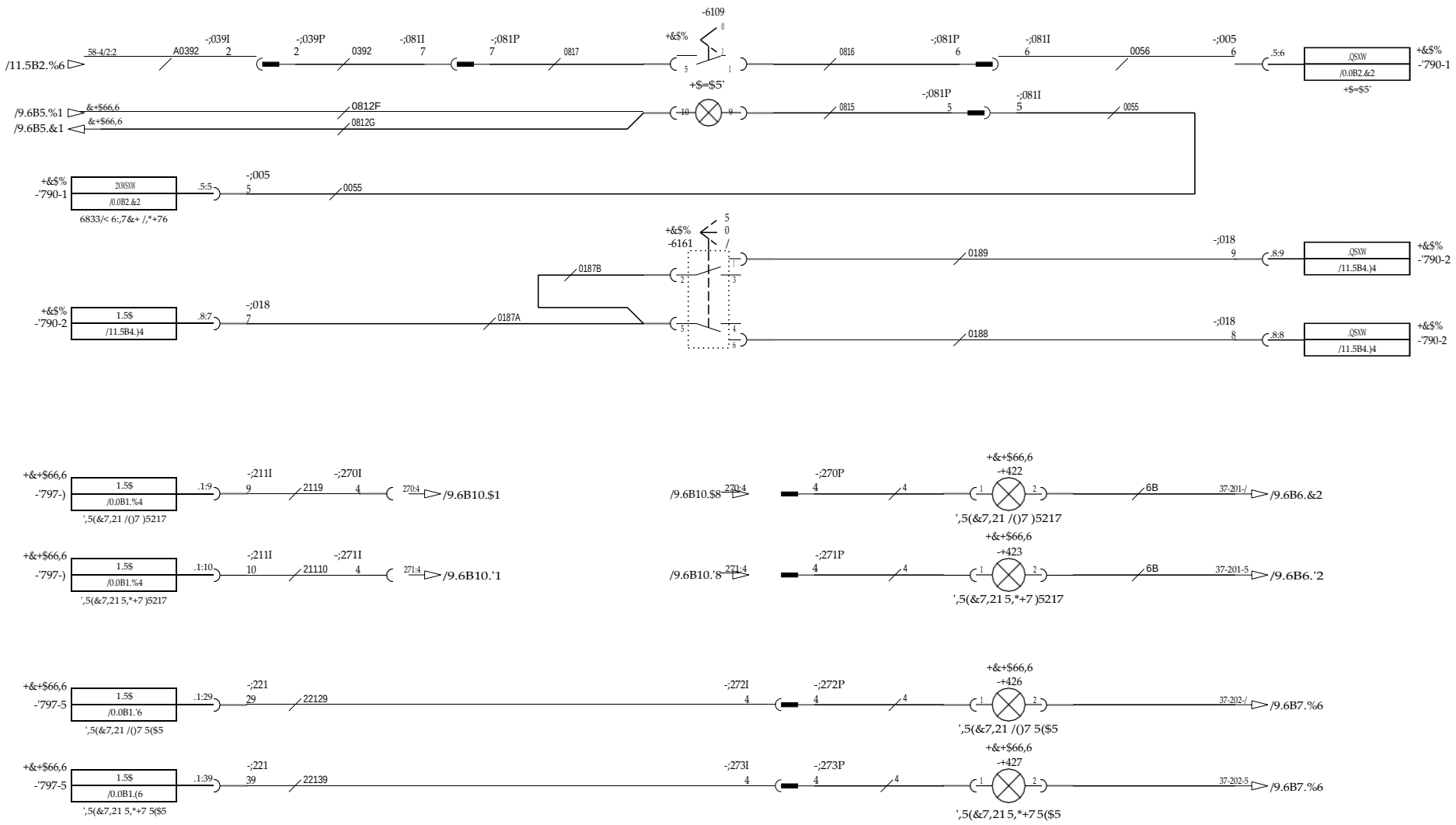

5HI. 5WWD 6T.	1U bQGULQJ 1R.	'HVLJQ FKDQJH	bQGULQJ QU &KDQJH 1R.	6LJQ.	'DWXP 'DWH	SLWDG/UDZQ	6LJQ.	'DWXP/'DWH	,XXNGQLU,SUBMHFW QR		%HQHPQLQJ .UHWV %OLQNHUV, 9DUQLQJVEOLQNHUV	3URGXNW(3URGXFW '5)& 400-450	%ODG&&KEHHW 9.7B3/
	1	$GGHG 9.1B5 & 8.2B4 & ;059-2.	060600	7.%	060615	.RQVWU/'HVLJQ	7.%	050511	$50000.0600	,.*US: 6	1DPH :LULQJ)ODVKLQJ LQGLFDWRU, +DJDUG	SLWQ QU / UDZLQJ 1R. $50001.0100	8WHnYD/VVXH 05
		7 7LOON/$GGHG 8 8WJnU/'HOHWHG 9 9DU/:DV				*RGN/$SSU	7.%	050511	.ODVV/&ODVV				

Kalmar

5HI. 5WD 6T.	1U bQGULQJ	bQGULQJ QU	6LJQ.	'DWXP		6LJQ.	'DWXP/'DWH	+XYXGQU./'URMHNW QR.			%HQlPQLQJ	3URGXNW/3URGXFW	%ODG/6KHHW
1R.	'HVLJQ FKDQJH	&KDQJH1R.		'DWH	5LWDG/UDZQ	7.%	050511	$50000.0600			.UHWV %DFNODUDP	'5)& 400-450	9.7B4
1	$GGHG 9.1B5 & 8.2B4 & ;059-2.	060600	7.%	060615	.RQVWU/'HVLJQ				+.*US: 6	Kalmar	1DPH	5LWQLQJVQU/'UDZLQJ 1R.	8WJnYD/,VVXH
	77LOON/$GGHG 88WJnU/'HOHWHG 99DU/:DV				*RGN/$SSU	7.%	050511	.ODVV/&ODVV			:LULQJ 5HYHUVH DODUP	$50001.0100	05

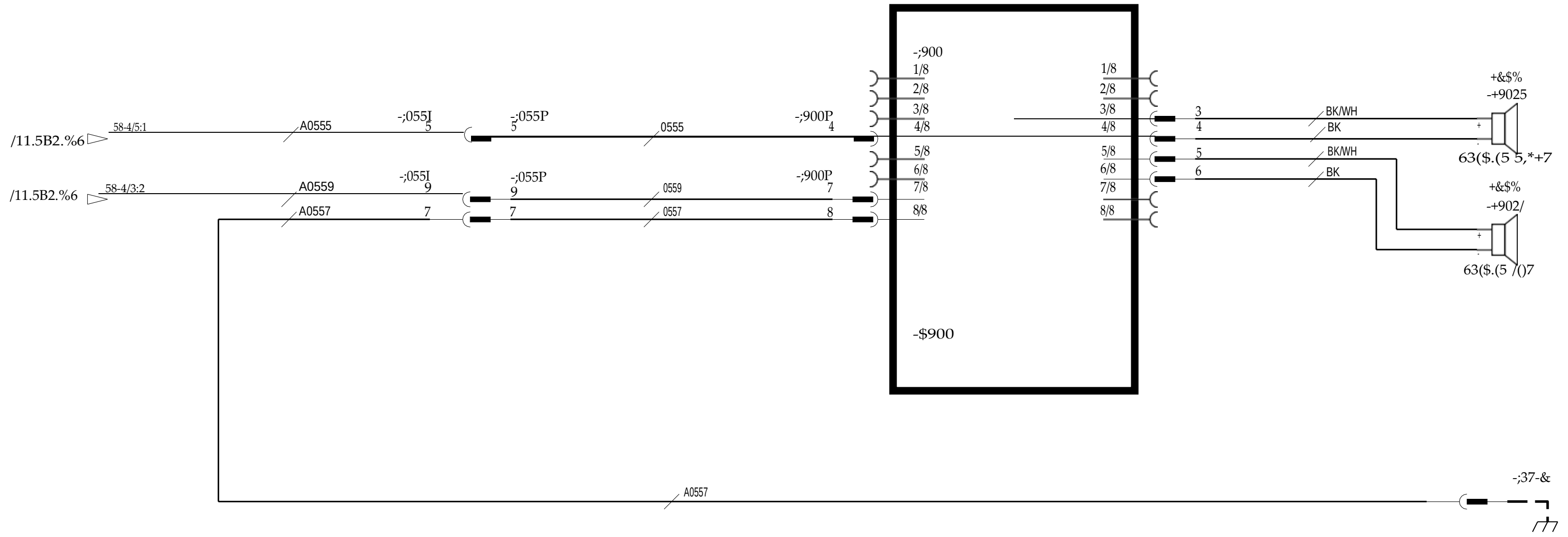

5HL	1U bQGULQJ		bQGULQJ QU	6LJQ	'DWXP		6LJQ	'DWXP/'DWH	+\YXGQU./3URMHFW QR.			%HQlPQLQJ	3URGXNW/3URGXFW	%ODG/6KHHW
5WD 6T.	1R.	'HVLJQ FKDQJH	&KDQJH 1R.		'DWH	5LWDG/'UDZQ	7.%	050511	$50000.0600			.UHWV 5DGLR	'5)& 400-450	9.8B1/
	1	$GGHG 9.1B5 & 8.2B4 & ;059-2.	060600	7.%	060615	.RQVWU/'HVLJQ				+.*US: 6	Kalmar	1DPH	5LWQLQJVQU/'UDZLQJ 1R.	8WJnYD/,VVXH
		77LOON/$GGHG 88WJnU/+HOHWHG 99DU/:DV				*RGN/$SSU	7.%	050511	.DVV/&ODVV			:LULQJ 5DGLR	$50001.0100	05

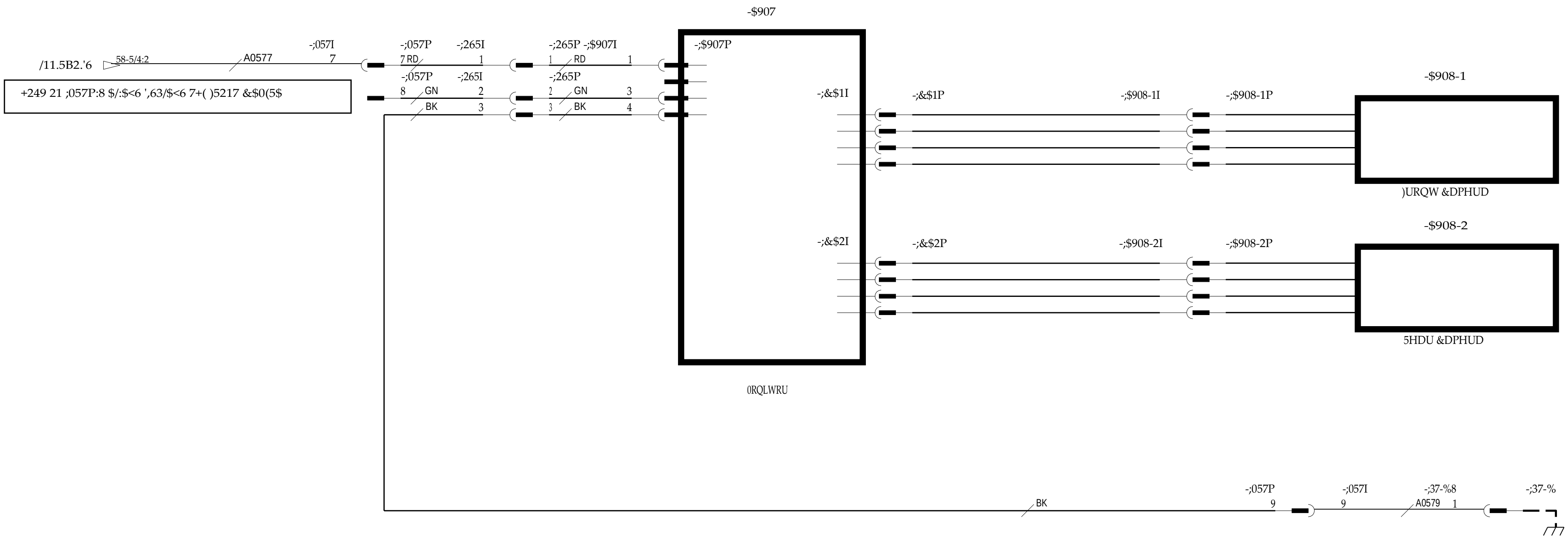

1U b[illegible]GULQJ	bQGULQJ QU	6LJQ.	'DWXP		6LJQ.	'DWXP/'DWH	+\Y\GQU./DUWLFOH QR.	
1R. 'HVLJQ FKDQJH	&KDQJH 1R.		'DWH	5LWDG/'UDZQ	7.%	050511	$50000.0600	
1 $GGHG 9.1B5 & 8.2B4 & ;059-2.	060600	7.%	060615	.RQVWU/'HVLJQ				+.*US: 6
77LOON/$GGHG 88WJnU/'HOHWHG 99DU/:DV				*RGN/$SSU	7.%	050511	.DVV/&ODVV	

Kalmar

.UHWV .DPHUD

:LULQJ &DPHUD

'5)& 400-450

$50001.0100

9.9B9/

05

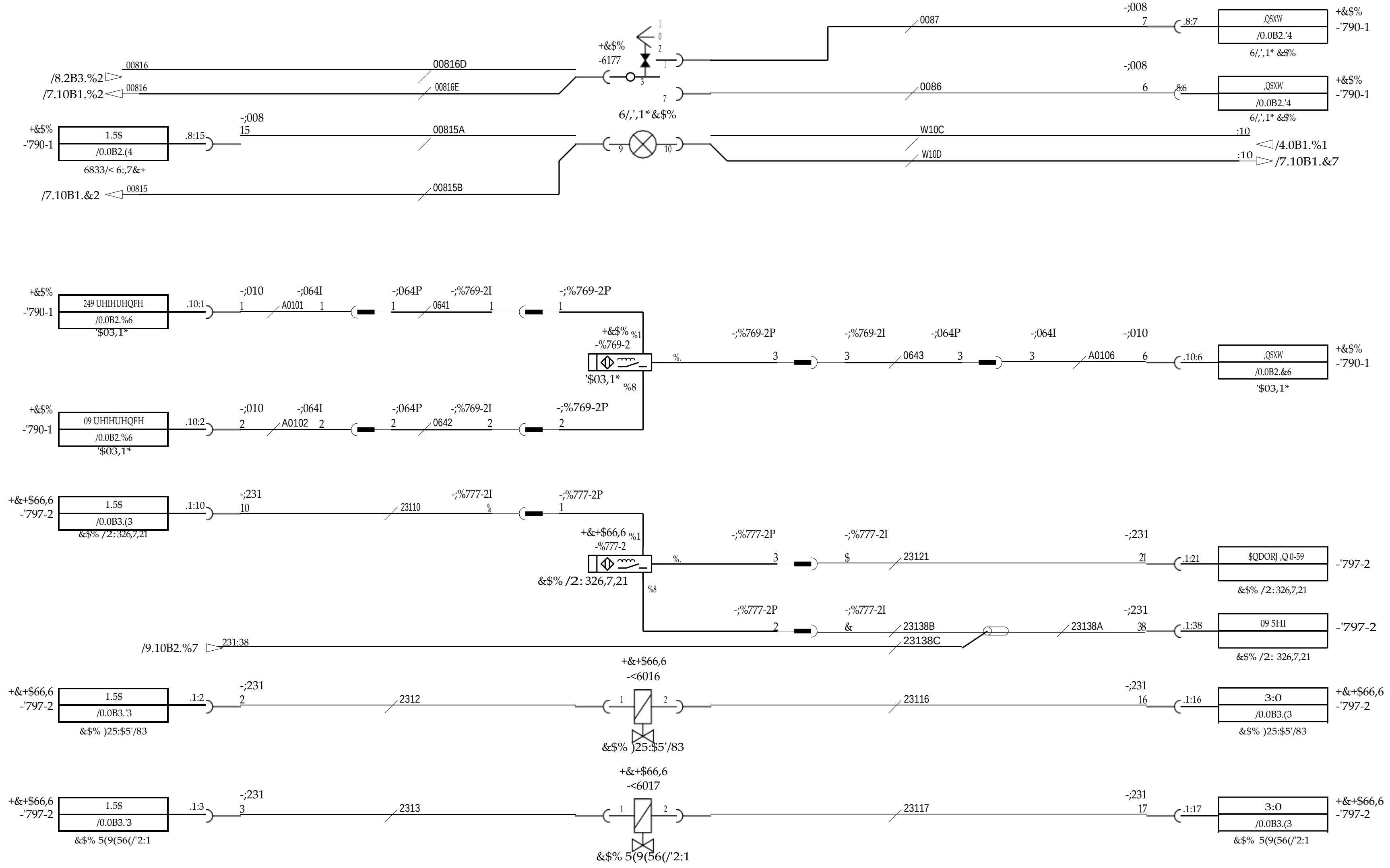

5HI. 6T.	1R.	'HVLJQ FKDQJH	bQGULQJ QU &KDQJH 1R.	6LJQ.	'DWXP 'DWH		
	1	$GGHG 9.1B5 & 8.2B4 & ;059-2.	060600	7.%	060615		
		7 7LOON/$GGHG 8 8WJnU/'HOHWHG 9 9DU/:DV					

5LWDG/UDZQ	7.%	050511	$50000.0600
.RQVWU/HVLJQ			
*RGN/SSSU	7.%	050511	

+.*US: 6

Kalmar

.UHWV 6NMXWEDU/9HUWLNDOW MXVWHUEDU+\WW

:LULQJ 6OLGLQJ/9HUWLFDOO\ DGMXVWDEOH &D

'5)& 400-450

$50001.0100

9.10B1/

05

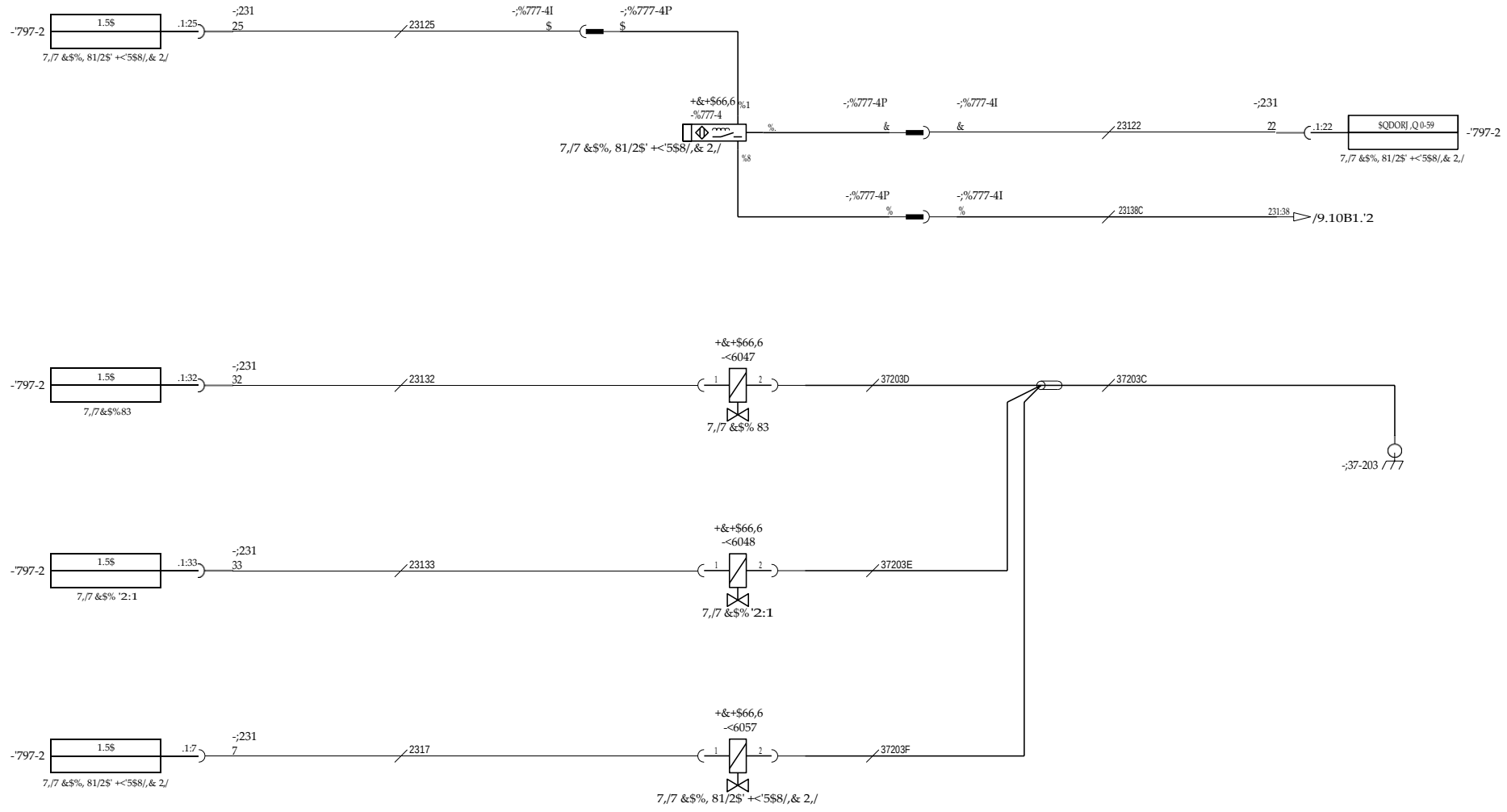

5HI. 5WD 6T.	1U bQGULQJ 1R. 'HVLJQ FKDQJH	bQGULQJ QU &KDQJH 1R.	6LJQ.	'DWXP 'DWH		6LJQ.	'DWXP/'DWH	+XYXGQU,5UBMHFW QR.		%HQPQ4LQJ .UHWV 7LOWEDU K\WW	3URGXW/3URGXFW '5)& 400-450	%ODG/6KHHW 9.10B2/
	1	$GGHG 9.1B5 & 8.2B4 &;059-2.	060600	7.%	060615	SLWDG/UDZQ	7.%	050511	$50000.0600	1DPH :LULQJ &DE WLOW	SLW Q QU / UDZL QJ 1R $50001.0100	8WjnYD/VVXH 05
		77LOON/$GGHG 88WJnU/'HOHWHG 99DU;DV				1QVWU/HVLJQ						
						*RGN/$SSU	7.%	050511	;DVV/&DVV			

+.*US: 6

Kalmar

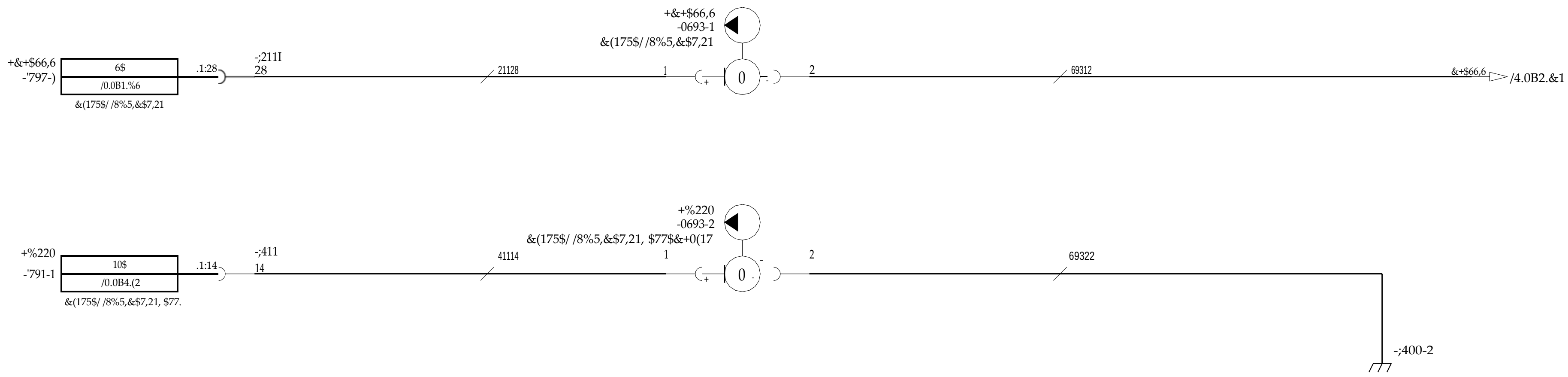

1U bQGULQJ	bQGULQJ QU	6LJQ.	'DWXP		6LJQ.	'DWXP/'DWH	+\YXGQU./3URMHFW QR.
1R. 'HVLJQ FKDQJH	&KDQJH 1R.		'DWH	5LWDG/UDZQ	7.%	050511	$50000.0600
1 $GGHG 9.1B5 & 8.2B4 &;059-2.	060600	7.%	060615	.RQVWU/'HVLJQ			
77LOON/$GGHG 88WJnU/'HOHWHG 99DU/:DV				*RGN/$SSU	7.%	050511	.ODVV/&ODVV

+*US: 6

Kalmar

%HQlPQLQJ: .UHWV &HQWUDOVP\UMQLQJ

1DPH: :LULQJ &HQWUDO /XEULFDWLRQ

3URGXNW/3URGXFW: '5)& 400-450

5LWQLQJV/'UDZLQJ 1R.: $50001.0100

%ODG/6KHHW: 9.14/

8WJnYD/,VVXH: 05

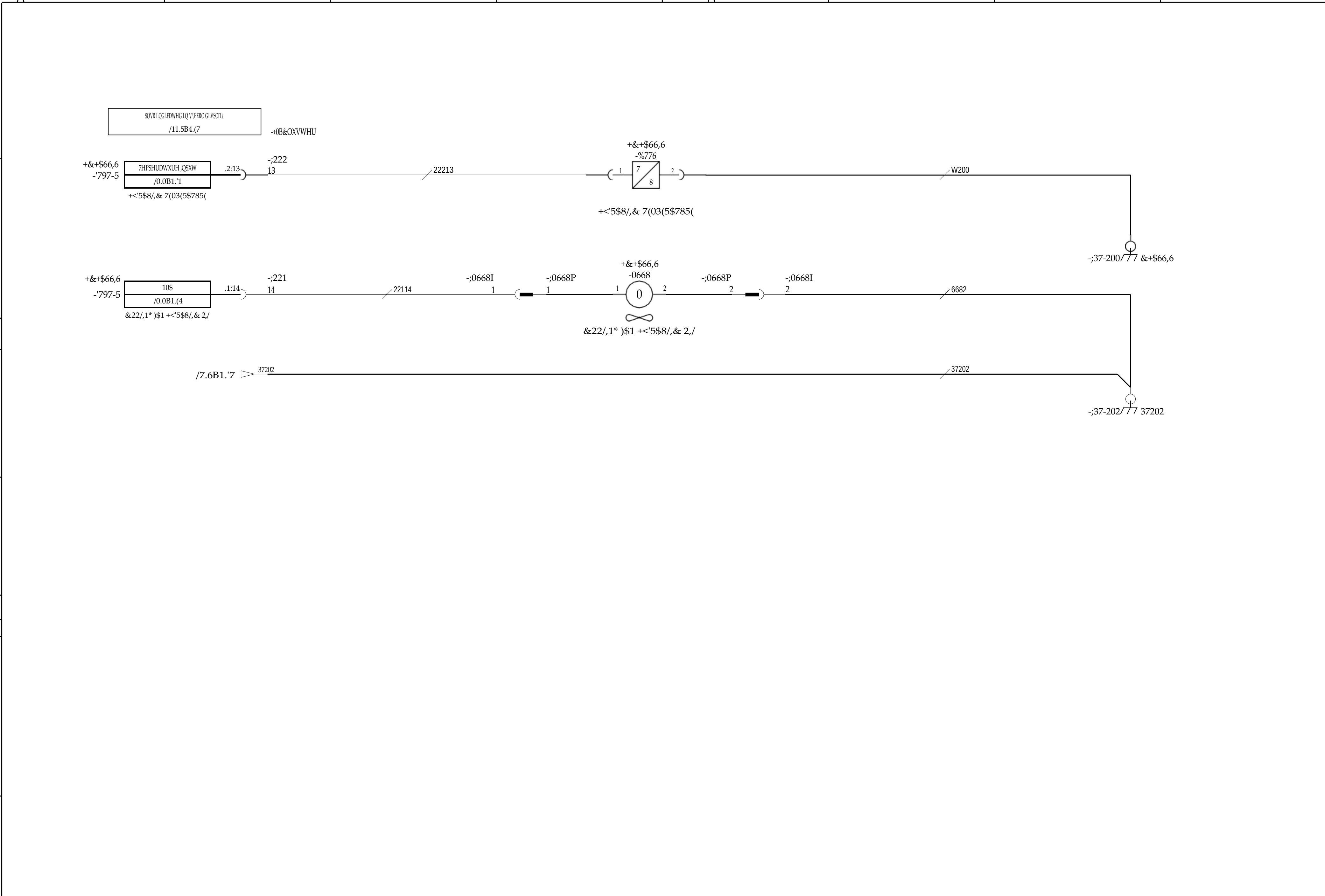

5HI.	1U b	GULQJ	bQGULQJ QU	6LJQ.	'DWXP		6LJQ.	'DWXP/'DWH	+\YXGQU./'URMHFW QR.			%HQlPQLQJ	3URGXNW/3URGXFW	%ODG/6KHHW
5HYD 6T.	1R.	'HVLJQ FKDQJH	&KDQJH 1R.		'DWH	5LWDG/'UDZQ	7.%	050511	$50000.0600			.UHWV +\GUDXOLN	'5)& 400-450	10.0B1/
	1	$GGHG 9.1B5 & 8.2B4 & ;059-2.	060600	7.%	060615	.RQWU/&KHFNLQ				+.*US:	6	1DPH	5LWQLQJ/'UDZLQJ 1R.	6WjUVD/Sheet
		77LOON/$GGHG 88WjnU/'HOHWHG 99DU/:DV				*RGN/$SSU	7.%	050511	.DOVV/&ODVV			:LULQJ +\GUDXOLFV	$50001.0100	05

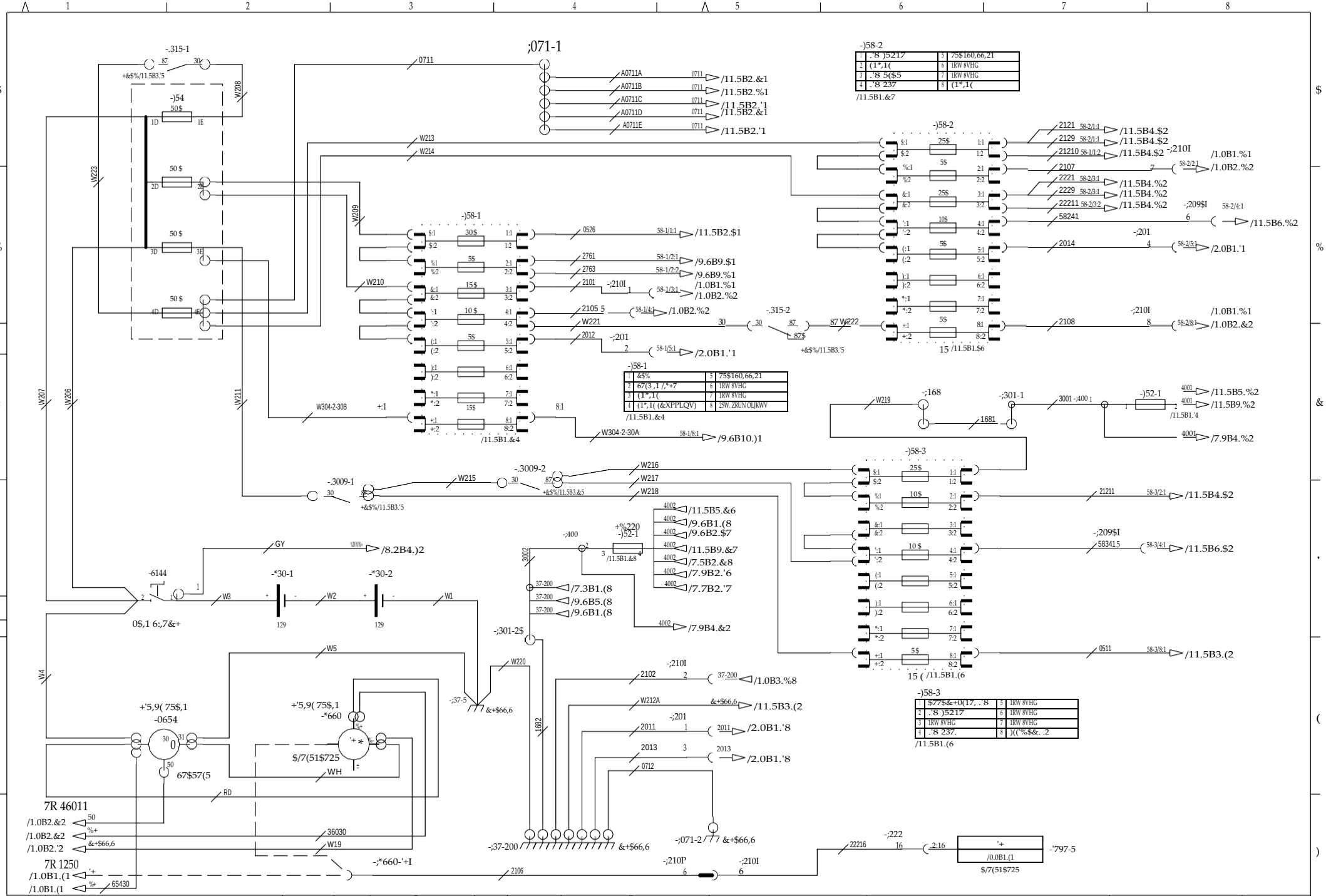

5HL. 5WD 6T.	1U bQGULQJ	bQGULQJ QU	6LJQ.	'DWXP		6LJQ.	'DWXP/'DWH	+XYXGQU,5UBMHFW QR.		%HQHPQLQJ	3UBGXW/3UBGFW	%ODG&KHHW
	1R. 'HVLJQ FKDQJH	&KDQJH1R.		'DWH	SLWDG/UDZQ	7.%	050511	$50000.0600	+&+$66,6	.UHWV 6WU|P	'5)& 400-450	11.5B1/
	1 $GGHG 9.1B5 & 8.2B4 &;059-2.	060600	7.%	060615	,RQVWU/'HVLJQ				+.*US: 6	1DPH	SLW Q QU / UDZL QJ 1R.	8WHjeYD/VVXH
	77LOON/$GGHG 88WJnU/'HOHWHG 99DU;DV				*RGN/8SSU	7.%	050511	,DVV/&DVV		:LULQJ 3RZHU	$50001.0100	05

Kalmar

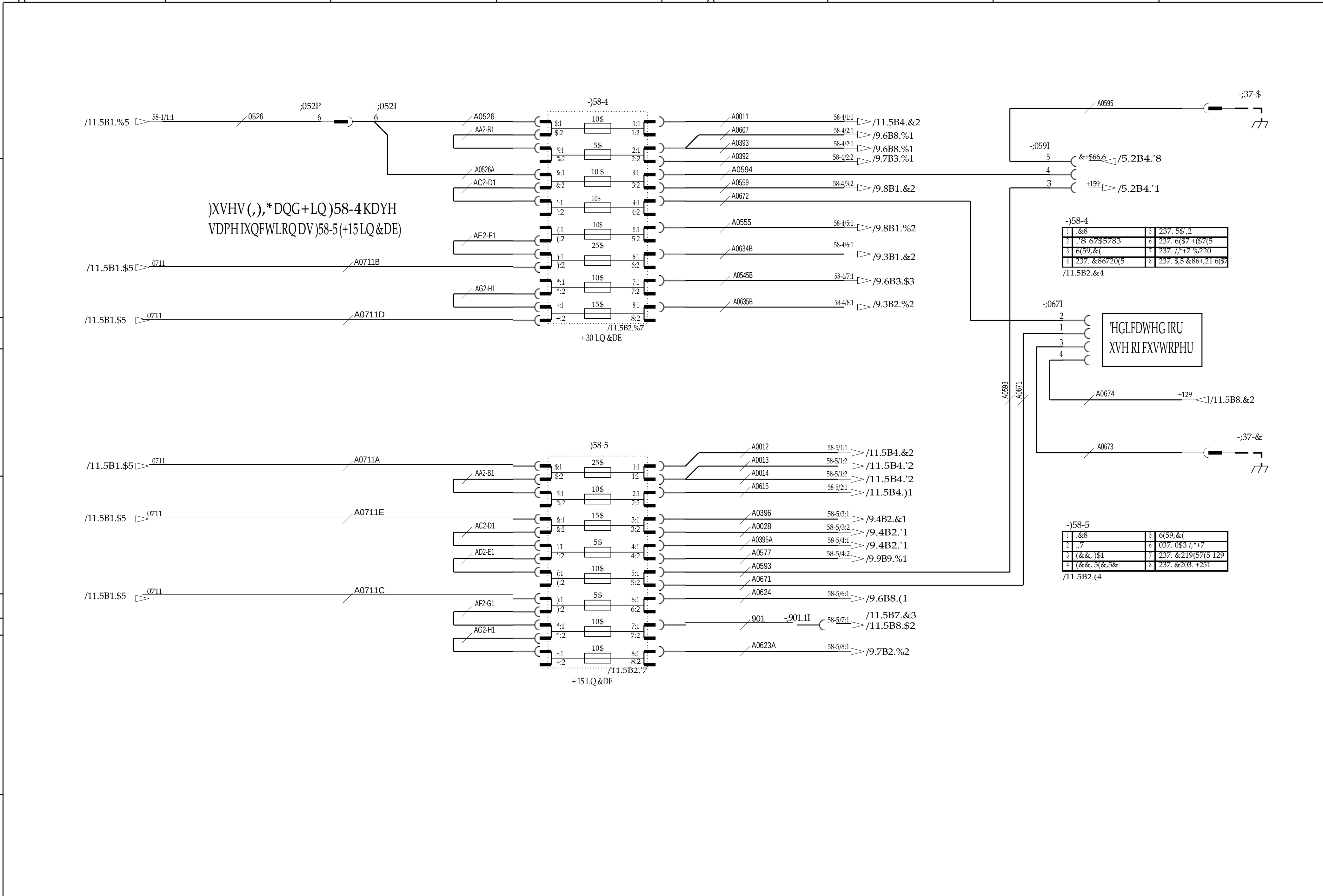

5HI.	1U	bQGULQJ	bQGULQJ QU	6LJQ.	'DWXP
	1R.	'HVLJQ FKDQJH	&KDQJH 1R.		'DWH
	1	$GGHG 9.1B5 & 8.2B4 & ;059-2.	060600	7.%	060615
		7 7LOOR/$GGHG 8 8WJnU/'HOHWHG 9 9DU/:DV			

	6LJQ.	'DWXP/'DWH	+XYXGQU./ÜUMHWHW QU.
5LWDG/UDZQ	7.%	050511	$50000.0600
.RQWUROO/&KHFNHG			
*RGN/$SSU	7.%	050511	.ODVV/&ODVV

+&$% 6

Kalmar

.UHWV 6WUHP

:LULQJ 3RZHU

'5)& 400-450

$50001.0100

11.5B2/

05

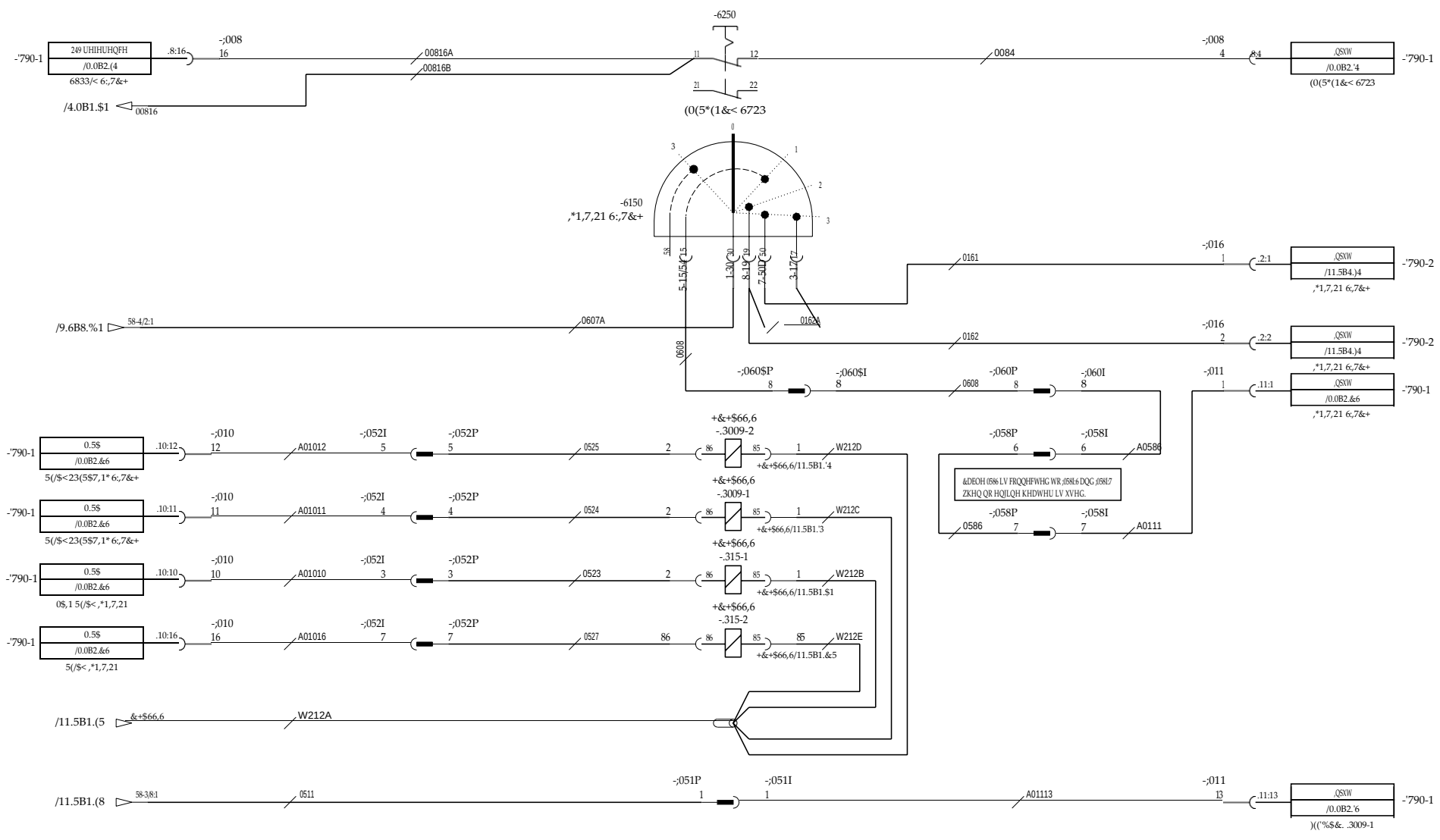

5HL 5WD 6T.	1U bQGULQJ 1R.	'HVLJQ FKDQJH	bQGULQJ QU &KDQJH 1R.	6LJQ.	'DWXP 'DWH		6LJQ.	'DWXP/'DWH	×XXGQGU,RUBHFW QR.	+&$%	%HQHPQLQJ .UHWV 6WUIP	3URGXXW/3URGXFW '5)& 400-450	%ODG&KHHW 11.5B3/
						SLWDG/'UDZQ	7.%	050511	$50000.0600	×.*US: 6	1DPH :LULQJ 3KZHU	SLWQ.QU./ 'UDZLQJ 1R. $50001.0100	8WhYD/VVXH 05
	1	$GGHG 9.1B5 & 8.2B4 & ;059-2.	060600	7.%	060615	.RQVWU/HVUJQ							
		7 7LOON/$GGHG 8 8W]nU/'HOHWHG 9 9DU/:DV				*RGN/$SSU	7.%	050511	.ODVV/&ODVV				

Kalmar

(8'5&.1*

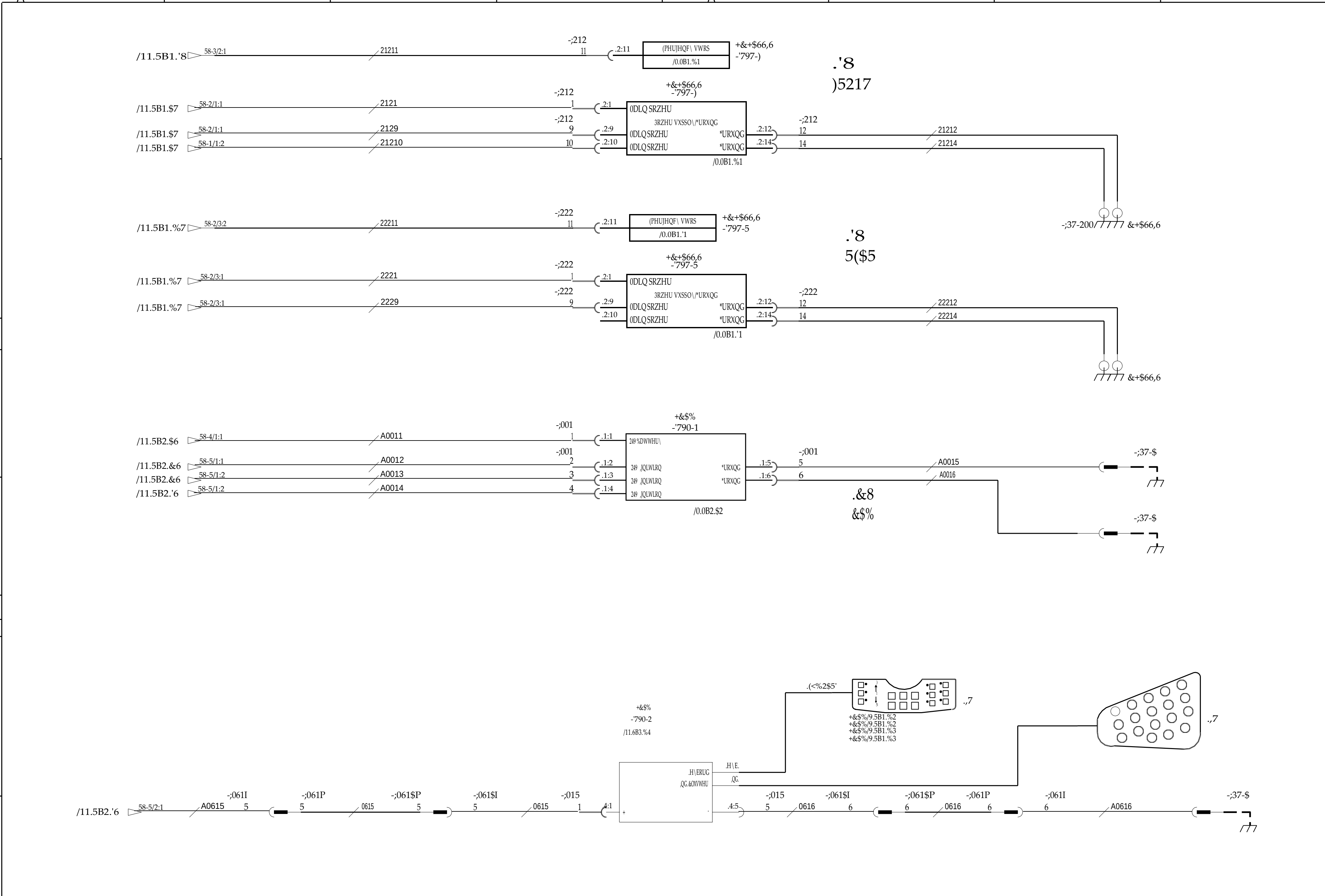

5HI.	1U bQGULQJ		bQGULQJ QU	6LJQ.	'DWXP		6LJQ.	'DWXP/'DWH	+XYXGQU./8URMHFW QR.		%HQlPQLQJ		3URGXNW/3URGXFW	%ODG/6KHHW
5XWD 6T.	1R.	'HVLQ FKDQJH	&KDQJH 1R.		'DWH	5LWDG/'UDZQ	7.%	050511	$50000.0600		.UHWV 6WUP		'5)& 400-450	11.5B4/
	1	$GGHG 9.1B5 & 8.2B4 & ;059-2.	060600	7.%	060615	.RQWUROO/&KHFNLQJ				+.*US: 6	1DPH		5LWQ.QU./'UDZLQJ 1R.	8WJnYD/,VVXH
		7 7LOOn/$GGHG 8 8WJnU/'HOHWHG 9 9DU/:DV				*RGN/$SSU	7.%	050511	.ODVV/&ODVV		:LULQJ 3RZHU		$50001.0100	05

Kalmar

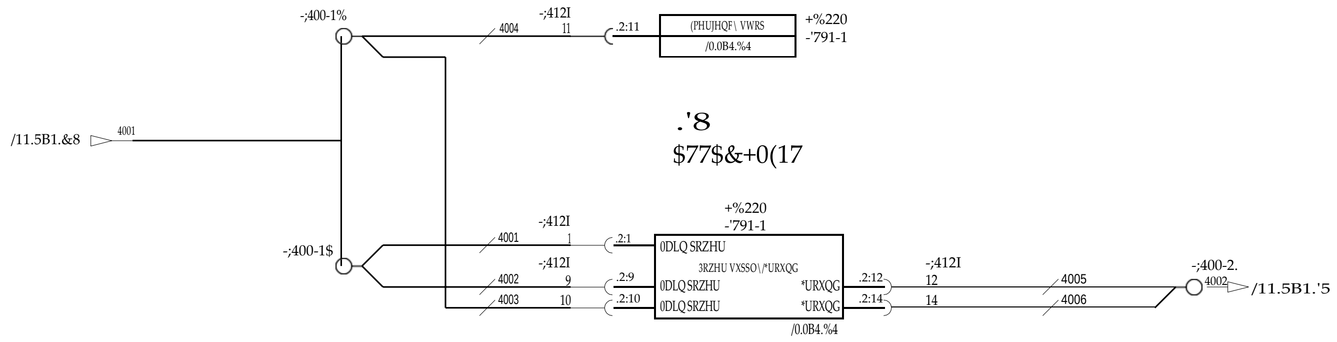

5HI.	1U bQGULQJ	bQGULQJ QU	6LJQ.	'DWXP		6LJQ.	'DWXP/'DWH	+\YXGQU./'URMHNW QR.
6T.	1R. 'HVLJQ FKDQJH	&KDQJH1R.		'DWH	5LWDG/UDZQ	7.%	050511	$50000.0600
	1 $GGHG 9.1B5 & 8.2B4 & ;059-2.	060600	7.%	060615	.RQVWU/'HVLJQ			
	77LOON/$GGHG 88WJnU/'HOHWHG 99DU/:DV				*RGN/$SSU	7.%	050511	.DVVHW/&ODVV

+*US: 6

Kalmar

%HQlPQLQJ: .UHWV 6WU|P $JJ

1DPH: :LULQJ 3RZHU

3URGXNW/3URGXFW: '5)& 400-450

%ODG/6KHHW: 11.5B5/

5LWQLQJ/'UDZLQJ 1R: $50001.0100

8WJnYD/,VVXH: 05

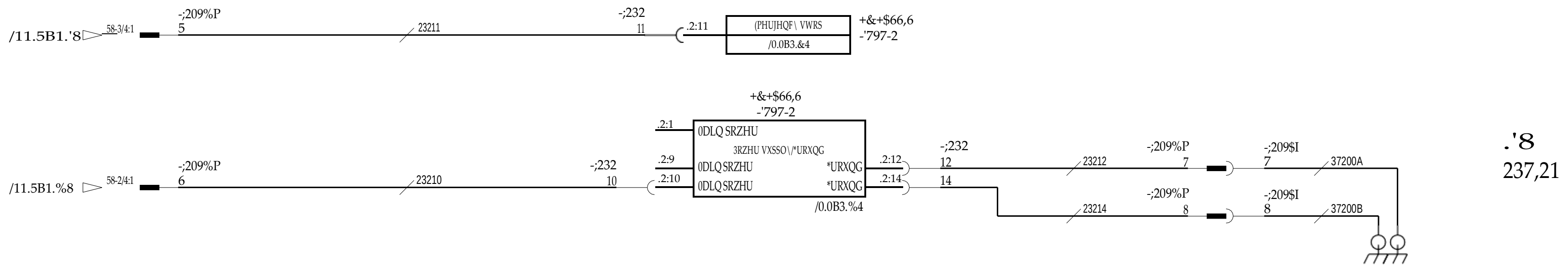

5HY	1U bQGULQJ		bQGULQJ QU	6LJQ	'DWXP		6LJQ	'DWXP/'DWH	+XYXGUL/8UMHFW QR		%HQlPQLQJ	3URGXNW/3URGXFW	%ODG/6KHHW
5HYLV 6T.	1R.	'HVLJQ FKDQJH	&KDQJH 1R.		'DWH	5LWDG/'UDZQ	7.%	050511	$50000.0600		.UHWV 6WU|P.'8237	'5)& 400-450	11.5B6/
	1	$GGHG 9.1B5 & 8.2B4 & ;059-2.	060600	7.%	060615	.RQWUROO/&KHFNHG				+,*US: 6	1DPH :LULQJ 3RZHU	5LWQLQJ/'UDZLQJ 1R. $50001.0100	6WlQYDQGH 05
		77LOON/$GGHG 88WJnU/'HOHWHG 99DU/:DV				*RGN/$SSU	7.%	050511	.ODVV/&ODVV				

Kalmar

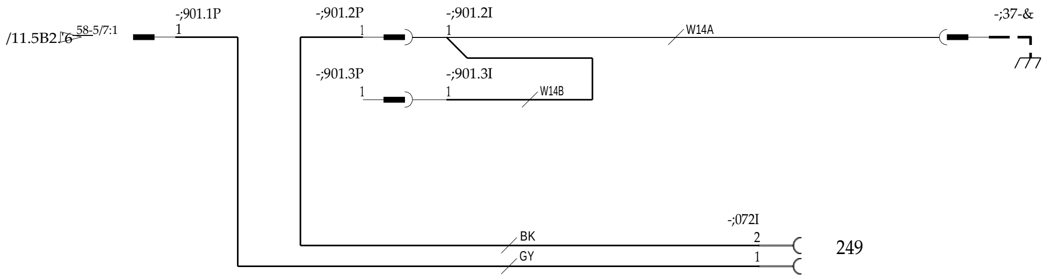

1U bQGULQJ	bQGULQJ QU	6LJQ.	'DWXP		
1R. 'HVLJQ FKDQJH	&KDQJH1R.		'DWH		
1 $GGHG 9.1B5 & 8.2B4 & ;059-2.	060600	7.%	060615		
77LOON/$GGHG 88WJnU/'HOHWHG 99DU/:DV					

	6LJQ.	'DWXP/'DWH	+\YXGQU./3URMHFW QR.
5LWDG/UDZQ	7.%	050511	$50000.0600
.RQWUO/HVLJQ			
*RGN/$SSU	7.%	050511	.0DVV/&0DVV

+.*US: 6

Kalmar

%HQPQLQJ: .UHWV 249

1DPH: :LULQJ 249

3URGXNW/3URGXFW: '5)& 400-450

5LWQLQJVQU / 'UDZLQJ 1R.: $50001.0100

%ODG/6KHHW: 11.5B7/

8WJnYD/,VVXH: 05

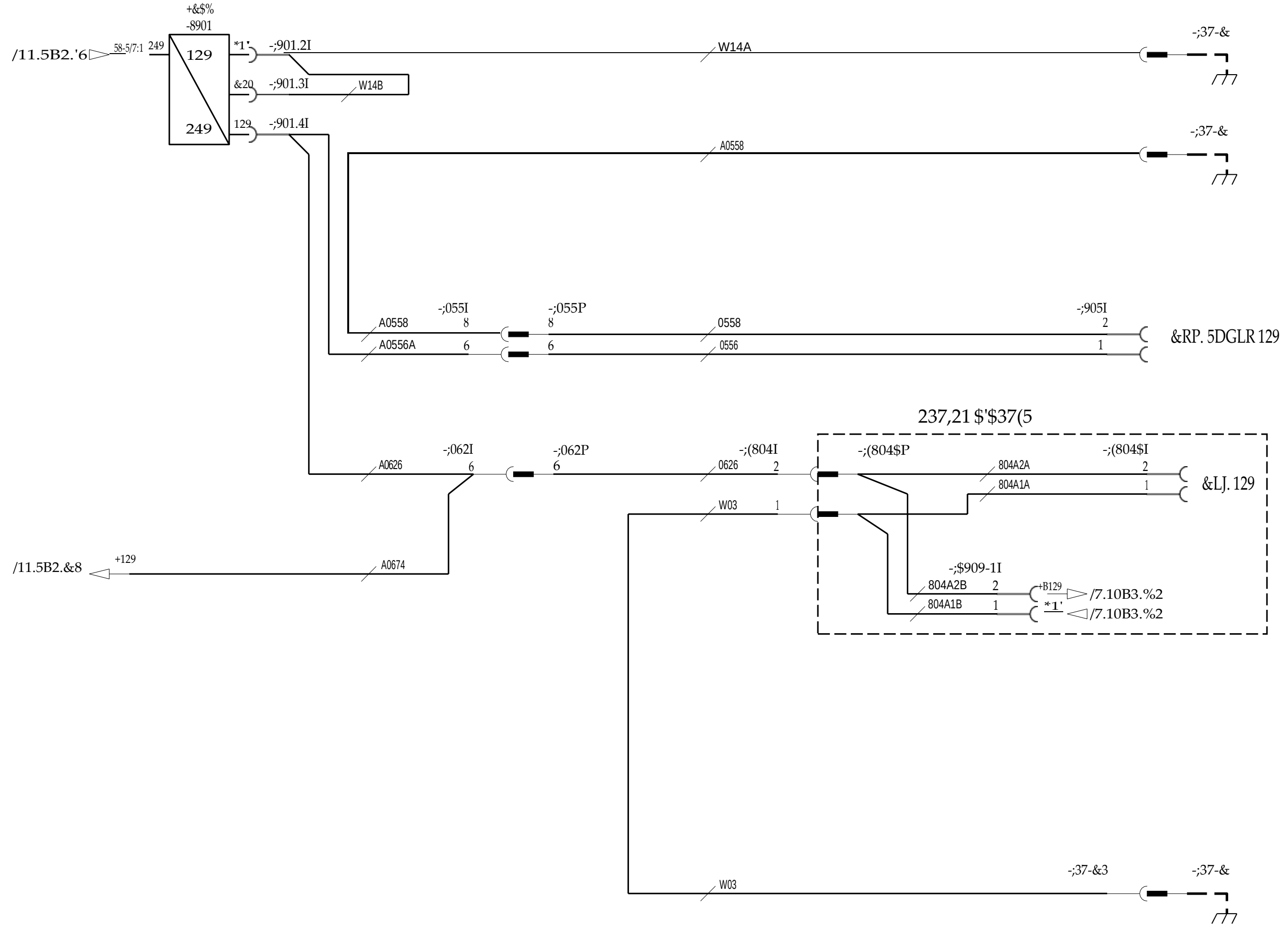

5HI.	1U bQGULQJ	bQGULQJ QU	6LJQ.	'DWXP		6LJQ.	'DWXP'DWH	+\YXGQU./6URMHFW QR.		%HQHQQXQJ	3URGXNW/3URGXFW	%ODGQXPPHU
5WD 6T.	1R. 'HVLJQ FKDQJH	&KDQJH 1R.		'DWH	5LWDG/UDZQ	7.%	050511	$50000.0600	+*US: 6	.UHWV 129 + .RP. 5DGLR	'5)& 400-450	11.5B8/
1	$GGHG 9.1B5 & 8.2B4 & ;059-2.	060600	7.%	060615	.RQVWU/HVLJQ					:LULQJ 129 + &RP. 5DGLR	$50001.0100	05
	77LOON/$GGHG 88WJnU/HOHWHG 99DU/:DV				*RGN/$SSU	7.%	050511	.DOVWL/&DOVWD				

Kalmar

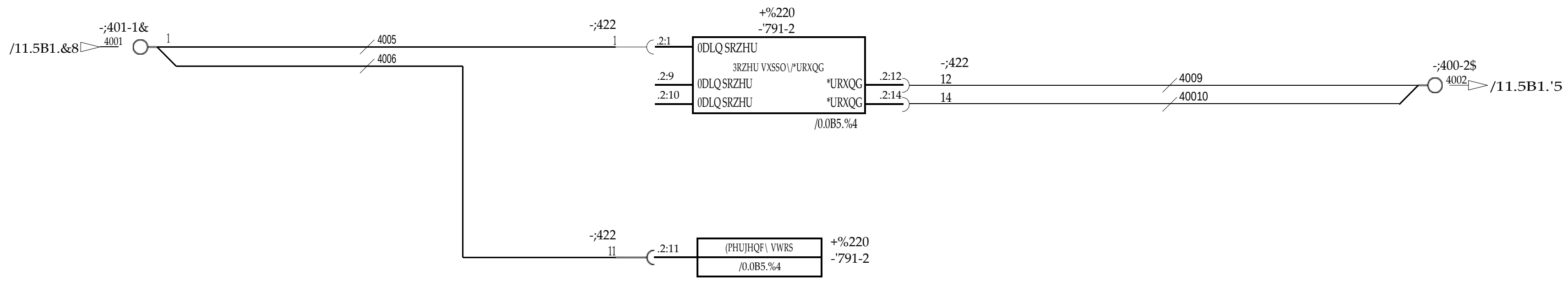

5HI.	1U bQGULQJ		bQGULQJ QU	6LJQ.	'DWXP	6LJQ.	'DWXP/'DWH	+\YXGQU./'URMHFW QR.		%HQlPQLQJ	3URGXNW/3URGXFW	%ODG/6KHHW
5HYD 6T.	1R.	'HVLJQ FKDQJH	&KDQJH 1R.		'DWH	5LWDG/'UDZQ 7.%	050511	$50000.0600		.UHWV 6WU|P $JJ	'5)& 400-450	11.5B9/
	1	$GGHG 9.1B5 & 8.2B4 & ;059-2.	060600	7.%	060615	.RQVWU/'HVLJQ			+.*US: 6	1DPH	5LWQLQJVQU./'UDZLQJ 1R.	6WjUYD/VVXH
		77LOON/$GGHG 88WjnU/'HOHWHG 99DU/:DV				*RGN/$SSU 7.%	050511	.ODVV/&ODVV		:LULQJ 3RZHU $WW	$50001.0100	05

Kalmar

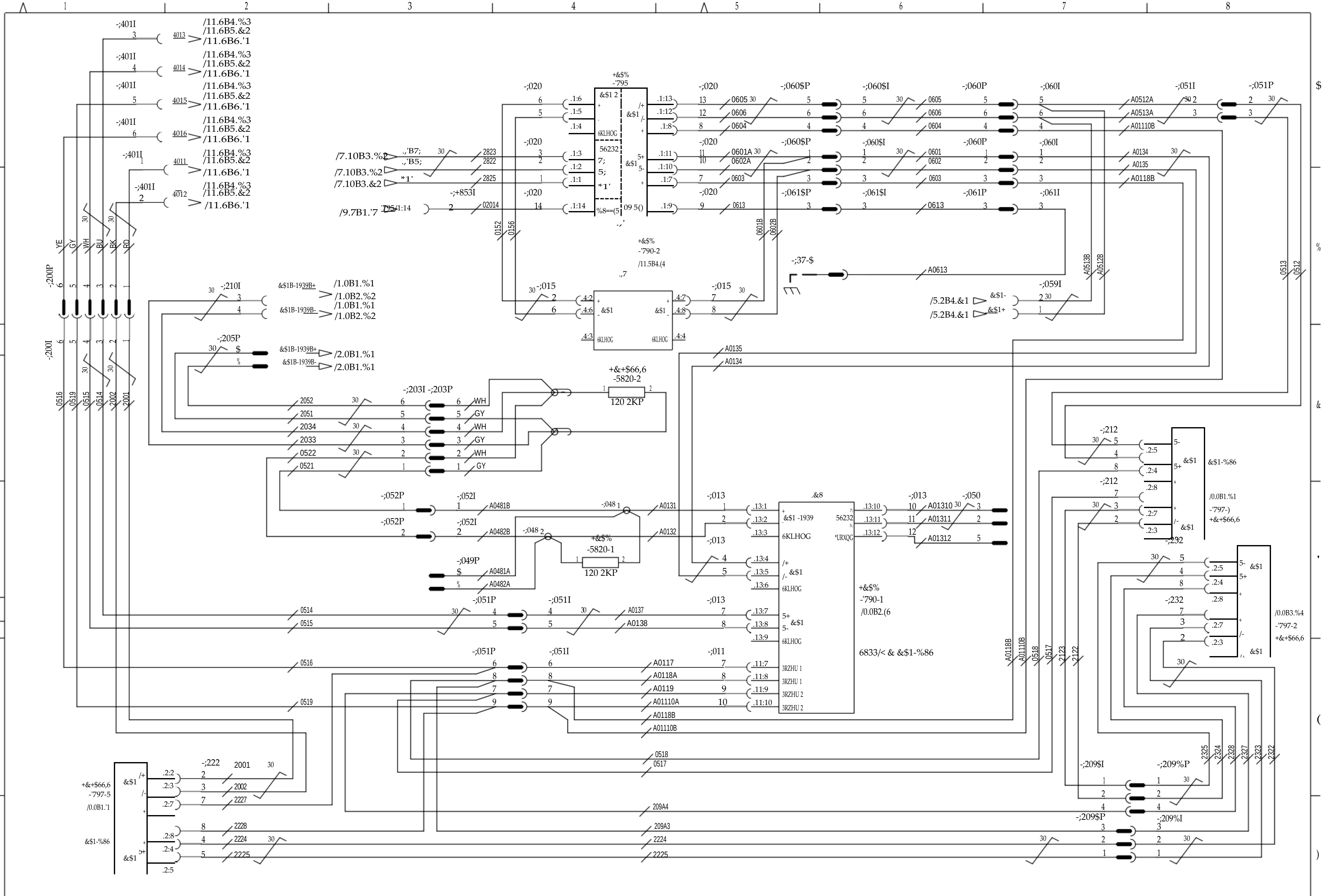

1U	'HVLJQ FKDQJH	&KDQJH1R.	6LJQ.	'DWH
1	$GGHG 9.1B5 & 8.2B4 & ;059-2.	060600	7.%	060615

77LOON/$GGHG 88WJnU/'HOHWHG 99DU/:DV

5LWDG/UDZQ	7.%	050511
*RGN/SSU	7.%	050511

$50000.0600

+,*US: 6

Kalmar

.UHWV &$1-%86 RSW. UDP .'8

:LULQJ &$1-%86 2SW. FKDVVLV .'8

'5)& 400-450

$50001.0100

11.6B3/

05

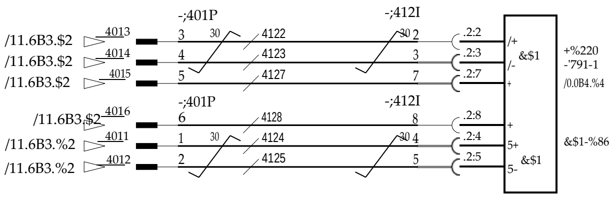

1R.	'HVLJQ FKDQJH	bQGULQJ QU &KDQJH1R.	6LJQ.	'DWXP 'DWH		
1	$GGHG 9.1B5 & 8.2B4 & ;059-2.	060600	7.%	060615		
	77LOON/$GGHG 88WJnU/'HOHWHG 99DU/:DV					

	6LJQ.	'DWXP/'DWH	+YYAGQU/,URMHFW QR.
5LWDG/UDZQ	7.%	050511	$50000.0600
.RQVWU/'HVLJQ			
*RGN/$SSU	7.%	050511	.DVV/&ODVV

+,*US: 6

Kalmar

.UHWV &$1-%86 $**

:LULQJ &$1-%86 $WW

'5)& 400-450

$50001.0100

11.6B4

05

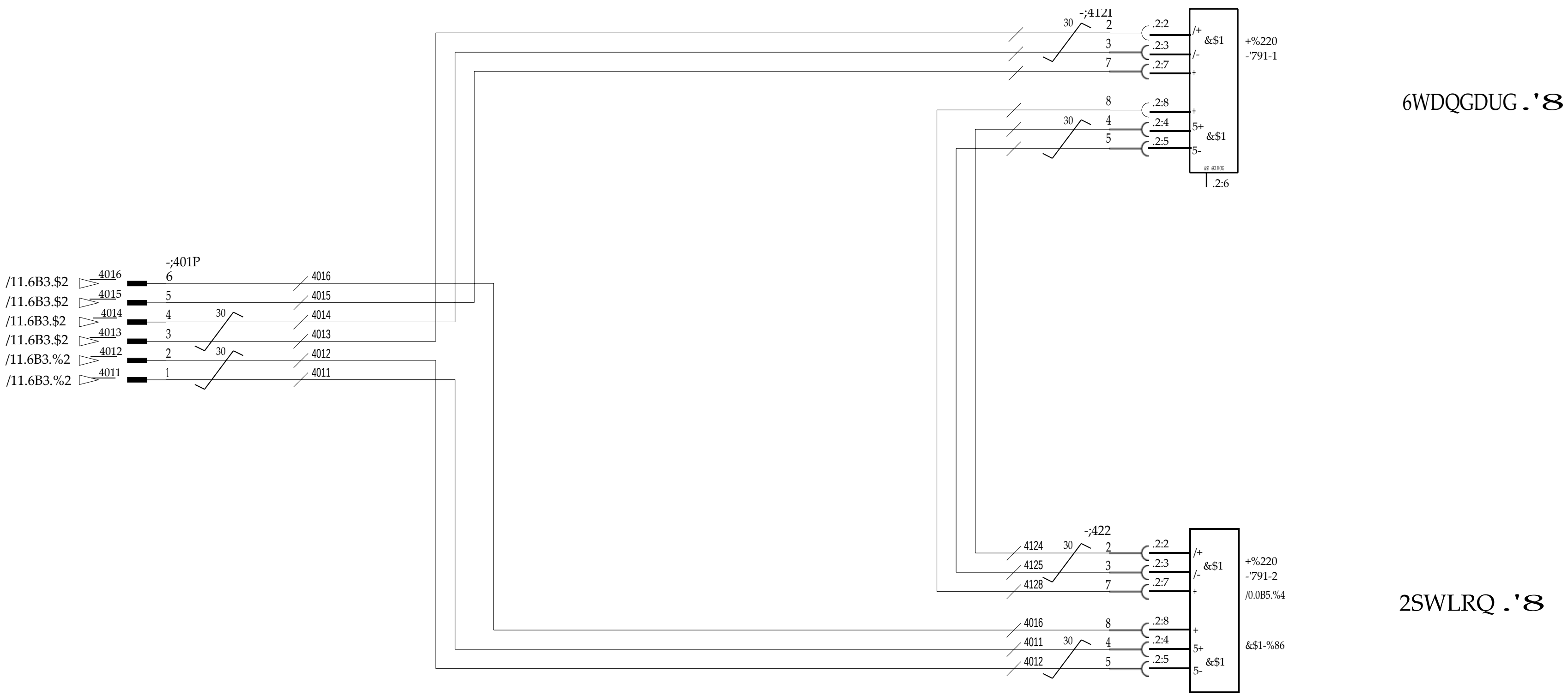

5HI.	1U bQGULQJ	bQGULQJ QU	6LJQ.	'DWXP		6LJQ.	'DWXP/'DWH	+XYXGQU./3URMHFW QR.	
1R.	'HVLJQ FKDQJH	&KDQJH1R.		'DWH	5LWDG/'UDZQ	7.%	050511	$50000.0600	
1	$GGHG 9.1B5 & 8.2B4 & ;059-2.	060600	7.%	060615	.RQVWU./'HVLJQ				+*US: 6
	77LOON/$GGHG 88WJnU/'HOHWHG 99DU/:DV				*RGN/$SSU	7.%	050511	.ODVV/&ODVV	

Kalmar

%HQIPQLQJ: .UHWV &$1-%86 $**

1DPH: :LULQJ &$1-%86 $WW

3URGXNW/3URGXFW: '5)& 400-450

5LWQLQJVQU./'UDZLQJ 1R.: $50001.0100

%ODG/6KHHW: 11.6B5/

6WJnYD/&RQWLQXH: 05

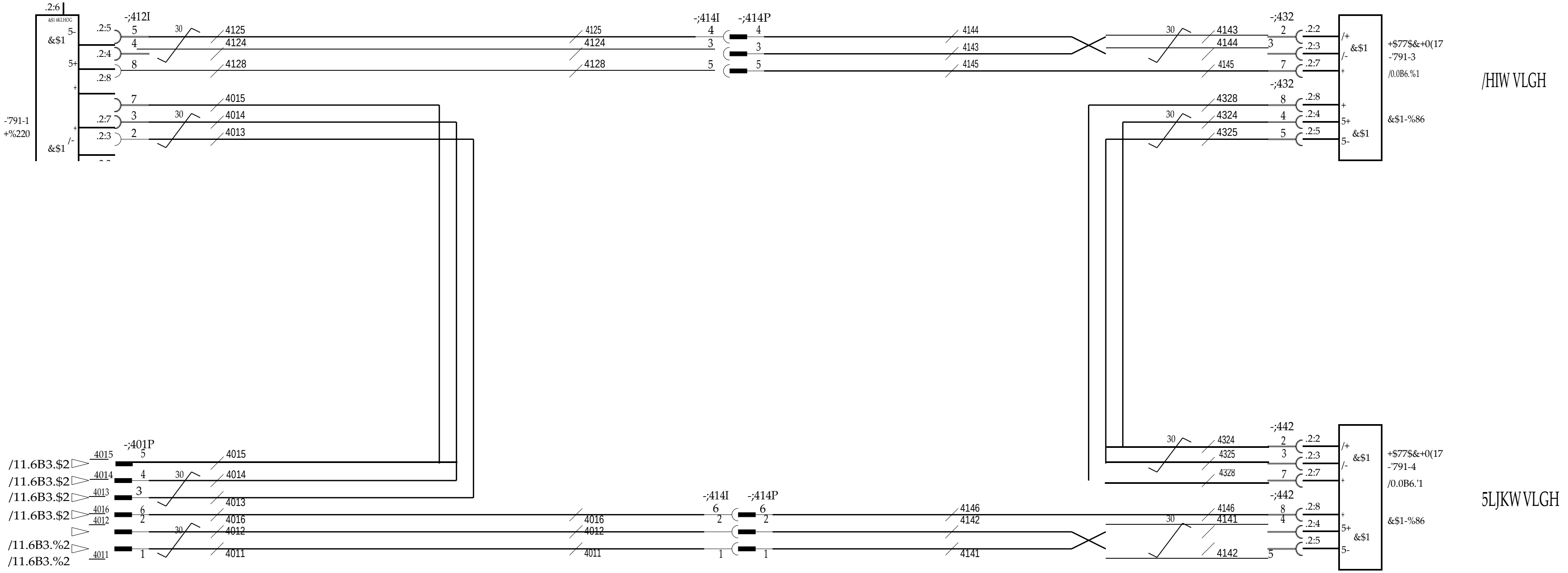

5HI.	1U bQGULQJ	bQGULQJ QU	bLJQ	'DWXP	5LWDG/'UDZQ	7.%	050511
6T.	1R. 'HVLJQ FKDQJH	&KDQJH 1R.		'DWH	.RQWU./FKHFNHG		
1	$GGHG 9.1B5 & 8.2B4 & ;059-2. 7 7LOON/$GGHG 8 8WJnU/'HOHWHG 9 9DU/:DV	060600	7.%	060615	*RGN/$SSU	7.%	050511

+*US: 6

Kalmar

%HQHPQLQJ: .UHWV &$1-%86 $**

1DPH: :LULQJ &$1-%86 $WW

'5)& 400-450

$50000.0600

$50001.0100

11.6B6

05

Komponentförteckning / List of Components

Number	Categ.	Svenska	English
30	G	Batteri	Battery
32	A	Kretskort elcentral	Printed circuit board, Junction box
37	X	Terminal stomanslutning	Earthing terminal on chassis
39	X	Terminal minusanslutning	Terminal, negative terminal
51	F	Säkringshållare 1-polig	Fuse holder, 1-pole
52	F	Säkringshållare 2-polig	Fuse holder, 2-pole
56	F	Säkringshållare 6-polig	Fuse holder, 6-pole
58	F	Säkringshållare 8-polig	Fuse holder, 8-pole
59	F	Säkringshållare 12-polig	Fuse holder, 12-pole
62	F	Batterihandske 2-polig	Battery connector, 2-pole
64	F	Batterihandske 4-polig	Battery connector, 4-pole
72	X	Stickuttag 2-polig	Outlet, 2-pole
77	X	Stickuttag 7-polig	Outlet, 7-pole
78	X	Stickuttag extra 7-polig	Outlet, extra, 7-pole
100	S	Strömställare ljus	Switch, light
101	S	Strömställare omk hel/halvljus	Switch, main/dipped beam
102	S	Strömställare dimljus	Switch, fog light
103	S	Strömställare fjärrljus	Switch, distance light
104	S	Strömställare lastljus	Switch, mast lights
105	S	Strömställare arbetsljus	Switch, working lights
106	S	Strömställare containerljus	Switch, container light
107	S	Strömställare park broms	Switch, parking brake
108	S	Strömställare centr smörjning	Switch, central lubricator
109	S	Strömställare varningsljus	Switch, hazard lights
110	S	Strömställare rot varningsljus	Switch, rotating hazard beacon
111	S	Strömställare fönsterhiss	Switch, window regulator
112	S	Strömställare kylanläggning (AC)	Switch, air conditioner (AC)
113	S	Strömställare styrning alt	Switch, alternative steering
114	S	Strömställare läsbelysning	Switch, reading light
115	S	Strömställare instr belysning	Switch, instrument illumination
116	S	Strömställare innerbelysning	Switch, interior lighting
117	S	Strömställare värme	Switch, heating
118	S	Strömställare fläktm värme	Switch, heater fan
119	S	Strömställare vindrutetorkare	Switch, wiper
120	S	Strömställare spolare	Switch, washer
121	S	Strömställare blackout	Switch, blackout
122	S	Strömställare nöd hydraulpump	Switch, emergency hydraulic pump
123	S	Strömställare backspegel	Switch, observation mirror
124	S	Strömställare kallstart	Switch, cold start
125	S	Strömställare avgasbroms	Switch, exhaust brake
126	S	Strömställare diff spärr/broms	Switch, diff. Block
127	S	Strömställare värmesystem diesel	Switch, heating system diesel
128	S	Strömställare kraftuttag sida	Switch, power take off side
129	S	Strömställare kraftuttag bak	Switch, power take off rear
130	S	Strömställare hög/lågväxel	Switch, high/low gear
131	S	Strömställare färdväljare fram	Switch, gear selector forward
132	S	Strömställare färdväljare bak	Switch, gear selector rear
135	S	Strömställare växelväljare	Switch, gear shift
136	S	Strömställare framhjuls styrning	Switch, forward wheel steering
137	S	Strömställare 4-hjuls styrning	Switch, 4-wheel steering
138	S	Strömställare crab styrning	Switch, crab steering

Number	Categ.	Svenska	English
139	S	Strömställare defroster	Switch, defroster
141	S	Strömställare Stegbelysning	Switch, Steplight
142	S	Strömställare fot	Switch, foot
143	S	Strömställare sitsvärme	Switch, seat heater
144	Q	Batterifrånskiljare	Battery disconnecting switch
145	S	Strömställare AT-regulator	Switch, AT-regulator
147	S	Strömställare körvisare	Switch, direction indicators
149	S	Strömställare signalhorn	Switch, horn
150	S	Strömställare startlås/ellas	Switch, main key switch
152	S	Strömställare intervalltorkare	Switch, intermittent wiper
156	S	Strömställare kupevärmare	Switch, cab heating
157	S	Strömställare stoltilt	Switch, seat tilt
158	S	Strömställare dimbakljus	Switch, rear fog light
159	S	Strömställare extra fram/back väljare	Switch, extra direction selector
160	S	Strömställare komb fram/back	Switch, combi-forward/reverse
161	S	Strömställare komb signal, ljus hel/halv spol,torkare m intervall körvisare	Switch, combi-horn, light main/dipped beam, washer, wiper (intermittent), direction indicator
162	S	Strömställare komb signal ljus hel/halv, spol, torkare m 2 int, fram/bacK	Switch, combi horn, light main/dipped beam, washer, wiper w 2int., forward/revers
163	S	Strömställare start på 2-an	Switch, start 2nd gear
165	S	Strömställare stolvärme	Switch, seat heater
166	S	Strömställare låsning vändskiva	Switch, interlocking of turntable
167	S	Strömställare luftfjädring	Switch, pneumatic springing
168	S	Strömställare låsn stol	Switch, interlocking of seat
169	S	Strömställare stolsvändning	Switch, reversible seat
170	S	Strömställare förångare (LPG)	Switch, evaporator (LPG)
171	S	Strömställare v-skiva upp/ner	Switch, fifth wheel up/down
172	S	Strömställare v-skiva fr/back	Switch, fifth wheel forward/reverse
173	S	Strömställare v-skiva skevning	Switch, fifth wheel, levelling
174	S	Strömställare,utskjut	Switch, projecting
175	S	Strömställare hyttlyft upp	Switch, cab hoist up
176	S	Strömställare hyttlyft ner	Switch, cab hoist down
177	S	Strömställare hyttskjutning	Switch, cab movement
178	S	Strömställare nollställning	Switch, reset
179	S	Strömställare Aut/man växling	Switch Aut/man gearshifting
180	S	Strömställare fyrhjulsdrift	Switch, 4-WD
190	S	Strömställare klimatanläggning	Switch, air conditioner
191	S	Strömställare recirkulation	Switch, re-circulation
192	S	Strömställare vattenavskiljare	
195	S	Strömställare joy-stick X	Switch, joy-stick X
196	S	Strömställare joy-stick X+Y	Switch, joy-stick X+Y
197	S	Strömställare längs/tvärskörning	Switch, length/sideways driwing
198	S	Strömställare flytläge skevning	Switch, equalizing fifth wheel
199	S	Strömställare option	Switch, option
200	S	Brytkontakt lampa park broms	Contact, breaking,warning lamp,parking brake
201	S	Brytkontakt lampa färdbroms	Contact, breaking, warning lamp, brake
202	S	Brytkontakt lampa oljetryck motor	Contact, breaking, warning lamp, oil pressure engine
204	S	Brytkontakt tryck ackumulator	Contact, breaking, pressure accumulatortank
205	S	Brytkontakt innerbelysning	Contact, breaking, interior lighting

Number	Categ.	Svenska	English
206	S	Brytkontakt handskfack belysning	Contact, breaking, glove
207	S	Slutkontakt diff spärr	Contact, making, diff. interlock
208	S	Slutkontakt lampa temperatur spolkrets bromsar	Contact, making, warning lamp temperature brake
214	S	Slutkontakt överväxel	Contact, making, over drive
215	S	Slutkontakt temp motor	Contact, making, temperature engine
216	S	Slutkontakt bromsljus	Contact, making, brake lights
217	S	Slutkontakt backljus	Contact, making, reversing light
218	S	Slutkontakt AT-regulator	Contact, making, AT-control
219	S	Slutkontakt lampa luftfilter	Contact, making, indicating light air filter
220	S	Brytkontakt drivning	Contact, breaking, drive cut off
221	S	Slutkontakt temp växellåda	Contact, making, temperature gear box
222	S	Slutkontakt lampa temp moment - förstärkare	Contact, making, warning lamp temperature torque amplifier.
223	S	Släpkontakt signal	Contact, brush, horn
224	S	Slutkontakt insprutningspump	Contact, making, injection pump
225	S	Brytkontakt säkerhetsbälte	Contact, breaking, seat belt
228	S	Slutkontakt hyttlåsning	Contact, making, cab locking
229	S	Slutkontakt stolslåsning	Contact, making, seat locking
230	S	Brytkontakt stol	Contact, breaking, seat
231	S	Slutkontakt fotkontroll stolvändning	Contact, making, seat rotation, foot switch
232	S	Brytkontakt lampa luftanslutning släp	Contact, breaking, warning lamp air connection
233	S	Slutkontakt lampa låsning vändskiva	Contact, warning, interlocking of turntable
235	S	Slutkontakt sidoskjutning stol	Contact, making, side shifting of seat
236	S	Slutkontakt vattennivå	Contact, water level
239	S	Brytkontakt termisk	Contact, breaking, thermic
240	S	Slutkontakt termisk	Contact, making, thermic
241	S	Brytkontakt lampa luftmatning släp	Contact, breaking, warning lamp air supply to trailer
242	S	Slutkontakt lampa oljetryck v-låda	Contact, making, warning lamp, oil pressure gear box
243	S	Brytkontakt tryck kylmedia AC	Contact, breaking, coolant pressure (air condition)
244	S	Slutkontakt hydraulik aktiverad	Contact, making, hydraulics
245	S	Slutkontakt hydraultryck styrning	Contact, making, hydraulic pressure control
246	S	Slutkontakt tryck kylmedia	Contact, pressure refrigerant
250	S	Manöverbrytare	Operating Switch
251	S	Slutkontakt vändbar förarstol	Contact, making, VBFS
260	S	Slutkontakt lyft steg 1	Contact, making, hoist step 1
261	S	Slutkontakt lyft steg 2	Contact, making, hoist step 2
262	S	Slutkontakt tilt	Contact, making, tilting
263	S	Slutkontakt gaffelspridning	Contact, making, fork positioning
264	S	Slutkontakt sidoföring	Contact, making, sideshift
265	S	Slutkontakt stativ in/ut	Contact, making, lifting mast in-out
266	S	Brytkontakt hyttdörr	Contact, breaking cab door
267	S	Slutkontakt bromstryck	Contact, making, brake pressure
268	S	Slutkontakt kompressor	Contact, making, Compressor
269	S	Slutkontakt sax inne	Contact, making extender in
270	S	Slutkontakt överlastskydd	Contact, making, overload protection
299	S	Slut/brytkontakt option	Contact, making/braking option
300	K	Relä hel/halvljus	Relay, main/dipped beam

Number	Categ.	Svenska	English
301	K	Relä dimljus	Relay, fog light
302	K	Relä fjärrljus	Relay, distance light
303	K	Relä lastljus	Relay, mast light
304	K	Relä arbetsljus	Relay, working light
305	K	Relä backljus	Relay, reversing light
306	K	Relä helljus	Relay, main beam
307	K	Relä halvljus	Relay, dipped beam
308	K	Relä bromsljus	Relay, brake light
309	K	Relä parkeringsbroms	Relay, parking light
310	K	Relä körvisare vä	Relay, direction indicator left
311	K	Relä körvisare hö	Relay, direction indicator right
312	K	Relä startelement	Relay,element preheater
313	K	Relä vändbar förarstol	Relay, rotating driver´s seat (VBFS)
314	K	Relä parkeringsbroms	Relay, parking brake
315	K	Relä tändningslås	Relay, ignition key
316	K	Relä torkare	Relay, wiper
317	K	Relä strålkastartorkare	Relay, roading lights wiper
318	K	Relä AT-regulator	Relay, AT-regulator
319	K	Relä varningsblinkers	Relay, hazard blinkers
320	K	Relä elektrisk stopp	Relay, electical stop
321	K	Relä intervalltorkare	Relay, intermittent wiper
322	K	Relä kylvätskenivå	Relay, coolant level
323	K	Relä blinkers	Relay, blinkers
324	K	Relä rangespärr	Relay, range interlock
325	K	Relä blinkande bromsljus (back)	Relay, flashing brake lights (reversing)
326	K	Relä blinkande bromsljus (runt)	Relay, flashing hazard brake lights
327	K	Relä växel neutral	Relay, gear neutral
328	K	Relä växelskifte	Relay, gear shift
329	K	Relä växel hög/låg	Relay, high/low gear
330	K	Relä startspärr	Relay, start interlock
331	K	Relä drivning fram	Relay, forward driving
332	K	Relä drivning bak	Relay, reversing driving
333	K	Tidrelä förvärmning	Time relay, automatically preheating
334	K	Relä frikoppling/drivbrytning	Relay, free wheel/drive disconnection
335	K	Relä växelventil 1:a (diesel, gas)	Relay, gear change valve 1-gear (diesel,LPG)
336	K	Relä växelventil 2:a (diesel, gas)	Relay, gear change valve 2-gear (diesel,LPG)
337	K	Relä drivriktning motor	Relay, motor drive direction
338	K	Relä kylfläkt drivmotor	Relay, cooling fan drive motor
339	K	Relä kylfläkt elskåp	Relay, cooling fan electrical box
340	K	Tidrelä fördröjt tillslag	Time relay, start delay
341	K	Tidrelä fördröjt frånslag	Time relay, stop delay
342	K	Relä drivning 2/4 hjul	Relay, switching 2/4 WD
343	K	Relä dimbakljus	Relay, fog light rear
344	K	Relä momentförstärkare	Relay, torque amplifier
345	K	Relä låsning vändskiva	Relay, interlocking of turntable
346	K	Relä frikoppling stollåsning	Relay, releasing of seat interlocking
347	K	Relä stolvändning/ljussignal	Relay, multifunction, seat rotation/light signal
348	K	Relä fläktmotor värmare	Relay, fan heating
349	K	Relä fartreglage	Relay, speed control
350	K	Relä pumpkontaktor/pumpkontroll	Relay, pump contactor/pump control
351	K	Relä hyttlyft upp	Relay, cab hoist up

Number	Categ.	Svenska	English
352	K	Relä hyttlyft ner	Relay, cab hoist down
353	K	Relä säkerhetsslinga	Relay, safety loop
354	K	Relä styrsystem	Relay, signal control system
355	K	Relä sensorstyrning	Relay, sensor control
356	K	Skiftrelä längskörning/tvärskörning	Shift relay, length/sideways driving
357	K	Relä roterande varningsljus	Relay, hazard beacon
358	K	Relä komressor luft	Relay, compressor air
359	K	Relä Hydrauloljekylare	Relay hydraulic oil cooler
360	K	Relä startsolenoid	Relay, starting solenoid
361	K	Relä kompressor AC	Relay, compressor air conditione
362	K	Relä vattenventil AC	Relay, water valve air conditioner
363	K	Relä kondensor AC	Relay, condenser air conditione
364	K	Relä stolsbrytare	Relay seat switch
365	K	Relä fönsterhiss upp	Relay, electrical screen elevator up
366	K	Relä fönsterhiss ner	Relay, electrical screen elevator down
367	K	Relä styrning	Relay, steerin
368	K	Relä lågt bromstryck	Relay, low brake pressure
369	K	Relä centralsmörjning	Relay, central lubrication
370	K	Relä centralsmörjning, aggregat	Relay, central lubrication, attatchment
371	K	Relä lyfthöjd	Relay, liftheight
372	K	Relä blinkande varn.ljus, höjdbegränsn.	Relay, flashing beacon, lifting height limiter
373	K	Relä bakljus	Relay light
375	K	Huvudkontaktor reglersystem	Main contactor, operating control
376	K	Kontaktor fram reglersystem	Contactor, forward operating control
377	K	Kontaktor bak reglersystem	Contactor, reversing operating control
378	K	Kontaktor by-pass reglersystem/Fältförsvagning	Contactor, ¿by-pass¿ operating control/ Field weakening
379	K	Kontaktor pumpmotor	Contactor, pump motor
380	K	Kontaktor	Contactor
381	K	Kontaktor återladdning	Contactor, recharging
382	K	Relä, förbikoppling säkerhetssystem	Relay, by-pass safety system
383	K	Relä, Stolsvärme	Relay, heated seat
384	K	Relä vattenseparator	Relay, waterseparator
385	K	Relä bränslepump insprutning	Relay, fuel injection pump
386	K	Relä, hög motortemperatur.	Relay, high motor temperature
387	K	Relä alternativ gaspedal	Relay alternative throttle pedal
388	K	Relä, Extra färdriktningsväljare	Relay, Extra direction selector
389	K	Relä, Pausvärme	Relay, Paus heat
399	K	Relä option	Relay, option
400	E	G-lampa vä fram	Light bulb, roading light left hand front
400	E	G-lampa hö fram	Light bulb, roading light right hand rear
401	E	G-lampa vä bak	Light bulb, roading light left hand front
401	E	G-lampa hö bak	Light bulb, roading light right hand rear
402	E	G-lampa fjärrljus	Light bulb, distance light
403	E	G-lampa lastljus	Light bulb, mast light
404	E	G-lampa arbetsljus	Light bulb, working light
405	E	G-lampa backljus	Light bulb, rear light
406	E	G-lampa cont belysning vänster	Container light left-hand
406	E	G-lampa cont belysning höger	Container light right-hand
408	E	G-lampa park ljus vä fram	Light bulb, parking light, left-hand forward
408	E	G-lampa park ljus hö fram	Light bulb, parking light, right-hand forward
410	H	G-lampa broms ljus vä fram	Light bulb, brake light, left-hand forward

Number	Categ.	Svenska	English
410	H	G-lampa broms ljus hö fram	Light bulb, brake light, right-hand forward
411	H	G-lampa broms ljus vä bak	Light bulb, brake light, left-hand rear
411	H	G-lampa broms ljus hö bak	Light bulb, brake light, right-hand rear
412	H	G-lampa bak ljus vä bak	Light bulb, rear light, left-hand rear
412	H	G-lampa bak ljus hö bak	Light bulb, rear light right-hand rear
413	H	G-lampa bak ljus vä fram (VBFS)	Light bulb, rear light, left-hand forward (VBFS)
413	H	G-lampa bak ljus hö fram (VBFS)	Light bulb, rear light,right-hand forward (VBFS)
416	H	G-lampa sidomarkering vä fram	Light bulb, side position light, left-hand forward
416	H	G-lampa sidomarkering vä bak	Light bulb, side position light, left-hand rear
417	H	G-lampa sidomarkering hö fram	Light bulb, side position light, right -hand forward
417	H	G-lampa sidomarkering hö bak	Light bulb, side position light, right-hand rear
420	H	G-lampa positionsljus vänster	Light bulb, position light, left-hand
421	H	G-lampa positionsljus höger	Light bulb, position light, right-hand
422	H	G-lampa körvisare vä fram	Light bulb, direction indicator left-hand forward
423	H	G-lampa körvisare hö fram	Light bulb, direction indicator right-hand forwrd
426	H	G-lampa körvisare vä bak	Light bulb, direction indicator left-hand rear
427	H	G-lampa körvisare hö bak	Light bulb, direction indicator right-hand rear
428	H	G-lampa roterande varningsljus	Light bulb, flashing beacon lamp
429	E	G-lampa cigarettändare belysning	Light bulb, cigarett lighter illumination
431	E	G-lampa instrument belysning	Light bulb, instrument illumination
432	E	G-lampa handsfack belysning	Light bulb, glove pocket light
433	E	G-lampa instegs belysning	Light bulb, step-in lighting
434	E	G-lampa innerbelysning	Light bulb, interior lighting
435	E	G-lampa låsbelysning	Light bulb, reading lighting
436	E	G-lampa identifikationsljus	Light bulb, identification light
437	E	G-lampa identifikationsljus/takskylt	Light bulb, identification light/roof sign
438	E	G-lampa motorrumsbelysning	Light bulb, engine compartment light
439	E	Nummerskyltsbelysning	Light license plate
440	E	G-lampa värmereglage belysning	Light bulb, heating control light
445	H	G-lampa körvisare vä (extra)	Light bulb, extra direction indicator left
446	H	G-lampa körvisare hö (extra)	Light bulb, extra direction indicator right
451	H	G-lampa dimbakljus vänster	Light bulb, fog light rear left
452	H	G-lampa dimbakljus höger	Light bulb, fog light rear right
453	H	G-lampa bromsljus/körvisare vänster	Light bulb, brake light/dir. indicator left-hand
453	H	G-lampa bromsljus/körvisare höger	Light bulb, brake light/dir. indicator right-hand
454	H	G-lampa bromsljus blackout vänster	Light bulb, brake light blackout left-hand
454	H	G-lampa bromsljus blackout höger	Light bulb, brake light blackout right-hand
456	E	G-lampa backljus blackout IR vänster	Light bulb, rear light blackout IR left-hand
456	E	G-lampa backljus blackout IR höger	Light bulb, rear light blackout IR right-hand
457	H	G-lampa positionsljus blackout vänster	Light bulb, position light blackout left-hand

Number	Categ.	Svenska	English
457	H	G-lampa positionsljus blackout höger	Light bulb, position light blackout right-hand
458	E	G-lampa fram blackout vänster	Light bulb, roading light blackout left-hand
458	E	G-lampa fram blackout höger	Light bulb, roading light blackout right-hand
459	E	G-lampa fram blackout IR vänster	Light bulb, roading light blackout IR left-hand
459	E	G-lampa fram blackout IR höger	Light bulb, roading light blackout IR right-hand
460	E	G-lampa arb.belysning hytt blackout IR vä	Light bulb, working light cab blackout IR left
460	E	G-lampa arb.belysning hytt blackout IR hö	Light bulb, working light cab blackout IR right
461	E	G-lampa arb.bel. bom 20' blackout IR vä	Light bulb, working light boom20' b.out IR left
461	E	G-lampa arb.bel. bom 20' blackout IR hö	Light bulb, working light boom20' b.out IR right
462	E	G-lampa arb.bel. bom 40' blackout IR vä	Light bulb, working light boom40' b.out IR left
462	E	G-lampa arb.bel. bom 40' blackout IR hö	Light bulb, working light boom40' b.out IR right
463	H	G-lampa bak ljus vänster bak, blackout	Light bulb, rear light left-hand rear, blackout
463	H	G-lampa bak ljus höger bak, blackout	Light bulb, rear light right-hand rear, blackout
464	E	G-lampa cont belysning IR vänster	Light bulb,Container light IR left-hand
464	E	G-lampa cont belysning IR höger	Light bulb,Container light IR right-hand
465	H	G-lampa röd saxagregat ute	Light-bulb, red extender exended
466	H	G-lampa orange vertikalhålning på	Light bulb, orange vertical hold on
467	H	G-lampa grön klämtryck OK	Light bulb, green clamp pressure OK
468		G-Lampa Röd Maxlast	Light bulb,Red Overload
500	H	Kont lampa körvisare	Indicating lamp, direction indicator
501	H	Kont lampa körvisare (extra)	Indicating lamp, direction indicator extra
503	H	Varn lampa oljetryck motor	Warning lamp, oil pressure engine
504	H	Kont lampa helljus	Indicating lamp, main beam
505	H	Varn lampa laddning	Warning lamp, loading
506	H	Varn lampa laddning (extra)	Warning lamp, loading extra
507	H	Varn lampa färdbroms	Warning lamp, brake
508	H	Varn lampa parkerings broms	Warning lamp, parking brake
509	H	Varn lampa nivå kylvatten	Warning lamp, coolant level
510	H	Kont lampa diff spärr	Indicating lamp, diff. interlock
512	H	Varn lampa temp momentförst	Warning lamp, temperature converter
514	H	Kont lampa överväxel	Indicating lamp, overdrive clutch
519	H	Kont lampa halvljus	Indicating lamp, dipped lights
524	H	Kont lampa luftfilter	Indicating lamp, air filter
525	H	Kont lampa UNIKAT	Indicating lamp, UNIKAT
528	H	Kont lampa förvärmning	Indicating lamp, preheating
530	H	Kont lampa framhjuls styrning	Indicating lamp, forward wheel steering
531	H	Kont lampa 4-hjuls styrning	Indicating lamp, 4-wheel steering
532	H	Kont lampa crab styrning	Indicating lamp, crab steering
533	H	Kont lampa hyd.pump	Indicating lamp, emergency hyd. pump
547	H	Varn lampa centralvarning	Warning lamp, central warning
549	H	Varn lampa oljetryck v-låda	Warning lamp, oil pressure gear box
550	H	Varn lampa hyttlåsning	Warning lamp, cab lock

Number	Categ.	Svenska	English
551	H	Varn lampa temp v-låda	Warning lamp, temperature gear box
552	H	Varn lampa bromstryck	Warning lamp, brake pressure
554	H	Varn lampa temp spolkrets bromsar	Warning lamp, temp. cooling system brakes
555	H	Varn lampa temp kylvatten mot	Warning lamp, temperature coolant engine
556	H	Varn lampa låsning vändskiva	Warning lamp, interlocking of turntable
560	H	Varn lampa temp drivmotor el	Warning lamp, temperature, drive motor
561	H	Varn lampa temp pumpmotor el	Warning lamp, temperature, pump motor
562	H	Varn lampa öppen twistlock	Warning lamp, unlocked twist lock
563	H	Varn lampa låst twistlock	Warning lamp, locked twist lock
564	H	Varn lampa anliggning	Warning lamp, alignement
565	H	Varn lampa temp motor el	Warning lamp ,temperature motor
569	H	Kont lampa elvärme	Indicating lamp, electric heater
569	H	Kont lampa elvärme	Indicating lamp, electric heater
570	H	Varn lampa överkoppling säkerhetssystem	Warning lamp, by-pass safety system
571	H	Kont lampa bränslenivå	Indicating lamp, fuel level
572	H	Varningslampa lyfthöjd	Warning lamp lifting height
573	H	Kontroll lampa motor information	Indicator lamp engine information
574	H	Kontroll lampa stödben nere	Indicator lamp support jacks down
575	H	Kontroll lampa stödben ur arb.läge	Indicator lamp support jacks out of working pos
576	H	Kontroll lampa anliggning främre ben	Indicator lamp, alignment front legs
577	H	Kontroll lampa anliggning bakre ben	Indicator lamp, alignment rear legs
578	H	Kontroll lampa klämläge främre ben	Indicator lamp, clamp position front legs
579	H	Kontroll lampa klämläge bakre ben	Indicator lamp, clamp position rear legs
580	H	Kontroll lampa främre ben uppe	Indicator lamp, front legs upper position
581	H	Kontroll lampa främre ben nere	Indicator lamp, front legs lower position
582	H	Varningslampa överlast	Warning lamp overload
583	H	Kontroll lampa anliggning ett ben	Indicator lamp, alignment one leg
584	H	Kontroll lampa anliggning alla ben	Indicator lamp, alignment all legs
599	H	Kont lampa option	Indicating lamp, option
600	Y	M-ventil avgasbroms	Solenoid valve, exhaust brake
601	Y	M-ventil diff spärr	Solenoid valve, diff. interlock
602	Y	M-ventil broms	Solenoid valve, brake
603	Y	M-ventil värme	Solenoid valve, heater
604	Y	M-ventil kraftuttag sida	Solenoid valve, power take off, side
605	Y	M-ventil kraftuttag bak	Solenoid valve, power take off, rear
606	Y	M-ventil 2/4 hjulsdrift	Solenoid valve, 2/4WD
607	Y	M-ventil hög/låg växel	Solenoid valve, high/low gear
608	M	Pumpaggregat hyttlyft	Pump unit, cab hoist
609	M	Ställmotor gaspådrag	Regulating motor, throttle
610	Y	M-ventil hydraulsystem allm	Solenoid valve, hydraulics, general
611	Y	M-ventil flödesbegränsning	Solenoid valve, flow restriction
612	M	Ställmotor recirkulation	Regulating motor, re-circulation
613	Y	M-ventil momentförstärkare	Solenoid valve, torque amplifier
614	Y	M-ventil rangespärr	Solenoid valve, ranging interlock
615	Y	M-ventil hjulvridning	Solenoid valve, wheel turning
616	Y	M-ventil kallstart	Solenoid valve, cold start aid
617	Y	M-ventil AT-regulator by-pass	Solenoid valve, AT-regulator ¿by-pass¿
618	Y	M-ventil vatten klimatanläggning	Solenoid valve, water air conditioner
620	Y	M-ventil vändskiva upp	Solenoid valve, fifth wheel up
621	Y	M-ventil vändskiva ner	Solenoid valve, fifth wheel down

Number	Categ.	Svenska	English
622	Y	M-ventil vändskiva fram	Solenoid valve, fifth wheel forward
623	Y	M-ventil vändskiva bak	Solenoid valve, fifth wheel rear
624	Y	M-ventil skevning hö	Solenoid valve, levelling right hand
625	Y	M-ventil skevning vä	Solenoid valve, levelling left hand
626	Y	M-ventil AT-regulator	Solenoid valve, AT-regulator
627	Y	M-ventil vakuum	Solenoid valve vacuum
628	Y	M-ventil bränsleblandning	Solenoid valve fuelmixture
630	Y	M-ventil v-låda fram	Solenoid valve, gear box, forward gear
631	Y	M-ventil v-låda back	Solenoid valve, gear box, rear gear
632	Y	M-ventil v-låda spole 1	Solenoid valve, gear box, 1 gear
633	Y	M-ventil v-låda spole 2	Solenoid valve, gear box, 2 gear
634	Y	M-ventil v-låda spole 3	Solenoid valve, gear box, 3 gear
635	Y	M-ventil klämtryck	Solenoid valve, clamping pressure
636	Y	M-ventil styrning	Solenoid valve, steering
637	Y	M-ventil flytläge skevning	Solenoid valve, equalizing fifth wheel
638	Y	M-ventil stopp insprut pump	Solenoid valve, stop injection pump
639	Y	M-ventil låsning orbitrol ls	Solenoid valve, locking LS orbitrol
640	Y	M-ventil gasol	Solenoid valve, LPG
641	Y	M-ventil förångare (LPG)	Solenoid valve, evaporator (LPG)
642	Y	M-ventil park broms	Solenoid valve, parking brake
643	Y	M-ventil låsning stol (VBFS)	Solenoid valve, seat locking (VBFS)
644	Y	M-ventil låsning vändskiva	Solenoid valve, fifth wheel locking
645	Y	Magnetkoppling komp AC	Magnetic clutch, compressor AC
646	Y	M-ventil stolsvändning	Solenoid valve, seat rotation
647	Y	M-ventil stolstilt	Solenoid valve, seat tilt
648	Y	M-ventil luftfjädring	Solenoid valve, pneumatic springing
649	B	Termostat klimatannläggning	Thermostat, air condition
650	M	Torkarmotor fram	
650	M	Torkarmotor fram	
650	M	Torkarmotor fram	
650	M	Torkarmotor fram	
651	M	Vindrutespolarmotor	Washer motor
652	M	Strålkastarmotor	Light motor
653	M	Strålkastarspolarmotor	Light washer motor
654	M	Startmotor	Starter motor
655	M	Kylfläkt drivmotor (EC)	Cooling fan, main motor (EC)
656	M	Kylfläkt elskåp (EC)	Cooling fan, electrical box (EC)
657	M	Fläktmotor värme	Heating fan
658	G	Generator (extra)	Alternator extra
659	G	Generator utan laddregulator	Alternator without loading regulator
660	G	Generator med laddregulator	Alternator with loading regulator
661	M	Fönsterhissmotor	Screenelevator motor
662	G	Laddregulator	Loading regulator
663	M	Doseringspump klimatanläggning	Dosage pump, air condition
664	M	Cirk pump klimatanläggning	Circulating pump, air condition
665	V	Diod	Diode
666	M	Fläktmotor cirkulation	Circulation fan
667	M	Cirkulationspump värmesystem	Circulation pump heating system
668	M	Kylfläkt hydraulolja	Cooling fan, hydraulic oil
669	E	Värmare kupe/ motor diesel	Heater compartment/engine diesel
670	M	Kompressor	Compressor
671	M	Doseringspump diesel	Dosage pump diesel
672	M	Spjäll motor, ECC	Draught valve motor, ECC
673	Y	Vatten ventil motor, ECC	Water valve motor, ECC

Number	Categ.	Svenska	English
674	M	Kylfläkt bromsolja	Cooling fan, brake fluid
675	M	Motor, Stolsvändning	Motor, Seat rotation
676	Y	Solenoid Broms stolsvändning	Solenoid brake , seat rotation
685	A	Reglerenhet termostat AC	Control unit, termostat AC
690	B	Fartreglage (EC)	Speed control (EC)
693	M	Pump centralsmörjning	Pump, central lubrication
694	M	Styrmotor	Steering motor
695	M	Drivmotor (EC)	Drive motor (EC)
696	M	Pumpaggregate nödstyrning	Pump, emergency steering
697	B	Elbroms	Electric brake
698	M	Pumpmotor (EC)	Pump motor (EC)
699	Y	M-ventil option	Solenoid valve, option
700	P	Hastighetsmätare	Speedometer
701	P	Mätare oljetemp v-låda	Gear box oil temperature gauge
702	P	Klocka	Clock
703	P	Varvtalsmätare	Engine rev meter
704	P	Tryckluftsmätare	Air pressure gauge
705	P	Mätare oljetryck v-låda	Gear box oil pressure gauge
706	P	Termometer temp kylvätska motor	Temperature gauge, engine coolant
707	P	Bränslemätare	Fuel gauge
708	P	Timräknare	Hour meter
709	P	Kapacitetsmätare batteri	Capacity gauge, battery
710	P	Tidur motor/kupevärmare	Timer, engine- and cab heater
711	P	Räknare, impuls	Counter, impulse
712	P	Mätare oljetryck motor	Motor oil pressure gauge
714	P	Mätare, temp. Hydraulolja	Hydraulic fluidtemperature, guage
715	P	Extra instrument allm	Extra instrument, general
720	S	Givare vändbar förarstol	Transmitter, revolving driver´s seat (VBFS)
740	D	FleetManager kontrollenhet	FleetManager control unit
741	U	FleetManager batterifilter	FleetManager battery filter
742	D	FleetManager kortläsare	FleetManager card device
743	D	FleetManager accelerations givare	FleetManager acceleration sensor
751	B	Givare varvtal turbin	Transmitter, speed turbin
752	B	Givare varvtal inre växellåda	Transmitter, speed internal gear chain
753	B	Varvtalsgivare motor	Transmitter, engine revolution
754	B	Givare lufttryck	Transmitter, air pressure
755	B	Givare hydraulfilter indikering	Transmitter, hydraulics filter indication
756	B	Temperatur kylvätska motor	Transmitter, engine coolant temperature
757	B	Bränslenivågivare	Transmitter, fuel level
758	B	Varvtalsgivare v-låda	Transmitter, gear box revolution
759	B	Nivåindikator kylvätska	Transmitter, coolant level
760	B	Givare rev-spärr/aut-vxl trans	Transmitter, reversing interlock / automatic gear change system (on gearbox output shaft)
761	B	Givare rev-spärr/aut-vxl motor	Transmitter, reversing interlock / automatic gear changing system (engine speed)
762	B	Givare temp,spolkrets bromsar	Transmitter, brake flushing circuit
763	B	Givare nivå hydraulolja	Transmitter, hydraulic fluid level
764	B	Givare servotryck växellåda	Transmitter, gear box servo pressure
765	B	Givare oljetryck v-låda	Transmitter, oil pressure gear box
766	B	Givare oljetemp. v-låda	Transmitter, oil temperature gear box
767	B	Givare oljetryck motor	Transmitter, oil pressure engine
768	B	Givare oljetryck hydraulik	Transmitter, hydraulic pressure

Number	Categ.	Svenska	English
769	B	Givare ändläge	Transmitter, end position
770	B	Givare rattutslag	Transmitter, steering wheel angle
771	B	Givare vinkel	Transmitter, angle
772	B	Givare temp bromsolja	Transmitter, temperature brake fluid
773	B	Givare närvaro	Transmitter, presence
774	B	Givare utomhustemp	Transmitter, ambient temperature
775	B	Givare temp klimatanläggning	Transmitter, temperature air condition
776	B	Givare temp hydraulolja	Transmitter, hydraulic temperature
777	B	Givare läge	Transmitter, position
778	B	Givare drivbrytning	Transmitter, drive break
779	A	Reglersystem återladdning (EC)	Control system, recharging (EC)
780	A	Reglersystem åkmotor (EC)	Control system main motor (EC)
781	A	Reglersystem pumpmotor (EC)	Control system pump motor (EC)
782	A	Logik interface 2 drivmotorer	Logic (interface) two main motors (EC)
783	A	Logik interface gaspådrag	Logic (interface) throttle
784	A	Logik interface bromsregl	Logic (interface) brake control
785	A	Logik interface styrsystem	Logic (interface) control system
786	A	Servoförstärkare styrsystem	Servo amplifier steering system
789	B	Givare allmän	Transmitter, common
790	D	Elektronisk kontrollenhet ECU, hytt	Electronic Control Unit ECU, cab
791	D	Elektronisk kontrollenhet aggregat	Electronic Control Unit, attachment
792	D	Elektronisk kontrollenhet styrning	Electronic Control Unit, steering system
793	D	Elektronisk kontrollenhet växellåda	Electronic Control Unit, gearbox
794	D	Elektronisk kontrollenhet motor	Electronic Control Unit, engine
795	P	Display	Display
796	D	Elektronisk kontrollenhet, lasthantering	Electronic Control Unit, Loadhandling
797	D	Elektronisk kontrollenhet, ram	Electronic Control Unit, frame
798	D	Elektronisk kontrollenhet, stolvändning	Electronic Control Unit, seat rotation
799	A	Logik allm (option)	Logic, general (option)
800	S	Startelement	Start element
802	E	Eluppvärmd backspegel	Electrical heated observation mirror
803	E	Eluppvärmd stol	Electrical heated seat
804	E	Cigarettändare	Cigarett lighter
805	E	Elvärme hytt	Electrical heating cab
806	A	Aggregat klimatanläggning	Aggregate, air conditioner
807	R	Potentiometer	Potentiometer
808	E	Eluppvärmd lufttorkare	Electrical heater air dryer
810	A	Kondensor AC, fläkt	Condensor AC, fan
815	S	Manöverspak	Control lever
820	R	Motstånd	Resistor
821	C	KONDENSATOR	CAPACITOR
822	Z	Signalfilter	Signal filter
823	U	Signalomvandlare höger	Signal amplifier, right
824	U	Signalomvandlare vänster	Signal amplifier, left
825	R	Reglage spakstyrning	Controls, (steering with control levers).
826	Y	Ventil spakstyrning	Valve, (steering with control levers).
827	A	Växellåda	Gearbox
828	R	Shuntmotstånd	Shunt-resitor
830	L	Tändspole	Ignition coil
835	E	Tändstift	Ignition plug
840	S	Strömfördelare	Distributor
850	H	Signalhorn	Horn
853	H	Summer	Buzzer
888	E	Lufttork, kompressor	Air Dryer, Compressor

Number	Categ.	Svenska	English
900	A	Radio/bandspelare	Radio/tape recorder
901	U	Spänningsomvandlare	Voltage converter
902	B	Högtalare	Loud speaker
903	W	Antenn radio	Aerial, radio
905	A	Kommunikationsradio	Communication radio
906	W	Antenn kommunikationsradio	Aerial, communication radio
907	A	Monitor	Monitor
908	A	Kamera	Camera
909	A	Skrivare	Printer
910	U	Spänningsomvandlare 80V/24V	Voltage converter 80 V / 24 V
911	A	Dataterminal	Dataterminal
940	A	Logik batterivakt	Logic switch , battery watch
941	U	Laddningsutjämnare	Even charger
950	A	Logik transistortändning	Logic transistor ignition
955	A	Logik övervarvningsskydd (LPG)	Logic overspeed protection (LPG)
960	A	Logik rev-spärr/aut-vxl	Logic unit, reversing interlock/automatic gear changing
961	A	Motor/kupevärmare	Engine- and cab heater
962	E	Logik slitageind kol elmotor	Logic indication of wear, brush electrical motor
965	H	Backvarnare	Reversing alarm
1001	S	Strömställare, TW	Switch, TW
1002	S	Strömställare, lossa TW	Switch, unlocking of TW
1003	S	Strömställare, låsa TW	Switch, locking of TW
1004	S	Strömställare, stopp vid 30'-35'	Switch, stop at 30 -35¿
1005	S	Strömställare, förbikoppling av säkerhetssystem	Switch, overriding of the safety system
1006	S	Strömställare, fällning främre ben	Switch, front legs down
1007	S	Strömställare, fällning bakre ben	Switch, rear legs down
1008	S	Strömställare, klämma/lossa ben	Switch, clamping/-releasing legs
1009	S	Strömställare, Motor information	Switch, Engine information
1010	S	Srömställare, tilt av hytt	Switch, tilt of cab
1011	S	Strömställare IR ljus	Switch IR light
1012	S	Strömställare utskjut 20¿-40¿	Switch, Extension 20¿-40¿
1013	S	Strömställare stödben	Switch, Support jacks
1014	S	Strömställare förbikoppling rotationstopp	Switch, over ride rotation stop
1015	S	Strömställare förbikoppling höjdbeg/tp-beg	Switch, over ride height limit/tp-limit
1016			
1017	S	Strömställare diagnostik öka/minska	Switch, diagnostics increase/decrease
1018	S	Strömställare diagnostik on/off	Switch, diagnostics on/off
1019	S	Strömställare rastvärme	Switch, paus heat
1020	S	Strömställare automatisk släpp/kläm funktion	Switch automatic release/clamp funktion
1021	S	Strömställare sax	Switch extender
1022	S	Strömställare vertikalhållning	Switch, vertical position
1023	S	Strömställare låsning övre arm	Switch, lock upper arm
1024	S	Strömställare Korta Armen av/på	Switch, Short Arm on/off
1025	S	Strömställare pappersfunktioner av/på	Switch, paper funktions on/off
1026	S	Strömställare omkoppling pappers/klämmagregat	Switch, switch papper/bale clamp
1027	S	Strömställare lyfthöjdsförval	Switch, lift height selection
1028	S	Strömställare lyfthöjdsförval öka	Switch, lift height selection increase
1029	S	Strömställare lyfthöjdsförval minska	Switch, lift height selection decrease

Number	Categ.	Svenska	English
1030	S	Strömställare läraringång givare ultraljud	Switch, teaching ultrasonic sensor
1031	S	Strömställare, Over Height Upp/Ned	Switch, Over Height Up/Down
1032	S	Brytare backljus	Switch reverse light.
1033	S	Flytta korta armen	Move short arm
1034	S	Strömställare förbikoppling startspärr	Switch Override Start interlock
1035	S	Strömställare Val av klämtryck	Switch, Clamp pressure selection
1036	S	Strömställare Korta Armen av/på	Switch , Short Arm on/off
1037	S	Strömställare låsning skevning	Switch, lock levelling
1038	S	Strömställare Övre armpar/Sidoföring	Switch Upper arms/Sideshift
1039	S	Strömställare Inching	Switch, Inching
1040	S	Switch stopp motor	Switch, Stop engine
1041	S	Strömställare motorrumsbelysning	Switch, light engine compartment
1042	S	Strömställare höjdjustering stol	Switch, Seat height level
1043	S	Strömställare längdjustering stol	Switch, Seat for/aft adjustment
1044	S	Strömställare Tankväljare	Switch, Tankselector
1045	S	Strömställare Avstängning backalarm	Switch, Rev. Alarm on/off
2000	D	Elektronisk kontrollenhet, proportionalventil	Electronic control unit, propotional valve
3001	K	Relä rotation	Relay, rotation
3002	K	Relä tilt	Relay, tilt
3003	K	Relä sidoföring	Relay, side shifting
3004	K	Relä längdinställning	Relay, length adjustment
3005	K	Relä twist lock	Relay, twist lock
3006	K	Relä spridning	Relay, spreading
3007	K	Relä lyft/sänk	Relay, lifting/lowering
3008	K	Relä hydraulfunktion extra	Relay, extra hydraulic function
3009	K	Relä manöverbrytare hydr	Relay, operating switch
3010	K	Relä bromsljus vxl std/blackout	Relay, brake light shift std/blackout
3011	K	Relä backljus vxl std/blackout	Relay, reversing light shift std/blackout
3012	K	Relä arb.bel hytt vxl std/blackout	Relay, working light cab, shift std/blackout
3013	K	Relä arb.bel. bom 20' vxl std/blackout	Relay,working light boom20' shift std/b.out
3014	K	Relä arb.bel. bom 40' vxl std/blackout	Relay,working light boom40' shift std/b.out
3015	K	Relä vxl bromsljus/blinkers vä	Relay, shift brake light/direction indicator left
3015	K	Relä vxl bromsljus/blinkers hö	Relay, shift brake light/direction indicator right
3016	K	Relä signalhorn	relay, horn
3017	K	Relä containerbelysning	Relay, Container light
3018	K	Relä containerbelysning IR	Relay, Container light IR
3305	K	Relä VBFS, backljus	Relay, rotating driver´s seat, reversing light
3306	K	Relä VBFS, helljus	Relay, rotating driver´s seat, main beam
3307	K	Relä VBFS, halvljus	Relay, rotating driver´s seat, dipped beam
3308	K	Relä VBFS, bromsljus	Relay, rotating driver´s seat, brake light
3310	K	Relä VBFS, körvisare vä	Relay, rotating driver´s seat, direction indicator left
3311	K	Relä VBFS, körvisare hö	Relay, rotating driver´s seat, direction indicator right
3330	K	Relä, säkerhetsbälte	Relay, seat belt
3331	K	Relä VBFS, drivning fram	Relay, rotating driver´s seat, forward driving

Number	Categ.	Svenska	English
3332	K	Relä VBFS, drivning bak	Relay, rotating driver´s seat, reversing driving
3349	K	Relä VBFS, fartreglage	Relay, rotating driver´s seat, speed control
3404	K	Relä VBFS, mastljus	Relay, rotating driver´s seat, mast light
3412	K	Relä bak ljus	Relay, rotating driver´s seat, rear light
3768	K	Relä oljetryck hydraulik	Relay, hydraulic pressure
3769	K	Relä, blockering av hyttilt	Relay, blocking of cab tilt
3770	K	Relä anliggning	Relay, alignment
3771	K	Relä Krok	Relay, Hook
3772	K	Relä laddsignal (D+)	Relay, charge signal (D+)
3773	K	Relä 12V för minne radio	Relay 12V for radio memory
3774		Relä kylfläkt olja	Relay, cooling fan oil
3775			
5000	H	Kont lampa tryck lyfttång	Indicating lamp, pressure lift tong
5001	H	Varn lampa, Over Height ben uppe	Warn. Lamp, Over Height leg upper pos
6001	Y	M-ventil blockering höger	Solenoid valve, blocking right
6002	Y	M-ventil blockering vänster	Solenoid valve, blocking left
6003	Y	M-ventil inkoppling av hydraulik till topplyft	Solenoid valve, activation of toplift hydraulics
6004	Y	M-ventil sänk	Solenoid valve, lower
6005	Y	M-ventil lyft	Solenoid valve, lift
6006	Y	M-ventil bom ut	Solenoid valve, boom out
6007	Y	M-ventil bom in	Solenoid valve, boom in
6008	Y	M-ventil vridning medsols	Solenoid valve, rotation clockwise
6009	Y	M-ventil vridning motsols	Solenoid valve, rotation counter-clockwise
6010	Y	M-ventil tilt ut	Solenoid valve, tilt out
6011	Y	M-ventil tilt in	Solenoid valve, tilt in
6012	Y	M-ventil tilt	Solenoid valve, tilt
6013	Y	M-ventil fällning främre ben	Solenoid valve, lowering front legs
6014	Y	M-ventil fällning bakre ben	Solenoid valve, lowering rear legs
6015	Y	M-ventil klämma/lossa ben	Solenoid valve, clamping/releasing legs
6016	Y	M-ventil Hyttskjutning fram	Solenoid valve, cab movement forward
6017	Y	M-ventil Hyttskjutning bak	Solenoid valve, cab movement reverse
6018	Y	M-ventil spridning ut	Solenoid valve, spreading out
6019	Y	M-ventil spridning in	Solenoid valve, spreading in
6020	Y	M-ventil sidoföring vänster	Solenoid valve, side shift left
6021	Y	M-ventil sidoföring höger	Solenoid valve, side shift right
6022	Y	M-ventil extra hydraulfunktion ut	Solenoid valve, extra hydraulic function out
6023	Y	M-ventil extra hydraulfunktion in	Solenoid valve, extra hydraulic function in
6024	Y	M-ventil stativ ut	Solenoid valve, mast out
6025	Y	M-ventil stativ in	Solenoid valve, mast in
6026	Y	M-ventil höger framhjul styrning vänster	Solenoid valve, right front wheel, steering left
6027	Y	M-ventil höger framhjul styrning höger	Solenoid valve, right front wheel, steering right
6028	Y	M-ventil vänster framhjul styrning vänster	Solenoid valve, left front wheel, steering left
6029	Y	M-ventil vänster framhjul styrning höger	Solenoid valve, left front wheel, steering right
6030	Y	M-ventil höger bakhjul styrning vänster	Solenoid valve, right rear wheel, steering left

Number	Categ.	Svenska	English
6031	Y	M-ventil höger bakhjul styrning höger	Solenoid valve, right rear wheel, steering right
6032	Y	M-ventil vänster bakhjul styrning vänster	Solenoid valve, left rear wheel, steering left
6033	Y	M-ventil vänster bakhjul styrning höger	Solenoid valve, left rear wheel, steering right
6034	Y	M-ventil skevning	Solenoid valve, levelling
6035	Y	M-ventil skevning höger	Solenoid valve, levelling right
6036	Y	M-ventil skevning vänster	Solenoid valve, levelling left
6037	Y	M-ventil kylfläkt	Solenoid valve, Cooling fan
6038	Y	M-ventil frikoppling koppling	Solenoid valve, lockup clutch
6039	Y	M-ventil öppna twistlock	Solenoid valve, unlocked twist lock
6040	Y	M-ventil låsa twistlock	Solenoid valve, locked twist lock
6041	Y	M-ventil nöd, twistlock	Solenoid valve, emergency, twistlock
6042	Y	M-ventil mellan bom	Solenoid valve, middle boom
6043	Y	Magnetventil, fällning torn (RTCH)	Solenoid valve, boom lowering (RTCH)
6044	Y	M-ventil blockering twistlock	Solenoid valve, blocking twistlock
6045	Y	M-ventil blockering lyft	Solenoid valve, blocking lift
6046	Y	M-ventil utskjut	Solenoid valve, projecting
6047	Y	M-ventil, hyttilt upp	Solenoid valve, cab tilt up
6048	Y	M-ventil, hyttilt ner	Solenoid valve, cab tilt down
6049	Y	M-ventil, kylkrets broms	Solenoid valve, cooling cicuit brake
6050	Y	M-ventil blockering utskjut	Solenoid valve, blocking projecting
6051	Y	M-ventil, regenerering höger	Solenoid valve, regeneration right
6052	Y	M-ventil, regenerering vänster	Solenoid valve, regeneration left
6053	Y	M-ventil, körläge	Solenoid valve, driving position
6054	Y	M-ventil, klämma ihop	Solenoid valve, clambing in
6055	Y	M-ventil, klämma isär	Solenoid valve, clambing out
6056	Y	M-ventil, främre knä ut	Solenoid valve, front knee out
6057	Y	M-ventil, främre knä in	Solenoid valve, front knee in
6058	Y	M-ventil, bakre knä ut	Solenoid valve, rear knee out
6059	Y	M-ventil, bakre knä in	Solenoid valve, rear knee in
6060	Y	M-ventil, främre ben upp	Solenoid valve, front legs up
6061	Y	M-ventil, bakre ben upp	Solenoid valve, rear legs up
6062	Y	M-ventil, urkoppling hydraulpump	Solenoid valve interruption hydraulic pump
6063	Y	M-ventil, stödben upp	Solenoid valve, brace up
6064	Y	M-ventil, stödben ner	Solenoid valve, brace down
6065	Y	M-ventil, frikoppling vridbroms	Solenoid valve, lockup rotation brake
6066	Y	M-ventil, v-låda, drivning	Solenoid valve, gearbox, drive
6067	Y	M-ventil, v-låda, oljetryck till 1:a/3:e växeln	Solenoid valve, gearbox,oilpressure to 1st/3rd gear
6068	Y	M-ventil sax/rotation	Solenoid valve externder/rotation
6069	Y	M-ventil, v-låda, oljetryck till 2:a/4:e växeln	Solenoid valve, gearbox,oilpressure to 2nd/4th gear
6070	Y	M-ventil Over Height upp	Solenoid valve, Over Height up
6071	Y	M-ventil Over Height ner	Solenoid valve, Over Height down
6072	Y	M-ventil klämtryck	Solenoid valve clamp pressure
6073	Y	Propertional ventil, Opti speed	Proportional valve, Opti speed
6074	Y	M-ventil, v-låda, växelväljare för 2:a/4:e växeln	Solenoid valve, gearbox, gearswitch for 2nd/4th gear
6075	Y	M-ventil, v-låda, växelväljare för 1:a/3:e växeln	Solenoid valve, gearbox, gearswitch for 1st/3rd gear
6076	Y	M-ventil blockering sänk	Solenoid valve, blocking lower
6077	Y	M-ventil Inching	Solenoid valve, Inching

Number	Categ.	Svenska	English
6078	Y	M-ventil,Avstängning Övre klämarm	Solenoid valve, upper arm off
6079	Y	M-Ventil, Sidoföring/Övre armar	Solenoid valve, Sideshift/Upper arms
6080	Y	M-ventil, aktivering hyttkörning	Solenoid valve, activate sliding cab
7200	S	Givare, axeltryck höger	Sensor, axle pressure right
7201	S	Givare, axeltryck vänster	Sensor, axle pressure left
7202	S	Givare, anliggning vänster fram	Sensor, alignment left front
7202	S	Givare, anliggning höger fram	Sensor, alignment right front
7203	S	Givare, anliggning vänster bak	Sensor, alignment left rear
7203	S	Givare, anliggning höger bak	Sensor, alignment right rear
7204	S	Givare, öppen vänster twistlock	Sensor, unlocked twistlock left
7204	S	Givare, öppen höger twistlock	Sensor, unlocked twistlock right
7205	S	Givare, låst vänster twistlock	Sensor, locked twistlock left
7205	S	Givare, låst höger twistlock	Sensor, locked twistlock right
7206	S	Givare, gaffel aggregat	Sensor, fork attachment
7207	S	Givare, 2WD/4WD	Sensor, 2WD/4WD
7208	S	Givare, hytt i körläge	Sensor, Cab in drive position
7209	S	Givare, oljefilter indikering	Sensor, Oil filter indication
7210	S	Givare, hytt i transportläge	Sensor, Cab in transportation position
7211	S	Givare, lyfthöjd	Sensor, lifting height
7212	S	Givare, körläge	Sensor, driving position
7213	S	Givare, Anliggning främre ben	Sensor, Alignment front legs
7214	S	Givare, Anliggning bakre ben	Sensor, Alignment rear legs
7215	S	Givare, kläm främre ben	Sensor, Clamp front legs
7216	S	Givare, kläm bakre ben	Sensor, Clamp rear legs
7217	S	Givare, främnre knä	Sensor, front knee
7218	S	Givare, bakre knä	Sensor, rear knee
7219	S	Givare, främre ben	Sensor, front legs
7220	S	Givare, bakre ben	Sensor, rear legs
7221	S	Givare, styraxel	Sensor, steering axle
7222	S	Givare, stödben uppe	Sensor, brace up
7223	S	Givare, stödben nere	Sensor, brace down
7224	B	Givare, mätläge våg	Sensor, measurepoint scale
7225	B	Givare, rotationsstopp	Sensor, rotation stop
7226	B	Givare, tryck lyftcylinder	Sensor, pressure lift cylinder
7227	B	Givare, tryck klämma	Sensor, pressure clamp
7228	B	Givare lyfthöjd analog	Sensor lift height analogue
7229	B	Givare tiltvinkel analog	Sensor tilt angle analogue
7230	B	Givare ultraljud last position	Sensor, ultrasonic load position
7231	B	Givare, Over Height, Ben uppe	Sensor, Over Height, Leg upper position
7232	B	Givare,IR Last position	Givare,IR Load position
7233	B	Givare lambda sond	Sensor lambda sond
7234	B	Givare vatten i bränsle	Transmitter water in fuel
8071	R	Potentiometer lyft/sänk	Potentiometer lift/lower
8072	R	Potentiometer tilt	Potentiometer tilt
8073	R	Potentiometer sidoföring	Potentiometer side shifting
8074	R	Potentiometer spridning	Potentiometer spreading
8075	R	Potentiometer extra	Potentiometer extra
8076	R	Potentiometer mast in/ut	Potentiometer reach in/out
8077	R	Potentiometer höger framhjul	Potentiometer right front wheel
8078	R	Potentiometer vänster framhjul	Potentiometer left front wheel
8079	R	Potentiometer höger bakhjul	Potentiometer right rear wheel
8080	R	Potentiometer vänster bakhjul	Potentiometer left rear wheel
8081	R	Potentiometer tiltvinkel	Potentiometer tilt angle
8082	R	Potentiometer fläkthastighet, ECC	Potentiometer fan speed, ECC

Number	Categ.	Svenska	English
8083	R	Potentiometer temperatur, ECC	Potentiometer temperature, ECC
8084	R	Potentiometer spjäll, ECC	Potentiometer draught valve, ECC
8085	R	Potentiometer rotation	Potentiometer rotation
8086	R	Potentiometer sax	Potentiometer extender
8087	R	Potentiometer klämma	Potentiometer clamp
8088	R	Potentiometer skevning	Potentiometer levelling
8089	R	Potentiometer kroklåsning	Potentiometer flaps
8090	V	Laser, pappersaggretgat	Lase, Pulp an Paper
8091			
9000	M	Motor höj/sänkbar stolspelare	Motor rise/lower seat column
9001	D	Åkerströms fjärrkontroll	Åkerströms Remote Control
9002			
9003	H	Varningssignal aut. rörelse	Warning alarm aut. movement
9888	A	test	
93774	K	Relä hållkrets	Relay, Holdcircuit

Table of Contents F Technical data

Technical data.....3
Data and volume..... 3
Lift capacity and dimensions..... 6
Oils and lubricants, recommendation 9
Tightening torques, recommendations 10
Tightening torque, ORFS connections..... 12
Unit explanations 13
Conversion table, SI-units..... 14
Conversion table, length 15
Conversion table, area..... 15
Conversion table, volume 15
Conversion table, weight 16
Conversion table, pressure..... 16

Technical data

Data and volume

Data

1 Engine	Volvo TWD1240VE	Volvo TAD1250VE	Cummins QSM11
Power acc. to ISO 3046 (net power)	256 kW at 2000 rpm	247 kW at 1900 rpm	261 kW at 2000 rpm
Torque ISO 3046	1751 Nm at 1200 rpm	1760 Nm at 1400 rpm	1830 Nm at 1100-1400 rpm
Alternator	2240 W (28 V / 80 A)		2400 W (24 V / 100 A)
System voltage	24 V (2 x 12 V / 140 Ah)		

2 Transmission	Dana TE32000
No. of gears forward – reverse	4 – 4

3 Power transmission	Meritor PRC7534	Kessler D102

4 Brakes	Wet Disc Brakes - Drive wheels
Parking brake	Spring brake - Drive wheels

5 Steering	Hydraulic servo

6 Wheel suspension	DRF420	DRF400/450	DRF450, X
Dimensions front - rear	18.00x25/36	18.00x25/40	18.00x33/36
Tyre pressure (also see pressure plate)	1.0 MPa		

9.6 Frame, body, cab and accessories, lighting system		
Light	**Rating (W)**	**Socket**
Control lights	1.2	W2x4.6d
Interior lighting	10	S8.5
Rear lights	5	BA15s
Brake lights	21	BA15s
Direction indicators	21	BA15s
Running lights	5	W2.1x9.5d
Headlights (high and low beams)	75/70	P43t-38
Back-up lights	70	PK22s
Work lights	70	PK22s
Work lights Xenon ⊕	35	D1S Xenon tube. Insert and ballast replaced complete.
Rotating beacon	70	PK22s

Volumes

For oil types see tab *F Technical data*.

1 Engine	Volvo TWD1240VE	Volvo TAD1250VE	Cummins QSM11
Fuel tank	550 l		
Fuel quality	Diesel according to EN590		
Cooling system	68 l	40 l	40 l
Engine oil	35 l	35 l	34 l

2 Transmission	Dana TE32000
Transmission oil	60 l when changing (80 l total)

3 Power transmission	Meritor PRC7534	Kessler D102
Differential	50 l	65 l
Hub reduction	2x10 l	2x12 l

4 Brakes	
Brake system	140 l

7 Load handling	
Planetary gear hydraulic motor attachment	1.6 l
Brake hydraulic motor attachment	0.6 l

9 Frame, body, cab and accessories	Volvo TWD1240VE	Volvo TAD1250VE	Cummins QSM11
Air conditioning, refrigerant	2000 g, R134a		
Air conditioning, lubricant	Pre-filled with correct volume.		1.7 dl ZXL100 (PAG oil)
Washer fluid	5 l		

10 Common hydraulics	
Hydraulic oil tank	600 l
Hydraulic system	940 l (total incl. tank)

Lift capacity and dimensions

Capacity (tons)

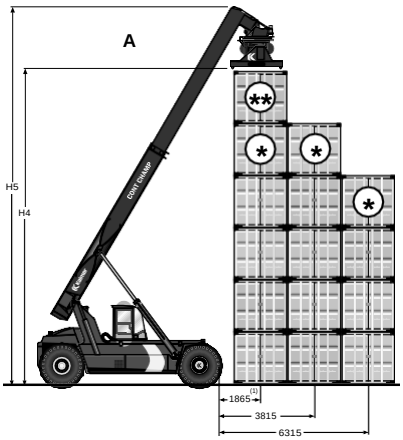

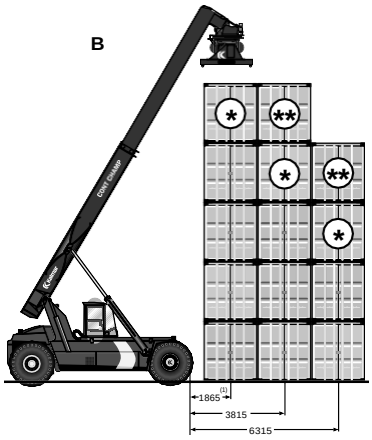

005113

A. Container 86

B. Container 96

Model	Container 86			Container 96			Lift height top lift	
	Row 1	Row 2	Row 3	Row 1	Row 2	Row 3	H4 (mm)	H5 (mm)
DRF400-60C5	38*/40	25**	10**	37**/40*	25*	10*	14900	18100
DRF420-60S5	41*/42	25*	11*	40*/42	25*	11*	15100	18100
DRF450-60S5	43*/45	27*	13*	42*/45	27*	13*	15100	18100
DRF450-60S5X	43*/45	35*	18*	42*/45	35*	18*	15200	18200
DRF450-60C5X	42*/45	32**	14**	41**/44*/45	32*	14*	15000	18200
DRF420-65S5	41*/42	28*	13*	40*/42	28*	13*	15100	18100
DRF420-65S6	39**/41*/42	28*	13*	40*/42	28**	13**	16200	19250
DRF450-65S5	43*/45	30*	15*	42*/45	30*	15*	15100	18100
DRF450-65S6	42**/44*/45	30*	15*	43*/45	30**	15**	16200	19250
DRF450-65S5X	45*	36*/38*	21*	43*/45	37*/38	21*	15200	18200
DRF450-65C5X	42*/45	33**/34*	16**	41**/44*/45	34*	16*	15000	18200
DRF450-65S6X	42**/45*	35*/38	21*	43*/45	34**/36*/38	21**	16300	19350
DRF420-70S5	41*/42	30*	15*	40*/42	30*	15*	15100	18100
DRF450-70S5X	45*	39*/41	23*	45*	40*/41	23*	15100	18200
DRF450-70S5XS	45*	39*/41	23*/(31*)	45*	40*/41	23*/(31*)	15100	18200
DRF450-70C5XS	45*	36**/38*	20**/(27**)	43**/45*	37*/38	20*/(27*)	14900	18200
DRF450-75S5XS	45*	43*/45	26*/(34*)	45	45*	26*/(34*)	15200	18400
DRF450-75C5XS	45*	40**/42*/43	24**/(32**)	45**	41*/43	24/(32*)	15000	18400

( ) = Support jacks down

Dimensions (mm)

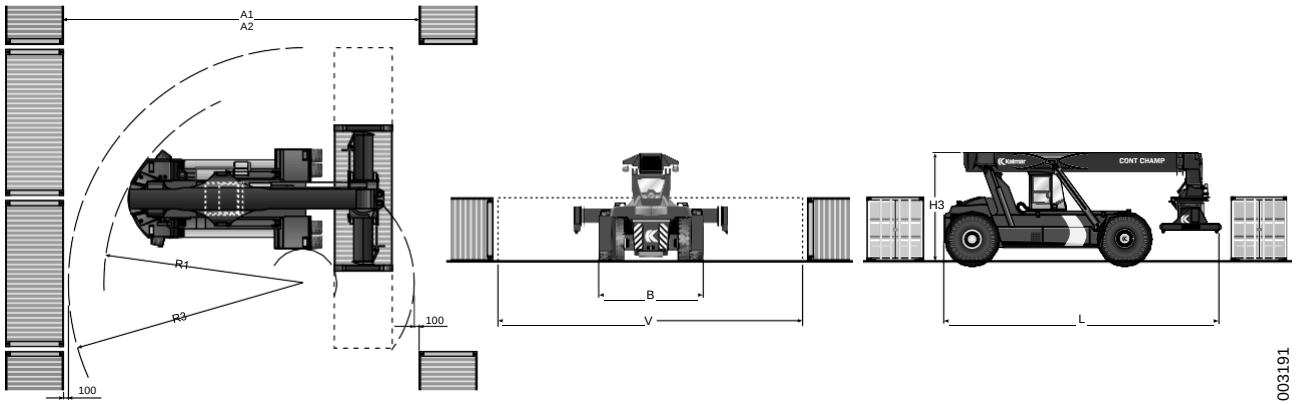

Model	Operating width		Turning radius		Main dimensions						Operating weight (kg)
	A1-20'	A2-40'	R1-20'	R3-40'	B	V	L	H3	Ground clearance	Tyres	
DRF400-60C5	11200	13600	8100	9400	4150	6055-12185	11200	4500	250	18.00x 25/40	72700
DRF420-60S5	11200	13600	8100	9400	4150	6055-12185	11200	4500	250	18.00x 25/36	64500
DRF450-60S5	11200	13600	8100	9400	4150	6055-12185	11200	4500	250	18.00x 25/40	66400
DRF450-60S5X	11200	13600	8100	9400	4150	6055-12185	11200	4600	300	18.00x 33/36	76500
DRF450-60C5X	11200	13600	8100	9400	4150	6055-12185	11200	4600	300	18.00x 33/36	81100
DRF420-65S5	11600	13600	8500	9400	4150	6055-12185	11700	4500	250	18.00x 25/36	65000
DRF420-65S6	11900	13900	8500	9450	4150	6055-12185	12000	4500	250	18.00x 25/36	66200
DRF450-65S5	11600	13600	8500	9400	4150	6055-12185	11700	4500	250	18.00x 25/40	66800
DRF450-65S6	11900	13900	8500	9450	4150	6055-12185	12000	4500	250	18.00x 25/40	67800
DRF450-65S5X	11600	13600	8500	9400	4150	6055-12185	11700	4600	300	18.00x 33/36	76300
DRF450-65C5X	11600	13600	8500	9400	4150	6055-1258	11700	4600	300	18.00x 33/36	80500
DRF450-65S6X	11900	13900	8500	9450	4150	6055-12185	12000	4600	300	18.00x 33/36	77200
DRF420-70S5	12100	13600	9000	9400	4150	6055-12185	12200	4500	250	18.00x 25/36	65800

Model	Operating width		Turning radius		Main dimensions						Operat-ing weight (kg)
	A1-20'	A2-40'	R1-20'	R3-40'	B	V	L	H3	Ground clearance	Tyres	
DRF450-70S5X	12100	13600	9000	9400	4150	6055-12185	12200	4700	300	18.00x 33/36	77800
DRF450-70S5XS	12100	13600	9000	9400	4150	6055-12185	12200	4700	300	18.00x 33/36	79300
DRF450-70C5XS	12100	13600	9000	9400	4150	6055-12185	12200	4700	300	18.00x 33/36	84200
DRF450-75S5XS	12500	13600	9400	9400	4150	6055-12185	12700	4750	300	18.00x 33/36	82100
DRF450-75C5XS	12500	13600	9400	9400	4150	6055-12185	12700	4750	300	18.00x 33/36	88100

Oils and lubricants, recommendation

The service intervals indicated by Kalmar Industries in the maintenance manual only apply if oils are selected according to the table below. The table indicates recommended viscosity for different oil types and qualities depending on the ambient temperature.

Any deviation from this table must be approved in writing by Kalmar Industries, and may mean changed service intervals.

Oil type, quality	°C	-40	-30	-20	-10	0	+10	+20	+30	+40
	°F	-40	-22	-4	+14	+32	+50	+68	+86	+104
1.8 Engine, lubrication system Volvo TWD1240VE: VDS-2 AND ACEA E5* Volvo TAD1250VE: VDS-3** Cummins QSM11: API CH-4 or ACEA E5				SAE 15W40 (engine oil)						
		SAE 5W30 (engine oil)								
2.6 Transmission, lubrication system ATF DEXRON III		DEXRON III								
3.3 Power transmission, drive axle API GL-5				SAE 80W140						
		SAE 75W90								
4 Brakes (UTTO-oil) ***) GM Allison C-4 John Deere J20 C, D Catepillar TO-4		SAE 5W30 (transmission oil)								
7 Load handling Planetary gear hydraulic motor, hypoid oil API GL-5 Disc brake hydraulic motor, see "10 Common hydraulics" below.				SAE 80W140						
		SAE 75W90								
10 Common hydraulics DIN 51524 Part 3 HVLP						ISO VG 68				
					ISO VG 46 HV					
				ISO VG 32						

NOTE

The change interval for engine oils is conditional on the sulphur content in the fuel does not exceed 0.5 %.

Oil filters shall always be changed in connection with oil change.

*) The lubrication oil must meet both standards. **NOTE!** API: CH-4 or CH-4 are approved for markets outside of Europe (Instead of ACEA E5).

**) Same oil as for Volvo TWD1240VE may be used on the condition that the change interval is reduced to 400 hours.

***) The oil in the brake system must meet one of the quality standards as well as be a UTTO-oil (Universal Tractor Transmission Oil).

ACEA = Association des Constructeurs Européenne d'Automobiles

API = American Petroleum Institute

VDS = Volvo Drain Specification

Grease

Use a universal grease type EP acc. to NLGI Grade 2 with 3-5 % molybdenum sulfide content for all grease points except for slide plates and pins/axles with bearings not requiring greasing.

For slide plates, use lubrication paste Gleitmo 805 or its equivalent.

For pins/axles with bearings not requiring greasing, use aluminium paste Loctite 8150 or its equivalent.

For electrical contacts, Electrical connector grease 923836.0552 shall be used.

Sealant silicone

Use Loctite 5972 or Loctite 598 (or equivalent). If uncertain, contact Kalmar Industries.

Tightening torques, recommendations

The tightening torques in the following table are recommendations when tightening bolts and nuts.

When torquing using a machine, for example, bolt runner, the tightening torque should be reduced by approx. 5%.

For mild surfaces (hardness below 200 HB), washer shall be used under both bolt head and nut. Alternatively, use flange bolt or flange nut.

Tighten to the prescribed torque without stopping.

Recommended tightening torque may vary depending on surface treatment. Certain combinations of nut and bolt require lubrication according to the table below.

State	Bolt	Nut	Lubrication
1	untreated	untreated	oil
2	bright-galvanized	untreated or bright-galvanized	dry or oil
3	hot-galvanized	untreated	dry or oil

Quality	**8.8**			**10.9**	**12.9**
State	**1**	**2**	**3**	**1**	**1**
Fine M-thread					
M81	27 Nm	24 Nm	30 Nm	39 Nm	46 Nm
M101,25	54 Nm	48 Nm	61 Nm	78 Nm	91 Nm
M121,25	96 Nm	85 Nm	108 Nm	135 Nm	162 Nm
M161.5	230 Nm	205 Nm	260 Nm	323 Nm	388 Nm
M181.5	330 Nm	294 Nm	373 Nm	466 Nm	559 Nm
M-thread					
M4	3.2 Nm	2.9 Nm	3.6 Nm	4.6 Nm	5.5 Nm
M5	6.4 Nm	5.7 Nm	7.2 Nm	9.1 Nm	11 Nm
M6	11 Nm	9.8 Nm	12.5 Nm	16 Nm	19 Nm
M8	26 Nm	24 Nm	30 Nm	38 Nm	45 Nm
M10	52 Nm	47 Nm	59 Nm	74 Nm	89 Nm
M12	91 Nm	81 Nm	103 Nm	128 Nm	154 Nm
M16	220 Nm	198 Nm	250 Nm	313 Nm	375 Nm
M20	430 Nm	386 Nm	490 Nm	620 Nm	732 Nm
M24	750 Nm	668 Nm	848 Nm	1050 Nm	1270 Nm
M30	1480 Nm	1317 Nm	1672 Nm	2080 Nm	2500 Nm
UNC-thread					
1/4	12.5 Nm	11.1 Nm	14.1 Nm	17.6 Nm	20 Nm
5/16	25 Nm	22.3 Nm	28.3 Nm	35 Nm	42 Nm
3/8	44 Nm	39 Nm	50 Nm	62 Nm	73 Nm
7/16	70 Nm	62 Nm	79 Nm	100 Nm	118 Nm
1/2	107 Nm	95 Nm	121 Nm	151 Nm	178 Nm
9/16	153 Nm	136 Nm	173 Nm	216 Nm	255 Nm
5/8	210 Nm	187 Nm	237 Nm	298 Nm	353 Nm
3/4	370 Nm	390 Nm	418 Nm	524 Nm	619 Nm
7/8	594 Nm	528 Nm	671 Nm	839 Nm	990 Nm
1	889 Nm	791 Nm	1005 Nm	1260 Nm	1480 Nm
1 1/8	1260 Nm	1120 Nm	1424 Nm	1780 Nm	2100 Nm
1 1/4	1760 Nm	1565 Nm	1990 Nm	2490 Nm	2940 Nm
1 3/8	2320 Nm	2065 Nm	2620 Nm	3280 Nm	3870 Nm
1 1/2	3060 Nm	2720 Nm	3455 Nm	4320 Nm	5100 Nm

Tightening torque, ORFS connections

Pipe and hose fitting

Pipe diameter		Tightening torque
mm	**inch**	**Nm**
6	1/4	23-25
8	5/16	33-38
10	3/8	
12	1/2	51-57
14	-	80-90
15	-	
16	5/8	
18	3/4	120-130
20	-	
22	7/8	150-170
25	1"	
28	-	180-200
30	-	
32	1"1/4	
35	-	200-240
38	1"1/2	

Wrench size		Tightening torque
mm	**inch**	**Nm**
17	11/16	23-25
22	13/16	33-38
24	15/16	51-57
36	1 3/8	120-130
41	1 5/8	150-170

Goods coupling

UNF-UN		Metric-ISO		BSSP	
Thread (inch)	Tightening torque (Nm)	Thread (mm)	Tightening torque (Nm)	Thread (inch)	Tightening torque (Nm)
7/16-20	21	10x1	20	1/8-28	20
1/2-20	27	12x1.5	35	1/4-19	35
9/16-18	40	14x1.5	45	3/8-19	70
3/4-16	78	16x1.5	55	1/2-14	100
7/8-14	110	18x1.5	68	3/4-14	190
1"1/16-12	180	20x1.5	80	1"-11	300
1"3/16-12	230	22x1.5	98	1"1/4-11	330
1"5/16-12	285	26x1.5	170	1"1/2-11	400
1"5/8-12	320	27x2	180		
1"7/8-12	400	33x2	310		
		42x2	330		
		48x2	400		

Unit explanations

Unit	Abbreviation
Newton metre	Nm
Kilo pound metre	kpm
Kilo pascal	kPa
Mega pascal	MPa
Kilowatt	kW
kilojoule	kJ
British termel unit	Btu
Calorie	ca
Inch	in
Feet	ft
Yard	yd
Mile	mile
Centimetre	cm
Metre	m
Kilometre	km

Conversion table, SI-units

SI-unit	Recalculation factor	Non-SI	Recalculation factor	SI
Torque				
Nm	x 10,2	= kg·cm	x 0,8664	= lb·in
Nm	x 0,74	= lbf·ft	x 1,36	= Nm
Nm	x 0,102	= kg·m	x 7,22	= lb·ft
Pressure (Pa = N/m ^{2})				
kPa	x 4,0	= in.H_2O	x 0,249	= kPa
kPa	x 0,30	= in.Hg	x 3,38	= kPa
kPa	x 0,145	= psi	x 6,89	= kPa
bar	x 14,5	= psi	x 0,069	= bar
kp/cm ^{2}	x 14,22	= psi	x 0,070	= kp/cm ^{2}
N/mm ^{2}	x 145,04	= psi	x 0,069	= bar
MPa	x 145	= psi	x 0,00689	= MPa
Power (W = J/s)				
kW	x 1,36	= hp (cv)	x 0,736	= kW
kW	x 1,34	= bhp	x 0,746	= kW
kW	x 0,948	= Btu/s	x 1,055	= kW
W	x 0,74	= ft·lb/s	x 1,36	= W
Energy (J = Nm)				
kJ	x 0,948	= Btu	x 1,055	= kJ
J	x 0,239	= calorie	x 4,19	= J
Speed and acceleration				
m/s^2	x 3,28	= ft/s ^{2}	x 0,305	= m/s ^{2}
m/s	x 3,28	= ft/s	x 0,305	= m/s
km/h	x 0,62	= mph	x 1,61	= km/h
Horsepower/torque				
Bhp x 5252 rpm= TQ (lb·ft)			TQ x rpm 5252 = bhp	
Temperature				
ºC = (ºF – 32)/1,8	ºF = (ºC x 1,8) + 32			
Flow factor				
l/min (dm ^{3} /min)	x 0,264	= US gal/min x 3,785		= liter/min

Conversion table, length

Unit	cm	m	km	in	ft	yd	mile
cm	1	0,01	0,00001	0,3937	0,03281	0,01094	0,000006
m	100	1	0,001	39,37	3,2808	1,0936	0,00062
km	100000	1000	1	39370,7	3280,8	1093,6	0,62137
in	2,54	0,0254	0,000025	1	0,08333	0,02777	0,000015
ft	30,48	0,3048	0,000304	12	1	0,3333	0,000189
yd	91,44	0,9144	0,000914	36	3	1	0,000568
mile	160930	1609,3	1,6093	63360	5280	1760	1
1 mm = 0,1 cm - 1 mm = 0,001 mm							

Conversion table, area

Unit	cm^2	m^2	km^2	a	ft^2	yd^2	in^2
cm^2	1	0,0001	-	0,000001	0,001076	0,000012	0,155000
m^2	10000	1	0,000001	0,01	10,764	1,1958	1550,000
km^2	-	1000000	1	10000	1076400	1195800	-
a	0,01	100	0,0001	1	1076,4	119,58	-
ft^2	-	0,092903	-	0,000929	1	0,1111	144,000
yd^2	-	0,83613	-	0,008361	9	1	1296,00
in^2	6,4516	0,000645	-	-	0,006943	0,000771	1
1ha = 100a - 1mile^2 = 259 ha = 2,59km ^{2}							

Conversion table, volume

Unit	cm^3 = cc	m^3	l	in^3	ft^3	yd^3
cm^3 = ml	1	0,000001	0,001	0,061024	0,000035	0,000001
m^3	1000000	1	1000	61024	35,315	1,30796
dm^3 (l)	1000	0,001	1	61,024	0,035315	0,001308
in^3	16,387	0,000016	0,01638	1	0,000578	0,000021
ft^3	28316,8	0,028317	28,317	1728	1	0,03704
yd^3	764529,8	0,76453	764,53	46656	27	1
1gal (US) = 3785,41cm ^{3} = 231in^3 = 0,83267gal (UK)						

Conversion table, weight

Unit	g	kg	t	oz	lb
g	1	0,001	0,000001	0,03527	0,0022
kg	1000	1	0,001	35,273	2,20459
t	1000000	1000	1	35273	2204,59
oz	28,3495	0,02835	0,000028	1	0,0625
lb	453,592	0,45359	0,000454	16	1
1ton (metric) = 1,1023 ton (US) = 0,9842 ton (UK)					

Conversion table, pressure

Unit	kp/cm^2	bar	$Pa = N/m^2$	kPa	lbf/in^2	lbf/ft^2
kp/cm^2	1	0,98067	98066,5	98,0665	14,2233	2048,16
bar	1,01972	1	100000	100	14,5037	2088,6
$Pa = N/m^2$	0,00001	0,001	1	0,001	0,00015	0,02086
kPa	0,01020	0,01	1000	1	0,14504	20,886
lbf/in^2	0,07032	0,0689	6894,76	6,89476	1	144
lbf/ft^2	0,00047	0,00047	47,88028	0,04788	0,00694	1
kg/cm^2 = 735,56 Torr (mmHg) = 0,96784atm						

Table of Contents G Terminology and index

Terminology and index.....3
Terminology 3
Index 6

Terminology and index

Terminology

Term	Description
Accumulator	Reservoir that stores (accumulates) pressure for i.e. hydraulic functions.
Anti-corrosion compound	Prevents oxidation, in simple terms, rustproofing.
Attachment	Part of the machine that grabs the load when lifting.
Axle distance	Distance between drive axle and steering axle.
Bar	Unit to express pressure.
Battery disconnector	Cuts off current from battery.
Boom	Lift beam moveable vertically and in-out. Bracket for attachment.
Bottom lift attachment	“Lift legs” that can be raised/lowered for handling loads. Grabs load from below.
Buzzer	Acoustic alarm to catch the operator’s attention.
Control valve	Valves that can be used to control something, for example, to release pressure and thus lower a boom or a fork. See also control valve.
Daily inspection	The actions that should be performed daily to ensure the machine’s functionality.
Decitonne	Tenth of a tonne, measure of the machine’s lift capacity.
Display	“Window” showing digital information on steering wheel panel in cab.
Drive axle	Driving axle that receives the torque from the drivetrain.
Drivetrain	Parts in machine involved in power transmission; engine, torque converter, transmission, propeller shaft and drive axle with differential and hub reduction.
Dust reservoir	The air filter collects the coarsest particles in a dust reservoir, emptied automatically during operation.
ECC	Electric Climate Control. Climate unit with thermostat-controlled cooling, dehumidification and heating.
EHC	Electric Heat Control. Heater unit with automatic heat control.
Electrolyte level	Fluid level in battery cells.
Environmental waste	Used oils, filters, etc., must be handled according to governing national laws and regulations.
Expansion tank	Tank for coolant.
Fixed displacement	Pump with fixed pump volume.
Hanging load	Lifted load.
Hub reduction	Type of final drive (often next to drive wheel) that reduces rpm and increases torque from the drivetrain.
Hydraulic oil	Oil for hydraulic system. See specifications in section *F Technical data*.
Hydraulic oil pump	Pump in hydraulic system.

Term	Description
Hydraulic system	System that uses oil pressure to transfer power to different functions.
Indicator	Manual “sensor”, for example, shows that a filter is clogged and needs to be changed.
LC	Load centre.
Levelling	Attachment is tilted, for example, if load stands on uneven ground.
Lift capacity	Indicates machine’s maximal lift capacity.
Lifting point	Attaching point for lift device when lifting an object.
Low-emission engine	Engine with low emissions of hazardous substances. Manufactured according to regulations.
Machine model	Machine type. Indicated, for example: DRF 400-450. See also type designation.
Main fuse	Located by battery. Cuts off current all systems in machine.
Maintenance	Periodic maintenance actions so that machine functions safely and for long life.
OP	Overload Protection. Overload system to warn when machine is overloaded.
Operating hours	Number of hours machine has been in operation, shown on hour meter in cab.
Option	Optional equipment for machine.
Overload system	See OP (Overload Protection).
Pilot oil pressure	A low control pressure to, for example, a valve.
Planetary gear	Type of transmission with gears in constant engagement.
Product alternative	One of several alternatives is selected for a machine, i.e. engine alternative.
Proportional valve	An electro-magnetically controlled valve. If a current is applied, the valve is activated in proportion to the current’s amplitude. In simple terms, infinitely variable valve, as opposed to on/off valve. For example, on transmission’s valve housing.
Reachstacker	Machine with special top lift attachment for containers.
Refrigerant	Fluid/gas in air conditioning. May only be handled by authorized trained person.
Rotation yoke	Rotating unit on attachment, rotates attachment in relation to lift boom.
Securing machine for transport	Actions before transporting machine.
Serial number	Unique machine designation. On machine plate.
Service position	How machine should be safely positioned before service may be started.
Servo	A small user movement results in a big machine movement, i.e. power steering.
Servo pressure	A low control pressure to control a higher pressure, for example, to a valve.
Sideshift	Parallel sideways movement of attachment.
Solenoid valve	An electro-magnetically controlled valve. See also proportional valve.
Spirit Delta	Enclosed type of cab.
Spreading	Widening of attachment.
Start up	Start procedure for control and monitoring system (from powerless to supplied with voltage).

Term	Description
Steering axle	Wheel axle with steering.
Tilting	Load is leaned forward or backward.
Torque converter	Hydraulic, variable clutch.
Transmission oil	Oil for transmission and torque converter. See specifications in section *F Technical data*.
Twistlocks	Four lock pins, one in each corner of the attachment, pushed down in corresponding holes in container and twisted to lock the container when lifting.
Type designation	Indicates machine type and capacity. See also machine model.
Valve slide	Moveable part in valve. Determines oil's path.
Variable displacement	Adjustable volume (capacity) of a pump.
Variable pump	Pump with adjustable flow rate.
Wet brakes	Brake discs in oil-bath.
Working hydraulics	All load handling functions, i.e. lift and lower, tilt, sideshift, spreader and levelling.

Index

Designation	Tab	Group
A near-accident is a warning signal!	B Safety	-
About the documentation	A Foreword	-
About the machine version	A Foreword	-
About the Workshop Manual	A Foreword	-
Accelerator	1 Engine	1.1.2
AC-compressor	9 Frame, body, cab and accessories	9.4.7
Accumulator	4 Brakes	4.3.4
Accumulator charging valve	4 Brakes	4.3.3
Accumulator charging valve	4 Brakes	4.8.4
Accumulator drain valve	10 Common hydraulics	10.2.1
Accumulator servo circuit	7 Load handling	7.2.4
Accumulator servo circuit	7 Load handling	7.3.4
Additional functions	7 Load handling	7.10
Air cleaning system	1 Engine	1.6.1
Air distributor	9 Frame, body, cab and accessories	9.4.14
Air intake and exhaust outlet	1 Engine	1.6
Air pollution	B Safety	-
Air suspension	9 Frame, body, cab and accessories	9.3.5
Air vents	9 Frame, body, cab and accessories	9.4.15
Alternator	11 Common electric	11.4.1
Alternator (generation)	11 Common electric	11.4
Armrest	9 Frame, body, cab and accessories	9.3.8
ATTACH	8 Control system	8.4.9
Axial piston pump with variable displacement	10 Common hydraulics	10.4.2
Back cushion	9 Frame, body, cab and accessories	9.3.2
Back window	9 Frame, body, cab and accessories	9.9.4
Back-up alarm	9 Frame, body, cab and accessories	9.7.5
Back-up camera	9 Frame, body, cab and accessories	9.9.6
Back-up lights	9 Frame, body, cab and accessories	9.6.5
Batteries (storage)	11 Common electric	11.3
Battery disconnector	11 Common electric	11.2.1
Body structure	9 Frame, body, cab and accessories	9.13

Designation	Tab	Group
BOOM	8 Control system	8.4.8
Brake lights	9 Frame, body, cab and accessories	9.6.4
Brake oil filter	4 Brakes	4.3.2
Brake oil filter	4 Brakes	4.5.2
Brake oil filter	4 Brakes	4.8.12
Brake oil pump	4 Brakes	4.3.1
Brake oil pump	4 Brakes	4.5.1
Brake oil pump	4 Brakes	4.8.3
Brake oil tank	4 Brakes	4.8.1
Brake pedal	4 Brakes	4.1.1
Brake valve	4 Brakes	4.3.5
Brakes	4 Brakes	4
Breaking contact brake pressure	4 Brakes	4.3.7
Breaking contact declutch	2 Transmission	2.8.2
Breaking contact parking brake	4 Brakes	4.5.5
Breather filter	4 Brakes	4.8.11
Breather filter hydraulic oil tank	10 Common hydraulics	10.6.6
Buzzer	9 Frame, body, cab and accessories	9.2.4
By-pass valve cooler	10 Common hydraulics	10.6.5
By-passing	8 Control system	8.2.2
CAB	8 Control system	8.4.3
Cab fan	9 Frame, body, cab and accessories	9.4.3
Cab interia	9 Frame, body, cab and accessories	9.11
Cab mounting	9 Frame, body, cab and accessories	9.10.3
Cab structure and suspension	9 Frame, body, cab and accessories	9.10
Cable harness	11 Common electric	11.5.5
Cable harness transmission	2 Transmission	2.8.3
Calibration	8 Control system	8.5.2
CAN/POWER	8 Control system	8.4.1
CAN-bus	11 Common electric	11.6.1
CAN-bus driveline	11 Common electric	11.6.3
Central lubrication	9 Frame, body, cab and accessories	9.14
Circuit diagrams, compilation	E Schematics	11
CLIMATE	8 Control system	8.4.4

Designation	Tab	Group
Clothing etc.	B Safety	-
Collection block filtered return	10 Common hydraulics	10.5.4
Collection block unfiltered return	10 Common hydraulics	10.5.5
Common electric	11 Common electric	11
Common electric	E Schematics	11
Common hydraulics	10 Common hydraulics	10
Common hydraulics	E Schematics	10
Communication	11 Common electric	11.6
Communication between PC and machine	11 Common electric	11.6.4
Communication system	9 Frame, body, cab and accessories	9.7
Complete machine	0 Complete machine	-
Complete machine, description	0 Complete machine	-
Component designations	E Schematics	11
Condenser	9 Frame, body, cab and accessories	9.4.8
Conditions	A Foreword	-
Container counter	7 Load handling	7.10.3
Control and monitoring system	D Error codes	8
Control lever	7 Load handling	7.1.1
Control system	8 Control system	8
Control system engine	1 Engine	1.9
Control system transmission	2 Transmission	2.8
Control unit engine	1 Engine	1.9.1
Control unit transmission	2 Transmission	2.8.1
Control units	11 Common electric	11.5.3
Control valve attachment	7 Load handling	7.4.3
Control valve attachment	7 Load handling	7.5.3
Control valve attachment	7 Load handling	7.6.3
Control valve attachment	7 Load handling	7.7.5
Control valve attachment	7 Load handling	7.8.3
Controls and instrumentation	1 Engine	1.1
Controls and instrumentation	2 Transmission	2.1
Controls and instrumentation	4 Brakes	4.1
Controls and instrumentation	5 Steering	5.1
Controls and instrumentation	7 Load handling	7.1

Designation	Tab	Group
Controls and instrumentation	8 Control system	8.1
Controls and instrumentation	9 Frame, body, cab and accessories	9.1
Conversion table, area	F Technical data	-
Conversion table, length	F Technical data	-
Conversion table, pressure	F Technical data	-
Conversion table, SI-units	F Technical data	-
Conversion table, weight	F Technical data	-
Conversion table, volume	F Technical data	-
Coolant	1 Engine	1.7.7
Coolant	B Safety	-
Cooling	2 Transmission	2.7
Cooling fan	1 Engine	1.7.5
Cooling fan	10 Common hydraulics	10.6.3
Cooling fan	4 Brakes	4.8.8
Cooling system	1 Engine	1.7
Copyright	A Foreword	-
Counterweights	9 Frame, body, cab and accessories	9.13.4
Damping block tilt	7 Load handling	7.7.3
Data and volume	F Technical data	-
Diagnostics	8 Control system	8.4
Distribution block	9 Frame, body, cab and accessories	9.14.2
Distribution of electricity	11 Common electric	11.5
Documentation sections	A Foreword	-
Doors	9 Frame, body, cab and accessories	9.10.2
Drive axle	3 Driveline/axle	3.3
Drive axle block	4 Brakes	4.3.6
Drive axle block	4 Brakes	4.8.5
Driveline/axle	3 Driveline/axle	3
Electric motors	B Safety	-
Electric protection	11 Common electric	11.2
Electrical distribution box	11 Common electric	11.5.2
Engine	1 Engine	1
Engine	D Error codes	1
ENGINE	8 Control system	8.4.6

Designation	Tab	Group
Entertainment and communication	9 Frame, body, cab and accessories	9.8
Environment	B Safety	-
Error code menu	8 Control system	8.1.10
Error code menu, description	D Error codes	-
Error codes	D Error codes	-
Error codes engine (engine alternative Cummins QSM11)	D Error codes	1
Error codes engine (engine alternative Volvo)	D Error codes	1
Error codes engine, general	D Error codes	1
Error codes machine	D Error codes	8
Error codes transmission (transmission alternative TE32000)	D Error codes	2
Error codes, explanation	D Error codes	-
Exhaust system	1 Engine	1.6.3
Expansion valve	9 Frame, body, cab and accessories	9.4.11
Extension cylinder	7 Load handling	7.3.8
EXTRA	8 Control system	8.4.11
Feedback	A Foreword	-
Fenders	9 Frame, body, cab and accessories	9.13.1
Fire and explosion risks	B Safety	-
Fire extinguisher	9 Frame, body, cab and accessories	9.2.3
Flex plates	2 Transmission	2.2.1
Flooring material	9 Frame, body, cab and accessories	9.11.4
Fluid or gas under pressure	B Safety	-
Footstep and rail	9 Frame, body, cab and accessories	9.13.3
Foreword	A Foreword	-
Form for copying	A Foreword	-
Frame	9 Frame, body, cab and accessories	9.12
Frame, body, cab and accessories	9 Frame, body, cab and accessories	9
Framework cab	9 Frame, body, cab and accessories	9.10.1
Fresh air damper or recirculation damper	9 Frame, body, cab and accessories	9.4.2
Fresh air filter	9 Frame, body, cab and accessories	9.4.1
Fuel system	1 Engine	1.2
Fuel system	B Safety	-
Fuel tank	1 Engine	1.2.1
Function descriptions	A Foreword	-

Designation	Tab	Group
Function group structure	A Foreword	-
Fuses	11 Common electric	11.2.2
Gear and multi-function lever	2 Transmission	2.1.1
Gear and multi-function lever	9 Frame, body, cab and accessories	9.1.1
Gear pump with fixed displacement	10 Common hydraulics	10.4.1
General	A Foreword	-
General	B Safety	-
General	B Safety	-
General safety information	B Safety	-
Glass/windows/mirrors	9 Frame, body, cab and accessories	9.9
Headlights	9 Frame, body, cab and accessories	9.6.1
Heat exchanger cooling	9 Frame, body, cab and accessories	9.4.13
Heat exchanger heat	9 Frame, body, cab and accessories	9.4.4
Heating coils	9 Frame, body, cab and accessories	9.3.3
Height limitation	8 Control system	8.2.4
Hood engine compartment	9 Frame, body, cab and accessories	9.13.2
Horn	9 Frame, body, cab and accessories	9.7.1
Hoses, pipes and valves	10 Common hydraulics	10.5
Humidity filter	9 Frame, body, cab and accessories	9.4.9
HVAC	9 Frame, body, cab and accessories	9.4
HYD	8 Control system	8.4.5
Hydraulic and brake systems, depressurizing	B Safety	-
Hydraulic aux.	10 Common hydraulics	10.7
Hydraulic cylinders	10 Common hydraulics	10.7.1
Hydraulic diagram basic machine	E Schematics	10
Hydraulic diagram cab lift and support jacks	E Schematics	10
Hydraulic diagram combi attachment (part 1 of 3)	E Schematics	10
Hydraulic diagram combi attachment (part 2 of 3)	E Schematics	10
Hydraulic diagram combi attachment (part 3 of 3)	E Schematics	10
Hydraulic diagram joystick steering	E Schematics	10
Hydraulic diagram sliding cab	E Schematics	10
Hydraulic diagram sliding cab and support jacks	E Schematics	10
Hydraulic diagram top lift	E Schematics	10
Hydraulic diagram top lift, tilt lock and controllable tilt	E Schematics	10

Designation	Tab	Group
Hydraulic diagram top lift, tilt lock, controllable tilt and hydraulic levelling	E Schematics	10
Hydraulic diagrams, compilation	E Schematics	10
Hydraulic oil	10 Common hydraulics	10.6.8
Hydraulic oil cooler	10 Common hydraulics	10.6.2
Hydraulic oil filter	10 Common hydraulics	10.6.7
Hydraulic oil fine-filter	10 Common hydraulics	10.6.9
Hydraulic oil pump	5 Steering	5.2.1
Hydraulic oil pump	7 Load handling	7.2.1
Hydraulic oil pump	7 Load handling	7.3.1
Hydraulic oil pump	7 Load handling	7.4.1
Hydraulic oil pump	7 Load handling	7.5.1
Hydraulic oil pump	7 Load handling	7.6.1
Hydraulic oil pump	7 Load handling	7.7.1
Hydraulic oil pump	7 Load handling	7.8.1
Ignition	1 Engine	1.1.1
Important information	A Foreword	-
Initiation	8 Control system	8.5.1
Instrument and control panels	9 Frame, body, cab and accessories	9.11.1
Insulation	9 Frame, body, cab and accessories	9.11.5
Intercooler	1 Engine	1.6.4
Interior details plastic	9 Frame, body, cab and accessories	9.11.2
Interior details textile	9 Frame, body, cab and accessories	9.11.3
Interior lighting	9 Frame, body, cab and accessories	9.6.12
Levelling	7 Load handling	7.8
Levelling cylinders	7 Load handling	7.8.7
Lift boom	7 Load handling	7.2.10
Lift boom	7 Load handling	7.3.10
Lift boom	7 Load handling	7.7.8
Lift capacity and dimensions	F Technical data	-
Lift cylinder	7 Load handling	7.2.8
Lift legs	7 Load handling	7.9.2
Lifting equipment	B Safety	-
Lifting heavy components	B Safety	-
Lifting/lowering	7 Load handling	7.2

Designation	Tab	Group
Lighting system	9 Frame, body, cab and accessories	9.6
LIGHTS	8 Control system	8.4.2
Link arm	5 Steering	5.2.6
Load carrying	7 Load handling	7.9
Load centre limitation	8 Control system	8.2.3
Load handling	7 Load handling	7
Lock valve tilt	7 Load handling	7.7.4
Longitudinal displacement of cab	9 Frame, body, cab and accessories	9.10.4
Lubrication	2 Transmission	2.6
Machine card	A Foreword	-
Main beam attachment	7 Load handling	7.4.7
Main beam attachment	7 Load handling	7.5.9
Making contact brake light	4 Brakes	4.3.8
Manoeuvre switch	11 Common electric	11.2.3
Manoeuvre switch	9 Frame, body, cab and accessories	9.2.1
Manoeuvre valve lift, lower, protrude	7 Load handling	7.2.5
Manoeuvre valve lift, lower, protrude	7 Load handling	7.3.5
Manoeuvre valve mini-wheel/lever steering	5 Steering	5.2.10
Mechanical seat adjustment	9 Frame, body, cab and accessories	9.3.6
Mini-wheel	5 Steering	5.1.2
Monitor back-up camera	9 Frame, body, cab and accessories	9.9.7
Monitoring	8 Control system	8.2
Noise	B Safety	-
Nut, washer and clamp (wedge)	6 Suspension	6.3.3
Oil brake system	4 Brakes	4.8.14
Oil cooler	2 Transmission	2.6.3
Oil cooler	2 Transmission	2.7.3
Oil cooler	4 Brakes	4.8.7
Oils	B Safety	-
Oils and lubricants, recommendation	F Technical data	-
OP	8 Control system	8.4.10
Ordering of documentation	A Foreword	-
Over-centre valve levelling	7 Load handling	7.8.5
Overloading system	8 Control system	8.2.1

Designation	Tab	Group
Paint/coatings	9 Frame, body, cab and accessories	9.15
Parking brake system	4 Brakes	4.5
Parking brake unit	4 Brakes	4.5.4
Passenger seat	9 Frame, body, cab and accessories	9.3.7
Pipes	9 Frame, body, cab and accessories	9.14.3
Pipes and hoses	10 Common hydraulics	10.2.3
Pipes and hoses	10 Common hydraulics	10.3.2
Pipes and hoses	10 Common hydraulics	10.4.3
Pipes and hoses	10 Common hydraulics	10.5.1
Pipes and hoses	10 Common hydraulics	10.6.10
Pipes and hoses	4 Brakes	4.3.10
Pipes and hoses	4 Brakes	4.5.6
Pipes and hoses	4 Brakes	4.8.13
Pipes and hoses	5 Steering	5.2.13
Pipes and hoses	7 Load handling	7.2.12
Pipes and hoses	7 Load handling	7.3.12
Pipes and hoses	7 Load handling	7.4.9
Pipes and hoses	7 Load handling	7.5.12
Pipes and hoses	7 Load handling	7.6.12
Pipes and hoses	7 Load handling	7.7.11
Pipes and hoses	7 Load handling	7.8.10
Plug-in heater	1 Engine	1.7.10
Position lights	9 Frame, body, cab and accessories	9.6.2
Position sensor positioning	7 Load handling	7.5.10
Positioning	7 Load handling	7.5
Positioning beam	7 Load handling	7.5.8
Positioning chains	7 Load handling	7.5.7
Positioning motor	7 Load handling	7.5.6
Power-assisted system	5 Steering	5.2
Pressure monitor	9 Frame, body, cab and accessories	9.4.10
Pressure reducer	7 Load handling	7.2.3
Pressure reducer	7 Load handling	7.3.3
Preventive maintenance	C Preventive maintenance	-
Priority valve	10 Common hydraulics	10.5.2

Designation	Tab	Group
Priority valve	5 Steering	5.2.2
Product alternatives and optional equipment	A Foreword	-
Propeller shaft	3 Driveline/axle	3.2
Protection and emergency equipment	9 Frame, body, cab and accessories	9.2
Protruding	7 Load handling	7.3
Pump unit	9 Frame, body, cab and accessories	9.14.1
Pumps	10 Common hydraulics	10.4
Radiator and expansion tank	1 Engine	1.7.4
Read maintenance manual	A Foreword	-
Read operator's manual	A Foreword	-
Reading instructions	A Foreword	-
Reading out error code	D Error codes	-
Rear lights	9 Frame, body, cab and accessories	9.6.3
Rear-view mirror	9 Frame, body, cab and accessories	9.9.5
Redundant CAN-bus	11 Common electric	11.6.2
References between different information types	A Foreword	-
Refrigerant	B Safety	-
Rims	6 Suspension	6.3.2
Ring gear	7 Load handling	7.6.8
RMI	8 Control system	8.4.13
RMI (Remote Machine Interface)	11 Common electric	11.6.5
Roof window	9 Frame, body, cab and accessories	9.9.3
Rotating beacon	9 Frame, body, cab and accessories	9.6.8
Rotating beacon	9 Frame, body, cab and accessories	9.7.3
Rotating components and tools	B Safety	-
Rotation	7 Load handling	7.6
Rotation motor unit	7 Load handling	7.6.6
Rotation yoke	7 Load handling	7.6.7
Rotation yoke	7 Load handling	7.7.9
Safety	B Safety	-
Safety concerns everyone!	B Safety	-
Safety instructions	B Safety	-
Seat	9 Frame, body, cab and accessories	9.3
Seat belt	9 Frame, body, cab and accessories	9.2.2

Designation	Tab	Group
Seat cushion	9 Frame, body, cab and accessories	9.3.1
Security valves	10 Common hydraulics	10.2
Sensor boom angle	7 Load handling	7.2.11
Sensor boom length	7 Load handling	7.3.11
Sensor brake oil temperature	4 Brakes	4.8.10
Sensor cab temperature	9 Frame, body, cab and accessories	9.4.17
Sensor coolant temperature	9 Frame, body, cab and accessories	9.4.12
Sensor driver in seat	9 Frame, body, cab and accessories	9.3.9
Sensor engine temperature	9 Frame, body, cab and accessories	9.4.6
Sensor fuel level	1 Engine	1.2.2
Sensor hydraulic oil temperature	10 Common hydraulics	10.6.4
Sensor hydraulic pressure lift cylinder	7 Load handling	7.2.9
Sensor outer temperature	9 Frame, body, cab and accessories	9.4.18
Sensor rotation stop	7 Load handling	7.6.10
Sensor steering wheel angle	5 Steering	5.2.12
Sensor temperature fan air out	9 Frame, body, cab and accessories	9.4.16
Service brake system	4 Brakes	4.3
Service indicator	8 Control system	8.2.6
Service position	B Safety	-
Servo filter	7 Load handling	7.2.2
Servo filter	7 Load handling	7.3.2
Setup	8 Control system	8.5
Several mechanics on the same machine	B Safety	-
Shock absorbers	9 Frame, body, cab and accessories	9.3.4
Shuttle valve	10 Common hydraulics	10.5.3
Shuttle valve	5 Steering	5.2.9
Shuttle valve	7 Load handling	7.2.6
Shuttle valve	7 Load handling	7.3.6
Shuttle valve	7 Load handling	7.4.4
Shuttle valve	7 Load handling	7.5.4
Shuttle valve	7 Load handling	7.6.4
Shuttle valve	7 Load handling	7.7.6
Shuttle valve	7 Load handling	7.8.4
Shuttle valve mini-wheel/lever steering	5 Steering	5.2.11

Designation	Tab	Group
Side window	9 Frame, body, cab and accessories	9.9.2
Side-shift	7 Load handling	7.4
Sideshift cylinder	7 Load handling	7.4.5
Sideshift frame	7 Load handling	7.4.6
Sideshift frame	7 Load handling	7.6.9
Sideshift frame	7 Load handling	7.8.8
Solenoid valve parking brake	4 Brakes	4.5.3
Solvents	B Safety	-
Speed limitation	8 Control system	8.2.5
Start battery	11 Common electric	11.3.1
Start motor	1 Engine	1.11.1
Start/stopp	1 Engine	1.11
Steering	5 Steering	5
Steering axle cradle	5 Steering	5.2.5
Steering axle cradle	6 Suspension	6.2.1
Steering cylinder	5 Steering	5.2.4
Steering lever	5 Steering	5.1.3
Steering valve	5 Steering	5.2.3
Stop device	1 Engine	1.11.2
Storage	A Foreword	-
Summer automatic positioning 20'-40'	7 Load handling	7.5.13
Sunshield curtains	9 Frame, body, cab and accessories	9.11.6
Support jacks	7 Load handling	7.10.1
Suspension	6 Suspension	6
Suspension mounting	6 Suspension	6.2
Switch automatic spreading	7 Load handling	7.1.3
Switch by-passing of load centre limitation and height limitation	8 Control system	8.1.4
Switch lock twistlocks	7 Load handling	7.1.2
Switch stop at 30' or 35'	7 Load handling	7.1.5
Switch travel direction indicator	9 Frame, body, cab and accessories	9.1.22
Synchronous lift	7 Load handling	7.10.4
Tank	10 Common hydraulics	10.3.1
Tank heater	10 Common hydraulics	10.6.1
Tank heater	4 Brakes	4.8.2

Designation	Tab	Group
Tanks and accumulators	10 Common hydraulics	10.3
Technical data	F Technical data	-
Temperature control, cleaning and hydraulic oil	10 Common hydraulics	10.6
Temperature control, filtration and brake fluid	4 Brakes	4.8
Tensioned springs	B Safety	-
Terminal table	9 Frame, body, cab and accessories	9.11.7
Thermal by-pass valve	4 Brakes	4.8.9
Tightening torque, ORFS connections	F Technical data	-
Tightening torques, recommendations	F Technical data	-
Tilt	7 Load handling	7.7
Tilt cylinder	7 Load handling	7.7.7
Torque converter/clutch system	2 Transmission	2.2
TRANSM	8 Control system	8.4.7
Transmission	2 Transmission	2
Transmission	D Error codes	2
Travel direction indicators	9 Frame, body, cab and accessories	9.6.6
Troubleshooting cable harness	0 Complete machine	-
Troubleshooting hydraulic hoses	0 Complete machine	-
Troubleshooting with error code, example	0 Complete machine	-
Troubleshooting without an error code, example	0 Complete machine	-
Troubleshooting, general work instructions	0 Complete machine	-
Twistlocks	7 Load handling	7.9.1
Tyre and rim system	6 Suspension	6.3
Tyre system	B Safety	-
Tyres	6 Suspension	6.3.1
Unit explanations	F Technical data	-
Unloading valve attachment	10 Common hydraulics	10.2.2
Unloading valve attachment	7 Load handling	7.4.8
Unloading valve attachment	7 Load handling	7.5.11
Unloading valve attachment	7 Load handling	7.6.11
Unloading valve attachment	7 Load handling	7.7.10
Unloading valve attachment	7 Load handling	7.8.9
Valve block levelling cylinders	7 Load handling	7.8.6
Valve block lift cylinder	7 Load handling	7.2.7

Designation	Tab	Group
Valve block positioning motor	7 Load handling	7.5.5
Valve block protrude cylinder	7 Load handling	7.3.7
Valve block pump unloading	7 Load handling	7.3.9
Valve block rotation motor	7 Load handling	7.6.5
Valve block top lift hydraulics	7 Load handling	7.4.2
Valve block top lift hydraulics	7 Load handling	7.5.2
Valve block top lift hydraulics	7 Load handling	7.6.2
Valve block top lift hydraulics	7 Load handling	7.7.2
Valve block top lift hydraulics	7 Load handling	7.8.2
Warning information	A Foreword	-
Warning light Hazard	9 Frame, body, cab and accessories	9.6.7
Warning light Hazard	9 Frame, body, cab and accessories	9.7.2
Warning parking brake	9 Frame, body, cab and accessories	9.7.4
Washer motor and reservoir	9 Frame, body, cab and accessories	9.5.4
Water valve	9 Frame, body, cab and accessories	9.4.5
Weight indicator	7 Load handling	7.10.2
Vertically adjustable cab	9 Frame, body, cab and accessories	9.10.5
Wheel brake	4 Brakes	4.8.6
Wheel brakes	4 Brakes	4.3.9
Wheel hub	5 Steering	5.2.8
Wheel hub	6 Suspension	6.2.3
Wheel spindle	5 Steering	5.2.7
Wheel spindle	6 Suspension	6.2.2
Vibrations	B Safety	-
Windscreen	9 Frame, body, cab and accessories	9.9.1
Wiper front	9 Frame, body, cab and accessories	9.5.1
Wiper motor front	9 Frame, body, cab and accessories	9.5.5
Wiper motor rear	9 Frame, body, cab and accessories	9.5.7
Wiper motor roof	9 Frame, body, cab and accessories	9.5.6
Wiper rear	9 Frame, body, cab and accessories	9.5.3
Wiper roof	9 Frame, body, cab and accessories	9.5.2
Wiper/washer system	9 Frame, body, cab and accessories	9.5
Wiring diagrams, description	E Schematics	11
Voltage feed	11 Common electric	11.5.1

Designation	Tab	Group
Work light attachment	9 Frame, body, cab and accessories	9.6.11
Work light boom	9 Frame, body, cab and accessories	9.6.10
Work light cab	9 Frame, body, cab and accessories	9.6.9
Working under machine	B Safety	-
Workshop manual contents	A Foreword	-
Writing-desk	9 Frame, body, cab and accessories	9.11.8