https://truckmanualshub.com/

KENWORTH A PACCAR COMPANY

Harness - Instr Panel B-Cab

P92-4319 C 01

© 2009 PACCAR Inc – All Rights Reserved – The information contained in this drawing is proprietary to PACCAR. Reproduction, in whole or in part, by any means is strictly prohibited without prior written authorization from PACCAR Inc.

USAGE NOTE:
USE ON T4 / T6 / T8 / W9 / C5 CABS WITH NAMUX III INSTRUMENTATION AND 2010 ENGINES.

QTY	ITEM	PART NUMBER	NO OF CAVITIES	PRODUCT DESCRIPTION	MATERIAL
AR	-	ESB-M3G71-B		INSULATOR - ADHESIVE BACKED THIN TAPE WRAP (AFL)	
AR	-	K344-1072		BRAIDED EXPANDABLE WRAP	
AR	-	VINYL TAPE		ADHESIVE BACKED	
AR	-	BLUE TAPE		ADHESIVE BACKED	
AR	-	YELLOW TAPE		ADHESIVE BACKED	
1	CAPC	DIGI - KEY PART # 4061PHTB - ND OR SIMILAR		0.47 MFD, 63 VOLT CAPACITOR	11
2	DIODE	MOTOROLA MR752		6 AMP 200 VOLT DIODE	11
1	-	46211-06		BLACK COLE HERSEE POWER FEED STUD	4
2	-	EC-26		PROTECTIVE COVER	
1	-	K169-140-066CA		NYLOCK HEX NUT, 3 / 8", LIGHT COARSE THREAD	
AR	-	K344-635		INSULATOR - HEAT SHRINK	11
AR	-	K344-813		CONVOLUTED TUBING	
1	-	P10-1000		BOX - PWR DIST	
1	-	P20-1157-002		276, CONN - PD BOX CEP ASSY	
1	-	P22-1012		COVER - UPPER PD BOX	
1	-	P42-1002-1		SEAL - PD BOX	
1	-	P42-1002-2		SEAL - PD BOX	
AR	-	P92-2197		CABLE - J1939 / 15 DATA LINK	
1	-	PE2007-001		GROMMET, WIRE BUNDLE	
1	R001	P20-1284	2	BLUE AEES 1.5mm BLADE, SEALED	
1	P151	P20-1014	1	CONNECTOR - BLACK, PACKARD, METRI - PACK 150 SERIES, UNSEALED	
1	P150	K333-586-204	4	CONNECTOR - BLACK, PACKARD, METRI - PACK 150 SERIES, UNSEALED	
1	P149	P20-1151	2	CONNECTOR - BLACK, DEUTSCH DTM J1939	
1	P148	P20-1193-1202G	2	CONNECTOR - BLACK, AMP SUPERSEAL SERIES, SEALED	
1	P147	P20-1285-102	2	CONNECTOR - BLUE AEES 1.5mm BLADE, SEALED	
1	P146	P20-1228	6	CONNECTOR - DELPHI GT150	
1	P139	K333-549-192	2	CONNECTOR - GREY 2 - WAY PACKARD MP 280 SERIES	
1	P129	K333-41	1	CONNECTOR - BLACK BULLET	
1	P102	P20-1036	2	CONNECTOR - BLACK PACKARD METRI - PACK 150 UNSEALED	
1	P101	P20-1134-09-5-0	9	CONNECTOR - BLACK DEUTSCH 9 WAY HPD20 SEALED	15
1	P100	P20-1134-29-5-0	29	CONNECTOR - BLACK DEUTSCH HDP20 29 - WAY SEALED	15
1	P93	K333-536-2	1	CONNECTOR - BLACK DEUTSCH DT	
1	P72	P20-1131-1312	12	CONNECTOR - GREEN AMP 3 - ROW JPT UNSEALED	
1	P71	K333-432	4	CONNECTOR - BLACK PACKARD 4 - WAY	
1	P60	P20-1036	2	CONNECTOR - BLACK METRI-PACK 2-WAY 150 SERIES UNSEALED	

QTY	ITEM	PART NUMBER	NO OF CAVITIES	PRODUCT DESCRIPTION	MATERIAL
1	P38	P20-1195-1102	2	CONNECTOR - NATURAL MOLEX 2 - WAY MINIFIT RECEPTACLE	
1	P37	P20-1195-1102	2	CONNECTOR - NATURAL MOLEX 2 - WAY MINIFIT RECEPTACLE	
1	P36	P20-1195-1102	2	CONNECTOR - NATURAL MOLEX 2 - WAY MINIFIT RECEPTACLE	
1	P35	P20-1195-1102	2	CONNECTOR - NATURAL MOLEX 2 - WAY MINIFIT RECEPTACLE	
1	P34	P20-1195-1102	2	CONNECTOR - NATURAL MOLEX 2 - WAY MINIFIT RECEPTACLE	
1	P33	P20-1195-1102	2	CONNECTOR - NATURAL MOLEX 2 - WAY MINIFIT RECEPTACLE	
1	P32	P20-1195-1102	2	CONNECTOR - NATURAL MOLEX MINIFIT 2 - WAY RECEPTACLE	
1	P31	K333-372	3	CONNECTOR - BLACK PACKARD METRI - PACK 150 UNSEALED	
1	P30	K333-372	3	CONNECTOR - BLACK PACKARD METRI - PACK 150 UNSEALED	
1	P29	K333-550-101	1	CONNECTOR - BLACK PACKARD METRI - PACK 280 SEALED	
1	P28	K333-511	3	CONNECTOR - NATURAL DOOR JAMB SWITCH FOR DOME LAMP	
1	P27	K333-550-101	1	CONNECTOR - BLACK PACKARD METRI - PACK 280 SEALED	
1	P26	K333-511	3	CONNECTOR - NATURAL DOOR JAMB SWITCH FOR DOME LAMP	
1	P24	K333-550-102	2	CONNECTOR - BLACK METRI - PACK 280, SEALED	
1	P22	P20-1173-1110	10	CONNECTOR - BLACK AMP 2 ROW JPT UNSEALED	
1	P21	P20-1173-1110	10	CONNECTOR - BLACK AMP 2 ROW JPT UNSEALED	
1	P20	P20-1173-1106	6	CONNECTOR - BLACK AMP 2 ROW JPT 6 - WAY UNSEALED	
1	P18	K333-549-292	2	CONNECTOR - GREY 2 - WAY PACKARD M / P 280 SERIES	
1	P13	K333-598	1	CONNECTOR - BLACK ELECTRO BLACK WIRE	
1	P04	P20-1199-1	9	CONNECTOR - BLACK J1939 DIAGN GLASSMASTER 9 - WAY SEALED	
1	P02	K333-598	1	CONNECTOR - BLACK_ELECTRO - WIRE	
1	P01	K333-598	1	CONNECTOR - BLACK_ELECTRO - WIRE	
1	J151	K333-549-102	2	CONNECTOR - BLACK, PACKARD, METRI - PACK 280 SERIES, UNSEALED	
1	J150	P20-1131-1209	9	CONNECTOR - YELLOW AMP 3 ROW MCP UNSEALED	
1	J149	P20-1150	2	CONNECTOR - BLACK, DEUTSCH DTM J1939	
1	J148	P20-1193-1102G	2	CONNECTOR - BLACK, AMP SUPERSEAL	
1	J143	K333-549-106	6	CONNECTOR - BLACK, PACKARD, METRI - PACK 280 SERIES, UNSEALED	
1	J139	K333-549-292	2	CONNECTOR - GREY 2 - WAY PACKARD M / P 280 SERIES	
1	J138	P20-1095	6	CONNECTOR - BLACK 56 SERIES 6 WAY	
1	J137	P20-1191-3	10	CONNECTOR - BLACK EATON 10 - WAY	
1	J136	P20-1191-3	10	CONNECTOR - BLACK EATON 10 - WAY	
1	J135	K333-549-204	4	CONNECTOR - BLACK PACKARD METRI - PACK 280 UNSEALED	
1	J134	P20-1037	2	CONNECTOR - BLACK PACKARD METRI - PACK 150 UNSEALED	
1	J133	K333-549-204	4	CONNECTOR - BLACK PACKARD METRI - PACK 280 UNSEALED	
1	J132	K333-549-204	4	CONNECTOR - BLACK PACKARD METRI - PACK 280 UNSEALED	
1	J131	K333-237	1	CONNECTOR - BLACK MOLDED 1 - WAY	
1	J130	K333-237	1	CONNECTOR - BLACK MOLDED 1 - WAY	
1	J129	K333-33	1	CONNECTOR - BLACK_MOLDED_BULLET_RECEPTACLE	
1	J128	K333-237	1	CONNECTOR - BLACK MOLDED 1 - WAY	
1	J127	K333-237	1	CONNECTOR - BLACK MOLDED 1 - WAY	
1	J126	K333-237	1	CONNECTOR - BLACK MOLDED 1 - WAY	
1	J125	K333-237	1	CONNECTOR - BLACK MOLDED 1 - WAY	
1	J124	P20-1112	1	CONNECTOR - BLACK_AMP_1 / 4"_RECEPTACLE	
1	J123	P20-1112	1	CONNECTOR - BLACK_AMP_1 / 4"_RECEPTACLE	
1	J122	P20-1112	1	CONNECTOR - BLACK_AMP_1 / 4"_RECEPTACLE	
1	J121	P20-1112	1	CONNECTOR - BLACK_AMP_1 / 4"_RECEPTACLE	
1	J120	P20-1112	1	CONNECTOR - BLACK_AMP_1 / 4"_RECEPTACLE	
1	J117	K333-237	1	CONNECTOR - BLACK_MOLDED_1 - WAY	
1	J116	K333-237	1	CONNECTOR - BLACK_MOLDED_1 - WAY	
1	J115	K333-237	1	CONNECTOR - BLACK_MOLDED_1 - WAY	
1	J114	K333-237	1	CONNECTOR - BLACK_MOLDED_1 - WAY	
1	J113	K333-237	1	CONNECTOR - BLACK_MOLDED_1 - WAY	
1	J112	K333-237	1	CONNECTOR - BLACK_MOLDED_1 - WAY	
1	J111	K333-237	1	CONNECTOR - BLACK_MOLDED_1 - WAY	
1	J110	K333-237	1	CONNECTOR - BLACK_MOLDED_1 - WAY	
1	J109	K333-237	1	CONNECTOR - BLACK_MOLDED_1 - WAY	
1	J108	K333-237	1	CONNECTOR - BLACK_MOLDED_1 - WAY	
1	J107	K333-237	1	CONNECTOR - BLACK_MOLDED_1 - WAY	
1	J106	K333-237	1	CONNECTOR - BLACK_MOLDED_1 - WAY	
1	J105	K333-237	1	CONNECTOR - BLACK_MOLDED_1 - WAY	
1	J104	K333-237	1	CONNECTOR - BLACK_MOLDED_1 - WAY	
1	J103	K333-237	1	CONNECTOR - BLACK_MOLDED_1 - WAY	
1	J102	K333-237	1	CONNECTOR - BLACK_MOLDED_1 - WAY	
1	J101	K333-237	1	CONNECTOR - BLACK_MOLDED_1 - WAY	
1	J100	K333-237	1	CONNECTOR - BLACK_MOLDED_1 - WAY	
1	J97	K333-237	1	CONNECTOR - BLACK MOLDED 1 - WAY	

QTY	ITEM	PART NUMBER	NO OF CAVITIES	PRODUCT DESCRIPTION	MATERIAL
1	J95	K333-46-25	1	CONNECTOR - 3 / 8" RING TERMINAL	
1	J94	K333-526	3	CONNECTOR - BLACK PACKARD METRI - PACK 280 UNSEALED	
1	J93	K333-537-2	1	CONNECTOR - BLACK DEUTSCH DT	
1	J92	K333-54	1	CONNECTOR - WHITE MOLDED CANDELABRA	
1	J91	K333-54	1	CONNECTOR - WHITE MOLDED CANDELABRA	
1	J90	K333-237	1	CONNECTOR - BLACK MOLDED 1 - WAY	
1	J89	K333-514	2	CONNECTOR - GRAY PACKARD 56 SERIES UNSEALED	
1	J88	P20-1112	1	CONNECTOR - BLACK AMP 1 / 4" RECEPTACLE	
1	J87	K333-290	3	CONNECTOR - BROWN LOCKING 3 - WAY	
1	J86	P20-1212	16	CONNECTOR - BLACK DELPHI VF280 16 - WAY UNSEALED	
1	J83	P20-1112	1	CONNECTOR - BLACK_AMP_1 / 4"_RECEPTACLE	
1	J82	P20-1112	1	CONNECTOR - BLACK_AMP_1 / 4"_RECEPTACLE	
1	J81	P20-1112	1	CONNECTOR - BLACK_AMP_1 / 4"_RECEPTACLE	
1	J80	P20-1112	1	CONNECTOR - BLACK_AMP_1 / 4"_RECEPTACLE	
1	J79	K333-549-202	2	CONNECTOR - BLACK PACKARD METRI - PACK 280 UNSEALED	
1	J78	K333-526	3	CONNECTOR - BLACK MP 280 SERIES PACKARD UNSEALED	
1	J75	P20-1186-2	4	CONNECTOR - BLACK DELPHI MP 630 SERIES	
1	J74	K333-540	6	CONNECTOR - BLACK PACKARD METRI - PACK 150 SERIES SEALED	
1	J73	P20-1186-1	2	CONNECTOR - BLACK DELPHI MP 630 SERIES	
1	J72	P20-1185	16	CONNECTOR - GREY MICRO 64	
1	J71	K333-549-202	2	CONNECTOR - BLACK PACKARD METRI - PACK 280 UNSEALED	
1	J70	P20-1223-14-1-0	14	CONNECTOR - BLACK DEUTCH HDP20 SERIES, GREEN END	
1	J63	P20-1201	3	CONNECTOR - BLACK METRI - PACK 150 SERIES SEALED	
1	J62	P20-1288	3	CONNECTOR - NATURAL METRI - PACK GT150 SERIES SEALED	
1	J61	P20-1288	3	CONNECTOR - BLACK METRI - PACK GT150 SERIES SEALED	
1	J60	P20-1288	3	CONNECTOR - BLACK METRI - PACK GT150 SERIES SEALED	
1	J56	P20-1172-1204	4	CONNECTOR - BLACK AMP MQS UNSEALED	
1	J55	P20-1172-1204	4	CONNECTOR - BLACK AMP MQS UNSEALED	
1	J54	P20-1016	2	CONNECTOR - NATURAL, METRI - PACK 150 SERIES, 2 WAY, UNSEALED	
1	J49	P20-1112	1	CONNECTOR - BLACK AMP 1 / 4" RECEPTACLE	
1	J48	P20-1112	1	CONNECTOR - BLACK AMP 1 / 4" RECEPTACLE	
1	J47	P20-1112	1	CONNECTOR - BLACK AMP 1 / 4" RECEPTACLE	
1	J46	P20-1112	1	CONNECTOR - BLACK AMP 1 / 4" RECEPTACLE	
1	J44	P20-1183-2209	9	CONNECTOR - WHITE AMP JPT 9 - WAY	
1	J43	P20-1172-1240	40	CONNECTOR - BLACK AMP MQS 40 - WAY	
1	J42	P20-1172-1252	52	CONNECTOR - BLACK AMP MQS 52 - WAY	
1	J41	P20-1172-1224	24	CONNECTOR - BLACK AMP MQS 24 - WAY	
1	J40	P20-1183-1209	9	CONNECTOR - BLACK AMP JPT 9 - WAY	
1	J39	P20-1173-1214	14	CONNECTOR - BLACK AMP JPT 2 ROW 14 PIN UNSEALED	
1	J37	K333-549-204	4	CONNECTOR - BLACK PACKARD METRI - PACK 280 UNSEALED	
1	J35	K333-46-38	1	CONNECTOR - 5 / 16" RING TERMINAL	
1	J34	P20-1198	12	CONNECTOR - GREY SWF 12 - WAY	
1	J33	K333-54	1	CONNECTOR - WHITE MOLDED CANDELABRA	
1	J32	K333-237	1	CONNECTOR - BLACK MOLDED 1 - WAY	
1	J31	K333-54	1	CONNECTOR - WHITE MOLDED CANDELABRA	
1	J30	K333-54	1	CONNECTOR - WHITE MOLDED CANDELABRA	
1	J29	P20-1179	6	CONNECTOR - BLACK AMP, JPT, 6 WAY, UNSEALED	
1	J26	P20-1132-1312	12	CONNECTOR - GREEN AMP 3 - ROW MCP UNSEALED	
1	J25	P20-1191-3	10	CONNECTOR - BLACK, EATON, 10 - WAY	
1	J24	P20-1015	1	CONNECTOR - BLACK_PACKARD_METRI - PACK_150	
1	J23	P20-1175	16	CONNECTOR - BLACK_PACKARD_METRI - PACK_280	
1	J023	P92-3043	16	HARNESS - RKE JUMPER	
1	J22	P20-1064	4	CONNECTOR - NATURAL METRI - PACK 150 SERIES UNSEALED	
1	J21	P20-1064	4	CONNECTOR - NATURAL METRI - PACK 150 SERIES UNSEALED	
1	J20	P20-1112	1	CONNECTOR - BLACK AMP 1 / 4" RECEPTACLE	
1	J19	P20-1112	1	CONNECTOR - BLACK AMP 1 / 4" RECEPTACLE	
1	J18	K333-549-192	2	CONNECTOR - GREY 2 - WAY PACKARD M / P 280 SERIES	
1	J14	P20-1078	2	CONNECTOR - BLACK PACKARD METRI - PACK 150 UNSEALED	
1	J13	P20-1112	1	CONNECTOR - BLACK AMP 1 / 4" RECEPTACLE	
1	J12	P20-1132-1518	18	CONNECTOR - GREY AMP MCP 3 - ROW UNSEALED	
1	J11	P20-1191-3	10	CONNECTOR - BLACK, EATON, 10 - WAY	
1	J10	P20-1191-3	10	CONNECTOR - BLACK, EATON, 10 - WAY	
1	J09	P20-1132-1518	18	CONNECTOR - GREY AMP 3 - ROW MCP	
1	J08	P20-1112	1	CONNECTOR - BLACK AMP 1 / 4" RECEPTACLE	
1	J07	P20-1112	1	CONNECTOR - BLACK AMP 1 / 4" RECEPTACLE	
1	J01	P20-1134-47-3-0	47	CONNECTOR - BLACK, DEUTSCH, HDP20, RECEPTACLE	

DWG SIZE A0

https://truckmanualshub.com/

KENWORTH A PACCAR COMPANY Harness - Instr Panel B-Cab

P92-4319 C 02

© 2009 PACCAR Inc – All Rights Reserved – The information contained in this drawing is proprietary to PACCAR. Reproduction, in whole or in part, by any means is strictly prohibited without prior written authorization from PACCAR Inc.

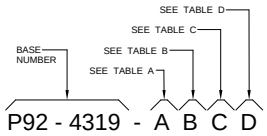

HARNESS VARIATION TABLE

TABLE A
(DAY CAB / SLEEPER)

VAR	OMIT CIRCUITS	OMIT COMPONENTS	USAGE
1	BLK6121-0, BRN4388-0, BLK6123-0, BRN6121-0, BRN6930-0, BRN6123-0, GRA4211-0, ORN0791-0, GRA7310-0, GRA4211-1, ORN1260-0, GRA7360-0, GRA4211-2, ORN2613-0, ORN0792-0, GRA4211-3, ORN4221-0, ORN1261-0, ORN6953-2, ORN6930-0, ORN1262-0, ORN7310-0, ORN6953-0, ORN6953-1, ORN7310-2, ORN7310-1, RED1219-0, ORN7310-3, ORN7360-0, WHT4211-0, YEL2941-2, WHT6930-0, WHT7310-0,	60, SPLICE 61, SPLICE 70, SPLICE 99, SPLICE J112, K333-237 J113, K333-237 J93, K333-537-2 J94, K333-526 P151, P20-1014 P93, K333-536-2	- DAY CAB WITHOUT LOW VOLTAGE DISCONNECT
2	RED1215-0, BRN6123-1, GRA4211-3, BRN6121-1, BLK6123-1, BLK6121-1, GRA4211-4,	P151, P20-1014	- SLEEPER WITH NON - CECU CONTROLLED LOW VOLTAGE DISCONNECT
3	GRA4211-3, BLK6121-0, BLK6123-0, GRA4211-4, BRN6121-0, BRN6123-0, RED1215-0,	P151, P20-1014	- DAY CAB WITH NON-CECU CONTROLLED LOW VOLTAGE DISCONNECT
4	RED1215-0, BLK6123-1, BLK6121-1, BRN6123-1, BRN6121-1, GRA4211-4,		- SLEEPER WITH CECU CONTROLED LOW VOLTAGE DISCONNECT
5	RED1215-0, BLK6121-0, BLK6123-0, GRA4211-4, BRN6121-0, BRN6123-0,		- DAY CAB WITH CECU CONTROLED LOW VOLTAGE DISCONNECT

TABLE B
(REMOTE THROTTLE AND ENGINE OVERSPEED AIR SHUTOFF)

VAR	OMIT CIRCUITS	OMIT COMPONENTS	USAGE
1	BLU3144-0, GRA3512-0, GRA3513-0, BRN3963-0, GRN3964-0, YEL3961-0, GRA3964-0, VIO4500-2, GRN4500-2,	P150, K333-586-204	WITHOUT: - REMOTE THROTTLE VIA CECU - ENGINE OVERSPEED AIR SHUTOFF
2	NONE	NONE	WITH: - REMOTE THROTTLE VIA CECU - ENGINE OVERSPEED AIR SHUTOFF

TABLE C
(REAR AXLE CROSS LOCKS)

VAR	OMIT CIRCUITS	OMIT COMPONENTS	USAGE
1	BRN2624-3, BRN4361-0, BRN4362-0 BRN4363-0, WHT4360-0	J143, K333-549-106	WITHOUT: - REAR AXLE CROSS LOCKS
2	NONE	NONE	WITH: - REAR AXLE CROSS LOCKS

TABLE D
(OPTIONAL CAN BUS)

VAR	OMIT CIRCUITS	OMIT COMPONENTS	USAGE
1	GRN0811-0, YEL0811-0, GRN0811-1, YEL0811-1, GRN0813-2, YEL0813-2,	J149, P20-1150 P149, P20-1151	WITHOUT: - INSTRUMENTATION CAN (I - CAN) BREAKOUT - BODYBUILDER CAN (B - CAN)
2	GRN0811-2, YEL0811-2,		WITH: - INSTRUMENTATION CAN (I - CAN) BREAKOUT - BODYBUILDER CAN (B - CAN)

20 SPLICE PAIRS MUST BE SEPARATED BY A MINIMUM OF 100MM FROM ADJACENT PAIRS PER SAE J1939-15 STANDARD.

21 FINISH J127, PARK LAMP BREAKOUT WITH CONNECTOR TAPED BACK TO WIRE USING YELLOW TAPE.

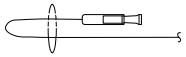

22) REFERENCE P53-1150 FOR CEP FUSE/RELAY LOCATIONS AND RATINGS.

23 THE FOLLOWING CONNECTOR SHALL HAVE GOLD PLATED TERMINALS AS DESCRIBED BELOW:

CONNECTOR J01	
TERM	CIRCUIT
7	BLU4527-0
8	GRN4527-0
12	VIO3141-0
13	VIO3142-0
14	BLU3142-0
22	BLU3141-0
23	GRN3141-0
30	GRN0812-9
31	YEL0812-9
41	GRN3142-0
44	GRN4527-1
45	BLU4527-1

24 CIRCUIT YEL9120-2 TO BE LESS THAN 1000mm.

25 SPLICE TO BE NO FURTHER THAN 100mm FROM BASE OF CONNECTOR J43.

26 TERMINALS MUST BE GOLD PLATED

27) SUPERCEDES P92-4208

PROD	X
SERV	X

GENERAL NOTES:

1) USE ON T4 / T6 / T8 / W9 / C5 CABS WITH NAMUX III INSTRUMENTATION AND 2010 ENGINES.

2) HARNESS SHALL CONFORM TO R026-170-18.

3) HARNESS SHALL CONFORM TO R026-170-146.
- ALL CONDUCTORS TO BE GXL EXCEPT IF NOTED OTHERWISE IN THE WIRE INFORMATION TABLE.
- WIRE BINDING PER 8.2 EXCEPT BINDING SHALL BE EVERY 100MM OR LESS INSTEAD OF 150MM. IF TIES ARE USED, THEY SHALL NOT IMPEDE BREAKOUT FLEXIBILITY OR CAUSE CHAFING.
- HARNESS COVERING SHALL USE CONVOLUTED TUBING ONLY WHERE FLAGGED.

4) THE FOLLOWING CIRCUITS ARE PART OF A TWISTED PAIR, JACKETED CABLE ASSEMBLY. USE CABLE P/N P92-2197. NO LOOPING OF CABLE ASSEMBLY OR WIRES IN HARNESS ASSEMBLY. NO UNTWISTED SECTIONS OF WIRE IN EXCESS OF 50mm AFTER STRIPPING JACKET.

YEL0811-0, GRN0811-0,	YEL0813-2, GRN0813-2,
YEL0811-1, GRN0811-1,	YEL0819-2, GRN0819-2,
YEL0811-2, GRN0811-2,	YEL0822-2, GRN0822-2,
YEL0812-1, GRN0812-1,	YEL0822-3, GRN0822-3,
YEL0812-3, GRN0812-3,	YEL0822-4, GRN0822-4,
YEL0812-7, GRN0812-7,	
GRN0812-8, YEL0812-8,	
YEL0812-9, GRN0812-9,	
YEL0812-10, GRN0812-10,	

5) PAPER TAGS SHALL BE APPLIED TO THE HARNESS WITHIN 75mm OF THE BASE OF THE CONNECTOR AND SHOULD BE CLEARLY VISIBLE UPON COMPLETION OF THE HARNESS. PAPER TAG ALL BREAKOUTS WITH CORRESPONDING ITEM NUMBER AND STATEMENT. TAG TO BE WHITE IN COLOR, EXCEPT OTHERWISE NOTED.
EXAMPLE - FOR:

P38: P20-1195-1102, RED TAG TELLTALE POS.4
CIRCUIT TERM 2: GRA4371-0

TAG SHOULD BE RED AND SHOULD READ: "P38, TELLTALE POS.4"

6) DESIGNATES REFERENCE POINT ON ANOTHER SHEET.

7) ALL BREAKOUTS MARKED TO BE ORIENTED OUTWARD, 90° FROM DRAWING PAPER. (SEE SECTION S-S, SHEET 6) ~

8) DENOTES A TWISTED PAIR OF WIRES.
DENOTES A TWISTED, JACKETED PAIR OF WIRES.
DENOTES A TWISTED TRIPLET OF WIRES.

9) THE FOLLOWING CIRCUITS ARE TO BE MADE OF HIGH FLEX CPE CONFORMING TO FORD SPECS ESF - M1L64 - A, ESF - M1L28 - A & ESF - M1L34 - A.

WIRE	SHEET	TYPE	WIRE GAUGE
RED1210-0	15	CPE	(4)
RED1210-1	15	CPE	(4)
RED5100-0	15	CPE	(6)
WHT1515-1	12	CPE	(4)
WHT1515-2	12	CPE	(4)
WHT1515-7	14	CPE	(6)

10 CONNECTORS TO BE MATED BY HARNESS MANUFACTURER.

11 USE HEAT SHRINK OVER THE DIODE AND CAPACITOR. HEAT SHRINK EACH AXIAL ENDS AND THEN HEAT SHRINK TOTAL PACKAGE, EXTENDING 25MM BEYOND ENDS OF DIODE OR CAPACITOR AS PER DETAIL H, SHEET 6 ZONE G4. MANUFACTURER TO SELECT THE SIZE OF THE HEAT SHRINK TO FIT CONDITIONS CALLOUT. HEAT SHRINK TO BE RED AND SHALL MEET R026-170-90. DIODE AND CAPACITOR TO BE LOCATED IN PD BOX IN A FAVORABLE LOCATION AS DETERMINED BY THE HARNESS MANUFACTURER.

12 HARNESS MANUFACTURER TO INSTALL GROMMET ON MAIN BUNDLE IN APPROXIMATE LOCATION SHOWN BELOW CEP TO PREVENT WIRE CHAFING.

13 NO SPLICES AND NO SERVICE LOOPS ALLOWED IN BREAKOUT FROM P20-1157-002 ROW "SP" TO 100mm PAST P22-1012 (COVER - UPPER PD BOX).

14) WIRES SHOWN IN DASH LINE IN HARNESS DIAGRAM ARE SUBLJECT TO OMISSION PER HARNESS VARIATION TABLES: A, B OR C (EXAMPLE SEE CIRCUIT BLK6121-0 IN TABLE A AND HARNESS DIAGRAM)

15 P20-1134-29-5-0 (P100) & P20-1134-09-5-0 (P101) TO BE COVERED WITH PROTECTIVE CAP TO PROTECT TERMINALS DURING SHIPPING. DEUTSCH CAP PLUGS, PART NUMBER EC-26.

16 TAPE THE FOLLOWING J1939 TERMINATING CONNECTORS WITH BLUE TAPE TO MAIN HARNESS BUNDLE OVER LOCKING LATCH.
VERIFY WIRES ARE NOT STRAINED AT THE CONNECTOR.

P147, P148 AND P149

17 SPOT TAPE AS CLOSE TO BACK OF CONNECTORS AS FEASIBLE.

18) PART MARKING AND TRACEABILITY REQUIREMENTS SHALL COMPLY WITH CPS0098.

19) ALL HARNESS BREAKOUTS TO BE PLACED INSIDE KENWORTH SUPPLIED REUSABLE NYLON BAG. BAG TO BE CINCHED SO HARNESS ID TAG IS VISIBLE.
CERF BROS BAG CO., PART # 2251.

DWG SIZE A0

https://truckmanualshub.com/

KENWORTH A PACCAR COMPANY Harness - Instr Panel B-Cab P92-4319 C 03

© 2009 PACCAR Inc – All Rights Reserved – The information contained in this drawing is proprietary to PACCAR. Reproduction, in whole or in part, by any means is strictly prohibited without prior written authorization from PACCAR Inc.

USAGE NOTE:

USE ON T4 / T6 / T8 / W9 / C5 CABS WITH NAMUX III INSTRUMENTATION AND 2010 ENGINES.

WIRE INFORMATION FOR HARNESS: P92-4319-0000

WIRE NAME	FROM COMPONENT	FROM TERM	FROM SHEET	TO COMPONENT	TO TERM	TO SHEET	C OF C	WIRE SIZE	WIRE GAUGE	WIRE TYPE	DESCRIPTION
BLK4100-0	41 SPLICE	1	13	J42 P20-1172-1252	15	13	S	0.5mm^2	(20)	TXL	CVSG GND
BLK4100-1	41 SPLICE	1	13	J56 P20-1172-1204	3	13	S	0.5mm^2	(20)	TXL	INSTRUMENTATION, GAUGES RETURN
BLK4100-2	41 SPLICE	1	13	J55 P20-1172-1204	3	13	S	0.5mm^2	(20)	TXL	INSTRUMENTATION, GAUGES RETURN
BLK6111-0	J12 P20-1132-1518	16	11	J86 P20-1212	11	14	S	0.8mm^2	(18)	GXL	SPEAKERS FRONT, LH (-)
BLK6113-0	J12 P20-1132-1518	14	11	J86 P20-1212	10	14	S	0.8mm^2	(18)	GXL	SPEAKERS FRONT, RH (-)
BLK6121-0	J86 P20-1212	12	14	P100 P20-1134-29-5-0	10	16	S	1.0mm^2	(16)	GXL	SLEEPER LH SPKR (-)
BLK6121-1	J86 P20-1212	12	14	J12 P20-1132-1518	1	11	S	0.8mm^2	(18)	GXL	CAB LH REAR SPKR (-)
BLK6123-0	J86 P20-1212	9	14	P100 P20-1134-29-5-0	21	16	S	1.0mm^2	(16)	GXL	SLEEPER RH SPKR (-)
BLK6123-1	J86 P20-1212	9	14	J12 P20-1132-1518	2	11	S	0.8mm^2	(18)	GXL	CAB RH REAR SPKR (-)
BLK7210-0	P71 K333-432	C	14	J73 P20-1186-1	2	14	S	3.0mm^2	(12)	GXL	HVAC, CAB SYSTEM, BLOWER (-)
BLK7221-0	J72 P20-1185	4	14	J71 K333-549-202	B	14	S	0.5mm^2	(20)	TXL	RECIRC DOOR (-)
BLU0855-0	40 SPLICE	1	13	J42 P20-1172-1252	14	13	S	0.5mm^2	(20)	TXL	CVSG DATA
BLU0855-1	40 SPLICE	1	13	J56 P20-1172-1204	1	13	S	0.5mm^2	(20)	TXL	DATA LINKS, AUXILIARY GAUGE BUS
BLU0855-2	40 SPLICE	1	13	J55 P20-1172-1204	1	13	S	0.5mm^2	(20)	TXL	DATA LINKS, AUXILIARY GAUGE BUS
BLU3141-0	P146 P20-1228	A	11	J01 P20-1134-47-3-0	22	11	S	0.8mm^2	(18)	GXL	PT SENSE POSITION # 1
BLU3142-0	P146 P20-1228	F	11	J01 P20-1134-47-3-0	14	11	S	0.8mm^2	(18)	GXL	PT SENSE POSITION # 2
BLU3144-0	J42 P20-1172-1252	27	13	J01 P20-1134-47-3-0	39	11	S	0.8mm^2	(18)	TXL	REMOTE ACCELERATOR
BLU4511-0	J60 P20-1288	3	13	J42 P20-1172-1252	6	13	S	0.5mm^2	(20)	TXL	REAR PRIMARY AIR
BLU4512-0	J61 P20-1288	3	13	J42 P20-1172-1252	7	13	S	0.5mm^2	(20)	TXL	SECONDARY AIR SUPPLY
BLU4515-0	J62 P20-1288	3	13	J42 P20-1172-1252	8	13	S	0.5mm^2	(20)	TXL	APPLICATION AIR
BLU4517-1	J42 P20-1172-1252	10	13	J63 P20-1201	B	13	S	0.8mm^2	(18)	TXL	AIR FILT RESTRICT SIG
BLU4522-0	P100 P20-1134-29-5-0	19	16	J42 P20-1172-1252	21	13	S	0.8mm^2	(18)	TXL	TRANS OIL TEMP
BLU4527-0	P60 P20-1036	A	13	J01 P20-1134-47-3-0	7	11	S	0.5mm^2	(20)	TXL	OAT SENSOR SENSE
BLU4527-1	J01 P20-1134-47-3-0	45	11	J42 P20-1172-1252	16	13	S	0.8mm^2	(18)	TXL	FIREWALL OAT SENSE
BLU7224-0	J70 P20-1223-14-1-0	D	14	J72 P20-1185	11	14	S	0.5mm^2	(20)	TXL	WATER VALVE POS PORT SIG
BRN2611-0	J137 P20-1191-3	6	17	J41 P20-1172-1224	6	12	S	0.8mm^2	(18)	TXL	DOME LAMP IN
BRN2611-1	90 SPLICE	1	17	J137 P20-1191-3	3	17	S	2.0mm^2	(14)	GXL	CAB DOME LAMP
BRN2611-2	90 SPLICE	1	17	J135 K333-549-204	C	17	S	2.0mm^2	(14)	GXL	CAB DOME LAMP
BRN2611-3	90 SPLICE	1	17	J37 K333-549-204	C	12	S	2.0mm^2	(14)	GXL	CAB DOME LAMP
BRN2612-0	90 SPLICE	1	17	J134 P20-1037	B	17	S	0.8mm^2	(18)	GXL	CAB COURTESY LAMP
BRN2620-0	27 SPLICE	1	12	J40 P20-1183-1209	7	12	S	2.0mm^2	(14)	TXL	DASH ILLLUMINATION 1
BRN2620-1	27 SPLICE	1	12	J34 P20-1198	A	12	S	0.8mm^2	(18)	GXL	DASH/PANEL ILLUMINATION
BRN2620-2	66 SPLICE	1	14	27 SPLICE	1	12	S	0.8mm^2	(18)	TXL	DASH/PANEL ILLUMINATION
BRN2620-3	J37 K333-549-204	D	12	27 SPLICE	1	12	S	0.8mm^2	(18)	GXL	DASH/PANEL ILLUMINATION
BRN2620-4	66 SPLICE	1	14	J86 P20-1212	3	14	S	0.8mm^2	(18)	GXL	DASH/PANEL ILLUMINATION
BRN2620-5	J88 P20-1112	1	14	66 SPLICE	1	14	S	0.8mm^2	(18)	GXL	DASH/PANEL ILLUMINATION
BRN2620-6	27 SPLICE	1	12	J72 P20-1185	16	14	S	0.5mm^2	(20)	TXL	DIMMING - PWM INPUT
BRN2620-7	27 SPLICE	1	12	J25 P20-1191-3	9	12	S	0.8mm^2	(18)	GXL	DASH/PNL ILLUMINATION
BRN2621-0	27 SPLICE	1	12	J56 P20-1172-1204	2	13	S	0.5mm^2	(20)	TXL	LIGHTING, GAUGES & CLUSTERS
BRN2621-1	27 SPLICE	1	12	J55 P20-1172-1204	2	13	S	0.5mm^2	(20)	TXL	LIGHTING, GAUGES & CLUSTERS
BRN2622-0	J136 P20-1191-3	9	17	27 SPLICE	1	12	S	0.8mm^2	(18)	GXL	BACKLIGHTING, SWITCHES
BRN2622-1	J137 P20-1191-3	9	17	27 SPLICE	1	12	S	0.8mm^2	(18)	TXL	BACKLIGHTING, SWITCHES
BRN2622-2	J135 K333-549-204	D	17	27 SPLICE	1	12	S	0.8mm^2	(18)	GXL	BACKLIGHTING, SWITCHES
BRN2622-3	J29 P20-1179	5	12	27 SPLICE	1	12	S	0.8mm^2	(18)	TXL	BACKLIGHTING .
BRN2622-4	J26 P20-1132-1312	3	12	27 SPLICE	1	12	S	1.0mm^2	(16)	GXL	BACKLIGHTING, SWITCH
BRN2622-5	J09 P20-1132-1518	8	11	27 SPLICE	1	12	S	1.0mm^2	(16)	TXL	SWITCH BACKLIGHTING
BRN2622-6	J10 P20-1191-3	9	11	27 SPLICE	1	12	S	0.8mm^2	(18)	TXL	BACKLIGHTING, SWITCH
BRN2622-7	J150 P20-1131-1209	8	11	27 SPLICE	1	12	S	0.8mm^2	(18)	TXL	BACK LIGHTING, SWITCH
BRN2624-0	04 SPLICE	1	11	J40 P20-1183-1209	8	12	S	2.0mm^2	(14)	TXL	DASH ILLLUMINATION 2
BRN2624-1	J22 P20-1064	D	11	04 SPLICE	1	11	S	0.8mm^2	(18)	TXL	AUXILIARY BACKLIGHTING, CTRL
BRN2624-2	J21 P20-1064	D	11	04 SPLICE	1	11	S	0.8mm^2	(18)	TXL	AUXILIARY BACKLIGHTING, CTRL
BRN2624-3	J143 K333-549-106	D	11	04 SPLICE	1	11	S	1.0mm^2	(16)	TXL	AUXILIARY BACKLIGHTING, CTRL
BRN2911-0	J11 P20-1191-3	9	11	27 SPLICE	1	12	S	0.8mm^2	(18)	GXL	BEACON/ SIGN LAMP
BRN3223-0	J25 P20-1191-3	4	12	J25 P20-1191-3	10	12	S	1.0mm^2	(16)	TXL	INHIBIT REGENERATION
BRN3963-0	J01 P20-1134-47-3-0	27	11	P150 K333-586-204	B	14	S	0.8mm^2	(18)	GXL	AIR SHUTOFF VLV IND LP
BRN4311-0	J01 P20-1134-47-3-0	42	11	J43 P20-1172-1240	15	13	S	0.5mm^2	(20)	TXL	CHECK ENGINE LAMP
BRN4312-0	J01 P20-1134-47-3-0	43	11	J43 P20-1172-1240	16	13	S	0.5mm^2	(20)	TXL	STOP ENGINE LAMP
BRN4323-0	J01 P20-1134-47-3-0	40	11	J39 P20-1173-1214	10	13	S	0.8mm^2	(18)	TXL	WAIT TO START LAMP
BRN4330-0	J01 P20-1134-47-3-0	3	11	J39 P20-1173-1214	14	13	S	0.8mm^2	(18)	TXL	OBD MIL
BRN4361-0	P100 P20-1134-29-5-0	29	16	J143 K333-549-106	E	11	S	1.0mm^2	(16)	TXL	R FRONT AXLE LOCK IND
BRN4362-0	P100 P20-1134-29-5-0	27	16	J143 K333-549-106	B	11	S	1.0mm^2	(16)	TXL	R CENTER AXLE LOCK IND
BRN4363-0	J143 K333-549-106	C	11	P100 P20-1134-29-5-0	24	16	S	1.0mm^2	(16)	TXL	R REAR AXLE LOCK IND
BRN4388-0	J4_30 CEP	1	16	J39 P20-1173-1214	6	13	S	1.0mm^2	(16)	GXL	SLEEPER REFRIGERATOR ON
BRN5114-0	J43 P20-1172-1240	14	13	96 SPLICE	1	16	S	0.5mm^2	(20)	TXL	TRL ABS WARNING LAMP
BRN5114-1	96 SPLICE	1	16	P101 P20-1134-09-5-0	X	16	S	3.0mm^2	(12)	GXL	TRL ABS WARNING LAMP
BRN6111-0	J12 P20-1132-1518	15	11	J86 P20-1212	15	14	S	0.8mm^2	(18)	GXL	SPEAKERS FRONT, LH (+)
BRN6113-0	J12 P20-1132-1518	13	11	J86 P20-1212	14	14	S	0.8mm^2	(18)	GXL	SPEAKERS FRONT, RH (+)
BRN6121-0	J86 P20-1212	16	14	P100 P20-1134-29-5-0	28	16	S	1.0mm^2	(16)	GXL	SLEEPER LH SPKR (+)
BRN6121-1	J86 P20-1212	16	14	J12 P20-1132-1518	4	11	S	0.8mm^2	(18)	GXL	CAB LH REAR SPKR (+)
BRN6123-0	J86 P20-1212	13	14	P100 P20-1134-29-5-0	22	16	S	1.0mm^2	(16)	GXL	SLEEPER RH SPKR (+)
BRN6123-1	J86 P20-1212	13	14	J12 P20-1132-1518	3	11	S	0.8mm^2	(18)	GXL	CAB RH REAR SPKR (+)
BRN6930-0	J4_87A CEP	1	16	P100 P20-1134-29-5-0	11	16	S	1.0mm^2	(16)	GXL	SLEEPER REFER WARN LP
GRA0759-0	J6_85 CEP	1	16	J133 K333-549-204	D	16	S	0.8mm^2	(18)	GXL	SPARE ACC RELAY RTN 1
GRA0759-1	J7_85 CEP	1	16	J132 K333-549-204	D	16	S	0.8mm^2	(18)	GXL	SPARE ACC RELAY RTN 2
GRA1220-0	92 SPLICE	1	17	J138 P20-1095	3	17	S	0.8mm^2	(18)	GXL	IGNITION BUS RELAY CTL
GRA1220-1	E2_86 CEP	1	15	92 SPLICE	1	17	S	0.8mm^2	(18)	GXL	IGNITION BUS RELAY CTL
GRA1220-2	112 SPLICE	1	13	J39 P20-1173-1214	2	13	S	2.0mm^2	(14)	GXL	IGNITION BUS RELAY CTL
GRA1220-3	92 SPLICE	1	17	112 SPLICE	1	13	S	0.8mm^2	(18)	GXL	IGNITION BUS RELAY CTL
GRA1230-0	J138 P20-1095	1	17	93 SPLICE	1	17	S	0.8mm^2	(18)	GXL	ACCESORY BUS RELAY CTL
GRA1230-1	G2_86 CEP	1	16	93 SPLICE	1	17	S	0.8mm^2	(18)	GXL	ACCESORY BUS RELAY CTL
GRA1230-2	J43 P20-1172-1240	3	13	93 SPLICE	1	17	S	0.5mm^2	(20)	TXL	ACCESSORY PWR
GRA2130-0	J09 P20-1132-1518	15	11	J42 P20-1172-1252	48	13	S	0.5mm^2	(20)	TXL	DRL OVERRIDE
GRA2140-0	P72 P20-1131-1312	4	14	J42 P20-1172-1252	52	14	S	0.8mm^2	(18)	TXL	HEADLAMP HIGH / LOW IN
GRA2141-0	54 SPLICE	1	14	J26 P20-1132-1312	5	12	S	0.8mm^2	(18)	TXL	CTRL, HEADLAMP SW

WIRE INFORMATION FOR HARNESS: P92-4319-0000

WIRE NAME	FROM COMPONENT	FROM TERM	FROM SHEET	TO COMPONENT	TO TERM	TO SHEET	C OF C	WIRE SIZE	WIRE GAUGE	WIRE TYPE	DESCRIPTION
GRA2141-1	J26 P20-1132-1312	10	12	J41 P20-1172-1224	14	12	S	0.5mm^2	(20)	TXL	HEADLAMP ACTIVE
GRA2143-0	J42 P20-1172-1252	51	14	P72 P20-1131-1312	5	14	S	0.8mm^2	(18)	TXL	HEADLAMP CONTROL, FLASH
GRA2300-0	J42 P20-1172-1252	32	14	P72 P20-1131-1312	2	14	S	0.8mm^2	(18)	TXL	TURN SIG RES LADDER
GRA2411-0	D1 CEP	1	15	J43 P20-1172-1240	6	13	S	0.5mm^2	(20)	TXL	PARK LAMP
GRA2411-1	23 SPLICE	1	12	J26 P20-1132-1312	2	12	S	0.8mm^2	(18)	TXL	PARK LAMP CTRL
GRA2411-2	J23 P20-1175	S	12	23 SPLICE	1	12	S	0.8mm^2	(18)	GXL	CAB/CHASSIS TAIL LAMPS
GRA2411-3	23 SPLICE	1	12	E1_85 CEP	1	15	S	0.8mm^2	(18)	GXL	PARK LAMP CTRL
GRA2412-1	G3_85 CEP	1	16	J26 P20-1132-1312	8	12	S	0.8mm^2	(18)	TXL	CAB MARKER LAMPS
GRA2415-3	D5 CEP	1	15	J43 P20-1172-1240	5	13	S	0.5mm^2	(20)	TXL	STOP LAMP ACTIVE
GRA2611-0	J12 P20-1132-1518	11	11	J40 P20-1183-1209	3	12	S	2.0mm^2	(14)	GXL	DOME LAMP OUT
GRA2620-0	J34 P20-1198	3	12	J42 P20-1172-1252	5	13	S	0.5mm^2	(20)	TXL	DASH/PNL ILLUMINATION
GRA2631-0	J43 P20-1172-1240	2	13	30 SPLICE	1	12	S	0.8mm^2	(18)	TXL	DRIVER DOOR JAMB
GRA2632-0	29 SPLICE	1	12	J41 P20-1172-1224	4	12	S	0.8mm^2	(18)	TXL	PASSENGER DOOR JAMB
GRA2941-0	J2_85 CEP	1	16	J136 P20-1191-3	5B	17	S	0.8mm^2	(18)	GXL	FLOOD LIGHT CTL
GRA2950-0	J43 P20-1172-1240	8	13	J26 P20-1132-1312	4	12	S	0.8mm^2	(18)	TXL	PRIMARY FOG LAMP
GRA2953-0	J26 P20-1132-1312	11	12	J43 P20-1172-1240	18	13	S	0.8mm^2	(18)	TXL	SECONDARY FOG LAMP
GRA2980-0	J43 P20-1172-1240	4	13	J09 P20-1132-1518	18	11	S	0.5mm^2	(20)	TXL	FLASHER HAZARD
GRA2991-0	P72 P20-1131-1312	12	14	54 SPLICE	1	14	S	0.8mm^2	(18)	GXL	TURN STALK SW GND
GRA3131-0	J09 P20-1132-1518	5	11	J41 P20-1172-1224	11	12	S	0.5mm^2	(20)	TXL	RETARDER SELECT 1
GRA3132-0	J09 P20-1132-1518	4	11	J41 P20-1172-1224	12	12	S	0.5mm^2	(20)	TXL	RETARDER SELECT 2
GRA3153-0	J44 P20-1183-2209	1	13	G1_85 CEP	1	16	S	0.8mm^2	(18)	TXL	IDLE CTRL SYS, TIMER
GRA3155-0	92 SPLICE	1	17	G1_87 CEP	1	16	S	0.8mm^2	(18)	GXL	IDLE CTRL SYS, IGN RELAY CTRL
GRA3161-0	J09 P20-1132-1518	12	11	J43 P20-1172-1240	10	13	S	0.5mm^2	(20)	TXL	CRUISE ON / OFF
GRA3162-0	J09 P20-1132-1518	10	11	J41 P20-1172-1224	8	12	S	0.5mm^2	(20)	TXL	CRUISE SET
GRA3163-0	J09 P20-1132-1518	11	11	J41 P20-1172-1224	9	12	S	0.5mm^2	(20)	TXL	CRUISE RESUME/DECEL
GRA3192-0	J10 P20-1191-3	6	11	J41 P20-1172-1224	17	12	S	0.5mm^2	(20)	TXL	ENGINE FAN OVERRIDE
GRA3192-1	J10 P20-1191-3	6	11	P01 K333-598	1	11	S	0.8mm^2	(18)	GXL	ENGINE FAN OVERRIDE
GRA3195-0	J08 P20-1112	1	11	J41 P20-1172-1224	13	12	S	0.5mm^2	(20)	TXL	CLUTCH SWITCH
GRA3222-0	J41 P20-1172-1224	18	12	J25 P20-1191-3	3	12	S	0.5mm^2	(20)	TXL	REGEN ENABLE
GRA3223-0	J25 P20-1191-3	1	12	J41 P20-1172-1224	19	12	S	0.5mm^2	(20)	TXL	INHIBIT REGEN
GRA3512-0	J01 P20-1134-47-3-0	37	11	J41 P20-1172-1224	15	12	S	0.5mm^2	(20)	TXL	PTO SET
GRA3513-0	J01 P20-1134-47-3-0	38	11	J41 P20-1172-1224	16	12	S	0.5mm^2	(20)	TXL	PTO RESUME
GRA3912-0	J138 P20-1095	2	17	P139 K333-549-192	A	17	S	0.8mm^2	(18)	GXL	STARTER SOLENOID
GRA3912-1	J5_87 CEP	1	16	J01 P20-1134-47-3-0	10	11	S	0.8mm^2	(18)	GXL	STARTER RELAY CONTROL
GRA3912-2	98 SPLICE	1	17	J41 P20-1172-1224	5	12	S	0.8mm^2	(18)	TXL	START SIGNAL
GRA3912-3	98 SPLICE	1	17	J5_30 CEP	1	16	S	0.8mm^2	(18)	GXL	STARTER SOLENOID
GRA3912-4	J139 K333-549-292	A	17	98 SPLICE	1	17	S	0.8mm^2	(18)	GXL	STARTER SOLENOID
GRA3914-0	J5_85 CEP	1	16	J44 P20-1183-2209	3	13	S	0.8mm^2	(18)	TXL	CECU STARTER INTERRUPT
GRA3964-0	J01 P20-1134-47-3-0	36	11	P150 K333-586-204	D	14	S	0.8mm^2	(18)	GXL	AIR SHUTOFF TEST SW SIG
GRA4211-0	99 SPLICE	1	15	J94 K333-526	B	15	S	1.0mm^2	(16)	GXL	LVD SENSE BATT
GRA4211-1	D3 CEP	1	15	99 SPLICE	1	15	S	1.0mm^2	(16)	GXL	LVD BATT VOLTAGE
GRA4211-2	99 SPLICE	1	15	J42 P20-1172-1252	33	13	S	0.8mm^2	(18)	TXL	LVD BATT VOLTAGE
GRA4211-3	J44 P20-1183-2209	6	13	P151 P20-1014	A	13	S	0.8mm^2	(18)	TXL	CECU LVD CTRL
GRA4211-4	D3 CEP	1	15	J42 P20-1172-1252	33	13	S	0.8mm^2	(18)	TXL	LVD BATT VOLTAGE
GRA4323-0	J39 P20-1173-1214	8	13	112 SPLICE	1	13	S	1.0mm^2	(16)	GXL	WAIT TO START IGN POWER
GRA4330-0	J39 P20-1173-1214	13	13	112 SPLICE	1	13	S	1.0mm^2	(16)	GXL	OBD MIL LAMP IGN POWER
GRA4364-0	J09 P20-1132-1518	17	11	J43 P20-1172-1240	11	13	S	0.5mm^2	(20)	TXL	INTERAXLE DIFF LOCK
GRA4371-0	P38 P20-1195-1102	2	13	J43 P20-1172-1240	19	13	S	0.8mm^2	(18)	TXL	EDITABLE TELLTALE # 1
GRA4372-0	J43 P20-1172-1240	20	13	P37 P20-1195-1102	2	13	S	0.8mm^2	(18)	TXL	EDITABLE TELLTALE # 2
GRA4373-0	J43 P20-1172-1240	21	13	P36 P20-1195-1102	2	13	S	0.8mm^2	(18)	TXL	EDITABLE TELLTALE # 3
GRA4374-0	J43 P20-1172-1240	22	13	P35 P20-1195-1102	2	13	S	0.8mm^2	(18)	TXL	EDITABLE TELLTALE # 4
GRA4376-0	J43 P20-1172-1240	24	13	P34 P20-1195-1102	2	13	S	0.8mm^2	(18)	TXL	EDITABLE TELLTALE # 6
GRA4378-0	J43 P20-1172-1240	26	13	P33 P20-1195-1102	2	13	S	0.8mm^2	(18)	TXL	EDITABLE TELLTALE # 8
GRA4379-0	J43 P20-1172-1240	27	13	P32 P20-1195-1102	2	13	S	0.8mm^2	(18)	TXL	EDITABLE TELLTALE # 9
GRA4391-0	J43 P20-1172-1240	12	13	J09 P20-1132-1518	16	11	S	0.5mm^2	(20)	TXL	FIFTH WHEEL SLIDE
GRA4392-0	J80 P20-1112	1	14	J43 P20-1172-1240	7	13	S	0.5mm^2	(20)	TXL	PARK BRAKE SET
GRA4852-0	J29 P20-1179	2	12	J41 P20-1172-1224	1	12	S	0.8mm^2	(18)	TXL	MCS A
GRA4853-0	J29 P20-1179	4	12	J41 P20-1172-1224	2	12	S	0.8mm^2	(18)	TXL	MCS B
GRA4854-0	J29 P20-1179	6	12	J41 P20-1172-1224	3	12	S	0.8mm^2	(18)	TXL	MCS ENTER
GRA5112-0	J43 P20-1172-1240	13	13	08 SPLICE	1	11	S	0.5mm^2	(20)	TXL	TRACT ABS WARN LAMP
GRA5112-1	J150 P20-1131-1209	5	11	08 SPLICE	1	11	S	0.8mm^2	(18)	GXL	ABS WARNING LP CTL
GRA5113-0	08 SPLICE	1	11	J19 P20-1112	1	11	S	0.8mm^2	(18)	GXL	ABS DIAGNOSTIC
GRA5115-0	J41 P20-1172-1224	20	12	J150 P20-1131-1209	7	11	S	0.5mm^2	(20)	TXL	ABS OFFROAD SIG
GRA5451-0	J41 P20-1172-1224	7	12	P24 K333-550-102	B	12	S	0.8mm^2	(18)	TXL	SEAT BELT
GRA5910-0	79 SPLICE	1	15	G4_85 CEP	1	16	S	0.8mm^2	(18)	GXL	WINDSHIELD WIPE/WASH CTRL
GRA5910-1	85 SPLICE	1	15	E4_85 CEP	1	15	S	0.8mm^2	(18)	GXL	WIPER CTL
GRA5910-2	89 SPLICE	1	15	P72 P20-1131-1312	8	14	S	0.8mm^2	(18)	TXL	WINDSHIELD WIPE FAST
GRA5910-3	89 SPLICE	1	15	J43 P20-1172-1240	17	13	S	0.5mm^2	(20)	TXL	WIPER FAST SENSE
GRA5913-0	J42 P20-1172-1252	47	14	P72 P20-1131-1312	9	14	S	0.8mm^2	(18)	TXL	WINDSHIELD WASHER MOTOR
GRA5915-0	J42 P20-1172-1252	31	14	P72 P20-1131-1312	7	14	S	0.8mm^2	(18)	TXL	WIPER LOW/INTER R LADDER
GRA5915-1	J44 P20-1183-2209	2	13	79 SPLICE	1	15	S	0.8mm^2	(18)	TXL	WIPER LOW/INT RELAY CTL
GRA5921-0	P21 P20-1173-1110	10	12	J8_85 CEP	1	16	S	0.8mm^2	(18)	GXL	MIRROR HEAT CTL
GRA5922-0	P31 K333-372	A	12	P20 P20-1173-1106	2	12	S	0.8mm^2	(18)	GXL	LH MIRROR UP
GRA5923-0	P31 K333-372	B	12	P20 P20-1173-1106	1	12	S	0.8mm^2	(18)	GXL	LH MIRROR LEFT
GRA5925-0	P31 K333-372	C	12	P20 P20-1173-1106	3	12	S	0.8mm^2	(18)	GXL	LH MIRROR DWN/RT
GRA5926-0	P20 P20-1173-1106	6	12	P30 K333-372	B	12	S	0.8mm^2	(18)	GXL	RH MIRROR LEFT
GRA5927-0	P20 P20-1173-1106	5	12	P30 K333-372	A	12	S	0.8mm^2	(18)	GXL	RH MIRROR UP
GRA5928-0	P20 P20-1173-1106	4	12	P30 K333-372	C	12	S	0.8mm^2	(18)	GXL	RH MIRROR DWN/RT
GRA5961-0	J43 P20-1172-1240	28	13	J49 P20-1112	1	13	S	0.8mm^2	(18)	TXL	ALARM 1A
GRA5961-1	J43 P20-1172-1240	29	13	J48 P20-1112	1	13	S	0.8mm^2	(18)	TXL	ALARM 1B
GRA5961-2	J43 P20-1172-1240	30	13	J47 P20-1112	1	13	S	0.8mm^2	(18)	TXL	ALARM 1C
GRA5962-0	J43 P20-1172-1240	31	13	J46 P20-1112	1	13	S	0.8mm^2	(18)	TXL	ALARM 2
GRA5970-0	J3_85 CEP	1	16	P102 P20-1036	B	16	S	0.8mm^2	(18)	GXL	HORN CTL
GRA5980-0	J41 P20-1172-1224	10	12	J09 P20-1132-1518	6	11	S	0.5mm^2	(20)	TXL	BACK - UP ALARM MUTE

DWG SIZE A0

https://truckmanualshub.com/

KENWORTH A PACCAR COMPANY Harness - Instr Panel B-Cab P92-4319 C 04

© 2009 PACCAR Inc – All Rights Reserved – The information contained in this drawing is proprietary to PACCAR. Reproduction, in whole or in part, by any means is strictly prohibited without prior written authorization from PACCAR Inc.

USAGE NOTE:

USE ON T4 / T6 / T8 / W9 / C5 CABS WITH NAMUX III INSTRUMENTATION AND 2010 ENGINES.

WIRE INFORMATION FOR HARNESS: P92-4319-0000

WIRE NAME	FROM COMPONENT	FROM TERM	FROM SHEET	TO COMPONENT	TO TERM	TO SHEET	C OF C	WIRE SIZE	WIRE GAUGE	WIRE TYPE	DESCRIPTION
GRA6623-0	100 SPLICE	1	14	E3_85 CEP	1	15	S	0.8mm^2	(18)	GXL	MARKER LP FLASH SW
GRA6623-1	J26 P20-1132-1312	12	12	E3_87 CEP	1	15	S	0.8mm^2	(18)	TXL	MKR / CLEAR FLASH RELAY
GRA6623-2	J26 P20-1132-1312	9	12	E3_87A CEP	1	15	S	0.8mm^2	(18)	TXL	MKR / CLEAR FLASH RELAY
GRA6623-3	100 SPLICE	1	14	J42 P20-1172-1252	46	14	S	0.8mm^2	(18)	TXL	MARKER LP FLASH
GRA6623-4	100 SPLICE	1	14	P72 P20-1131-1312	6	14	S	0.8mm^2	(18)	GXL	MARKER LP FLASH SW
GRA6710-1	P21 P20-1173-1110	8	12	21 SPLICE	1	12	S	0.8mm^2	(18)	GXL	RH / LH DOOR LOCK
GRA6710-2	21 SPLICE	1	12	P22 P20-1173-1110	8	12	S	0.8mm^2	(18)	GXL	RH / LH DOOR LOCK
GRA6710-3	21 SPLICE	1	12	J23 P20-1175	R	12	S	0.8mm^2	(18)	GXL	DOOR LOCK
GRA6730-0	22 SPLICE	1	12	P21 P20-1173-1110	7	12	S	0.8mm^2	(18)	GXL	RH / LH DOOR UNLOCK
GRA6730-1	22 SPLICE	1	12	P22 P20-1173-1110	7	12	S	0.8mm^2	(18)	GXL	RH / LH DOOR UNLOCK
GRA6730-2	J23 P20-1175	B	12	22 SPLICE	1	12	S	0.8mm^2	(18)	GXL	DOOR UNLOCK
GRA6731-1	P21 P20-1173-1110	9	12	J23 P20-1175	A	12	S	0.8mm^2	(18)	GXL	LH DR UNLOCK RELAY
GRA6912-0	P22 P20-1173-1110	6	12	P21 P20-1173-1110	6	12	S	0.8mm^2	(18)	GXL	RH WINDOW UP
GRA6915-0	P22 P20-1173-1110	5	12	P21 P20-1173-1110	5	12	S	0.8mm^2	(18)	GXL	RH WINDOW DOWN
GRA7111-0	J72 P20-1185	2	14	50 SPLICE	1	14	S	0.8mm^2	(18)	TXL	AC CLUTCH FIELD
GRA7111-1	P71 K333-432	D	14	50 SPLICE	1	14	S	0.8mm^2	(18)	GXL	A / C COMPRESSOR CLUTCH
GRA7111-2	50 SPLICE	1	14	J43 P20-1172-1240	9	13	S	0.8mm^2	(18)	TXL	A / C COMPRESSOR CLUTCH
GRA7111-3	J1_85 CEP	1	16	J70 P20-1223-14-1-0	A	14	S	0.8mm^2	(18)	GXL	A/C CLUTCH HP SW
GRA7132-0	P71 K333-432	A	14	J1_86 CEP	1	16	S	0.8mm^2	(18)	GXL	HVAC, FREEZE SWITCH
GRA7214-0	J72 P20-1185	6	14	J75 P20-1186-2	3	14	S	0.5mm^2	(20)	TXL	BLOWER MOTOR PWM OUT
GRA7222-0	J72 P20-1185	5	14	J74 K333-540	D	14	S	0.5mm^2	(20)	TXL	MODE DOOR CTRL
GRA7310-0	J72 P20-1185	10	14	G5_86 CEP	1	16	S	0.8mm^2	(18)	TXL	SLEEPER ENABLE
GRA7360-0	P100 P20-1134-29-5-0	15	16	J72 P20-1185	1	14	S	0.8mm^2	(18)	GXL	SLEEPER HVAC SENSE
GRA9120-0	J42 P20-1172-1252	39	13	E5_85 CEP	1	15	S	0.8mm^2	(18)	TXL	TRLR STOP LP RLY CTRL
GRA9130-2	J26 P20-1132-1312	7	12	G6_85 CEP	1	16	S	0.8mm^2	(18)	TXL	TRLR MARKER
GRN0811-0	J39 P20-1173-1214	7	13	P149 P20-1151	1	13	A	0.75mm^2	(19)	XLPOLYO	I - CAN LOW
GRN0811-1	J43 P20-1172-1240	35	13	J149 P20-1150	1	13	A	0.75mm^2	(19)	XLPOLYO	I - CAN LOW
GRN0811-2	J43 P20-1172-1240	35	13	J39 P20-1173-1214	7	13	A	0.75mm^2	(19)	XLPOLYO	I - CAN LOW
GRN0812-1	101 SPLICE	1	11	11 SPLICE	1	11	A	0.75mm^2	(19)	XLPOLYO	V - CAN LOW
GRN0812-3	101 SPLICE	1	11	P148 P20-1193-1202G	1	11	A	0.75mm^2	(19)	XLPOLYO	V - CAN LOW
GRN0812-7	P04 P20-1199-1	D	11	101 SPLICE	1	11	A	0.75mm^2	(19)	XLPOLYO	V - CAN LOW
GRN0812-8	102 SPLICE	1	13	11 SPLICE	1	11	A	0.75mm^2	(19)	XLPOLYO	V - CAN LOW
GRN0812-9	J148 P20-1193-1102G	1	11	J01 P20-1134-47-3-0	30	11	A	0.75mm^2	(19)	XLPOLYO	V - CAN LOW
GRN0812-10	J150 P20-1131-1209	1	11	11 SPLICE	1	11	A	0.75mm^2	(19)	XLPOLYO	V - CAN LOW
GRN0812-11	J43 P20-1172-1240	38	13	102 SPLICE	1	13	A	0.75mm^2	(19)	XLPOLYO	V - CAN LOW
GRN0812-13	J43 P20-1172-1240	40	13	102 SPLICE	1	13	A	0.75mm^2	(19)	XLPOLYO	V - CAN LOW
GRN0813-2	P100 P20-1134-29-5-0	18	16	J42 P20-1172-1252	44	14	A	0.75mm^2	(19)	XLPOLYO	B - CAN LOW
GRN0819-2	P100 P20-1134-29-5-0	5	16	J43 P20-1172-1240	33	13	A	0.75mm^2	(19)	XLPOLYO	F - CAN LOW
GRN0822-2	114 SPLICE	1	11	J42 P20-1172-1252	41	14	A	0.75mm^2	(19)	XLPOLYO	D - CAN LOW
GRN0822-3	114 SPLICE	1	11	P04 P20-1199-1	J	11	A	0.75mm^2	(19)	XLPOLYO	D - CAN LOW
GRN0822-4	114 SPLICE	1	11	P147 P20-1285-102	1	11	A	0.75mm^2	(19)	XLPOLYO	D - CAN LOW
GRN0831-0	P04 P20-1199-1	G	11	J14 P20-1078	B	11	S	0.8mm^2	(18)	GXL	J1587 DATA LINK (-)
GRN1515-0	J42 P20-1172-1252	25	13	44 SPLICE	1	13	S	0.8mm^2	(18)	TXL	ANALOG GROUND
GRN3141-0	P146 P20-1228	B	11	J01 P20-1134-47-3-0	23	11	S	0.8mm^2	(18)	GXL	PT RETURN # 1
GRN3142-0	P146 P20-1228	E	11	J01 P20-1134-47-3-0	41	11	S	0.8mm^2	(18)	GXL	PT RETURN # 2
GRN3964-0	J01 P20-1134-47-3-0	20	11	P150 K333-586-204	A	14	S	0.8mm^2	(18)	GXL	AIR SHUTOFF TEST SW RTN
GRN4500-0	42 SPLICE	1	13	J42 P20-1172-1252	2	13	S	0.8mm^2	(18)	TXL	POWER SUPPLY GROUND
GRN4500-2	J01 P20-1134-47-3-0	24	11	44 SPLICE	1	13	S	0.8mm^2	(18)	GXL	NAMUX ANALOG RETURN
GRN4511-0	J60 P20-1288	1	13	42 SPLICE	1	13	S	0.8mm^2	(18)	TXL	TRANSDUCER, PRESS, PRIMARY AIR
GRN4512-0	J61 P20-1288	1	13	42 SPLICE	1	13	S	0.8mm^2	(18)	TXL	TRANSDUCER, PRESS, SECOND AIR
GRN4515-0	J62 P20-1288	1	13	42 SPLICE	1	13	S	0.8mm^2	(18)	TXL	TRACT BRK APP PRESS TRANDSDUCER
GRN4517-0	42 SPLICE	1	13	J63 P20-1201	A	13	S	0.8mm^2	(18)	TXL	AIR FILTER RESTRICTION RTN
GRN4527-0	P60 P20-1036	B	13	J01 P20-1134-47-3-0	8	11	S	0.8mm^2	(18)	TXL	OAT SENSOR RETURN
GRN4527-1	J01 P20-1134-47-3-0	44	11	44 SPLICE	1	13	S	0.8mm^2	(18)	GXL	FIREWALL OAT RETURN
GRN4620-0	44 SPLICE	1	13	J54 P20-1016	B	13	S	0.8mm^2	(18)	GXL	SPARE ANALOG INPUT, GND
GRN4851-0	J29 P20-1179	3	12	J40 P20-1183-1209	6	12	S	0.8mm^2	(18)	TXL	MCS GND
GRN7224-0	J70 P20-1223-14-1-0	C	14	J72 P20-1185	12	14	S	0.5mm^2	(20)	TXL	WATER VALVE POS PORT (-)
GRN7225-0	J70 P20-1223-14-1-0	E	14	J72 P20-1185	14	14	S	0.5mm^2	(20)	TXL	WATER VALVE MOTOR (-)
ORN0731-0	B7 CEP	1	15	J114 K333-237	1	15	S	3.0mm^2	(12)	GXL	SPARE IGNITION A
ORN0731-1	F4 CEP	1	16	J125 K333-237	1	16	S	1.0mm^2	(16)	GXL	IGN PWR, SPARE
ORN0732-0	B8 CEP	1	15	J115 K333-237	1	15	S	3.0mm^2	(12)	GXL	SPARE IGNITION B
ORN0733-0	B9 CEP	1	15	J116 K333-237	1	15	S	3.0mm^2	(12)	GXL	SPARE IGNITION C
ORN0734-0	B10 CEP	1	15	J117 K333-237	1	15	S	3.0mm^2	(12)	GXL	SPARE IGNITION D
ORN0742-0	J133 K333-549-204	A	16	J6_30 CEP	1	16	S	3.0mm^2	(12)	GXL	SPARE ACCESSORY F
ORN0743-0	J132 K333-549-204	A	16	J7_30 CEP	1	16	S	3.0mm^2	(12)	GXL	SPARE ACCESSORY G
ORN0751-0	A9 CEP	1	15	J108 K333-237	1	15	S	3.0mm^2	(12)	GXL	SPARE ACCESORY A
ORN0752-0	A10 CEP	1	15	J109 K333-237	1	15	S	3.0mm^2	(12)	GXL	SPARE ACCESORY B
ORN0753-0	A11 CEP	1	15	J110 K333-237	1	15	S	3.0mm^2	(12)	GXL	SPARE ACCESORY C
ORN0754-0	A12 CEP	1	15	J111 K333-237	1	15	S	3.0mm^2	(12)	GXL	SPARE ACCESORY D
ORN0755-0	J133 K333-549-204	B	16	J6_87A CEP	1	16	S	3.0mm^2	(12)	GXL	SPARE ACC RELAY NC 1
ORN0755-1	J132 K333-549-204	B	16	J7_87A CEP	1	16	S	3.0mm^2	(12)	GXL	SPARE ACC RELAY NC 2
ORN0756-0	J133 K333-549-204	C	16	J6_87 CEP	1	16	S	3.0mm^2	(12)	GXL	SPARE ACC RELAY NO 1
ORN0756-1	J132 K333-549-204	C	16	J7_87 CEP	1	16	S	3.0mm^2	(12)	GXL	SPARE ACC RELAY NO 2
ORN0758-0	J6_86 CEP	1	16	H7 CEP	1	16	S	0.8mm^2	(18)	GXL	ACC RELAY COIL PWR
ORN0758-2	J7_86 CEP	1	16	J6_86 CEP	1	16	S	0.8mm^2	(18)	GXL	SPARE RELAY COIL PWR
ORN0771-0	B1 CEP	1	15	J120 P20-1112	1	15	S	3.0mm^2	(12)	GXL	SPARE SWITCH CIRCUIT A
ORN0772-0	B2 CEP	1	15	J121 P20-1112	1	15	S	3.0mm^2	(12)	GXL	SPARE SWITCH CIRCUIT B
ORN0773-0	B3 CEP	1	15	J122 P20-1112	1	15	S	3.0mm^2	(12)	GXL	SPARE SWITCH CIRCUIT C
ORN0774-0	B4 CEP	1	15	J123 P20-1112	1	15	S	3.0mm^2	(12)	GXL	SPARE SWITCH CIRCUIT D
ORN0774-1	B4 CEP	1	15	J124 P20-1112	1	15	S	3.0mm^2	(12)	GXL	SPARE SWITCH CIRCUIT D
ORN0791-0	B5 CEP	1	15	J112 K333-237	1	15	S	3.0mm^2	(12)	GXL	SPARE LVD A
ORN0792-0	B6 CEP	1	15	J113 K333-237	1	15	S	3.0mm^2	(12)	GXL	SPARE LVD B
ORN0993-0	F6 CEP	1	16	P100 P20-1134-29-5-0	17	16	S	2.0mm^2	(14)	GXL	IGN PWR, AIR TANK VALVE
ORN1150-0	F2 CEP	1	16	20 SPLICE	1	12	S	0.8mm^2	(18)	GXL	IGN PWR, DOOR

WIRE INFORMATION FOR HARNESS: P92-4319-0000

WIRE NAME	FROM COMPONENT	FROM TERM	FROM SHEET	TO COMPONENT	TO TERM	TO SHEET	C OF C	WIRE SIZE	WIRE GAUGE	WIRE TYPE	DESCRIPTION
ORN1150-1	20 SPLICE	1	12	P22 P20-1173-1110	3	12	S	0.8mm^2	(18)	GXL	IGNITION PWR
ORN1150-2	P21 P20-1173-1110	3	12	20 SPLICE	1	12	S	0.8mm^2	(18)	GXL	IGNITION PWR
ORN1220-0	E2_87 CEP	1	15	74 SPLICE	1	15	S	8.0mm^2	(8)	GXL	POWER BUS, IGNITION BUS
ORN1221-0	74 SPLICE	1	15	H12_PWR CEP	1	16	S	2.0mm^2	(14)	GXL	POWER BUS, IGNITION BUS 1
ORN1221-1	74 SPLICE	1	15	B7-10_PWR CEP	1	15	S	5.0mm^2	(10)	GXL	POWER BUS, IGNITION BUS 1
ORN1222-0	74 SPLICE	1	15	E6_86 CEP	1	15	S	0.8mm^2	(18)	GXL	POWER BUS, IGNITION BUS 2
ORN1223-0	74 SPLICE	1	15	F1-6_PWR CEP	1	16	S	5.0mm^2	(10)	GXL	POWER BUS, IGNITION BUS 3
ORN1223-1	74 SPLICE	1	15	F7-10_PWR CEP	1	16	S	5.0mm^2	(10)	GXL	POWER, IGNITION BUSS
ORN1224-0	J8_86 CEP	1	16	74 SPLICE	1	15	S	0.8mm^2	(18)	GXL	POWER BUS, IGNITION BUS 4
ORN1229-0	J01 P20-1134-47-3-0	1	11	H12 CEP	1	16	S	1.0mm^2	(16)	GXL	POWER, IGN BUS
ORN1230-0	80 SPLICE	1	16	G2_87 CEP	1	16	S	8.0mm^2	(8)	GXL	POWER BUS, ACCESORY BUS
ORN1231-0	80 SPLICE	1	16	A9-12_PWR CEP	1	15	S	5.0mm^2	(10)	GXL	POWER BUS, ACCESORY BUS 1
ORN1232-0	B1-4_PWR CEP	1	15	80 SPLICE	1	16	S	5.0mm^2	(10)	GXL	POWER BUS, ACCESORY BUS 2
ORN1233-0	H5,6_PWR CEP	1	16	80 SPLICE	1	16	S	5.0mm^2	(10)	GXL	POWER BUS, ACCESORY BUS 3
ORN1234-0	CAPC CAP	A	16	80 SPLICE	1	16	S	0.8mm^2	(18)	GXL	POWER BUS, ACCESORY BUS 4
ORN1234-1	H7-11_PWR CEP	1	16	80 SPLICE	1	16	S	5.0mm^2	(10)	GXL	POWER BUS, ACCESORY BUS 4
ORN1260-0	J93 K333-537-2	1	15	70 SPLICE	1	15	S	8.0mm^2	(8)	GXL	POWER BUS, LVD
ORN1261-0	70 SPLICE	1	15	H1-4_PWR CEP	1	16	S	5.0mm^2	(10)	GXL	POWER, LVD BUS 1
ORN1262-0	B5-6_PWR CEP	1	15	70 SPLICE	1	15	S	3.0mm^2	(12)	GXL	POWER BUS, LVD BUS 2
ORN2611-0	H1 CEP	1	16	91 SPLICE	1	17	S	2.0mm^2	(14)	GXL	CAB DOME LAMP
ORN2611-1	91 SPLICE	1	17	J135 K333-549-204	B	17	S	2.0mm^2	(14)	GXL	CAB DOME LAMP
ORN2611-2	91 SPLICE	1	17	J137 P20-1191-3	2B	17	S	2.0mm^2	(14)	GXL	CAB DOME LAMP
ORN2611-3	J137 P20-1191-3	5B	17	J137 P20-1191-3	2B	17	S	2.0mm^2	(14)	GXL	CAB DOME LAMP
ORN2611-4	J12 P20-1132-1518	10	11	91 SPLICE	1	17	S	2.0mm^2	(14)	GXL	CAB DOME LAMP
ORN2611-5	J41 P20-1172-1224	22	12	91 SPLICE	1	17	S	0.5mm^2	(20)	TXL	LVD STATUS SENSE
ORN2613-0	H3 CEP	1	16	P100 P20-1134-29-5-0	1	16	S	3.0mm^2	(12)	GXL	SLEEPER DOME LAMP
ORN2624-0	J22 P20-1064	C	11	01 SPLICE	1	11	S	1.0mm^2	(16)	GXL	AUXILIARY BACKLIGHTING, CTRL
ORN2624-1	J21 P20-1064	C	11	01 SPLICE	1	11	S	1.0mm^2	(16)	GXL	AUXILIARY BACKLIGHTING, IGN PWR
ORN2950-0	J26 P20-1132-1312	6	12	01 SPLICE	1	11	S	0.8mm^2	(18)	TXL	FOG LP IGN PWR
ORN2960-0	F9 CEP	1	16	P100 P20-1134-29-5-0	7	16	S	2.0mm^2	(14)	GXL	BACKUP LAMP
ORN3112-0	J01 P20-1134-47-3-0	21	11	P18 K333-549-292	A	11	S	0.8mm^2	(18)	GXL	ECU WAKE UP
ORN3112-1	F1 CEP	1	16	J18 K333-549-192	A	11	S	0.8mm^2	(18)	GXL	ECU WAKE UP
ORN3223-0	J25 P20-1191-3	5B	12	01 SPLICE	1	11	S	1.0mm^2	(16)	GXL	INHIBIT REGENERATION
ORN3971-0	J01 P20-1134-47-3-0	5	11	F7 CEP	1	16	S	1.0mm^2	(16)	GXL	POWERTRAIN, IGN POWER
ORN4220-0	J43 P20-1172-1240	1	13	F8 CEP	1	16	S	0.5mm^2	(20)	TXL	IGNITION POWER
ORN4220-1	F10 CEP	1	16	P100 P20-1134-29-5-0	25	16	S	0.8mm^2	(18)	GXL	IGNITION POWER WAKEUP
ORN4220-2	J09 P20-1132-1518	2	11	01 SPLICE	1	11	S	1.0mm^2	(16)	TXL	IGNITION POWER
ORN4221-0	01 SPLICE	1	11	J94 K333-526	C	15	S	1.0mm^2	(16)	GXL	IGNITION, LVD OVERRIDE
ORN4300-0	01 SPLICE	1	11	F5 CEP	1	16	S	1.0mm^2	(16)	GXL	WARNING LAMPS
ORN4317-0	01 SPLICE	1	11	J10 P20-1191-3	2B	11	S	1.0mm^2	(16)	TXL	ENGN FAN OVERRIDE WARN LP
ORN4360-0	F5 CEP	1	16	P100 P20-1134-29-5-0	23	16	S	0.8mm^2	(18)	GXL	AXLE LOCK INDICATOR PWR
ORN5100-0	E6_87 CEP	1	15	B11,12_PWR CEP	1	15	S	5.0mm^2	(10)	GXL	ABS PWR
ORN5100-1	B11 CEP	1	15	J150 P20-1131-1209	3	11	S	1.0mm^2	(16)	GXL	ABS CTL PWR
ORN5100-2	110 SPLICE	1	15	P101 P20-1134-09-5-0	U	15	S	8.0mm^2	(8)	GXL	ABS PWR SWITCHED
ORN5100-3	110 SPLICE	1	15	B12 CEP	1	15	S	5.0mm^2	(10)	GXL	ABS PWR SWITCHED
ORN5910-0	H6 CEP	1	16	88 SPLICE	1	16	S	2.0mm^2	(14)	GXL	ACC PWR, WIPER
ORN5910-1	88 SPLICE	1	16	G4_86 CEP	1	16	S	2.0mm^2	(14)	GXL	ACC PWR, WIPER
ORN5910-2	88 SPLICE	1	16	G4_87 CEP	1	16	S	2.0mm^2	(14)	GXL	ACC PWR, WIPER
ORN5910-3	88 SPLICE	1	16	E4_86 CEP	1	15	S	2.0mm^2	(14)	GXL	ACC PWR, WIPER
ORN5921-0	J8_87 CEP	1	16	83 SPLICE	1	16	S	3.0mm^2	(12)	GXL	MIRROR HEAT PWR
ORN5921-1	J131 K333-237	1	16	83 SPLICE	1	16	S	3.0mm^2	(12)	GXL	MIRROR HEAT PWR
ORN5921-2	J130 K333-237	1	16	83 SPLICE	1	16	S	3.0mm^2	(12)	GXL	MIRROR HEAT PWR
ORN6100-0	H9 CEP	1	16	J86 P20-1212	2	14	S	1.0mm^2	(16)	TXL	ACC PWR, RADIO
ORN6292-0	63 SPLICE	1	14	H8 CEP	1	16	S	1.0mm^2	(16)	GXL	CB, ACC PWR
ORN6292-1	J12 P20-1132-1518	6	11	63 SPLICE	1	14	S	0.8mm^2	(18)	GXL	CB, ACC PWR
ORN6292-2	63 SPLICE	1	14	J87 K333-290	B	14	S	1.0mm^2	(16)	GXL	CB, ACC PWR
ORN6930-0	J4_86 CEP	1	16	01 SPLICE	1	11	S	1.0mm^2	(16)	GXL	REFRIGERATOR
ORN6950-0	H2 CEP	1	16	J37 K333-549-204	B	12	S	3.0mm^2	(12)	GXL	BATT PWR, ACCESSORIES
ORN6953-0	H4 CEP	1	16	61 SPLICE	1	14	S	3.0mm^2	(12)	GXL	BATT PWR, SLEEPER ACC
ORN6953-1	P101 P20-1134-09-5-0	V	16	61 SPLICE	1	14	S	3.0mm^2	(12)	GXL	BATT PWR, SLEEPER ACC
ORN6953-2	P101 P20-1134-09-5-0	W	16	61 SPLICE	1	14	S	3.0mm^2	(12)	GXL	BATT PWR, SLEEPER ACC
ORN7111-0	F3 CEP	1	16	J1_30 CEP	1	16	S	1.0mm^2	(16)	GXL	A/C COMPRESSOR CLUTCH PWR
ORN7200-0	51 SPLICE	1	14	H10 CEP	1	16	S	0.8mm^2	(18)	GXL	HVAC CAB CONTROL
ORN7210-0	J75 P20-1186-2	4	14	H11 B9	1	16	S	3.0mm^2	(12)	GXL	CAB BLOWER PWR
ORN7220-0	J72 P20-1185	8	14	51 SPLICE	1	14	S	0.8mm^2	(18)	TXL	HVAC POWER
ORN7222-0	51 SPLICE	1	14	J74 K333-540	A	14	S	0.8mm^2	(18)	GXL	HVAC, CAB SYSTEM, ACTUATOR PWR
ORN7310-0	H5 CEP	1	16	G5_30 CEP	1	16	S	3.0mm^2	(12)	GXL	SLEEPER REFRIG BLOWER ACC PWR
ORN7310-1	G5_87 CEP	1	16	60 SPLICE	1	14	S	3.0mm^2	(12)	GXL	HVAC, SLEEPER SYSTEM, BLOWER
ORN7310-2	P101 P20-1134-09-5-0	Y	16	60 SPLICE	1	14	S	3.0mm^2	(12)	GXL	SLEEPER HEAT
ORN7310-3	P101 P20-1134-09-5-0	Z	16	60 SPLICE	1	14	S	3.0mm^2	(12)	GXL	SLEEPER HEAT
ORN7360-0	P100 P20-1134-29-5-0	16	16	51 SPLICE	1	14	S	0.8mm^2	(18)	GXL	HVAC, SLEEPER POWER
RED0711-0	A1 CEP	1	15	J100 K333-237	1	15	S	3.0mm^2	(12)	GXL	SPARE BATTERY A
RED0712-0	A2 CEP	1	15	J101 K333-237	1	15	S	3.0mm^2	(12)	GXL	SPARE BATTERY B
RED0713-0	A3 CEP	1	15	J102 K333-237	1	15	S	3.0mm^2	(12)	GXL	SPARE BATTERY C
RED0714-0	A4 CEP	1	15	J103 K333-237	1	15	S	3.0mm^2	(12)	GXL	SPARE BATTERY D
RED0721-0	A5 CEP	1	15	J104 K333-237	1	15	S	3.0mm^2	(12)	GXL	SPARE BATTERY E
RED0722-0	A6 CEP	1	15	J105 K333-237	1	15	S	3.0mm^2	(12)	GXL	SPARE BATTERY F
RED0723-0	A7 CEP	1	15	J106 K333-237	1	15	S	3.0mm^2	(12)	GXL	SPARE BATTERY G
RED0724-0	A8 CEP	1	15	J107 K333-237	1	15	S	3.0mm^2	(12)	GXL	SPARE BATTERY H
RED0996-0	P04 P20-1199-1	B	11	71 SPLICE	1	15	S	1.0mm^2	(16)	GXL	DIAGNOSTIC CONN, BATT
RED1150-0	C12 CEP	1	15	P21 P20-1173-1110	2	12	S	2.0mm^2	(14)	GXL	BATT PWR, LH DOOR
RED1150-1	C11 CEP	1	15	P22 P20-1173-1110	2	12	S	2.0mm^2	(14)	GXL	BATTERY PWR
RED1210-0	J95 K333-46-25	1	15	94L SPLICE	1	15	S	19.0mm^2	(4)	CPE	POWER BUS, BATTERY BUS
RED1210-1	J95 K333-46-25	1	15	94R SPLICE	1	15	S	19.0mm^2	(4)	CPE	POWER BUS, BATTERY BUS
RED1211-0	A1,3_PWR CEP	1	15	94L SPLICE	1	15	S	5.0mm^2	(10)	GXL	POWER BUS, BATTERY BUS 1

DWG SIZE A0

https://truckmanualshub.com/

KENWORTH A PACCAR COMPANY Harness - Instr Panel B-Cab

P92-4319 C 05

© 2009 PACCAR Inc – All Rights Reserved – The information contained in this drawing is proprietary to PACCAR. Reproduction, in whole or in part, by any means is strictly prohibited without prior written authorization from PACCAR Inc.

USAGE NOTE:

USE ON T4 / T6 / T8 / W9 / C5 CABS WITH NAMUX III INSTRUMENTATION AND 2010 ENGINES.

WIRE INFORMATION FOR HARNESS: P92-4319-0000

WIRE NAME	FROM COMPONENT	FROM TERM	FROM SHEET	TO COMPONENT	TO TERM	TO SHEET	C OF C	WIRE SIZE	WIRE GAUGE	WIRE TYPE	DESCRIPTION
RED1211-1	A4-6_PWR CEP	1	15	94L SPLICE	1	15	S	5.0mm^2	(10)	GXL	POWER BUS, BATTERY BUS 1
RED1211-2	A7,8_PWR CEP	1	15	94R SPLICE	1	15	S	3.0mm^2	(12)	GXL	POWER BUS, BATTERY BUS 1
RED1212-0	94L SPLICE	1	15	C1-5_PWR CEP	1	15	S	5.0mm^2	(10)	GXL	POWER BUS, BATTERY BUS 3
RED1212-1	94R SPLICE	1	15	C7-10_PWR CEP	1	15	S	5.0mm^2	(10)	GXL	POWER BUS, BATTERY BUS 3
RED1212-2	94R SPLICE	1	15	C11-12_PWR CEP	1	15	S	3.0mm^2	(12)	GXL	POWER BUS, BATTERY BUS 3
RED1213-0	D2-4_PWR CEP	1	15	94L SPLICE	1	15	S	5.0mm^2	(10)	GXL	POWER BUS, BATTERY BUS 4
RED1213-1	D8-12_PWR CEP	1	15	94R SPLICE	1	15	S	5.0mm^2	(10)	GXL	POWER BUS, BATTERY BUS
RED1214-0	F11,12_PWR CEP	1	16	94R SPLICE	1	15	S	5.0mm^2	(10)	GXL	POWER BUS, BATTERY BUS
RED1215-0	H1-4_PWR CEP	1	16	94R SPLICE	1	15	S	5.0mm^2	(10)	GXL	POWER BUS, BATTERY BUS 6
RED1217-0	E2_30 CEP	1	15	94L SPLICE	1	15	S	8.0mm^2	(8)	GXL	POWER BUS, BATTERY BUS 7
RED1218-0	94L SPLICE	1	15	G2_30 CEP	1	16	S	8.0mm^2	(8)	GXL	POWER BUS, BATTERY BUS 8
RED1219-0	P93 K333-536-2	1	15	94R SPLICE	1	15	S	8.0mm^2	(8)	GXL	POWER BUS, BATTERY BUS 9
RED1910-0	94 SPLICE	1	17	C2 CEP	1	15	S	1.0mm^2	(16)	GXL	KEYSWITCH BATT PWR
RED1910-1	J138 P20-1095	4	17	94 SPLICE	1	17	S	1.0mm^2	(16)	GXL	KEYSWITCH BATT PWR
RED2411-0	C10 CEP	1	15	76 SPLICE	1	15	S	3.0mm^2	(12)	GXL	PARK LAMP PWR
RED2411-1	76 SPLICE	1	15	E1_30 CEP	1	15	S	3.0mm^2	(12)	GXL	PARK LAMP PWR
RED2411-2	76 SPLICE	1	15	E1_86 CEP	1	15	S	3.0mm^2	(12)	GXL	PARK LAMP PWR
RED2412-0	94L SPLICE	1	15	G3_86 CEP	1	16	S	2.0mm^2	(14)	GXL	CAB MARKER LAMPS RELAY PWR
RED2412-1	94L SPLICE	1	15	G3_30 CEP	1	16	S	2.0mm^2	(14)	GXL	CAB MARKER LAMPS PWR
RED2415-3	D4 CEP	1	15	J79 K333-549-202	A	14	S	2.0mm^2	(14)	GXL	STOP LAMPS, BATT PWR
RED2640-0	71 SPLICE	1	15	28 SPLICE	1	12	S	1.0mm^2	(16)	GXL	LIGHTING, DOOR JAMB SWITCHES
RED2641-0	P28 K333-511	3	12	28 SPLICE	1	12	S	0.8mm^2	(18)	GXL	LTNG, DOOR JAMB SW, LH
RED2642-0	P26 K333-511	3	12	28 SPLICE	1	12	S	0.8mm^2	(18)	GXL	LTNG, DOOR JAMB SW, RH
RED2900-0	C1 CEP	1	15	78 SPLICE	1	15	S	0.8mm^2	(18)	GXL	MISC LIGHTING PWR
RED2911-0	C7 CEP	1	15	J11 P20-1191-3	2B	11	S	1.0mm^2	(16)	TXL	BEACON/SIGN LAMP PWR
RED2940-0	03 SPLICE	1	11	C8 CEP	1	15	S	1.0mm^2	(16)	GXL	LIGHTING, FLOOD/WORK/LOAD & SPOT
RED2940-1	J97 K333-237	1	11	03 SPLICE	1	11	S	1.0mm^2	(16)	GXL	LIGHTING, FLOOD/WORK/LOAD & SPOT
RED2940-2	03 SPLICE	1	11	J12 P20-1132-1518	12	11	S	1.0mm^2	(16)	GXL	LIGHTING, FLOOD
RED2941-0	78 SPLICE	1	15	J136 P20-1191-3	2B	17	S	0.8mm^2	(18)	GXL	FLOOD LIGHT PWR
RED2941-1	J2_30 CEP	1	16	C3 CEP	1	15	S	2.0mm^2	(14)	GXL	FLOOD LIGHT PWR
RED2941-2	C3 CEP	1	15	J2_86 CEP	1	16	S	2.0mm^2	(14)	GXL	FLOOD LIGHT PWR
RED2980-0	78 SPLICE	1	15	J09 P20-1132-1518	13	11	S	0.8mm^2	(18)	TXL	HAZARD PWR
RED3153-0	94 SPLICE	1	17	G1_86 CEP	1	16	S	1.0mm^2	(16)	GXL	IDLE CTRL SYS, TIMER
RED3155-0	94 SPLICE	1	17	G1_30 CEP	1	16	S	1.0mm^2	(16)	GXL	IDLE CTRL SYS, IGNITION RELAY CONTROL
RED3914-0	94 SPLICE	1	17	J5_86 CEP	1	16	S	0.8mm^2	(18)	GXL	CECU ST ARTER INTERRUPT
RED4210-0	J40 P20-1183-1209	9	12	F11 CEP	1	16	S	2.0mm^2	(14)	GXL	CECU POWER 2
RED4210-1	J40 P20-1183-1209	2	12	F12 CEP	1	16	S	2.0mm^2	(14)	GXL	CECU POWER 1
RED4210-2	J39 P20-1173-1214	1	13	D8 CEP	1	15	S	0.8mm^2	(18)	TXL	INSTRUM, POWER, BATTERY
RED4920-0	78 SPLICE	1	15	J89 K333-514	B	14	S	0.8mm^2	(18)	GXL	CLOCK PWR
RED4930-0	71 SPLICE	1	15	D10 CEP	1	15	S	1.0mm^2	(16)	GXL	BATT PWR, DIAGNOSTICS
RED5100-0	75 SPLICE	1	15	P101 P20-1134-09-5-0	R	16	S	13.0mm^2	(6)	CPE	TRL ABS PWR
RED5100-1	75 SPLICE	1	15	E6_30 CEP	1	15	S	5.0mm^2	(10)	GXL	ABS PWR
RED5111-0	D12 CEP	1	15	J151 K333-549-102	A	11	S	3.0mm^2	(12)	GXL	ABS MONITOR FEED
RED5910-0	J70 P20-1223-14-1-0	K	14	C9 CEP	1	15	S	2.0mm^2	(14)	GXL	WIPER MOTOR POWER
RED5921-0	D11 CEP	1	15	J8_30 CEP	1	16	S	3.0mm^2	(12)	GXL	BATT PWR, MIRROR HEAT
RED5970-0	J3_30 CEP	1	16	71 SPLICE	1	15	S	1.0mm^2	(16)	GXL	BATT PWR, HORN
RED5970-1	71 SPLICE	1	15	J3_86 CEP	1	16	S	1.0mm^2	(16)	GXL	BATT PWR, HORN
RED6191-0	D3 CEP	1	15	P13 K333-598	1	11	S	1.0mm^2	(16)	GXL	RADIO, BATT POWER
RED6191-1	J13 P20-1112	1	11	62 SPLICE	1	14	S	1.0mm^2	(16)	GXL	RADIO, MEMORY POWER
RED6191-2	J86 P20-1212	8	14	62 SPLICE	1	14	S	1.0mm^2	(16)	GXL	RADIO, MEMORY POWER
RED6291-0	J13 P20-1112	1	11	J12 P20-1132-1518	5	11	S	1.0mm^2	(16)	GXL	CB, BATT POWER
RED6291-1	J87 K333-290	A	14	62 SPLICE	1	14	S	1.0mm^2	(16)	GXL	CB, MEMORY POWER
RED6623-0	94L SPLICE	1	15	E3_86 CEP	1	15	S	0.8mm^2	(18)	GXL	MARKER / CLEARANCE FLASH RELAY PWR
RED6750-0	D9 CEP	1	15	J23 P20-1175	E	12	S	0.8mm^2	(18)	GXL	RKE, PWR
RED9120-0	75 SPLICE	1	15	E5_30 CEP	1	15	S	5.0mm^2	(10)	GXL	TRAILER STOP LAMP PWR
RED9120-2	D2 CEP	1	15	E5_86 CEP	1	15	S	0.8mm^2	(18)	GXL	TRAILER STOP RELAY CTRL BATT
RED9130-0	94R SPLICE	1	15	G6_86 CEP	1	16	S	0.8mm^2	(18)	GXL	MARKER / CLEARANCE LAMP PWR
RED9130-1	94R SPLICE	1	15	G6_30 CEP	1	16	S	3.0mm^2	(12)	GXL	MARKER / CLEARANCE LAMP RTN
RED9920-0	C5 CEP	1	15	J129 K333-33	1	16	S	3.0mm^2	(12)	GXL	TRAILER HOTWIRE
RED9920-1	P129 K333-41	1	16	P101 P20-1134-09-5-0	T	16	S	3.0mm^2	(12)	GXL	TRAILER HOTWIRE
VIO0831-0	P04 P20-1199-1	F	11	J14 P20-1078	A	11	S	0.8mm^2	(18)	GXL	J1587 DATA LINK (+)
VIO3141-0	P146 P20-1228	C	11	J01 P20-1134-47-3-0	12	11	S	0.8mm^2	(18)	GXL	PT SUPPLY #1 (+5V)
VIO3142-0	J01 P20-1134-47-3-0	13	11	P146 P20-1228	D	11	S	0.8mm^2	(18)	GXL	PT SUPPLY #2 (+5V)
VIO4500-0	43 SPLICE	1	13	J42 P20-1172-1252	1	13	S	0.8mm^2	(18)	TXL	PWR SUPP SENSOR +5V
VIO4500-2	43 SPLICE	1	13	J01 P20-1134-47-3-0	28	11	S	0.8mm^2	(18)	GXL	NAMUX POWER SUPPLY (+5V)
VIO4511-0	J60 P20-1288	2	13	43 SPLICE	1	13	S	0.8mm^2	(18)	TXL	TRANSDUCER, PRESS, PRIMARY AIR
VIO4512-0	J61 P20-1288	2	13	43 SPLICE	1	13	S	0.8mm^2	(18)	TXL	TRANSDUCER, PRESS, SECOND AIR
VIO4515-0	J62 P20-1288	2	13	43 SPLICE	1	13	S	0.8mm^2	(18)	TXL	TRACT BRK APP PRESS TRANDSDUCER
VIO4517-0	43 SPLICE	1	13	J63 P20-1201	C	13	S	0.8mm^2	(18)	TXL	AIRFILTER RESTRICTION SUPPLY
VIO4620-0	J54 P20-1016	A	13	43 SPLICE	1	13	S	0.8mm^2	(18)	GXL	SPARE ANALOG INPUT, PWR
VIO7224-0	J70 P20-1223-14-1-0	N	14	J72 P20-1185	13	14	S	0.5mm^2	(20)	TXL	WATER VALVE POS PORT (+)
WHT0996-0	P04 P20-1199-1	A	11	26 SPLICE	1	12	S	2.0mm^2	(14)	GXL	DIAGNOSTIC CONN, GND
WHT1220-0	25 SPLICE	1	12	E2_85 CEP	1	15	S	0.8mm^2	(18)	GXL	POWER BUS, IGNITION BUS RELAY RTN
WHT1230-0	E6_85 CEP	1	15	G2_85 CEP	1	16	S	0.8mm^2	(18)	GXL	ACCESSORY BUS, GND
WHT1512-0	J70 P20-1223-14-1-0	G	14	65 SPLICE	1	14	S	2.0mm^2	(14)	TXL	FIREWALL HARN RETURN
WHT1515-0	24 SPLICE	1	12	J35 K333-46-38	1	12	S	32.0mm^2	(2)	SGX	INSTRUMENT PANEL, GROUND
WHT1515-1	26 SPLICE	1	12	24 SPLICE	1	12	S	19.0mm^2	(4)	CPE	INSTRUMENT PANEL, GROUND
WHT1515-2	24 SPLICE	1	12	65 SPLICE	1	14	S	19.0mm^2	(4)	CPE	GROUNDS, INSTRUMENT PANEL
WHT1515-3	25 SPLICE	1	12	CAPC CAP	B	16	S	0.8mm^2	(18)	GXL	INSTRUMENT PANEL, GROUND
WHT1515-4	26 SPLICE	1	12	25 SPLICE	1	12	S	8.0mm^2	(8)	GXL	INSTRUMENT PANEL, GROUND
WHT1515-5	J39 P20-1173-1214	3	13	65 SPLICE	1	14	S	2.0mm^2	(14)	TXL	GND, INSTRUMENT PANEL
WHT1515-6	J44 P20-1183-2209	5	13	64 SPLICE	1	14	S	0.8mm^2	(18)	TXL	GROUND, INSTRUMENT PANEL
WHT1515-7	65 SPLICE	1	14	64 SPLICE	1	14	S	13.0mm^2	(6)	CPE	GROUNDS, INSTRUMENT PANEL
WHT1515-8	J91 K333-54	1	14	64 SPLICE	1	14	S	2.0mm^2	(14)	GXL	INSTRUMENT PANEL, GROUND

WIRE INFORMATION FOR HARNESS: P92-4319-0000

WIRE NAME	FROM COMPONENT	FROM TERM	FROM SHEET	TO COMPONENT	TO TERM	TO SHEET	C OF C	WIRE SIZE	WIRE GAUGE	WIRE TYPE	DESCRIPTION
WHT1515-9	J92 K333-54	1	14	64 SPLICE	1	14	S	2.0mm^2	(14)	GXL	INSTRUMENT PANEL, GROUND
WHT1515-10	J30 K333-54	1	12	25 SPLICE	1	12	S	2.0mm^2	(14)	GXL	INSTRUMENT PANEL, GROUND
WHT1515-11	J31 K333-54	1	12	25 SPLICE	1	12	S	2.0mm^2	(14)	GXL	INSTRUMENT PANEL, GROUND
WHT1515-12	25 SPLICE	1	12	J33 K333-54	1	12	S	2.0mm^2	(14)	GXL	INSTRUMENT PANEL, GROUND
WHT1515-13	J40 P20-1183-1209	5	12	64 SPLICE	1	14	S	2.0mm^2	(14)	GXL	CECU GROUND
WHT1515-14	J37 K333-549-204	A	12	64 SPLICE	1	14	S	3.0mm^2	(12)	GXL	GND, INSTRUMENT PANEL
WHT1515-15	J09 P20-1132-1518	1	11	64 SPLICE	1	14	S	1.0mm^2	(16)	TXL	GROUND,INSTRUM PNL
WHT1515-16	J26 P20-1132-1312	1	12	64 SPLICE	1	14	S	1.0mm^2	(16)	GXL	GROUND, I / P
WHT1515-17	J09 P20-1132-1518	7	11	64 SPLICE	1	14	S	0.8mm^2	(18)	TXL	GROUND,INSTRUM PNL
WHT1515-18	54 SPLICE	1	14	65 SPLICE	1	14	S	0.8mm^2	(18)	GXL	TURN STALK RETURN
WHT1515-19	J12 P20-1132-1518	9	11	65 SPLICE	1	14	S	3.0mm^2	(12)	GXL	CAB ROOF RETURN
WHT1515-20	J12 P20-1132-1518	18	11	65 SPLICE	1	14	S	3.0mm^2	(12)	GXL	CAB ROOF RETURN
WHT1521-0	P21 P20-1173-1110	1	12	26 SPLICE	1	12	S	2.0mm^2	(14)	TXL	GROUND, DOOR
WHT1521-1	P22 P20-1173-1110	1	12	64 SPLICE	1	14	S	2.0mm^2	(14)	TXL	GROUND, DOOR
WHT2612-0	26 SPLICE	1	12	J134 P20-1037	A	17	S	0.8mm^2	(18)	TXL	CAB COURTESY LAMP RTN
WHT2620-0	26 SPLICE	1	12	J34 P20-1198	B	12	S	0.8mm^2	(18)	TXL	DASH / PANEL ILLUMINATION
WHT2620-1	J34 P20-1198	9	12	26 SPLICE	1	12	S	0.8mm^2	(18)	TXL	DASH / PANEL ILLUMINATION
WHT2622-0	26 SPLICE	1	12	J137 P20-1191-3	7	17	S	0.8mm^2	(18)	TXL	BACKLIGHTING, SW RTN
WHT2622-1	26 SPLICE	1	12	J135 K333-549-204	A	17	S	0.8mm^2	(18)	TXL	BACKLIGHTING, SW RTN
WHT2624-0	J22 P20-1064	A	11	64 SPLICE	1	14	S	1.0mm^2	(16)	GXL	AUXILIARY BACKLIGHTING, GND
WHT2624-1	26 SPLICE	1	12	J21 P20-1064	A	11	S	1.0mm^2	(16)	GXL	AUXILIARY BACKLIGHTING, GND
WHT2911-0	J11 P20-1191-3	7	11	64 SPLICE	1	14	S	1.0mm^2	(16)	TXL	BEACON / SIGN LAMP GND
WHT2941-0	26 SPLICE	1	12	J136 P20-1191-3	7	17	S	0.8mm^2	(18)	TXL	FLOOD LIGHT RTN
WHT2941-1	J136 P20-1191-3	6	17	J136 P20-1191-3	7	17	S	0.8mm^2	(18)	TXL	FLOOD LIGHT RTN
WHT3192-0	26 SPLICE	1	12	J10 P20-1191-3	7	11	S	0.8mm^2	(18)	TXL	ENGINE FAN OVERRIDE, GND
WHT3192-1	J10 P20-1191-3	7	11	J10 P20-1191-3	5B	11	S	0.8mm^2	(18)	TXL	ENGINE FAN OVERRIDE, GND
WHT3192-2	P02 K333-598	1	11	J10 P20-1191-3	5B	11	S	0.8mm^2	(18)	GXL	ENGINE FAN OVERRIDE, GND
WHT3195-0	J07 P20-1112	1	12	25 SPLICE	1	12		0.8mm^2	(18)	GXL	
WHT4211-0	J94 K333-526	A	15	26 SPLICE	1	12	S	1.0mm^2	(16)	GXL	LVD SENSE GND
WHT4319-0	J151 K333-549-102	B	11	65 SPLICE	1	14	S	3.0mm^2	(12)	GXL	ABS HARNESS RETURN
WHT4360-0	J143 K333-549-106	A	11	64 SPLICE	1	14	S	1.0mm^2	(16)	TXL	DIFF LOCK
WHT4392-0	65 SPLICE	1	14	J81 P20-1112	1	14	S	1.0mm^2	(16)	GXL	PARK BRAKE SET
WHT4920-0	J89 K333-514	A	14	65 SPLICE	1	14	S	1.0mm^2	(16)	TXL	CLOCK GND
WHT5113-0	26 SPLICE	1	12	J20 P20-1112	1	11	S	0.8mm^2	(18)	GXL	ABS DIAGNOSTIC
WHT5451-0	P24 K333-550-102	A	12	26 SPLICE	1	12	S	0.8mm^2	(18)	TXL	SEAT BELT SWITCH, GND
WHT5921-0	J32 K333-237	1	12	25 SPLICE	1	12	S	2.0mm^2	(14)	GXL	MIRROR HEAT, GROUND
WHT5921-1	64 SPLICE	1	14	J90 K333-237	1	14	S	2.0mm^2	(14)	GXL	MIRROR HEAT, GND
WHT5952-0	J25 P20-1191-3	2B	12	64 SPLICE	1	14	S	1.0mm^2	(16)	TXL	AFTERTREATMENT REGEN VALIDATION, GND
WHT5952-1	J25 P20-1191-3	2B	12	J25 P20-1191-3	7	12	S	1.0mm^2	(16)	TXL	REGEN VALIDATION, GND
WHT5970-0	P102 P20-1036	A	16	65 SPLICE	1	14	S	0.8mm^2	(18)	TXL	HORN GND
WHT6100-0	J86 P20-1212	4	14	64 SPLICE	1	14	S	1.0mm^2	(16)	TXL	RADIO, GROUND
WHT6200-0	J87 K333-290	C	14	64 SPLICE	1	14	S	1.0mm^2	(16)	TXL	CB, GROUND
WHT6623-0	E3_30 CEP	1	15	E2_85 CEP	1	15	S	0.8mm^2	(18)	GXL	MARKER/CLEARANCE FLASH, RELAY RTN
WHT6750-0	J23 P20-1175	N	12	65 SPLICE	1	14	S	0.8mm^2	(18)	GXL	RKE, GROUND
WHT6750-1	J24 P20-1015	1	12	J23 P20-1175	L	12	S	0.8mm^2	(18)	GXL	RKE, PROGRAM
WHT6930-0	G5_85 CEP	1	16	J4_85 CEP	1	16	S	0.8mm^2	(18)	GXL	REFRIGERATOR WARNING LAMP RTN
WHT7214-0	J75 P20-1186-2	2	14	64 SPLICE	1	14	S	3.0mm^2	(12)	GXL	HVAC, FAN SPEED SIGNAL GND
WHT7220-0	J72 P20-1185	7	14	64 SPLICE	1	14	S	0.8mm^2	(18)	TXL	HVAC GROUND
WHT7222-0	J74 K333-540	C	14	64 SPLICE	1	14	S	0.8mm^2	(18)	GXL	HVAC, CAB SYSTEM, ACTUATOR GND
WHT7310-0	G5_85 CEP	1	16	G2_85 CEP	1	16	S	0.8mm^2	(18)	GXL	SLEEPER REFRIG BLOWER RTN
WHT9120-0	E3_30 CEP	1	15	E6_85 CEP	1	15	S	0.8mm^2	(18)	GXL	TRAILER STOP LAMP, RELAY RTN
YEL0781-0	J126 K333-237	1	16	P100 P20-1134-29-5-0	3	16	S	3.0mm^2	(12)	GXL	SPARE CKT, (EURO TAIL LAMP)
YEL0811-0	J39 P20-1173-1214	9	13	P149 P20-1151	2	13	A	0.75mm^2	(19)	XLPOLYO	I - CAN HIGH
YEL0811-1	J43 P20-1172-1240	34	13	J149 P20-1150	2	13	A	0.75mm^2	(19)	XLPOLYO	I - CAN HIGH
YEL0811-2	J39 P20-1173-1214	9	13	J43 P20-1172-1240	34	13	A	0.75mm^2	(19)	XLPOLYO	I - CAN HIGH
YEL0812-1	12 SPLICE	1	11	07 SPLICE	1	11	A	0.75mm^2	(19)	XLPOLYO	V - CAN HIGH
YEL0812-3	P148 P20-1193-1202G	2	11	12 SPLICE	1	11	A	0.75mm^2	(19)	XLPOLYO	V - CAN HIGH
YEL0812-7	P04 P20-1199-1	C	11	12 SPLICE	1	11	A	0.75mm^2	(19)	XLPOLYO	V - CAN HIGH
YEL0812-8	07 SPLICE	1	11	J43 P20-1172-1240	37	13	A	0.75mm^2	(19)	XLPOLYO	V - CAN HIGH
YEL0812-9	J148 P20-1193-1102G	2	11	J01 P20-1134-47-3-0	31	11	A	0.75mm^2	(19)	XLPOLYO	V - CAN HIGH
YEL0812-10	J150 P20-1131-1209	2	11	07 SPLICE	1	11	A	0.75mm^2	(19)	XLPOLYO	V - CAN HI
YEL0813-2	J42 P20-1172-1252	43	14	P100 P20-1134-29-5-0	20	16	A	0.75mm^2	(19)	XLPOLYO	B - CAN HIGH
YEL0819-2	P100 P20-1134-29-5-0	6	16	J43 P20-1172-1240	32	13	A	0.75mm^2	(19)	XLPOLYO	F - CAN HIGH
YEL0822-2	J42 P20-1172-1252	40	14	115 SPLICE	1	11	A	0.75mm^2	(19)	XLPOLYO	D - CAN HIGH
YEL0822-3	115 SPLICE	1	11	P04 P20-1199-1	H	11	A	0.75mm^2	(19)	XLPOLYO	D - CAN HIGH
YEL0822-4	115 SPLICE	1	11	P147 P20-1285-102	2	11	A	0.75mm^2	(19)	XLPOLYO	D - CAN HIGH
YEL2300-0	58 SPLICE	1	14	J78 K333-526	C	14	S	2.0mm^2	(14)	GXL	LIGHTING, TURN INDICATORS
YEL2311-3	J82 P20-1112	1	14	56 SPLICE	1	14	S	2.0mm^2	(14)	GXL	TURN LIGHT, FRONT / MID, LH
YEL2311-4	56 SPLICE	1	14	J78 K333-526	B	14	S	2.0mm^2	(14)	GXL	TURN LIGHT, FRONT / MID, LH
YEL2311-5	56 SPLICE	1	14	P100 P20-1134-29-5-0	8	16	S	2.0mm^2	(14)	GXL	LH TURN/HAZ LAMP
YEL2312-3	J83 P20-1112	1	14	57 SPLICE	1	14	S	2.0mm^2	(14)	GXL	TURN LIGHT, FRONT/MID, RH
YEL2312-4	J78 K333-526	A	14	57 SPLICE	1	14	S	2.0mm^2	(14)	GXL	TURN LIGHT, FRONT/MID, RH
YEL2312-5	57 SPLICE	1	14	P100 P20-1134-29-5-0	9	16	S	2.0mm^2	(14)	GXL	RH TURN / HAZ LAMP
YEL2411-0	95 SPLICE	1	16	P100 P20-1134-29-5-0	12	16	S	2.0mm^2	(14)	GXL	PARK LAMP
YEL2411-1	J128 K333-237	1	16	95 SPLICE	1	16	S	3.0mm^2	(12)	GXL	PARK LAMP
YEL2411-2	J127 K333-237	1	16	95 SPLICE	1	16	S	3.0mm^2	(12)	GXL	PARK LAMP
YEL2411-3	103 SPLICE	1	15	D1_PWR CEP	1	15	S	1.0mm^2	(16)	GXL	PARK LAMP
YEL2411-4	95 SPLICE	1	16	103 SPLICE	1	15	S	3.0mm^2	(12)	GXL	PARK LAMP
YEL2411-5	E1_87 CEP	1	15	103 SPLICE	1	15	S	3.0mm^2	(12)	GXL	PARK LAMP
YEL2412-0	84 SPLICE	1	11	P100 P20-1134-29-5-0	13	16	S	2.0mm^2	(14)	GXL	CAB MARKER LAMPS
YEL2412-1	C6_PWR CEP	1	15	G3_87 CEP	1	16	S	2.0mm^2	(14)	GXL	CAB MARKER LAMPS
YEL2412-2	C8 CEP	1	15	84 SPLICE	1	11	S	2.0mm^2	(14)	GXL	CAB MARKER LAMPS
YEL2412-4	84 SPLICE	1	11	J12 P20-1132-1518	7	11	S	1.0mm^2	(16)	GXL	CAB MARKER LAMPS
YEL2415-0	J79 K333-549-202	B	14	58 SPLICE	1	14	S	2.0mm^2	(14)	GXL	LIGHTING, STOP LAMP
YEL2415-1	58 SPLICE	1	14	D5_PWR CEP	1	15	S	2.0mm^2	(14)	GXL	STOP LAMP ACTIVE

DWG SIZE A0

https://truckmanualshub.com/

KENWORTH A PACCAR COMPANY

Harness - Instr Panel B-Cab

P92-4319 C 06

© 2009 PACCAR Inc – All Rights Reserved – The information contained in this drawing is proprietary to PACCAR. Reproduction, in whole or in part, by any means is strictly prohibited without prior written authorization from PACCAR Inc.

WIRE INFORMATION FOR HARNESS: P92-4319-0000

WIRE NAME	FROM COMPONENT	FROM TERM	FROM SHEET	TO COMPONENT	TO TERM	TO SHEET	C OF C	WIRE SIZE	WIRE GAUGE	WIRE TYPE	DESCRIPTION
YEL2415-2	J150 P20-1131-1209	6	11	58 SPLICE	1	14	S	2.0mm^2	(14)	GXL	ABS STOP LP SIG
YEL2631-0	P21 P20-1173-1110	4	12	P28 K333-511	2	12	S	0.8mm^2	(18)	GXL	DOOR COURTESY LAMP
YEL2632-0	P22 P20-1173-1110	4	12	P26 K333-511	2	12	S	0.8mm^2	(18)	GXL	DOOR COURTESY LAMP
YEL2911-0	J12 P20-1132-1518	8	11	J11 P20-1191-3	3	11	S	1.0mm^2	(16)	TXL	BEACON / SIGN LAMP
YEL2921-0	P28 K333-511	1	12	30 SPLICE	1	12	S	0.8mm^2	(18)	GXL	LIGHTING, STEP LP, LH
YEL2921-1	30 SPLICE	1	12	P29 K333-550-101	1	12	S	0.8mm^2	(18)	GXL	LIGHTING, STEP LP, LH
YEL2922-0	P26 K333-511	1	12	29 SPLICE	1	12	S	0.8mm^2	(18)	GXL	LIGHTING, STEP LP, RH
YEL2922-1	29 SPLICE	1	12	P27 K333-550-101	1	12	S	0.8mm^2	(18)	GXL	LIGHTING, STEP LP, RH
YEL2941-0	J2_87 CEP	1	16	86 SPLICE	1	16	S	2.0mm^2	(14)	GXL	FLOOD LAMP
YEL2941-1	86 SPLICE	1	16	J12 P20-1132-1518	17	11	S	2.0mm^2	(14)	GXL	FLOOD LAMP
YEL2941-2	97 SPLICE	1	16	P100 P20-1134-29-5-0	4	16	S	3.0mm^2	(12)	GXL	SLEEPER FLOOD LAMP
YEL2941-3	97 SPLICE	1	16	P100 P20-1134-29-5-0	14	16	S	2.0mm^2	(14)	GXL	FLOOD LAMP
YEL2941-4	97 SPLICE	1	16	86 SPLICE	1	16	S	2.0mm^2	(14)	GXL	FLOOD LAMP
YEL3961-0	J01 P20-1134-47-3-0	35	11	P150 K333-586-204	C	14	S	0.8mm^2	(18)	GXL	AIR SHUTOFF MANUAL SW SIG
YEL4100-0	39 SPLICE	1	13	J40 P20-1183-1209	1	12	S	0.8mm^2	(18)	TXL	CVSG POWER
YEL4100-1	39 SPLICE	1	13	J56 P20-1172-1204	4	13	S	0.5mm^2	(20)	TXL	INSTRUMENTATION, GAUGES POWER
YEL4100-2	39 SPLICE	1	13	J55 P20-1172-1204	4	13	S	0.5mm^2	(20)	TXL	INSTRUMENTATION, GAUGES POWER
YEL4851-0	J29 P20-1179	1	12	J40 P20-1183-1209	4	12	S	0.8mm^2	(18)	TXL	MCS SUPPLY
YEL5910-0	E4_30 CEP	1	15	G4_30 CEP	1	16	S	2.0mm^2	(14)	GXL	WIPER PWR
YEL5910-1	G4_87A CEP	1	16	J70 P20-1223-14-1-0	L	14	S	1.0mm^2	(16)	GXL	WIPER PARK
YEL5911-0	J70 P20-1223-14-1-0	M	14	E4_87A CEP	1	15	S	1.0mm^2	(16)	GXL	WIPER LOW
YEL5912-0	J70 P20-1223-14-1-0	J	14	E4_87 CEP	1	15	S	1.0mm^2	(16)	GXL	WIPER HI
YEL5970-0	J70 P20-1223-14-1-0	H	14	J3_87 CEP	1	16	S	1.0mm^2	(16)	GXL	HORN PWR
YEL7111-0	J1_87 CEP	1	16	J01 P20-1134-47-3-0	4	11	S	1.0mm^2	(16)	GXL	A / C COMPRESSOR CLUTCH
YEL7210-0	P71 K333-432	B	14	J73 P20-1186-1	1	14	S	3.0mm^2	(12)	GXL	HVAC, CAB SYSTEM, BLOWER (+)
YEL7221-0	J72 P20-1185	3	14	J71 K333-549-202	A	14	S	0.5mm^2	(20)	TXL	RECIRC DOOR (+)
YEL7226-0	J70 P20-1223-14-1-0	P	14	J72 P20-1185	15	14	S	0.5mm^2	(20)	TXL	WATER VALVE MOTOR (+)
YEL9120-1	E5_87 CEP	1	15	D6_PWR CEP	1	15	S	5.0mm^2	(10)	GXL	TRAILER STOP LAMP PWR
YEL9120-2	111 SPLICE	1	15	D6 CEP	1	15	S	5.0mm^2	(10)	GXL	TRAILER STOP LAMP PWR
YEL9120-3	P101 P20-1134-09-5-0	S	16	111 SPLICE	1	15	S	8.0mm^2	(8)	GXL	TRAILER STOP LAMP PWR
YEL9130-0	G6_87 CEP	1	16	D7_PWR CEP	1	15	S	3.0mm^2	(12)	GXL	MARKER/CLEARANCE LAMP
YEL9130-1	D7 CEP	1	15	P100 P20-1134-29-5-0	2	16	S	3.0mm^2	(12)	GXL	TRAILER MARKER LAMP

DETAIL G:

(SEE SHEET 8 ZONE E11)

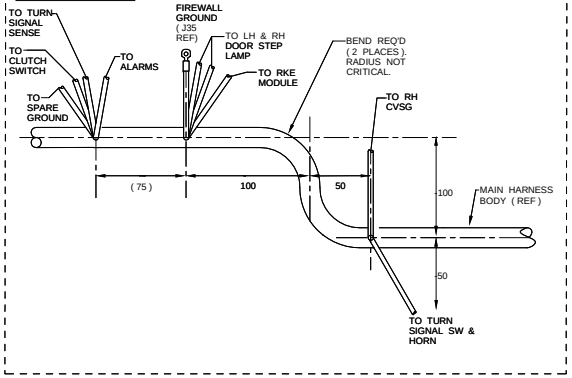

USAGE NOTE:

USE ON T4 / T6 / T8 / W9 / C5 CABS WITH NAMUX III INSTRUMENTATION AND 2010 ENGINES.

SECTION S-S:

(SEE NOTE 7 ON SHEET 2)

ALL BREAKOUTS MARKED TO BE ORIENTED OUTWARD, 90° FROM DRAWING PAPER

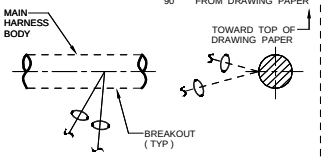

SECTION L-L:

(SEE SHEET 7 ZONE F5)

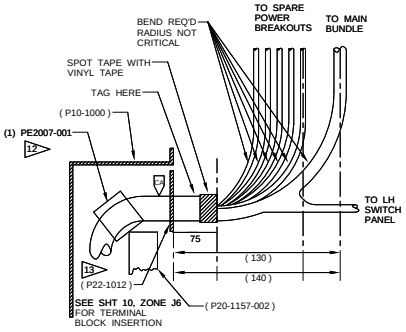

DETAIL H:

(SEE NOTES ON SHEET 2)

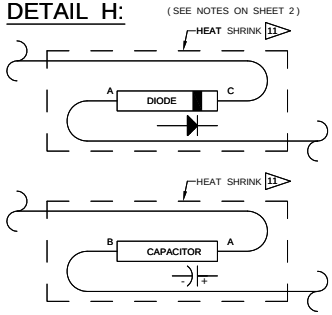

DETAIL MM:

(SEE SHEET 10 ZONE G10)

CONNECTOR MATING VIEW FOR ISO RELAY
13 PLACES (E1 TYP)

CONNECTOR MATING VIEW FOR HIGH CURRENT RELAY
2 PLACES (E2 TYP)

CONNECTOR MATING VIEW FOR MICRO RELAY
5 PLACES (J1 TYP)

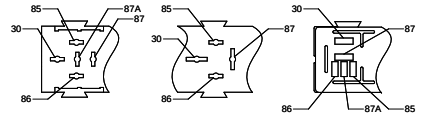

DWG SIZE A0

https://truckmanualshub.com/

KENWORTH A PACCAR COMPANY

Harness - Instr Panel B-Cab

P92-4319 C 07

© 2009 PACCAR Inc – All Rights Reserved – The information contained in this drawing is proprietary to PACCAR. Reproduction, in whole or in part, by any means is strictly prohibited without prior written authorization from PACCAR Inc.

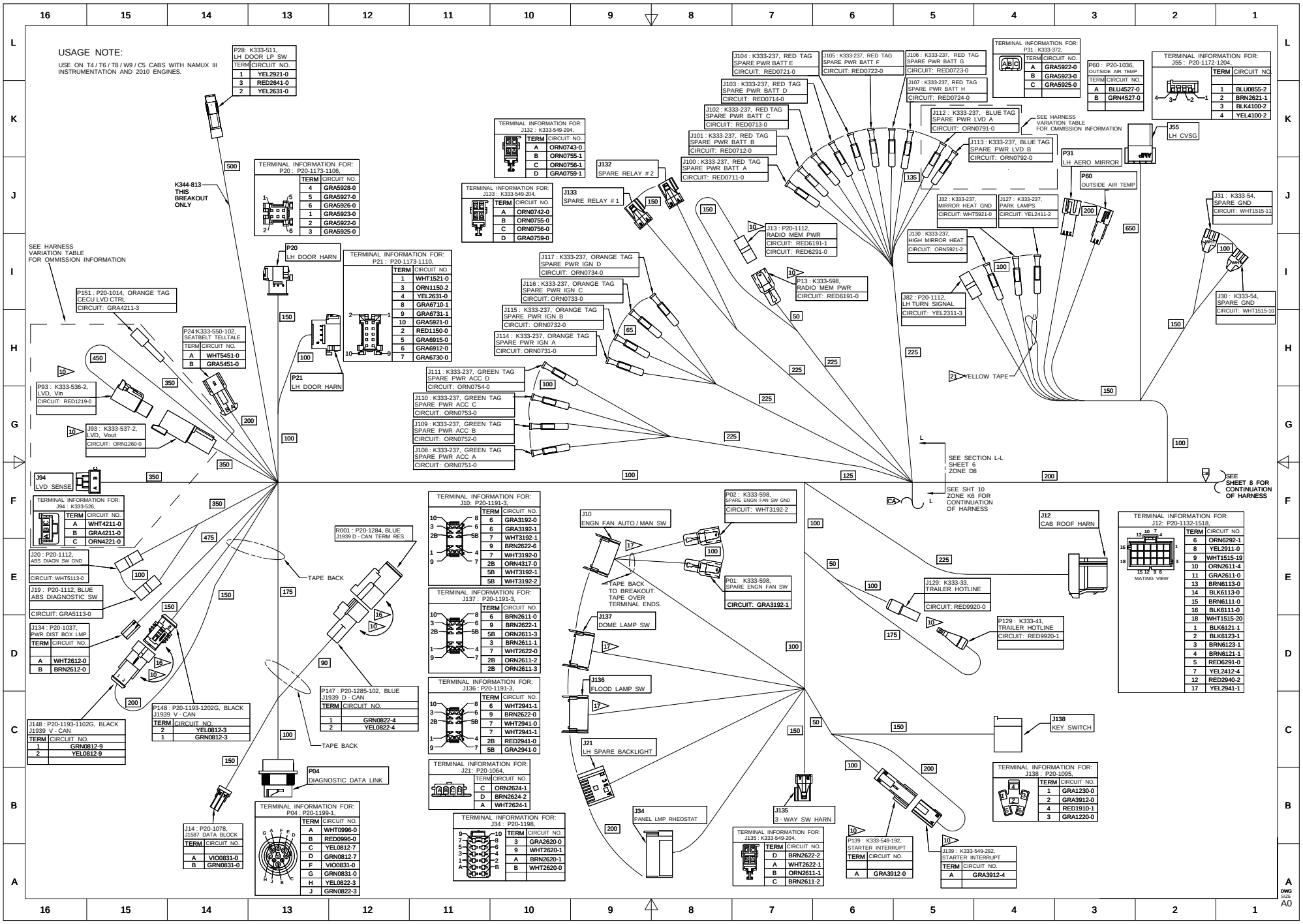

https://truckmanualshub.com/

KENWORTH A PACCAR COMPANY — Harness - Instr Panel B-Cab

P92-4319 C 08

© 2009 PACCAR Inc – All Rights Reserved – The information contained in this drawing is proprietary to PACCAR. Reproduction, in whole or in part, by any means is strictly prohibited without prior written authorization from PACCAR Inc.

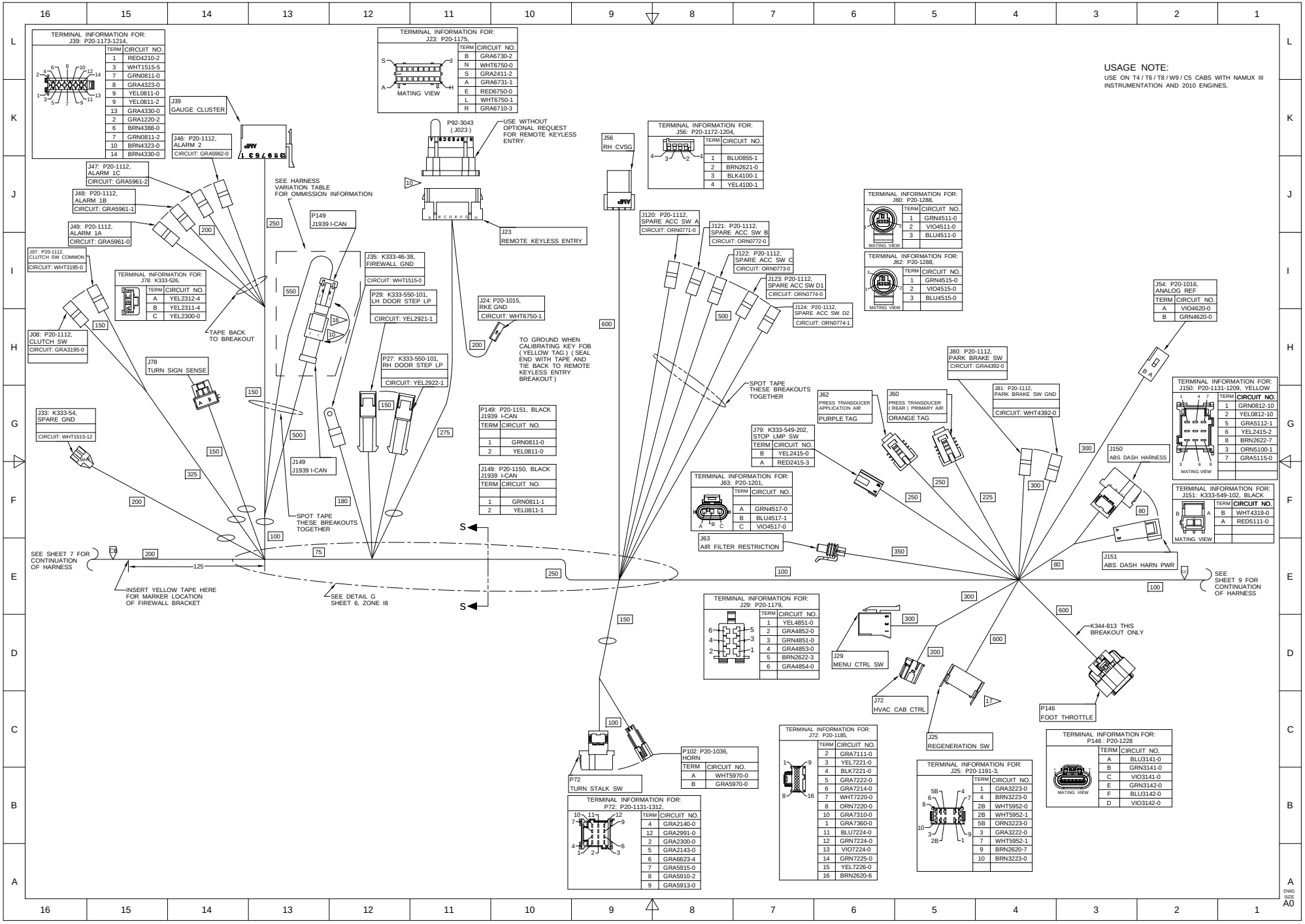

https://truckmanualshub.com/

KENWORTH A PACCAR COMPANY Harness - Instr Panel B-Cab P92-4319 C 09

© 2009 PACCAR Inc – All Rights Reserved – The information contained in this drawing is proprietary to PACCAR. Reproduction, in whole or in part, by any means is strictly prohibited without prior written authorization from PACCAR Inc.

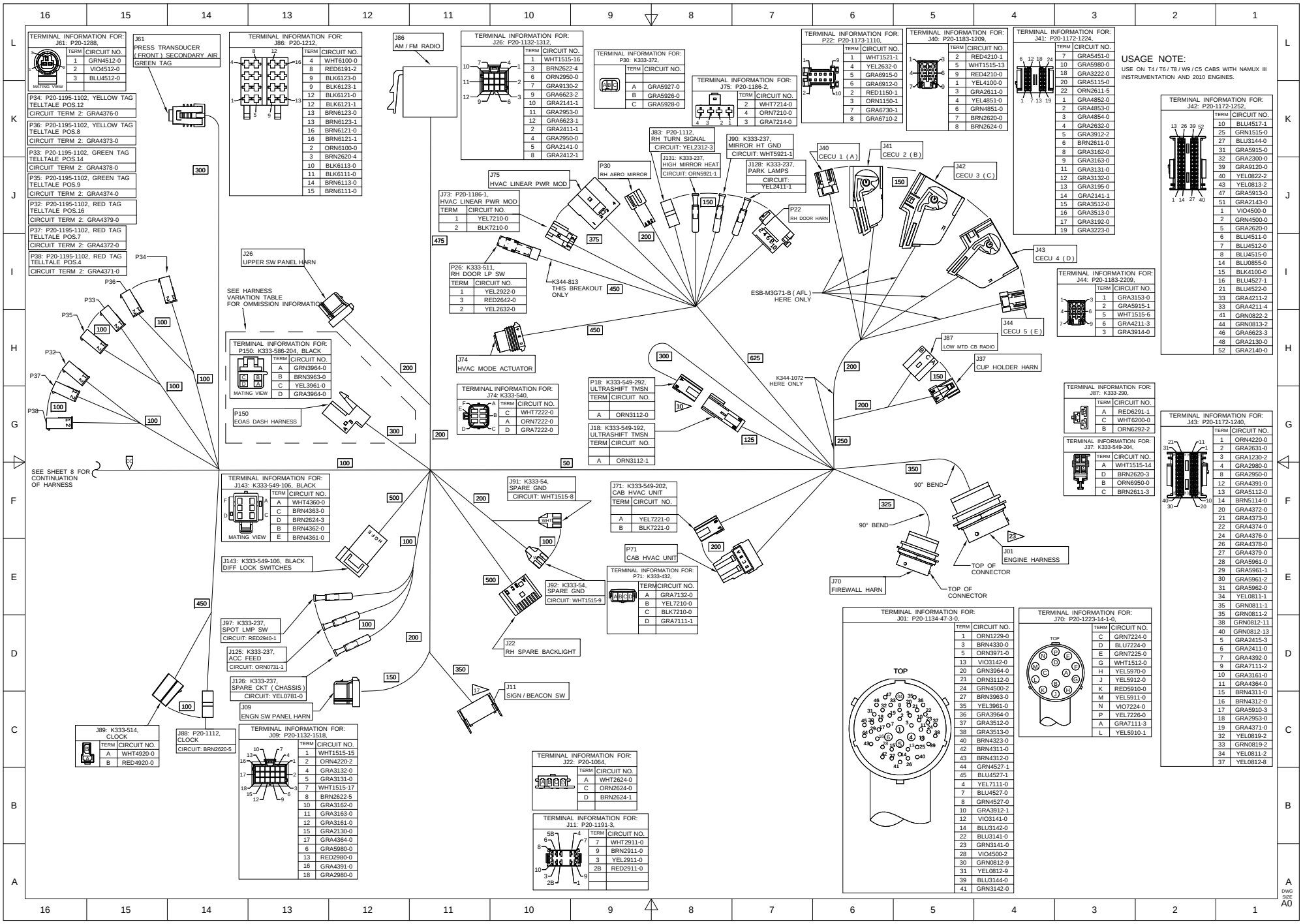

https://truckmanualshub.com/

© 2009 PACCAR Inc – All Rights Reserved – The information contained in this drawing is proprietary to PACCAR. Reproduction, in whole or in part, by any means is strictly prohibited without prior written authorization from PACCAR Inc.

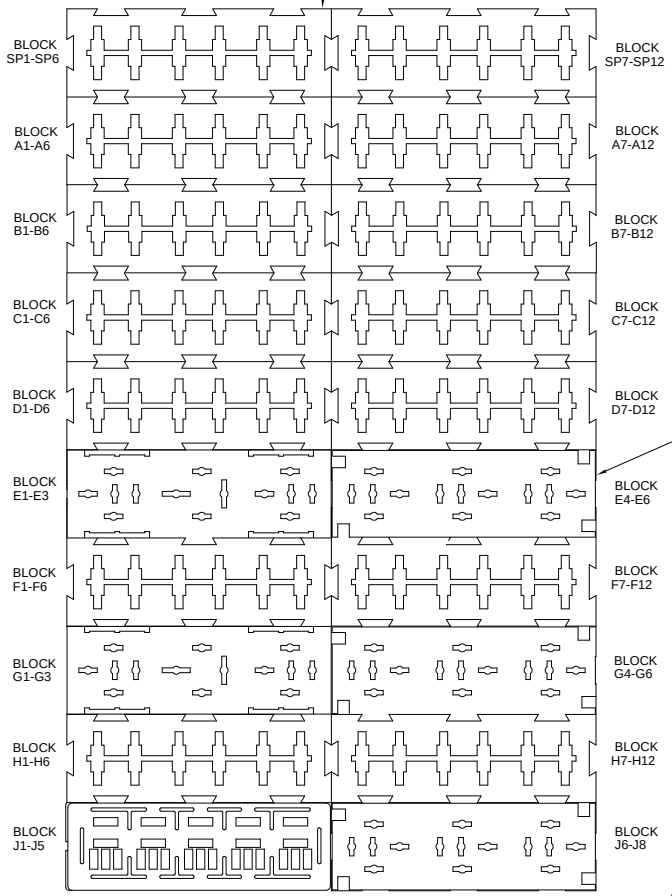

SEE SHT 7, ZONE F5 FOR CONTINUATION OF HARNESS

(P22-1012) (COVER - UPPER PD BOX)

WIRE ENDS FOR TERMINAL BLOCK INSERTION. MANUFACTURING TO SELECT PROPER LENGTH FROM P22-1012 TO CEP INSERTION TO MINIMIZE WIRE LENGTH SECTION L-L, SHT 6, ZONE D8

11 4061PHTB - ND (CAPC) MR752 (DIODE)

CA 75 13

USAGE NOTE:

USE ON T4 / T6 / T8 / W9 / C5 CABS WITH NAMUX III INSTRUMENTATION AND 2010 ENGINES.

TERMINAL BLOCK (SP1 - SP6)

-	-	-	-	-	-
-	-	-	-	-	-

TERMINAL BLOCK (SP7 - SP12)

-	-	-	-	-	-
-	-	-	-	-	-

TERMINAL BLOCK (A1 - A6)

RED0711-0	RED0712-0	RED0713-0	RED0714-0	RED0721-0	RED0722-0
RED1211-0			RED1211-1		

TERMINAL BLOCK (A7 - A12)

RED0723-0	RED0724-0	ORN0751-0	ORN0752-0	ORN0753-0	ORN0754-0
RED1211-2			ORN1231-0		

TERMINAL BLOCK (B1 - B6)

ORN0771-0	ORN0772-0	ORN0773-0	ORN0774-0 ORN0774-1	ORN0791-0	ORN0792-0
ORN1232-0			ORN1262-0		

TERMINAL BLOCK (B7 - B12)

ORN0731-0	ORN0732-0	ORN0733-0	ORN0734-0	ORN5100-1	ORN5100-3
ORN1221-1			ORN5100-0		

TERMINAL BLOCK (C1 - C6)

RED2900-0	RED1910-0	RED2941-1 RED2941-2	OPEN	RED9920-0	YEL2412-2
RED1212-0			YEL2412-1		

TERMINAL BLOCK (C7 - C12)

RED2911-0	RED2940-0	RED5910-0	RED2411-0	RED1150-1	RED1150-0
RED1212-1			RED1212-2		

TERMINAL BLOCK (D1 - D6)

GRA2411-0	RED9120-2	GRA4211-1 GRA4211-4 RED6191-0	RED2415-3	GRA2415-3	RED2423-3
YEL2411- 3			RED1213-0	YEL2415-1	RED9120-1

TERMINAL BLOCK (D7 - D12)

YEL9130-1	RED4210-2	RED6750-0	RED4930-0	RED5921-0	RED5111-0
YEL9130-0			RED1213-1		

SEE DETAIL MM, SHEET 6 FOR RELAY TERMINAL BLOCK CONFIGURATION EXAMPLE

TERMINAL BLOCK (E1 - E3)

	RELAY (PARK / TAIL LAMPS)	RELAY (IGN BUS)	RELAY (MARKER LAMP FLASH)
30	RED2411-1	RED1217-0	WHT6623-0 WHT9120-0
85	GRA2411-3	WHT1220-0 WHT6623-0	GRA6623-0
86	RED2411-2	GRA1220-1	RED6623-0
87	YEL2411-4	ORN1220-0	GRA6623-1
87A	-	N / A	GRA6623-2

TERMINAL BLOCK (E4 - E6)

	RELAY (WINDSHIELD WIPER)	RELAY (TRAILER STOP LAMPS)	RELAY (TRAILER ABS)
30	YEL5910-0	RED9120-0	RED5100-1
85	GRA5910-1	GRA9120-0	WHT5100-0 WHT1230-0
86	ORN5910-3	GRA9120-0	ORN1222-0
87	YEL5912-0	RED9120-1	ORN5100-0
87A	YEL5911-0	-	-

TERMINAL BLOCK (F1 - F6)

ORN3112-1	ORN1150-0	ORN7111-0	ORN0731-1	ORN4300-0 BRN4360-0	ORN0993-0
ORN1223-0					

TERMINAL BLOCK (F7 - F12)

ORN3971-0	ORN4220-0	ORN2960-0	ORN4220-1	RED4210-0	RED4210-1
ORN1223-1			RED1214-0		

TERMINAL BLOCK (G1 - G3)

	RELAY (IDLE TIMER)	RELAY (ACC BUS)	RELAY (MKR LP CAB) }
30	RED3155-0	RED1218-0	RED2412-1
85	GRA3153-0	WHT1230-0 WHT7310-0	GRA2412-1
86	RED3153-0	GRA1230-1	RED2412-0
87	GRA3155-0	ORN1230-0	YEL2412-1
87A	-	N / A	-

TERMINAL BLOCK (G4 - G6)

	RELAY (WIPER ON)	RELAY (SLEEPER HVAC)	RELAY (MKR LP TRAILER)
30	YEL5910-0	ORN7310-0	RED9130-1
85	GRA5910-0	WHT6930-0 WHT7310-0	GRA9130-2
86	ORN5910-1	GRA7310-0	RED9130-0
87	ORN5910-2	ORN7310-1	YEL9130-0
87A	YEL5910-1	-	-

TERMINAL BLOCK (H1 - H6)

ORN2611-0	ORN6950-0	ORN2613-0	ORN6953-0	ORN7310-0	ORN5910-0
RED1215-0 OR ORN1261-0			ORN1233-0		

TERMINAL BLOCK (H7 - H12)

ORN0758-0	ORN6292-0	ORN6100-0	ORN7200-0	ORN7210-0	ORN1229-0
ORN1234-1	ORN1221-0				

TERMINAL BLOCK (J1 - J5)

	RELAY (FREON COMP.)	RELAY (FLOOD LAMPS)	RELAY (HORN)	RELAY REFRIGERATOR LIGHT)	RELAY (STARTER INTERRUPT)
30	ORN7111-0	RED2941-1	RED5970-0	BRN4388-0	GRA3912-3
85	GRA7111-3	GRA2941-0	GRA5970-0	WHT6930-0	GRA3914-0
86	GRA7132-0	RED2941-2	RED5970-1	ORN6930-0	RED3914-0
87	YEL7111-0	YEL2941-0	YEL5970-0	-	GRA3912-1
87A	-	-	-	BRN6930-0	-

TERMINAL BLOCK (J6 - J8)

	RELAY (SPARE 1)	RELAY (SPARE 2)	RELAY (MIRROR HEAT)
30	ORN0742-0	ORN0743-0	RED5921-0
85	GRA0759-0	GRA0759-1	GRA5921-0
86	ORN0758-1 ORN0758-2	ORN0758-2	ORN1224-0
87	ORN0756-0	ORN0756-1	ORN5921-0
87A	ORN0755-0	ORN0755-1	-

J95: K333-46-25, PWR FEED
CIRCUIT: RED1210-0
CIRCUIT: RED1210-1

(3 / 8") MANUFACTURE TO MATE WITH 46211-06 (COLE HERSEE POWER FEED THRU STUD)

275

SEE NOTE 9

TERMINAL INFORMATION FOR: P100: P20-1134-29-5-0,

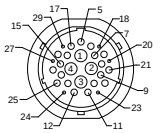

TERM	CIRCUIT NO.
5	GRN0819-2
6	YEL0819-2
15	GRA7360-0
16	ORN7360-0
18	GRN0813-2
19	BLU4522-0
27	BRN4362-0
29	BRN4361-0
1	ORN2613-0
2	YEL9130-1
3	YEL0781-0
4	YEL2941-2
7	ORN2960-0
8	YEL2311-5
9	YEL2312-5
10	BLK6121-0
11	BRN6930-0
12	YEL2411-0
13	YEL2412-0
14	YEL2941-3
17	ORN0993-0
20	YEL0813-2
21	BLK6123-0
22	BRN6123-0
23	ORN4360-0
24	BRN4363-0
25	ORN4220-1
28	BRN6121-0

TERMINAL INFORMATION FOR: P101: P20-1134-09-5-0,

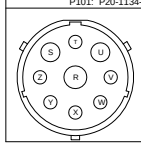

TERM	CIRCUIT NO.
S	YEL9120-3
V	ORN6953-1
W	ORN6953-2
Y	ORN7310-2
Z	ORN7310-3
R	RED5100-0
T	RED9920-1
U	ORN5100-2
X	BRN5114-1

P101 FR CHASSIS HARNESS

FOR ASSEMBLY SEE DETAIL RR, SHT 18

200

P100 FRONT CHASSIS HARNESS

FOR ASSEMBLY SEE DETAIL RR SHT 18

DWG SIZE A0

https://truckmanualshub.com/

© 2009 PACCAR Inc – All Rights Reserved – The information contained in this drawing is proprietary to PACCAR. Reproduction, in whole or in part, by any means is strictly prohibited without prior written authorization from PACCAR Inc.

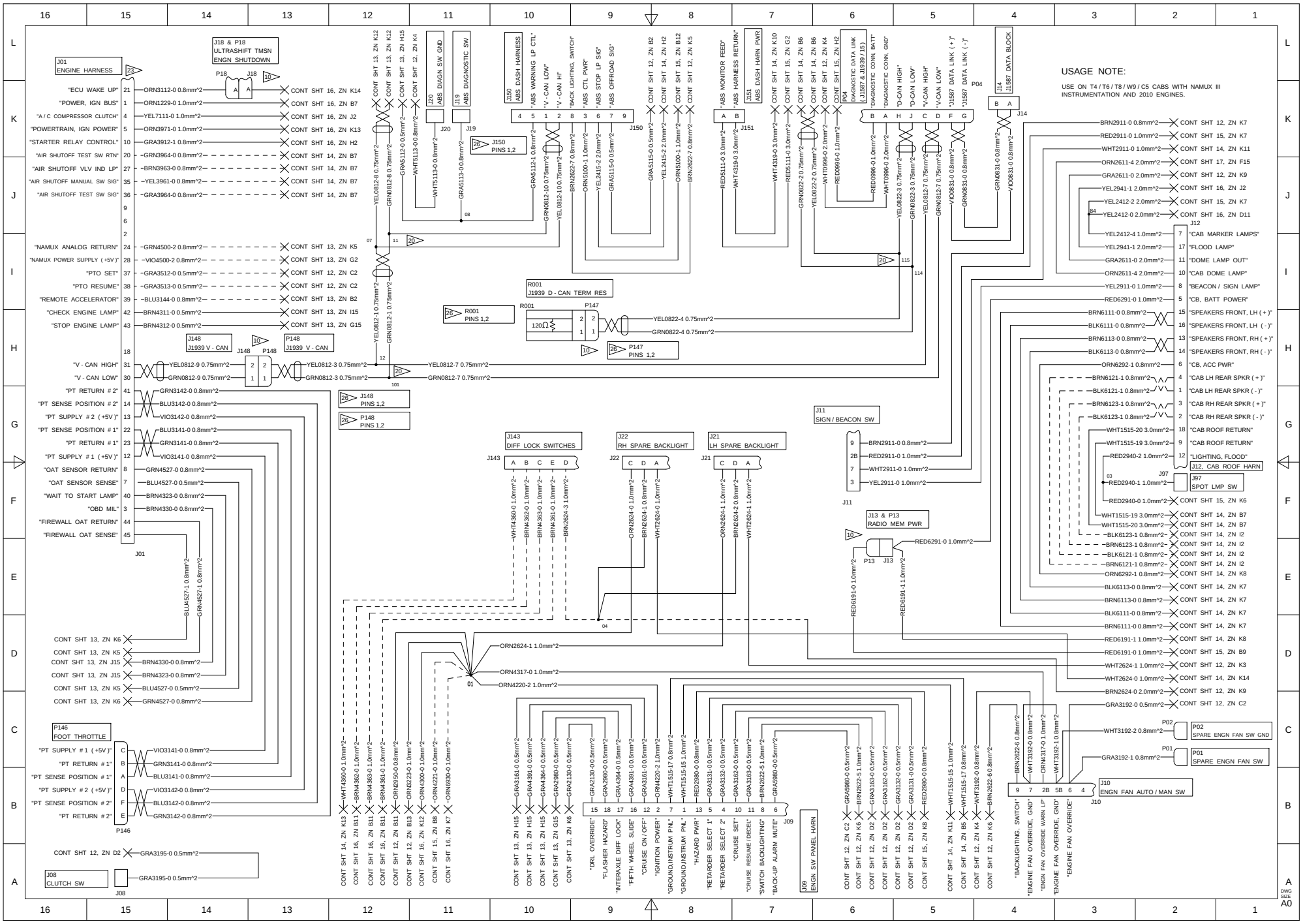

https://truckmanualshub.com/

© 2009 PACCAR Inc – All Rights Reserved – The information contained in this drawing is proprietary to PACCAR. Reproduction, in whole or in part, by any means is strictly prohibited without prior written authorization from PACCAR Inc.

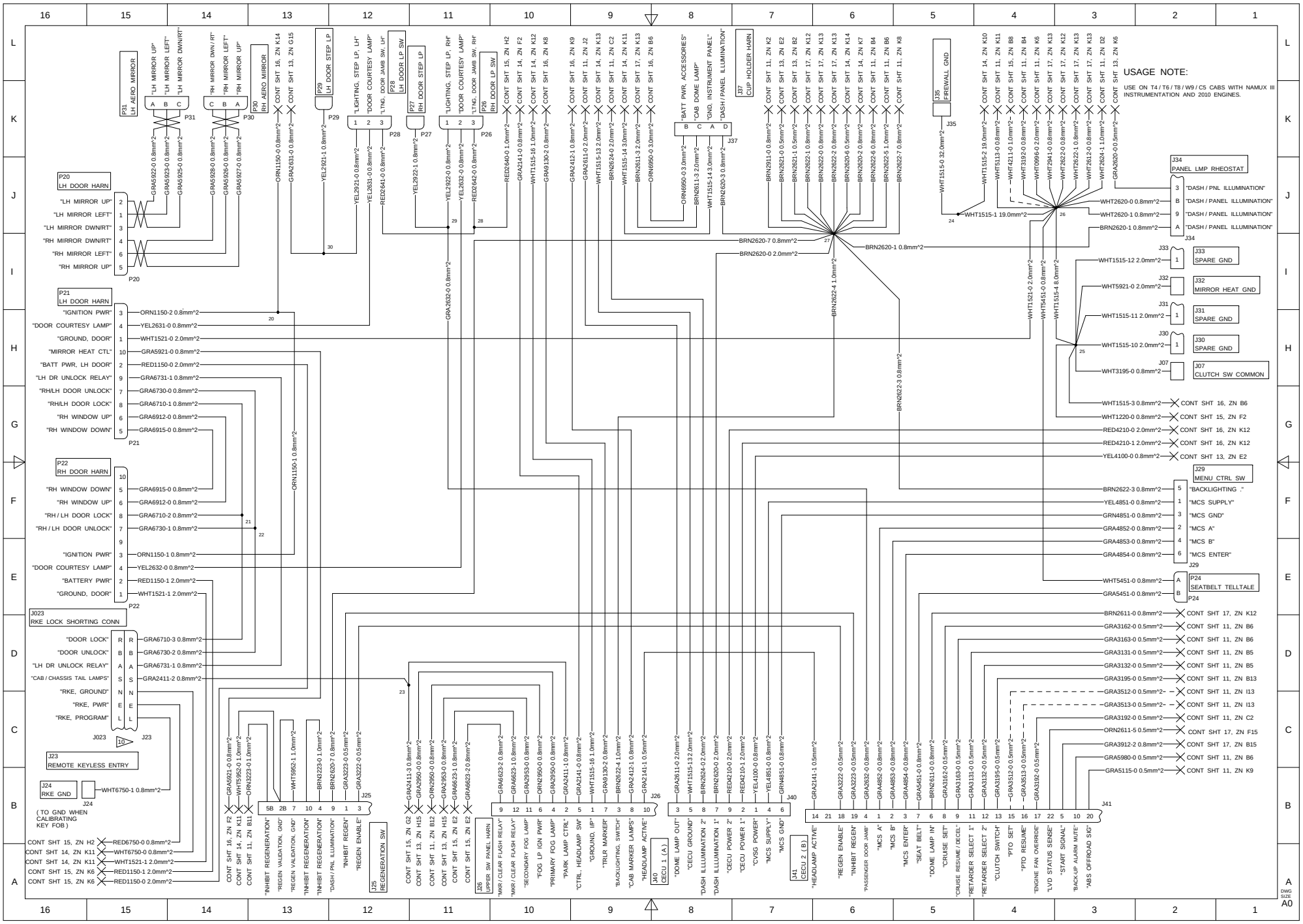

https://truckmanualshub.com/

© 2009 PACCAR Inc – All Rights Reserved – The information contained in this drawing is proprietary to PACCAR. Reproduction, in whole or in part, by any means is strictly prohibited without prior written authorization from PACCAR Inc.

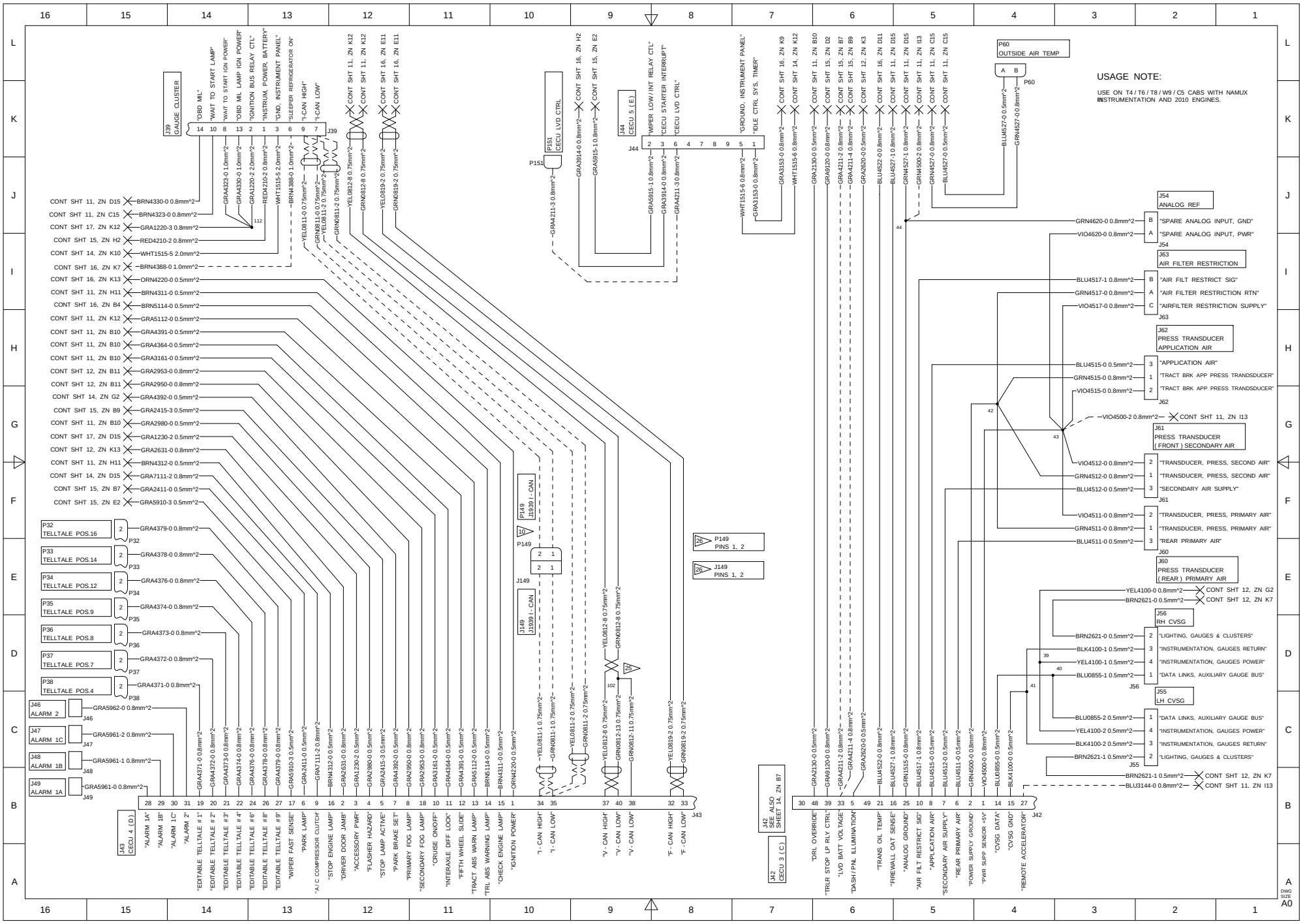

https://truckmanualshub.com/

© 2009 PACCAR Inc – All Rights Reserved – The information contained in this drawing is proprietary to PACCAR. Reproduction, in whole or in part, by any means is strictly prohibited without prior written authorization from PACCAR Inc.

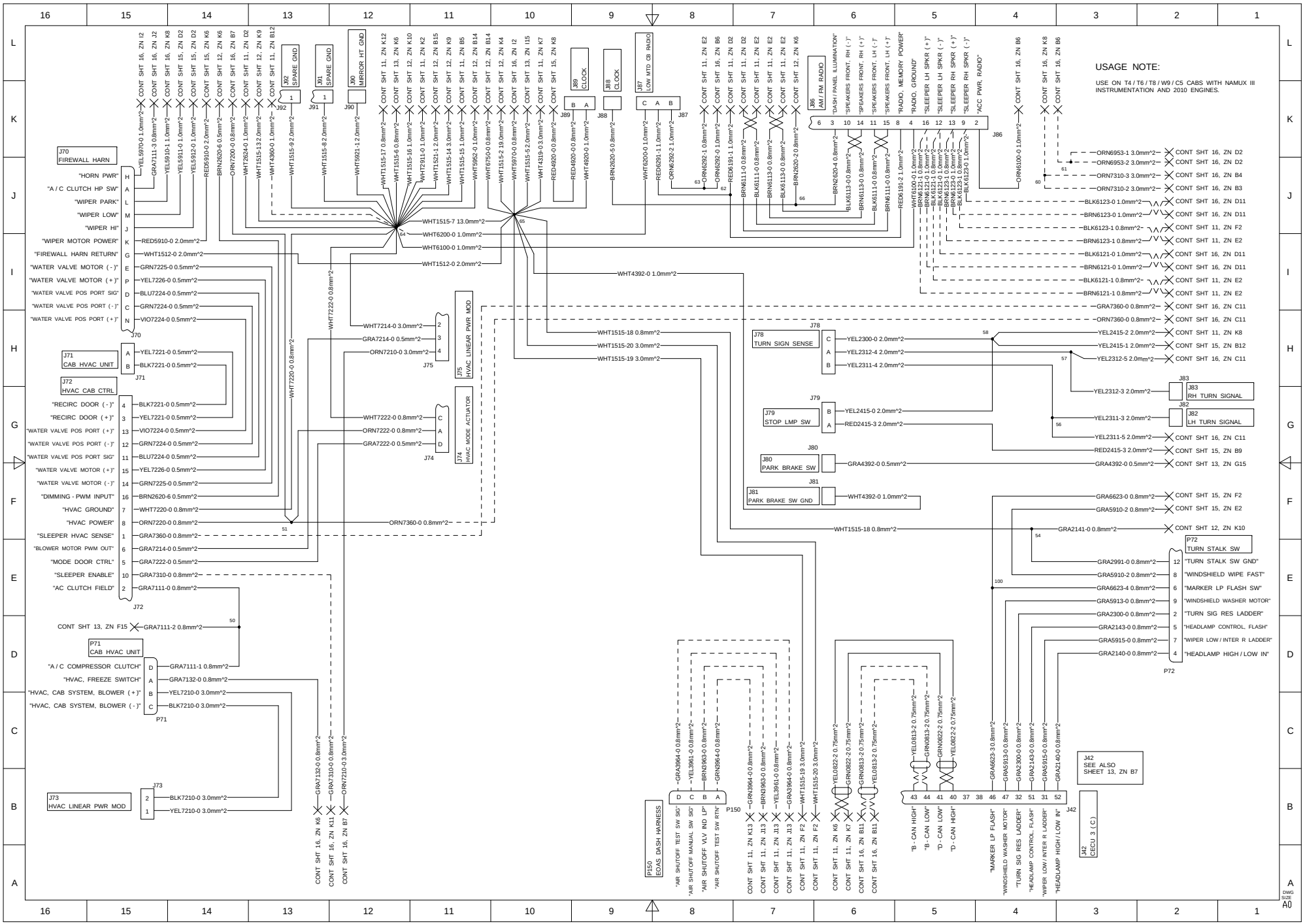

https://truckmanualshub.com/

© 2009 PACCAR Inc – All Rights Reserved – The information contained in this drawing is proprietary to PACCAR. Reproduction, in whole or in part, by any means is strictly prohibited without prior written authorization from PACCAR Inc.

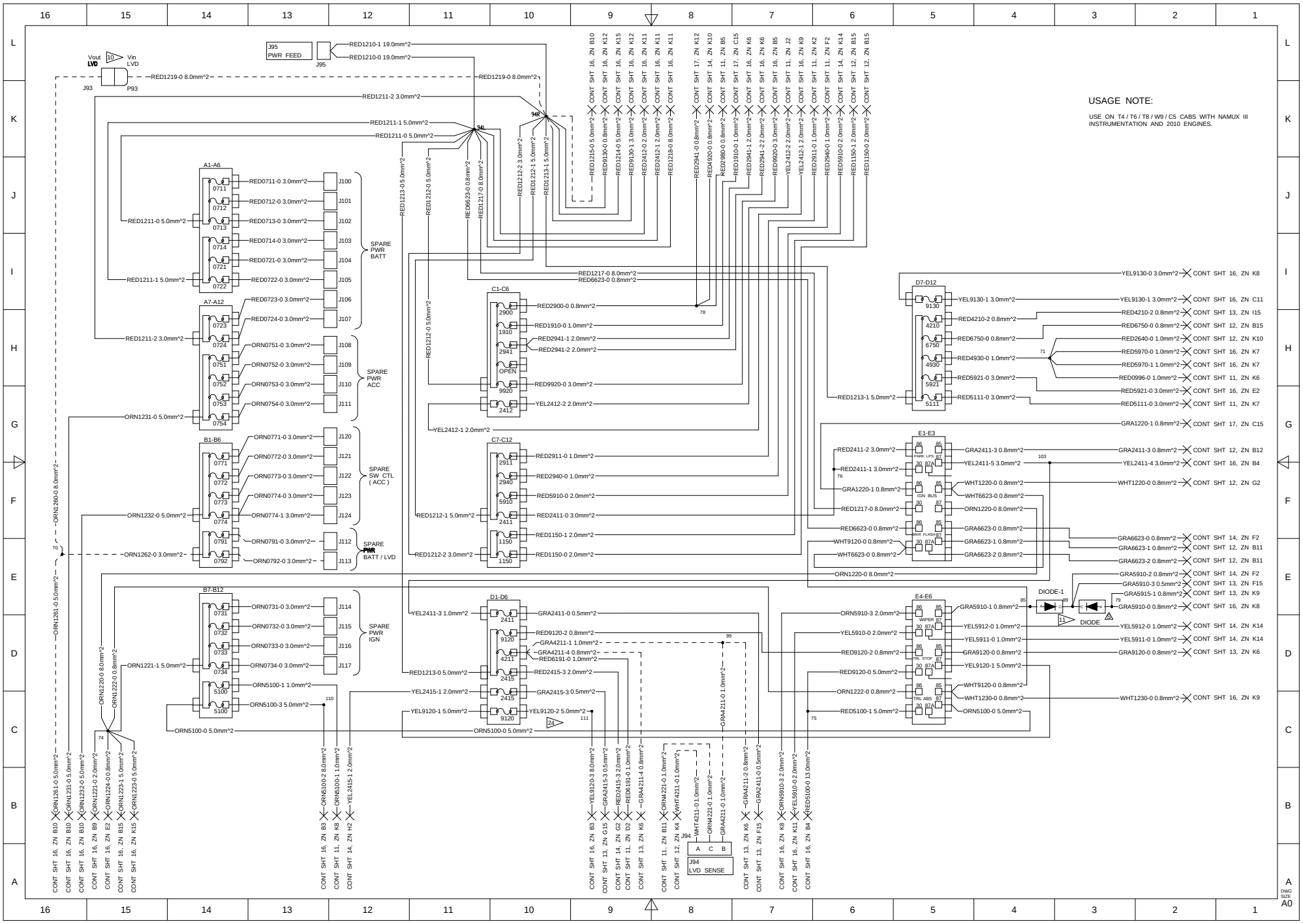

https://truckmanualshub.com/

© 2009 PACCAR Inc – All Rights Reserved – The information contained in this drawing is proprietary to PACCAR. Reproduction, in whole or in part, by any means is strictly prohibited without prior written authorization from PACCAR Inc.

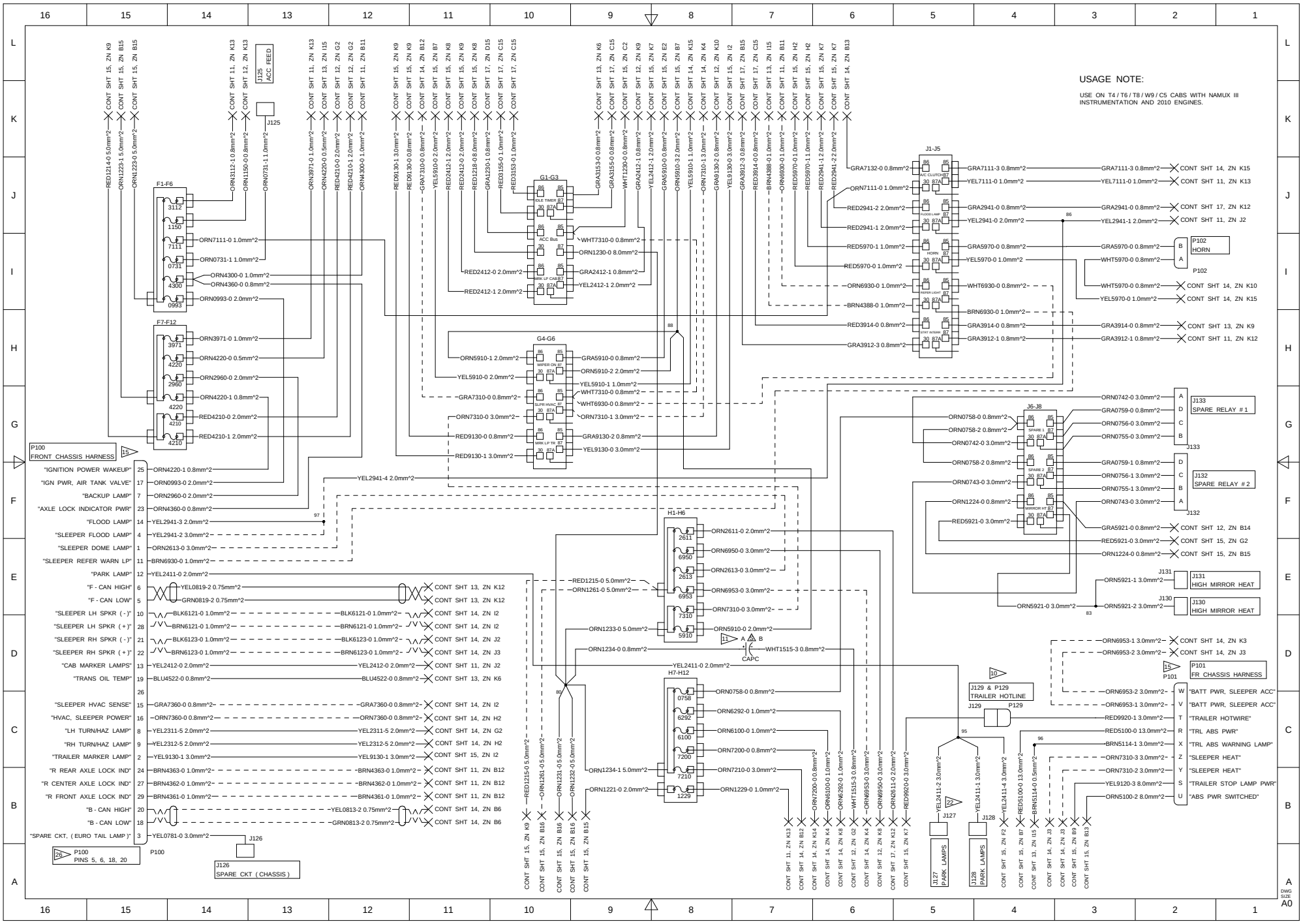

https://truckmanualshub.com/

© 2009 PACCAR Inc – All Rights Reserved – The information contained in this drawing is proprietary to PACCAR. Reproduction, in whole or in part, by any means is strictly prohibited without prior written authorization from PACCAR Inc.

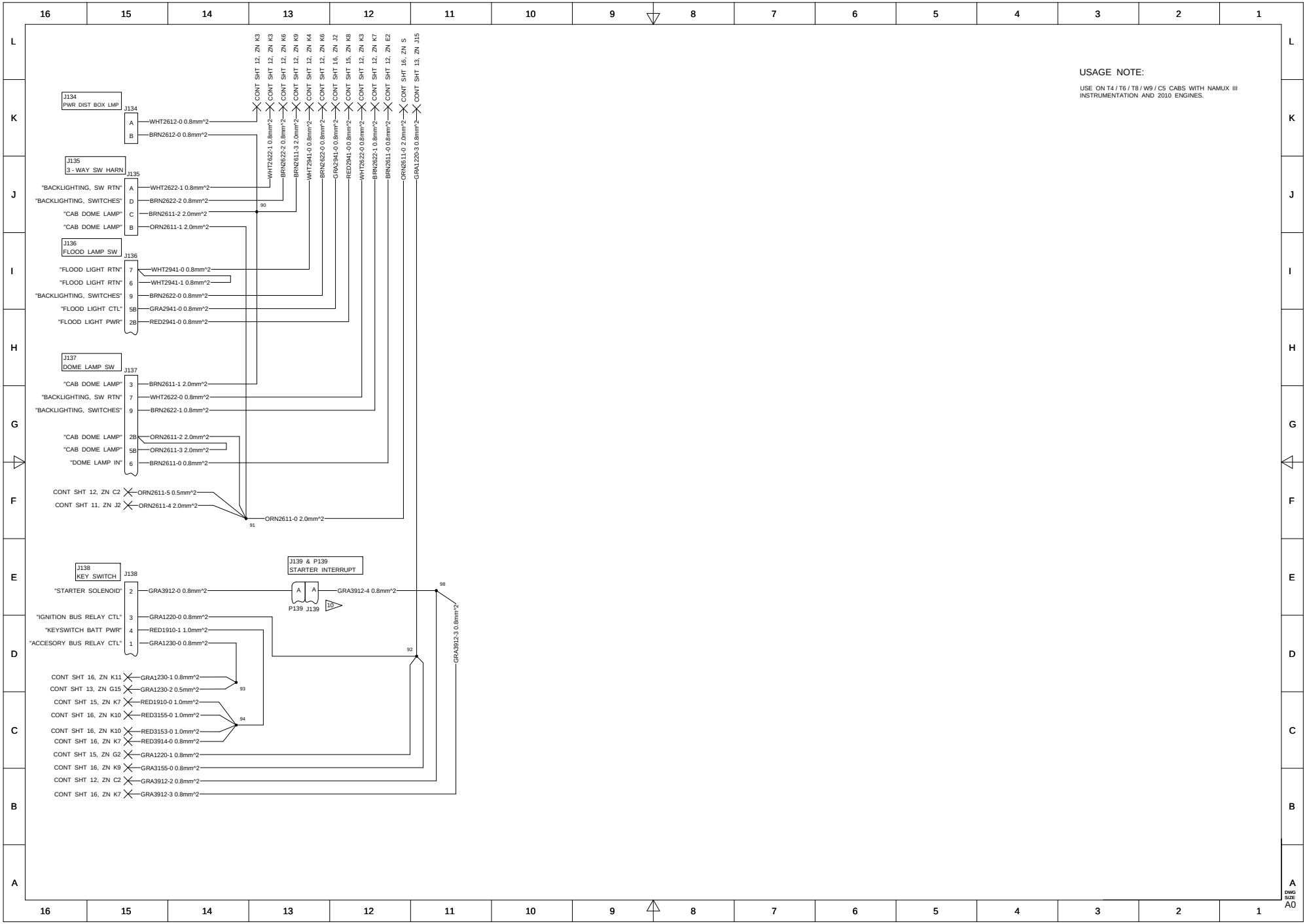

© 2009 PACCAR Inc – All Rights Reserved – The information contained in this drawing is proprietary to PACCAR. Reproduction, in whole or in part, by any means is strictly prohibited without prior written authorization from PACCAR Inc.

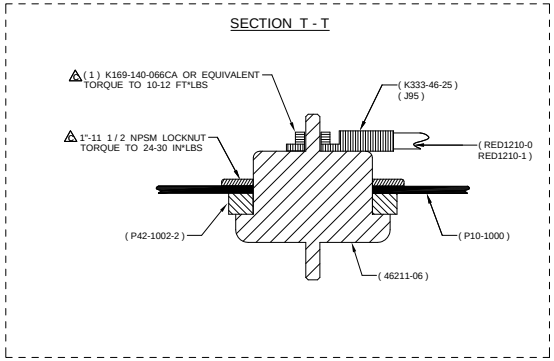

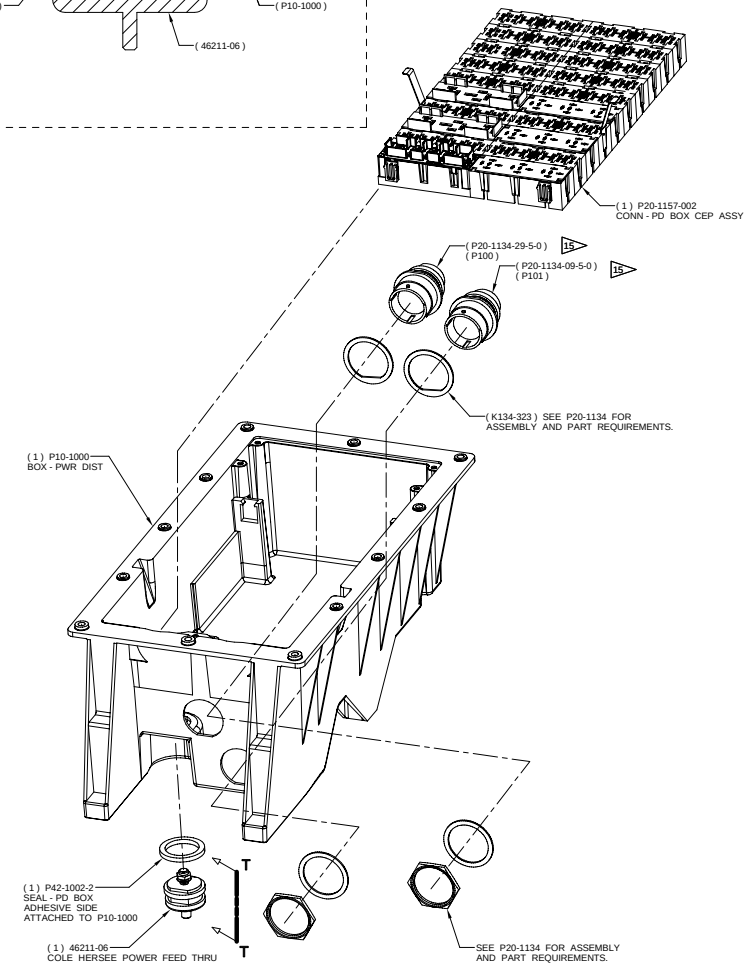

DETAIL RR

WIRE BUNDLE OMITTED FOR CLARITY

USAGE NOTE:

USE ON T4 / T6 / T8 / W9 / C5 CABS WITH NAMUX III INSTRUMENTATION AND 2010 ENGINES.

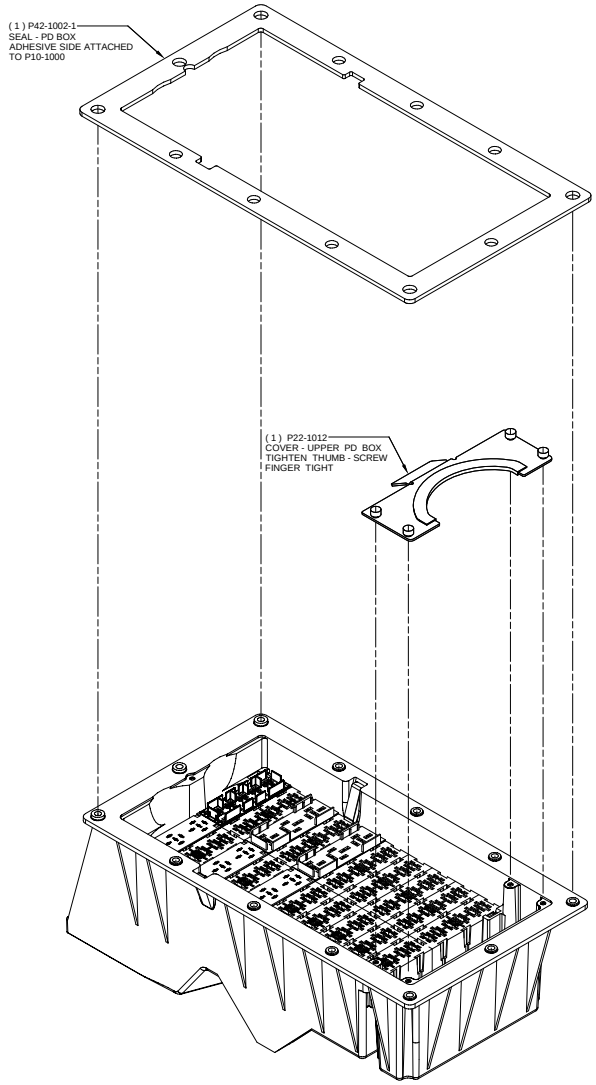

DWG SIZE A0