https://truckmanualshub.com/

KENWORTH MEDIUM DUTY BODY BUILDER MANUAL

August 2022

T180

T280

T380

T480

T380V

T480V

KENWORTH

A PACCAR COMPANY

https://truckmanualshub.com/

SECTION 1 - INTRODUCTION

Figure 1 NMD Aero Hood

Figure 2 NMD Vocational Hood

The Kenworth Medium Duty Body Builder Manual has been created to provide body builders with appropriate information and guidelines useful in the body planning and installation process.

This manual contains applicable dimensional information, guidelines for mounting bodies, modifying frames, electrical wiring information, and other information beneficial to the body installation process.

The Kenworth Medium Duty Body Builder Manual can be valuable when specifying a vehicle, particularly when the body builder is involved in the vehicle definition and ordering process. Early in the process, professional body builders can often contribute critical information that reduces the ultimate cost of the body installation.

In the interest of continuing product development, Kenworth reserves the right to change specifications or products at any time without prior notice. It is the responsibility of the user to ensure that they are working with the latest update. Check Kenworth.com for the most recently released version of the Kenworth Medium Duty Body Builder Manual.

If you require additional information or reference materials, please contact your local Kenworth dealer.

https://truckmanualshub.com/

CONTENTS

SECTION 1 - INTRODUCTION 1

CONTENTS 2

SECTION 2 - SAFETY AND COMPLIANCE 7

SAFETY SIGNALS 7
FEDERAL MOTOR VEHICLE SAFETY STANDARDS COMPLIANCE 8
INCOMPLETE VEHICLE CERTIFICATION 8
NOISE AND EMISSIONS REQUIREMENTS 10
FUEL SYSTEM 11
COMPRESSED AIR SYSTEM 11
EXHAUST AND EXHAUST AFTER-TREATMENT SYSTEM 12
COOLING SYSTEM 13
AIR INTAKE SYSTEM 13
ELECTRICAL SYSTEM 13

SECTION 3 - DIMENSIONS 15

INTRODUCTION 15
ABBREVIATIONS 15
MODELS 16
OVERALL DIMENSIONS 16
AERO SHORT HOOD - SH (107.5" BBC) 17
AERO MID HOOD - MH (109.5" BBC) 18
VOCATIONAL HOOD – VH (109.5" BBC) 19
VOCATIONAL HOOD W/ 24" FEPTO BUMPER EXTENSION 20
CAB – 2.1m MEDIUM DUTY FAMILY 21
LOW ROOF and RAISED ROOF 21
WINDOW DIMENSIONS 22
CAB SUSPENSION 22
CAB STEP HEIGHT 23
FRAME RAILS 24
FRAME HEIGHT CHARTS 25
FRONT FRAME HEIGHTS “A’ 26
REAR FRAME HEIGHTS "C" 27
FRAME MOUNTED COMPONENT GROUND CLEARANCE 29
FRAME SPACE REQUIREMENTS 30
CALCULATING BOC FRAME SPACE 30
FRAME SPACE DIMENSION "A" 31
FRAME SPACE DIMENSION "B" 37
FRAME SPACE DIMENSION “C” 38
SMALL DEF TANK (5.5 GALLON) 39
LARGE DEF TANK (15 GALLON) 40
FUEL TANK (D-SHAPE) 41
ADDITIONAL DIMENSIONS 42
EXTENDED CAB ACCESS STEP 42
IN-FRAME FUEL TANK – 45 GALLON 43
IN-FRAME FUEL TANK - 70 GALLON 44

https://truckmanualshub.com/

EXHAUST DIMENSIONS 45
EXHAUST RH SOC - DPF/SCR RH UNDER CAB 45
EXHAUST RH BOC - DPF/SCR RH UNDER CAB 46
EXHAUST RH HORIZONTAL - DPF/SCR RH UNDER CAB (STANDARD) 47
EXHAUST RH HORIZONTAL - DPF/SCR RH UNDER CAB (W/ RH DEF) 48
EXHAUST RH HORIZONTAL - DPF/SCR RH UNDER CAB (W/ FDA) 49
EXHAUST RH HORIZONTAL - DPF/SCR RH UNDER FRAME 50
EXHAUST RH SOC - NATURAL GAS CATALYST RH UNDER CAB 51
EXHAUST RH BOC - NATURAL GAS CATALYST RH UNDER CAB 52
EXHAUST RH HORIZONTAL - NATURAL GAS CATALYST RH UNDER FRAME (L9N) 53

SECTION 4 - BODY MOUNTING 54

INTRODUCTION 54
FRAME RAILS 54
CRITICAL CLEARANCES 55
REAR TIRES AND CAB 55
FRAME SILL 56
BRACKETS 57
MOUNTING HOLES 58
FRAME DRILLING 59
BODY MOUNTING USING U–BOLTS 60
REAR BODY MOUNT 62

SECTION 5 FRAME MODIFICATIONS 63

INTRODUCTION 63
DRILLING RAILS 63
MODIFYING FRAME LENGTH 64
CHANGING WHEELBASE 64
CROSSMEMBERS 65
TORQUE REQUIREMENTS 66
WELDING 67
WELDING PRECAUTIONS: ALL ELECTRONIC ENGINES 67

SECTION 6 CAN COMMUNICATIONS 68

INTRODUCTION 68
CAN COMMUNICATIONS ACRONYM LIBRARY 68
SAE J1939 68
PARAMETER GROUP NUMBER 69
SUSPECT PARAMETER NUMBER 69
VMUX GATEWAY REFERENCE – CAN MESSAGES 70

SECTION 7 ELECTRICAL 84

INTRODUCTION 84
ELECTRICAL ACRONYM LIBRARY 84
ELECTRICAL WIRING CIRCUIT CODES 85
MULTIPLEX SYSTEM 86
CAN BUS SYSTEM OVERVIEW 86
CAN BUS SPEEDS AND CIRCUIT DESIGNATION 86
ELECTRICAL COMPONENT OVERVIEW 87

https://truckmanualshub.com/

ELECTRICAL HARNESS OVERVIEW 88
IN CAB CAN BASED MESSAGING CONNECTOR 89
RP1226 CONNECTOR 89
RP1226 PARTS AND CONNECTORS 90
RP1226 TO 9-PIN JUMPERS 91
BODY CONNECTION POINTS 92
ELECTRIC ENGAGED EQUIPMENT 95
RP170 CONNECTOR 95
ENGINE HARNESS 12 PIN CONNECTOR 96
POWER DISTRIBUTION CENTER 100
ENGINE SIDE POWER DISTRIBUTION CENTER (PDC) 100
ENGINE SIDE FUSE BOX – FULL CONTENT POPULATION 101
DASH SIDE POWER DISTRIBUTION CENTER (PDC) 102
DASH SIDE FUSE BOX – FULL CONTENT POPULATION 103
CHASSIS MODULE 104
CHASSIS MODULE FUNCTION DESIGNATION 105
PRIMARY and PRIMARY LITE CHASSIS MODULE 105
SECONDARY CHASSIS MODULE 105
FUSE GROUPS 106
ELECTRIC OVER AIR SOLENOIDS 108
OVERVIEW LAYOUT (EOA SOLENOID BANK) 109
SWITCHES 111
OVERVIEW LAYOUT - SWITCHES 111
OVERVIEW LAYOUT (SPARE SWITCHES) 111
SWITCH RELEARN PROCESS 112
SWITCH LOCATION 113
GROUNDING 114
ADDITONAL CIRCUITS 115
SPARE POWER 115
JUNCTION BOX 119
TRANSMISSION BACK UP SIGNALS 120
SNOWPLOW LIGHTING 120
LIFT AXLES (PUSHERS & TAG) 121
TRAILER LIFT AXLE 122
GAUGES 122
TELLTALE ICONS 123

SECTION 8 POWER TAKE-OFF (PTO) 124

INTRODUCTION 124
PTO ACRONYM LIBRARY 124
TRANSMISSION MOUNTED PTO 125
MANUAL TRANSMISSIONS 125
AUTOMATIC TRANSMISSIONS - ALLISON 125
AUTOMATED TRANSMISSIONS – PACCAR 8-SPEED 126
FRONT ENGINE PTO 127
PTO MOUNTING CLEARNANCE 128
2.1M PTO MOUNTING CLEARNANCE CHARTS – ALLISON TRANSMISSIONS 128
PTO MOUNTING CLEARNANCE CHARTS – PACCAR 8-SPEED TRANSMISSION 132
PTO MOUNTING CLEARNANCE CHARTS – EATON TRANSMISSIONS 133
HYDRAULIC CLUTCH ACTUATOR CONFIGURATIONS 135

https://truckmanualshub.com/

REAR ENGINE PTO 135
REMOTE PMC CONNECTIONS 136

SECTION 9 AFTERTREAMENT 137

INTRODUCTION 137
GENERAL GUIDELINES FOR DEF SYSTEM 137
DEF SYSTEM SCHEMATICS 138
INSTALLATION REQUIREMENTS AND DIMENSIONS FOR DEF SYSTEM 139
DEF ASSEMBLY RELOCATION - SUPPLY MODULE REQUIREMENTS 139
ROUTING TO THE DOSING MODULE (INJECTOR) 140

SECTION 10 ROUTING 141

INTRODUCTION 141
DEFINITIONS 141
ROUTING REQUIREMENTS 144
WIRES IN BUNDLES 144
EXCEPTIONS: 144
WIRES CROSSING OTHER COMPONENTS 145
PIPING 145
HOSES CROSSING COMPONENTS 145
AIR COMPRESSOR DISCHARGE HOSES 145
BUNDLES 145
ROUTING OF WIRES AND HOSES NEAR MOVING COMPONENTS 145
ROUTING OF WIRES AND HOSES NEAR EXHAUST SYSTEM 146

TABLE OF FIGURES 147

TABLE OF TABLES 151

https://truckmanualshub.com/

https://truckmanualshub.com/

SECTION 2 - SAFETY AND COMPLIANCE

SAFETY SIGNALS

There are several alerting messages in this book. Please read and follow them. They are there for your protection and information. These alerting messages can help you avoid injury to yourself or others and help prevent costly damage to the vehicle.

Key symbols and “signal words” are used to indicate what kind of message is going to follow. Pay special attention to comments prefaced by “WARNING”, “CAUTION”, and “NOTE.” Please do not ignore any of these alerts.

WARNING

Signals a potentially hazardous situation which, if not avoided, could result in death or serious injury. This message will tell you what the hazard is, what can happen if you do not heed the warning, and how to avoid it.

Example:
WARNING! Be sure to use a circuit breaker designed to meet liftgate amperage requirements. An incorrectly specified circuit breaker could result in an electrical overload or fire situation. Follow the liftgate installation instructions and use a circuit breaker with the recommended capacity.

CAUTION

Signals a potentially hazardous situation which, if not avoided, could result in minor or moderate injury or damage to the vehicle.

Example:
CAUTION: Never use a torch to make a hole in the rail. Use the appropriate drill bit.

NOTE

Provides general information that is related to the topic being discussed.

Example:
Note: Be sure to provide maintenance access to the battery box and fuel tank fill neck.

Signals the location of a high voltage electrical component.

Example:
HAZARDOUS VOLTAGE: To reduce the risk of possible injury (Shock, Burn or Death): Components marked with High Voltage should be avoided. Service must be performed by qualified personnel only.

https://truckmanualshub.com/

FEDERAL MOTOR VEHICLE SAFETY STANDARDS COMPLIANCE

As an Original Equipment Manufacturer (OEM), Kenworth Truck Company ensures that our products comply with all applicable U.S. or Canadian Federal Motor Vehicle Safety Standards. However, the fact that this vehicle has no fifth wheel and that a Body Builder (Intermediate or Final Stage Manufacturer) will be doing additional modifications means that the vehicle was incomplete when it left the build plant.

INCOMPLETE VEHICLE CERTIFICATION

An Incomplete Vehicle Document is shipped with the vehicle, certifying that the vehicle is not complete. See **Figure 3**. In addition, affixed to the driver's side door frame or edge is an Incomplete Vehicle Certification label. See **Figure 4 - Figure 6**. For further information on Vehicle Certification and Identification, see APPENDIX A "VEHICLE IDENTIFICATION."

NOTE: These documents list the U.S. or Canadian Federal Motor Vehicle Safety Standard regulations that the vehicle complied with when it left the build plant. You should be aware that if you add, modify, or alter any of the components or systems covered by these regulations, it is your responsibility as the Intermediate or Final Stage Manufacturer to ensure that the complete vehicle is in compliance with the particular regulations upon completion of the modifications.

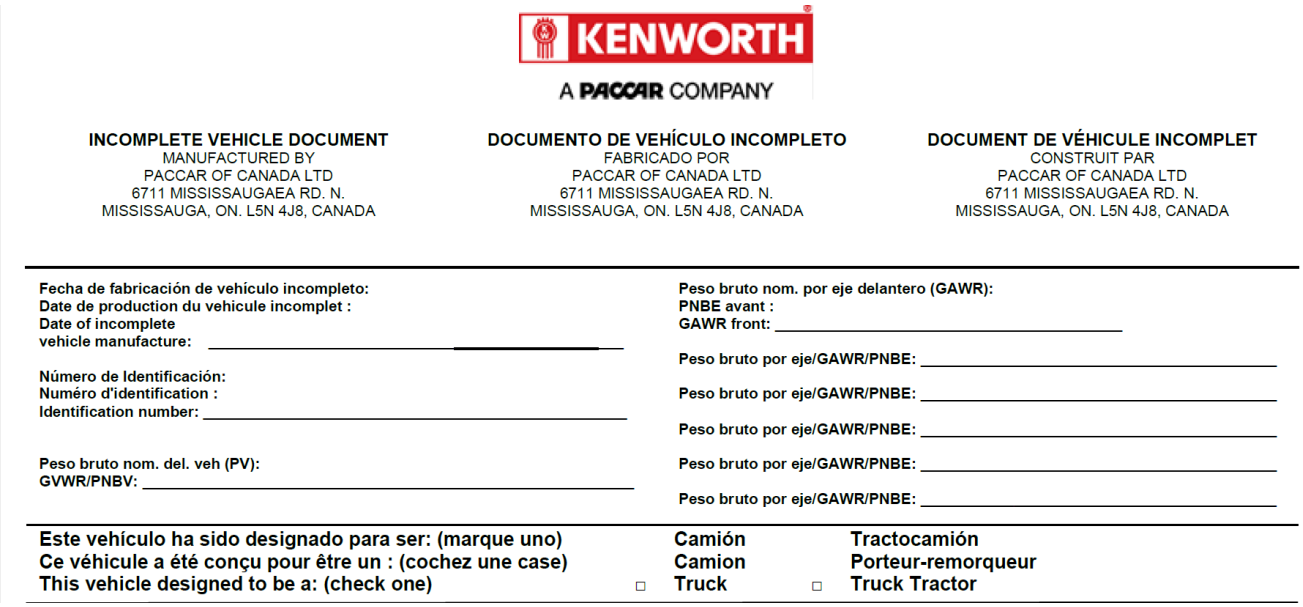

KENWORTH
A PACCAR COMPANY

INCOMPLETE VEHICLE DOCUMENT	DOCUMENTO DE VEHÍCULO INCOMPLETO	DOCUMENT DE VÉHICULE INCOMPLET
MANUFACTURED BY PACCAR OF CANADA LTD 6711 MISSISSAUGAEA RD. N. MISSISSAUGA, ON. L5N 4J8, CANADA	FABRICADO POR PACCAR OF CANADA LTD 6711 MISSISSAUGAEA RD. N. MISSISSAUGA, ON. L5N 4J8, CANADA	CONSTRUIT PAR PACCAR OF CANADA LTD 6711 MISSISSAUGAEA RD. N. MISSISSAUGA, ON. L5N 4J8, CANADA

Fecha de fabricación de vehículo incompleto:
Date de production du vehicule incomplet :
Date of incomplete vehicle manufacture: _____

Número de Identificación:
Numéro d'identification :
Identification number: _____

Peso bruto nom. del. veh (PV):
GVWR/PNBV: _____

Peso bruto nom. por eje delantero (GAWR):
PNBE avant :
GAWR front: _____

Peso bruto por eje/GAWR/PNBE: _____
Peso bruto por eje/GAWR/PNBE: _____
Peso bruto por eje/GAWR/PNBE: _____
Peso bruto por eje/GAWR/PNBE: _____
Peso bruto por eje/GAWR/PNBE: _____

Este vehículo ha sido designado para ser: (marque uno)
Ce véhicule a été conçu pour être un : (cochez une case)
This vehicle designed to be a: (check one)

☐ **Camión / Camion / Truck**
☐ **Tractocamión / Porteur-remorqueur / Truck Tractor**

Figure 3 Beginning portion of the Incomplete vehicle document

https://truckmanualshub.com/

Figure 4 Locations of Information Labels - Driver's

Figure 5 Detail Image of figure 4 Item 1

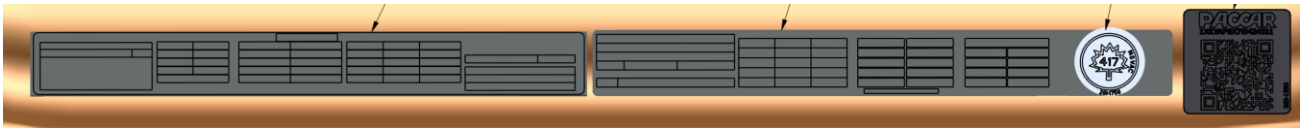

Figure 6 Detailed Image of Figure 4 Item 2 (Canadian Safety Mark)

As the Intermediate or Final Stage Manufacturer, you should retain the Incomplete Vehicle Document for your records. In addition, you should record and retain the manufacturer and serial number of the tires on the vehicle. Upon completion of the vehicle (installation of the body and any other modifications), you should affix your certification label to the vehicle as required by Federal law. This tag identifies you as the "Intermediate or Final Stage Manufacturer" and certifies that the vehicle complies with Federal Motor Vehicle Safety Standards. (See **Figure 4 - Figure 6**.) Be advised that regulations affecting the intermediate and final stage manufacturer may change without notice. Ensure you are referencing the most updated copy of the regulation during the certification and documentation processes.

In part, if the final stage manufacturer can complete and certify the vehicle within the instruction in the incomplete vehicle document (IVD) the certification label would need a statement that reads, "This vehicle has been completed in accordance with the prior manufacturers IVD where applicable. This vehicle conforms to all applicable Federal Motor Vehicle Safety Standards [and Bumper and Theft Prevention Standards if applicable] in effect in (month, year)."

However, if the vehicle cannot be completed and certified with in the guidance provided in the IVD, the final stage manufacturer must ensure the vehicle conforms to all applicable Federal Motor Vehicle Safety Standards (FMVSS). The final stage manufactures certification label would need a statement that reads, "This vehicle conforms to all applicable Federal Motor Vehicle Safety Standards [and Bumper and Theft Prevention Standards if applicable] in effect in (month, year).

https://truckmanualshub.com/

Please refer to e-CFR Title 49: Transportation Part 567 Certification for details related to this regulation.

For Canadian final stage manufacturers see:
Motor Vehicle Safety Regulations C.R.C, c. 1038, Section 6.1 – Vehicles Manufactured in Stages

Or contact: Transport Canada
Tower C, Place de Ville, 330 Sparks Street
Ottawa, Ontario K1A

NOISE AND EMISSIONS REQUIREMENTS

NOTE:

This truck may be equipped with specific emissions control components/systems in order to meet applicable Federal and California noise and exhaust emissions requirements. Tampering with these emissions control components/systems is against the rules that are established by the U.S Code of Federal Regulations, Environment Canada Regulations and California Air Resources Board (CARB). These emissions control components/systems may only be replaced with original equipment parts.

Additionally, most vehicles in North America will be equipped with a Greenhouse Gas (GHG) "Vehicle Emission Control Information" door label indicating its certified configuration. The vehicle components listed on this label are considered emission control devices.

Modifying (i.e., altering, substituting, relocating) any of the emissions control components/systems defined above will affect the noise and emissions performance/certification. Modifications that alter the overall shape and aerodynamic performance of a tractor will also affect the emission certification. If modifications are required, they must first be approved by the manufacturer. Unapproved modifications could negatively affect emissions performance/certification. There is no guarantee that proposed modifications will be approved.

Tires may be substituted provided the new tires possess a Coefficient of rolling resistance (Crr) equal to or lower than Crr of the original tires. Consult with your tire supplier(s) for appropriate replacement tires.

Contact the engine manufacturer for any requirements and restrictions prior to any modifications.

For Cummins Contact 1-800-DIESELS or your local Cummins distributor. Reference AEB 21.102.

https://truckmanualshub.com/

It is possible to relocate the DEF tank; however, the relocation requirements need to be followed. Any variances from the relocation requirements may cause the emissions control components/systems to operate improperly, potentially resulting in engine de-rate.

NOTE: All 2021 engine emissions certified vehicles will be equipped with an On-Board Diagnostics (OBD) system. The OBD system is designed to detect malfunctions of any engine or vehicle component that may increase exhaust emissions or interfere with the proper performance of the OBD system itself

The OBD system consists of computer programs on one or more of the vehicle's Electronic Control Units (ECUs). This program uses information from the control system and from additional sensors to detect malfunctions. When a malfunction is detected, information is stored in the ECU(s) for diagnostic purposes. A Malfunction Indicator Light (MIL) is illuminated in the dash to alert the driver of the need for service of an emission-related component or system.

To ensure compliance to emissions regulations, the final configuration of certain features of the completed vehicle must meet specific requirements. This section describes requirements relevant for only the most common or critical modifications done by body builders. For a complete description of acceptable modifications, see the application guidance available from the manufacturer of the engine installed in the chassis.

FUEL SYSTEM

The following are highlights of some of the more common or critical aspects of this system. The overall system restriction may not exceed the restriction limitations set forth by the engine manufacturer for both supply and return.

- Ensure that fuel lines are not pinched or can potentially be damaged when installed between body and frame
- Fuel lines must be routed and secured without dips or sags
- There must be easy access to filter(s) and fill cap(s)
- The tank vent may not be obstructed
- Added accessories (heaters, generators) cannot introduce air into the system
- Fuel tank must be located so that the full level is not above cylinder head
- "Ultra-Low Sulfur Fuel Only" labels must be present on the dash and fuel fill
- Modification of the pressure side secondary filter and plumbing is not allowed without engine manufacturer approval
- Body installation of fuel tank or routing of lines must not cause significant increase in fuel temperature
- Fuel hoses shall meet or exceed OEM supplied hose material construction specifications

COMPRESSED AIR SYSTEM

The following are highlights of some of the more common or critical aspects of this system.

- Air system modification must meet applicable FMVSS regulations
- Compressed Air tank may not be modified (exception – addition or removal of fittings or relocation of the tank)
- Added devices or bodywork may not interfere with or rub air lines
- Air supply to the engine doser may not be restricted or disconnected

https://truckmanualshub.com/

- Air lines should be routed, protected from heat, and properly secured to prevent damage from other components
- Care should be taken so that air lines do not rub against other components
- Care should be taken to protect the air system from heat sources

EXHAUST AND EXHAUST AFTER-TREATMENT SYSTEM

The following are highlights of some of the more common or critical aspects of this system.

- The following after-treatment and exhaust system components may not be modified:
    - DPF assembly
    - SCR Catalyst assembly
    - Exhaust pipes between the engine and after-treatment devices (DPF, SCR Catalyst) and between after-treatment devices
    - NOx Sensors
    - PM Sensor
- The following modifications may only be done within the guidelines of the "DEF System Relocation Guide."
    - Modifications to Diesel Exhaust Fluid (DEF) throttle, suction, or pressure lines
    - Modification or relocation of the DEF tank
    - Modification of coolant lines to and from the DEF tank
- All DEF and coolant lines should be routed, protected, and properly secured to prevent damage during vehicle operation or other components
- If relocation of the DCU or ACM is necessary, use existing frame brackets and mount inside of frame flanges where necessary. Do not extend the harnesses
- The DPF, the SCR catalyst, or their mounting may not be modified
- The NOx sensor may not be relocated or altered in any way; this includes re-clocking the aftertreatment canister or reorienting the sensor(s)
- Exhaust pipes used for tailpipes/stacks must be properly sized, and must prevent water from entering
- Ensure adequate clearance between the exhaust and body panels, hoses, and wire harnesses
- The body in the vicinity of the DPF must be able to withstand temperatures up to 400°C (750°F)
- Do not add thermal insulation to the external surface of the DPF
- The SCR water drain hole may not be blocked
- Allow adequate clearance (25mm (1 inch)) for servicing the DPF sensors, wiring, and clamped joints
- Drainage may not come in contact with the DPF, SCR catalyst, sensors or wiring
- Allow sufficient clearance for removing sensors from DPF. Thermistors require four inches. Other sensors require one inch
- Wiring should be routed, protected from heat, and properly secured to prevent damage from other components
- The exhaust system from an auxiliary power unit (APU) must not be connected to any part of the vehicle after-treatment system or vehicle tail pipe.

https://truckmanualshub.com/

COOLING SYSTEM

The following are highlights of some of the more common or critical aspects of this system.

- Modifications to the design or locations of fill or vent lines, heater or defroster core, and surge tank are not recommended
- Additional accessories plumbed into the engine cooling system are not permitted, at the risk of voiding vehicle warranty
- Coolant level sensor tampering will void warranty
- When installing auxiliary equipment in front of the vehicle, or additional heat exchangers, ensure that adequate air flow is available to the vehicle cooling system. Refer to engine manufacturer application guide- lines for further detail
- When installing FEPTO drivelines, the lower radiator anti-recirculation seal must be retained with FEPTO driveline clearance modification only
- Changes made to cooling fan circuit and controls are not allowed, with the exception of AC minimum fan on time parameter
- See owner's manual for appropriate winter front usage

AIR INTAKE SYSTEM

The following are highlights of some of the more common or critical aspects of this system.

- The air intake screen may not be blocked, either fully or partially
- Modification to the air intake system may not restrict airflow. For example, pipe diameter may not be reduced
- All sensors must be retained in existing locations
- To retain the system seal, proper clamp torque must be used. Refer to service manual for proper clamp torque

ELECTRICAL SYSTEM

The following are highlights of some of the more common or critical aspects of this system.

- Electrical harnesses providing battery power and electronic control signals to engine and emissions control/ vehicle OBD components including datalinks may not be spliced. These emissions control/vehicle OBD components include the following:
    - throttle pedal
    - vehicle speed sensor
    - after-treatment wiring
    - 9-pin OBD Connector
    - CAN Communication / OBD Diagnostic wiring
- If the alternator or battery is substituted, it must meet the requirements of the engine manufacture's guidelines. This includes alternator ground voltage drop and alternator ground cable effectiveness. See the engine manufacturer's guidelines for recommended test procedure. Additionally, the maximum voltage differential and the peak-peak voltage differential between the engine ECM block ground stud and battery negative terminal may not exceed 500 mV under any combination of loads or operating conditions.
- Only an OBD compliant battery disconnect switch may be installed on vehicles equipped with EPA 2013 and beyond compliant diesel engines. An OBD compliant switch and harness, even in the off position, supply a small amount of power to the engine controller and enable certain

https://truckmanualshub.com/

emissions critical functions (e.g., DEF line purge). Any modifications to the electrical system which interrupt this power supply will cause OBD fault codes and illumination of the MIL. In addition, such a modification will render the engine non-compliant with certain emission regulations. As a rule of thumb, you can remove and replace a battery disconnect switch on a truck equipped with a battery disconnect switch at the factory. However, if a battery disconnect switch was not installed in the factory a significant harness modification is required before a battery disconnect switch can be added.

- Installation of aftermarket transfer-cases must address the vehicle speed sensor position. The standard position of the speed sensor is at the transmission tail shaft. When a transfer-case is added it is best to relocate the sensor to the axle side output shaft of the transfer-case. This is typically accomplished by adding a tone wheel into the driveline yoke assembly.
- Wiring extensions for the after-treatment wiring are available for relocating the DEF tank from your dealer via Paccar Parts. For relocation of DEF tank, refer to the after-treatment section of this manual.
- The OBD/Diagnostic connector port is located below the dash to the left of the steering wheel. This connector and its location may not be changed.

https://truckmanualshub.com/

SECTION 3 - DIMENSIONS

INTRODUCTION

This section has been designed to provide enough information to successfully layout a chassis in the body planning process. All dimensions are inches unless otherwise noted. Optional equipment may not be depicted. Please contact your local Kenworth dealer if more dimensional information is desired.

ABBREVIATIONS

Throughout this section and in other sections as well, abbreviations are used to describe certain characteristics of your vehicle. The chart below lists the abbreviated terms used.

Table 1 Abbreviations Used

AF	After Frame – Frame rail overhang behind rear axle(s)
CA	Cab to Axle – Dimension from back of the cab to the centerline of the rear axle(s)
WB	Wheelbase – Measured from front axle to the centerline of the rear axle(s)
FS	Front suspension height
RS	Rear suspension height
SOC	Side of cab
BOC	Back of cab
UC	Under cab
BBC	Bumper to back of cab
BFA	Bumper to front axle
FAB	Front axle to back of cab
FDA	Front drive axle
FEPTO	Front engine PTO extension. Measured from the front of the grille to the front of the bumper
SH	Aero short hood (107.5”)
MH	Aero medium hood (109.5”)
VH	Vocational hood (109.5”)

https://truckmanualshub.com/

MODELS

For ease of use, this manual has designated each model as a specific color.

AERO SH (107.5" BBC)

AERO MH (109.5" BBC)

VOCATIONAL HOOD (109.5" BBC)

OVERALL DIMENSIONS

This section includes drawings and charts of the following Kenworth Models: Aero SH, Aero MH, and Vocational Hood. Several optional configurations are also included.

On the pages that follow, detailed drawings show views of each vehicle. They illustrate important measurements critical to integrating bodies of all types. See the "Table of Contents" at the beginning of the manual to locate the drawing that you need.

All heights are given from the bottom of the frame rail.

Kenworth offers 3D frame models and 2D .dxf files prior to build for chassis that have been ordered. Please contact your local dealership to request this feature when specifying your chassis.

https://truckmanualshub.com/

AERO SHORT HOOD - SH (107.5" BBC)

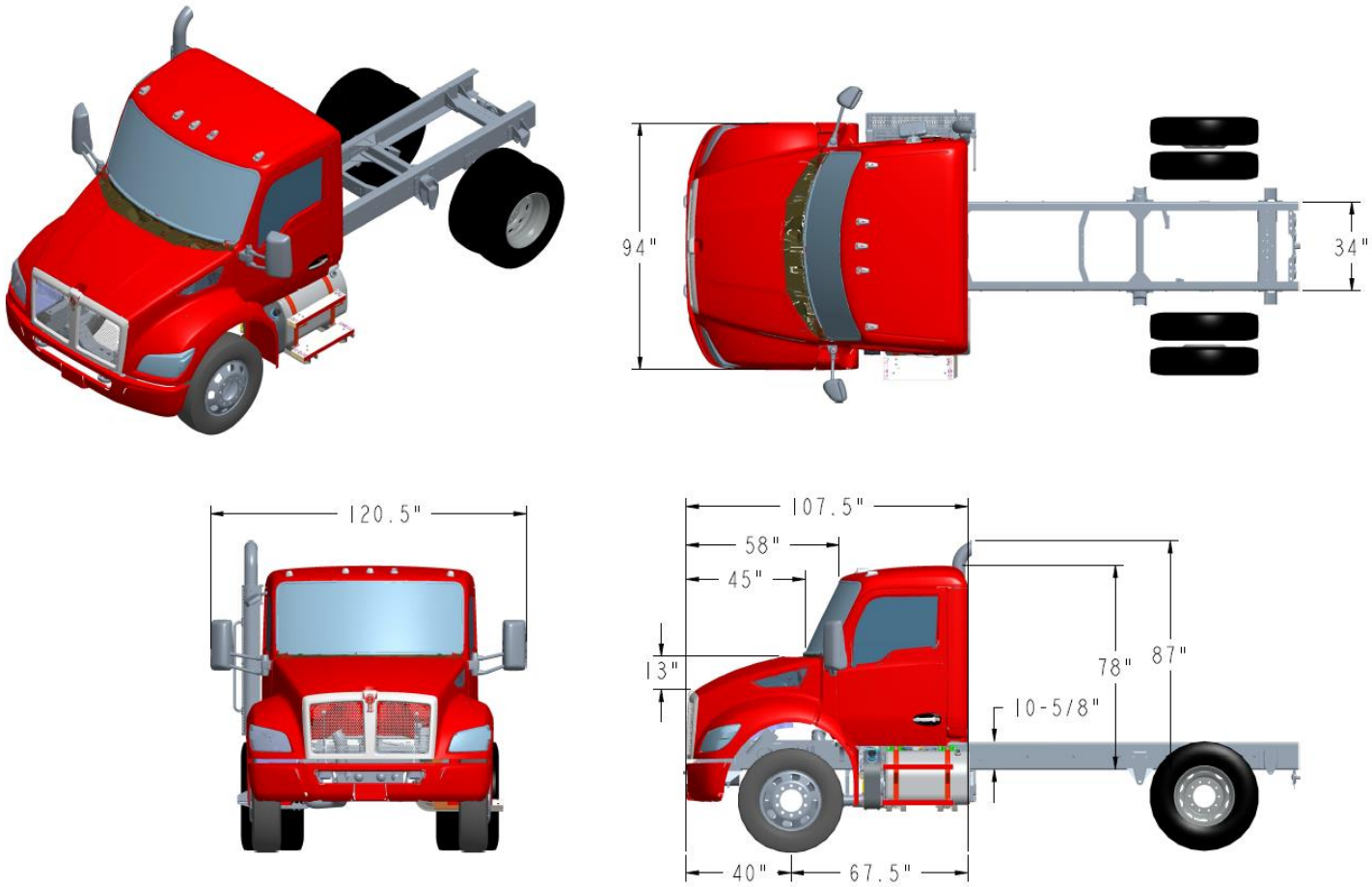

Figure 7 Aero SH (107.5" BBC) Isometric, Top, Front, & LH View - Overall Dimensions

NOTES:

- DIMENSIONS ARE FOR REFERENCE ONLY
- DIMENSIONS REFERENCE FRONT OF BUMPER
- DIMENSION FRONT AXLE TO FRONT OF FRAME (FFA) IS 26.8"
- DIMENSION FRONT OF BUMPER TO FRONT OF FRAME (BFF) IS 13.2"
- LOW ROOF SHOWN (RAISED ROOF 4" TALLER)
- 24" EXHAUST STANDPIPE SHOWN, OTHER HEIGHT OPTIONS ARE AVAILABLE

https://truckmanualshub.com/

AERO MID HOOD - MH (109.5" BBC)

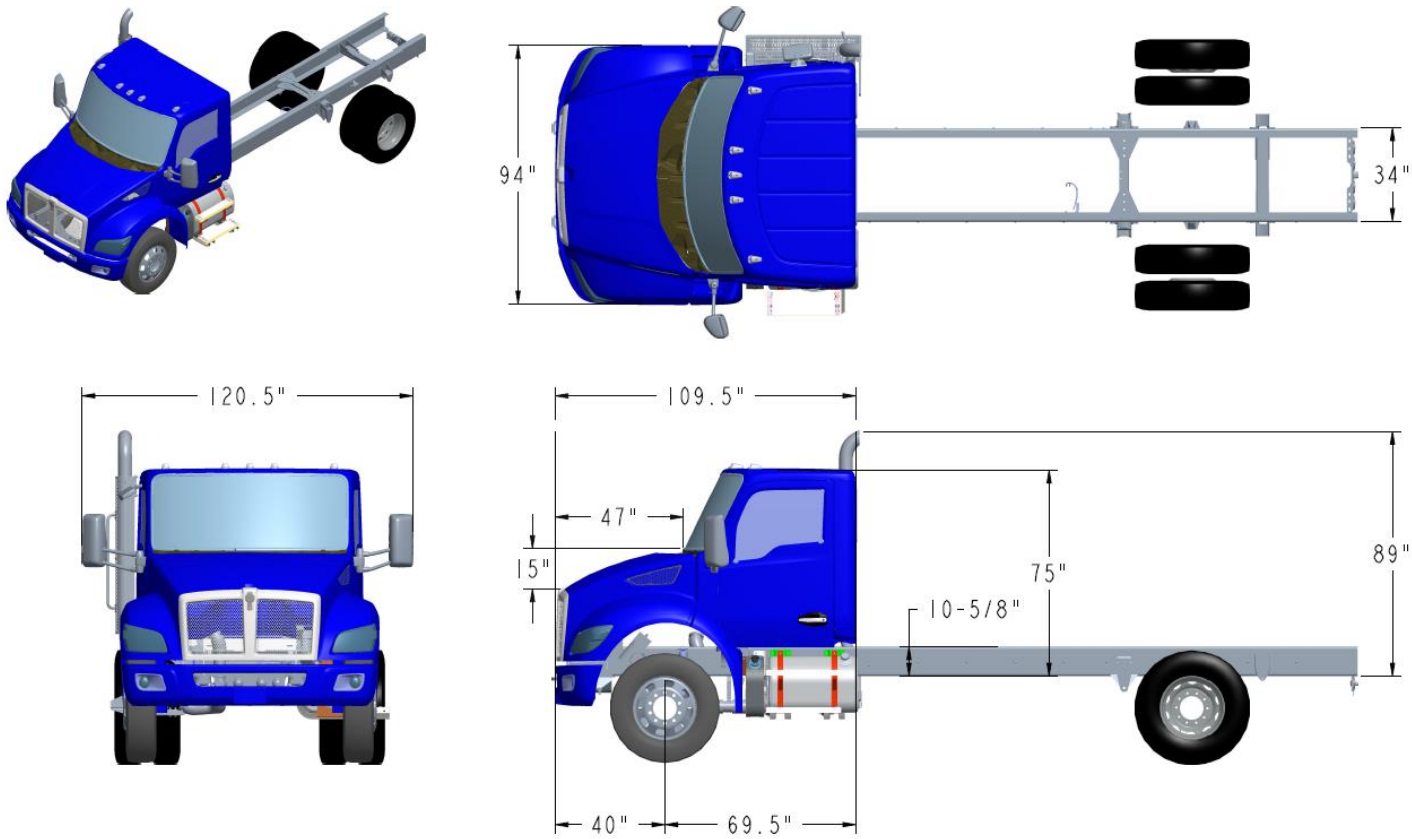

Figure 8 Aero MH (109.5 BBC) – Overall Dimensions

NOTES:

- Dimensions are for reference only
- Dimensions reference front of bumper
- Dimension front axle to front of frame (FFA) is 26.2″
- Dimension front of bumper to front of frame (BFF) is 12.9″
- Low roof shown (raised roof 4″ taller)
- 24″ exhaust standpipe shown, other height options are available

https://truckmanualshub.com/

VOCATIONAL HOOD – VH (109.5" BBC)

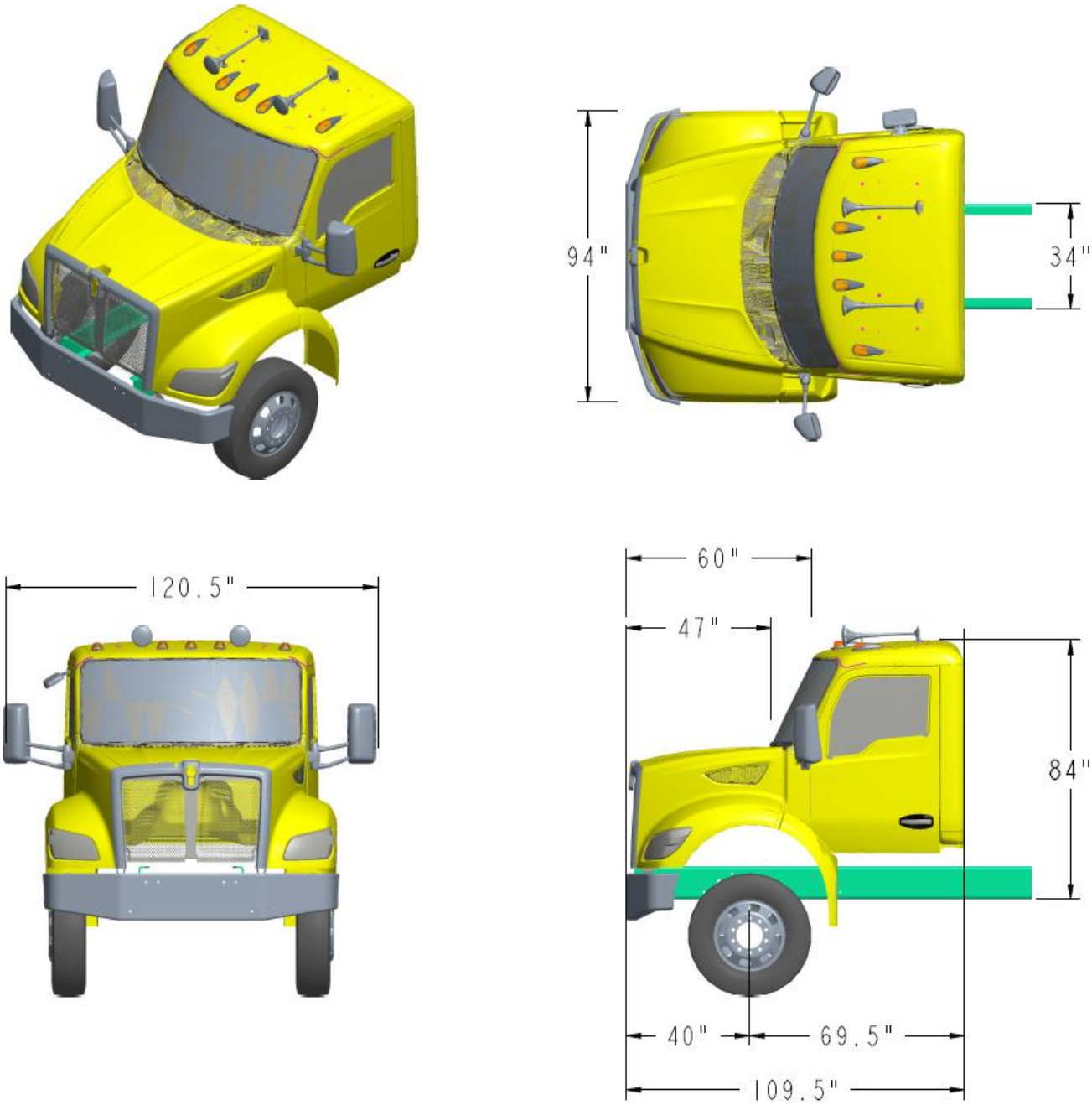

Figure 9 VH (109.5" BBC) - With Raised Roof - Overall Dimensions

NOTES:

- DIMENSIONS ARE FOR REFERENCE ONLY
- DIMENSIONS REFERENCE FRONT OF BUMPER
- DIMENSION FRONT AXLE TO FRONT OF FRAME (FFA) IS 37.9"
- DIMENSION FRONT OF BUMPER TO FRONT OF FRAME (BFF) IS 1.5"
- RAISED ROOF SHOWN (LOW ROOF 4" LOWER)
- DIMENSIONS ARE WITH 10-3/4" RAIL
- DIMENSIONS ARE WITH 24" 45 DEGREE TAILPIPE

https://truckmanualshub.com/

VOCATIONAL HOOD W/ 24" FEPTO BUMPER EXTENSION

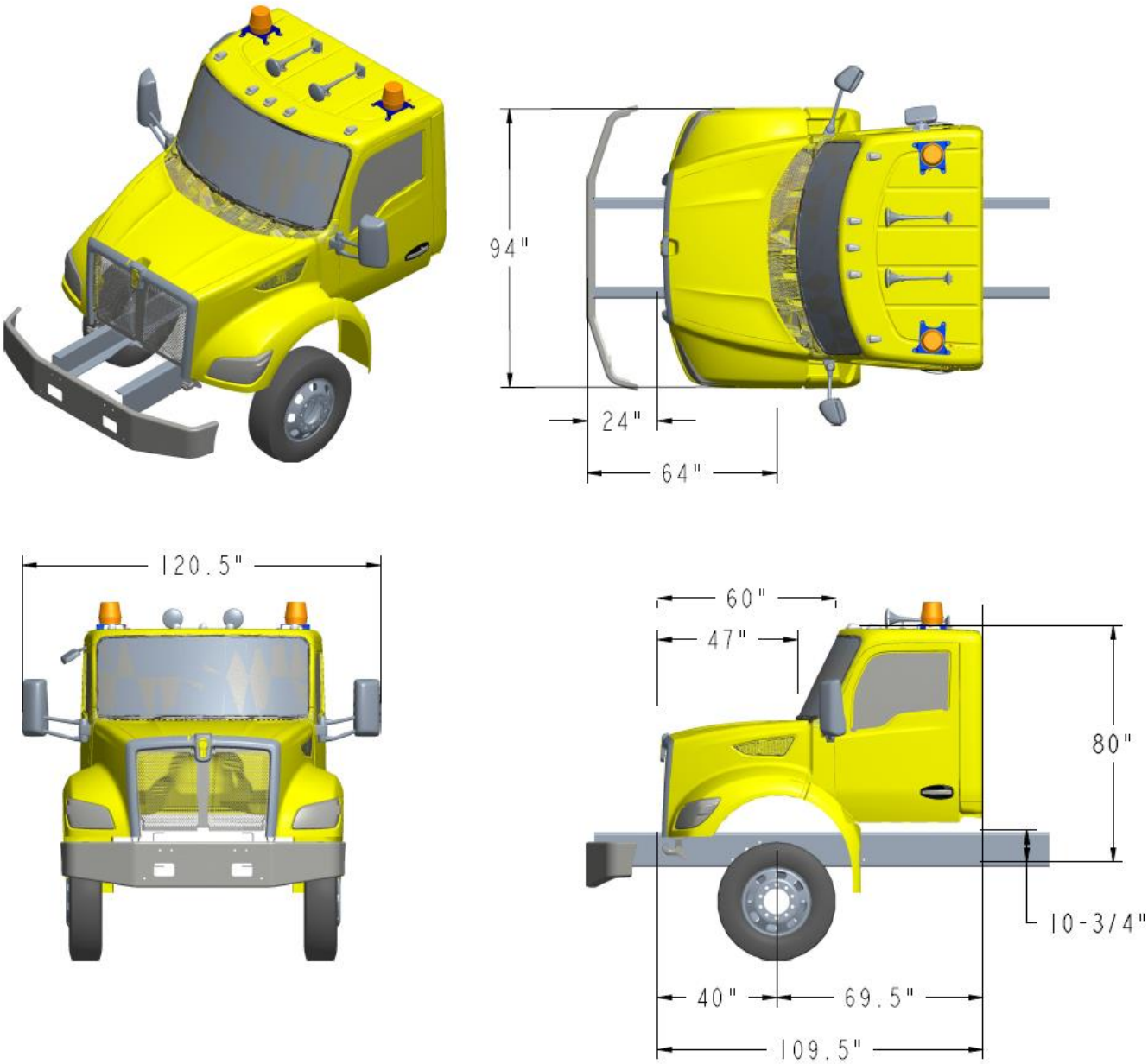

Figure 10 VH 24" FEPTO Extension – Overall Dimensions

NOTES:

- Dimensions are for reference only
- Dimension front of bumper to front of frame (BFF) is 1.5"

https://truckmanualshub.com/

CAB – 2.1m MEDIUM DUTY FAMILY

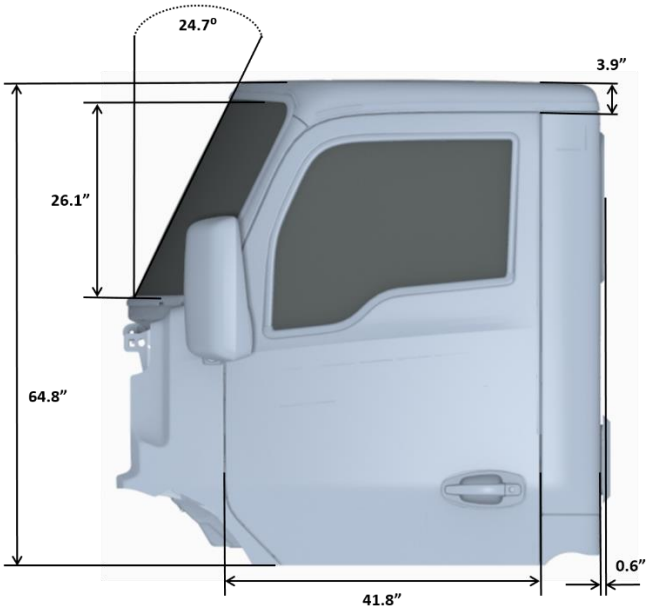

Figure 11 Cab Dimensions 2.1m Medium Duty

LOW ROOF and RAISED ROOF

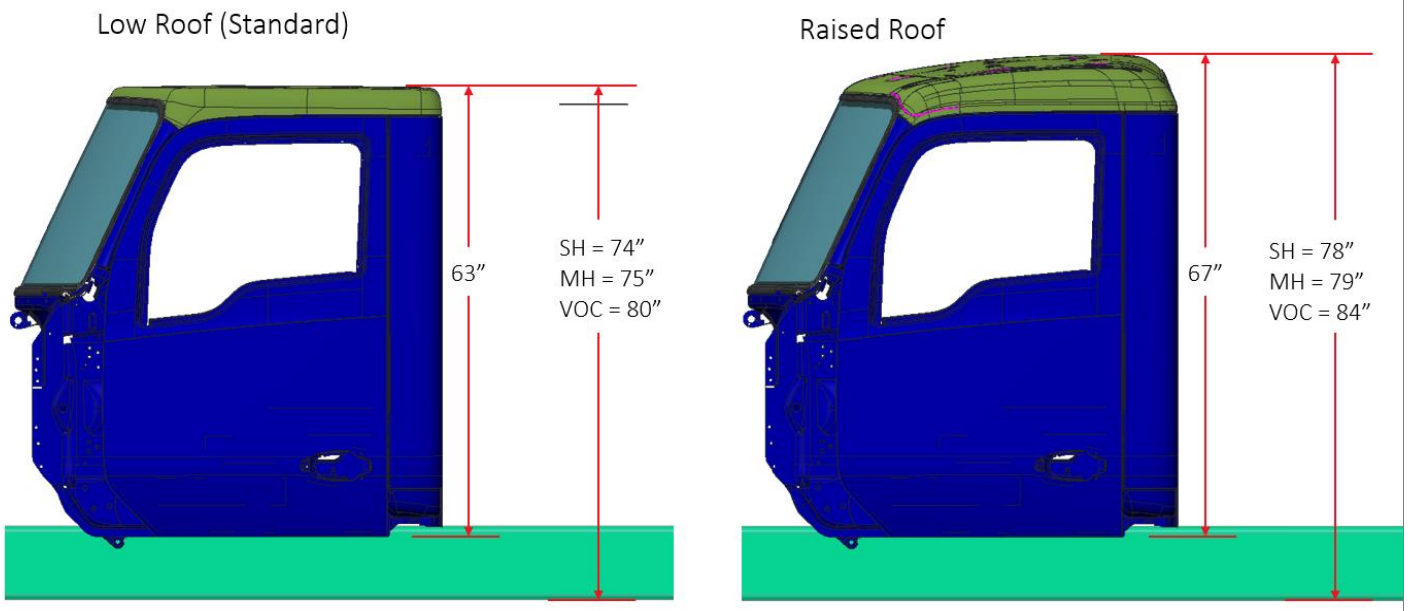

Figure 12 Low Roof and Raised Roof Cab Height 2.1m Medium Duty

https://truckmanualshub.com/

WINDOW DIMENSIONS

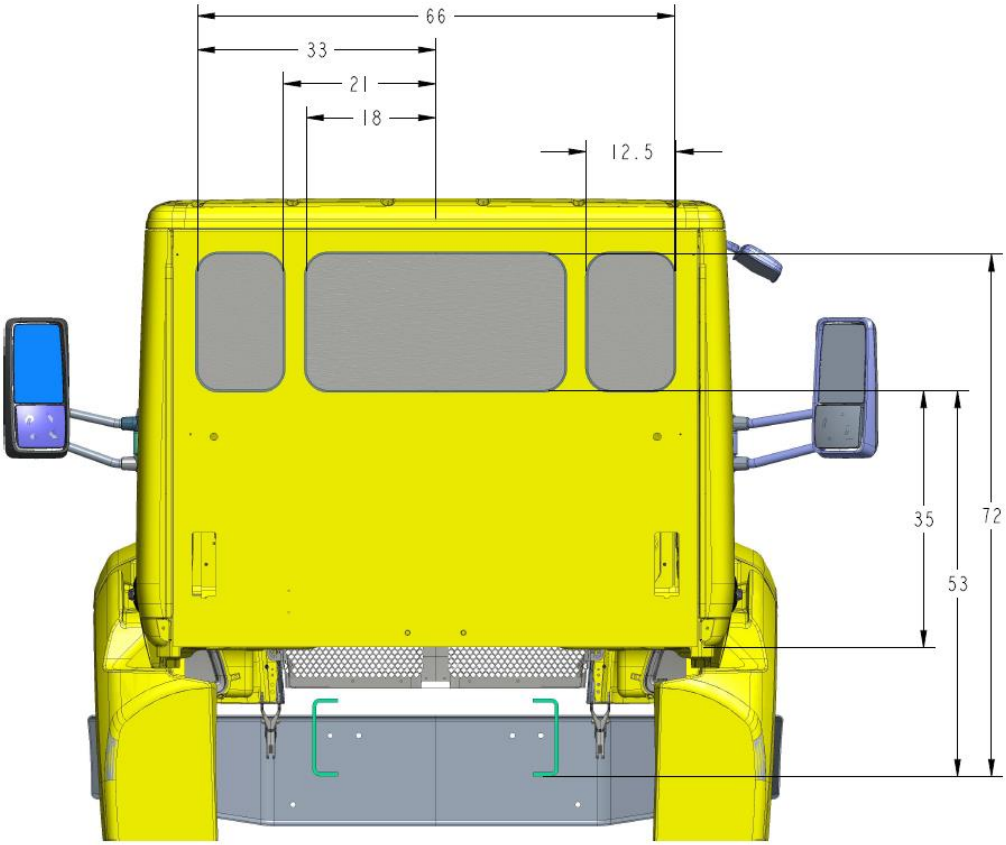

Figure 13 Vocational Hood BOC Window Dimensions

NOTES:

- DIMENSIONS ARE FOR REFERENCE ONLY
- Bottom of frame to window height will be less for MH and SH.
- For other hoods reference Figure 12

CAB SUSPENSION

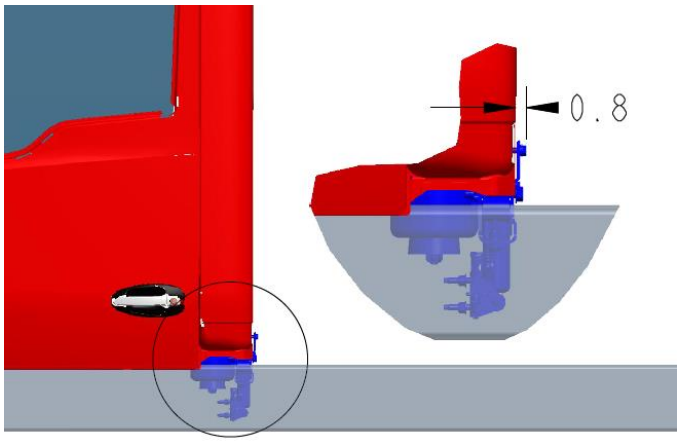

Figure 14 Cab Air Suspension

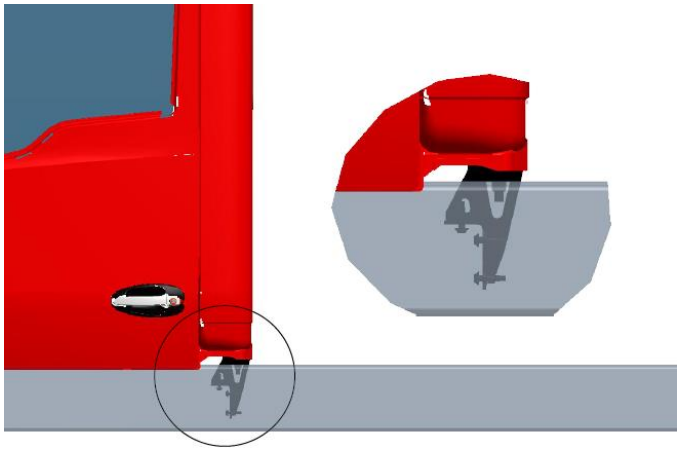

Figure 15 Cab Rigid Suspension

https://truckmanualshub.com/

CAB STEP HEIGHT

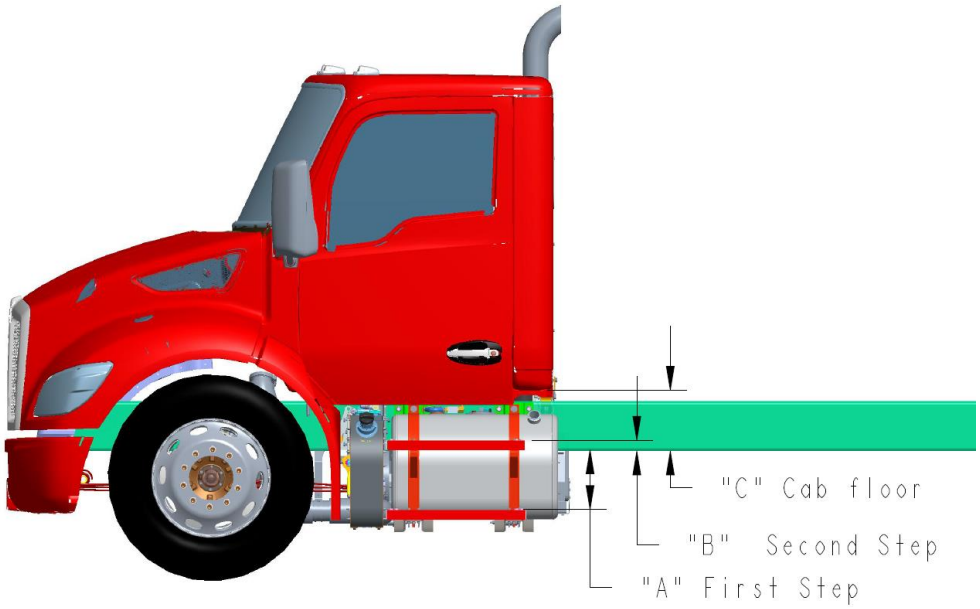

Figure 16 Cab Step Heights

Table 2 Cab Step Heights

Description	A (First Step)	B (Second Step)	C (Cab Floor)
Battery Box	11.5"	1.8"	See Notes
Fuel Tank	11.5"	1.8"	See Notes
RHUC Aftertreatment Box	8"	5.8"	See Notes

NOTES:

- Dimension C is fixed for each hood variation, regardless of under cab component
- Dimension C (Bottom of frame to Cab floor sheet):
  - SH = 15.0", MH = 16.1", VH = 20.8"
- LH shown, RH Dimensions are equivalent
- Aftertreatment box is RH Under Cab only

https://truckmanualshub.com/

FRAME RAILS

Frame rail configurations are shown below. Frame height, flange and structural values can be found in the Body Mounting Section. All rails measure 34" to the outer surfaces as shown.

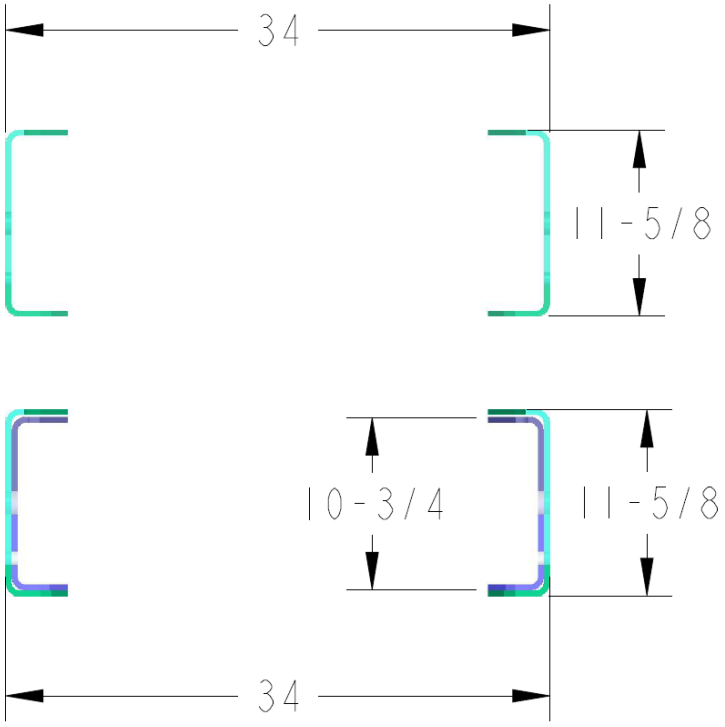

Figure 17 Frame Rail Configuration Example

https://truckmanualshub.com/

FRAME HEIGHT CHARTS

The following frame height charts may be used for finding approximate front and rear frame heights.

The results are approximations because of the many variables such as tire tread thickness, manufacturing tolerances, spring set, and the loading imposed in the loaded situation.

Loaded values are quotes for representative loads at the ground for the spring and axle combination, and, as such, can vary with loading variations.

Special installations are sometimes possible with certain suspensions allowing variations from standard. Please contact application engineering for information.

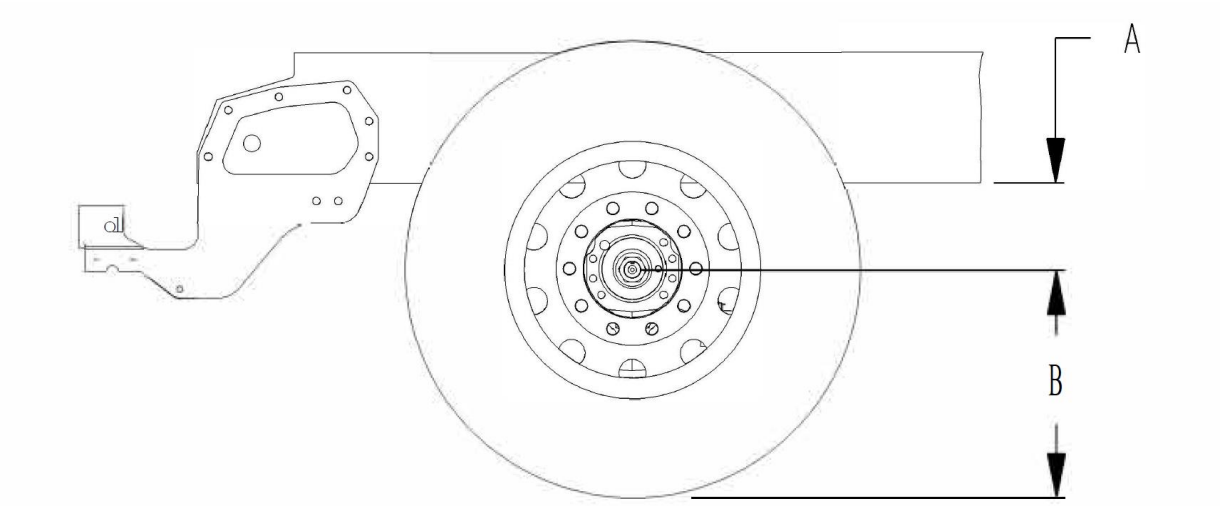

Figure 18 Front Frame Height

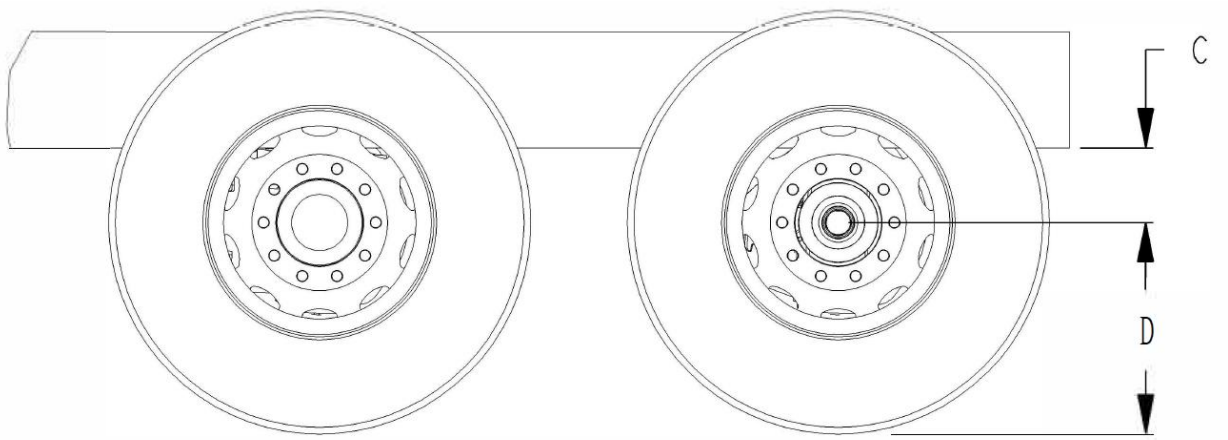

Figure 19 Rear Frame Height

NOTES:

- "B" and "D" dimensions can be found in the tires/wheels section or in the tire vendors literature.

https://truckmanualshub.com/

FRONT FRAME HEIGHTS "A'

Table 3 Front Frame Ride Heights "A"

Front Suspension Rating (lbs)	Spacer Height (mm)	A (in.)	
		Unladen	Laden
8,000, 10,000 & 12,000	5	7.4	6.5
	30	8.4	7.5
	40	8.8	7.9
	50	9.2	8.3
	60	9.6	8.7
	70	10	9.1
	80	10.4	9.4
13,200	5	9.4	8.3
	30	10.4	9.3
	40	10.8	9.6
	50	11.2	10
	60	11.6	10.4
	70	12	10.8
	80	12.4	11.2
14,600	5	9.4	7.9
	30	10.4	8.9
	40	10.8	9.3
	50	11.2	9.7
	60	11.6	10.1
	70	12	10.5
	80	12.4	10.9
16,000	5	10	8.5
	30	10.9	9.5
	40	11.3	9.9
	50	11.7	10.3
	60	12.1	10.7
	70	12.5	11.1
	80	12.9	11.5
20,000	5	10	7.7
	30	10.9	8.7
	40	11.3	9.1
	50	11.7	9.4
	60	12.1	9.8
	70	12.5	10.2
	80	12.9	10.6

NOTES:

1. Spacers are used by Engineering to obtain a level frame and are not optional.
2. UNLADEN heights are calculated on the assumptions below
3. 12K or 14.6K springs assumes 8,000 lbs. load in UNLADEN condition
4. 16K springs assumes 8,500 lbs. load in UNLADEN condition
5. 18K - 20K springs assumes 9,000 lbs. load in UNLADEN condition
6. "A" dimension shown is to bottom of frame rail. Add frame rail height dimension for frame height.
7. All suspension heights are with standard 3.5" drop axles.

https://truckmanualshub.com/

REAR FRAME HEIGHTS "C"

Table 4 Single Drive Rear Suspension Height "C"

Suspension	*Suspension Description*		*C (in.)*	
			Unladen	Laden
KW AG180	KW AG180 AIR LEAF 18K SINGLE		7.0	7.0
KW TL135	KW TL135 TAPERLEAF 13.5K SINGLE		8.9	7.0
KW TL180	KWTL180 TAPERLEAF 18K SINGLE		9.4	7.4
Hendrickson HAS230	HEND HAS230 8.8"HT, WELD CM/G*23K SING	W/SHOCKS, MED DUTY W/RR ADB	8.9	8.8
	HEND HAS230 23K SING AIR 10" RIDE HT		10.0	10.0
	HEND HAS230L 8.3"HT, WELD CM/G*23K SING	W/SUSP DUMP VLV, NOT ADB COMP	8.5	8.3
Hendrickson Primaax EX	HEND PRIMAAX EX232 SINGLE 23K 8.5"	RIDE HEIGHT	8.5	8.5
	HEND PRIMAAX EX262 SINGLE 26K 8.5"	RIDE HEIGHT	8.5	8.5
	HEND PRIMAAX EX262 SINGLE 26K 8.5"	RIDE HEIGHT	8.5	8.5
REYCO 79KB (W/O HELPER SPRING)	REYCO 79KB TAPERLEAF 20K SING MED DUTY	NOT RR ADB COMPATIBLE	9.0	7.6
	REYCO 79KB TAPERLEAF 20K SING*MED DUTY	W/ RR AIR DISC BRKS	9.0	8.1
	REYCO 79KB TAPERLEAF 21K SING*MED DUTY	NOT RR ADB	11.4	9.8
	REYCO 79KB TAPERLEAF 21K SING*MED DUTY	NOT RR ADB COMPATIBLE	9.0	7.5
	REYCO 79KB TAPERLEAF 21K SING*MED DUTY	W/ RR ADB	9.0	8.0
REYCO 79KB (W/HELPER SPRING)	REYCO 79KB TAPERLEAF 23K SING*MED DUTY	W/ HELPER SPRG, NOT RR ADB COMPATIBLE	9.0	7.3
	REYCO 79KB TAPERLEAF 23K SING*MED DUTY	W/ HELPER SPRG, W/ RR ADB	9.3	8.0
	REYCO 79KB TAPERLEAF 23K SING*MED DUTY	FIRE TRUCK, W/ HELPER SPRG, W/ RR AD	10.8	9.0
	REYCO 79KB TAPERLEAF 23K SING*MED DUTY	HELPER SPRG	11.4	9.7
	REYCO 79KB MULTILEAF 26K SING*MED DUTY	W/ HELPER SPRG, NOT RR ADB COMPATIBLE	10.8	8.1
	REYCO 79KB MULTILEAF 26K SING	W/ HELPER SPRG, W/ RR ADB	10.7	8.4
	REYCO 79KB MULTILEAF 31K SING	28K SPRG W/ HELPER, NOT ADB COMPAT	11.8	9.5

https://truckmanualshub.com/

Table 5 Tandem Rear Suspension Height "C"

Suspension	Suspension Description	C (in.)	
		Unladen	Laden
KW AG400	KW AG400 40K DUAL 52" AS 9" RIDE HTINCL AIR SUSP DUMP VALVE	9.0	9.0
	KW AG400 40K DUAL 54" AS 9" RIDE HTINCL AIR SUSP DUMP VALVE	9.0	9.0
KW AG400L	KW AG400L 40K DUAL 52" AS 8.5" RIDE HTW/SING LEVEL VALVE	8.8	8.5
	KW AG400L 40K DUAL 54" AS 8.5" RIDE HTW/SING LEVEL VALVE	8.8	8.5
KW AG460	KW AG460 46K DUAL 54" AS 10.5" RIDE HT	10.5	10.5
CHALMERS 854	CHALMERS 854-40-H 40K DUAL 54" ASSTANDARD RESTRICTOR CAN	12.4	10.2
	CHALMERS 854-40-H-HS 40K DUAL 54" ASHIGH CENTER OF GRAVITY APPLICATION	12.4	10.9
	CHALMERS 854-40-L 40K DUAL 54" ASSTANDARD RESTRICTOR CAN	11.1	8.9
	CHALMERS 854-40-L-HS 40K DUAL 54" ASHIGH CENTER OF GRAVITY APPLICATION	11.1	9.6
	CHALMERS 854-40-XL 40K DUAL 54" ASMED DUTY, UNDERSLUNG, NOT ADB COMPATIBLE	9.3	6.9
	CHALMERS 854-40-XL-HS 40K DUAL 54" ASMED DUTY, UNDERSLUNG, HIGH CG	9.3	7.6
	CHALMERS 85446-H 46K DUAL 54" ASSTANDARD RESTRICTOR CAN	12.5	10.1
	CHALMERS 854-46-H-HS 46K DUAL 54" ASHIGH CENTER OF GRAVITY APPLICATION	12.5	10.9
	CHALMERS 854-46-L 46K DUAL 54" ASSTANDARD RESTRICTOR CAN	11.3	8.9
	CHALMERS 854-46-L-HS 46K DUAL 54" ASHIGH CENTER OF GRAVITY APPLICATION	11.3	9.6
Hendrickson HAS402	HEND HAS402 40K DUAL 52" AS STL C/M&G	8.0	7.9
	HEND HAS402 40K DUAL 52" AS STL C/M&GW/ RR ADB	8.9	8.8
	HEND HAS402 40K DUAL 54" AS ALUM C/M&GNOT ADB COMPATIBLE	10.0	10.0
Hendrickson Haulmaax EX	HEND HAULMAAX EX (HMX)400 40K DUAL 54"16.5" SADDLE HT, W/ SHOCKS	11.5	9.5
	HEND HAULMAAX EX (HMX)400 40K DUAL 54"17.5" SADDLE HT, W/ SHOCKS	12.5	10.5
	HEND HAULMAAX EX (HMX)460 46K DUAL 54"16.5" SADDLE HT, W/ SHOCKS	11.5	9.5
	HEND HAULMAAX EX (HMX)460 46K DUAL 54"17.5" SADDLE HT, W/ SHOCKS	12.5	10.5
	HEND HAULMAAX EX (HMX)460 46K DUAL 54"18.5" SADDLE HT, W/ SHOCKS	13.5	11.5
	HEND HAULMAAX EX (HMX)460 46K DUAL 60"17.3" SADDLE HT, W/ SHOCKS	12.5	10.5
	HEND HAULMAAX EX (HMX)460 46K DUAL 60"18.5" SADDLE HT, W/ SHOCKS	13.5	11.5
Hendrickson Primaax EX	HEND PRIMAAX EX 462 46K DUAL 54" AS	10.0	10.0
	HEND PRIMAAX EX 462 46K DUAL 72" AS	10.0	10.0
Hendrickson RT	HEND RT403 40K DUAL 52" AS MED DUTY6.0" SADDLE HT W/BARPIN BUSHING	8.6	7.6
	HEND RT403 40K DUAL 52" AS STD HT7.19" SADDLE HT W/BARPIN BUSHING	10.7	9.7
	HEND RT463 46K DUAL 54" AS LOW HT6.0" SADDLE HT W/BARPIN BUSHING	11.1	10.0
	HEND RT463 46K DUAL 54" AS STD HT7.19" SADDLE HT W/BARPIN BUSHING	12.5	11.2
REYCO 102	REY 102 TL HI-T*MED DUTY*38K DUAL 52"AS8-1/2" RIDE HEIGHT*STL CM&G	8.5	7.2
	REYCO 102 ML 40K DUAL 52" AS STL C/M&G9.6" LOW MOUNT, NOT RR ADB COMPATIBLE	9.6	8.0

https://truckmanualshub.com/

FRAME MOUNTED COMPONENT GROUND CLEARANCE

To calculate estimated ground clearance for frame mounted components, using the underside of the frame rail as a reference, do the following:

1. Find the front and rear tire radius data from the manufacturer's literature
   - As described on Page 25
2. Determine front and rear suspension ride heights from the tables on the previous pages
3. Add the tire's radius to its respective suspension ride height to calculate frame height
4. Find the bottom of rail to bottom of component dimension "E" for the desired component in Table 6 below.
5. Ground clearance = lowest frame height – component dimension "E"

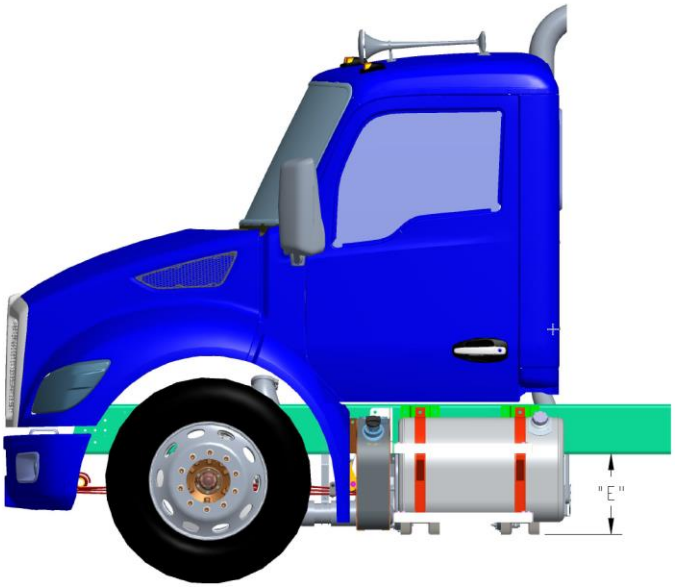

Figure 20 Bottom of Frame to Bottom of Component

Table 6 Bottom of Frame to Bottom of Component Dimension "E"

Component	E (in)
Fuel Tank (All)	15.8
Battery/Toolbox (All)	13.4
RHUC DPF/SCR	15.3
RHUC Natural Gas Catalyst	18.1
Under Frame DPF/SCR	15.2
Under Frame Catalyst B6.7N	15.6
Under Frame Catalyst L9N	16.6
Small/Large DEF Tank	15.0
Extended Cab Access Step	25.8

Ground clearances, like height calculations, are affected by numerous factors including, but not limited to, front and rear axle loading and tire pressure. Placement of frame components, such as fuel tanks, will affect loads on the front axle and rear axle, as well as distribution to the left and right side of the vehicle. Ground clearances calculated from this information are estimates only.

https://truckmanualshub.com/

FRAME SPACE REQUIREMENTS

To ensure adequate space for fuel tanks, ladder steps, additional battery/toolboxes, pusher axles and other frame mounted components; the amount of available space must be calculated by using the formula below. Contact Applications Engineering for configurations not shown in this section.

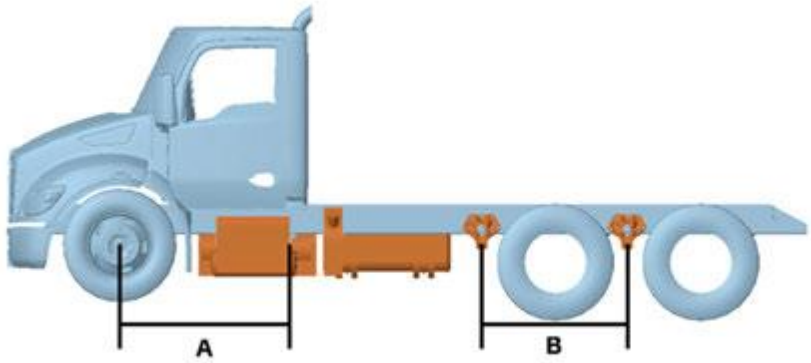

Figure 21 Frame Space Driver Side

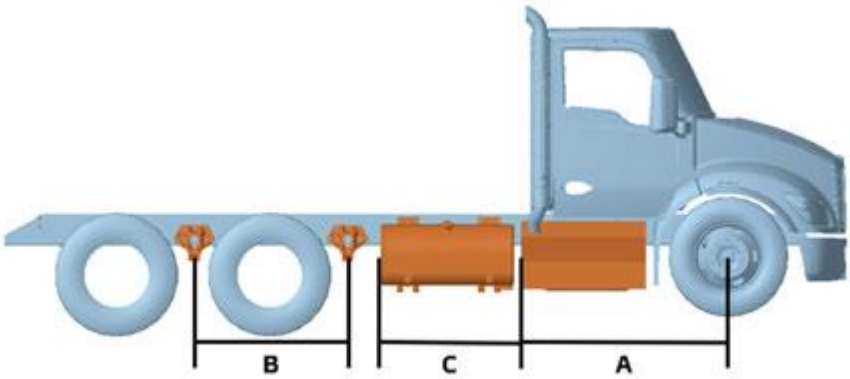

Figure 22 Frame Space Passenger

CALCULATING BOC FRAME SPACE

Available BOC Frame Space = Wheelbase - Dimension "A" – Dimension "C" - Dimension "B"

Dimension "A" (shown in charts on following pages) is the minimum clearance measured from the centerline of the front axle to the back of the under-cab component (DPF/SCR exhaust, fuel tank, battery box, toolbox, etc.).

Dimension "B" is the amount of required suspension and quarter fender clearance from the rear axle centerline to clear rail for a given suspension.

Dimension "C" is the amount of space from the rear of the under-cab component to the back of the DEF tank (can be on LH or RH rail).

https://truckmanualshub.com/

FRAME SPACE DIMENSION "A"

Table 7 LH Under Cab DEF Dimension "A"

Hood	A(in)	From BOC
SH	33.9	-33.6
MH/VH	35.8	-33.7

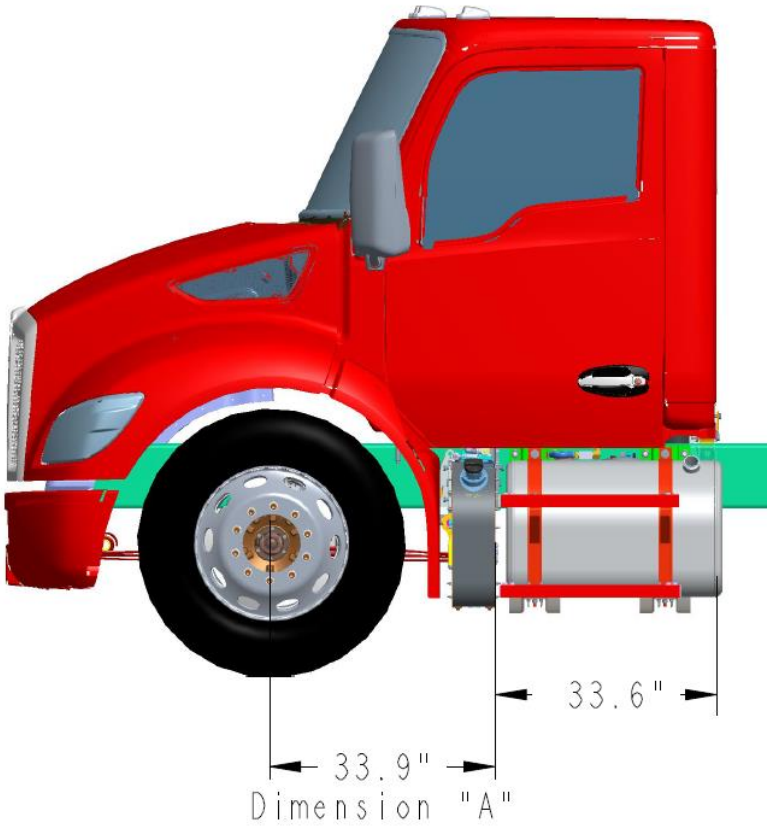

Figure 23 Dimension "A" on SH, LH Rail

https://truckmanualshub.com/

Table 8 Under Cab Battery/Toolbox Dimension "A"

Rail	Hood	UC Component	A(in)	From BOC
LH/RH	***SH***	***3 Battery/Toolbox***	***61***	***-6.5***
		4 Battery Box	64.8	-2.7
	MH/VH	3 Battery/Toolbox	63	-6.5
		4 Battery Box	64.8	-4.7

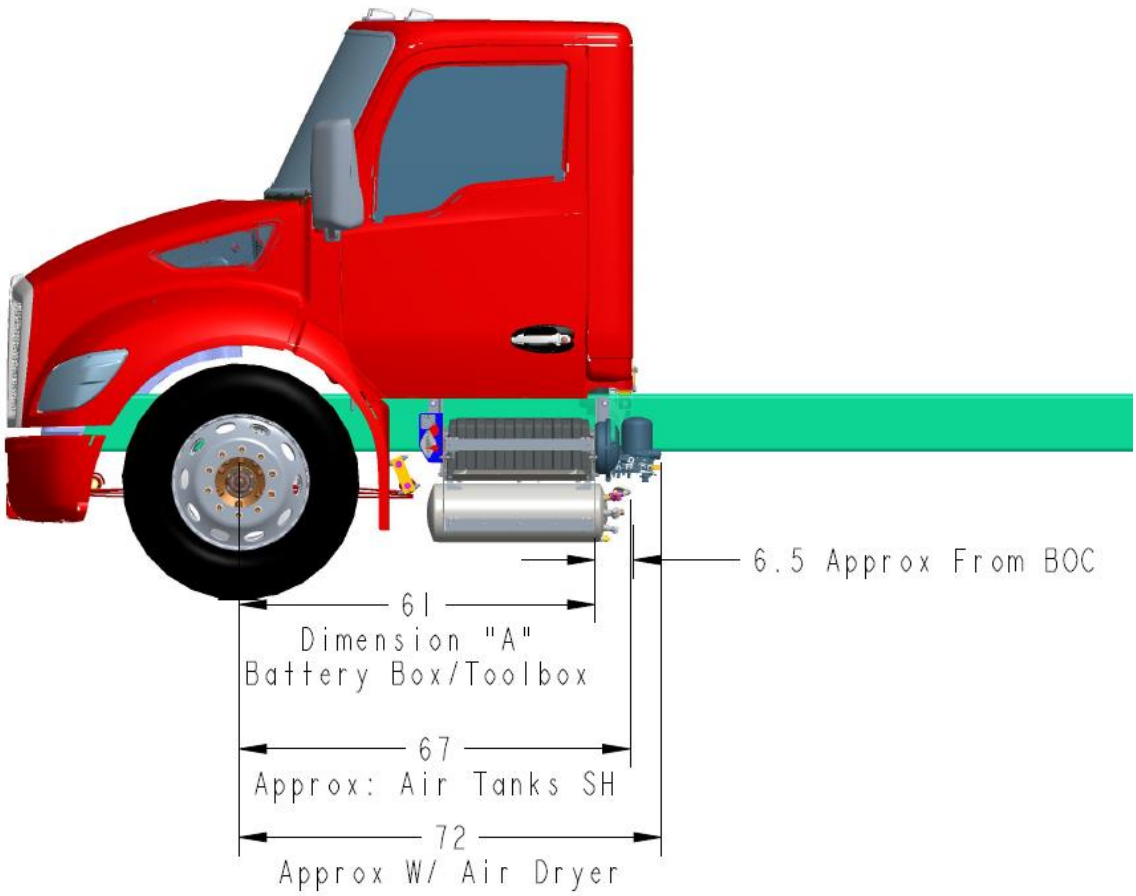

Figure 24 Dimension "A" on SH, LH Batter/Toolbox

https://truckmanualshub.com/

Table 9 Under Cab DPF/SCR Dimension "A"

Hood	Engine Horsepower	A (in)	From BOC
SH	LHP (PX-7 < 275hp)	68.9	1.4
	MHP (PX-7 > 275hp OR PX-9 < 365hp)	***70.7***	***3.2***
MH/VH	LHP (PX-7 < 275hp)	70	2.5
	MHP (PX-7>275hp OR PX-9<365hp)	71.6	2.1
	HHP (PX-9 > 365hp)	75.4	5.9

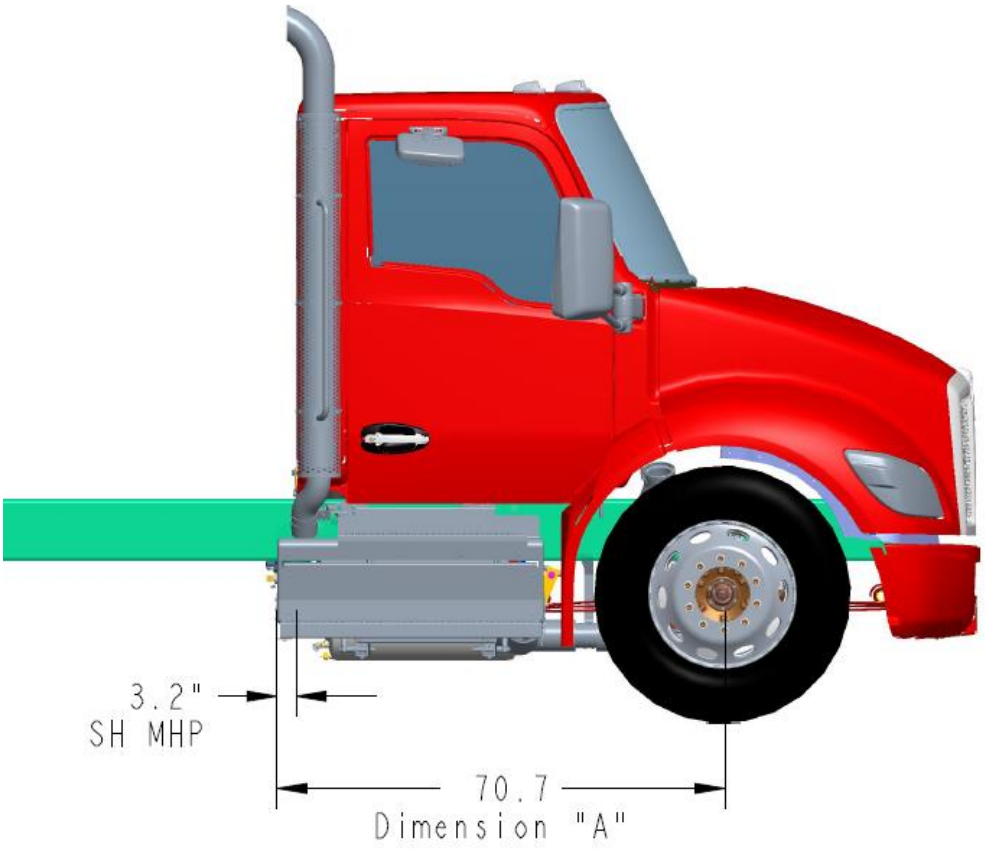

Figure 25 Dimension "A" on SH – RH

https://truckmanualshub.com/

Table 10 LH Rail Components

RAIL	DEF TANK LOC	DEF TANK SIZE	HOOD	UC FUEL TANK	A (in)	From BOC
LH	LHUC	SMALL	SH	50 GAL	68.4	0.9
				60 GAL	74.8	7.3
				70 GAL	81.2	13.7
				80 GAL	**87.6**	**20.1**
				100 GAL	N/A	N/A
			MH/VH	50 GAL	70.4	0.9
				60 GAL	76.8	7.3
				70 GAL	83.2	13.7
				80 GAL	89.6	20.1
				100 GAL	N/A	N/A

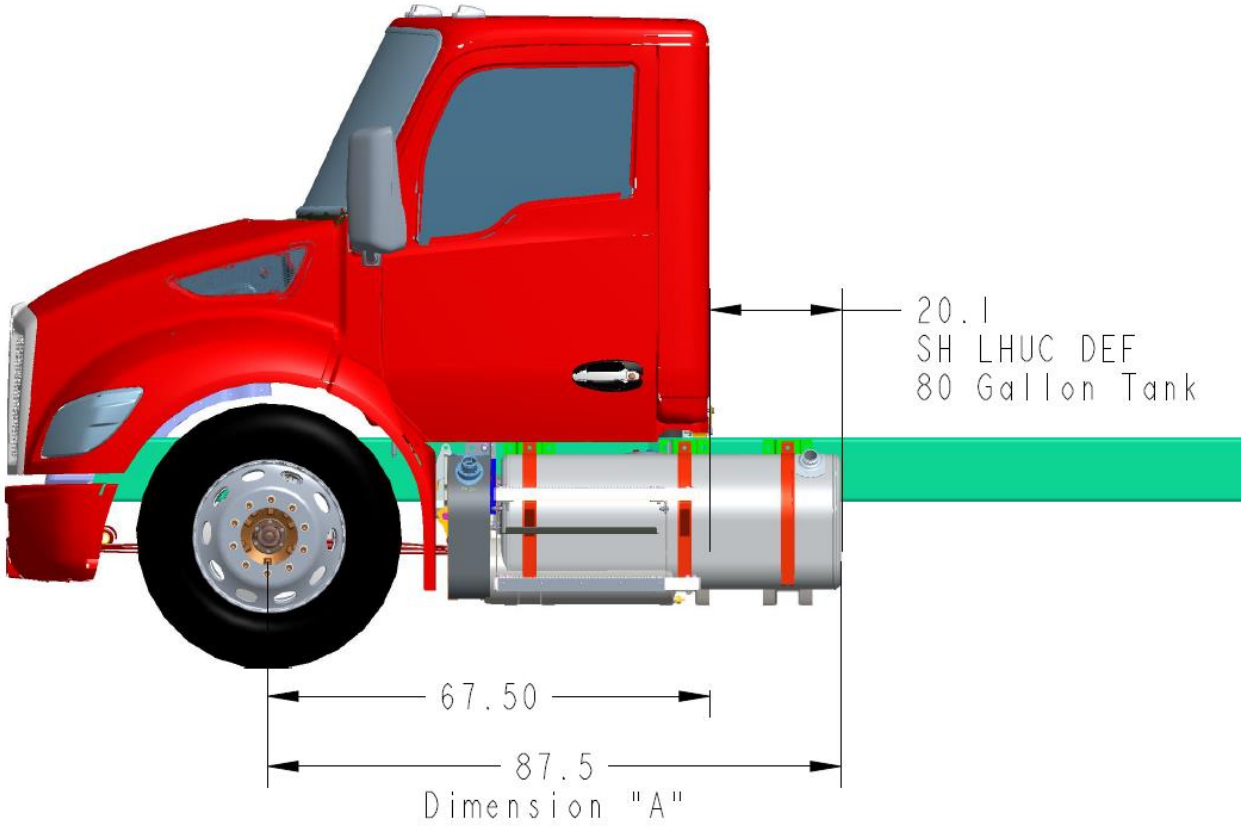

Figure 26 Dimension "A" for LHUC Fuel Tank

https://truckmanualshub.com/

Table 11 Dimension "A" BOC DEF, UC fuel

RAIL	HOOD	DEF TANK LOC	DEF TANK SIZE	UC FUEL TANK	A (in)	From BOC
LH	All	**BOC**	SMALL OR LARGE	50 GAL	68.4	0.9
				60 GAL	72	4.5
				70 GAL	78.5	11
				80 GAL	**84.8**	**17.3**
				100 GAL	97.6	30.1

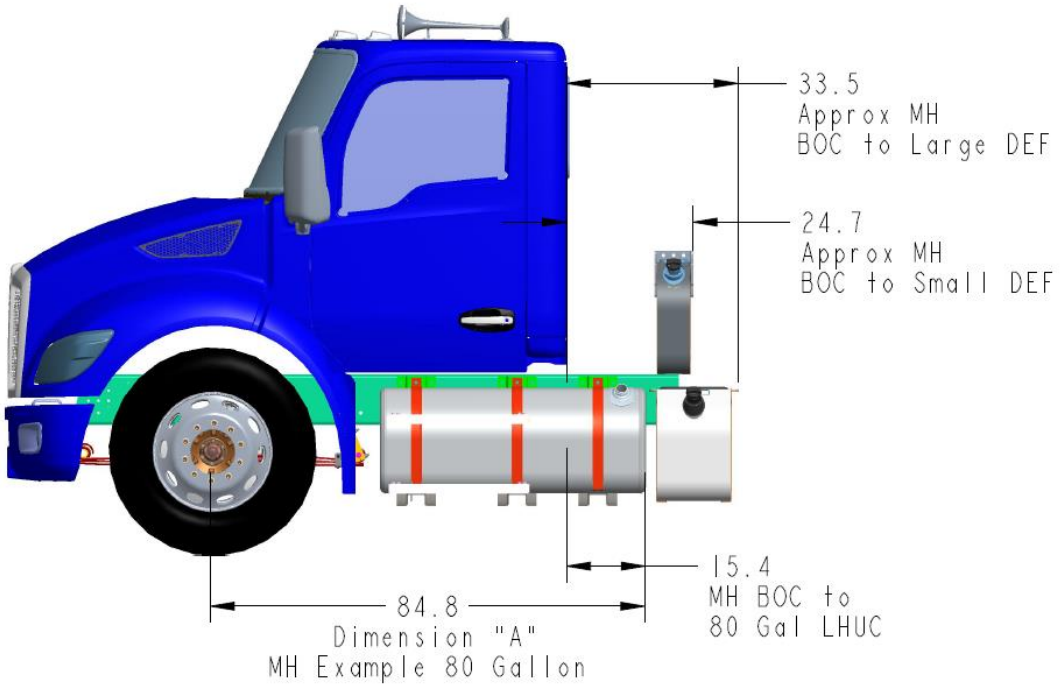

Figure 27 Dimension "A" on MH with BOC DEF, and UC 80 Gal.

https://truckmanualshub.com/

Table 12 RH Rail Components

RAIL	DEF TANK LOC	DEF TANK SIZE	HOOD	RHUC FUEL TANK	A (in)	From BOC
RH	BOC OR LHUC	SMALL OR LARGE	SH	50 GAL	68.4	0.9
				60 GAL	72	4.5
				70 GAL	78.5	11
				80 GAL	84.8	17.3
				100 GAL	97.6	30.1
			MH/VH	50 GAL	68.4	-1.1
				60 GAL	72	2.5
				70 GAL	***81.8***	**12.3**
				80 GAL	84.8	15.3
				100 GAL	97.6	28.1

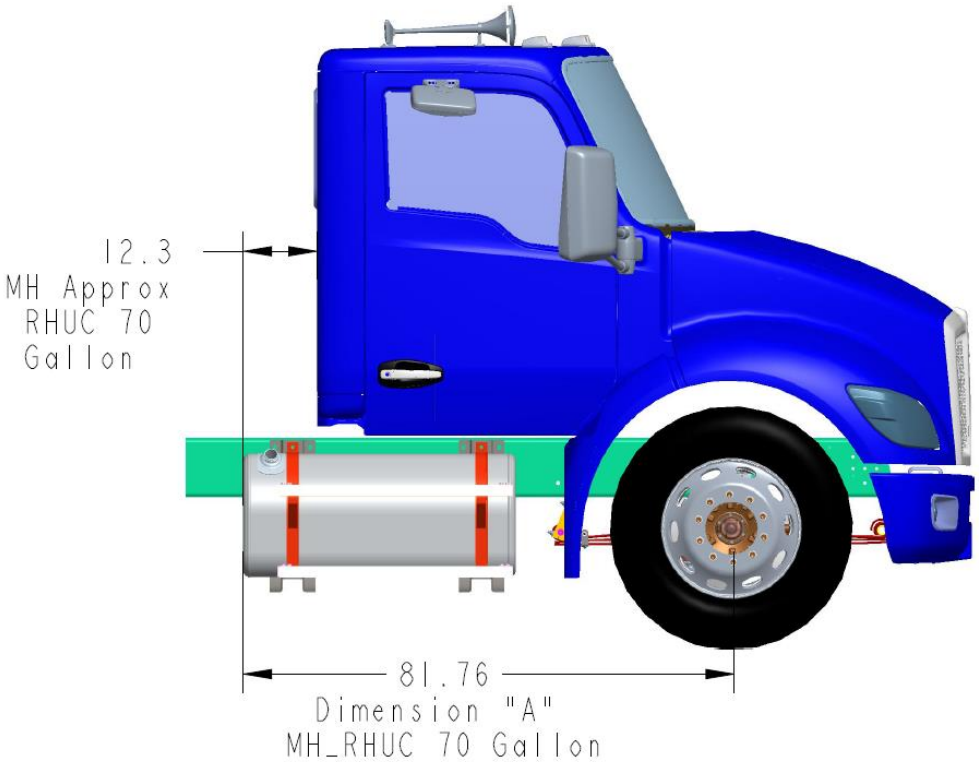

Figure 28 Dimension "A", RHUC Fuel

https://truckmanualshub.com/

FRAME SPACE DIMENSION "B"

To find available frame space per the equation on page 30, use Table 13 below, to locate Dimension "B"

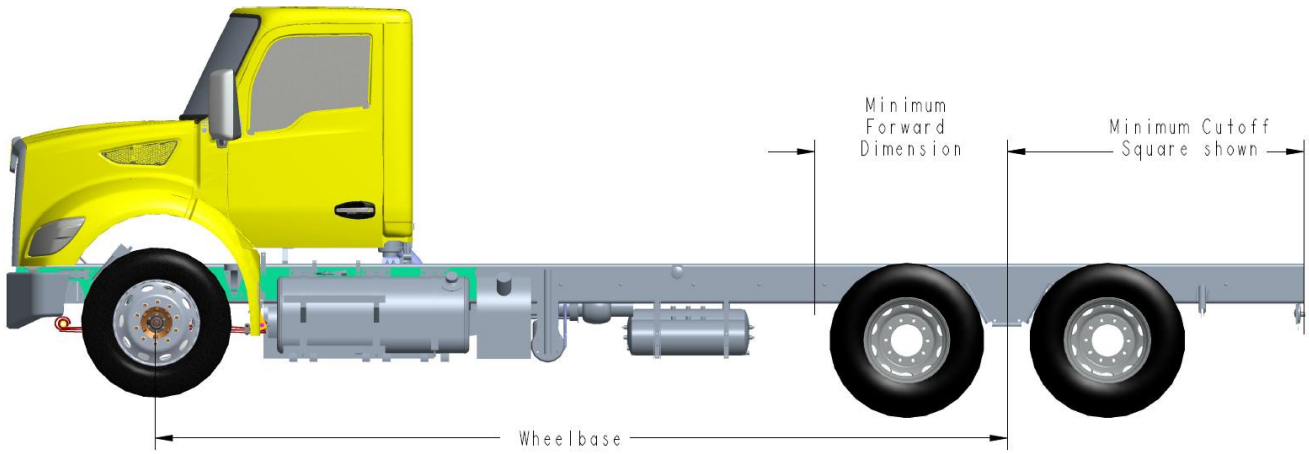

Figure 29 Dimension "B" Labeled as "Minimum Forward Dimension"

Table 13 Rear Suspension Dimension "B"

		MINIMUM CUTOFF		
REAR SUSPENSION	Forward Dimension, "B" (in.)	Std Tractor Taper (in.)	Square EOF (in.)	Notes
AG180 SINGLE	32.2	35	32	1
AG210L SINGLE	33.4	39	36	1
AG230 SINGLE	38.8	29	27	1
TL135/TL180 SINGLE	32.2	45	42	1
HENDRICKSON HAS SINGLE	27.3	32	32	1
HENDRICKSON PRIMAAX SINGLE (8.5")	31.8	37	36	1
REYCO 79KB SINGLE	30.2	37	36	1
AG380 TANDEM (52")	57.9	56	57	1, 2
AG400L TANDEM (52")	59.4	56	57	1, 2
AG400L TANDEM (54")	60.4	57	58	1, 2
AG400/AG460 TANDEM (52" or 54")	58.5	55	54	1
HENDRICKSON HMX EX TANDEM (54")	58.5	58	58	1
HENDRICKSON RT TANDEM (52" or 54")	58.5	58	58	1
CHALMERS 800 SERIES (54" SPACING)	58.5	55	55	1
HENDRICKSON PRIMAAX 46K TANDEM (54")	58.5	58	57	1
HENDRICKSON HAS402 TANDEM (52")	53.5	59	58	1
REYCO 102 TANDEM (52")	50.5	58	58	1

NOTES:
1. Cutoff Dimensions calculated using Standard Betts B25 Mudflaps
2. Minimum Cutoff requires Heavy Duty End of Frame Crossmember

https://truckmanualshub.com/

FRAME SPACE DIMENSION "C"

To find available frame space per the equation on page 30, use the tables and figures below to find Dimension "C" that best matches your configuration based on the width of available components.

Table 14 Dimensions of Frame Mounted Components

Component	**Component Width** (Along frame rail)
Small DEF Tank (5.5 Gal)	8"
Large DEF Tank (15 Gal)	17.5"
50 Gallon Fuel Tank	33"
60 Gallon Fuel Tank	39"
70 Gallon Fuel Tank	45"
80 Gallon Fuel Tank	52"
100 Gallon Fuel Tank	65"

NOTE:

Components may require additional clearance to allow for mounting and maintenance. Be sure to account for that additional space while laying out your frame components.

For certain configurations, the DEF Tank and/or Fuel Tank are included in Dimension "A", carefully review the previous pages, to verify if these components are already accounted for, or if you should manually account for them.

https://truckmanualshub.com/

SMALL DEF TANK (5.5 GALLON)

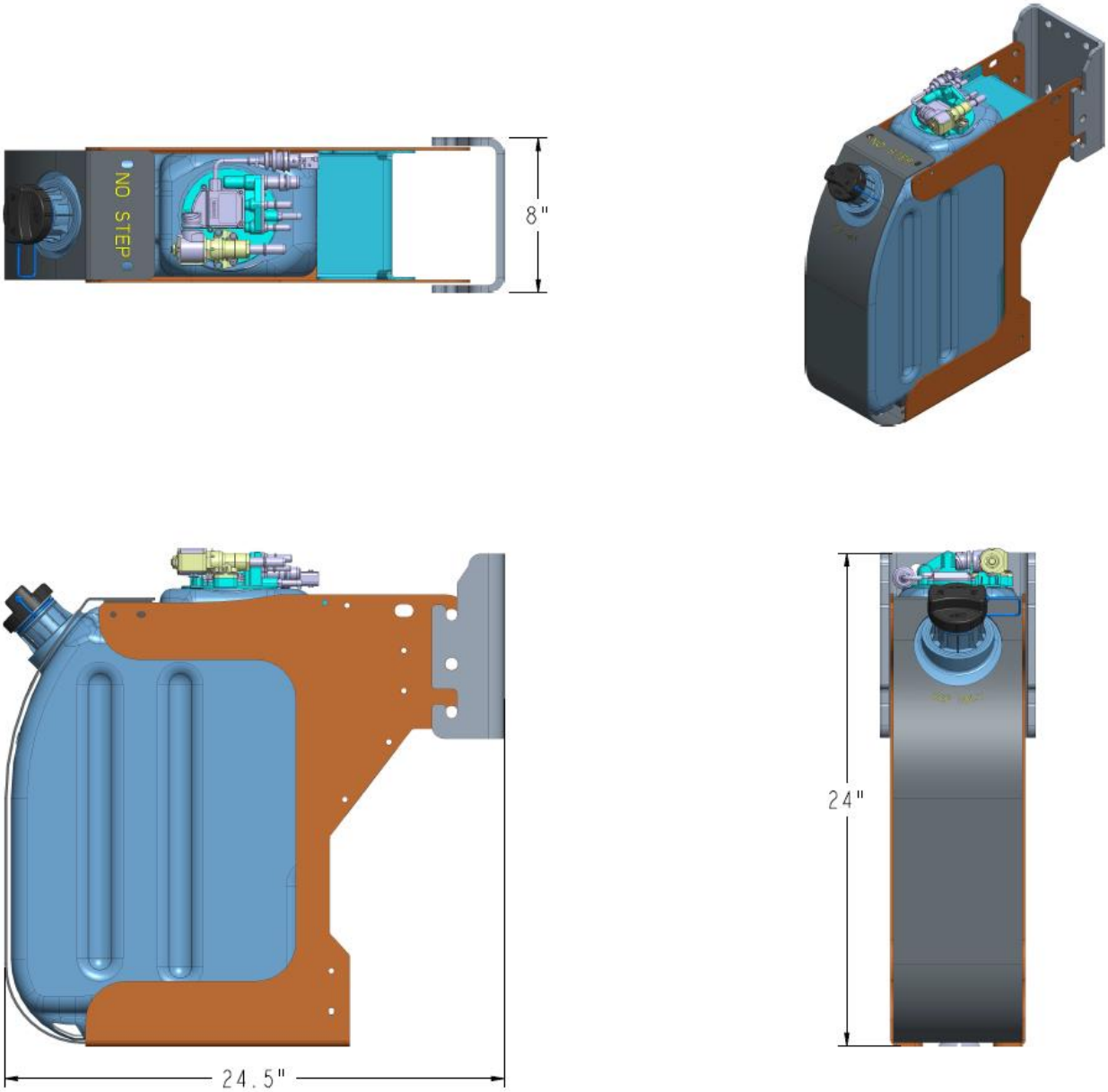

Figure 30 Small DEF Tank Dimensions

https://truckmanualshub.com/

LARGE DEF TANK (15 GALLON)

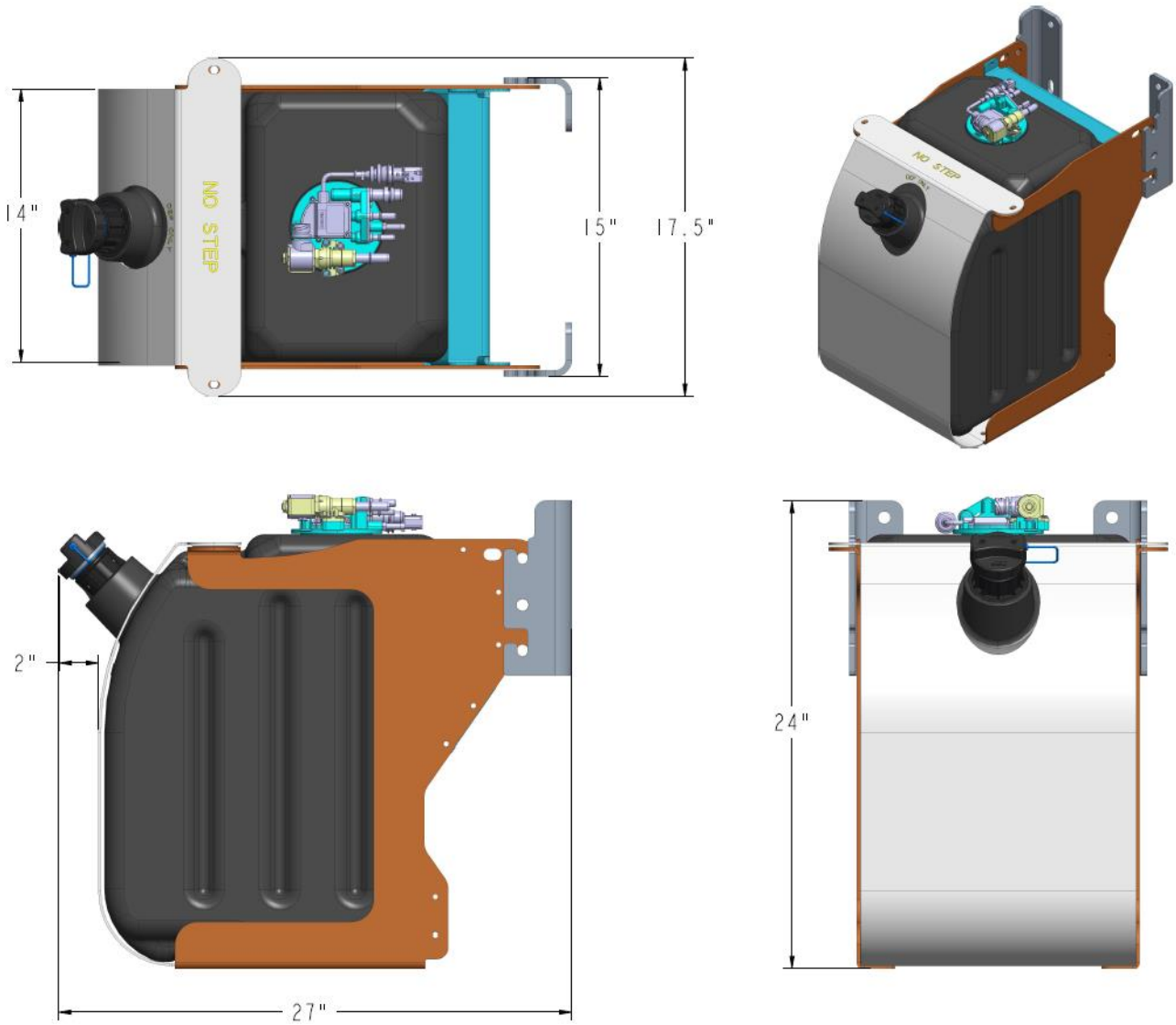

Figure 31 Large DEF Tank Dimensions

https://truckmanualshub.com/

FUEL TANK (D-SHAPE)

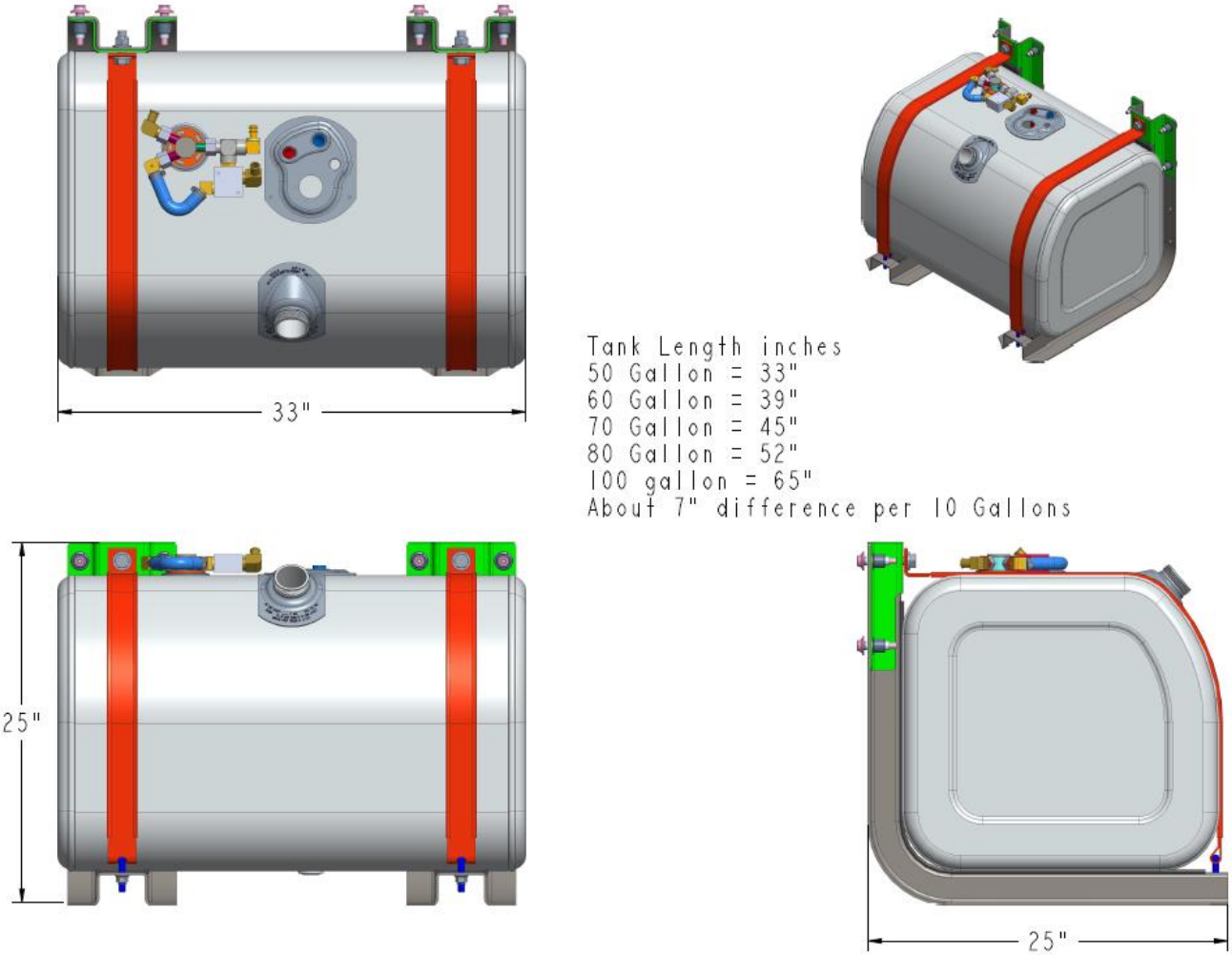

Figure 32 Fuel Tank Dimensions

https://truckmanualshub.com/

ADDITIONAL DIMENSIONS

EXTENDED CAB ACCESS STEP

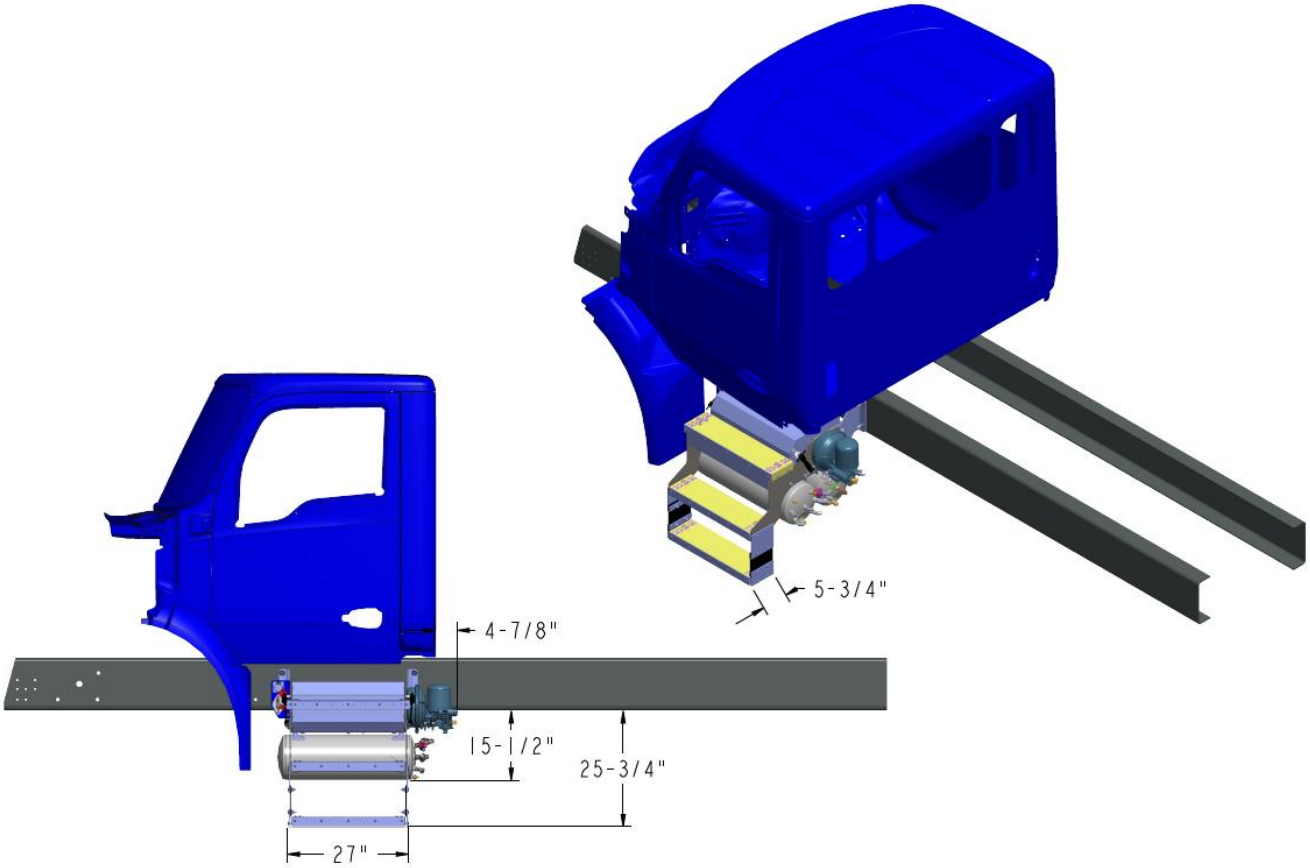

Figure 33 Extended Cab Access Step Dimensions

https://truckmanualshub.com/

IN-FRAME FUEL TANK – 45 GALLON

Table 15 45 Gallon In-Frame Fuel Tank Dimensions

REAR SUSPENSION	FUEL TANK CAPACITY (GAL)	FRONT OF TANK BEHIND AXLE (IN)	REAR OF TANK TO AXLE (IN)	MIN. FRAME CUTOFF (IN)
REYCO 79KB	45	12	40	40
REYCO 79KB W/ HD SUSP XMBRS	45	16	44	45
79KB W/ PIERCE FRAME EXT	45	12	40	42
HENDRICKSON HAS	45	21	49	49
HENDRICKSON PRIMAAX 23K	45	22	50	51
HENDRICKSON PRIMAAX 26K	45	23	51	51
TAPER LEAF 13.5K/18K (TL135 / TL180)	45	12	40	40
AIR LEAF 18K (AL180)	45	20	48	48

NOTE:

MINIMUM FRAME CUTOFF IS WITHOUT EOF C/M, MUDFLAPS, OR TRAILER CONNECTIONS

FUEL Tank Length is 28 Inches
Bottom of Rail to Bottom of Fuel Tank is 13.8”

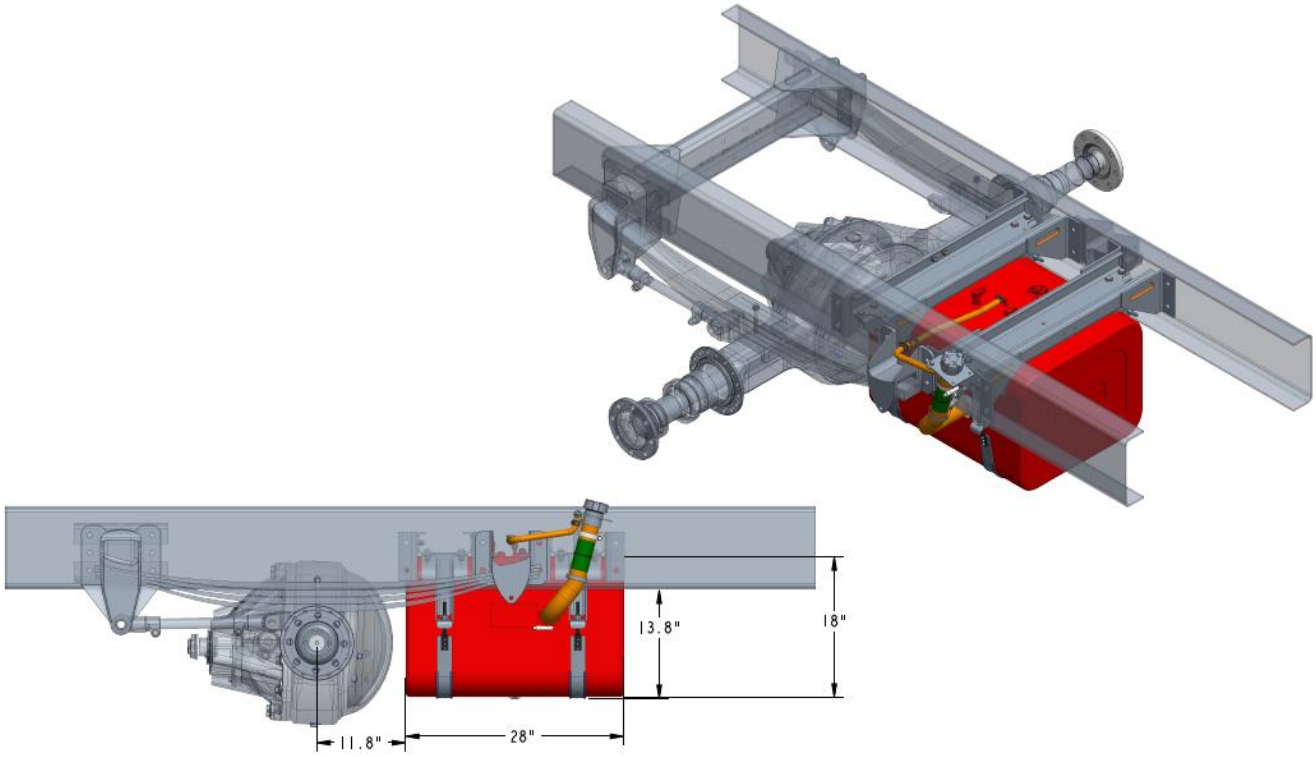

Figure 34 In-Frame Fuel Tank – 45 Gallon – With Dimensions

https://truckmanualshub.com/

IN-FRAME FUEL TANK - 70 GALLON

Table 16 In-Frame Fuel Tank -70 Gallon -With Dimensions

REAR SUSPENSION	FUEL TANK CAPACITY (GAL)	FRONT OF TANK BEHIND AXLE (IN)	REAR OF TANK TO AXLE (IN)	MIN. FRAME CUTOFF (IN)
REYCO 79KB	70	12	55	56
REYCO 79KB W/ HD SUSP XMBRS	70	16	60	60
HENDRICKSON HAS	70	21	64	65
HENDRICKSON PRIMAAX 23K	70	22	66	66
HENDRICKSON PRIMAAX 26K	70	23	66	67
TAPER LEAF 13.5K/18K (TL135 / TL180)	70	13	56	57
AIR LEAF 18K (AL180)	70	20	63	64

NOTE:

MINIMUM FRAME CUTOFF IS WITHOUT EOF C/M, MUDFLAPS, OR TRAILER CONNECTIONS

FUEL Tank Length is 28 Inches
Bottom of Rail to Bottom of Fuel Tank is 13.8”

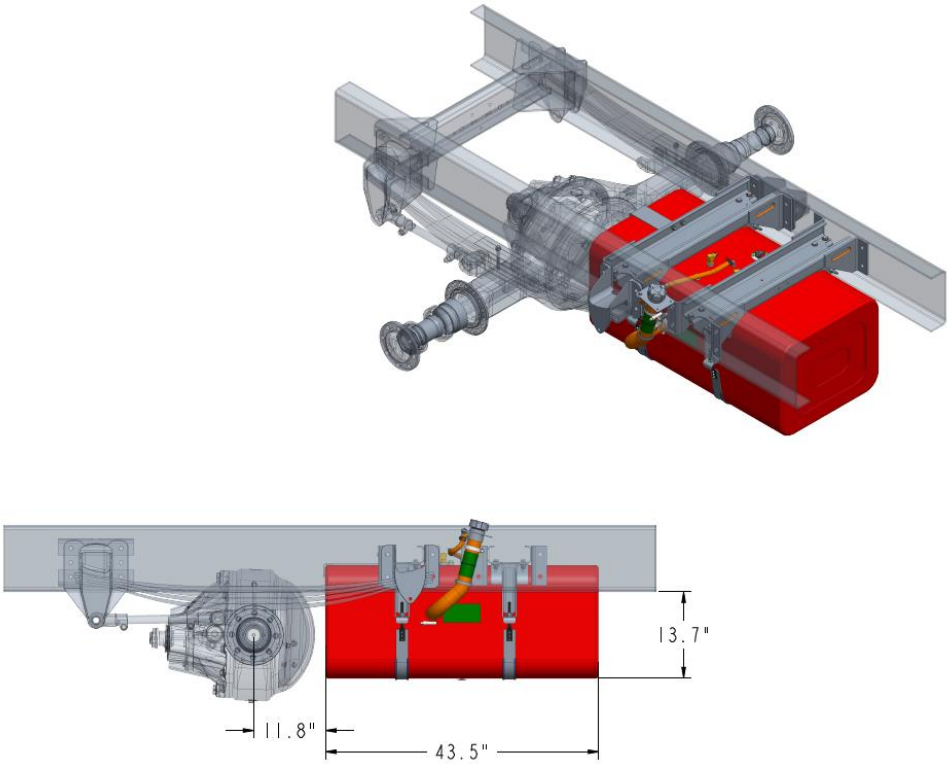

Figure 35 In-Frame Fuel Tank - 70 Gallon – With Dimensions

https://truckmanualshub.com/

EXHAUST DIMENSIONS

EXHAUST RH SOC - DPF/SCR RH UNDER CAB

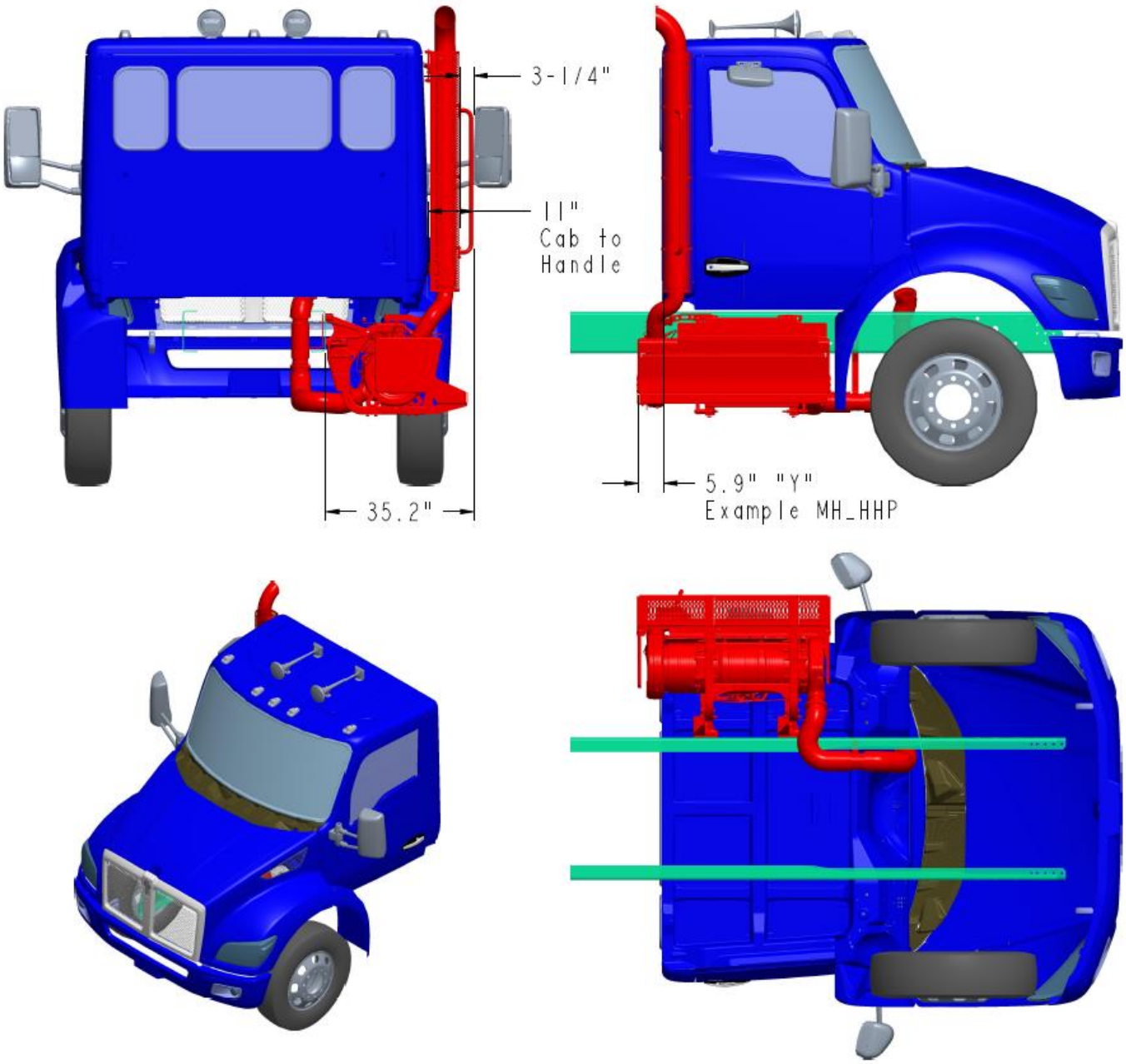

RH UC Box Protrusion		
Hood	**Type (Engine Horsepower)**	**"Y"**
107" BBC	LHP (PX-7< 275hp)	1.5"
107" BBC	MHP (PX-7>275hp OR PX-9< 365hp)	3.2"
109" BBC	LHP (PX-7< 275hp)	0.5"
109" BBC	MHP HP (PX-7>275hp OR PX-9< 365hp)	2.2"
109" BBC	HHP (HP PX-9>365hp)	5.9"

Figure 36 Exhaust RH SOC - DPF/SCR RH UNDER CAB

https://truckmanualshub.com/

EXHAUST RH BOC - DPF/SCR RH UNDER CAB

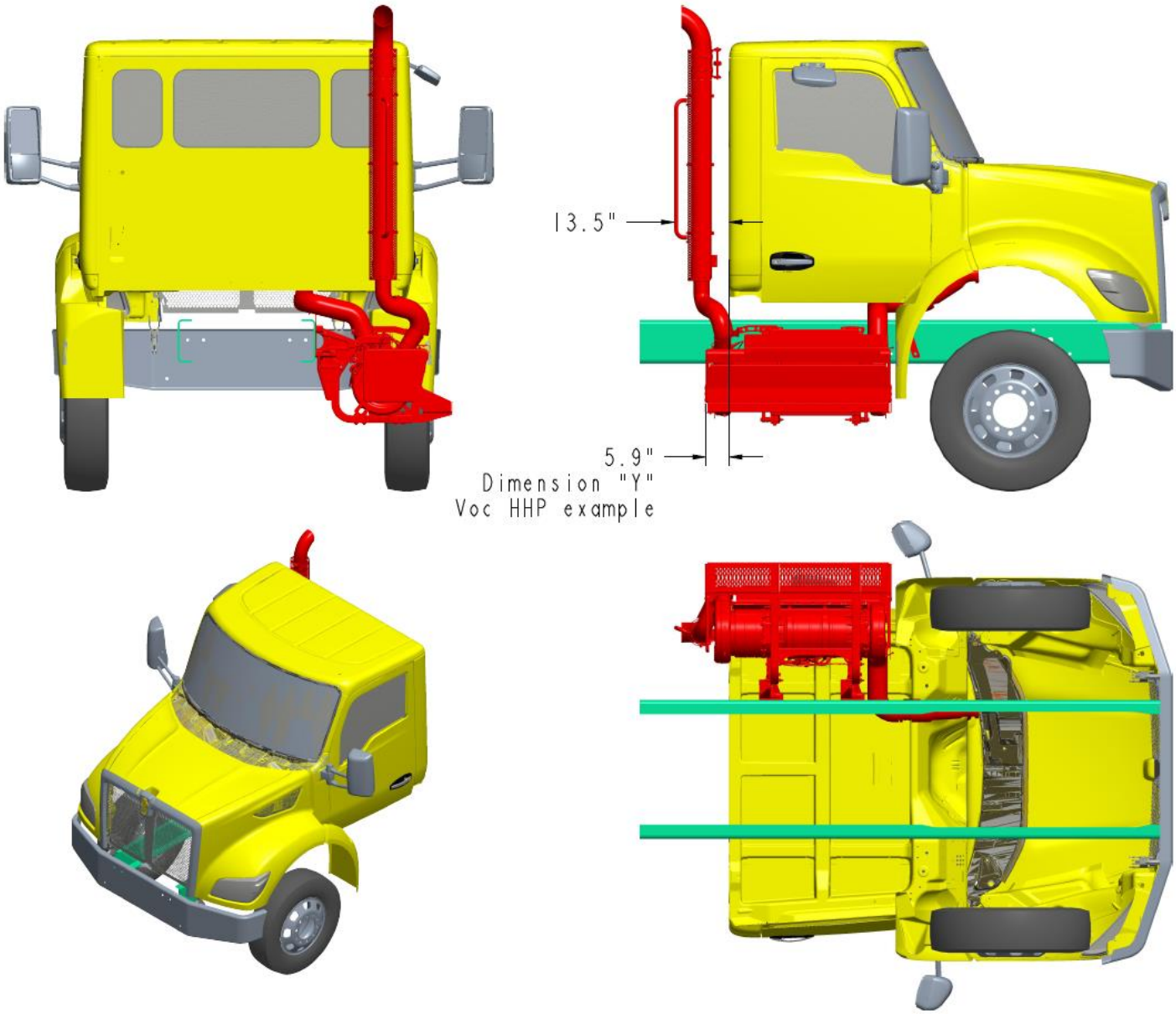

RH UC Box Protrusion		
Hood	**Type (Engine Horsepower)**	**"Y"**
107" BBC	LHP (PX-7< 275hp)	1.5"
107" BBC	MHP (PX-7>275hp OR PX-9< 365hp)	3.2"
109" BBC	LHP (PX-7< 275hp)	0.5"
109" BBC	MHP HP (PX-7>275hp OR PX-9< 365hp)	2.2"
109" BBC	HHP (HP PX-9>365hp)	5.9"

Figure 37 EXHAUST RH BOC - DPF/SCR RH UNDER CAB

https://truckmanualshub.com/

EXHAUST RH HORIZONTAL - DPF/SCR RH UNDER CAB (STANDARD)

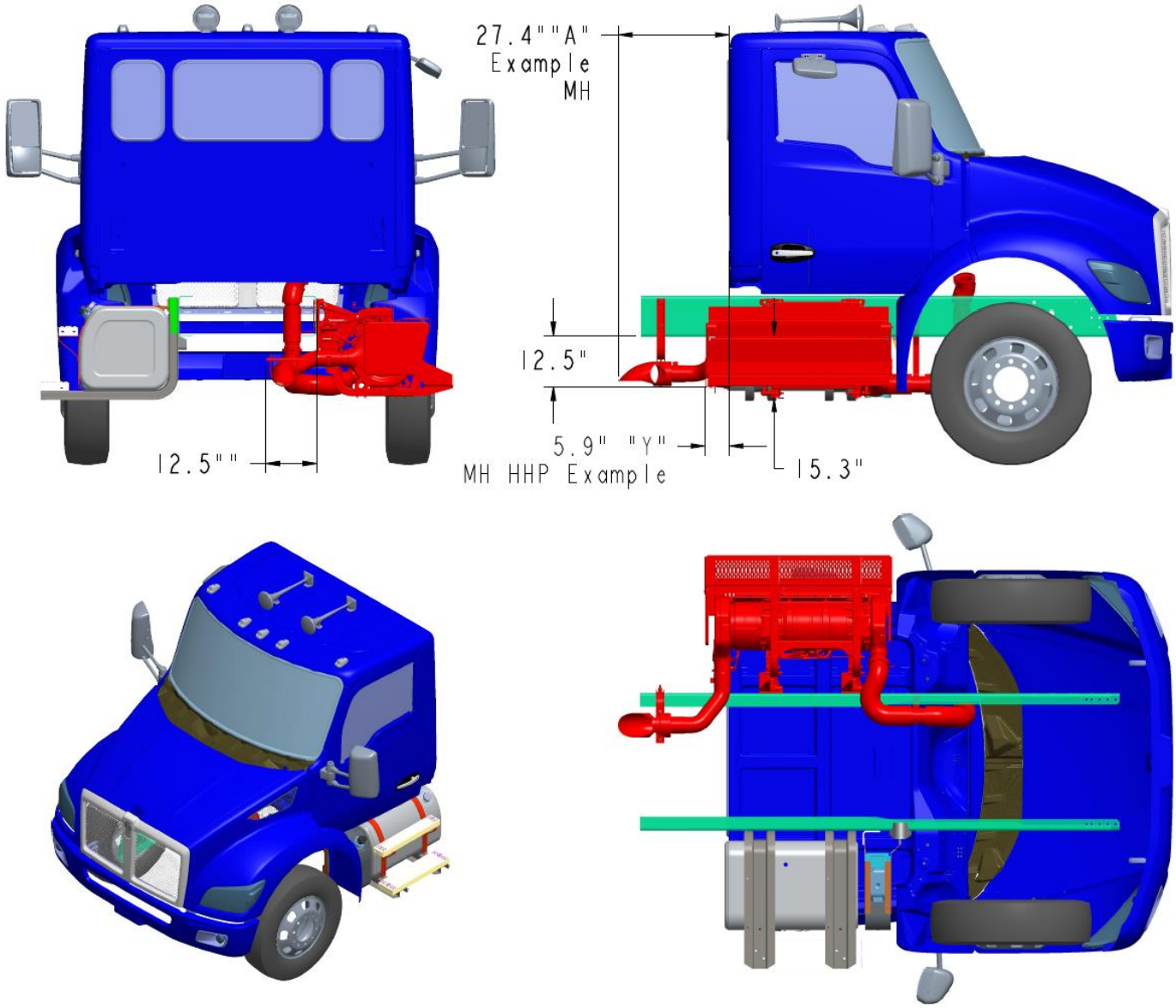

Diffuser to BOC (Standard)	
Hood	"A"
107" BBC	28.3"
109" BBC	27.4"

RH UC Box Protrusion		
Hood	Type (Engine Horsepower)	"Y"
107" BBC	LHP (PX-7< 275hp)	1.5"
107" BBC	MHP (PX-7>275hp OR PX-9< 365hp)	3.2"
109" BBC	LHP (PX-7< 275hp)	0.5"
109" BBC	MHP HP (PX-7>275hp OR PX-9< 365hp)	2.2"
109" BBC	HHP (HP PX-9>365hp)	5.9"

Figure 38 EXHAUST RH HORIZONTAL - DPF/SCR RH UNDER CAB (STANDARD)

https://truckmanualshub.com/

EXHAUST RH HORIZONTAL - DPF/SCR RH UNDER CAB (W/ RH DEF)

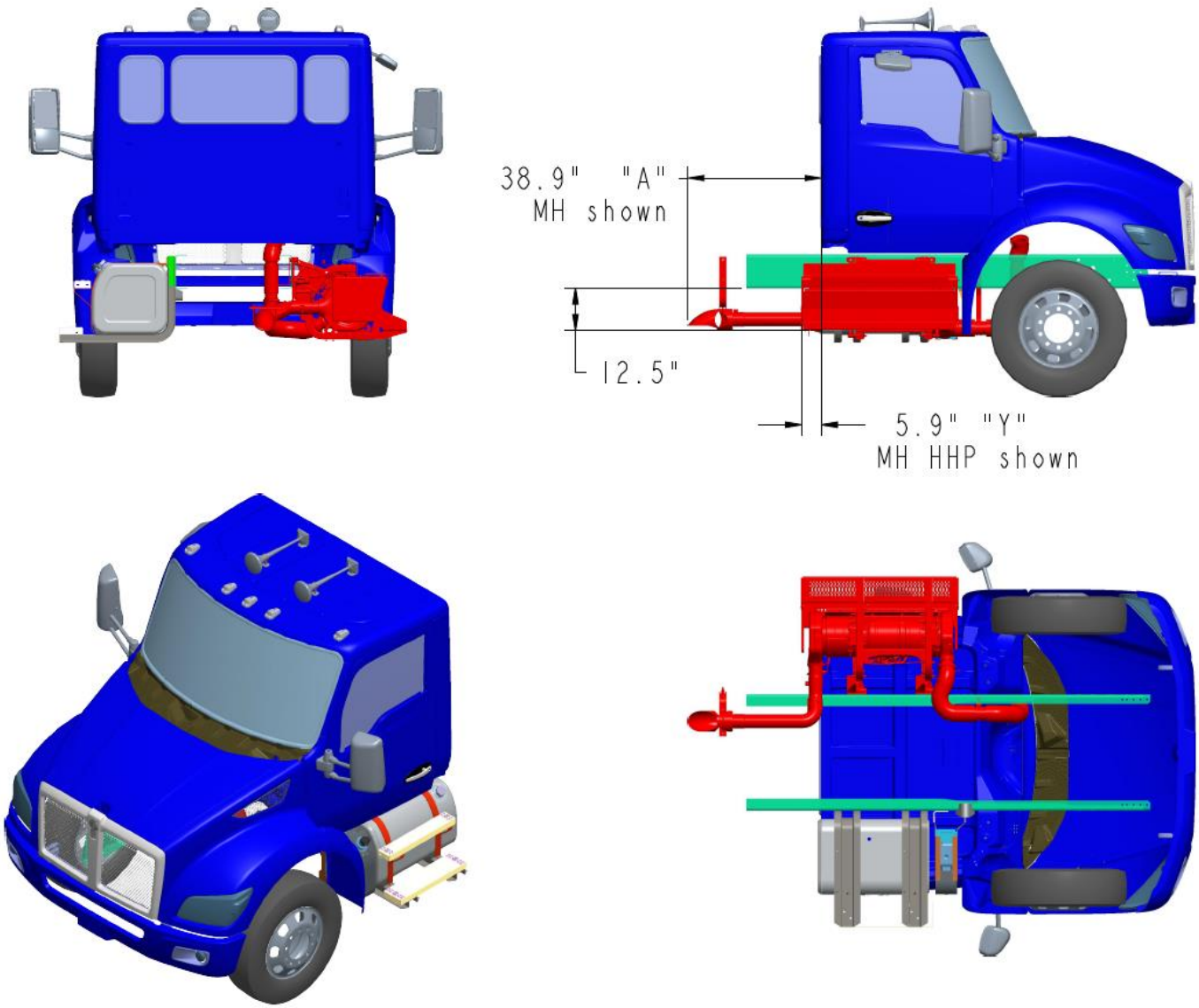

Diffuser to BOC (RH DEF)	
Hood	"A"
107" BBC	39.9"
109" BBC	38.9"

RH UC Box Protrusion		
Hood	Type (Engine Horsepower)	"Y"
107" BBC	LHP (PX-7< 275hp)	1.5"
107" BBC	MHP (PX-7>275hp OR PX-9< 365hp)	3.2"
109" BBC	LHP (PX-7< 275hp)	0.5"
109" BBC	MHP HP (PX-7>275hp OR PX-9< 365hp)	2.2"
109" BBC	HHP (HP PX-9>365hp)	5.9"

Figure 39 EXHAUST RH HORIZONTAL - DPF/SCR RH UNDER CAB (W/ RH DEF)

https://truckmanualshub.com/

EXHAUST RH HORIZONTAL - DPF/SCR RH UNDER CAB (W/ FDA)

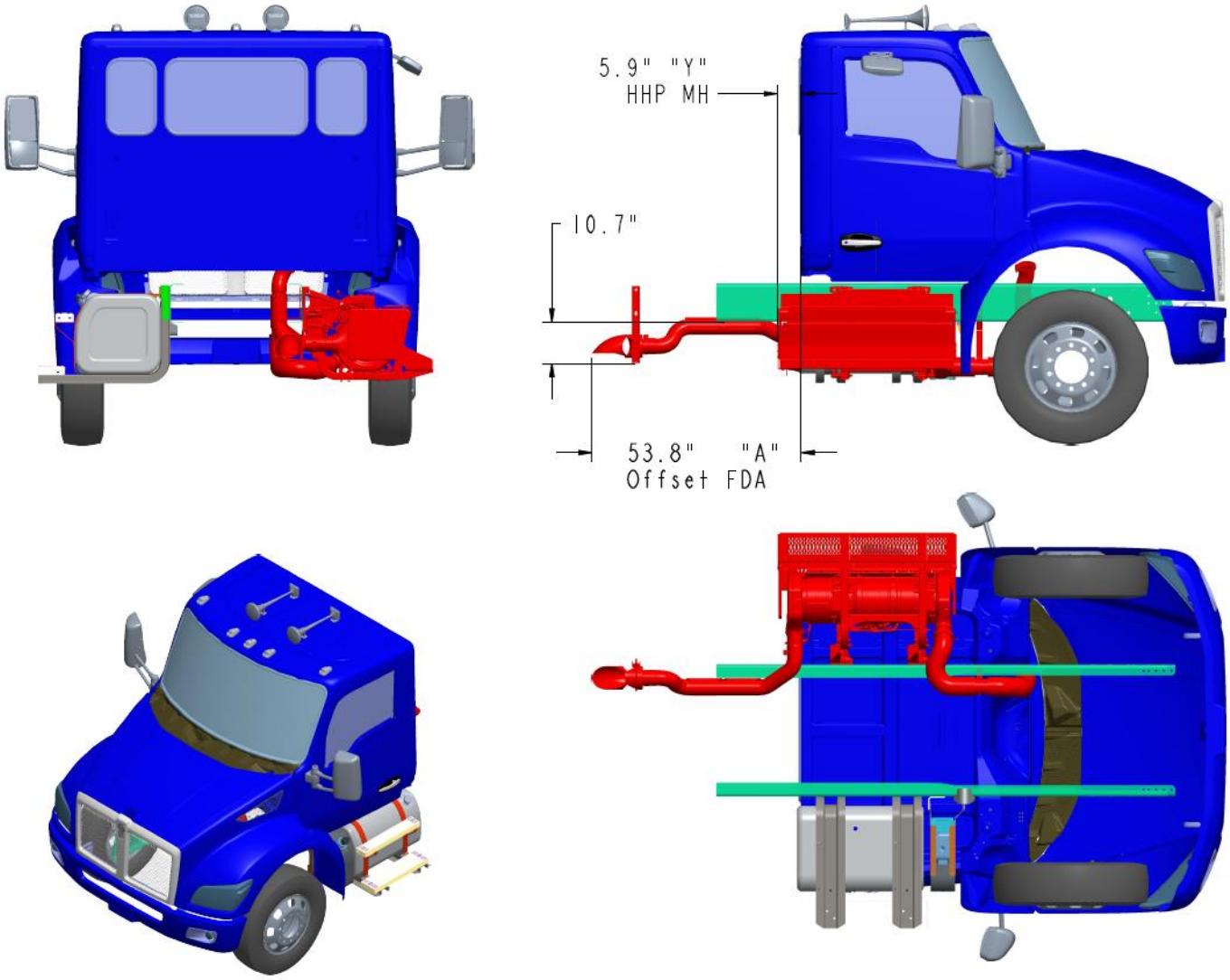

Diffuser to BOC- Front Drive Axle FDA		
Hood	**Type**	**"A"**
109" BBC	Standard FDA	50.7
109" BBC	Offset FDA (Meritor MX-120)	53.8

RH UC Box Protrusion		
Hood	**Type (Engine Horsepower)**	**"Y"**
109" BBC	LHP (PX-7< 275hp)	0.5"
109" BBC	MHP HP (PX-7>275hp OR PX-9< 365hp)	2.2"
109" BBC	HHP (HP PX-9>365hp)	5.9"

Figure 40 EXHAUST RH HORIZONTAL - DPF/SCR RH UNDER CAB (W/ FDA)

https://truckmanualshub.com/

EXHAUST RH HORIZONTAL - DPF/SCR RH UNDER FRAME

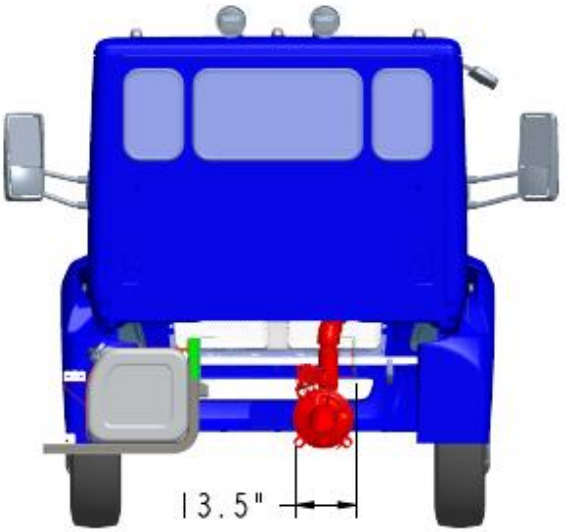

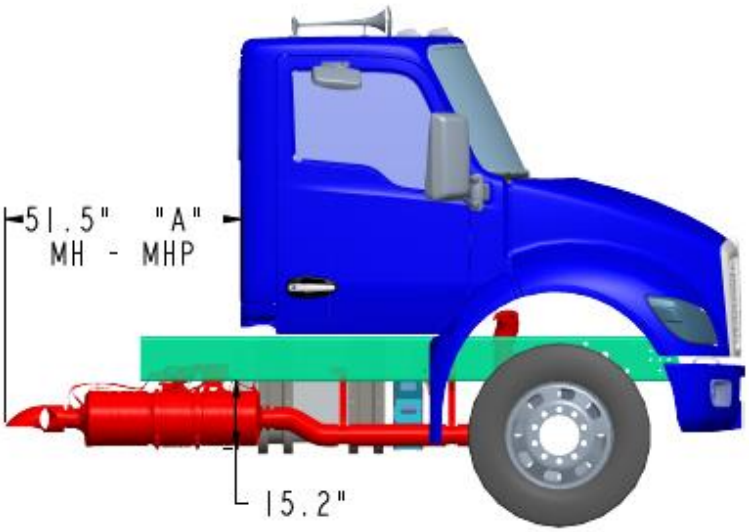

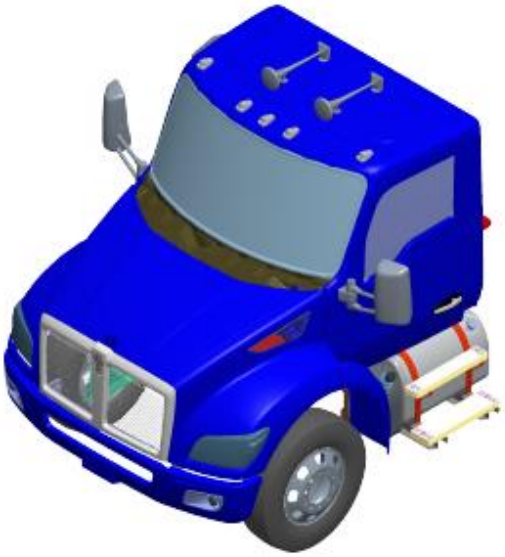

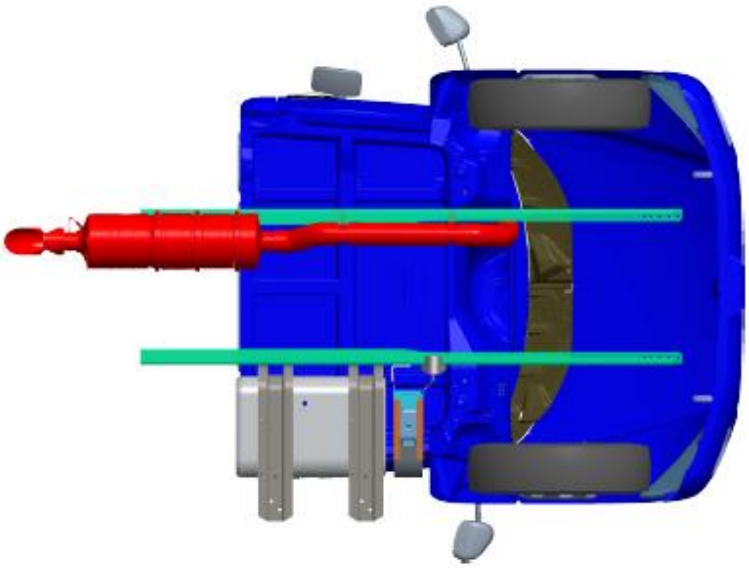

Diffuser to BOC- Under Frame DPF		
Hood	**Type (Engine Horsepower)**	**"Y"**
107" BBC	LHP (PX-7< 275hp)	50.6"
107" BBC	MHP (PX-7>275hp OR PX-9< 365hp)	53.4"
109" BBC	LHP (PX-7< 275hp)	48.6"
109" BBC	MHP HP (PX-7>275hp OR PX-9< 365hp)	51.5"
109" BBC	HHP (HP PX-9>365hp)	55.2"

Figure 41 EXHAUST RH HORIZONTAL - DPF/SCR RH UNDER FRAME

https://truckmanualshub.com/

EXHAUST RH SOC - NATURAL GAS CATALYST RH UNDER CAB

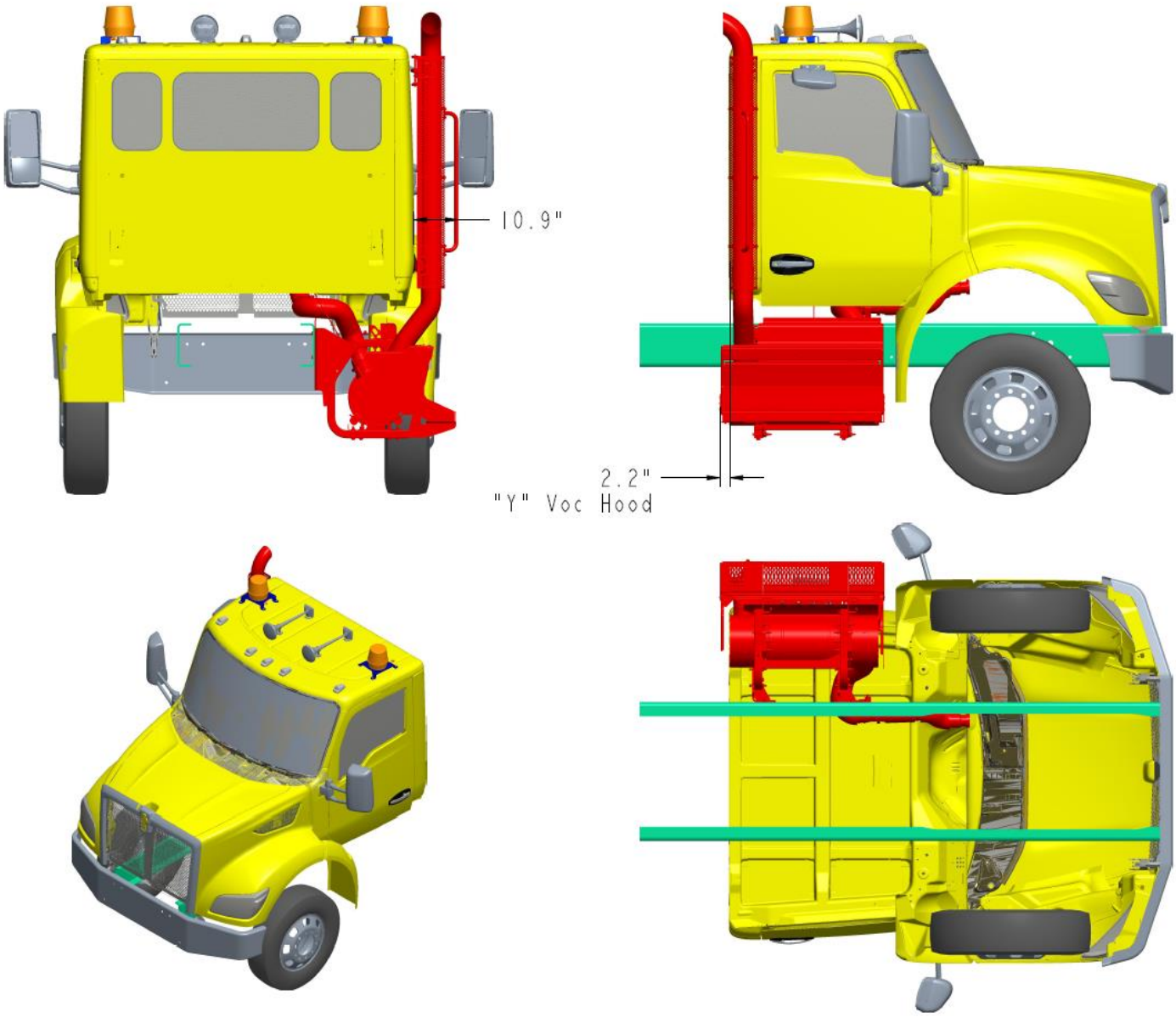

RH UC Box Protrusion		
Hood	**Type (Engine Horsepower)**	**"Y"**
109" BBC	Natural Gas (Vocational Hood only)	2.2"

Figure 42 EXHAUST RH SOC - NATURAL GAS CATALYST RH UNDER CAB

https://truckmanualshub.com/

EXHAUST RH BOC - NATURAL GAS CATALYST RH UNDER CAB

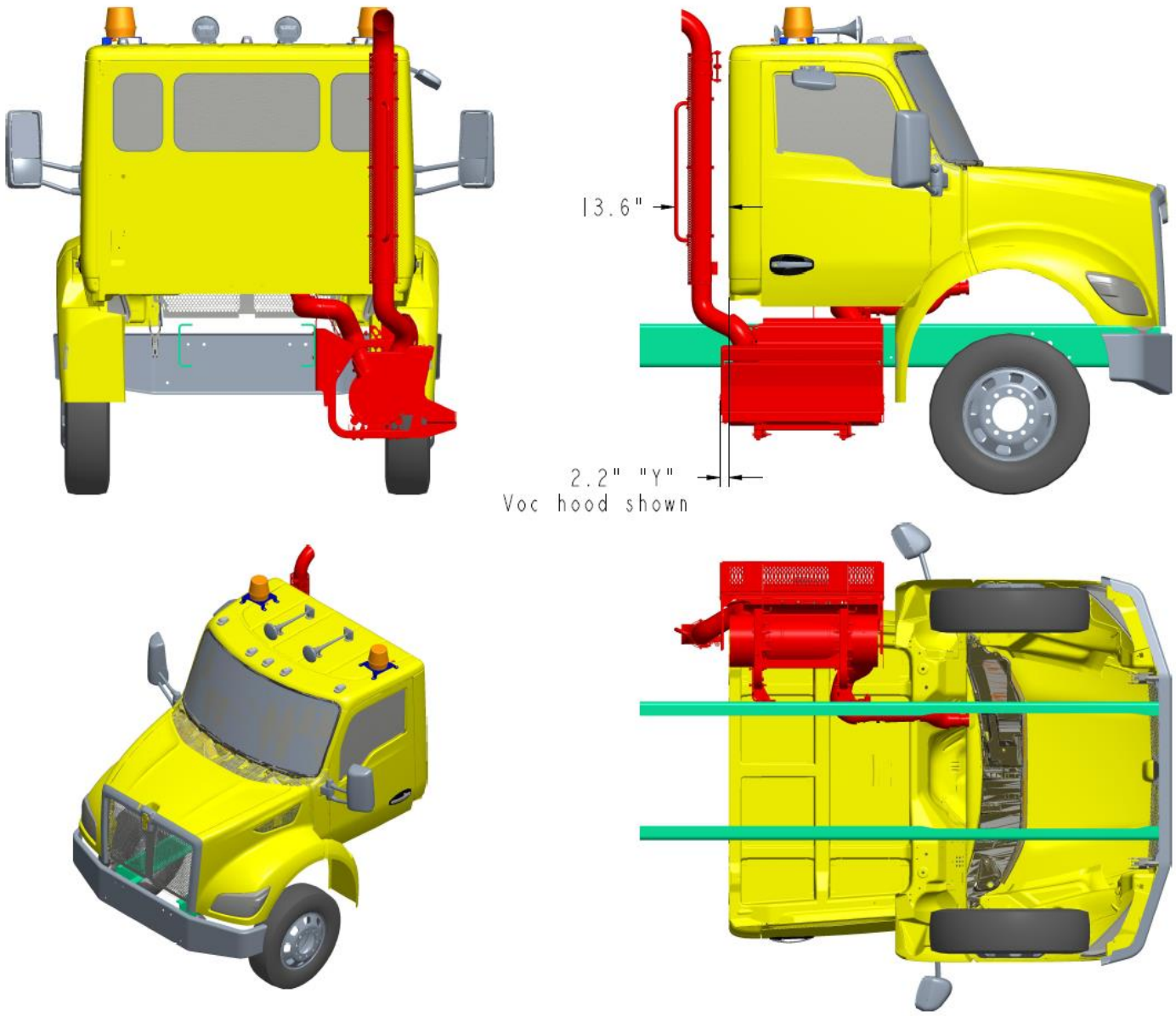

RH UC Box Protrusion		
Hood	**Type (Engine Horsepower)**	**"Y"**
109" BBC	Natural Gas (Vocational Hood only)	2.2"

Figure 43 EXHAUST RH BOC - NATURAL GAS CATALYST RH UNDER CAB

https://truckmanualshub.com/

EXHAUST RH HORIZONTAL - NATURAL GAS CATALYST RH UNDER FRAME (L9N)

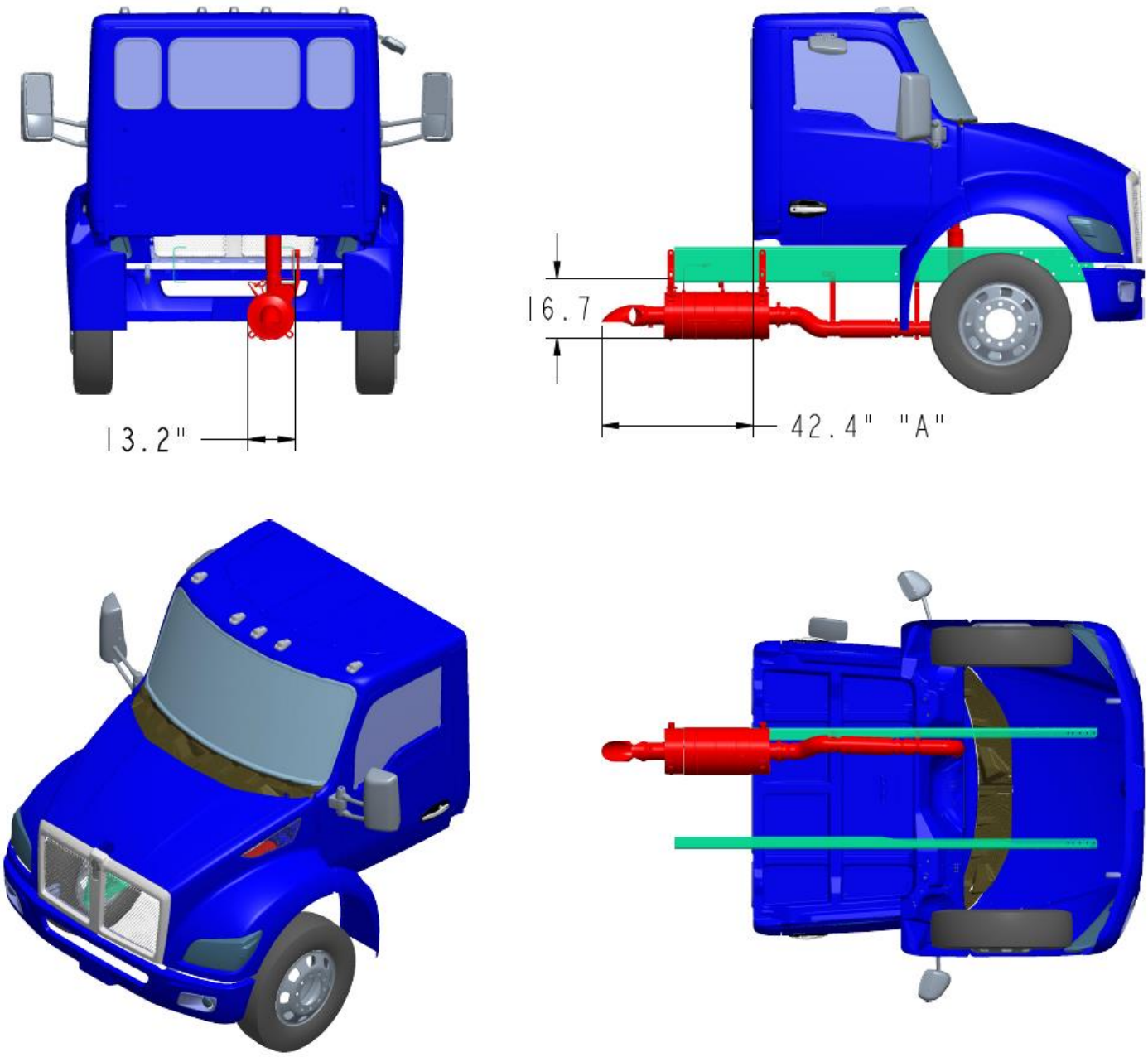

RH UC Box Protrusion		
Hood	**Type (Engine Horsepower)**	**"Y"**
109" BBC	Natural Gas	2.2"

Figure 44 EXHAUST RH HORIZONTAL - NATURAL GAS CATALYST RH UNDER FRAME (L9N)

https://truckmanualshub.com/

SECTION 4 - BODY MOUNTING

INTRODUCTION

This section has been designed to provide guidelines to aid in body mounting. This is not intended as a complete guide, but as general information. Body mounting strategies are unique to each body type and each body builder must determine the appropriate method. Please note, an alignment adjustment is required after body installation. Front alignment and rear alignment must be performed prior to putting the vehicle into service.

Please contact your local Kenworth dealer if more information is desired

FRAME RAILS

Frame rail information is provided per rail.

Table 17 Single Frame Rails

				Per Rail		Per Pair of Rail
Rail Height (in.)	**Flange Width**	**Web Thickness**	**Section Modulus (In.^{3})**	**RBM (in.-lbs.)**	**Weight (lbs./in.)**	**Weight (lbs./in.)**
9-7/8	3-1/2″	1/4″	10.5	1,250,000	1.06	2.12
10-5/8	3-1/2″	5/16″	14.8	1,776,000	1.44	2.88
10-3/4	3-1/2″	3/8″	17.8	2,134,000	1.74	3.48
10-11/16	3-1/2″	1/2″	22.4	2,691,000	2.265	4.53
11-5/8	3-7/8″	3/8″	21.4	2,572,000	1.9	3.8

Table 18 Inserted Frame Rails

			Per Rail		Per Pair of Rail
Main Rail Height (in.)	**Insert size**	**Combined Section Modulus (In.^{3})**	**RBM (in.-lbs.)**	**Weight (lbs./in.)**	**Weight (lbs./in.)**
10-5/8	9-7/8″	23.7	2,844,000	2.48	4.96
10-3/4	9-7/8″	26.58	3,190,000	2.75	5.5
11-5/8	10-3/4″	37.93	4,551,000	3.64	7.28

Table 19 Double Inserted Frame Rails

				Per Rail		Per Pair of Rail
Main Rail Height (in.)	**First Insert size**	**Second Insert Size**	**Combined Section Modulus (In.^{3})**	**RBM (in.-lbs.)**	**Weight (lbs./in.)**	**Weight (lbs./in.)**
11-5/8	10-3/4″	9-7/8″	46.07	5,528,000	4.7	9.4

https://truckmanualshub.com/

CRITICAL CLEARANCES

REAR TIRES AND CAB

CAUTION: Insufficient clearance between rear tires and body structure could cause damage to the body during suspension movement.

Normal suspension movement could cause contact between the tires and the body. To prevent this, mount the body so that the minimum clearance between the top of the tire and the bottom of the body is 8 inches (203 mm). This should be measured with the body empty. See Figure **45**.

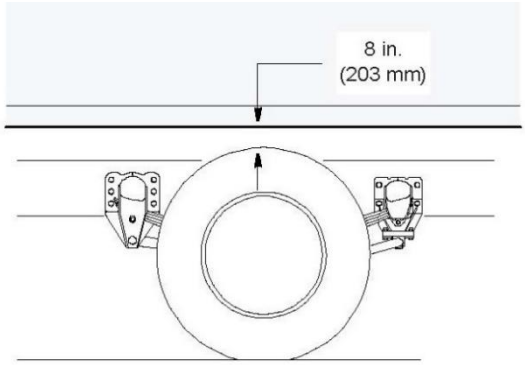

Figure 45 Minimum Clearance between Top of Rear Tires and Body Structure Overhang

CAUTION: Maintain adequate clearance between back of cab and the front (leading edge) of mounted body. It is recommended leading edge of the body be mounted 4 in. behind the cab. See Figure 46 Minimum Back of Cab ClearanceFigure 46.

NOTE:

Be sure to provide maintenance access to the battery box and fuel tank fill neck.

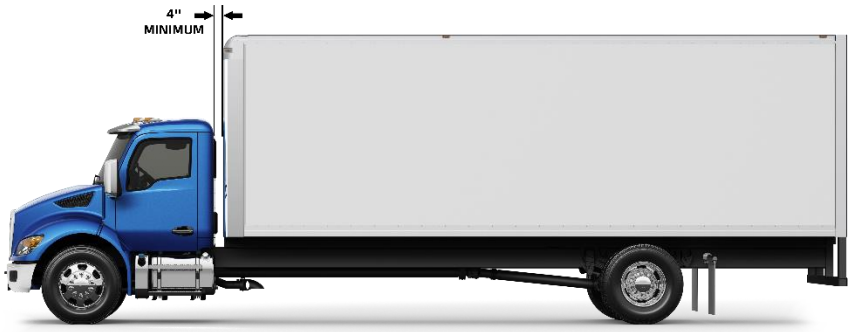

Figure 46 Minimum Back of Cab Clearance

https://truckmanualshub.com/

CAUTION: Always install a spacer between the body subframe and the top flange of the frame rail. Installation of a spacer between the body subframe and the top flange of the frame rail will help prevent premature wear of the components due to chafing or corrosion.

WARNING! When mounting a body to the chassis, DO NOT drill holes in the upper or lower flange of the frame rail. If the frame rail flanges are modified or damaged, the rail could fail prematurely and cause an accident. Mount the body using body mounting brackets or U–bolts.

FRAME SILL

If the body is mounted to the frame with brackets, we recommend a frame sill spacer made from a strip of rubber or plastic (delrin or nylon). These materials will not undergo large dimensional changes during periods of high or low humidity. The strip will be less likely to fall out during extreme relative motion between body and chassis. See Figure **47**.

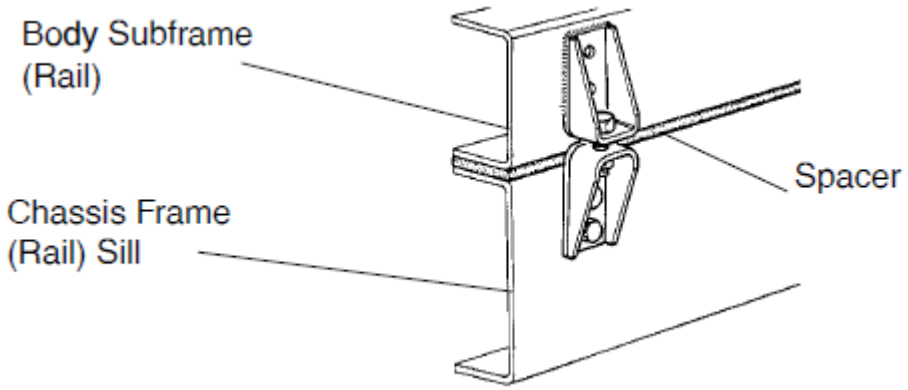

Figure 47 Spacer Between Frame Sill and Body Rail – Rubber or Plastic

https://truckmanualshub.com/

BRACKETS

When mounting a body to the chassis with brackets, we recommend designs that offer limited relative movement, bolted securely but not too rigid. Brackets should allow for slight movement between the body and the chassis. For instance, **Figure 48** shows a high compression spring between the bolt and the bracket and **Figure 49** shows a rubber spacer between the brackets. These designs will allow relative movement between the body and the chassis during extreme frame racking situations. Mountings that are too rigid could cause damage to the body. This is particularly true with tanker installations.

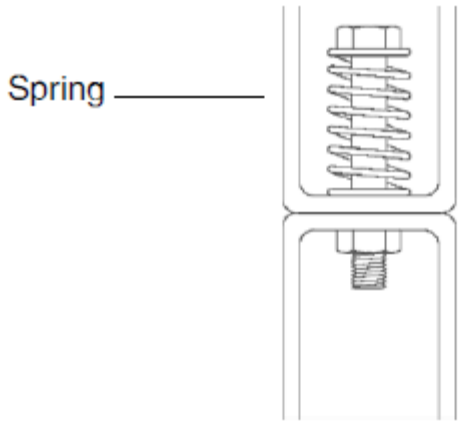

Figure 48 Mounting Brackets with Spring

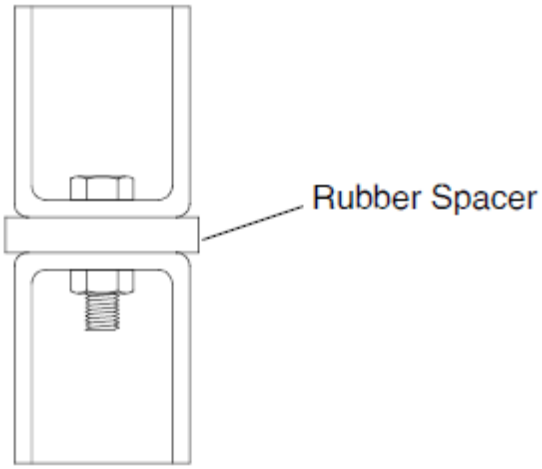

Figure 49 Mounting Brackets with Rubber Spacer

https://truckmanualshub.com/

MOUNTING HOLES

When installing brackets on the frame rails, the mounting holes in the chassis frame bracket and frame rail must comply with the general spacing and location guidelines illustrated in **Figure 50.**

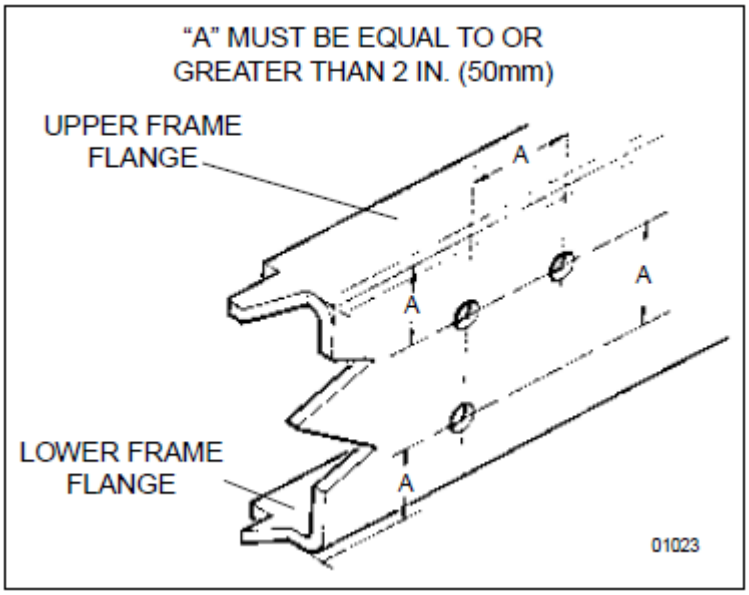

Figure 50 Frame Hole Location Guidelines for Frame Rail and Bracket

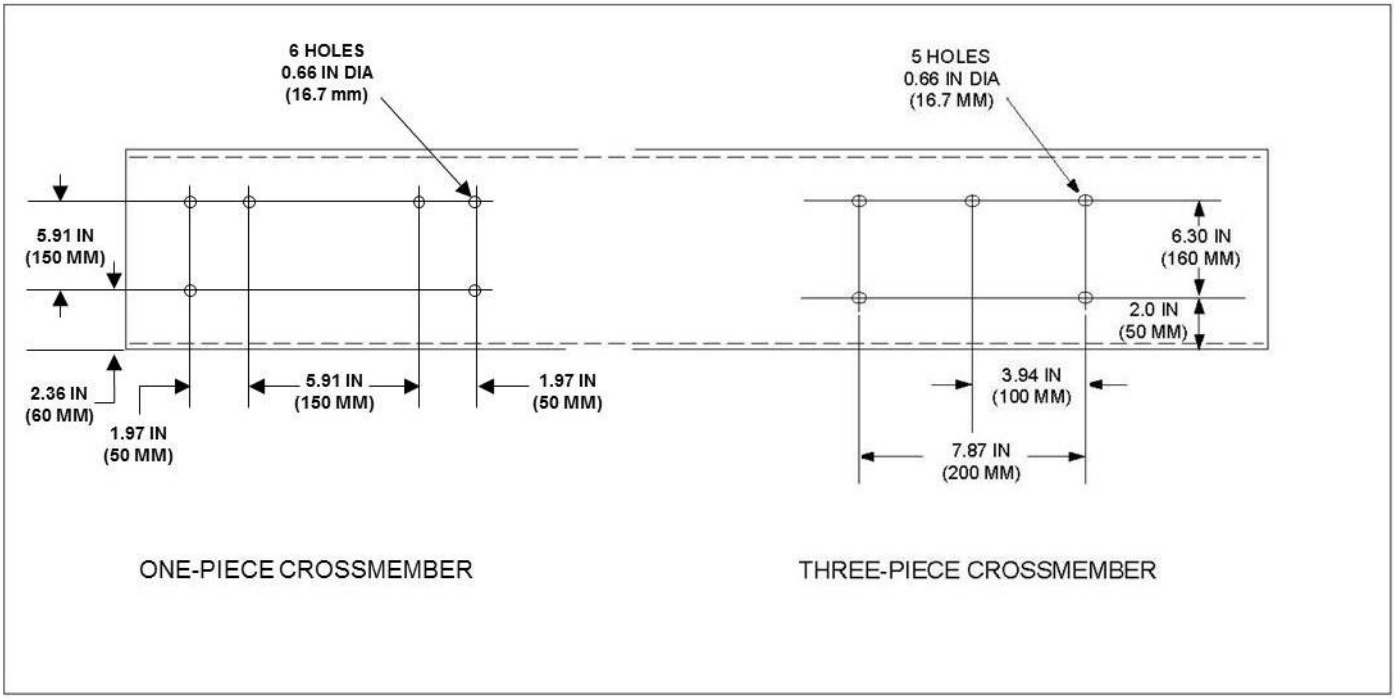

Figure 51 Crossmember Gusset Hole Patterns
(Additional Holes Available in 50 mm Horizontal Increments)

https://truckmanualshub.com/

FRAME DRILLING

WARNING! When mounting a body to the chassis, DO NOT drill holes in the upper or lower flange of the frame rail. If the frame rail flanges are modified or damaged, the rail could fail prematurely and cause an accident. Mount the body using body mounting brackets or U–bolts.

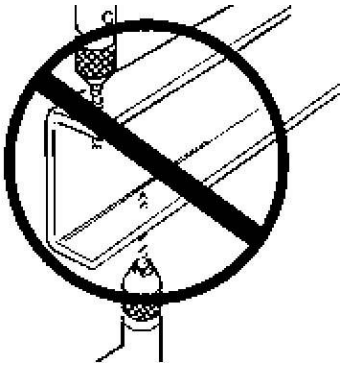

Figure 52 Frame Rail Flange Drilling Prohibited

WARNING! DO NOT drill closely spaced holes in the frame rail. Frame hole centers of two adjacent holes should be spaced no less than twice the diameter of the largest hole. Closer spacing could induce a failure between the two holes.

CAUTION: An appropriately sized bolt and nut must be installed and torqued properly in all unused frame holes. Failure to do so could result in a frame crack initiation around the hole.

CAUTION: Use care when drilling the frame web so the wires and air lines routed inside the rail are not damaged. Failure to do so could cause an inoperable electrical or air system circuit.

CAUTION: Never use a torch to make holes in the rail. Use the appropriate diameter drill bit. Heat from a torch will affect the material properties of the frame rail and could result in frame rail cracks.

CAUTION: The frame hole diameter should not exceed the bolt diameter by more than .060 inches (1.5mm)

https://truckmanualshub.com/

BODY MOUNTING USING U–BOLTS

If the body is mounted to the frame with U–bolts, use a hardwood sill (minimum 1/2 inch thick) between the frame rail and body frame to protect the top surface of the rail flange.

WARNING! Do not allow the frame rails or flanges to deform when tightening the U–bolts. It will weaken the frame and could cause an accident. Use suitable spacers made of steel or hardwood on the inside of the frame rail to prevent collapse of the frame flanges.

Use a hardwood spacer between the bottom flange and the U–bolt to prevent the U–bolt from notching the frame flange. See Figure **53**.

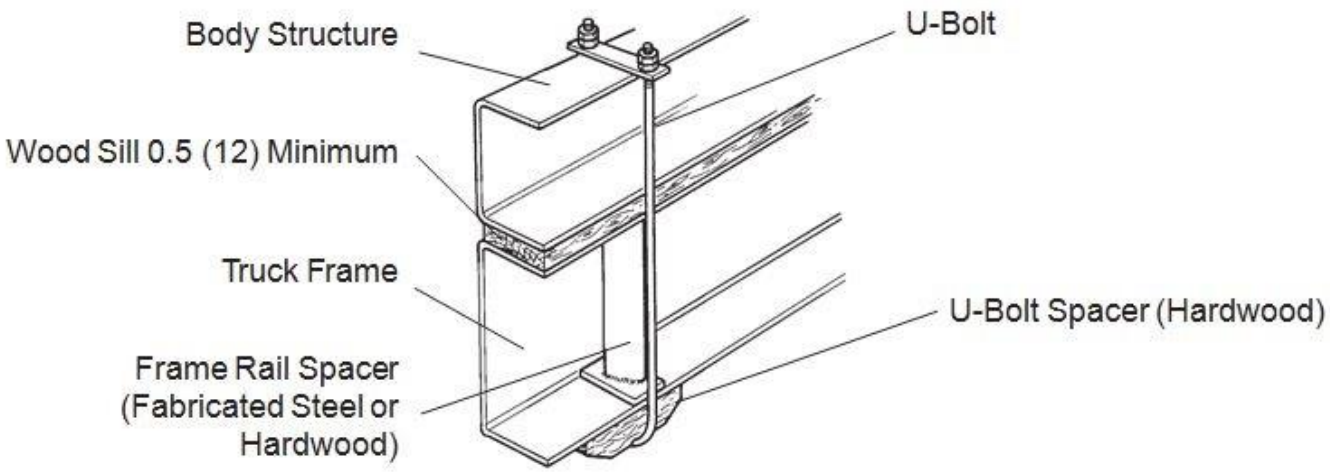

Figure 53 Acceptable U-Bolt Mounting with Wood and Fabricated Spacers

https://truckmanualshub.com/

WARNING! Do not allow spacers and other body mounting parts to interfere with brake lines, fuel lines, or wiring harnesses routed inside the frame rail. Crimped or damaged brake lines, fuel lines, or wiring could result in loss of braking, fuel leaks, electrical overload**,** or a fire. Carefully inspect the installation to ensure adequate clearances for air brake lines, fuel lines, and wiring. See **Figure 54**.

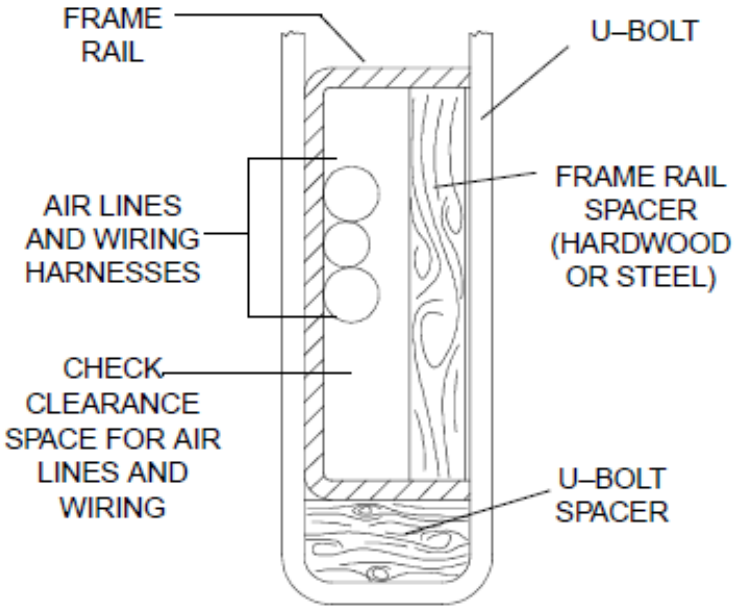

Figure 54 Clearance Space for Air Lines and Cables

WARNING! Do not notch frame rail flanges to force a U–bolt fit. Notched or damaged frame flanges could result in premature frame failure. Use a larger size U-bolt

CAUTION: Mount U–bolts so they do not chafe on frame rail, air, or electric lines.

https://truckmanualshub.com/

REAR BODY MOUNT

When U–bolts are used to mount a body**,** we recommend that the last body attachment be made with a "fishplate" bracket. See **Figure 55**. This provides a firm attachment point and helps prevent any relative fore or aft movement between the body and frame. For frame hole location guidelines, see **Figure 50.**

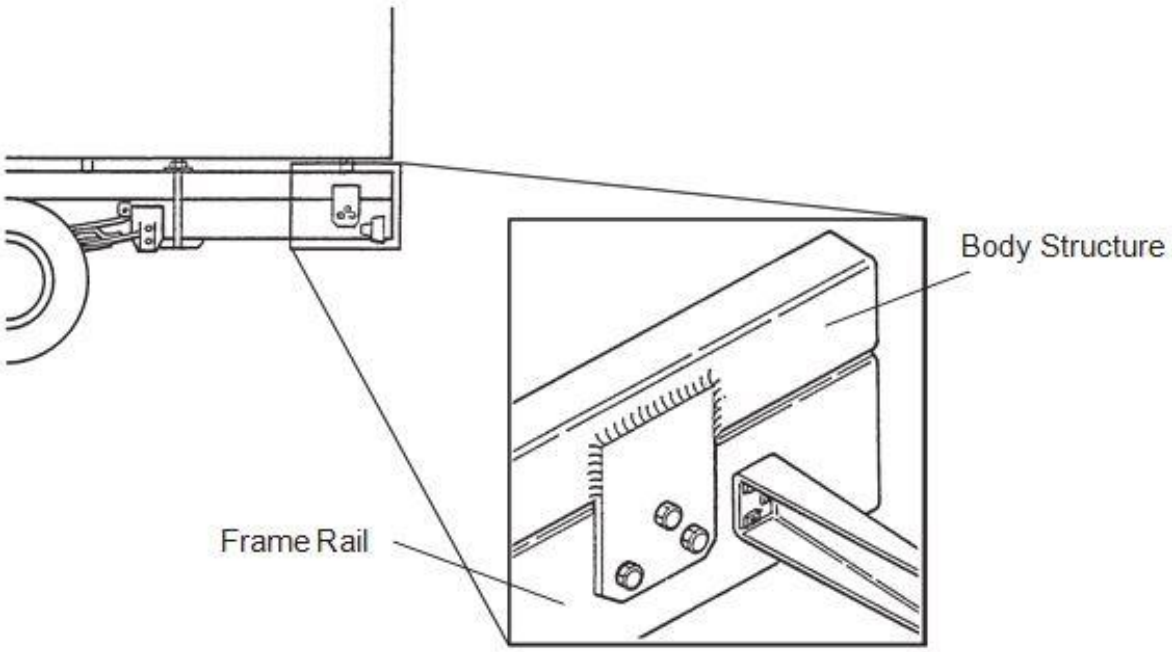

Figure 55 Fishplate Bracket at Rear End of Body

https://truckmanualshub.com/

SECTION 5 FRAME MODIFICATIONS

INTRODUCTION

Kenworth offers customer specified wheelbases and frame overhangs. Therefore, in most cases frame modifications should not be necessary.

However, some body installations may require slight modifications, while other installations will require extensive modifications. Sometimes an existing dealer stock chassis may need to have the wheelbase changed to better fit a customer's application. The modifications may be as simple as modifying the frame cutoff, or as complex as modifying the wheelbase.

DRILLING RAILS

If frame holes need to be drilled in the rail, see Section 4 FRAME DRILLING for more information.

WARNING! When mounting a body to the chassis, DO NOT drill holes in the upper or lower flange of the frame rail. If the frame rail flanges are modified or damaged, the rail could fail prematurely and cause an accident. Mount the body using body mounting brackets or U–bolts.

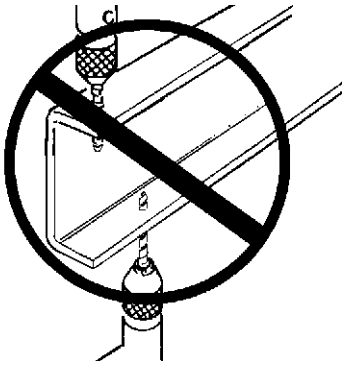

WARNING! Do not drill new holes any closer than 2 inches (50mm) to existing holes. Frame drilling affects the strength of the rails. If the holes are too close together, the rail could fail prematurely and cause an accident.

WARNING! Never use a torch to make a hole in the rail. Use the appropriate diameter drill bit. Heat from a torch can change material properties and weaken the frame rail.

CAUTION: Use care when drilling the frame web so the wires and air lines routed inside the rail are not damaged.

https://truckmanualshub.com/

MODIFYING FRAME LENGTH

The frame overhang after the rear axle can be shortened to match a particular body length. Using a torch is acceptable; however, heat from a torch will affect the material characteristics of the frame rail. The affected material will normally be confined to within 1 to 2 inches (25 to 50mm) of the flame cut and may not adversely affect the strength of the chassis or body installation.

CHANGING WHEELBASE

Changing a chassis' wheelbase is not recommended. Occasionally, a chassis' wheelbase will need to be shortened or lengthened. Before this is done there are a few guidelines that need to be considered.

WARNING! When changing the wheelbase, be sure to follow the driveline manufacturer's recommendations for driveline length or angle changes. Incorrectly modified drivelines can fail prematurely due to excessive vibration. This can cause an accident and severe personal injury.

Before changing the wheelbase, the driveline angles of the proposed wheelbase need to be examined to ensure no harmful vibrations are created. Consult with the driveline manufacturer for appropriate recommendations.

Before the rear suspension is relocated, check the new location of the spring hanger brackets. The new holes for the spring hanger brackets must not overlap existing holes and should adhere to the guidelines in the "FRAME DRILLING" section of this manual.

When shortening the wheelbase, the suspension should be moved forward and relocated on the original rail. The rail behind the suspension can then be cut to achieve the desired frame overhang. See Figure 56.

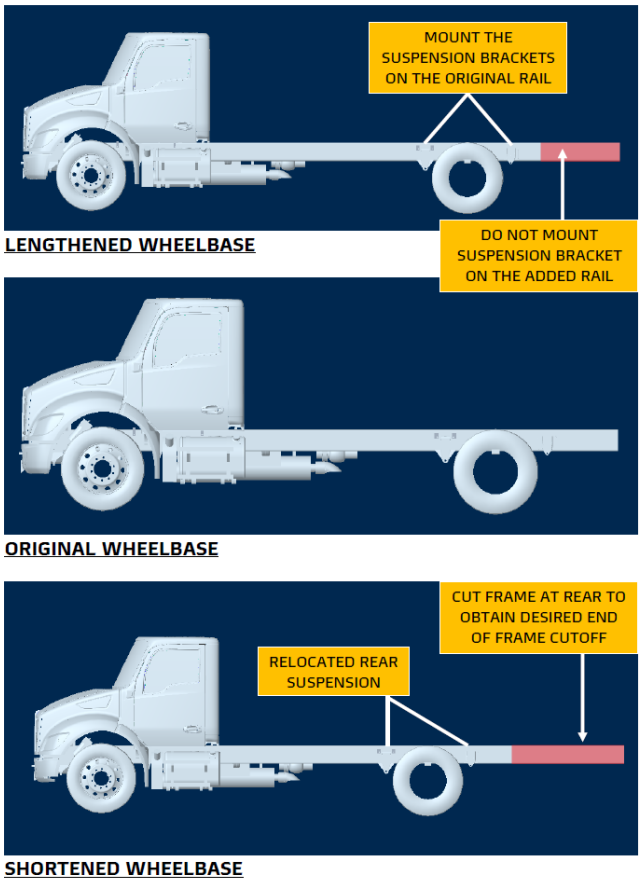

Figure 56 Wheelbase Customization

https://truckmanualshub.com/

CROSSMEMBERS

After lengthening the wheelbase, an additional crossmember may be required to maintain the original frame strength. The maximum allowable distance between the forward suspension crossmember and the next crossmember forward is 47.2 inches (1200 mm). If the distance exceeds 47.2 inches (1200 mm) after the wheelbase is lengthened, add a crossmember between them.

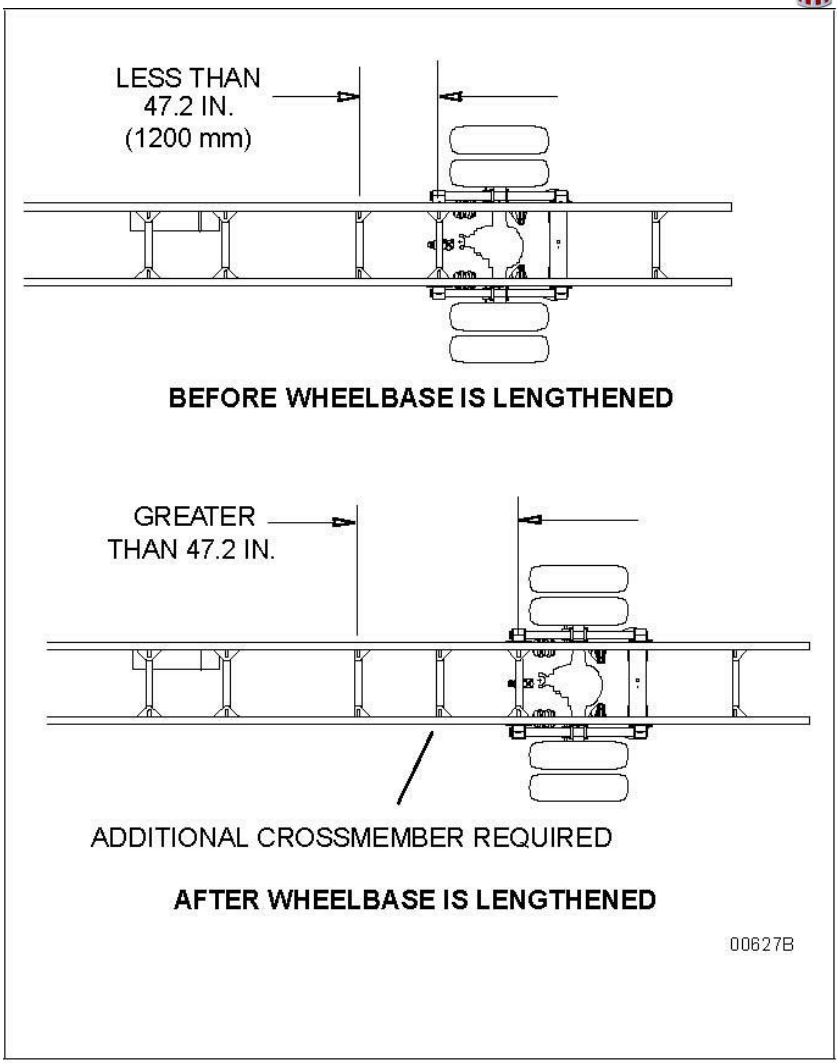

Figure 57 Crossmember Spacing Requirements

https://truckmanualshub.com/

TORQUE REQUIREMENTS

Torque values apply to fasteners with clean threads, lightly lubricated, with hardened steel washers, and nylon-insert nuts.

Table 20 Customary Grade 8 UNF or UNC

Fastener	Torque	
Size	**Nm**	**lb-ft**
5/16	27–34	20–25
3/8	47–60	35–44
7/16	76–96	56–71
1/2	117–148	86–109
9/16	167–214	123-158
5/8	235–296	173–218
3/4	411–523	303–386
7/8	654–846	482–624
1	973–1268	718–935

Table 21 U.S. Customary – Grade 8 Metric Class 10.9

Fastener	Torque	
Size	**Nm**	**lb-ft**
M6	9–11	7–8
M8	24–27	18–20
M10	47–54	35–40
M12	83–95	61–70
M14	132–150	97–111
M16	206–235	152–173
M20	403–458	297–338

https://truckmanualshub.com/

WELDING

The frame rails are heat treated and should not be welded. The high heat of welding nullifies the special heat treatment of the rails, greatly reducing the tensile strength of the frame rail. If a frame member becomes cracked from overloading, fatigue, surface damage or a collision, the only permanent repair is to replace the damaged frame member with a new part.

The following information is provided for temporary emergency repair. Prior to welding a cracked frame rail, the area should be beveled (V'd out) to allow for a better weld. To prevent spreading of the crack, a 7 to 9 mm (1/4 in. to 3/8 in.) dia. hole should be drilled at the end of the crack. Widen the crack along its full length by using two hack saw blades together. When welding steel frames use the shielded arc method. When welding aluminum frames use either the tungsten inert gas (TIG) or consumable electrode method. Be sure to obtain full weld penetration along the entire length of the crack.

CAUTION: Before welding, disconnect the negative terminal battery cable.

CAUTION: Before welding, disconnect the alternator terminals. Failure to do so could result in damage to the voltage regulator and/or alternator.

CAUTION: To prevent damage to electrical equipment, disconnect battery cables before arc-welding on a truck, and be sure that the welding ground lead is connected to the frame. Bearings and other parts will be damaged if current must pass through them to complete the circuit.

WELDING PRECAUTIONS: ALL ELECTRONIC ENGINES

Before welding on vehicles with electronic engines, the following precautions should be observed.

1. Disconnect all electrical connections to the vehicle batteries.
2. Disconnect all ECM and VECU connectors.
3. Do not use the ECM, VECU or engine ground stud for the ground of the welding probe.
4. Ensure that the ground connection for the welder is as close to the weld point as possible. This ensures maximum weld current and minimum risk to damage electrical components on the vehicle.
5. Turn off the key.

NOTE:

Bendix ABS and Wabco ABS: Disconnect ECU.

https://truckmanualshub.com/

SECTION 6 CAN COMMUNICATIONS

INTRODUCTION

Controller Area Network (CAN) is a serial network technology that was originally designed for the automotive industry but has also become popular in the commercial trucking industry. The CAN bus is primarily used in embedded systems and network technology that provides fast communication among controllers up to real-time requirements, eliminating the need for the much more expensive and complex technology.

CAN is a two-wire high-speed network system, that is far superior to conventional hardwired technologies in functionality and reliability. CAN implementations are more cost effective. CAN is designed for real-time requirements which can easily beat hardwire connections when it comes to short reaction times, timely error detection, quick error recovery and error repair.

Characteristics of the Controller Area Network

- A serial networking technology for embedded solutions
- Needs only two wires to communicate messages
- Operates at data rates of 250K and 500K
- Supports a maximum of 8 bytes per message frame
- One application can support multiple message IDs
- Supports message priority, i.e., the lower the message ID the higher its priority

CAN COMMUNICATIONS ACRONYM LIBRARY

Acronym	Definition
CAN	Controller Area Network
J-1939	SAE CAN Communication Standard
PGN	Parameter Group Number
PTO	Power Take Off
SPN	Suspect Parameter Number
SCR	Selective Catalytic Reduction
DPF	Diesel Particulate Filter
TSC1	Torque Speed Commands

SAE J1939

The Society of Automotive Engineers (SAE) Communications Subcommittee for Truck and Bus Controls has developed a family of standards concerning the design and use of devices that transmit electronic signals and control information among vehicle components. SAE J1939 and its companion documents are the accepted industry standard for the vehicle network of choice for commercial truck applications. SAE J1939 is used in the commercial vehicle area for communication in the embedded systems of the commercial vehicle.

SAE J1939 uses CAN as a physical layer. It is a recommended practice that defines which (and how) the data is communicated between the Electronic Control Units within a vehicle network. Typical

https://truckmanualshub.com/

controllers are the Engine, Brake, Transmission, etc. Examples of data that can be exchanged in these messages include, but are not limited to vehicle road speed, torque control message from the transmission to the engine and oil temperature.

Characteristics of J1939

- Extended CAN identifier (29 bit)
- Peer-to-peer and broadcast communication
- Network management
- Definition of parameter groups for commercial vehicles and others
- Manufacturer specific parameter groups are supported
- Diagnostics features
- A standard developed by the Society of Automotive Engineers
- Defines communication for vehicle networks
- A Higher-Layer Protocol using CAN as the physical layer
- Uses UTP (Unshielded Twisted Pair) wire
- Applies a maximum network length of 120 ft.
- Applies a standard baud rate of 500 Kbit/sec or 250 Kbit/sec
- Supports peer-to-peer and broadcast communication
- Supports message lengths up to 1785 bytes
- Defines a set of Parameter Group Numbers
- Supports network management

PARAMETER GROUP NUMBER

Parameter Groups contain information on parameter assignments within the 8-byte CAN data field of each message as well as repetition rate and priority. Parameters groups are, for instance, engine temperature, which includes coolant temperature, fuel temperature, oil temperature, etc. Parameter Groups and their numbers are listed in SAE J1939 and defined in SAE J1939/71, a document containing parameter group definitions plus suspect parameter numbers.

SUSPECT PARAMETER NUMBER

A Suspect Parameter Number is a number assigned by the SAE to a specific parameter within a parameter group. It describes the parameter in detail by providing the following information:

Data Length in bytes
Data Type
Resolution
Offset
Range
Reference Tag (Label)

SPNs that share common characteristics are grouped into Parameter Groups and they will be transmitted throughout the network using the Parameter Group Number.

https://truckmanualshub.com/

VMUX GATEWAY REFERENCE – CAN MESSAGES

PGN					SPN	
Number	Name	Abbr.	Source Address	CAN BUS	Number	Name
0	Torque Speed control 1	TSC1	0	KCAN SCAN BCAN	695	Engine Override Control Mode
					696	Engine Requested Speed Control Conditions
					897	Override Control Mode Priority
					898	Engine Requested Speed/Speed Limit
					518	Engine Requested Torque/Torque Limit
					3349	TSC1 Transmission Rate
					3350	TSC1 Control Purpose
					4191	Engine Requested Torque (Fractional)
					4206	Message Counter
					4207	Message Checksum
61441	Electronic Brake Controller 1	EBC1	39	BCAN	561	ASR Engine Control Active
					562	ASR Brake Control Active
					563	Anti-Lock Braking (ABS) Active
					1121	EBS Brake Switch
					521	Brake Pedal Position
					575	ABS Off-road Switch
					576	ASR Off-road Switch
					577	ASR "Hill Holder" Switch
					1238	Traction Control Override Switch
					972	Accelerator Interlock Switch
					971	Engine Derate Switch
					970	Engine Auxiliary Shutdown Switch
					969	Remote Accelerator Enable Switch
					973	Engine Retarder Selection
					1243	ABS Fully Operational
					1439	EBS Red Warning Signal
					1438	ABS/EBS Amber Warning Signal (Powered Vehicle)
					1793	ATC/ASR Information Signal
					1481	Source Address of Controlling Device for Brake Control
					7941	Railroad Mode Switch
					2911	Halt brake switch

https://truckmanualshub.com/

PGN					SPN	
Number	Name	Abbr.	Source Address	CAN BUS	Number	Name
					1836	Trailer ABS Status
					1792	Tractor-Mounted Trailer ABS Warning Signal
61442	Electronic Transmission Controller 1	ETC1	0,3	KCAN SCAN BCAN	560	Transmission Driveline Engaged
					573	Transmission Torque Converter Lockup Engaged
					574	Transmission Shift In Process
					4816	Transmission Torque Converter Lockup Transition in Process
					191	Transmission 1 Output Shaft Speed
					522	Percent Clutch Slip
					606	Engine Momentary Overspeed Enable
					607	Progressive Shift Disable
					5015	Momentary Engine Maximum Power Enable
					161	Transmission 1 Input Shaft Speed
					1482	Source Address of Controlling Device for Transmission Control
61443	Electronic Engine Controller 2	EEC2	0	KCAN SCAN BCAN	558	Accelerator Pedal 1 Low Idle Switch
					559	Accelerator Pedal Kickdown Switch
					1437	Road Speed Limit Status
					2970	Accelerator Pedal 2 Low Idle Switch
					91	Accelerator Pedal Position 1
					92	Engine Percent Load At Current Speed
					974	Remote Accelerator Pedal Position
					29	Accelerator Pedal 2 Position
					2979	Vehicle Acceleration Rate Limit Status
					5021	Momentary Engine Maximum Power Enable Feedback
					5399	DPF Thermal Management Active
					5400	SCR Thermal Management Active
					3357	Actual Maximum Available Engine - Percent Torque

https://truckmanualshub.com/

PGN					SPN	
Number	Name	Abbr.	Source Address	CAN BUS	Number	Name
					5398	Estimated Pumping - Percent Torque
61444	Electronic Engine Controller 1	EEC1	0	KCAN SCAN BCAN	899	Engine Torque Mode
					4154	Actual Engine - Percent Torque (Fractional)
					512	Driver's Demand Engine - Percent Torque
					513	Actual Engine - Percent Torque
					190	Engine Speed
					1483	Source Address of Controlling Device for Engine Control
					1675	Engine Starter Mode
					2432	Engine Demand – Percent Torque
61445	Electronic Transmission Controller 2	ETC2	3	KCAN SCAN BCAN	524	Transmission Selected Gear
					526	Transmission Actual Gear Ratio
					523	Transmission Current Gear
					162	Transmission Requested Range
					163	Transmission Current Range
61712	Brakes 2	B2	39	BCAN	8484	Demanded Brake Application Pressure
					603	Brake Pedal Switch 2
64187	Direct Lamp Control Command 3	DLCC3	23, 167	KCAN SCAN BCAN	13116	Transmission Oil Temperature High Lamp Command
					13117	Transmission Oil Pressure Low Lamp Command
64195	Air Supply Pressure 3	AIR3	23	KCAN SCAN BCAN	13073	Air Dryer Cartridge Life Remaining
					13132	Air Suspension Supply Pressure 2
64740	Engine Fuel Properties	EFP	0	KCAN SCAN BCAN	5537	Engine Fuel Dynamic Viscosity
					5538	Engine Fuel Density
					5539	Engine Fuel Dielectricity (High Resolution)
					5540	Engine Fuel 1 Temperature 1 (High Resolution)
64774	Direct Lamp Control Command 2	DLCC2	0, 23, 167	KCAN SCAN BCAN	5087	Vehicle Battery Voltage Low Lamp Command
					5088	Vehicle Fuel Level Low Lamp Command
					5089	Vehicle Air Pressure Low Lamp Command

https://truckmanualshub.com/

PGN					SPN	
Number	Name	Abbr.	Source Address	CAN BUS	Number	Name
					5090	Vehicle HVAC Recirculation Lamp Command
					5091	Vehicle Battery Charging Lamp Command
					1847	Hill Holder Lamp Command
					10295	Vehicle Limited Performance Mode Lamp Command
					13108	Primary Air Pressure Low Lamp Command
					13109	Secondary Air Pressure Low Lamp Command
					13110	Optional Lamp 1 Command
					13111	Optional Lamp 2 Command
					13112	Optional Lamp 3 Command
					13113	Optional Lamp 4 Command
					13114	Optional Lamp 5 Command
					13115	Optional Lamp 6 Command
64775	Direct Lamp Control Command 1	DLCC1	0, 23, 167	KCAN SCAN BCAN	5077	Engine Protect Lamp Command
					5078	Engine Amber Warning Lamp Command
					5079	Engine Red Stop Lamp Command
					5080	OBD Malfunction Indicator Lamp Command
					5081	Engine Brake Active Lamp Command
					3987	Compression Brake Enable Switch Indicator Lamp Command
					5082	Engine Oil Pressure Low Lamp Command
					5083	Engine Coolant Temperature High Lamp Command
					5084	Engine Coolant Level Low Lamp Command
					5085	Engine Idle Management Active Lamp Command
					5086	Engine Air Filter Restriction Lamp Command
					5469	Engine Fuel Filter Restricted Lamp Command
					6205	Engine Control Module 1 Ready for Use Lamp Command

https://truckmanualshub.com/

PGN					SPN	
Number	Name	Abbr.	Source Address	CAN BUS	Number	Name
					6206	Engine Control Module 2 Ready for Use Lamp Command
					6207	Engine Control Module 3 Ready for Use Lamp Command
					6709	Engine Speed High Lamp Command
					6710	Engine Speed Very High Lamp Command
					6899	Vehicle Acceleration Rate Limit Lamp Command
					9372	Engine Idle Management Pending Event Lamp Command
					9683	Engine Stop-Start Automatic Stop Active Lamp Command
					9684	Engine Stop-Start Automatic Start Failed Lamp Command
					9685	Engine Stop-Start Enabled Lamp Command
					13105	Engine Oil Temperature High Lamp Command
					13106	Engine Fuel Temperature High Lamp Command
					13107	Engine Intercooler Temperature High Lamp Command
					13379	Engine Air Shutoff Lamp Command
64914	Engine Operating Information	EOI	0	SCAN	3543	Engine Operating State
					4082	Fuel Pump Primer Control
					6385	Engine Starter Motor Relay Control
					3544	Time Remaining in Engine Operating State
					3608	Engine Fuel Shutoff Vent Control
					632	Engine Fuel Shutoff 1 Control
					2807	Engine Fuel Shutoff 2 Control
					3601	Engine Fuel Shutoff Valve Leak Test Control
					3589	Engine Oil Priming Pump Control
					3602	Engine Oil Pre-heater Control
					3603	Engine Electrical System Power Conservation Control

https://truckmanualshub.com/

PGN					SPN	
Number	Name	Abbr.	Source Address	CAN BUS	Number	Name
					3604	Engine Pre-Heater Control
					3605	Engine Coolant Pump Control
					3606	Engine Controlled Shutdown Request
					3607	Engine Emergency (Immediate) Shutdown Indication
					6884	Engine Cold Ambient Elevated Idle Status
					6807	Engine Desired Torque Request
					3644	Engine Derate Request
64980	Cab Message 3	CM3	0,23,39, 167	KCAN SCAN BCAN	2796	Transfer Case Selector Switch
					9175	Aftertreatment SCR Dosing Mode Command
					9842	Momentary Operator Key Switch
					3314	Fifth Wheel Release Control
					3315	Fifth Wheel Release Control Security Lockout
					7711	Vehicle Trailer Status
					10144	Operator Key Detected
					3809	Transmission Oil Level Request
					3996	Operator Key Switch Accessory Power
					10145	Operator Key Switch Ignition Power
					10146	Operator Key Switch Start
					10147	Operator Key Switch Delayed Battery Off
					2641	Horn Switch
					13363	Engine Air Shutoff Test Switch
					13364	Engine Air Shutoff Manual Switch
65129	Aftertreatment 1 Fuel Control 1	ET3	0	KCAN SCAN BCAN	3480	Aftertreatment 1 Fuel Pressure 1
					3481	Aftertreatment 1 Fuel Rate
					3479	Aftertreatment 1 Fuel Pressure 1 Control
					4097	Aftertreatment 1 Fuel Drain Actuator
					3484	Aftertreatment 1 Ignition
					3483	Aftertreatment 1 Regeneration Status
					3482	Aftertreatment 1 Fuel Enable Actuator

https://truckmanualshub.com/

PGN					SPN	
Number	Name	Abbr.	Source Address	CAN BUS	Number	Name
					4301	Aftertreatment 1 Fuel Injector 1 Heater Control
65170	Intermediate Speed Control	EI1	0	SCAN	2880	Engine Operator Primary Intermediate Speed Select
65198	Air Supply Pressure	AIR1	23, 39, 167	KCAN SCAN BCAN	46	Pneumatic Supply Pressure
					1086	Parking and/or Trailer Air Pressure
					1087	Service Brake Circuit 1 Air Pressure
					1088	Service Brake Circuit 2 Air Pressure
					1089	Auxiliary Equipment Supply Pressure
					1090	Air Suspension Supply Pressure 1
					1351	Air Compressor Status
					6305	Powertrain Circuit Air Supply Pressure
65199	Fuel Consumption (Gaseous)	GFC	0	SCAN	1039	Trip Fuel (Gaseous)
					1040	Total Fuel Used (Gaseous)
65203	Fuel Information 1 (Liquid)	LFI1	0	KCAN SCAN BCAN	1028	Total Engine PTO Governor Fuel Used
					1029	Trip Average Fuel Rate
					5458	Flexible Fuel Percentage
65214	Electronic Engine Controller 4	EEC4	0	SCAN	166	Engine Rated Power
					189	Engine Rated Speed
					3669	Engine Rotation Direction
					5465	Engine Intake Manifold Pressure Control Mode
					3671	Crank Attempt Count on Present Start Attempt
					8622	Engine Prelube Oil Low Pressure Threshold
65217	High Resolution Vehicle Distance	VDHR	0	SCAN	917	Total Vehicle Distance (High Resolution)
					918	Trip Distance (High Resolution)
65244	Idle Operation	IO	0	SCAN	236	Engine Total Idle Fuel Used
					235	Engine Total Idle Hours
65247		EEC3	0	SCAN	514	Nominal Friction - Percent Torque
					515	Engine's Desired Operating Speed

https://truckmanualshub.com/

PGN					SPN	
Number	Name	Abbr.	Source Address	CAN BUS	Number	Name
	Electronic Engine Controller 3				519	Engine's Desired Operating Speed Asymmetry Adjustment
					2978	Estimated Engine Parasitic Losses - Percent Torque
					3236	Aftertreatment 1 Exhaust Gas Mass Flow Rate
					3237	Aftertreatment 1 Intake Dew Point
					3238	Aftertreatment 1 Exhaust Dew Point
					3239	Aftertreatment 2 Intake Dew Point
					3240	Aftertreatment 2 Exhaust Dew Point
65248	Vehicle Distance	VD	0	SCAN	244	Trip Distance
					245	Total Vehicle Distance
65251	Engine Configuration 1	EC1	0	SCAN	188	Engine Speed At Idle, Point 1
					539	Engine Percent Torque At Idle, Point 1
					528	Engine Speed At Point 2
					540	Engine Percent Torque At Point 2
					529	Engine Speed At Point 3
					541	Engine Percent Torque At Point 3
					530	Engine Speed At Point 4
					542	Engine Percent Torque At Point 4
					531	Engine Speed At Point 5
					543	Engine Percent Torque At Point 5
					532	Engine Speed At High Idle, Point 6
					545	Engine Gain (Kp) Of The Endspeed Governor
					544	Engine Reference Torque
					533	Engine Maximum Momentary Override Speed, Point 7
					534	Engine Maximum Momentary Override Time Limit
					535	Engine Requested Speed Control Range Lower Limit
					536	Engine Requested Speed Control Range Upper Limit
					537	Engine Requested Torque Control Range Lower Limit

https://truckmanualshub.com/

PGN					SPN	
Number	Name	Abbr.	Source Address	CAN BUS	Number	Name
					538	Engine Requested Torque Control Range Upper Limit
					1712	Engine Requested Speed Control Range Upper Limit (Extended Range)
					1794	Engine Moment of Inertia
					1846	Engine Default Torque Limit
					3344	Support Variable Rate TSC1 Message
					3345	Support TSC1 Control Purpose Group 1
					3346	Support TSC1 Control Purpose Group 2
					3347	Support TSC1 Control Purpose Group 3
					3348	Support TSC1 Control Purpose Group 4
					7828	Engine Default Idle Torque Limit
65252	Shutdown	SHUTDN	0	KCAN SCAN BCAN	593	Engine Idle Shutdown has Shutdown Engine
					594	Engine Idle Shutdown Driver Alert Mode
					592	Engine Idle Shutdown Timer Override
					590	Engine Idle Shutdown Timer State
					591	Engine Idle Shutdown Timer Function
					985	A/C High Pressure Fan Switch
					875	Refrigerant Low Pressure Switch
					605	Refrigerant High Pressure Switch
					1081	Engine Wait to Start Lamp
					1110	Engine Protection System has Shutdown Engine
					1109	Engine Protection System Approaching Shutdown
					1108	Engine Protection System Timer Override
					1107	Engine Protection System Timer State
					1111	Engine Protection System Configuration
					2815	Engine Alarm Acknowledge

https://truckmanualshub.com/

PGN					SPN	
Number	Name	Abbr.	Source Address	CAN BUS	Number	Name
					2814	Engine Alarm Output Command Status
					2813	Engine Air Shutoff Command Status
					2812	Engine Overspeed Test
					3667	Engine Air Shutoff Status
					5404	PTO Shutdown has Shutdown Engine
					5566	Coolant Level Engine Protection Shutdown Status
					8159	Engine Oil Pressure Switch
65253	Engine Hours, Revolutions	HOURS	0	KCAN SCAN BCAN	247	Engine Total Hours of Operation
					249	Engine Total Revolutions
65255	Vehicle Hours	VH	0	KCAN SCAN BCAN	246	Total Vehicle Hours
					248	Total Power Takeoff Hours
65262	Engine Temperature 1	ET1	0	KCAN SCAN BCAN	110	Engine Coolant Temperature
					174	Engine Fuel 1 Temperature 1
					175	Engine Oil Temperature 1
					176	Engine Turbocharger 1 Oil Temperature
					52	Engine Intercooler Temperature
					1134	Engine Charge Air Cooler Thermostat Opening
65263	Engine Fluid Level/Pressure 1	EFL/P1		KCAN SCAN BCAN	94	Engine Fuel Delivery Pressure
					22	Engine Extended Crankcase Blow-by Pressure
					98	Engine Oil Level
					100	Engine Oil Pressure 1
					101	Engine Crankcase Pressure 1
					109	Engine Coolant Pressure 1
					111	Engine Coolant Level 1
65264	Power Takeoff Information 1	PTO1	0,23,39	KCAN SCAN BCAN	90	Power Takeoff Oil Temperature
					186	Power Takeoff Speed
					187	Power Takeoff Set Speed
					980	Engine PTO Governor Enable Switch
					979	Engine Remote PTO Governor Preprogrammed Speed Control Switch

https://truckmanualshub.com/

PGN					SPN	
Number	Name	Abbr.	Source Address	CAN BUS	Number	Name
					978	Engine Remote PTO Governor Variable Speed Control Switch
					984	Engine PTO Governor Set Switch
					983	Engine PTO Governor Coast/Decelerate Switch
					982	Engine PTO Governor Resume Switch
					981	Engine PTO Governor Accelerate Switch
					2897	Operator Engine PTO Governor Memory Select Switch
					3447	Remote PTO Governor Preprogrammed Speed Control Switch #2
					3448	Auxiliary Input Ignore Switch
					8639	Engine PTO Governor Disable Switch
65265	Cruise Control/Vehicle Speed 1	CCVS1	0	SCAN BCAN	69	Two Speed Axle Switch
					70	Parking Brake Switch
					1633	Cruise Control Pause Switch
					3807	Park Brake Release Inhibit Request
					84	Wheel-Based Vehicle Speed
					595	Cruise Control Active
					596	Cruise Control Enable Switch
					597	Brake Switch
					598	Clutch Switch
					599	Cruise Control Set Switch
					600	Cruise Control Coast (Decelerate) Switch
					601	Cruise Control Resume Switch
					602	Cruise Control Accelerate Switch
					86	Cruise Control Set Speed
					976	PTO Governor State
					527	Cruise Control States
					968	Engine Idle Increment Switch
					967	Engine Idle Decrement Switch
					966	Engine Diagnostic Test Mode Switch
					1237	Engine Shutdown Override Switch
65266		LFE1	0		183	Engine Fuel Rate

https://truckmanualshub.com/

PGN					SPN	
Number	Name	Abbr.	Source Address	CAN BUS	Number	Name
	Fuel Economy (Liquid)			KCAN SCAN BCAN	184	Engine Instantaneous Fuel Economy
					185	Engine Average Fuel Economy
					51	Engine Throttle Valve 1 Position 1
					3673	Engine Throttle Valve 2 Position
65269	Ambient Conditions	AMB	0	SCAN	108	Barometric Pressure
					170	Cab Interior Temperature
					171	Ambient Air Temperature
					172	Engine Intake 1 Air Temperature
					79	Road Surface Temperature
65270	Intake/Exhaust Conditions 1	IC1	0	KCAN SCAN BCAN	81	Aftertreatment 1 Diesel Particulate Filter Intake Pressure (use SPN 3609)
					102	Engine Intake Manifold #1 Pressure
					105	Engine Intake Manifold 1 Temperature
					106	Engine Intake Air Pressure
					107	Engine Air Filter 1 Differential Pressure
					173	Engine Exhaust Temperature
					112	Engine Coolant Filter Differential Pressure
65271	Vehicle Electrical Power 1	VEP1	39	BCAN	114	SLI Battery 1 Net Current
					115	Alternator Current
					167	Charging System Potential (Voltage)
					168	Battery Potential / Power Input 1
					158	Key Switch Battery Potential
65272	Transmission Fluids 1	TRF1	3	KCAN SCAN BCAN	123	Transmission Clutch 1 Pressure
					124	Transmission Oil Level 1
					126	Transmission Filter Differential Pressure
					127	Transmission 1 Oil Pressure
					177	Transmission Oil Temperature 1
					3027	Transmission Oil Level 1 High / Low
					3028	Transmission Oil Level 1 Countdown Timer
					3026	Transmission Oil Level 1 Measurement Status

https://truckmanualshub.com/

PGN					SPN	
Number	Name	Abbr.	Source Address	CAN BUS	Number	Name
65274	Brakes 1	B1	39	BCAN	116	Brake Application Pressure
					117	Brake Primary Pressure
					118	Brake Secondary Pressure
					619	Parking Brake Actuator
					3557	Parking Brake Red Warning Signal
					3808	Park Brake Release Inhibit Status
65276	Dash Display 1	DD1	0	SCAN BCAN	80	Washer Fluid Level
					96	Fuel Level 1
					95	Engine Fuel Filter Differential Pressure
					99	Engine Oil Filter Differential Pressure
					169	Cargo Ambient Temperature
					38	Fuel Level 2
65277	Alternate Fuel 1	AF1	0	SCAN	72	Engine Blower Bypass Valve Position
					159	Engine Gaseous Fuel Supply Pressure 1
					6814	Engine Gaseous Fuel Vent Pressure
					7020	LNG Vaporizer Coolant Outlet Temperature
					7581	Engine Gaseous Fuel Pressure Regulator Intake Pressure
65279	Operator indicators	OI	0	KCAN SCAN BCAN	97	Water In Fuel Indicator 1
					5675	Operator Shift Prompt
					6301	Water in Fuel Indicator 2
					8612	Engine Overloaded Indicator
					5825	Driver Warning System Indicator Status
					5826	Emission Control System Operator Inducement Severity
					8611	Water In Charge Air Duct After Charge Air Cooler Indicator
					8428	Fuel Supply Estimated Remaining Distance
					9373	Automatic Start Request Inhibit Indicator
					12959	Recommended Number of Gears to Shift
					355	Engine Oil Life Remaining

https://truckmanualshub.com/

PGN					SPN	
Number	Name	Abbr.	Source Address	CAN BUS	Number	Name
65294	Proprietary B	PropB_VECU_03	39	BCAN	2551	Manufacturer Defined Usage (PropB_PDU2)
65347	Proprietary B	PropB_CMNS_HNDSHK_RN	0	SCAN	2552	Manufacturer Defined Usage (PropB_PDU2)
65348	Proprietary B	PropB_CMNS_HNDSHK_ED	0	SCAN	2553	Manufacturer Defined Usage (PropB_PDU2)
65349	Proprietary B	PropB_CMNS_HNDSHK_AR	0	SCAN	2554	Manufacturer Defined Usage (PropB_PDU2)
65357	Proprietary B	PropB_AGLTY_SG_MTE	0	SCAN	2555	Manufacturer Defined Usage (PropB_PDU2)
65360	Proprietary B	PropB_AGLTY_FS_Temps	0	SCAN	2556	Manufacturer Defined Usage (PropB_PDU2)

https://truckmanualshub.com/

SECTION 7 ELECTRICAL

INTRODUCTION

This section is written to provide information to the body builder when installing equipment into vehicles built with multiplexed instrumentation. The technology presented by VMUX level instrumentation integrates J-1939 CAN data communications between controllers and equipment on the vehicle. This section is intended to address how to work in aftermarket equipment while still maintaining full functionality of the OEM vehicle.

These topics apply to 2.1M medium duty chassis built with a Vehicle Electronic Control Unit (VECU). The electrical architecture for these trucks is named VMUX which replaces NAMUX2. This system integrates a parallel control unit to manage outbound messages via a faster baud rate 500kbps and FCAN signals for the chassis module(s). Since the F-CAN has moved to the VECU, the VCAN is divided into VCAN1 and VCAN2. The second CAN is dedicated to OBD communication.

The most important advancement of electrical instrumentation is the implementation of the VECU controller. While it is still possible to wire completely outside of the VECU system, utilizing the VECU functions will make a cleaner installation and will maintain OEM functionality. VECU expands controls to air operated devices by receiving input from dash switches, remote (aftermarket) switches, sensors mounted to the aftermarket equipment and other vehicle parameters (engine speed, transmission status etc.) With the proper programming, the VECU will then process the inputs and will create a J-1939 Data instruction which is communicated to another controller outside the cab called the Chassis Module. This chassis module receives the instruction and communicates the information to the air solenoid bank. Then 12V power will open the solenoid and supply air pressure to the specified air circuit. The chassis module can also supply voltage to other systems on the chassis.

ELECTRICAL ACRONYM LIBRARY

Acronym	Definition
CAN	Controller Area Network
DTC	Diagnostics Trouble Code
ECM	Engine Control Module
ECU	Electrical Control Unit
EOA	Electric Over Air
EOH	Electric Over Hydraulic
J-1939	SAE CAN Communication Standard
LIN	Local Interconnect Network
MSB	Master Solenoid Bank
MSM	Master Switch Module
MUX	Multiplex Switch

Acronym	Definition
OBD	On Board Diagnostics
OEM	Original Equipment Manufacture
PCC	Predictive Cruise Control
PDC	Power Distribution Center
PGN	Parameter Group Number
PTO	Power Take Off
RP1226	TMS Messaging Standard
SPN	Suspect Parameter Number
TCM	Transmission Control Module
VECU	Vehicle Electrical Control Unit

https://truckmanualshub.com/

ELECTRICAL WIRING CIRCUIT CODES

The wire system uses 10 different colors and only one striped wire color. Each wire has a minimum of seven characters, with the first three characters as the wire color. The remaining four characters are related to the wire services. The colors determine the circuits function as follows:

Table 22 Electrical Wire Circuit Code Tables

Color Codes, NA Applications		
Insulation Color	**Color Code**	**Electrical Function**
Red with White Stripe	R/WXXXX	Direct Battery Power
Red	REDXXXX	Protected Battery Power
Orange	ORNXXXX	Ignition Accessory Start Power
Yellow	YELXXXX	Activated Power CAN High
Brown	BRNXXXX	Indicator Illumination Backlit Illumination
Black	BLKXXXX	Load Return
Violet	VIOXXXX	Reference Voltage
Light Blue	BLUXXXX	Sensor Signal
Light Green	GRNXXXX	Sensor Common, Not Connected Directly to Ground CAN Low
White	WHTXXXX	Ground

Number			Category
XXX0000	through	XXX0999	General
XXX1000	through	XXX1999	Power Supply
XXX2000	through	XXX2999	Lighting
XXX3000	through	XXX3999	Powertrain
XXX4000	through	XXX4999	Instrumentation
XXX5000	through	XXX5999	Safety Systems
XXX6000	through	XXX6999	Convenience, Security
XXX7000	through	XXX7999	HVAC
XXX8000	through	XXX8999	Undefined
XXX9000	through	XXX9999	Trailer/Body Connections

https://truckmanualshub.com/

MULTIPLEX SYSTEM

The VECU electrical architecture uses a multiplexing system. Multiplexing can be defined as the process of sending multiple digital signals on the same shared medium at the same time. These signals are introduced into the multiplexing system through data connection points which are defined by J1939 backbone.

CAN BUS SYSTEM OVERVIEW

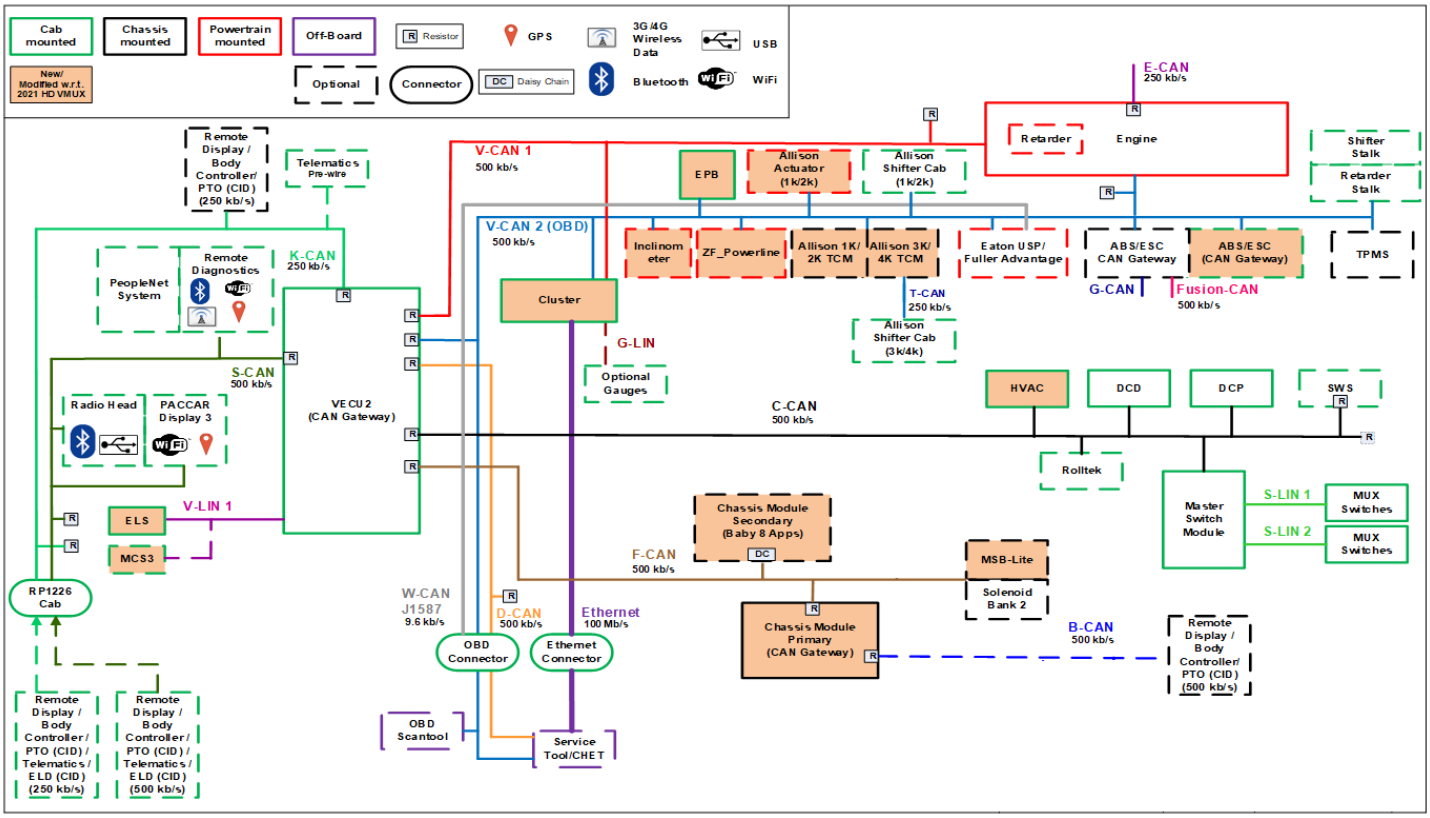

Figure 58 CAN Bus System Overview

CAN BUS SPEEDS AND CIRCUIT DESIGNATION

J1939-14 (500KBPS):
B-CAN – 0813 Body Builder
C-CAN – 0821 Cab
D-CAN – 0822 Diagnostics
F-CAN – 0819 Frame
G-CAN – 0825 Bendix ACB Antenna
S-CAN – 0827 Radio and PACCAR Display
V-CAN1 – 0812 Vehicle1
V-CAN2 – 0823 Vehicle2

J1939-15 (250KBPS):
T-CAN – 0828 Transmission
K-CAN – 0829 Telematics and Remote PTO

https://truckmanualshub.com/

ELECTRICAL COMPONENT OVERVIEW

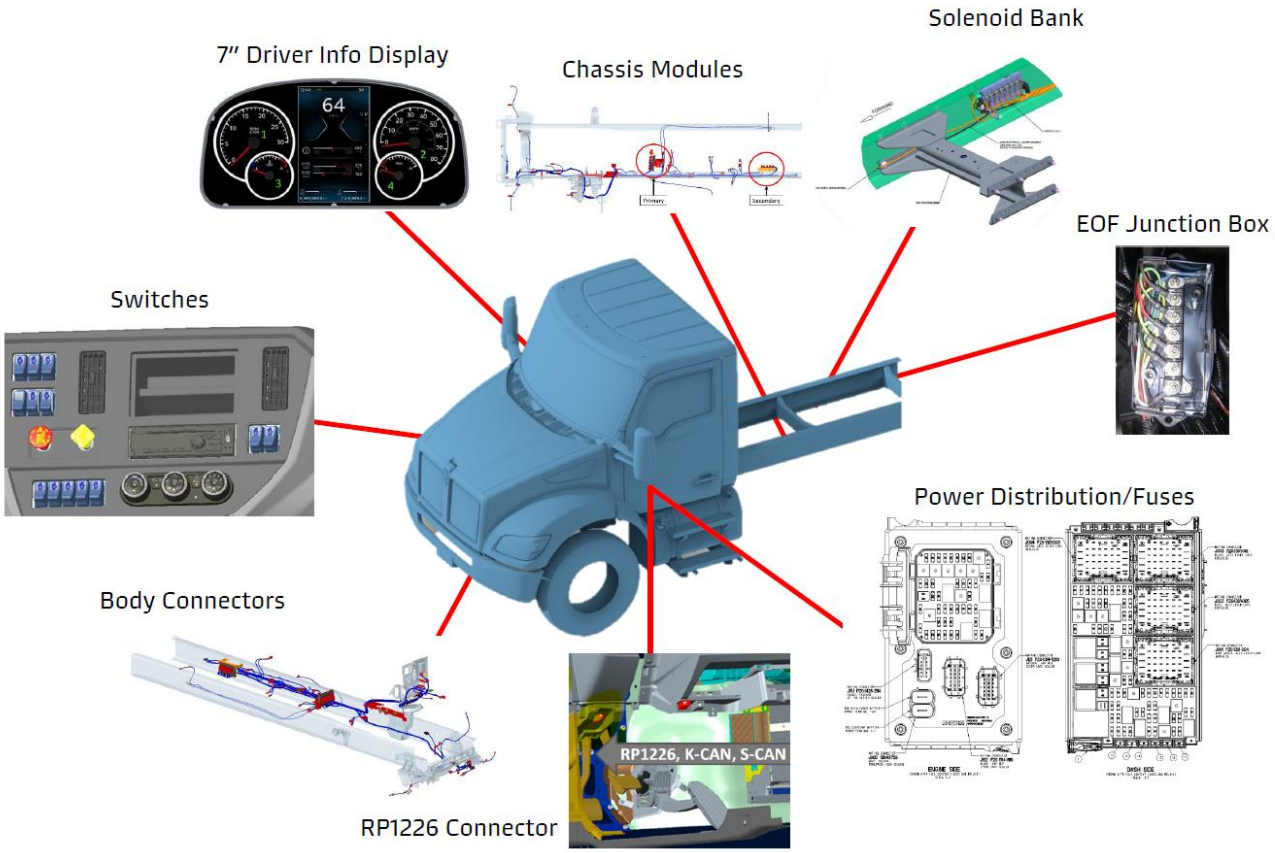

Figure 59 Overview Diagram of Electrical Component Locations

https://truckmanualshub.com/

ELECTRICAL HARNESS OVERVIEW

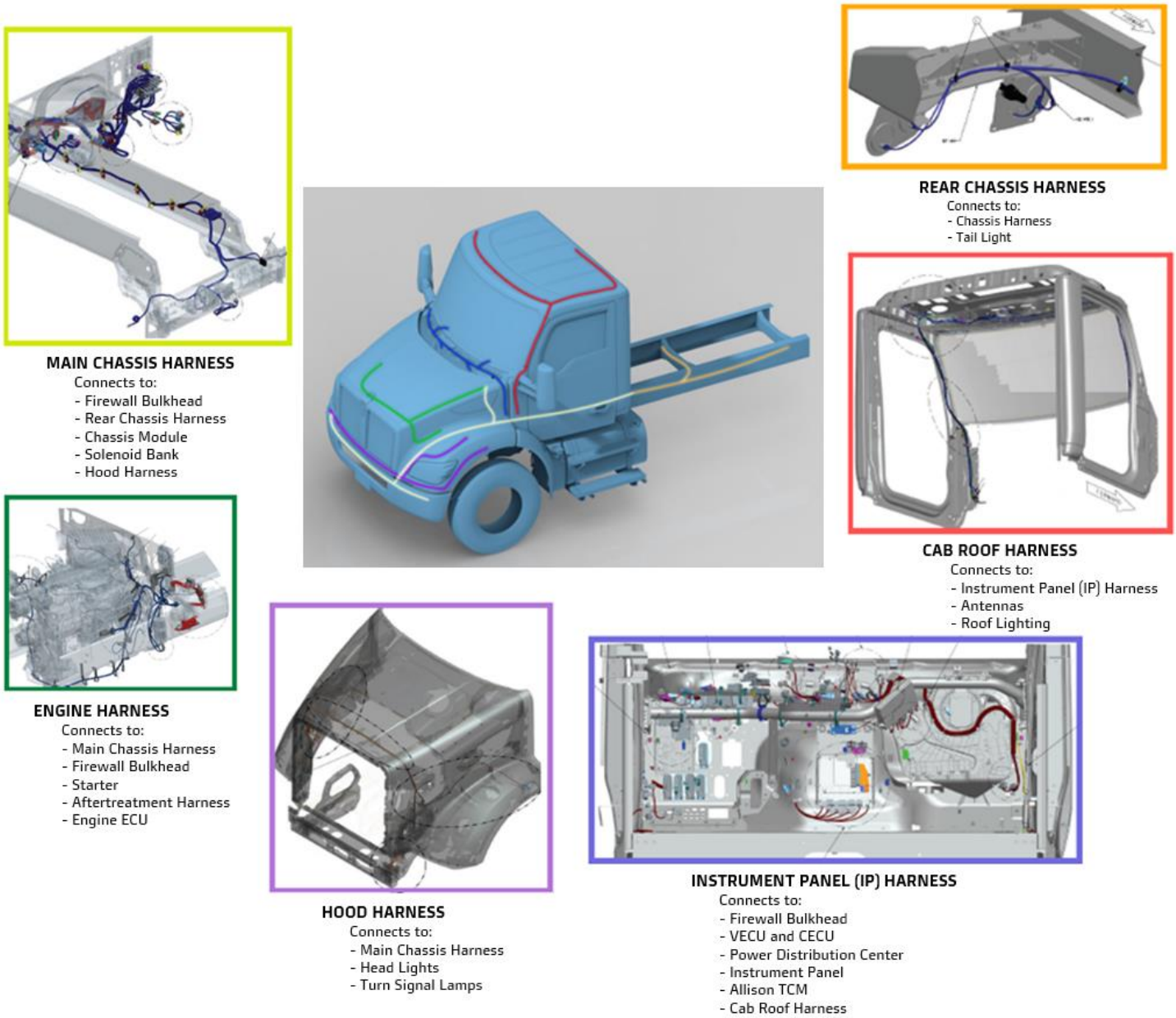

Figure 60 Overview Diagram of Electrical Harness Locations

https://truckmanualshub.com/

IN CAB CAN BASED MESSAGING CONNECTOR

RP1226 CONNECTOR

The RP1226 connector is located on the left-hand side of the steering wheel behind the dash near the OBD connector. The RP1226 connector can be used for after-market telematics, ELD, body controls, and PTO controls. There are multiple bus speeds available K-CAN for 250kbps and S-CAN for 500 kbps. The RP1226 provides defined messages and major telematics supplier data for customer use.

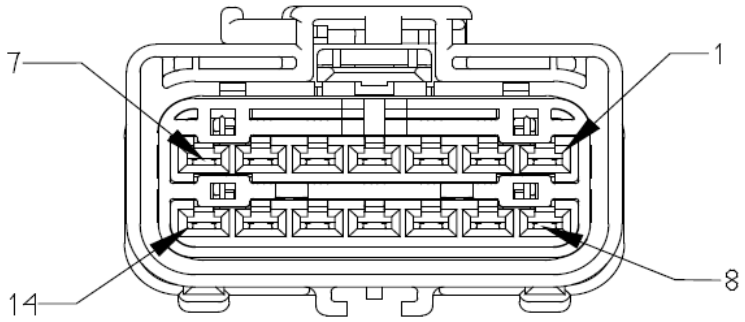

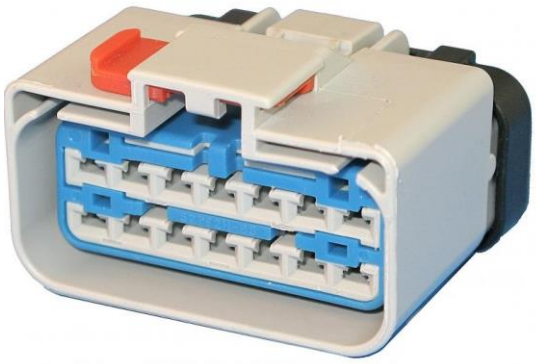

Pin	Description
1	PROTECTED POWER
2	J1939 S-CAN (+)
4	J1939 K-CAN (+)
7	IGNITION POWER
8	GROUND
9	J1939 S-CAN (-)
11	J1939 K-CAN (-)

Figure 61 RP1226 Connector

https://truckmanualshub.com/

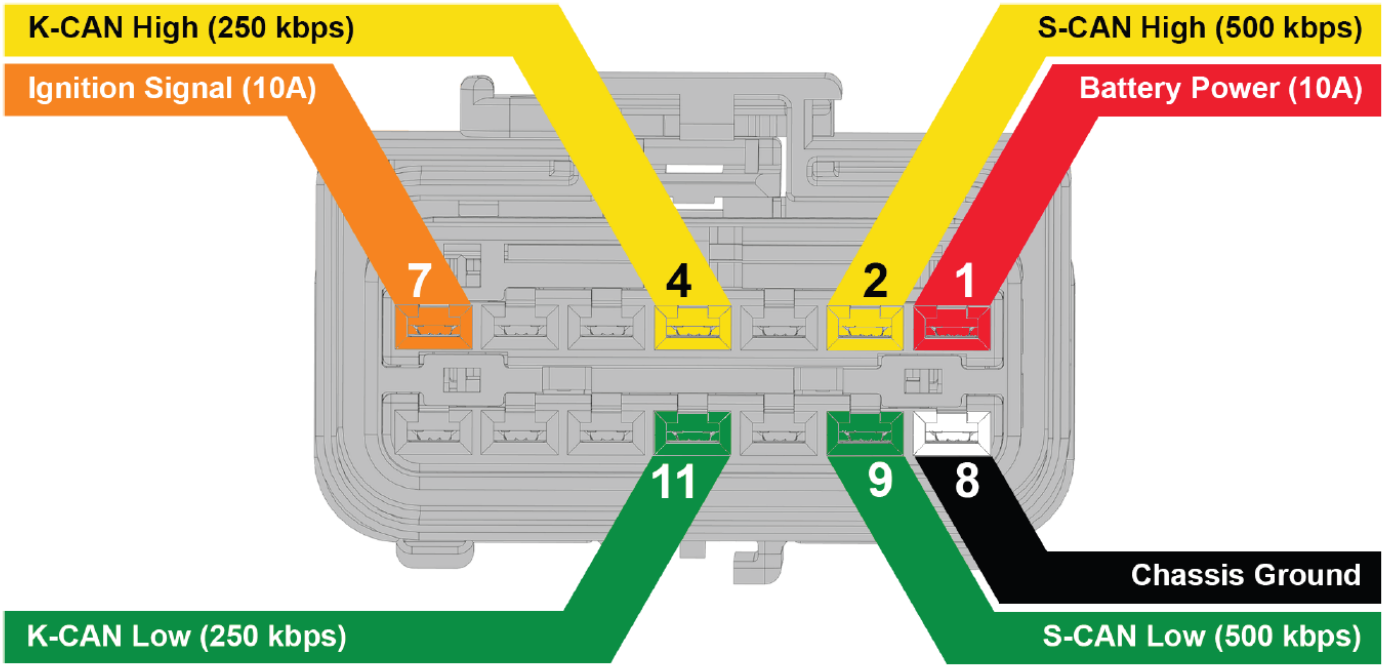

Figure 62 RP1226 Visual Pinout

NOTE:

One device allowed per CAN-Bus on each RP1226 Connector.
Your device MUST match the speed of the CAN-Bus that you install it on.
Devices on S-CAN must be within 1.4m of the RP1226 Connector.
Devices on K-CAN must be within 2.7m of the RP1226 Connector.

RP1226 PARTS AND CONNECTORS

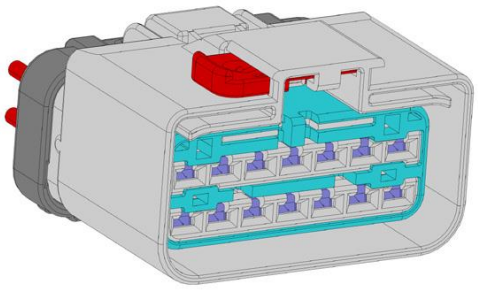

Figure 63 RP 1226 Connector

Connector Part Number: P20-6280-12142120
Wire Terminal Part Numbers:
Tin Plated: 54001800
Gold Plated: 15422510

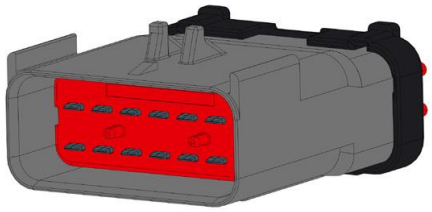

Figure 64 RP1226 Mating Connector

Connector Part Number: P20-6280-22142120
Wire Terminal Part Numbers:
Tin Plated: 54001801
Gold Plated: 15435215

https://truckmanualshub.com/

NOTE:

Use terminal crimping tool Hi-Line 29564 or equivalent

RP1226 TO 9-PIN JUMPERS

Table 23 RP1226 to 9 Pin Jumpers

Part Number	K-CAN	S-CAN	Length of "X"
PP207233	Yes	Yes	305 mm
PP207234	Yes	No	1700 mm

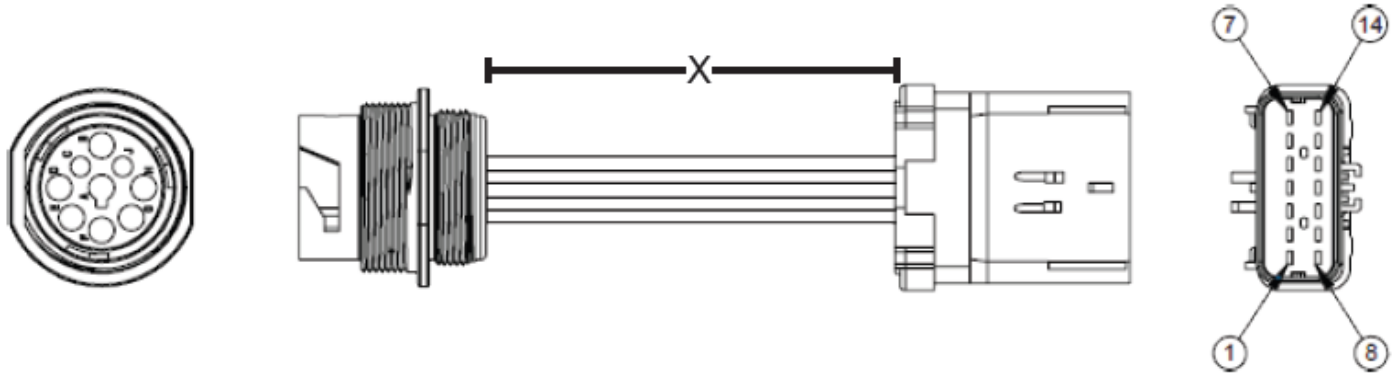

Figure 65 RP1226 to 9 Pin Jumper

https://truckmanualshub.com/

BODY CONNECTION POINTS

LOCATION DIAGRAMS FOR VARIOUS BODY CONNECTORS ON THE MAIN CHASSIS HARNESS

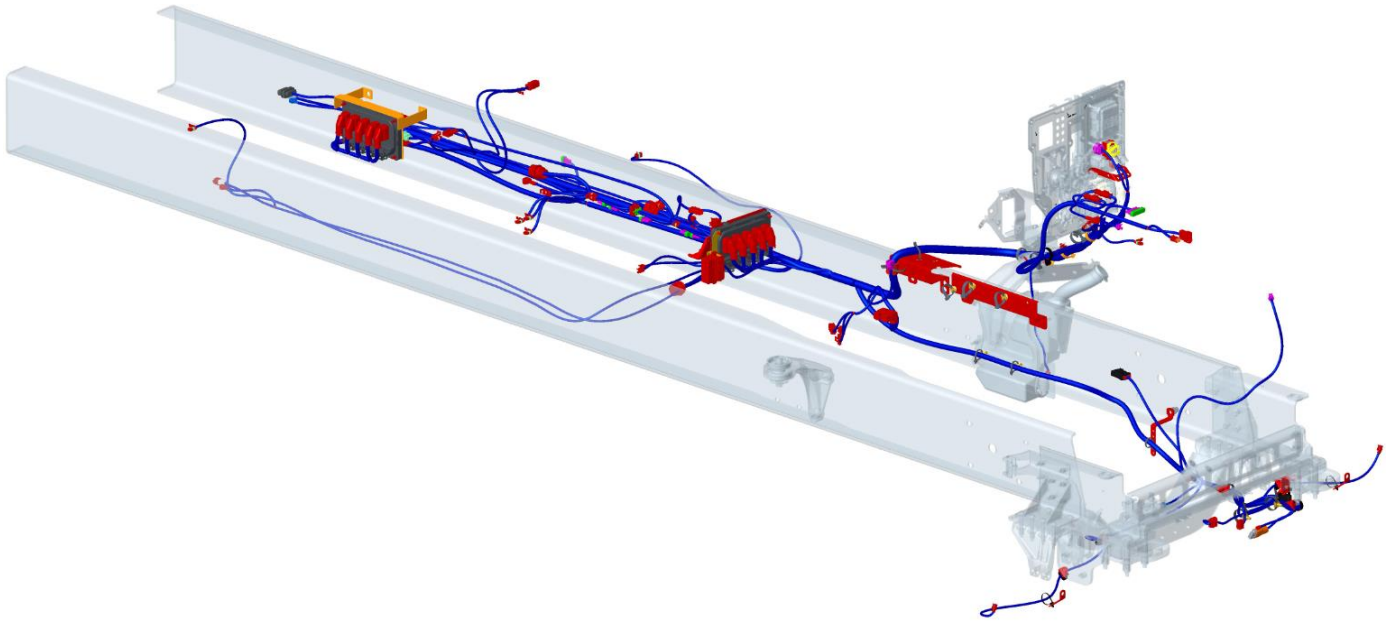

Figure 66 Main Chassis harness General Routing – Isometric View

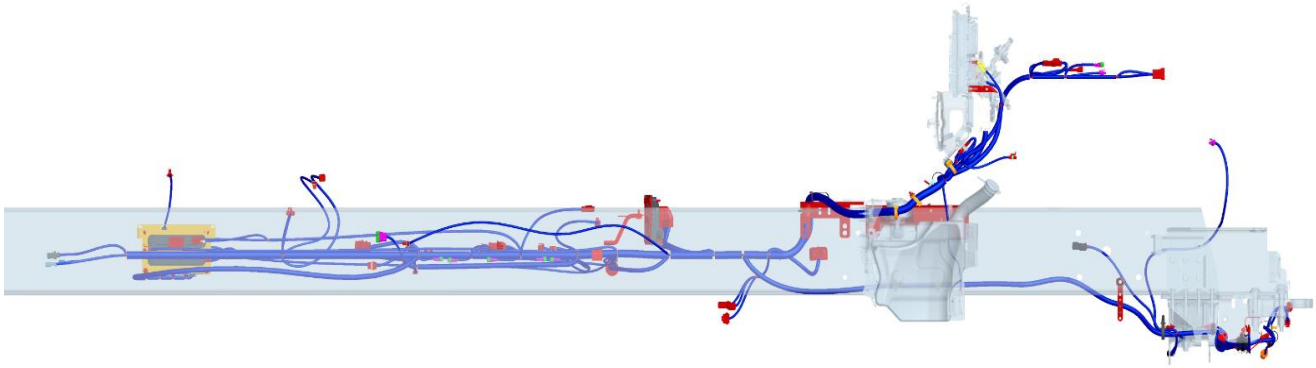

Figure 67 Main Chassis Harness General Routing – Side View

https://truckmanualshub.com/

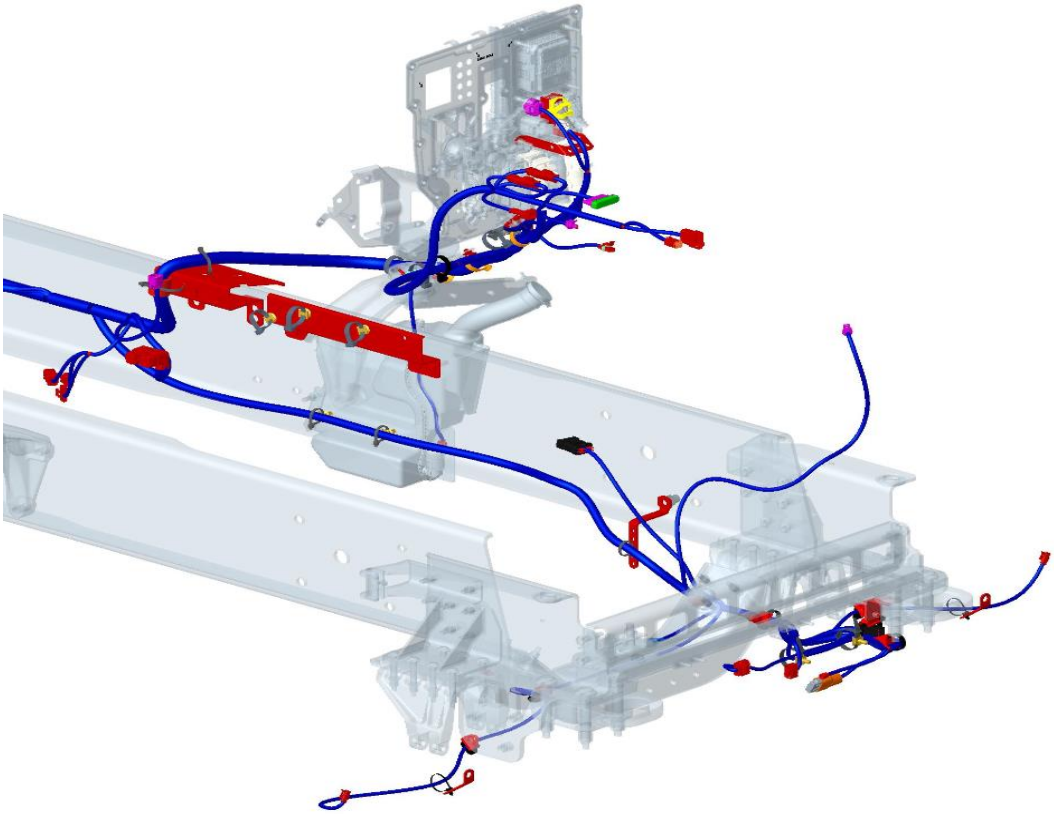

Figure 68 Main Chassis Harness General Routing – Front Partial View

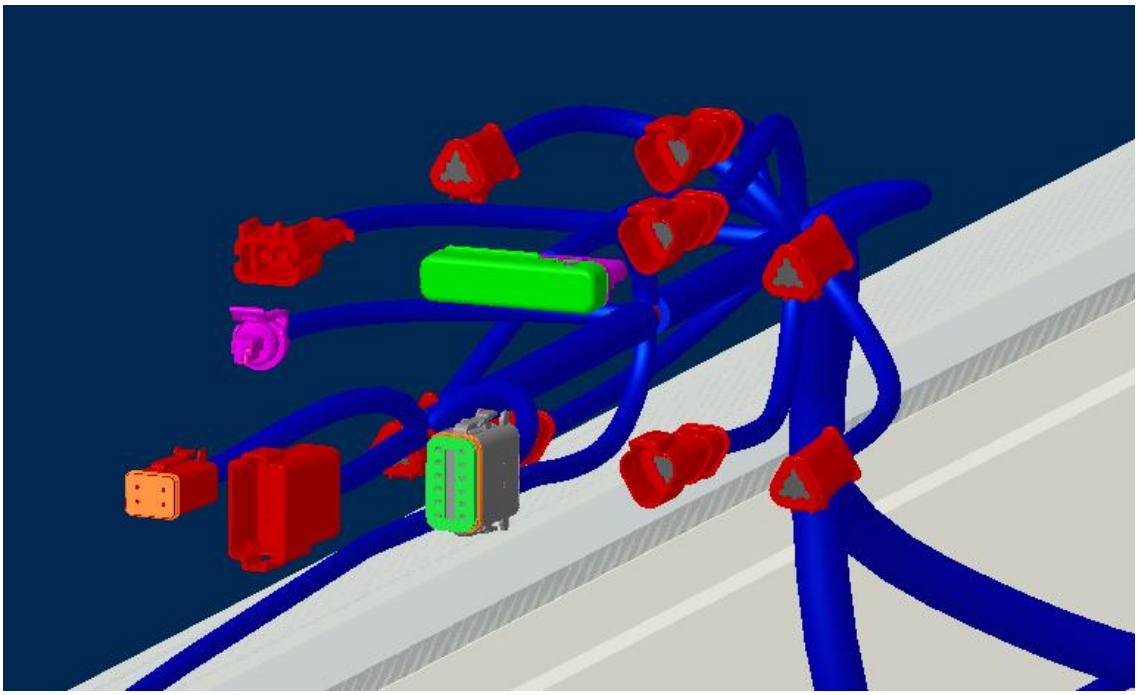

Figure 69 Detail View of Engine Compartment Body Connectors

https://truckmanualshub.com/

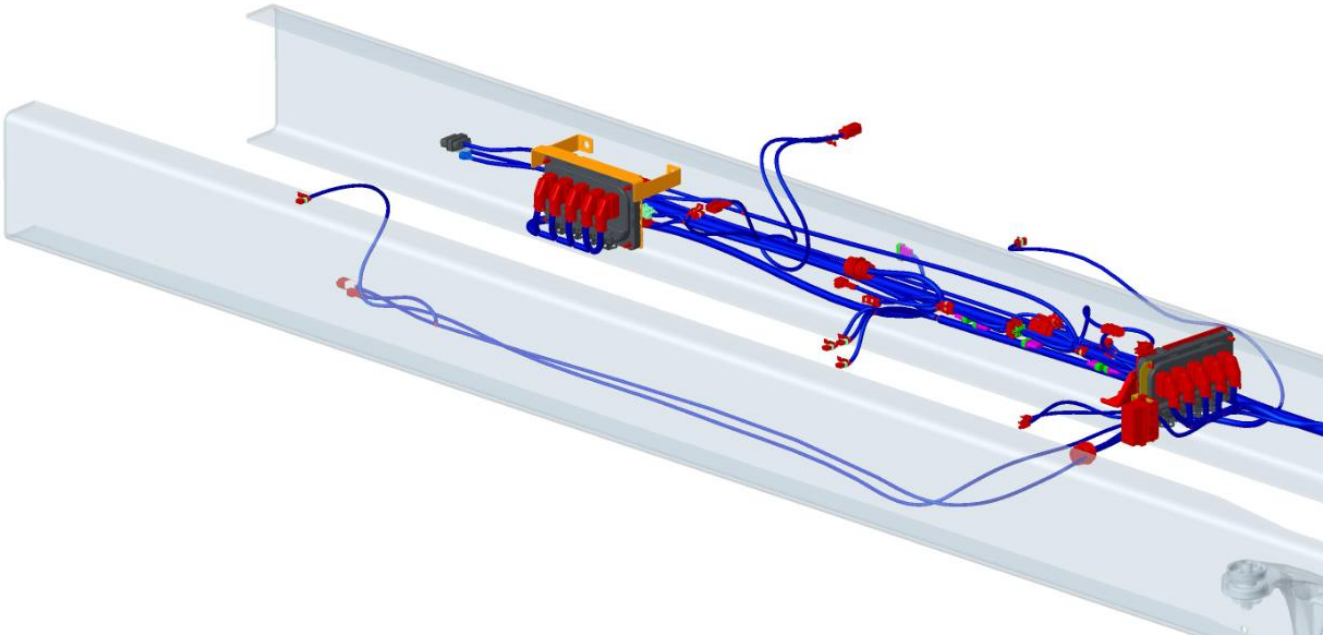

Figure 70 Main Chassis Harness General Routing – Rear Partial View

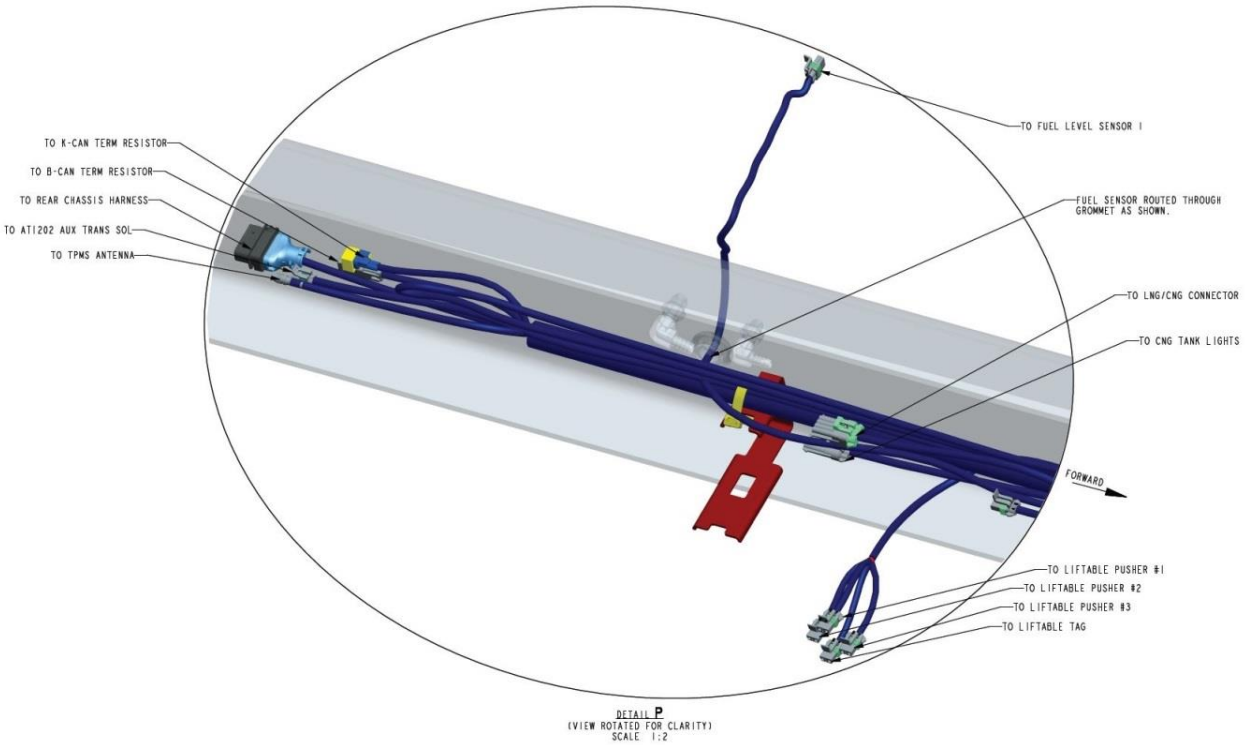

Figure 71 Detail View of BOC/BOS and EOF Body Connectors

https://truckmanualshub.com/

ELECTRIC ENGAGED EQUIPMENT

At the left-hand forward cab mount, a P198 connector is available for PTO controls that are electrically engaged via ground.

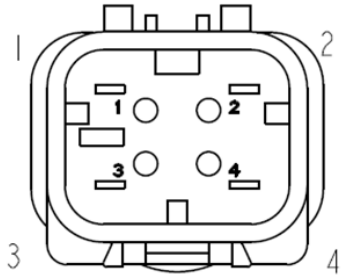

Pin	Description
1	VEHICLE GROUND
2	#1 PTO ON/OFF
3	PTO PUMP MODE SIGNAL
4	#2 PTO ON/OFF

Figure 72 P198 Connector

RP170 CONNECTOR

The RP170 connector provides various pins for vehicle and trailer lamps. The connector will be located in the frame rail right behind the BOC crossmember.

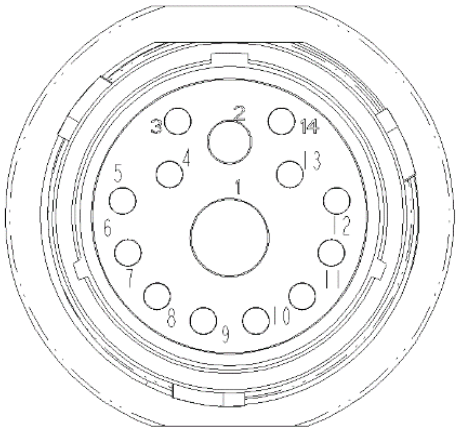

Pin	Description
1	FIREWALL GROUND
2	BACKUP LIGHTS
3	LH TURN/STOP
4	TRAILER LH TURN
5	TRAILER MARKER LAMP
6	PARK LAMPS
7	TRAILER STOP LAMPS
8	NOT USED
9	NOT USED
10	NOT USED
11	NOT USED
12	NOT USED
13	RH TURN/STOP
14	TRAILER RH TURN

Figure 73 RP170 Connector

https://truckmanualshub.com/

ENGINE HARNESS 12 PIN CONNECTOR

Chassis must be ordered with the appropriate option to have a 12-pin connector on the engine harness. The Body IGN signal was moved off the engine harness connector, so the Chassis Harness will include the PTO layer to insert the Body IGN signal back into the 12-way connector. Signals that feed directly to the engine ECM typically will be active low signals. Connect pins 3 and 5 for simple PTO ON/OFF signal. For Remote throttle bump, you must connect pins 3 & 6. Having a momentary switch to signal ground on pins 2 and 1 will then increase/decrease engine speed. Engine speed will depend on how the engine is programmed. Unless otherwise specified, the engine is set by default for incremental speed increase. Full remote throttle control can be achieved with a twisted triple to pin 4, 10, and 11.

Wiring Function Description:
Connect pin 5 and pin 6 to pin 8 to activate PTO Mode Control (PMC) and Enable PTO Speed Control (PSC).

WARNING! DO NOT install a permanent jumper wire between pins 5 and 6. May cause unexpected vehicle behavior.

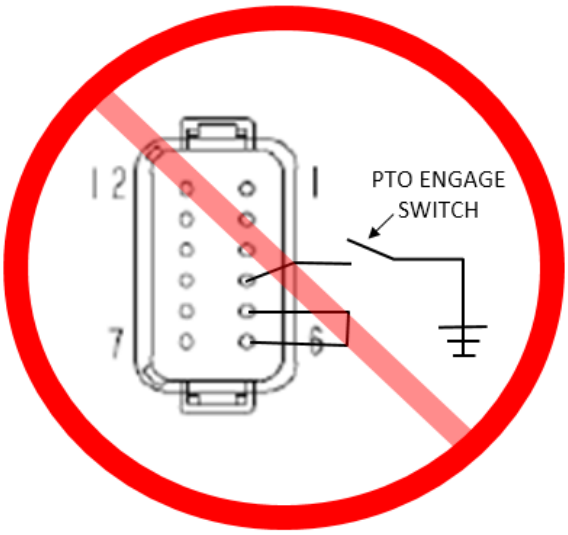

Figure 74 Warning Image for PTO Function

- "Bump up" Engine Speed: Connect pins 2 to pin 8 momentarily
- "Accelerate" Engine Speed: Connect pins 2 to pin 8 until desired RPM is reached then disconnect
- "Bump down" Engine Speed: Connect pin 1 to pin 8 momentarily
- "Decelerate" Engine Speed: Connect pins 1 to pin 8 until desired RPM is reached then disconnect
- "0-5v Variable Voltage Remote Throttle": See PTO section

https://truckmanualshub.com/

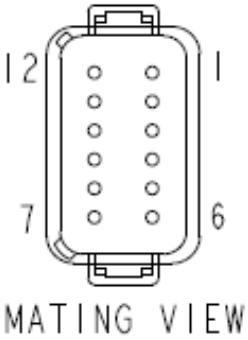

Pin 1-Resume/decel
Wire #: GRA3163-16
Signal: LOW/GROUND

Pin 2-Set/accel
Wire #: GRA3162-16
Signal: LOW/GROUND

Pin 3-Return for variable voltage throttle
Wire #: GRN3115-24

Pin 4-Signal for variable voltage throttle
Wire #: BLU3144-7
Signal: 0-5V
Note: See PTO Section for detail on VVRT

Pin 5-PTO Engaged
Wire #: GRA3511-46
Signal: LOW/GROUND
Note: Same circuit as P198 connector, pin2-PTO1 Engaged

Pin 6-Cruise Control On/Off
Wire #: GRA3161-34
Signal: LOW/GROUND

Pin 11-12V 20A engine power
Wire #: GRN3144-22
Fuse: C_A6, Key on Ignition
Amperage: 10A

Pin 10-5V supply for variable voltage throttle
Wire #: VIO3144-19
Source: Chassis Module Primary

Pin: 8-Vehicle Ground
Wire #: WHT1513-18
Notes: Recommended source for all ground signals on this connector

Pin 7-12V 10A Body Ignition
Wire #: ORN1229-7
Fuse: C_A6, Key on Ignition
Amperage: 10A

Figure 75 Engine Harness 12 Pin Connector and Pinout Details

https://truckmanualshub.com/

Table 24 Engine Harness 12 Pin Connector and Pinout Details

Pin	Description
1	INPUT FOR REMOTE PTO RESUME (Active Low)
2	INPUT FOR REMOTE PTO SET (Active Low)
3	SWITCH RETURN
4	INPUT FOR REMOTE THROTTLE SENSOR CIRCUIT (TWISTED TRIPLE)
5	PTO ENGAGED SIGNAL (LOW = ENGAGED)
6	CRUISE ON/OFF (Active Low)
7	+12V 10A BODY IGN FUSE C_A6
8	VEHICLE GROUND
9	TORQUE LIMIT INPUT (Active Low)
10	INPUT FOR NAMUX PWR SUPPLY +5V(TWISTED TRIPLE)
11	INPUT FOR NAMUX ANALOG RETURN (TWISTED TRIPLE)
12	REMOTE PTO ON/OFF (Active Low)

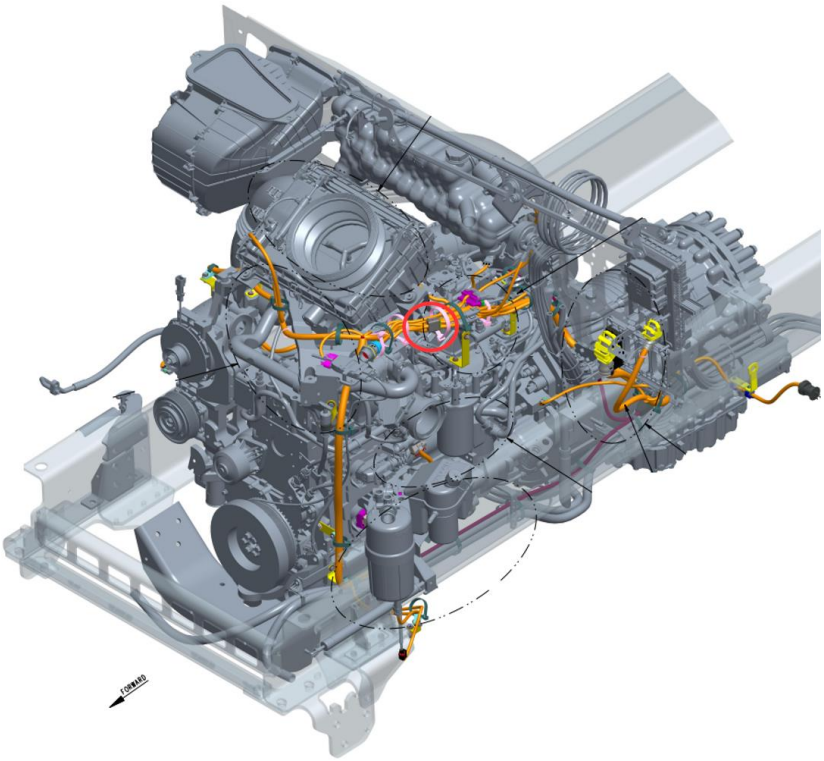

Figure 76 PX-7 - 12-Pin Connection Location

https://truckmanualshub.com/

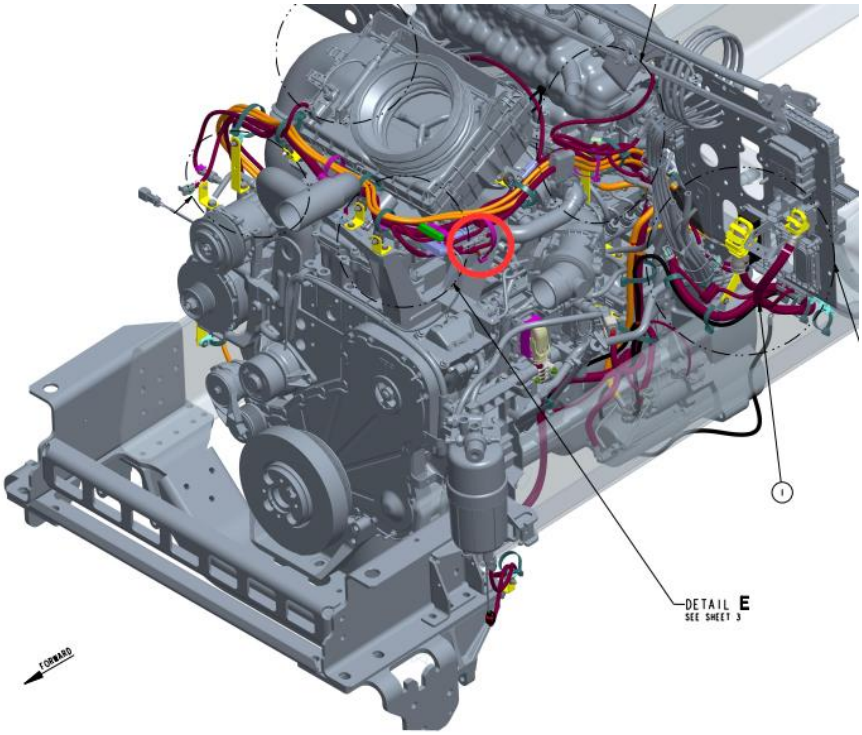

Figure 77 PX-9 – 12-pin Connection Location

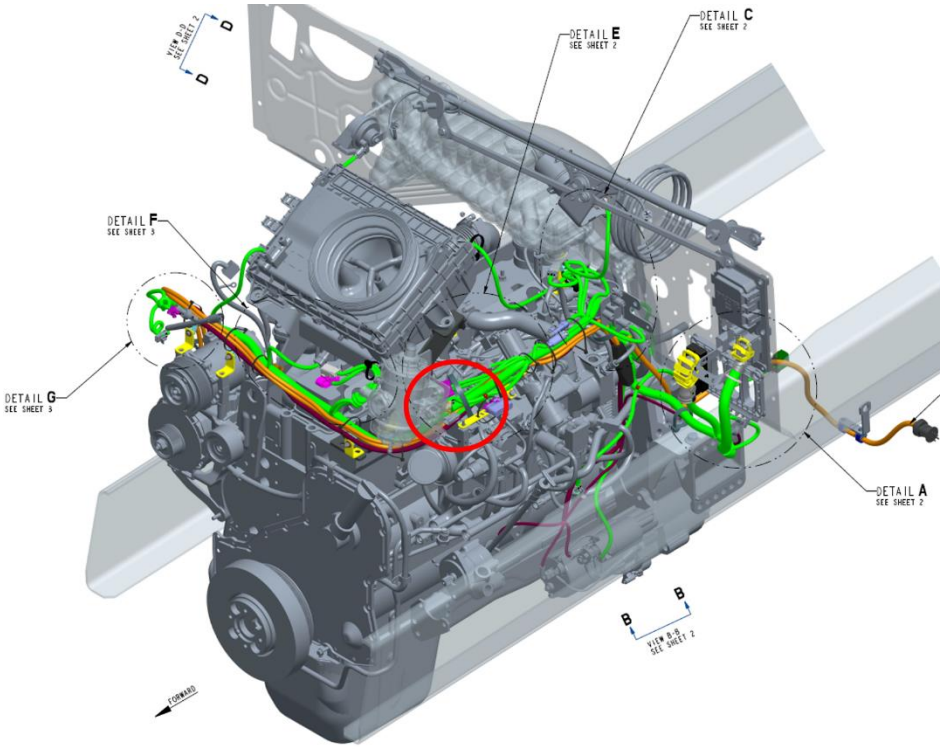

Figure 78 L9N – 12-pin Connection Location

https://truckmanualshub.com/

POWER DISTRIBUTION CENTER

ENGINE SIDE POWER DISTRIBUTION CENTER (PDC)

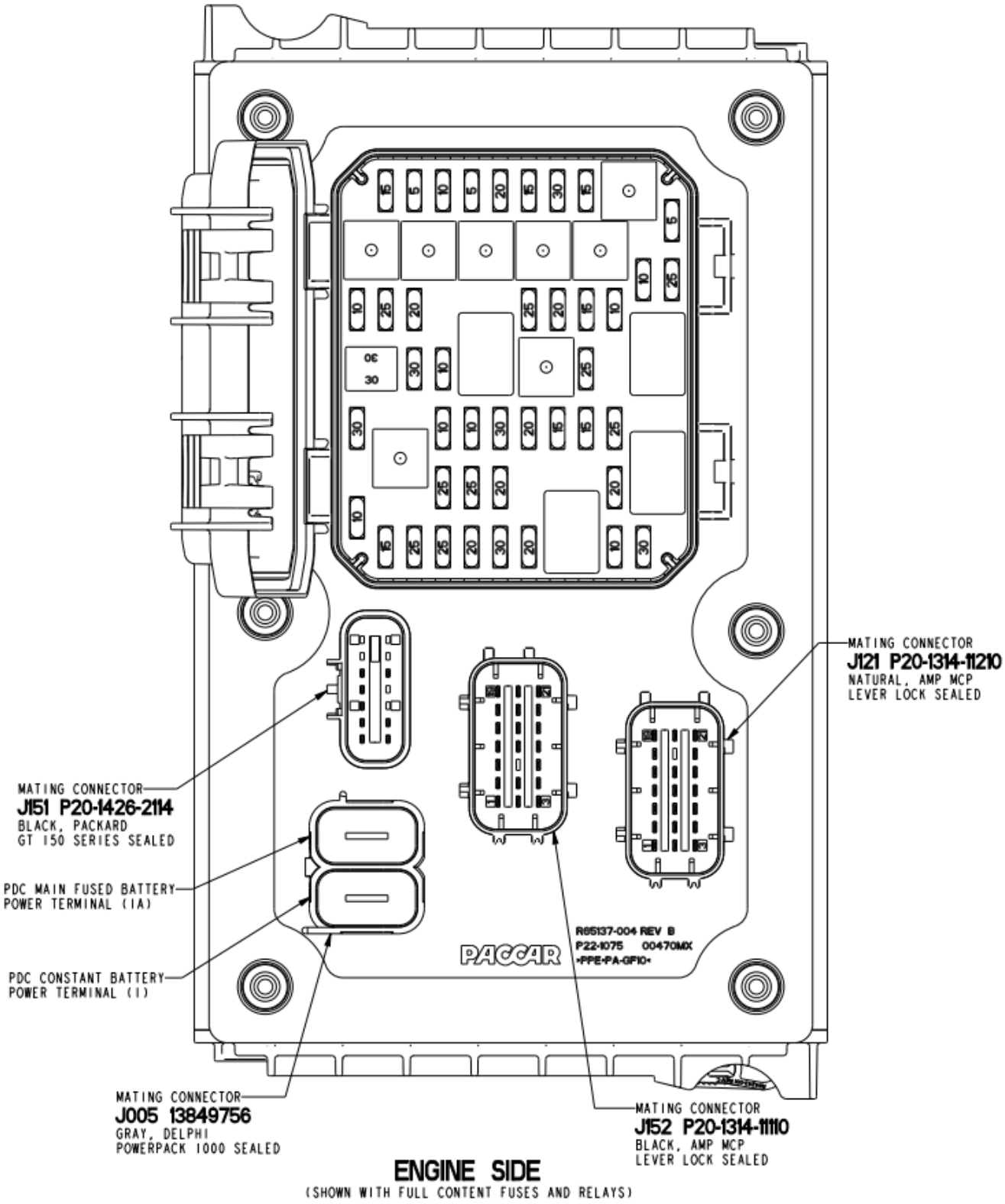

Figure 79 Engine Side Power Distribution Center

https://truckmanualshub.com/

ENGINE SIDE FUSE BOX – FULL CONTENT POPULATION

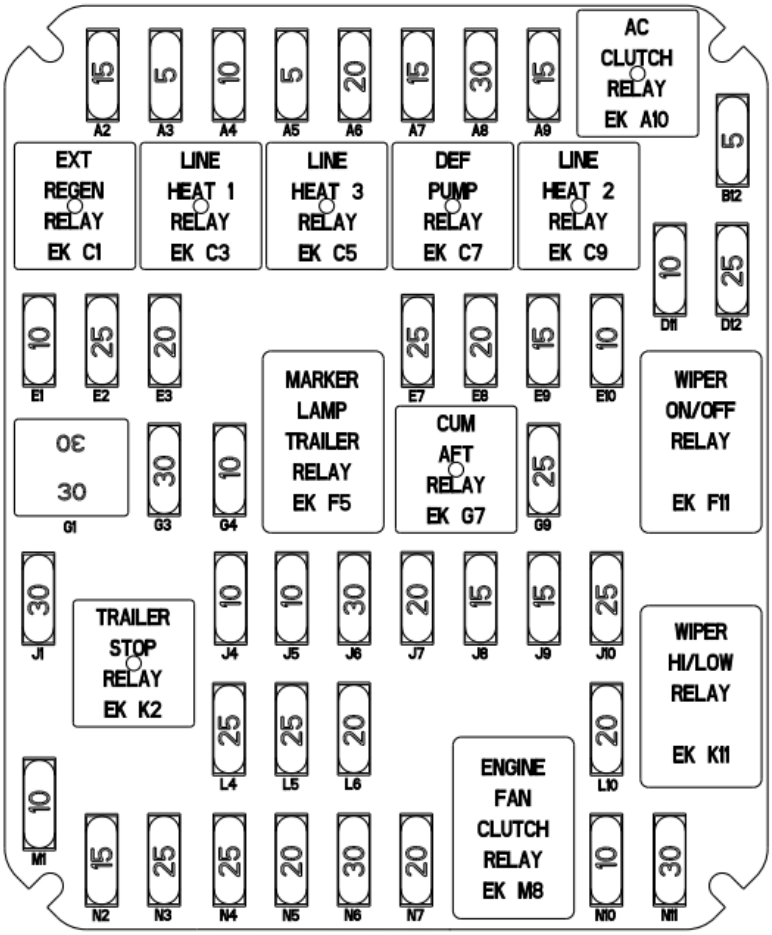

FUSE ID	AMP	DESCRIPTION
A2	15A	LINE HEAT 1 (PRESSURE)
A3	5A	ENGINE ECU WAKE (ENG SIDE)
A4	10A	CHASSIS MODULE P/S
A5	5A	LINE HEAT 3 (SUCTION)
A6	20A	CHASSIS MOD SECONDARY F4
A7	15A	DEF PUMP
A8	30A	CAB ABS
A9	15A	LINE HEAT 2 (BACKFLOW)
B12	5A	HVAC HEAD PWR/DOOR AJAR
D11	10A	AC CLUTCH RELAY PWR
D12	25A	WIPER MOTOR
E1	10A	CAB ABS PWR- 10A IGN
E2	25A	QUALCOMM TRLR TRACKS
E3	20A	EXT REGEN/LNG-CNG IGN
E7	25A	CHASSIS MOD SECONDARY F6
E8	20A	SPARE CONSTANT PWR 1
E9	15A	ICM PWR
E10	10A	VECU BATT PWR 1
G1	30A JCASE	HVAC BLDC MOTOR
G3	30A	SPARE BATT 7
G4	10A	ALLISON/AUTO/ULTRASHIFT
G9	25A	FRAME FUEL HEATER
J1	30A	SPARE BATT 8
J4	10A	ACC RADAR/TPMS
J5	10A	BACKUP LAMP
J6	30A	TRAILER MARKER RELAY PWR
J7	20A	HDLP LH HI/BRAKE
J8	15A	AFT/NOX/VSFD
J9	15A	CUM AFT
J10	25A	WIPER ON CTL
L4	25A	CHASSIS MOD PRIMARY F5
L5	25A	CHASSIS MOD PRIMARY F6
L6	20A	CHASSIS MOD PRIMARY F7
L10	20A	TRICAN/DEF CTL/DOSER
M1	10A	MUX SOL BANK LT
N2	15A	TRAILER STOP LP
N3	25A	RH HDLP LO/DRL/PARK
N4	25A	RH HDLP HI/FOG/DRL
N5	20A	LH HDLP LO/DRL/PARK
N6	30A	AUTO TRANS
N7	20A	CHASSIS MOD SECONDARY F5
N10	10A	FAN CLUTCH PWR
N11	30A	CUM ECM PWR

Figure 80 Engine Side Fuse Box

https://truckmanualshub.com/

DASH SIDE POWER DISTRIBUTION CENTER (PDC)

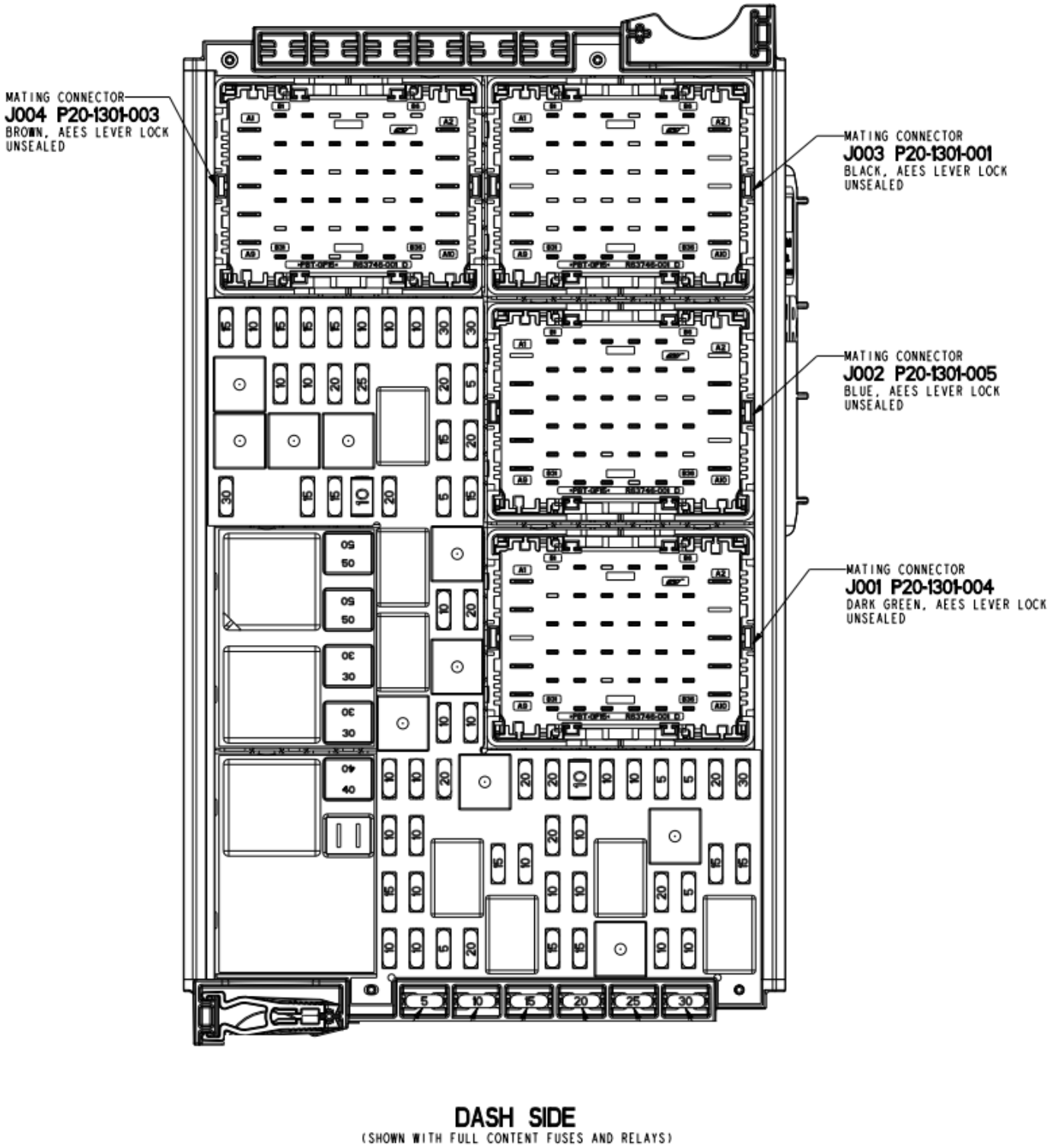

Figure 81 Dash Side Power Distribution Center (PDC)

https://truckmanualshub.com/

DASH SIDE FUSE BOX – FULL CONTENT POPULATION

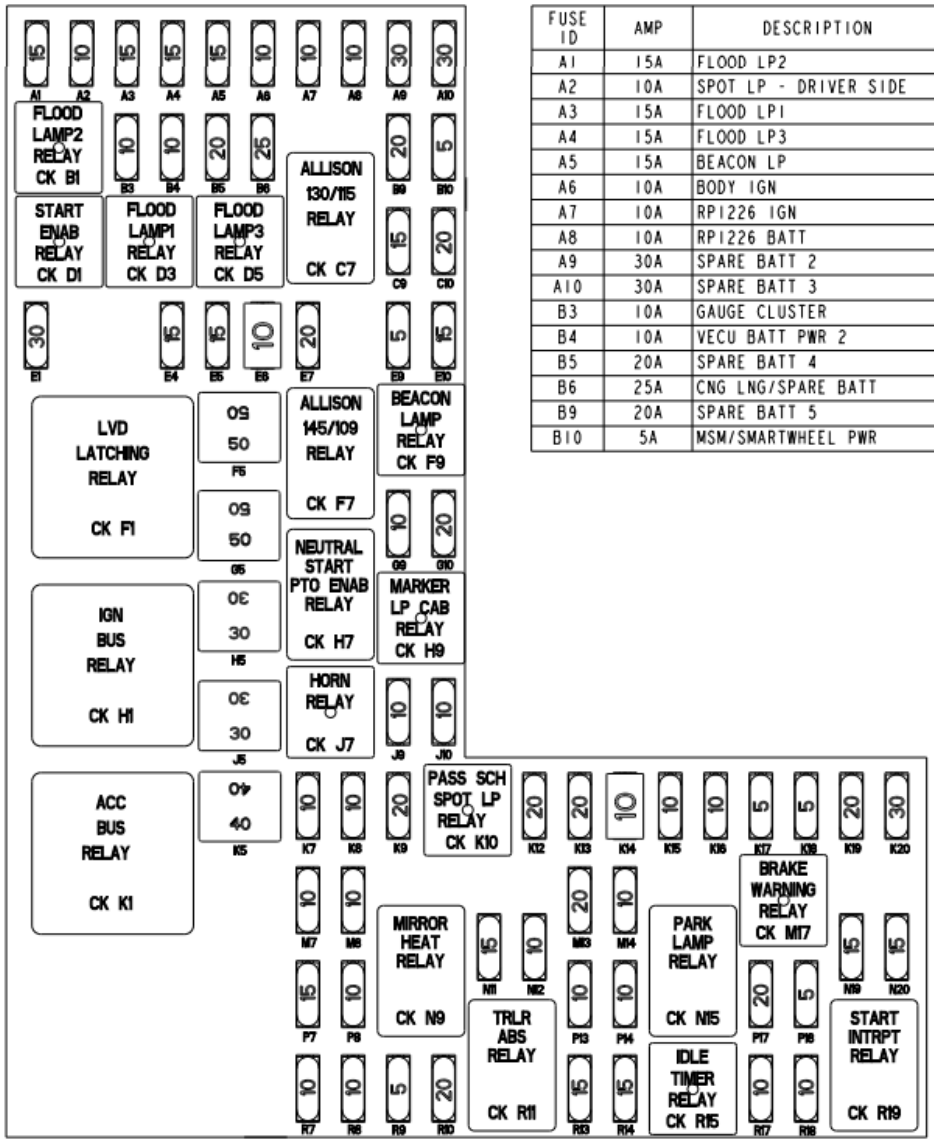

FUSE ID	AMP	DESCRIPTION
A1	15A	FLOOD LP2
A2	10A	SPOT LP - DRIVER SIDE
A3	15A	FLOOD LP1
A4	15A	FLOOD LP3
A5	15A	BEACON LP
A6	10A	BODY IGN
A7	10A	RP1226 IGN
A8	10A	RP1226 BATT
A9	30A	SPARE BATT 2
A10	30A	SPARE BATT 3
B3	10A	GAUGE CLUSTER
B4	10A	VECU BATT PWR 2
B5	20A	SPARE BATT 4
B6	25A	CNG LNG/SPARE BATT
B9	20A	SPARE BATT 5
B10	5A	MSM/SMARTWHEEL PWR

FUSE ID	AMP	DESCRIPTION
C9	15A	CB/RADIO PWR
C10	20A	CHASSIS MOD SECONDARY F1
E1	30A	SPARE ACC 3
E4	15A	POWER PORT 1
E5	15A	POWER PORT 2/CIGAR LTR
E6	10A	CAB DOME LP *
E7	20A	SPARE LVD 1
E9	5A	TRACTOR STOP LAMPS
E10	15A	CHASSIS MOD SECONDARY F2
F5	50A JCASE	HYD ABS PUMP SUPPLY
G5	50A JCASE	HYD ABS BOOST MTR PWR
G9	10A	EOAS
G10	20A	TELEMATICS/QCOM BATT
H5	30A JCASE	RH DOOR MOD
J5	30A JCASE	LH DOOR MOD
J9	10A	DIAGNOSTIC POWER
J10	10A	TCM BATT
K5	40A JCASE	TRAILER E-BRAKE
K7	10A	HORN RELAY PWR
K8	10A	CAB MARKER RELAY PWR
K9	20A	SPARE BATT 6
K12	20A	HYD ABS AIR SEAT
K13	20A	SPARE IGN 1
K14	10A	ETRAC VALVE *
K15	10A	VECU STOP LAMP SW
K16	10A	PARK LP - CAB PWR
K17	5A	VECU / DIGITAL DISPLAY IGN PWR
K18	5A	RH STALK/SHIFTER
K19	20A	CHASSIS MOD SECONDARY F3
K20	30A	TRAILER HOT LINE
M7	10A	SPLICE FEED IGN
M8	10A	RH HEATED SEAT
M13	20A	SPARE IGN 2
M14	10A	SIGN LAMP SW
N11	15A	RH MIRROR HEAT
N12	10A	LH HEATED SEAT
N19	15A	LH MIRROR HEAT
N20	15A	PARK LP - TRLR PWR
P7	15A	AIR DRYER
P8	10A	PRIMARY SHIFTER BATT 1
P13	10A	KEY SW/GAUGE CLUSTER
P14	10A	DIGITAL DISPLAY
P17	20A	SPARE BATT 1
P18	5A	HVAC HEAD ACC
R7	10A	SPARE ACC 6
R8	10A	REMOTE DIAG
R9	5A	VECU ACC PWR
R10	20A	SPARE ACC 1
R13	15A	SPARE ACC SW 3/4/5
R14	15A	SPARE ACC SW 1/2
R17	10A	SPARE ACC 2
R18	10A	RADIO WAKE UP

* DENOTES OPTIONAL POLYSWITCH

Figure 82 Dash Side Fuse Box

https://truckmanualshub.com/

CHASSIS MODULE

Chassis modules are replacing the legacy NAMUX2 chassis node. Chassis modules are slave I/O drivers controlled by the VECU. Chassis modules have expanded functionality and option platform growth in comparison to the chassis node. Chassis modules have built-in protections to prevent internal damage, can detect faults, and store DTC's. Chassis modules can also be diagnosed through the DAVIE service tool.

There are three variants of chassis modules, the Primary (CMP), Primary LITE (CMLITE) and Secondary (CMS). Depending on how the truck is ordered, a CMP or CMLITE will be installed. Like the heavy-duty variant, certain options would require medium duty trucks to have a CMS installed in addition to a CMP or CMLITE. MD trucks will have a maximum of two chassis modules installed, depending on order configuration. The primary chassis module will be mounted under the back of the cab on the top left-hand side of the back of cab cross-member. The secondary optional chassis module will be bracket mounted inside the LH frame rail a few feet behind BOC.

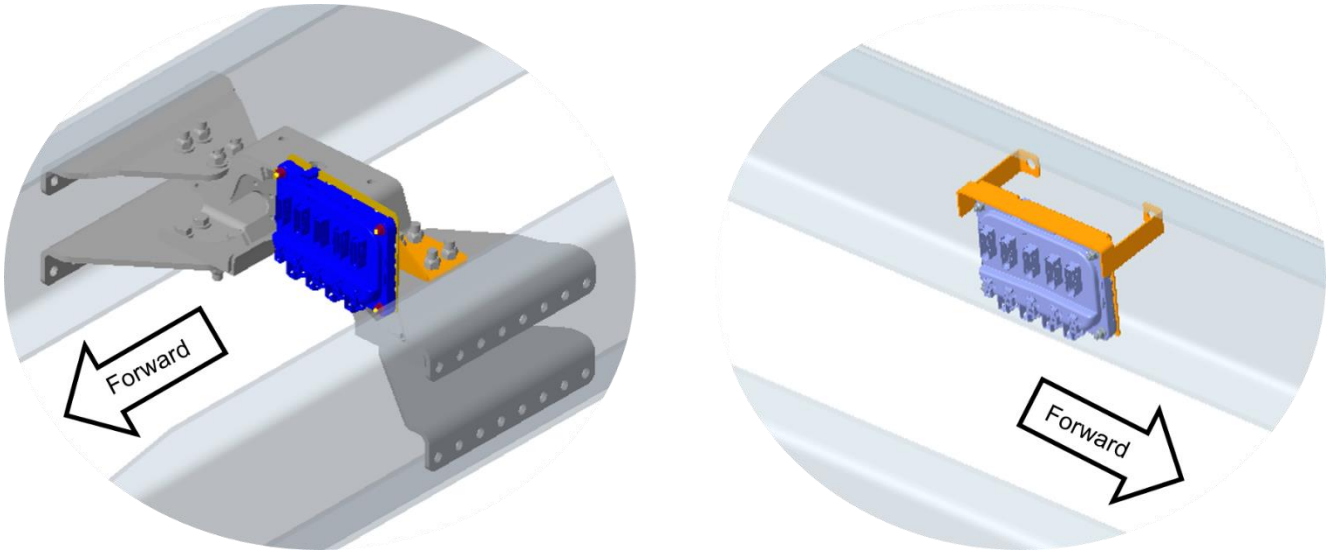

Figure 83 Chassis Module Location (Left) – Secondary Chassis Module location (Right)

https://truckmanualshub.com/

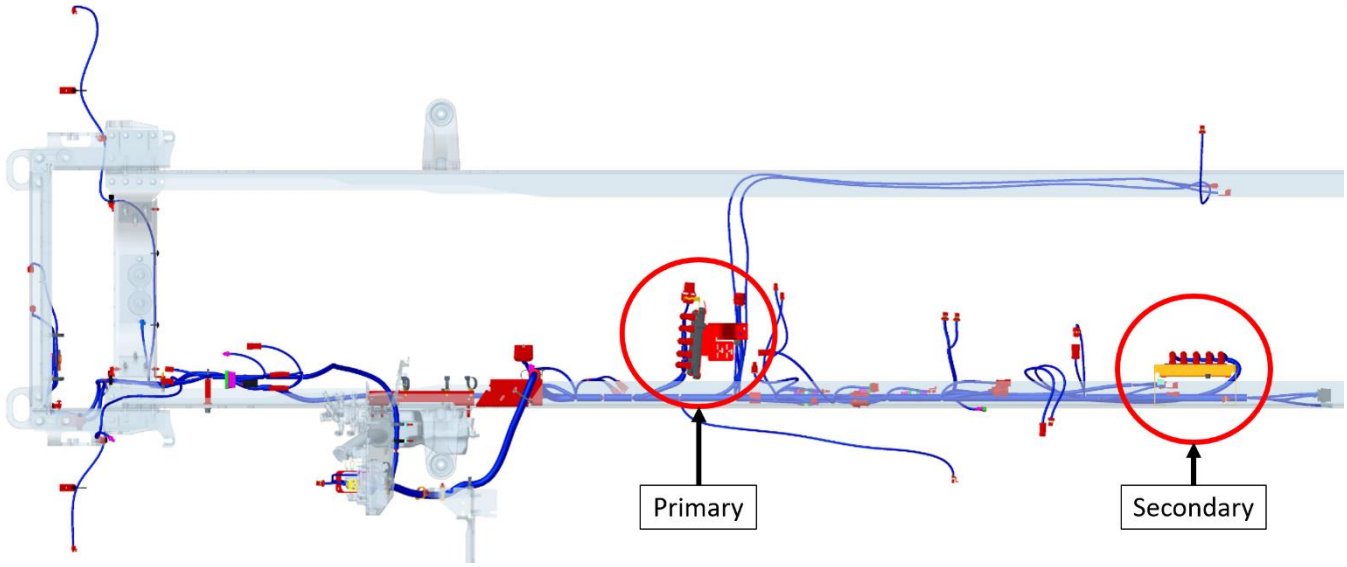

Figure 84 Top View of Chassis Module Locations

CHASSIS MODULE FUNCTION DESIGNATION

PRIMARY and PRIMARY LITE CHASSIS MODULE

- Exterior Lighting: Headlamps, Park/Tail, Turn, Brake, DRL, Fog Lights*, Reverse etc.
- Axle Temperature Sensor Inputs* Front Rear and Rear
- Ammeter Sensor Input
- Secondary Kingpin Release Solenoid Control
- Primary/Secondary Fuel Level Sensors
- Lift Axle Air Solenoid Controls 1st, 2nd
- Primary Transmission Neutral Position Switch
- Remote PTO/Throttle Control Inputs
- J-CAN Multiplexed EOA Solenoid Bank Control
- Fuel Filter Gauges
- Main Transmission Oil Temp

* = Functionality is depopulated on CMLITE Module

SECONDARY CHASSIS MODULE

- External Notification of DPF Regeneration
- AT1202 Aux Trans Neutral Switch
- Axle Temperature Gauges Center Rear
- Lift Axle Air Solenoid Controls 3rd, Tag (Rocker Panel Controls)
- NAMCO/FABCO Split shaft PTO/Transfer Case Sensors
- Aux Transmission Temperature Sensor
- Split Shaft PTO Temperature Sensor
- Fuel Temp Sensor (Auto Start)
- Chicken/Panel Lamps, Snowplow Lamp
- ISO 3731 Spare Outputs
- B-CAN
- Auto Start/Stop Hood Tilt Switch
- City Horn

https://truckmanualshub.com/

FUSE GROUPS

Table 25 Primary Chassis Module Fuse Groups

Fuse Group	Function
F1	Electric Over Air Solenoid Kingpin Release
	Main Beam (aka High Beam) - LH
	Tractor Direction Indication and Hazard Lights - RH Rear (Brake Lamps Also)
F2	Tractor Direction Indication/Hazard/DRL Lights - LH Front
	Front Tractor Position lights (Park Lamps)
	Tractor Direction Indication Hazard Side Turn Indicator LH Front
	Dipped Beam (aka Low Beam) - LH
F3	Lift Axle #2 Solenoid
	Daytime Running Lights (DRL) - LH
	Tractor Direction Indication/Hazard/DRL Lights - RH Front
	Tractor Direction Indication Hazard Side Turn Indicator RH Front
	Dipped Beam (aka Low Beam) - RH
F4	Daytime Running Lights (DRL) - RH
	Main Beam (aka High Beam) - RH
	Fog/Driving Lights (Front) 1st Set
F5	Reverse Warning (aka Backup Alarm)
	(Rear) Direction Indication and Hazard Lights - LH Trailer
F6	Rear Tractor Position lights (Park Lamps)
	Reverse Lamps
	Tractor Direction Indication and Hazard Lights LH Rear (Brake Lamps Also)
F7	LVD Bipolar Output 1
	LVD Bipolar Output 2
	Lift Axle #1 Solenoid
	(Rear) Direction Indication and Hazard Lights - RH Trailer

Table 26 Secondary Chassis Module Fuse Groups

Fuse Group	Function
F1	Work Lights 1st Set (Frame mounted Flood Light Options without pass-through grommet)
F2	Aftertreatment External Notification
F3	Sky/Auxiliary lights
	Snowplow Lamps OR Dual Station
F4	Lift Axle #3 Solenoid
	Trailer Options - ISO 3731/Spare OR Additional 4/6/7-Way Trailer Connections OR Berg Box
F5	Lift Axle #4 (Tag) Solenoid
	Trailer Options - ISO 3731/Spare OR Additional 4/6/7-Way Trailer Connections OR Berg Box
F6	Trailer Options - Trailer Dump Gate Coiled BOC OR Configurable Output
	Trailer Options - ISO 3731/Spare OR Additional 4/6/7-Way Trailer Connections OR Berg Box

https://truckmanualshub.com/

Table 27 VECU Fuse Groups

Fuse Group	Function
G1	Driving Lights
	Inside/Outside Air Filter Control
	Starter Interrupt / Start Enable Relay Control
	Mirror Heat Relay
	Cab Dome Lamp
	Sleeper Dome Lamp
	Trailer Marker/Clearance Lamps
G2	Recirculating Header Fan - Low Speed
	Trailer Hotline Relay
	Work Lights (Flood Lamps) 2
	Work Lights (Flood Lamps) 3
	Allison MTD PTO Controls - PTO 2
	Allison MTD PTO Controls - PTO 1
	Passenger Spot Lamp
	Work Lights (Flood Lamps) 1
	Beacon/Strobe
	Trailer Brake Lamps
	Trailer/Cab Park Lamps
	Recirculating Header Fan - High Speed
	Digital Vision System – Mirrors (DVS-M)
	Start Signal
	Right Hand Steer
	LED Headlamps Heater
	PTO Engaged Output for PTO Hour Meter and PTO Telltale
	Footwell Lamp
G3	Cab Marker/Clearance Lamps Relay Output
	Washer Pump Control
	Auxiliary Lamps/ Chicken Panel Lamps
	MCS (Power)
G4	Dash PWM Backlighting
	Dash Illumination 2

https://truckmanualshub.com/

ELECTRIC OVER AIR SOLENOIDS

Air solenoids are devices that translate the electrical signal into physical functions that control the air pressure in various circuits. The air solenoids are mounted to a bracket outside the cab. The solenoids are designed to stack on each other so that they share a common air supply which reduces the amount of air lines on the vehicle.

The aftermarket installer/final vehicle manufacturer needs to decide what type of valve to install and ensure that the documentation to the operator provides them with enough understanding of how the customized switches work.

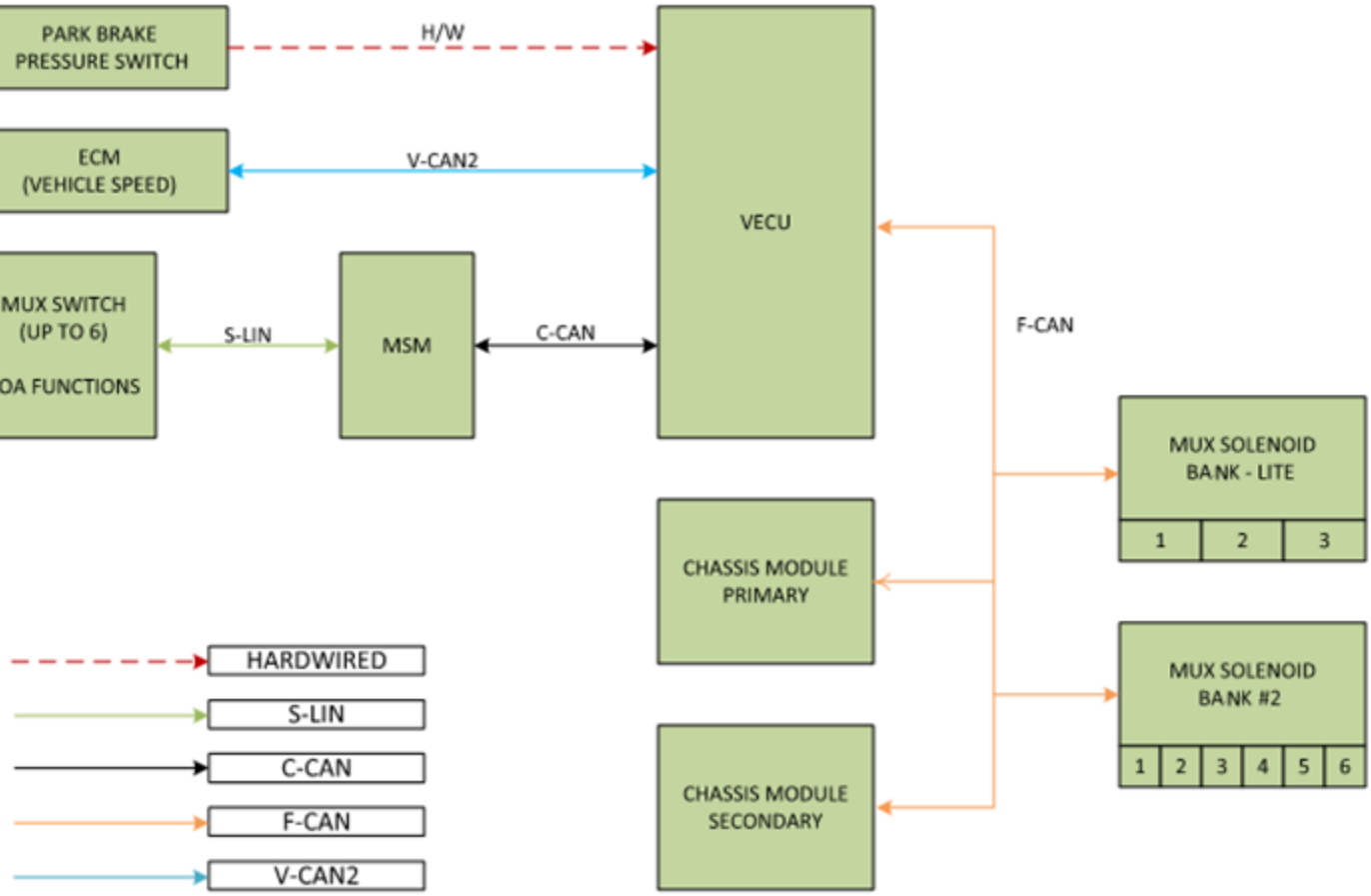

Figure 85 VECU and MUX Solenoid Bank Overview

https://truckmanualshub.com/

Overview Layout (EOA SOLENOID BANK)

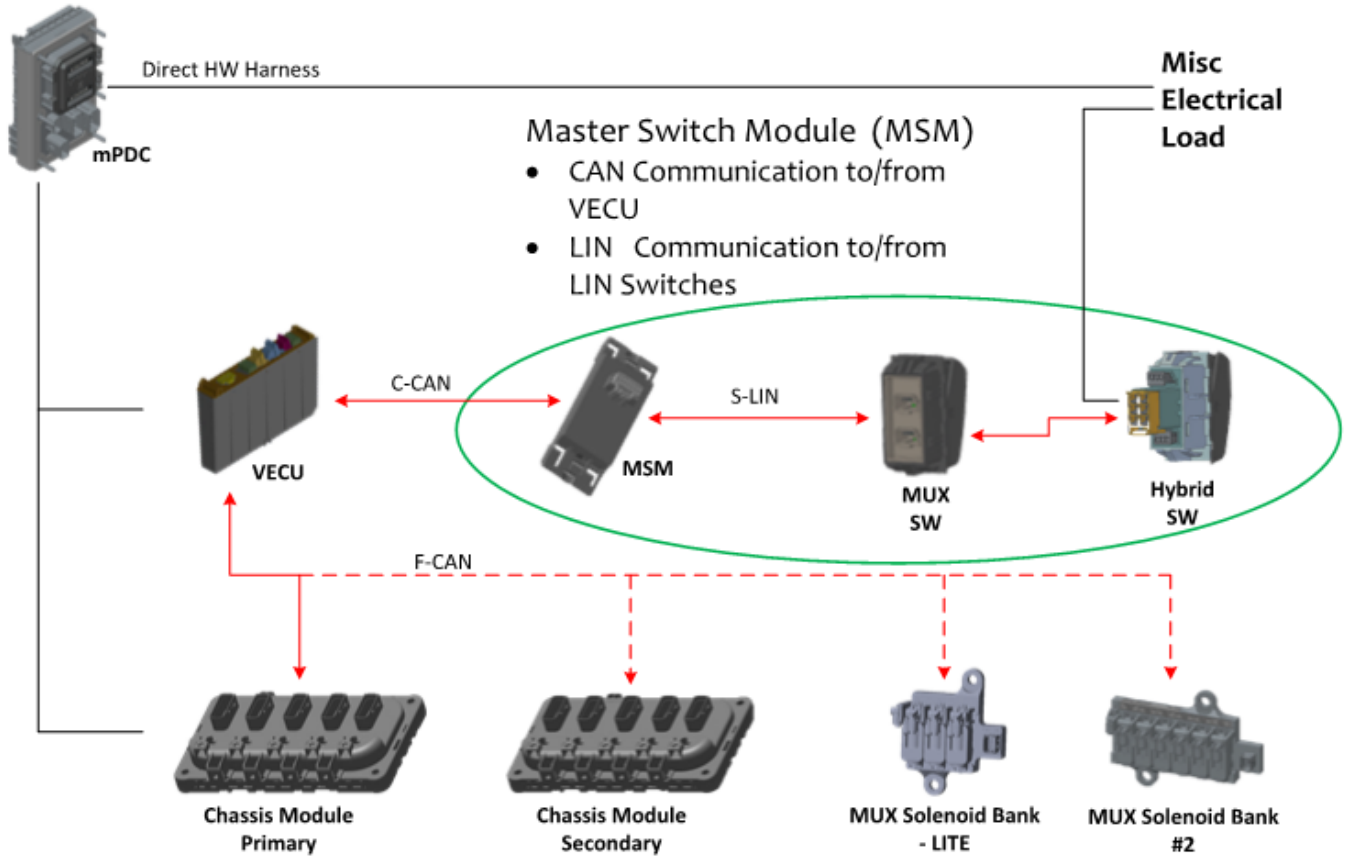

Figure 86 Solenoid Bank Overview Layout

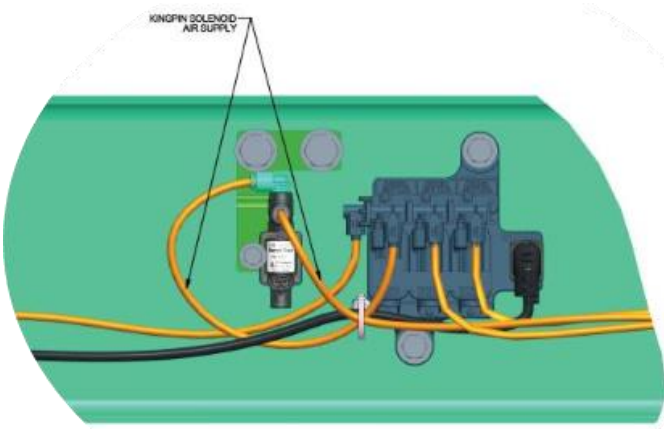

Figure 87 MUX Solenoid Bank LITE

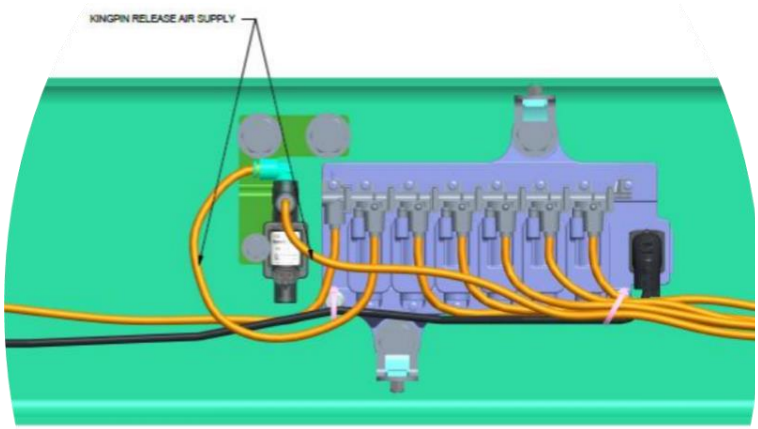

Figure 88 MUX Solenoid Bank

https://truckmanualshub.com/

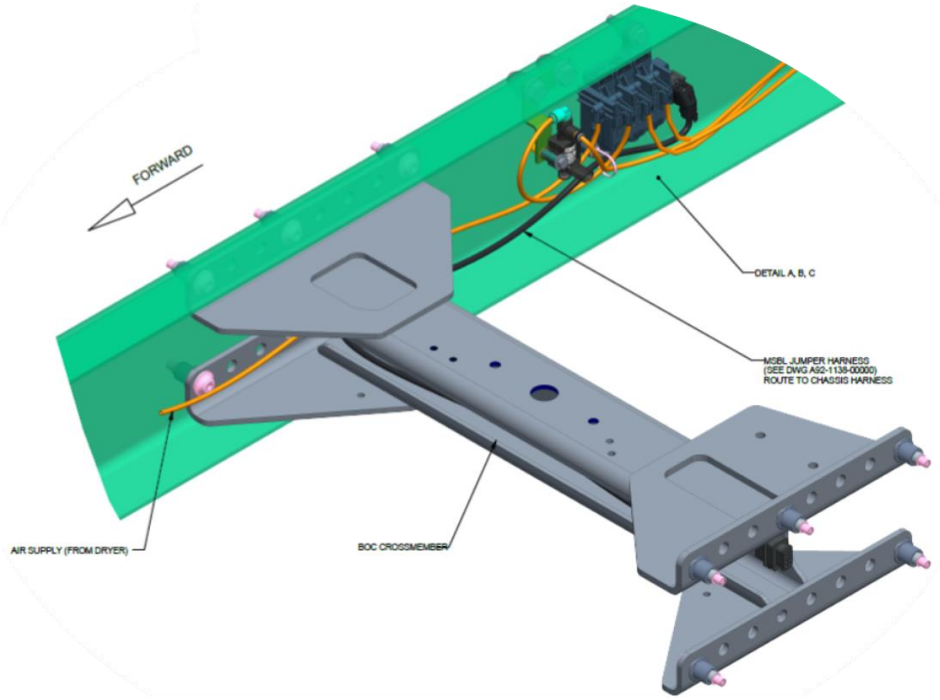

Figure 89 MUX Solenoid Bank LITE Frame Mounting Location

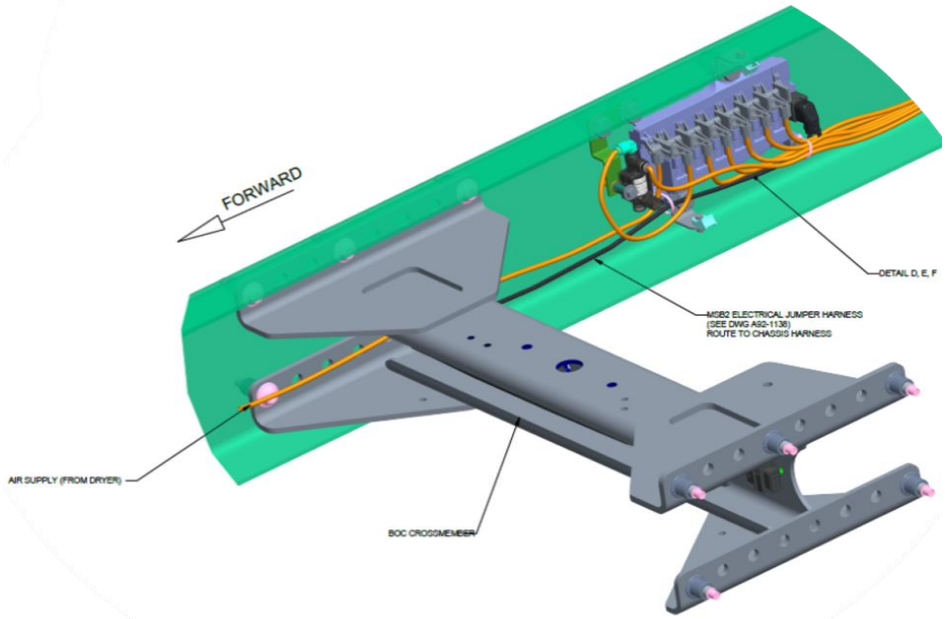

Figure 90 MUX Solenoid Bank Frame Mounting Location

NOTE:

If the chassis has both the LITE and full solenoid bank, they will be mounted side-by-side in the RH rail.

https://truckmanualshub.com/

SWITCHES

OVERVIEW LAYOUT - SWITCHES

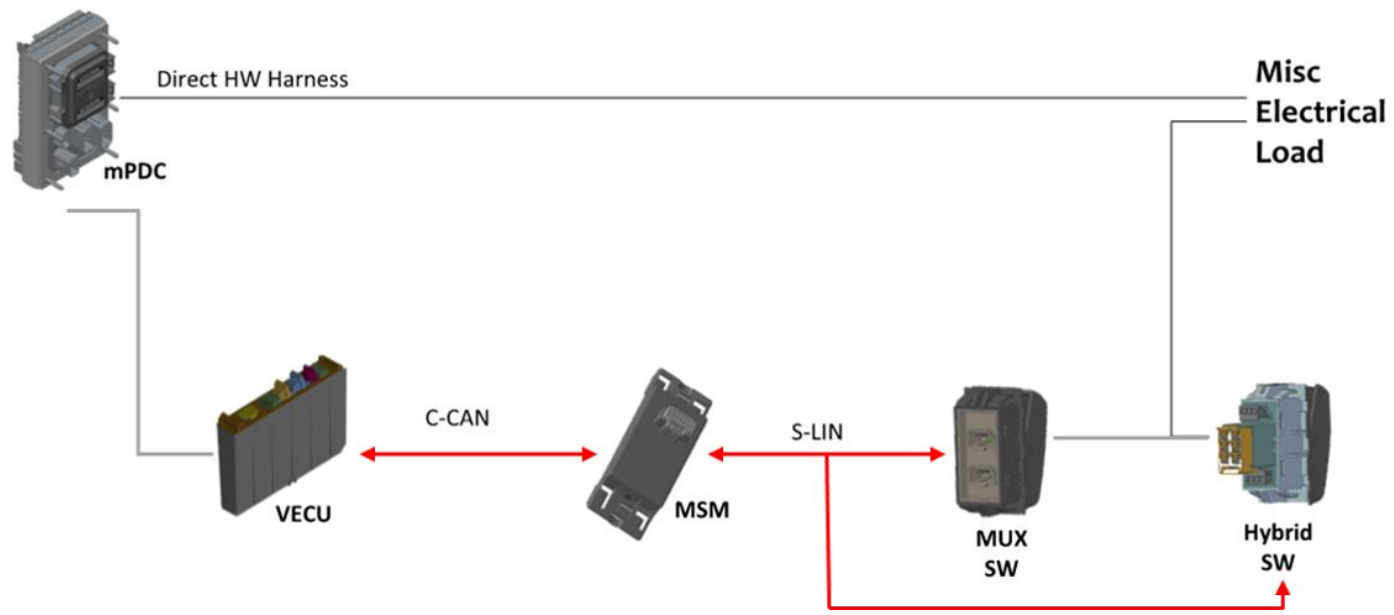

Figure 91 Switch Overview Layout

Multiplexing results in shorter wire bundles, improved diagnostics, and greater driver feedback. Safety critical switches use hybrid switch with hardwire for redundancy. The switches are less expensive with fewer wires behind the dash and on the chassis. The switches are self-diagnosable to improve troubleshooting with DAVIE.

OVERVIEW LAYOUT (SPARE SWITCHES)

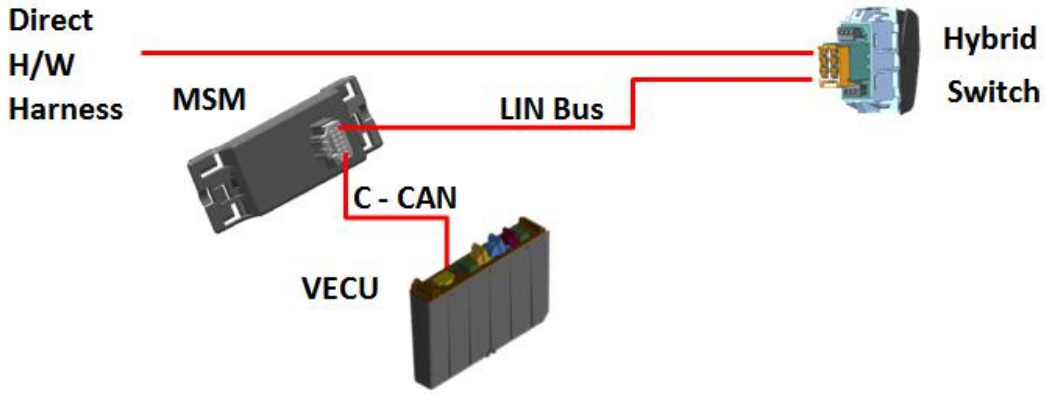

Figure 92 Spare Switch Overview Layout

Spare switches offer customers and body builders a convenient way to control power and air to various sources, like a body or trailer. They should be flexible and easily configurable to meet the vast and unique needs of body builders. The Spare switches, along with all hybrid switch variants, are rated to 15 Amps of current.

https://truckmanualshub.com/

SWITCH RELEARN PROCESS

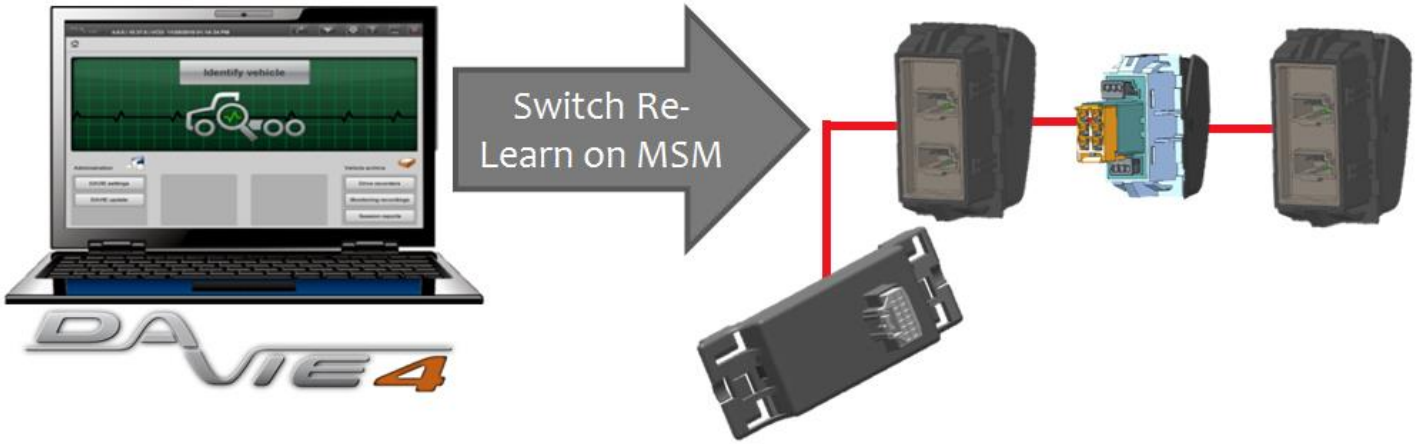

Figure 93 Switch Relearn Process

Switch replacement installation instructions:

1. Turn off the engine and all switches
2. Remove the dash panel
3. Unplug LIN jumpers from the original existing switch
4. Remove original switch
5. Replace the old switch with the new switch
6. Reconnect LIN jumpers into the replacement switch
7. Reinstall the dash panel
8. Open DAVIE application
9. Select the “Repair Support” tab.
10. Select the “Driver Environment” tab
11. Select the “Learn Dash Switches”
12. Run “Quick Check”
13. Clear Inactive DTCs (Diagnostics trouble code) from MSM
14. Finished

New switch installation instructions:

1. Turn off the engine and put all switches into the off position
2. Remove the dash panels
3. Remove the switch blank
4. Add the new switch into the dash panel
5. Connect the LIN jumper between the last open switch to the newly installed switch
    a. Part Number S92-1127-0125
6. Reinstall the dash panel
7. Open DAVIE application
8. Select the “Repair Support” tab.
9. Select the “Driver Environment” tab
10. Select the “Learn Dash Switches”
11. Run “Quick Check”
12. Clear Inactive DTCs (Diagnostics trouble code) on the MSM
13. Finished

https://truckmanualshub.com/

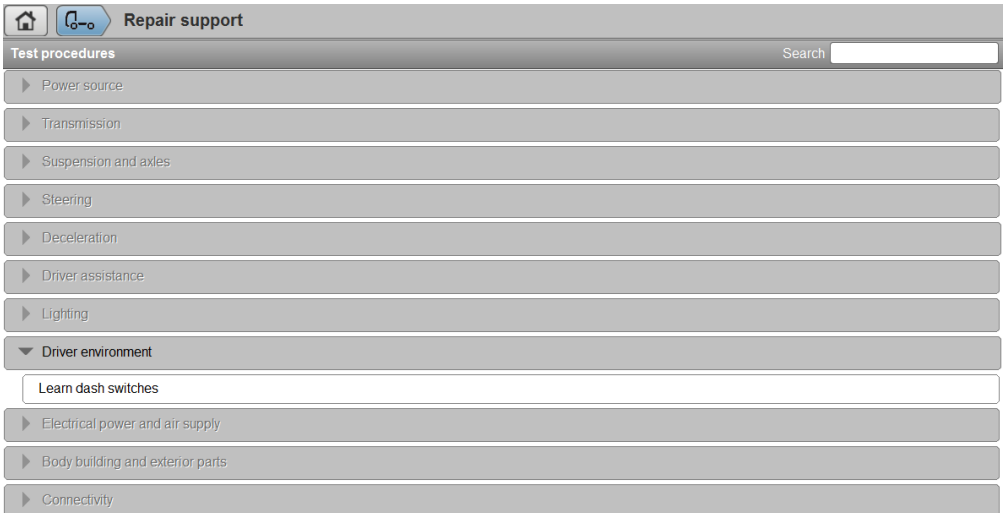

Figure 94 DAVIE Switch Relearn Screen View

SWITCH LOCATION

Switches on the same LIN bus can be reordered in any configuration without the need to run a relearn process with DAVIE tool. Unlike the heavy-duty dash, all MUX switches for 2.1M medium duty product are on B-Panel which operates on LIN bus 2. Therefore, a switch relearn process is not required when moving previously learned switches amongst B-Panel. However, a relearn process is required when adding a new MUX switch that has not previously been learned. Push button switches on A-Panel operate on LIN bus 1 and are not compatible with Lin bus 2 (B-Panel) dash positions.

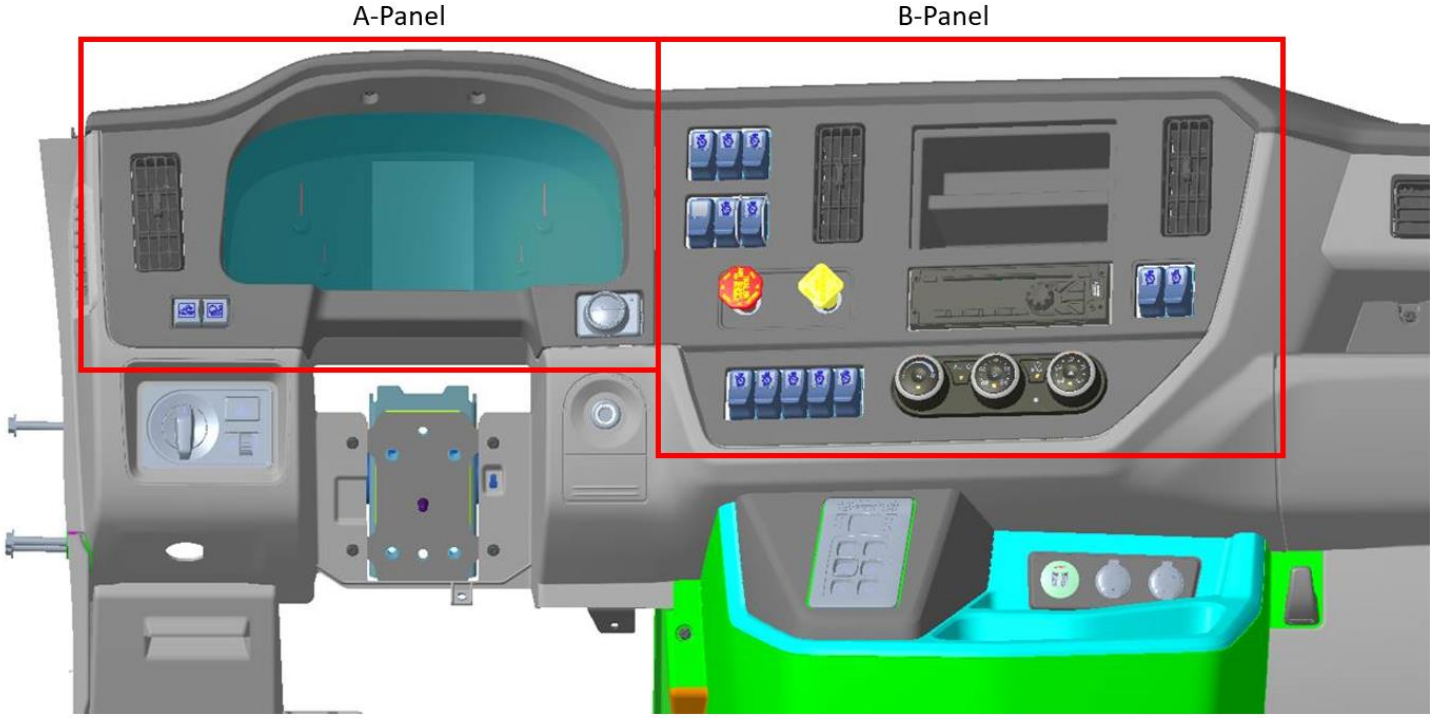

Figure 95 Dash Layout

https://truckmanualshub.com/

GROUNDING

Ground all post-OEM component/device/apparatus/etc. with combined current draw of less than 30A to the firewall ground buss bar with appropriately sized wire/cable for the load required.

WARNING! Grounding any post-OEM component/device/apparatus/etc. to the metal cab structure or frame is not acceptable. Failure to properly ground add-on components can result in vehicle damage and possibly bodily injury.

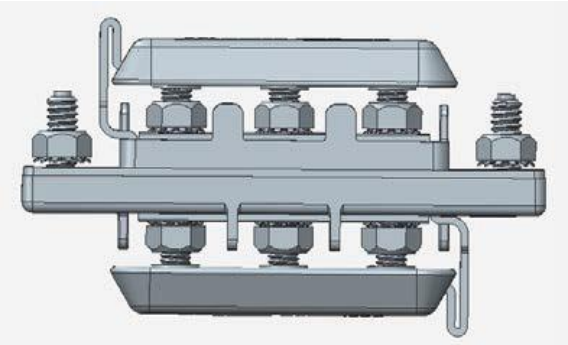

Figure 96 Grounding Buss Bar Illustration

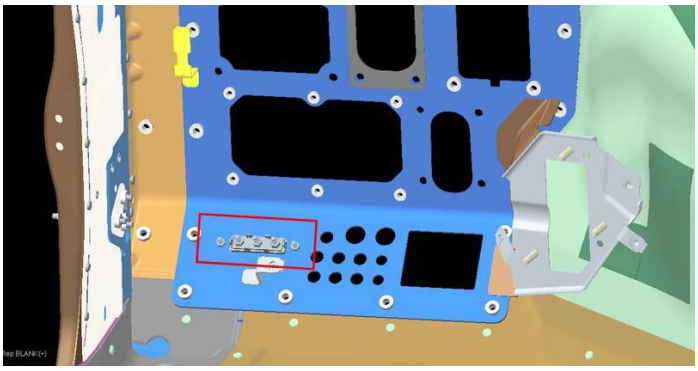

Figure 97 Grounding Point - Cab Interior Behind Driver's Side Kick Panel

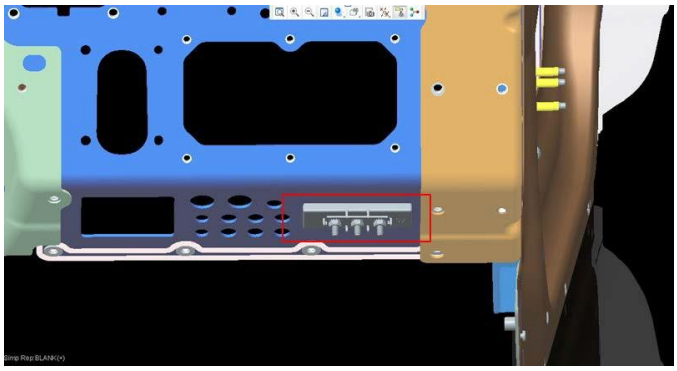

Figure 98 Grounding Point - Cab Exterior LH Side of Firewall

For post OEM components/devices/apparatus/etc. with combined current draw more than 30A, ground must be attained from vehicle batteries directly with appropriately sized wire/cable for the load required.

https://truckmanualshub.com/

ADDITONAL CIRCUITS

SPARE POWER

Spare power connector P096 is located on the lower left side of dash behind the key switch or kick panel. The mating harness is available from PACCAR parts with pre-labeled pigtails, P92-8916-000000001. Any spare power requiring more than 20 amps must go directly to the battery box, not this spare circuit.

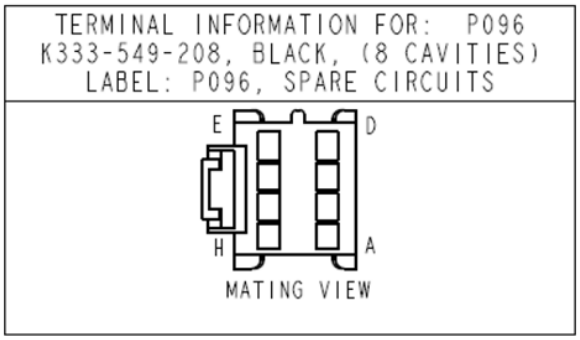

Pin	Spare Circuit	Designation	Fuse Max Rating
F	ORN0731-9	Spare Ignition #2	Cab Side - 20A
C	ORN0752-4	Spare Accessory #1	Cab Side - 20A
E	ORN0731-8	Spare Ignition #1	Cab Side - 20A
B	RED0712-5	Spare Battery #1	Cab Side - 20A
G	ORN0791-4	Spare LVD #1	Cab Side - 20A
A	RED0711-1	Spare Battery #2	Engine Side - 20A

Figure 99 Spare Circuit Connector and Pinout Details

https://truckmanualshub.com/

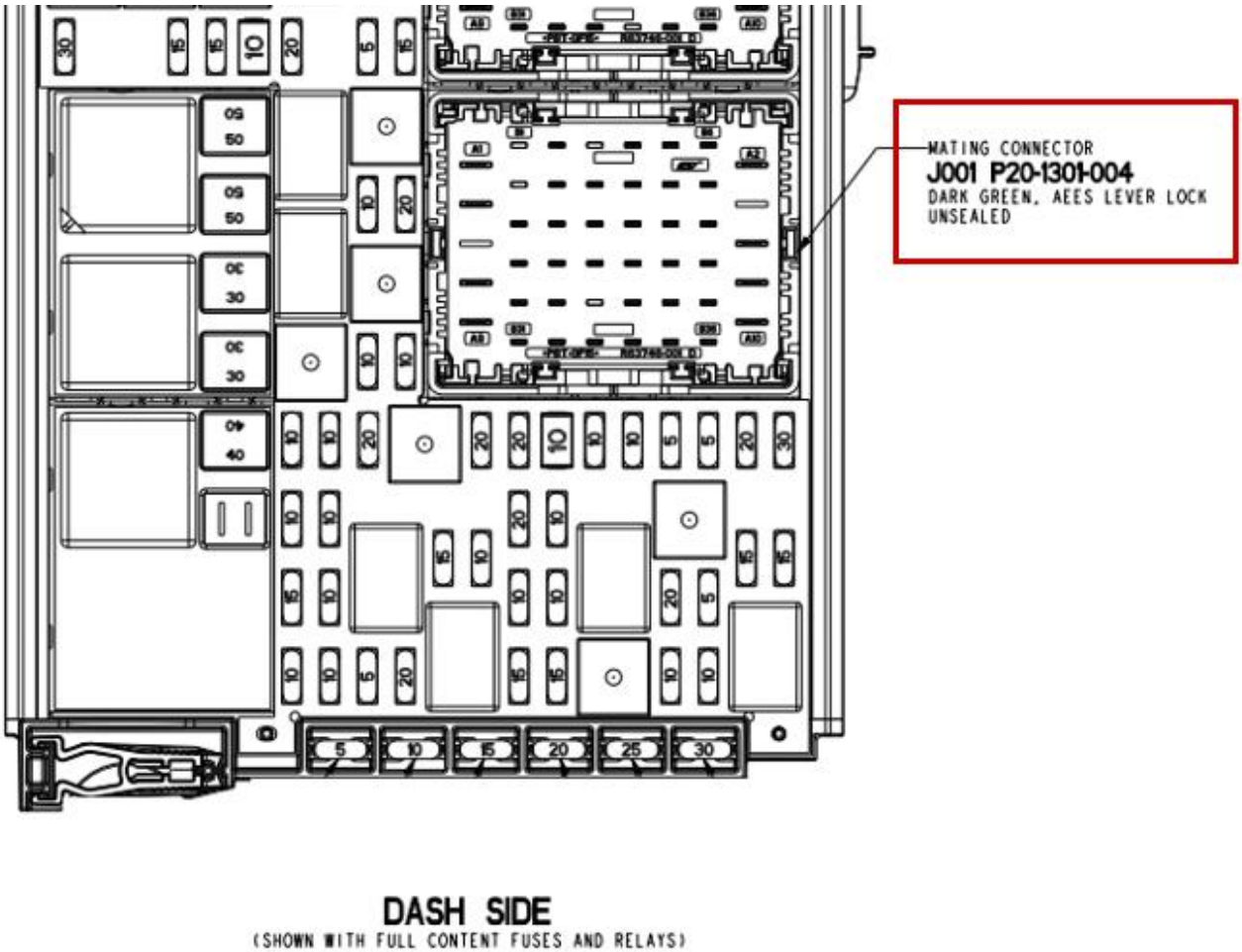

Figure 100 Spare Circuit Location on Power Distribution Center (Dash-Side, P001)

https://truckmanualshub.com/

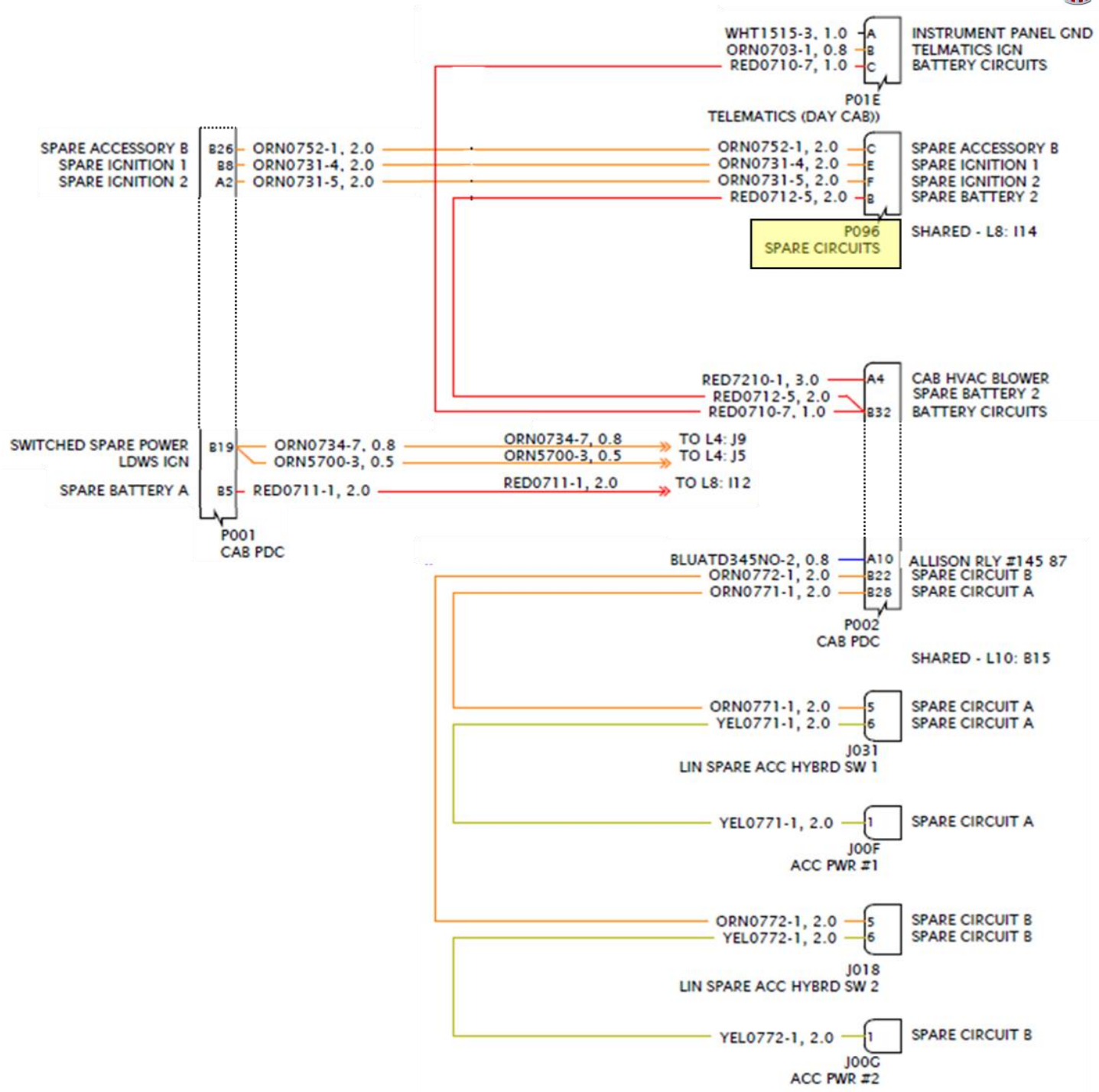

Figure 101 Diagram of Spare Circuit A and B (P096)

https://truckmanualshub.com/

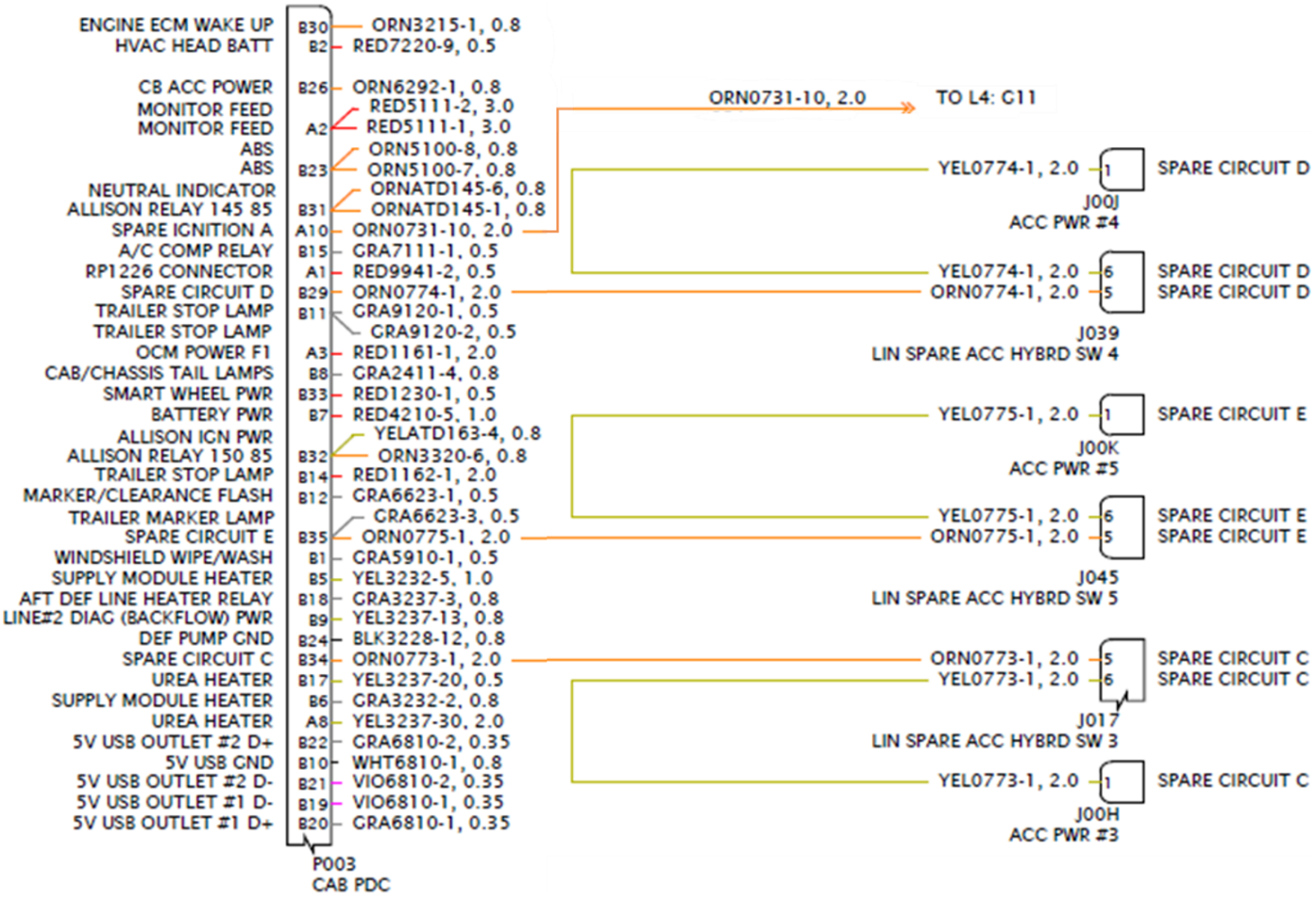

Figure 102 Diagram of Spare Circuits C, D and E

https://truckmanualshub.com/

JUNCTION BOX

The junction box provides access to lighting signals.

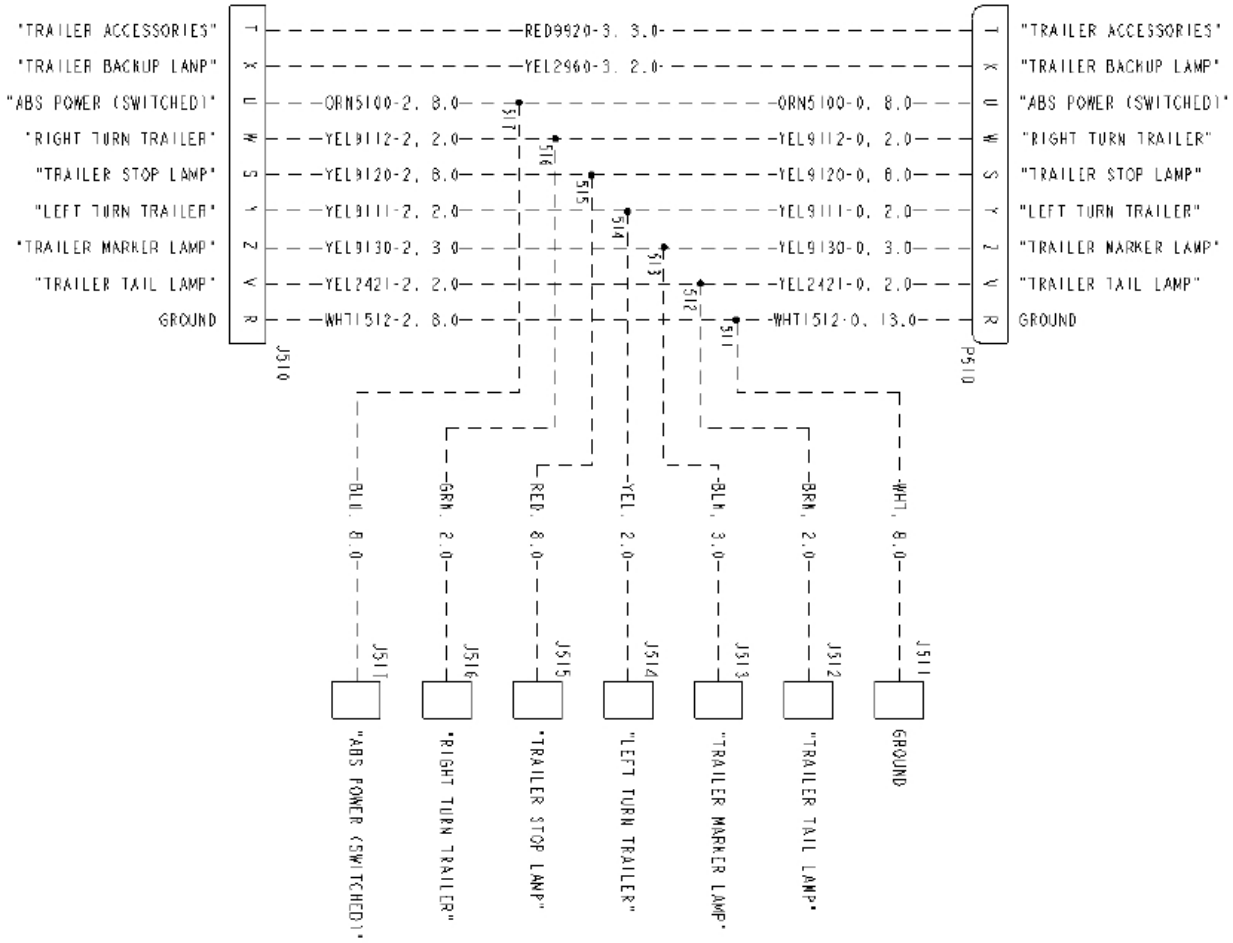

Figure 103 Junction Box BOC or EOF

https://truckmanualshub.com/

TRANSMISSION BACK UP SIGNALS

The back-up signal can be accessed from pin D of the 6-way taillight connector located at the end of frame. The taillight connector is a 6-way connector located in the chassis harness at the end of frame. It will either be connected to a taillight, a jumper harness, or tied up in the rail if no taillights are provided. The mating connector is Packard part number 12020786.

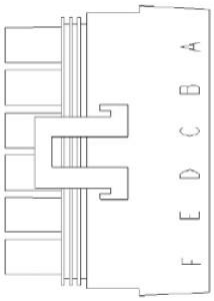

PIN	CIRCUIT DESCRIPTION
A	Park Lamp
B	Left Turn/Stop Lamp
C	Right Turn/Stop Lamp
D	Backup Lamp
E	Aux Chassis
F	Ground

Figure 104 6-Way Taillight Connector Pinout

SNOWPLOW LIGHTING

When the optional switch and wiring for snowplow lights are ordered, the truck will include a switch on the dash to control the snowplow lights and a body builder connection at the front of the chassis, connector J168.

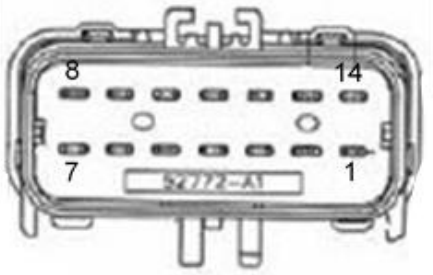

Pin	Description
1	LOW BEAM LH
2	LOW BEAM RH
3	HIGH BEAM LH
4	HIGH BEAM LH
5	TURN INDICATOR LH
6	TURN INDICATOR RH
7	MARKER LAMPS
8	NOT USED
9	SNOWPLOW GROUND
10	SNOWPLOW GROUND
11	TURN INDICATOR, LH DRL
12	TURN INDICATOR, RH DRL

Figure 105 Optional J168 Lighting Connector

https://truckmanualshub.com/

LIFT AXLES (PUSHERS & TAG)

All truck lift axles (pushers and tag) are direct wire Electric-Only. The wiring comes from the Primary Chassis Module or Secondary Chassis Module and goes direct to the axle mounted solenoid. This is not from the EoA Solenoid Bank. The activation signal comes from either a dash mounted MUX switch, or a hardwired switch that is mounted outside of the cab. There are a total of four lift axle controls available: supporting up to 3 pushers and 1 tag axle. These are controlled with separate switches by default, but it is possible to have a single switch control all axles if they are the same type. The customer can order the following configurations: steerable, non-steerable, with auto-reverse, and with park brake interlock. A lift axle comes with a control switch (single or separate), a gauge, and a regulator valve.

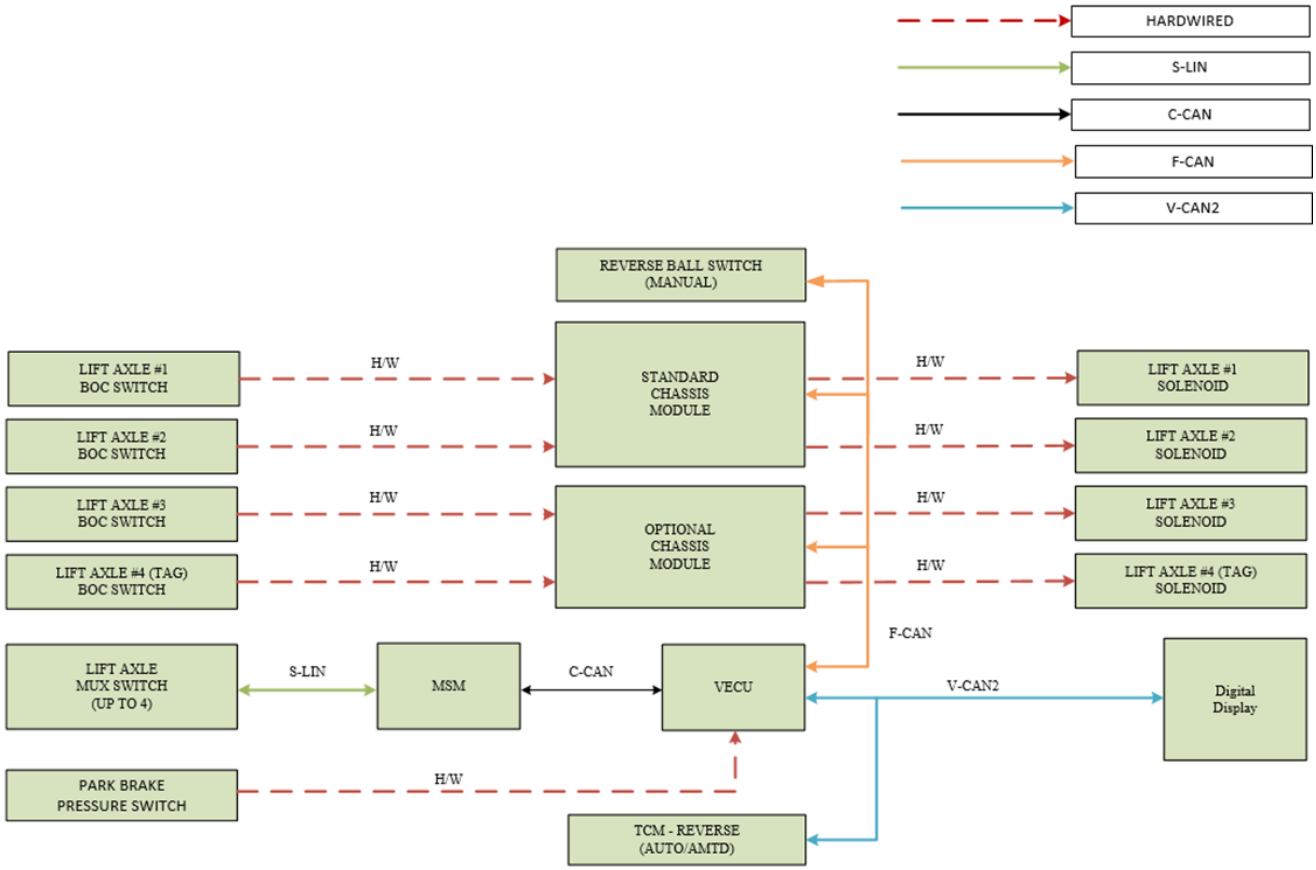

Figure 106 Lift Axle Diagram

Table 28 Truck Lift Axle Logic

Lift Axle Type	Raise Condition Logic	Lower Condition Logic
Steerable Lift Axle w/o Auto-Reverse	- Lift Switch is Inactive OR - Park Brake Active OR - Trans in Reverse	- Lift Switch is Active AND - Park Brake Inactive AND - Trans Not is Reverse
Steerable Lift Axle with Auto-Reverse OR Non-Steerable Lift Axle w/o Park Brake	- Lift Switch is Inactive OR - Park Brake Active	- Lift Switch is Active AND - Park Brake Inactive AND
Non-Steerable Lift Axle with Park Brake	- Lift Switch is Inactive AND - Park Brake Inactive	- Lift Switch is Active OR - Park Brake Active

https://truckmanualshub.com/

TRAILER LIFT AXLE

Trailer lift axles can be either EOA or Electric-Only type. There are two available EOA trailer lift axle controls using latching solenoids. If one axle is ordered, the customer will receive a switch labeled “Trailer Lift Axle”. If two axles are ordered, the customer can have a single switch that controls both axles, or two switches. If two switches are present, they are labeled “Forward Trailer Lift Axle” and “Rear Trailer Lift Axle.”

GAUGES

Physical gauges and switches are fastened directly to the B-panel. Once the panel is free, the gauge or switch can be installed. Gauges are held by a screw on collar while switches have a plastic tab.

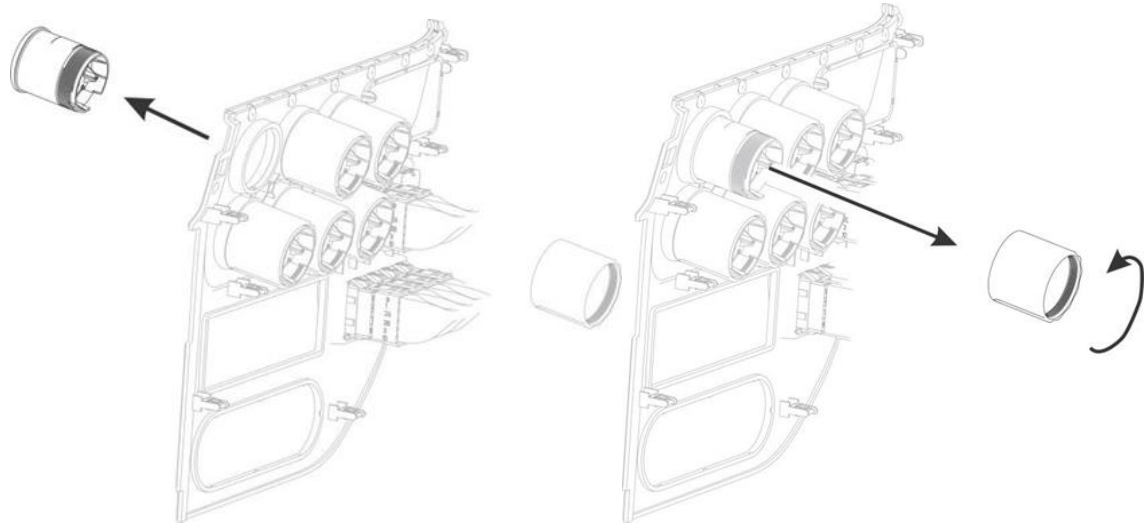

Figure 107 Gauge Removal and Installation

The standard display comes with a menu of preset gauges. A limited number of additional gauges can be configured on the 7” digital display after the initial truck build using Paccar Vehicle Pro (PVP). Please contact your local Kenworth dealership for assistance.

Figure 108 Gauges on the 7” Digital Display

https://truckmanualshub.com/

TELLTALE ICONS

Telltales no longer illuminate through a physical card installed behind the dash cluster. Telltales now populate on the digital display behind the steering wheel. Certain telltale positions have been designated as body builder telltales. These body builder telltale positions can be reconfigured after initial chassis build using PVP at your local Kenworth dealership.

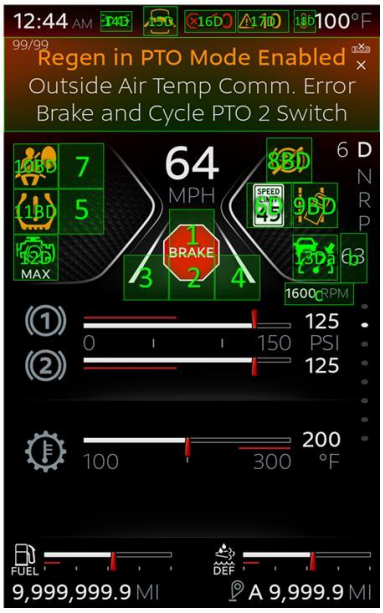

Figure 109 Body Builder Telltale Positions

Body builder telltales are limited to five per vehicle with the 7" digital display used on 2.1M medium duty product. Each telltale has a designated analog connector located on the IP harness behind the digital display.

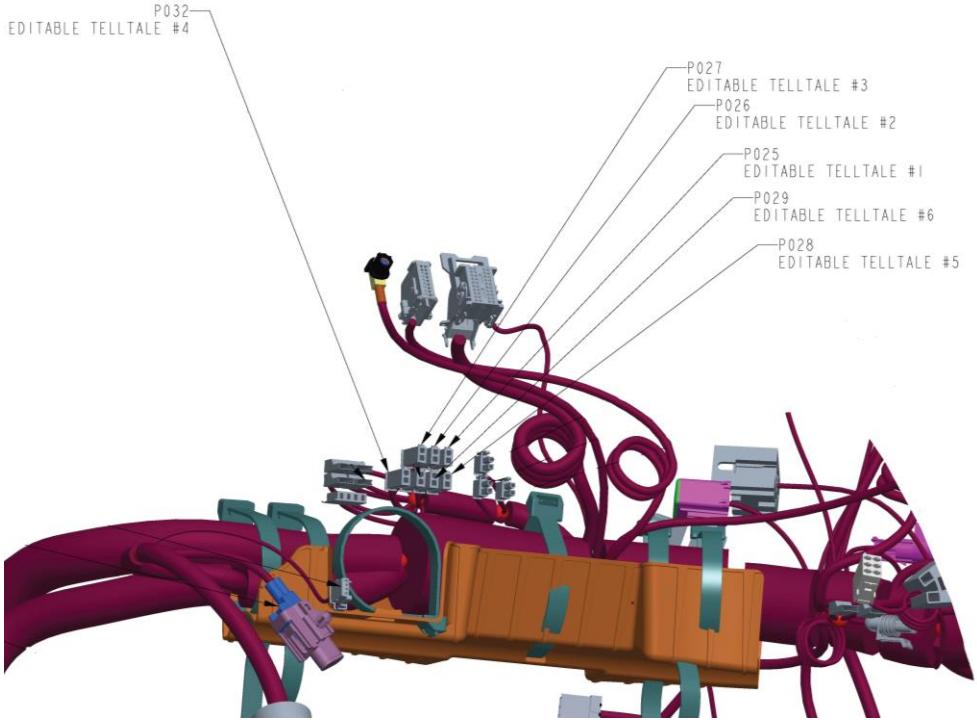

Figure 110 Body Builder Telltale Connections

https://truckmanualshub.com/

SECTION 8 POWER TAKE-OFF (PTO)

INTRODUCTION

A Power Take Off (PTO) provides a way to divert some or all the truck's engine power to another component. There are a wide variety of PTO options available.

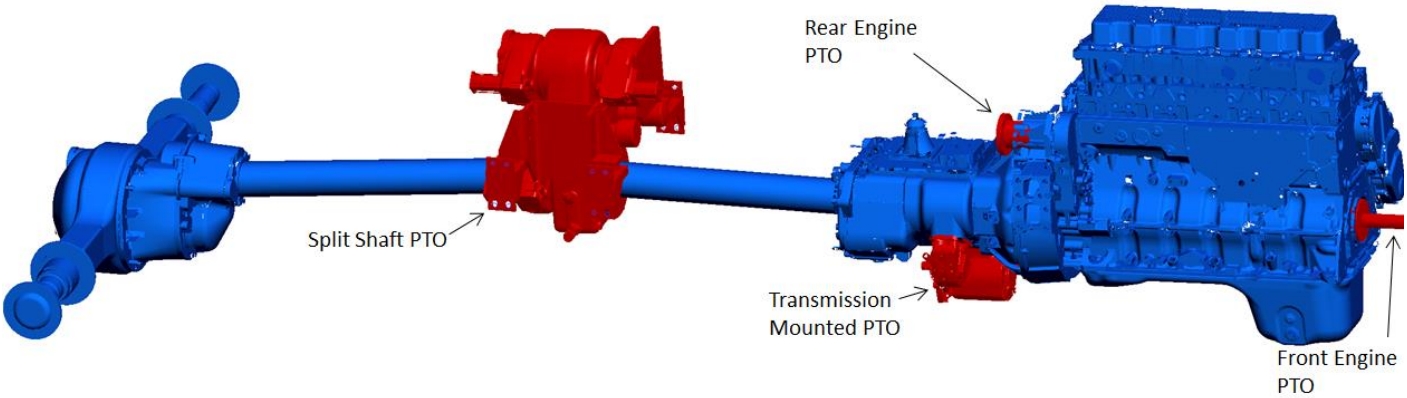

PTO ACRONYM LIBRARY

Acronym	Definition
ABS	Arty-Lock Braking System
CAN	Controller Area Network
CC	Cruise Control
DEF	Diesel Exhaust Fluid
DTC	Diagnostic Trouble Code
ECM	Engine Control Module
ECU	Engine Control Unit
EIST	Electrical Idle Shutdown Timer
EOA	Electric Over Air
EOH	Electric over Hydraulic
FIC	Fast Idle Control
J-1939	SAE CAN Communication Standard
LIN	Local Interconnect Network
MSB	Master Solenoid Bank
MSN	Master Switch Module
MUX	Multiplex
OBD	On Board Diagnostics

Acronym	Definition
OCM	Optional Control Module
OEM	Original Equipment Manufacture
PCC	Predictive Cruise Control
PDC	Power Distribution Center
PGN	Parameter Group Number
PMC	PTO Mode Control
PSC	PTO Speed Control
PTO	Power Take Off
PVP	PACCAR Vehicle Pro
RP1226	TMS Messaging Standard
SCM	Standard Control Module
SCR	Selective Catalyst Reduction
SPN	Suspect Parameter Number
TCM	Transmission Control Module
TSC1	Torque Speed Control (request)
VECU	Vehicle Electrical Control Unit

https://truckmanualshub.com/

TRANSMISSION MOUNTED PTO

MANUAL TRANSMISSIONS

This is the most common type of PTO that is used. On a manual transmission there are two locations for PTO's. On medium duty transmissions there are 6 bolt PTO locations on the right and left. On heavy duty manual transmissions there is a 6 bolt PTO on the right and an 8 bolt PTO on the bottom left. There are also some options for a thru-shaft or extended countershaft PTO. On a thru-shaft PTO, the counter shaft extends out through the back of the transmission which can be used to power a PTO. When using a thru-shaft PTO the vehicle must be spec'd with the correct option as not all transmissions will be set up for use with thru-shaft PTO's. For more information go to www.roadranger.com and enter "PTO Installation Guide" in the search bar in the upper right corner.

MD Manual Transmission **MD Automated (10-Speed)**

Figure 111 PTO Location Examples

AUTOMATIC TRANSMISSIONS - ALLISON

On Allison transmissions there are two locations for PTO's. The Allison 4000 series has PTO locations at 1 and 8 o'clock viewed from the back of the transmission. The 4000HS transmissions do not have any PTO locations. The 3000 series Allison transmissions have PTO locations at 4 and 8 o'clock. For more information on using PTOs with an Allison transmission go to www.allisontransmission.com and refer to the "Rugged Duty Series Brochure" and "PTO Request Flyer" which is available in a 1000/2000 version and a 3000/4000 version.

Some PTO configurations will have clearance issues with other components on the truck. With manual transmissions, a 6-bolt PTO on the right will typically clear most components when the DPF and SCR are under the cab. This is also true when 30° and 45° adapters are used. The 8-bolt bottom mount PTO will not have any issues unless you are running a driveshaft back to another component and the truck has a crossover style exhaust. In this case, the DPF and SCR would block any routing for the driveshaft. If a wet kit is used in this scenario there is enough room to mount the PTO and the hydraulic pump without interfering with the exhaust. On Allison 4000 series transmissions, most PTO's will fit in the 1 o'clock position without interfering with the cab. If a wet kit is used here, the dipstick housing will most likely need to be modified as it runs over the top of the transmission to the driver side of the vehicle. The PTO in the 8 o'clock position is typically ok. The same issue with crossover exhaust would apply here as well. There are some scenarios where the PTO will be very close to or could interfere with the rear spring shackle on the front suspension. This problem can occur on vehicles with a set-back front axle and the problem is amplified on the aero short hood models.

https://truckmanualshub.com/

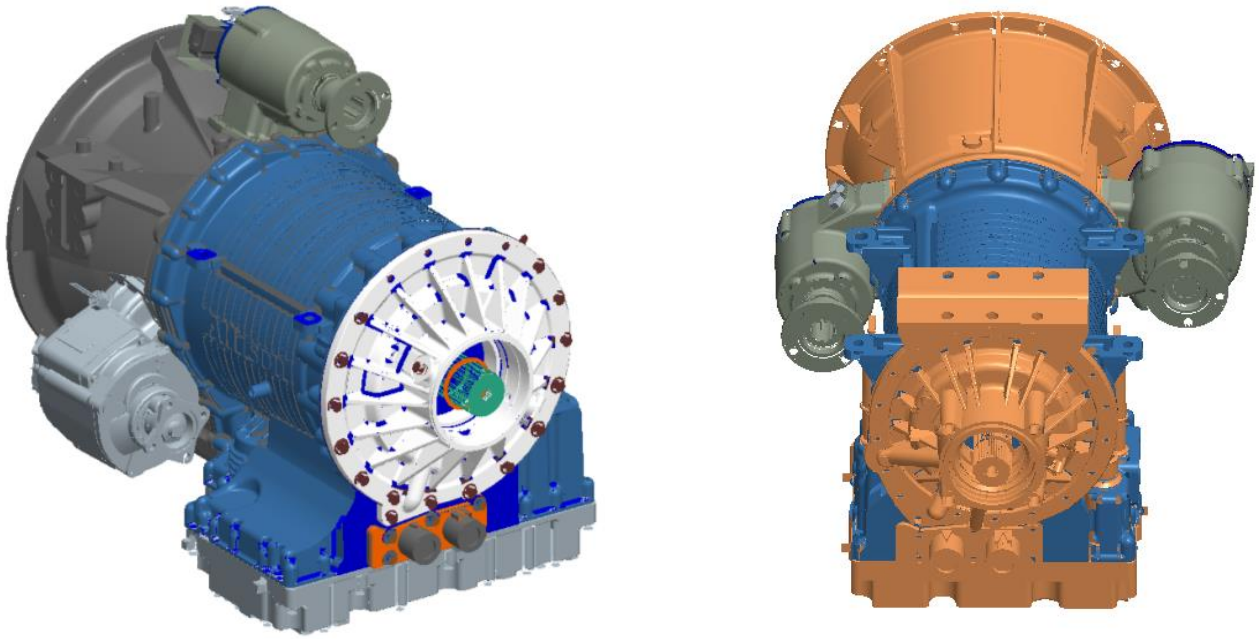

Allison 4000 Series **Allison 3000 Series**

Figure 112 PTO mounting locations for Allison Transmission

AUTOMATED TRANSMISSIONS – PACCAR 8-SPEED

There are two locations for PTOs on the PACCAR 8-speed transmission: 9 o'clock and 3 o'clock from the back of the transmission. The PACCAR 8-speed automatic transmission is relatively wide at the PTO mounting locations. For this reason, it is important to be aware of potential PTO packaging issues. Frame rails and frame mounted hose bundles can present a challenge, depending on the specific configuration. If the PTO is using an elongated driveshaft it is advised to be aware of the location of the back of cab crossmember in relation to the driveshaft. PTOs mounted in the 9 o'clock position on the PACCAR 8-speed may need a spacer to clear the transmission shift actuator.

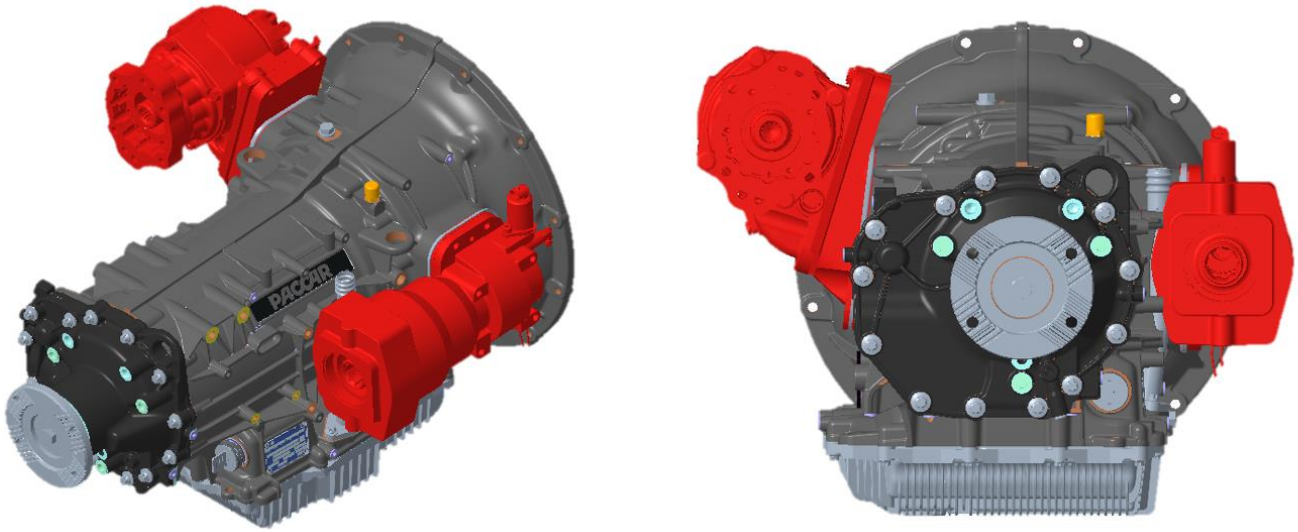

Figure 113 PACCAR 8-Speed Automatic Transmission PTO Locations

https://truckmanualshub.com/

FRONT ENGINE PTO

Front engine PTOs (FEPTO) are commonly used in mixer, snowplow, and crane applications. When a FEPTO is spec'd on a truck, the cooling module moves up to allow for a shaft to be bolted to the front of the crankshaft and extend out to the front of the truck. The vehicle can be spec'd with a 1350 flange adapter to simplify installing the FEPTO shaft. The frame rails will be extended out to mount a hydraulic pump, snowplow, or outriggers. The frame extension is 24" long and a full rail profile, see Figure 114.

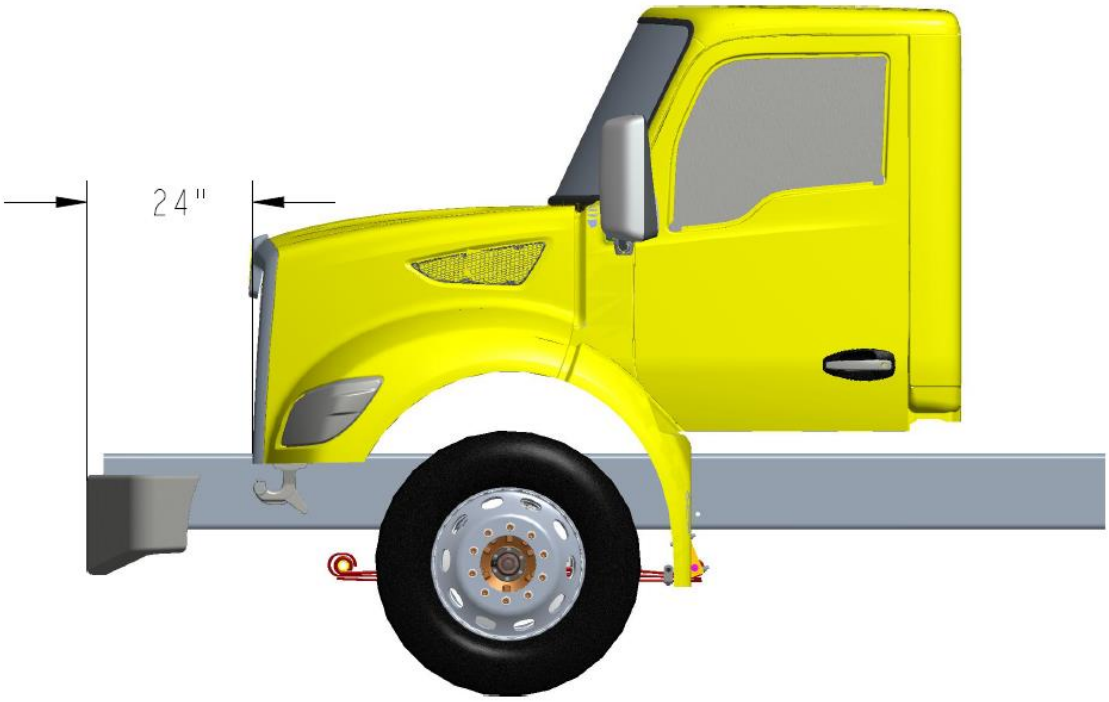

Figure 114 FEPTO 24" Full Profile Frame Extension

https://truckmanualshub.com/

PTO MOUNTING CLEARNANCE

This application guide indicates if a PTO has sufficient clearance to truck components in various mounting configurations. The truck components investigated in this guide include frame rails, Set Back Front Axle (SBFA) rear shackle, SBFA Front Air Suspension (FAS) rear shackle, over-bell frame brace, coolant return manifold, transmission clutch actuator, and exhaust system components.

Usage Notes:

1. This application guide is only applicable to 2.1M trucks.
2. Only the specified PTO configurations have been analyzed.
3. Horizontal aftertreatment limits access behind PTOs for shaft drives and other PTO attachments.
4. Eaton FR transmissions require the use of a 30° adapter when installing Chelsea or Muncie transmission PTOs in the right-hand position.
5. Eaton RT & Ultrashift Plus transmissions require the use of a 45° adapter when installing Chelsea transmission PTOs in the right-hand position.
6. Eaton RT & Ultrashift Plus transmissions require the use of a 55° adapter when installing Muncie transmission PTOs in the right-hand position.
7. Eaton transmissions require the use of a 6 to 8 Bolt adapter when installing a 6 bolt PTO in the bottom position.

2.1M PTO MOUNTING CLEARNANCE CHARTS – ALLISON TRANSMISSIONS

				Allison 1000/2000 3 & 9 o'clock Positions					
		PTO		SH		MH		Voc	
	Brand	Series	Type	4	8	4	8	4	8
6-Bolt	Chelsea	272	E3	x	ok	x	ok	ok	ok
			E5	x	x	ok	x	ok	ok
		442	V3	x		ok		ok	
			V5		ok		ok		ok
	Muncie	CS6	H1	x		x		ok	
			H3		x		x		ok
		FA6B	H3		x		ok		ok
		TG6	H1	x		ok		ok	
			H3		ok		ok		ok

Clocking Position on Transmssion

x	Will not package in truck
ok	Will package in truck
	Requires "RH PTO" exhaust

https://truckmanualshub.com/

				3000 - 4 o'clock & 8 o'clock Positions															
				7L						9L						9L REPTO			
		PTO		SH		MH		Voc		SH		MH		Voc		MH		Voc	
	Brand	Series	Type	4	8	4	8	4	8	4	8	4	8	4	8	4	8	4	8
10-Bolt	Chelsea	267	M3	x		ok		ok		x		ok		ok		ok		ok	
			M5		ok		ok		ok		ok		ok		ok		ok		ok
		280	E3	x		ok		ok		x		ok		ok		ok		ok	
			E5		ok		ok		ok		ok		ok		ok		ok		ok
		287	M3	x		ok		ok		x		ok		ok		ok		ok	
			M5		ok		ok		ok		ok		ok		ok		ok		ok
		870	E3	x		x		ok		x		x		ok		ok		ok	
			E5		x		x		ok		x		x		ok		ok		ok
		877	M3	x		x		ok		x		x		ok		ok		ok	
			M5		x		x		ok		x		x		ok		ok		ok
		890	R-B5	x		x		ok		x		x		ok		ok		ok	
			L-B5		x		x		ok		x		x		ok		ok		ok
			T-B5																
			E-B5																
			U-B5																
			H-B5																
		897	R-M5	x		x		ok		x		x		ok		ok		ok	
			L-M5		x		x		ok		x		x		ok		ok		ok
			T-M5																
			E-M5																
			U-M5																
			H-M5																
	Muncie	CD05	M3		ok		ok		ok		ok		ok		ok		ok		ok
		CD10	M1	x		ok		ok		x		ok		ok		ok		ok	
			M3		ok		ok		ok		x		x		ok		ok		ok
		CD40	M1	x		x		ok		x		x		ok		x		ok	
			M3		x		x		ok		x		x		ok		x		ok
		CS10	H1	x		x		ok		x		x		ok		x		x	
			H3		x		x		ok		x		x		ok		x		x
		CS41	H1	x		x		ok		x		x		ok		x		ok	
			H3		x		x		ok		x		x		ok		x		ok
		HS24	H1	x		ok		ok		x		ok		ok		ok		ok	
			H3		ok		ok		ok		ok		ok		ok		ok		ok
		A20	HX1	x		ok		ok		x		ok		ok		ok		ok	
			HX3		ok		ok		ok		ok		ok		ok		ok		ok
			HX5																

x Will not package in truck
ok Will package in truck
Requires "RH PTO" exhaust

https://truckmanualshub.com/

				3000 - 1 o'clock & 8 o'clock Positions															
				7L						9L						9L REPTO			
		PTO		SH		MH		Voc		SH		MH		Voc		MH		Voc	
	Brand	Series	Type	1	8	1	8	1	8	1	8	1	8	1	8	1	8	1	8
10-Bolt	Chelsea	267	M3	x		x		x		x		ok		ok		x		x	
			M5		x		x		ok		x		x		ok		ok		ok
		280	E3	x		x		x		x		ok		x		x		x	
			E5		x		x		ok		x		x		ok		ok		ok
		287	M3	x		x		x		x		ok		x		x		x	
			M5		x		x		ok		x		x		ok		ok		ok
		870	E3	x		x		x		x		ok		x		x		x	
			E5		x		x		ok		x		x		ok		x		ok
		877	M3	x		x		x		x		ok		x		x		x	
			M5		x		x		ok		x		x		ok		x		ok
		890	R-B5																
			L-B5																
			T-B5	x		x		x		x		x		ok		x		x	
			E-B5		x		x		ok		x		x		ok		x		ok
			U-B5																
			H-B5																
		897	R-M5																
			L-M5																
			T-M5	x		x		x		x		x		ok		x		x	
			E-M5		x		x		ok		x		x		ok		x		ok
			U-M5																
			H-M5																
	Muncie	CD05	M3		ok		ok		ok		ok		ok		ok		ok		ok
		CD10	M1	x		x		x		ok		ok		x		x		x	
			M3		x		x		ok		x		x		ok		x		ok
		CD40	M1	x		x		x		ok		ok		x		x		x	
			M3		x		x		ok		x		x		x		x		ok
		CS10	H1	x		x		x		ok		ok		x		x		x	
			H3		x		x		x		x		x		x		x		x
		CS41	H1	x		x		x		ok		ok		x		x		x	
			H3		x		x		ok		x		x		x		x		ok
		HS24	H1																
			H3	x	x	x	x	ok	ok	ok	x	ok	x	ok	ok	x	ok	x	ok
		A20	HX1																
			HX3		x		x		ok		x		x		ok		ok		ok
			HX5	x		x		x		ok		ok		x		x		x	

x Will not package in truck
ok Will package in truck
Requires "RH PTO" exhaust

https://truckmanualshub.com/

				4000							
				9L				9L REPTO			
		PTO		MH		Voc		MH		Voc	
	Brand	Series	Type	1	8	1	8	1	8	1	8
10-Bolt	Chelsea	267	M3	ok		ok		x		x	
			M5		ok		ok		ok		ok
		280	E3								
			E5	ok	x	ok	ok	x	ok	x	ok
		287	M3								
			M5	ok	x	ok	ok	x	ok	x	ok
		870	E3	ok		ok		x		x	
			E5		x		x		ok		ok
		877	M3	ok		ok		x		x	
			M5		x		x		ok		ok
		890	R-B5								
			L-B5								
			T-B5								
			E-B5								
			U-B5	x		x		x		x	
			H-B5		x		x		ok		ok
		897	R-M5								
			L-M5								
			T-M5								
			E-M5								
			U-M5	x		x		x		x	
			H-M5		x		x		ok		ok
	Muncie	CD05	M3								
		CD10	M1	ok		ok		x		x	
			M3		x		x		ok		ok
		CD40	M1	ok		ok		x		x	
			M3		x		x		x		x
		CS10	H1	ok		ok		x		x	
			H3		ok		x		x		x
		CS41	H1	ok		ok		x		x	
			H3		x		x		x		ok
		HS24	H1								
			H3	ok	ok	ok	ok	x	ok	x	ok
		A20	HX1								
			HX3		x		ok		ok		ok
			HX5	ok		ok		x		x	

x Will not package in truck
ok Will package in truck
Requires "RH PTO" exhaust

https://truckmanualshub.com/

PTO MOUNTING CLEARNANCE CHARTS – PACCAR 8-SPEED TRANSMISSION

			PACCAR TX-8 - 3 & 9 o'clock Positions											
			Engine											
			PX-7						PX-9					
			SH		MH		Voc		SH		MH		Voc	
Brand	PTO Series	Pump	3	9	3	9	3	9	3	9	3	9	3	9
Chelsea	Z35	F1	x	x	x	x		x	x	x	x	x		x
		SG102	x	x	x	x		x	x	x	x	x		x
		PGP020	x	x	x	x		x	x	x	x	x		x
		PGP350	x	x	x	x		x	x	x	x	x		x
		Driveshaft	x	x	x	x		x	x	x	x	x		x
	272 Slim Line	F1	x	ok	x	ok			x	ok	ok	ok		
		SG102	x	ok	x	ok			x	ok	ok	ok		
		PGP020	x	ok	x	ok			x	ok	ok	ok		
		PGP350	x	ok	x	ok			x	ok	x	ok		
		Driveshaft	x	x	x	x			x	x	x	x		
Muncie	P58	PH1	x	x	ok	x	ok	x	ok	x	ok	x	ok	x
		PK1	x	x	ok	x	ok	x	ok	x	ok	x	ok	x
		S2LD	x	x	x	x	ok	x	x	x	x	x	ok	x
		W17	x	x	x	x	ok	x	x	x	x	x	ok	x
		Driveshaft	x	x	ok	x			x	x	ok	x		

https://truckmanualshub.com/

PTO MOUNTING CLEARNANCE CHARTS – EATON TRANSMISSIONS

Single PTO's for Eaton Transmissions

LH, RH or Bottom Mounted

				SAE #2						SAE #1						
				FS/FSO		FR/FRO		RT/RTO/RTLO		FR/FRO		RT/RTO/RTLO Adv Manual		Ultrashift + Adv AMT		Endurant PACCAR AMT
		PTO		Left	Right	Bottom	Right	Bottom	Right	Bottom	Right	Bottom	Right	Bottom	Right	Bottom
Chelsea	6-Bolt	272	V3		s		s		s		s		s		s	
			V5	s												
		340	V5	s	s		s		s		s		s		s	
		442	V3		s		s		s		s		s		s	
			V5	s												
		660	V3				s		s		s		s		s	
	8-Bolt	282	V3			s		s		s		s		s		
		348	V5			s		s		s		s		s		
		489	V5			s		s		s		s		s		s
		680	V3			s		s		s		s		s		
		823	V3			s		s		s		s		s		
		880	V3			o		o		o		o		s		s
		885	V3			o		o		o		o		s		
Muncie	6-Bolt	CS6	P1		s		x		x		s		s		s	
			P3	s												
		RL6	A3	s	s		x		s		s		s		s	
		SH6	P1		s		x		x		s		s		s	
			P3	s												
		TG6	P1		s		x		x		s		s		s	
			P3	s												
	8-Bolt	828	P1			s		s		s		s		s		s
		CS8	P1			s		s		s		s		s		
		RL8	A3			s		s		s		s		s		
		SH8	P1			s		s		s		s		s		s
		TG8	P1			s		s		s		s		s		s

s = Will package for this configuration w/ Standard Hydraulic Clutch Actuator
o = Will package for this configuration w/ Optional Hydraulic Clutch Actuator
ok = Will package for this configuration
x = Will not package for this configuration

https://truckmanualshub.com/

Dual PTO's for Eaton Transmissions

RH Mounted with LH or Bottom Mounted

				RH Side Mounted																							
				Chelsea																							
				SAE #2												SAE #1											
				FS/FSO			FR/FRO				RT/RTO/RTLO				FR/FRO				RT/RTO/RTLO Adv Man				Ultrashift+ Adv AMT			
		PTO		Z72-V3	340-V5	442-V3	Z72-V3	340-V5	442-V3	660-V3	Z72-V3	340-V5	442-V3	660-V3	Z72-V3	340-V5	442-V3	660-V3	Z72-V3	340-V5	442-V3	660-V3	Z72-V3	340-V5	442-V3	660-V3
Bottom or LH Side Mounted	6-Bolt	272	V5	s	s	s																				
		340	V5	s	s	s																				
		442	V5	s	s	s																				
	8-Bolt	282	V3				s	s	s	s	s	s	s	s	s	s	s	s	s	s	s	s	ok	ok	ok	ok
		348	V5				s	s	s	s	s	s	s	s	s	s	s	s	s	s	s	s	ok	ok	ok	ok
		489	V5				s	s	s	s	s	s	s	s	s	s	s	s	s	s	s	s	ok	ok	ok	ok
		680	V3				s	s	s	s	s	s	s	s	s	s	s	s	s	s	s	s	ok	ok	ok	ok
		823	V3				s	s	s	s	s	s	s	s	s	s	s	s	s	s	s	s	ok	ok	ok	ok
		880	V3				x	x	x	x	x	x	x	x	o	o	x	x	o	o	o	o	ok	ok	ok	ok
		885	V3				x	x	x	x	x	x	x	x	o	o	x	x	o	o	o	o	ok	ok	ok	ok

				RH Side Mounted																							
				Muncie																							
				SAE #2												SAE #1											
				FS/FSO				FR/FRO				RT/RTO/RTLO				FR/FRO				RT/RTO/RTLO Adv Man				Ultrashift+ Adv AMT			
		PTO		CS6-P1	RL6-A3	SH6-P1	TG6-P1	CS6-P1	RL6-A3	SH6-P1	TG6-P1	CS6-P1	RL6-A3	SH6-P1	TG6-P1	CS6-P1	RL6-A3	SH6-P1	TG6-P1	CS6-P1	RL6-A3	SH6-P1	TG6-P1	CS6-P1	RL6-A3	SH6-P1	TG6-P1
Bottom or LH Side Mounted	6-Bolt	CS6	P3	s	s	s	s																				
		RL6	A3	s	s	s	s																				
		SH6	P3	s	s	s	s																				
		TG6	P3	s	s	s	s																				
	8-Bolt	828	P1					x	x	x	x	x	s	x	x	s	s	s	s	s	s	s	s	ok	ok	ok	ok
		CS8	P1					x	x	x	x	x	s	x	x	s	s	s	s	s	s	s	s	ok	ok	ok	ok
		RL8	A3					x	x	x	x	x	s	x	x	s	s	s	s	s	s	s	s	ok	ok	ok	ok
		SH8	P1					x	x	x	x	x	s	x	x	s	s	s	s	s	s	s	s	ok	ok	ok	ok
		TG8	P1					x	x	x	x	x	s	x	x	s	s	s	s	s	s	s	s	ok	ok	ok	ok

s = Will package for this configuration w/ Standard Hydraulic Clutch Actuator
o = Will package for this configuration w/ Optional Hydraulic Clutch Actuator
ok = Will package for this configuration
x = Will not package for this configuration

https://truckmanualshub.com/

HYDRAULIC CLUTCH ACTUATOR CONFIGURATIONS

(Only used with 2.1M models with Eaton transmissions)

Eaton FR, RT and Advantage manual transmissions with SAE #1 or SAE #2 Clutch Housings

Eaton FS manual transmissions with SAE #2 Clutch Housings

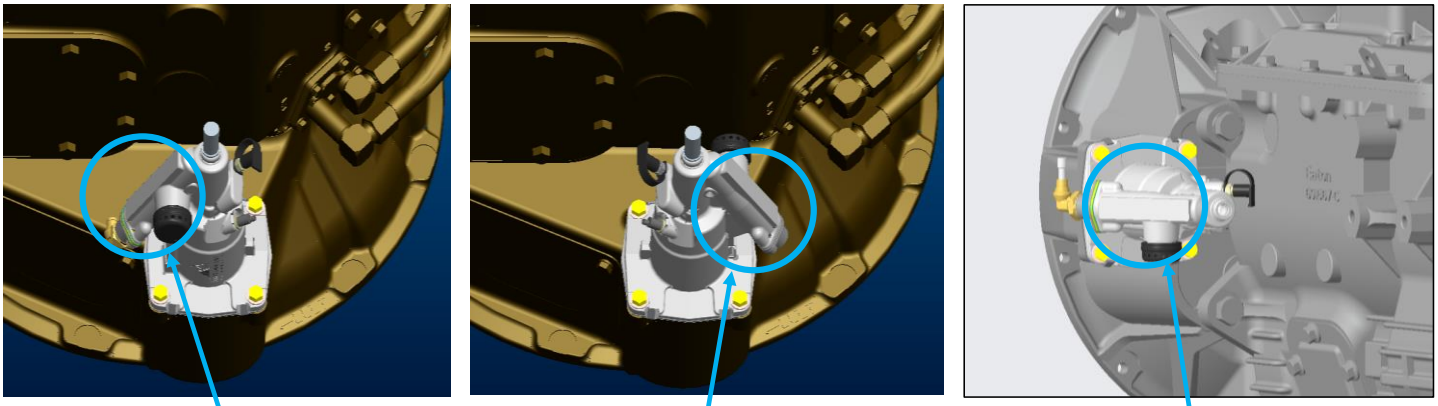

Standard Configuration
Air assist connection faces driver's side

Optional Configuration
Air assist connection faces passenger's side

Standard Configuration
Air assist connection faces driver's side

Figure 115 Hydraulic Clutch Actuator

NOTE:

- The actuator should never be flipped upside-down to achieve PTO clearance.
- The bleed nipple must always be above the centerline.
- The drain valve should always be below the centerline.

REAR ENGINE PTO

Rear Engine PTOs (REPTO) are commonly used in cement mixers and feed lot applications. The REPTO is driven off the rear gear train on the engine. There is a 1350/1410 flange on the bell housing in the 1 o'clock position that can be used to attach a hydraulic pump or driveshaft. The REPTO flange will always be turning when the engine is running, and the output rotation is the same as the engine. The Cummins ISL9 and PX-9 REPTO turns at a rate of 1.15:1.

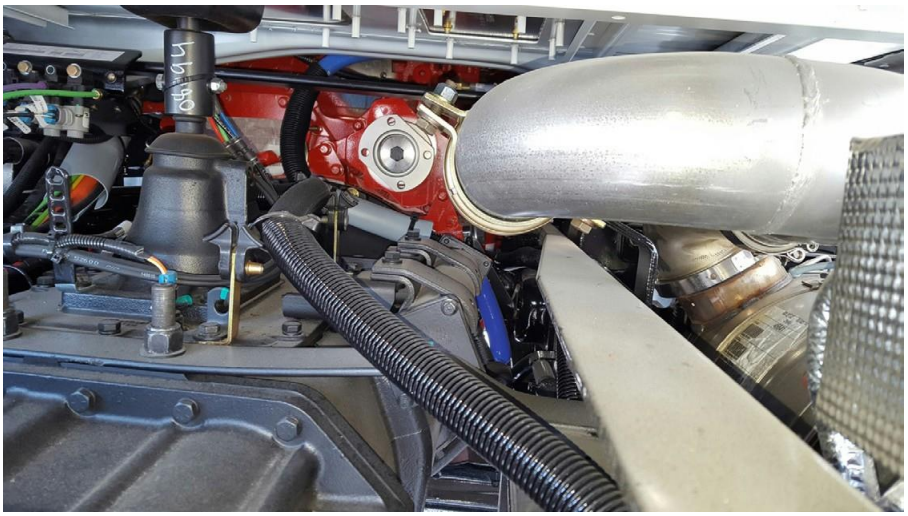

Figure 116 REPTO Flywheel Housing

https://truckmanualshub.com/

REMOTE PMC CONNECTIONS

There are options to control PTO functionality from the following locations.

- Engine Bay – Hardwired option only
- RP1226 Connection in the Cab – CAN bus connection only
- BOC/BOS – Hardwired and CAN bus connections
- EOF – Hardwired and CAN bus connections

There are options available for the body builder to specify controller speeds of 250 kbps or 500 kbps.

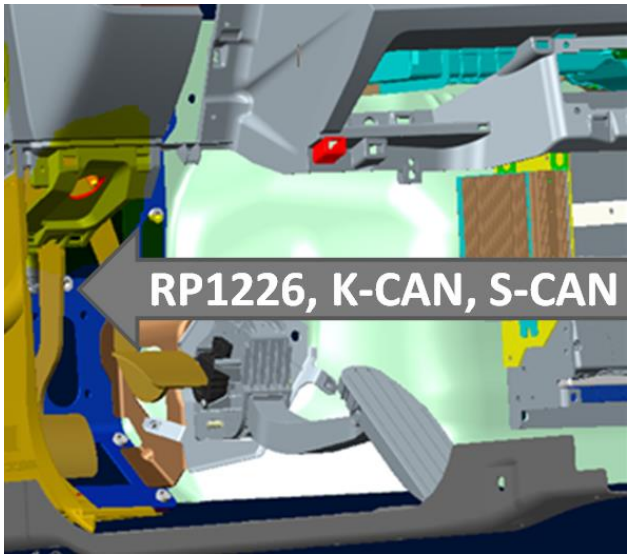

Figure 117 RP1226 Location

PTO CAN functionality may be accessed in the cab through the RP1226 connector and remotely through the body connectors K-CAN (E-3375-021) and B-CAN (DTM06-2S-EP10) Connectors.

PTO hardwired functionality may be accessed in the engine bay or on the frame through optional the 12-Way connector.

12-Way Deutsch Connector

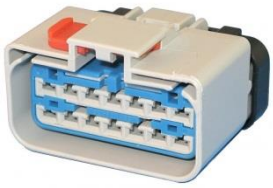

RP1226 Delphi Connector

Figure 118 Connectors for PTO controls

Pin-out information for the PTO connectors can be found in the Electrical Section.

https://truckmanualshub.com/

SECTION 9 AFTERTREAMENT

INTRODUCTION

The following section is designed to give you information regarding the aftertreatment systems on Kenworth chassis.

All Kenworth's equipped with 2021 emission level engines will utilize Selective Catalyst Reduction (SCR). SCR is a process in which Diesel Exhaust Fluid (DEF) is injected into the exhaust downstream of the engine. DEF is converted to ammonia by the heat of the exhaust system. Inside of the SCR canister a catalyst causes a chemical reaction to occur between the ammonia and NOx, turning it into water and nitrogen. For more information on the specific details of how SCR works, please contact your local Kenworth dealer.

GENERAL GUIDELINES FOR DEF SYSTEM

The installation of the DEF tank is a critical component of the aftertreatment system. While Kenworth does not recommend relocating the DEF tank, there are applications and body installations that will require it. The guidelines below must be strictly followed by any entity relocating the tank. Failure to follow the guidelines completely and accurately may result in engine shut-down situations.

PACCAR-approved DEF hoses are required when retrofitting for the system to function properly. The use of unapproved hoses for DEF lines will void warranty and may cause engine shut-down situations. The DEF pump (or Supply Module) cannot be relocated from the DEF tank.

Kenworth offers a variety of DEF tank sizes to meet every application. The DEF tank volume is regulated by the E.P.A. Kenworth advises against modifying the tank volume after the truck has been delivered from the factory. These are estimated nominal (published) maximum fuel capacities for various DEF tanks, engines, and fill ratios. Dosing rates for these calculations are also shown.

Table 29 DEF Fuel Ratios

	FUEL VOLUME ALLOWED (USABLE GALLONS)					
	Optional DEF:Fuel Ratio (2:1)		Standard DEF:Fuel Ratio (1.25:1-1.99:1)		Minimum Required DEF:Fuel Ratio (1:1)	
DEF tank	PX-7	PX-9	PX-7	PX-9	PX-7	PX-9
SMALL	55	55	88	88	110	110
LARGE	150	150	240	240	300	300

https://truckmanualshub.com/

DEF SYSTEM SCHEMATICS

On most Kenworth chassis, the DEF Supply Module (or pump) is integrated into the DEF tank assembly. See Page 139 for assembly relocation requirements.

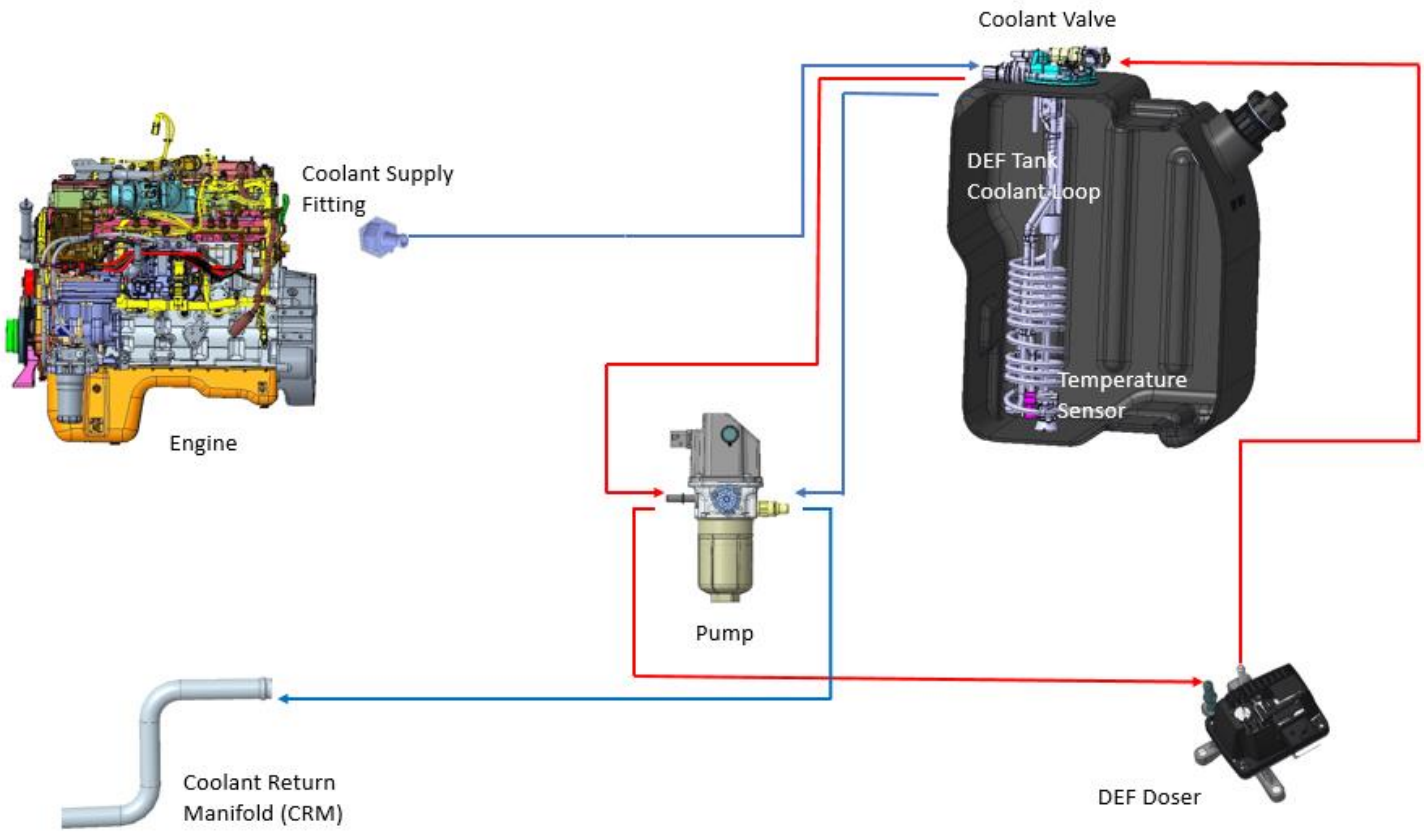

Figure 119 DEF System Schematic

DEF will freeze at approximately 11° F. To keep DEF from freezing, all tanks will be heated with engine coolant. The following schematic shows the routing of these lines. It is critical that the system is not compromised in any manner.

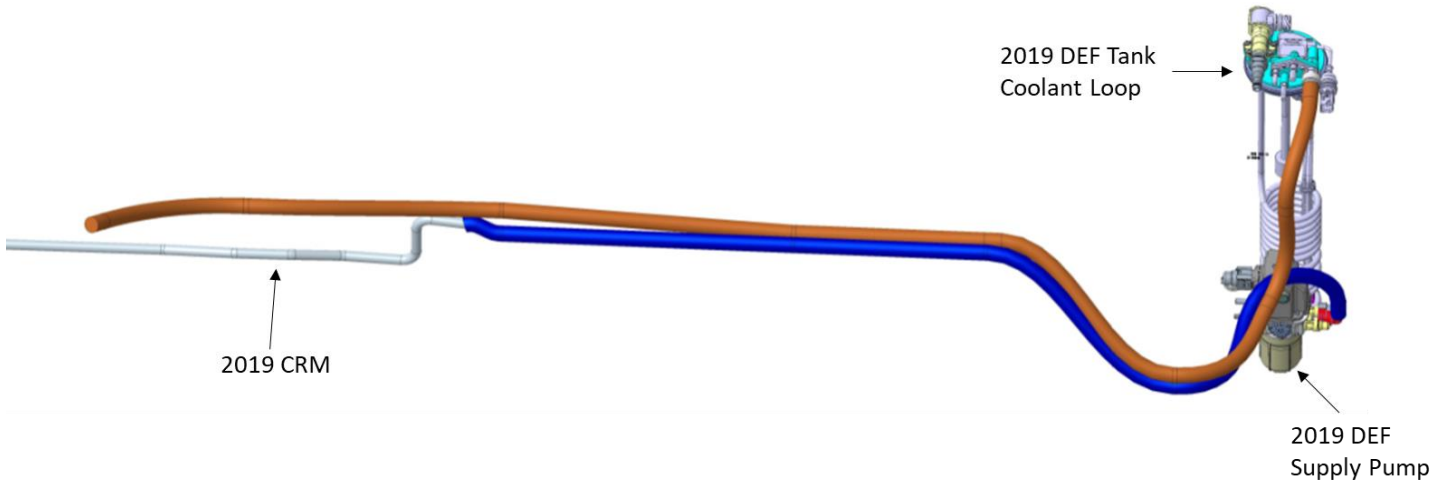

Figure 120 DEF Coolant Routing Schematic

https://truckmanualshub.com/

INSTALLATION REQUIREMENTS AND DIMENSIONS FOR DEF SYSTEM

When relocating any DEF system component, the locations must meet all guidelines described below. Failure to comply may result in non-conformance to EPA standards and engine shutdown.

General clearances, routing guidelines, and installation requirements must be followed. See section 10 of this manual for general routing guidelines and clearances. The maximum DEF hose line length is 5.5 meters (216.5").

If the DEF tank is relocated the coolant lines will need to be modified. During this process if the tank is moved forward on the chassis (closer to the engine) it is necessary to remove excess coolant lines and maintain the original routing path. If the tank is moved rearward on the chassis the additional length of cooling line required to complete the installation must be installed in a straight section of the existing coolant routing lines. This process minimizes the change in coolant flow and mitigates the risk of increased flow restriction. Changes in flow restriction are added with excessive line length and hose bends. Work with your local Kenworth dealer if you are unsure about coolant line modifications.

DEF ASSEMBLY RELOCATION - SUPPLY MODULE REQUIREMENTS

The Supply Module (or Pump) standard mounting location is on the DEF tank assembly. The pump cannot be removed from the DEF tank assembly. However, the assembly as a whole, may be relocated. Body builders should follow the location and length restrictions above. Additionally, the supply module must be mounted with the filter cap oriented downwards within +/-45º of vertical (or a 90º inverted cone as shown in **Figure 121**). The supply module should be located in a space that will minimize its vulnerability to road debris. Serviceability of the supply module filter should be considered, and adequate space for filter access and removal should be given (at least 5”).

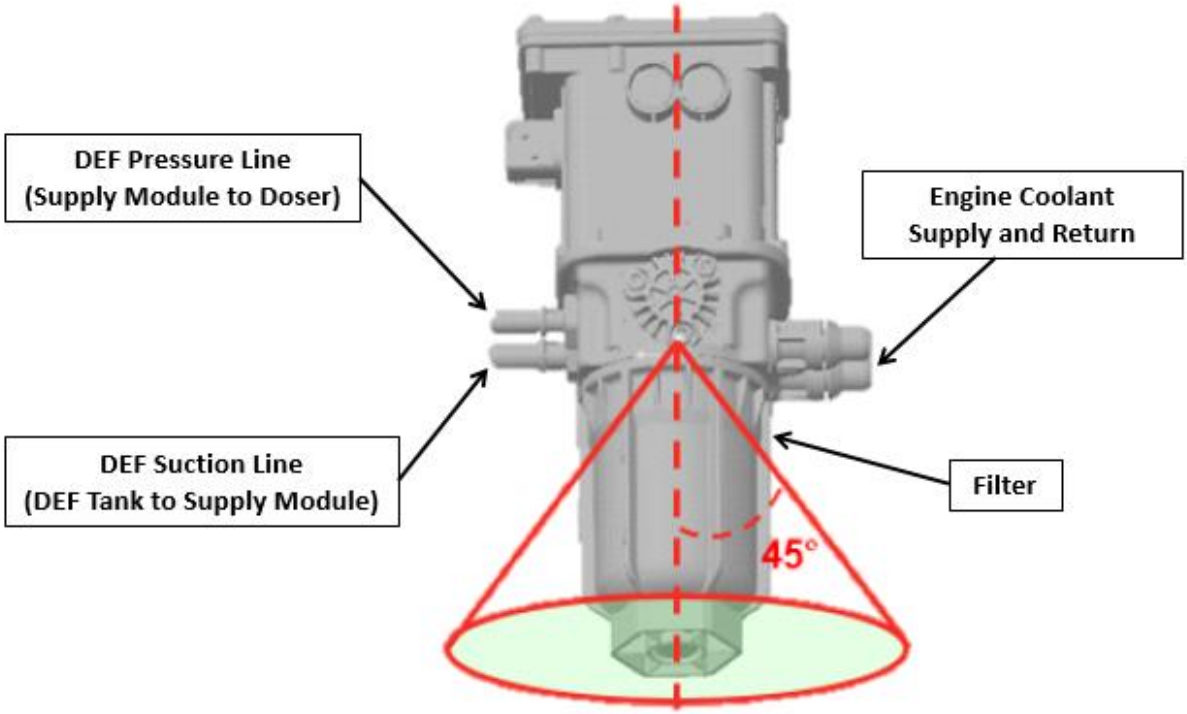

Figure 121 Supply Module Mounting Angle Limits

https://truckmanualshub.com/

ROUTING TO THE DOSING MODULE (INJECTOR)

A DEF pressure line "trap" is no longer required after EPA 2013 emissions level engines. The dosing module (injector) no longer needs to be purged and relative heights of components are no longer critical. See Figure 122 below for typical routing with RHUC exhaust and LH DEF tank shown. The figure below shows a typical coolant line routing.

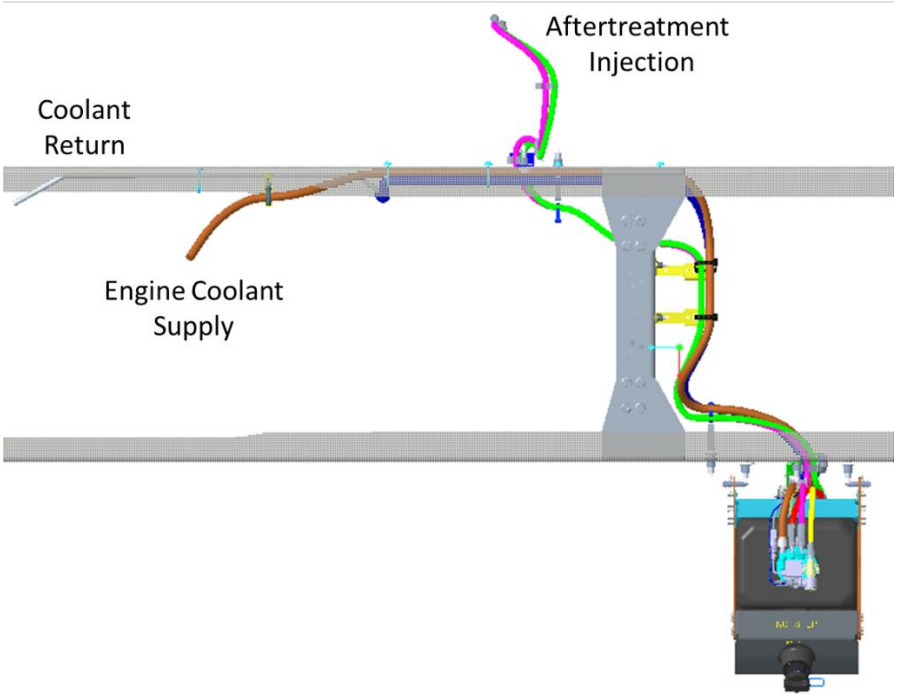

Figure 122 Routing for DEF and Coolant Lines

https://truckmanualshub.com/

SECTION 10 ROUTING

INTRODUCTION

This section specifies the general requirements for securing hoses and electrical wires to present an orderly appearance, facilitate inspection and maintenance, and prevent potential damage to these lines.

DEFINITIONS

Bundle: Two or more air, electrical, fuel, or other lines tied together to form a unitized assembly.

Clamp: A cushioned rigid or semi-rigid, anti-chafing device for containing the bundle and securing it to the frame or other structural support. Standard clamps have a black elastomer lining. High temperature clamps (e.g., those used with compressor discharge hose) have a white or red elastomer lining (most applications for these are called out in the bills of material). An assembly of two clamps fastened together to separate components is referred to as a "butterfly" clamp.

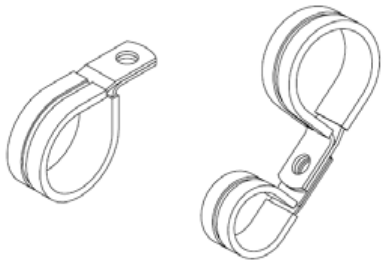

Figure 123 Clamp and Butterfly Clamp

NOTE:

The metal portion of clamps shall be stainless steel or otherwise made capable, through plating or other means, of passing a 200-hour salt spray test per ASTM B117 without rusting.

Butterfly Tie: A tough plastic (nylon or equivalent) locking dual clamp tie strap used to separate bundles or single lines, hoses, etc. These straps must be UV stable. (Tyton DCT11)

Figure 124 Butterfly Tie

https://truckmanualshub.com/

Tie Strap: A tough plastic (nylon, or equivalent) locking strap used to tie the lines in a bundle together between clamps or to otherwise secure hoses and wires as noted below. Straps must be UV stable.

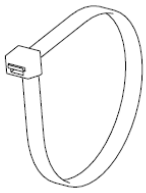

Figure 125 Tie Strap

Button Tie Strap: A tough plastic (nylon, or equivalent) locking strap used to secure lines to the frame or other structural support. Straps must be UV stable.

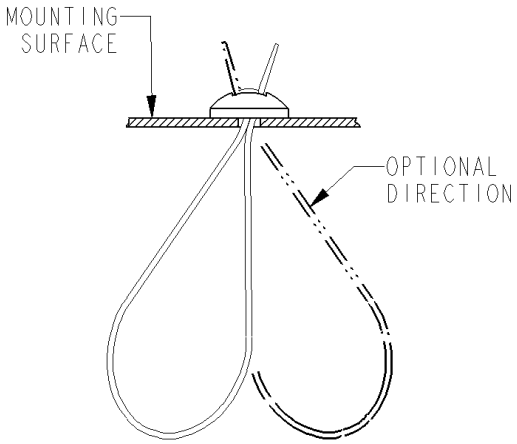

Figure 126 Button Tie Mount

Fir Tree Mount: A tough plastic mount, inserted into a bracket or other intended support structure, used for securing routed bundles via a tie strap. Mounts must be UV stable.

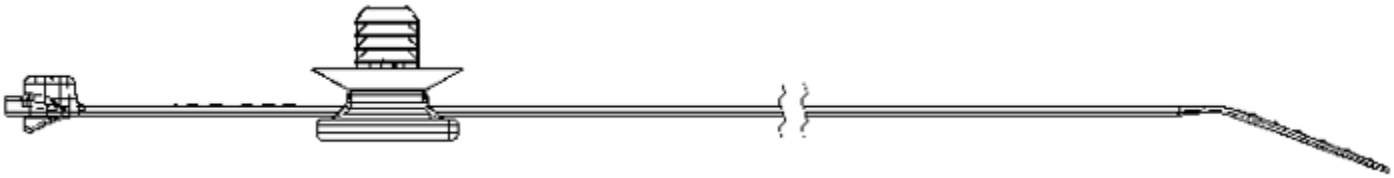

Figure 127 Fir Tree Mount

https://truckmanualshub.com/

Heavy Duty (HD) Mount: A black rigid device used for securing a tie strap to the frame or other structural support. Mounts are made of impact modified, heat stabilized UV resistant nylon capable of continuous operation between temperatures 220°F (150°) and -40°F (-40°).

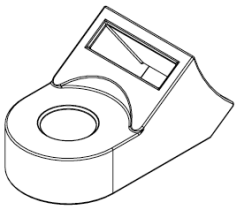

Figure 128 Heavy Duty (HD) Mount

NOTE: Heavy duty tie straps 0.50in (12.7mm) wide (Tyton T255ROHIR or similar) shall be used whenever HD mounts are specified, although 0.25in (6.4mm) tie straps may be used in some specified applications.

Excess of material: More than 3 inches of slack for every 18-inch section of hose routing, except for air conditioner hoses.

Shortness of material: Less than 1 inch of slack on an 18-inch section of hose routing.

https://truckmanualshub.com/

ROUTING REQUIREMENTS

Electrical Wiring

- Electrical ground wire terminals must be securely attached, and the complete terminal surface must contact a clean bare metal surface. See R414-558 for grounding wire connection practice. Apply electrical contact corrosion inhibitor Nyogel 759G grease (made by William F. Nye, Inc., New Bedford, MA) per R414-558.
- Do not bend wires or use tie straps within 75 mm (3 inches) of (connected) wire connectors or plugs.
- Electrical wiring must be routed so that other components do not interfere with it
- Electrical wiring must be routed away from moving components so that at least 13.0 mm (0.5 in.) of clearance exists when the component is in operation and at maximum limits of the component's travel
- Electrical wiring must be protected in the locations where they are routed
- Electrical wiring must be routed to avoid heat sources
- Electrical wiring must be secured to a crossmember when going from one frame rail to the other
- When crossing other components, electrical wiring must have a covering of convoluted tubing, PSA tape, or must be separated from the component with a standoff or butterfly clamp
- Electrical wiring must not be routed directly over a sharp edge unless separated from the edge by a clip, standoff bracket, or similar spacing feature that prevents any risk of chafing or cutting
- Alternatively, the installation of windlace applied to the edge along with PSA tape or convoluted tubing on the harness is acceptable
- Electrical wiring must be routed in a way that will not place strain on connectors.

WIRES IN BUNDLES

Electrical wires (other than the exceptions covered below) running parallel with air or coolant hose bundles, may be included in the bundle if they are isolated from the hoses with a covering of convoluted plastic tubing.

EXCEPTIONS:

Battery cables (including jump start cables) may be bundled with or tied to the charging wire harness. They shall not be bundled with or tied directly to any other components, including hoses, wires, or bundles. They shall be separated from other routed components using butterfly ties at intervals not exceeding 18 inches (356 mm). Battery strap (W84-1000) tie down shall be used without exception to secure battery cables to frame mounted or other major component (e.g., engine, transmission, etc.) mounted standoffs at intervals not exceeding 18 inches (356 mm). The (positive) battery cable shall be covered with convoluted plastic tubing from terminal to terminal.

110/220-volt wires for engine heaters, oil pan heaters, transmission oil heaters and battery pad warmers, shall not be included in any hose/wire bundle with a fuel hose. Individual heater wires not in a bundle shall be separated from other components by using butterfly clamps or butterfly ties at intervals not exceeding 18 inches (356 mm). Heater wires with a secondary covering shall be covered with convoluted tubing whether they are in bundles or not.

https://truckmanualshub.com/

WIRES CROSSING OTHER COMPONENTS

Electrical wires crossing over other components, such as lines, bolt heads, fittings, engine components lifting eyes, engine block, cylinder head, etc., close enough to rub shall be isolated with a covering of convoluted tubing and separated from the component by using butterfly clamps, butterfly ties, or plastic sheathing. 110/220-volt engine heater wiring shall be installed with butterfly ties or butterfly clamps

PIPING

Use no street elbows in air brake, water, fuel, or hydraulic systems unless specified on the piping diagram and the build instructions.

Use no elbows in the air brake system unless specified on the air piping diagram and the build instructions.

HOSES CROSSING COMPONENTS

Hoses crossing over other components close enough to rub shall be protected with a secured covering of convoluted plastic tubing (part number K344-813), another section of hose, or plastic sheathing (part number K213-1312). The usage of butterfly ties, or butterfly clamps are also recommended.

AIR COMPRESSOR DISCHARGE HOSES

Wires or hoses shall not be tied to the high temperature air compressor discharge hose. Hoses and wires may be routed across the air compressor discharge hose at a distance of 18 inches (457 mm) or greater from the compressor discharge port. In this case the crossing hoses and wires shall be "butterfly" clamped to the air compressor discharge hose and covered with convoluted tubing at the clamp point (use high temperature clamps on the compressor hose).

BUNDLES

HD mount and tie strap, or clamp shall be located at intervals not to exceed 18 inches (356 mm) along the bundle.

Regular tie straps shall be located at intervals not to exceed 7 inches (178 mm) between HD mount or clamps. Extra tie straps may be used as needed to contain the hoses and wires in the bundle.

ROUTING OF WIRES AND HOSES NEAR MOVING COMPONENTS

Wires and Hoses shall be routed away from moving components, such as fans, shackle links, drivelines, steering linkages, etc. so that there is at least 0.5 inches (12.7 mm) clearance when the component is operating at its maximum travel limits.

A minimum clearance of 1.0 inches (25.4 mm) shall be maintained between steering axle tires (and associated rotating parts) in all positions and routed components, such as hoses, oil lines, wires, pipes, etc.

https://truckmanualshub.com/

ROUTING OF WIRES AND HOSES NEAR EXHAUST SYSTEM

Table 30 Exhaust – System Clearance

Description	Minimum Clearance Shielded	Minimum Clearance Unshielded
Coolant hoses (Silicone, colored)	1″	2″
HVAC hoses, tubing, and hard lines	5″	7″
Electrical wires	6″	8″
Fuel Hoses		
within 15″ of the turbo	N/A	4″
over 15″ from the turbo	2″	3″
Fuel Tanks and Hydraulic Tanks		
Crossing Tank	N/A	2″
Parallel to Tank	N/A	2″
End of Tank	N/A	1″
Aluminum/Ceramic-coated exhaust crossing tank	N/A	1.5″
Air Hose		
Nylon	3″	10″
Wire Braid	5″	7.5″

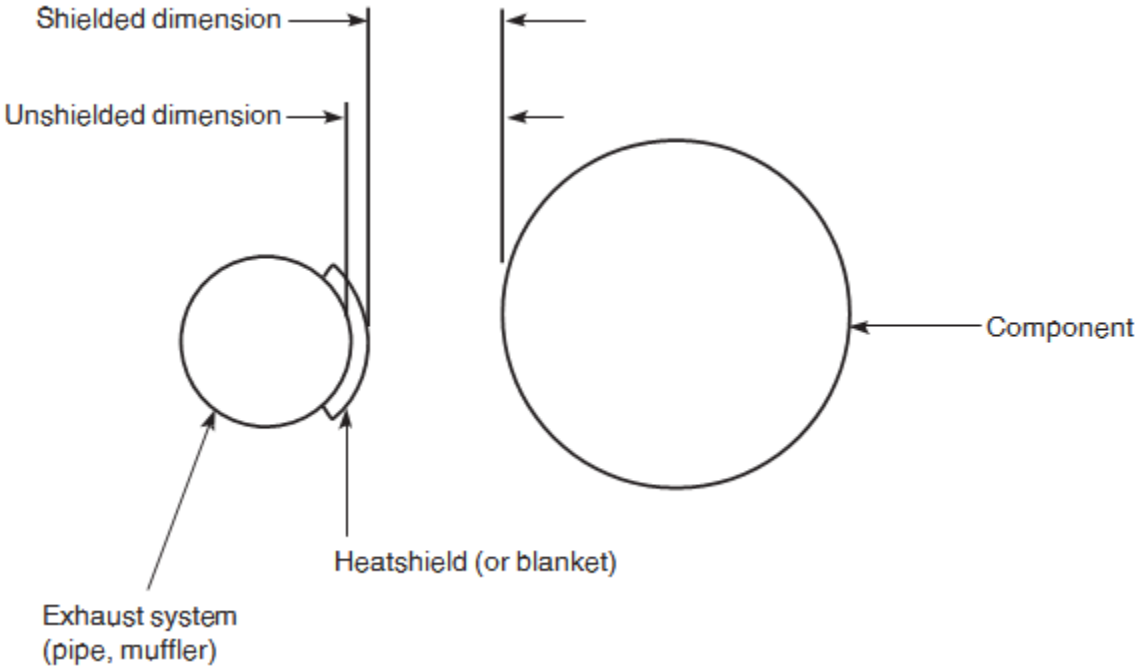

Figure 129 Definition of Measurement

https://truckmanualshub.com/

TABLE OF FIGURES

Figure 1 NMD Aero Hood 1
Figure 2 NMD Vocational Hood 1
Figure 3 Beginning portion of the Incomplete vehicle document 8
Figure 4 Locations of Information Labels - Driver's 9
Figure 5 Detail Image of figure 4 Item 1 9
Figure 6 Detailed Image of Figure 4 Item 2 (Canadian Safety Mark) 9
Figure 7 Aero SH (107.5" BBC) Isometric, Top, Front, & LH View - Overall Dimensions 17
Figure 8 Aero MH (109.5 BBC) – Overall Dimensions 18
Figure 9 VH (109.5" BBC) - With Raised Roof - Overall Dimensions 19
Figure 10 VH 24" FEPTO Extension – Overall Dimensions 20
Figure 11 Cab Dimensions 2.1m Medium Duty 21
Figure 12 Low Roof and Raised Roof Cab Height 2.1m Medium Duty 21
Figure 13 Vocational Hood BOC Window Dimensions 22
Figure 14 Cab Air Suspension 22
Figure 15 Cab Rigid Suspension 22
Figure 16 Cab Step Heights 23
Figure 17 Frame Rail Configuration Example 24
Figure 18 Front Frame Height 25
Figure 19 Rear Frame Height 25
Figure 20 Bottom of Frame to Bottom of Component 29
Figure 21 Frame Space Driver Side 30
Figure 22 Frame Space Passenger 30
Figure 23 Dimension "A" on SH, LH Rail 31
Figure 24 Dimension "A" on SH, LH Batter/Toolbox 32
Figure 25 Dimension "A" on SH – RH 33
Figure 26 Dimension "A" for LHUC Fuel Tank 34
Figure 27 Dimension "A" on MH with BOC DEF, and UC 80 Gal 35
Figure 28 Dimension "A", RHUC Fuel 36
Figure 29 Dimension "B" Labeled as "Minimum Forward Dimension" 37
Figure 30 Small DEF Tank Dimensions 39
Figure 31 Large DEF Tank Dimensions 40
Figure 32 Fuel Tank Dimensions 41
Figure 33 Extended Cab Access Step Dimensions 42
Figure 34 In-Frame Fuel Tank – 45 Gallon – With Dimensions 43
Figure 35 In-Frame Fuel Tank - 70 Gallon – With Dimensions 44
Figure 36 Exhaust RH SOC - DPF/SCR RH UNDER CAB 45
Figure 37 EXHAUST RH BOC - DPF/SCR RH UNDER CAB 46
Figure 38 EXHAUST RH HORIZONTAL - DPF/SCR RH UNDER CAB (STANDARD) 47
Figure 39 EXHAUST RH HORIZONTAL - DPF/SCR RH UNDER CAB (W/ RH DEF) 48
Figure 40 EXHAUST RH HORIZONTAL - DPF/SCR RH UNDER CAB (W/ FDA) 49
Figure 41 EXHAUST RH HORIZONTAL - DPF/SCR RH UNDER FRAME 50

https://truckmanualshub.com/

Figure 42 EXHAUST RH SOC - NATURAL GAS CATALYST RH UNDER CAB 51
Figure 43 EXHAUST RH BOC - NATURAL GAS CATALYST RH UNDER CAB 52
Figure 44 EXHAUST RH HORIZONTAL - NATURAL GAS CATALYST RH UNDER FRAME (L9N) ... 53
Figure 45 Minimum Clearance between Top of Rear Tires and Body Structure Overhang 55
Figure 46 Minimum Back of Cab Clearance 55
Figure 47 Spacer Between Frame Sill and Body Rail – Rubber or Plastic 56
Figure 48 Mounting Brackets with Spring 57
Figure 49 Mounting Brackets with Rubber Spacer 57
Figure 50 Frame Hole Location Guidelines for Frame Rail and Bracket 58
Figure 51 Crossmember Gusset Hole Patterns 58
Figure 52 Frame Rail Flange Drilling Prohibited 59
Figure 53 Acceptable U-Bolt Mounting with Wood and Fabricated Spacers 60
Figure 54 Clearance Space for Air Lines and Cables 61
Figure 55 Fishplate Bracket at Rear End of Body 62
Figure 56 Wheelbase Customization 64
Figure 57 Crossmember Spacing Requirements 65
Figure 58 CAN Bus System Overview 86
Figure 59 Overview Diagram of Electrical Component Locations 87
Figure 60 Overview Diagram of Electrical Harness Locations 88
Figure 61 RP1226 Connector 89
Figure 62 RP1226 Visual Pinout 90
Figure 63 RP 1226 Connector 90
Figure 64 RP1226 Mating Connector 90
Figure 65 RP1226 to 9 Pin Jumper 91
Figure 66 Main Chassis harness General Routing – Isometric View 92
Figure 67 Main Chassis Harness General Routing – Side View 92
Figure 68 Main Chassis Harness General Routing – Front Partial View 93
Figure 69 Detail View of Engine Compartment Body Connectors 93
Figure 70 Main Chassis Harness General Routing – Rear Partial View 94
Figure 71 Detail View of BOC/BOS and EOF Body Connectors 94
Figure 72 P198 Connector 95
Figure 73 RP170 Connector 95
Figure 74 Warning Image for PTO Function 96
Figure 75 Engine Harness 12 Pin Connector and Pinout Details 97
Figure 76 PX-7 - 12-Pin Connection Location 98
Figure 77 PX-9 – 12-pin Connection Location 99
Figure 78 L9N – 12-pin Connection Location 99
Figure 79 Engine Side Power Distribution Center 100
Figure 80 Engine Side Fuse Box 101
Figure 81 Dash Side Power Distribution Center (PDC) 102
Figure 82 Dash Side Fuse Box 103
Figure 83 Chassis Module Location (Left) – Secondary Chassis Module location (Right) 104
Figure 84 Top View of Chassis Module Locations 105

https://truckmanualshub.com/

Figure 85 VECU and MUX Solenoid Bank Overview 108
Figure 86 Solenoid Bank Overview Layout....109
Figure 87 MUX Solenoid Bank LITE 109
Figure 88 MUX Solenoid Bank....109
Figure 89 MUX Solenoid Bank LITE Frame Mounting Location.... 110
Figure 90 MUX Solenoid Bank Frame Mounting Location 110
Figure 91 Switch Overview Layout.... 111
Figure 92 Spare Switch Overview Layout.... 111
Figure 93 Switch Relearn Process 112
Figure 94 DAVIE Switch Relearn Screen View 113
Figure 95 Dash Layout....113
Figure 96 Grounding Buss Bar Illustration 114
Figure 97 Grounding Point - Cab Interior Behind Driver's Side Kick Panel 114
Figure 98 Grounding Point - Cab Exterior LH Side of Firewall.... 114
Figure 99 Spare Circuit Connector and Pinout Details....115
Figure 100 Spare Circuit Location on Power Distribution Center (Dash-Side, P001)....116
Figure 101 Diagram of Spare Circuit A and B (P096)....117
Figure 102 Diagram of Spare Circuits C, D and E 118
Figure 103 Junction Box BOC or EOF 119
Figure 104 6-Way Taillight Connector Pinout....120
Figure 105 Optional J168 Lighting Connector....120
Figure 106 Lift Axle Diagram 121
Figure 107 Gauge Removal and Installation 122
Figure 108 Gauges on the 7" Digital Display 122
Figure 109 Body Builder Telltale Positions....123
Figure 110 Body Builder Telltale Connections 123
Figure 111 PTO Location Examples....125
Figure 112 PTO mounting locations for Allison Transmission....126
Figure 113 PACCAR 8-Speed Automatic Transmission PTO Locations....126
Figure 114 FEPTO 24" Full Profile Frame Extension 127
Figure 115 Hydraulic Clutch Actuator 135
Figure 116 REPTO Flywheel Housing....135
Figure 117 RP1226 Location 136
Figure 118 Connectors for PTO controls 136
Figure 119 DEF System Schematic 138
Figure 120 DEF Coolant Routing Schematic 138
Figure 121 Supply Module Mounting Angle Limits 139
Figure 122 Routing for DEF and Coolant Lines 140
Figure 123 Clamp and Butterfly Clamp 141
Figure 124 Butterfly Tie 141
Figure 125 Tie Strap....142
Figure 126 Button Tie Mount....142
Figure 127 Fir Tree Mount....142

https://truckmanualshub.com/

Figure 128 Heavy Duty (HD) Mount.....143
Figure 129 Definition of Measurement.....146

https://truckmanualshub.com/

TABLE OF TABLES

Table 1 Abbreviations Used 15
Table 2 Cab Step Heights 23
Table 3 Front Frame Ride Heights “A” 26
Table 4 Single Drive Rear Suspension Height “C” 27
Table 5 Tandem Rear Suspension Height “C” 28
Table 6 Bottom of Frame to Bottom of Component Dimension “E” 29
Table 7 LH Under Cab DEF Dimension "A" 31
Table 8 Under Cab Battery/Toolbox Dimension “A” 32
Table 9 Under Cab DPF/SCR Dimension “A” 33
Table 10 LH Rail Components 34
Table 11 Dimension “A” BOC DEF, UC fuel 35
Table 12 RH Rail Components 36
Table 13 Rear Suspension Dimension “B” 37
Table 14 Dimensions of Frame Mounted Components 38
Table 15 45 Gallon In-Frame Fuel Tank Dimensions 43
Table 16 In-Frame Fuel Tank -70 Gallon -With Dimensions 44
Table 17 Single Frame Rails 54
Table 18 Inserted Frame Rails 54
Table 19 Double Inserted Frame Rails 54
Table 20 Customary Grade 8 UNF or UNC 66
Table 21 U.S. Customary – Grade 8 Metric Class 10.9 66
Table 22 Electrical Wire Circuit Code Tables 85
Table 23 RP1226 to 9 Pin Jumpers 91
Table 24 Engine Harness 12 Pin Connector and Pinout Details 98
Table 25 Primary Chassis Module Fuse Groups 106
Table 26 Secondary Chassis Module Fuse Groups 106
Table 27 VECU Fuse Groups 107
Table 28 Truck Lift Axle Logic 121
Table 29 DEF Fuel Ratios 137
Table 30 Exhaust – System Clearance 146