https://truckmanualshub.com/

BEB14E1-01

KOMATSU

SHOP MANUAL

FG20/25/30-14
FG20H/25H/30H-14
FD20/25/30-14
FD20H/25H/30H-14
FD20J/25J/30J-14

KOMATSU FORKLIFT

https://truckmanualshub.com/

https://truckmanualshub.com/

SHOP MANUAL

FG20/25/30-14
FG20H/25H/30H-14
FD20/25/30-14
FD20H/25H/30H-14
FD20J/25J/30J-14

MACHINE MODEL	SERIAL NO.	ENGINE
FG20/25/30-14	500001 and up	H20-II
FG20H/25H/30H-14	500001 and up	H25
FD20/25/30-14	500001 and up	4D94E
FD20H/25H/30H-14	500001 and up	4D98E
FD20J/25J/30J-14	500001 and up	C240

https://truckmanualshub.com/

PRECAUTIONS WHEN PERFORMING THE SERVICE WORK

Always pay attention to "Safety" before starting any work — this is important.
Never attempt any work where danger to yourself or to other persons.
Whenever work requiring safety precautions are described in this manual, a flag mark ⚠ inserted, always make double sure that safety measures are taken.
Other unmarked work, should always be performed after studying and using your common sense to prevent accidents.

DESCRIPTION OF THE SYMBOLS

The symbols described below are used in this manual for convenience and better understanding.

Symbol	Item	Description
⚠	**Safety**	Special safety precautions are needed to perform the work.
★	**Note**	Special technical precautions are needed to perform the work.
kgm	**Tightening torque**	Fastening parts that require specified tightening force when assembling.
kg	**Weight**	Weight of parts or systems
	Coat	Places to be coated with adhesives, etc. when assembling

https://truckmanualshub.com/

SECTION INDEX

00. FOREWORD

01. GENERAL AND SPECIFICATIONS

10. TESTING AND ADJUSTING

20. REMOVAL AND INSTALLATION

30. DISASSEMBLY AND ASSEMBLY

40. MAINTENANCE STANDARD

50. STRUCTURE AND FUNCTION

60. TROUBLESHOOTING

70. CONVERSION TABLE

https://truckmanualshub.com/

https://truckmanualshub.com/

01. GENERAL AND SPECIFICATIONS

Specifications 01- 2
Periodic replacement of consumable parts 01- 9
Safety items for maintenance 01-10
Standard tightening torque 01-18
Standard tightening torque for pipe joint 01-19

https://truckmanualshub.com/

SPECIFICATIONS

Unit: mm

Item	Symbol	Model 2.0 t	Model 2.5 t	Model 3.0 t
Overall length	A	3,450	3,645	3,775
Overall width	B	1,150		1,255
Overall height	C	2,070		2,090
Overall height with mast extended	D	4,050		
Maximum lifting height	E	3,000		
Mast lowered height	F	1,995		2,015
Free lift height	G	155		
Fork length	H	920	1,070	
Front overhang	I	450	455	480
Wheelbase	J	1,650		
Fork spread	K	970		
Front wheel tread	L	965		1,025
Rear wheel tread	M	975		980
Min. turning radius	N	2,190	2,260	2,370
Front tire size	-	7.00-12-12PR(I)		28x9-15-12
Rear tire size	-	6.00-9-10PR(I)		6.50-10-10

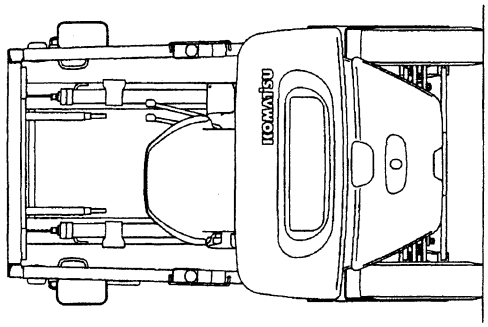

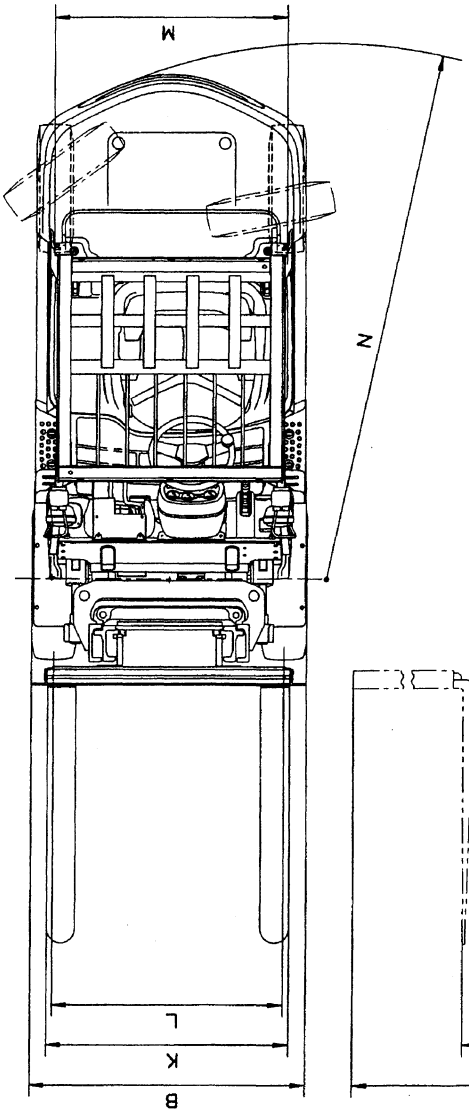

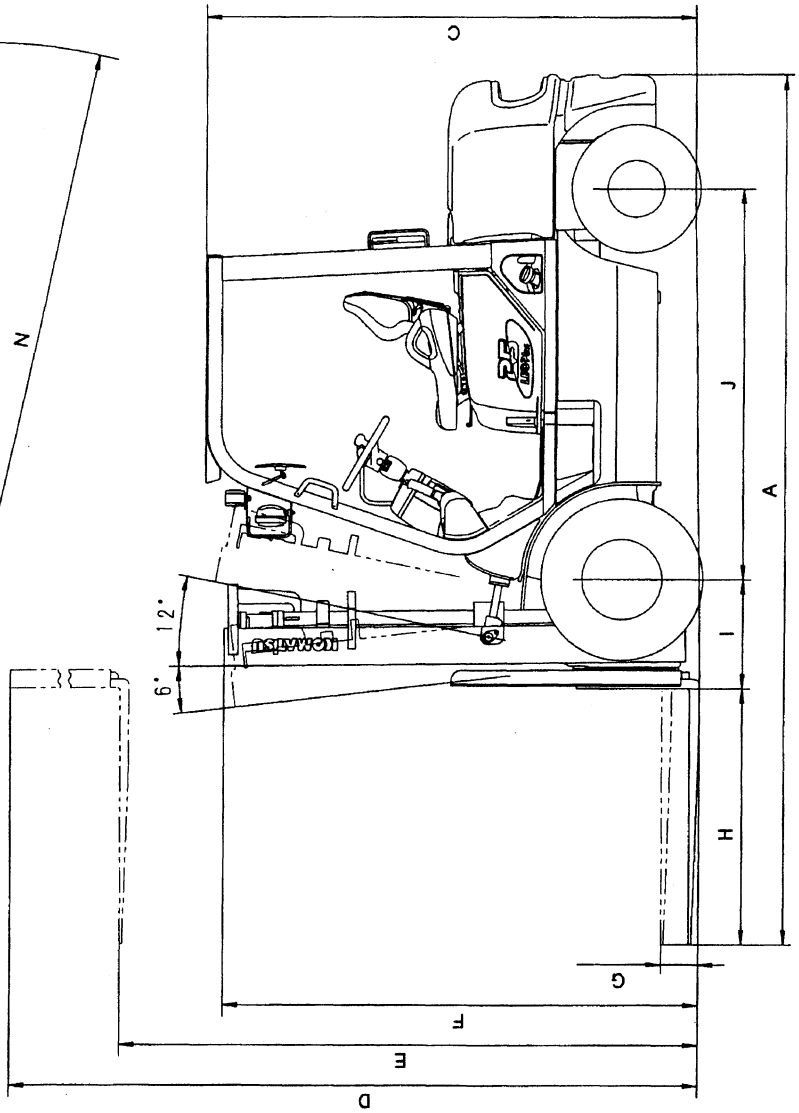

NJZ00352

https://truckmanualshub.com/

2.0-TON GASOLINE TRUCK

Specifications of current BX are omitted since they are same as m/c.

No.	Classification	Item				Unit	Komatsu BX m/c FG20-14(STD)	Komatsu BX m/c FG20H-14(Hi-power)
1	Performance	Max. load				kN{kgf}	19.6{2,000}	19.6{2,000}
2		Center of load				mm	500	500
3		Maximum lifting height				mm	3,000	3,000
4		Free lift height				mm	155	155
5		Slant angle of mast (Forward/Reverse)				deg.	6/12	6/12
6		Fork	Lifting speed	With load		mm/s	520	600
7				With no load		mm/s	580	650
8			Lowering speed	With no load		mm/s	500	500
9		Travel speed (with no load) Clutch/Torque converter		Forward	1st gear	km/h	8.5/18.5	–/18.5
10					2nd gear	km/h	18.0/–	–/–
11				Reverse	1st gear	km/h	8.5/17.5	–/17.5
12					2nd gear	km/h	18.0/–	–/–
13		Traction force with load (Clutch/Torque converter)				kN{kgf}	14.4{1,470}/13.0{1,330}	18.2{1,860}/17.2{1,760}
14		Gradeability with load (Clutch/Torque converter)				deg.	14.2/14.8	18.4/19.8
15		Min. turning radius				mm	2,190	2,190
16		Width of theoretical minimum aisle for rightangle turn				mm	2,195	2,195
17		Width of theoretical minimum aisle for rightangle stacking				mm	3,950	3,950
18	Dimensions/Mass	Fork size (Length)				mm	920	920
19		Overhang of fork				mm	460	460
20		Overall length (To front end of fork)				mm	2,530	2,530
21		Overall width				mm	1,150	1,150
22		Overall height		Top of head guard		mm	2,070	2,070
23				Top of mast		mm	1,995	1,995
24		Fork spread				mm	1,020	1,020
25		Wheelbase				mm	1,650	1,650
26		Tread		Front wheel		mm	965	965
27				Rear wheel		mm	975{Current 960}	975{Current 960}
28		Front tire				—	7.00-12-12PR	7.00-12-12PR
29		Rear tire				—	6.00-9-10PR	6.00-9-10PR
30		Minimum ground clearance (Under mast)				mm	115	115
31		Mass of truck (Clutch/Torque converter)				kg	3,220	3,220
32		Head clearance				mm	1,040	1,040
33	Engine	Manufacturer				—	Nissan	Nissan
34		Name				—	H20-II	H25
35		Number of cylinder-total displacement				cc	4-1,982	4-2,472
36		Rated output/speed				kW{HP}/rpm	36{43.5}2,450	44.5{60}2,400
37		Max. torque/speed				Nm{kgf·m}/rpm	157{16.0}/1,600	191{19.5}/1,600
38		Type of combustion				—	Wedge type	Wedge type
39	Other items	Forward/Reverse stability ratio				—	1.46	1.46
40		Lifting height which does not lower load				mm	4,000	4,000
41		Noise at operator's seat (Hi)				db(A)	80	80
42		Vibration of steering wheel				—	S – A	S – A
43		Fuel tank capacity				ℓ	55	55
44		Step		Type		—	Open step	Open step
45				Height		mm	440	440
46		Floor height				mm	650	650

https://truckmanualshub.com/

2.5-TON GASOLINE TRUCK

Specifications of current BX are omitted since they are same as m/c.

No.	Classification	Item				Unit	Komatsu BX m/c FG25-14(STD)	Komatsu BX m/c FG25H-14(Hi-power)
1	Performance	Max. load				kN{kgf}	24.5{2,500}	24.5{2,500}
2		Center of load				mm	500	500
3		Maximum lifting height				mm	3,000	3,000
4		Free lift height				mm	155	155
5		Slant angle of mast (Forward/Reverse)				deg.	6/12	6/12
6		Fork	Lifting speed	With load		mm/s	520	600
7				With no load		mm/s	580	650
8			Lowering speed	With no load		mm/s	500	500
9		Travel speed (with no load) Clutch/Torque converter		Forward	1st gear	km/h	–/18.5	8.5/18.5
10					2nd gear	km/h	–/–	18.0/–
11				Reverse	1st gear	km/h	–/17.5	8.5/17.5
12					2nd gear	km/h	–/–	18.0/–
13		Traction force with load (Clutch/Torque converter)				kN{kgf}	14.4{1,470}/13.0{1,330}	18.2{1,860}/17.2{1,760}
14		Gradeability with load (Clutch/Torque converter)				deg.	13.1/12.5	15.5/16.7
15		Min. turning radius				mm	2,260	2,260
16		Width of theoretical minimum aisle for rightangle turn				mm	2,230	2,230
17		Width of theoretical minimum aisle for rightangle stacking				mm	4,025	4,025
18	Dimensions/Mass	Fork size (Length)				mm	1,070	1,070
19		Overhang of fork				mm	465	465
20		Overall length (To front end of fork)				mm	2,595	2,595
21		Overall width				mm	1,150	1,150
22		Overall height		Top of head guard		mm	2,070	2,070
23				Top of mast		mm	1,995	1,995
24		Fork spread				mm	1,020	1,020
25		Wheelbase				mm	1,650	1,650
26		Tread		Front wheel		mm	965	965
27				Rear wheel		mm	975{Current 960}	975{Current 960}
28		Front tire				—	7.00-12-12PR	7.00-12-12PR
29		Rear tire				—	6.00-9-10PR	6.00-9-10PR
30		Minimum ground clearance (Under mast)				mm	115	115
31		Mass of truck (Clutch/Torque converter)				kg	3,610	3,610
32		Head clearance				mm	1,040	1,040
33	Engine	Manufacturer				—	Nissan	Nissan
34		Name				—	H20-II	H25
35		Number of cylinder-total displacement				cc	4-1,982	4-2,472
36		Rated output/speed				kW{HP}/rpm	36{43.5}2,450	44.5{60}2,400
37		Max. torque/speed				Nm{kgf·m}/rpm	157{16.0}/1,600	191{19.5}/1,600
38		Type of combustion				—	Wedge type	Wedge type
39	Other items	Forward/Reverse stability ratio				—	1.47	1.47
40		Lifting height which does not lower load				mm	4,000	4,000
41		Noise at operator's seat (Hi)				db(A)	80	80
42		Vibration of steering wheel				—	S – A	S – A
43		Fuel tank capacity				ℓ	55	55
44		Step		Type		—	Open step	Open step
45				Height		mm	440	440
46		Floor height				mm	650	650

https://truckmanualshub.com/

3.0-TON GASOLINE TRUCK

No.	Classification	Item				Unit	Komatsu BX m/c FG30-14	Komatsu BX m/c FG30H-14
1	Performance	Max. load				kN{kgf}	22.1{2,250}	22.1{2,250}
2		Center of load				mm	500	500
3		Maximum lifting height				mm	3,000	3,000
4		Free lift height				mm	155	155
5		Slant angle of mast (Forward/Reverse)				deg.	6/12	6/12
6		Fork	Lifting speed	With load		mm/s	430	490
7				With no load		mm/s	480	540
8			Lowering speed	With no load		mm/s	450	450
9		Travel speed (with no load) Clutch/Torque converter		Forward	1st gear	km/h	9.0/19.5	9.0/19.5
10					2nd gear	km/h	19.0/–	19.0/–
11				Reverse	1st gear	km/h	9.0/18.5	9.0/18.5
12					2nd gear	km/h	19.0/–	19.0/–
13		Traction force with load (Clutch/Torque converter)				kN{kgf}	13.3{1,360}/17.2{1,750}	16.9{1,720}/20.6{2,100}
14		Gradeability with load (Clutch/Torque converter)				deg.	9.0/9.6	11.8/12.8
15		Min. turning radius				mm	2,370	2,370
16		Width of theoretical minimum aisle for rightangle turn				mm	2,325	2,325
17		Width of theoretical minimum aisle for rightangle stacking				mm	4,160	4,160
18	Dimensions/Mass	Fork size (Length)				mm	1,070	1,070
19		Overhang of fork				mm	490	490
20		Overall length (To front end of fork)				mm	2,705	2,705
21		Overall width				mm	1,255	1,255
22		Overall height		Top of head guard		mm	2,090	2,090
23				Top of mast		mm	2,015	2,015
24		Fork spread				mm	1,060	1,060
25		Wheelbase				mm	1,650	1,650
26		Tread		Front wheel		mm	1,025	1,025
27				Rear wheel		mm	980{Current 965}	980{Current 965}
28		Front tire				—	28x9-15-12PR	28x9-15-12PR
29		Rear tire				—	6.50-10-10PR	6.50-10-10PR
30		Minimum ground clearance (Under mast)				mm	135	135
31		Mass of truck (Clutch/Torque converter)				kg	4,210	4,210
32		Head clearance				mm	1,040	1,040
33	Engine	Manufacturer				—	Nissan	Nissan
34		Name				—	H20-II	H25
35		Number of cylinder-total displacement				cc	4-1,982	4-2,472
36		Rated output/speed				kW{HP}/rpm	34.6{47}2,450	42.7{58}2,400
37		Max. torque/speed				Nm{kgf·m}/rpm	152{15.5}/1,600	186{19}/1,600
38		Type of combustion				—	Wedge type	Wedge type
39	Other items	Forward/Reverse stability ratio				—	1.48	1.48
40		Lifting height which does not lower load				mm	4,000	4,000
41		Noise at operator's seat (Hi)				db(A)	80	80
42		Vibration of steering wheel				—	S – A	S – A
43		Fuel tank capacity				ℓ	55	55
44		Step		Type		—	Open step	Open step
45				Height		mm	460	460
46		Floor height				mm	670	670

https://truckmanualshub.com/

2.0-TON DIESEL TRUCK

Specifications of current BX are omitted since they are same as m/c.

No.	Classification	Item				Unit	Komatsu BX m/c FD20-14(STD)	FD20H-14(Hi-power)	FD20J-14
1	Performance	Max. load				kN{kgf}	19.6{2,000}	19.6{2,000}	19.6{2,000}
2		Center of load				mm	500	500	500
3		Maximum lifting height				mm	3,000	3,000	3,000
4		Free lift height				mm	155	155	155
5		Slant angle of mast (Forward/Reverse)				deg.	6/12	6/12	6/12
6		Fork	Lifting speed	With load		mm/s	620	660	500
7				With no load		mm/s	650	700	520
8			Lowering speed	With no load		mm/s	500	500	500
9		Travel speed (with no load) Clutch/Torque converter		Forward	1st gear	km/h	8.5/18.5	8.5/18.5	8.5/18.5
10					2nd gear	km/h	18.0/–	18.5/–	18.0/–
11				Reverse	1st gear	km/h	8.5/17.5	8.5/17.5	8.5/17.5
12					2nd gear	km/h	18.0/–	18.0/–	18.0/–
13		Traction force with load (Clutch/Torque converter)				kN{kgf}	17.8{1,820}/17.2{1,760}	20.0{2,130}/21.6{2,200}	17.8{1,820}/12.3{1,250}
14		Gradeability with load (Clutch/Torque converter)				deg.	17.6/19.7	21.1/24.5	17.6/19.7
15		Min. turning radius				mm	2,190	2,190	2,190
16		Width of theoretical minimum aisle for rightangle turn				mm	2,195	2,195	2,195
17		Width of theoretical minimum aisle for rightangle stacking				mm	3,950	3,950	3,950
18	Dimensions/Mass	Fork size (Length)				mm	920	920	920
19		Overhang of fork				mm	460	460	460
20		Overall length (To front end of fork)				mm	2,530	2,530	2,530
21		Overall width				mm	1,150	1,150	1,150
22		Overall height		Top of head guard		mm	2,070	2,070	2,070
23				Top of mast		mm	1,995	1,995	1,995
24		Fork spread				mm	1,020	1,020	1,020
25		Wheelbase				mm	1,650	1,650	1,650
26		Tread		Front wheel		mm	965	965	965
27				Rear wheel		mm	975{Current 960}	975{Current 960}	975{Current 960}
28		Front tire				—	7.00-12-12PR	7.00-12-12PR	7.00-12-12PR
29		Rear tire				—	6.00-9-10PR	6.00-9-10PR	6.00-9-10PR
30		Minimum ground clearance (Under mast)				mm	115	115	115
31		Mass of truck (Clutch/Torque converter)				kg	3,330	3,340	3,330
32		Head clearance				mm	1,040	1,040	1,040
33	Engine	Manufacturer				—	Komatsu	Komatsu	Isuzu
34		Name				—	4D94E	4D98E	C240
35		Number of cylinder-total displacement				cc	4-2,775	4-3,318	4-2,369
36		Rated output/speed				kW{HP}/rpm	48{65}2,450	55{74}2,400	36{48.5}2,450
37		Max. torque/speed				Nm{kgf·m}/rpm	191{19.5}/1,800	225{22.9}/1,700	142{14.5}/2,000
38		Type of combustion				—	Whirl-chamber type	Whirl-chamber type	Whirl-chamber type
39	Other items	Forward/Reverse stability ratio				—	1.51	1.51	1.51
40		Lifting height which does not lower load				mm	4,000	4,000	4,000
41		Noise at operator's seat (Hi)				db(A)	81	84	81
42		Vibration of steering wheel				—	S – A	S – A	S – A
43		Fuel tank capacity				ℓ	55	55	55
44		Step		Type		—	Open step	Open step	Open step
45				Height		mm	440	440	440
46		Floor height				mm	650	650	650

https://truckmanualshub.com/

2.5-TON DIESEL TRUCK

Specifications of current BX are omitted since they are same as m/c.

No.	Classification	Item				Unit	Komatsu BX m/c FD25-14(STD)	FD25H-14(Hi-power)	FD25J-14
1	Performance	Max. load				kN{kgf}	24.5{2,500}	24.5{2,500}	24.5{2,500}
2		Center of load				mm	500	500	500
3		Maximum lifting height				mm	3,000	3,000	3,000
4		Free lift height				mm	155	155	155
5		Slant angle of mast (Forward/Reverse)				deg.	6/12	6/12	6/12
6		Fork	Lifting speed	With load		mm/s	620	660	500
7				With no load		mm/s	650	700	520
8			Lowering speed	With no load		mm/s	500	500	500
9		Travel speed (with no load) Clutch/Torque converter		Forward	1st gear	km/h	8.5/18.5	8.5/18.5	8.5/18.5
10					2nd gear	km/h	18.0/–	18.5/–	18.0/–
11				Reverse	1st gear	km/h	8.5/17.5	8.5/17.5	8.5/17.5
12					2nd gear	km/h	18.0/–	18.0/–	18.0/–
13		Traction force with load (Clutch/Torque converter)				kN{kgf}	17.8{1,820}/17.5{1,790}	20.9{2,130}/21.6{2,200}	17.8{1,820}/12.3{1,250}
14		Gradeability with load (Clutch/Torque converter)				deg.	14.9/16.7	17.7/20.8	14.9/16.7
15		Min. turning radius				mm	2,260	2,260	2,260
16		Width of theoretical minimum aisle for rightangle turn				mm	2,230	2,230	2,230
17		Width of theoretical minimum aisle for rightangle stacking				mm	4,025	4,025	4,025
18	Dimensions/Mass	Fork size (Length)				mm	1,070	1,070	1,070
19		Overhang of fork				mm	465	465	465
20		Overall length (To front end of fork)				mm	2,595	2,595	2,595
21		Overall width				mm	1,150	1,150	1,150
22		Overall height		Top of head guard		mm	2,070	2,070	2,070
23				Top of mast		mm	1,995	1,995	1,995
24		Fork spread				mm	1,020	1,020	1,020
25		Wheelbase				mm	1,650	1,650	1,650
26		Tread		Front wheel		mm	965	965	965
27				Rear wheel		mm	975{Current 960}	975{Current 960}	975{Current 960}
28		Front tire				—	7.00-12-12PR	7.00-12-12PR	7.00-12-12PR
29		Rear tire				—	6.00-9-10PR	6.00-9-10PR	6.00-9-10PR
30		Minimum ground clearance (Under mast)				mm	115	115	115
31		Mass of truck (Clutch/Torque converter)				kg	3,720	3,720	3,720
32		Head clearance				mm	1,040	1,040	1,040
33	Engine	Manufacturer				—	Komatsu	Komatsu	Isuzu
34		Name				—	4D94E	4D98E	C240
35		Number of cylinder-total displacement				cc	4-2,775	4-3,059	4-2,369
36		Rated output/speed				kW{HP}/rpm	48{65}2,450	55{74}2,400	36{48.5}2,450
37		Max. torque/speed				Nm{kgf·m}/rpm	191{19.5}/1,800	225{22.9}/1,700	142{14.5}/2,000
38		Type of combustion				—	Whirl-chamber type	Whirl-chamber type	Whirl-chamber type
39	Other items	Forward/Reverse stability ratio				—	1.51	1.51	1.51
40		Lifting height which does not lower load				mm	4,000	4,000	4,000
41		Noise at operator's seat (Hi)				db(A)	81	84	81
42		Vibration of steering wheel				—	S – A	S – A	S – A
43		Fuel tank capacity				ℓ	55	55	55
44		Step		Type		—	Open step	Open step	Open step
45				Height		mm	440	440	440
46		Floor height				mm	650	650	650

https://truckmanualshub.com/

3.0-TON DIESEL TRUCK

Specifications of current BX are omitted since they are same as m/c.

No.	Classification	Item			Unit	Komatsu BX m/c FD30-14(STD)	FD30H-14(Hi-power)	FD30J-14
1	Performance	Max. load			kN{kgf}	29.4{3,000}	29.4{3,000}	29.4{3,000}
2		Center of load			mm	500	500	500
3		Maximum lifting height			mm	3,000	3,000	3,000
4		Free lift height			mm	155	155	155
5		Slant angle of mast (Forward/Reverse)			deg.	6/12	6/12	6/12
6		Fork	Lifting speed	With load	mm/s	500	540	410
7				With no load	mm/s	540	580	430
8			Lowering speed	With no load	mm/s	450	450	450
9		Travel speed (with no load) Clutch/Torque converter	Forward	1st gear	km/h	9.0/19.5	9.0/19.5	9.0/19.5
10				2nd gear	km/h	19.0/–	19.5/–	19.0/–
11			Reverse	1st gear	km/h	9.0/18.5	9.0/18.5	9.0/18.5
12				2nd gear	km/h	19.0/–	19.5/–	19.0/–
13		Traction force with load (Clutch/Torque converter)			kN{kgf}	16.5{1,680}/16.0{1,630}	19.4{1,980}/19.7{2,010}	16.5{1,680}/11.1{1,130}
14		Gradeability with load (Clutch/Torque converter)			deg.	11.4/12.9	13.5/16.0	11.4/12.9
15		Min. turning radius			mm	2,370	2,370	2,370
16		Width of theoretical minimum aisle for rightangle turn			mm	2,325	2,325	2,325
17		Width of theoretical minimum aisle for rightangle stacking			mm	4,160	4,160	4,160
18	Dimensions/Mass	Fork size (Length)			mm	1,070	1,070	1,070
19		Overhang of fork			mm	490	490	490
20		Overall length (To front end of fork)			mm	2,705	2,705	2,705
21		Overall width			mm	1,255	1,255	1,255
22		Overall height	Top of head guard		mm	2,090	2,090	2,090
23			Top of mast		mm	2,015	2,015	2,015
24		Fork spread			mm	1,060	1,060	1,060
25		Wheelbase			mm	1,650	1,650	1,650
26		Tread	Front wheel		mm	1,025	1,025	1,025
27			Rear wheel		mm	980{Current 965}	980{Current 965}	980{Current 965}
28		Front tire			—	28x9-15-12PR	28x9-15-12PR	28x9-15-12PR
29		Rear tire			—	6.50-10-10PR	6.50-10-10PR	6.50-10-10PR
30		Minimum ground clearance (Under mast)			mm	135	135	135
31		Mass of truck (Clutch/Torque converter)			kg	4,310	4,310	4,310
32		Head clearance			mm	1,040	1,040	1,040
33	Engine	Manufacturer			—	Komatsu	Komatsu	Isuzu
34		Name			—	4D94E	4D98E	C240
35		Number of cylinder-total displacement			cc	4-2,775	4-3,318	4-2,369
36		Rated output/speed			kW{HP}/rpm	48{65}2,450	55{74}2,400	36{48.5}2,450
37		Max. torque/speed			Nm{kgf·m}/rpm	191{19.5}/1,800	225{22.9}/1,700	142{14.5}/2,000
38		Type of combustion			—	Whirl-chamber type	Whirl-chamber type	Whirl-chamber type
39	Other items	Forward/Reverse stability ratio			—	1.51	1.51	1.51
40		Lifting height which does not lower load			mm	4,000	4,000	4,000
41		Noise at operator's seat (Hi)			db(A)	81	84	81
42		Vibration of steering wheel			—	S – A	S – A	S – A
43		Fuel tank capacity			ℓ	55	55	55
44		Step	Type		—	Open step	Open step	Open step
45			Height		mm	460	460	460
46		Floor height			mm	670	670	670

https://truckmanualshub.com/

PERIODIC REPLACEMENT OF CONSUMABLE PARTS

For operation safety, **never fail to perform periodic maintenance or make periodic replacement of the consumable parts listed in the following.**
These parts may deteriorate in time and are susceptible to wear. It is difficult to estimate the degree of wear at time of periodic maintenance; therefore, even if no apparent wear is found, always replace with new parts within the prescribed period of replacement (or earlier if trouble is found).
Note that periodic replacement has nothing to do with guarantee service.

No.	Part Name	Period of Replacement
1	Master cylinder and wheel cylinder caps, dust seals	Every 1 year
2	Brake hose or tube	Every 1 or 2 years
3	Brake reservior tank and tube	Every 2 to 4 years
4	Power steering hose	Every 2 years
5	Stop lamp switch (Oil pressure type)	Every 2 years
6	Fuel hose	Every 2 to 4 years
7	Rubber parts of power steering	Every 2 years
8	Lift chain	Every 2 to 4 years
9	Hose of load handling	Every 1 or 2 years

https://truckmanualshub.com/

SAFETY ITEMS FOR MAINTENANCE

FOR SAFETY OPERATION

⚠ USE QUALIFIED PERSONNEL FOR INSPECTION AND MAINTENANCE

- Only persons authorized by the owner or operator of the equipment and having proper certification (local or national) may carry out inspection, maintenance and repairs of the lift truck.
  If inspection, maintenance, or repair work is carried out incorrectly, it is very dangerous.

⚠ MAINTENANCE LOCATION

- When carrying out inspection and maintenance, use a level, dry, dust-free area.
- If the work is carried out inside a building, make sure that there is ample ventilation.

⚠ PRECAUTIONS FOR INSPECTION AND MAINTENANCE

- To be prepared in the event of a fire, have a fire extinguisher nearby and make sure that you know how to use it.
- Before carrying out inspection, lower the forks to the ground and stop the machine.
- Do not run the engine unless it is necessary.
- Place the directional lever, speed lever, and work equipment control levers in neutral.

⚠ PRECAUTIONS WHEN CARRYING OUT INSPECTION AND MAINTENANCE

- Wipe off any oil or grease. Immediately wipe up any oil that has leaked.
  If the lift truck is dirty, it becomes difficult or impossible to find cracks or other problems. Always clean the lift truck before starting inspection. (See page 1-26)
- Do not smoke or allow any flame to exist under any circumstances.
  Do not use any cloth which is soaked in fuel, oil, or grease. There is danger that it may catch fire.
- Wear suitable clothes for the job.
- Use suitable safety and protective equipment (hard hat, safety boots, safety glasses, gloves) for the job.
- When working on top of the lift truck, be careful not to fall.
- Do not put your feet under the forks.
- When opening or closing the floor plate or engine hood, be careful not to get your hands or body caught.
- When carrying out inspection with the forks raised, insert a stand under the inner mast to prevent the forks and mast from dropping.
- When carrying out job with another worker, decide who is the leader and carry out the job in accordance with instructions from that person.
- After repairing, make sure that the trouble has been corrected by performing a trial run.
- During the trial run, start/operate the lift truck carefully because it is possible that the trouble has not been fully corrected or that defective parts have not been removed.

https://truckmanualshub.com/

⚠ USE SUITABLE TOOLS

- Always use tools that are suited for inspection and maintenance.
  It is extremely dangerous to use broken tools or tools designed for another purpose.

A0055120

⚠ REPLACE SAFETY CRITICAL PARTS PERIODICALLY

- Even if no abnormality is found, always replace safety critical parts periodically.
  As time passes, these parts deteriorate and may cause fire or failure in the work equipment system.
- However, if these parts show any abnormality before the replacement interval has passed, they should be repaired or replaced immediately.

⚠ PRECAUTIONS WITH HIGH TEMPERATURE COOLANT

- Immediately after using the lift truck, the engine coolant is at high temperature and high pressure. Do not remove the radiator cap under these conditions.
  Hot water may spurt out and cause burns.
- When removing the radiator cap, turn it slowly to release the internal pressure.
- When checking the coolant level, stop the engine and wait for the engine and radiator to cool down before checking. For lift trucks equipped with a subtank or reservoir, check the level in the subtank.
- When adding water on lift trucks equipped with a subtank, add the water to the subtank.

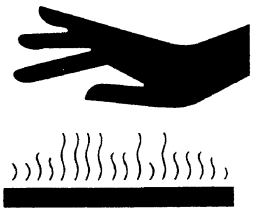

A0055050

https://truckmanualshub.com/

⚠ PRECAUTIONS WITH HIGH PRESSURE, HIGH TEMPERATURE OIL

- Immediately after using the lift truck, the oil is at high temperature. Do not drain the oil or replace the filter when the oil is hot. Hot oil may spurt out and cause burns.
- When carrying out inspection and maintenance, wait for the oil temperature to go down, and carry out the operation in the order given in this manual.
- Do not forget that the work equipment circuits are always under pressure. Do not add oil, drain oil, or carry out maintenance or inspection before completely releasing the internal pressure. (For details on releasing the oil pressure, see page 3-37.)
- If oil is leaking under high pressure from small holes, it is dangerous if the jet of high-pressure oil hits your skin or eyes. Always wear safety glasses and thick gloves, and use a piece of cardboard or a sheet of plywood to check for oil leakage.
- Release the internal pressure before checking the accumulator piping.
- If you are hit by a jet of high-pressure oil, consult a doctor immediately.

A0055180

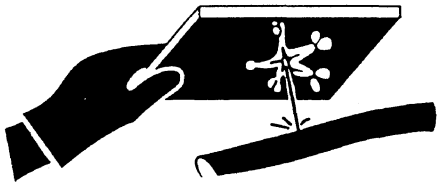
A0055190

⚠ ROTATING FAN AND BELT

- It is extremely dangerous if you or any tool touches or gets caught in the fan or fan belt when the fan is rotating. Never touch the fan when it is rotating.
- Always stop the engine before inspecting rotating parts.
- When inspecting the areas around rotating parts, do not allow anything to come close which may get caught.

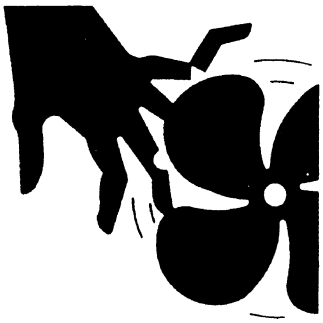
AB801500

https://truckmanualshub.com/

⚠ BE CAREFUL NOT TO GET CAUGHT OR FALL

- Never put your hands or feet into the mast structure. There is danger that you will get caught in moving parts and be seriously injured.
- Do not use the mast as a ladder. If you slip, there is danger that you will fall.

AB801320

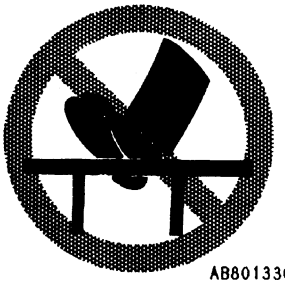

AB801330

⚠ CHECKING AND INFLATING TIRES

- If the tire inflation pressure is low, it will affect truck stability. However, do not inflate the tires immediately. The inflation pressure may have gone down because of damage to the rim. If the rim is damaged or cracked and the tires are inflated, there is danger that the rim will break when the tire is under high pressure, and this may cause personal injury or death.
- For safety, when checking tire pressure, place your body in front of the tread face of the tire. Do not check from the side face of the tire.
- Suitable qualifications are needed for tire inflation work. Always have the work carried out by properly qualified personnel.
- The tire inflation pressure on a forklift truck is several times higher than the pressure on an automobile. When the tires are being inflated, there is danger that dirt or dust may be thrown up by the compressed air and enter your eyes, so always wear safety glasses.

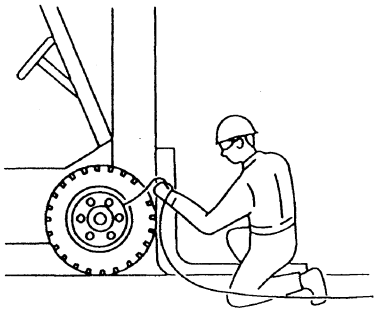

AB801510

https://truckmanualshub.com/

⚠ HANDLING TIRES

Disassembly and assembly of tires should be carried out by tire dealer.
The tire inflation pressure is extremely high, so caution is needed when handling tires.

- The wheel is fitted with mounting nuts. It also has rim nuts and bolts used to join the rim halves. When removing the tire from the lift truck, do not loosen the rim nuts and bolts. The tire is under high pressure, and there is a singnificant risk that the rim nuts and bolts may fly off. Relief tire inflation pressure before removing.
- When the tires have been replaced, carry out a test drive and check again for any loose mounting nuts. If the tightening torque is low, tighten to the specified torque.

⚠ JACKING UP LIFT TRUCK (when checking or replacing tires)

- Do not go under the forklift truck when it is jacked up.
- Check the following before jacking up the lift truck.(For details, see page 3-41.)
  1) Check that there is no one on the lift truck.
  2) Check that there is no load on the forks.
- When jacking up, stop when the tires come off the ground surface. Put blocks under both sides of the frame to prevent the lift truck from coming down.
- Put blocks under any tires contacting the ground to prevent the lift truck from moving.

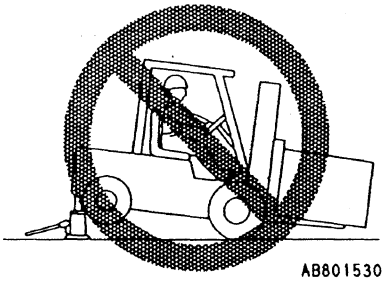

⚠ LIFTING LIFT TRUCK (when checking tires)

- Lift truck slinging work should be carried out by a qualified person who has completed a course in correct lifting methods.
- Fit wire ropes to the specified lifting points.
- When lifting the lift truck, check that the wire ropes have ample strength and are not damaged.
- Block the tires contacting the ground to prevent the lift truck from moving.
- Insert blocks to prevent the truck from coming down.
- Do not go under the lift truck during the lifting operation.
- If the specified lifting point is the counterweight, check that the counterweight mounting bolts are tightened to the specified torque before carrying out the lifting operation. Check also that there is no damage to the lifting portion on the counterweight.

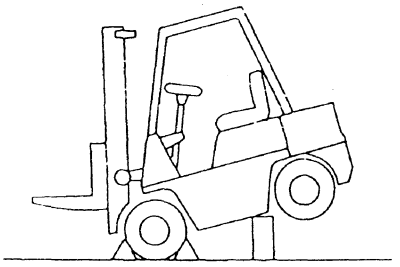

https://truckmanualshub.com/

⚠ BATTERY HAZARD PREVENTION

- Battery electrolyte contains sulfuric acid and can quickly burn the skin and eat holes in clothing. If you spill electrolyte on yourself, immediately flush the area with a large quantity of water.
- Battery electrolyte can cause blindness if splashed into the eyes. If electrolyte gets into your eyes, flush them immediately with large quantities of water and consult a doctor at once.
- If you accidentally drink electrolyte, drink a large quantity of water, or milk mixed with beaten eggwhite or vegetable oil. Call a doctor or poison prevention center immediately.
- When working with batteries, ALWAYS wear safety glasses or goggles.
- Batteries generate hydrogen gas. Hydrogen gas is highly EXPLOSIVE, and is easily ignited with a small spark or flame. Do not smoke or create any spark near the battery.
- Before working with batteries, stop the engine and turn the starting switch to the OFF position.
- When removing the battery, remove the cable from the negative ⊖ terminal first. When installing the battery, install the cable to the positive ⊕ terminal first.
- Avoid short-circuiting the battery terminals through accidental contact with tools or other metal objects across the terminals.
- Tighten the battery terminals securely. Loose terminals can generate sparks and lead to an explosion.
- When removing or installing the battery, confirm which is the positive ⊕ terminal and negative ⊖ terminal. Be careful not to connect the cables to the opposite terminals.
- Tighten the battery caps securely.
- When cleaning the battery, leave the battery caps tightened.

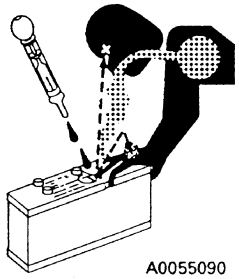

A0055090

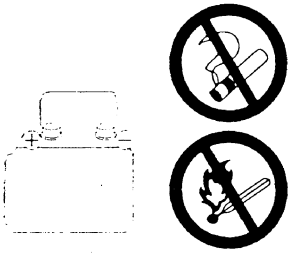

A0055100

⚠ DO NOT PUT METAL OBJECTS ON TOP OF BATTERY

- Never place any metal objects on top of the battery. There is danger that they will cause a short circuit and start a fire.

https://truckmanualshub.com/

⚠ PRECAUTIONS WHEN CHARGING

When the battery is charged, hydrogen gas is generated and the battery is heated by the chemical change. To prevent the danger of gas explosion, always do as follows.

- Carry out the charging operation in a well-ventilated place.
- Do not smoke or allow any flame.
- Start the charging operation when the temperature of the battery electrolyte is below 35°C (95°F). (If the temperature goes above 50°C (122°F) during the charging operation, wait for it to go down below 35°C (95°F) before starting charging operation again.)
- When using a battery charger to charge the battery, take the battery caps off.

⚠ STARTING WITH BOOSTER CABLES

- ALWAYS wear safety glasses or goggles when starting the lift truck with booster cables.
- When starting using the battery of another lift truck, do not allow the two lift trucks to touch.
  For details of the order of operations when using a booster cable.
- Stop the engine before connecting the cables.
- Be extremely careful not to let the cables get caught in the fan or fan belt.
- Connect the batteries in parallel: positive to positive and negative to negative. Never connect positive to negative.

⚠ DO NOT PUSH START

- Do not push the lift truck to start the engine. There is danger that the lift truck may suddenly start and operate unexpectedly.

⚠ HANDLING BRAKE FLUID

It is dangerous if the brakes do not work because in this condition, the lift truck cannot be stopped. Always do the following.

- Check the level of the brake fluid periodically.
- Always use the specified brake fluid.
- Check that the breather of the brake fluid reserve tank is not clogged.
- Be careful not to let dirt or dust get into the brake fluid reserve tank.

https://truckmanualshub.com/

⚠ HANDLING ANTIFREEZE

- Antifreeze can be a flammable. Keep away from flame when handling.
- Antifreeze is poisonous, so do not drink it. If you drink it by mistake, drink large amounts of water, vomit it out, and get medical attention immediately. Follow safety precautions on container.

⚠ WASTE MATERIALS

- Obey appropriate laws and regulations when disposing of harmful objects such as oil, fuel, solvent, filters, and batteries.

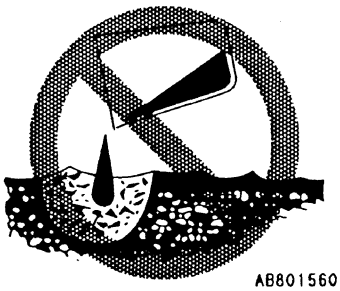

https://truckmanualshub.com/

STANDARD TIGHTENING TORQUE FOR BOLTS

For unspecified bolts and nuts, use the torques specified in this list.
Select a proper torque corresponding to the width across flats (b) of bolts and nuts.
When replacing bolts and nuts,always use genuine Komatsu Forklift parts the same size as the previous ones.

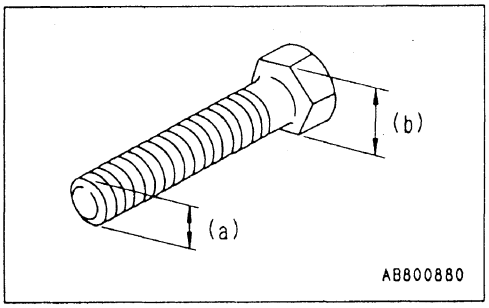

Thread diameter of bolt (mm) (a)	Width across flat (mm) (b)	Tightening torque		
		Nm	Kgfm	lbft
6	10	13.2 ± 1.4	1.35 ± 0.15	9.73 ± 1.03
8	13	31.4 ± 2.9	3.2 ± 0.3	23.2 ± 2.1
10	17	65.7 ± 6.8	6.7 ± 0.7	48.5 ± 5.0
12	19	112 ± 9.8	11.5 ± 1.0	82.6 ± 7.2
14	22	177 ± 19	18.0 ± 2.0	131 ± 14
16	24	279 ± 29	28.5 ± 3	206 ± 21
18	27	383 ± 39	39 ± 3	282 ± 29
20	30	549 ± 58	56 ± 6	405 ± 43
22	32	745 ± 78	76 ± 8	549 ± 58
24	36	927 ± 98	94.5 ± 10	684 ± 72
27	41	1320 ± 140	135 ± 15	973 ± 100
30	46	1720 ± 190	175 ± 20	1270 ± 140
33	50	2210 ± 240	225 ± 25	1630 ± 180
36	55	2750 ± 290	280 ± 30	2030 ± 210
39	60	3280 ± 340	335 ± 35	2420 ± 250

https://truckmanualshub.com/

STANDARD TIGTENING TORQUE FOR PIPE JOINTS

Elbows, nipples and unions

Width across flats B (mm)	22	30	36
Width D (mm)	19	22	30
Tightening torque Nm {kgfm}	29.4 – 39.2 {3 – 4}	78.5 – 103 {8 – 10.5}	117.7 – 161.8 {12 – 16.5}
Port size (inch)	3/4-16UNF	7/8-14UNF	—
Tightening torque Nm {kgfm}	68.6 – 73.6 {7 – 7.5}	78.5 – 83.3 {8 – 8.5}	—

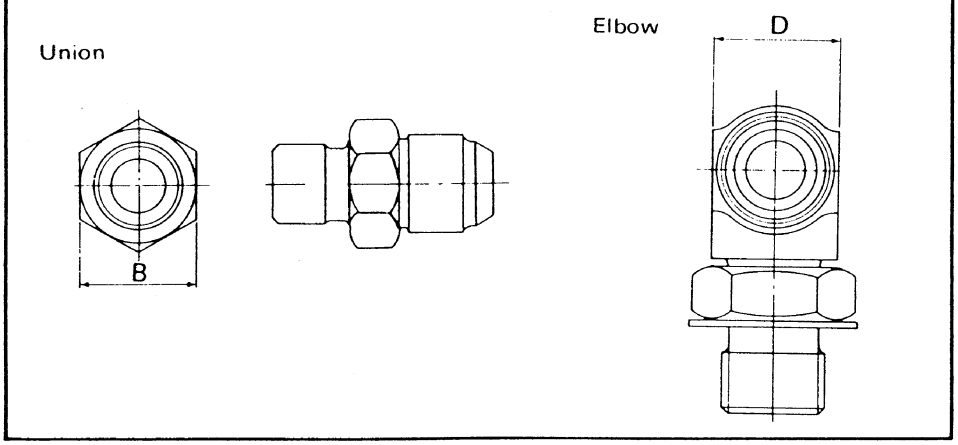

High-pressure rubber hoses, pipes and sleeve nuts

Width across flats B (mm)	19	24	27	32	36
Bore A (mm)	14	18	22	24	30
Tightening torque Nm {kgfm}	19.6 – 29.4 {2 – 3}	23.5 – 68.6 {3 – 7}	58.8 – 98.1 {6 – 10}	108 – 167 {11 – 17}	147 – 206 {15 – 21}

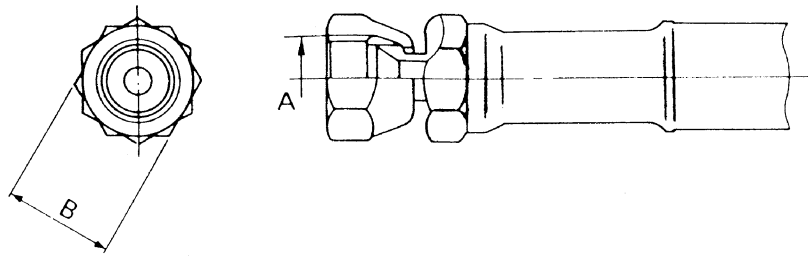

https://truckmanualshub.com/

https://truckmanualshub.com/

10. TESTING AND ADJUSTNG

Service data (gasoline engine lift truck) 10- 2
Service data (diesel engine lift truck) 10- 4
Diesel engine 10- 6
Gasoline engine 10- 8
Air cleaner 10-10
Method of adjusting ignition timing 10-11
Method of adjusting fuel injection timing 10-12
Method of measuring compression 10-13
Method of adjusting valve clearance 10-14
Tightening torques for cylinder head
mounting bolt 10-15
Clutch disc 10-17
Differential case 10-19
TORQFLOW transmission case 10-20
Hydraulic tank 10-21
Measuring hydraulic drift of lift cylinder,
tilt cylinder 10-22
Adjusting clutch/brake pedal
(clutch type truck) 10-24
Adjusting inching/brake pedal
(TORQFLOW truck) 10-26
Adjusting accelerator pedal 10-28
Adjusting parking brake lever 10-31
Bleeding air 10-32
Adjusting spring-up angle of
steering column 10-35
Specified fuel and lubricants 10-36
Check items for each equipment 10-38

https://truckmanualshub.com/

SERVICE DATA (GASOLINE ENGINE LIFT TRUCK)

Component		Inspection item		Unit	FG20/25/30-14	FG20H/25H/30H-14
Engine	Engine proper	Engine model		—	Nissan H20II	Nissan H25
		Idling speed		rpm	600 – 700	600 – 700
		Max. speed		rpm	2,850 – 3,050	2,700 – 2,900
		Compression		MPa{kgf/cm²}/rpm	1.23{12.5}/300	1.28{13.0}/300
	Lubricating oil cooling system	Fan belt deflection		mm	11 – 13 (0.43 – 0.51 in) (finger pressure: 98N) 11 – 13 (0.43 – 0.51 in) (finger pressure: 10kgf)	11 – 13 (0.43 – 0.51 in) (finger pressure: 98N) 11 – 13 (0.43 – 0.51 in) (finger pressure: 10kgf)
	Fuel system	Injection timing		BTDC°	—	—
		Injection order		—	—	—
		Injection pressure		MPa	—	—
	Intake, exhaust system	Valve clearance	Intake	mm	0.38 (0.015 in) (Warm)	0.38 (0.015 in) (Warm)
			Exhaust	mm	0.38 (0.015 in) (Warm)	0.38 (0.015 in) (Warm)
	Electrical system	Distributor point gap		mm	—	—
		Spark plug gap		mm	0.8 – 0.9 (0.031 – 0.035 in)	0.8 – 0.9 (0.031 – 0.035 in)
		Spark plug type		—	NGK: BP-4ES BPR-4ES (Noise protect type)	NGK: BP-4ES BPR-4ES (Noise protect type)
		Ignition timing		BTDC°/rpm	4/650	4/650
		Firing order		—	1 – 3 – 4 – 2	1 – 3 – 4 – 2
Travel system	Tires	Tire Inflation pressure	Front wheels	MPa{kgf/cm²}	0.68 {7.0}	
			Rear wheels	MPa{kgf/cm²}	0.68 {7.0}	
	Hub nuts	Tightening torque	Front wheels	Nm{kgfm}	294 – 490 {30 – 50}	
			Rear wheels	Nm{kgfm}	196 – 245 {20 – 25}	
	Rim mating nuts	Tightening torque	Front wheels	Nm{kgfm}	196 – 245 {20 – 25} (excluding 3 ton lift truck)	
			Rear wheels	Nm{kgfm}	88 – 123 {9 – 12.5}	

https://truckmanualshub.com/

Component		Inspection item	Unit	FG20/25/30-14	FG20H/25H/30H-14
Steering, braking system	Steering wheel	Play	mm	30 – 60 (1.2 – 2.4 in)	
	Clutch pedal	Play	mm	3 – 5 (0.12 – 0.20 in)	
	Inching pedal	Play	mm	2 – 3 (0.08 – 0.12 in)	
		Interconnected travel	mm	35 – 41 (1.38 – 1.61 in)	
	Brake pedal	Play	mm	13 – 17 (0.51 – 0.67 in)	
		Pedal height when pedal is depressed	mm	90 – 100 (3.54 – 3.94 in)	
	Brake	Parking brake operating force	N{kgf}	Min. 196 {20}	
		Tightening torque for back plate mounting bolts	Nm{kgfm}	147 – 196 {15 – 20}	
Loading equipment	Forks	Fork thickness (at base)	mm	2 ton lift truck: Min. 32.5 (1.28in) 2.5 ton lift truck: Min. 36 (1.42in) 3 ton lift truck: Min. 39.5 (1.56in)	
	Chain	Length over 17 links	mm	2–2.5 ton lift truck: Max. 330(13.0in) 3 ton lift truck: Max. 550(21.7in)	
	Hydraulic system	Relief pressure	MPa{kgf/cm^2}	18 {185}	

https://truckmanualshub.com/

SERVICE DATA (DIESEL ENGINE LIFT TRUCK)

Component		Inspection item		Unit	FD20/25/30-14	FD20H/25H/30H-14	FD20J/25J/30J-14
Engine	Engine proper	Engine model		—	Komatsu 4D94E	Komatsu 4D98E	Isuzu C240
		Idling speed		rpm	750 – 800	750 – 800	650 – 700
		Max. speed		rpm	2,700 – 2,750	2,700 – 2,750	2,650 – 2,750
		Compression		MPa{kgf/cm²}/rpm	2.94{30}/250	2.94{30}/250	3.04{31}/250
	Lubricating oil cooling system	Fan belt deflection		mm	10–15 (0.39–0.59in) (finger pressure: 98N) 10–15 (0.39–0.59in) (finger pressure: 10kgf)	10–15 (0.39–0.59in) (finger pressure: 98N) 10–15 (0.39–0.59in) (finger pressure: 10kgf)	10 (0.39 in) (finger pressure: 98N) 10 (0.39 in) (finger pressure: 10kgf)
	Fuel system	Injection timing		BTDC°	ATDC 6	ATDC 6	9
		Injection order		—	1–3–4–2	1–3–4–2	1–3–4–2
		Injection pressure		MPa{kgf/cm²}	11.8{120}	11.8{120}	11.8{120}
	Intake, exhaust system	Valve clearance	Intake	mm	0.2(0.0079in) (Cool)	0.2(0.0079in) (Cool)	0.45(0.0177in) (Cool)
			Exhaust	mm	0.2(0.0079in) (Cool)	0.2(0.0079in) (Cool)	0.45(0.0177in) (Cool)
	Electrical system	Distributor point gap		mm	—	—	—
		Spark plug gap		mm	—	—	—
		Ignition timing		BTDC°/rpm	—	—	—
		Firing order		—	—	—	—
Travel braking system	Tires	Tire Inflation pressure	Front wheels	MPa{kgf/cm²}	0.68 {7.0}		
			Rear wheels	MPa{kgf/cm²}	0.68 {7.0}		
	Hub nuts	Tightening torque	Front wheels	Nm{kgfm}	294 – 490 {30 – 50}		
			Rear wheels	Nm{kgfm}	196 – 245 {20 – 25}		
	Rim mating nuts	Tightening torque	Front wheels	Nm{kgfm}	196 – 294 {20 – 30} (excluding 3 ton lift truck)		
			Rear wheels	Nm{kgfm}	88 – 123 {9 – 12.5}		

https://truckmanualshub.com/

Component		Inspection item	Unit	FD20/25/30-14	FD20H/25H/30H-14	FD20J/25J/30J-14
Steering, braking system	Steering wheel	Play	mm	30 – 60 (1.2 – 2.4 in)		
	Clutch pedal	Play	mm	3 – 5 (0.12 – 0.20 in)		
	Inching pedal	Play	mm	2 – 3 (0.08 – 0.12 in)		
		Interconnected travel	mm	35 – 41 (1.38 – 1.61 in)		
	Brake pedal	Play	mm	13 – 17 (0.51 – 1.61 in)		
		Pedal height when pedal is depressed	mm	90 – 100 (3.54 – 3.94 in) (oil clutch lift truck: 110–120(4.33–4.72 in)		
	Brake	Parking brake operating force	N{kgf}	Min. 196 {20}		
		Tightening torque for back plate mounting bolts	Nm{kgfm}	147 – 196 {15 – 20}		
Loading equipment	Forks	Fork thickness (at base)	mm	2 ton lift truck: Min. 32.5 (1.28in) 2.5 ton lift truck: Min. 36 (1.42in) 3 ton lift truck: Min. 39.5 (1.56in)		
	Chain	Length over 17 links	mm	2–2.5 ton lift truck: Max. 330(13.0in) 3 ton lift truck: Max. 550(21.7in)		
	Hydraulic system	Relief pressure	MPa{kgf/cm^2}	18 {185}		

https://truckmanualshub.com/

DIESEL ENGINE

⚠ CAUTION

Always stop the engine and wait for the engine temperature to go down before carrying out maintenance of the engine.

1. CHANGE ENGINE OIL

1) Remove the drain plug, drain the oil, then tighten the plug again.

2) Remove the dipstick.

3) Add the specified amount of engine oil, and be careful not to let it overflow.

4) Check the oil level with the dipstick.

Refill amount

4D94E engine 4D98E engine	7.5 ℓ (1.98 US gal, 1.65 UK gal)
C240 engine	4.8 ℓ (1.27 US gal, 1.06 UK gal)

4D94E, 4D98E

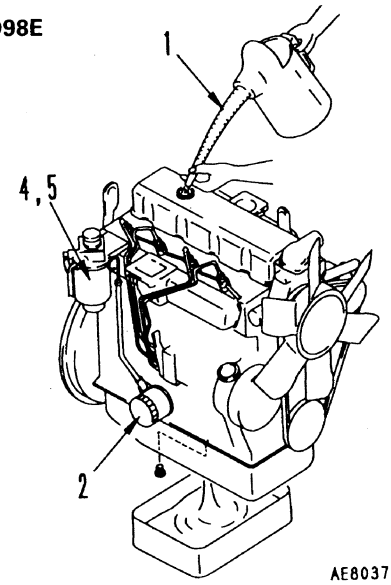

AE80375B

C240

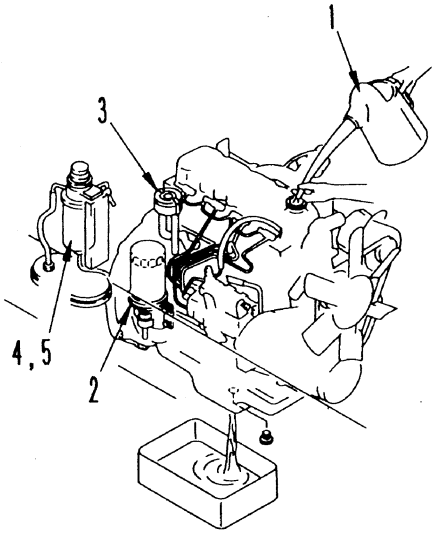

AE80552B

2. REPLACE ENGINE OIL FILTER

1) Using a filter wrench, remove the cartridge.

2) Clean the filter holder, coat the thread and the seal of the new cartridge with engine oil, then install.

NOTICE:
After installing the cartridge, start the engine and check that there is no leakage of oil from the filter mounting surface.

3. CLEAN CRANK CASE BREATHER (C240 engine only)

1) Remove the cover and take out the metal mesh.

2) Clean the metal mesh in flushing oil.

3) After cleaning, dry it properly.

4) Fill the metal mesh with clean engine oil and install it.

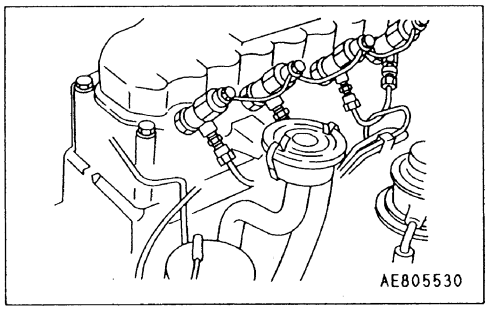

4. DRAIN WATER FROM FUEL FILTER

1) Loosen the combination sensor plug and drain the water and sediment accumulated at the bottom.

NOTE:
- **Fuel is drained out at the same time, so prepare a container to catch it.**
- **Always be sure to wipe up any spilled fuel.**

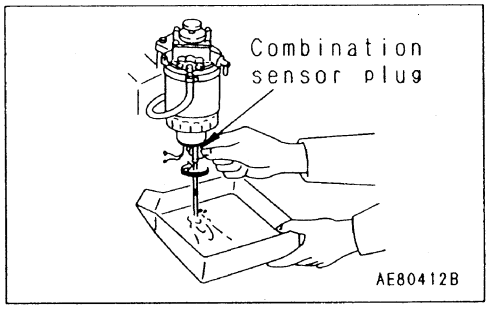

5. REPLACE FUEL FILTER

1) Remove the combination sensor plug at the bottom of the cartridge.

2) Using a filter wrench, remove the cartridge.

3) Install the combination sensor plug to the new cartridge.

4) Fill the new cartridge with fuel, coat the packing surface thinly with engine oil, then install.

5) Loosen plug ① and pump knob ⇞A up and down until no more bubbles come out with the fuel.

6) Tighten plug ①.

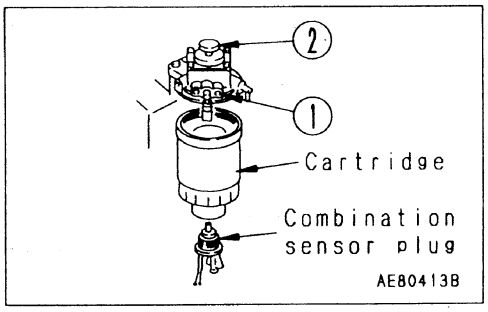

GASOLINE ENGINE

⚠ CAUTION

Always stop the engine and wait for the engine temperature to go down before carrying out maintenance of the engine.

1. CHANGE ENGINE OIL

1) Remove the drain plug, drain the oil, then tighten the drain plug again.

2) Add the specified amount of engine oil.

3) Check the oil level with the oil gauge.

Refill capacity

H20II engine	3.8 ℓ 1,00US gal, 0.84UK gal
H25 engine	3.8 ℓ 1,00US gal, 0.84UK gal

2. REPLACE ENGINE OIL FILTER

1) Using a filter wrench, remove the cartridge.

2) Clean the filter holder, coat the seal portion and thread of the new cartridge with engine oil, then install.

NOTICE:
After installing the cartridge, start the engine and check that there is no leakage of oil from the filter mounting surface.

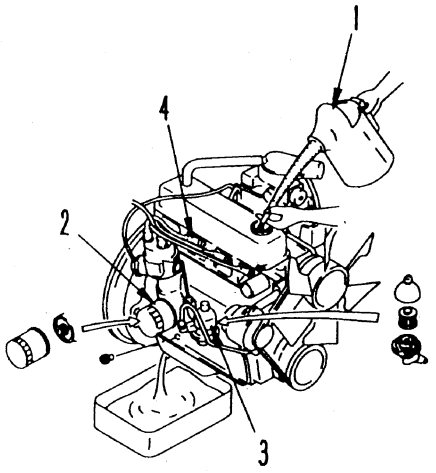

AE80373B

https://truckmanualshub.com/

3. REPLACE FUEL FILTER

1) Loosen the nut, remove the glass bowl, then take out the filter.

2) Drain the dirt and water collected at the bottom, and clean the bowl.

3) Install a new filter.

NOTICE:

- **If the glass bowl packing is damaged, replace it.**
- **After replacing, check that there is no leakage of oil from the hose mount.**

4. CHECK SPARK PLUG

1) Using the plug wrench supplied with the truck, remove the plug.

2) Clean off any carbon stuck to the plug tip or the surrounding area.

3) Measure gap (A) with a plug gap gauge.

Brand of plug to use

NGK	BP4ES, BPR4ES

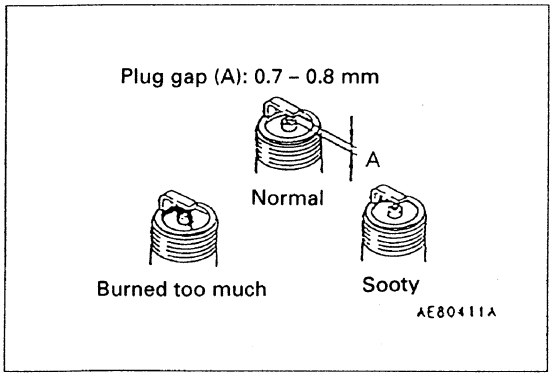

https://truckmanualshub.com/

AIR CLEANER

⚠ CAUTION

- Never clean or replace the air cleaner while the engine is running.
- When using compressed air to clean the element, there is danger that dust will fly and get into your eyes, so always wear protective glasses.

NOTICE:

- **If oil, grease, or carbon are stuck to the element, clean the element with special element cleaner. Follow the instructions given with the cleaner.**
- **Do not remove the inner element. (FD20(H) – 30(H))**
- **In heavy-duty operating environments or conditions, clean and replace the element more frequently.**

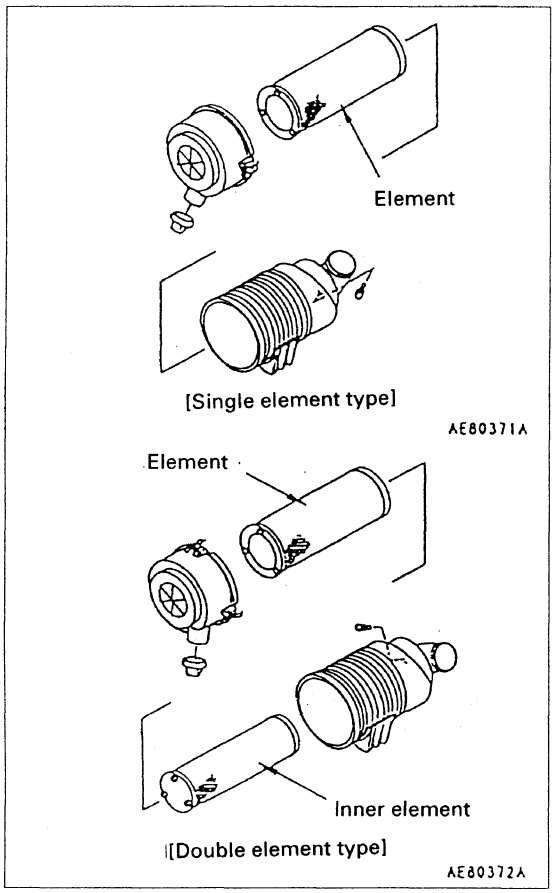

CLEANING

1. Remove the element, blow the element from the inside with dry compressed air at 0.69 MPa {7 kg/cm²} and clean the whole circumference.
2. After cleaning the element, install it again.

TESTING

Check visually that there is no damage to the element.

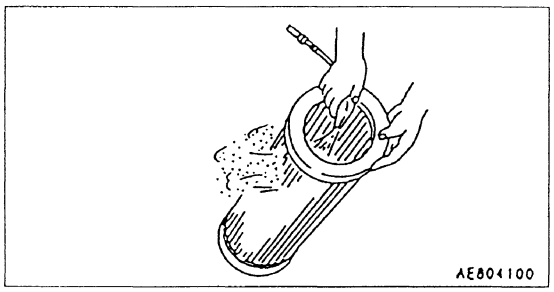

REPLACE ELEMENT

1. Remove the element.
2. Remove the inner element.
3. Cover the air connector with a clean cloth or cloth tape to prevent dirt from getting in.
4. Clean the inside of the body, then remove the cover installed in Step 3.
5. Install a new element.

https://truckmanualshub.com/

METHOD OF ADJUSTING IGNITION TIMING

1. Connect the timing advance tester as shown in the diagram on the right.
2. Turn the power switch ON, and adjust the timing position of the advance adjustment knob.
3. Start the engine and run at the specified idling speed.
4. Shine the timing light and check that the indicator and timing mark stamped on the crankshaft pulley and flywheel are aligned.
5. If the timing is misaligned, turn the distributor to the right or left to adjust.
6. Check that the injection timing advances quickly when the engine speed is raised.

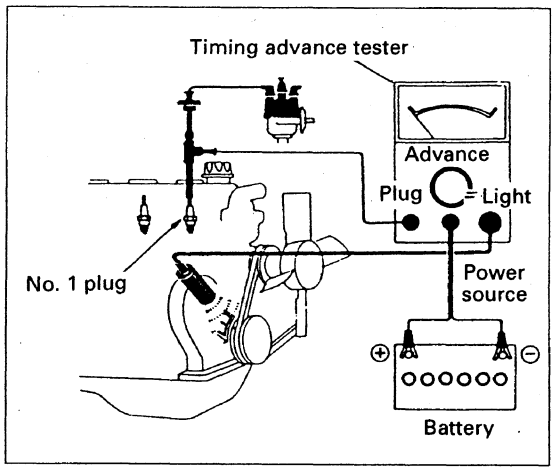

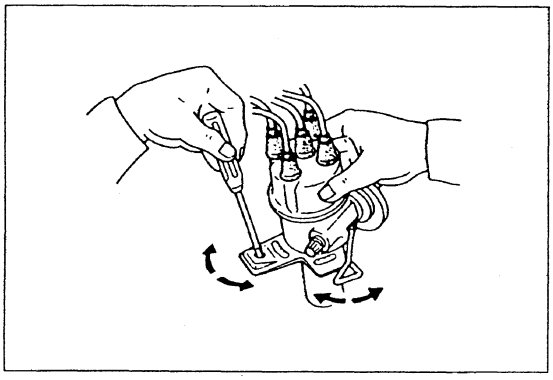

https://truckmanualshub.com/

METHOD OF ADJUSTING FUEL INJECTION TIMING (DIESEL ENGINE)

TESTING AND ADJUSTING FUEL INJECTION TIMING MARK (4D94E, 4D98E)

When carrying out disassembly and assembly

① Align the fuel injection pump with the match mark.
② Align the top mark to a point 6* beyond top.
③ Check that the plunger lift is 1 mm.
④ If it is not 1 mm, adjust the mounting angle of the pump body.

When checking

Carry out Steps ②, ③, and ④ for disassembly and assembly.

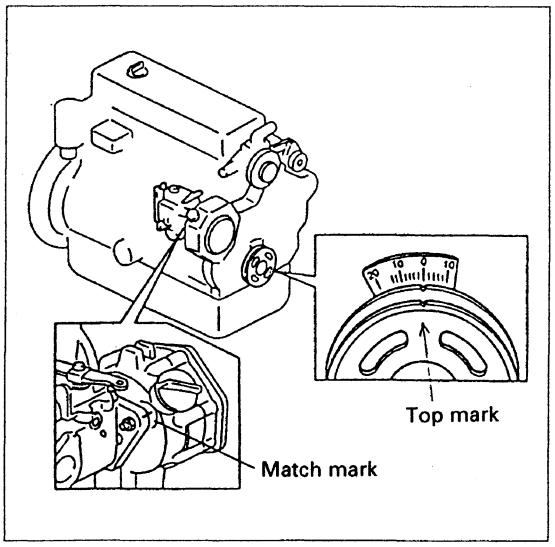

https://truckmanualshub.com/

METHOD OF MEASURING COMPRESSION

1. Start the engine and carry out the warming-up operation until the cooling water temperature is 75 - 85°C.

2. Stop the engine, remove all the spark plugs (gasoline engine) or nozzle holders (diesel engine), then remove the air cleaner.

3. Remove the coil cord from the ignition coil (gasoline engine).
   Set the fuel control lever to the NO INJECTION position or remove the fuel cut solenoid wiring (diesel engine).

4. Install the adapter to the nozzle holder mount of the cylinder to be checked, and tighten to the specified torque (diesel engine).

5. Install the compression gauge to the cylinder to be checked.

6. In the case of the pneumatic governor, depress the accelerator pedal fully, crank the engine with the starting motor, and measure the maximum value indicated on the gauge.

   ★ There is likely to be an error in the measurement, so carry out the measurement twice for each cylinder and take the average.

   ★ If the battery is discharged, it will be impossible to obtain the proper rotating speed, so use a fully charged battery.

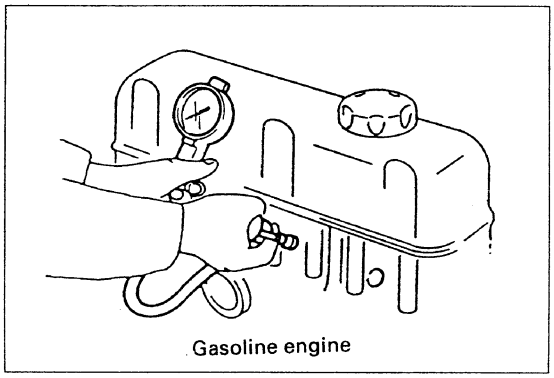
Gasoline engine

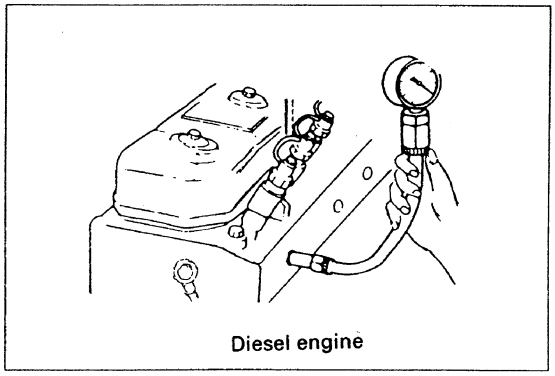
Diesel engine

Causes of insufficient compression

1. Defective adjustment of valve clearance
2. Leakage of pressure from valve seat
3. Seizure of valve stem
4. Deterioration, breakage of valve spring
5. Leakage of pressure from cylinder head gasket
6. Sticking, breakage of piston ring
7. Wear of piston ring or cylinder

https://truckmanualshub.com/

METHOD OF ADJUSTING VALVE CLEARANCE

1. Remove the cylinder head cover.

2. Rotate the crankshaft, align the pointer and the top mark on the crankshaft pulley, then check if the No. 1 cylinder or No. 4 cylinder is at the piston compression top dead center.

   ★ To check if the piston is at compression top dead center, check that both the intake and exhaust valves are closed (the cylinder where both the rocker arms are fully is at compression dead center).

3. Adjust the clearance starting with the cylinder which is at compression top dead center.

   ★ **When No. 1 cylinder is at compression top dead center**
   Adjust the valve clearance of the valves marked ● in the table, then rotate the crankshaft one turn in the normal direction and adjust the clearance of the remaining valves marked ○.

   ★ **When No. 4 cylinder is at compression top dead center**
   Adjust the valve clearance of the valves marked ○ in the table, then rotate the crankshaft one turn in the normal direction and adjust the clearance of the remaining valves marked ●.

4. Loosen locknut (8) of adjustment screw (7), then adjust the clearance between valve stem (6) and rocker arm (5) so that the specified feeler gauge is a sliding fit. After adjusting the clearance, tighten the locknut to secure the adjustment screw in position.

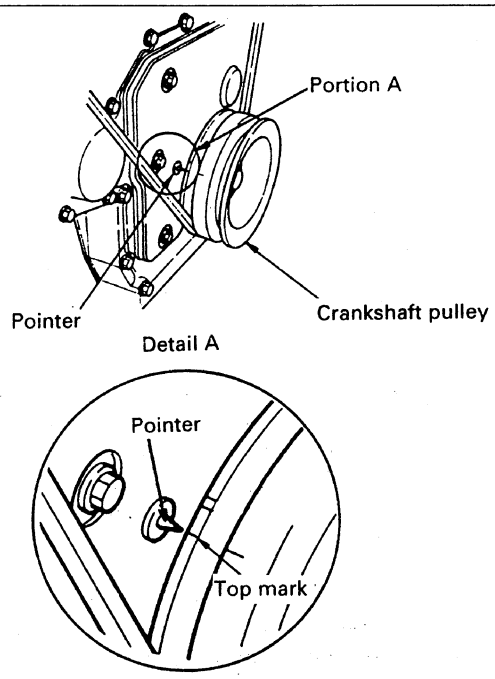

Engine firing order: 1–2–4–3

Cylinder number	1		2		3		4	
Exhaust valve	●		○		●		○	
Exhaust valve		●		●		○		○

Engine firing order: 1–3–4–2

Cylinder number	1		2		3		4	
Exhaust valve	●		●		○		○	
Exhaust valve		●		○		●		○

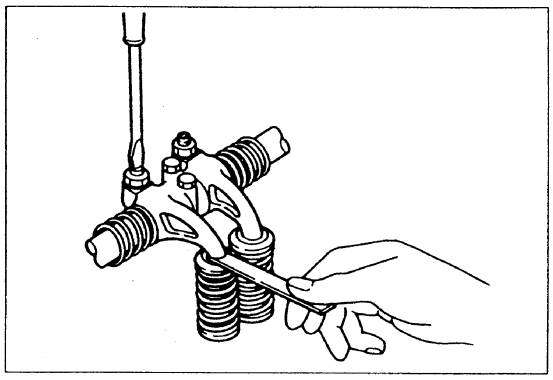

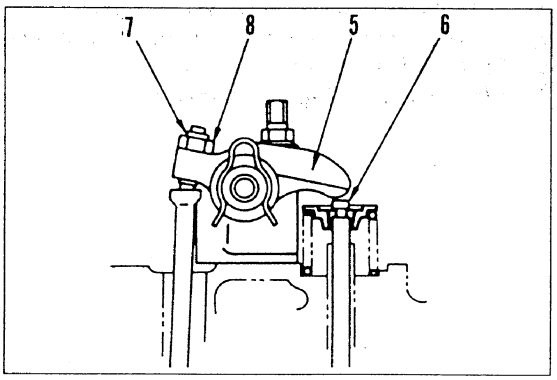

https://truckmanualshub.com/

TIGHTENING TORQUES FOR CYLINDER HEAD MOUNTING BOLT

H20 II/H25 ENGINE

1. Set the steel plate side of the head gasket on the block side, then set on the top surface of the block.

2. Put the cylinder head in position, coat the cylinder bolts with engine oil, then tighten the bolts to the specified tightening torque in the order shown in the diagram.

① 29.4 Nm {3.0 kgfm} ② 78.4 Nm {8.0 kgfm}	Tighten temporarily
③ 0 Nm {0 kgfm}	Loosen
④ 29.4 Nm {3.0 kgfm} ⑤ 73.5 – 83.3 Nm {7.5 – 8.5 kgfm}	Tighten agai

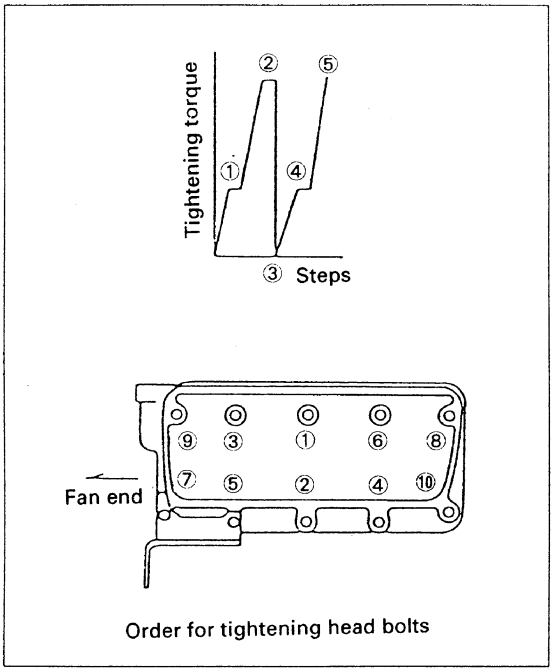

Order for tightening head bolts

4D94E, 4D98E ENGINE

1. Coat the head bolt thread and seat surface with oil, then install uniformly by hand.

2. Tighten the bolts in two stages. Use the order shown in the diagram on the right (the opposite order to the order used during assembly).

Torque	1st step	T = 58.8 Nm {6 kgfm}
	2nd step	T = 117.6 Nm {12 kgfm}

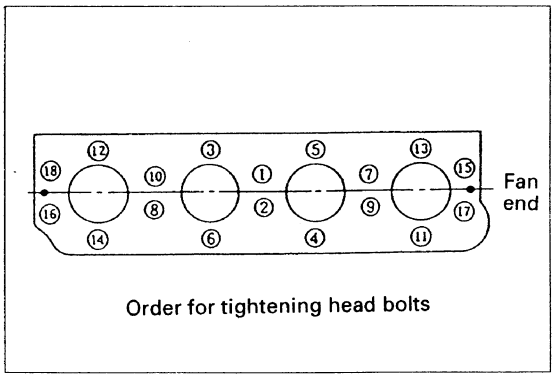

Order for tightening head bolts

https://truckmanualshub.com/

C240 ENGINE

Apply engine oil on the bearing surface of the nuts and bolts, and tighten the bolts twice in the order shown in the picture to the specified torque level.

	First	Second
Brand new bolt	63.7 ± 4.9 Nm {6.5 ± 0.5 kgfm}	78.4 ± 4.9 Nm {8.0 ± 0.5 kgfm}
Re-used bolt	63.7 ± 4.9 Nm {6.5 ± 0.5 kgfm}	88.2 ± 4.9 Nm {9.0 ± 0.5 kgfm}

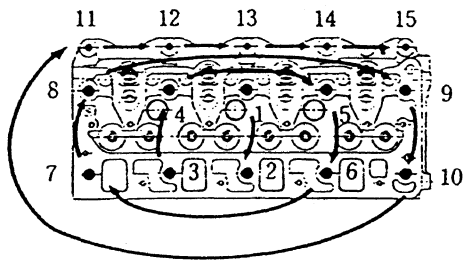

Order for tightening head bolts

https://truckmanualshub.com/

REPLACEMENT OF CLUTCH DISC

REMOVAL OF DISC

1. Open clutch case cover.

2. Install pressure plate lock bolt to hold plate in position.

Lock bolt

Part No.	01010-61065
Side	M10
Pitch x length	1.5 x 65

3. Move snap ring (1) aside and remove pin (2).

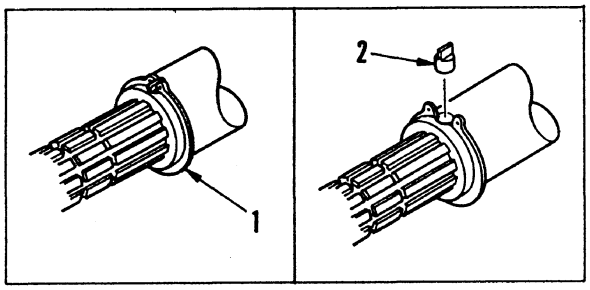

Detail A

4. Push in shaft towards transmission.

5. Remove pressure plate mounting bolts (3), then move pressure plate aside and remove clutch disc.

★ When moving the pressure plate aside, be careful not to distort the spring.

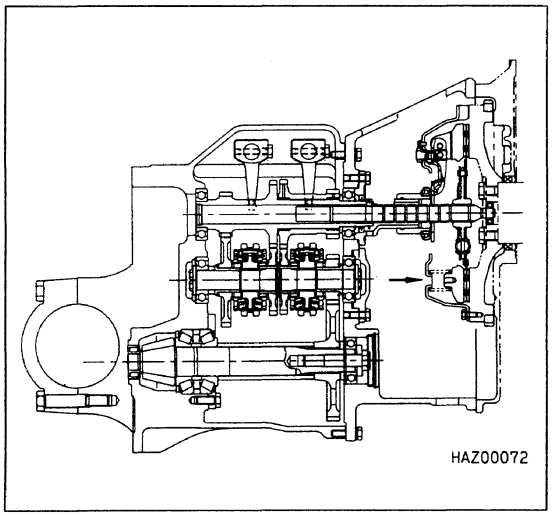

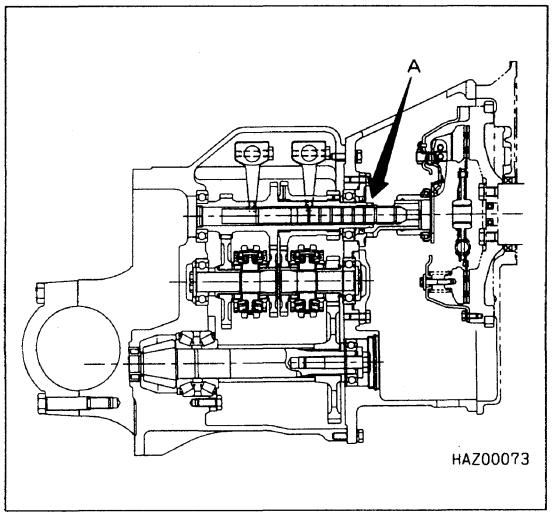

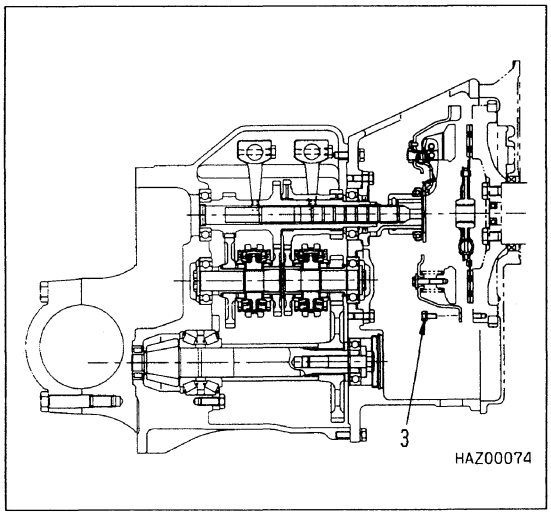

https://truckmanualshub.com/

INSTALLATION OF CLUTCH DISC

1. Install clutch disc.

★ Direction to install clutch disc
Install the side with the smaller protrusion facing the flywheel.
★ Coat the spline thinly with ? paste.

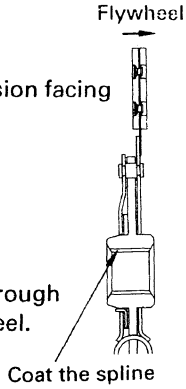

2. Return shaft towards flywheel, pass through clutch disc spline, and push into flywheel.

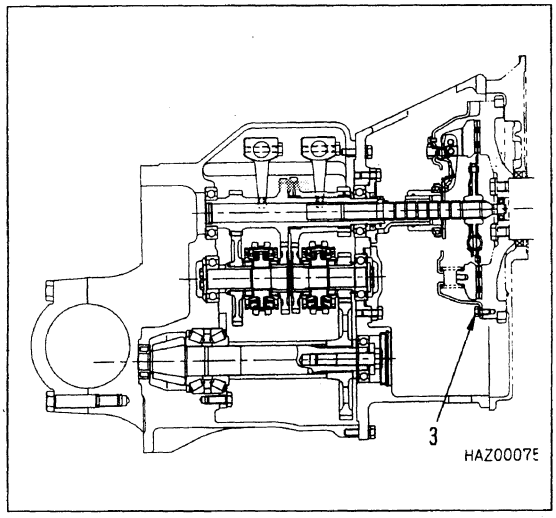

3. Tighten mounting bolts (3) of pressure plate.

kgm	27 - 34 Nm {2.8 - 3.5Kgfm}

4. Install pin (2) and secure in position with snap ring.

★ If the snap ring is damaged, replace it.

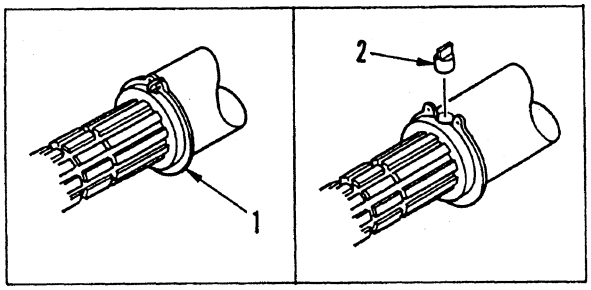

5. Remove pressure plate lock bolt.

6. Install clutch case cover.

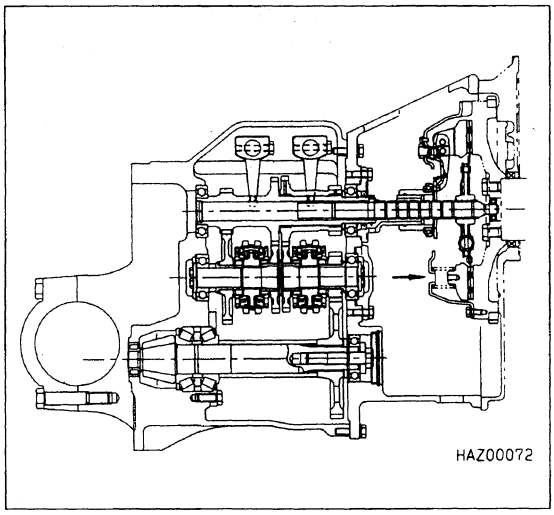

https://truckmanualshub.com/

DIFFERENTIAL CASE

CAUTION

The oil is at high temperature immediately after stopping work. Wait until the temperature goes down before starting the operation.

CHECK OIL LEVEL

1. Remove the level plug and check that the oil is near the bottom of the plug hole.
   If the oil level is low, remove the oil filler plug and add oil.

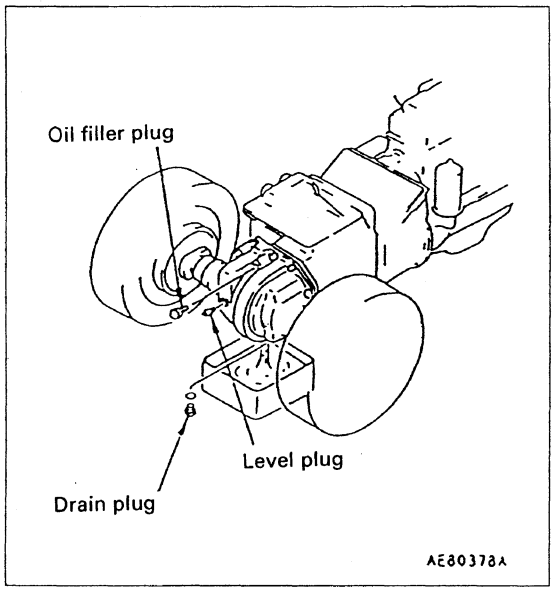

CHANGE OIL

1. Remove the oil filler plug, then remove the drain plug and drain the oil.
2. After draining the oil, tighten the drain plug and add the specified amount of oil through the oil filler.
3. After filling with oil, check the oil level.

Refill capacity

Clutch type truck	13 ℓ 3.43US gal, 2.86UK gal
TORQFLOW truck	6 ℓ 1159US gal, 1.32UK gal

NOTICE:
Always use Komatsu Forklift genuine oil (FG090) as the gear oil.
(For details, see SPECIFIED FUEL AND LUBRICANT.)

REMARK :
On the clutch type truck, the same oil supply is used for the differential case and transmission case. However, on the TORQFLOW truck, each case has an independent oil supply, so it is necessary to inspect and change the oil in the TORQFLOW transmission case as well as in the differential case.

https://truckmanualshub.com/

TORQFLOW TRANSMISSION CASE (TORQFLOW TRUCK ONLY)

⚠ CAUTION

The oil is at high temperature immediately after stopping work. Wait until the temperature goes down before starting the operation.

CHECK OIL LEVEL

1. Open the inspection window in the floor plate and check with the oil gauge.
2. If the oil level is low, remove the oil filler plug and add oil.

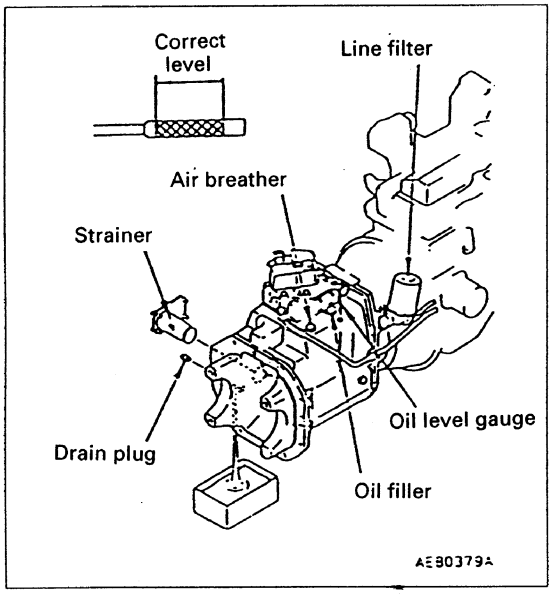

CHANGE OIL, CLEAN STRAINER

1. Remove the drain plug, drain the oil, then tighten the drain plug again.
2. Remove the mounting bolts, take out the strainer, and wash it in flushing oil.
3. After washing, blow the strainer with compressed air from the inside to dry it thoroughly, then install it.
4. Add the specified amount of oil through the oil filler.
5. After adding the oil, check the oil level.

Refill capacity

One-speed (F1/R1) truck	10 ℓ (2.64 US gal, 2.20 UK gal) (including torque converter)

NOTICE:
Always use Komatsu Forklift genuine oil (FEO10-CD) as the engine oil.
(For details, see SPECIFIED FUEL AND LUBRICANT.)

https://truckmanualshub.com/

HYDRAULIC TANK

- **Change oil in hydraulic tank**
- **Replace hydraulic line filter**
- **Clean hydraulic tank strainer**
- **Clean inside of hydraulic tank**

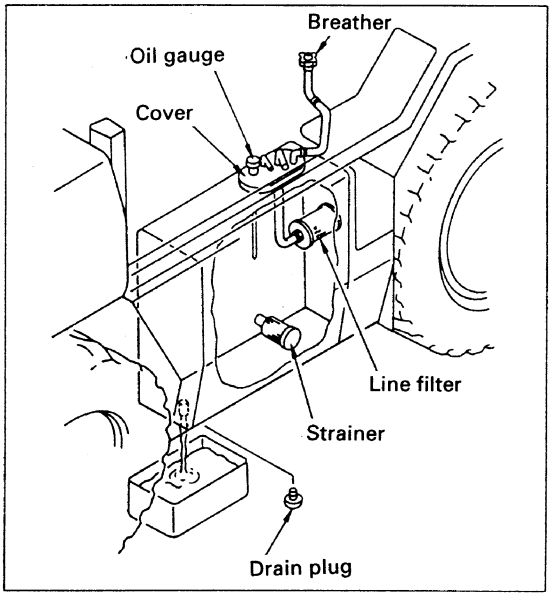

⚠ CAUTION

The oil is at high temperature immediately after stopping work. Wait until the temperature goes down before starting the operation.

1. Remove the drain plug at the bottom of the tank, drain the oil, then remove the cover, take out the strainer, and wash it in flushing oil.
2. After cleaning the inside of the tank, install the drain plug.
3. After washing the strainer, blow with compressed air from the inside to dry it thoroughly, then assemble it.
4. After replacing the line filter, install the cover.
5. Add the specified amount of hydraulic oil through the breather (with oil gauge) insertion port, then measure the oil level with the oil gauge.

   Refill capacity: 56 ℓ (14.80 US gal, 12.32 UK gal)

6. Operate the cylinders (lift, tilt) to the end of their stroke 5 or 6 times to bleed the air.

NOTICE:
Always use Komatsu Forklift genuine hydraulic oil as the hydraulic oil.

https://truckmanualshub.com/

MEASURING HYDRAULIC DRIFT OF LIFT CYLINDER, TILT CYLINDER

⚠ PRECAUTIONS WHEN MEASURING

1. When measuring, never let anyone go under the load.
2. Do not put your feet on the mast stays or dashboard and climb up when measuring the hydraulic drift of the lift cylinder. If you measure the hydraulic drift when doing this, there is danger that you may get your hands or feet caught in the mast.
   Always use a strong, stable stand when measuring.
3. Before measuring, check that the hydraulic oil level is correct and that the hydraulic oil is not dirty or mixed with any other brand of oil.
4. Always carry out the measurement on flat horizontal ground in front of a strong platform which will support the truck if it should tip over to the front.

METHOD OF MEASURING

1. Stop the lift truck 500 mm in front of the platform.
2. Operate the lift and tilt repeatedly to set the hydraulic oil temperature to 50°C.
3. Set the rated load on the forks and secure it to the fork carriage with wire.
4. Raise the load approx. 1500 mm and set the mast perpendicular.

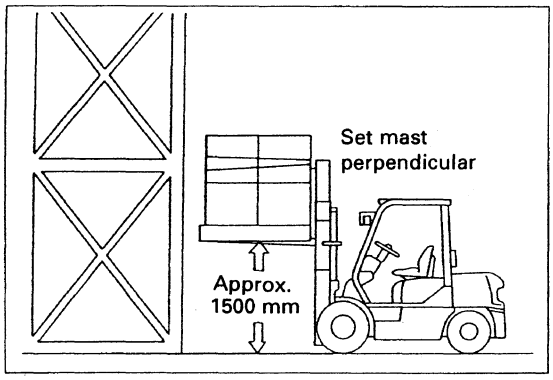

[Hydraulic drift of lift cylinder]

5. Wait for 3 minutes, then place a ruler against the lift cylinder piston rod and make a mark.
6. Measure the hydraulic drift over the next 15 minutes.

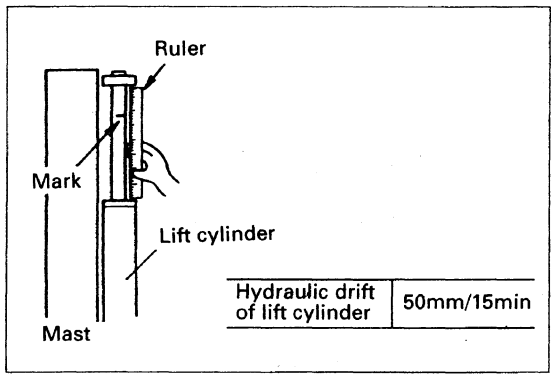

[Hydraulic drift of tilt cylinder]

5. Wait for 3 minutes, then place a ruler against the tilt cylinder piston rod and make a mark.
6. Measure the hydraulic drift over the next 15 minutes.

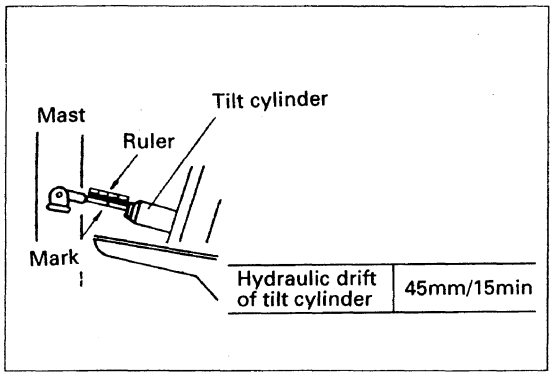

https://truckmanualshub.com/

https://truckmanualshub.com/

ADJUSTING CLUTCH/BRAKE PEDAL (CLUTCH TYPE TRACK)

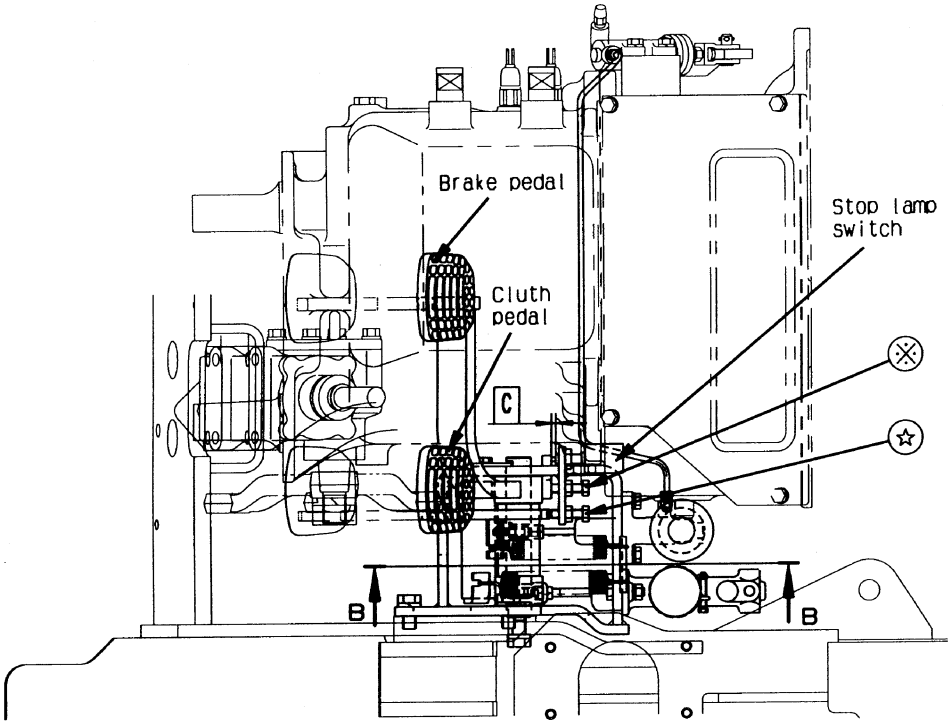

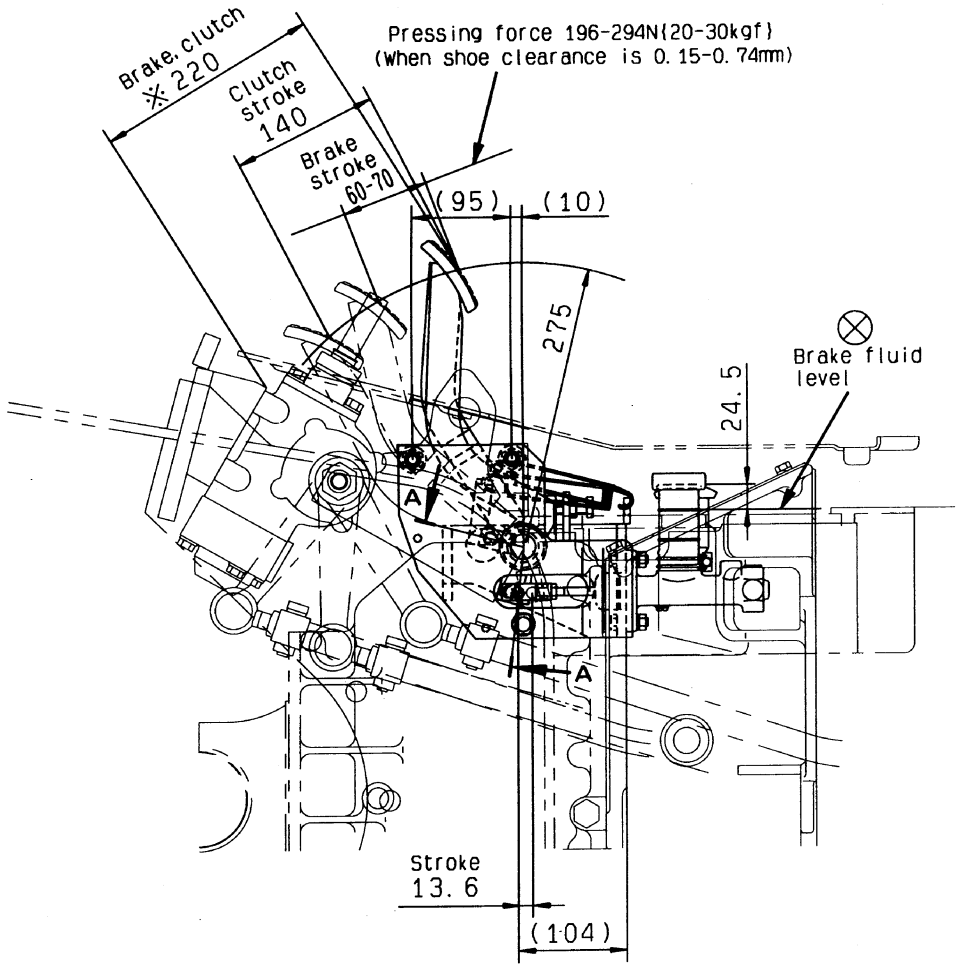

HWZ03866

https://truckmanualshub.com/

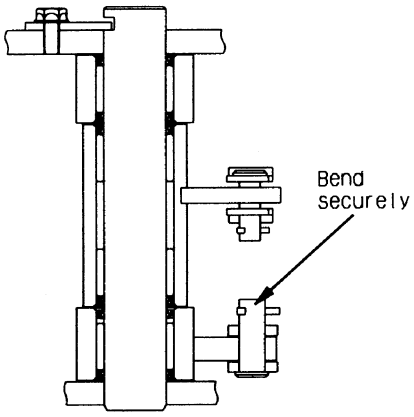

A – A

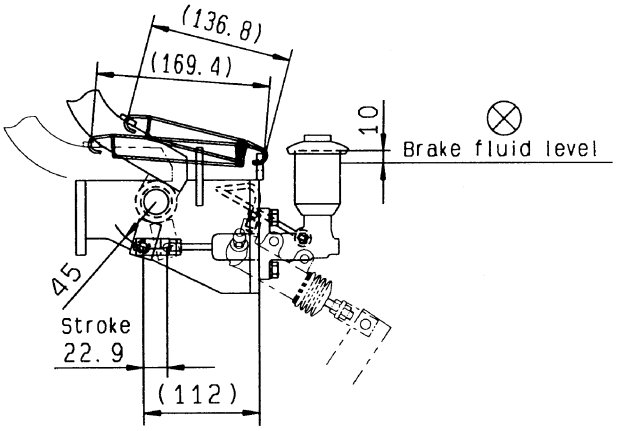

B – B

1. Adjustment procedure of clutch pedal:
   1-1. Set pedal height to dimensions 216 marked ※ with stopper bolt marked ☆.
   1-2. Adjust master cylinder rod so that pedal will have play of 1-3. (Loosen nut and turn rod)
2. Adjustment procedure of brake pedal:
   2-1. Set pedal height to dimensions 216 marked ※ with stopper bolt marked ⊗.
   2-2. Adjust master cylinder rod so that pedal will have play of 15 ± 2. (Loosen nut and turn rod)
3. Adjustment method of stop lamp switch :
   After adjusting the brake pedal height, set dimension [C] to 0.5-1.5.
4. When assembling, apply lithium grease (G2-G1) to sliding parts of link.
5. Link ratio:
   Clutch pedal, brake pedal

$$\frac{275}{45} = 6.11$$

6. Fill ⊗ ×2 with brake fluid BF1.
   (Fluid quantity: 0.1 ℓ for clutch and 0.15 ℓ for brake)

HWZ03867

https://truckmanualshub.com/

ADJUSTING INCHING/BRAKE PEDAL (TORQFLOW TYPE TRACK)

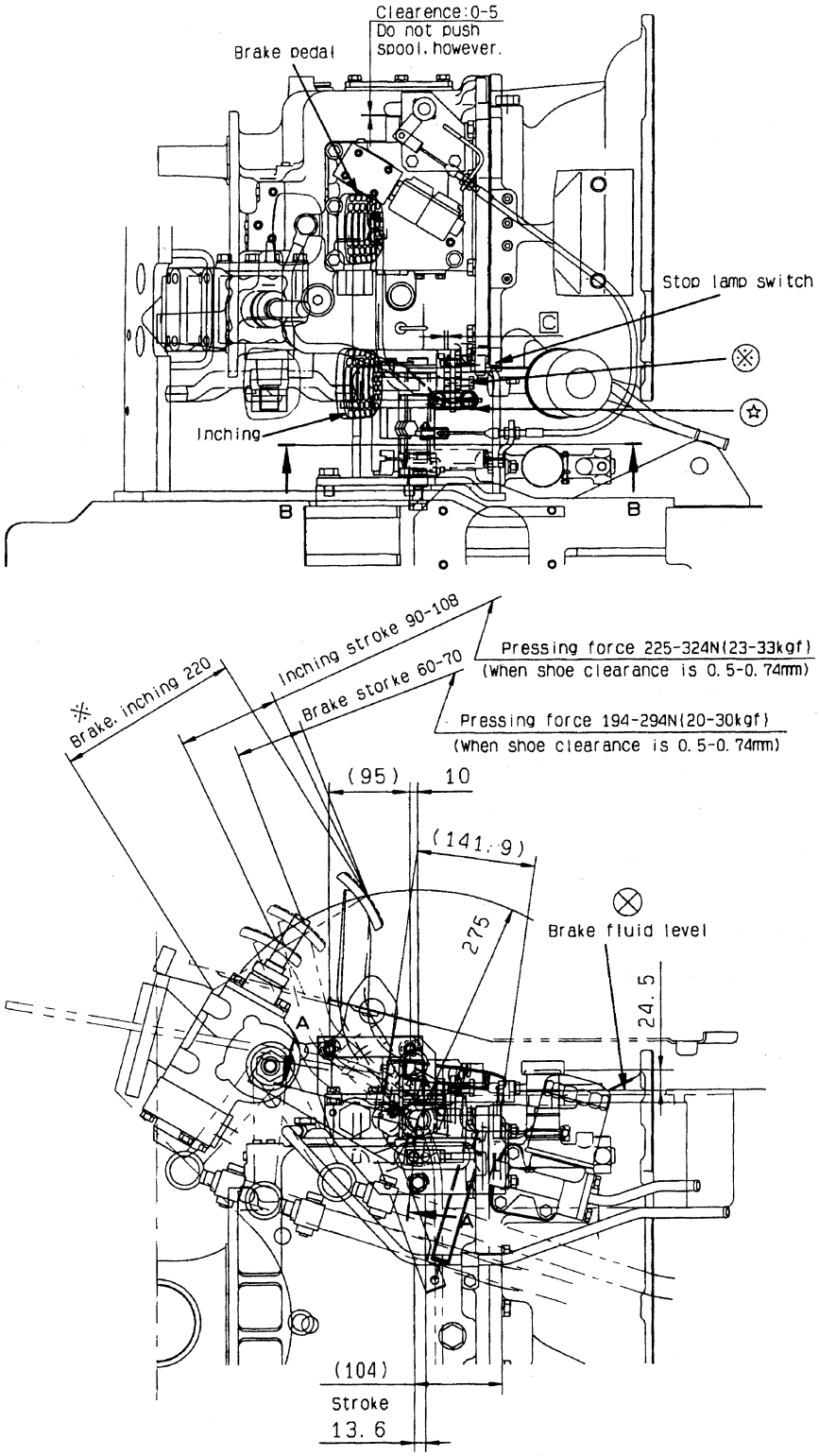

https://truckmanualshub.com/

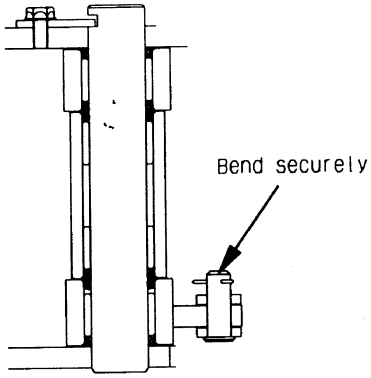

A – A

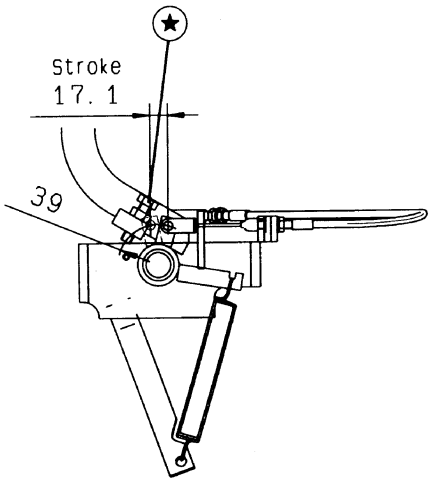

B – B

1. Adjustment procedure of inching pedal:
   1-1. Set pedal height to dimensions 216 marked ※ with stopper bolt marked ⊛.
   1-2. Adjust bolt marked with ⊛ so that it will work together with brake pedal when pedal stroke is 35-41.
   1-3. Bind cables so that they will not be broken.
2. Adjustment procedure of brake pedal:
   2-1. Set pedal height to dimensions 216 marked ※ with stopper bolt marked ⊗.
   2-2. Adjust master cylinder rod so that pedal will have play of 15±2. (Loosen nut and turn rod).
3. Adjustment method of stop lamp switch:
   After adjusting the brake pedal height, set dimension Ⓓ to 0. 5-1. 5.
4. When assembling, apply lithium grease(G2-L1) to sliding parts of link.
5. Link ratio
   5-1. Clutch pedal
   $\frac{275}{39}$ =7. 05
   5-2. Brake pedal
   $\frac{275}{45}$ =6. 11
6. Fill ⊗ X1 with brake fluid BF1. (Fluid quantity:0. 15 ℓ for brake)

HWZ03869

https://truckmanualshub.com/

ADJUSTING ACCELERATOR PEDAL (H20II/H25)

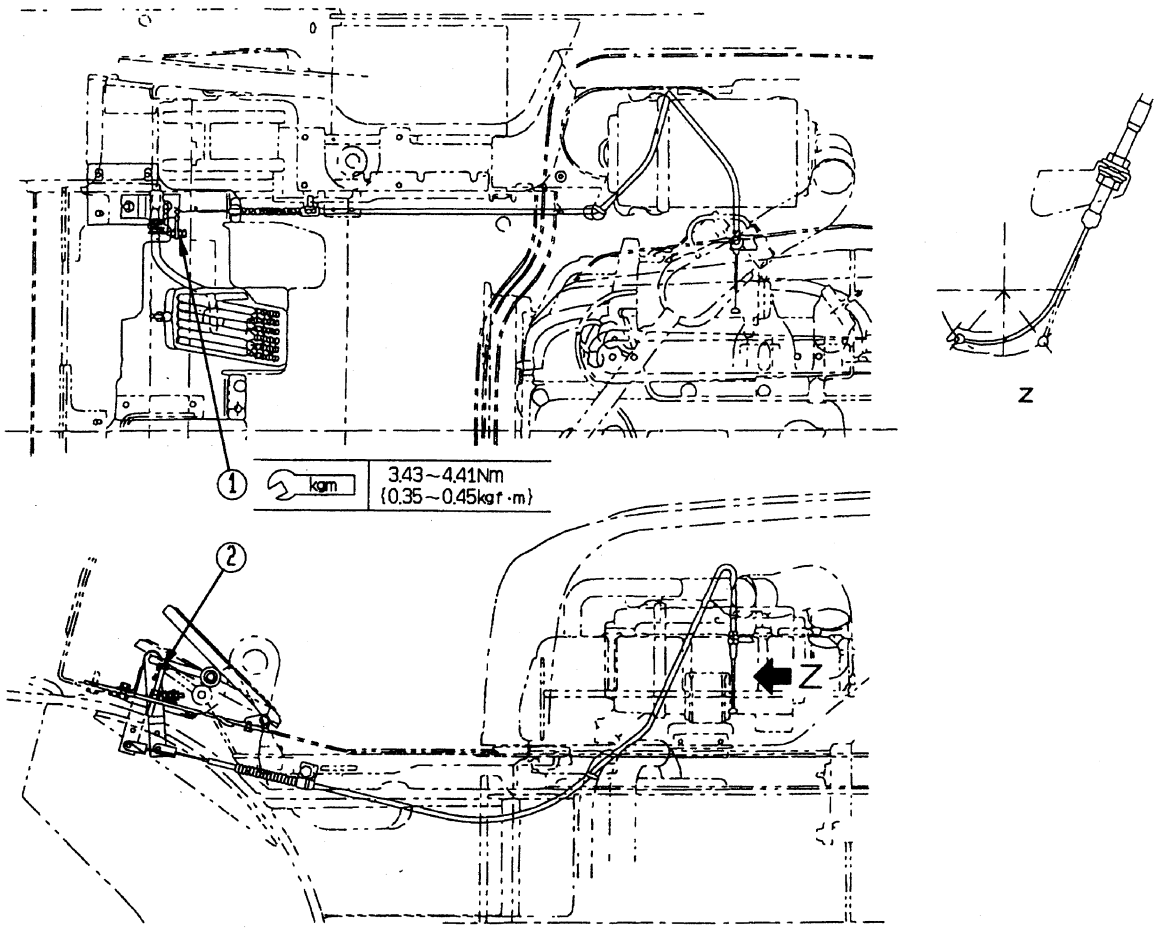

HWZ03832

PROCEDURE FOR ADJUSTING PEDAL

1. Set stopper bolt ① so that the pedal height is 130 mm.

2. Set stopper bolt ② temporarily to a height of 48.5 mm.

3. After assembling the cable, adjust the outer casing mount of the cable so that the pedal has a play of 1 – 2 mm.

4. Adjust the height of stopper bolt ② again so that the lever at the engine end is fully open when the pedal is fully depressed.

https://truckmanualshub.com/

ADJUSTING ACCELERATOR PEDAL (4D94E, 4D98E)

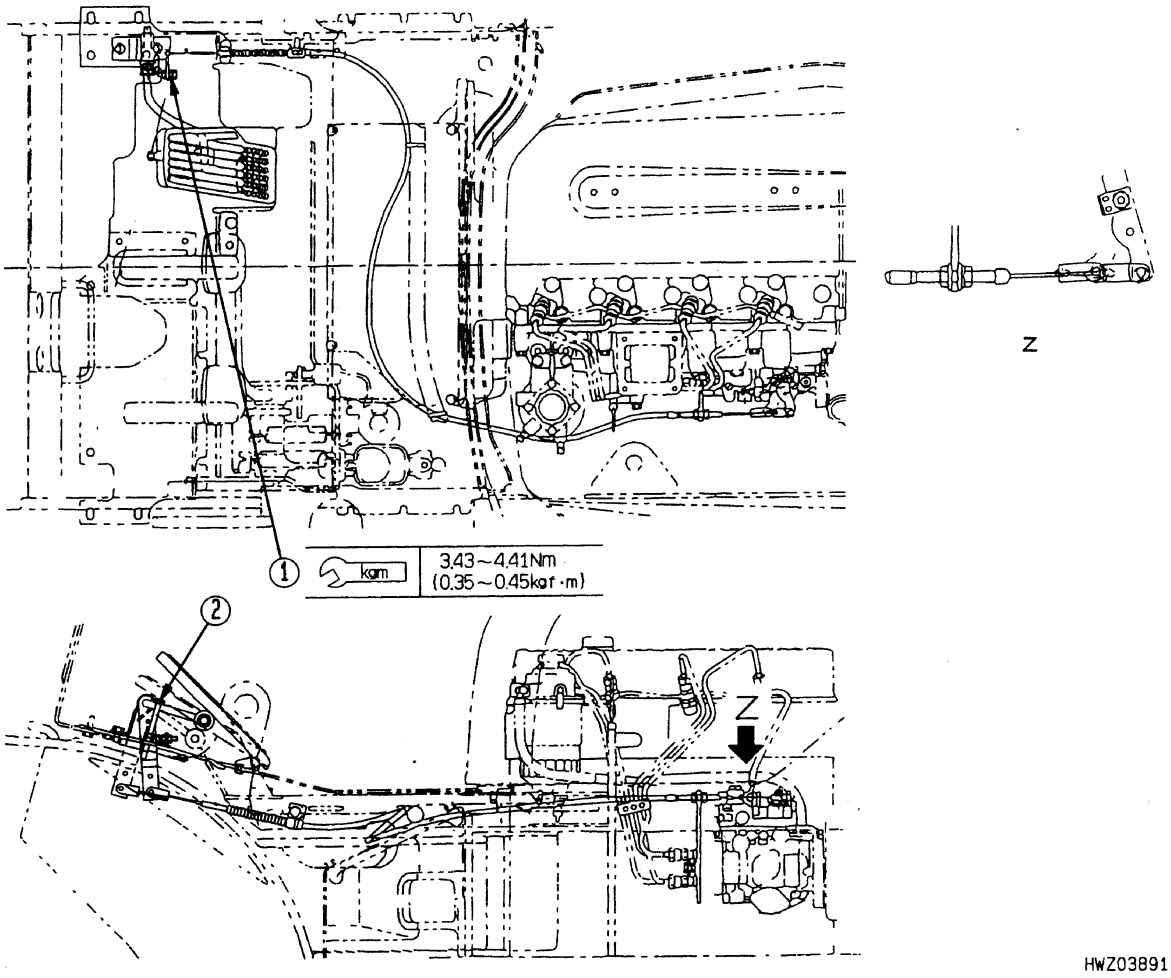

PROCEDURE FOR ADJUSTING PEDAL

1. Set stopper bolt ① so that the pedal height is 130 mm.

2. Set stopper bolt ② temporarily to a height of 60.5 mm.

3. After assembling the cable, adjust the outer casing mount of the cable so that the pedal has a play of 1 – 2 mm.

4. Adjust the height of stopper bolt ② again so that the lever at the engine end is fully open when the pedal is fully depressed.

https://truckmanualshub.com/

ADJUSTING ACCELERATOR PEDAL (C240)

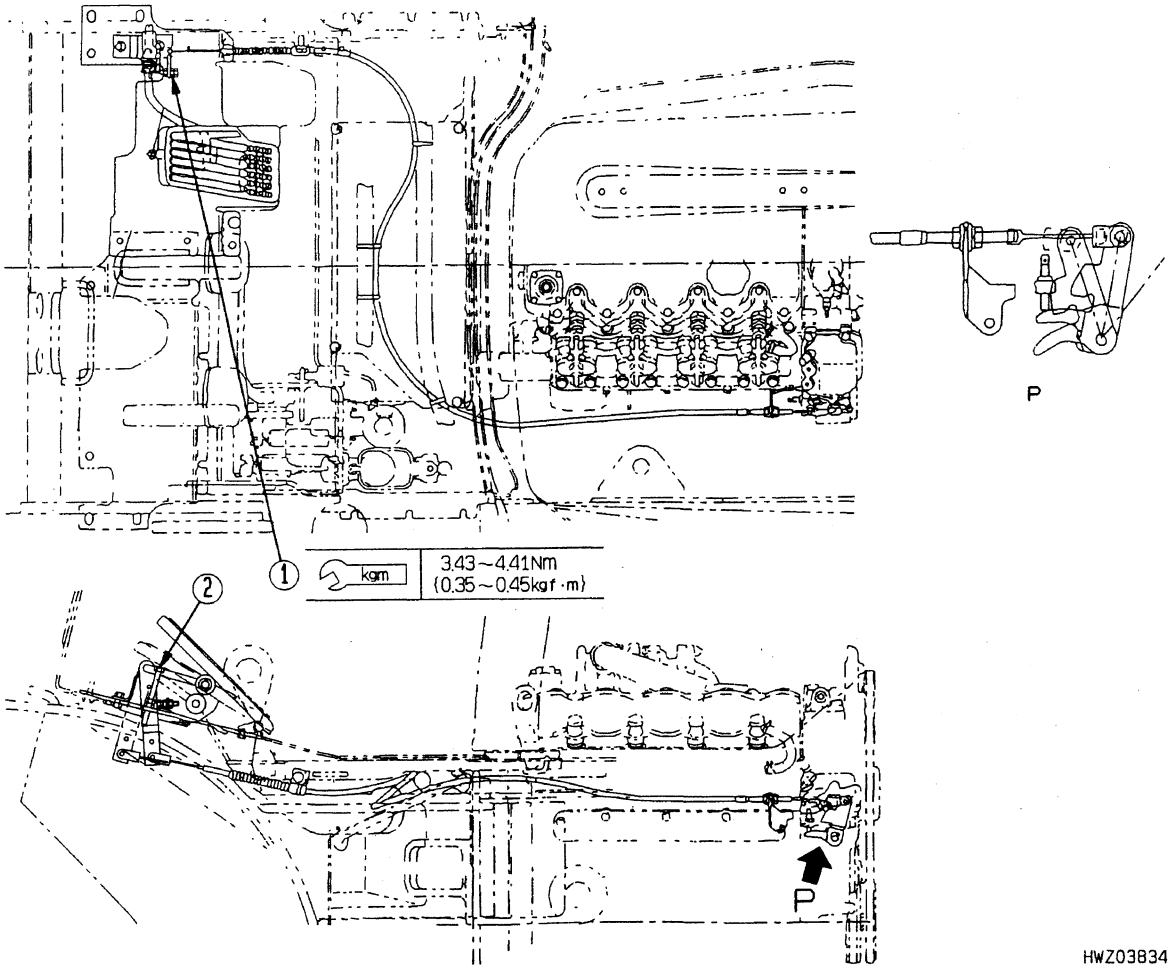

PROCEDURE FOR ADJUSTING PEDAL

1. Set stopper bolt ① so that the pedal height is 130 mm.
2. Set stopper bolt ② temporarily to a height of 53.5 mm.
3. After assembling the cable, adjust the outer casing mount of the cable so that the pedal has a play of 1 – 2 mm.
4. Adjust the height of stopper bolt ② again so that the lever at the engine end is fully open when the pedal is fully depressed.

https://truckmanualshub.com/

ADJUSTING PARKING BRAKE LEVER

★ Put blocks securely under the front and rear wheels.

1. Press the push button and set parking brake lever (1) to the RELEASED position.
2. Pull the parking brake lever enough to remove the play in the cable.
3. When the lever is released, adjustment bolt (2) will come up, so use a screwdriver to tighten so that the operating effort of the lever is the specified value.
4. Align stopper (3) with the width across flats of adjustment bolt (2).

Operating effort of lever	Min.196 N {20 kgf}

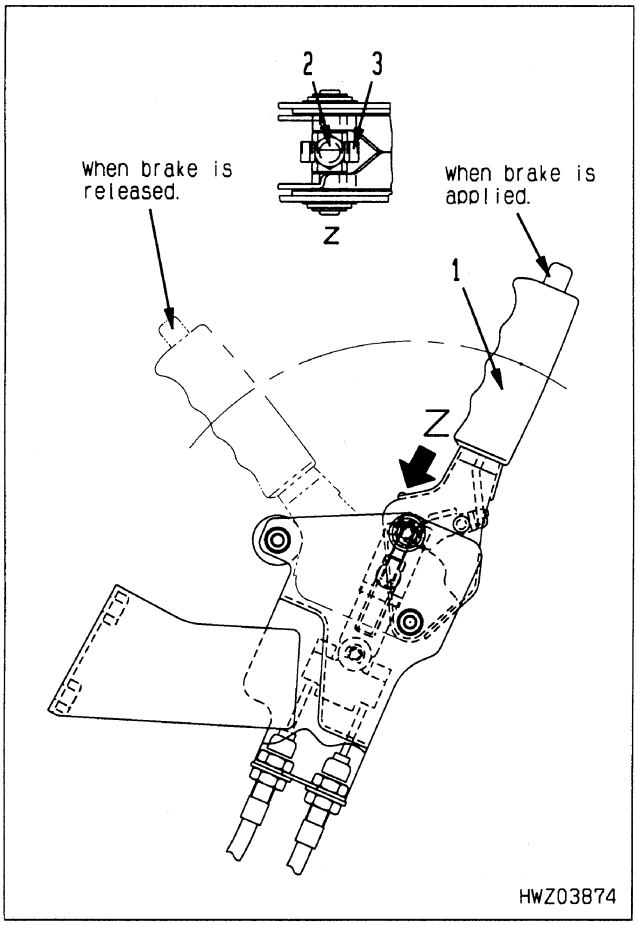

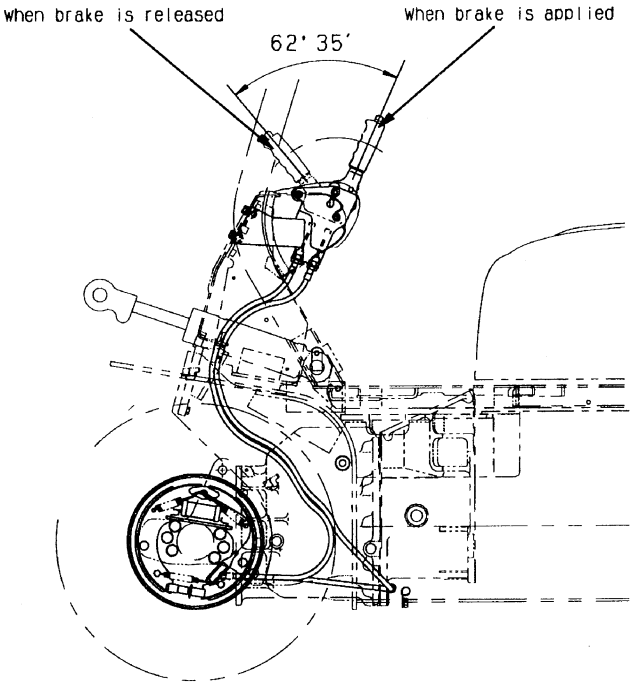

https://truckmanualshub.com/

BLEEDING AIR

BRAKE PIPING

1. Remove the cap from the air bleed plug, fit one end of a vinyl hose to the plug, and put the other end of the hose in a container of brake fluid.
2. Loosen the air bleed plug approx. 3/4 turns and depress the brake pedal.
3. Tighten the air bleed plug, then release the brake pedal.
4. Repeat Steps 2 and 3 until no more bubbles come out from the hose.
5. When all the air has been completely removed, tighten the plug and install the cap.

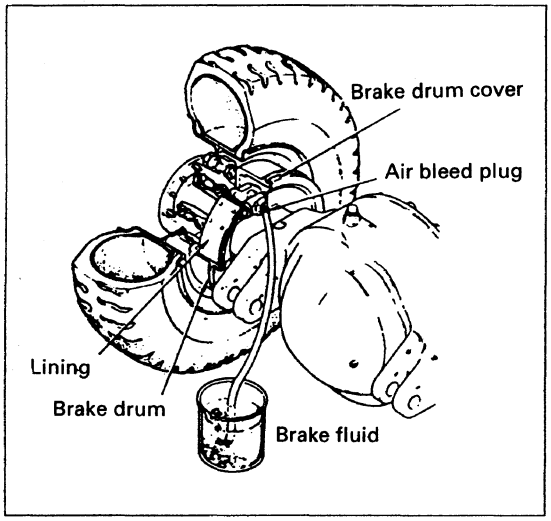

CLUTCH PIPING

1. Remove the cap from the air bleed plug, fit one end of a vinyl hose to the plug, and put the other end of the hose in a container of brake fluid.
2. Loosen the air bleed plug approx. 3/4 turns and depress the clutch pedal.
3. Tighten the air bleed plug, then release the clutch pedal.
4. Repeat Steps 2 and 3 until no more bubbles come out from the hose.
5. When all the air has been completely removed, tighten the plug and install the cap.

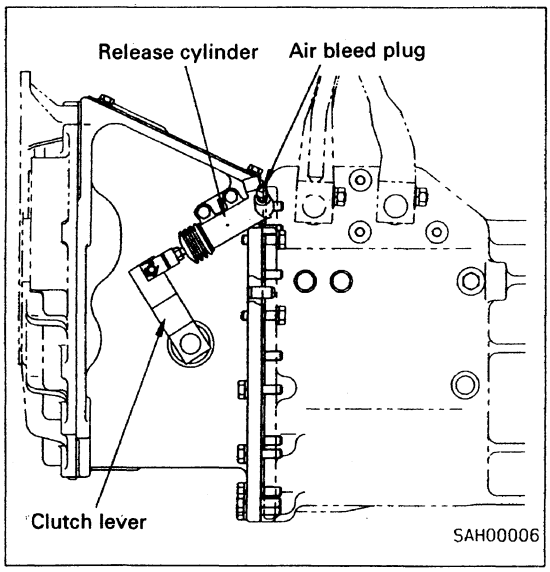

https://truckmanualshub.com/

LIFT CYLINDER

1. Start the engine and run it at low idling.

2. Raise and lower the mast.
   ★ Stop the mast approx. 100 mm before the maximum height and the lowest position.

3. Repeat Step 2 four or five times.

4. Raise and lower the mast to the maximum height and lowest position.

5. Repeat Step 4 four or five times.

FUEL PIPING
(diesel engine lift truck)

1. Loosen plug (1) and move knob (2) up and down until no more bubbles come out with the fuel.

2. After completely bleeding the air, tighten plug (1).

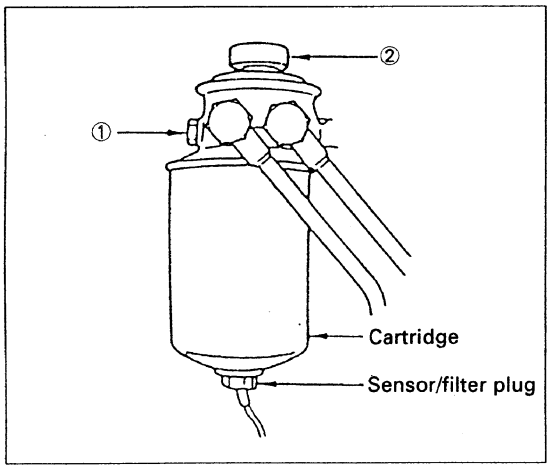

https://truckmanualshub.com/

https://truckmanualshub.com/

ADJUSTING SPRING-UP ANGLE OF STEERING COLUMN

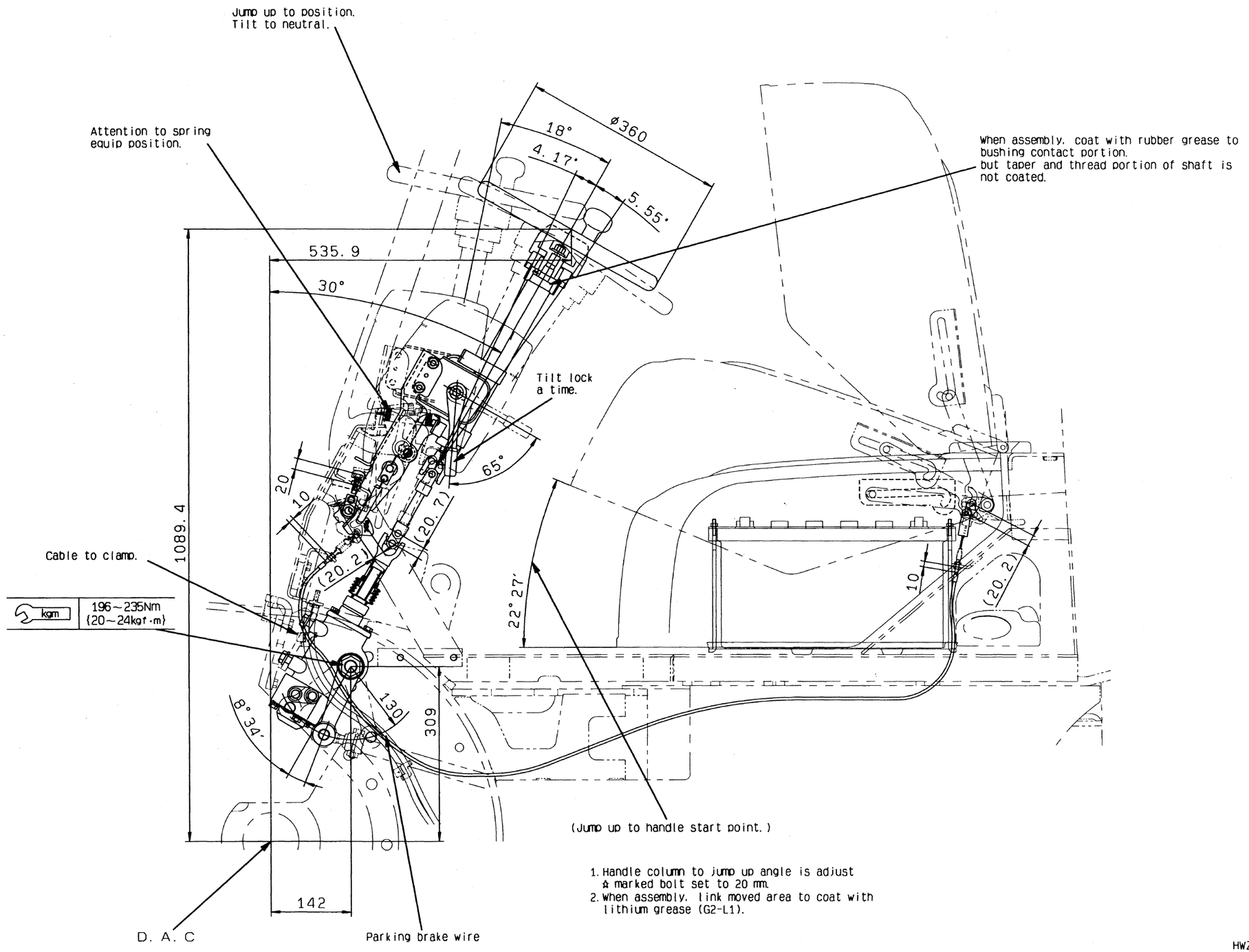

HWZ03875

https://truckmanualshub.com/

GASOLINE ENGINE LIFT TRUCK
[FG20/25/30-14, FG20H/25H/30H-14]

NOTE:
Always use genuine Komatsu Forklift oil and grease. (Oil, grease, and anti-freeze are available from Komats Forklift distributors.)

⚠ CAUTION
Never use the wrong type of brake fluid.

Lubrication point	Type of fluid	Ambient temperature -4 -20 / 14 -10 / 32 0 / 50 10 / 68 20 / 86°F 30°C	Capacity
Engine oil pan	Engine oil	SAE30-CD	3.8 ℓ 1.00 US gal, 0.84 UK gal
TORQFLOW transmission case	Engine oil	SAE10W-CD	10 ℓ 2.64 USgal, 2.20 UK gal
Differential case	Gear oil	SAE80 SAE90	TORQFLOW Transmission lift truck: 6 ℓ 1.59 US gal, 1.32 US gal Clutch type lift truck: 13 ℓ 3.43 US gal, 2.86 UK gal
Hydraulic tank	Hydraulic oil	SAE5W-CD SAE10W-CD	56 ℓ 14.80 US gal, 12.32 UK gal
Fuel tank	Gasoline		55 ℓ 14.53 US gal, 12.10 UK gal
Brake reservoir tank	Brake fluid	SAE70R-1, SAE70R-3	0.15 ℓ 0.040 US gal, 0.033 UK gal
Clutch reservoir tank	Brake fluid	SAE70R-1, SAE70R-3	0.1 ℓ 0.026 US gal, 0.022 UK gal
Greasing points	Lithium grease	NLGI No. 2	—
Cooling system	Fresh water, coolant (FLL-CT)	Add antifreeze	9.1 ℓ 2.40 US gal, 2.00 UK gal

https://truckmanualshub.com/

DIESEL ENGINE LIFT TRUCK
[FD20/25/30-14, FD20H/25H/30H-14, FD20J/25J/30J-14]

NOTE:
- **Never use fuel mixed with kerosene.**
- **Always use genuine Komatsu Forklift oil and grease. (Oil, grease, and anti-freeze are available from Komatsu Forklift disributors.)**

CAUTION

Never use the wrong type of brake fluid.

Lubrication point	Type of fluid	Ambient temperature -4 14 32 50 68 86°F -20 -10 0 10 20 30°C	Capacity
Engine oil pan	Engine oil	SAE10W-CD SAE30-CD	4D94E and 4D98E engine: 7.5 ℓ 1.98 US gal, 1.65 UK gal C240 engine: 4.8 ℓ 1.27 US gal, 1.06 UK gal
TORQFLOW transmission case	Engine oil	SAE10W-CD	10 ℓ 2.64 USgal, 2.20 UK gal
Differential case	Gear oil	SAE80 SAE90	TORQFLOW Transmission lift truck: 6 ℓ 1.59 US gal, 1.32 US gal Clutch type lift truck: 13 ℓ 3.43 US gal, 2.86 UK gal
Hydraulic tank	Hydraulic oil	SAE5W-CD SAE10W-CD	56 ℓ 14.80 US gal, 12.32 UK gal
Fuel tank	Diesel	ASTM D975 No. 2 ASTM D975 No. 1	55 ℓ 14.53 US gal, 12.10 UK gal
Brake reservoir tank	Brake fluid	SAE70R-1, SAE70R-3	0.15 ℓ 0.040 US gal, 0.033 UK gal
Clutch reservoir tank	Brake fluid	SAE70R-1, SAE70R-3	0.1 ℓ 0.026 US gal, 0.022 UK gal
Greasing points	Lithium grease	NLGI No. 2	—
Cooling system	Fresh water, coolant (FLL-CT)	Add antifreeze	4D94E and 4D98E engine: 9.2 ℓ 2.43 US gal, 2.02 UK gal C240 engine: 9.0 ℓ 2.38 US gal, 1.98 US gal

https://truckmanualshub.com/

CHECK ITEMS FOR EACH EQUIPMENT

Component	Check item	Details of check
Engine	1. Ease of starting, abnormal noise	• Set forward/reverse to the neutral position, pull the parking brake lever, then start the engine and check the following. 1. Does engine start smoothly? 2. Is there any abnormal noise? 3. Does preheating plug work normally? 4. Do accelerator pedal and levers work smoothly?
	2. Engine rotation, exhaust gas color	• Depress the accelerator pedal and check for the following. 1. Combustion instability 2. Abnormal noise 3. Abnormal explosion 4. Irregular engine vibration 5. Irregular rise in engine speed 6. Leakage of exhaust gas 7. Abnormal exhaust gas color When idling: No color When pedal is depressed: Faint black color
	3. Idling speed	• After warming up the engine, run at idling and check the following. 1. Idling speed FG20 – 30: 600 – 700 rpm FG20H – 30H: 600 – 700 rpm FD20J – 30J: 650 – 700rpm FD20 – 30: 750 – 800 rpm FD20H – 30H: 750 – 800 rpm 2. Max. speed FG20 – 30: 2850–3050 rpm FG20H – 30H: 2700–2900 rpm FD20J – 30J: 2650–2750 rpm FD20 – 30: 2700–2750 rpm FD20H – 30H: 2700–2750 rpm
	4. Air cleaner	• Check the air cleaner and element for the following. 1. Cracked, damaged element 2. Loose air cleaner mount 3. Dirty, damaged element ★ For details of the method of cleaning and replacing the element, see TESTING AND ADJUSTING.

https://truckmanualshub.com/

Component	Check item	Details of check
Engine	5. Cylinder head	Check for loose cylinder head mounting bolts ★ For details of the tightening method and tightening torque for engine cylinder head mounting bolts, see TESTING AND ADJUSTING.
	6. Valve clearance	**Valve clearance** Unit: mm (in) Model / Engine / Intake valve / Exhaust valve FG20 – 30 / H20II / 0.38 (Warm) (0.015) / 0.38 (Warm) (0.015) FG20H – 30H / H25 / 0.38 (Warm) (0.015) / 0.38 (Warm) (0.015) FD20J – 30J / C240 / 0.45 (Cold) (0.0177) / 0.45 (Cold) (0.0177) FD20 – 30 / 4D94E / 0.2 (Cold) (0.0081) / 0.2 (Cold) (0.0081) FD20H – 30H / 4D98E / 0.2 (Cold) (0.0081) / 0.2 (Cold) (0.0081) ★ For details of the method of adjusting, see TESTING AND ADJUSTING.
	7. Compression pressure	**Compression** Unit: MPa (kgf/cm²)/rpm FG20 – 30: 1.23(12.5)/300 FG20H – 30H: 1.28(13.0)/300 FD20J – 30J: 3(31)/200 FD20 – 30: 2.94(30)/250 FD20H – 30H: 2.94(30)/250 ★ For details of the method of measuring, see TESTING AND ADJUSTING.
	8. Injection pressure (diesel engine lift truck)	**Pressure at start of injection** Install a nozzle tester to the nozzle when checking. Unit: MPa (kgf/cm²) Injection pressure: C240 11.8 (120); 4D94E 11.8 (120); 4D98E 11.8 (120) 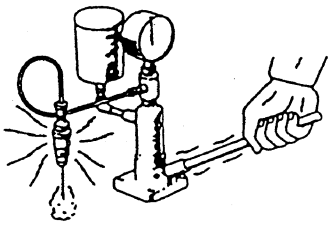 **Adjustment:** Adjust with adjustment screw.

https://truckmanualshub.com/

Component	Check item	Details of check
Engine	9. Injection spray condition (diesel engine lift truck)	Check the spray condition of the injection nozzle. If the defective: Remove nozzle from holder, remove carbon stuck to the nozzle, then wash in diesel oil. 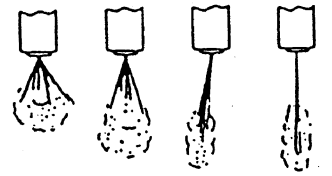 No good No good No good Good
	10. Turbocharger	Check for the following. 1. Abnormal vibration 2. Abnormal noise 3. Leakage of gas
	11. Engine mount	Check for the following. 1. Crack, deformed bracket 2. Loose, missing mounting bolts, nuts 3. Damaged, deteriorated anti-vibration rubber
	12. Lubricating system	1. Engine oil 1) Oil level Check the oil level with the oil level gauge, and add oil if the level is low. H20II engine 3.8 ℓ H25 engine 3.8 ℓ C240 engine 4.8 ℓ 4D94E engine 7.5 ℓ 4D98E engine 7.5 ℓ 2) Discoloration and deterioration Replace if there is any discoloration or deterioration. 3) Leakage of oil 2. Engine oil filter The condition cannot be judged visually, so replace the filter periodically.

https://truckmanualshub.com/

Component	Check item	Details of check
Engine	13. Fuel system	Check for the following. 1. Leakage of fuel 2. Damage, deterioration of hoses and pipes 3. Fuel filter The condition cannot be judged visually, so replace the filter periodically.
	14. High-pressure gas fuel system	Check for the following. 1. Leakage of gas 2. Cracked, damaged piping 3. Loose, damaged cylinder mount bracket
	15. Blow-by gas reduction system	Check for the following. 1. Actuation of valve 2. Clogged, damaged piping
	16. Coolant, radiator	1. Coolant level 2. Leakage of water from hose 3. Cracked, heat-hardening of hose 4. Radiator cap MAX Correct range MIN AE80345B ⚠ Never remove the radiator cap when the cooling is hot. Boiling water may spurt out. ⚠ When removing the radiator cap after the cooling water temperature has gone down, turn the cap slowly to release the pressure before removing it. 1) Pressure regulator valve Push the cap spring down with your finger and check that there is the proper tension. 2) Negative pressure valve Pull the valve, then release it and check that it closes. ★ If the packing is damaged, replace the whole radiator cap assembly.

https://truckmanualshub.com/

Component	Check item	Details of check
Engine	17. Fan, fan belt	1. Fan belt 1) When checking the fan belt: • Check the inside of the belt also. • If the bottom of the pulley is shining, the belt will slip, so replace it. 2) Deflection Press the belt at a point midway between the fan pulley and alter-nator pulley to check. H20II engine: 11 – 13 mm (Finger pressure 98 N) H25 engine: 11 – 13 mm (Finger pressure: 10 kgf) 4D94E eingne: 10 – 15 mm (Finger pressure 98 N) 4D98E eingne: 10– 15 mm (Finger pressure: 10 kgf) C240 engine: 10 mm (Finger pressure 98 N) 10 mm (Finger pressure: 10 kgf) **Adjustment:** Loosen the alternator mounting nut and adjustment bar bolt, then move the position of the alterna-tor to adjust. 2. Fan, fan cover (shroud) 1) Cracked, deformed fan 2) Loose fan mounting bolts 3) Cracked, deformed shroud 4) Loose shroud mounting bolts
	18. Distributor (gasoline engine lift truck)	1. Cracked cap 2. Damaged cable 3. Point gap Point gap: Full transistor

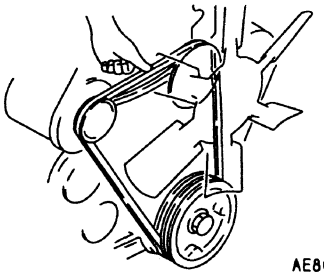
AE803940

https://truckmanualshub.com/

Component	Check item	Details of check
Engine	19. Spark plug ignition timing (gasoline engine lift truck)	1. Spark plug 1) Gap Remove the plug with a plug wrench, then measure the gap with a gauge. * If the plug is burned or is not within the specified range, replace the plug. 2) Cleaning of the plug or the surrounding area. 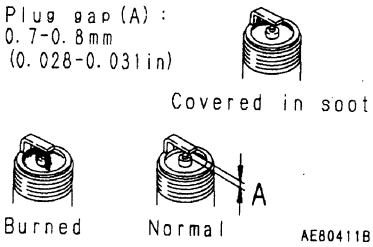 2. Ignition timing 1) Start the engine and run at idling. 2) Using a timing light, check with the timing mark on the crankshaft pulley and front cover. 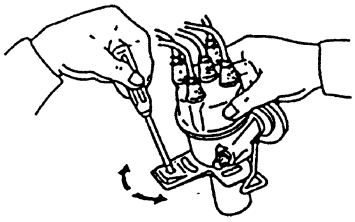 **Adjustment:** Turn the distributor to adjust. Ignition timing (BTDC°/rpm): H20II 4/650; H25 4/650
	20. Charging system, wiring	Check the following. 1. Specific gravity of battery electrolyte Specific gravity of battery electrolyte: 1.280, 1.240 — Charge condition: Fully charged, 1/4 discharged — Need for charging: No Specific gravity of battery electrolyte: 1.210, 1.130 — Charge condition: 1/2 discharged, Fully discharged — Need for charging: Yes If the charge is low, check the alternator. 2. Battery electrolyte level 3. Loose, corroded battery terminals 4. Loose wiring connections 5. Damaged wiring 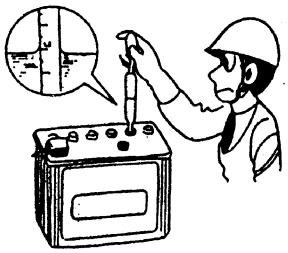

https://truckmanualshub.com/

Component	Check item	Details of check
Power train	21. Clutch	1. Abnormal noise Check for abnormal noise when the clutch pedal is depressed fully. 2. Pedal height (from floor plate) When free: 140 – 150 mm 3. Engaging, disengaging of clutch The clutch must disengage completely when the clutch pedal is fully depressed. The clutch must engage before the clutch pedal is fully released. 4. Play Play: 3 – 5 mm 5. Leakage of oil from clutch cylinder or piping
	22. Transmission	1. Shift lever (clutch type lift truck) 1) Play at neutral position 2) Ease of entering gear shift position, play at each gear shift position 2. Forward/reverse lever (TORQFLOW truck) • Operate the lever and check the following. 1) Play (neutral position, gear shift position) 2) Ease of entering each shift position 3. Transmission 1) Abnormal noise

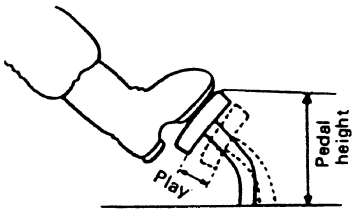

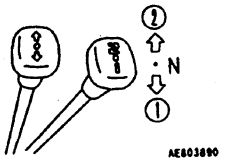

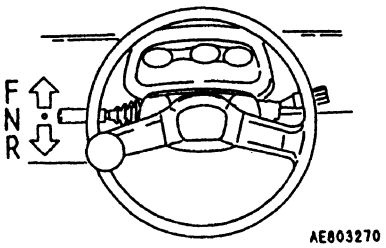

https://truckmanualshub.com/

Component	Check item	Details of check
Power train	22. Transmission (continued)	2) Oil leakage If oil is oozing out and dripping, replace the packings. 3) Oil level Stop the lift truck on level ground and check with the oil level gauge.

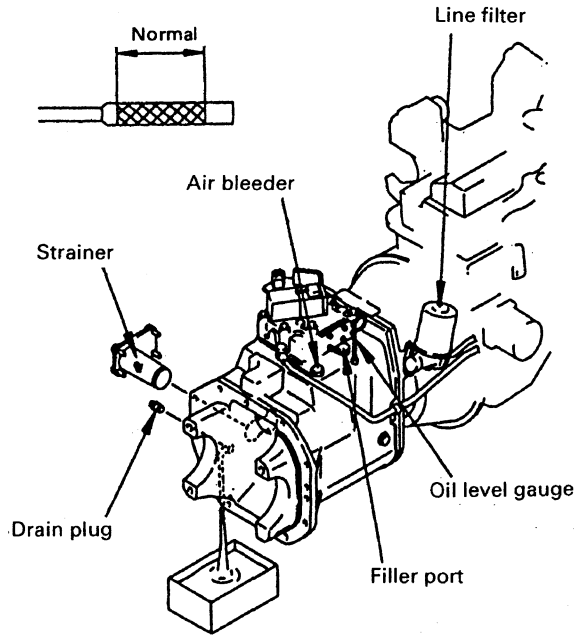

AE80379A

4. Inching pedal (TORQFLOW truck)

1) Protrusion of inching spool
Check with the pedal fully released.
(Figure on right)

Protrusion	31 mm

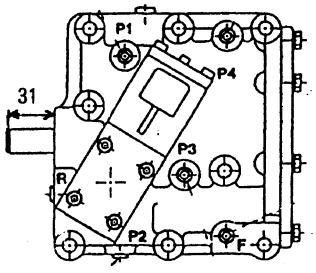

2) Interconnected stroke
Adjust with the adjustment bolt so that the inching pedal interconnects with the brake pedal at the specified value.

Interconnected stroke	35 – 41 mm

3) Pedal height

When free	140 – 150mm

4) Play

Play	2 – 3 mm

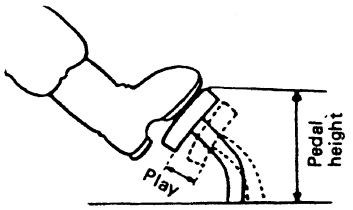

Component	Check item	Details of check
Power train	23. Torque converter	⚠ When carrying out the following checks, apply the parking brake securely and put blocks under the wheels.

1. Clutch actuation pressure
   Place the forward/reverse lever at FORWARD or REVERSE, then depress the accelerator pedal and measure the pressure.

Clutch actuation pressure	9.3 – 13.4 kgf/cm²

2. Stall speed
   Place the forward/reverse lever at FORWARD and REVERSE, run the engine at maximum speed, and measure the engine speed at that point.

H20II	1720 – 1790 rpm
H25	1950 – 2250 rpm

4D94E	1950 – 2200 rpm
4JG2	2040 – 2390 rpm
C240	1650 – 1950 rpm

★ This operation raises the torque converter oil temperature, so do not continue the operation for a long time.

Position of hydraulic ports on torque converter assembly

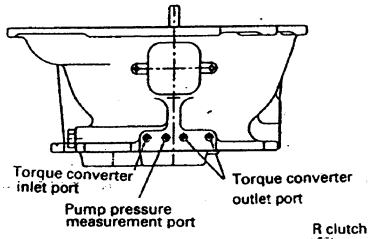

Position of hydraulic ports on control valve assembly

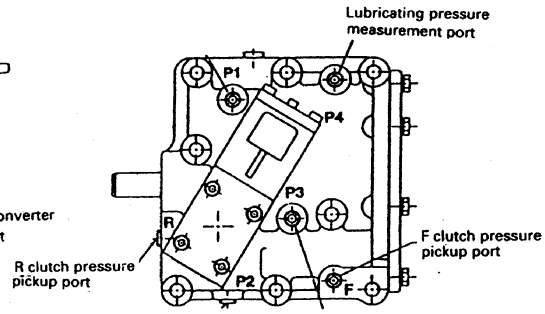

3. Torque converter inlet port pressure: 3 – 7 kgf/cm²

4. Torque converter outlet port pressure: 2.5 – 4.5 kgf/cm²

https://truckmanualshub.com/

Component	Check item	Details of check
Power train	24. Propeller shaft	Not applicable to this model
	25. Differential	1. Abnormal noise when traveling 2. Oil level in differential case (For the clutch type truck: Including transmission case) 3. Oil leakage ★ For details of the method of measuring the oil level and changing the oil, see TESTING AND ADJUSTING. 4. Leakage of oil from case 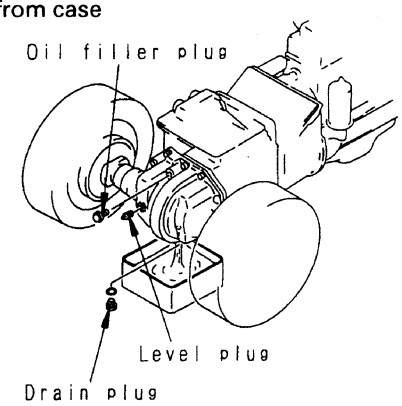
	26. Final drive	Not applicable to this model

https://truckmanualshub.com/

Component	Check item	Details of check
Travel system	27. Front axle	1. Deformation, cracks, damage Check visually or check with the crack detection method. (Be particularly careful to check the welds and area around the main frame mounting bolts.) 2. Loose mounting bolts Tightening torque for bolts used for mounting to frame kgm: 343 – 427 Nm (35.0 – 43.5 kgfm)
	28. Rear axle	1. Deformation, cracks, damage Check visually or check with the crack detection method. 2. Center pin play 3. Thrust clearance Clearance a: Max. 0.5 mm Bolt 1 (kgm): 245 – 309 Nm {25.0 – 31.5 kgfm} Bolt 2 (kgm): 490 – 608 Nm {50.0 – 62.0 kgfm} 4. Loose cap mounting bolts 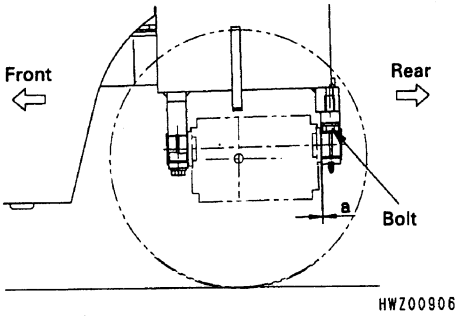
	29. Tire	1. Inflation pressure Unit: kPa (kgf/cm²) Front tire: 690 (7.0) Rear tire: 690 (7.0) Note: 3.0 ton hi-speed truck: 760 kPa {7.75 kgf/cm²} 2. Cracks in tread, side wall If the cracks are serious, replace the tire. 3. Depth of tread (amount of wear) For pneumatic (air-filled) tires: Measure the depth of the tread at a position 1/4 of the tread width and check that the depth is at least 1.6 mm. 4. Abnormal wear Uneven wear, stepped wear 5. Metal pieces stuck in tire 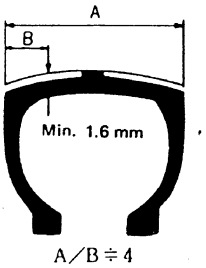

https://truckmanualshub.com/

Component	Check item	Details of check
Travel system	30. Wheel	1. Tightening torque for hub nuts Unit: Nm {kgfm} Front wheel: 294 – 490 {30 – 50} Rear wheel: 196 – 245 {20 – 25} 2. Deformation, cracks in side ring Check visually or check with the crack detection method. 3. Tightening torque for rim mating nuts Unit: Nm {kgfm} Front wheel: 196 – 294 {20 – 30} (Except, 3-ton truck) Rear wheel: 88 – 123 {9 – 12.5}

https://truckmanualshub.com/

Component	Check item	Details of check
Steering system	31. Steering wheel	1. Shaking, pulling, dragging 2. Operating effort Play Play: 30 – 60 mm (At engine idling) ★ Adjustment: Adjust at gear box 3. Looseness, play 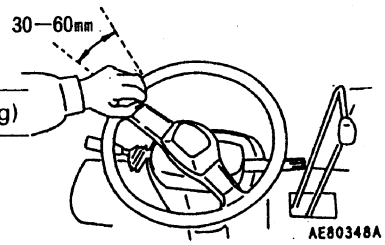
	32. Steering gear box	1. Oil leakage 2. Tightening torque for mounting bolts kgm: 98 – 123 Nm (10.0 – 12.5 kgfm)
	33. Rod, arms (steering linkage)	1. Cracks, damage, curvature 2. Missing, broken split pins 3. Loose, missing mounting bolts 4. Play in movable parts, connections
	34. Knuckle	1. Wheel bearing • Jack up and check for the following. 1) Play Use your hands to move the tire at the top and bottom to check. 2) Abnormal noise, rotate the tire by hand to check 2. King pin 1) Play 2) Cracks, damage 3. Knuckle Damage Check visually or check with the crack detection method.

Component	Check item	Details of check
Steering system	35. Left, right turning radius	Measure minimum turning radius 1) Have an assistant operate the lift truck with the turning radius at the minimum. 2) Fit a piece of chalk to the end of a stick, fix it to the side of the outermost part of the counterweight, and draw a circle on the road surface. 3) Measure the circle on the road surface. 4) Carry out the check both when turning left and when turning right. 2.0-ton truck: Within 2190 mm ± 5% 2.5-ton truck: Within 2260 mm ± 5% 3.0-ton truck: Within 2370 mm ± 5% Difference between right and left: Within ±100 mm Adjustment: Adjust with stopper bolt
	36. Steering wheel	1. Loose, missing stopper bolts 2. Contact between wheels and other parts of the lift truck
	37. Power steering system	1. Leakage of oil from power steering cylinder or hose 2. Damaged, deteriorated hoses 3. Loose, missing mounting bolts 4. Interference with chassis 5. Oil pressure Install an oil pressure gauge to oil pressure measurement port (2) in the diagram on the left, then turn the steering wheel fully and measure the oil pressure. Oil pressure: 7.4 – 7.8 MPa {75 – 80 kgf/cm²} 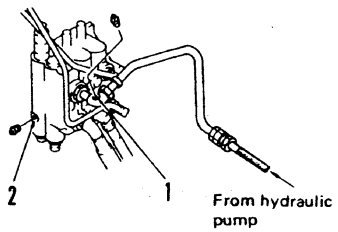
	38. Steering chain	Not applicable to this model

https://truckmanualshub.com/

Component	Check item	Details of check
Braking system	39. Travel brake	1. Brake pedal 1) Pedal height When depressed: 90 – 100 mm 2) Play Play: 13 – 17 mm 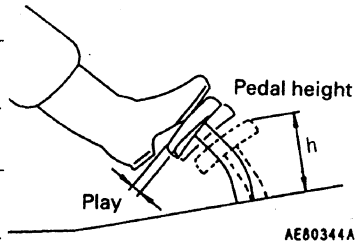 2. Braking effect • Travel at maximum speed on a flat, dry paved surface, then stop the machine suddenly, and check for the following. 1) Pulling of steering wheel 2) Dragging of brakes 3) Abnormal noise 4) Stopping distance When unloaded: Within 5 m (when traveling at 20 km/h) When loaded: Within 2.5 m (when traveling at 10 km/h)
	40. Parking brake	1. Parking brake lever 1) Operating effort for lever Min. 196 Nm {20 kgfm} 2) Braking force Check that the parking brake can hold the lift truck when it is stopped on the slope given below. When unloaded: Slope of 11.2° or above When loaded: Slope of 8.5° or above 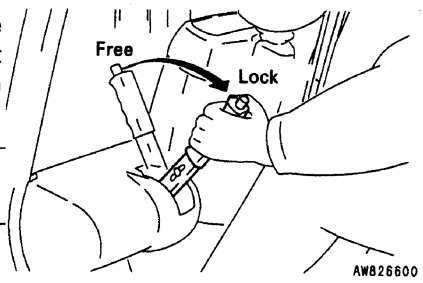
	41. Rod, link, cables	1. Damage, looseness, play 2. Broken split pins
	42. Brake piping	Check the pipes, hoses, and joint visually for the following. 1. Damage 2. Oil leakage 3. Contact 4. Deteriorated hoses 5. Loose mounting bolts

Component	Check item	Details of check
Braking system	43. Oil brake	1. Actuation of master cylinder, wheel cylinder Depress the brake pedal and check the following. 1) Operating effort 2) Change in operating effort 3) Change in position of pedal when kept depressed 4) Return of pedal when released ☆ If there is any change in the position when the pedal is kept depressed, and there is no external leakage of oil, it means that there is an abnormality in the brake valve. 2. Brake reservoir tank 1) Oil level Suitable range (A): 18 mm (0.7 in) 2) Dirt in oil, leakage 3. Deterioration of wheel cylinder Clearance between cylinder and piston: Within 0.2 mm 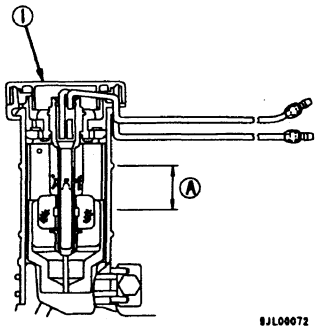
	44. Air brake	Not applicable to this model
	45. Brake booster	Not applicable to this model
	46. Brake shoe, lining	1. Brake shoe Operating condition, rust, wear 2. Peeling, damage, wear of lining Lining thickness (remaining thickness to rivet): Min. 2 mm 3. Corrosion of anchor pin 4. Deterioration of return spring Free length: Max. 136 mm Thickness of hook portion: Min. 2.0 mm

Component	Check item	Details of check
Braking system	47. Brake drum	Cracks, damage, wear of drum Measure the following dimension and check that it is within the service limit. Inside diameter of drum: Within 312 mm
	48. Back plate	1. Deformation, cracks, damage 2. Tightening torque for mounting bolt Unit: Nm {kgfm} kgm: Loctite #271 (thread hole) 157 – 196 {16.0 – 20.0} 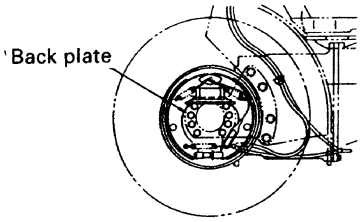
	49. Brake disc 50. Pad	Not applicable to this model
	51. Parking brake drum 52. Lining	Common with the travel brake drum, lining (see Nos. 46, 47)

Component	Check item	Details of check
Loading system	53. Fork (1)	1. Deformation, cracks, wear at fork stopper pin 2. Check that the opening of the fork tips and difference in height are within the specified range. 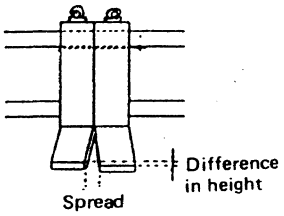 Opening: Within 35 mm Difference in height: Within 15 mm
	54. Fork (2)	1. Cracks, wear at upper hook, lower hook portion 2. Cracks, wear at fork root Check that the thickness of the fork root is within the specified value. 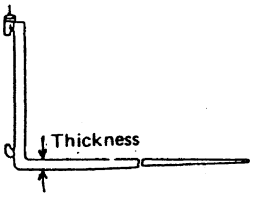 2-ton truck: Min. 32.5 mm 2.5-ton truck: Min. 36.0 mm 3.0-ton truck: Min. 39.5 mm ★ From time to time, use the crack detection method to check the fork root and hook, where stress is concentrated.
	55. Mast (1)	1. Deformation, cracks, damage to mast Check the following places visually or check with the crack detection method. • Mast stay • Tilt cylinder bracket • Roller shaft weld 2. Wear, play in mast roller, cracks in roller shaft Set the mast perpendicular, raise the forks approx. 10 cm from the ground, then check that the following clearances are within the specified value. Clearance between outer mast and inner mast: Left-to-right: Within 2.0 mm; Front-to-rear: Within 2.5 mm Clearance between inner mast and fork carriage: Left-to-right: Within 2.0 mm; Front-to-rear: Within 2.5 mm
	56. Mast (2)	1. Play in mast support Check that there is an oil groove in the bushing at the mast support. 2. Loose mast cap mounting bolts Tightening torque kgm: 245 – 309 Nm {25.0 – 31.5 kgfm}

https://truckmanualshub.com/

<table>
<tr><th>Com-ponent</th><th>Check item</th><th>Details of check</th></tr>
<tr><td rowspan="5">Loading system</td><td>57. Fork carriage</td><td>1. Deformation, cracks, damage to fork carriage
2. Wear, play in roller
3. Cracks in roller shaft</td></tr>
<tr><td>58. Lift chain</td><td>1. Tension
Set the mast perpendicular, raise the forks approx. 10 cm from the ground, then push the lift chain at the mid point with your finger and check that there is no difference in the tension.
Adjustment: Adjust with the chain stopper
2. Elongation
Measure the length between 17 links and check that it is within the specified value.
<table><tr><td rowspan="2">Length between 17 links</td><td>2-ton, 2.5-ton truck</td><td>3-ton truck</td></tr><tr><td>Within 330 mm</td><td>Within 550 mm</td></tr></table> 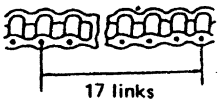
3. Thread of anchor bolt
Check visually that there is no abnormality.</td></tr>
<tr><td>59. Chain wheel</td><td>Deformation, damage, play in wheel
• Check contact surface with chain visually.
• Turn by hand and check for play in the bearing.</td></tr>
<tr><td>60. Attachment (1)</td><td>1. Installation to chassis
2. Loose bolts, nuts</td></tr>
<tr><td>61. Attachment (2)</td><td>1. Cracks, deformation, damage, wear at all parts
2. Actuation, abnormal noise at all parts</td></tr>
</table>

https://truckmanualshub.com/

Component	Check item	Details of check
Hydraulic system	62. Hydraulic tank	1. Oil leakage 2. Oil level Check the oil level with the oil level gauge and add oil if necessary. (Check the dirtiness of the oil also.) 3. Clean strainer 4. Replace line filter ★ For details of the method of checking the oil level and changing the oil, see TESTING AND ADJUSTING. 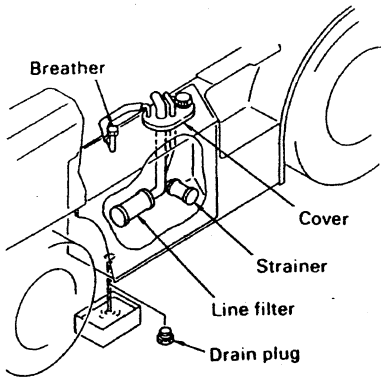
	63. Chassis piping	1. Cracks, damage, deterioration, twisting of piping 2. Oil leakage 3. Loose mounting bolts, nuts
	64. Attachment piping	1. Cracks, damage, deterioration, twisting of piping 2. Oil leakage 3. Loose mounting bolts, nuts
	65. Hydraulic pump	1. Oil leakage 2. Abnormal vibration 3. Abnormal noise
	66. Oil motor	1. Oil leakage 2. Abnormal vibration 3. Abnormal noise
	67. Lift cylinder	1. Actuation, oil leakage 2. Dents, cracks, curvature, scratches on rod 3. Tightening torque for mounting bolts kgm: 196 – 427 Nm {20 – 43.5 kgfm}

https://truckmanualshub.com/

Component	Check item	Details of check
Hydraulic system	68. Tilt cylinder	1. Actuation, oil leakage 2. Dents, cracks, curvature, scratches on rod 3. Tightening torque for mounting bolts kgm: 59 – 123 Nm {6.0 – 12.5 kgfm}
	69. Reach cylinder	Not applicable to this model
	70. Attachment cylinders	1. Actuation, oil leakage 2. Dents, cracks, curvature, scratches on rod 3. Looseness of mounting bolts
	71. Hydraulic drift of lift cylinder, tilt cylinder	Load the forks with the maximum payload, set the mast perpendicular, raise the forks approx. 1 m from the ground, then check that the hydraulic drift is within the specified value given below. Hydraulic drift of lift cylinder: When measured at fork — Within 100 mm (for 15 min); When measured at cylinder — Within 50 mm (for 15 min) Hydraulic drift of tilt cylinder: 45 mm (for 15 min) **Adjustment:** Replace the control valve, cylinder packing 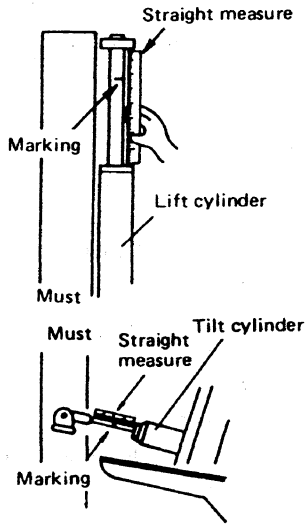
	72. Directional control valve (1)	1. Actuation, oil leakage 2. Loose mounting bolts
	73. Directional control valve (2)	**Measure relief pressure** 1) Install an oil pressure gauge to relief pressure measurement port (1). 2) Raise the forks to the maximum lifting height, measure the oil pressure when the oil is relieved, and check that it is within the specified pressure. Unit: MPa {kgf/cm²} Relief set pressure: 18.1 {185} 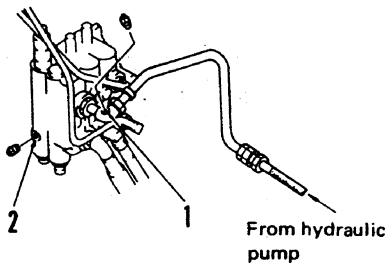

Component	Check item	Details of check
Hydraulic system	74. Solenoid valve	1. Actuation, abnormal noise 2. Abnormal generation of heat 3. Oil leakage

https://truckmanualshub.com/

Component	Check item	Details of check
Chassis, safety systemm	75. Chassis frame, chassis	1. Cracks, deformation 2. Loose, missing mounting bolts, nuts
	76. Cab	1. Cracks, deformation 2. Corrosion, leakage of rain 3. Opening/closing of door, lock, play, breakage
	77. Seat	1. Actuation 2. Loose mounting bolts
	78. Equipment for getting on/off lift truck, anti-slip devices	1. Cracks, damage, deformation 2. Loose mounting bolts
	79. Display panel	1. Damage 2. Mounting condition
	80. Overhead guard	1. Loose mount 2. Deformation, cracks, damage
	81. Backrest	1. Loose mounting bolts 2. Cracks, deformation, damage
	82. Lights, gauges, warning devices	1. Lighting up of lamps 2. Mounting condition, breakage, entry of water 3. Actuation of gauges
	83. Rear view mirror, reflectors	1. Dirt, damage 2. Reflection
	84. Oil, grease	1. Oil, greasing condition 2. Actuation of auto-greasing system
Overall test	85. Function of all systems	Carry out travel, operation test to check

https://truckmanualshub.com/

20. REMOVAL AND INSTALLATION

Overall assembly and disassembly drawing .. 20- 2
Weight table 20- 4
Mast 20- 5
Lift cylinder 20- 6
Engine 20- 7
(Clutch, torque converter) +
transmission + drive axle 20-13
Steering axle, powers steering 20-20
Wheel brake 20-23

https://truckmanualshub.com/

OVERALL ASSEMBLY AND DISASSEMBLY DRAWING

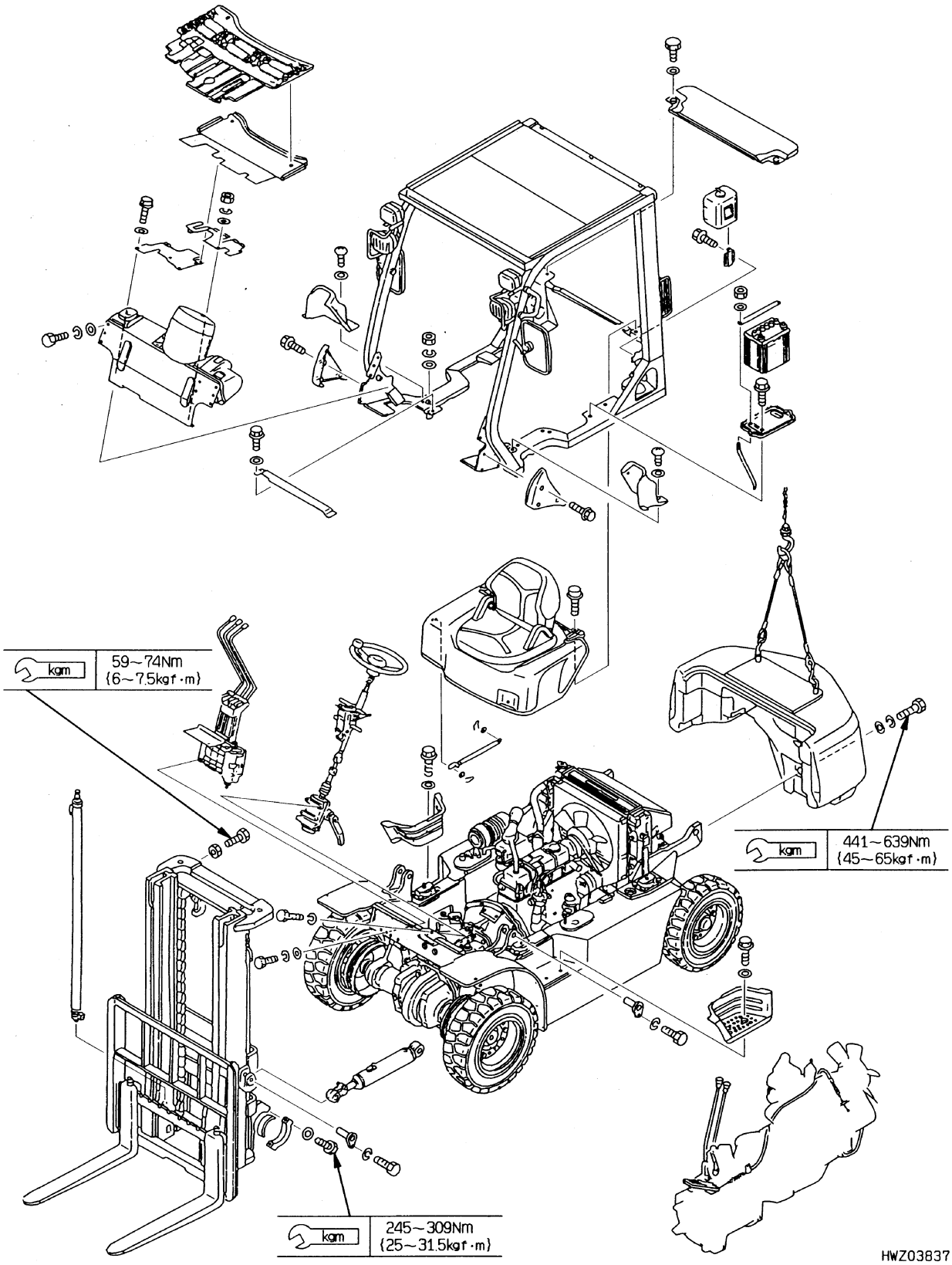

https://truckmanualshub.com/

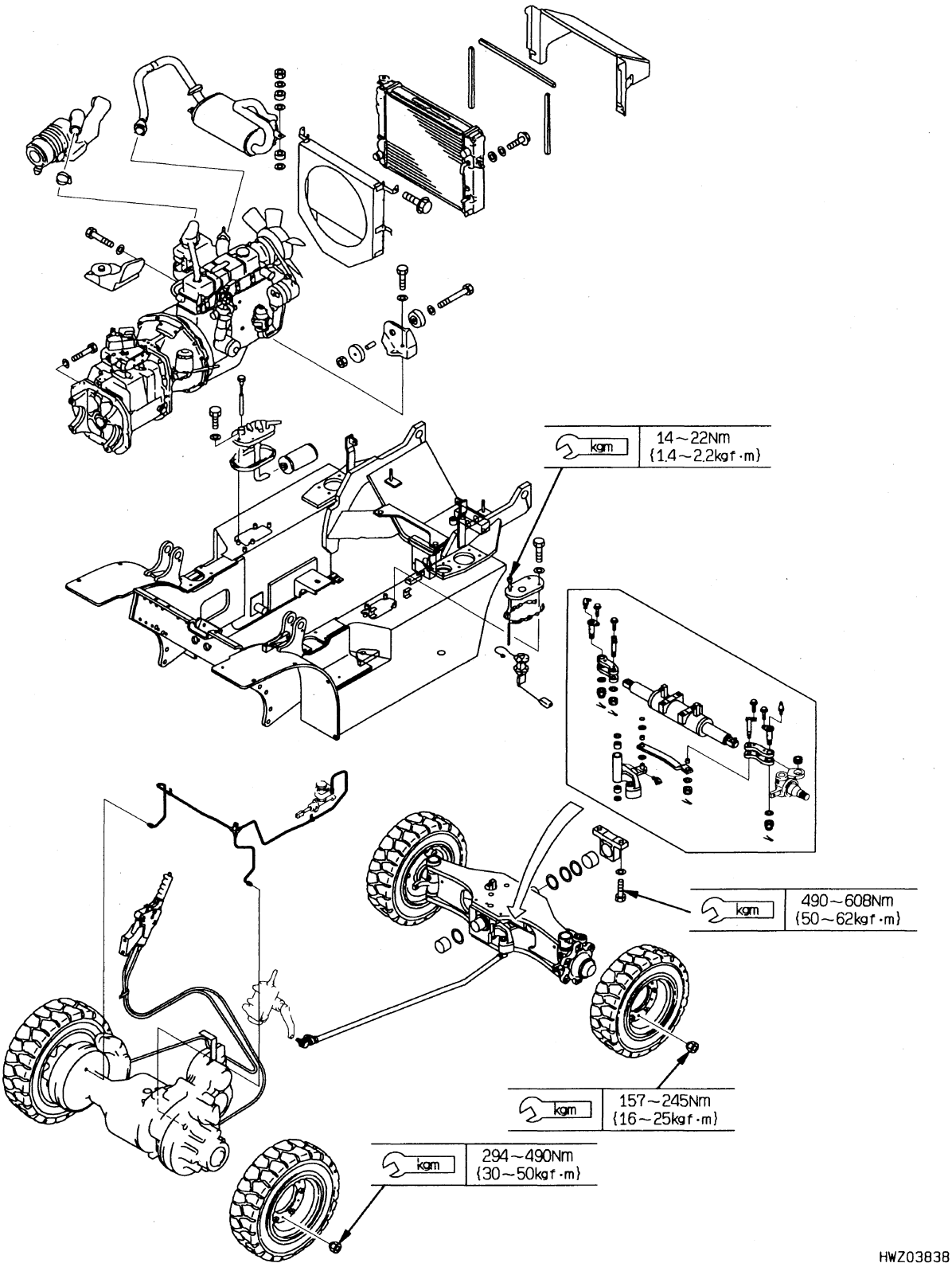

https://truckmanualshub.com/

WEIGHT TABLE

Name and type of lift truck		FG(D)20 FG(D)20H FD20J	FG(D)25 FG(D)25H FD20J	FG(D)30 FG(D)30H FD30J
Engine assembly		H20II (Gasoline engine truck standard): 153 kg H25 (Gasoline engine truck H type): 153 kg 4D94E (Diesel engine truck standard): 220 kg C240 (Diesel engine truck J type): 224 kg 4D98E (Diesel engine truck H type): 220 kg		
Clutch assembly		48 kg		
Torque converter		60 kg		
Transmission assembly	Clutch	90 kg		
	Torque converter	115 kg		
Drive axle		187 kg		
Steering axle		82 kg		
Front wheel		35 kg		
Rear wheel		15 kg		
Overhead guard assembly		102 kg		
Counterweight		1075 kg	1455 kg	1845 kg
Mast assembly (including fork)		620 kg	630 kg	760 kg
Cylinder	Lift	25 kg	25 kg	32 kg
	Tilt	12 kg		
	Power steering	5.5 kg		
Fork carriage		95 kg	95 kg	120 kg
Fork (each)		41 kg	48 kg	62 kg
Backrest		18 kg	18 kg	28 kg
Pump		3 kg		
Control valve (2-spool valve)		8 kg		
Steering gear box		9 kg		

https://truckmanualshub.com/

MAST

REMOVAL

1. Put blocks under front and rear tires.
2. Lift fork carriage with crane so that hydraulic piping can be removed.
3. Remove forks.
4. Put block under fork carriage.
5. Operate work equipment control levers several times to release remaining pressure in hydraulic piping, then remove piping.

★ After removing the piping, fit a blind plug immediately to prevent the hydraulic oil from flowing out and to prevent dirt or dust from getting in.

6. Raise fork carriage slightly with crane, and remove block.
7. Lower fork carriage.
8. Fit crane to mast.
9. Remove tilt pin.

⚠ Tilt the mast forward before removing the mast cap. If the mast cap is removed with the mast tilted back, there is danger that the mast may fall over.

10. Remove mast cap.
11. Remove mast.

⚠ When carrying the removed mast horizontally, fix the lower stay and the finger bar by the annealing wire with twisted.

⚠ Set the mast assembly horizontal and put blocks under the mast so that the fork carriage is at the top.

★ Carry out installation in the reverse order to removal.

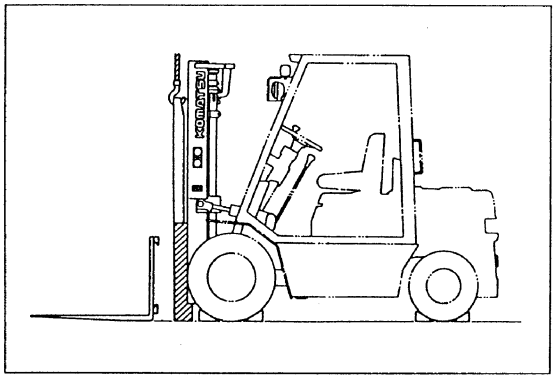

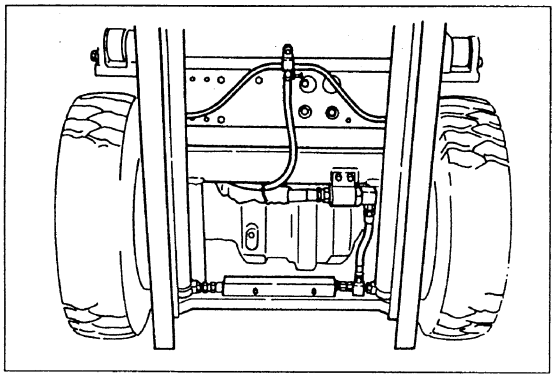

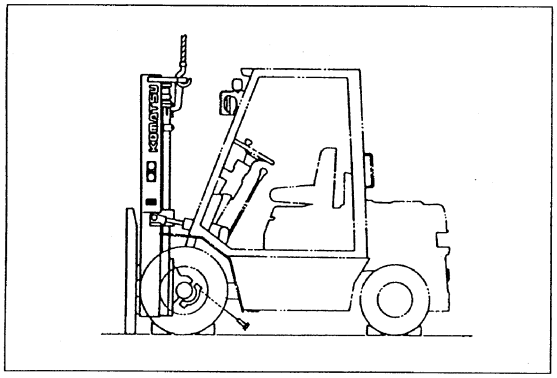

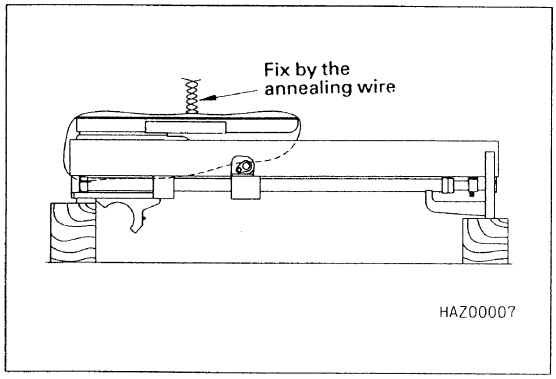

https://truckmanualshub.com/

LIFT CYLINDER

REMOVAL

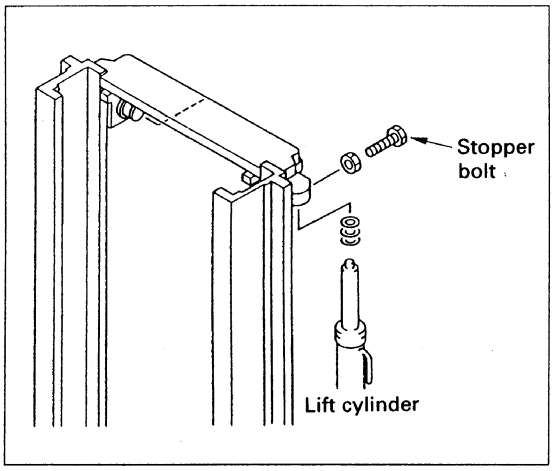

1. Set mast perpendicular.
2. Remove stopper bolt.
3. Raise mast with crane.
4. Put block under inner mast.
5. Remove cylinder clamp.
6. Operate work equipment control levers several times to release remaining pressure in hydraulic piping, then remove piping.
   ★ After removing the piping, fit a blind plug immediately to prevent the hydraulic oil from flowing out and to prevent dirt or dust from getting in.
7. Using sling belt, raise cylinder and remove.

ASSEMBLY

Synchronizing movement of mast

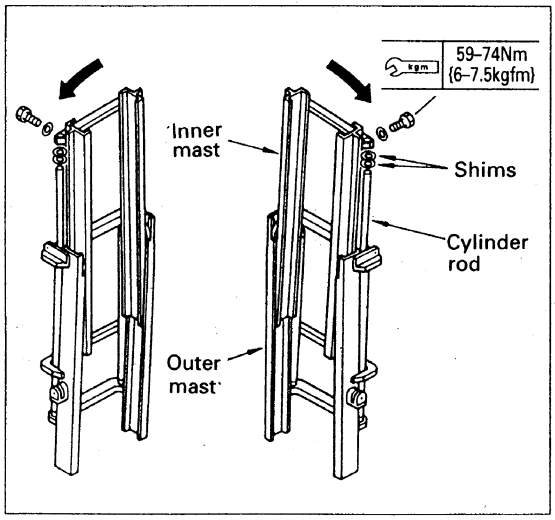

1. Raise mast to max. lifting height.
2. Check left-to-right play of mast.
3. Adjust with shims so that left and right cylinders move synchronously when mast is at max. lifting height.

Sways to left	Insert shim in left cylinder
Sways to right	Insert shim in right cylinder

https://truckmanualshub.com/

ENGINE

REMOVAL

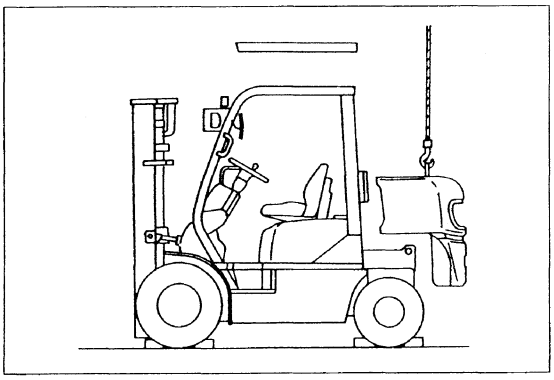

1. **Overhead guard (roof)**
   Hood (remove steering wheel spring-up interconnecting cable first)
   Counterweight

   ⚠ Always lower the forks or attachments to the ground, or remove them.
   [If the counterweight is removed with the mast or attachments raised, the lift truck will tip over.]

2. **Wiring, battery**
   1) H20II, H25 mounted

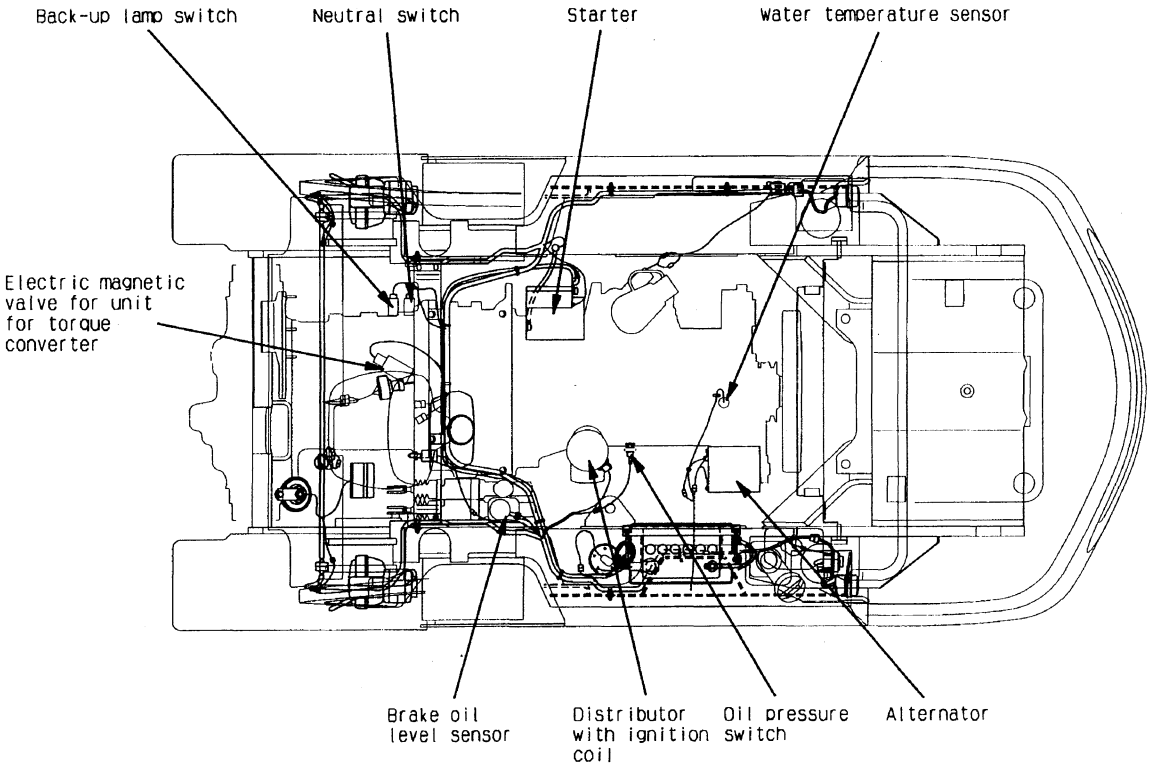

HWZ03876

https://truckmanualshub.com/

2) 4D94E, 4D98E mounted

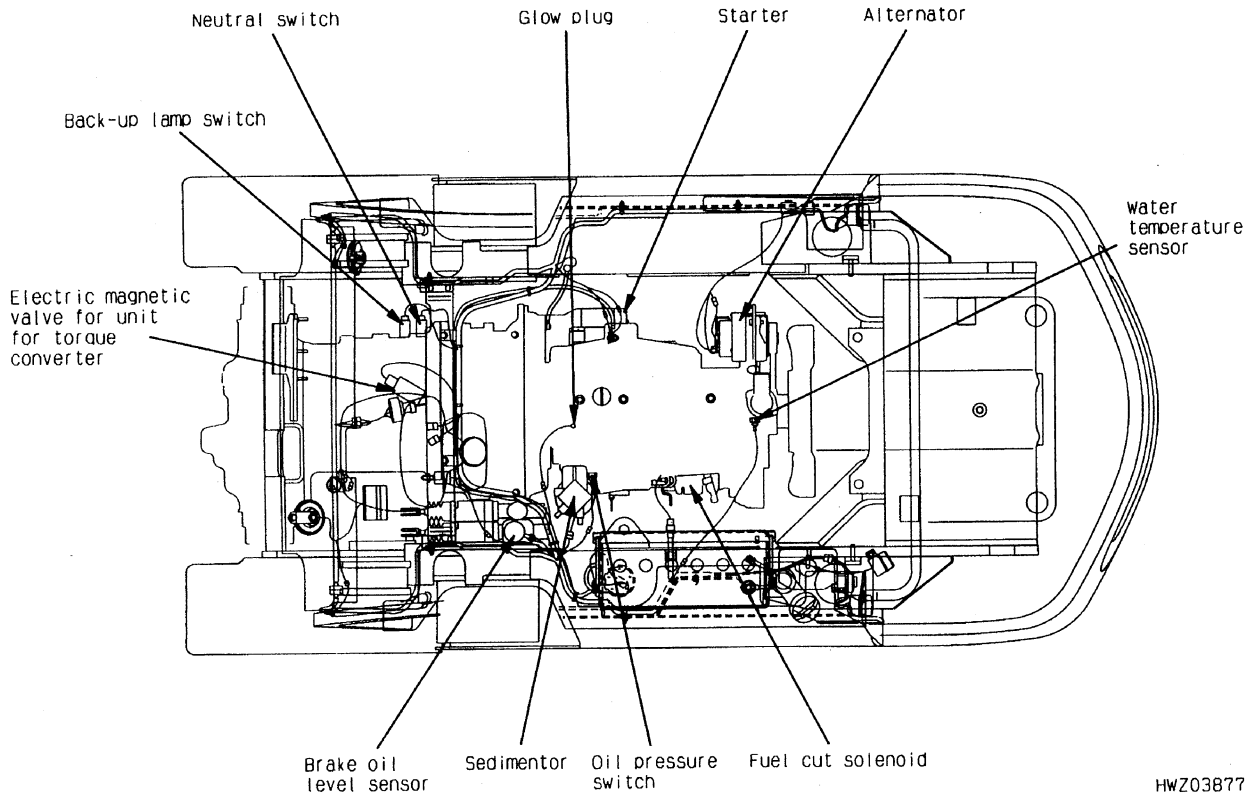

3) C240 mounted

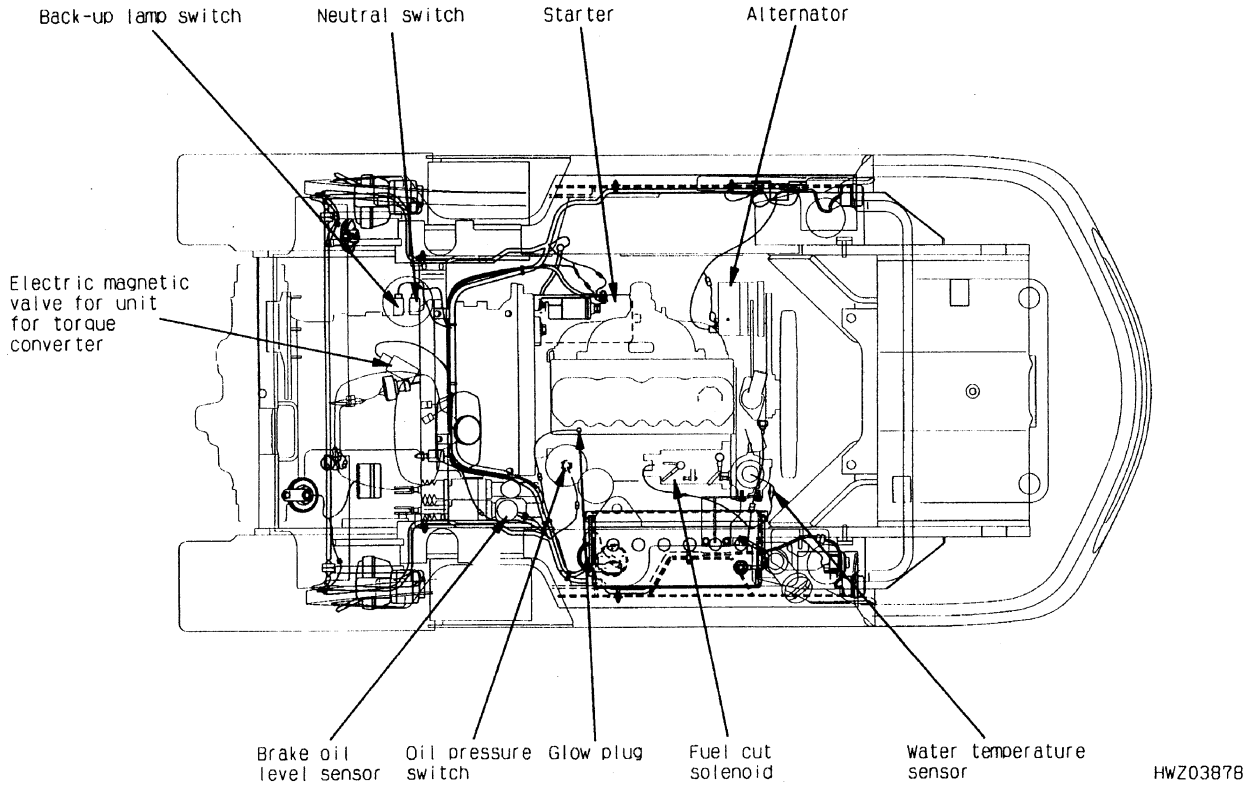

https://truckmanualshub.com/

3. **Accelerator wire**
   Remove accelerator wire.

4. **Piping (hydraulic, torque converter), hose (radiator, air cleaner, fuel)**
   - Diesel engine lift truck (TORQFLOW specification with 4D94E mounted)

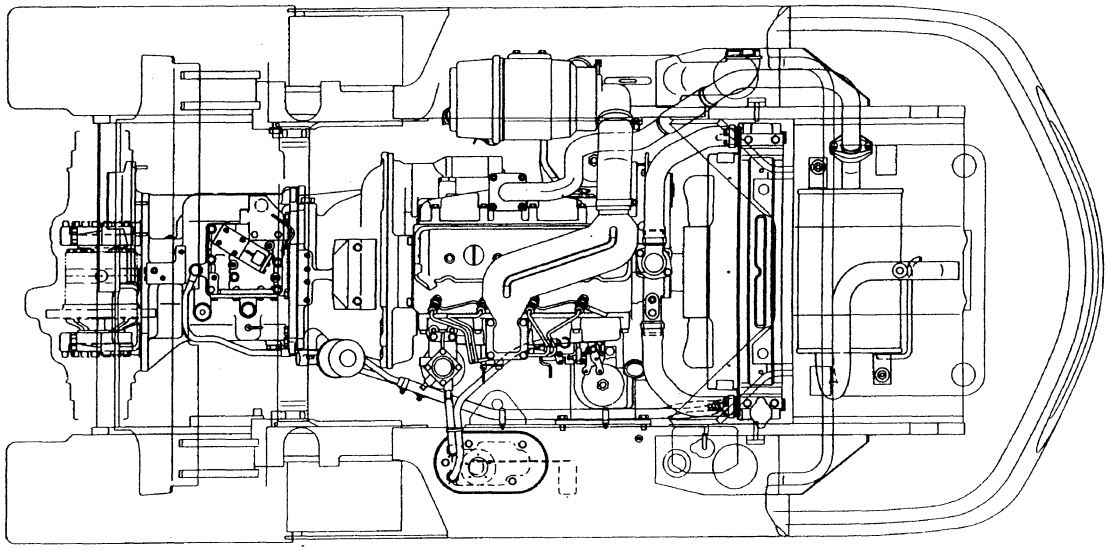

SAH00009

- Gasoline engine lift truck (TORQFLOW specification with H20II, H25 mounted)

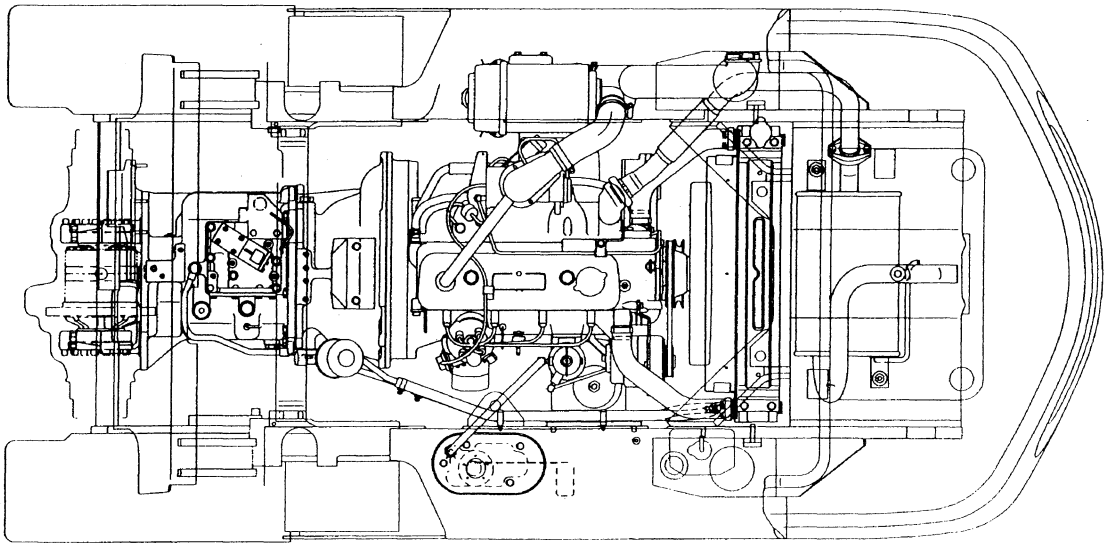

SAH00010

https://truckmanualshub.com/

5. Radiator, shroud, exhaust pipe

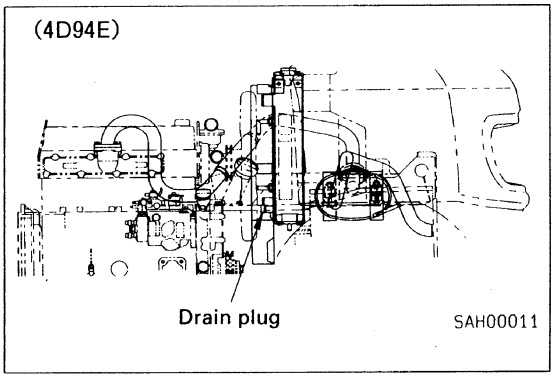

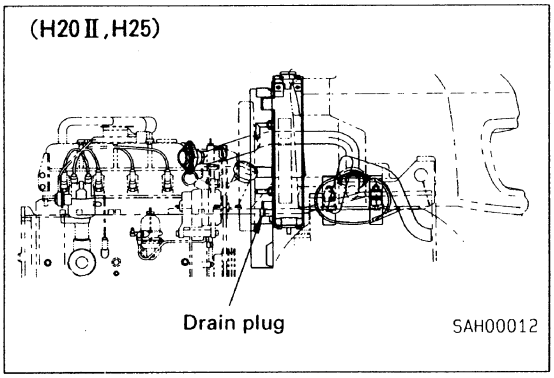

6. Pressure plate mounting bolt (clutch type truck)
Flexible plate mounting bolt (TORQFLOW truck)

★ For details of the pressure plate mounting bolt, see the explanation for replacing the clutch.

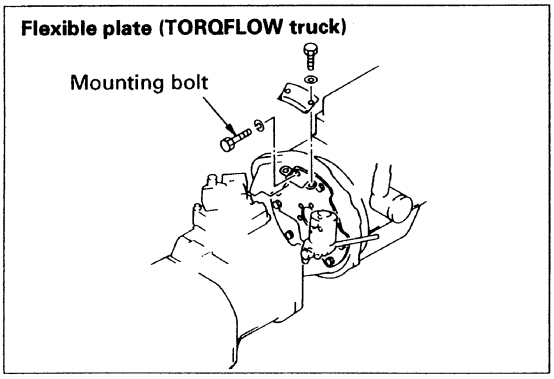

7. Engine

1) Put wooden block under transmission case.
2) Raise engine with crane and hold in position.
3) Remove clutch case mounting bolt. (clutch type truck)
   Remove torque converter case mounting bolt. (TORQFLOW truck)

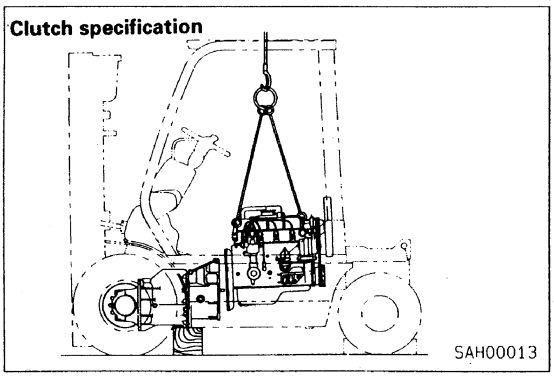

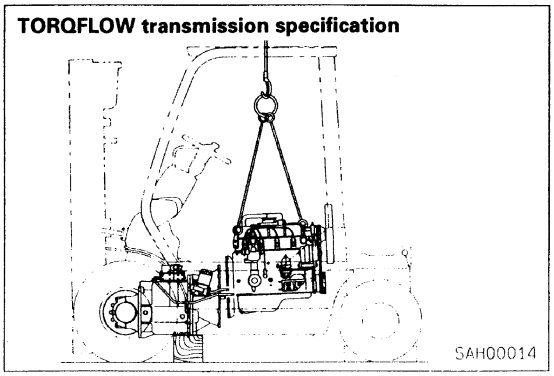

https://truckmanualshub.com/

INSTALLATION

Carry out installation in the reverse order to removal. Pay attention to the following points when installing.

1. **Tightening torque of engine mount bolt**
   When adjusting with the shim in the diagram on the right, adjust the frame mount clearance on either the left or right.

kgm	20 Nm {2 kgfm}

   Note: The diagram shows the adjustment for the H Series engine (H15, H20II, H25).

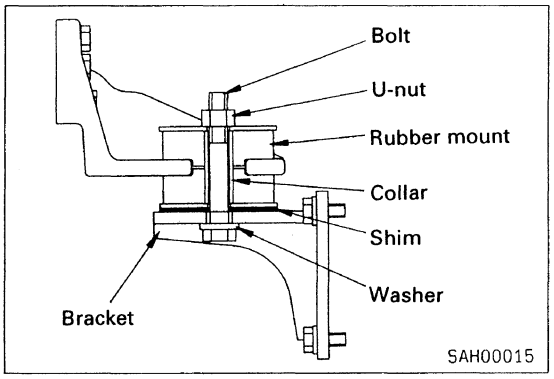

2. **Tightening torque of clutch case mounting bolt (clutch type truck)**
   Tightening torque of torque converter case mounting bolt (TORQFLOW truck)

kgm	59 – 74 Nm {6 – 7.5 kgfm}

   Note: The diagram shows the clutch type truck.

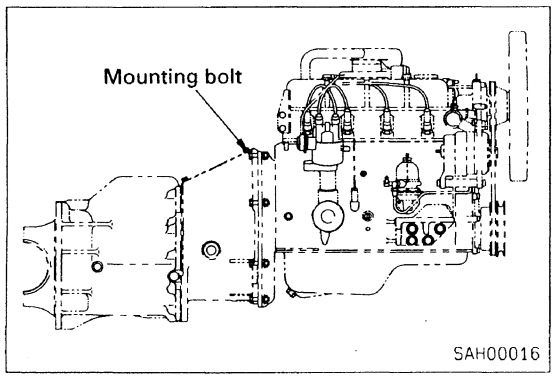

3. **Tightening torque of pressure plate mounting bolt (clutch type truck)**
   Tightening torque of flexible plate mounting bolt (TORQFLOW truck)

kgm	27 – 34 Nm {2.8 – 3.5 kgfm}

   ★ For details of the pressure plate mounting bolt, see the explanation for replacing the clutch.

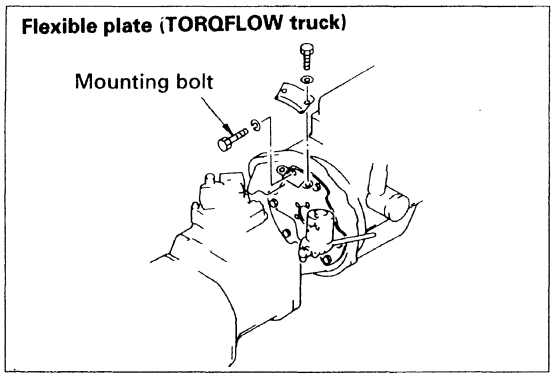

https://truckmanualshub.com/

4. Tightening torque for hydraulic piping

kgm	See the explanation for tightening torques (page 01-30).

5. Tightening torque of counterweight mounting bolt

kgm	441 – 639 Nm {45 – 65 kgfm}
	Molybdenum disulphide

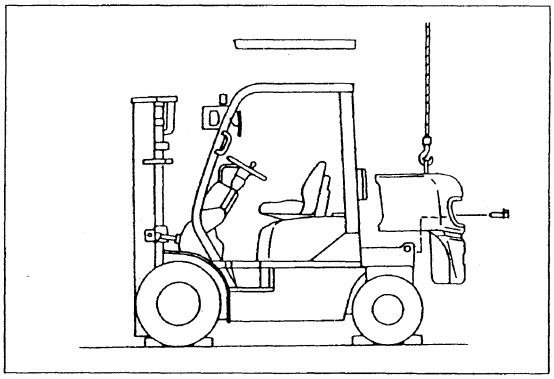

https://truckmanualshub.com/

[CLUTCH (CLUTCH TYPE TRUCK) TORQUE CONVERTER (TORQFLOW TRUCK)] + TRANSMISSION + DRIVE AXLE

REMOVAL

1. **Overhead guard (roof)**
   Hood (springs up with steering column)
   Counterweight

   ★ (When removing the clutch, torque converter) + transmission + drive axle, lift up the front of the frame. When doing this, remove the counterweight to prevent the lift truck from tipping over.

   ⚠ Always lower the forks or attachments to the ground, or remove them.
   [If the counterweight is removed with the mast or attachments raised, the lift truck will tip over.]

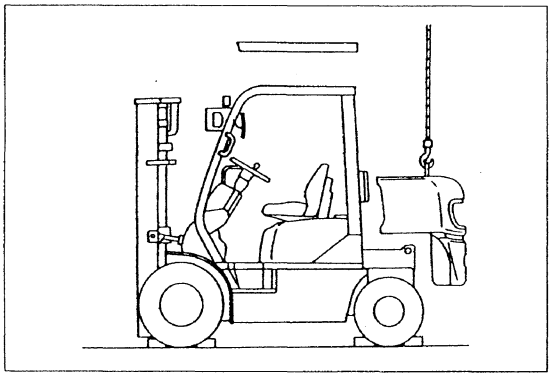

2. **Mast**

   ★ See MAST (page 20-5).

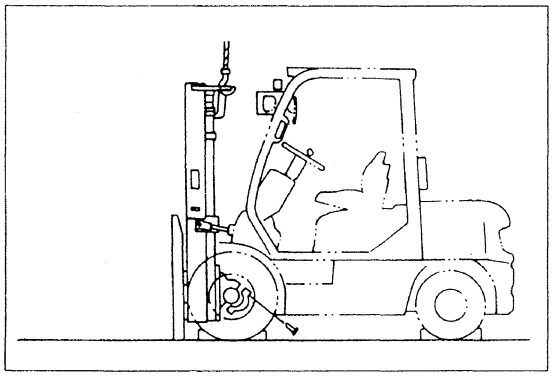

3. **Floor plate**
   Accelerator wire

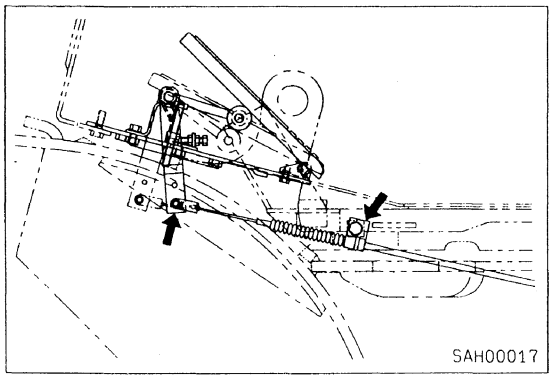

https://truckmanualshub.com/

4. Torque converter cooler piping

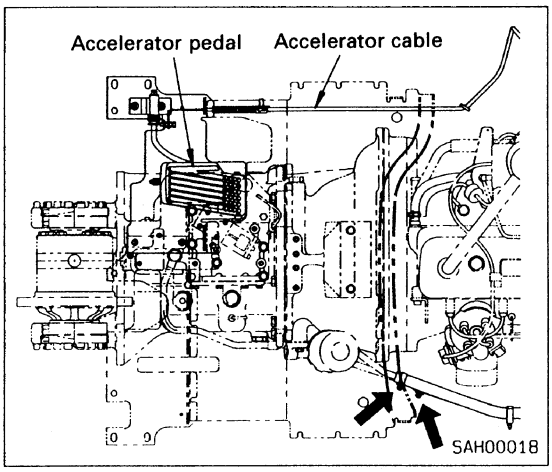

5. Directional lever, speed lever (clutch type truck)

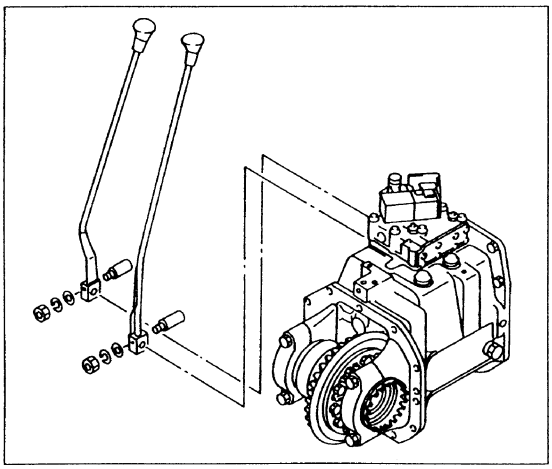

6. Brake master cylinder
Brake piping
Clutch master cylinder
Clutch piping
Parking brake lever

	0.15 ℓ (brake fluid)

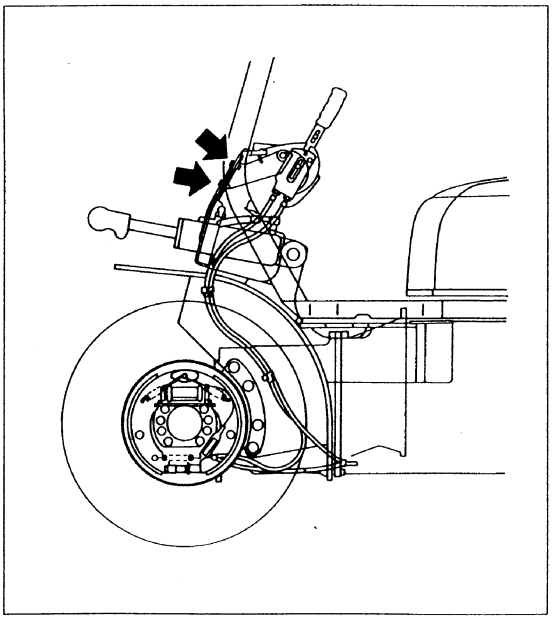

7. Pedal assembly

https://truckmanualshub.com/

8. Wiring

1) H20II, H25 mounted

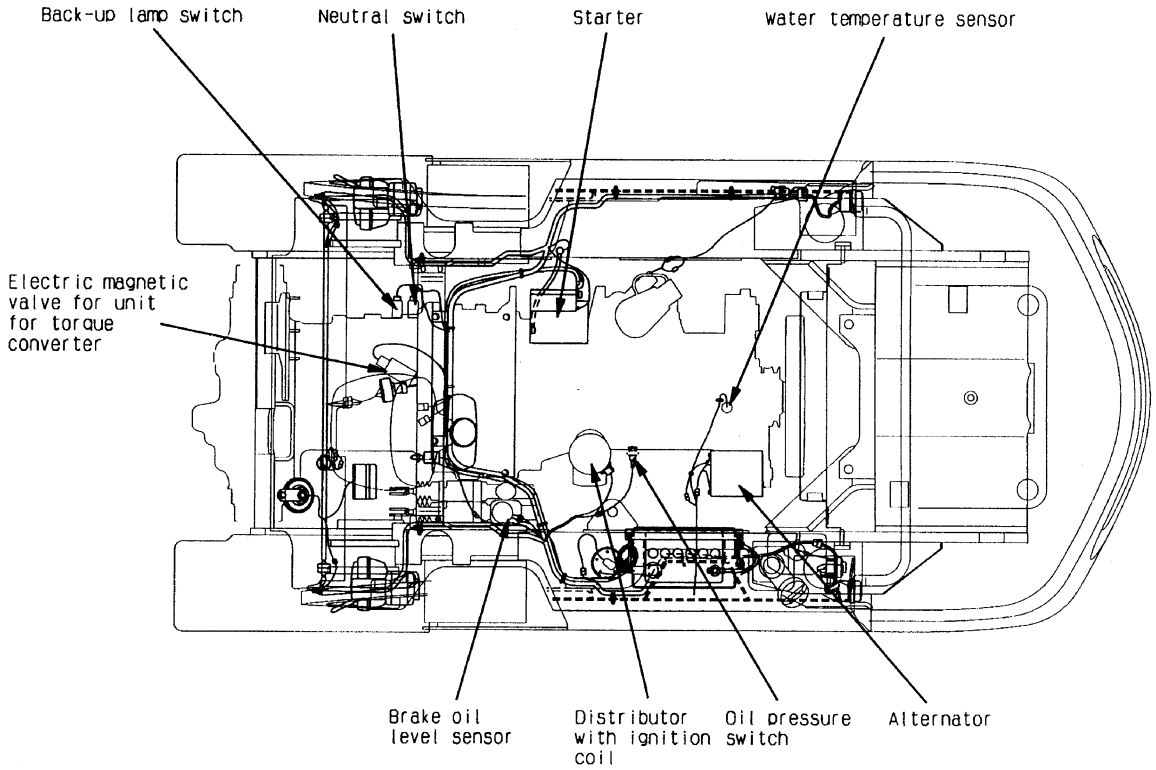

HWZ03876

2) 4D94E, 4D98E mounted

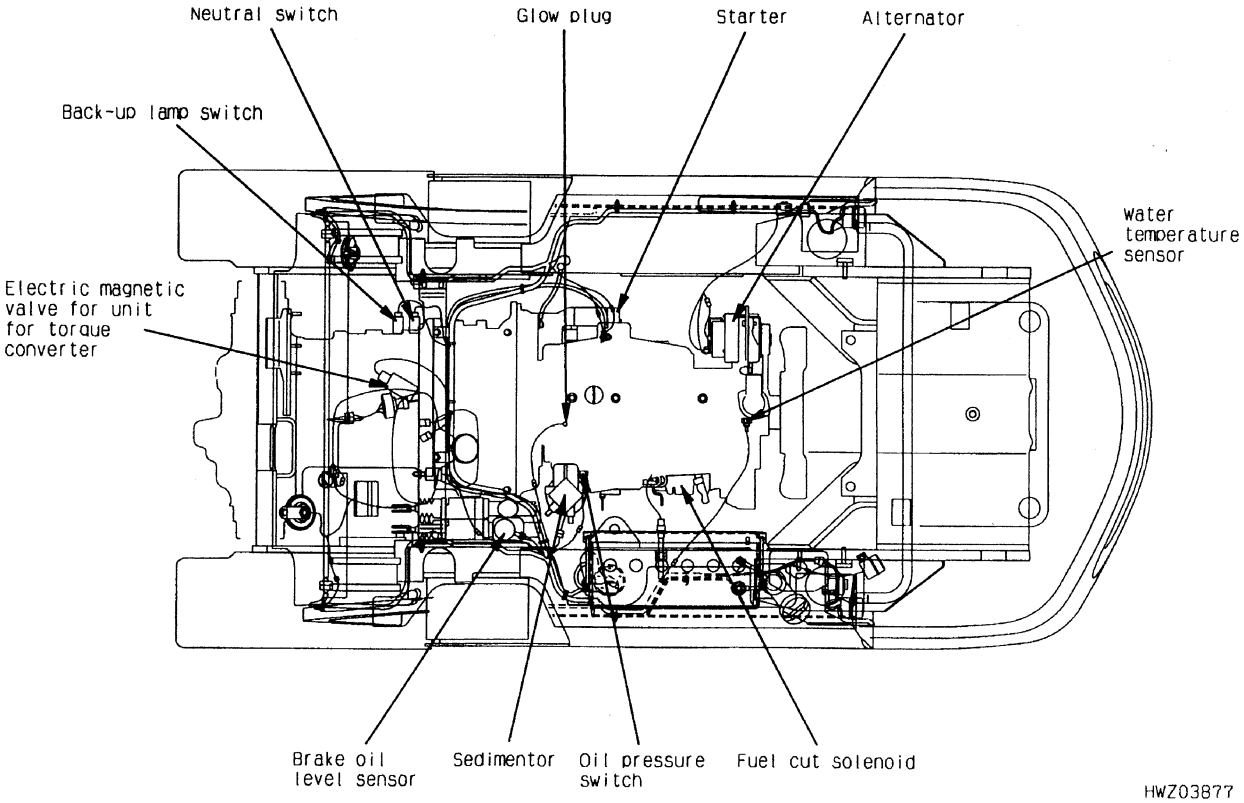

HWZ03877

https://truckmanualshub.com/

3) C240 mounted

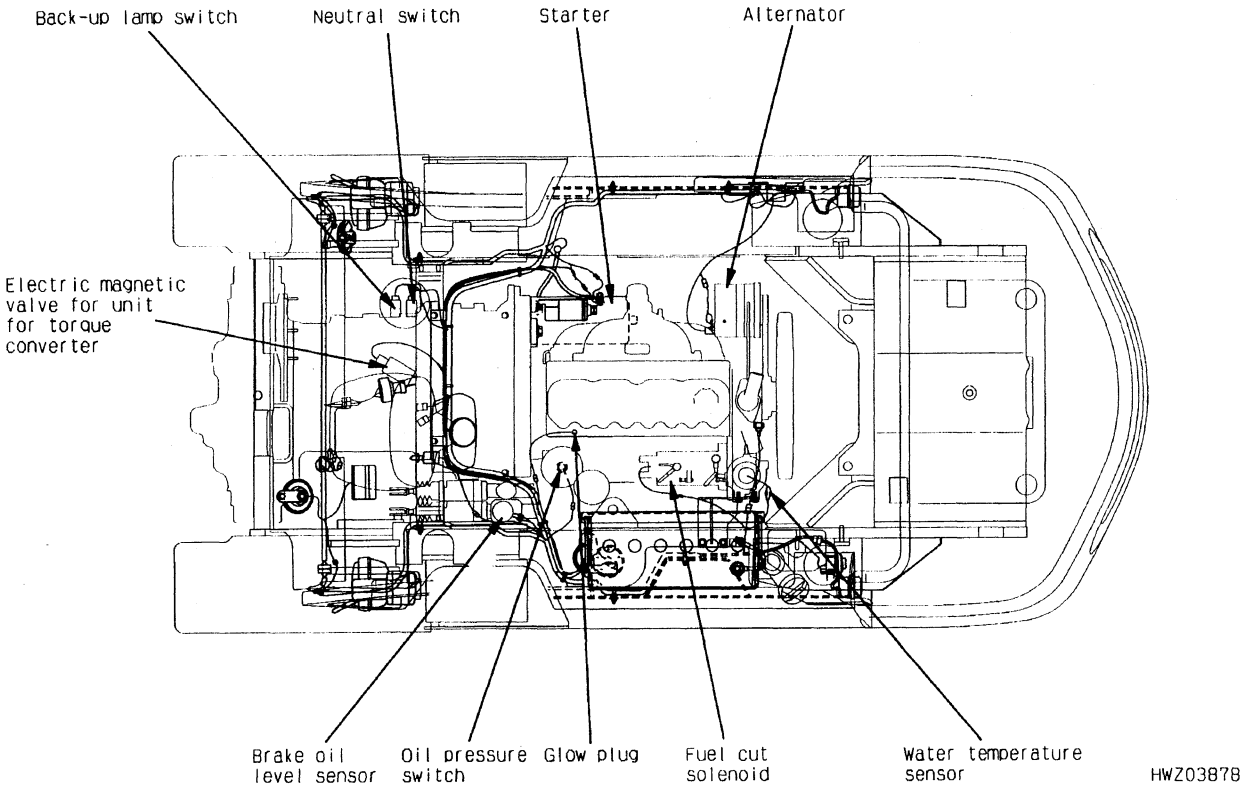

9. Pressure plate mounting bolt (clutch type truck)
Flexible plate mounting bolt (TORQFLOW truck)

★ For details of the pressure plate mounting bolt, see the explanation for replacing the clutch.

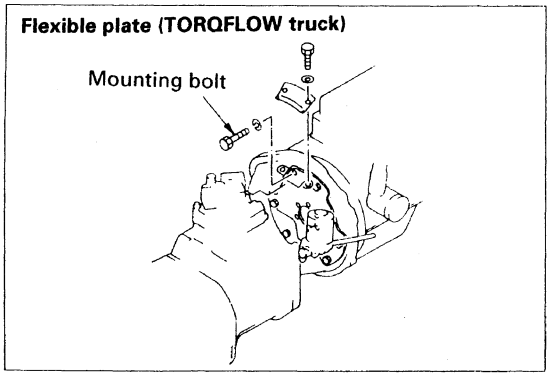

https://truckmanualshub.com/

10. (Clutch, torque converter) + transmission + drive axle

1) Put blocks under frame to jack up frame approx. 10 cm.

2) Raise engine with crane and hold in position.

3) Put a trolley in position as shown in diagram on right to support the 3 units.

4) Remove clutch case mounting bolt. (clutch type truck)
   Remove torque converter case mounting bolt. (TORQFLOW truck)

5) Remove front axle support from frame, then pull out 3 units on trolley.

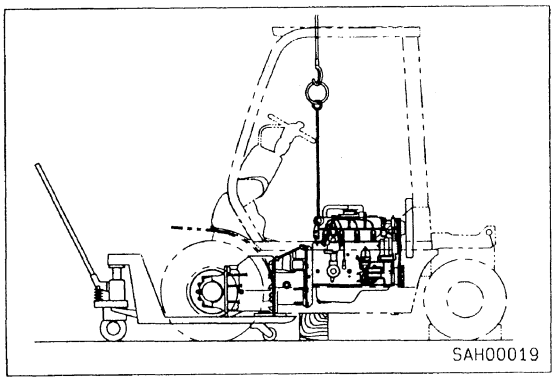

https://truckmanualshub.com/

INSTALLATION

Carry out installation in the reverse order to removal. Pay attention to the following points when installing.

1. **Tightening torque of clutch case mounting bolt (clutch type truck)**
   Tightening torque of torque converter case mounting bolt (TORQFLOW truck)

kgm	59 – 74 Nm {6 – 7.5 kgfm}

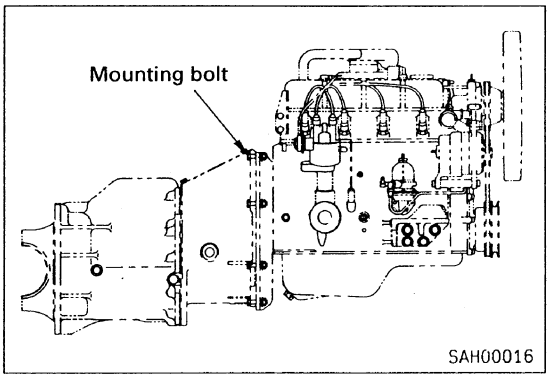

2. **Tightening torque of pressure plate mounting bolt (clutch type truck)**
   Tightening torque of flexible plate mounting bolt (TORQFLOW truck)

kgm	27 – 34 Nm {2.8 – 3.5 kgfm}

★ For details of the pressure plate mounting bolt, see the explanation for replacing the clutch.

Flexible plate (TORQFLOW truck)

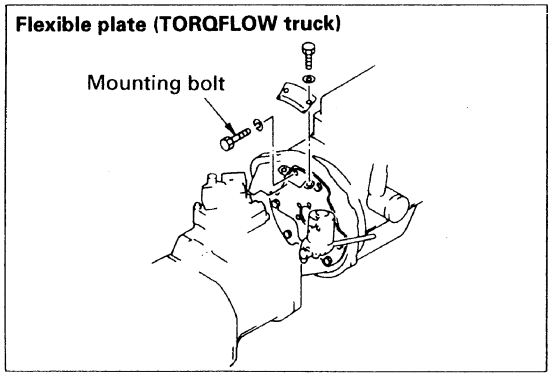

3. **Pedal assembly**
   Brake piping

★ Bleeding air from brake
See the explanation for bleeding air (page 10-32).

★ Adjusting pedal
See the explanation for adjusting pedal (page 10-24).

https://truckmanualshub.com/

4. Counterweight
Counterweight mounting bolt

kgm	441 – 639 Nm {45 – 65 kgfm}
	Molybdenum disulphide

5. Mast
Mast cap mounting bolt

kgm	245 – 309 Nm {25 – 31.5 kgfm}

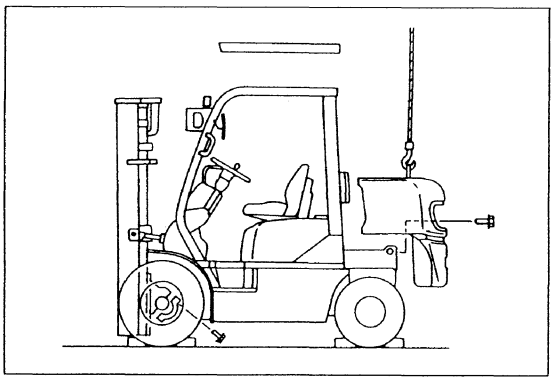

https://truckmanualshub.com/

STEERING AXLE, POWER STEERING

REMOVAL

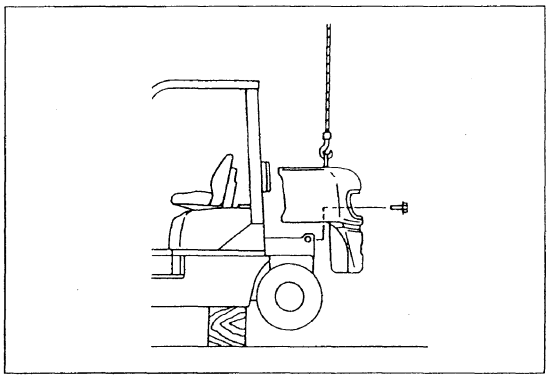

1. **Counterweight**
   1) Raise rear portion of frame with crane and put wooden blocks under left and right frames.
   2) Raise counterweight slightly with crane, remove mounting bolts, then remove counterweight.

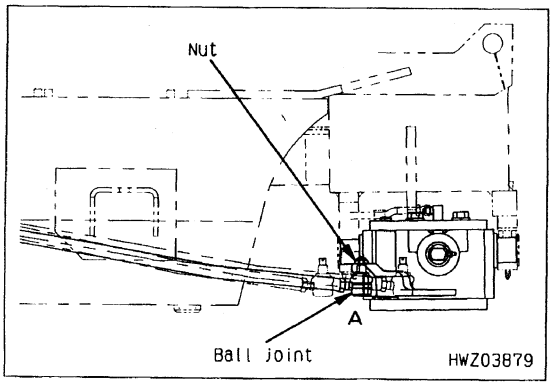

2. **PS cylinder, hydraulic hose**
   Remove the hydraulic hose.
   ★ Fit blind plugs in the hydraulic hose and cylinder oil port to prevent the oil from flowing out and to prevent dirt from getting in.

3. **Bellcrank ball joint**
   Remove ball joint at portion **A** in diagram on right.

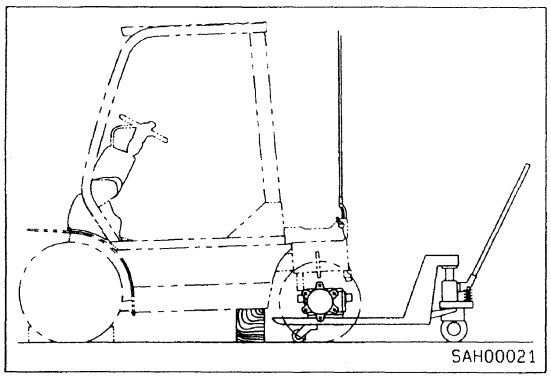

4. **Steering axle**
   1) Support steering axle with trolley.
   2) Remove 2 axle support bolts at the rear, pull the steering axle out to the rear of the machine, lower the truck when the center shaft comes out from the front support, then pull out completely to the rear of the machine, taking care not to let the axle hit the frame.

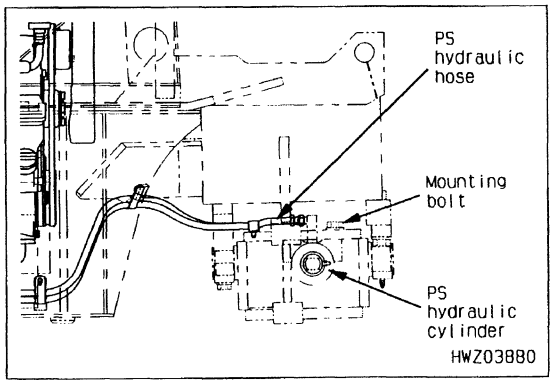

5. **Power steering cylinder**
   1) Remove the knuckle arm and PS cylinder piston rod link.
   2) Remove the mounting bolt of the PS cylinder.
   3) Remove the PS cylinder to either the left or right side of the steering axle.

https://truckmanualshub.com/

INSTALLATION

Carry out installation in the reverse order to removal. Pay attention to the following points when installing.

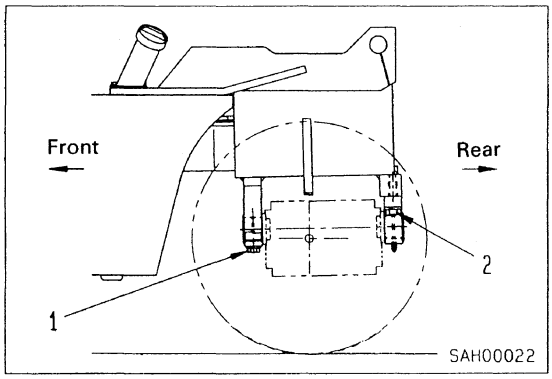

1. Tightening torque of steering axle support bolt

kgm	245 – 309 Nm {25 – 31.5 kgfm}

★ Adjust shims so that clearance a is less than 0.5 mm.
★ Install the bushing so that the bushing hole faces up.

2. Steering linkage

Set the place marked with ☆ to the dimension given in the diagram below.

1) Set the rear tires and pitman arm facing directly to the front.
2) Adjust the screw-in depth of ball joint (1) to dimension #, and set so that the steering angle of the bellcrank is the dimension marked in the diagram.

★ Tighten the locknut securely.
★ Bend the copper pin securely.

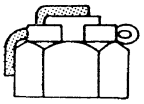

Bend the cotter pin securely.

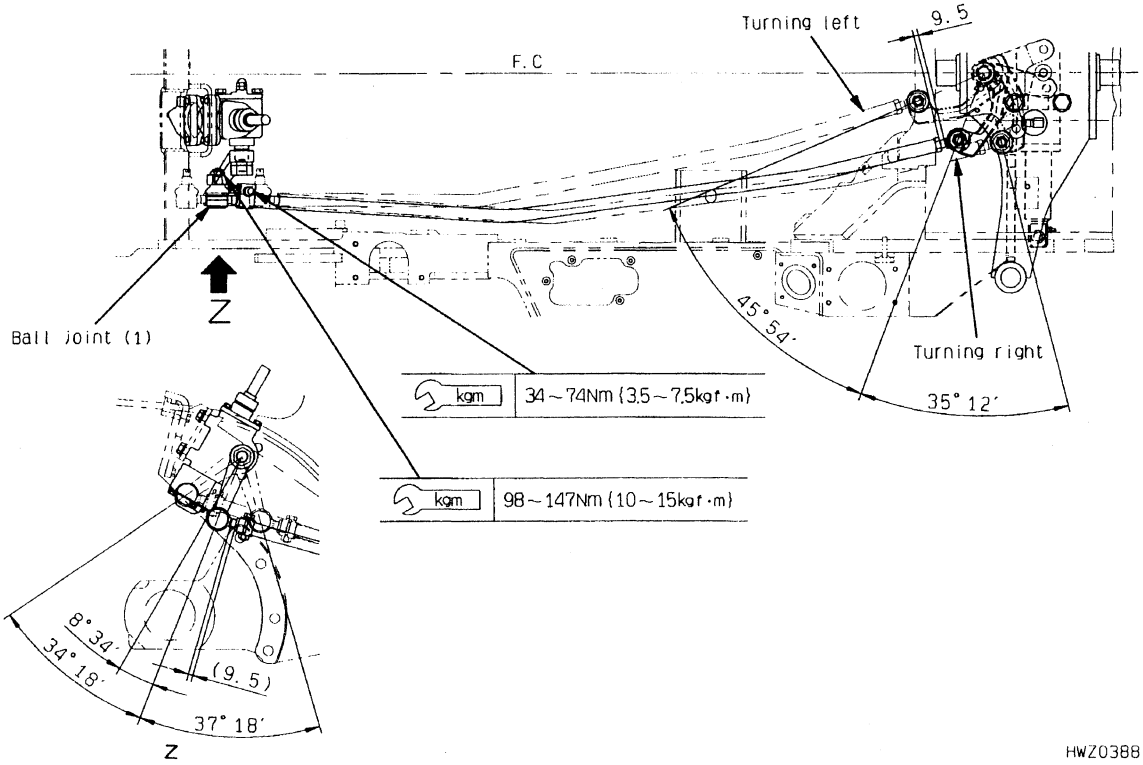

https://truckmanualshub.com/

3. Tightening torque of power steering cylinder mounting bolt

kgm	294 – 333 Nm {30 – 34 kgfm}

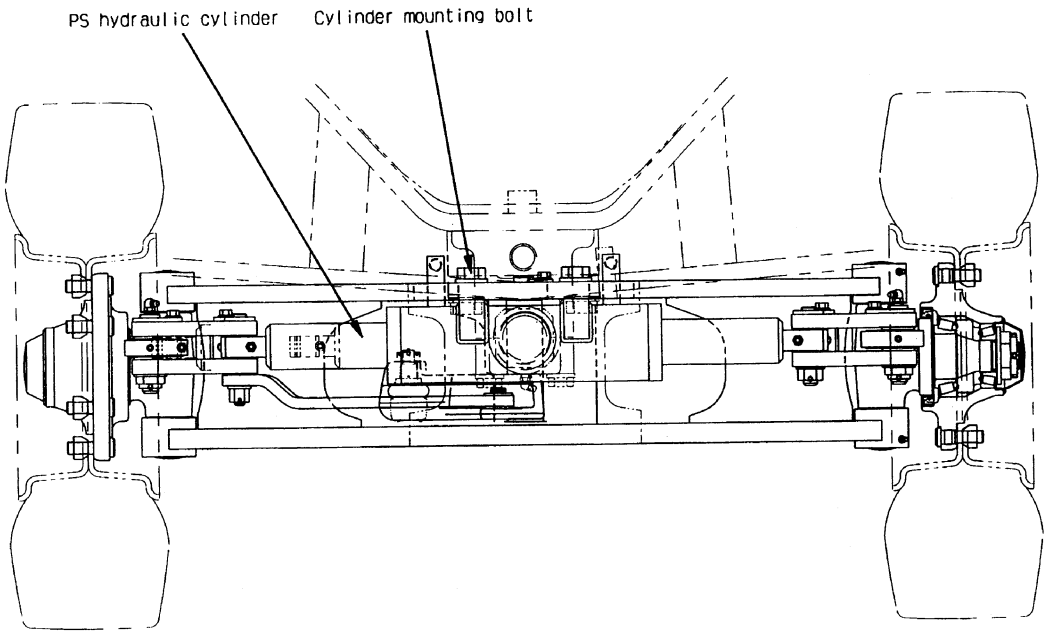

HWZ03882

4. Tightening torque of counterweight mounting bolt

kgm	441 – 637 Nm {45 – 65 kgfm}
	Molybdenum disulphide

★ Before tightening the bolt, coat with molybdenum disulphide.

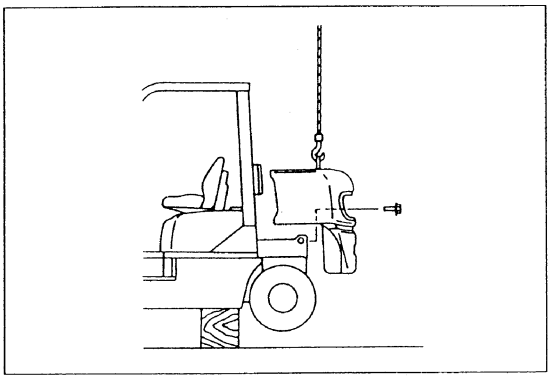

https://truckmanualshub.com/

WHEEL BRAKE

REMOVAL

1. **Front wheel, torque shaft**
   1) Put blocks under rear wheels.
   2) Put block under frame and jack up front wheels.
   3) Apply parking brake.

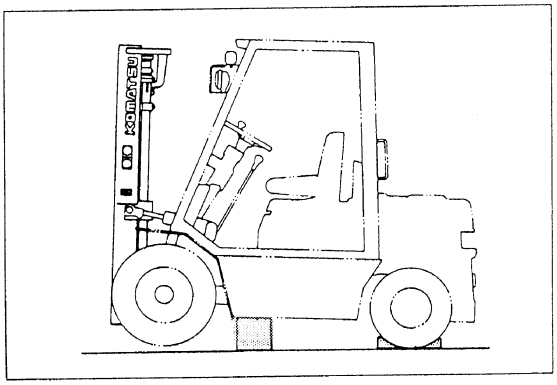

   4) Remove hub nuts (1), then remove front wheel.
   5) Remove bolts (2), then remove torque shaft (3).
   6) Release parking brake.

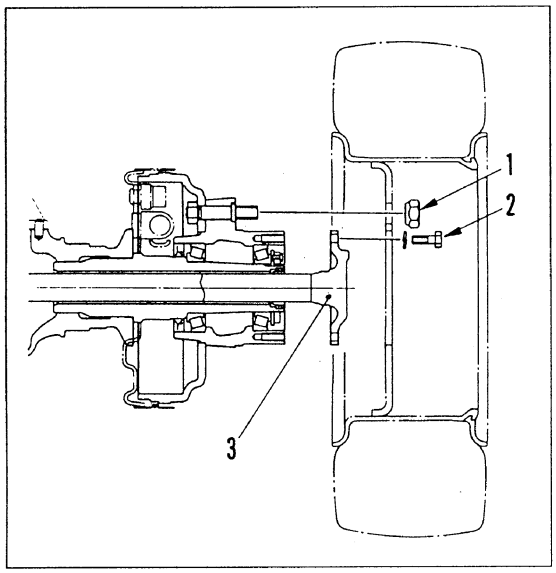

2. **Hub**
   1) Remove bolt (4).
   2) Remove locknut (5) using the box spanner with 80mm of width across flats.
   3) Remove without twisting hub up and down.

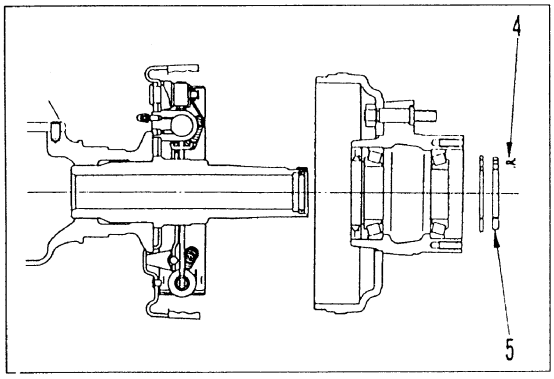

https://truckmanualshub.com/

INSTALLATION

1. **Back plate (when removed)**
   When installing brake, use a guide as shown in diagram and assemble so that shaft pipe and back plate ø100 hole are concentric.

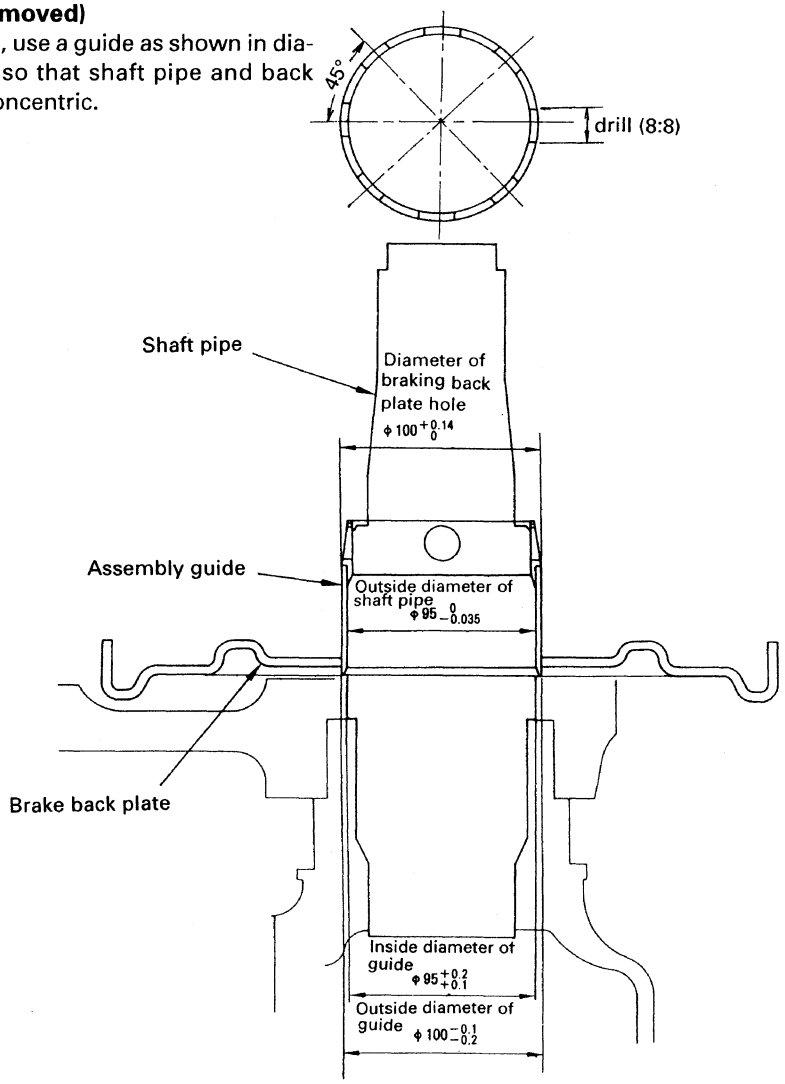

2. Coat mounting bolt (1) with Loctite and tighten.

kgm	157 – 196 Nm {16 – 20 kgfm}
	Loctite #271

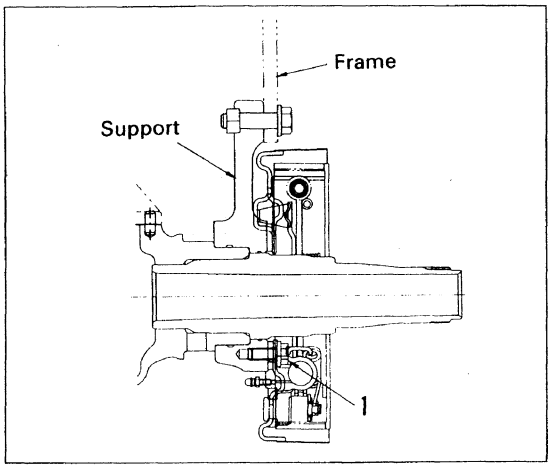

https://truckmanualshub.com/

3. Hub

1) Press fit new oil seal using special tool.

Special tool 3EB-97-99930

★ Be careful of the direction of the oil seal.
★ Coat the lip surface of the oil seal with grease (G2-LI).

2) Fill bearing with grease (G2-LI) and install to hub.

3) Remove all dirt and oil from inside surface of brake drum.

4) Install hub to shaft pipe.

5) Tighten locknut (5) so that starting torque of hub as individual part is as shown below.

Starting torque	6.1 – 15.7 Nm {62.5 – 160 kgfcm}

6) Coat bolt (4) with Loctite and tighten.

	Loctite #271

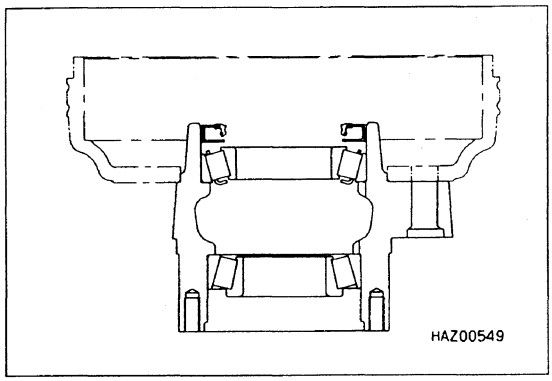

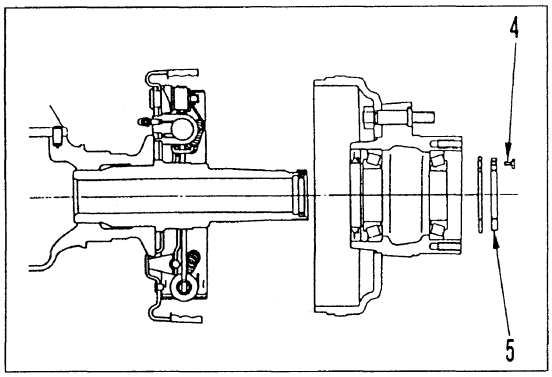

4. Front wheel, torque shaft

1) Install torque shaft (3), and tighten bolts (2).

kgm	98 – 127 Nm {10 – 13 kgfm}

2) Install front wheel and tighten hub nuts (1).

kgm	294 – 490 Nm {30 – 50 kgfm}

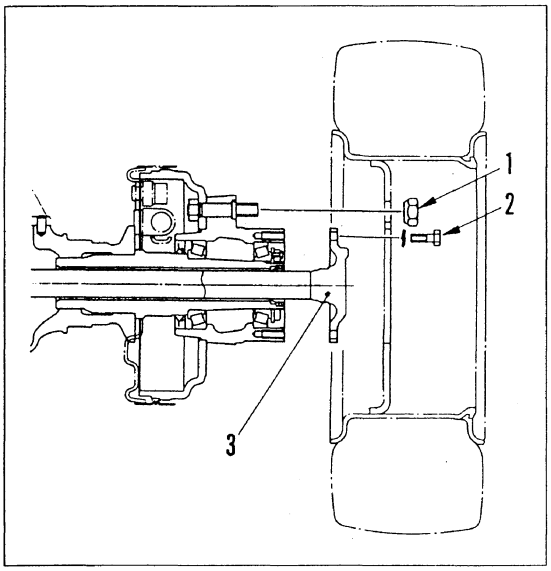

https://truckmanualshub.com/

https://truckmanualshub.com/

30. DISASSEMBLY AND ASSEMBLY

Clutch 30- 3
Clutch master cylinder 30- 7
Clutch release cylinder 30- 8
Clutch transmission 30-14
Torque converter 30-25
TORQFLOW transmission 30-36
Transmission contorol valve 30-49
Differential 30-54
Drive axle 30-60
Wheel brake 30-62
Brake master cylinder 30-65
Combination switch 30-72
Steering gear box 30-76
Power steering cylinder 30-86
Steering axle 30-88
Lift cylinder 30-92
Tilt cylinder 30-94
Control valve 30-96
Mast 30-98
Fork carriage 30-100

https://truckmanualshub.com/

https://truckmanualshub.com/

CLUTCH

DISASSEMBLY AND ASSEMBLY

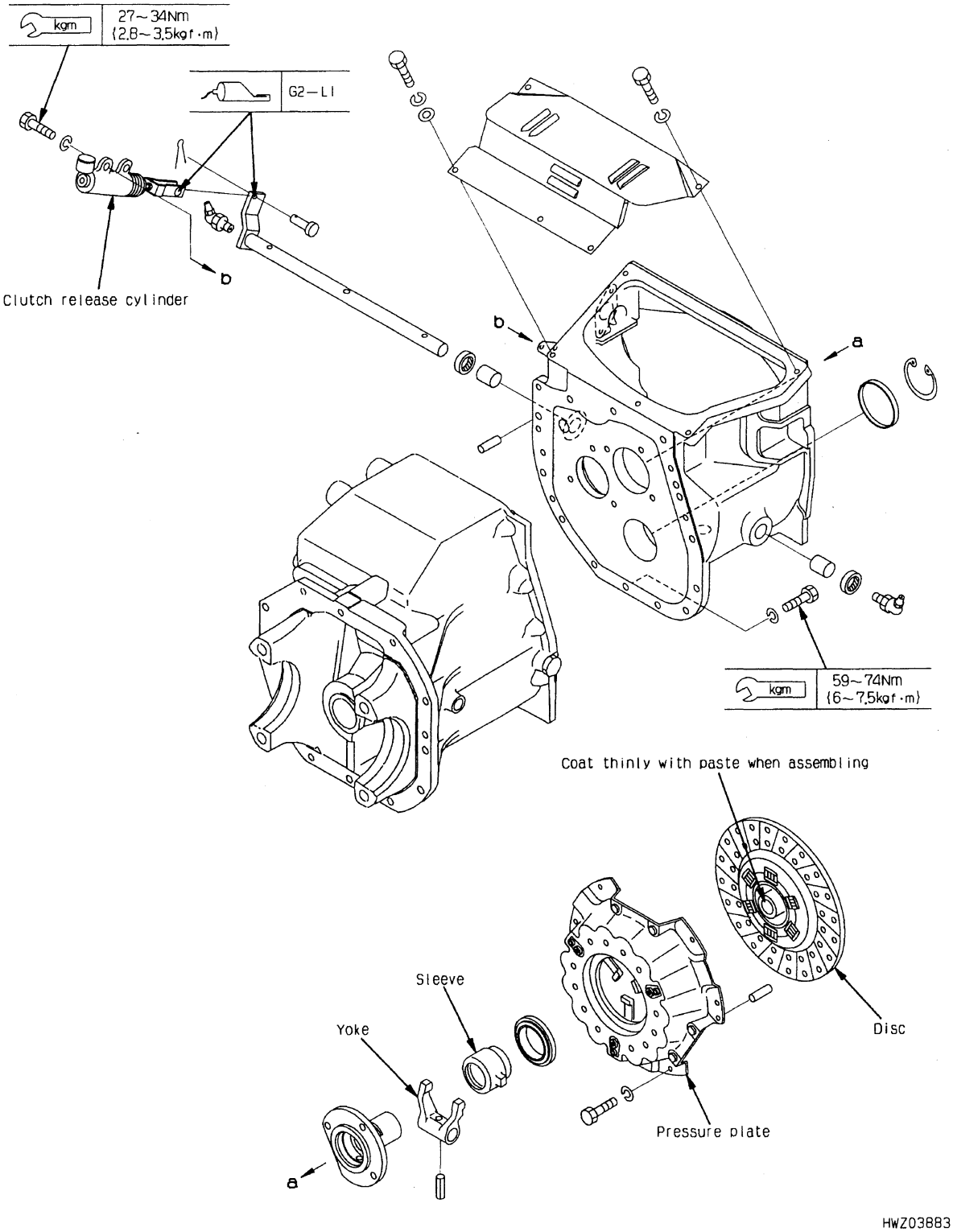

https://truckmanualshub.com/

TESTING

DRY CLUTCH

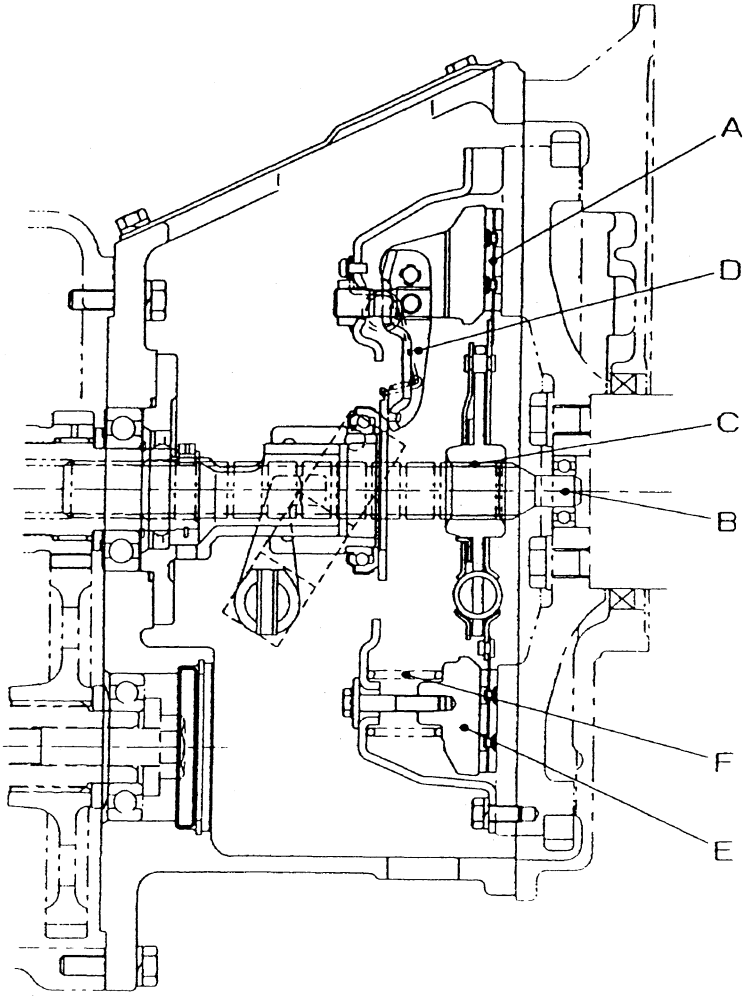

https://truckmanualshub.com/

Unit: mm

Symbol	Check item	Criteria		Remedy
		Standard size	Repair limit	
A	Thickness of clutch disc (both faces)	8.4	*0.3	Replace
B	Diameter of drive shaft tip	15	14.90	Correct hard chrome plating
C	Play of spline in rotating direction	—	0.5	Replace
	Face runout of outside circumference		0.7	
D	Height of release lever (when free)	59	—	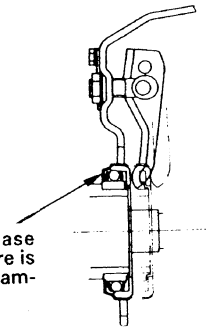 Replace release bearing if there is any seizure, damage, or wear
	Distance of movement of release lever	12	—	
	Wear-in amount of release lever	10	—	
E	Pressure plate	Damage, stepped wear of friction surface		Replace
F	Coil spring	Deformation, deterioration		Replace pressure plate assembly

*: Depth to head of rivet

Method of measuring remaining thickness of clutch disc

- Measure with calipers at both the engine end and pressure plate end. (See diagram on right.)

★ Take the smallest depth to the head of the rivet as the standard when judging.

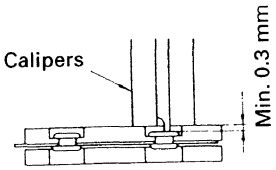

https://truckmanualshub.com/

ASSEMBLY DRAWING

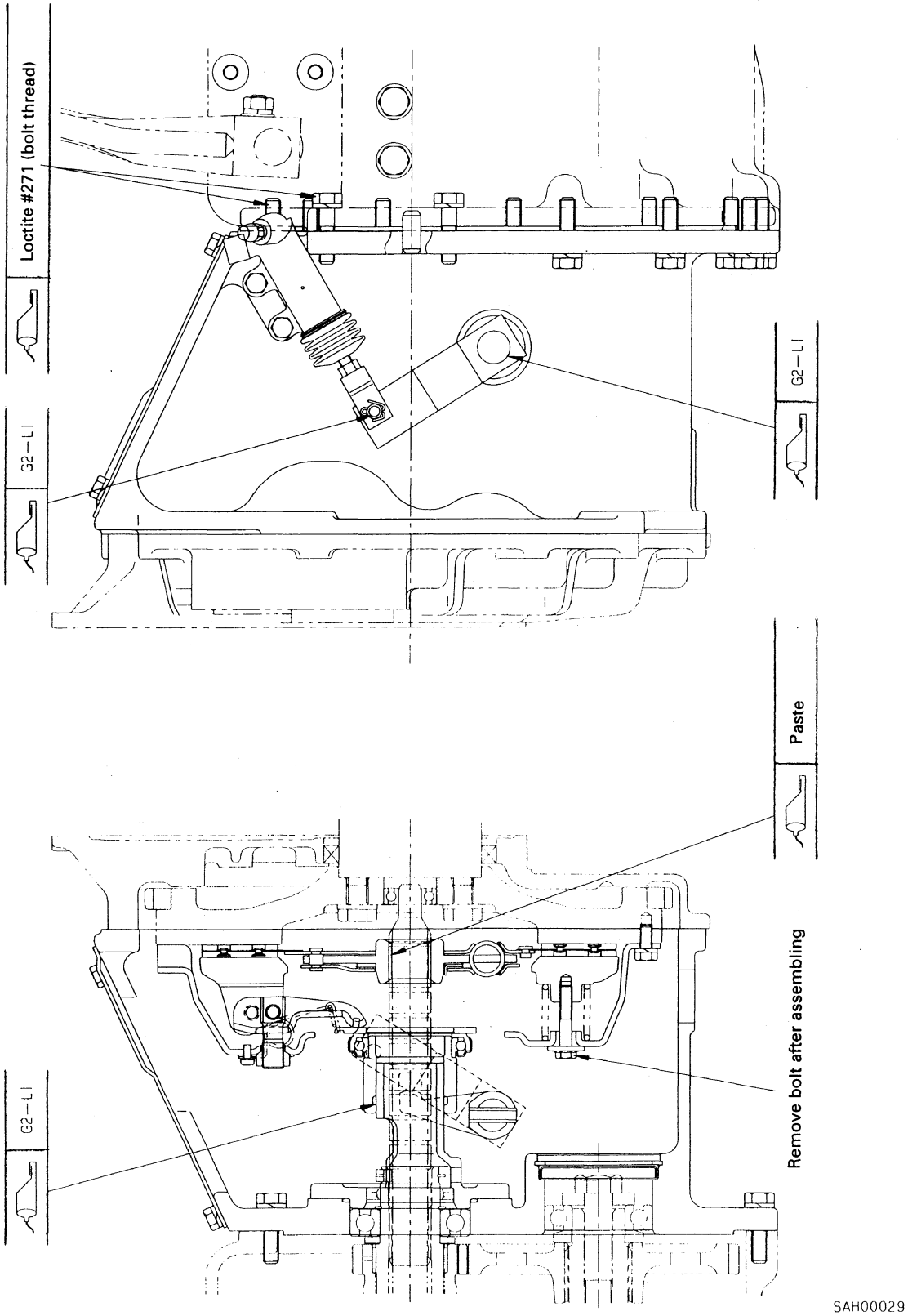

https://truckmanualshub.com/

CLUTCH MASTER CYLINDER

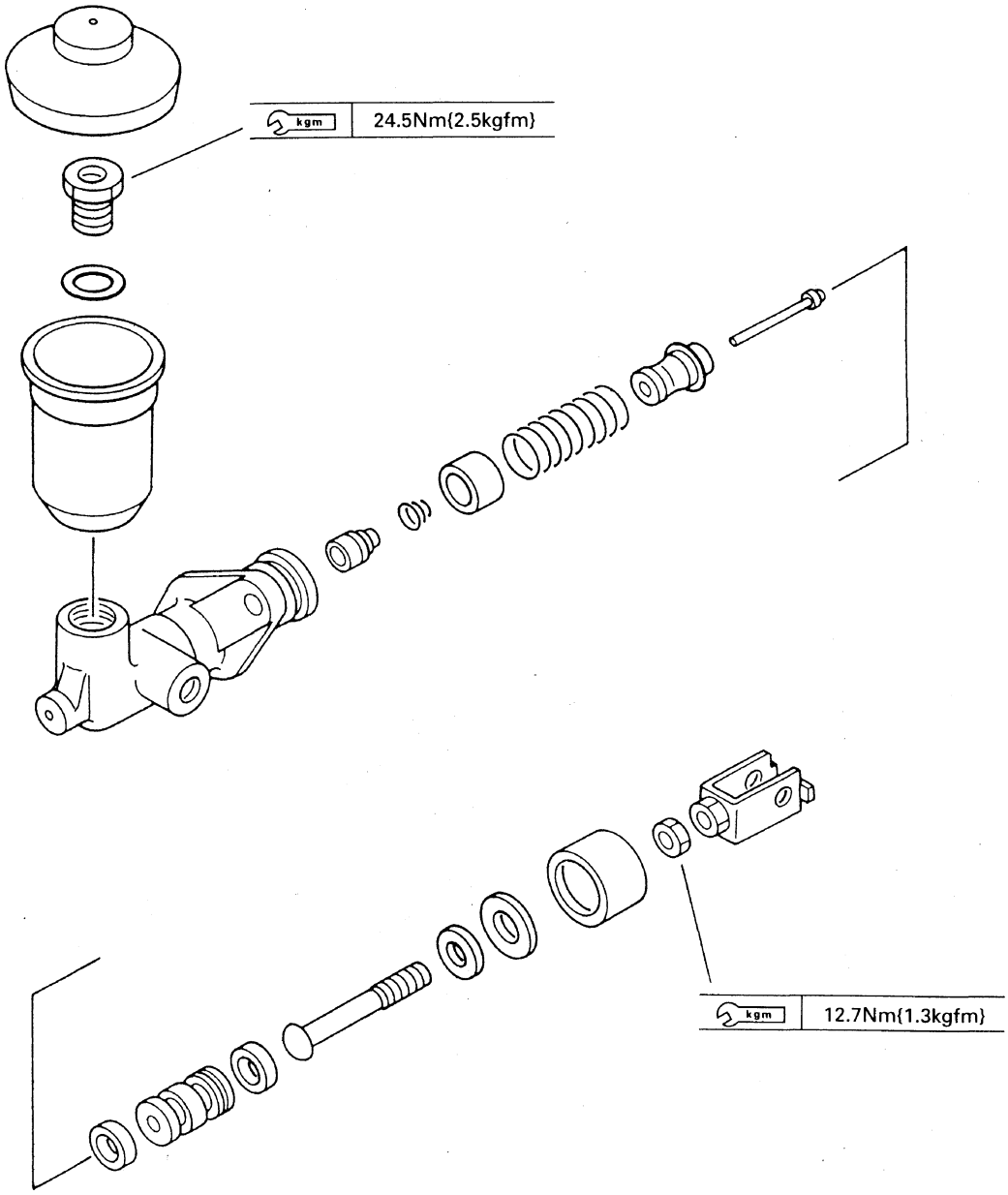

https://truckmanualshub.com/

CLUTCH RELEASE CYLINDER

COMPONENT PARTS

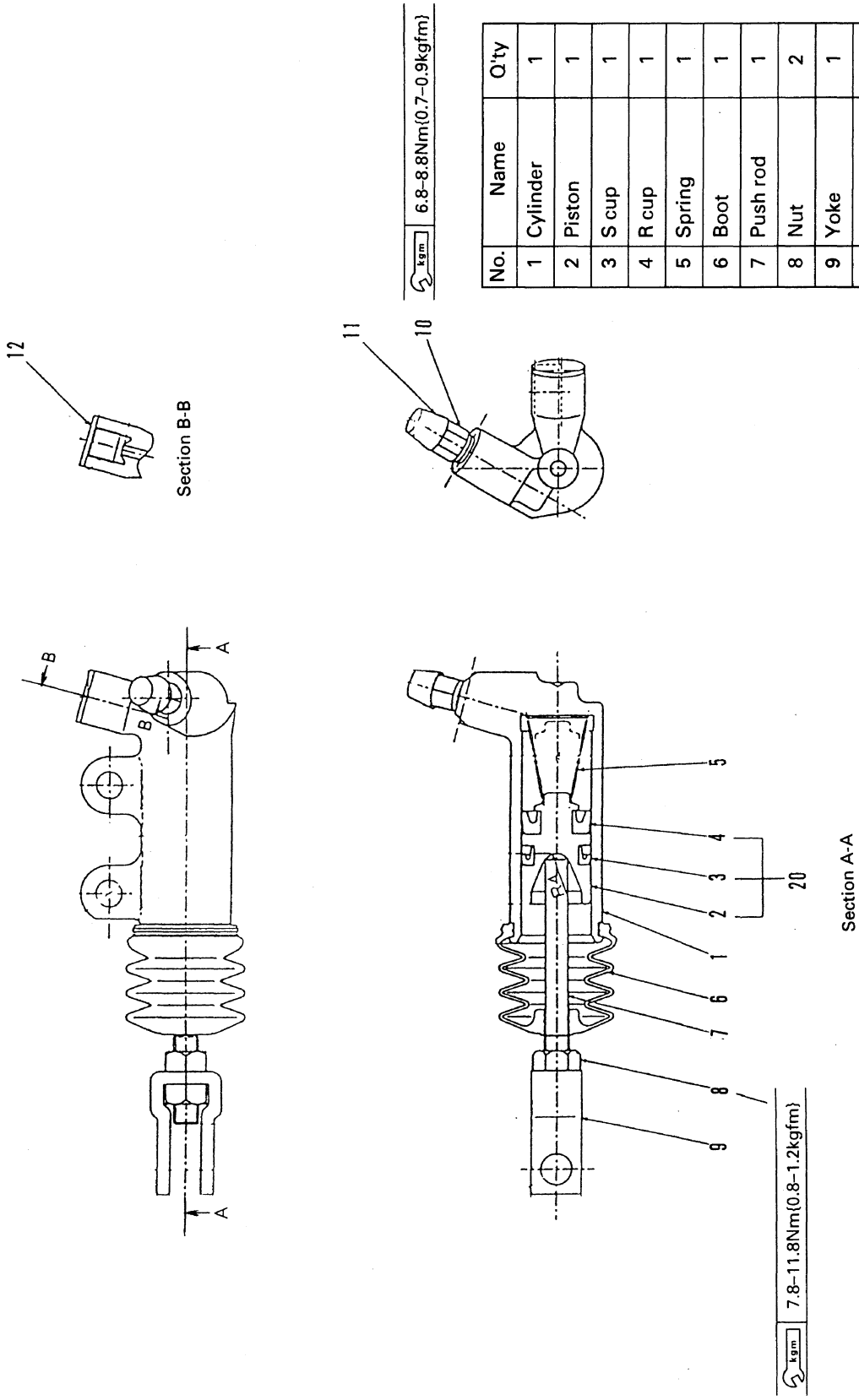

No.	Name	Q'ty
1	Cylinder	1
2	Piston	1
3	S cup	1
4	R cup	1
5	Spring	1
6	Boot	1
7	Push rod	1
8	Nut	2
9	Yoke	1
10	Bleeder valve	1
11	Bleeder cap	1
12	Cap	1
20	Piston assembly	1

https://truckmanualshub.com/

DISASSEMBLY

1. Remove boot from cylinder.

2. Take out piston assembly from cylinder.

PRECAUTIONS

- **Be careful not to damage the cylinder, piston, or cup.**
- **When carrying out disassembly, make sure that you understand the structure of the cylinder and lay the disassembled parts out in order.**
- **Do not disassemble the piston assembly.**
- **Do not push the outside wall of the cylinder with a vice.**
- **If it is difficult to take out the piston, put a block against the end face of the cylinder, then pump in low pressure air gradually from the discharge port.**

COMPONENT PARTS

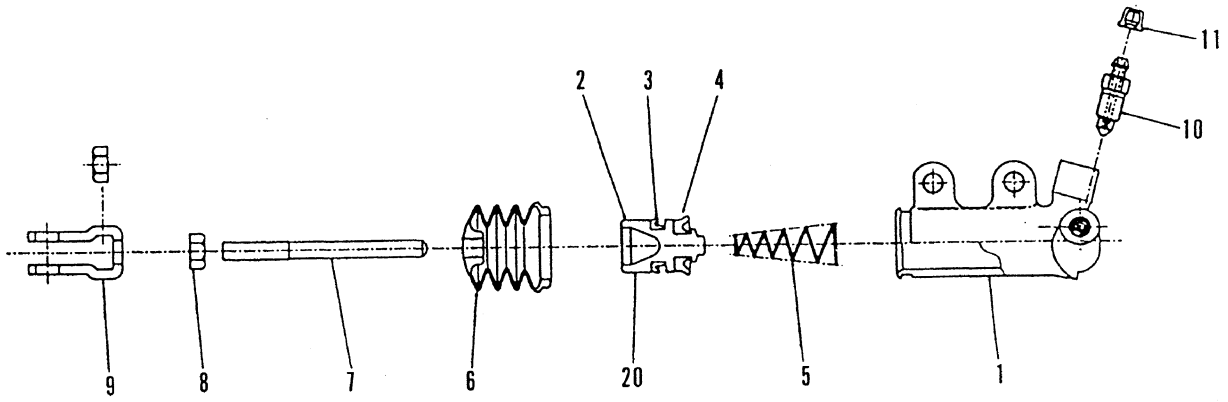

No.	Name	Q'ty
1	Cylinder	1
2	Piston	1
3	S cup	1
4	R cup	1
5	Spring	1
6	Boot	1
7	Push rod	1
8	Nut	2
9	Yoke	1
10	Bleeder valve	1
11	Bleeder cap	1
20	Piston assembly	1

https://truckmanualshub.com/

TESTING

Part name	Check item	Remedy
Cylinder	Scratches, uneven wear, corrosion of inside surface	• For small scratches, remove with sandpaper • If the scratch will have an adverse effect on the cup, replace the whole cylinder assembly
Piston	Scratches, uneven wear, corrosion of sliding portion	• or small scratches, remove with oilstone • If the scratch will have an adverse effect on the inside surface of the cylinder and cup, replace the whole piston assembly
	Clearance between and cylinder piston	• Replace if the clearance is greater than the limit Clearance limit: 0.15 mm
Cup	Scratches on lip	• Even if the scratches are small, replace the whole piston assembly
	Pitting of base	• If the pitting is harmful, replace the whole piston assembly
	Wear, swelling	• If there is any abnormal deterioration, wear, or swelling, replace the whole piston assembly
	Interference	• If the value is below the service limit, replace the whole piston assembly Wear limit: 0.4 mm **Note:** The cup is a specified periodic replacement part Generally speaking, it is safer to replace each time disassembly is carried out.

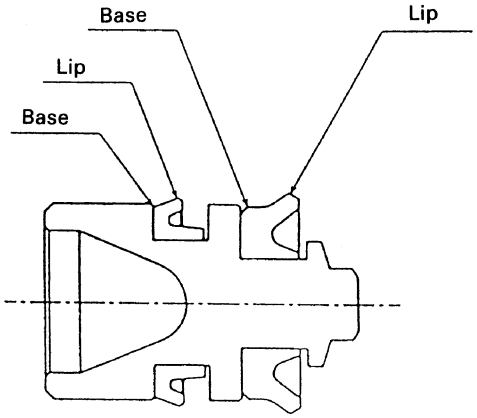

Part name	Check item	Remedy
Spring	Scratches, wear, inclination	• Replace if there is marked damage
	Free length	• Replace if it is less than the service limit Service limit: 38 mm
Bleeder valve	Scratches, deformation of seat surface	• Replace if there is marked damage or deformation
Bleeder cap	Cracks, deterioration	• Replace if there are cracks or marked deterioration
Push rod	Curvature, deformation	• Replace if there is curvature or deformation
Boot	Cracks, damage	• Replace if there are cracks or damage
	Interference for cylinder, rod	• Replace if there is no interference or extremely little interference
Yoke	Deformation, wear	• Replace if there is marked deformation or wear

MAINTENANCE STANDARD

	Check item	Standard value	Limit	Remedy
1	Clearance between cylinder and piston	0.020 – 0.105 mm	0.15 mm	Replace (cylinder assembly)
2	Interference of cup	Pressure side: Approx. 2 mm Secondary side: Approx. 0.6 mm	0.4 mm	Replace (piston assembly)
3	Free length of spring	43 mm	38 mm	Replace
4	Tightening torque for yoke and locknut	7.8 – 11.8 Nm {0.8 – 1.2 kgfm}	—	—
5	Tightening torque for bleeder valve	6.8 – 8.8 Nm {0.7 – 0.9 kgfm}	—	—

https://truckmanualshub.com/

ASSEMBLY

1. Use alcohol or brake fluid to wash all parts that are to be reused.
   For the cup or other rubber parts, do not soak for more than 30 seconds when washing in alcohol.

2. Coat inside surface of cylinder and outside circumference of piston evenly with rubber grease or brake fluid.

3. Assemble spring to piston assembly, then insert in cylinder.

4. Insert push rod, then assemble boot, nut, and yoke in turn to push rod.

kgm	7.8 – 11.7 Nm {0.8 – 1.2 kgfm}

PRECAUTIONS

- **Do not use any fluid apart from alcohol or brake fluid to wash the parts.**
  In particular, never use mineral oil (petroleum, gasoline, etc.)
  (If mineral oil gets on rubber parts, they will swell and become unusable.)

- **After washing the parts, keep them in a clean place to prevent dust or dirt from sticking to them.**

- **Be careful not to let dirt or dust get in, and be careful not to damage the damage the cylinder, piston, or cup.**

https://truckmanualshub.com/

ASSEMBLY DRAWING

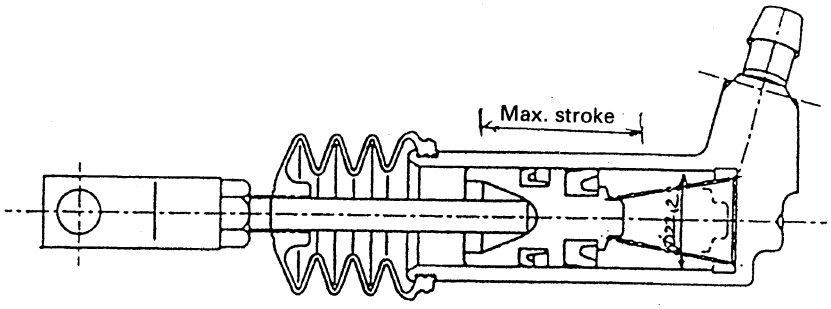

Cross-sectional drawing of cylinder

SPECIFICATIONS

Part Name		22.2 C/0 cylinder assembly
Fluid used		Brake fluid
Cylinder diameter	mm	22.2
Max. stroke	mm	35
Max. pressure	MPa {kgf/cm^2}	9.8 {1.0}

https://truckmanualshub.com/

CLUTCH TRANSMISSION

DISASSEMBLY

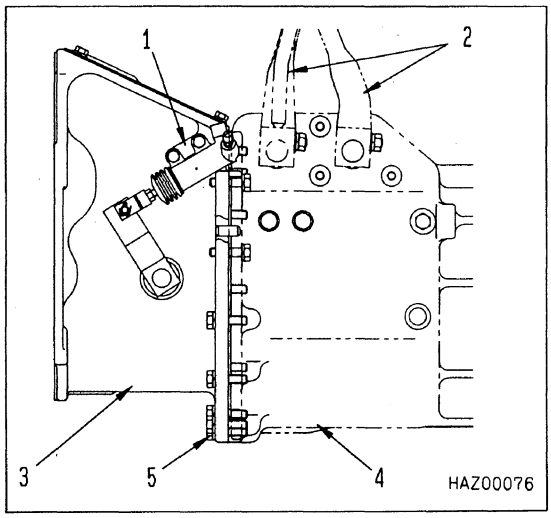

1. **Clutch case**
   (1) Remove clutch release cylinder (1).

   (2) Remove F-R, H-L lever (2).

   (3) Remove connecting bolts (5) of clutch case (3) and transmission case (4), and separate clutch case.

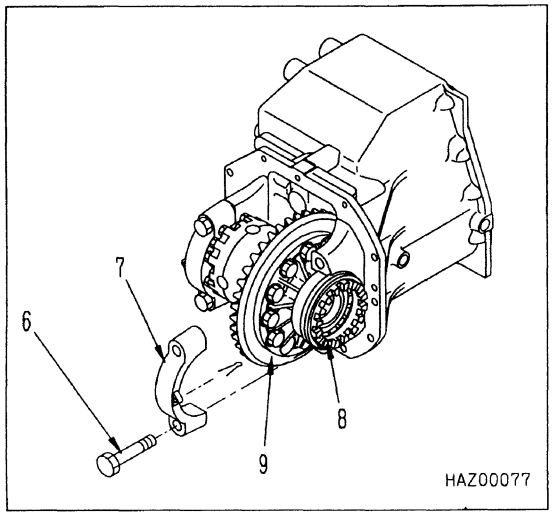

2. **Differential**
   (1) Remove bolt (6), then remove cap (7).

   (2) Remove screw (8), then remove differential (9).

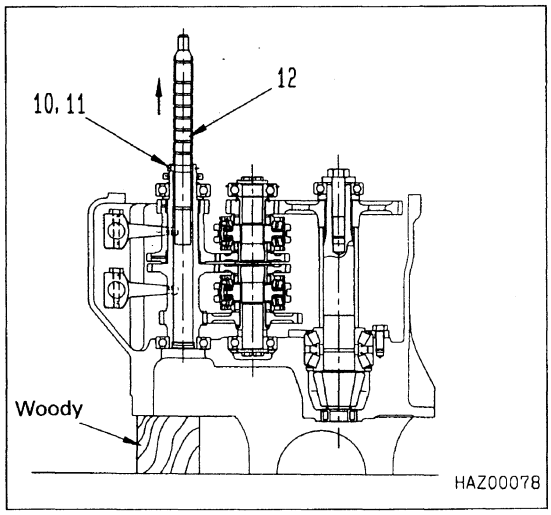

3. **Drive shaft**
   (1) Remove snap ring (10) and pin (11) holding drive shaft to input shaft.

   (2) Pull out drive shaft (12).

https://truckmanualshub.com/

4. Output shaft

(1) Remove bolt (1), then remove bearing (2).

(2) Remove gear (3), then pull out collar (4).

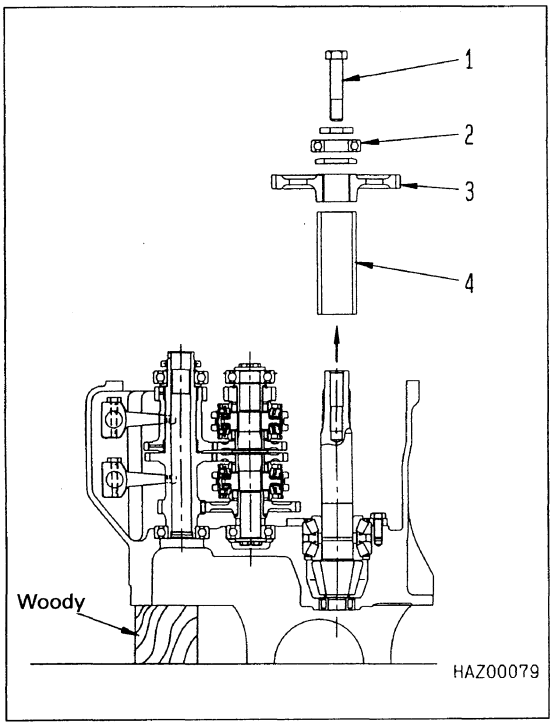

5. Idler shaft

Pull out idler shaft assembly (5) from case.

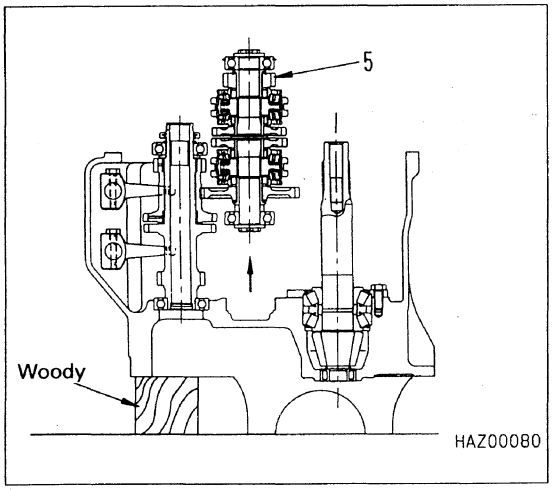

6. Output shaft

Remove bolt (6), then remove cage (7).

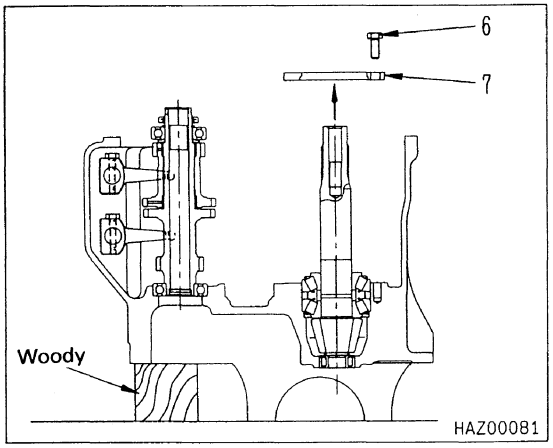

https://truckmanualshub.com/

7. Pinion shaft sub-assembly
Pull out pinion shaft sub-assembly (1) from case.

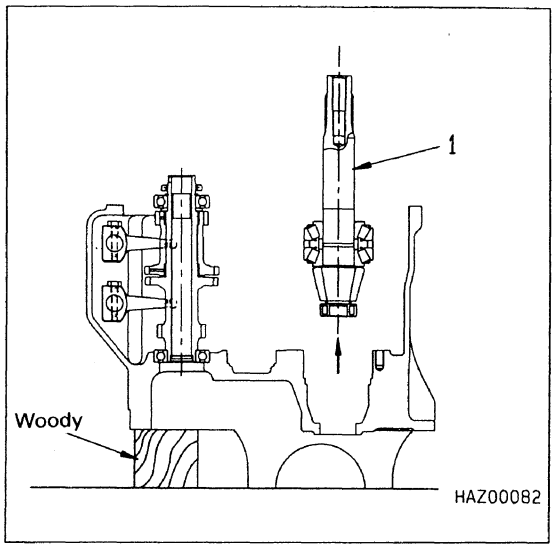

8. Input shaft, shifter yoke
Pull out both input shaft assembly and shifter yoke assembly from case.

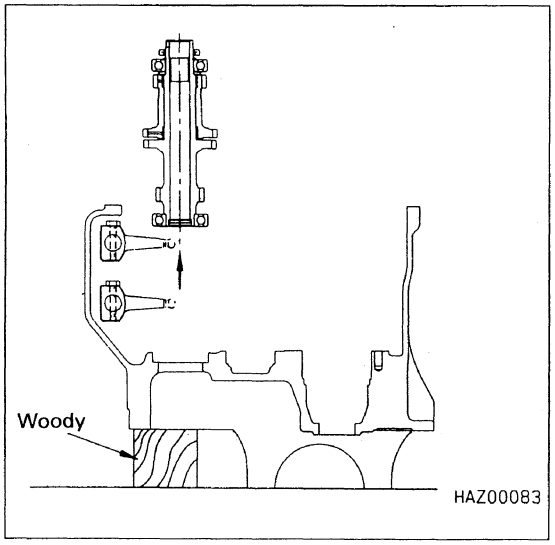

https://truckmanualshub.com/

9. Shifter yoke

1) Remove bolts (1), then remove shaft (2).

2) Remove bolts (3), then remove shaft (4).

3) Remove shifter yoke (5).

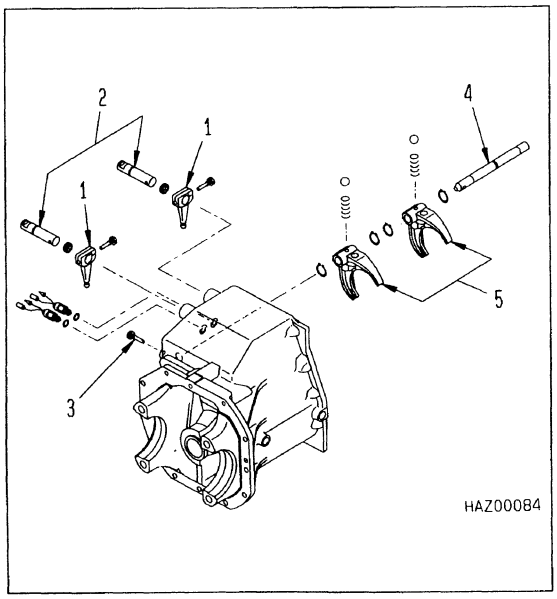

https://truckmanualshub.com/

TESTING

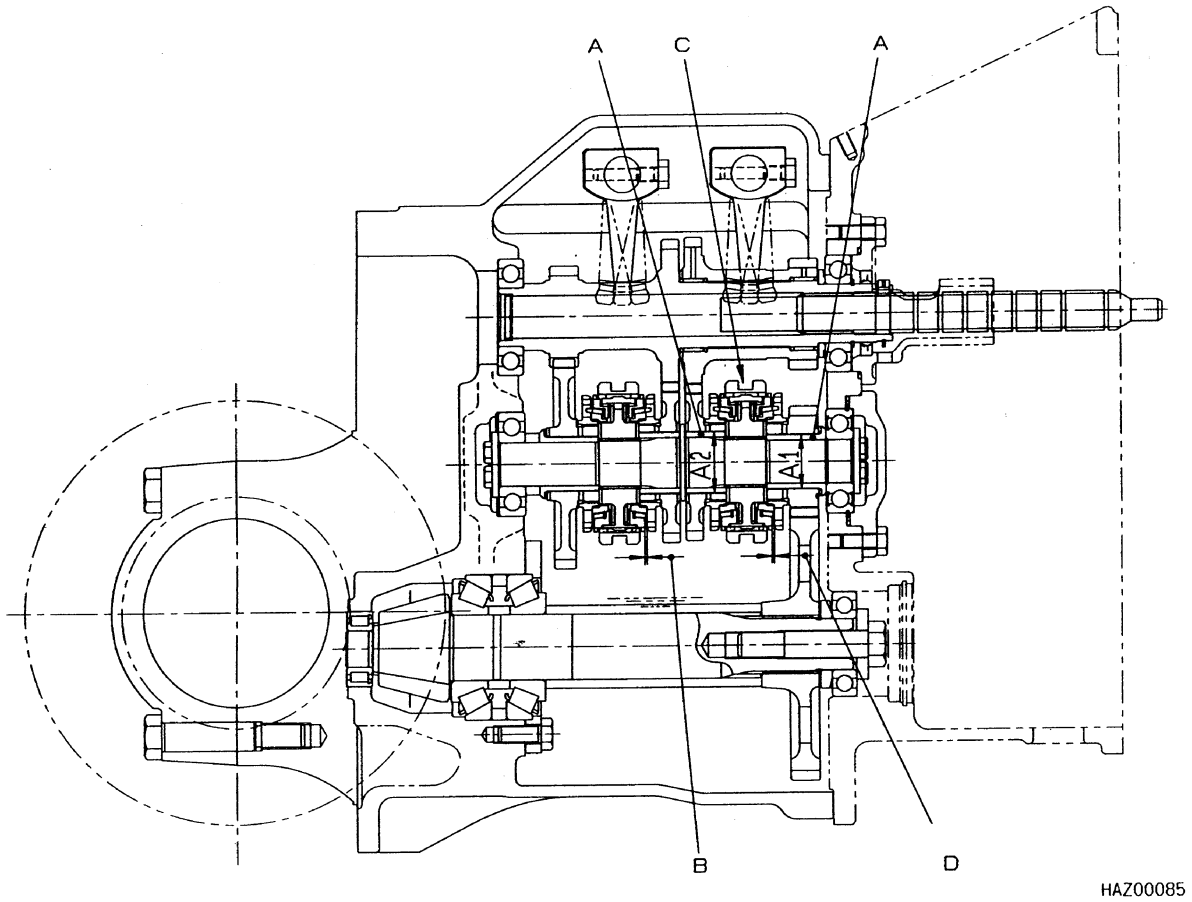

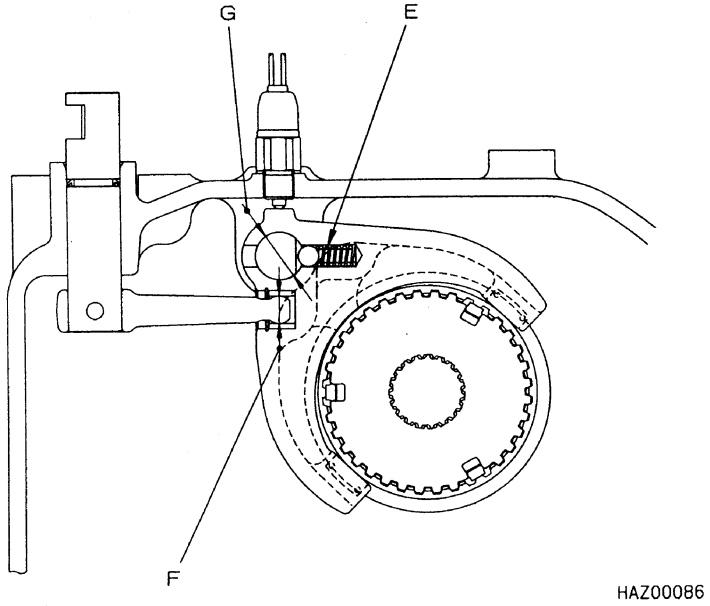

https://truckmanualshub.com/

Symbol	Check item		Criteria: Standard size (mm)	Criteria: Repair limit (mm)	Remedy
A	Outside diameter of bushing	A1	38	37.8	Replace
		A2	43	42.8	
B	Clearance between balk ring and H, L gear (*1)		1.2 – 1.8	0.8	Replace as assembly *1
C	Clearance between shifter yoke and sleeve gear (*2)		0.04 – 0.39	1.0	Replace *2
D	Clearance between balk ring and F, R gear		1.2 – 1.8	0.8	Replace
E	Deterioration of spring (free length)		21.0	18	
F	Outside diameter of tip of shift lever		13	12.5	
G	Inside diameter of shifter yoke mount		22	22.1	
—	Gears	Backlash	0.08 – 0.28	—	
		Clearance in thrust direction	0.15 – 0.35	—	
—	Tooth surface		• Damage • Excessive wear, defective tooth contact		
—	Bearing		• Seizure, wear • Abnormal noise, defective rotation		
—	Gasket O-ring Seals		—		Replace with new parts during disassembly and assembly

*1: Dimension when balk ring is moved to outside
*2: Dimension when shifter yoke is pushed fully in either direction

https://truckmanualshub.com/

ASSEMBLY

1. Output shaft sub-assembly

1) Insert shim (2) of calculated thickness to pinion shaft (1).

★ For details of the procedure for adjusting with shims, see "SHIM ADJUSTMENT METHOD".

2) Insert bearing (3).

3) For 3.0-ton truck, add bearing (4).

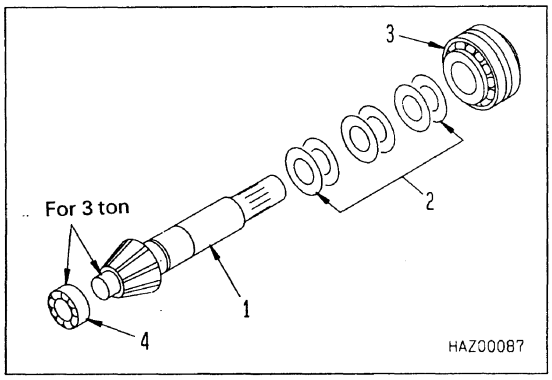

2. Installation of output shaft sub-assembly

1) Insert output shaft sub-assembly inside transmission case, then secure with cage (5) and bolt (6).

Tightening torque for bolts

kgm	64 – 78 Nm {6.5 – 8 kgfm}
	Loctite #271 (thread of hole)

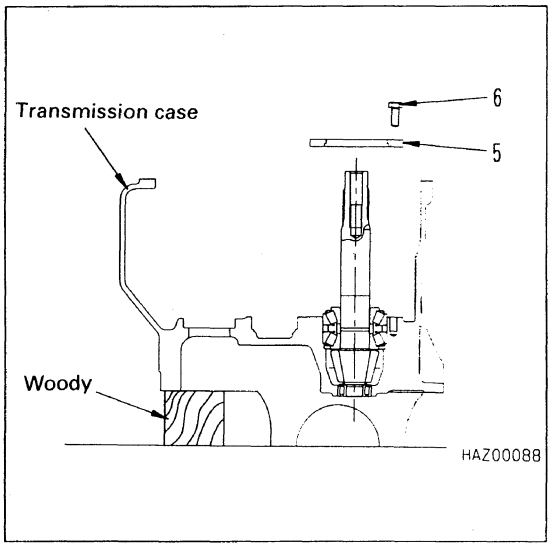

3. Idler shaft assembly

1) Secure bearing (7) in position at both ends of idler shaft with holder (8) and bolt (9).

	Loctite #271 (thread of hole)

2) Install idler shaft assembly and yoke shaft assembly inside case.

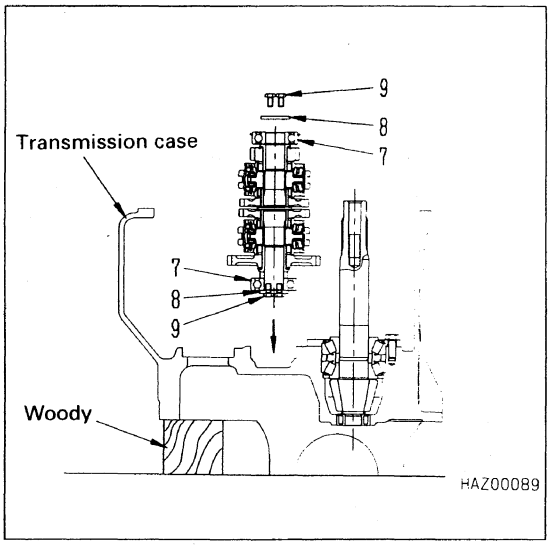

https://truckmanualshub.com/

4. Output shaft

1) Insert spacer (1), gear (2), collar (3), and bearing (4) to output shaft, then secure with washer (5) and bolts (6).

Tightening torque for bolts

kgm	343 – 427 Nm {35 – 43.5 kgfm}
	Loctite #271 (thread of hole)

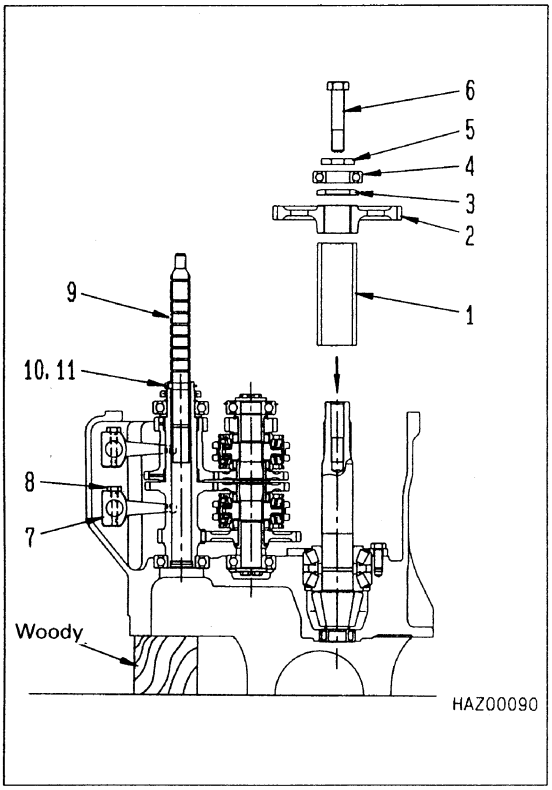

5. Input shaft sub-assembly

1) Install input shaft sub-assembly inside case.

2) Change lever
Secure lever (7) with bolt (8).

3) Insert shaft (9), then secure with pin (10) and snap ring (11).

★ Coat the shaft with ? paste when assembling.

★ After assembling, move the shaft in the axial direction and check that it is held in position securely.

6. Clutch case

1) Knock dowel pin (2) into transmission case (1).

2) Fit gasket (4), then connect clutch case (3) with bolt (5).

3) Install clutch yoke and shifter shaft.

4) Install clutch release cylinder (6).

5) Insert flange (7) to input shaft, then secure to clutch case with bolts (8).

6) Insert cage (10) in clutch case hole at top of idler shaft, then secure with bolt (10).

7) Insert seal (11) in clutch case hole at top of output shaft, then secure with snap ring (12).

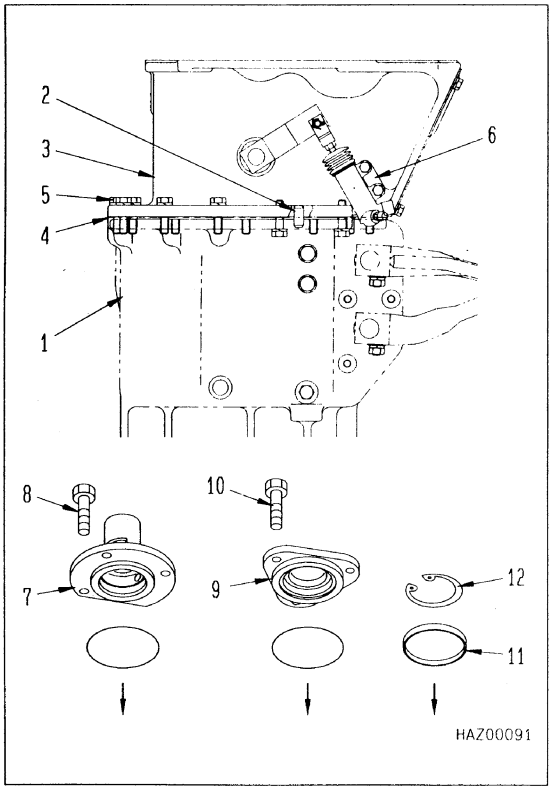

https://truckmanualshub.com/

Method of adjusting shim for pinion shaft assembly

1. **Dimension difference a**
   Read display a at the tip of the pinion shaft.

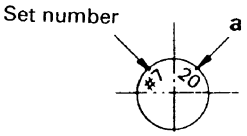

2. **Dimension difference b**
   Read stamped mark b on the case.

3. **Dimension difference c**
   1) Set the special tool to the bearing as shown in the diagram.

Special tool	3EB-97-99150

   2) Tighten the set bolts.

kgm	10 kgm

   3) Calculate C from the following formula

$$C = (9.45 - Ca) \times 100$$

   9.45: Basic dimension of bearing

4. **Calculating shim thickness (S)**
   Put the dimension differences a, b, and c calculated above in the following formula and calculate shim thickness (S).

$$S = 0.55 + \frac{a + b + c}{100} \quad \left(\text{Round the second place of decimal}\right)$$

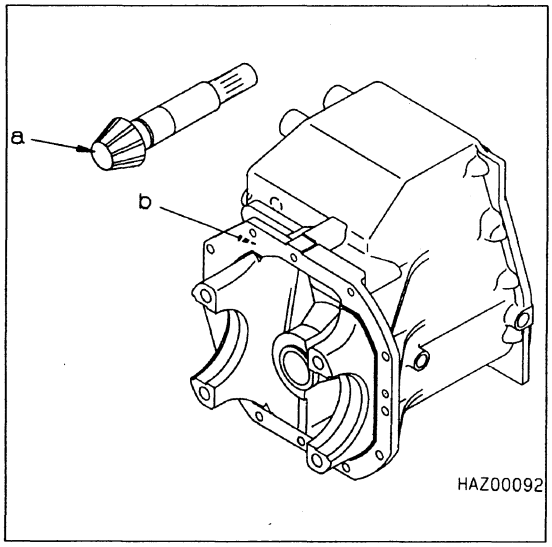

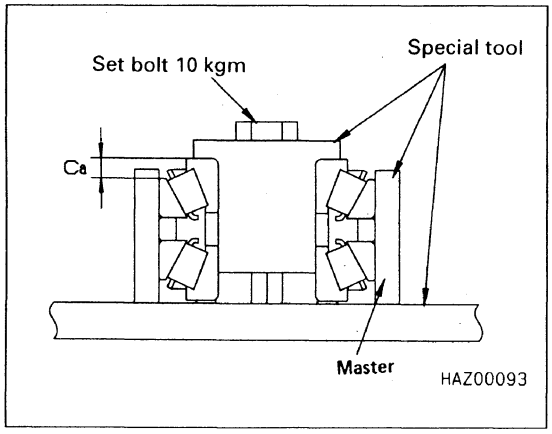

https://truckmanualshub.com/

Cross-sectional drawing of clutch transmission

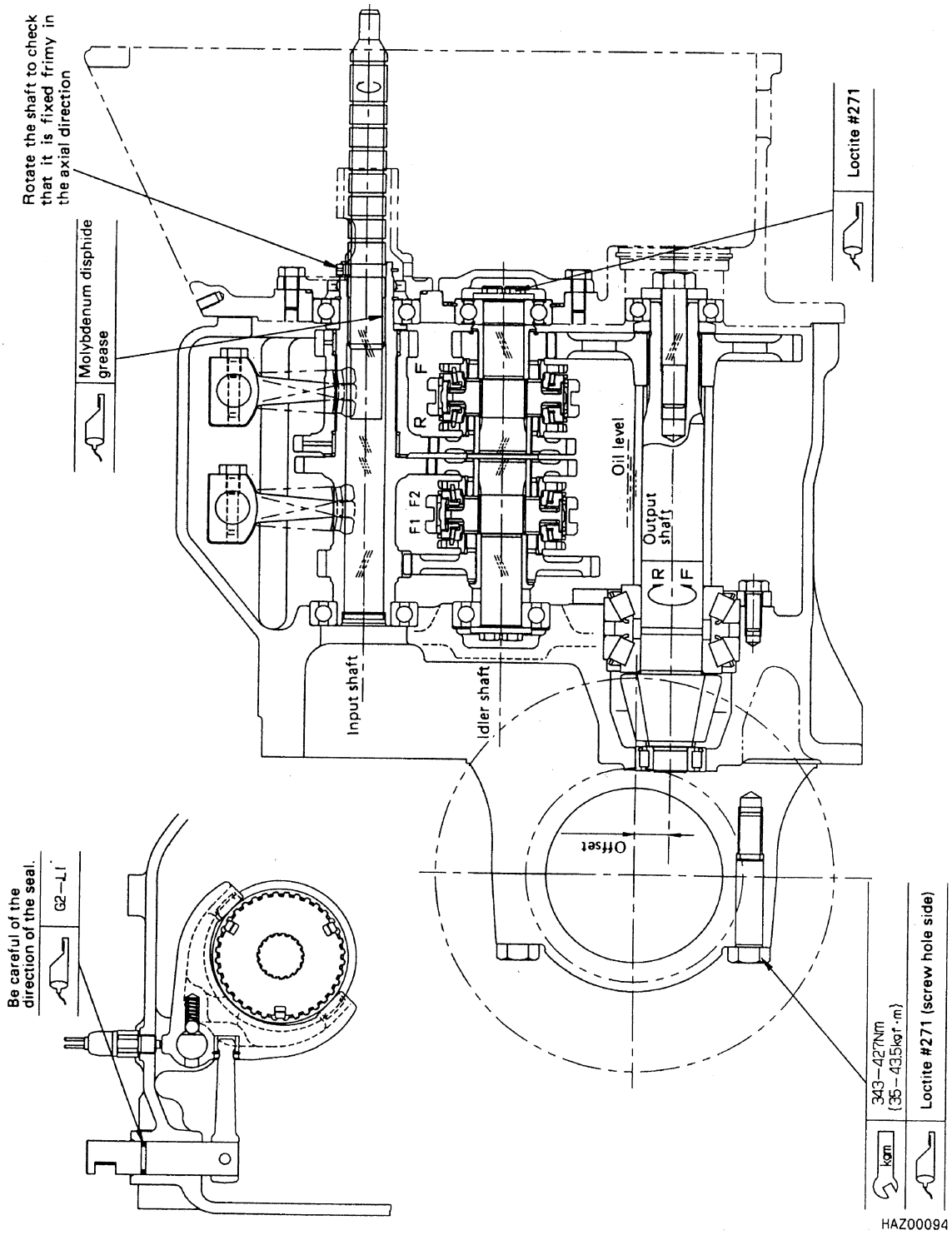

https://truckmanualshub.com/

https://truckmanualshub.com/

TORQUE CONVERTER

Wash the outside, then carry out the following operation in a clean place.

DISASSEMBLY

1. **Removal of torque converter assembly**
   Drain oil from inside transmission, then remove torque converter assembly from engine and transmission.

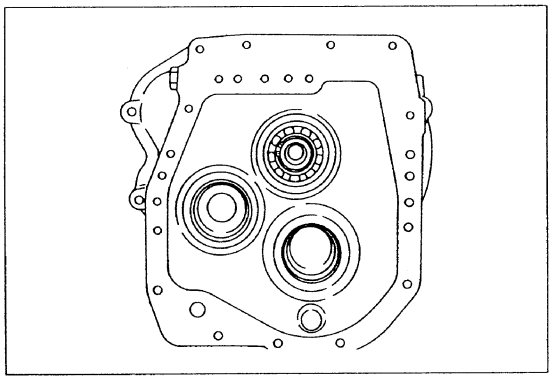

2. **Removal of torque converter**
   Remove torque converter slowly from housing. When doing this, be careful not to damage oil seal.

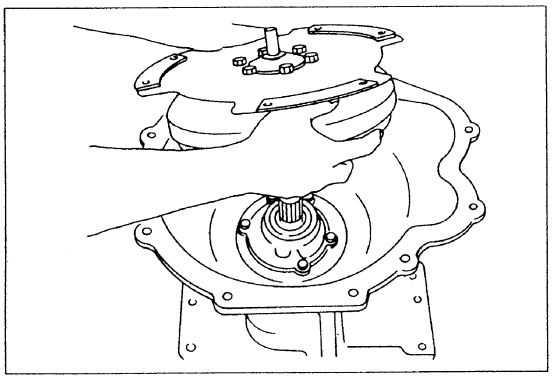

3. **Removal of gear pump**
   Remove pump mounting bolts, then remove gear pump.
   (Socket wrench: 20 mm)

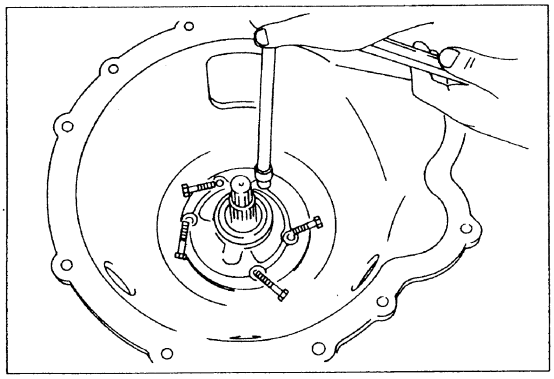

   After removing the pump, remove the O-ring if it is still remaining inside the housing.

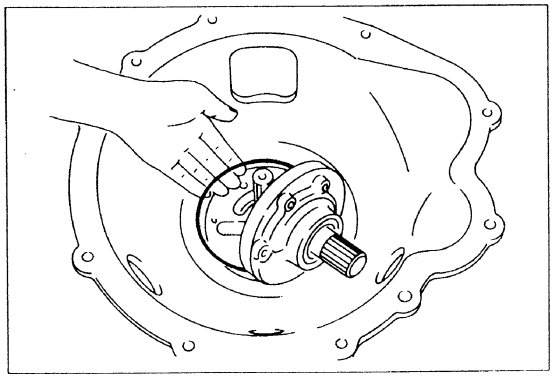

https://truckmanualshub.com/

4. Removal of turbine shaft

Remove snap ring from housing hole.
(Snap ring pliers)

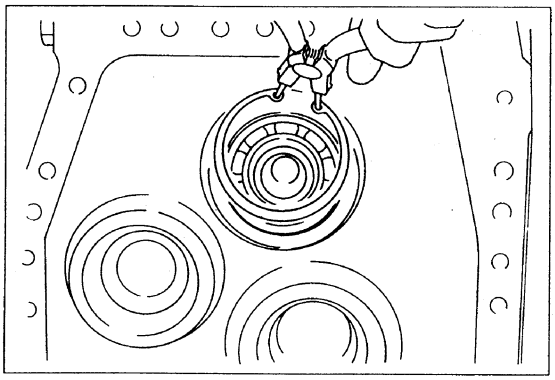

Remove turbine shaft from housing.

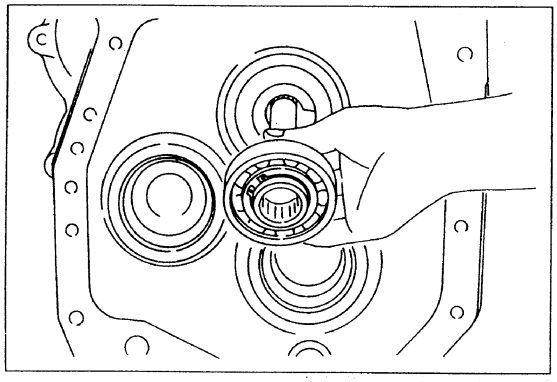

Remove seal ring at tip of turbine shaft.

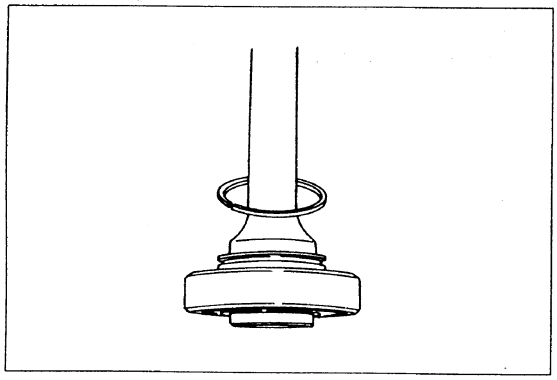

https://truckmanualshub.com/

5. **Removal of inlet port relief valve**
   Remove plug from housing, then remove spring and piston.
   (Wrench: 24 mm)

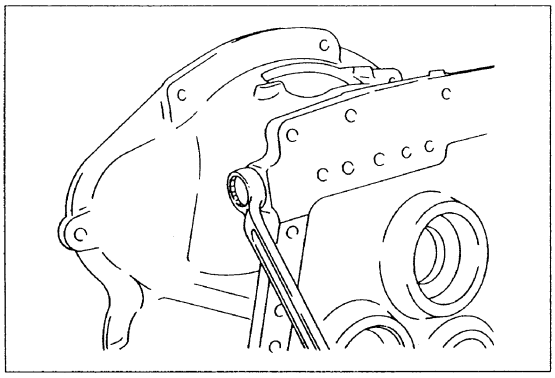

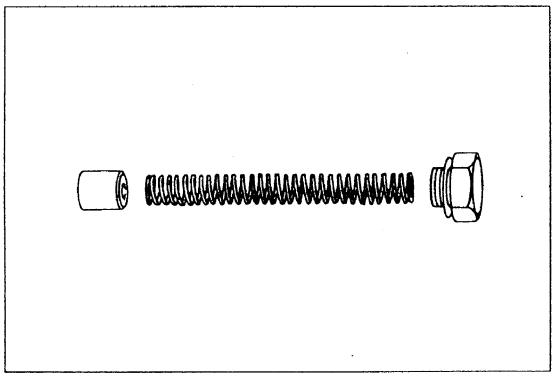

6. **Disassembly of gear pump**
   Remove O-ring and disassemble pump, then remove belleville spring (one place) and disassemble.

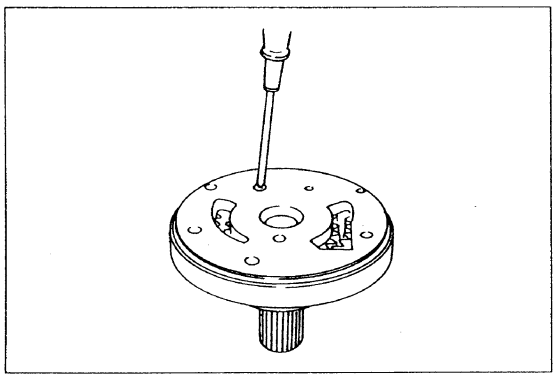

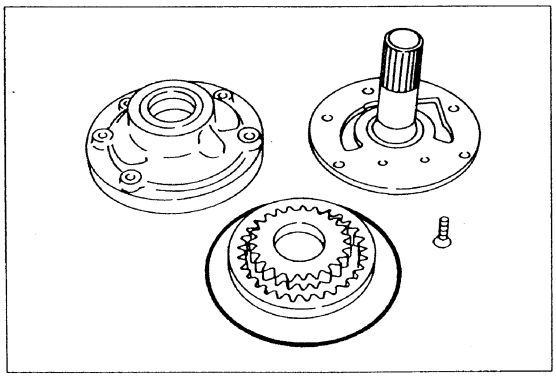

Note: Keep disassembly of the pump to the minimum.

https://truckmanualshub.com/

COMPONENT PARTS

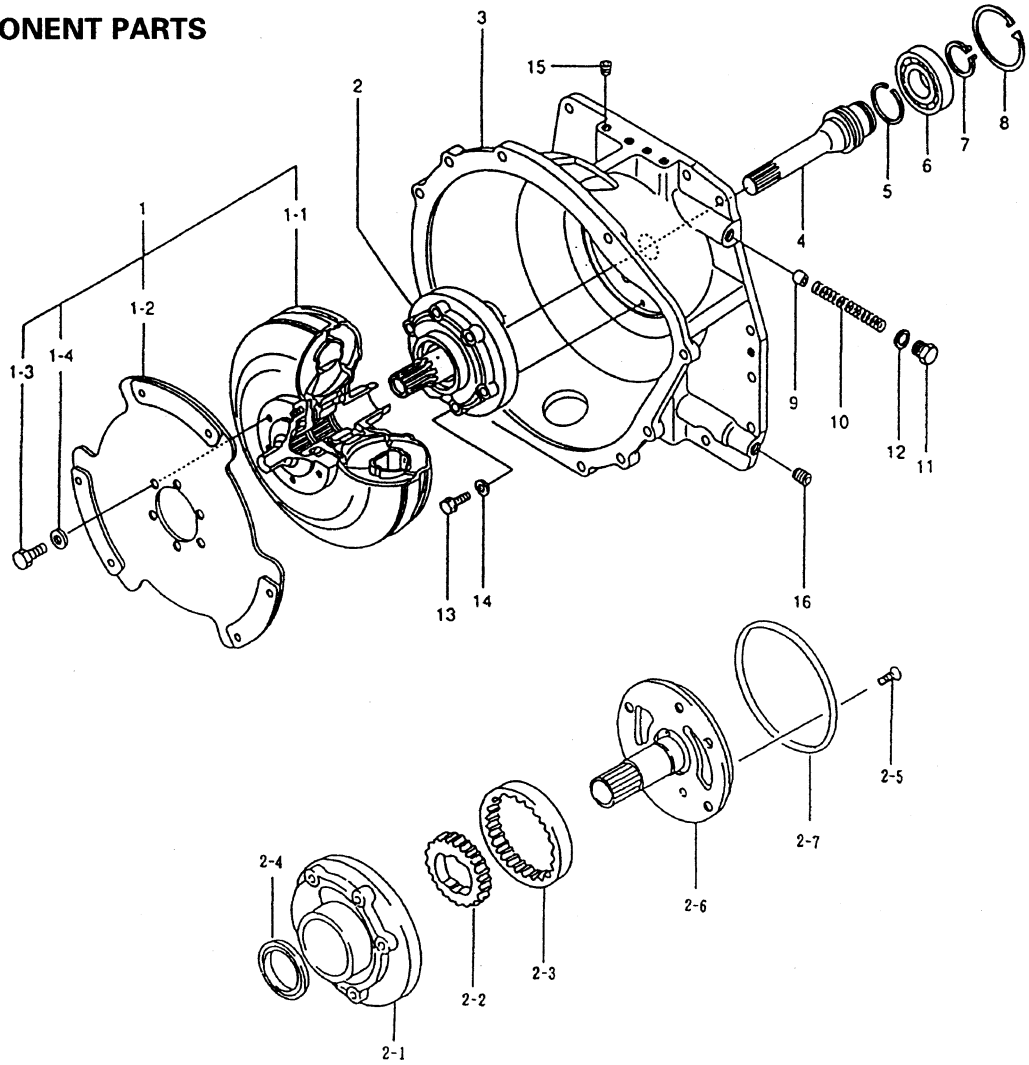

No.	Name	Q'ty	No.	Name	Q'ty
1	Torque converter circuit	1	4	Turbine shaft	1
1-2	Input plate assembly	1	5	Seal ring	1
1-3	Small hexagon bolt	6	6	Ball bearing	1
1-4	Washer	6	7	Snap ring	1
2	Gear pump assembly	1	8	Snap ring	1
2-1	Case assembly	1	9	Piston	2
2-2	Drive gear	1	10	Pressure spring	1
2-3	Driven gear	1	11	Plug	2
2-4	Oil seal	1	12	Gasket	2
2-5	Countersunk head screw	1	13	Hexagon bolt	5
2-6	Stator support	1	14	Gasket	5
2-7	O-ring	1	15	Hexagon socket head plug PT 1/4	4
3	Housing	1	16	Hexagon socket head plug PT 3/4	2

https://truckmanualshub.com/

TESTING

No.	Check item	Criteria: Standard size (mm)	Criteria: Repair limit (mm)	No.	Remedy
1	Torque converter inlet port valve Piston and housing hole 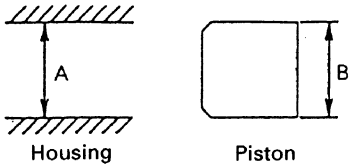 A mm B mm Clearance mm	14 – 14.018 13.96 – 13.97 0.030 – 0.058	 0.080	3 9 	Replace piston
2	Torque converter inlet port valve spring 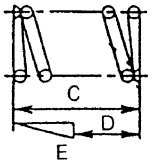 C: Free length D: Installed length C mm E: Installed load D mm E N {kg}	 103.4 62.7 75.6{7.71}±5%	 68.1{6.94}	 10 	Replace
3	Gear pump Oil seal and torque converter impeller hub 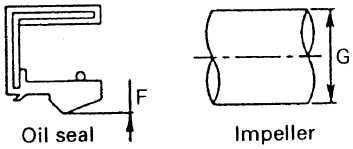 F mm G mm	41.915 – 41.965	41.5 41.815	2-4 1-1	
	Bushing and torque converter impeller hub 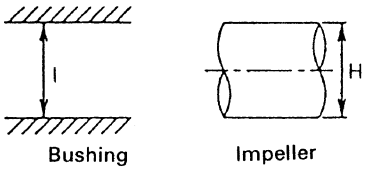 H mm I mm Clearance mm	41.915 – 41.965 42 – 42.039 0.035 – 0.124	 0.17	1-1 2-1 	
4	Turbine shaft Housing hole and seal ring groove 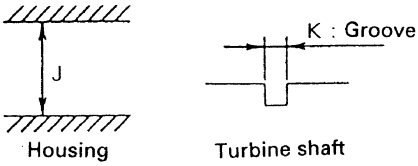 J mm K mm	50.10 – 50.15 2.5 – 2.6	50.25 2.7	3 4	
	Seal ring 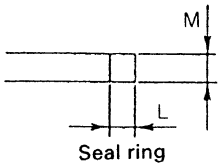 L mm M mm	2.0 – 2.2 2.35 – 2.40	1.8 2.15	5	

The numbers used in the No. column of the table refer to the numbers in the component part drawing.

https://truckmanualshub.com/

ASSEMBLY

Carry out assembly in the reverse order to disassembly. Pay attention to the following points when installing.

1. **Assembly of control valve**
   Insert the piston and spring correctly to their original position, assemble in the same way as for disassembly, then assemble to the transmission housing.

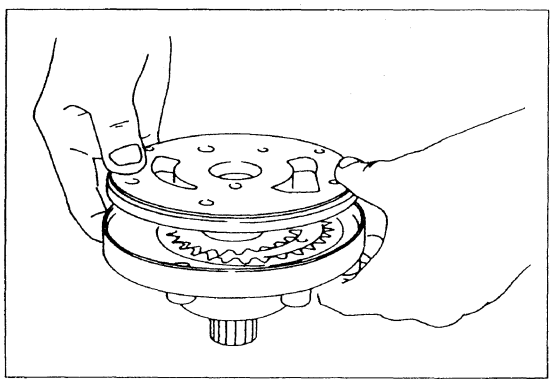

2. **Assembly of gear pump**
   Insert the pair of gears in the casing, reverse the stator support, and assemble in the same way as for disassembly.
   Tighten the countersunk head screw, and check that the gear rotates smoothly. If it does not rotate, disassemble, and then assemble again.

kgm (Countersunk head screw)	0.98 Nm {0.1 kgfm}

3. **Assembly of inlet port relief valve**
   There are two types of valve, so be sure to assemble them correctly to their original position.

kgm (Plug)	49 Nm {5.0 kgfm}

4. **Assembly of turbine shaft**
   Check that the seal ring is securely inserted, then insert the shaft into the housing.

5. **Assembly of gear pump**
   Insert the O-ring to the pump casing. To prevent the O-ring from breaking or cracking when it is inserted, coat it thinly with lithium grease (Shell Albania Z).

kgm (O-ring)	Lithium grease
(Bolt)	20.6 Nm {2.1 kgfm}

Assemble the O-ring to the casing as shown in the diagram.

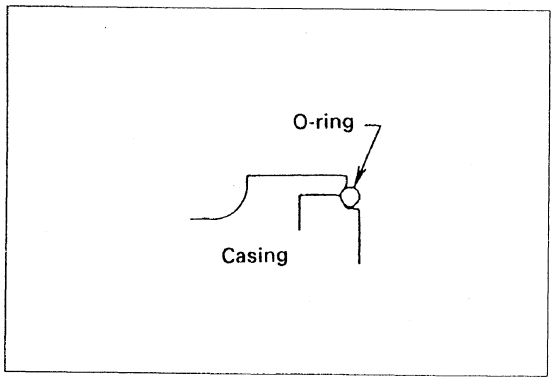

https://truckmanualshub.com/

6. Assembly of torque converter

Insert the torque converter into the pump inside the housing. When doing this, to prevent the oil seal and bushing from breaking or being scratched, fill the area between the oil seal lip 1/3 - 1/2 uniformly with lithium grease, or coat with clean hydraulic oil.

7. Assembly of torque converter assembly

Assemble the torque converter assembly to the transmission and engine. Replace the O-rings and oil seals with new parts.
Be careful to assemble correctly. For details, see the check items in Maintenance standard.
When replacing the oil seal with a new part, coat the outside circumference with semi-dry gasket sealant (for example, Three Bond No. 1211, 1104). Be careful not to get the gasket sealant on the lip or sliding surface of the shaft.

MAINTENANCE STANDARD

1. Checking oil pressure

Location	No.	Check item	Pressure MPa {kgf/cm²}	Port position
Torque converter	1	Torque converter inlet port pressure	0.29 – 0.69 {3 – 7}	Ⓔ

2. Tightening torque for bolts and plugs

Component	No.	Tightening location	Screw specification		Tightening torque Nm {kgfm}		No.
					Target	Maximum	
Torque converter	1	Input plate mount	Hexagon bolt	M10 × 1.5 × 16	57.8 {5.9}	74.5 {7.6}	1-3
	2	Gear pump assembly	Countersunk head screw	M5 × 0.8 × 16	0.98 {0.1}	2.94 {0.3}	2-5
	3	Inlet port valve mount	Plug	M16 × 1.5 × 10	49.0 {5.0}	63.7 {6.5}	11
	4	Gear pump mount	Small hexagon bolt	M8 × 1.25 × 40	20.6 {2.1}	26.5 {2.7}	13
	5	Pressure pickup ports	Hexagon socket head plug	PT 1/4	34.3 {3.5}	43.1 {4.4}	15
	6	Blind plug	Hexagon socket head plug	PT 3/4	56.8 {5.8}	70.6 {7.2}	16

The numbers used in the No. column of the table refer to the numbers in the component part drawing.

https://truckmanualshub.com/

ASSEMBLY DRAWING

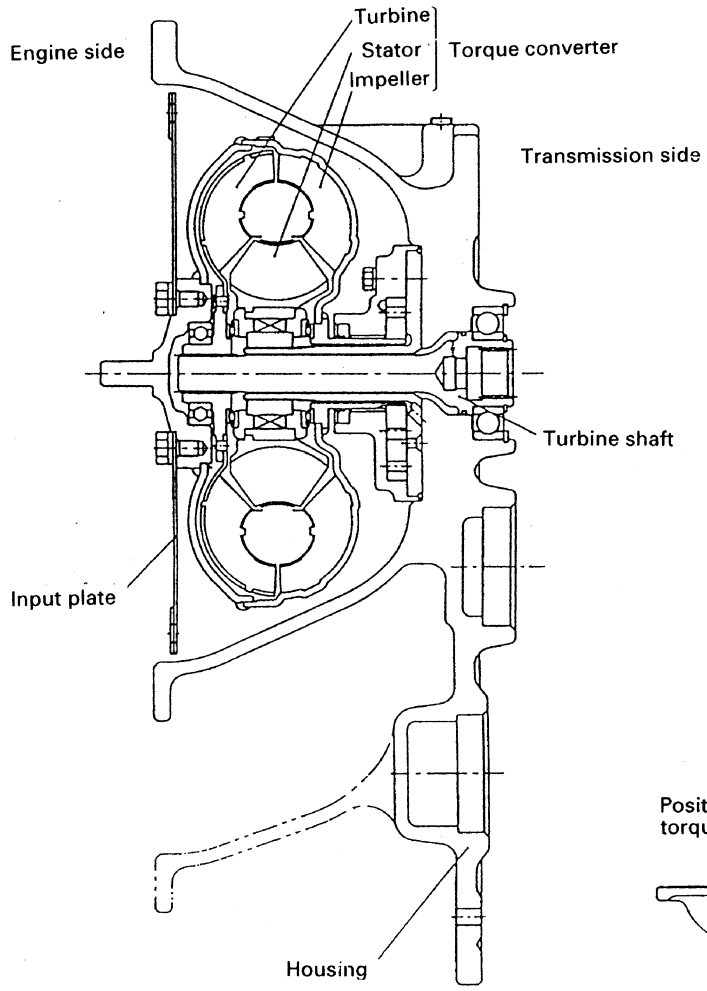

Cross-sectional drawing of torque converter assembly

Positions of hydraulic ports on torque converter assembly

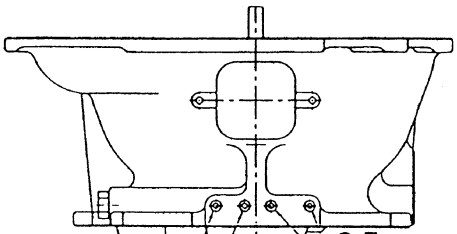

Ⓔ Torque converter inlet pressure measurement port
Ⓑ Pump pressure measurement port
Ⓕ Torque converter outlet pressure measurement port

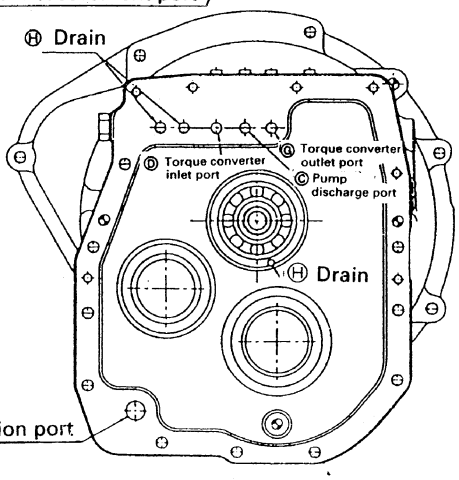

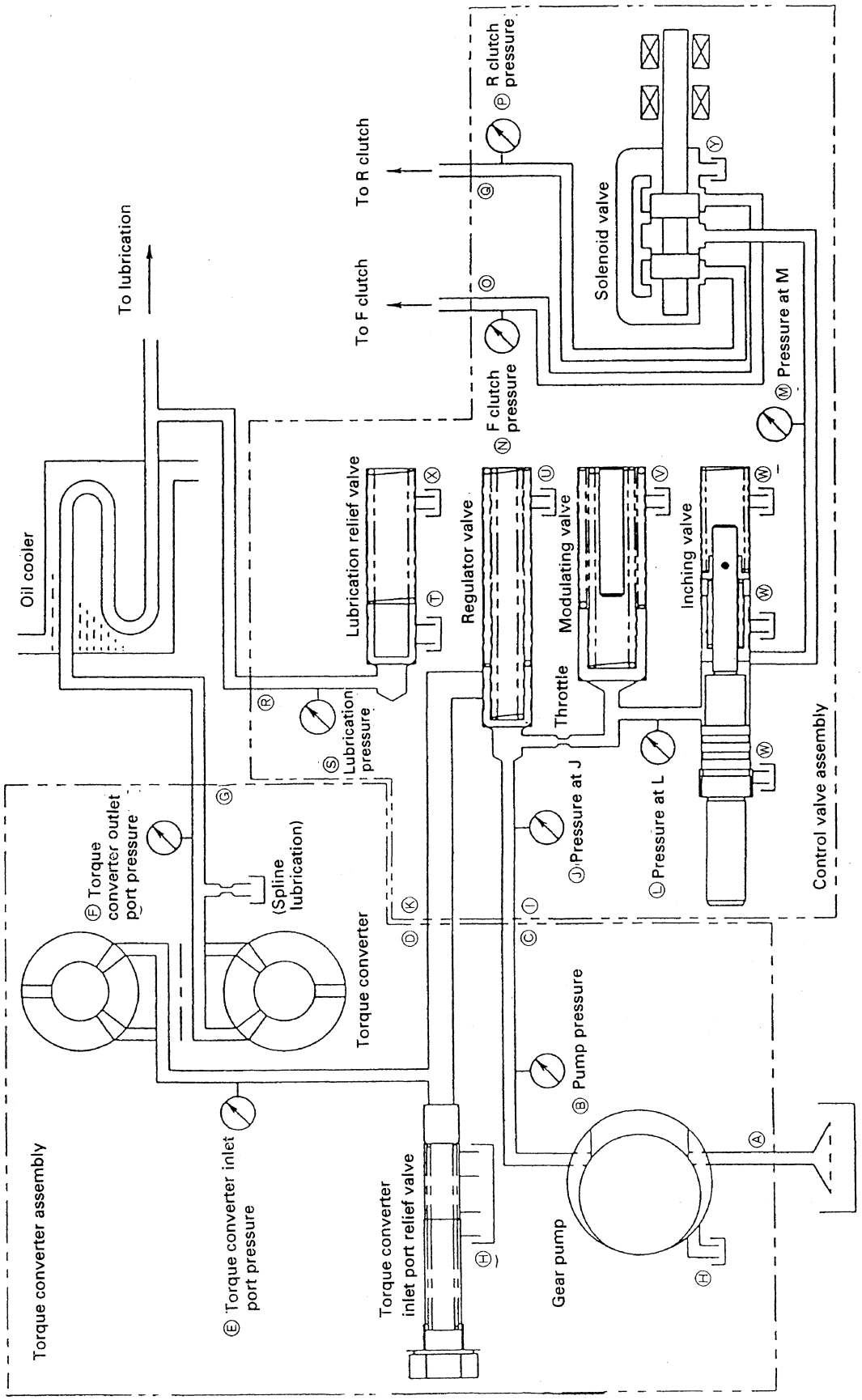
Oil cooler
To lubrication
To F clutch
To R clutch
Ⓝ F clutch pressure
Ⓟ R clutch pressure
Solenoid valve
Ⓜ Pressure at M
Lubrication relief valve
Regulator valve
Modulating valve
Inching valve
Throttle
Ⓢ Lubrication pressure
Ⓙ Pressure at J
Ⓛ Pressure at L
Control valve assembly
Ⓕ Torque converter outlet port pressure
(Spline lubrication)
Torque converter
Ⓑ Pump pressure
Torque converter assembly
Ⓔ Torque converter inlet port pressure
Torque converter inlet port relief valve
Gear pump

https://truckmanualshub.com/

CAUSES AND REMEDIES FOR FAILURES

No.	Problem	Cause	Remedy
1	Power is not transmitted	A No hydraulic pressure	
		1) Lack of oil	Add oil
		2) Damaged gear pump or drive portion	Disassemble and check, replace with new parts or replace whole assembly
		3) Damaged piping or joint	Disassemble and replace
		4) Broken piston in inlet port relief valve or broken spring	Disassemble and replace
		B Mechanical breakage	
		1) Broken input plate	Disassemble and replace
		2) Broken shaft, gear	Disassemble and replace
		3) Broken spline	Disassemble and replace
2	Output drops	A Hydraulic pressure is too low	
		1) Lack of oil	Add oil
		2) Leakage of air from suction piping	Check joint, gasket, replace parts if necessary
		3) Drop in efficiency of gear pump	Disassemble and replace, replace parts if necessary
		4) Deteriorated spring in inlet port relief valve or defective operation of piston	Disassemble and replace, replace parts if necessary
		5) Worn or broken seal ring	Disassemble and replace
		B Mechanical breakage	
		1) Broken or deformed impeller	Disassemble and replace
		2) Deformed input plate	Disassemble and replace
		C Other	
		1) Non-specified oil is being used	Change to specified oil
3	Oil pressure rises abnormally high	1) Incorrect oil level	Add or drain oil
		2) Contact of impeller	Disassemble and replace, replace parts if necessary
		3) Wear or seizure of bearing	Disassemble and replace, replace parts if necessary
		4) Wear or damage of gear pump	Disassemble and replace, replace parts if necessary

https://truckmanualshub.com/

No.	Problem	Cause	Remedy
4	Abnormal noise is generated	1) Cavitation caused by leakage of air from suction piping or lack of oil	Add oil or check and replace parts if necessary
		2) Failure of gear pump	Disassemble and replace parts or whole assembly
		3) Contact caused by deformed impeller	Disassemble and replace, replace parts if necessary
		4) Breakage of input plate	Disassemble and replace
		5) Breakage of gear	Disassemble and replace
		6) Wear or breakage of bearing	Disassemble and replace
		7) Wear of spline	Disassemble and replace
		8) Loose bolts	Tighten, replace if necessary
5	Oil oozes out or leaks	A Oil seal	
		1) Worn or damaged lip	Disassemble and replace
		2) Dirt caught	Disassemble and replace, replace parts if necessary
		3) Worn or scratched shaft	Correct or replace
		4) Hardening or deterioration of rubber because of abnormal rise in oil temperature	Disassemble and replace
		B O-ring	
		1) Broken O-ring	Disassemble and replace
		2) Scratched mating surface	Correct or replace
		3) Hardening or deterioration of rubber because of abnormal rise in oil temperature	Disassemble and replace
		4) Sudden use in extremely cold temperatures (below -15*C)	Carry out warming-up operation
		C. Plug, screw	
		1) Loose screw	Tighten
		2) Broken screw	Replace
		3) Cracked hole	Replace

https://truckmanualshub.com/

TORQFLOW TRANSMISSION

DISASSEMBLY

1. **Draining oil**
   Remove drain plug and drain oil from case.

2. **Transmission valve, differential**
   Remove transmission valve mounting bolts (1) and differential cap bolts (2), and separate into transmission valve and differential.

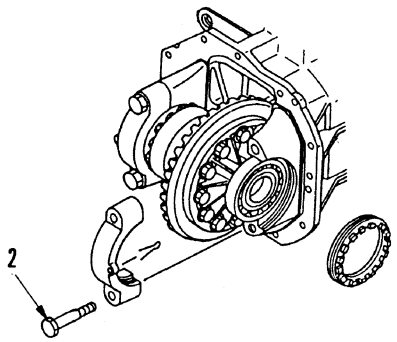

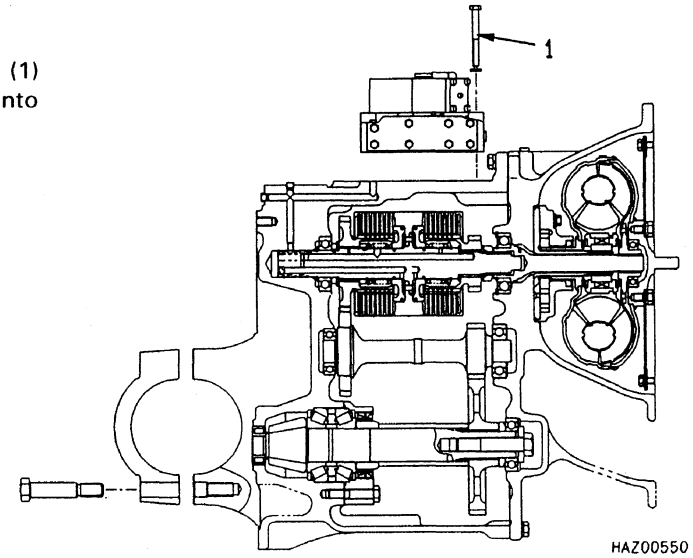

3. **Torque converter**
   (1) Use wooden blocks as support and set facing in direction shown in diagram on right.

   (2) Remove bolts (1) connecting torque converter and transmission case, and separate torque converter.

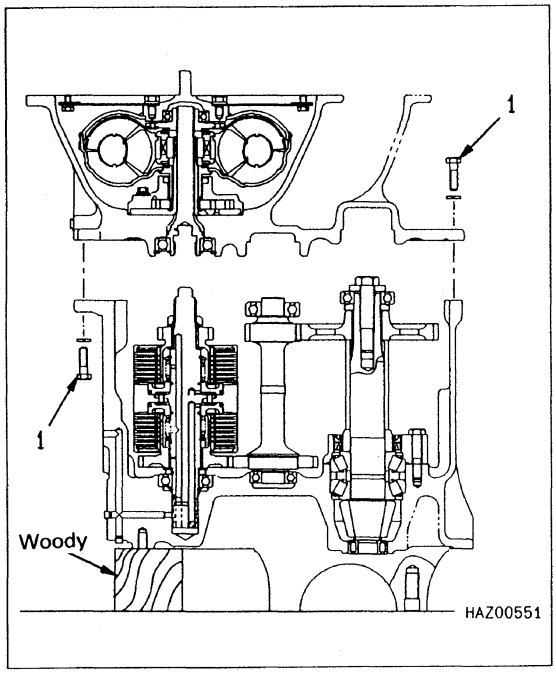

https://truckmanualshub.com/

4. Output shaft sub-assembly

1) Remove output shaft bearing holder bolt (1).

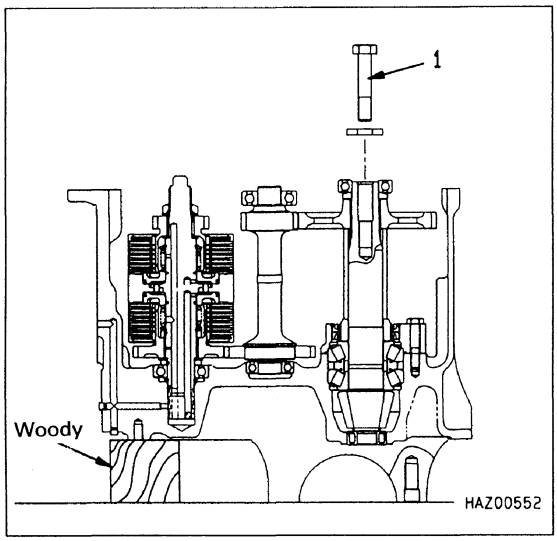

2) Using puller, remove output shaft bearing (2).

3) Remove gear (3) and spacer (4).

4) Remove cage lock bolt (5), then pull out cage (6) and output shaft sub-assembly (7).

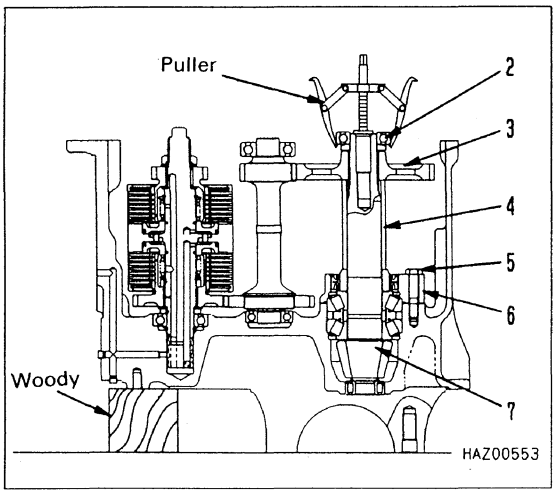

5. Input shaft sub-assembly

(1) Pull input shaft sub-assembly (with clutch pack assembly) out from case.

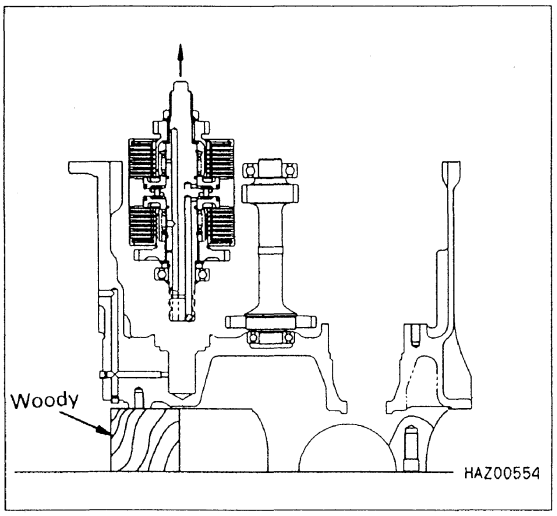

https://truckmanualshub.com/

6. Intermediate shaft sub-assembly

1) Using puller, remove intermediate shaft bearing (1).

2) Pull intermediate shaft sub-assembly (2) out from case.

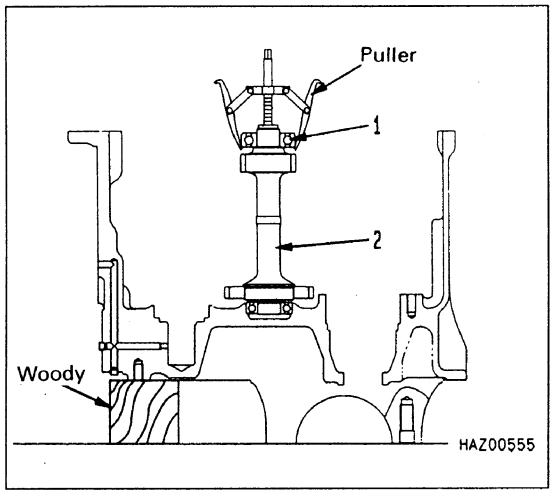

7. Strainer

1) Remove bolts (1), then remove plate (2).

2) Remove strainer (3).

8. Oil level plug

Remove oil level plug (4).

9. Cap, blind plug

Remove cap (5) and blind plug (6).

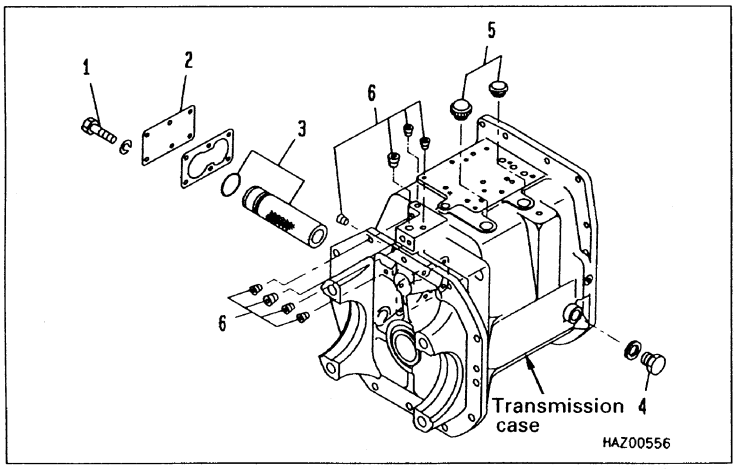

https://truckmanualshub.com/

10. Disassembly of clutch pack assembly

The numbers show the order for disassembly.

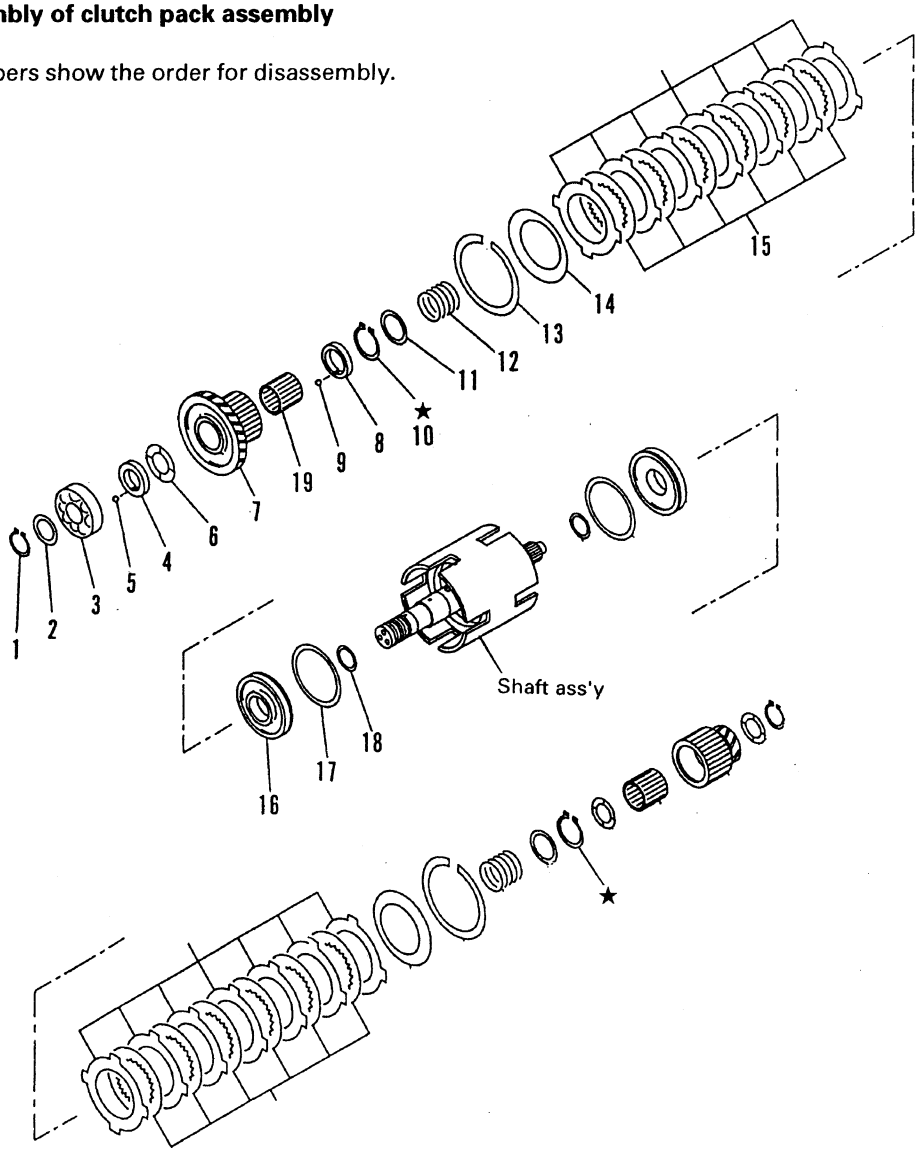

★ When removing snap ring (10), there is danger because it is under tension from the spring.
Always use a special tool to remove it.

Special tool	3EB-97-99000

CAUTION

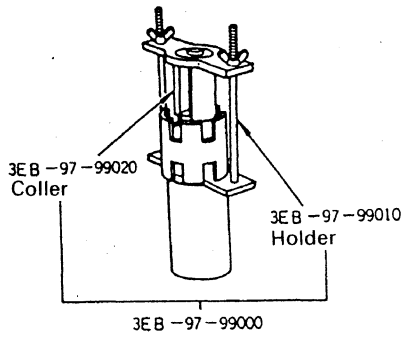

When removing snap ring (10), always use above special tool.

https://truckmanualshub.com/

TESTING

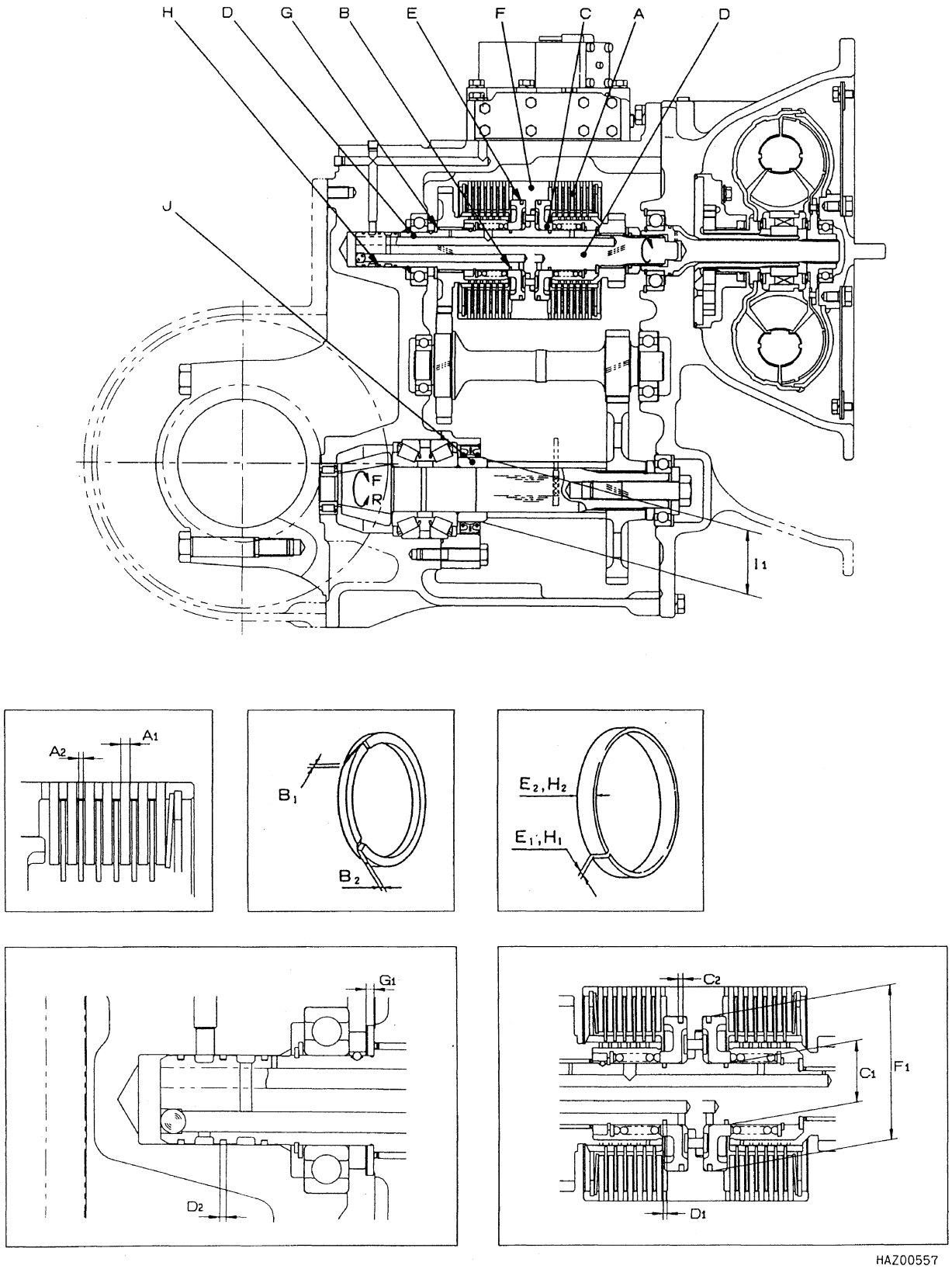

HAZ00557

https://truckmanualshub.com/

Symbol	Check item			Criteria		Remedy
				Standard size (mm)	Repair limit (mm)	
A	Plate	A1	Thickness of drive plate	3.13 – 3.27	37.8	Replace
		A2	Thickness of driven plate	2.90 – 3.05	2.6 (Oil groove depth: Min. 0.2)	
B	Seal ring	B1	Clearance at end gap when inserting piston	0.36 – 0.56	—	Replace each time disassembly is carried out
		B2	Depth of oil groove in side face	0.15 – 0.35	There must be oil groove	
		(D1)	Insertion groove width	2.60 – 2.65	2.8	
C	Piston	C1	Inside diameter of seal ring contact surface	40.025 – 40.050	40.2	Replace
		C2	Seal ring insertion groove width	3.1 – 3.2	3.4	
D	Drive shaft	D1	Seal ring insertion groove width	2.60 – 2.65	2.8	
		D2	Seal ring insertion groove width	2.60 – 2.65	2.8	
E	Seal ring	E1	Clearance at end gap when inserting clutch case	0.2 – 0.4	1.0	
		E2	Width	2.97 – 2.99	2.77	
		(C2)	Insertion groove width	3.1 – 3.2	3.4	
F	Clutch case	F1	Inside diameter of seal ring contact surface	100 – 100.054	100.3	
G	Thrust washer	G1	Thickness	2.9 – 3.1	2.5	
H	Seal ring	H1	Clearance at end gap when inserting cap	0.05 – 0.25	0.65	
		H2	Width	2.47 – 2.49	2.25	
		(D2)	Insertion groove width	2.60 – 2.65	2.8	
I	Retainer	I1	Outside diameter of oil seal contact surface	64.926 – 65.000	64.83	
—	Gears	—	Backlash	0.08 – 0.28	—	
		—	Thrust clearance	0.3 – 0.7	—	
—	Gasket, O-ring, seals			—	—	Replace with new parts during disassembly and assembly

https://truckmanualshub.com/

ASSEMBLY

1. Cleaning transmission case, blowing with air

1) Remove cap when cleaning transmission case. [This is because thread tightener is used on the cap mounting bolt.]

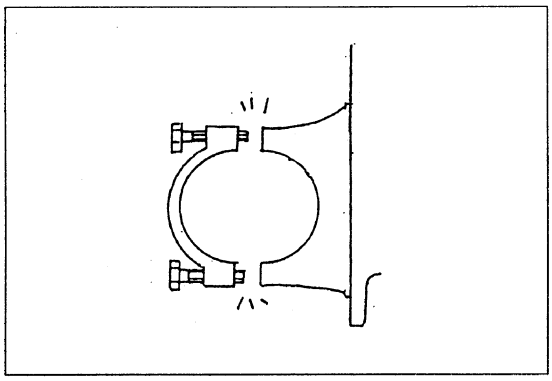

2) Blow machined hole in transmission case with air.

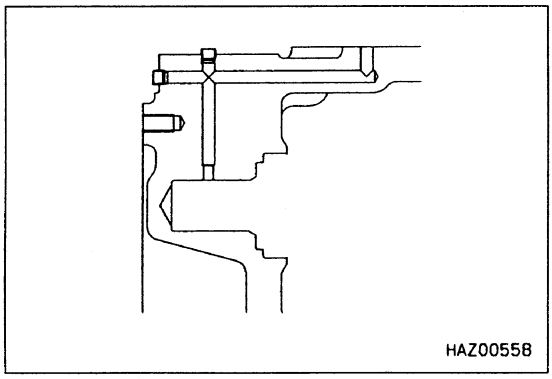

2. Installing blind plug in transmission case

Install blind plug (2) and cap (3) to transmission case (1).

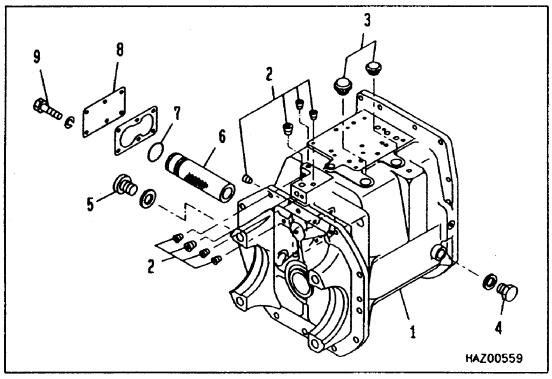

3. Install oil level plug (4) and drain plug (5).

Tightening torque for drain plug

58.8 – 78.4 Nm {6.0 – 8.0 kgfm}

4. Installing strainer

Fit O-ring (7) to filter (6), insert inside case, then install plate (8) with bolts (9).

https://truckmanualshub.com/

5. Output shaft sub-assembly

1) Insert thickness of shim (2) equivalent to difference in mounting dimensions to pinion shaft (1), then insert bearing (3).

★ Standard shim thickness: 1.2 mm

2) For 3.0-ton truck, insert bearing (4) at tip of shaft (1).

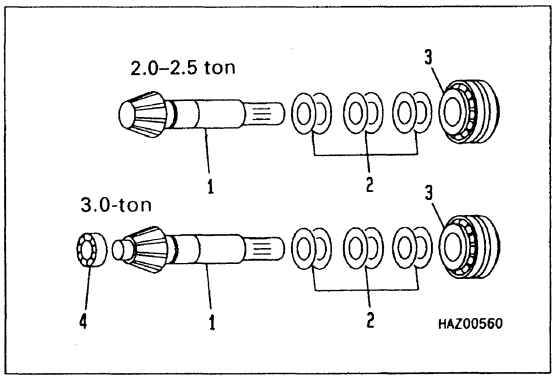

6. Installation of output shaft sub-assembly

1) Fit O-ring (6), race (7), and oil seal (8) to output shaft sub-assembly (5), then insert in transmission case.

★ Coat the oil seal lip surface with G2-LI.

2) Insert O-ring (9) and cage (10), then secure with bolts (11). (See the diagram on the right for the order of tightening.)

Tightening torque for bolts

kgm 1st step	49 Nm {5.0 kgfm}
kgm 2nd step	74 Nm {7.5 kgfm}
	Loctite #271 (hole thread)

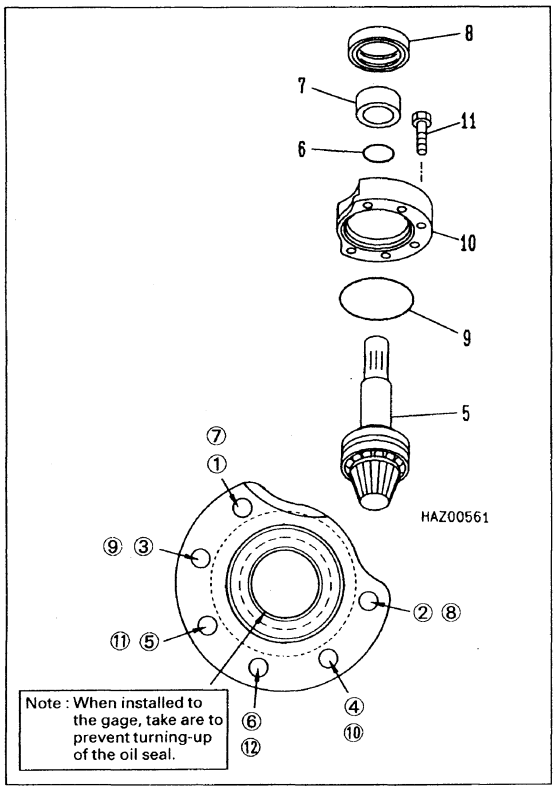

3) Insert spacer (12) and gear (13).

★ Note that the gear differs according to the specification.

Next, insert collar (14), bearing (15), and washer (16), and tighten with bolts (17).

Tightening torque for bolts

kgm	343 – 427 Nm {35 – 43.5 kgfm}
	Loctite #271 (hole thread)

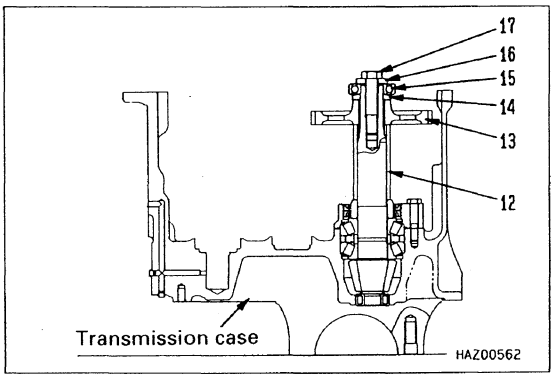

https://truckmanualshub.com/

7. Intermediate shaft sub-assembly

1) Assemble gear (2) to shaft (1).

★ Note that the gear differs according to the specification.

2) Insert bearings (3) and (4).
Bearing (3): Front
Bearing (4): Rear

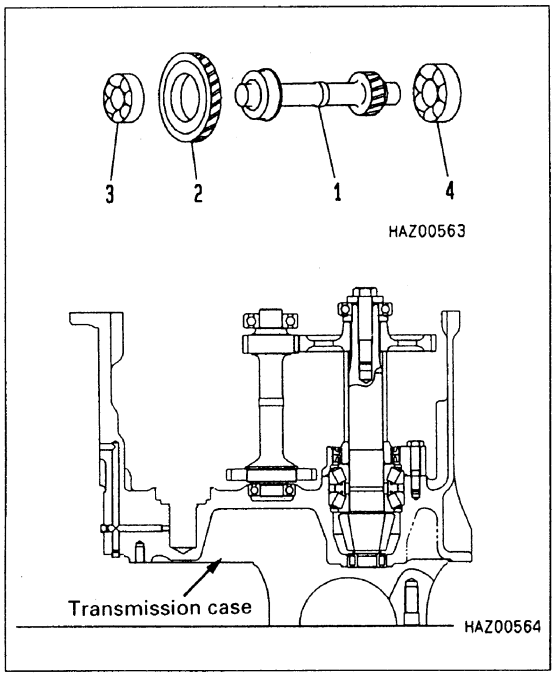

8. Installation of intermediate shaft sub-assembly

Assemble intermediate shaft sub-assembly inside transmission case.

9. Input shaft sub-assembly

1) Fit seal (2) and seal (3) to shaft assembly (1), then assemble piston (4).

2) Install spring (5) and washer (6), then secure in position with snap ring (7).

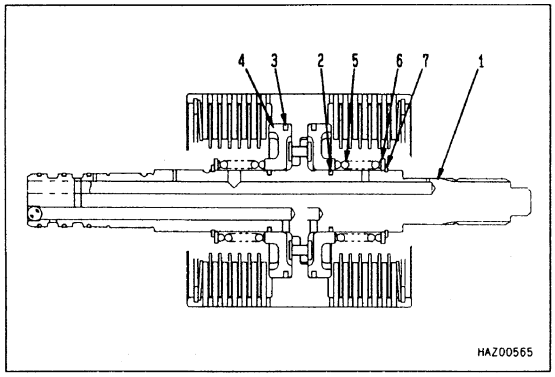

https://truckmanualshub.com/

3) Put oil on steel ball (8), fix it in shaft hole, align notch in spacer (9) with ball, and insert.

4) Assemble clutch disc (10) and plate (11), then insert plate (12) and secure in position with ring (13).

5) Installation of front gear
Insert bearing (15) in gear (14), then assemble to shaft.
Install plate (16), steel ball (17), and spacer (18). Assemble bearing (19) and spacer (20), and secure in position with snap ring (21).

6) Installation of rear gear
Assemble washer (22), gear (23), bearing (24), and washer (25), secure in position with snap ring (26), then install spacer (27).

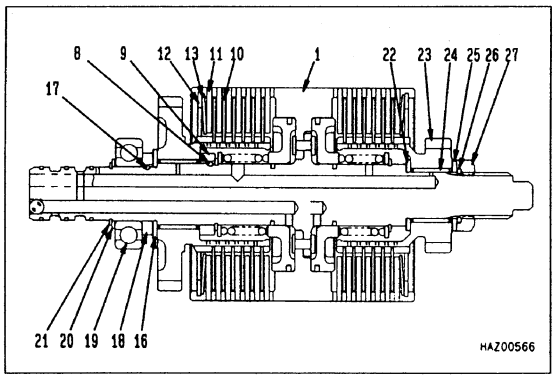

10. Installation of input shaft sub-assembly
Install seal ring to input shaft, then assemble inside transmission case.

11. Installation of torque converter
Fit gasket and install torque converter to transmission case with bolts (1).

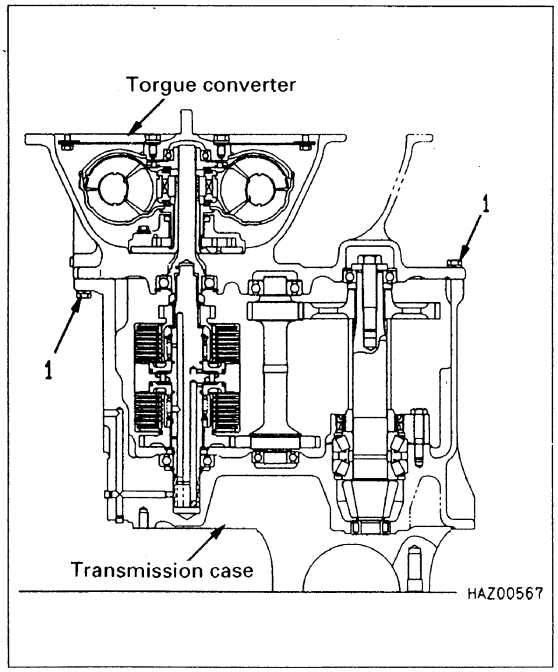

12. Installation of transmission valve

Fit gasket and install with bolts (1).
(Two of the eight bolts are also used to tighten the inching change bracket.)

Tightening torque for bolts

kgm	27 – 34 Nm {2.8 – 3.5 kgfm}

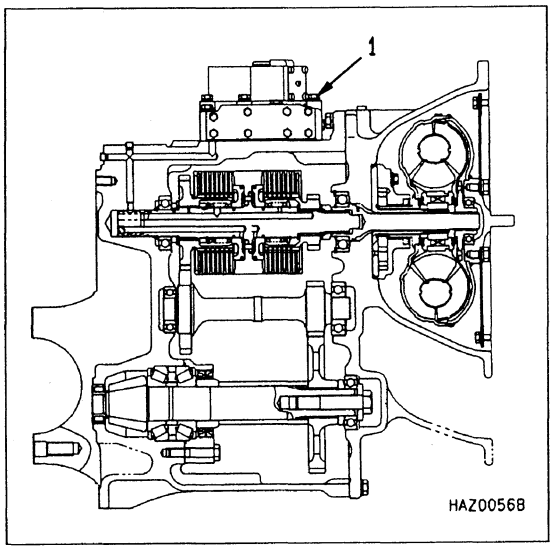

13. Installation of torque converter cooler filter

Install oil filter and piping.

14. Installation of differential

1) Insert screw (1) into differential mounting thread in transmission case, then secure with cap (2) and bolt (3).

Tightening torque for cap bolts

kgm	343 – 427 Nm {35 – 43.5 kgfm}
	Loctite #271 (hole thread)

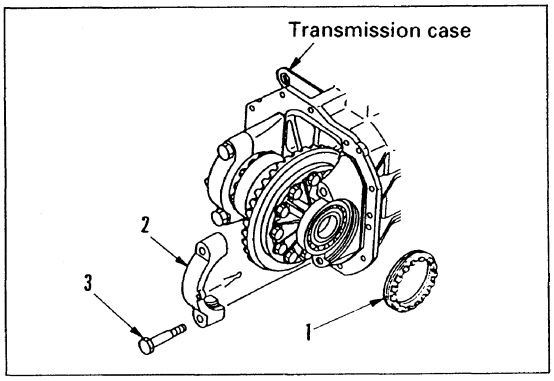

2) Preload
Tighten screw (1) so that pinion and ring gear set preload is 31 – 56 Nm (310 – 570 kgfcm) at ring gear end.

3) Backlash
Adjust so that backlash between bevel gear and pinion gear is 0.15 – 0.23 mm (check with dial gauge).

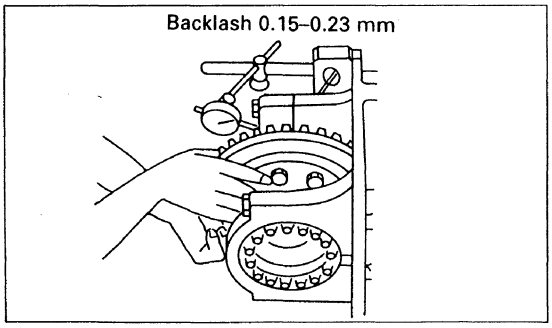

4) Tooth contact
The tooth contact (ℓ) should be 2/5 – 3/4.
- There should be no cross contact (A in diagram on right).
- There should be no contact at the toe or heel. In particular, there should be no missing tooth contact at the toe end. (B in diagram on right)

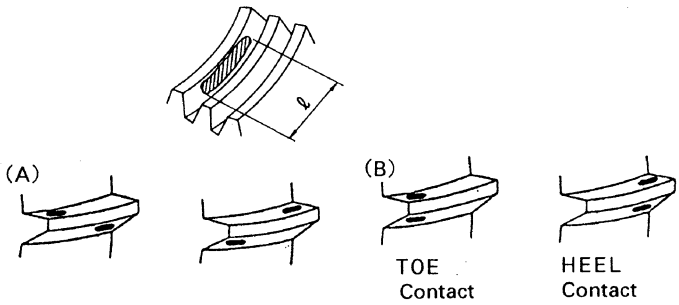

https://truckmanualshub.com/

TORQFLOW transmission assembly drawing

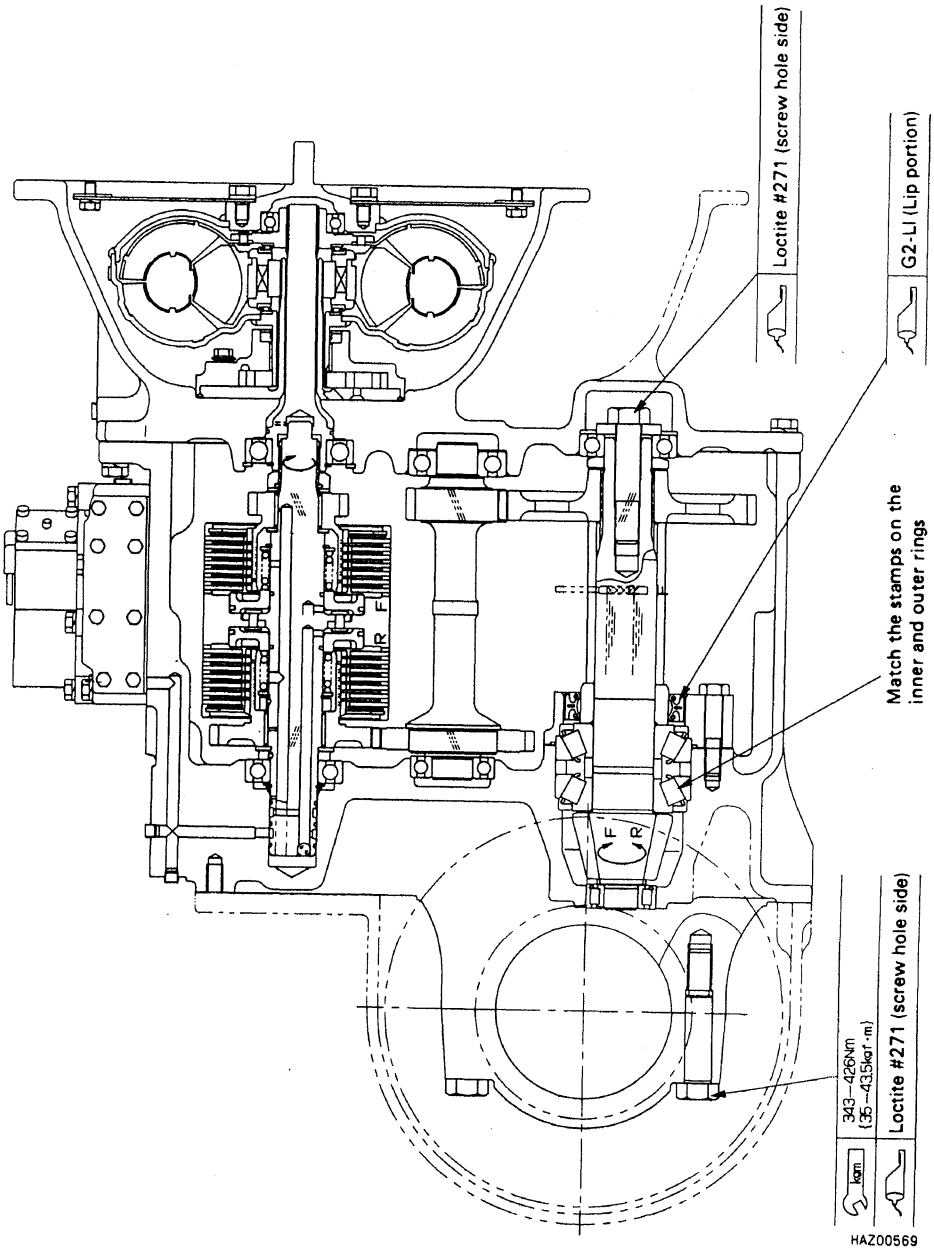

https://truckmanualshub.com/

https://truckmanualshub.com/

TRANSMISSION CONTROL VALVE

DISASSEMBLY OF CONTROL VALVE

1. Remove control valve from transmission, then remove solenoid valve mounting bolts, and remove solenoid valve from valve body.
   (Hexagon wrench: 4 mm)

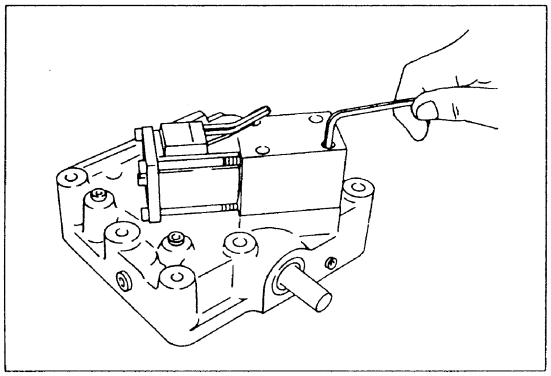

2. Remove cover mounting bolts, then remove cover and gasket.
   (Wrench: 10 mm)

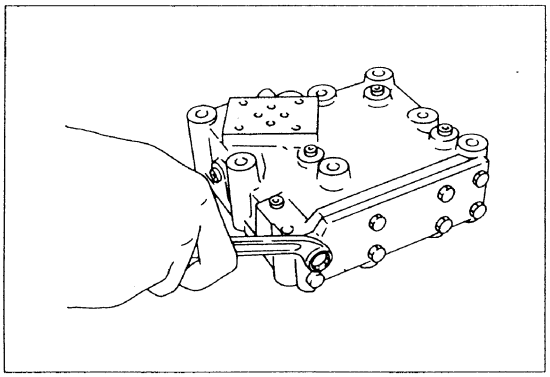

3. Remove inching spool and valves and pistons from valve body.
   ★ Fit tags to indicate the mounting position.

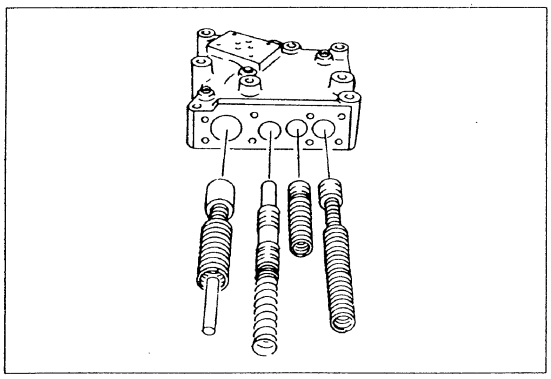

https://truckmanualshub.com/

COMPONENT PARTS

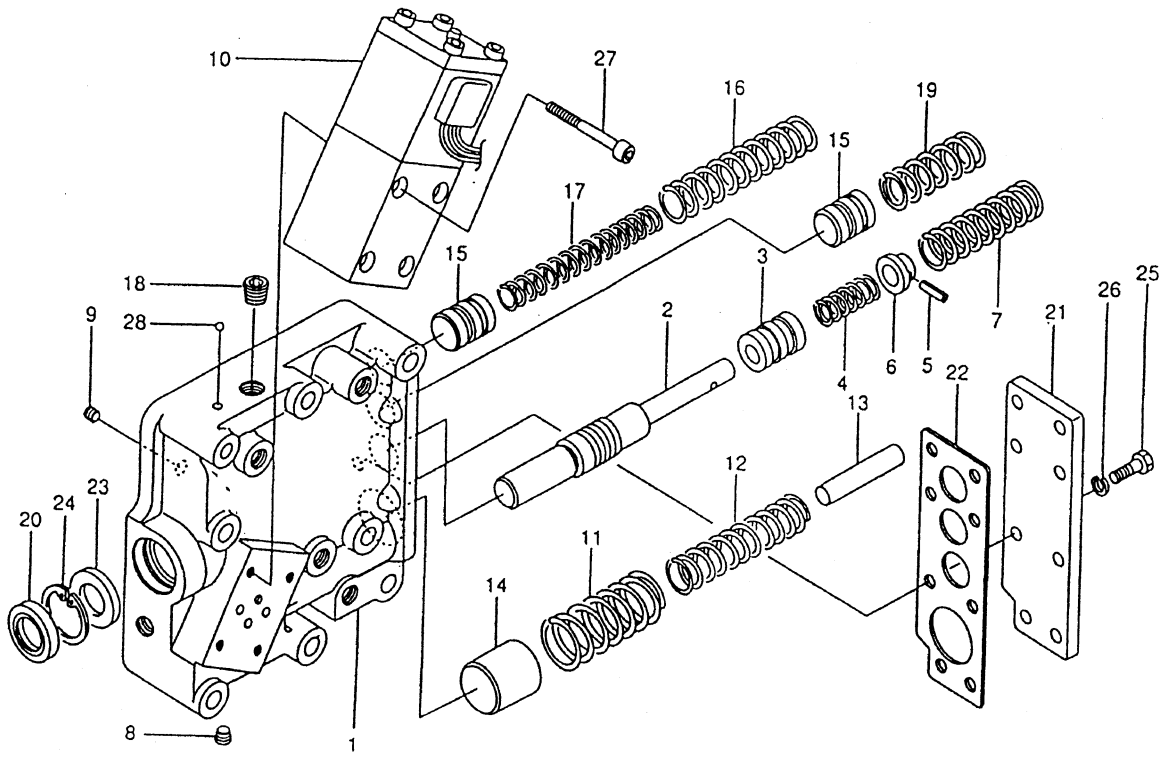

No.	Name	Q'ty	No.	Name	Q'ty
1	Valve body	1	10-16	O-ring	2
2	Inching spool	1	10-17	Stopper	1
3	Piston	1	10-18	Plug	1
4	Pressure spring	1	10-19	Tube	1
5	Spring pin	1	10-20	Plunger	1
6	Stopper	2	10-21	O-ring	1
7	Pressure spring	1	10-22	E-type stopper wheel	1
8	Plug	1	11	Pressure spring	1
9	Throttle	1	12	Pressure spring	1
10	Solenoid valve	1	13	Stopper	1
10-1	Body	1	14	Piston	1
10-2	Spool	1	15	Piston	2
10-3	Plug	1	16	Pressure spring	1
10-4	Pin	1	17	Pressure spring	1
10-5	Spring	1	18	Plug	1
10-6	Retainer A	1	19	Pressure spring	1
10-7	Retainer B	1	20	Oil seal	1
10-8	Pin	1	21	Cover	1
10-9	Solenoid coil	1	22	Gasket	1
10-10	Hexagon socket head bolt	4	23	Stopper	1
10-11	Spacer	4	24	Snap ring	1
10-12	Not used		25	Hexagon bolt	8
10-13	O-ring	1	26	Spring seat	8
10-14	O-ring	4	27	Hexagon head socket bolt	4
10-15	O-ring	2	28	Ball	1

TESTING

No.	Check item			Criteria: Standard size (mm)	Criteria: Repair limit (mm)	Symbol	Remedy
	Piston or spool and body hole 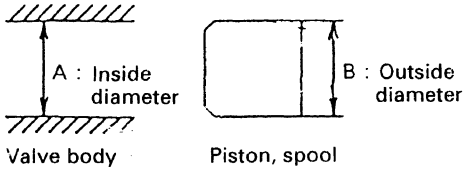 						
1	Accumulator	Outside diameter of piston Inside diameter of body Clearance	mm mm mm	27.97–27.98 28–28.021 0.020–0.051	 0.080	14 1	Replace
2	Regulator	Outside diameter of piston Inside diameter of body Clearance	mm mm mm	19.96–19.98 20–20.021 0.020–0.061	 0.080	15 1	
3	Lubricating relief	Outside diameter of piston Inside diameter of body Clearance	mm mm mm	19.96–19.98 20–20.021 0.020–0.061	 0.080	15 1	
4	Inching spool portion	Outside diameter of spool Inside diameter of body Clearance	mm mm mm	19.97–19.98 20–20.021 0.020–0.051	 0.070	2 1	
	Small piston portion	Outside diameter of piston Clearance	mm mm	19.97–19.98 0.020–0.051	 0.070	3	
	Spring 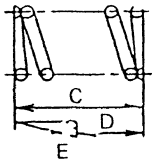 C: Free length D: Installed length E: Installed load						
5	Accumulator large spring	Free length Installed length Installed load	mm mm N {kgf}	66.51 58.7 53.9{5.5}±5%	 5.0	11	Replace
	Small spring	Free length Installed length Installed load	mm mm N {kgf}	88.83 83.7 36.3{3.7}±5%	 3.3	12	
6	Regulator large spring	Free length Installed length Installed load	mm mm N {kgf}	111.07 74.7 163.8{16.7}±5%	 15.0	16	
	Small spring	Free length Installed length Installed load	mm mm N {kgf}	123.43 96.7 206{21.0}±5%	 18.9	17	
7	Lubrication relief	Free length Installed length Installed load	mm mm N {kgf}	64.65 47.9 138{14.1}±5%	 12.7	19	
8	Inching spool portion	Free length Installed length Installed load	mm mm N {kgf}	73.97 48.0 34.3{3.5}±5%	 3.2	7	
	Small piston portion	Free length Installed length Installed load	mm mm N {kgf}	28.88 22.0 48.5{4.95}±5%	 4.46	4	

The numbers used in the symbol column of the table refer to the numbers in the component part drawing.

https://truckmanualshub.com/

ASSEMBLY DRAWING

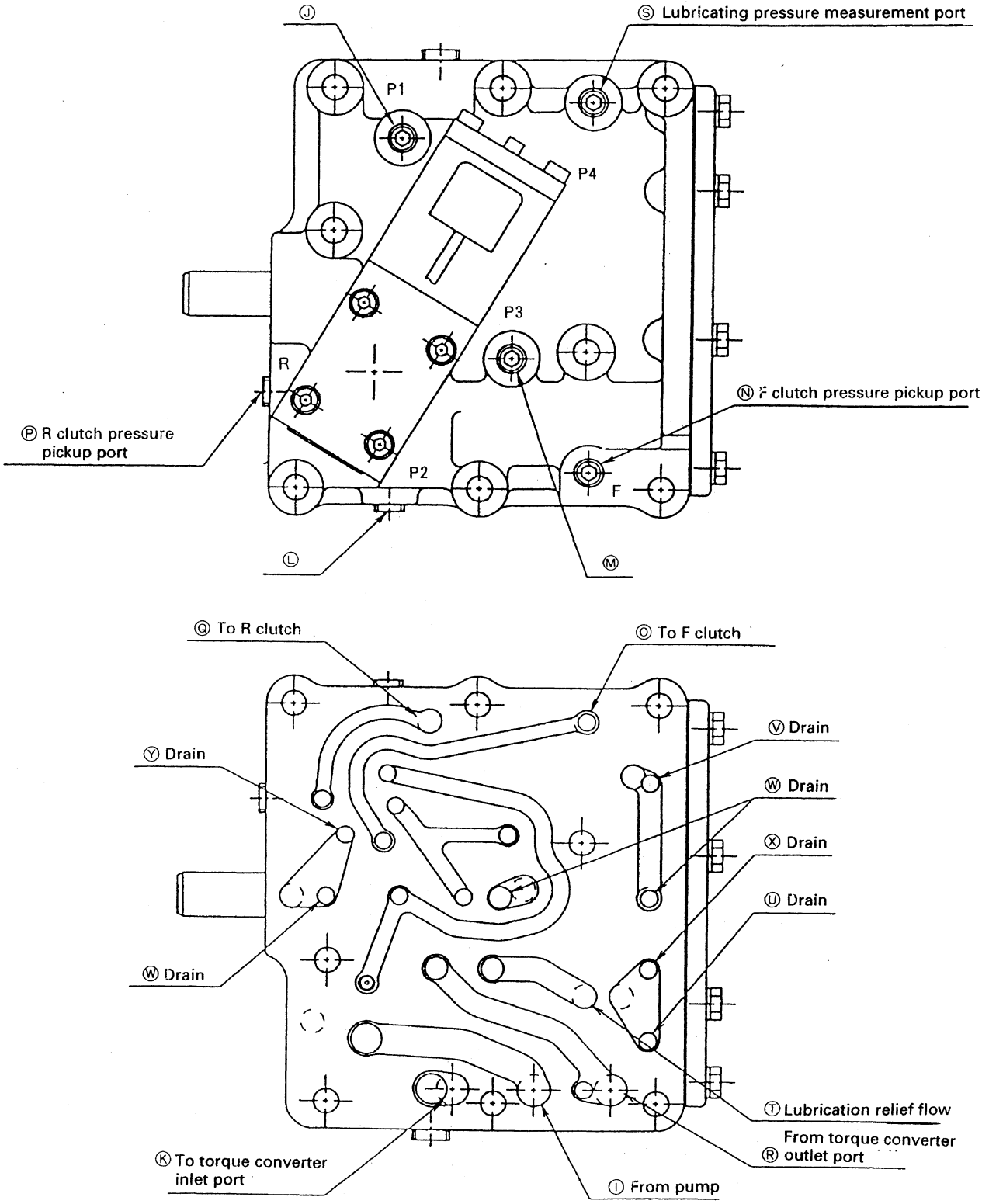

Position of hydraulic ports of control valve assembly

CAUSES AND REMEDIES FOR FAILURES

No.	Problem	Cause	Remedy
1	Power is not transmitted	No hydraulic pressure 1) Broken piston in inlet port relief valve or regulator valve, or broken spring 2) Stuck solenoid valve	 Disassemble and replace Disassemble and replace
2	Output drops	Hydraulic pressure is too low 1) Deteriorated spring in inlet port relief valve or regulator valve, or defective operation of piston 2) Stuck solenoid valve	 Disassemble and replace, replace parts if necessary Disassemble and replace
3	Oil oozes out or leaks	Mating surface using gasket 1) Loose bolt 2) Broken gasket 3) Scratched mating surface	 Tighten Disassemble and replace Correct or replace

DIFFERENTIAL

DISASSEMBLY AND ASSEMBLY

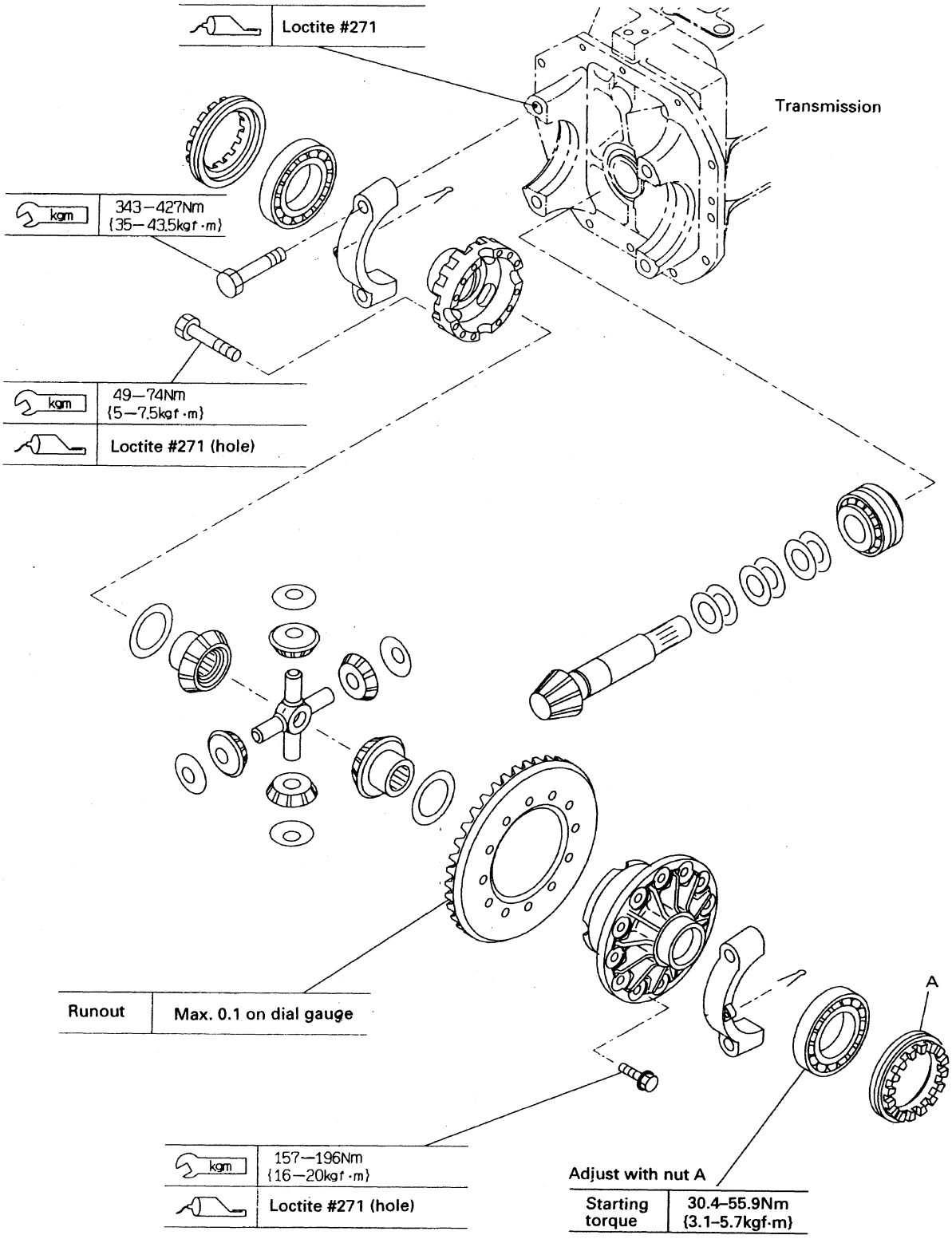

SAH00032

TESTING

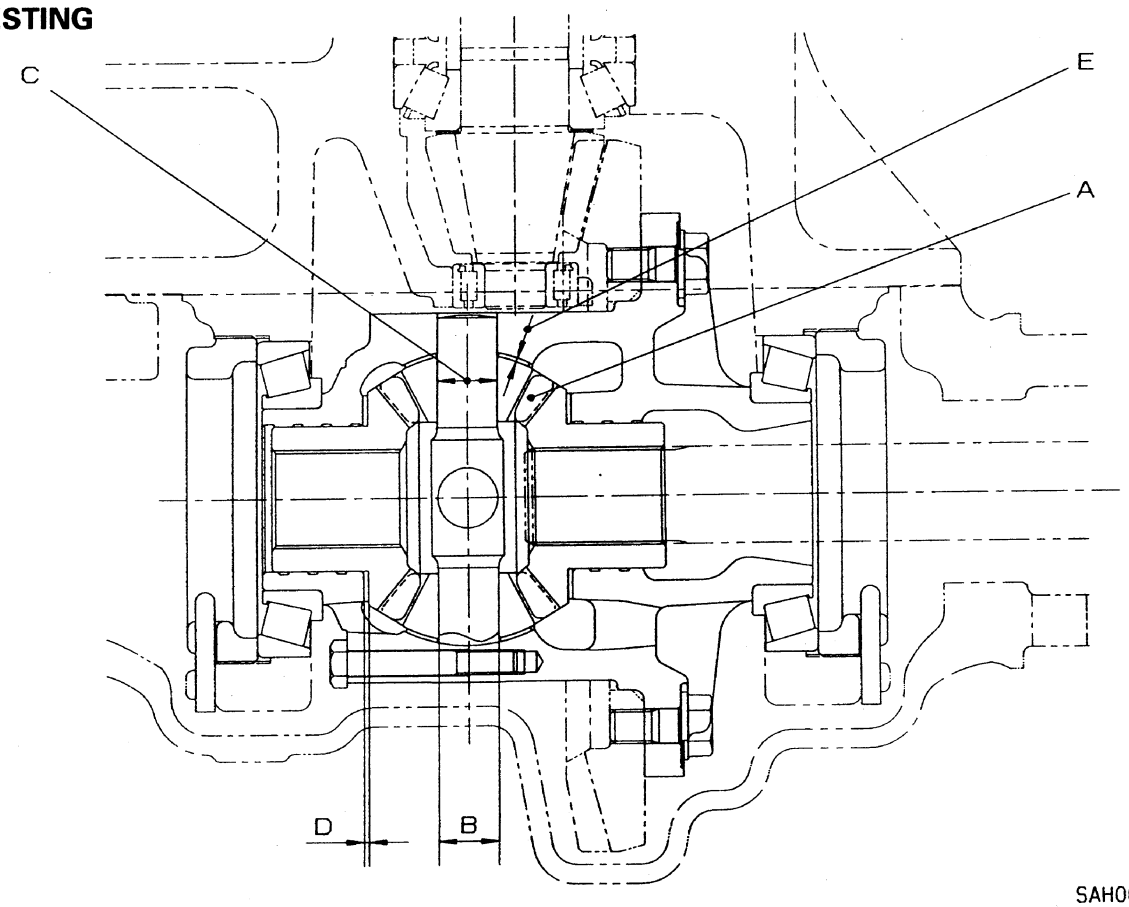

SAH00033

Symbol	Check item	Criteria		Remedy
		Standard size (mm)	Repair limit (mm)	
A	Differential pinion gear and differential side gear	—	If there is damage to tooth surface	Replace (replace bevel gear and pinion as a set)
B	Outside diameter of spider	24.959 – 24.980	24.75	Replace
C	Inside diameter of differential pinion gear	25.0 – 25.1	25.2	
D	Thickness of bushing	1.94 – 2.06	1.7	
E	Thickness of bushing	1.52 – 1.68	1.3	
—	(Inside diameter of brake drum)	310.0 – 310.2	312	
—	Gasket O-ring Seals	—	—	Replace with new parts during disassembly and assembly.

https://truckmanualshub.com/

ADJUSTING DIFFERENTIAL

1. Assembly of differential assembly

1) Assemble differential assembly, then install adjustment screw (1).

2) Coat hole of cap (2) with Loctite #271, then tighten temporarily with bolts (3).

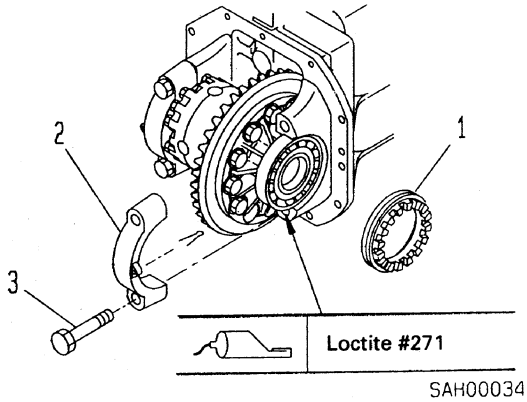

2. Adjusting backlash

★ When tightening adjustment screw (1), use special tool (A).

Special tool (A)	34B-97-99110

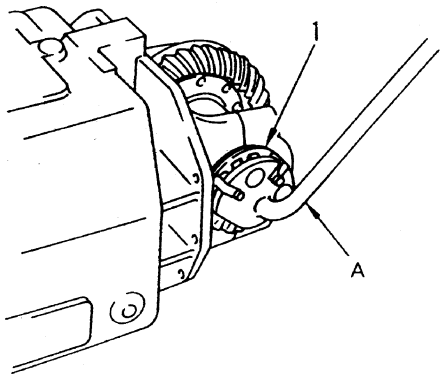

1) When adjusting, turn either left or right adjustment screw (1) back one notch, then tighten other adjustment screw one notch and read dial gauge indicator.

Backlash between ring gear and pinion gear	0.15 – 0.23 mm

2) Rotate bevel gear and carry out adjustment procedure in Step (1) at four places.

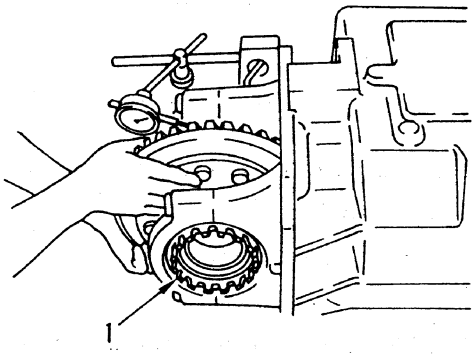

3. Adjusting preload of side bearing

1) Tighten left and right adjustment screws (1) uniformly to adjust preload.

Preload	30.4–55.9 Nm {3.1–5.7 kgfm}
Special tool	3EB-97-99960

2) Check again that backlash is within specified value.

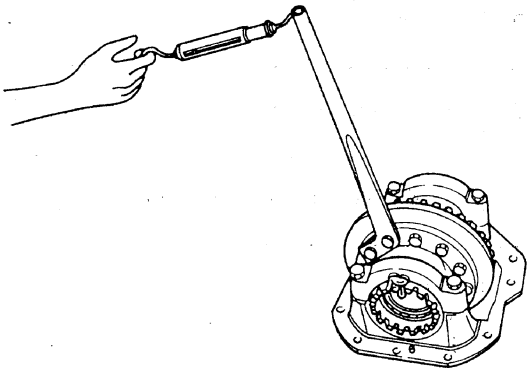

https://truckmanualshub.com/

4. Adjusting tooth contact

1) Coat tooth surface of bevel gear thinly with red lead (minium).

2) Rotate bevel gear in forward and reverse directions several times.

3) Check tooth contact pattern left on tooth surface. (See diagram below)

Correct tooth contact (no load)

Forward

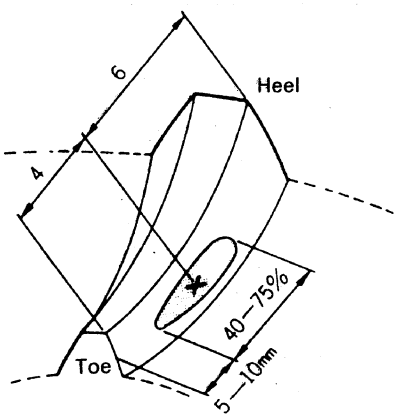

Pattern is in center of tooth surface, covers 40 – 75% of overall length of tooth, and there is weak contact at both ends of pattern.

Reverse

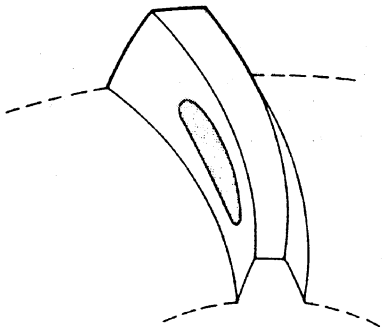

Pattern is in center of tooth surface, covers 40 – 75% of overall length of tooth, and there is weak contact at both ends of pattern.

4. If tooth contact is not correct, adjust as follows. (For details, see next page.)

- Pinion shaft shim
- Backlash of bevel gear
- Preload of bevel gear side bearing

★ The tooth contact must be adjusted correctly for both forward and reverse directions, but if it is impossible to adjust completely in both directions, adjust the forward direction correctly.

https://truckmanualshub.com/

Correcting tooth contact

Increase the shims at the pinion shaft to increase the protrusion of the pinion. (Direction **A**)
Next, move the bevel gear away from the pinion (direction **B**) and adjust the backlash.

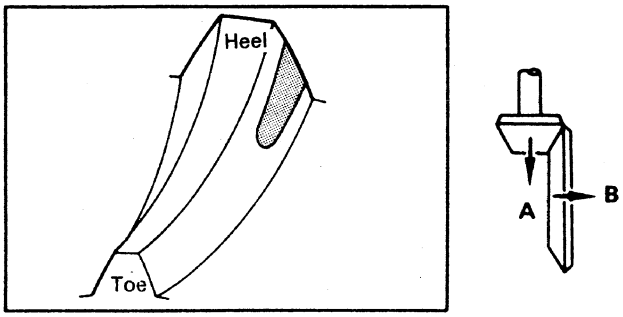

Decrease the shims at the pinion shaft to decrease the protrusion of the pinion. (Direction **A**)
Next, move the bevel gear closer to the pinion (direction **B**) and adjust the backlash.

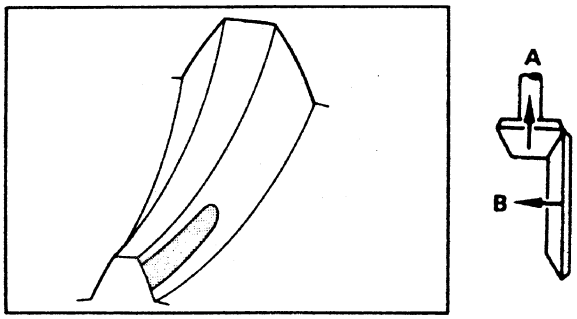

Decrease the shims at the pinion shaft to decrease the protrusion of the pinion. (Direction **A**)
Next, move the bevel gear closer to the pinion (direction **B**) and adjust the backlash.

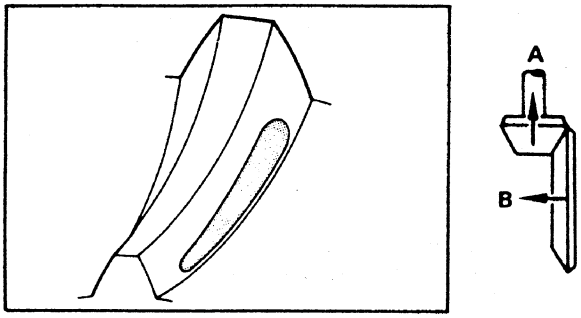

Increase the shims at the pinion shaft to increase the protrusion of the pinion. (Direction **A**)
Next, move the bevel gear away from the pinion (direction **B**) and adjust the backlash.

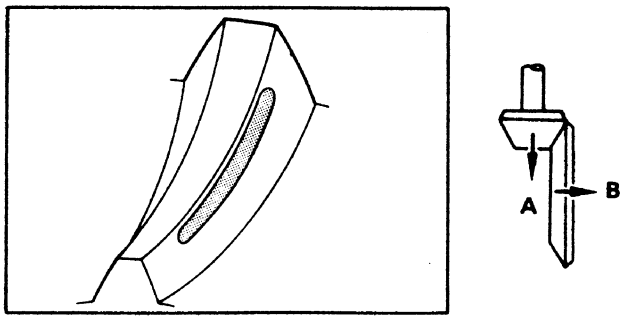

https://truckmanualshub.com/

DIFFERENTIAL ASSEMBLY DRAWING

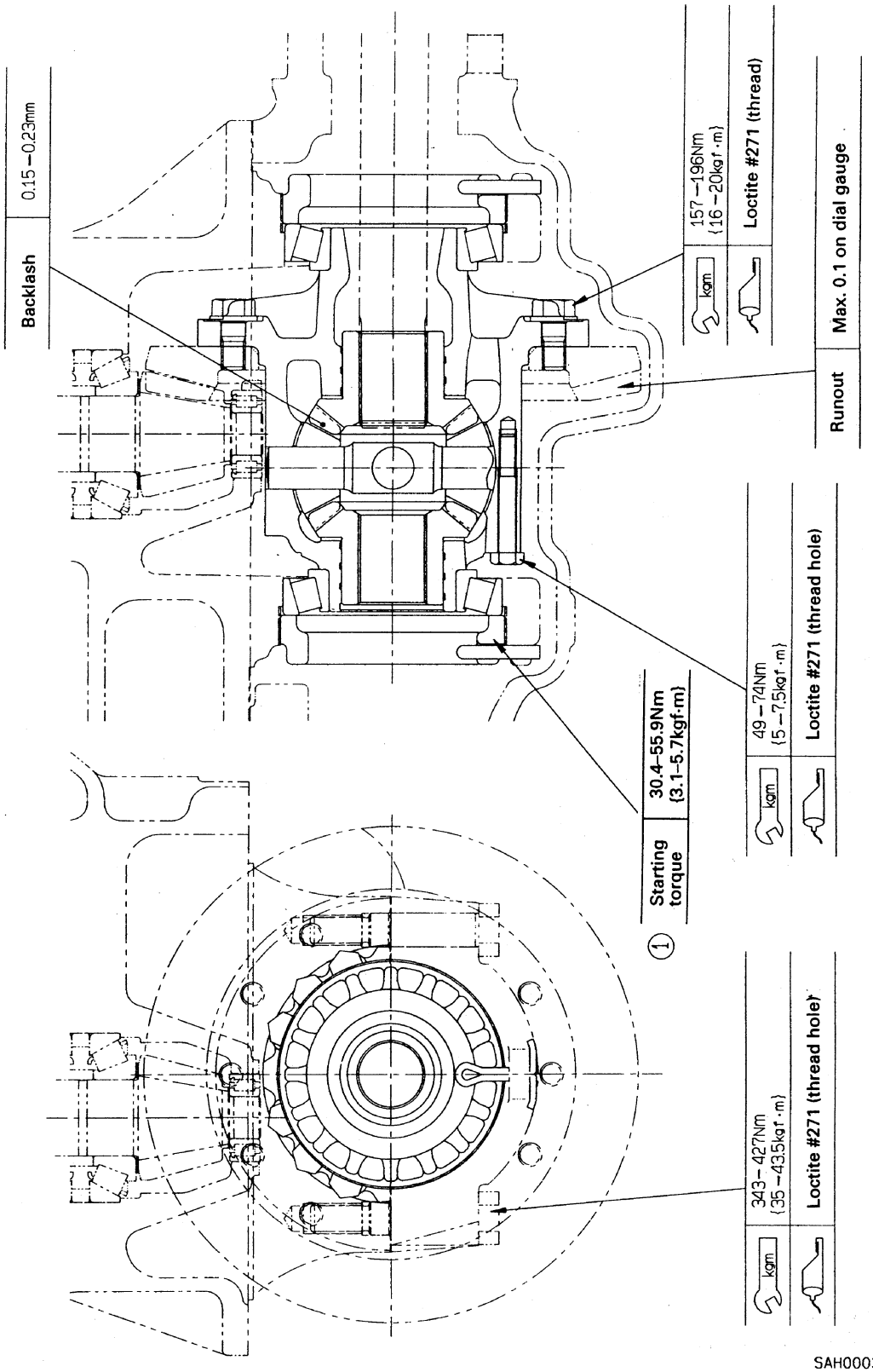

https://truckmanualshub.com/

DRIVE AXLE

DISASSEMBLY AND ASSEMBLY

Precautions when installing front axle to frame

1. Remove all oil and grease from mounting bolts, nuts, and tap holes before installing.
2. Do not use an impact wrench when tightening. Finally, check tightening torque with a torque wrench.

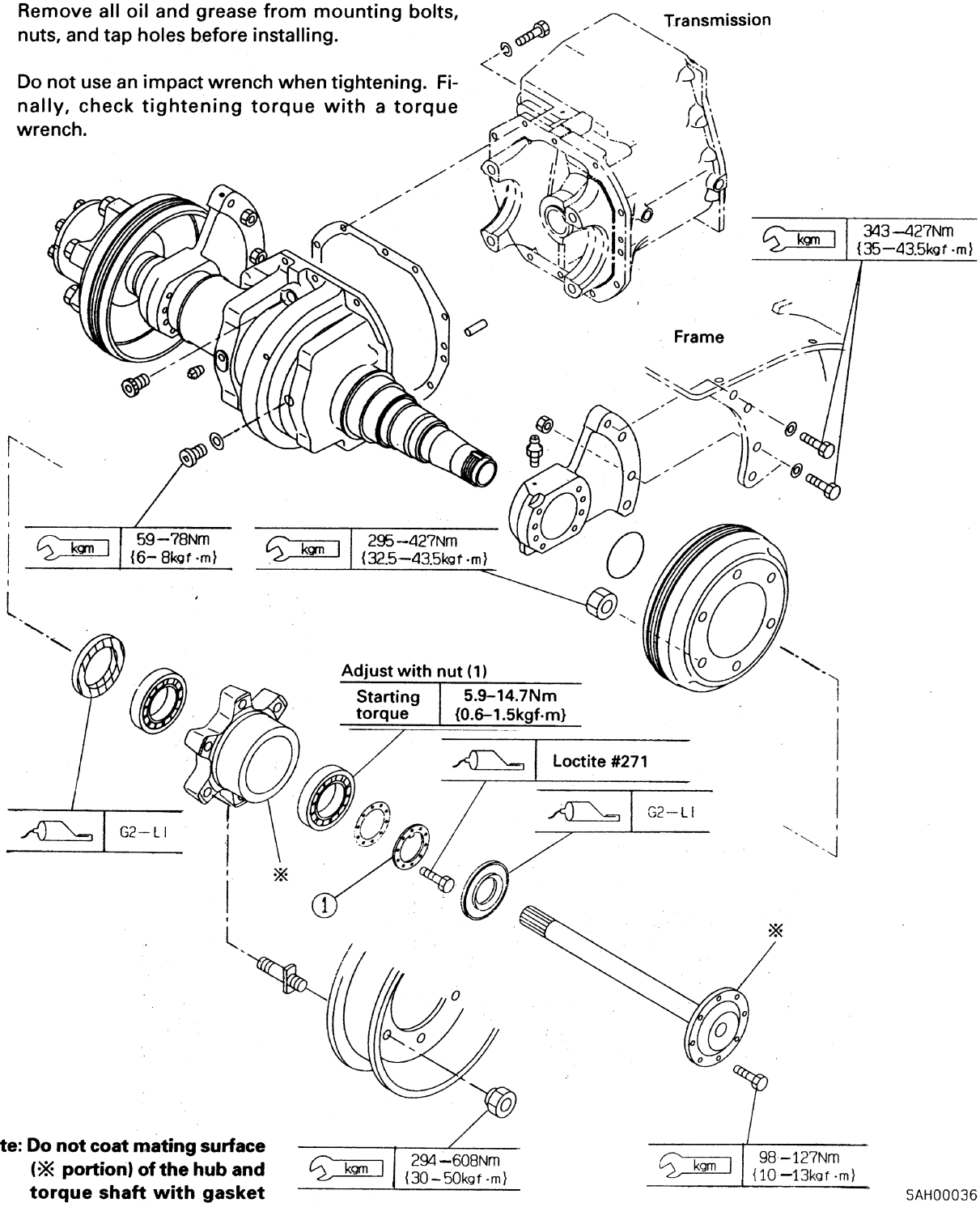

Note: Do not coat mating surface (※ portion) of the hub and torque shaft with gasket sealant.

https://truckmanualshub.com/

DRIVE AXLE ASSEMBLY DRAWING

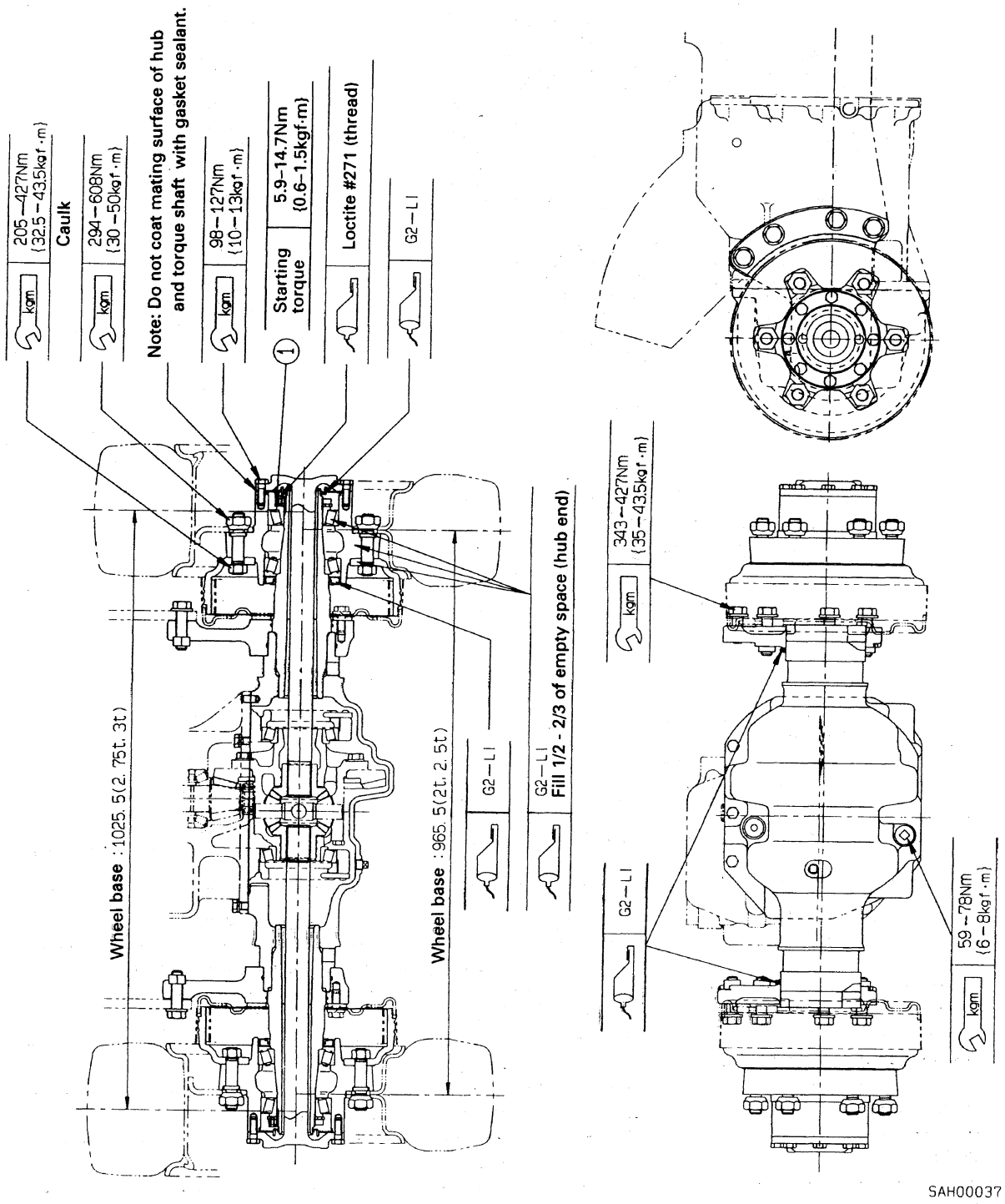

https://truckmanualshub.com/

WHEEL BRAKE

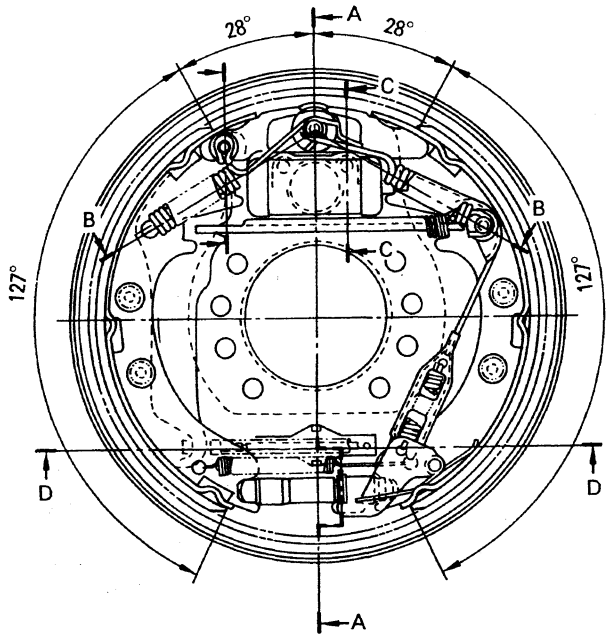

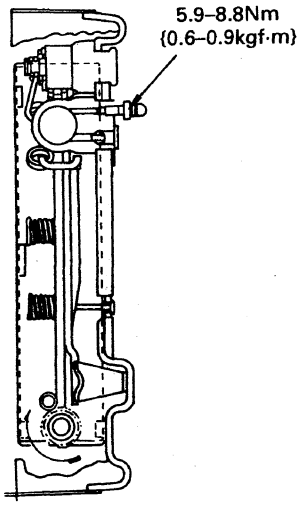

Section A-A

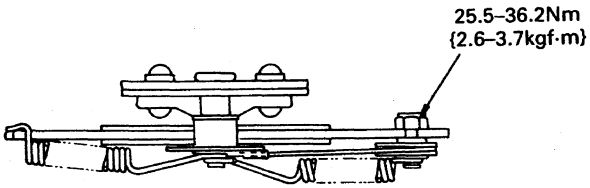

Section B-B (equivalent to C-C in drawing)

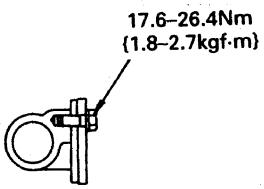

Section C-C
(equivalent to E-E in drawing)

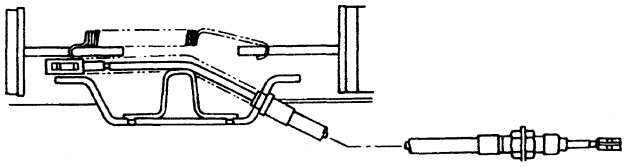

Section D-D (equivalent to B-B in drawing)

Section E-E
(equivalent to D-D in drawing)

Item	Unit	Wheel brake
Type	—	Internally expanding brake inside front wheel
Structure	—	Duo servo
Inside diameter of brake drum	mm	310.0
Lining material	mm	Resin mold (stick-on type)
Width	mm	60.0
Thickness	mm	5.67
Inside diameter of wheel cylinder	mm	28.58 (1/8")

https://truckmanualshub.com/

DISASSEMBLY AND ASSEMBLY

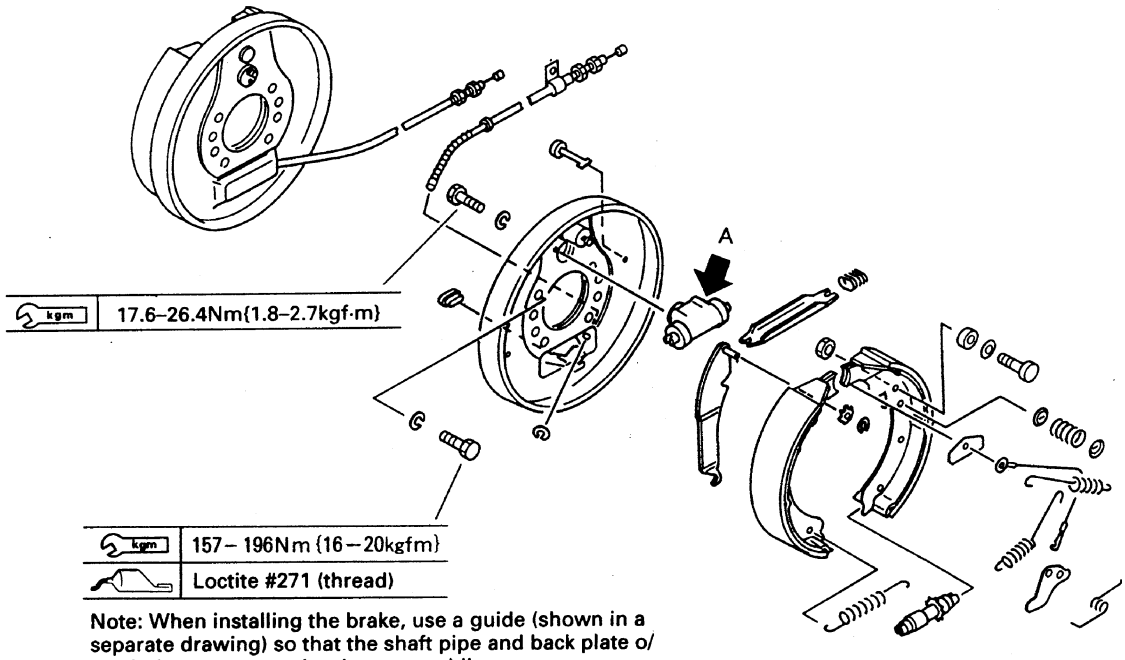

Note: When installing the brake, use a guide (shown in a separate drawing) so that the shaft pipe and back plate o/ 100 hole are concentric when assembling.

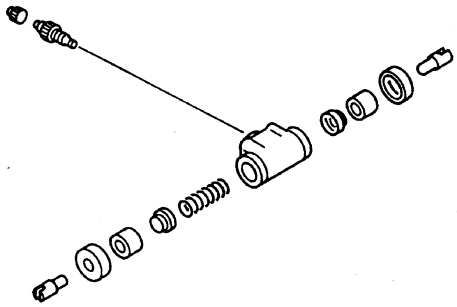

Detail A

TESTING

Check item	Criteria		Remedy
	Standard size (mm)	Repair limit(mm)	
Thickness of lining	5.67	2.0	Replace
Deterioration of return spring	Free length: 124	136	
Thickness of return spring hook portion	2.9	2.0	
Clearance between piston and cylinder	0 – 0.05	0.2	

Check for scratches on the wheel cylinder sliding surface and for damage or deterioration of the cup.

ASSEMBLY GUIDE (centering jig when installing brake back plate)

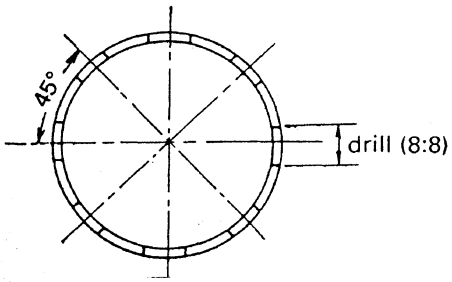

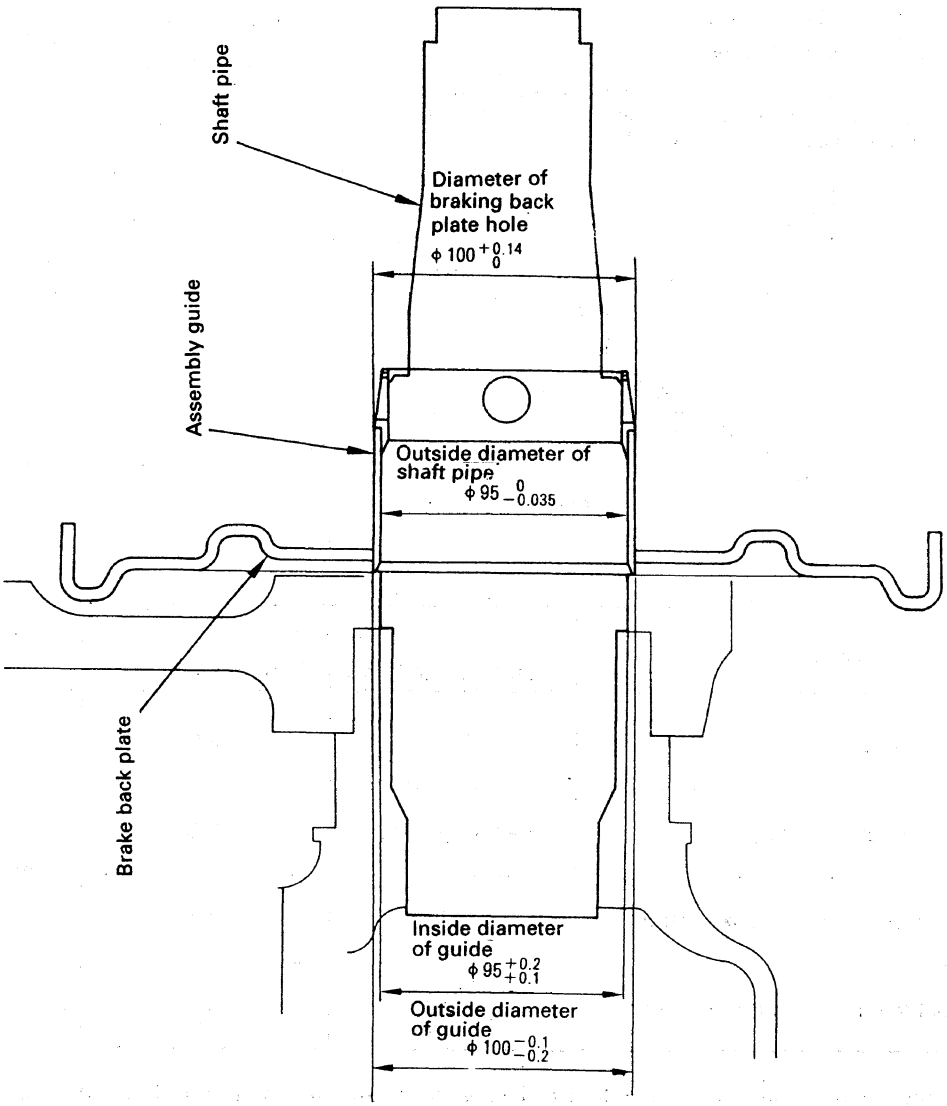

https://truckmanualshub.com/

BRAKE MASTER CYLINDER

COMPONENT PARTS

No.	Parts name	Q'ty
1	Cylinder	1
2	Stop wire	1
3	Stop plate	1
4	Piston	1
5	Spring	1
6	Valve ass'y	1
7	Valve seat	1
8	Boot	1
9	Push rod	1
10	:Nut	2
11	Yoke	1
12	Stop pin	1
13	Gasket	1
14	O-ring	1
15	Reservoir	1
16	Indicator ass'y	1
17	Filter	1
18	Clamp	1
19	Cap	1

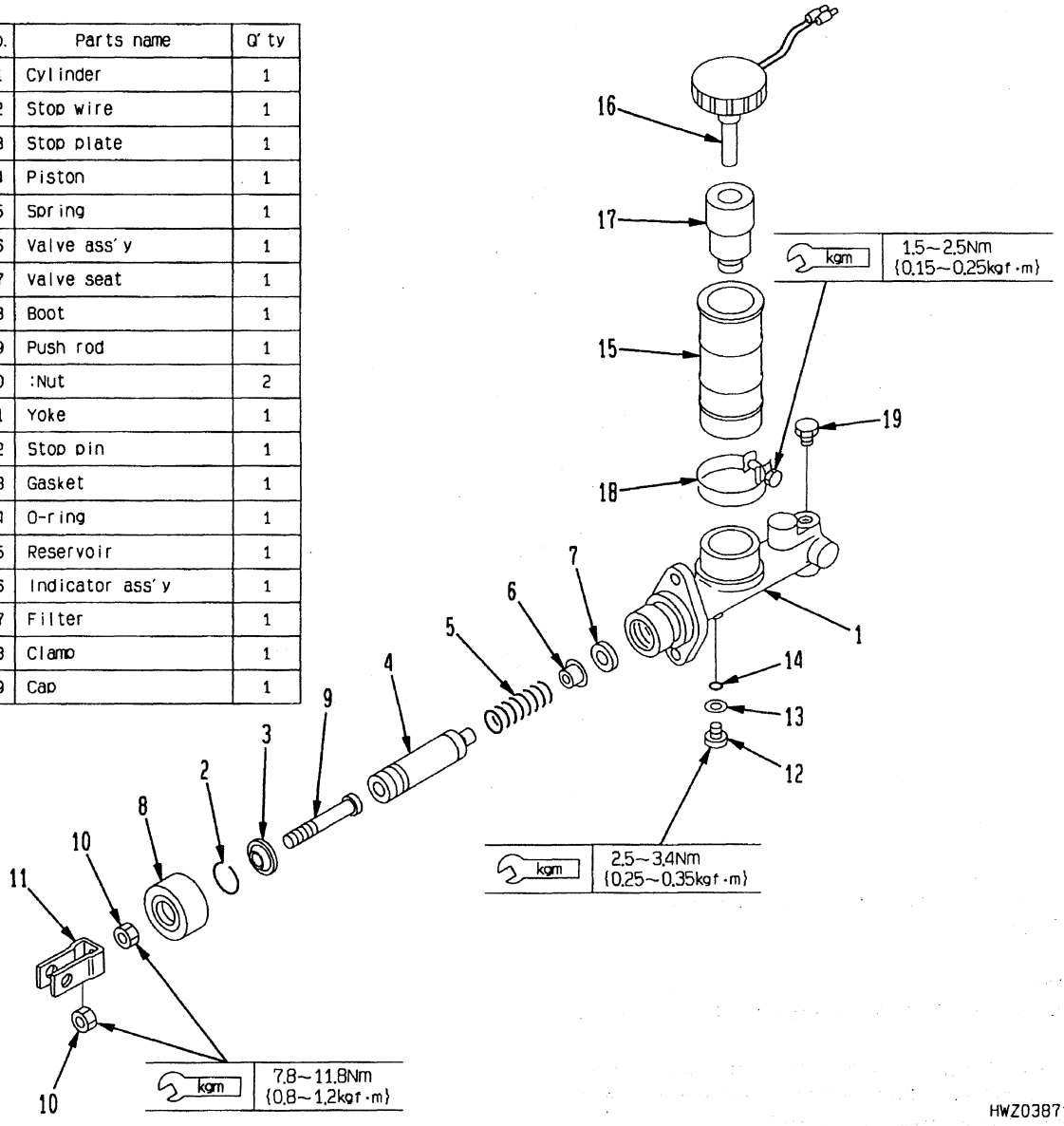

TESTING

Check item	Criteria		Remedy
	Standard size (mm)	Repair limit(mm)	
Clearance between cylinder and piston	0.020 – 0.105	0.15	Replace cylinder assembly
Interference of cup (outside diameter of cup - inside diameter of cylinder)	0.5 – 0.6	0.3	Replace piston assembly
Free length of spring	70.8	63	Replace

https://truckmanualshub.com/

DISASSEMBLY

1. Remove stop pin with flat-headed screwdriver.

2. Remove boot from cylinder, then remove stop wire from cylinder with flat-headed screwdriver.

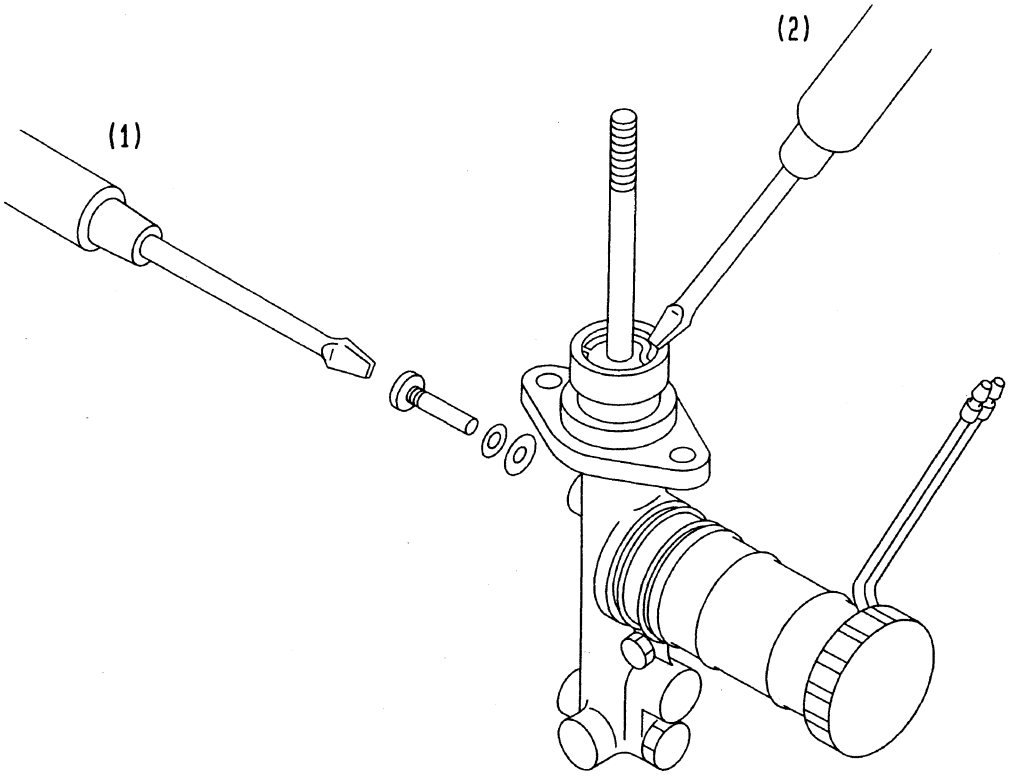

HWZ03850

3. Remove piston assembly, spring, check valve, and valve seat.

Precautions
- **Be careful not to damage the cylinder, piston, or cup.**
- **When carrying out disassembly, make sure that you understand the structure of the cylinder and lay the disassembled parts out in order.**
- **Do not disassemble the piston assembly.**
- **Do not push the outside wall of the cylinder with a vice.**

https://truckmanualshub.com/

TESTING

Part name	Check item	Remedy
Cylinder	Scratches, uneven wear, corrosion of inside surface	• For small scratches, remove with sandpaper • If the scratch will have an adverse effect on the cup, replace the whole cylinder assembly
Piston	Scratches, uneven wear, corrosion of sliding portion	• For small scratches, remove with oilstone • If the scratch will have an adverse effect on the inside surface of the cylinder and cup, replace the whole piston assembly
	Clearance between and cylinder piston	• Replace if the clearance is greater than the limit Clearance limit: 0.15 mm
Cup	Scratches on lip	• Even if the scratches are small, replace the whole piston assembly
	Pitting of base	• If the pitting is harmful, replace the whole piston assembly
	Wear, swelling	• If there is any abnormal deterioration, wear, or swelling, replace the whole piston assembly
	Interference	• If the value is below the service limit, replace the whole piston assembly Wear limit: 0.3 mm **Note:** The cup is a specified periodic replacement parts Generally speaking, it is safer to replace each time disassembly is carried out.
Piston assembly	Deformation, scratches, wear of valve rod, valve cup, spring, thimble	• Replace piston assembly if there is any abnormal deformation, scratches, or wear

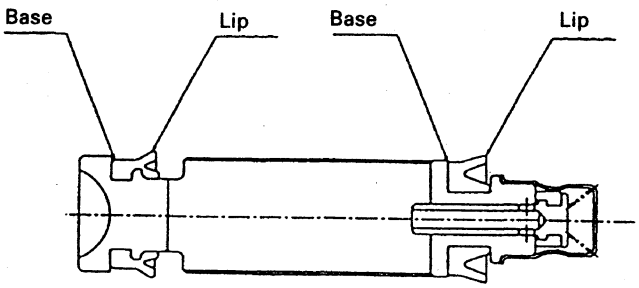

https://truckmanualshub.com/

TESTING

Part name	Check item	Remedy
Spring	Scratches, wear, inclination	• Replace if there is marked damage
	Free length	• Replace if it is below the service limit Service limit: 63 mm
Stop pin	Deformation, wear, scratches	• Replace if there is any marked deformation, wear, or scratches
Gasket	Scratches, deformation	• Replace if there are any marked scratches • It is recommended to replace any part which has been removed
Check valve	Scratches, deformation, swelling	• Replace if there are any marked scratches, deformation, or swelling
Valve seat	Scratches, deformation, swelling	• Replace if there are any marked scratches, deformation, or swelling
Bleeder valve	Scratches, deformation of seat surface	• Replace if there is marked damage or deformation
Bleeder cap	Cracks, deterioration	• Replace if there are cracks or marked deterioration
Push rod	Curvature, deformation	• Replace if there is curvature or deformation
Stop plate	Deformation, scratches, wear	• Replace if there is any marked deformation or wear
Stop wire	Scratches, deformation, deterioration	• Replace if there are any marked scratches, deformation, or deterioration
Boot	Cracks, damage	• Replace if there are cracks or damage
	Interference for cylinder, rod	• Replace if there is no interference or extremely little interference
Yoke	Deformation, wear	• Replace if there is marked deformation or wear
Reservoir	Cracks	• Replace cylinder assembly even if there are only small cracks
	Discoloration	• Replace cylinder assembly if there is marked discoloration
	Scratches	• Replace cylinder assembly if there are scratches
Indicator assembly	Actuation of alarm	• Move float up and down. If warning lamp does not light up correctly, replace

 https://truckmanualshub.com/

MAINTENANCE STANDARD

No.	Check item	Standard value	Limit	Remedy
1	Clearance between cylinder and piston	0.020 – 0.105 mm	0.15 mm	Replace (clinder assembly)
2	Interference of cup	Primary side: Approx. 1 mm Secondary side: Approx. 1.4 mm	0.3 mm	Replace (piston assembly)
3	Free length of spring	70.8 mm	63 mm	Replace
4	Tightening torque for stop pin	2.5 – 3.4 Nm {0.25 – 0.35 kgfm}	—	—
5	Tightening torque of yoke and locknut	7.8 – 11.8 Nm {0.8 – 1.2 kgfm}	—	—
6	Tightening torque for clamp	1.5 – 2.5 Nm {0.15 – 0.25 kgfm}	—	—

https://truckmanualshub.com/

ASSEMBLY

1. Use alcohol or brake fluid to wash all parts that are to be reused.
   For the cup or other rubber parts, do not soak for more than 30 seconds when washing in alcohol.

2. Coat inside surface of cylinder and outside circumference of piston evenly with rubber grease or brake fluid.

3. Assemble valve seat and check valve to cylinder.

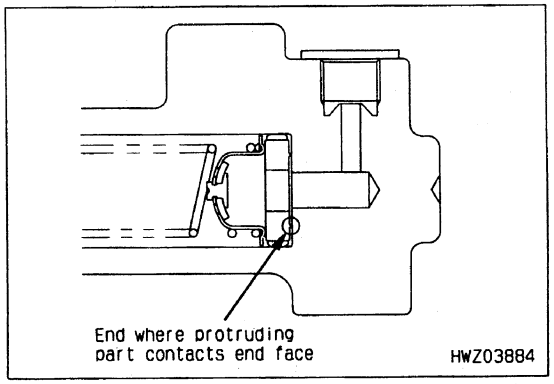

4. Assemble spring to piston assembly, then insert in cylinder.
   When doing this, align the direction of the piston groove with the direction of the stop pin hole in the cylinder.

5. Fit gasket and O-ring to stop pin, then push in piston and install to cylinder.

kgm	2.5 – 3.4 Nm {0.25 – 0.35 kgfm}

6. Insert stop plate, push in piston lightly with a finger, and assemble to cylinder with stop wire.

7. Insert push rod, then assemble boot, nut, and yoke in turn to push rod.

kgm	7.8 – 11.8 Nm {0.8 – 1.2 kgfm}

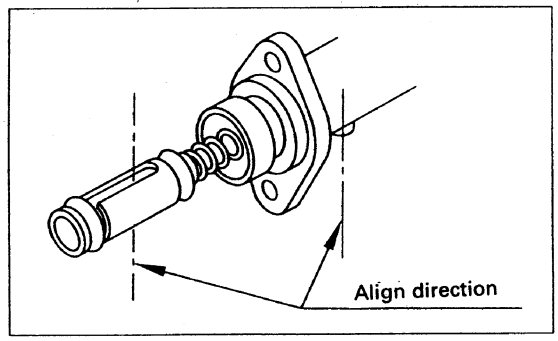

Precautions

- **Do not use any fluid apart from alcohol or brake fluid to wash the parts.**
  In particular, never use mineral oil (petroleum, gasoline, etc.)
  (If mineral oil gets on rubber parts, they will swell and become unusable.)
- **After washing the parts, keep them in a clean place to prevent dust or dirt from sticking to them.**
- **Be careful not to let dirt or dust get in, and be careful not to damage the damage the cylinder, piston, or cup.**

https://truckmanualshub.com/

ASSEMBLY DRAWING

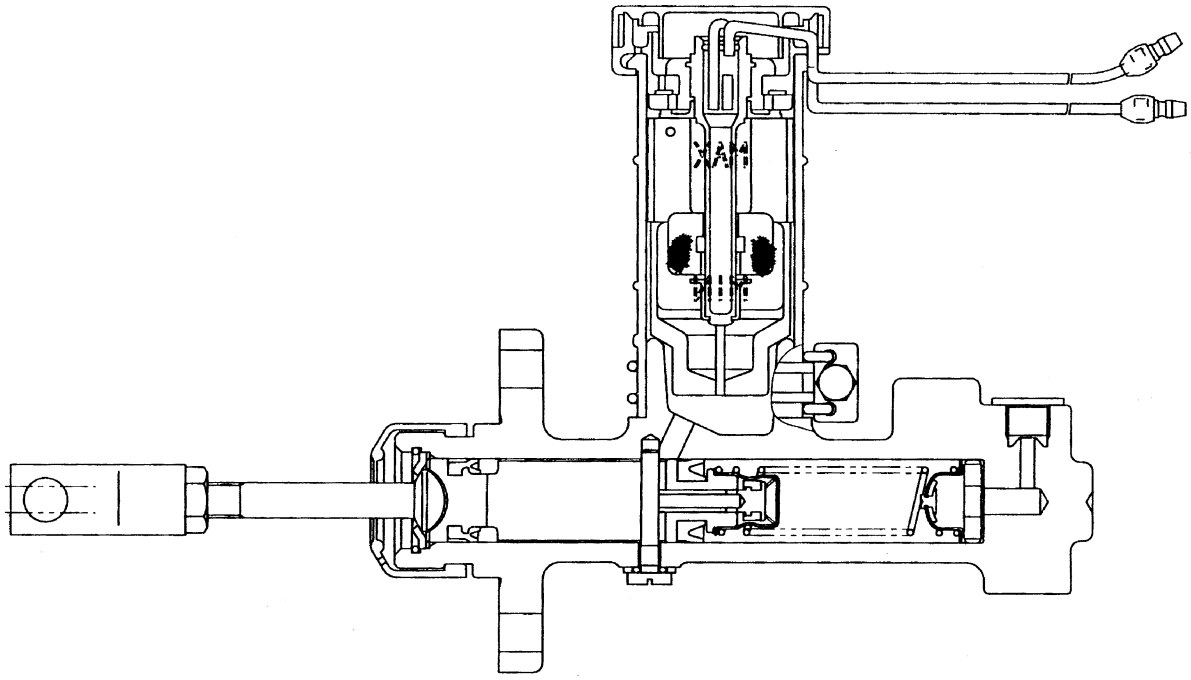

Cross-sectional drawing of master cylinder

HWZ03848

SPECIFICATIONS

Part Name	3/4" master cylinder assembly
Fluid used	Brake fluid
Cylinder diameter	19.05 mm
Max. stroke	28 mm
Max. pressure	14.7 MPa {150 kgf/cm²}
Residual pressure	0.1 MPa {1.0 kgf/cm²}

https://truckmanualshub.com/

COMBINATION SWITCH

COMPONENT PARTS

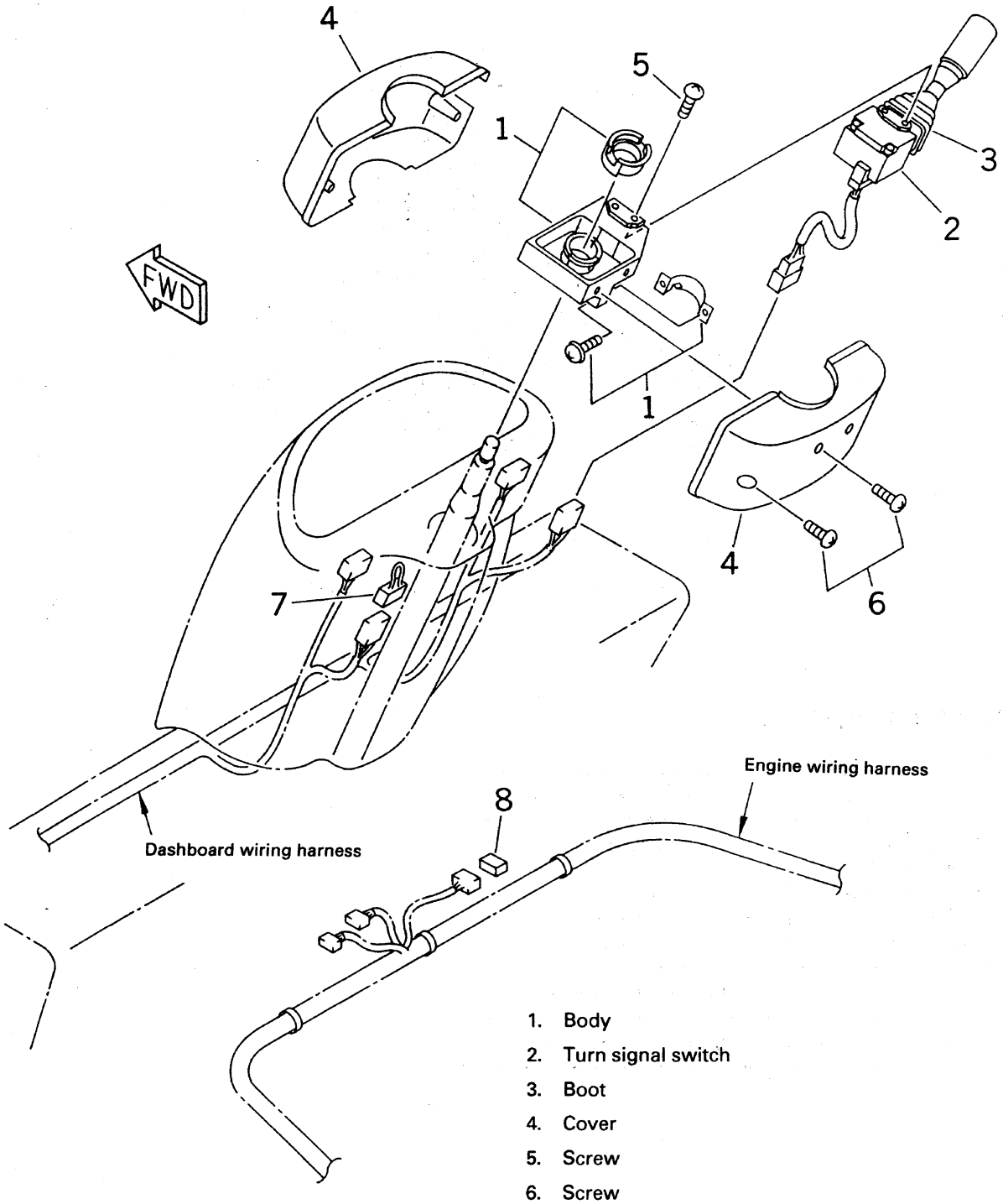

1. Body
2. Turn signal switch
3. Boot
4. Cover
5. Screw
6. Screw
7. Wire
8. Connector

https://truckmanualshub.com/

Checking lighting/turn signal switch

1. Remove connection of 8-pin coupler between combination switch cord and main wiring harness
2. Check continuity between terminals at each position, and check that there is continuity between 0–0.
3. Insulating resistance: Min. 10 MΩ at each terminal with 500 V megger

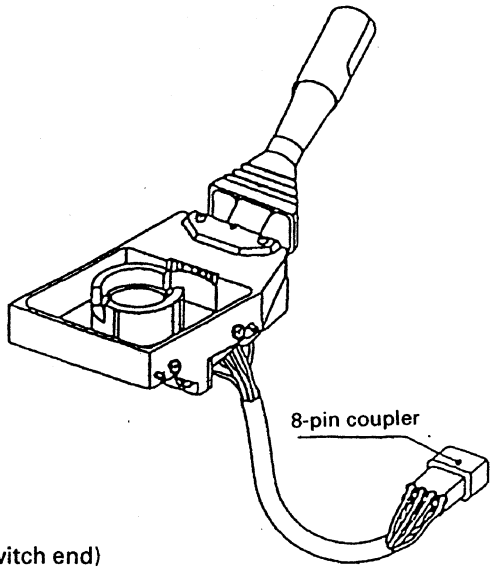

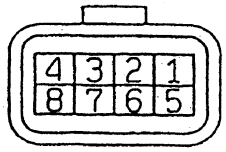

Layout of terminals of 8-pin coupler (combination switch end)

Connection positions for lighting switch

Position \ Circuit		1	2	3	4
Lighting switch	OFF				
	SMALL	○		○	
	HEAD		○	○	
				○	○

Circuit diagram

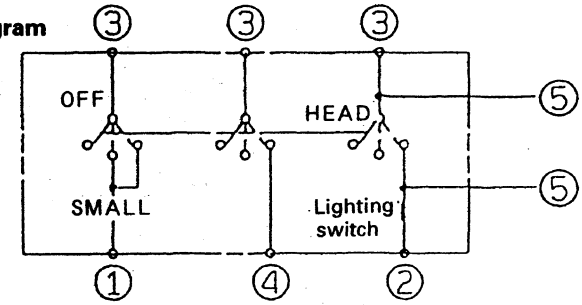

On the clutch specification truck, terminal ⑤ (dimmer circuit) is a dummy circuit.

Connection positions of turn signal switch

Position \ Circuit	6	7	8
R	○	○	
L	○		○

Circuit diagram

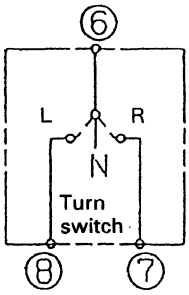

https://truckmanualshub.com/

Replacing combination switch assembly

1. Remove steering column upper cover and lower cover. (Remove 4 screws.)

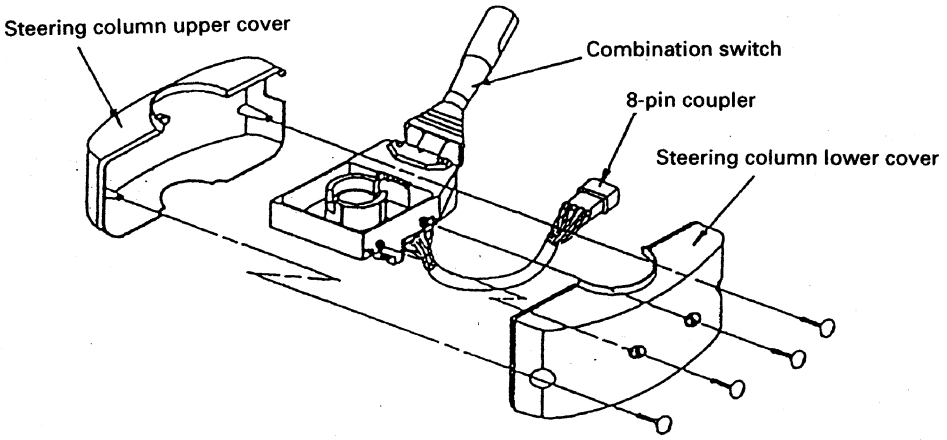

2. Remove connection of 8-pin coupler between combination switch cord and main wiring harness

3. Remove 2 screws of band holding steering shaft and combination switch, then remove switch.

kgm	T = 2.4 Nm {0.25 kgfm}

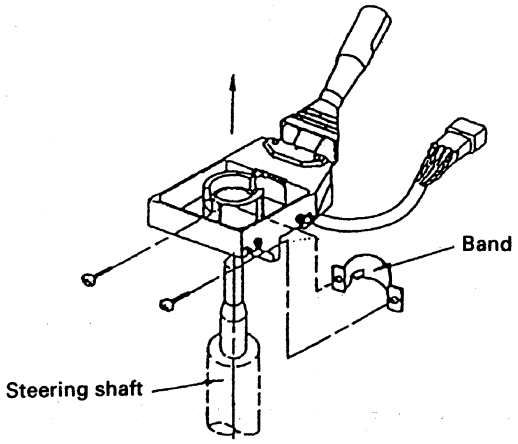

Carry out installation in the reverse order to removal.

https://truckmanualshub.com/

Replacing lighting switch unit

1. Remove steering column upper cover and lower cover. (Remove 4 screws.)

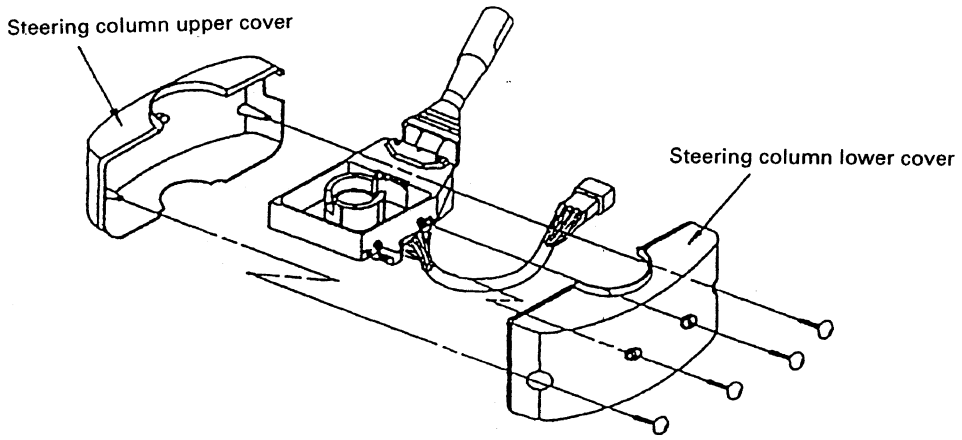

2. Remove 2 lighting switch unit mounting screws and plastic band for gathering wires, then remove switch.

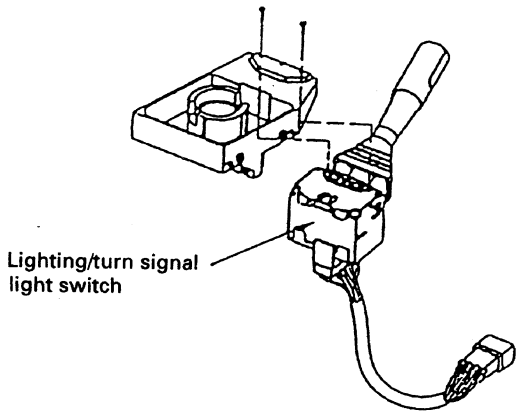

Carry out installation in the reverse order to removal.

STEERING GEAR BOX

DISASSEMBLY DRAWING

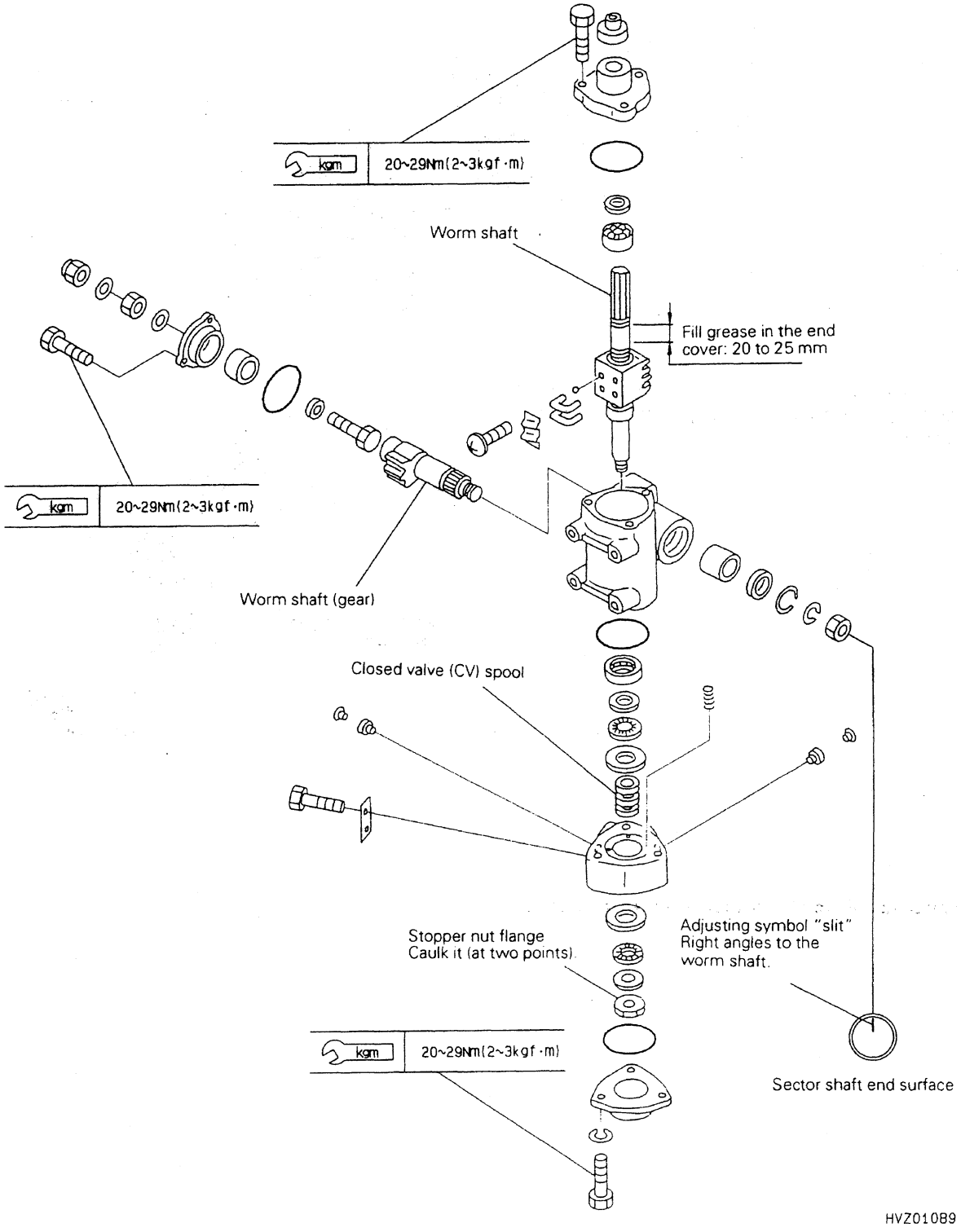

DISASSEMBLY

Precautions when disassembling

(1) Cleaning function parts
Clean function parts with volatile metal detergent (TRICLEN, CROROSEN, METACLEN), and dry with compressed air.

(2) Handling oil seals, O-rings and rubber parts
Remove foreign materials with compressed air.
In order to clean oil seals, O-ring and rubber part, never use some metal detergents which are dipped before using.
Replace all abnormal parts by new parts.

(3) Oil seal
When it is removed from the steering body and the end cover, replace by new oil seal.

(4) Needle radial bearing and bushing
The needle radial bearing, which are press-fitted to the steering body, and the bushing, which are press-fitted to the steering body, and the bushing, which are press-fitted to the side cover, are not disassembled. If there are any abnormal it, replace the steering body assembly and the side cover assembly.

1. Rear cover

Loosen bolts, then remove rear cover (1).

★ When removing the rear cover, oil will flow out, so prepare a container to catch it.

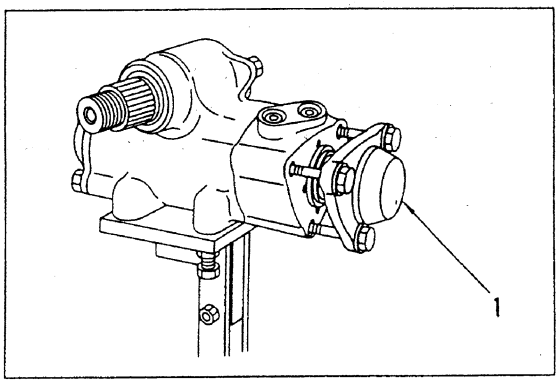

2. Control valve assembly

1) Loosen locknut (2).
2) Remove needle thrust bearing and centering plate.

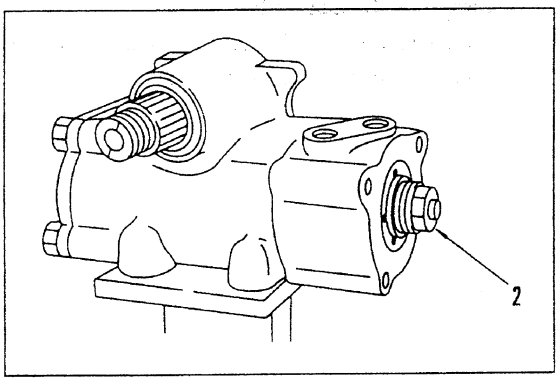

https://truckmanualshub.com/

3) Remove control valve assembly (3).
   ★ Be careful not to let the valve spool and reaction plunger fall out.
4) Remove centering plate and needle thrust bearing.

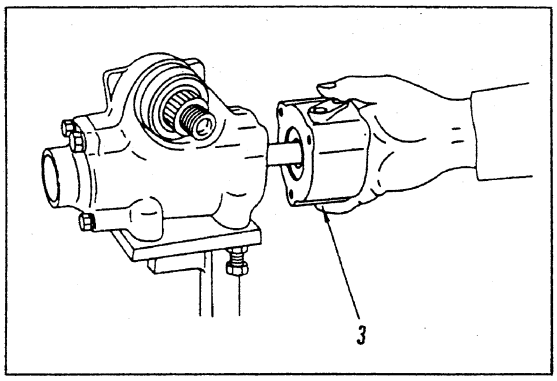

3. Disassembly of control valve assembly

Disassemble the part shown in the diagram on the right.

★ If the valve spool will not come out easily, slide it two or three times and then remove it. Never hit it in with a hammer.

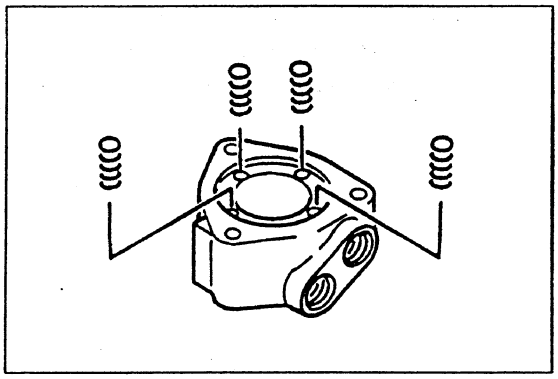

4. Side cover assembly

1) Loosen bolt (4).
2) Loosen nut (5), and remove gasket.
3) Turn adjustment screw (6) to right with a screwdriver, then pull out side cover assembly.

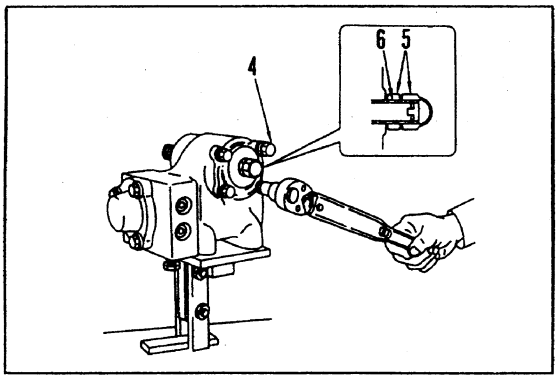

5. Sector shaft assembly

Tap serrated end of sector shaft assembly with a plastic hammer and remove it.

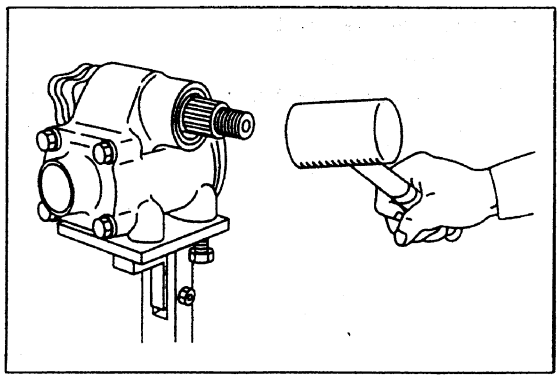

https://truckmanualshub.com/

6. Disassembly of sector shaft assembly

Disassemble the parts shown in the diagram on the right.

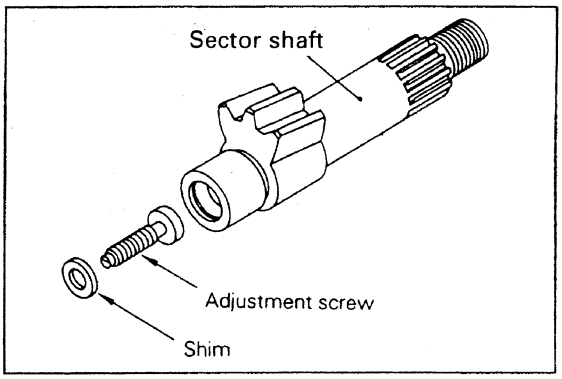

7. End cover assembly

1) Remove dust cover.
2) Loosen bolts (7) and remove end cover.

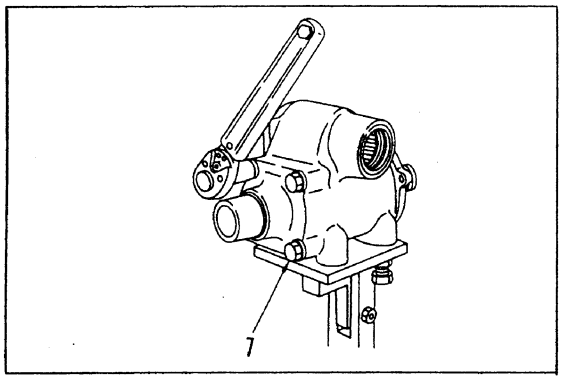

8. Disassembly of end cover assembly

Disassemble the parts shown in the diagram on the right.

★ When removing the oil seal, be careful not to damage the insertion portion of the bearing on the inside of the end cover with the screwdriver.

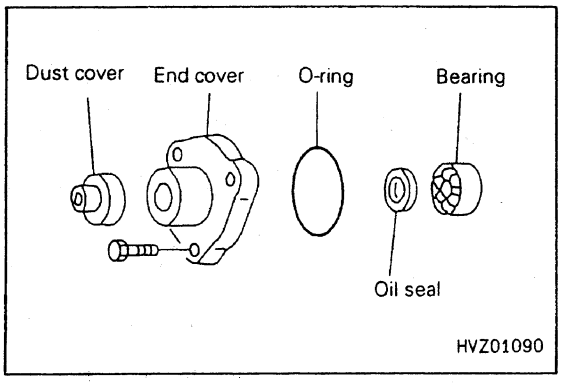

9. Ball screw assembly

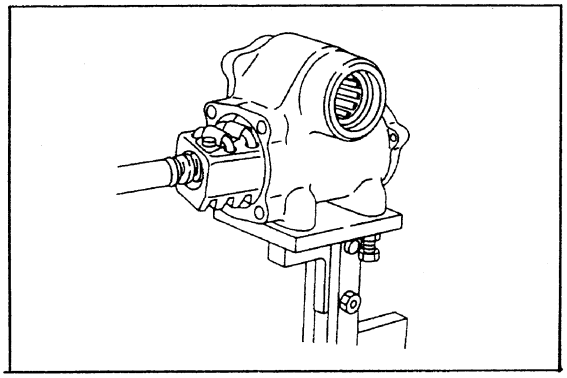

https://truckmanualshub.com/

10. Disassembly of steering gear box and body assembly

1) Insert pin body hole, and remove snap ring.
2) Remove oil seal.

★ When removing the oil seal, be careful not to damage the needle radial bearing of the steering body with the screwdriver.

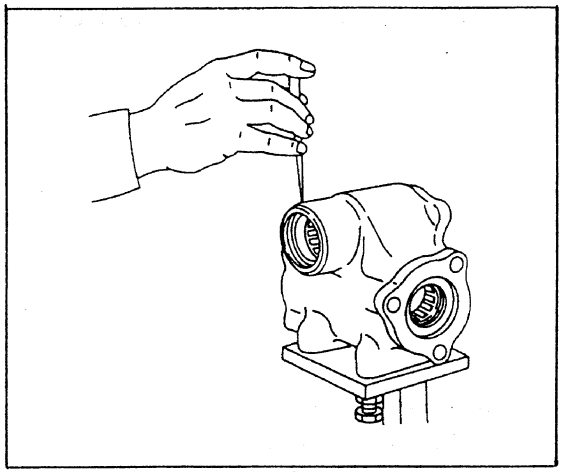

TESTING

Location	Check item	Remedy
Valve spool, valve housing sliding surface	Abnormal wear, rust, scratches	
Sector shaft	Scratches, abnormal wear, cracks	Replace
Ball screw assembly	Propulsion force when rotating: Max. 98N{10kg} (Secure ball nut in horizontal position, apply propulsion force to steering shaft, and measure propulsion force when rotating)	Replace assembly
Needle bearing	Abnormality in bearing roller and steering shaft, sector shaft roller tread surface	Replace (replace radial bearing as assembly)

ASSEMBLY

Precautions when assembly

1) Wash all parts and check that they are clean when assembling.
2) Replace all O-rings, oil seals, and rubber parts. (Replace all the rubber parts once every year.)
3) Apply grease to rubber parts and bearings.
4) After making the sub-assembly, carry out the overall assembly.

Assembly of sub-assembly

1. Control valve assembly

(1) Insert valve spool into valve housing.
(2) Insert reaction plunger and reaction spring.

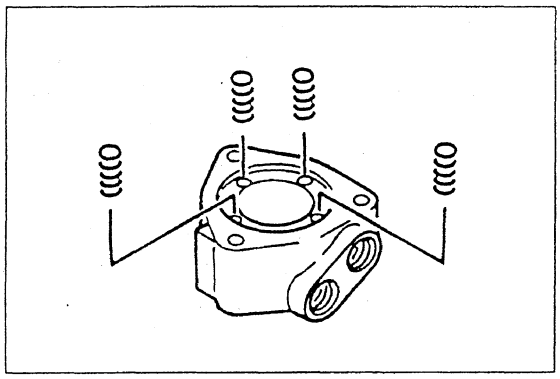

2. Sector shaft assembly

1) Insert adjustment screw and shim to sector shaft.

★ If there is any play between the sector shaft and adjustment screw, replace with a thicker shim and adjust so that there is no play in the adjustment screw when rotating.

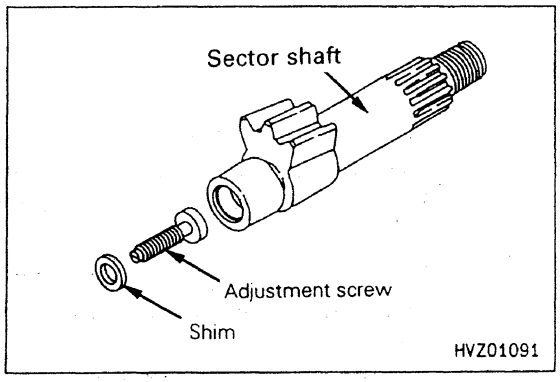

3. End cover assembly

1) Fill grease around the shaft in 20 to 25-mm width from the seal to the spline side in the end cover tube (3 g min.).
2) Coat outside circumference of oil seal thinly with grease (G2-LI), then press fit to end cover.

★ When press fitting, be careful not to damage the lip on the inside diameter of the oil seal.

3) Insert bearing.

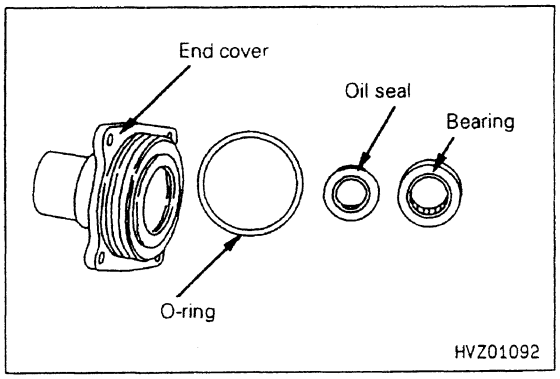

https://truckmanualshub.com/

4. Steering gear box, body assembly

1) Coat outside circumference of oil seal thinly with grease (G2-L1), press fit to steering body, then secure with snap ring.

★ When press fitting, be careful not to damage the lip o the inside diameter of the oil seal.

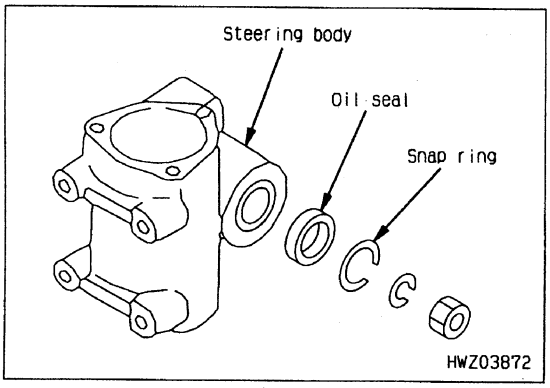

Overall assembly

1. Ball screw assembly

1) Fix steering body assembly in a vice.
2) Insert ball screw assembly, then insert portion of steering shaft with largest diameter into needle radial bearing portion of steering body assembly.

★ When carrying out the rest of the operation, be careful not to let the outside diameter portion of the steering shaft come out from the needle radial bearing.

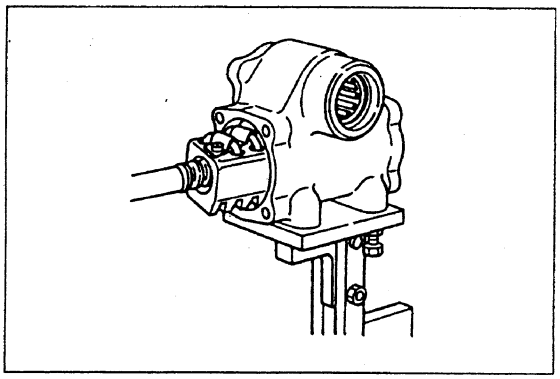

2. End cover assembly

1) Fit O-ring to end cover.
2) Coat end cover O-ring and oil seal lip with grease (G2-LI) and assemble to steering body.

★ Be extremely careful that the O-ring is not cut or pushed out, and that the oil seal is not damaged.

3) Tighten bolts to specified torque.

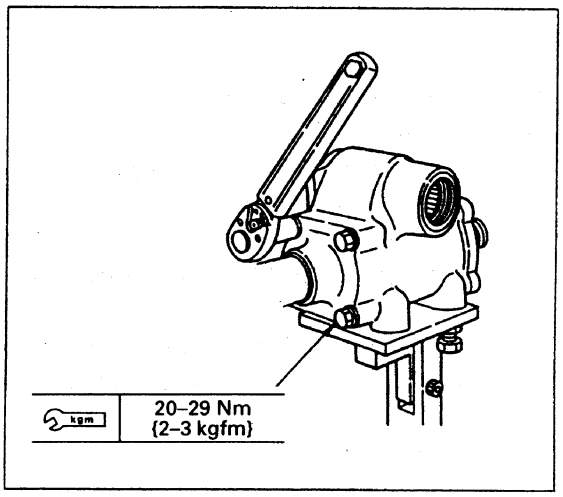

https://truckmanualshub.com/

3. Sector shaft assembly

1) Set ball not of ball screw assembly (assembled to steering body) at approximately center of stroke.
2) Coat oil seal lip of steering body with grease (G2-LI).
3) Assemble sector shaft so that teeth of ball nut and teeth of sector shaft are meshed when facing straight forward.

★ Be careful not to damage the oil seal lip when assembling the sector shaft.

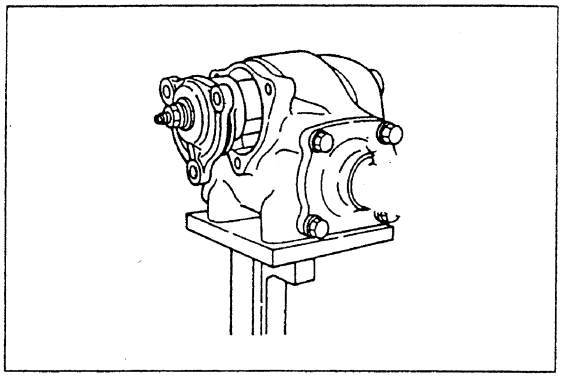

4. Control valve assembly

1) Fit O-ring (1) to steering body.
2) Install needle thrust bearing (2) and centering plate 83).
3) Install control valve assembly (4).

★ Be extremely careful that the O-ring is not cut or pushed out.

4) Install centering plate (5) and needle thrust bearing (6).
5) Tighten locknut (7).

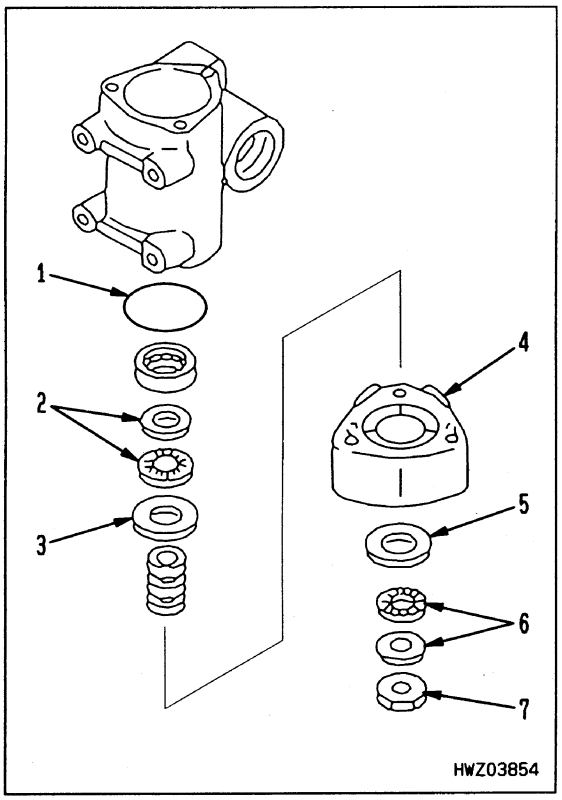

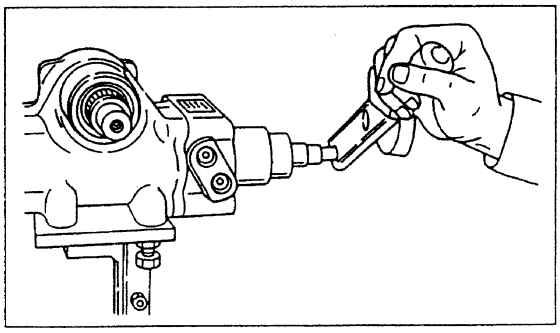

https://truckmanualshub.com/

5. Rear cover

1) Fit O-ring to control valve assembly, then tighten bolts to install.

kgm	20 – 29 Nm {2 – 3 kgfm}

★ Be extremely careful that the O-ring is not cut or pushed out.

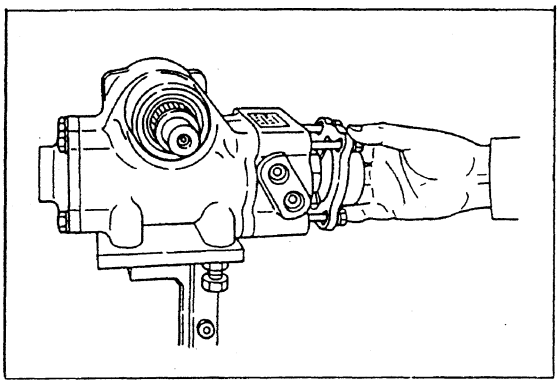

6. Side cover

1) Fit O-ring to side cover.
2) Align threaded portion of side cover with threaded portion of adjustment screw of sector shaft assembly, then use a flat-headed screwdriver to turn adjustment screw to left while assembling side cover.

★ Be extremely careful that the O-ring is not cut or pushed out.

3) Tighten bolts.

kgm	20 – 29 Nm {2 – 3 kgfm}

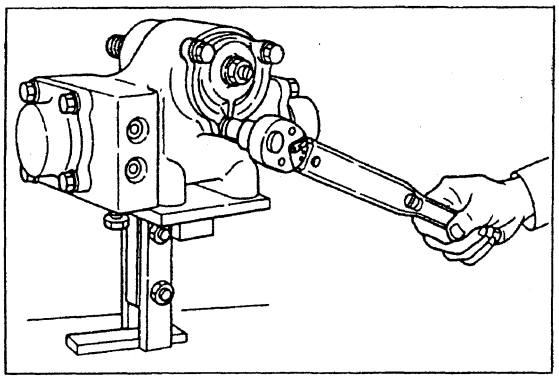

7. Dust cover

Assemble dust cover.

8. Measuring reverse rotation torque

Set steering shaft in free condition, and measure rotating torque of sector shaft in both left and right directions.

Reverse rotation torque	24.5 Nm {2.5 kgfm}

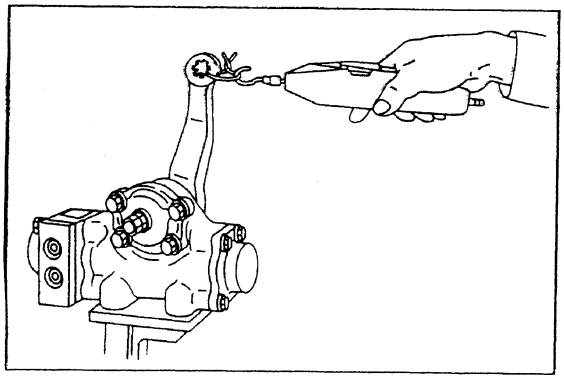

https://truckmanualshub.com/

TESTING AND ADJUSTING

1. Adjusting backlash

1) Set meshing of sector shaft and ball nut facing straight forward.

2) Install pitman arm, then put dial gauge in contact with tip of pitman arm and adjust backlash to 0.

[Tighten adjustment screw to 2 Nm {0.2 kgfm}, turn back two turns, then tighten to 0.25 Nm {0.025 kgfm}.]

3) After adjusting backlash to 0, use pitman arm to turn sector shaft in opposite direction two or three turns, then measure backlash again.

[If the backlash is not 0, adjust unit it becomes 0.]

4) Fit gasket and tighten nuts, and lock adjustment screw in position.

kgm	20 – 29 Nm {2 – 3 kgfm}

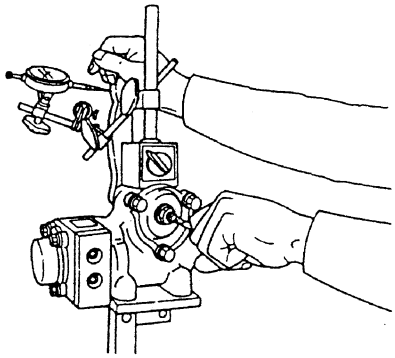

Backlash	0 (when facing straight forward)

2. Measuring normal rotation torque

Set sector shaft in free condition, and measure rotating torque of steering shaft in both left and right directions.

Normal rotation torque	1.5 Nm {0.15 kgfm}

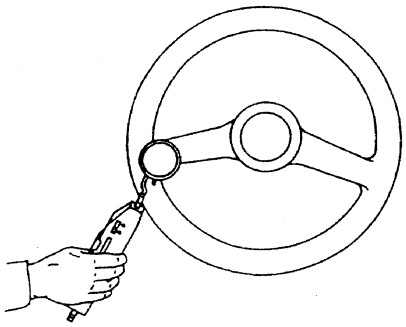

https://truckmanualshub.com/

POWER STEERING CYLINDER

COMPONENT PARTS

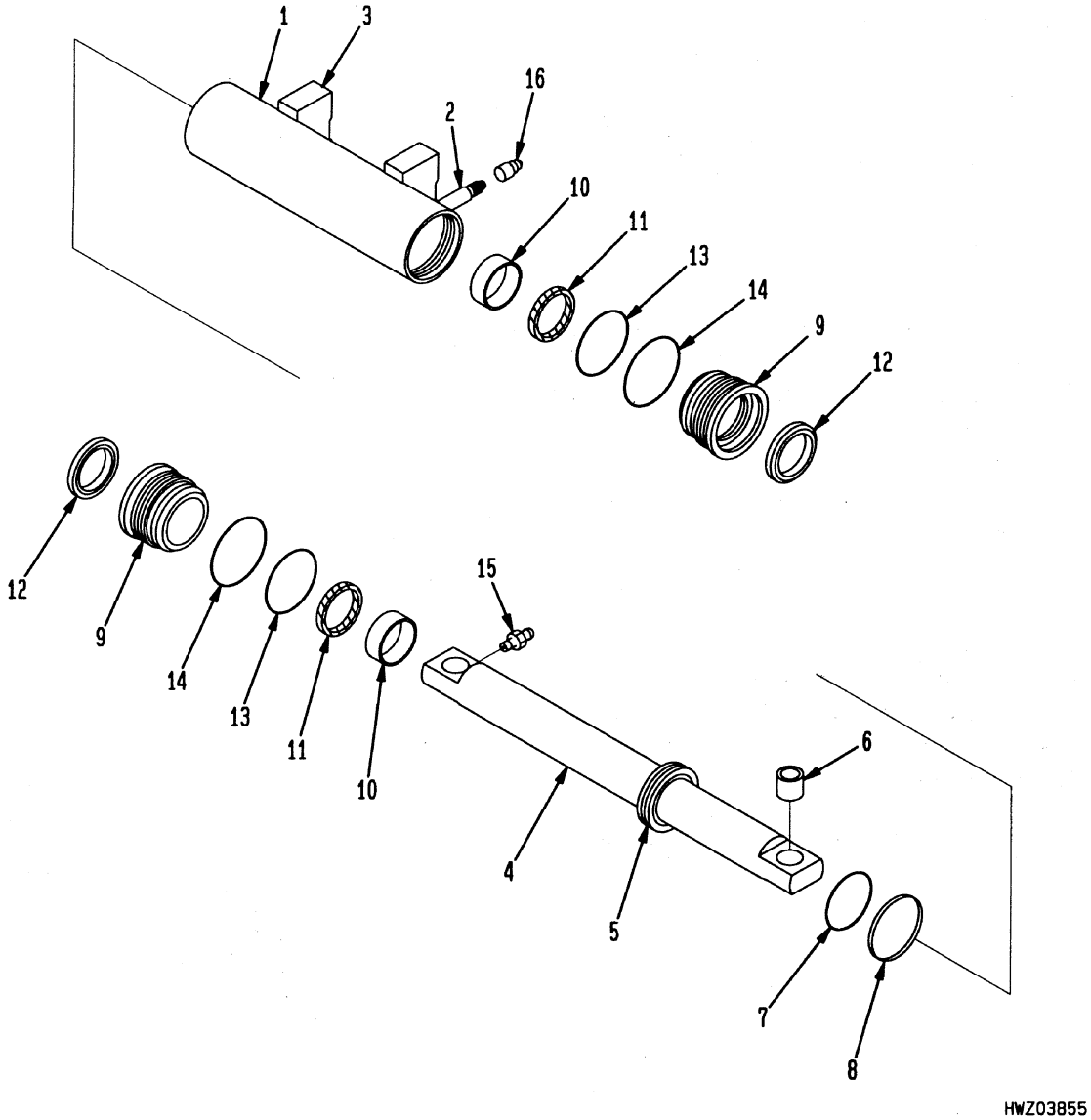

1. Cylinder
2. Boss
3. Bracket
4. Piston rod
5. Piston
6. Bushing
7. O-ring
8. Seal
9. Head
10. Bushing
11. Packing
12. Wiper
13. O-ring
14. O-ring
15. Nipple
16. Plug

https://truckmanualshub.com/

TESTING

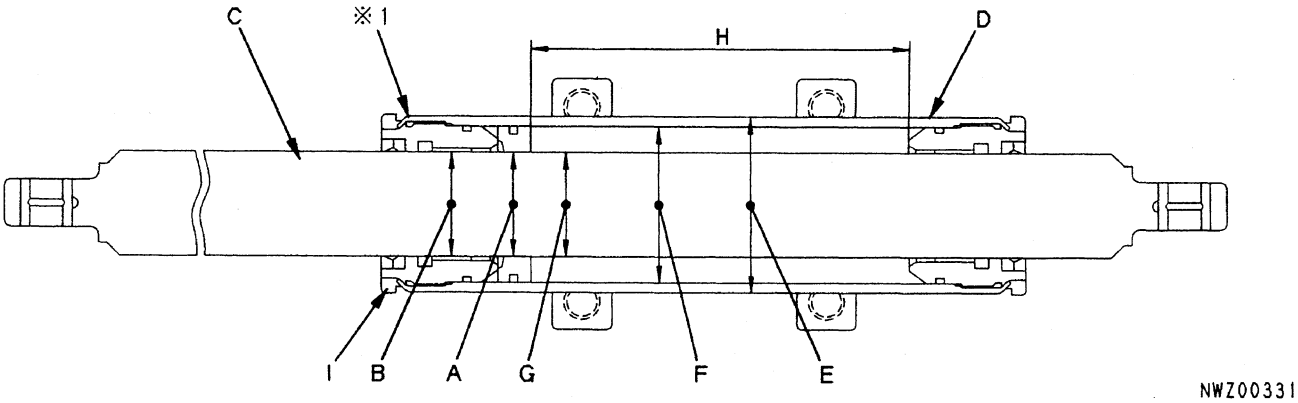

※1. Caulk it at two points on the circumference after tightening head (on both left and right).

Symbol	Check item	Criteria		Remedy
		Standard size (mm)	Repair limit (mm)	
A	Clearance between cylinder and piston	0.05 – 0.25	0.4	Replace
B	Clearance between piston rod and bushing	0.03 – 0.18	0.3	
C	Piston rod	Flaw, dent, streak or concave on claw		
D	Cylinder	Flaw, dent, streak or concave on claw		
E	Outside diameter of cylinder	85		—
F	Inside diameter of cylinder	75		
G	Outside diameter of piston rod	50		
H	Stroke	180		
I	Tightening torque for head	294 – 343 Nm {30 – 35 kgfm}		

https://truckmanualshub.com/

STEERING AXLE

DISASSEMBLY AND ASSEMBLY

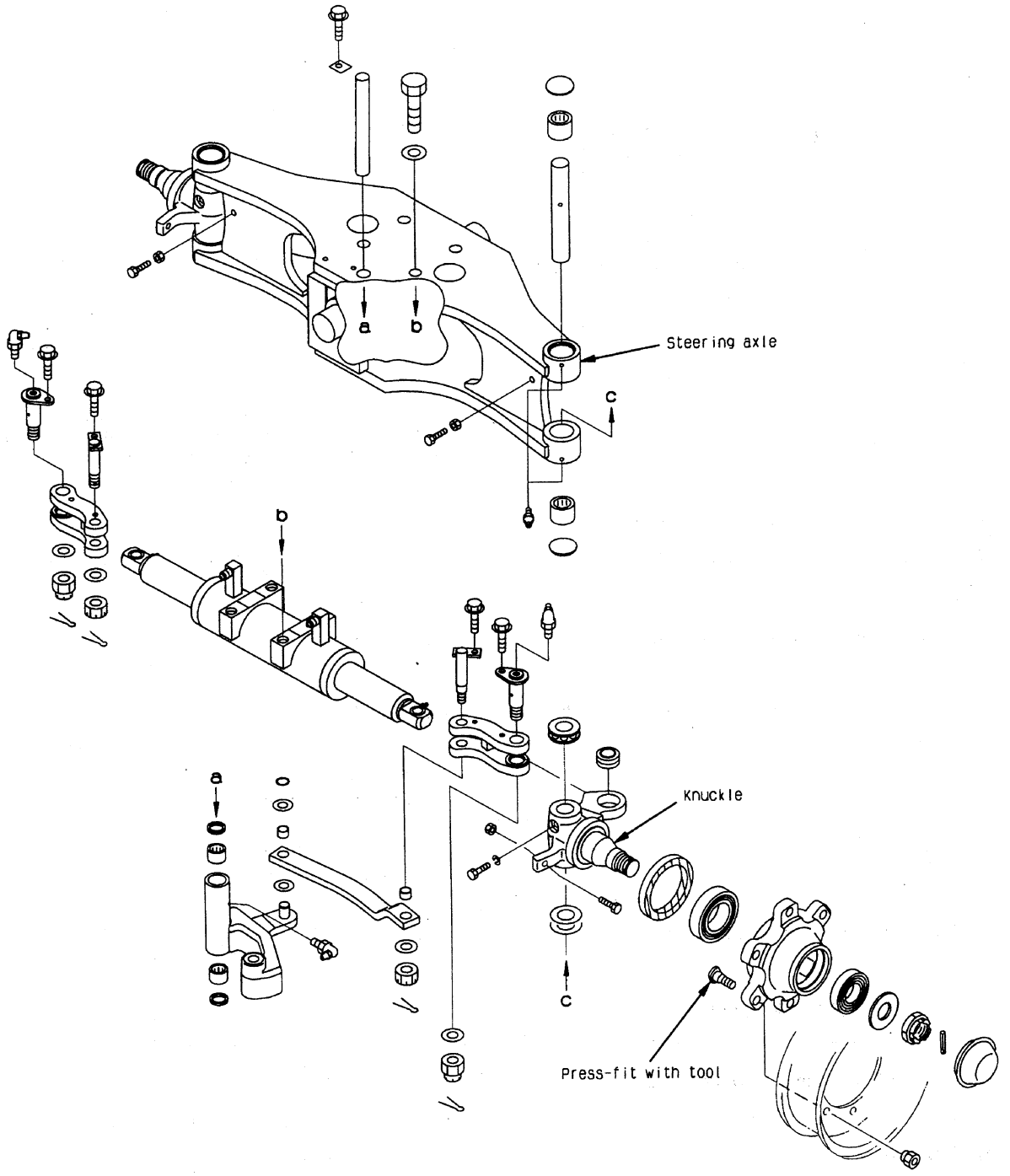

HWZ03870

https://truckmanualshub.com/

ASSEMBLY DRAWING

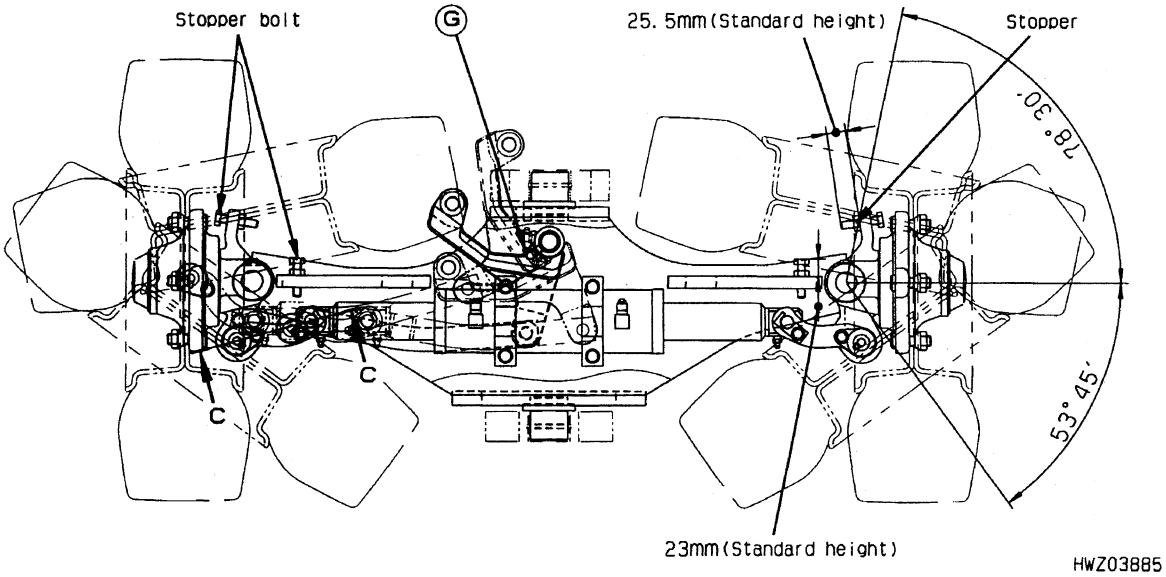

1. **Adjusting stopper bolt**
   Adjust so that the left and right stoppers are both in contact at the same time when the tires are turned fully.

2. **Assembling ball socket**
   When assembling the ball socket to the bellcrank, do not let any grease or paint get on the any of the taper portions.

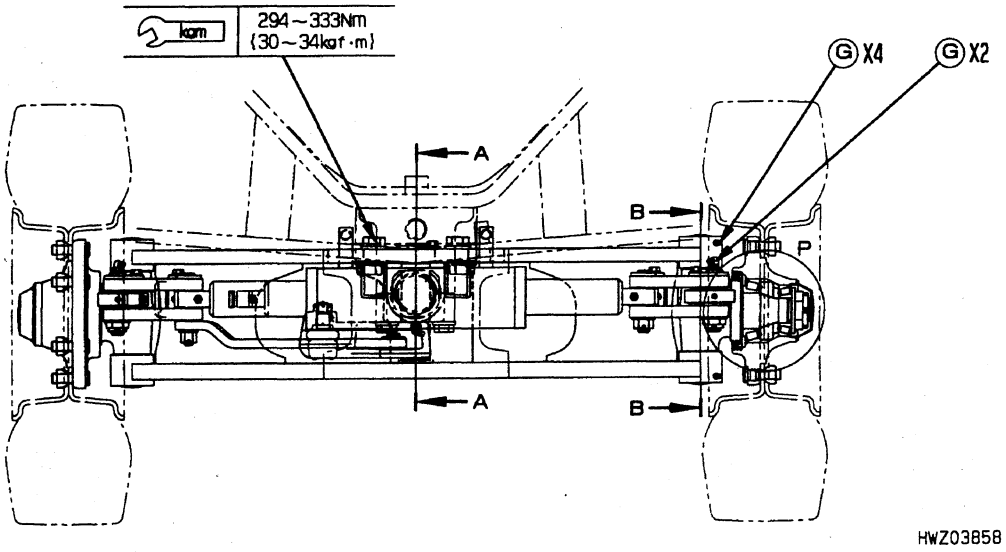

3. **Greasing**
   Use lithium grease (G2-LI) at grease nipple (Ⓖ x 7) and hub.

https://truckmanualshub.com/

DETAILS ON STEERING AXLE

1. Bell crank

1) Lock plate (1)

2) Snap ring (2)
Make sure that the snap ring has completely been engage with the ring groove.

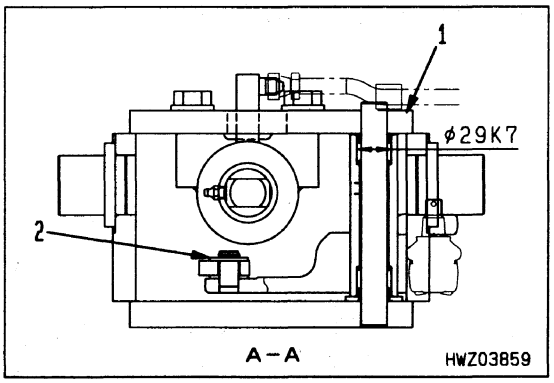

2. King pin

1) Adjust the needle bearing (3) end surface to the boss end surface (the difference between the surfaces can be within a range of 0 – 1).
2) Adjust the plays above and under the knuckle to the minimum using the shim.
Standard: 0.05 to 0.2 mm

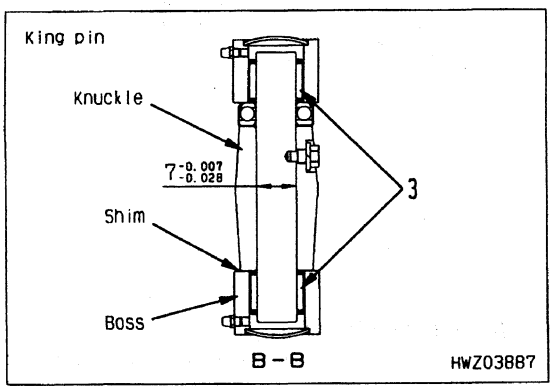

3. Link

1) Completely bend cotter pins (4), (5).

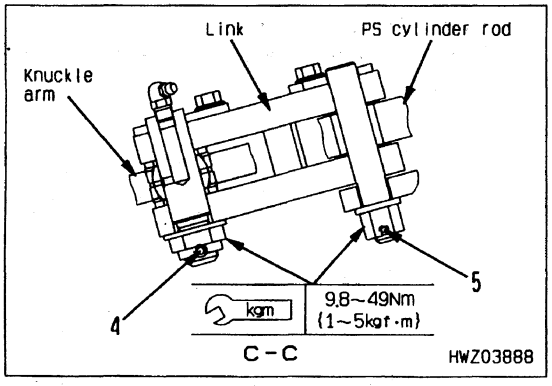

4. Hub

1) Apply sufficient grease (G2-LI) to the hub bearing and also fill 1/2 to 2/3 (shaded portion) of the hub capacity with grease (on both sides).
2) When assembling the hub, apply grease (G2-LI) to the lip of seal (6).
3) Completely bend cotter pin (7) after adjusting the starting torque.

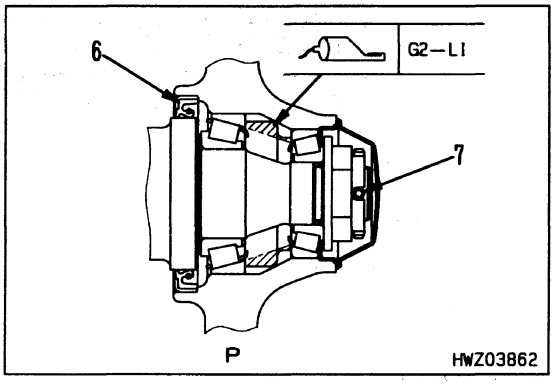

https://truckmanualshub.com/

5. Adjusting the rotation starting torque of the hub

1) Tighten the locknut until it becomes difficult to turn the hub by single hand and turn the hub by 1/4 rotation from that position in the opposite direction. Adjust the rotation starting torque to 4 to 8 kg using nut (8) by applying a spring scale to the hub bolt and apply pre-load to the tapered roller bearing.

Starting torque	431 – 862 Nm {44 – 88 kgfm}

※ Distance between knuckle and hub bolt centers: 110 mm

2) After adjustment, insert a cotter pin (rotation stopper) to a place where the nut and shaft holes match and completely bend it.

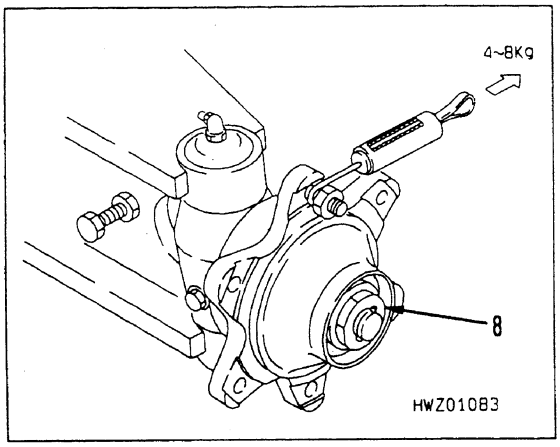

6. Adjusting the tire steering angles

Set the tire steering angles to the maximum and adjust angle A to 78°30' and B to 53°45' for both sides using stopper bolts (1) to (4).
After adjustment, completely tighten the locknut.

A	78°30'
B	53°45'

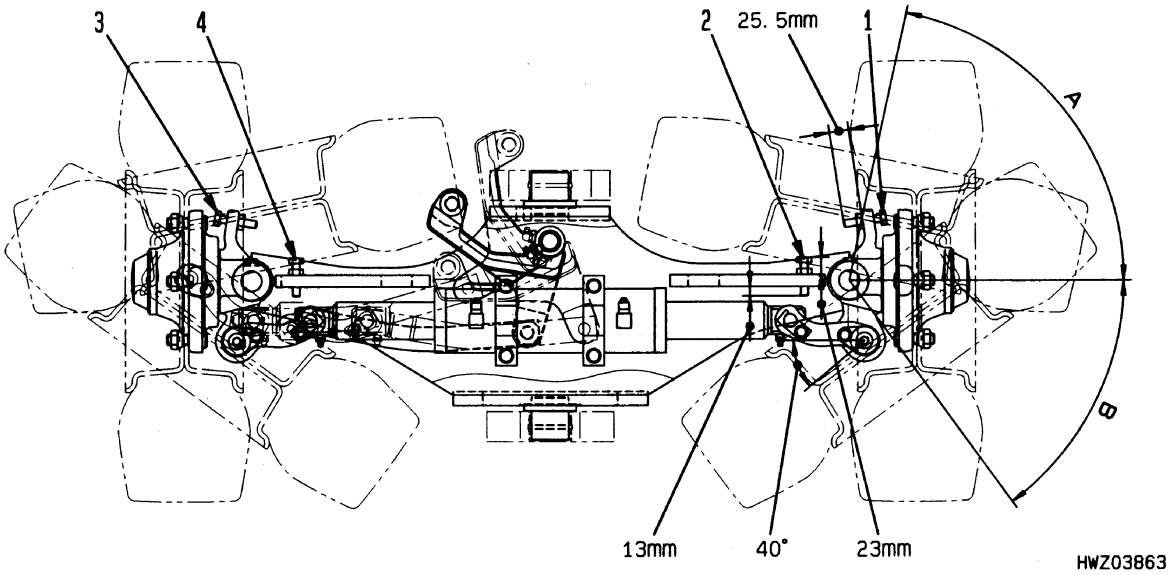

https://truckmanualshub.com/

LIFT CYLINDER

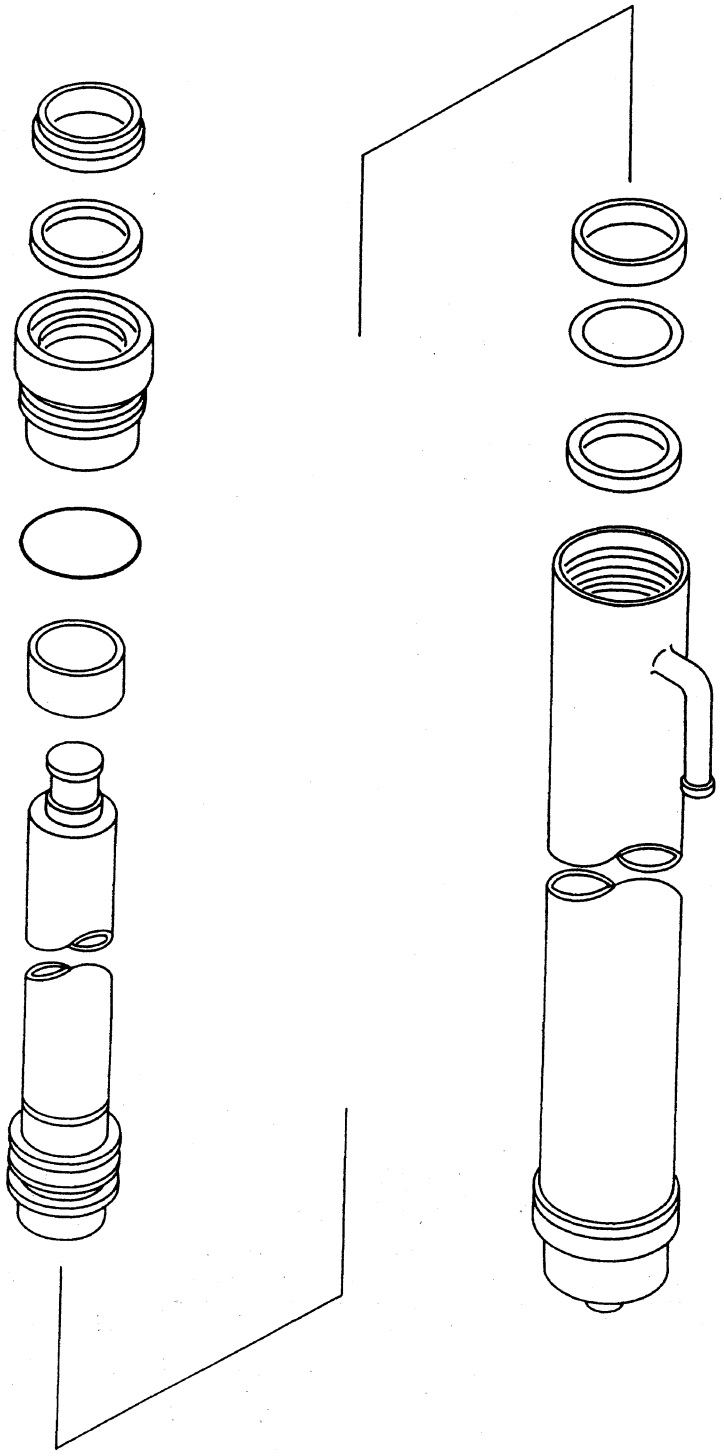

https://truckmanualshub.com/

(Lifting height: 3 m)

Item	Unit	2-ton – 2.5-ton truck	3-ton truck
Outside diameter of cylinder	mm	ϕ57	ϕ63
Inside diameter of cylinder	mm	ϕ50	ϕ55
Diameter of piston rod	mm	ϕ40	ϕ45
Stroke (S)	mm	1505	1505

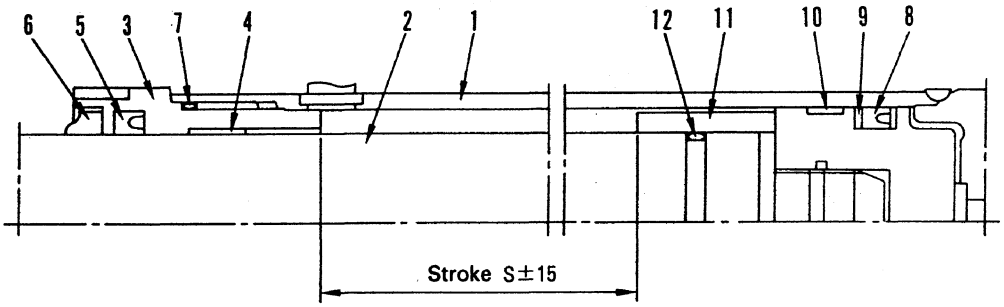

No.	Part Name
12	O-ring
11	Spacer
10	Bushing
9	Backup ring
8	U-ring
7	O-ring
6	Wiper ring
5	U-ring
4	Bushing
3	Cylinder head
2	Piston rod assembly
1	Cylinder tube assembly

TESTING

Check item	Criteria		Remedy
	Standard size (mm)	Repair limit(mm)	
Clearance between piston rod and bushing	0.04 – 0.023	0.35	Replace bushing
Clearance between piston ring and cylinder	0.05 – 0.035	0.5	Replace piston ring

https://truckmanualshub.com/

TILT CYLINDER

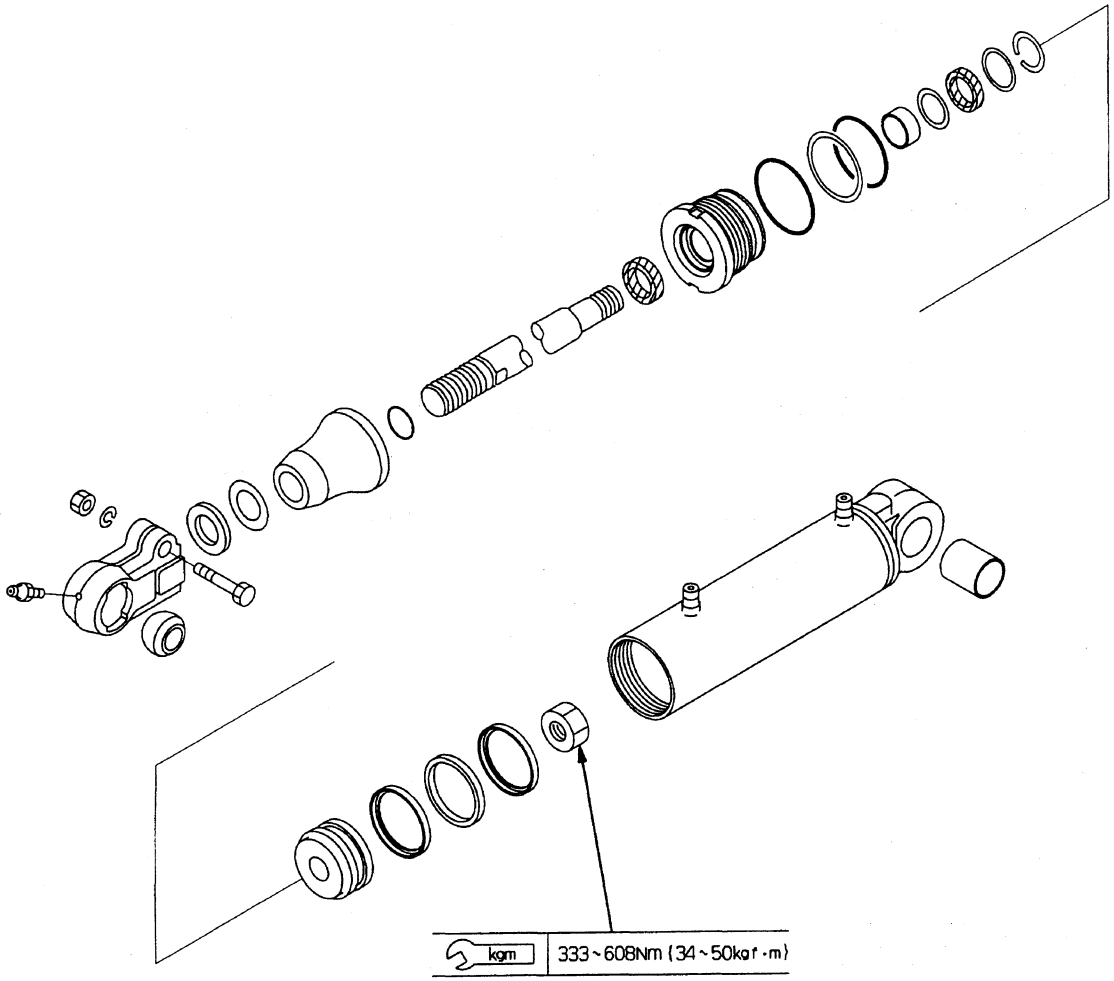

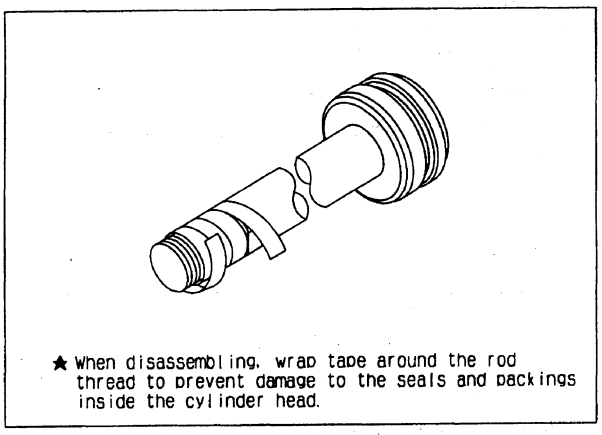

HWZ03890

https://truckmanualshub.com/

Cylinder (inside diameter x outside diameter)		70 mm x 84 mm
Stroke		160 mm
Outside diameter of rod		30 mm
Width of collar	6°/6°	84 mm
	6°/10°	47 mm

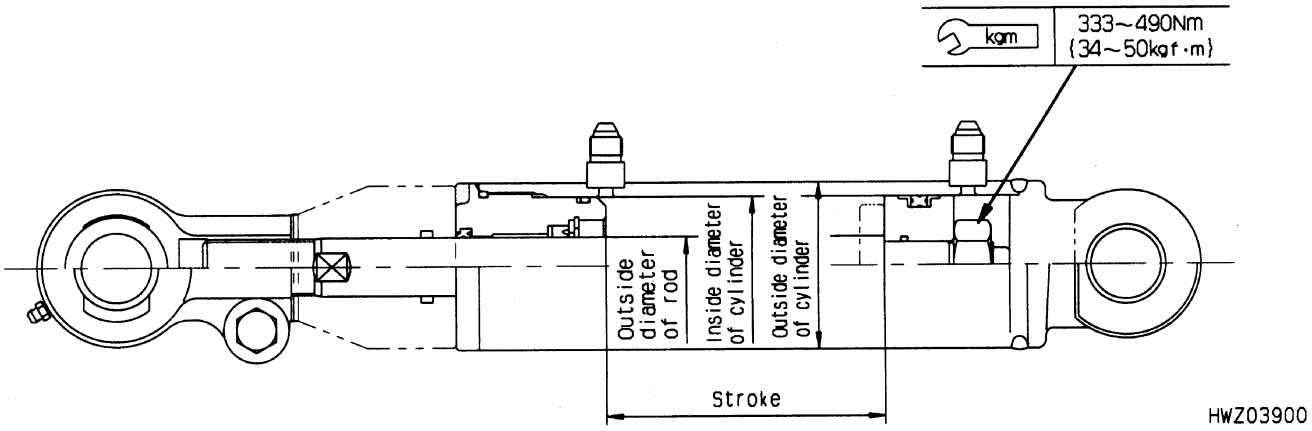

TESTING

Check item	Criteria		Remedy
	Standard size (mm)	Repair limit(mm)	
Clearance between piston rod and bushing	0.05 – 0.187	0.3	Replace bushing
Clearance between rod head bushing and pin	0.10 – 0.35	0.6	

https://truckmanualshub.com/

CONTROL VALVE

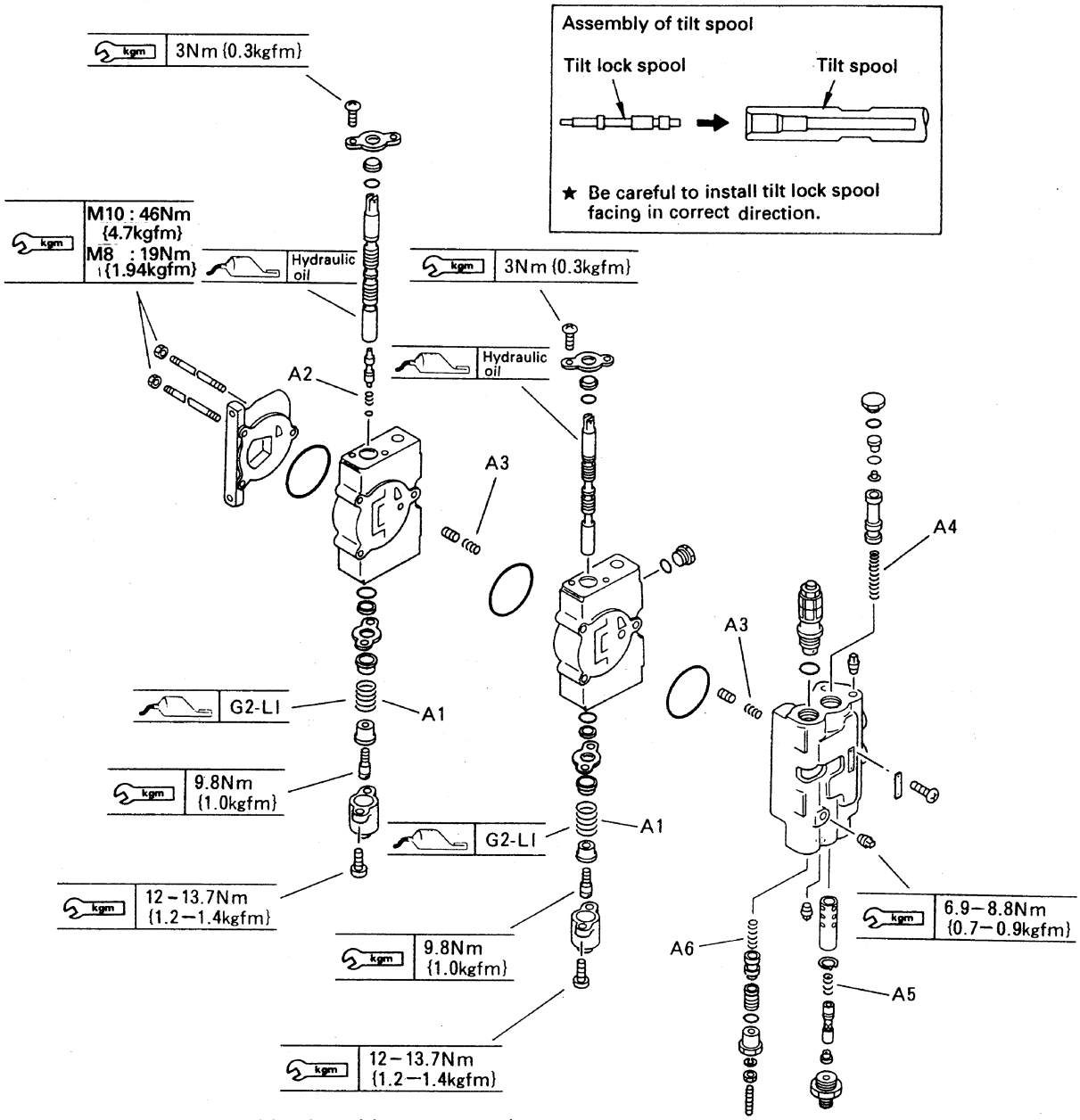

★ Wash all parts thoroughly, dry with compressed air to remove all detergent or dirt, then coat with hydraulic oil and assemble.

★ Do not use waste cloth to remove the detergent or dirt.

★ Use diesel oil or trichlene as the washing agent, and be extremely careful to keep away from fire.

★ Replace the seals, packings, and O-rings with new parts, coat with grease, and be careful not to damage when installing.

https://truckmanualshub.com/

TESTING

Symbol	Check item			Criteria		Remedy
				Standard size (mm)	Repair limit(mm)	
A	Free length of spring	A1	Return spring	56.8	51	Replace
		A2	Tilt lock spring	26	23.5	
		A3	Check valve	25.4	23	
		A4	Flow divider	67.8	65	
		A5	Load sensing	24.4	22	
		A6	PS relief valve	33.4	31	
B	Spool and housing			Burrs, scratches		

https://truckmanualshub.com/

MAST

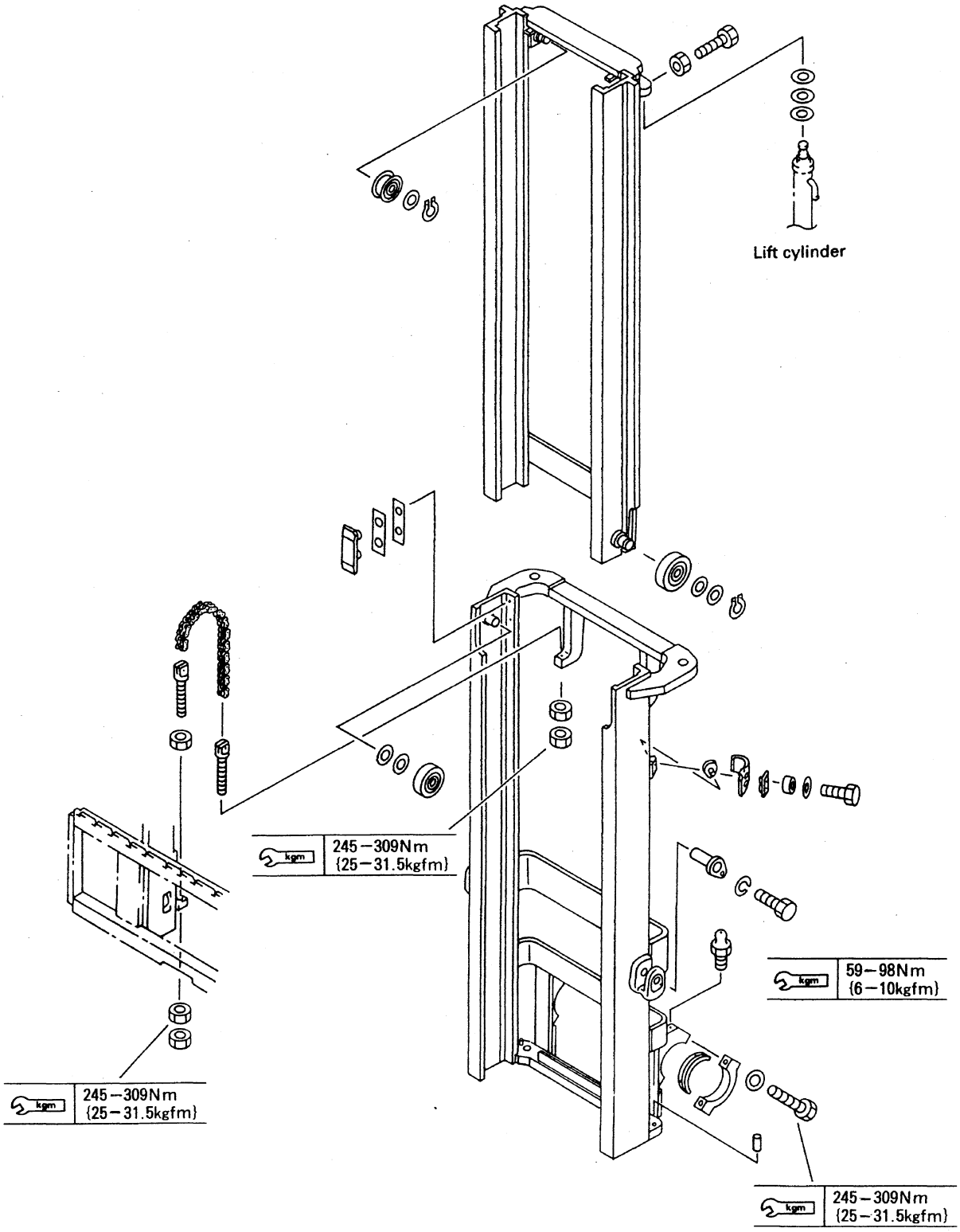

https://truckmanualshub.com/

METHOD OF ADJUSTING

1. Outer main roller

1) Selecting roller size
Select roller (**S, M, L, O**) so that there is no difference on left and right in dimension (v) of strip portion.

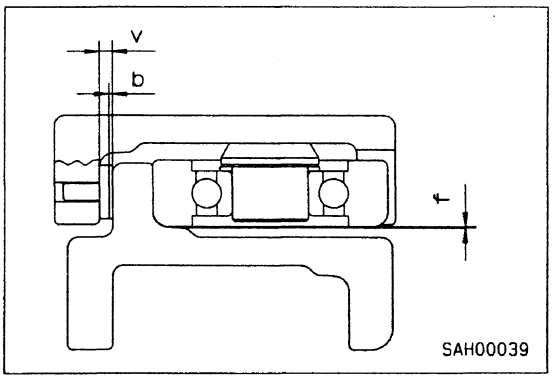

2) Adjusting shim
Adjust with shim (**A**) so that 0.1≦b≦0.4.
Adjust with shim (**B**) so that 0≦f≦0.5 (at max. lifting height). (Insert same thickness of shim on left and right.)

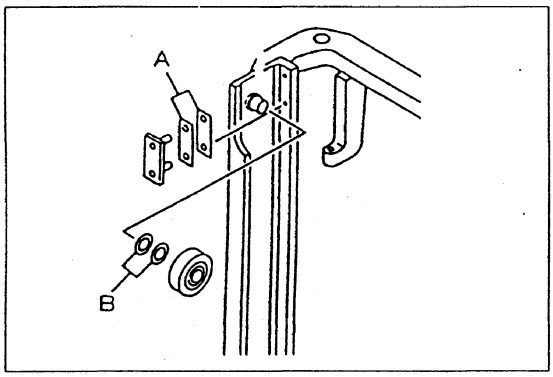

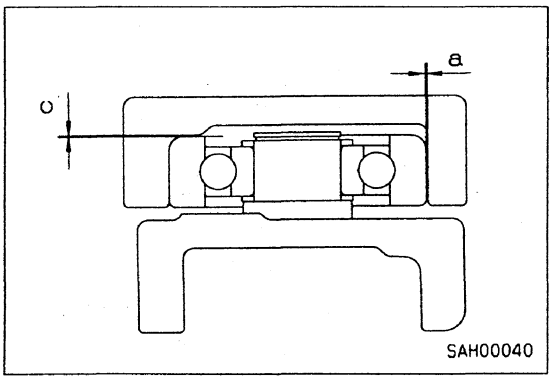

2. Inner main roller

1) Selecting roller size
Select roller (**S, M, L, O**) so that 0.2≦a≦0.7.

2) Adjusting shim
Adjust with shim (**C**) so that 0≦c≦0.5 (at max. lifting height). (Insert same thickness of shim on left and right.)

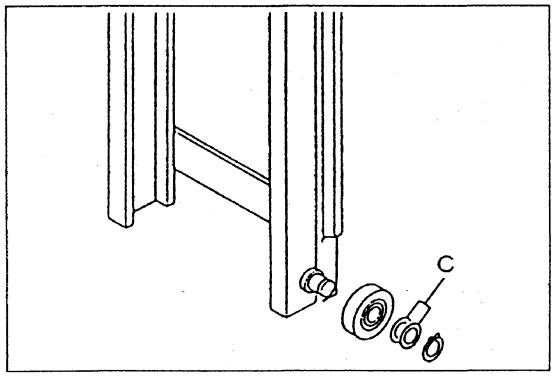

https://truckmanualshub.com/

FORK CARRIAGE

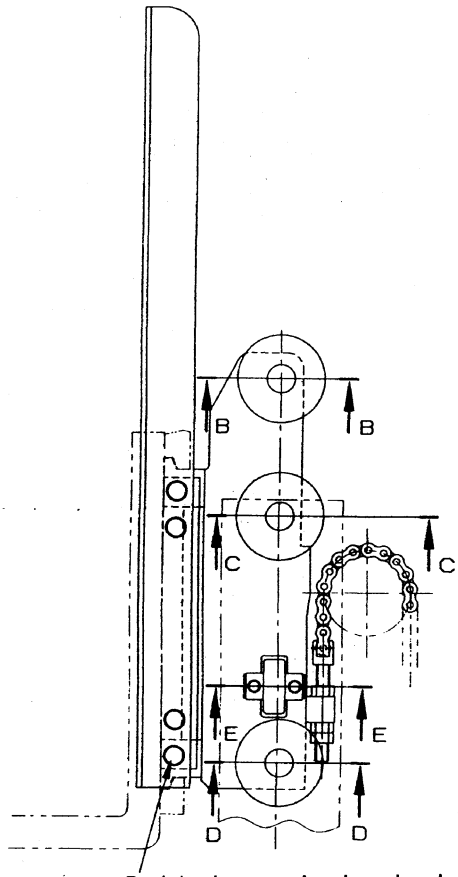

Push backrest against board and tighten bolts.

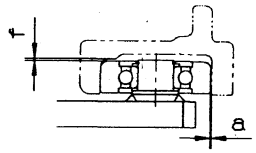

- Select roller so that a is 0.2 – 0.7 mm.
- Insert same thickness of shim on left and right to adjust so that 0≦f ≦0.1.
  (With fork carriage at highest point)

Section B-B

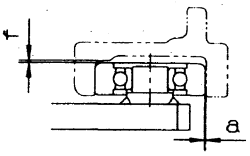

- Select roller so that a is 0.2 – 0.7 mm.
- Insert same thickness of shim on left and right to adjust so that 0≦f ≦0.1.
  (With fork carriage at highest point)

Section C-C

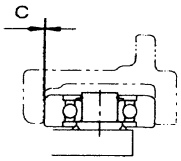

- Select roller so that c is 0.2 – 0.7 mm.

Section D-D

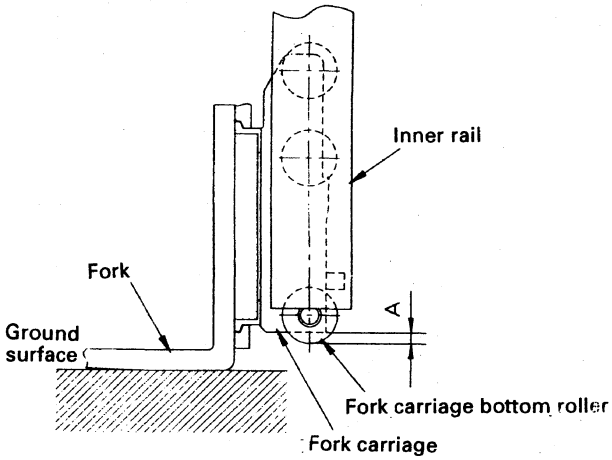

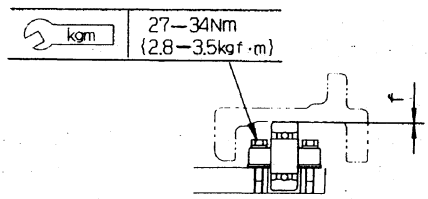

- Adjust with shims so that 0≦d≦ 0.2 mm.
  (With fork carriage at highest point)

Section E-E

SAH00041

Roller protrusion A

2-ton – 2.5-ton truck	21 mm
3-ton truck	24 mm

https://truckmanualshub.com/

TESTING

Check item		Criteria		Remedy
		Standard size (mm)	Repair limit(mm)	
Clearance between outer mast and inner mast	Left-to-right	0.5 – 1.0	Within 2.5	Adjust shim
	Front-to-rear	0.2 – 0.7	Within 2.0	Replace
Clearance between inner mast and fork carriage	Left-to-right	0.5 – 1.0	Within 2.5	Adjust shim
	Front-to-rear	0.2 – 0.7	Within 2.0	Replace
Bushing oil groove at mast support portion		There is oil groove	Oil groove cannot be seen clearly	
Thickness of fork (root of fork)	2-ton truck	36	Min. 32.5	
	2.5-ton truck	40	Min. 36	
	3-ton truck	44	Min. 39.5	

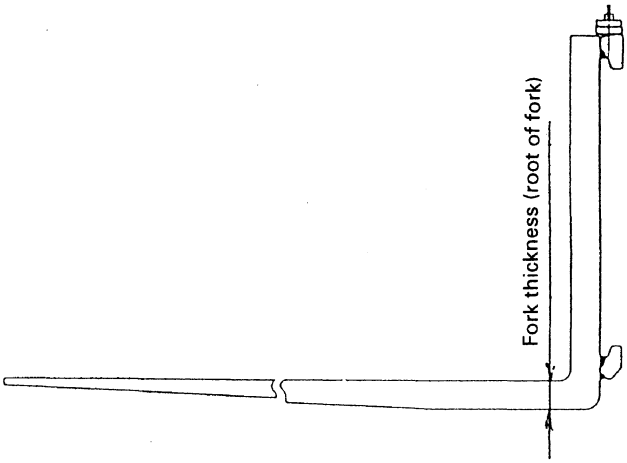

https://truckmanualshub.com/

https://truckmanualshub.com/

40. MAINTENANCE STANDARD

Torque converter 40- 2
TORQFLOW transmission 40- 4
Transmission control valve 40- 6
Differential 40- 8
Wheel brake 40- 9
Brake master cylinder 40-10
Brake booster 40-12
Clutch booster 40-13
Steering axle 40-14
Power steering gear box 40-15
Power steering cylinder 40-17
Lift cylinder 40-18
Tilt cylinder 40-19
Control valve 40-20
Fork carriage 40-22
Clutch release cylinder 40-23
Clutch transmission 40-24

https://truckmanualshub.com/

TORQUE CONVERTER

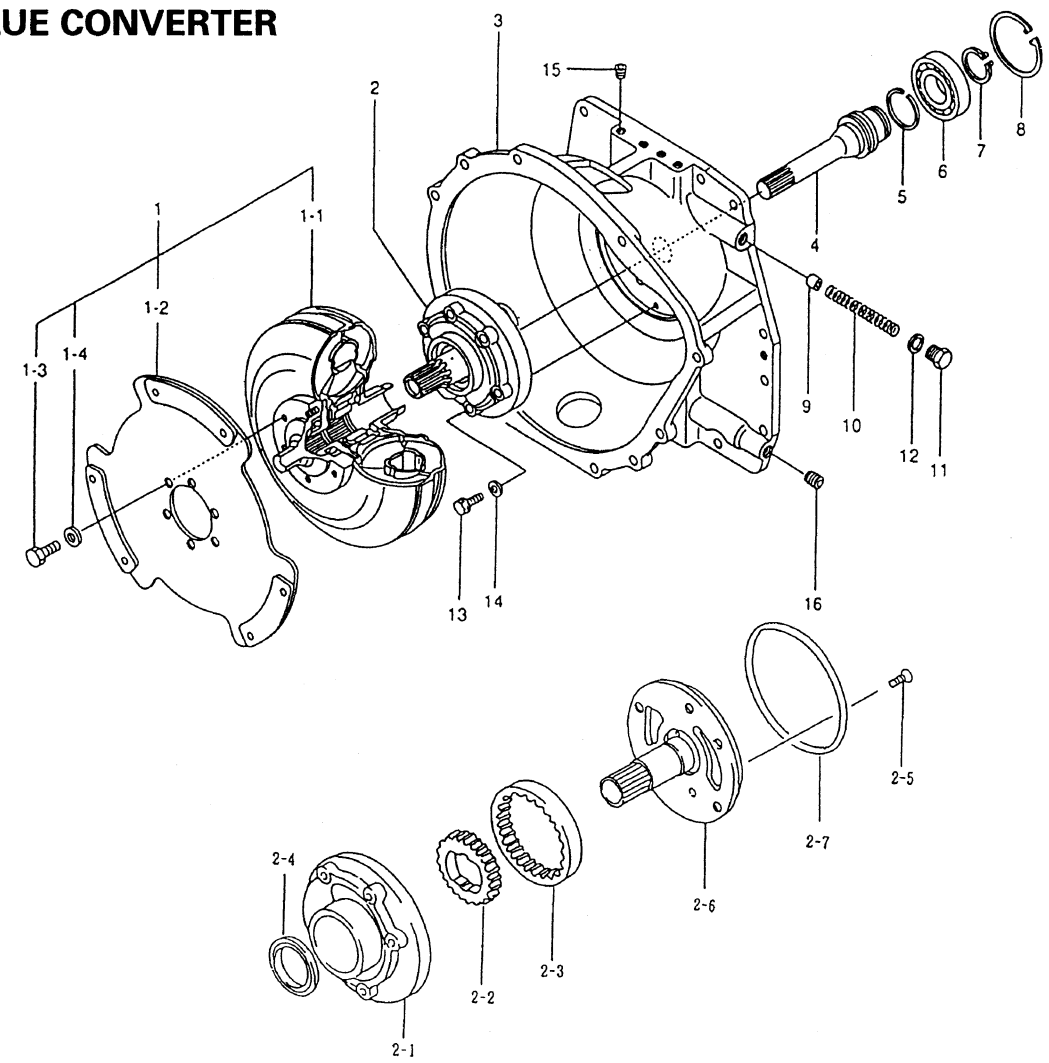

No.	Name	Q'ty	No.	Name	Q'ty
1	Torque converter circuit	1	4	Turbine shaft	1
1-2	Input plate assembly	1	5	Seal ring	1
1-3	Small hexagon bolt	6	6	Ball bearing	1
1-4	Washer	6	7	Snap ring	1
2	Gear pump assembly	1	8	Snap ring	1
2-1	Case assembly	1	9	Piston	2
2-2	Drive gear	1	10	Pressure spring	1
2-3	Driven gear	1	11	Plug	2
2-4	Oil seal	1	12	Gasket	2
2-5	Countersunk head screw	1	13	Hexagon bolt	5
2-6	Stator support	1	14	Gasket	5
2-7	O-ring	1	15	Hexagon socket head plug PT 1/4	4
3	Housing	1	16	Hexagon socket head plug PT 3/4	2

No.	Check item	Criteria: Standard size (mm)	Criteria: Repair limit (mm)	No.	Remedy
1	Torque converter inlet port valve Piston and housing hole 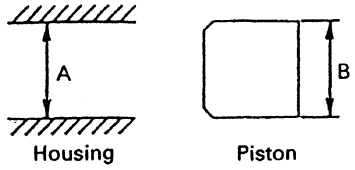 A mm B mm mm	14 – 14.018 13.96 – 13.97 0.030 – 0.058	 0.080	3 9 	Replace piston
2	Torque converter inlet port valve spring 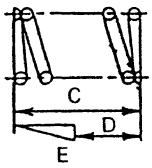 C: Free length D: Installed length C mm E: Installed load D mm E N {kg}	 103.4 62.7 75.6{7.71}±5%	 68.1{6.94}	 10 	Replace
3	Gear pump Oil seal and torque converter impeller hub 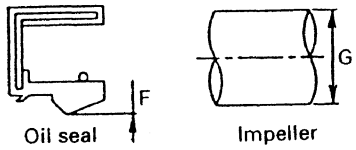 F mm G mm	41.915 – 41.965	41.5 41.815	2-4 1-1	
	Bushing and torque converter impeller hub 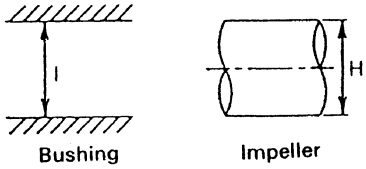 H mm I mm mm	41.915 – 41.965 42 – 42.039 0.035 – 0.124	 0.17	1-1 2-1 	
4	Turbine shaft Housing hole and seal ring groove 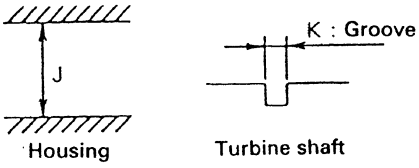 J mm K mm	50.10 – 50.15 2.5 – 2.6	50.25 2.7	3 4	
	Seal ring 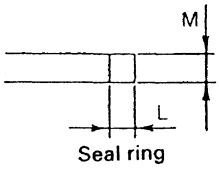 L mm M mm	2.0 – 2.2 2.35 – 2.40	1.8 2.15	5	

The numbers used in the No. column of the table refer to the numbers in the component part drawing.

https://truckmanualshub.com/

TORQFLOW TRANSMISSION

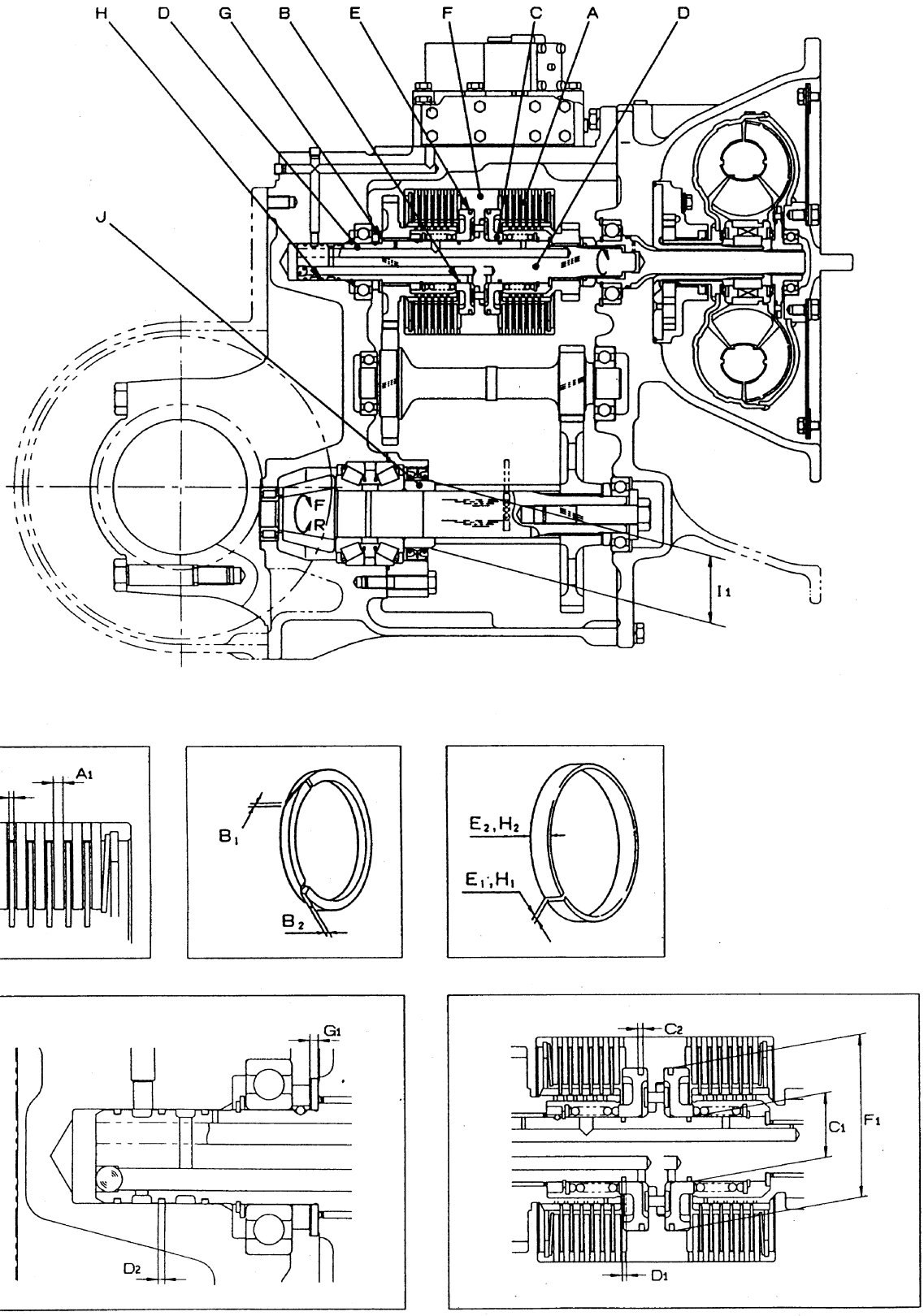

HAZ00557

https://truckmanualshub.com/

Symbol	Check item			Criteria		Remedy
				Standard size (mm)	Repair limit (mm)	
A	Plate	A1	Thickness of drive plate	3.13 – 3.27	2.9	Replace
		A2	Thickness of driven plate	2.90 – 3.05	2.6 (Oil groove depth: Min. 0.2)	
B	Seal ring	B1	Clearance at end gap when inserting piston	0.36 – 0.56	—	Replace each time disassembly is carried out
		B2	Depth of oil groove in side face	0.15 – 0.35	There must be oil groove	
		(D1)	Insertion groove width	2.60 – 2.65	2.8	
C	Piston	C1	Inside diameter of seal ring contact surface	40.025 – 40.050	40.2	Replace
		C2	Seal ring insertion groove width	3.1 – 3.2	3.4	
D	Drive shaft	D1	Seal ring insertion groove width	2.60 – 2.65	2.8	
		D2	Seal ring insertion groove width	2.60 – 2.65	2.8	
E	Seal ring	E1	Clearance at end gap when inserting clutch case	0.2 – 0.4	1.0	
		E2	Width	2.97 – 2.99	2.77	
		(C2)	Insertion groove width	3.1 – 3.2	3.4	
F	Clutch case	F1	Inside diameter of seal ring contact surface	100 – 100.054	100.3	
G	Thrust washer	G1	Thickness	2.9 – 3.1	2.5	
H	Seal ring	H1	Clearance at end gap when inserting cap	0.05 – 0.25	0.65	
		H2	Width	2.47 – 2.49	2.25	
		(D2)	Insertion groove width	2.60 – 2.65	2.8	
I	Retainer	I1	Outside diameter of oil seal contact surface	64.926 – 65.000	64.83	
—	Gears	—	Backlash	0.08 – 0.28	—	
		—	Thrust clearance	0.3 – 0.7	—	
—	Gasket, O-ring, seals			—	—	Replace with new parts during disassembly and assembly

https://truckmanualshub.com/

TRANSMISSION CONTROL VALVE

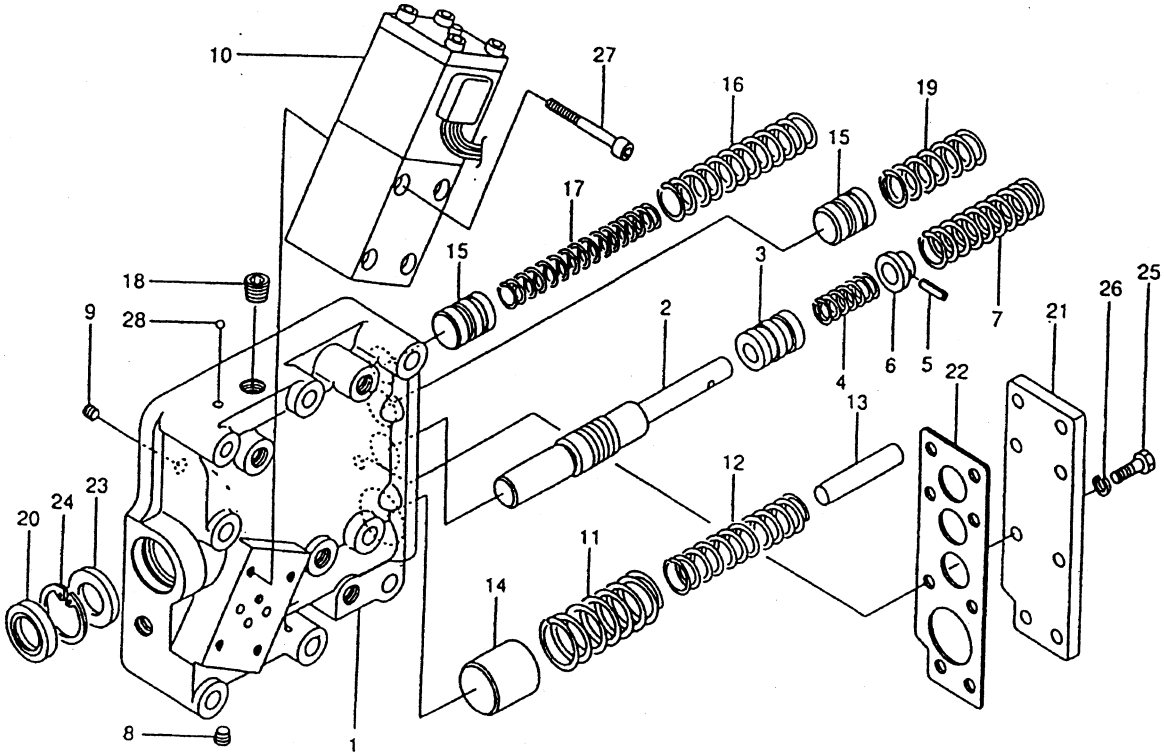

No.	Name	Q'ty	No.	Name	Q'ty
1	Valve body	1	10-16	O-ring	2
2	Inching spool	1	10-17	Stopper	1
3	Piston	1	10-18	Plug	1
4	Pressure spring	1	10-19	Tube	1
5	Spring pin	1	10-20	Plunger	1
6	Stopper	2	10-21	O-ring	1
7	Pressure spring	1	10-22	E-type stopper wheel	1
8	Plug	1	11	Pressure spring	1
9	Throttle	1	12	Pressure spring	1
10	Solenoid valve	1	13	Stopper	1
10-1	Body	1	14	Piston	1
10-2	Spool	1	15	Piston	2
10-3	Plug	1	16	Pressure spring	1
10-4	Pin	1	17	Pressure spring	1
10-5	Spring	1	18	Plug	1
10-6	Retainer A	1	19	Pressure spring	1
10-7	Retainer B	1	20	Oil seal	1
10-8	Pin	1	21	Cover	1
10-9	Solenoid coil	1	22	Gasket	1
10-10	Hexagon socket head bolt	4	23	Stopper	1
10-11	Spacer	4	24	Snap ring	1
10-12	Not used		25	Hexagon bolt	8
10-13	O-ring	1	26	Spring seat	8
10-14	O-ring	4	27	Hexagon head socket bolt	4
10-15	O-ring	2	28	Ball	1

https://truckmanualshub.com/

No.	Check item			Criteria: Standard size (mm)	Criteria: Repair limit (mm)	Symbol	Remedy
	Piston or spool and body hole 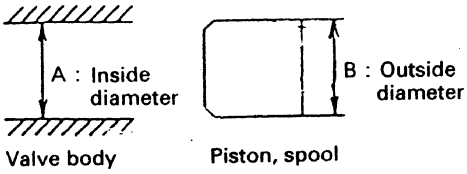						
1	Accumulator	Outside diameter of piston Inside diameter of body Clearance	mm mm mm	27.97–27.98 28–28.021 0.020–0.051	 0.080	14 1	Replace
2	Regulator	Outside diameter of piston Inside diameter of body Clearance	mm mm mm	19.96–19.98 20–20.021 0.020–0.061	 0.080	15 1	
3	Lubricating relief	Outside diameter of piston Inside diameter of body Clearance	mm mm mm	19.96–19.98 20–20.021 0.020–0.061	 0.080	15 1	
4	Inching spool portion	Outside diameter of spool Inside diameter of body Clearance	mm mm mm	19.97–19.98 20–20.021 0.020–0.051	 0.070	2 1	
	Small piston portion	Outside diameter of piston Clearance	mm mm	19.97–19.98 0.020–0.051	 0.070	3	
	Spring 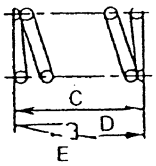 C: Free length D: Installed length E: Installed load						
5	Accumulator large spring	Free length Installed length Installed load	mm mm N {kgf}	66.51 58.7 53.9{5.5}±5%	 5.0	11	Replace
	Small spring	Free length Installed length Installed load	mm mm N {kgf}	88.83 83.7 36.3{3.7}±5%	 3.3	12	
6	Regulator large spring	Free length Installed length Installed load	mm mm N {kgf}	111.07 74.7 163.8{16.7}±5%	 15.0	16	
	Small spring	Free length Installed length Installed load	mm mm N {kgf}	123.43 96.7 206{21.0}±5%	 18.9	17	
7	Lubrication relief	Free length Installed length Installed load	mm mm N {kgf}	64.65 47.9 138{14.1}±5%	 12.7	19	
8	Inching spool portion	Free length Installed length Installed load	mm mm N {kgf}	73.97 48.0 34.3{3.5}±5%	 3.2	7	
	Small piston portion	Free length Installed length Installed load	mm mm N {kgf}	28.88 22.0 48.5{4.95}±5%	 4.46	4	

The numbers used in the symbol column of the table refer to the numbers in the component part drawing.

https://truckmanualshub.com/

DIFFERENTIAL

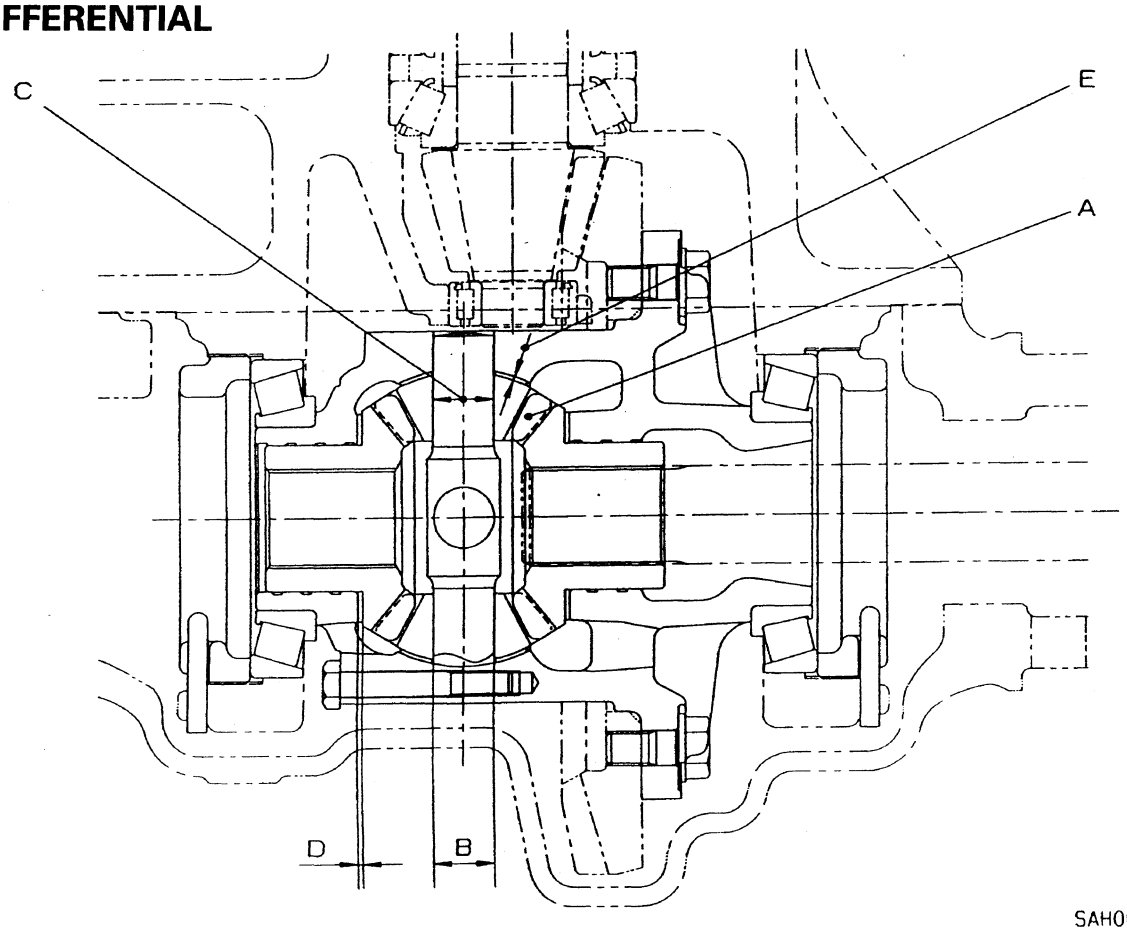

SAH00033

Symbol	Check item	Criteria		Remedy
		Standard size (mm)	Repair limit (mm)	
A	Differential pinion gear and differential side gear	—	If there is damage to tooth surface	Replace (replace bevel gear and pinion as a set)
B	Outside diameter of spider	24.959 – 24.980	24.75	Replace
C	Inside diameter of differential pinion gear	25.0 – 25.1	25.2	
D	Thickness of bushing	1.94 – 2.06	1.7	
E	Thickness of bushing	1.52 – 1.68	1.3	
—	(Inside diameter of brake drum)	310.0 – 310.2	312	
—	Gasket O-ring Seals			Replace with new parts during disassembly and assembly.

WHEEL BRAKE

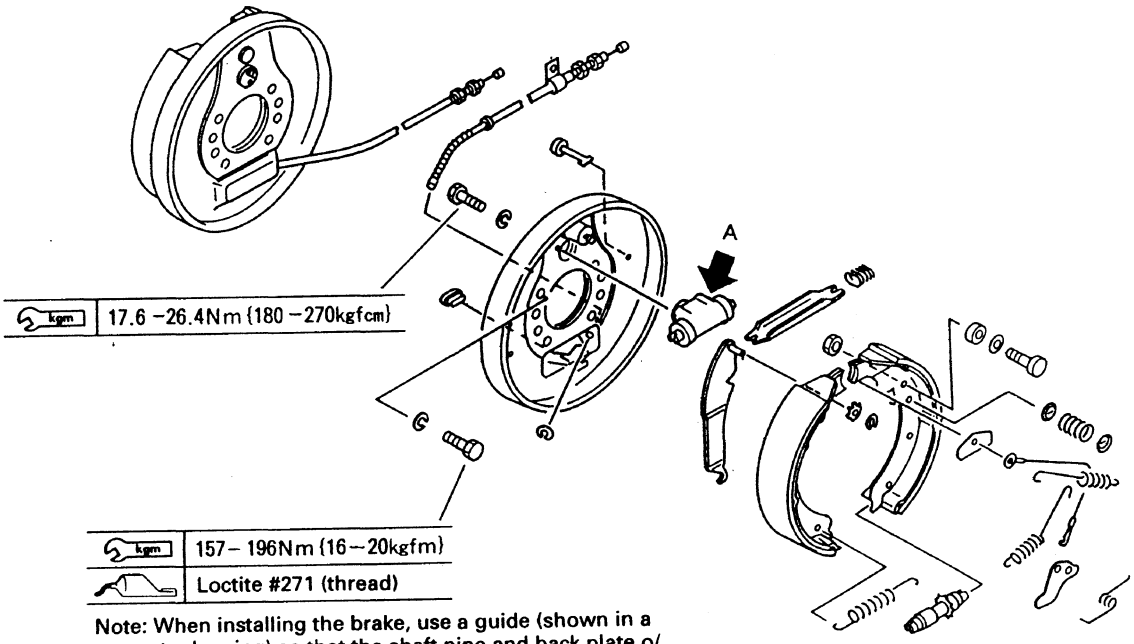

Note: When installing the brake, use a guide (shown in a separate drawing) so that the shaft pipe and back plate o/ 100 hole are concentric when assembling.

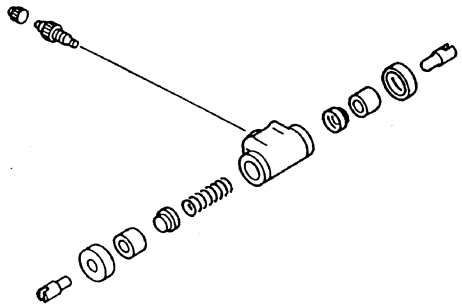

Detail A

Check item	Criteria		Remedy
	Standard size (mm)	Repair limit(mm)	
Thickness of lining	5.67	2.0	Replace
Deterioration of return spring	Free length: 124	136	
Thickness of return spring hook portion	2.9	2.0	
Clearance between piston and cylinder	0 – 0.05	0.2	

Check for scratches on the wheel cylinder sliding surface and for damage or deterioration of the cup.

https://truckmanualshub.com/

BRAKE MASTER CYLINDER

COMPONENT PARTS

No.	Parts name	Q' ty
1	Cylinder	1
2	Stop wire	1
3	Stop plate	1
4	Piston	1
5	Spring	1
6	Valve ass' y	1
7	Valve seat	1
8	Boot	1
9	Push rod	1
10	:Nut	2
11	Yoke	1
12	Stop pin	1
13	Gasket	1
14	O-ring	1
15	Reservoir	1
16	Indicator ass' y	1
17	Filter	1
18	Clamp	1
19	Cap	1

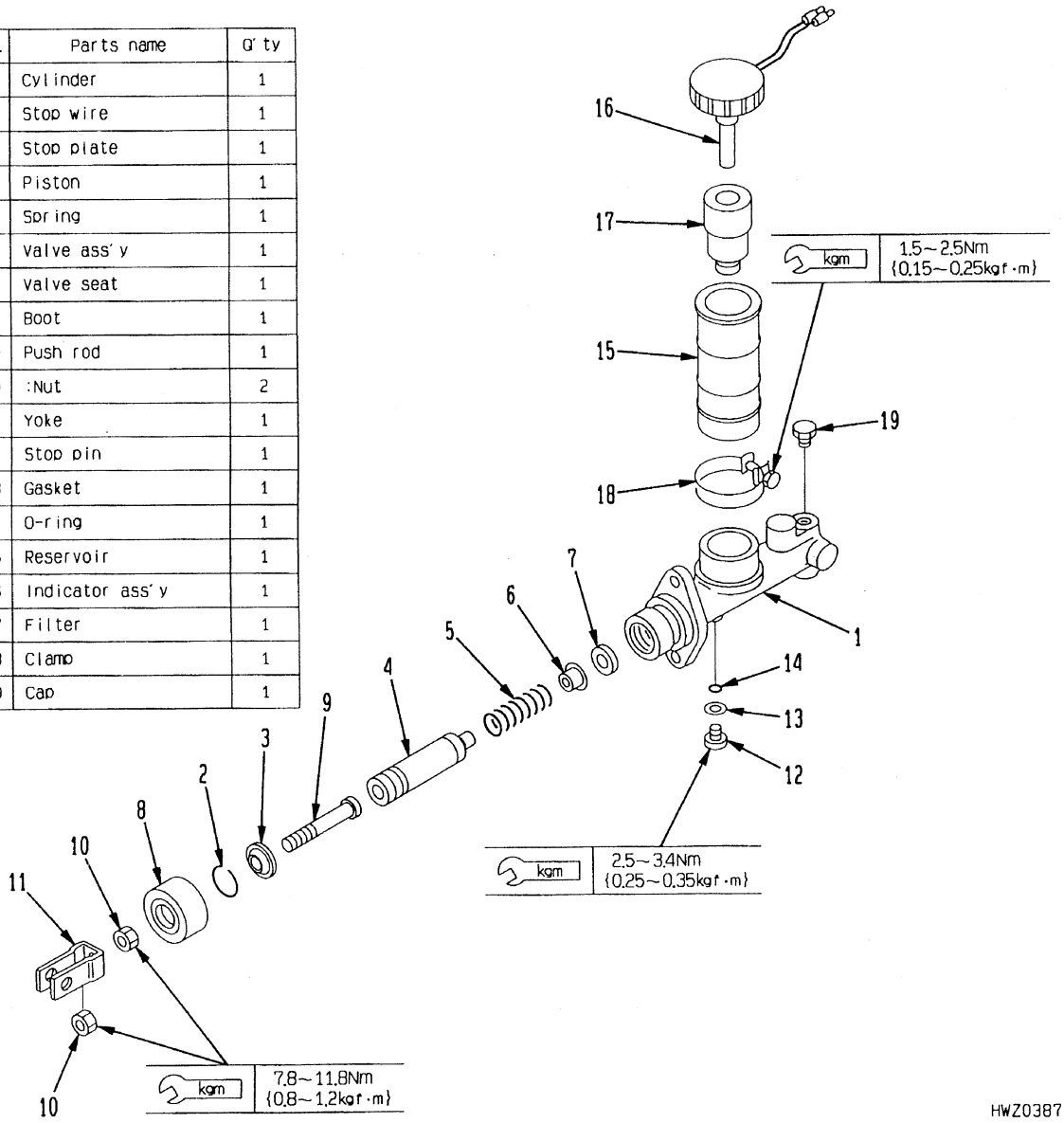

TESTING

Check item	Criteria		Remedy
	Standard size (mm)	Repair limit(mm)	
Clearance between cylinder and piston	0.020 – 0.105	0.15	Replace cylinder assembly
Interference of cup (outside diameter of cup - inside diameter of cylinder)	0.5 – 0.6	0.3	Replace piston assembly
Free length of spring	70.8	63	Replace

https://truckmanualshub.com/

No.	Check item	Standard value	Limit	Remedy	Symbol
1	Clearance between cylinder and piston	0.020 – 0.105 mm	0.15 mm	Replace (clinder assembly)	1.4
2	Interference of cup	Primary side: Approx. 1 mm Secondary side: Approx. 1.4 mm	0.3 mm	Replace (piston assembly)	4
3	Free length of spring	70.8 mm	63 mm	Replace	5
4	Tightening torque for stop pin	2.3 – 3.4 Nm {0.25 – 0.35 kgfm}	—	—	12
5	Tightening torque of yoke and locknut	7.8 – 11.8 Nm {0.8 – 1.2 kgfm}	—	—	10, 11
6	Tightening torque for clamp	1.48 – 2.45 Nm {0.15 – 0.25 kgfm}	—	—	18

https://truckmanualshub.com/

BRAKE BOOSTER

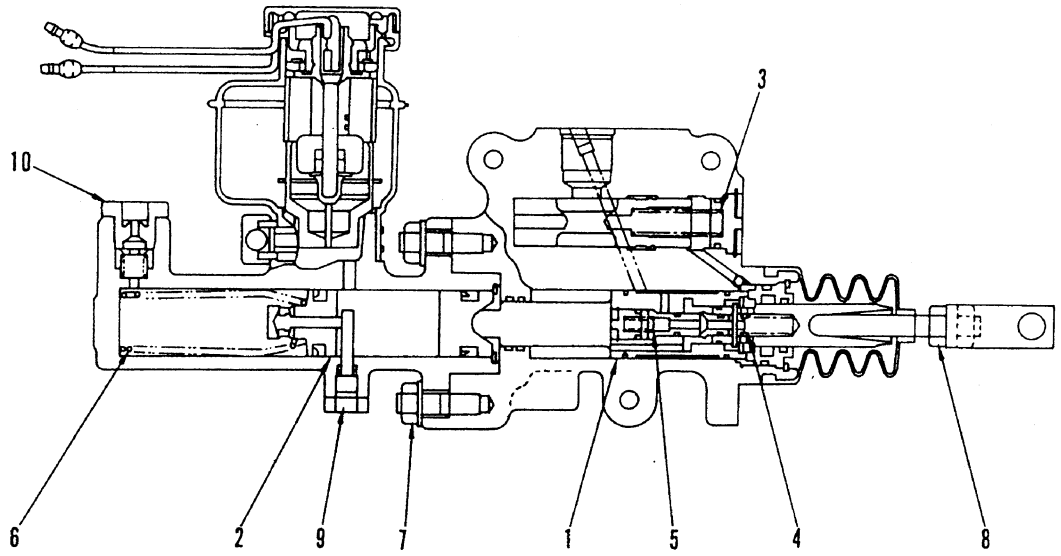

No.	Check item	Standard value				Allowable limit	Remedy
1	Clearance between cylinder and piston	Basic dimensions	Shaft	Hole	Standard clearance	Limit clearance	Replace
		25.4	− 0.020 − 0.053	+ 0.052 0	0.020 − 0.105	0.150	
2	Clearance between cylinder and piston	25.4	− 0.020 − 0.053	+ 0.052 0	0.020 − 0.105	0.150	
3	Deterioration of spring	Free length	Installed length	Installed load (kgf)		Free length	
		37.5	33.5	7.1		36.0	
4	Deterioration of spring	22.9	19.5	6.1		22.0	
5	Deterioration of spring	12.2	10.5	3.1		11.5	
6	Deterioration of spring	106	68.5	10.3		96	
7	Tightening torque	21 − 30 Nm {2.1 − 3.1 kgfm}				—	Retighten
8	Tightening torque	7.8 − 11.7 Nm {0.8 − 1.2 kgfm}				—	
9	Tightening torque	17.6 − 21.6 Nm {1.8 − 2.2 kgfm}				—	
10	Tightening torque	39.2 − 44.1 Nm {4.0 − 4.5 kgfm}				—	

https://truckmanualshub.com/

CLUTCH BOOSTER

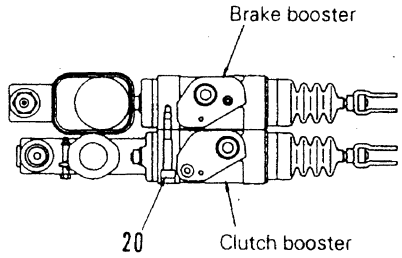

Clutch booster

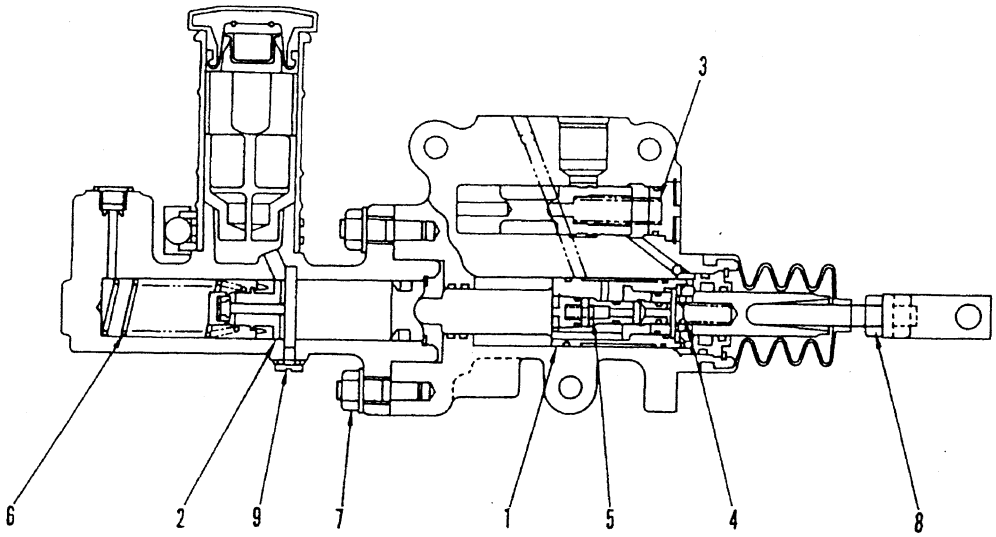

No.	Check item	Standard value				Allowable limit	Remedy
1	Clearance between cylinder and piston	Basic dimensions	Shaft	Hole	Standard clearance	Limit clearance	Replace
		25.4	− 0.020 − 0.053	+ 0.052 0	0.020 − 0.105	0.150	
2	Clearance between cylinder and piston	22.2	− 0.020 − 0.053	+ 0.052 0	0.020 − 0.105	0.150	
3	Deterioration of spring	Free length	Installed length	Installed load (kgf)		Free length	
		37.5	33.5	7.1		36.0	
4	Deterioration of spring	24.1	19.5	4.0		23.0	
5	Deterioration of spring	12.2	10.5	3.1		11.5	
6	Deterioration of spring	88.6	56	7.3		80	
7	Tightening torque	21 − 30 Nm {2.1 − 3.1 kgfm}				—	Retighten
8	Tightening torque	7.8 − 11.7 Nm {0.8 − 1.2 kgfm}				—	
9	Tightening torque	2.5 − 3.4 Nm {25 − 35 kgfm}				—	
20	Tightening torque	27.4 − 34.3 Nm {2.8 − 3.5 kgfm}				—	

https://truckmanualshub.com/

STEERING AXLE

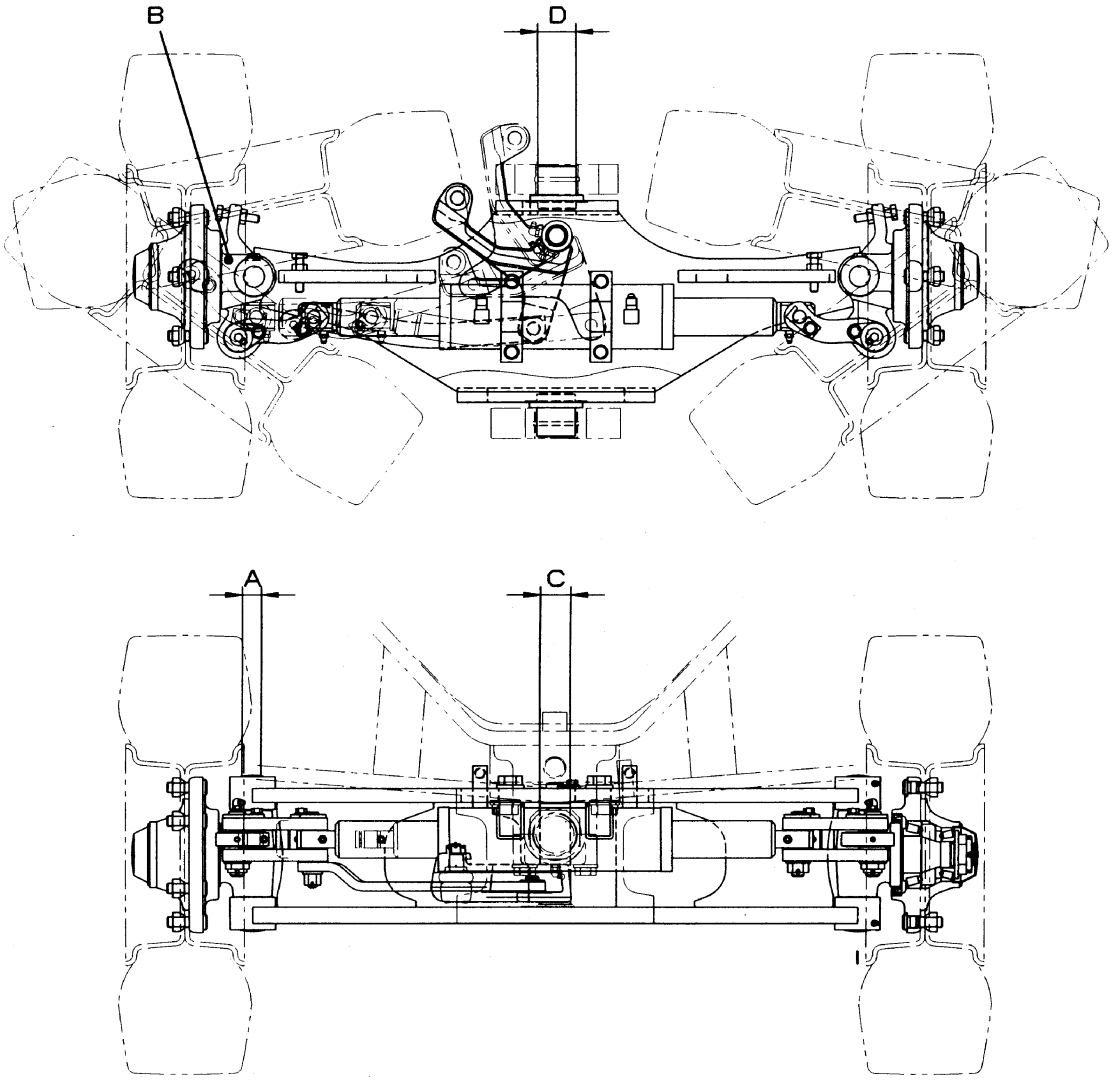

HWZ03865

Symbol	Check item	Criteria		Remedy
		Standard size (mm)	Repair limit(mm)	
A	Diameter of king pin	28	27.8	Replace
B	Vertical play of knuckle	—	0.2	Adjust shim
C	Diameter of bellcrank pin	40	39.6	Replace
D	Diameter of center pin	50	49.5	
—	Steering axle, hub, knuckle, bearing	• Cracks • Damage, peeling • Seizure, defective rotation, abnormal noise		

https://truckmanualshub.com/

POWER STEERING GEAR BOX

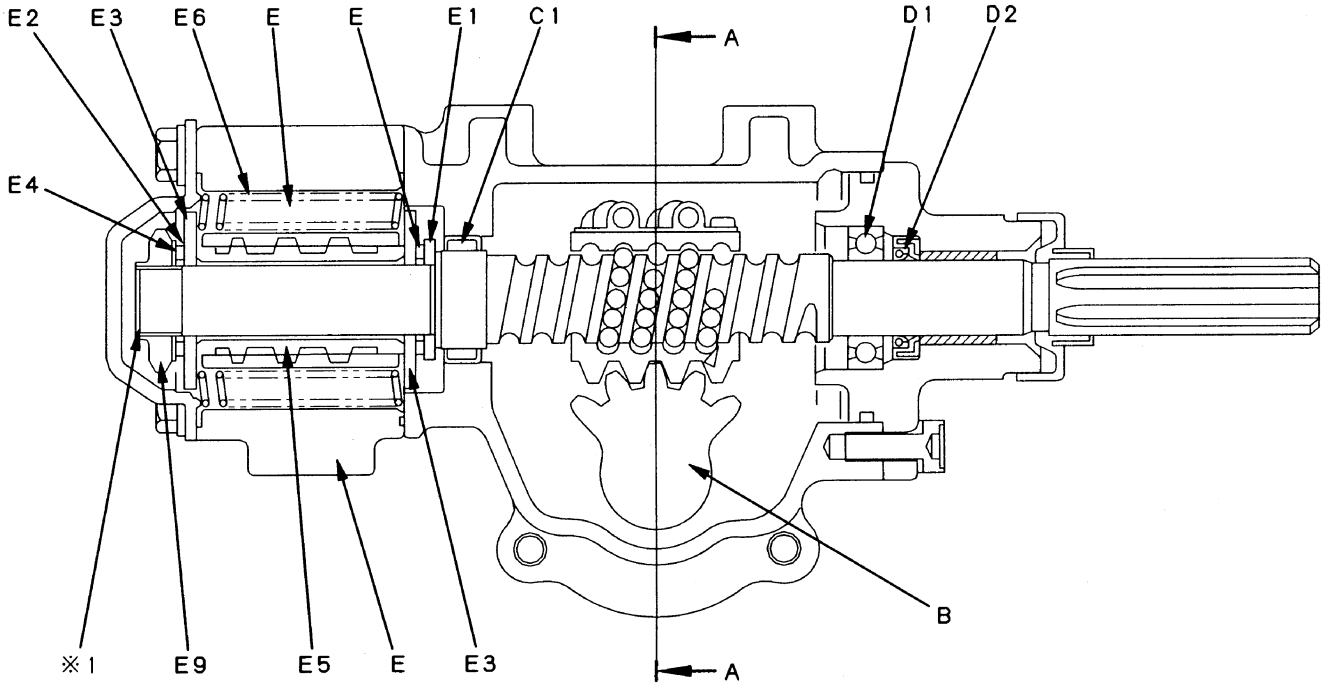

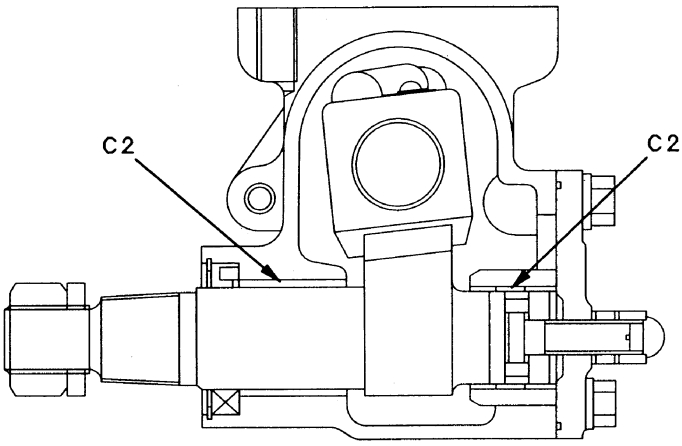

A – A

NWZ00329

※ Caulk the nut flange (at two point)

Item	Unit	Specifications
Gear ratio	—	18.9
Sector shaft operating angle	Degree	42 × 2
Handle rotation (left/right)	Rotation	2.0/ 2.0
Handle steering torque (left/right)	N{kgf}	7.8/7.8{0.8/0.8}

https://truckmanualshub.com/

Symbol	Check item			Criteria: Standard size (mm)	Criteria: Repair limit (mm)	Remedy
A	Ball nut assembly			• No screw groove peeling off or no abnormal wear • Smooth rotation (If not, rotate it while cleaning it in detergent oil)		Replace assembly
B	Sector shaft (shaft and gear)			No abnormal wear or streak		Replace
C	Gear box and side cover	C1	Bearing	No abnormal wear		
		C2	Bushing			
D	Cover	D1	Bearing	No abnormal wear		
		D1	Oil seal			
E	Control valve	E1	Thrust race	No damage or concave Smooth operation		
		E2	Thrust bearing			
		E3	Thrust race			
		E4	Thrust race			
		E5	Spool valve			
		E6	Spring			
		E7	Sleep body			
		E8	Orifice			
		E9	Nut			

Tightening torque

Bolt size	Tightening torque (Nm {kgfm})
M8 × 1.25	20 – 29 {2.1 – 3.1}
M10 × 1.25	20 – 29 {2.1 – 3.1}

https://truckmanualshub.com/

POWER STEERING CYLINDER

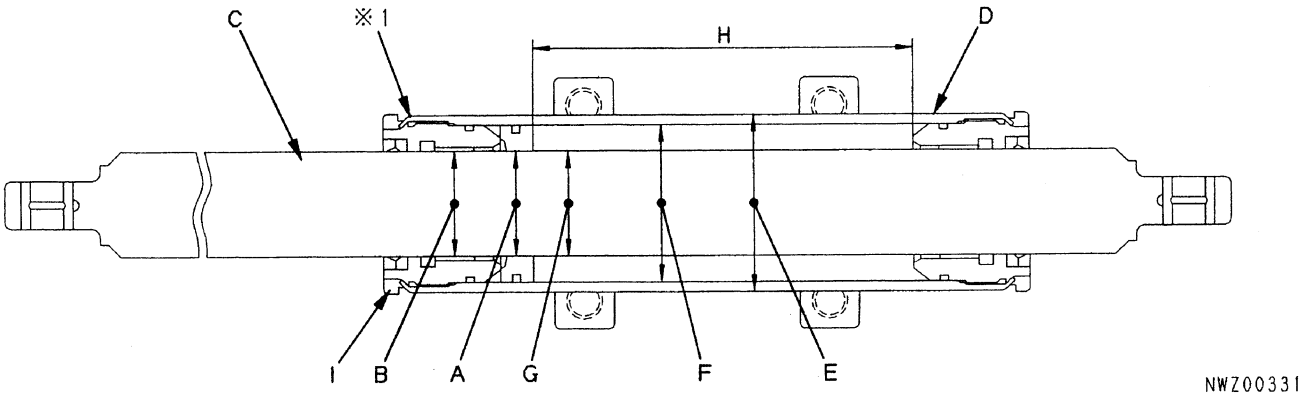

※1. Caulk it at two points on the circumference after tightening head (on both left and right).

Symbol	Check item	Criteria		Remedy
		Standard size (mm)	Repair limit (mm)	
A	Clearance between cylinder and piston	0.05 – 0.25	0.4	Replace
B	Clearance between piston rod and bushing	0.03 – 0.18	0.3	
C	Piston rod	Flaw, dent, streak or concave on claw		
D	Cylinder	Flaw, dent, streak or concave on claw		
E	Outside diameter of cylinder	85		—
F	Inside diameter of cylinder	75		
G	Outside diameter of piston rod	50		
H	Stroke	180		
I	Tightening torque for head	294 – 343 Nm {30 – 35 kgfm}		

https://truckmanualshub.com/

LIFT CYLINDER

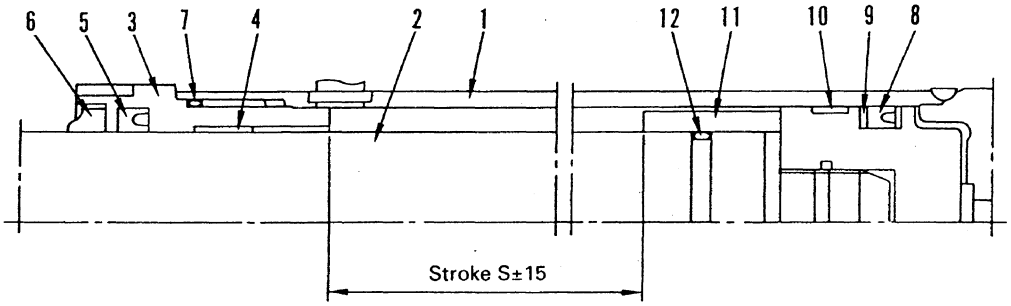

12	O-ring
11	Spacer
10	Bushing
9	Backup ring
8	U-ring
7	O-ring
6	Wiper ring
5	U-ring
4	Bushing
3	Cylinder head
2	Piston rod assembly
1	Cylinder tube assembly
No.	Part Name

Check item	Criteria		Remedy
	Standard size (mm)	Repair limit(mm)	
Clearance between piston rod and bushing	0.04 – 0.023	0.35	Replace bushing
Clearance between piston ring and cylinder	0.05 – 0.035	0.5	Replace piston ring

https://truckmanualshub.com/

TILT CYLINDER

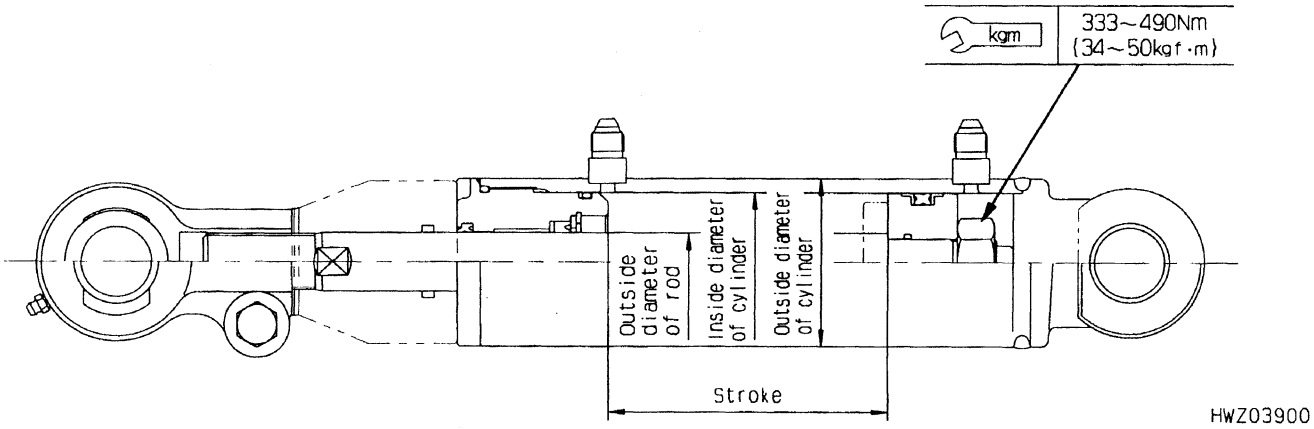

Check item	Criteria		Remedy
	Standard size (mm)	Repair limit(mm)	
Clearance between piston rod and bushing	0.05 – 0.187	0.3	Replace bushing
Clearance between rod head bushing and pin	0.10 – 0.35	0.6	

CONTROL VALVE

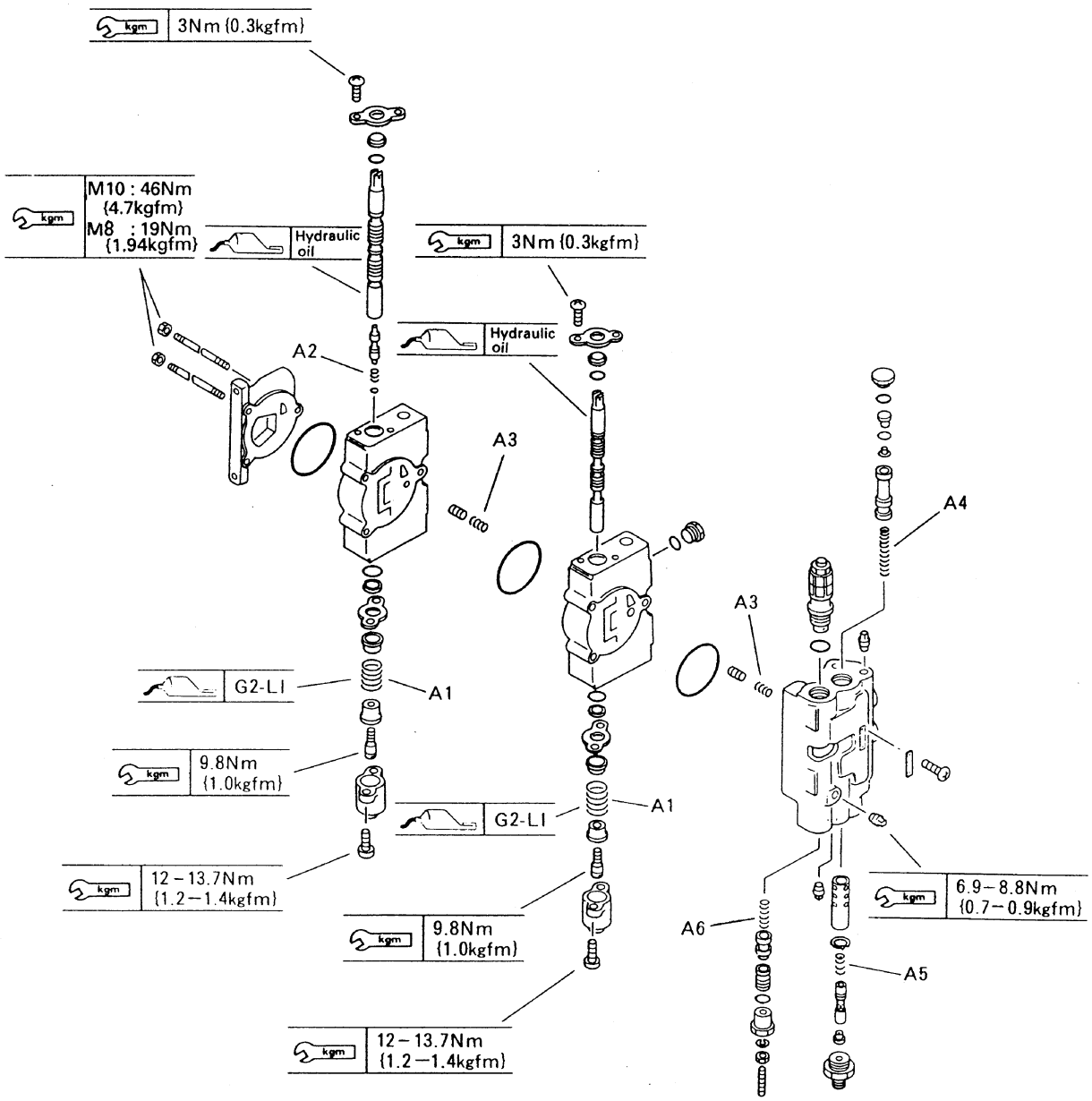

★ Wash all parts thoroughly, dry with compressed air to remove all detergent or dirt, then coat with hydraulic oil and assemble.

★ Do not use waste cloth to remove the detergent or dirt.

★ Use diesel oil or trichlene as the washing agent, and be extremely careful to keep away from fire.

★ Replace the seals, packings, and O-rings with new parts, coat with grease, and be careful not to damage when installing.

https://truckmanualshub.com/

Symbol	Check item			Criteria		Remedy
				Standard size (mm)	Repair limit(mm)	
A	Free length of spring	A1	Return spring	56.8	51	Replace
		A2	Tilt lock spring	26	23.5	
		A3	Check valve	25.4	23	
		A4	Flow divider	67.8	65	
		A5	Load sensing	24.4	22	
		A6	PS relief valve	33.4	31	
B	Spool and housing			Burrs, scratches		

https://truckmanualshub.com/

FORK CARRIAGE

Check item		Criteria		Remedy
		Standard size (mm)	Repair limit(mm)	
Clearance between outer mast and inner mast	Left-to-right	0.5 – 1.0	Within 2.5	Adjust shim
	Front-to-rear	0.2 – 0.7	Within 2.0	Replace
Clearance between inner mast and fork carriage	Left-to-right	0.5 – 1.0	Within 2.5	Adjust shim
	Front-to-rear	0.2 – 0.7	Within 2.0	Replace
Bushing oil groove at mast support portion		There is oil groove	Oil groove cannot be seen clearly	
Thickness of fork (root of fork)	2-ton truck	36	Min. 32.5	
	2.5-ton truck	40	Min. 36	
	3-ton truck	44	Min. 39.5	

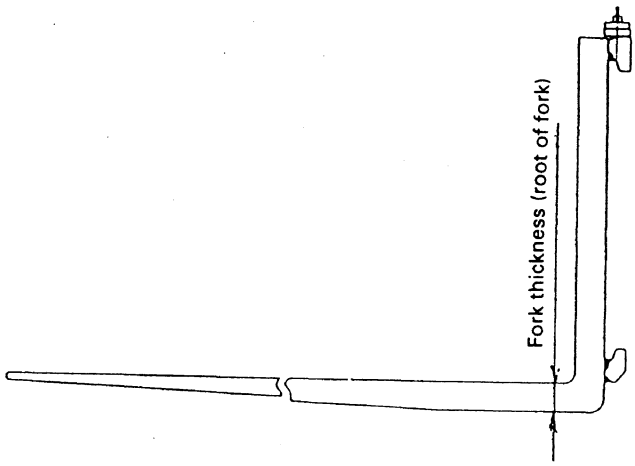

https://truckmanualshub.com/

CLUTCH RELEASE CYLINDER

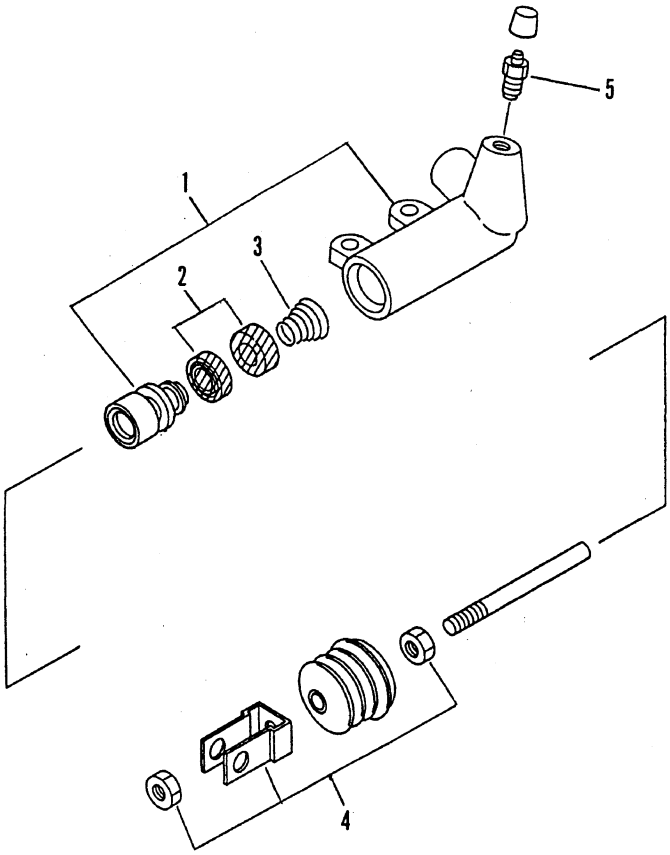

No.	Check item	Standard value	Limit	Remedy
1	Clearance between cylinder and piston	0.020 – 0.105 mm	0.15 mm	Replace (clinder assembly)
2	Interference of cup	Primary side: Approx. 2 mm Secondary side: Approx. 0.6 mm	0.4 mm	Replace (piston assembly)
3	Free length of spring	43 mm	38 mm	Replace
4	Tightening torque of yoke and locknut	7.8 – 11.8 Nm {80 – 120 kgfcm}	—	—
5	Tightening torque for bleeder valve	6.8 – 8.8 Nm {70 – 90 kgfcm}	—	—

https://truckmanualshub.com/

CLUTCH TRANSMISSION

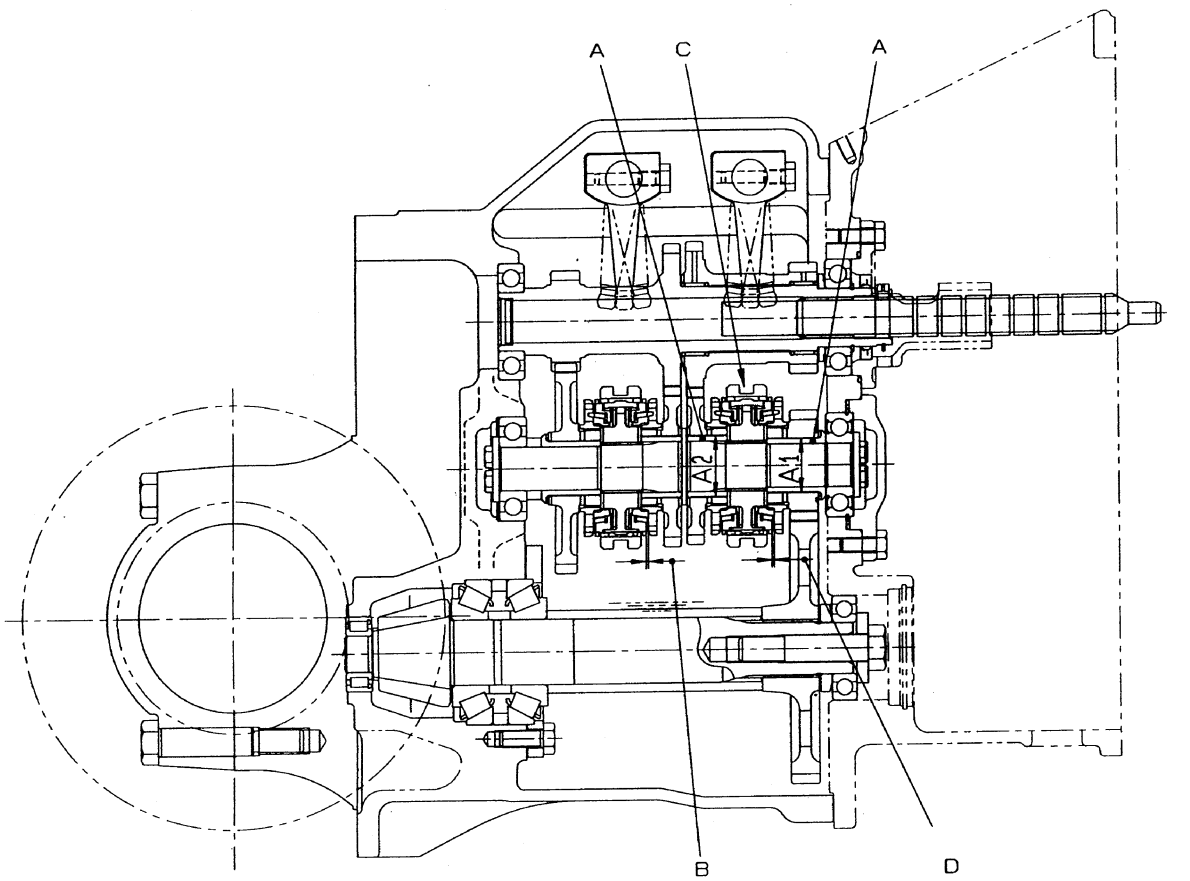

HAZ00085

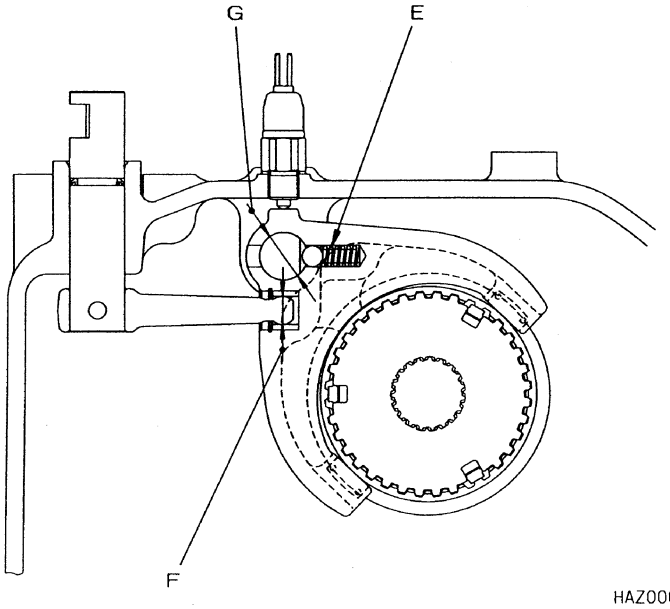

HAZ00086

https://truckmanualshub.com/

Symbol	Check item			Criteria: Standard size (mm)	Criteria: Repair limit (mm)	Remedy
A	Outside diameter of bushing		A1	38	37.8	Replace
			A2	43	42.8	
B	Clearance between balk ring and H, L gear (*1)			1.2 – 1.8	0.8	Replace as assembly *1
C	Clearance between shifter yoke and sleeve gear (*2)			0.04 – 0.39	1.0	Replace *2
D	Clearance between balk ring and F, R gear			1.2 – 1.8	0.8	Replace
E	Deterioration of spring (free length)			21.0	18	
F	Outside diameter of tip of shift lever			13	12.5	
G	Inside diameter of shifter yoke mount			22	22.1	
—	Gears	Backlash		0.08 – 0.28	—	
		Clearance in thrust direction		0.15 – 0.35	—	
—	Tooth surface			• Damage • Excessive wear, defective tooth contact		
—	Bearing			• Seizure, wear • Abnormal noise, defective rotation		
—	Gasket O-ring Seals			—		Replace with new parts during disassembly and assembly

*1: Dimension when balk ring is moved to outside
*2: Dimension when shifter yoke is pushed fully in either direction

https://truckmanualshub.com/

https://truckmanualshub.com/

50. STRUCTURE AND FUNCTION

Torque converter, gear pump and
transmission control valve 50- 2
Control valve 50-13
Hydraulic circuit drawing 50-16
Electrical circuit diagram 50-17
Mast assembly drawing 50-20
Fork carriage assembly drawing 50-22

TORQUE CONVERTER, GEAR PUMP AND TRANSMISSION CONTROL VALVE

1. Outline

1-1. Torque converter

For special large lift trucks
Size: 265 mm (10.5 in)
Type: 3 element, 1 stage, 2 phase (with 1-way clutch)

1-2. Gear pump

Capacity: Theoretical discharge 15.93 cc/rev

Actual discharge

Speed (rpm)	Actual discharge (ℓ/min)
600	Min. 5
2500	Min. 30

Discharge pressure: 1.2 MPa (12 kgf/cm^2)
Oil temperature: 65 ± 5°C

Type: Internal contact gear pump

1-3. Control valve
Speed range: Forward 1, Reverse 1, solenoid valve selection
Inching: Mechanical inching

2. Precautions when using

- Be careful not to let dirt or dust get into the oil circuit hole on the transmission mounting side.
- Before assembling, check that all bolts and plugs are properly assembled.
- Assemble securely to the transmission and engine.
- When assembling to the engine, align the boss at the tip of the torque converter with the center of the flywheel, and insert slowly.
- After assembling, fill with the initial amount of oil, then rotate the torque converter for approx. 1 minute, and check the oil level with the transmission oil gauge.

https://truckmanualshub.com/

3. Structure

3-1. Torque converter assembly

The structure of the torque converter assembly is as shown in the cross-sectional drawing on the following page. The elements can be broadly divided into following.

1) Torque converter
2) Gear pump
3) Housing
4) Drive coupling (input plate, turbine shaft)

1) Torque converter

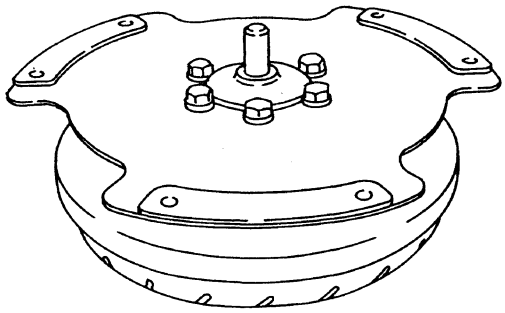

The torque converter is a 3-element, 1-stage, 2-phase type consisting of the following components.

a. Impeller
   Connected with input plate
b. Stator
   Fixed to housing by 1-way clutch
c. Turbine
   Connected to turbine shaft

https://truckmanualshub.com/

Torque converter assembly cross-sectional drawing

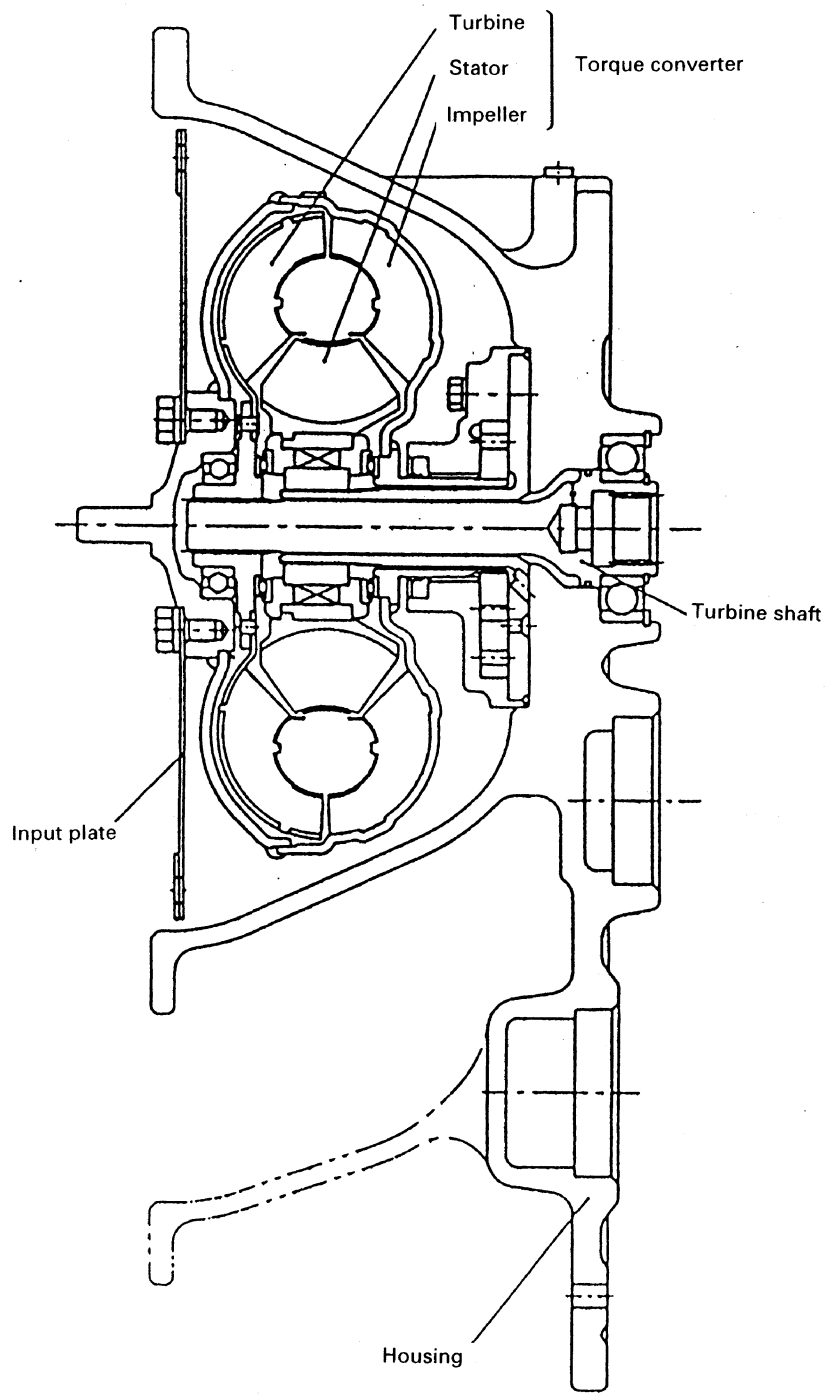

https://truckmanualshub.com/

2) Gear pump

This is an internal contact gear pump driven by the width across flats of the impeller hub tip. It supplies oil to the transmission and torque converter.

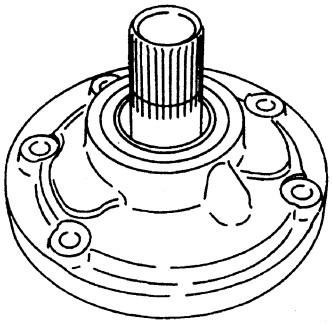

3) Housing

A torque converter inlet port relief valve is built into the housing to restrict the rise in pressure inside the torque converter.

4) Drive coupling

a. Input plate
The outside diameter is connected to the flywheel at the engine end and the inside circumference is connected to the torque converter impeller to transmit the engine torque to the torque converter.

b. Turbine shaft
One end is connected to the torque converter turbine and the other end is connected to the transmission input to transmit the torque converter output torque to the transmission.

3-2. Control valve assembly

The transmission has one forward and one reverse speed range, and switching is carried out by a solenoid valve. An inching mechanism is installed to release the hydraulic clutch when stopping the lift truck, and a modulation mechanism is installed to relieve the impact when starting the truck off or shifting speed.

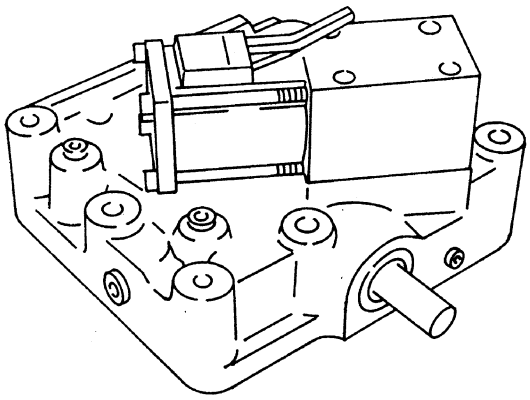

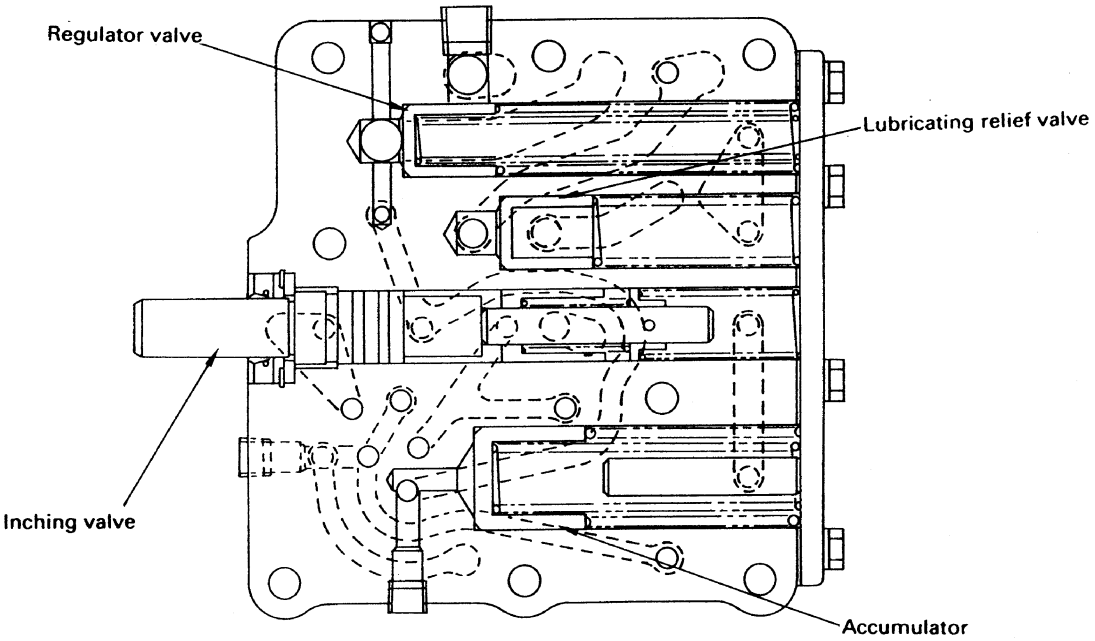

Control valve assembly cross-sectional drawing

4. Path of power transmission

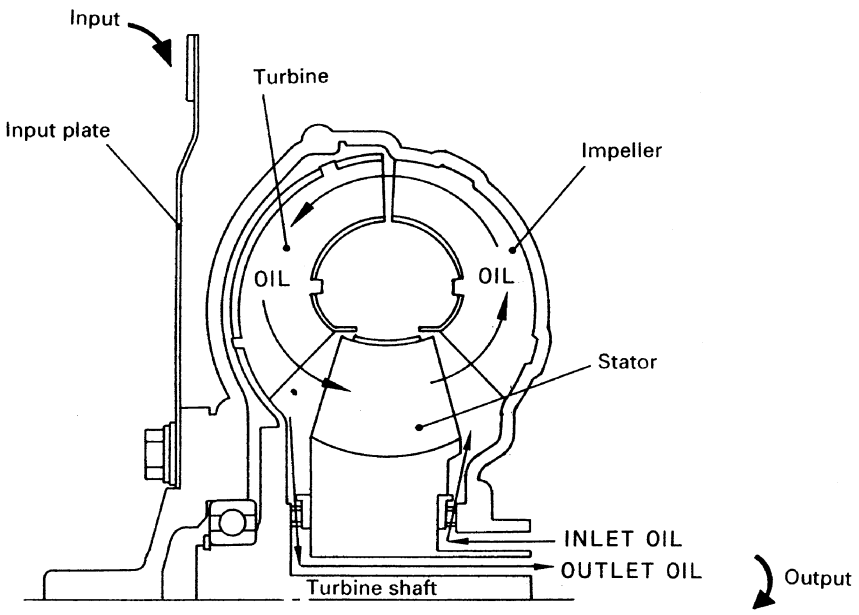

1) The rotation from the engine is transmitted to the impeller through the input plate.
   Centrifugal force is applied to the oil inside the impeller, and it is pushed out along the vanes of the impeller.

2) The oil pushed out from the impeller contacts the row of vanes of the turbine. The force produced when this happens passes through the turbine shaft and is output.

3) The direction of the oil coming out from the turbine is changed by the stator so that it flows again at the desired angle to the row of vanes on the impeller.

By repeating the above Steps 1 to 3, the engine power is transmitted to the transmission.

The gear pump is driven by the width across flats of the impeller hub tip, and always rotates in the same direction as the engine.

5. Circulation of pressure oil

1) When the engine is started, the gear pump is driven by the width across flats of the impeller hub tip in the torque converter. The oil inside the transmission passes through the strainer, enters the gear pump, and is supplied under pressure.

2) The oil coming out from the gear pump is adjusted to the clutch pressure by the regulator valve inside the control valve. It then passes through a throttle and fills the accumulator.

3) When the circuit is switched to FORWARD or REVERSE by the solenoid valve, the accumulator is released and the oil inside the accumulator is supplied to the hydraulic clutch circuit.

4) After the clutch is actuated, the oil in the hydraulic circuit gradually fills the accumulator and flows to the clutch, so the pressure inside the clutch gradually rises and enables the power to be transmitted smoothly.

5) There is a torque converter inlet port relief valve at the torque converter inlet port, and this acts to restrict the rise in pressure inside the torque converter to a maximum of 6.9 MPa (7 kgf/cm^2).

6) The oil coming out from the oil cooler is sent inside the transmission by the lubrication relief valve inside the control valve to prevent the pressure inside the lubricating circuit from rising above 0.44 MPa (4.5 kgf/cm^2).

7) The oil cooled by the oil cooler lubricates various parts of the system, and is then cooled and returned to the inside of the transmission case.

The following pages show the hydraulic circuit diagram and the position of each port.

HYDRAULIC CIRCUIT DIAGRAM

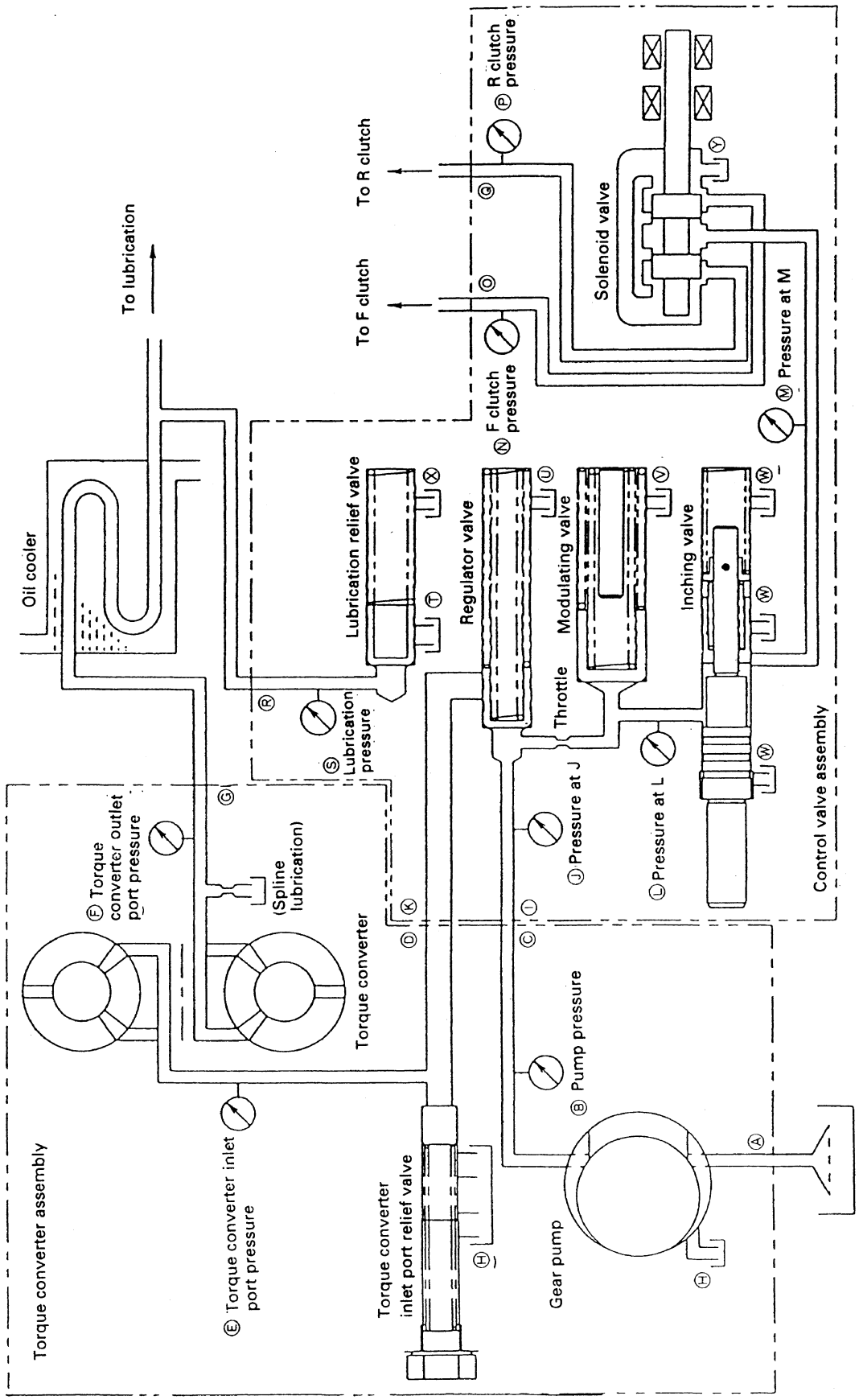

https://truckmanualshub.com

Position of hydraulic ports in torque converter assembly

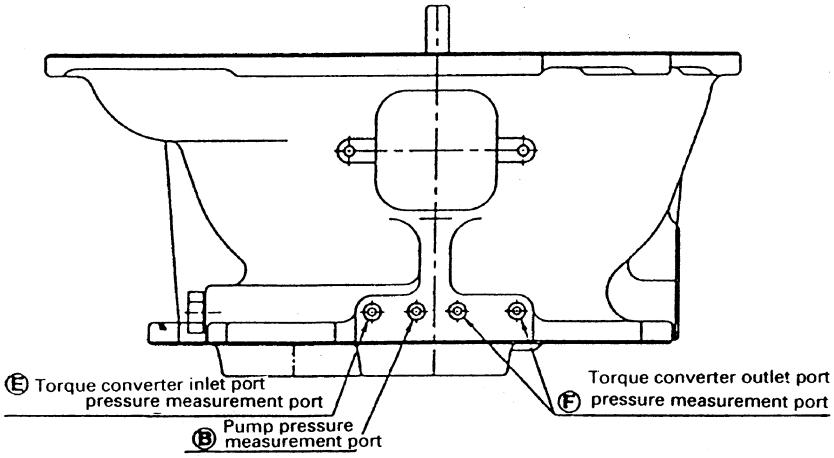

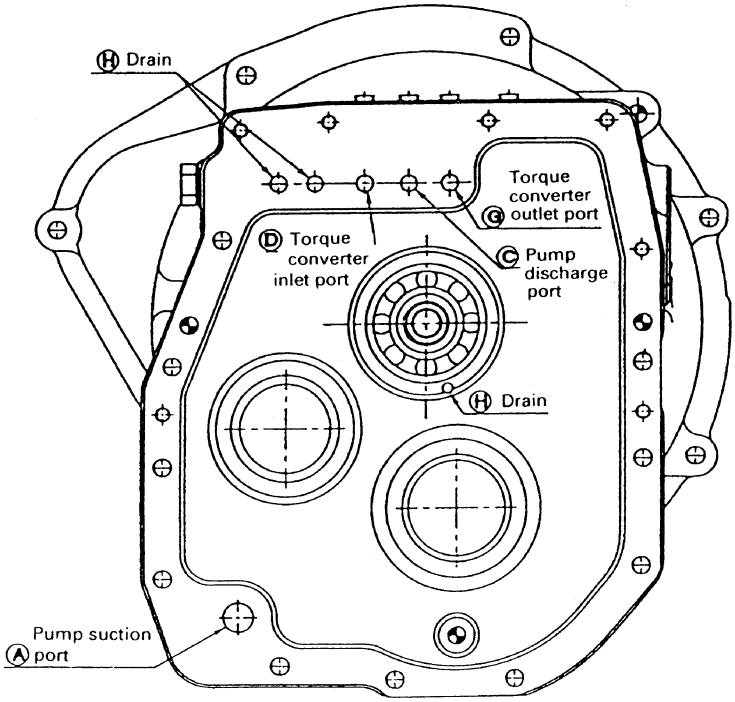

https://truckmanualshub.com/

Position of hydraulic ports in control valve assembly

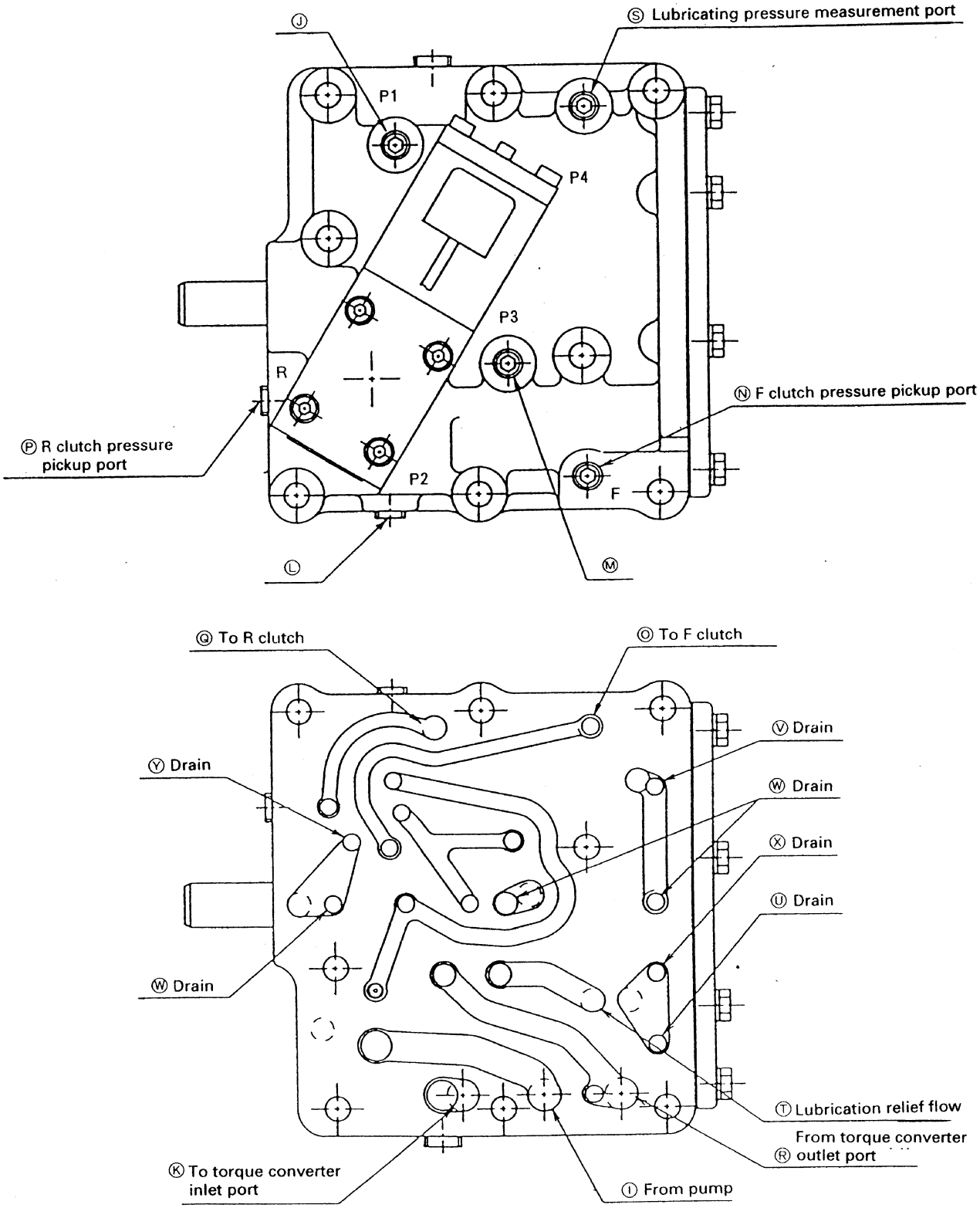

Position of hydraulic ports of control valve assembly

https://truckmanualshub.com/

https://truckmanualshub.com/

CONTROL VALVE

INCREASED COMPLEXITY

The control valve contains the lift valve, tilt valve, and main relief valve, and in addition, it also has a built-in power steering relief valve, flow divider with power steering load sensing valve, and engine stall prevention valve.

Load sensing valve
When the steering wheel is not being turned, the power steering load sensing valve acts to send most of the oil in the power steering circuit to the work equipment. This makes it possible to increase the work equipment lifting speed and increase the operating efficiency.

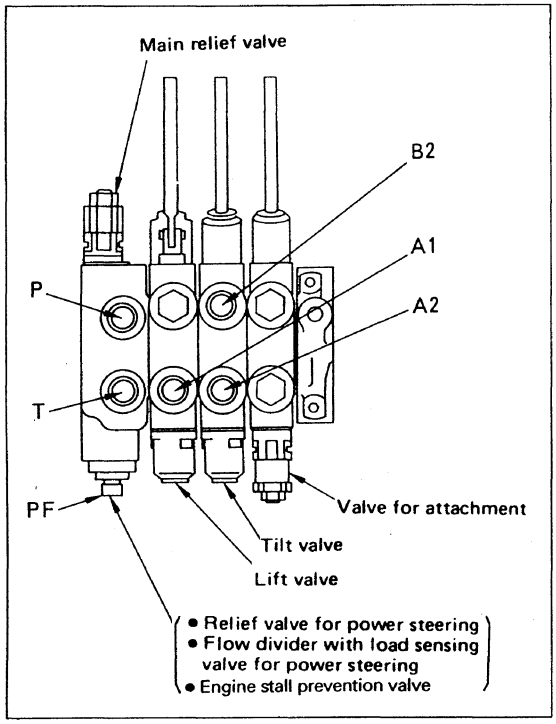

PRINCIPLE OF OPERATION OF LOAD SENSING VALVE

- **When steering wheel is not being turned**
  As shown in the diagram on the right, the flow divider is balanced by the differential pressure on both sides of drill hole **a**, and a small amount of hydraulic oil passes through **a** and enters the power steering valve. The remaining majority of the hydraulic oil enters the control valve and operates the work equipment.

- **When steering wheel is turned**
  When the steering wheel is turned, the pressure from the power steering valve pushes the load sensing valve up, drill hole b opens. The flow divider is balanced by the differential pressure on both sides of drill holes **a** and **b**, so the downward movement of the flow divider is reduced. As a result, the flow of oil to the control valve is throttled, and the flow of hydraulic oil needed for the power steering goes to the power steering valve.

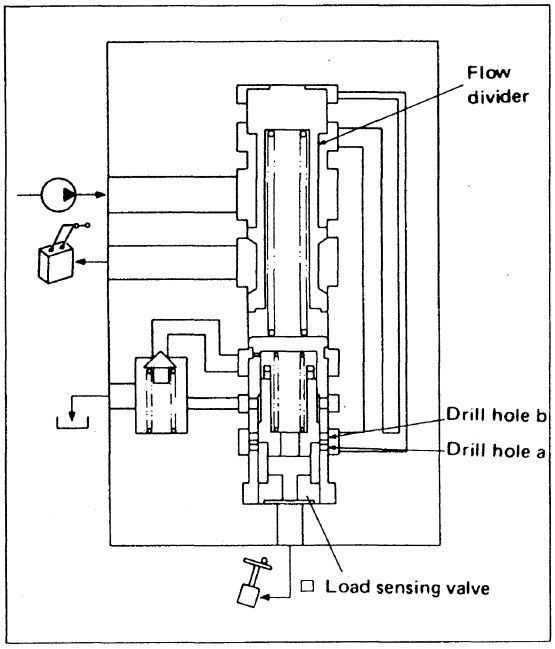

ENGINE STALL PREVENTION VALVE

The engine stall prevention valve is built into the control valve inlet port to improve the ease of operation when attachments are installed.

1. Structure of engine stall prevention valve

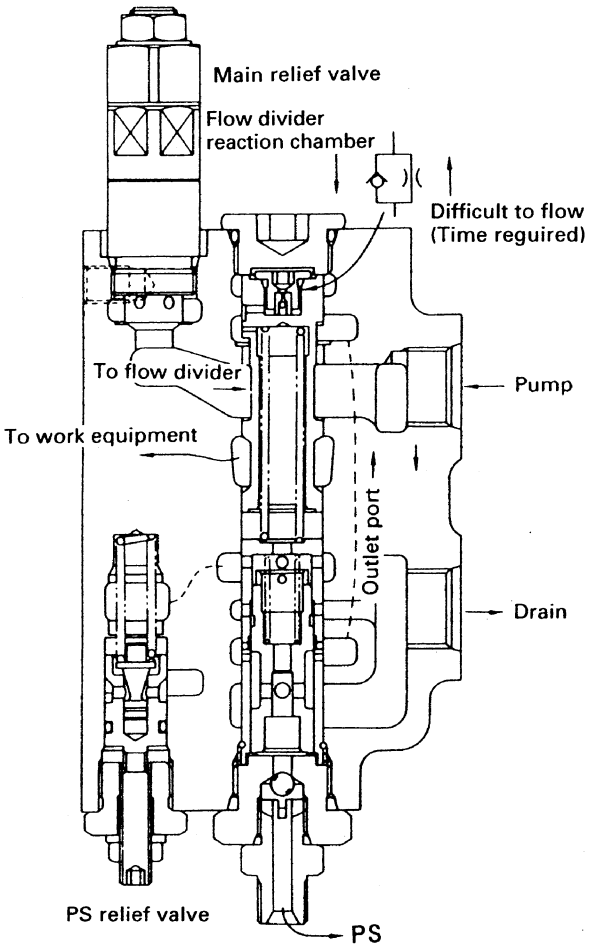

2. Function

When pressure is applied to the work equipment, the flow divider increases the size of the opening of the port to the work equipment which is under pressure. However, the response of the valve is delayed, and the amount of oil is not immediately sufficient, so the generation of the peak pressure is delayed, and this prevents the engine from stalling.

Pressure wave when the engine stop preventive valve is installed

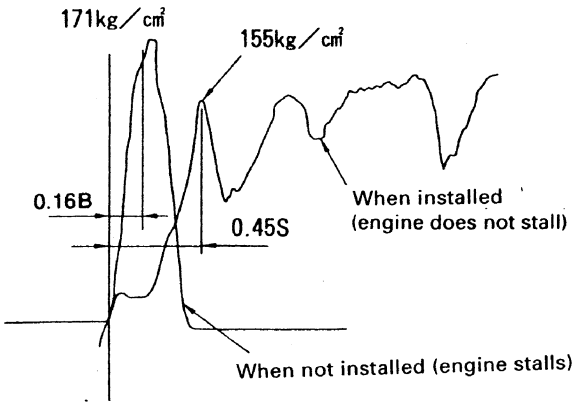

https://truckmanualshub.com/

CONTROL VALVE ASSEMLY DRAWING

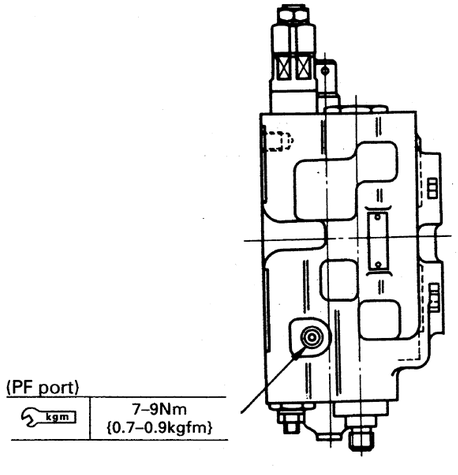

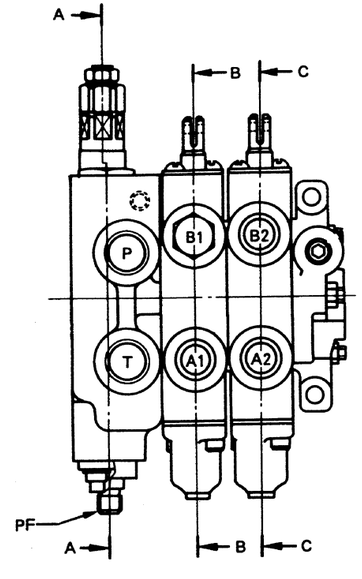

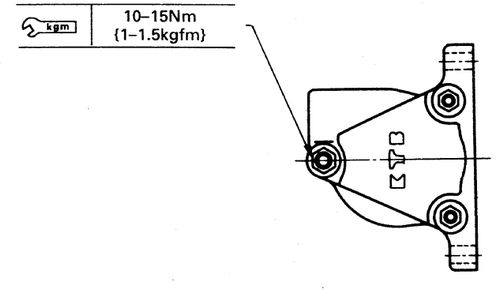

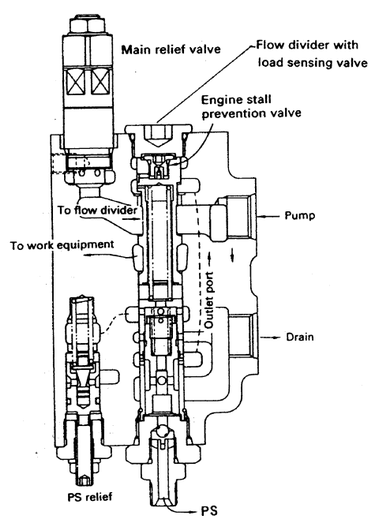

Section A–A

Main relief valve
Flow divider (with load sensing valve)
Power steering relief valve
Engine stall prevention valve

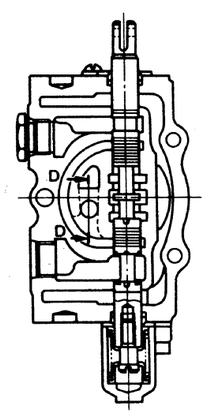

Section B–B

(Lift valve)

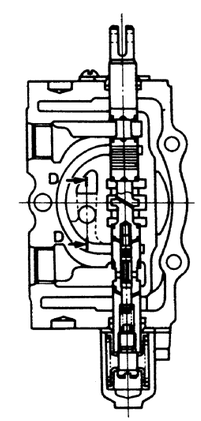

Section C–C

(Tilt valve)

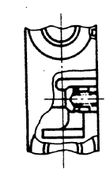

Section D–D

https://truckmanualshub.com/

HYDRAULIC CIRCUIT DRAWING

1. Standard type (except high-output diesel engine lift truck)

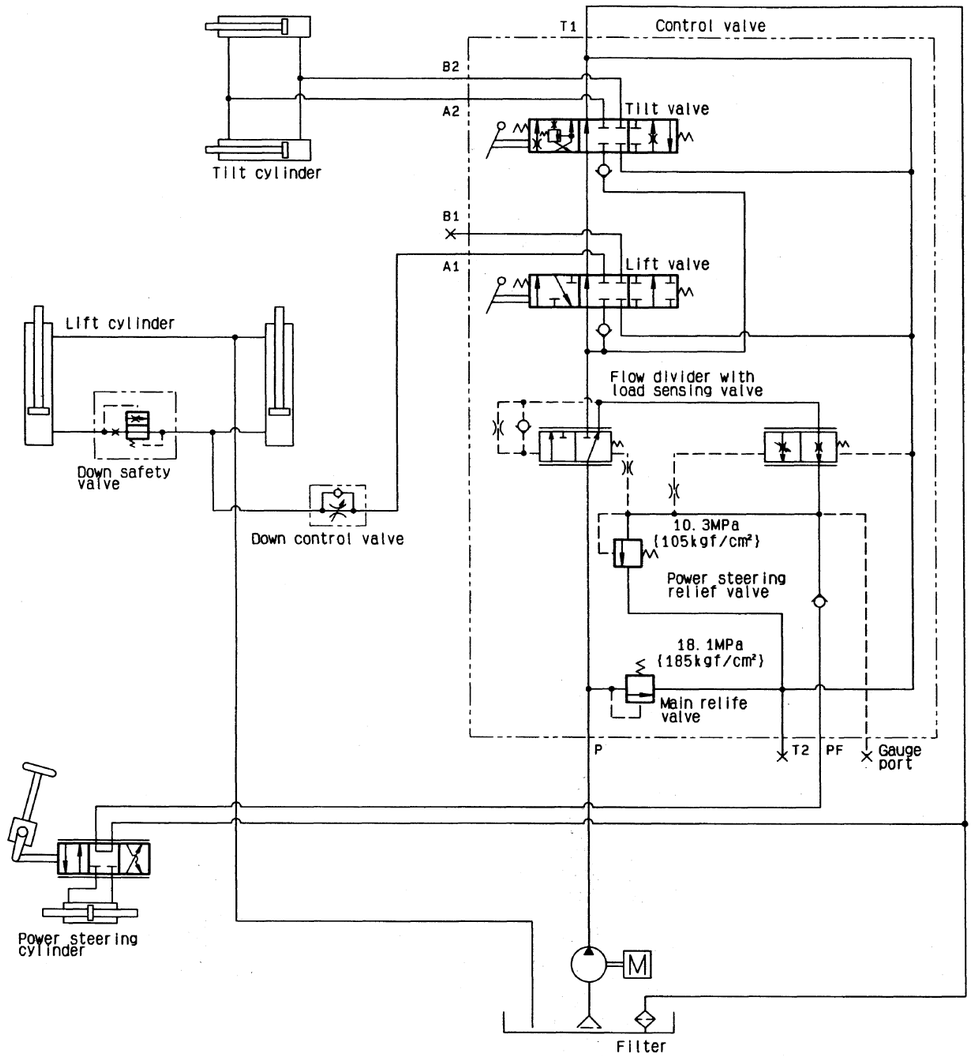

HWZ03901

2. High-output diesel engine lift truck (FD20H/25H/30H)

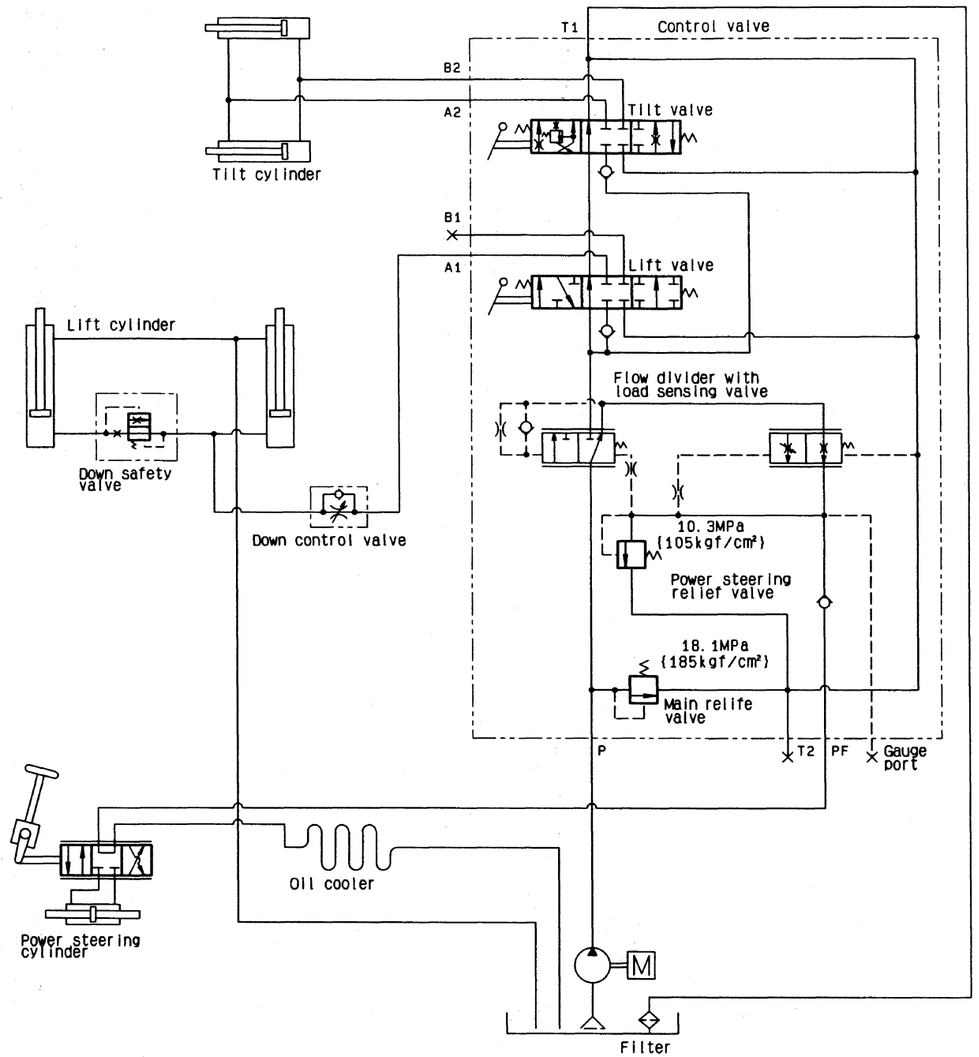

HWZ03902

https://truckmanualshub.com/

ELECTRICAL CIRCUIT DIAGRAM

1. H20II/H25 gasoline engine lift truck

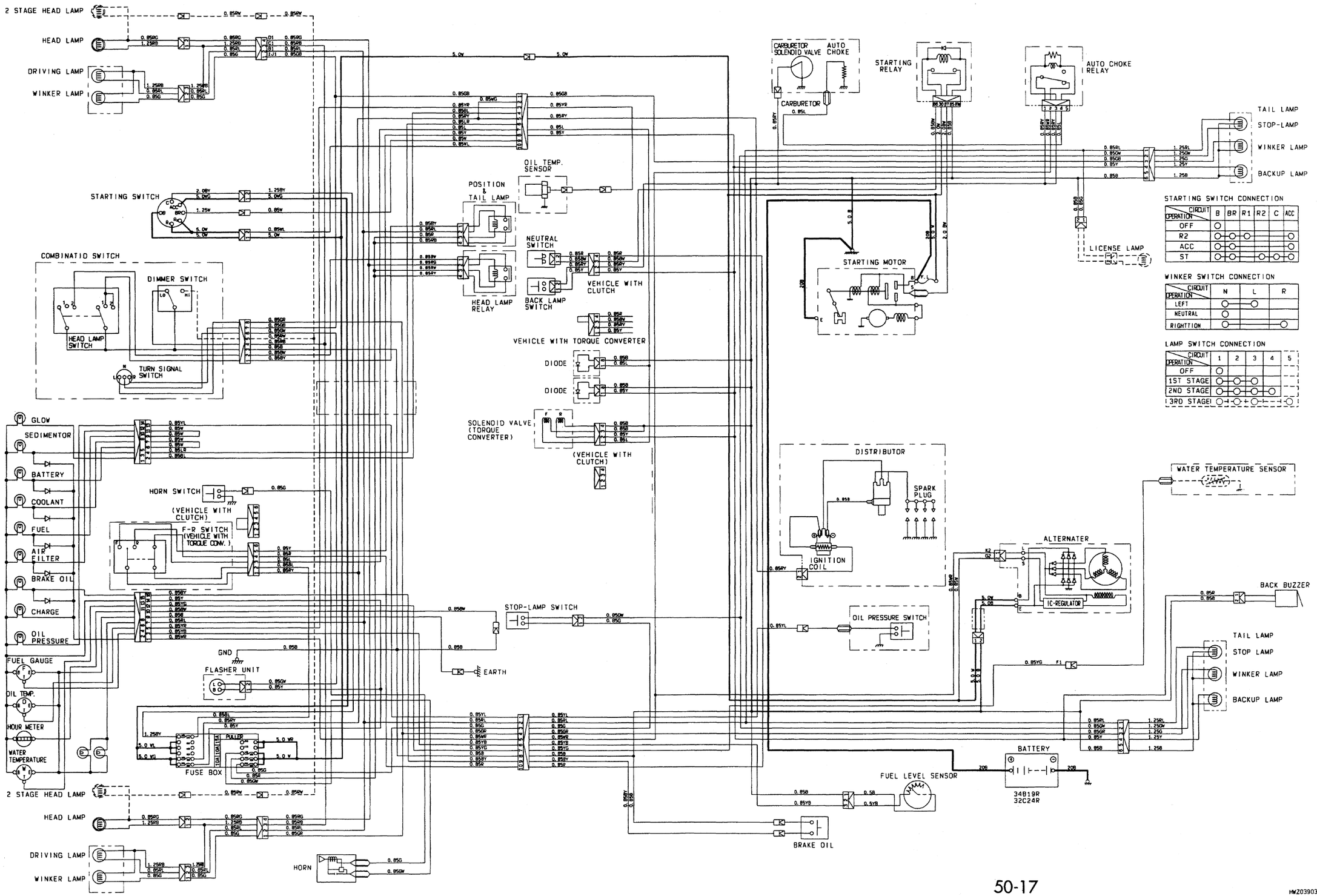

STARTING SWITCH CONNECTION

CIRCUIT / OPERATION	B	BR	R1	R2	C	ACC
OFF	○					
R2	○	○	○			○
ACC	○	○				○
ST	○	○		○	○	○

WINKER SWITCH CONNECTION

CIRCUIT / OPERATION	N	L	R
LEFT	○	○	
NEUTRAL	○		
RIGHTTION	○		○

LAMP SWITCH CONNECTION

CIRCUIT / OPERATION	1	2	3	4	5
OFF	○				
1ST STAGE	○	○	○		
2ND STAGE	○	○	○	○	
3RD STAGE	○	○	○	○	○

HW203903

https://truckmanualshub.com/

2. C240 diesel engine lift truck

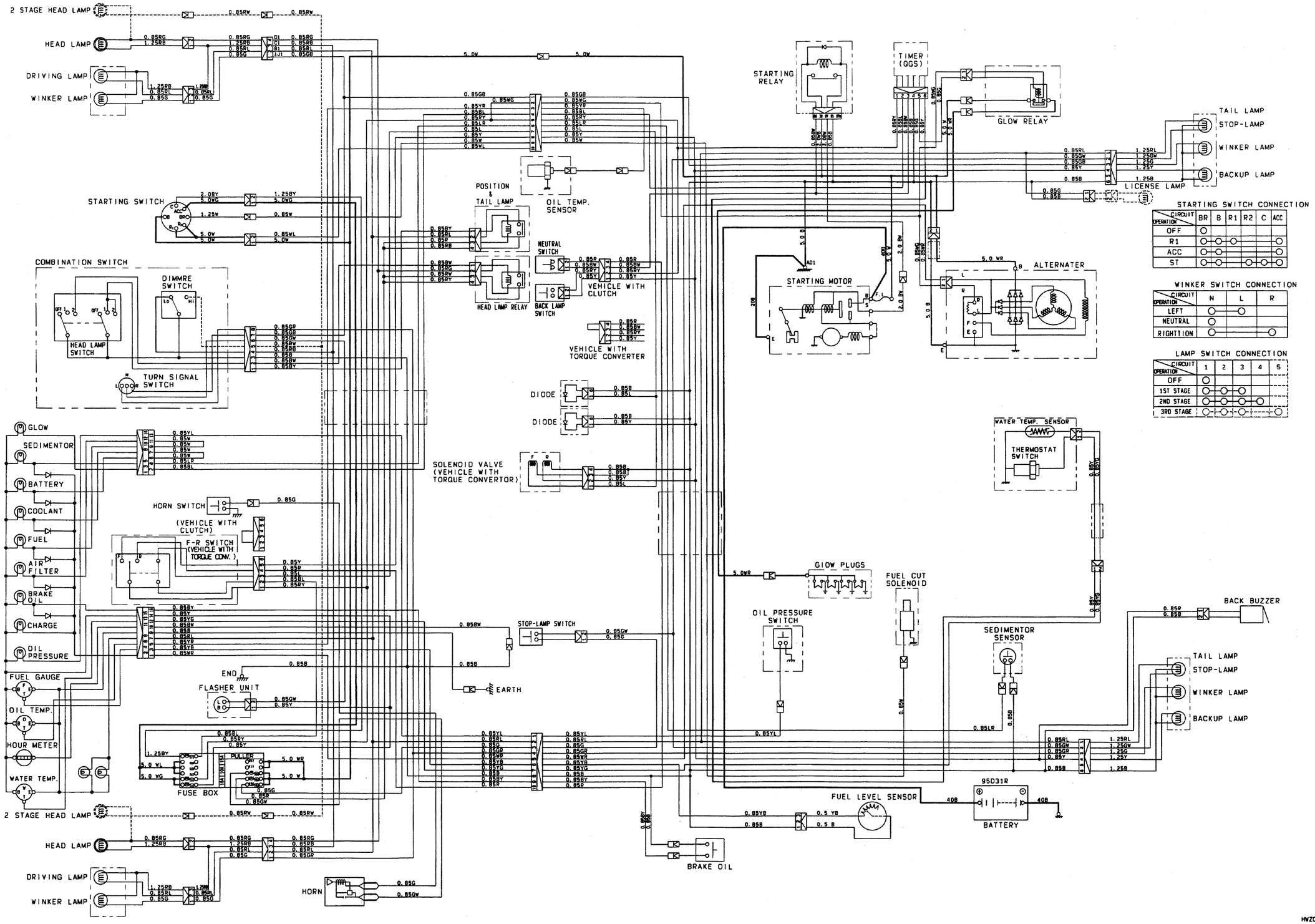

https://truckmanualshub.com/

3. 4D94E, 4D98E diesel engine lift truck

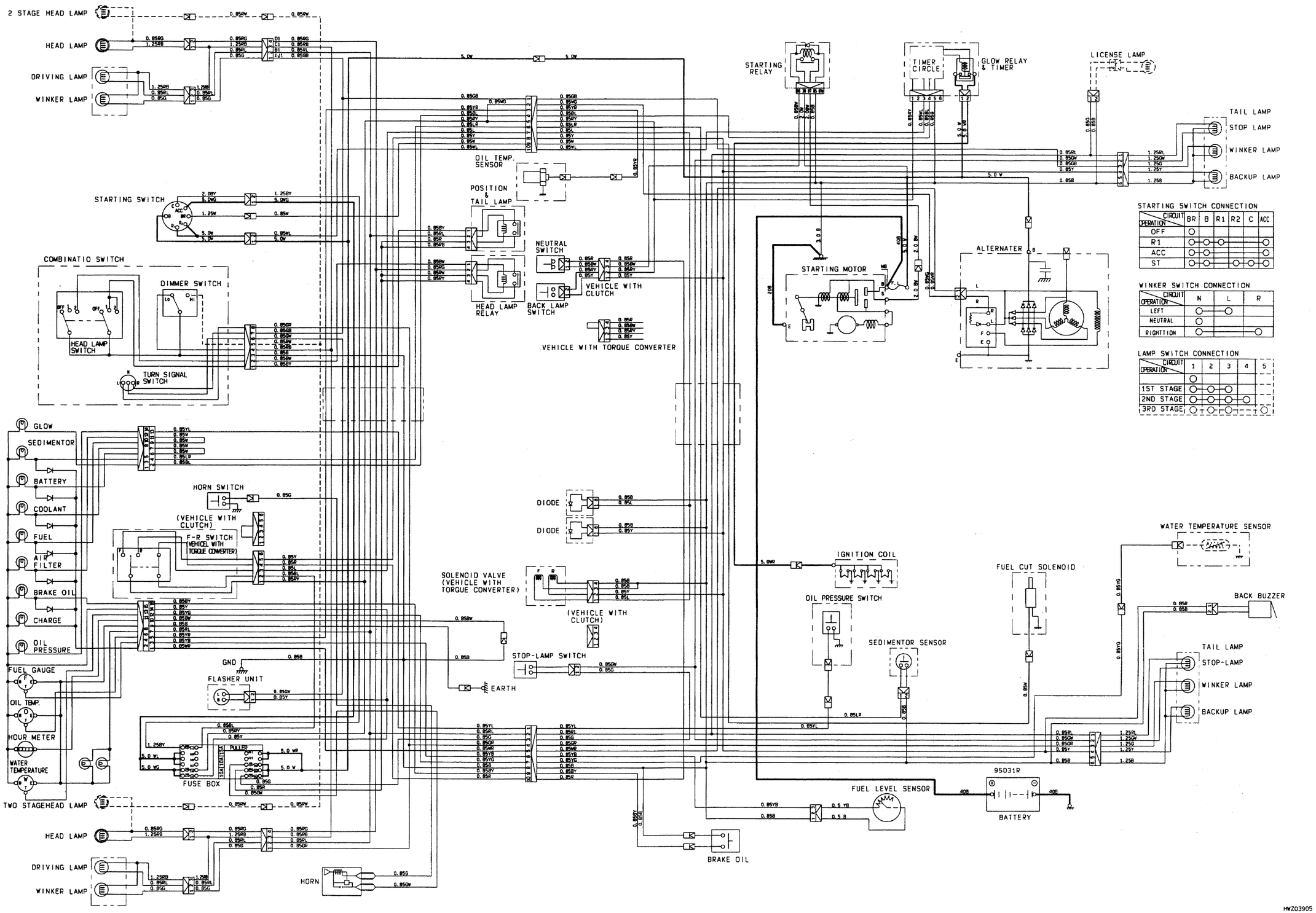

STARTING SWITCH CONNECTION

CIRCUIT / OPERATION	BR	B	R1	R2	C	ACC
OFF	○					
R1	○	○	○			○
ACC	○	○				○
ST	○	○		○	○	○

WINKER SWITCH CONNECTION

CIRCUIT / OPERATION	N	L	R
LEFT	○	○	
NEUTRAL	○		
RIGHTTION	○		○

LAMP SWITCH CONNECTION

CIRCUIT / OPERATION	1	2	3	4	5
	○				
1ST STAGE	○	○	○		
2ND STAGE	○	○	○	○	
3RD STAGE	○	○	○	○	○

https://truckmanualshub.com/

MAST ASSEMBLY DRAWING

1. 2.0/2.5 ton lift truck

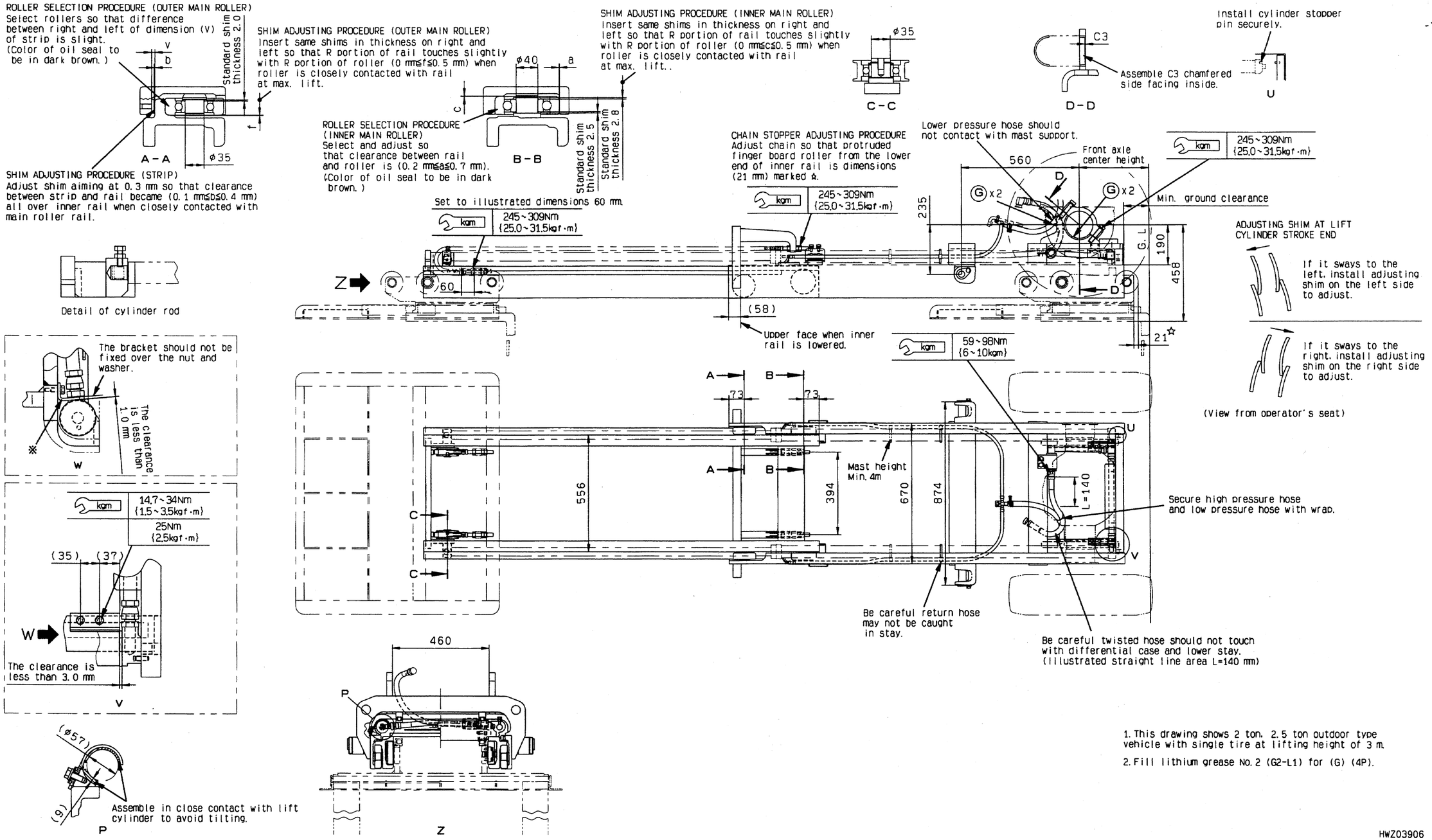

1. This drawing shows 2 ton, 2.5 ton outdoor type vehicle with single tire at lifting height of 3 m.
2. Fill lithium grease No.2 (G2-L1) for (G) (4P).

HWZ03906

https://truckmanualshub.com/

2. 2.8/3.0 ton lift truck

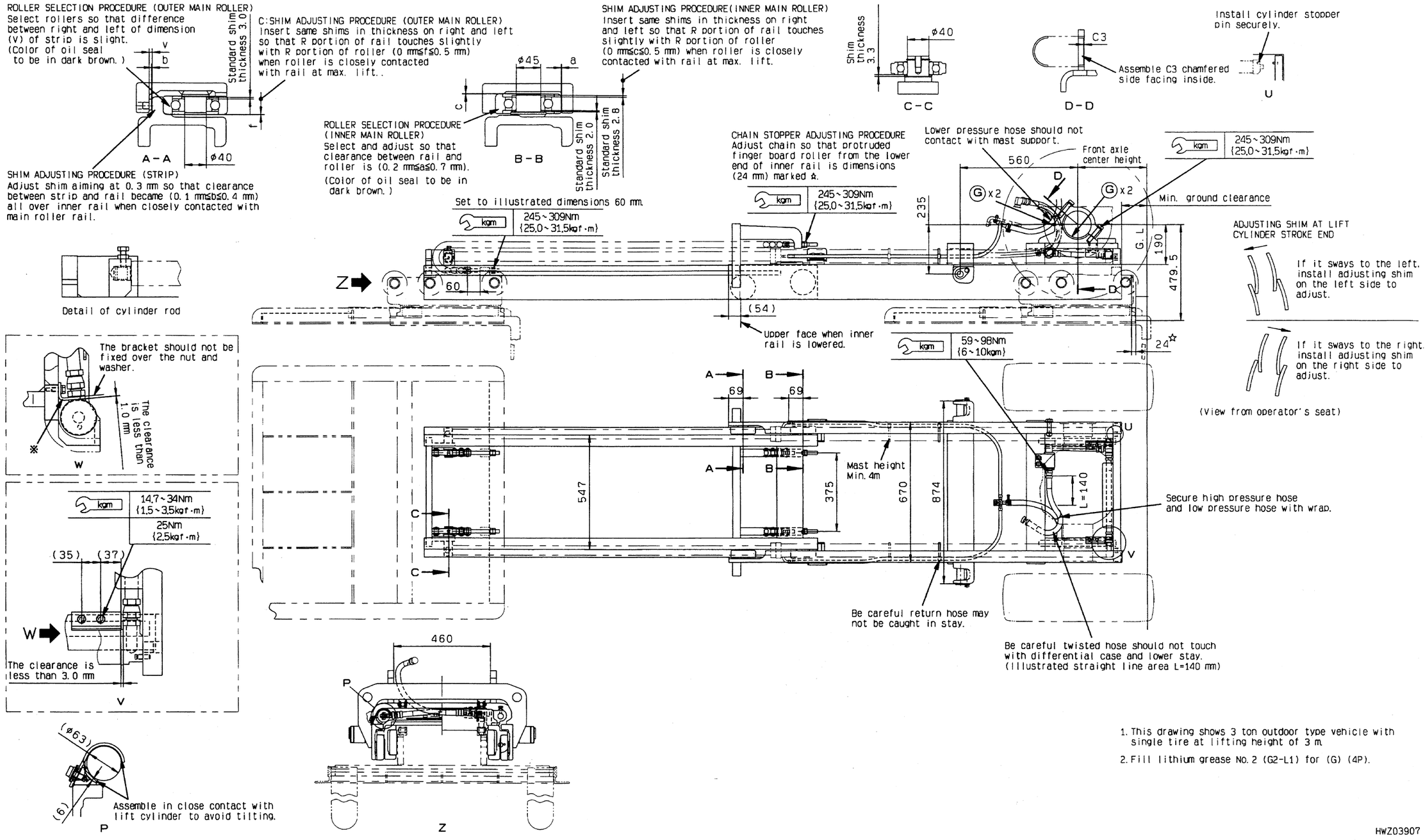

https://truckmanualshub.com/

FORK CARRIAGE ASSEMBLY DRAWING

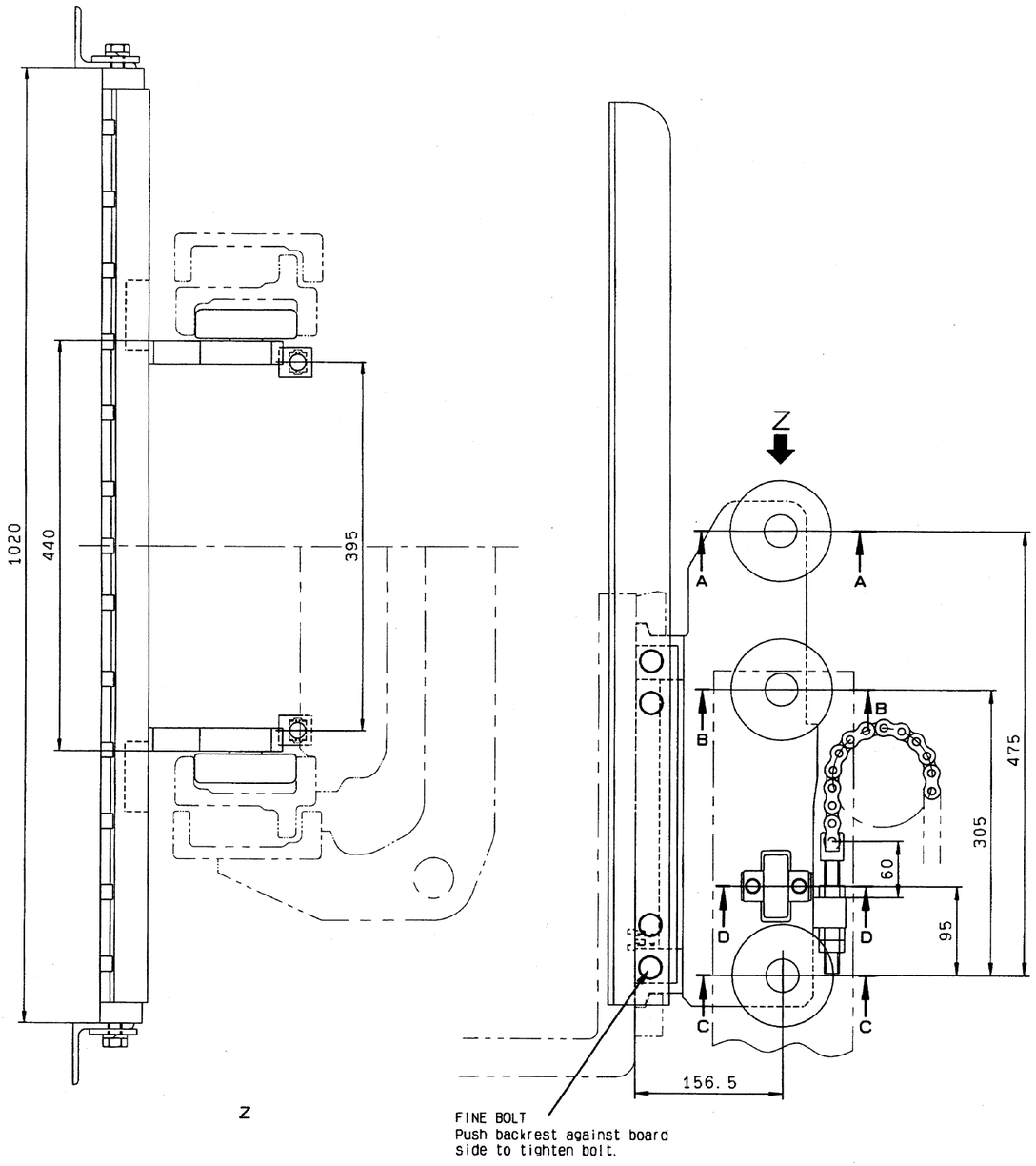

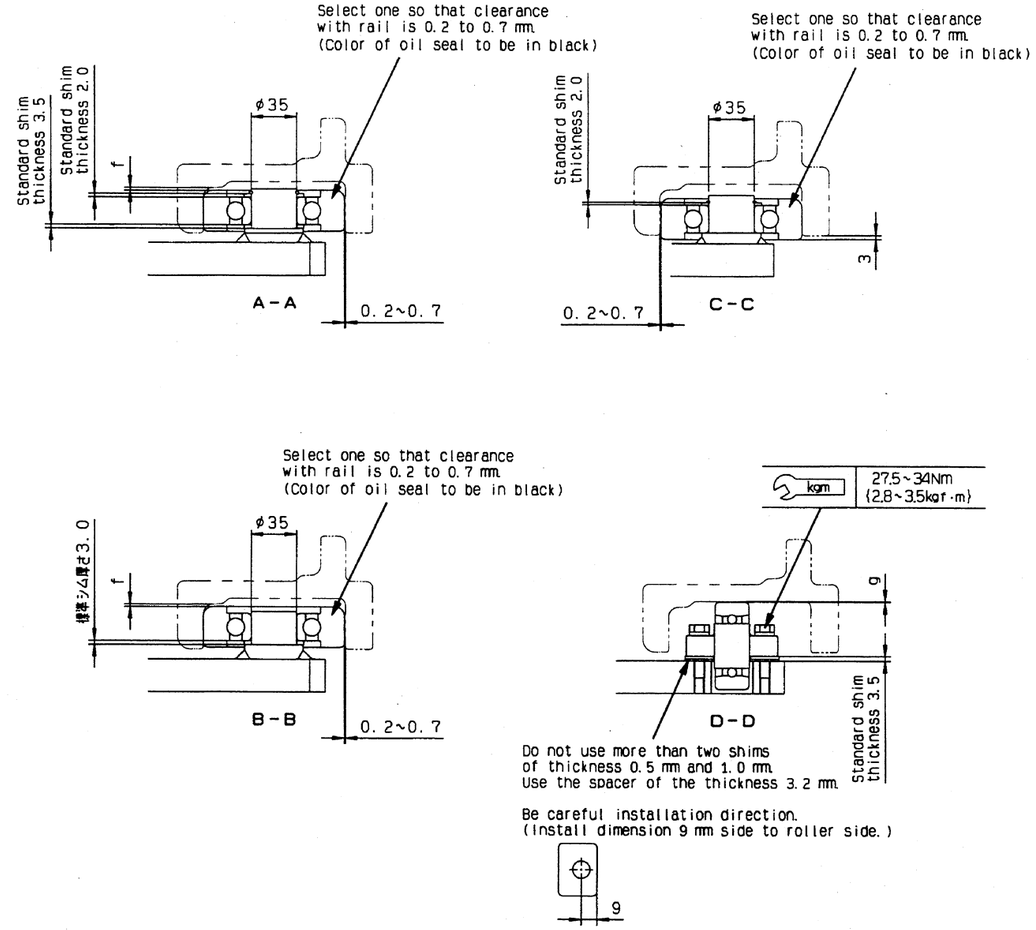

SHIM ADJUSTING PROCEDURE
Use shims of the same thickness on right and left to adjust so that rail contacts slightly with roller (0 mm≤f≤0.1 mm).
(When finger board is at the uppermost end.)

SIDE ROLLER ADJUSTING PROCEDURE
Adjust so that clearance 9 mm between roller and rail is (0 mm≤9 mm≤0.2 mm).
(When finger board is at the uppermost end.)

1. This drawing applies to finger board for 2 ton to 2.5 ton outdoor type vehicles.

HWZ03908

https://truckmanualshub.com/

60. TROUBLESHOOTING

4D94E, 4D98E diesel engine 60- 2
Torque converter 60- 7
Transmission control valve 60-12

4D94E, 4D98E DIESEL ENGINE

If any abnormal phenomenon appears, taking the necessary action before the problem develops into a serious failure is important in ensuring the service life of the engine.

See the "Troubleshooting chart" and "Troubleshooting using compression pressure" and take the necessary action.

https://truckmanualshub.com/

https://truckmanualshub.com/

1. Troubleshooting chart

The chart below shows common problems and abnormalities and their probable causes.

	Abnormality / Cause	Defective starting				Lack of engine output			Defective exhaust gas color		Excessive knocking during combustion	Abnormal noise from engine	Variation in combustion noise	Hunting		Excessive vibration of engine	Poor return to low speed	Excessive fuel consumption	Lubricating oil				Excessive blowby	Coolant		Air supply		Exhaust temperature rises	Remedy
		Engine does not start	Engine starts but then stops: Exhaust gas: None	Little	Large amount	Exhaust gas color: Normal	White	Black	When operating: White	Black				When idling	When operating				Excessive consumption	Dilution of oil by fuel	Water in oil	Low oil pressure		Overheats	Low water temperature	Pressure drops	Pressure rises		
Engine system	Defective intake, exhaust valve clearance	○	○			○						○														○		○	Adjust valve clearance
Engine system	Leakage of compression from valve seat					○		○		○		○						○					○			○		○	Grind valve seat
Engine system	Seizure of intake, exhaust valve	○			○	○		○		○					○	○				○			○			○			Correct or replace
Engine system	Blow-out from head gasket					○															○			○					Replace gasket
Engine system	Piston ring stuck or broken	○			○		○		○			○		○		○			○	○			○	○				○	Replace piston ring
Engine system	Wear of piston ring, piston, cylinder	○			○		○		○										○	○			○						Carry out honing or use oversize part
Engine system	Seizure of crankshaft pin bearing, shaft bearing	○	○									○		○	○	○							○						Repair or replace
Engine system	Defective positioning of piston ring end gap		○				○												○				○						Correct position of end gap
Engine system	Reverse assembly of piston ring						○		○										○				○						Correct assembly
Engine system	Wear of crankshaft pin and journal bearing					○						○		○	○	○						○							Measure and replace
Engine system	Loose connecting rod bolt											○				○						○							Tighten to specified torque
Engine system	Foreign substance in combustion chamber	○										○							○				○						Disassemble and repair
Engine system	Excessive gear backlash											○																	Adjust meshing of gear
Engine system	Wear of intake, exhaust valve guide						○												○				○						Measure and replace
Engine system	Defective governor		○											○	○	○	○												Repair and adjust
Engine system	Defective intake, exhaust valve timing	○					○	○	○	○		○																	Adjust valve clearance, check opening/closing timing of intake/exhaust valve
Cooling system	Excessive cooling by radiator								○									○							○				Defective thermostat (stays closed)
Cooling system	Insufficient cooling by radiator							○																○				○	Defective thermostat (stays open), fan belt slipping
Cooling system	Lack of coolant							○																○				○	Check for water leakage from cooling system, clean cooling system
Cooling system	Cracked water jacket																				○	○		○					Repair or replace
Cooling system	Loose fan belt							○																○				○	Adjust belt tension
Cooling system	Defective thermostat							○	○															○	○				Check or replace

https://truckmanualshub.com/

Cause \ Abnormality		Defective starting				Lack of engine output			Defective exhaust gas color		Excessive knocking during combustion	Abnormal noise from engine	Variation in combustion noise	Hunting		Excessive vibration of engine	Poor return to low speed	Excessive fuel consumption	Lubricating oil				Excessive blowby	Coolant		Air supply		Exhaust temperature rises	Remedy
			Engine starts but then stops			Exhaust gas color			When operating																				
			Exhaust gas																										
		Engine does not start	None	Little	Large amount	Normal	White	Black	White	Black				When idling	When operating				Excessive consumption	Dilution of oil by fuel	Water in oil	Low oil pressure		Overheats	Low water temperature	Pressure drops	Pressure rises		
Lubricating system	Improper lubricating oil	○	○			○													○			○	○						Use proper lubricating oil
	Leakage from oil piping																		○			○							Repair
	Insufficient discharge from trochoid pump																					○							Check and repair
	Clogging of lubricating oil filter																					○	○						Clean or replace
	Defective pressure regulating valve																					○							Clean, adjust, or replace
	Lack of lubricating oil		○																			○							Add proper lubricating oil
Fuel system	Timing of fuel injection pump too advanced								○	○	○					○													Check and adjust
	Timing of fuel injection pump too retarded						○	○	○	○								○										○	Check and adjust
	Improper fuel					○	○	○	○	○			○																Use proper fuel
	Water in fuel system	○			○		○		○				○	○	○														Check and repair
	Clogged fuel filter	○	○			○																							Clean or replace
	Air in fuel system	○	○				○																						Bleed air
	Fuel pipe clogged, cracked	○	○			○																							Clean or replace
	Insufficient supply of fuel to fuel injection pump	○	○			○																							Check fuel tank valve, fuel filter, fuel pipe, fuel feed pump
	Uneven injection from fuel injection pump						○	○	○	○			○	○	○	○												○	Check and adjust
	Excessive fuel injection									○								○	○				○	○			○	○	Check and adjust
	Defective spray from fuel injection nozzle						○	○	○	○			○	○	○	○		○											Check and adjust
	Priming impossible	○																											Dirt caught in valve inside priming pump (disassemble and clean)
	Clogged strainer at fuel filter inlet port					○																							Clean strainer
Air, exhaust gas system	Clogged air filter				○			○		○			○													○			Clean
	Engine used at high ambient temperature or high altitude							○		○								○						○		○			Use high-output engine
	Clogged exhaust pipe							○		○			○															○	Clean
Electrical system	Defective starting motor	○																											Repair or replace
	Defective alternator	○																											Repair or replace
	Disconnected wiring	○																											Repair
	Drop in battery voltage	○																											Charge

https://truckmanualshub.com/

2. Troubleshooting using compression pressure

Measure the engine compression pressure to judge if there is any abnormality in important internal parts.

(1) Method of measuring compression pressure

1) Carry out the warming-up operation to warm up the engine, then remove the fuel injection pipes and fuel injection valves for all cylinders.

2) Set the regulator handle to the STOP position and crank with the starting motor for approx. 4 - 5 seconds.

3) Install a compression gauge to the engine cylinder to be measured, crank with the starting motor until the measured value is stable, then measure the compression pressure.
(Do not crank with the starting motor for more than 15 seconds. Wait for at least 30 seconds before cranking again.)

Standard value for compression pressure	2.84 – 3.04 MPa (29 – 31 kgf/cm²)/250 rpm
Limit for compression pressure	2.35 MPa(24 kgf/cm²)/250 rpm

Reference: Compression pressure at each speed

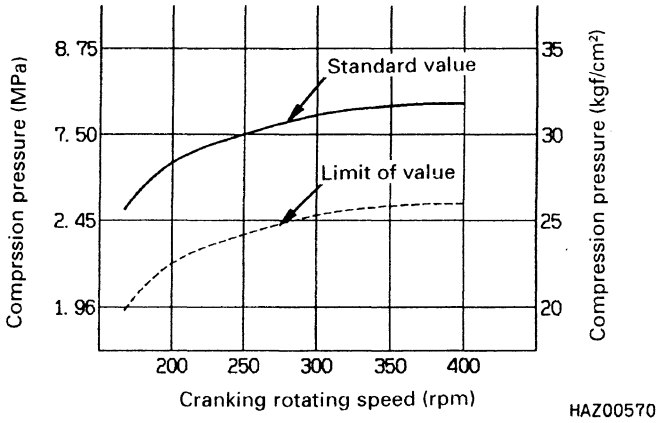

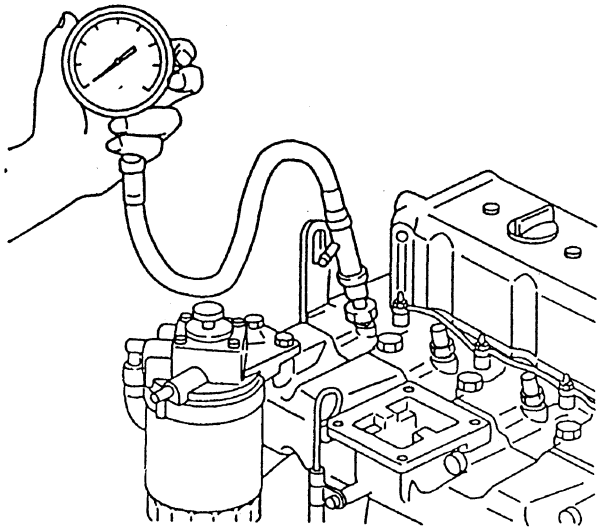

https://truckmanualshub.com/

(2) Phenomena when compression pressure drops

The blowby gas increases, and this causes improper starting, lack of output, increase in oil consumption, and premature deterioration of the lubricating oil. These problems then lead to premature wear of all parts and result in a reduction in the service life of the engine.

(3) Measurement values and troubleshooting of abnormalities

If the measured value is below the standard value, use the table below for reference when checking.

No.	Item	Remedy
1	Clogged, broken air cleaner element, defective air-tightness of seal	1. Clean element 2. Replace element
2	Defective adjustment of valve clearance, defective valve timing	1. Adjust valve clearance 2. Check gear train
3	Leakage of gas from head gasket, nozzle protector	1. Check tightening torque of head bolts 2. Replace gasket 3. Replace protector
4	Leakage of gas from intake, exhaust valve seat	Check cylinder head, valves
5	Scratched, worn cylinder, piston, ring	Check cylinder, piston, ring

TORQUE CONVERTER

1. Causes and remedies for failures

No.	Problem	Cause	Remedy
1	Power is not transmitted	A No hydraulic pressure	
		1) Lack of oil	Add oil
		2) Damaged gear pump or drive portion	Disassemble and check, replace with new parts or replace whole assembly
		3) Damaged piping or joint	Disassemble and replace
		4) Broken piston in inlet port relief valve or broken spring	Disassemble and replace
		B Mechanical breakage	
		1) Broken input plate	Disassemble and replace
		2) Broken shaft, gear	Disassemble and replace
		3) Broken spline	Disassemble and replace
2	Output drops	A Hydraulic pressure is too low	
		1) Lack of oil	Add oil
		2) Leakage of air from suction piping	Check joint, gasket, replace parts if necessary
		3) Drop in efficiency of gear pump	Disassemble and replace, replace parts if necessary
		4) Deteriorated spring in inlet port relief valve or defective operation of piston	Disassemble and replace, replace parts if necessary
		5) Worn or broken seal ring	Disassemble and replace
		B Mechanical breakage	
		1) Broken or deformed impeller	Disassemble and replace
		2) Deformed input plate	Disassemble and replace
		C Other	
		1) Non-specified oil is being used	Change to specified oil
3	Oil pressure rises abnormally high	1) Incorrect oil level	Add or drain oil
		2) Contact of impeller	Disassemble and replace, replace parts if necessary
		3) Wear or seizure of bearing	Disassemble and replace, replace parts if necessary
		4) Wear or damage of gear pump	Disassemble and replace, replace parts if necessary

https://truckmanualshub.com/

No.	Problem	Cause	Remedy
4	Abnormal noise is generated	1) Cavitation caused by leakage of air from suction piping or lack of oil	Add oil or check and replace parts if necessary
		2) Failure of gear pump	Disassemble and replace parts or whole assembly
		3) Contact caused by deformed impeller	Disassemble and replace, replace parts if necessary
		4) Breakage of input plate	Disassemble and replace
		5) Breakage of gear	Disassemble and replace
		6) Wear or breakage of bearing	Disassemble and replace
		7) Wear of spline	Disassemble and replace
		8) Loose bolts	Tighten, replace if necessary
5	Oil oozes out or leaks	A Oil seal	
		1) Worn or damaged lip	Disassemble and replace
		2) Dirt caught	Disassemble and replace, replace parts if necessary
		3) Worn or scratched shaft	Correct or replace
		4) Hardening or deterioration of rubber because of abnormal rise in oil temperature	Disassemble and replace
		B O-ring	
		1) Broken O-ring	Disassemble and replace
		2) Scratched mating surface	Correct or replace
		3) Hardening or deterioration of rubber because of abnormal rise in oil temperature	Disassemble and replace
		4) Sudden use in extremely cold temperatures (below -15*C)	Carry out warming-up operation
		C. Plug, screw	
		1) Loose screw	Tighten
		2) Broken screw	Replace
		3) Cracked hole	Replace

https://truckmanualshub.com/

2. Component parts

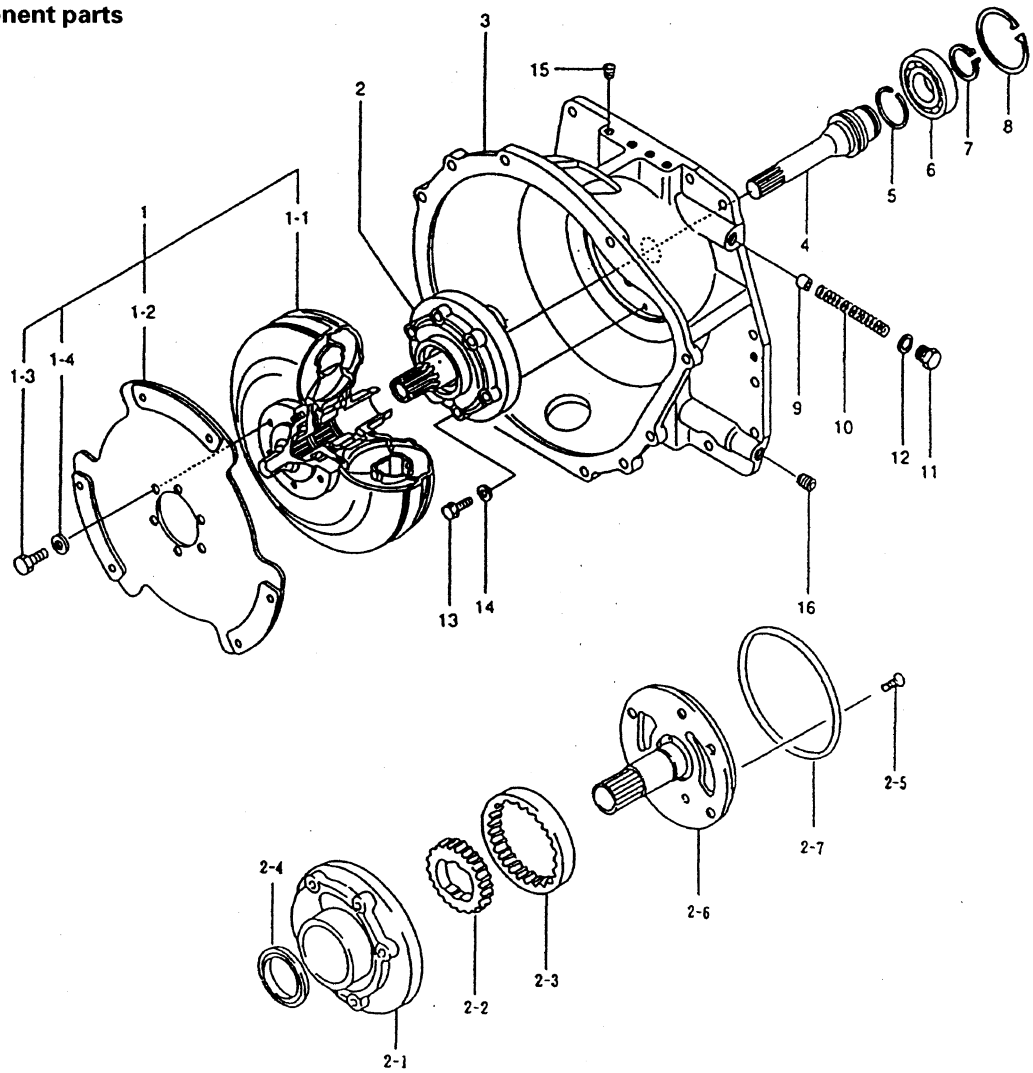

No.	Name	Q'ty	No.	Name	Q'ty
1	Torque converter circuit	1	4	Turbine shaft	1
1-2	Input plate assembly	1	5	Seal ring	1
1-3	Small hexagon bolt	6	6	Ball bearing	1
1-4	Washer	6	7	Snap ring	1
2	Gear pump assembly	1	8	Snap ring	1
2-1	Case assembly	1	9	Piston	2
2-2	Drive gear	1	10	Pressure spring	1
2-3	Driven gear	1	11	Plug	2
2-4	Oil seal	1	12	Gasket	2
2-5	Countersunk head screw	1	13	Hexagon bolt	5
2-6	Stator support	1	14	Gasket	5
2-7	O-ring	1	15	Hexagon socket head plug PT 1/4	4
3	Housing	1	16	Hexagon socket head plug PT 3/4	2

https://truckmanualshub.com/

3. Hydraulic circuit diagram

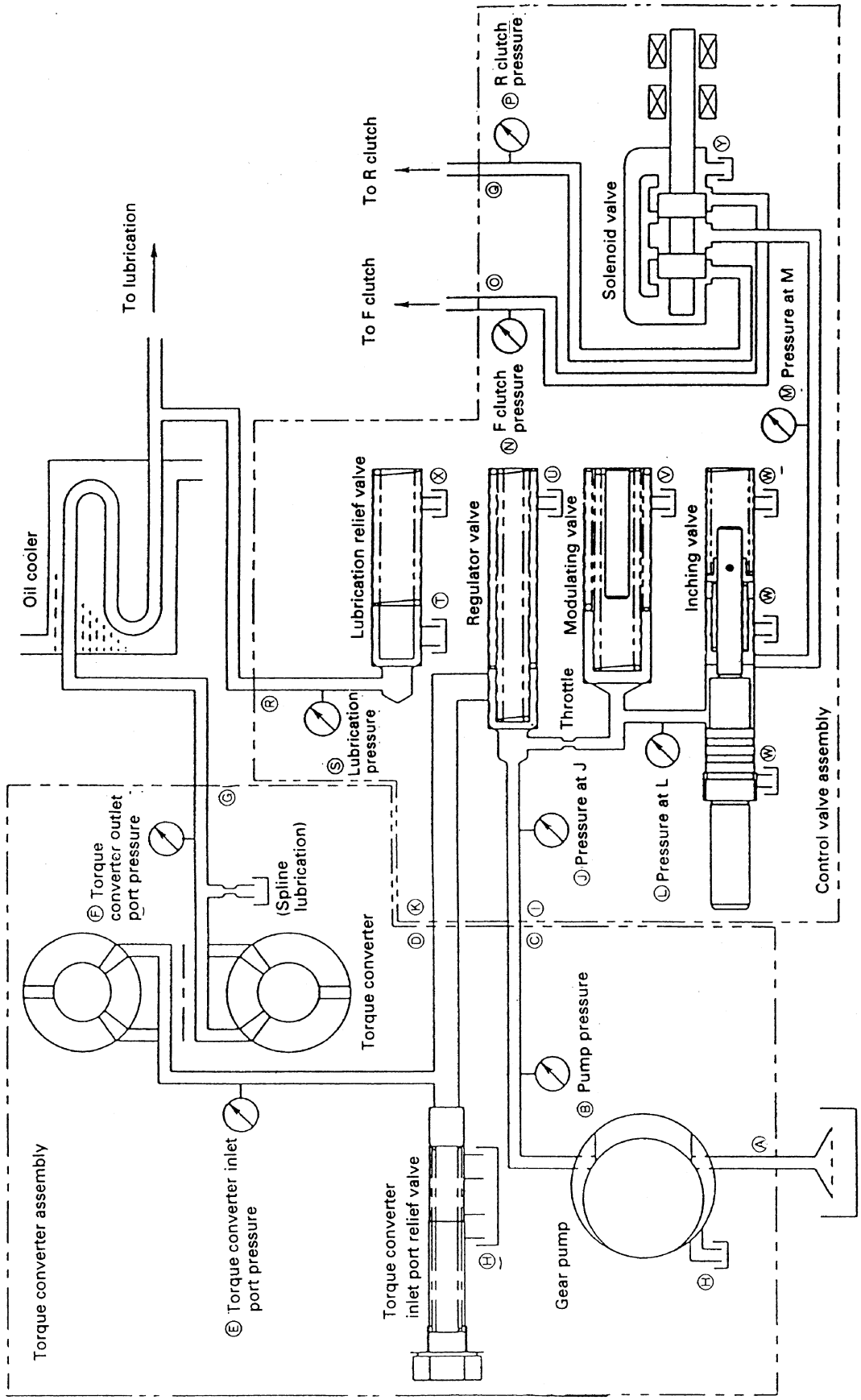

https://truckmanualshub.com/

4. Assembly drawing

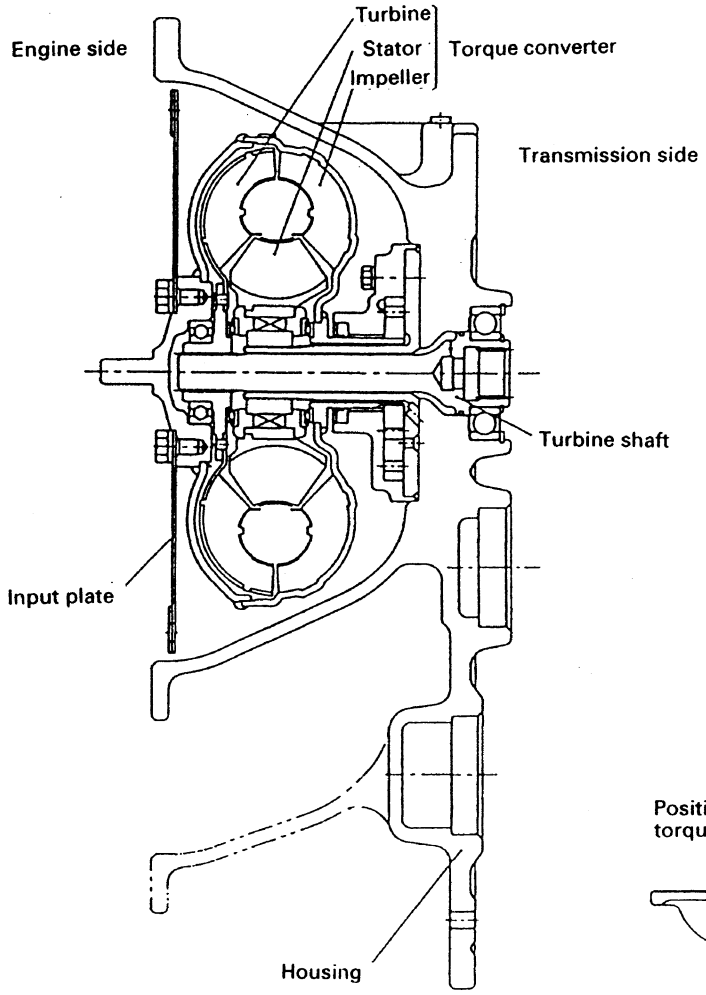

Cross-sectional drawing of torque converter assembly

Positions of hydraulic ports on torque converter assembly

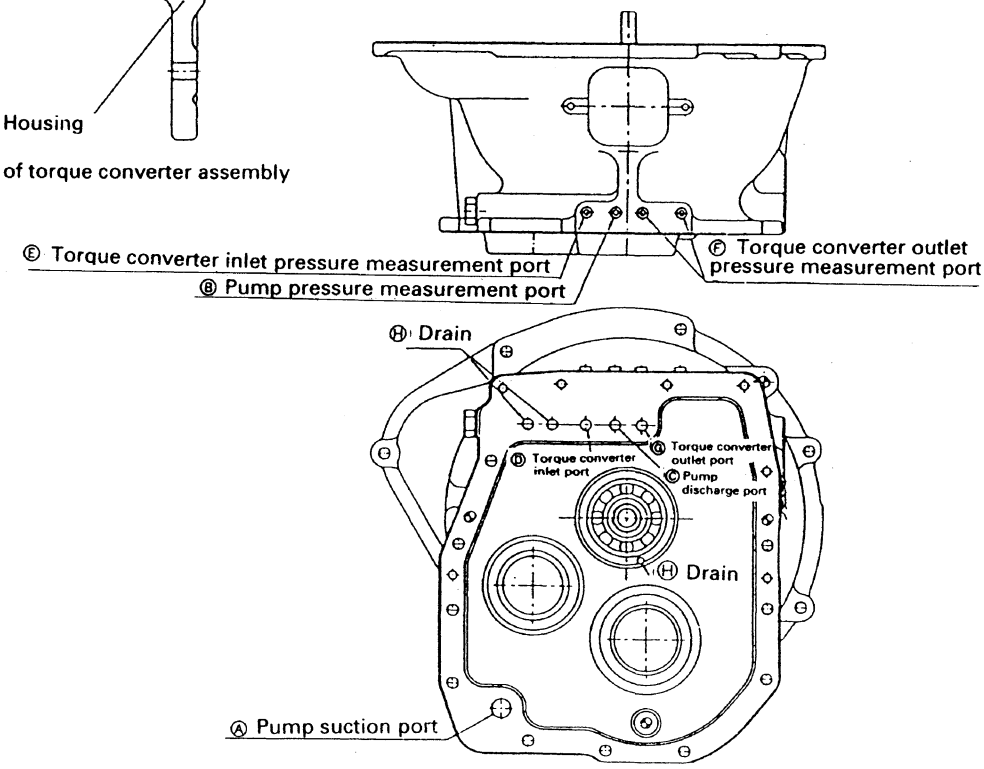

https://truckmanualshub.com/

TRANSMISSION CONTROL VALVE

CAUSES AND REMEDIES FOR FAILURES

No.	Problem	Cause	Remedy
1	Power is not transmitted	No hydraulic pressure 1) Broken piston in inlet port relief valve or regulator valve, or broken spring 2) Stuck solenoid valve	 Disassemble and replace Disassemble and replace
2	Output drops	Hydraulic pressure is too low 1) Deteriorated spring in inlet port relief valve or regulator valve, or defective operation of piston 2) Stuck solenoid valve	 Disassemble and replace, replace parts if necessary Disassemble and replace
3	Oil oozes out or leaks	Mating surface using gasket 1) Loose bolt 2) Broken gasket 3) Scratched mating surface	 Tighten Disassemble and replace Correct or replace

https://truckmanualshub.com/

2. Component parts

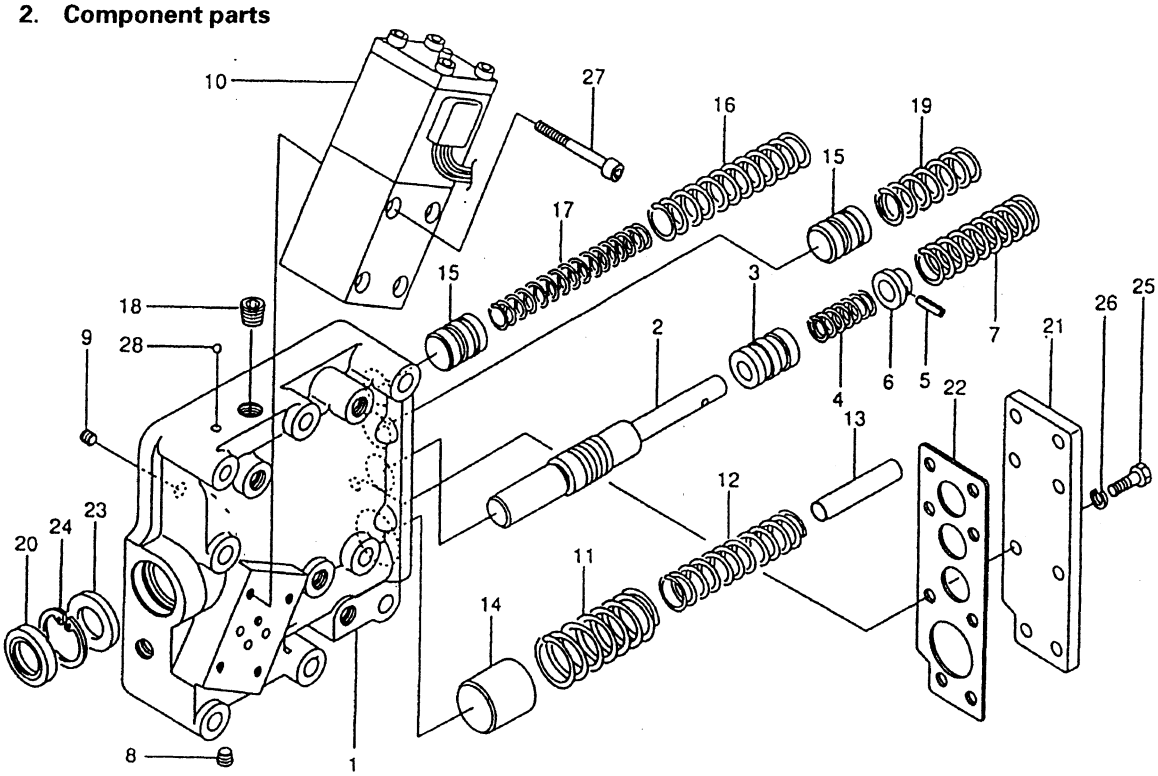

No.	Name	Q'ty	No.	Name	Q'ty
1	Valve body	1	10-16	O-ring	2
2	Inching spool	1	10-17	Stopper	1
3	Piston	1	10-18	Plug	1
4	Pressure spring	1	10-19	Tube	1
5	Spring pin	1	10-20	Plunger	1
6	Stopper	2	10-21	O-ring	1
7	Pressure spring	1	10-22	E-type stopper wheel	1
8	Plug	1	11	Pressure spring	1
9	Throttle	1	12	Pressure spring	1
10	Solenoid valve	1	13	Stopper	1
10-1	Body	1	14	Piston	1
10-2	Spool	1	15	Piston	2
10-3	Plug	1	16	Pressure spring	1
10-4	Pin	1	17	Pressure spring	1
10-5	Spring	1	18	Plug	1
10-6	Retainer A	1	19	Pressure spring	1
10-7	Retainer B	1	20	Oil seal	1
10-8	Pin	1	21	Cover	1
10-9	Solenoid coil	1	22	Gasket	1
10-10	Hexagon socket head bolt	4	23	Stopper	1
10-11	Spacer	4	24	Snap ring	1
10-12	Not used		25	Hexagon bolt	8
10-13	O-ring	1	26	Spring seat	8
10-14	O-ring	4	27	Hexagon head socket bolt	4
10-15	O-ring	2	28	Ball	1

https://truckmanualshub.com/

3. Assembly drawing

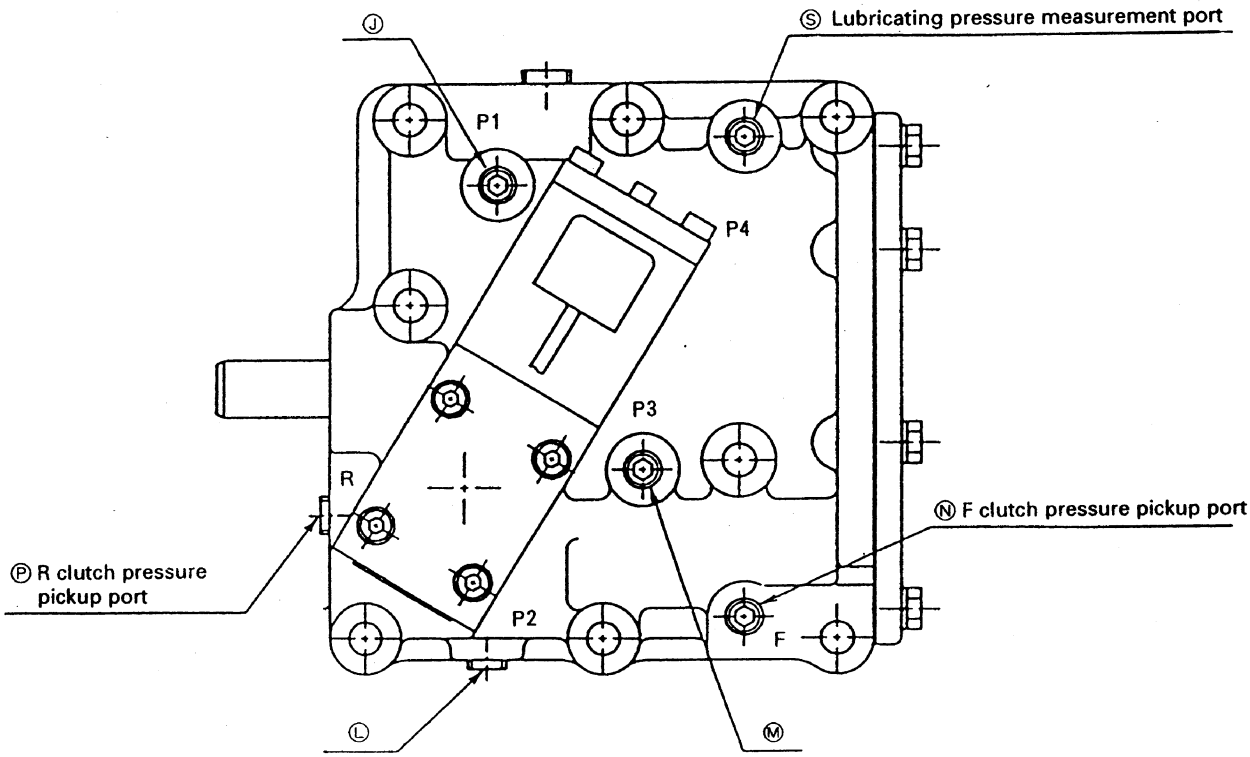

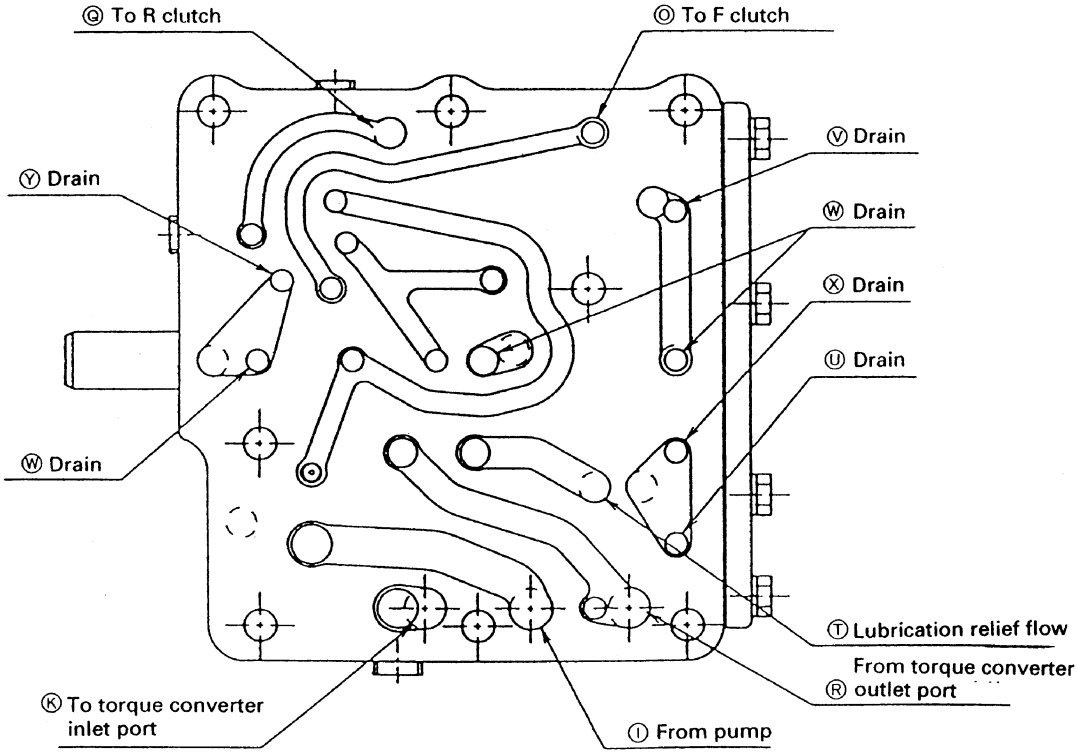

Position of hydraulic ports of control valve assembly

https://truckmanualshub.com/

70. CONVERSION TABLE

Millimeters to Inches 70-2
Inches to Millimeters 70-2
Cubic meters to Cubic yards 70-3
Cubic yards to Cubic meters 70-3
Liter to U.S.Gallon 70-4
U.S. Gallon to Liter 70-4
Liter to U.K. Gallon 70-5
U.K. Gallon to Liter 70-5
Kilogram to Pound 70-6
Pound to Kilogram 70-6
Kg/cm^2 to lb/in^2 70-7
Kgm to Ft. lb 70-8
Temperature 70-9

https://truckmanualshub.com/

CONVERSION TABLE

Millimeters to Inches

1 mm = 0.03937 in

	0	1	2	3	4	5	6	7	8	9
0		0.039	0.079	0.118	0.157	0.197	0.236	0.276	0.315	0.354
10	0.394	0.433	0.472	0.512	0.551	0.591	0.630	0.669	0.709	0.748
20	0.787	0.827	0.866	0.906	0.945	0.984	1.024	1.063	1.102	1.142
30	1.181	1.220	1.260	1.299	1.339	1.378	1.417	1.457	1.496	1.536
40	1.575	1.614	1.654	1.693	1.732	1.772	1.811	1.850	1.890	1.929
50	1.969	2.008	2.047	2.087	2.126	2.165	2.205	2.244	2.283	2.323
60	2.362	2.402	2.441	2.480	2.520	2.559	2.598	2.638	2.677	2.717
70	2.756	2.795	2.835	2.874	2.913	2.953	2.992	3.032	3.071	3.110
80	3.150	3.189	3.228	3.268	3.307	3.346	3.386	3.425	3.465	3.504
90	3.543	3.583	3.622	3.661	3.701	3.740	3.780	3.819	3.858	3.898

Inches to Millimeters

	0	0.01	0.02	0.03	0.04	0.05	0.06	0.07	0.08	0.09
0		0.254	0.508	0.762	1.016	1.270	1.524	1.778	2.032	2.286
0.1	2.540	2.794	3.048	3.302	3.556	3.810	4.064	4.318	4.572	4.826
0.2	5.080	5.334	5.588	5.842	6.096	6.350	6.604	6.858	7.112	7.366
0.3	7.620	7.874	8.128	8.382	8.636	8.890	9.144	9.398	9.652	9.906
0.4	10.160	10.414	10.668	10.922	11.176	11.430	11.684	11.938	12.192	12.446
0.5	12.700	12.954	13.208	13.462	13.716	13.970	14.224	14.478	14.732	14.986
0.6	15.240	15.494	15.748	16.002	16.256	16.510	16.764	17.018	17.272	17.526
0.7	17.780	18.034	18.288	18.542	18.796	19.050	19.304	19.558	19.812	20.066
0.8	20.320	20.574	20.828	21.082	21.336	21.590	21.844	22.098	22.352	22.606
0.9	22.860	23.114	23.368	23.622	23.876	24.130	24.384	24.638	24.892	25.146

https://truckmanualshub.com/

Cubic meters to Cubic yards

1 m^3 = 1.308 cu.yd

	0	1	2	3	4	5	6	7	8	9
		1.31	2.62	3.92	5.23	6.54	7.85	9.16	10.46	11.77
10	13.08	14.39	15.70	17.00	18.31	19.62	20.93	22.24	36.62	24.85
20	26.16	27.47	28.78	30.08	31.39	32.70	34.01	35.32	36.62	27.93
30	39.24	40.55	41.86	43.16	44.47	45.78	47.09	48.40	49.70	51.01
40	52.32	53.63	54.94	56.24	57.55	58.86	60.17	61.48	62.78	64.09
50	65.40	66.71	68.02	69.32	70.63	71.94	73.24	74.56	75.86	77.17
60	78.48	79.79	81.10	82.40	83.71	85.02	86.33	87.64	88.94	90.25
70	91.56	92.87	94.18	95.48	96.79	98.10	99.41	100.72	102.02	103.33
80	104.64	105.95	107.26	108.56	109.87	111.18	112.49	113.80	115.10	116.41
90	117.72	119.03	120.34	121.64	122.95	124.26	125.57	126.88	128.18	129.49

Cubic yards to Cubic meters

	0	1	2	3	4	5	6	7	8	9
		0.76	1.53	2.29	3.06	3.82	4.59	5.35	6.12	6.88
10	7.65	8.41	9.18	9.94	10.70	11.47	12.23	13.00	13.76	14.53
20	15.29	16.06	16.82	17.59	18.35	19.12	19.88	20.64	21.41	22.17
30	22.94	23.70	24.47	25.23	26.00	26.76	27.53	28.29	29.05	29.82
40	30.58	31.35	32.11	32.88	33.64	34.41	35.17	35.94	36.70	37.47
50	38.23	38.99	39.76	40.52	41.29	42.05	42.82	43.58	44.35	45.11
60	45.88	46.64	47.41	48.17	48.93	49.70	50.46	51.23	51.99	52.76
70	53.52	54.29	55.05	55.82	56.58	57.35	58.11	58.87	59.64	60.40
80	61.17	61.93	62.70	63.46	64.23	64.99	65.76	66.52	67.28	68.05
90	68.81	69.58	70.34	71.11	71.87	72.64	73.40	74.17	74.93	75.70

https://truckmanualshub.com/

Liter to U.S. Gallon

1 ℓ = 0.2642 U.S. Gal

	0	1	2	3	4	5	6	7	8	9
		0.264	0.528	0.793	1.057	1.321	1.585	1.849	2.113	2.378
10	2.642	2.906	3.170	3.434	3.698	3.963	4.227	4.491	4.755	5.019
20	5.283	5.548	5.812	6.076	6.340	6.604	6.869	7.133	7.397	7.661
30	7.925	8.189	8.454	8.718	8.982	9.246	9.510	9.774	10.039	10.303
40	10.567	10.831	11.095	11.359	11.624	11.888	12.152	12.416	12.680	12.944
50	13.209	13.473	13.737	14.001	14.265	14.529	14.795	15.058	15.322	15.586
60	15.850	16.115	16.379	16.643	16.907	17.171	17.435	17.700	17.964	18.228
70	18.492	18.756	19.020	19.285	19.549	19.813	20.077	20.341	20.605	20.870
80	21.134	21.398	21.662	21.926	22.190	22.455	22.719	22.983	23.247	23.511
90	23.775	24.040	24.304	24.568	24.832	25.096	25.361	25.625	25.889	26.153

U.S. Gallon to Liter

1 U.S. Gal = 3.7854 ℓ

	0	1	2	3	4	5	6	7	8	9
		3.79	7.57	11.36	15.14	18.93	22.71	26.50	30.28	34.07
10	37.85	41.64	45.43	49.21	53.00	56.78	60.57	64.35	68.14	71.92
20	75.71	79.49	83.28	87.06	90.85	94.64	98.42	102.21	105.99	109.78
30	113.56	117.35	121.13	124.92	128.70	132.49	136.27	140.06	143.85	147.63
40	151.42	155.20	158.99	162.77	166.56	170.34	174.13	177.91	181.70	185.49
50	189.27	193.06	196.84	200.63	204.41	208.20	211.98	215.77	219.55	223.34
60	227.12	230.91	234.70	238.48	242.27	246.05	249.84	353.62	257.41	261.19
70	264.98	268.76	272.55	276.33	280.12	283.91	287.69	291.48	295.26	299.05
80	302.83	306.62	310.40	314.19	317.97	321.76	325.55	329.33	333.12	336.90
90	340.69	344.47	348.26	352.04	355.83	359.61	363.40	367.18	370.97	374.76

https://truckmanualshub.com/

Liter to U.S. Gallon

1 ℓ = 0.21997 U.K. Gal

	0	1	2	3	4	5	6	7	8	9
		0.220	0.440	0.660	0.880	1.100	1.320	1.540	1.760	1.980
10	2.200	2.420	2.640	2.860	3.080	3.300	3.520	3.740	3.950	4.179
20	4.399	4.619	4.839	5.059	5.279	5.499	5.719	5.939	6.159	6.379
30	6.599	6.819	7.039	7.259	7.479	7.969	7.919	8.139	8.359	8.579
40	8.799	9.019	9.239	9.459	9.679	9.899	10.119	10.339	10.559	10.778
50	10.998	11.281	11.438	11.658	11.878	12.098	12.318	12.528	12.758	12.978
60	13.198	13.418	13.638	13.858	14.078	14.298	14.518	14.738	14.958	15.178
70	15.398	15.618	15.838	16.058	16.278	16.498	16.718	16.938	17.158	17.378
80	17.598	17.818	18.037	18.257	18.477	18.697	18.917	19.137	19.357	19.577
90	19.797	20.017	20.237	20.457	20.677	20.897	21.117	21.337	21.557	21.777

U.K. Gallon to Liter

1 U.K. Gal = 4.5461 ℓ

	0	1	2	3	4	5	6	7	8	9
		4.55	9.09	13.64	18.18	22.73	27.28	31.82	36.37	40.92
10	45.64	50.01	54.55	59.10	63.65	68.19	72.74	77.28	81.83	86.38
20	90.92	95.47	100.01	104.56	109.11	113.65	118.20	112.74	127.29	131.84
30	136.28	140.93	145.47	150.02	154.57	159.11	163.66	168.21	172.75	177.30
40	181.84	186.39	190.94	195.48	200.03	204.57	209.12	213.67	218.21	222.76
50	227.30	231.85	236.40	240.94	245.49	250.03	254.18	259.13	263.67	268.22
60	272.77	277.31	281.86	286.40	290.95	295.50	300.04	304.59	309.13	313.68
70	318.23	322.77	327.32	331.86	336.41	340.96	345.50	350.05	354.60	359.14
80	363.69	368.23	372.78	377.33	381.87	386.42	390.96	395.51	400.06	404.60
90	409.15	413.69	418.24	422.79	427.33	341.88	436.42	440.97	445.52	450.06

https://truckmanualshub.com/

Kilogram to Pound 1 kg = 2.2046 lb

	0	1	2	3	4	5	6	7	8	9
		2.20	4.41	6.61	8.82	11.02	13.23	15.43	17.64	19.84
10	22.05	24.25	26.46	28.66	30.86	33.07	35.27	37.48	39.68	41.89
20	44.09	46.30	48.50	50.71	51.91	55.12	57.32	59.53	61.73	63.93
30	66.14	68.34	70.55	72.75	74.96	77.16	79.37	81.57	83.78	85.98
40	88.18	90.39	92.59	94.80	97.00	99.21	101.41	103.62	105.82	108.03
50	110.23	112.44	114.64	116.85	119.05	121.25	123.46	125.66	127.87	130.07
60	132.28	134.48	136.69	138.89	141.10	143.30	145.51	147.71	149.91	152.12
70	154.32	156.53	158.73	160.94	163.14	165.35	167.55	169.76	171.96	174.17
80	176.37	178.57	180.78	182.98	185.19	187.39	189.60	191.80	194.01	196.21
90	198.42	200.62	202.83	205.03	207.24	209.44	211.64	213.85	216.05	218.26

Pound to Kilogram 1 lb = 0.4536 kg

	0	1	2	3	4	5	6	7	8	9
		0.454	0.907	1.361	1.814	2.268	2.722	3.175	3.629	4.082
10	4.536	4.990	5.443	5.897	6.350	6.804	7.257	7.711	8.165	8.618
20	9.072	9.525	9.979	10.433	10.886	11.340	11.793	12.247	12.701	13.154
30	13.608	14.061	14.515	14.969	15.422	15.876	16.329	16.783	17.237	17.690
40	18.144	18.597	19.051	19.505	19.958	20.412	20.865	21.319	21.772	22.226
50	22.680	23.133	23.587	24.040	24.494	24.948	25.401	25.855	26.308	26.762
60	27.216	27.699	28.123	28.576	29.030	29.484	29.937	30.391	30.844	31.298
70	31.752	32.205	32.659	33.112	33.566	34.019	34.473	34.927	35.380	35.843
80	36.287	36.741	37.195	37.648	38.102	38.555	39.001	39.463	39.916	40.370
90	40.823	41.277	41.731	42.184	42.638	43.091	43.545	43.999	44.452	44.906

https://truckmanualshub.com/

Kg/cm² to lb/in²

1 kg/cm² = 14.2233 lb/in²

	0	1	2	3	4	5	6	7	8	9
		14.2	28.4	42.7	56.9	71.1	85.3	99.6	113.8	128.0
10	142.2	156.5	170.7	184.9	199.1	213.4	227.6	241.8	256.0	270.2
20	284.5	298.7	312.9	327.1	341.4	355.6	369.8	384.0	398.3	412.5
30	426.7	440.9	455.1	469.4	483.6	497.8	512.0	526.3	540.5	554.7
40	568.9	583.2	597.4	611.6	625.8	640.1	654.3	668.5	682.7	696.9
50	711.2	725.4	739.6	753.8	768.1	782.3	796.5	810.7	825.0	839.2
60	853.4	867.6	881.8	896.1	910.3	924.5	938.7	953.0	967.2	981.4
70	995.6	1010	1024	1038	1053	1067	1081	1095	1109	1124
80	1138	1152	1166	1181	1195	1209	1223	1237	1252	1266
90	1280	1294	1309	1323	1337	1351	1365	1380	1394	1408
100	1422	1437	1451	1465	1479	1493	1508	1522	1536	1550
110	1565	1579	1593	1607	1621	1636	1650	1664	1678	1693
120	1707	1721	1735	1749	1764	1778	1792	1806	1821	1835
130	1849	1863	1877	1892	1906	1920	1934	1949	1963	1977
140	1991	2005	2020	2034	2048	2062	2077	2091	2105	2119
150	2134	2148	2162	2176	2190	2205	2219	2233	2247	2262
160	2276	2290	2304	2318	2333	2347	2361	2375	2389	2404
170	2418	2432	2446	2460	2475	2489	2503	2518	2532	2546
180	2560	2574	2589	2603	2617	2631	2646	2660	2674	2688
190	2702	2717	2731	2745	2759	2773	2788	2802	2816	2830
200	2845	2859	2873	2887	2901	2916	2930	2944	2958	2973
210	2987	3001	3015	3030	3044	3058	3072	3086	3101	3115
220	3129	3143	3158	3172	3186	3200	3214	3229	3243	3257
230	3271	3286	3300	3314	3328	3343	3357	3371	3385	3399
240	3414	3428	3442	3456	3470	3485	3499	3513	3527	3542

https://truckmanualshub.com/

kgm to ft.lb

1 kg.m = 7.233 ft.lb

	0	1	2	3	4	5	6	7	8	9
		7.2	14.5	21.7	28.9	36.2	43.4	50.6	57.9	65.1
10	72.3	79.6	86.8	94.0	101.3	108.5	115.7	123.0	130.2	137.4
20	144.7	151.9	159.1	166.4	173.6	180.8	188.1	195.3	202.5	209.8
30	217.0	224.2	231.5	238.7	245.9	253.2	260.4	267.6	274.9	282.1
40	289.3	396.6	303.8	311.0	318.3	325.5	332.7	340.0	347.2	354.4
50	361.7	368.9	376.1	383.4	390.6	397.8	405.1	412.3	419.5	426.8
60	434.0	441.2	448.5	455.7	462.9	470.2	477.4	484.6	491.8	499.1
70	506.3	513.5	520.8	528.0	535.2	542.5	549.7	556.9	564.2	571.4
80	578.6	585.9	593.1	600.3	607.6	614.8	622.0	629.3	636.5	643.7
90	651.0	658.2	665.4	672.7	679.9	687.1	694.4	701.6	708.8	716.1
100	723.3	730.5	737.8	745.0	752.2	759.5	766.7	773.9	781.2	788.4
110	795.6	802.9	810.1	817.3	824.6	831.8	839.0	846.3	853.5	860.7
120	868.0	875.2	882.4	889.7	896.6	904.1	911.4	918.6	925.8	933.1
130	940.3	947.5	954.8	962.0	969.2	976.5	983.7	990.9	998.2	1005.4
140	1012.6	1019.9	1027.1	1034.3	1041.5	1048.8	1056.0	1063.2	1070.5	1077.7
150	1084.9	1092.2	1099.4	1106.6	1113.9	1121.1	1128.3	1135.6	1142.8	1150.0
160	1157.3	1164.5	1171.7	1179.0	1186.2	1193.4	1200.7	1207.9	1215.1	1222.4
170	1129.6	1236.8	1244.1	1251.3	1258.5	1265.8	1273.0	1280.1	1287.5	1294.7
180	1301.9	1309.2	1316.4	1323.6	1330.9	1338.1	1345.3	1352.6	1359.8	1367.0
190	1374.3	1381.5	1388.7	1396.0	1403.2	1410.4	1417.7	1424.9	1432.1	1439.4

https://truckmanualshub.com/

Temperature

Fahrenheit-Centigrade Conversion. — A simple way to convert a Fahrenheit temperature reading into a Centigrade temperature reading or vice versa is to enter the accompanying table in the center or boldface column of figures.

These figures refer to the temperature in either Fahrenheit or Centigrade degrees.

If it is desired to convert from Fahrenheit to Centigrade degrees, consider the center column as a table of Fahrenheit temperatures and read the corresponding Centigrade temperature in the column at the left.

If it is desired to convert from Centigrade to Fahrenheit degrees, consider the center column as a table of Centigrade values, and read the corresponding Fahrenheit temperature on the right.

°C		°F	°C		°F	°C		°F	°C		°F
− 40.4	− 40	− 40.0	− 11.7	11	51.8	7.8	46	114.8	27.2	81	117.8
− 37.2	− 35	− 31.0	− 11.1	12	53.6	8.3	47	116.6	27.8	82	179.6
− 34.4	− 30	− 22.0	− 10.6	13	55.4	8.9	48	118.4	28.3	83	181.4
− 31.7	− 25	− 13.0	− 10.0	14	57.2	9.4	49	120.2	28.9	84	183.2
− 28.9	− 20	− 4.0	− 9.4	15	59.0	10.0	50	122.0	29.4	85	185.0
− 28.3	− 19	− 2.2	− 8.9	16	60.8	10.6	51	123.8	30.0	86	186.8
− 27.8	− 18	− 0.4	− 8.3	17	62.6	11.1	52	125.6	30.6	87	188.6
− 27.2	− 17	1.4	− 7.8	18	64.4	11.7	53	127.4	31.1	88	190.4
− 26.7	− 16	3.2	− 7.2	19	66.2	12.2	54	129.2	31.7	89	192.2
− 26.1	− 15	5.0	− 6.7	20	68.0	12.8	55	131.0	32.2	90	194.0
− 25.6	− 14	6.8	− 6.1	21	69.8	13.3	56	132.8	32.8	91	195.8
− 25.0	− 13	8.6	− 5.6	22	71.6	13.9	57	134.6	33.3	92	197.6
− 24.4	− 12	10.4	− 5.0	23	73.4	14.4	58	136.4	33.9	93	199.4
− 23.9	− 11	12.2	− 4.4	24	75.2	15.0	59	138.2	34.4	94	201.2
− 23.3	− 10	14.0	− 3.9	25	77.0	15.6	60	140.0	35.0	95	203.0
− 22.8	− 9	15.8	− 3.3	26	78.8	16.1	61	141.8	35.6	96	204.8
− 22.2	− 8	17.6	− 2.8	27	80.6	16.7	62	143.6	36.1	97	206.6
− 21.7	− 7	19.4	− 2.2	28	82.4	17.2	63	145.4	36.7	98	208.4
− 21.1	− 6	21.2	− 1.7	29	84.2	17.8	64	147.2	37.2	99	210.2
− 20.6	− 5	23.0	− 1.1	30	86.0	18.3	65	149.0	37.8	100	212.0
− 20.0	− 4	24.8	− 0.6	31	87.8	18.9	66	150.8	40.6	105	221.0
− 19.4	− 3	26.6	0	32	89.6	19.4	67	152.6	43.3	110	230.0
− 18.9	− 2	28.4	0.6	33	91.4	20.0	68	154.4	46.1	115	239.0
− 18.3	− 1	30.2	1.1	34	93.2	20.6	69	156.2	48.9	120	248.0
− 17.8	0	32.0	1.7	35	95.0	21.1	70	158.0	51.7	125	257.0
− 17.2	1	33.8	2.2	36	96.8	21.7	71	159.8	54.4	130	266.0
− 16.7	2	35.6	2.8	37	98.6	22.2	72	161.6	57.2	135	275.0
− 16.1	3	37.4	3.3	38	100.4	22.8	73	163.4	60.0	140	284.0
− 15.6	4	39.2	3.9	39	102.2	23.3	74	165.2	62.7	145	293.0
− 15.0	5	41.0	4.4	40	104.0	23.9	75	167.0	65.6	150	302.0
− 14.4	6	42.8	5.0	41	105.8	24.4	76	168.8	68.3	155	311.0
− 13.9	7	44.6	5.6	42	107.6	25.0	77	170.6	71.1	160	320.0
− 13.3	8	46.4	6.1	43	109.4	25.6	78	172.4	73.9	165	329.0
− 12.8	9	48.2	6.7	44	111.2	26.1	79	174.2	76.7	170	338.0
− 12.2	10	50.0	7.2	45	113.0	26.7	80	176.0	79.4	175	347.0

https://truckmanualshub.com/

https://truckmanualshub.com/

Komatsu Forklift Co., Ltd.

No. 3-4, 2-Chome, Akasaka, Minato-ku, Tokyo, Japan

Printed in Japan
11-01(02)08001