https://truckmanualshub.com/

GEN00048-00

FIELD ASSEMBLY INSTRUCTION

GALEO

PC800-8
PC850-8

HYDRAULIC EXCAVATOR

MACHINE MODEL	SERIAL NUMBER
PC800-8	50001 and up
PC800SE-8	50001 and up
PC800LC-8	50001 and up
PC850-8	60001 and up
PC850SE-8	60001 and up

KOMATSU

https://truckmanualshub.com/

FOREWORD

With this machine, the work equipment is extremely heavy and the hydraulic pressure of the chassis is used to install it efficiently. For this reason, start the engine and actuate the hydraulic cylinders.

Before starting the engine and assembling the work equipment, it is necessary to carry out thorough inspection and maintenance. In addition, this work is frequently carried out with more than one worker in a dangerous place and posture. To ensure safety, carry out a safety meeting before starting and decide the operation leader and the person to give signals to the crane to ensure that all workers can carry out the operation in safety.

Particularly in places where the workers speak different languages or have different customs, there are various causes of safety problems, so the local liaison officer and person in charge of the operation should consider fully the above points and take action to ensure safety.

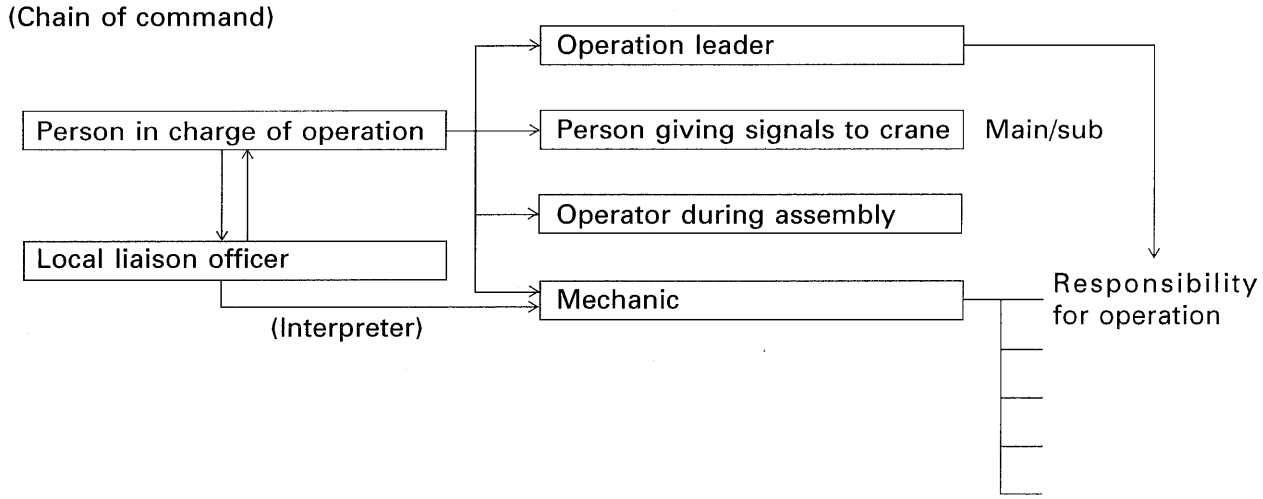

When carrying out assembly in local areas, all workers must co-operate to ensure safety, product quality, and delivery time while carrying out the operation swiftly.

https://truckmanualshub.com/

CONTENTS

Specifications 1
Precautions for Field Assembly 2
Assembling Procedures, Applicable Equipment and Schedule 3
Kit Layout Diagram 4
Transportation 5
List of Tools for Field Assembling 11
Tightening Torque 12
Coating Materials 16

A. Assembly of Base Machine 19
A- 1. Installation of Left and Right Track Frames 20
A- 2. Installation of Travel Pipe 24
A- 3. Installation of Top Guard 27
A- 4. Installation of Radiator Cover 28
A- 5. Installation of Rearview Mirror 29
A- 6. Installation of Left Side Step 33
A- 7. Installation of Handrail 34
A- 8. Installation of Handrail (With top guard) 35
A- 9. Installation of Muffler Tail Tube 37
A-10. Sticking Sheet to Counterweight 38
A-11. Installation of Counterweight 39
A-12. Installation of ORBCOMM Antenna (if equipped) 40
A-13. Installation of Step Light 41
A-14. Air Bleeding of Travel Motor 43
A-15. Installation of Travel Piping Cover 44
A-16. Testing Track Shoe Tension 46
A-17. Check Fuel, Coolant and Oil Levels 49
A-18. Parts to be Touched up after Field Assembly 52

B. Assembling of Work Equipment of Backhoe 53
B- 1. Assembly of Arm Cylinder 54
B- 2. Connection of Arm Cylinder Hoses 55
B- 3. Installation of Boom Cylinder Foot 57
B- 4. Relieving Remaining Pressure from Hydraulic Circuit 58
B- 5. Installation of Boom Cylinder Hoses 59
B- 6. Assembly of Boom Assembly 60
B- 7. Hose Connection of Arm and Bucket Circuits 61
B- 8. Installation of Quick Return Hose 62
B- 9. Installation of Boom Cylinder 63
B-10. Installation of Arm Assembly 64
B-11. Installation of Hose between Boom and Bucket Cylinder 66
B-12. Installation of Bucket Assembly 67
B-13. Lubrication Piping to Work Equipment 68
B-14. Air Bleeding from Cylinder 69
B-15. Wiring of Work Equipment 70
B-16. Greasing after Assembling Work Equipment 71

M. Procedure for Inspection and Maintenance after Completion of Assembly 73
M- 1. Inspection of Oil Level in Hydraulic Tank and Refill 74
M- 2. Replacement of Return Filter (Standard Filter to Flushing Filter) 76
M- 3. Flushing of Hydraulic Circuit 79
M- 4. Error Code 81

https://truckmanualshub.com/

C. Assembling of Work Equipment of Loading Shovel 83
C- 1. Releasing residual pressure in hydraulic circuit 84
C- 2. Pulling out boom foot pin and boom cylinder foot pin 85
C- 3. Installation of boom and arm assembly 86
C- 4. Installation of flushing piping between chassis and boom 87
C- 5. Installation of flushing piping for boom cylinder and arm cylinder 88
C- 6. Installation of flushing piping for bucket cylinder 89
C- 7. Installation of flushing piping for bottom dump cylinder 90
C- 8. Installation of boom cylinder 92
C- 9. Installation of boom cylinder foot 93
C-10. Installation of boom cylinder hoses 94
C-11. Installation of boom cylinder rod pin 95
C-12. Installation of arm cylinder hoses 96
C-13. Installation of bucket cylinder 97
C-14. Installation of bucket cylinder hose 98
C-15. Installation of connecting hoses between chassis and boom top 99
C-16. Installation of bottom dump cylinder hoses 100
C-17. Installation of bucket assembly 101
C-18. Installation of working lamps 103
C-19. Installation of work equipment grease piping 104
C-20. Greasing after assembling of work equipment 105
C-21. Bleeding air from work equipment circuit 106
C-22. Checking oil level in hydraulic tank and adding oil 107
C-23. Replacement of Return Filter (Standard Filter to Flushing Filter) 108
C-24. Flushing of Hydraulic Circuit 111

Field Assembly Inspection Report (Backhoe)

Field Assembly Inspection Report (Loading Shovel)

https://truckmanualshub.com/

SPECIFICATIONS

Machine model		PC800-8	PC800LC-8	PC800SE-8	PC850-8	PC850SE-8
Weight of machine	kg	75,000	77,200	76,000	79,500	79,100
Bucket capacity	m^3	3.1	3.1	4.0	3.4	4.3
Engine model	–	SAA6D140E-5				
Flywheel horsepower	kW/rpm {HP/rpm}	363/1,800 {486/1,800}				
Min. ground clearance	mm	840				
Travel speed (Low/High)	km/h	2.8/4.2				
Swing speed	rpm	6.8				

PC800-8

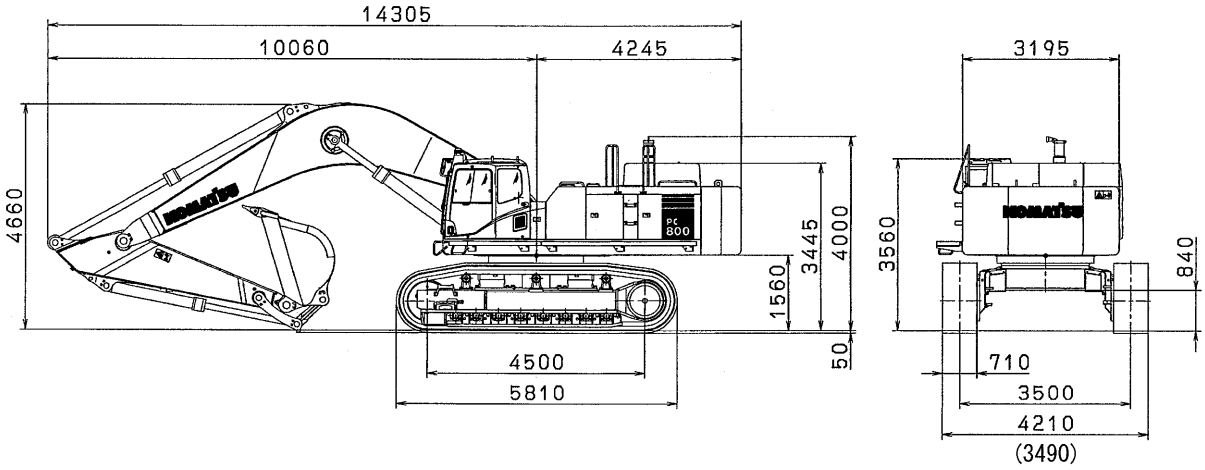

★The figures in ( ) show the value when the track width is reduced.

PC850-8

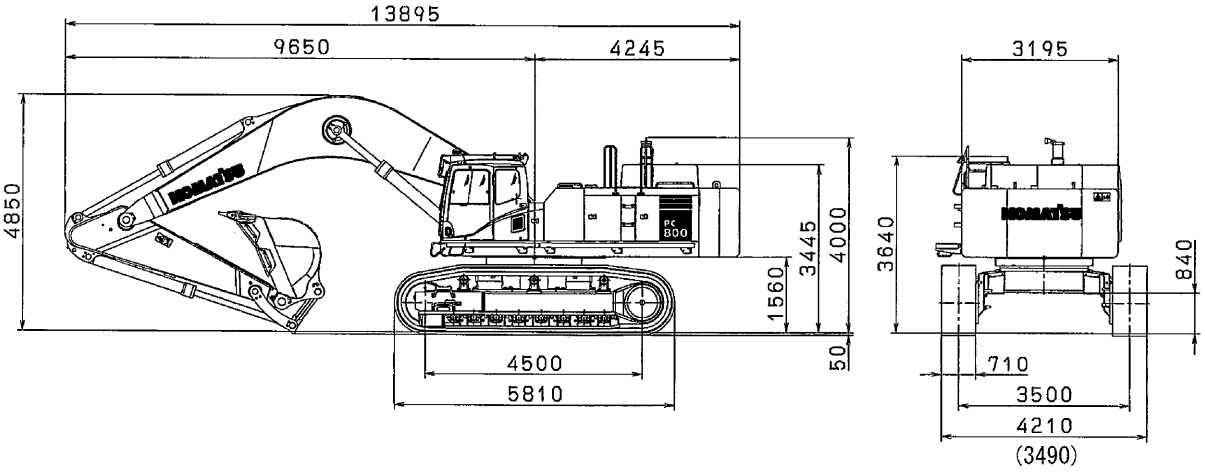

★The figures in ( ) show the value when the track width is reduced.

https://truckmanualshub.com/

PRECAUTIONS FOR FIELD ASSEMBLY

1. Selection of workplace

1) When selecting a workplace, consider the following items so that you can load and unload the machine.
   - Width
   - Hardness
   - Flatness
   - Access road, place for turn
2) Do not work in a place where dust, rainwater, etc. may enter the hydraulic circuit during assembling work.
3) Do not assemble while a strong wind is blowing or it is raining.

2. Preparation and check of slings and tools

1) Check each sling and tool thoroughly. When using wood blocks, etc., check that their inside is not rotten or broken.

3. ⚠ Check of actual work

1) Apply the parking brakes of the trailer and crane truck securely and put chocks under their wheels.
2) Before starting the work lower the temperature and pressure of the engine oil, hydraulic oil, cooling water, etc.
3) When starting the engine, make an arranged sign such as sounding of the horn and check that the work equipment control lever and travel lever are in neutral and the fuel control dial (or fuel control lever) is at the low idling position.
4) When using the crane, balance the load.
5) Allow only the persons concerned into the workplace.

4. Before starting the work, read this manual thoroughly and keep the precautions in your mind.

The numbers in circles in the illustrations correspond to the numbers in ( ) in the text. (For example ① → (1))

5. The supervisor shall write down the precautions for each work process and explain them to the workers.

6. Hold a meeting every morning to check today's work plan and safe work.

https://truckmanualshub.com/

ASSEMBLING PROCEDURES, APPLICABLE EQUIPMENT AND SCHEDULE

4 Divisions

Days	①			②	
Assembly unit	Base machine ① Left track frame ② Right track frame ③ Axle assembly	④ Upper structure	⑤ Counterweight ⑥ Platform group · Inspection of oil level and coolant level	Backhoe Loading shovel-type excavator ⑦ Assembling of work equipment	· Inspection of oil level and coolant level · Air bleeding from work equipment cylinder · Flushing of hydraulic circuit · Adjustment of track tension · Performance test
Crane	45t (Two) 45t			35t	
Air compressor	0.49 -- 0.69 MPa (5 -- 7 kg/cm^2) 15 m^3/min				
Worker	Leader + 3 mechanics				
	Start of assembling · Meeting with all workers	Completion of Installation of unit assembly to body		Completion of body assembling	· Completion of general assembling

https://truckmanualshub.com/

KIT LAYOUT DIAGRAM

- The dimensions given below are the minimum dimensions needed.
- The kit dimensions in the diagram are outline dimensions.
- When selecting a place, see precautions for “FIELD ASSEMBLING”.

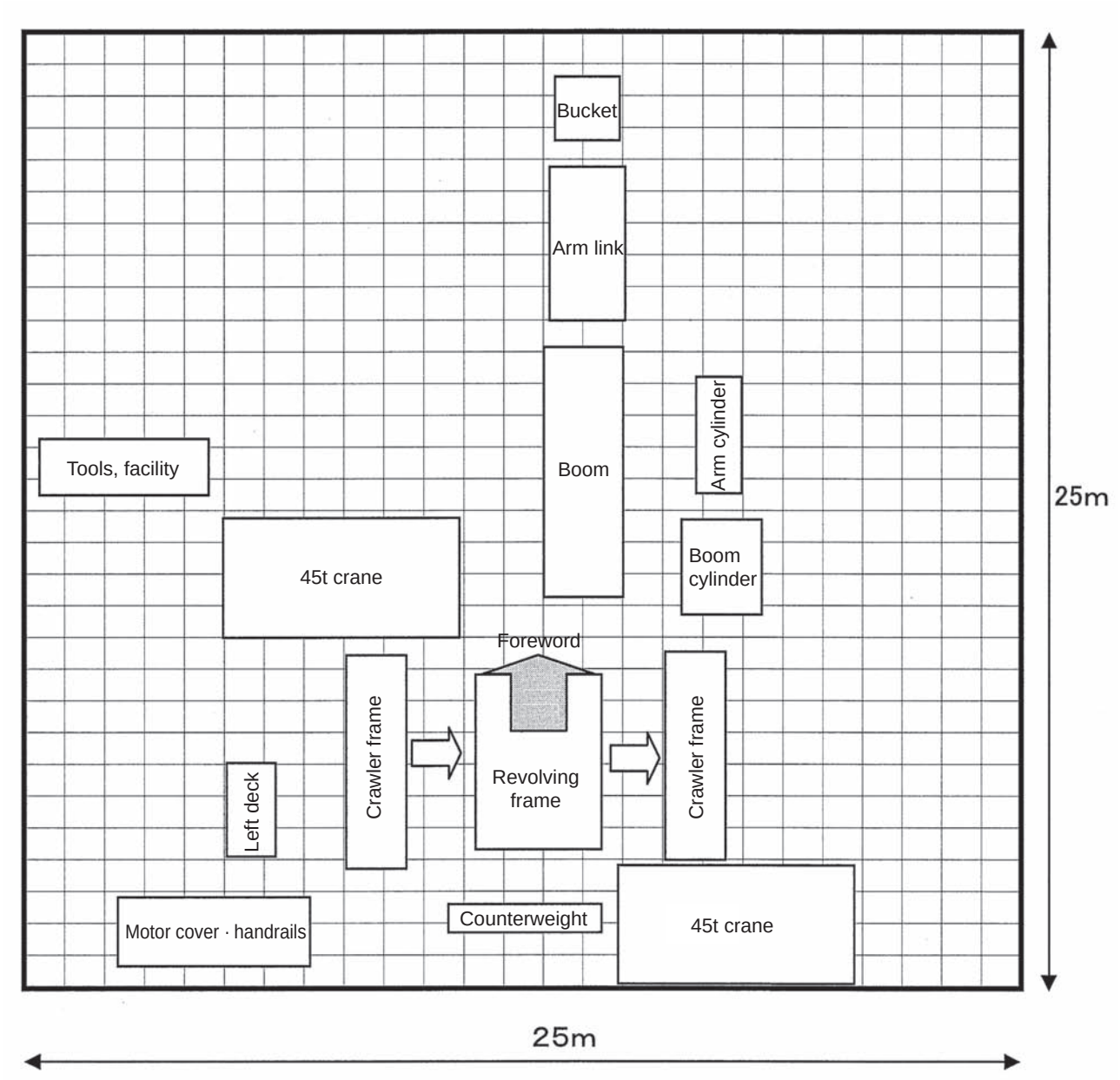

https://truckmanualshub.com/

TRANSPORTATION

Packing Style for Transportation

These machines can be divided into three or four kits for transportation. Please ask us or our service shop for transportation.

■ 4-kit Transportation

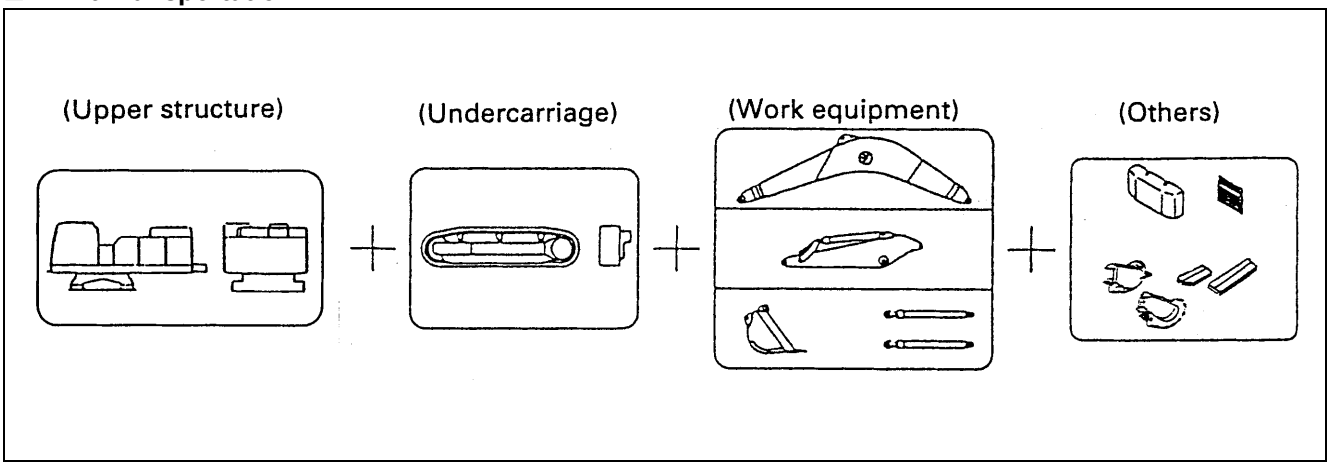

■ Packing Style of Each Kit (Sizes in drawing are given in millimeters.)

- **Upper structure (single piece of cab)**

Full width (mm)	a	Cab convex portion (air intake for air conditioner)	3,219
	b	Door hinge	3,204
	c	Lock used when the door is opened	3,262
	d	Stopper used when the door is opened	3,287
	e	Handrail	3,220

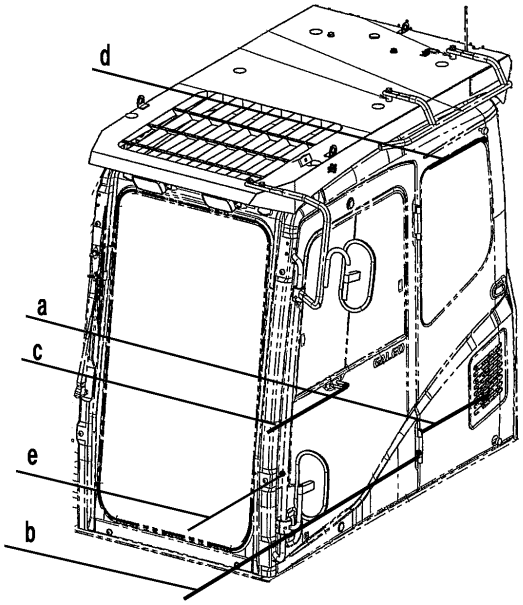

- **Upper structure without head guard**

Unit: mm

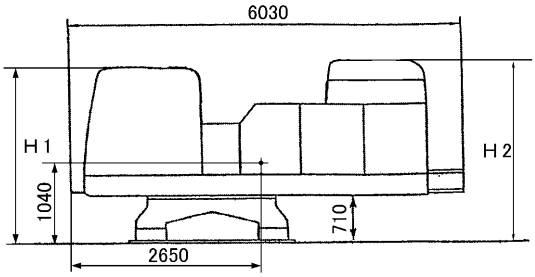

	Equipped with cab		Not equipped with cab
Overall height (mm)	H1: 2,840		H2: 2,840
Overall width (mm)	a	3,204	*3,195
	b	3,220	
	c	3,262	
	d	3,219	
	e	3,287	
Weight (kg)	25,620		25,080

* Revolving frame

- **Upper structure with head guard**

Unit: mm

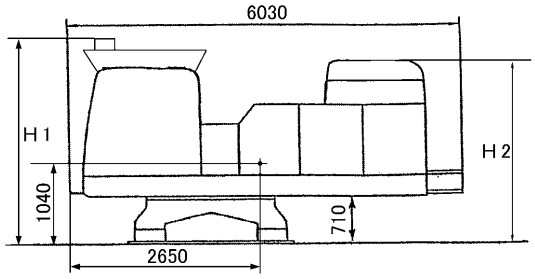

	Equipped with cab		Not equipped with cab
Overall height (mm)	H1: 2,910		H2: 2,840
Overall width (mm)	a	3,204	*3,195
	b	3,220	
	c	3,262	
	d	3,219	
	e	3,287	
Weight (kg)	25,770		25,180

* Revolving frame

Fix the upper structure on the truck by means of chain block.

- **Undercarriage**

Unit: mm

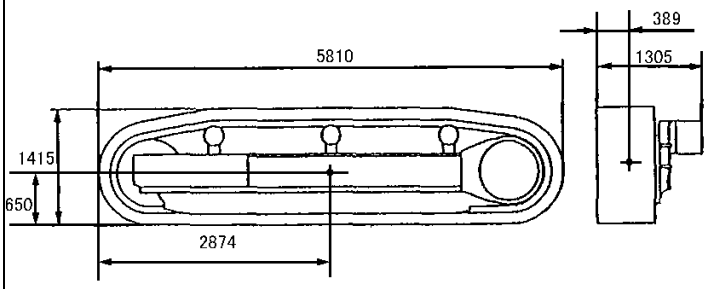

Model	PC800-8 PC800SE-8	PC850-8 PC850SE-8	PC800LC-8
Quantity	2	2	2
Weight (kg)	21,500 (10,750×2)	22,000 (11,000×2)	23,600 (11,800×2)

- **Work equipment**

(1) Boom

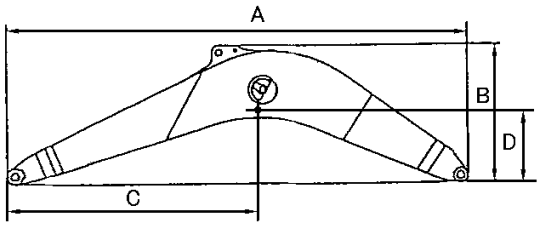

Model	PC800-8 PC800LC-8	PC800SE-8	PC850-8	PC850SE-8
A (mm)	8,505	7,405	8,345	7,405
B (mm)	2,705	2,560	2,695	2,560
C (mm)	4,387	4,104	4,295	4,104
D (mm)	1,218	1,098	1,210	1,098
Overall width (mm)	1,500	1,500	1,500	1,500
Weight (kg)	7,510	6,950	7,770	6,950

(2) Arm

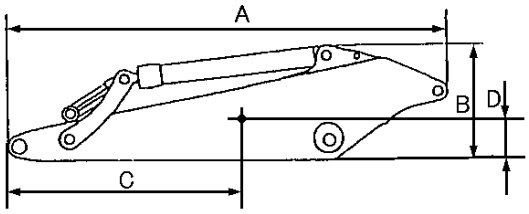

Model	PC800-8 PC800LC-8	PC800SE-8	PC850-8	PC850SE-8
A (mm)	5,105	4,075	4,800	4,075
B (mm)	1,324	1,696	1,410	1,696
C (mm)	2,459	2,237	2,478	2,237
D (mm)	577	709	648	709
Overall width (mm)	749	753	749	753
Weight (kg)	3,970	4,880	4,485	4,880

(3) Bucket

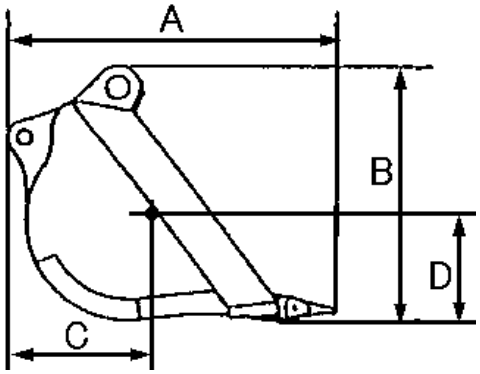

Model	PC800-8 PC800LC-8	PC800SE-8	PC850-8	PC850SE-8
A (mm)	2,365	2,200	2,390	2,200
B (mm)	1,850	1,950	1,880	1,950
C (mm)	1,052	889	1,118	889
D (mm)	646	714	599	714
Overall width (mm)	1,845	2,105	1,870	2,255
Weight (kg)	2,960	3,420	3,840	4,245

(4) Boom cylinder (for all models)

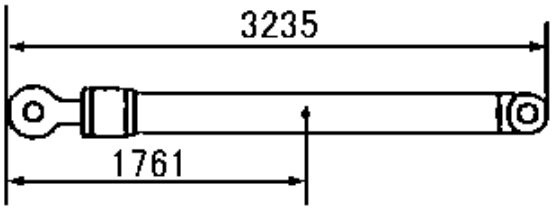

Weight: 1,550 kg
(775 kg × 2 pcs)

(5) Arm cylinder

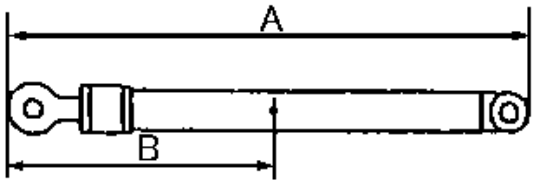

Model	PC800-8 PC800LC-8	PC800SE-8 PC850-8 PC850SE-8
Quantity	1	2
A (mm)	3,500	2,595
B (mm)	1,885	1,391
Weight (kg)	870	986 (493 × 2)

- **Others**

(1) Counterweight

Unit: mm

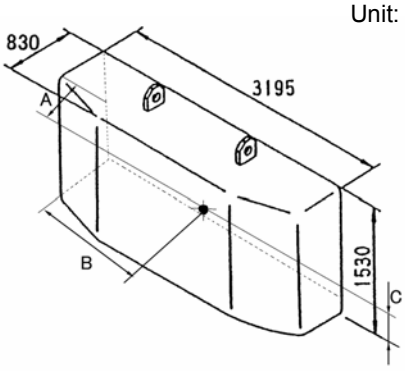

Model	PC800-8 PC800SE-8	PC850-8 PC850SE-8	PC800LC-8 (If equipped)
A (mm)	451	451	451
B (mm)	1,689	1,689	1,689
C (mm)	684	684	684
Weight (kg)	9,740	11,890	13,600

(2) Top guard (PC850-8, PC850SE-8 only)

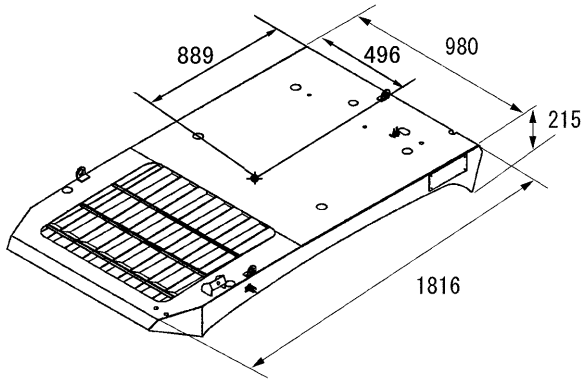

Unit: mm

Weight: 55 kg

(3) Catwalk (1) (for all models)

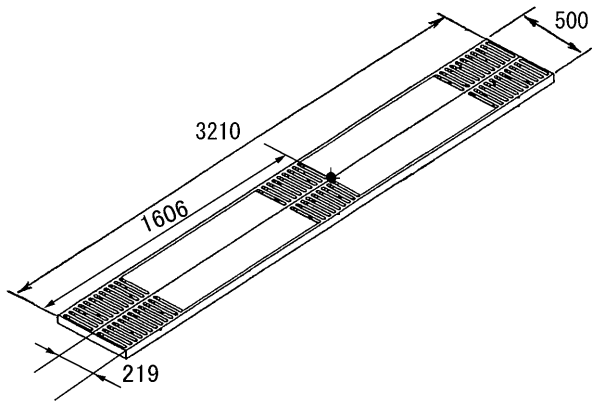

Unit: mm

Weight: 49 kg

(4) Catwalk (2) (for all models)

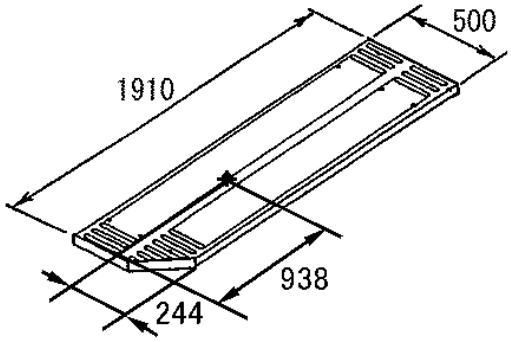

Unit: mm

Weight: 31 kg

https://truckmanualshub.com/

(5) Radiator duct (for all models)

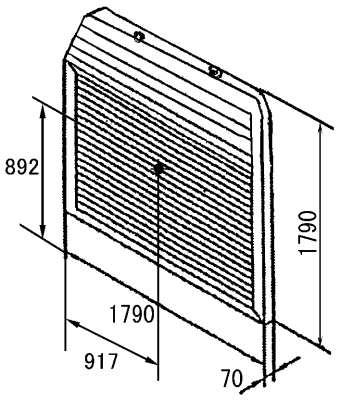

Unit: mm

Weight: 81 kg

(6) Travel motor cover (for all models)

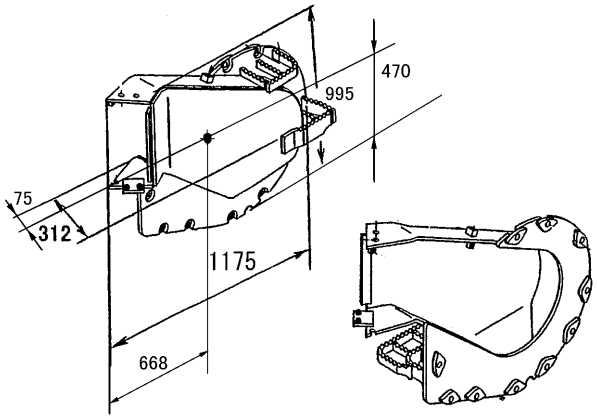

Weight: 115 kg × 2

https://truckmanualshub.com/

LIST OF TOOLS FOR FIELD ASSEMBLING

No.		Tool names	Specifications	Q'ty.	Remarks
1	Equipment	Engine compressor	Komatsu, 0.69 MPa {7.0kg/cm^2} Class	1	
2		Crane truck	441 kN {45 ton}, 245 kN {25 ton}	1 each	
3		Grease pump	Air type	1	Work equipment lubrication
4		Stepladder	5 -stepped- 1500 mm	2	
5	Tool	Impact wrench	KW10P (for M10)	1	
6			KW12PI (For M12)	1	
7			KW20P (For M16)	1	
8			KW45FS (Spline)	1	For counterweight
9		Socket for KW45FS	Spline × 65 mm	1	For counterweight
10		Air hose	50 m	1	For impact wrench
11		16-time wrench	4413 Nm {450 kgm}	1	For counterweight
12		Socket for 16-time wrench	□38.1 × 65 mm	1	For counterweight
13			□38.1 × 55 mm	1	For track frame
14			□38.1 × 50 mm	1	For track frame
15		4-time wrench	25.4, 19	1	
16		Socket for 4-time wrench	□25.4 × 50 mm	1	
17			□25.4 × 55 mm	1	
18		Torque wrench	412 Nm {42 kgm} – □25.4 mm	1	For 16-time wrench
19			834 Nm {85 kgm} – □25.4 mm	1	For 4-time wrench
20			4118 Nm {420 kgm} – □38.1 mm	1	For counterweight and track frame
21		Standard tool	Socket, spanner, wrench	2 set	
22		Sledge hammer	10 P	1	
23		Bar	1 m	2	
24		Hydraulic jack	490 kN {50 ton} (stroke 170)	2	Revolving frame pedestal
25			196 kN {20 ton}	1	When tightening track frame connecting bolts.
26		Waste oil pan	Large, small	2 each	When connecting travel and work equipment piping
27		Wooden block	300 × 400 mm	4	Revolving frame pedestal
28	Lifting tool	Wire	ø10 × 3 m	2	For catwalk
29			ø20 × 5 m	2	For boom, arm and bucket
30			ø25 × 5 m	4	For revolving frame and track frame
31			ø30 × 5 m	2	For counterweight
32		Shackle	SD30	3	
33			SC18	4	
34		Nylon sling	50 mm wide × 3 m	2	For boom cylinder and arm cylinder
35		Pin	ø50 × 5 m	2	Track frame
36		Lever block	14.7 – 29.4 kN {1.5 – 3 ton}	2	
37		Eyebolt	M16	2	
38			M12	2	
39		Detergent liquid	Brake cleaner	10	
40		Hydraulic oil	EO-10	300 ℓ	
41	Oil and grease	Grease	G2-LI	20 kg	Work equipment lubrication
42		Repair paint	Natural yellow	5	
43			Black gray	5	
44		Waste cloth	Bundle	20 kg	

https://truckmanualshub.com/

TIGHTENING TORQUE

Remove the plugging parts (flanges, heads, caps, and O-rings) of the work equipment piping and undercarriage piping, oil stopper plugs of the greasing piping, cylinder fixing jigs, and oil stopper plugs of the tap holes of the loose-supply items which were used for transportation and keep them carefully so that they can be used again for the next transportation.
Tighten the bolts to the torque shown in the following table, unless otherwise specified.

1. Tightening torque of bolts

When tightening the bolts with an impact wrench/spanner, apply Table 1.
Tighten the bolts according to Table 1 as a rule. When this rule is applied, the tightening torque is not shown in the drawing.

Table 1

Unit: Nm {kgm}

Nominal size of thread × pitch a (mm)	Width across flats b (mm)	Tightening torque	
		Target	Range
6 × 1	10	12 {1.2}	8.8 - 14.7 {0.9 - 1.5}
8 × 1.25	13	25 {2.5}	14.7 - 34 {1.5 - 3.5}
10 × 1.5	17	54 {5.5}	34 - 74 {3.5 - 7.5}
12 × 1.75	19	89 {9}	54 - 123 {5.5 - 12.5}
14 × 2	22	137 {14}	84 - 196 {8.5 - 20}
16 × 2	24	230 {23.5}	147 - 309 {15 - 31.5}
18 × 2.5	27	315 {32}	201 - 427 {20.5 - 43.5}
20 × 2.5	30	460 {47}	319 - 608 {32.5 - 62}
22 × 2.5	32	650 {66.5}	471 - 829 {48 - 84.5}
24 × 3	36	810 {82.5}	588 - 1030 {60 - 105}
27 × 3	41	1180 {120}	883 - 1470 {90 - 150}
30 × 3	46	1520 {155}	1130 - 1910 {115- 195}
33 × 3	50	1960 {200}	1470 - 2450 {150 - 250}
36 × 3	55	2450 {250}	1860 - 3040 {190 - 310}
39 × 3	60	2940 {300}	2260 - 3630 {230 - 370}

https://truckmanualshub.com/

When tightening the bolts with a torque wrench, apply Table 2.

Apply Table 2 when the proper tightening torque range is particularly narrow.

Table 2

Unit: Nm {kgm}

Nominal size of thread × pitch a (mm)	Width across flats b (mm)	Tightening torque	
		Target	Range
6 × 1	10	13.2 {1.35}	11.8 - 14.7 {1.2 - 1.5}
8 × 1.25	13	31 {3.2}	27 - 34 {2.8 - 3.5}
10 × 1.5	17	66 {6.7}	59 - 74 {6.0 - 7.5}
12 × 1.75	19	113 {11.5}	98 - 123 {10.0 - 12.5}
14 × 2	22	172 {17.5}	153 - 190 {15.5 - 19.5}
16 × 2	24	260 {26.5}	235 - 285 {23.5 - 29.5}
18 × 2.5	27	360 {37.0}	320 - 400 {33.0 - 41.0}
20 × 2.5	30	510 {52.3}	455 - 565 {46.5 - 58.0}
22 × 2.5	32	688 {70.3}	610 - 765 {62.5 - 78.0}
24 × 3	36	883 {90.0}	785 - 980 {80.0 - 100.0}
27 × 3	41	1295 {132.5}	1150 - 1440 {118.0 - 147.0}
30 × 3	46	1720 {175.0}	1520 - 1910 {155.0- 195.0}
33 × 3	50	2210 {225.0}	1960 - 2450 {200.0 - 250.0}
36 × 3	55	2750 {280.0}	2450 - 3040 {250.0 - 310.0}
39 × 3	60	3280 {335.0}	2890 - 3630 {295.0 - 370.0}

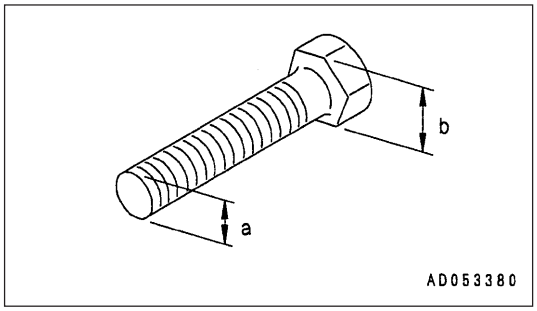

https://truckmanualshub.com/

2. Tightening torque of pipe threads

Tighten taper male pipe threads of nominal sizes of R1/8 - R1 and Rc1/8 - Rc1 and parallel female pipe threads of nominal size of Rp1/8 - Rp1 (coated with adhesive) according to the following standard.

If tightening torque is specified particularly, however, do not apply the following standard.

2-1. If the material of male threads is SS400, FC, or SGP, apply Table 1.

Table 1

Unit: Nm {kgm}

Material of female thread / Nominal size	Steel	Cast iron	Light alloy
1 / 8	3.9 - 6.9 {0.4 - 0.7}	2.9 - 5.9 {0.3 - 0.6}	2.0 - 3.9 {0.2 - 0.4}
1 / 4	5.9 - 11.8 {0.6 - 1.2}	4.9 - 9.8 {0.5 - 1.0}	3.9 - 7.8 {0.4 - 0.8}
3 / 8	16.7 - 26.5 {1.7 - 2.7}	13.7 - 21.6 {1.4 - 2.2}	9.8 - 16.7 {1.0 - 1.7}
1 / 2	32.3 - 52.9 {3.3 - 5.4}	26.5 - 43.1 {2.7 - 4.4}	19.6 - 32.3 {2.0 - 3.3}
3 / 4	51.0 - 85.3 {5.2 - 8.7}	42.1 - 70.6 {4.3 - 7.2}	31.4 - 52.9 {3.2 - 5.4}
1	86.2 - 173.5 {8.8 - 17.7}	72.5 - 146.0 {7.4 - 14.9}	54.9 - 111.7 {5.6 - 11.4}

2-2. If the material of male threads is S43C, apply Table 2.

Table 2

Unit: Nm {kgm}

Material of female thread / Nominal size	Steel	Cast iron	Light alloy
1 / 8	16.7 - 29.4 {1.7 - 3.0}	9.8 - 19.6 {1.0 - 2.0}	6.9 - 14.7 {0.7 - 1.5}
1 / 4	19.6 - 44.1 {2.0 - 4.5}	16.7 - 37.2 {1.7 - 3.8}	12.7 - 28.4 {1.3 - 2.9}
3 / 8	44.1 - 93.1 {4.5 - 9.5}	37.2 - 77.4 {3.8 - 7.9}	27.4 - 58.8 {2.8 - 6.0}
1 / 2	98.0 - 188.2 {10.0 - 19.2}	83.3 - 157.8 {8.5 - 16.1}	60.8 - 115.6 {6.2 - 11.8}
3 / 4	170.5 - 316.5 {17.4 - 32.3}	141.1 - 247.0 {14.4 - 25.2}	105.8 - 186.2 {10.8 - 19.0}
1	367.5 - 612.5 {37.5 - 62.5}	309.7 - 514.5 {31.6 - 52.5}	235.2 - 392.0 {24.0 - 40.0}

https://truckmanualshub.com/

3. Tightening torque of hoses (with taper/face seal)

Unit: Nm {kgm}

Nominal diameter of hose	Width across flatse.	Tightening torque	
		Range	Target
02	19	35 - 63 {3.5 - 6.5}	44 {4.5}
03	22	54 - 93 {5.5 - 9.5}	74 {7.5}
	24	59 - 98 {6.0 - 10.0}	78 {8.0}
04	27	84 - 132 {8.5 - 13.5}	103 {10.5}
05	32	128 - 186 {13.0 - 19.0}	157 {16.0}
06	36	177 - 245 {18.0 - 25.0}	216 {22.0}
{10}	41	177 - 245 {18.0 - 25.0}	216 {22.0}
{12}	46	197 - 294 {20.0 - 30.0}	245 {25.0}
{14}	55	246 - 343 {25.0 - 35.0}	294 {30.0}

When connecting hoses, take care not to twist them.

https://truckmanualshub.com/

COATING MATERIALS

★ The recommended coating materials such as adhesives, gasket sealants and greases used for disassembly and assembly are listed below.
★ For coating materials not listed below, use the equivalent of products shown in this list.

Category	Komatsu code	Part No.	Q'ty	Container	Main applications, features
Adhesives	LT-1A	790-129-9030	150 g	Tube	• Used to prevent rubber gaskets, rubber cushions, and cock plug from coming out.
	LT-1B	790-129-9050	20 g (2 pcs.)	Polyethylene container	• Used in places requiring an immediately effective, strong adhesive. Used for plastics (except polyethylene, polyprophylene, tetrafluoroethlene and vinyl chloride), rubber, metal and non-metal.
	LT-2	09940-00030	50 g	Polyethylene container	• Features: Resistance to heat and chemicals • Used for anti-loosening and sealant purpose for bolts and plugs.
	LT-3	790-129-9060 (Set of adhesive and hardening agent)	Adhesive: 1 kg Hardening agent: 500 g	Can	• Used as adhesive or sealant for metal, glass and plastic.
	LT-4	790-129-9040	250 g	Polyethylene container	• Used as sealant for machined holes.
	Holtz MH 705	790-126-9120	75 g	Tube	• Used as heat-resisting sealant for repairing engine.
	Three bond 1735	790-129-9140	50 g	Polyethylene container	• Quick hardening type adhesive • Cure time: within 5 sec. to 3 min. • Used mainly for adhesion of metals, rubbers, plastics and woods.
	Aron-alpha 201	790-129-9130	2 g	Polyethylene container	• Quick hardening type adhesive • Quick cure type (max. strength after 30 minutes) • Used mainly for adhesion of rubbers, plastics and metals.
	Loctite 648-50	79A-129-9110	50 cc	Polyethylene container	• Resistance to heat, chemicals • Used at joint portions subject to high temperatures.
Gasket sealant	LG-1	790-129-9010	200 g	Tube	• Used as adhesive or sealant for gaskets and packing of power train case, etc.
	LG-5	790-129-9080	1 kg	Can	• Used as sealant for various threads, pipe joints, flanges. • Used as sealant for tapered plugs, elbows, nipples of hydraulic piping.
	LG-6	790-129-9020	200 g	Tube	• Features: Silicon based, resistance to heat, cold • Used as sealant for flange surface, tread. • Used as sealant for oil pan, final drive case, etc.
	LG-7	790-129-9070	1 kg	Tube	• Features: Silicon based, quick hardening type • Used as sealant for flywheel housing, intake manifold, oil pan, thermostat housing, etc.
	Three bond 1211	790-129-9090	100 g	Tube	• Used as heat-resisting sealant for repairing engine.
	Three bond 1207B	419-15-18131	100 g	Tube	• Features: Silicone type, heat resistant, vibration resistant, and impact resistant sealing material • Used as sealing material for transfer case

https://truckmanualshub.com/

Category	Komatsu code	Part No.	Q'ty	Container	Main applications, features
Molybdenum disulphide lubricant	LM-G	09940-00051	60 g	Can	• Used as lubricant for sliding portion (to prevent from squeaking).
	LM-P	09940-00040	200 g	Tube	• Used to prevent seizure or scuffling of the thread when press fitting or shrink fitting. • Used as lubricant for linkage, bearings, etc.
Grease	G2-LI	SYG2-400LI SYG2-350LI SYG2-400LI-A SYG2-160LI SYGA-160CNLI	Various	Various	• General purpose type
	G2-CA	SYG2-400CA SYG2-350CA SYG2-400CA-A SYG2-160CA SYGA-160CNCA	Various	Various	• Used for normal temperature, light load bearing at places in contact with water or steam.
	Molybdenum disulphide grease LM-G (G2-M)	SYG2-400M SYG2-400M-A SYGA-16CNM	400 g × 10 400 g × 20 16 kg	Bellows type Bellows type Can	• Used for heavy load portion
	Hyper White Grease G2-T G0-T (*) *: For use in cold district	SYG2-400T-A SYG2-16CNT SYG0-400T-A (*) SYG0-16CNT (*)	400 g 16 kg	Bellows type Can	• Seizure resistance and heat resistance higher than molybdenum disulfide grease • Since this grease is white, it does not stand out against machine body.
	Biogrease G2B G2-BT (*) *: For high temperature and large load	SYG2-400B SYGA-16CNB SYG2-400BT (*) SYGA-16CNBT (*)	400 g 16 kg	Bellows type Can	• Since this grease is decomposed by bacteria in short period, it has less effects on microorganisms, animals, and plants.
Primer	SUNSTAR PAINT PRIMER 580 SUPER	417-926-3910	20 ml	Glass container	Adhesive for cab glass: • Used as primer for cab side (Expiration date: 4 months)
	SUNSTAR GLASS PRIMER 580 SUPER		20 ml	Glass container	• Used as primer for glass side (Expiration date: 4 months)
Adhesive	SUNSTAR PENGUINE SEAL 580 SUPER "S" or "W"		320 ml	Polyethylene container	• "S" is used for high-temperature season (April - October) and "W" for low-temperature season (November - April) as adhesive for glass. (Expiration date: 4 months)
	Sika Japan, Sikaflex 256HV	20Y-54-39850	310 ml	Polyethylene container	• Used as adhesive for glass. (Expiration date: 6 months)
Caulking material	SUNSTAR PENGUINE SEAL No. 2505	417-926-3920	320 ml	Polyethylene container	• Used to seal joints of glass parts. (Expiration date: 4 months)
	SEKISUI SILICONE SEALANT	20Y-54-55130	333 ml	Polyethylene container	• Used to seal front window. (Expiration date: 6 months)

https://truckmanualshub.com/

A. ASSEMBLY OF BASE MACHINE

Assembly procedure	
A-1	**Installation of Left and Right Track Frames (1/4)**

- Before transportation, the Upper Structure (also called the “Revolving Frame Assembly”) was rotated 90° from its original position. Start the engine and return the Upper Structure to its original position by slowly rotating it 90° as follows.

- Lift the Upper Structure by two cranes and position it on the Track Frames as shown.

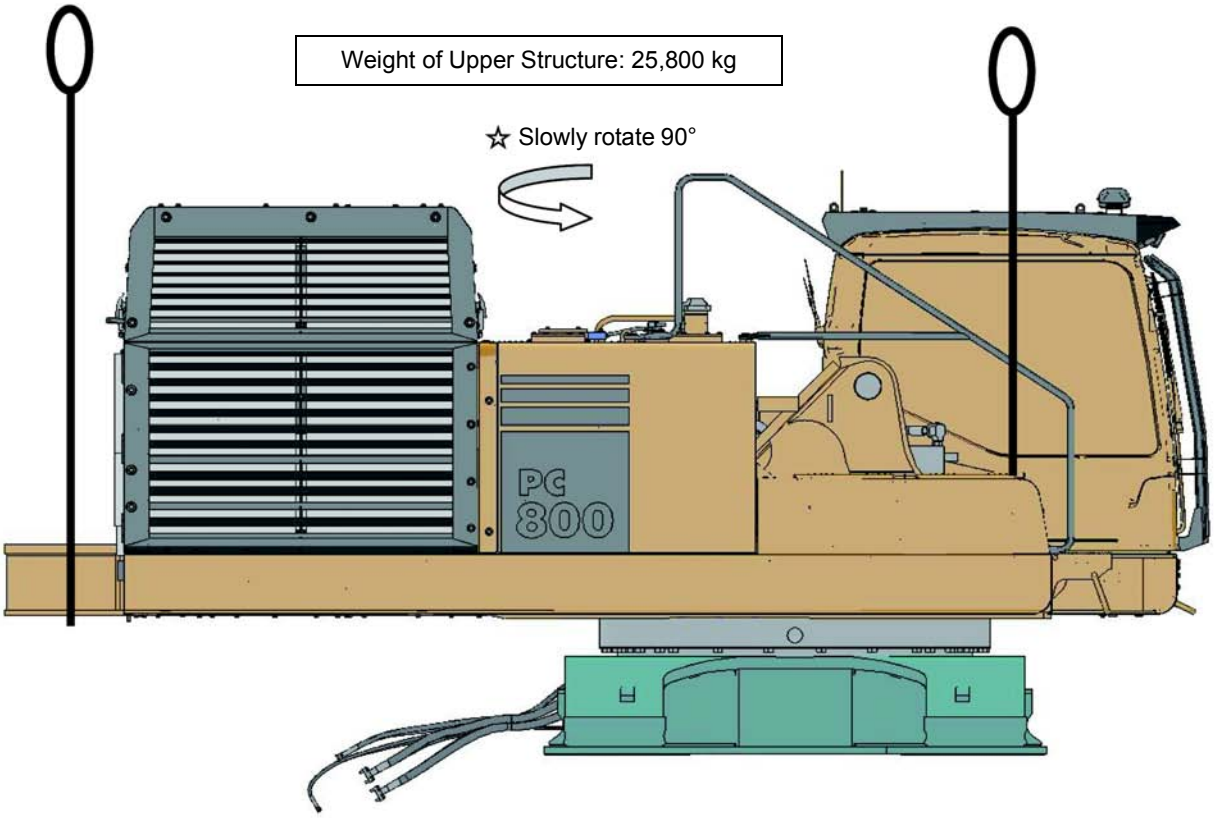

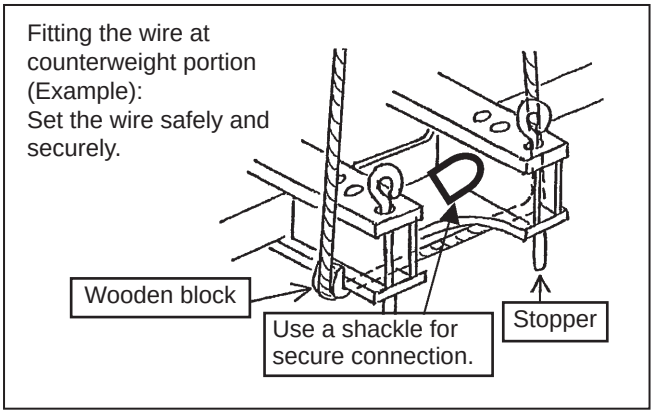

Precautions	Necessary tools		Necessary equipment	
Never enter under the lifted Upper Structure.	Name	Q’ty	Name	Q’ty
	ø 25 × 5000 wire	4	45 ton crane	1
	SD30 shackle	1		
	Others			

Assembly procedure	
A-1	**Installation of Left and Right Track Frames (2/4)**

- Lower the Upper Structure by two cranes and install it on the Track Frames as shown.

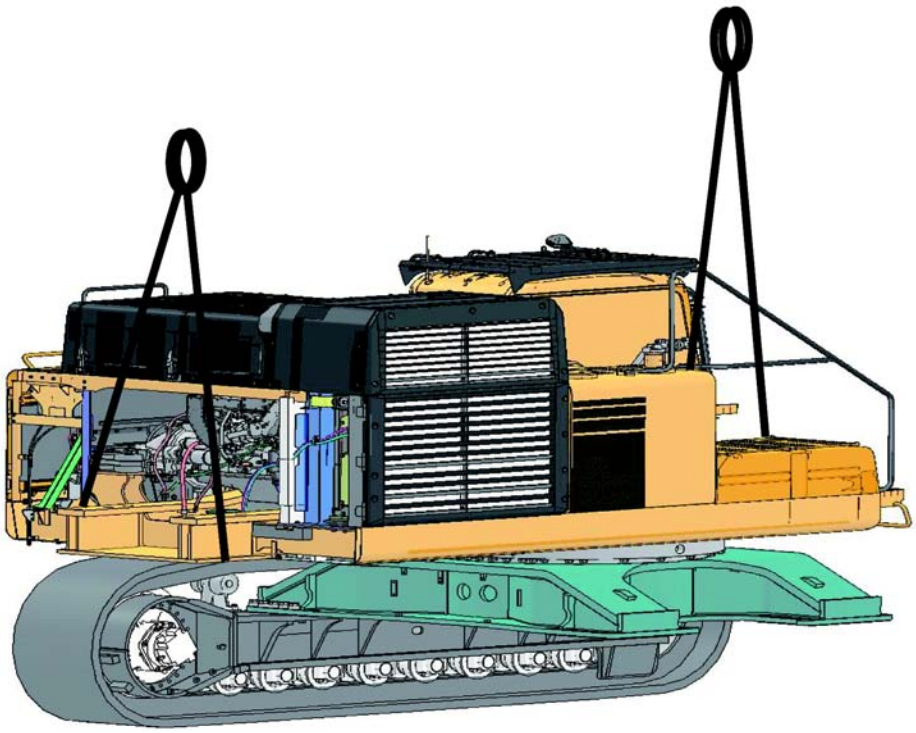

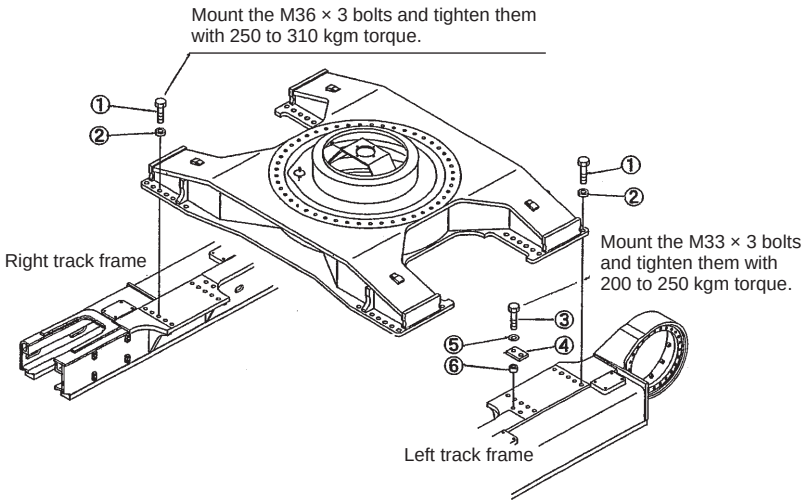

No.	Loose-supply items	Q'ty
1	209-09-11310	8
2	209-30-61120	8
3	209-09-51110	8
4	209-30-71121	2
5	01643-33690	8
6	209-30-11330	8
7	209-09-51110	32
8	209-30-61120	32

Precautions	Necessary tools		Necessary equipment	
	Name	Q'ty	Name	Q'ty
	4 time wrench	1	45 ton crane	2
	Torque wrench (100 kg)	1		
	Socket (25.4 Sq. × 55 mm)	1		
	Torque wrench (4,200 kg)	1		
	Others			

Assembly procedure	
A-1	**Installation of Left and Right Track Frames (3/4)**

- Secure two points of the center frame of the track by placing a hydraulic jack and a 300 × 400 mm wooden block at each point. Make sure that these points do not interfere with the upper structure rotation.
- Lift the Track Frame Assembly and install it on the Center Frame.

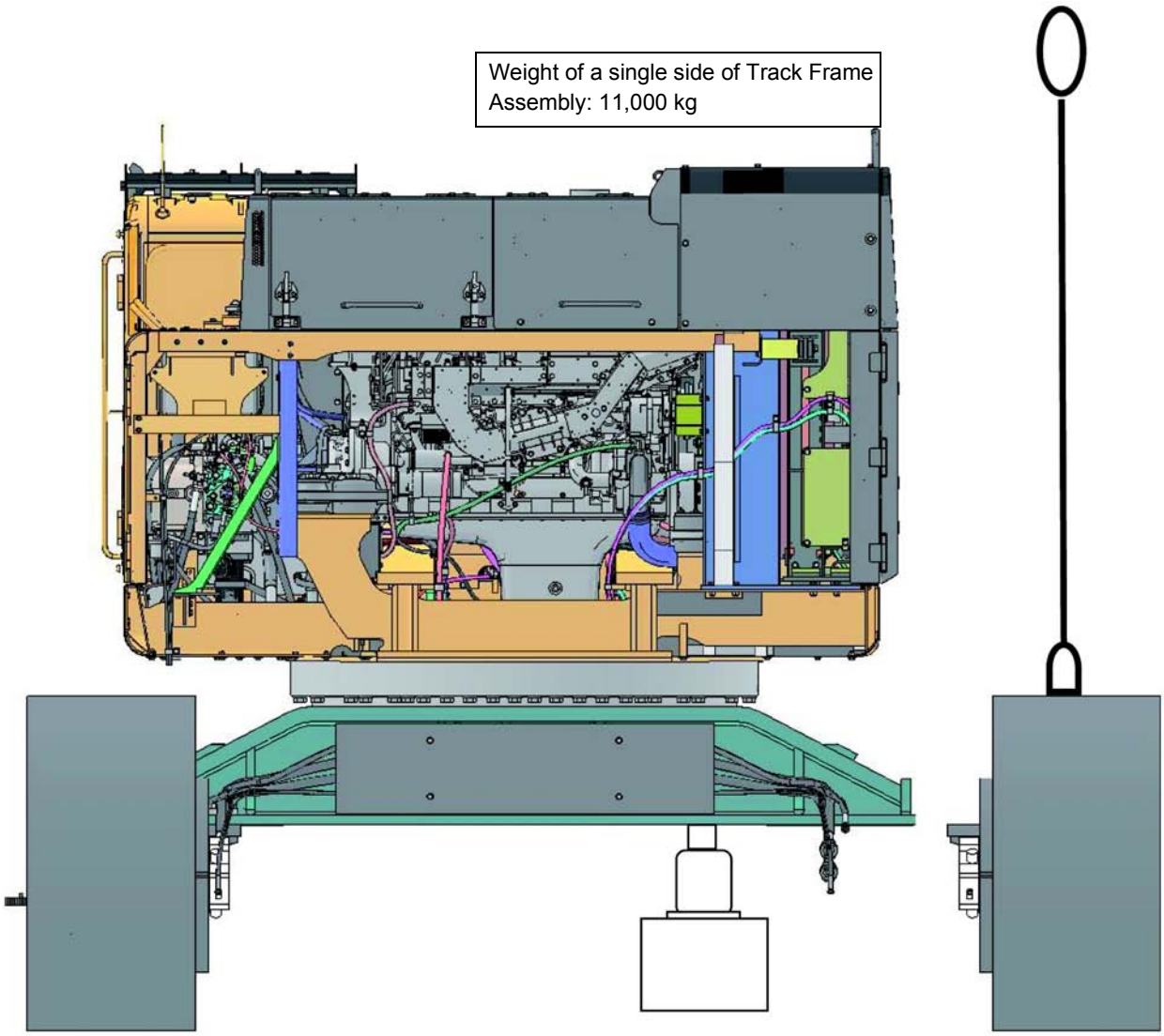

Precautions	Necessary tools		Necessary equipment	
	Name	Q'ty	Name	Q'ty
	Hydraulic jack (50 ton)	2	45 ton crane	1
	Wooden block (300 × 400 mm)	2		
	Wire (ø30 mm, 5000 mm long)	2		
	Pin (ø50 mm, 500 mm)	2		
	Others			

https://truckmanualshub.com/

Assembly procedure	
A-1	**Installation of Left and Right Track Frames (4/4)**

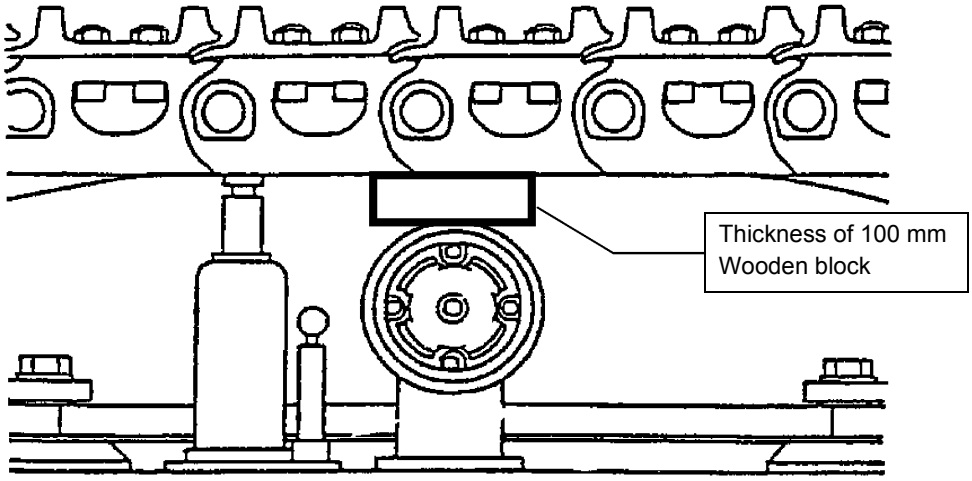

★ When tightening bolts, raise the track with a hydraulic jack as shown above so as to get sufficient space for tightening.

Precautions	Necessary tools		Necessary equipment	
	Name	Q'ty	Name	Q'ty
Do not remove the shoes before assembling (so as to maintain the tightening torques of the shoe bolts).	4 time wrench	1		
	Torque wrench (100 kg)	1		
	Socket (25.4 Sq. × 55 mm)	1		
	Torque wrench (4,200 kg)	1		
	Others			

https://truckmanualshub.com/

Assembly procedure	
A-2	**Installation of Travel Pipe (1/3)**

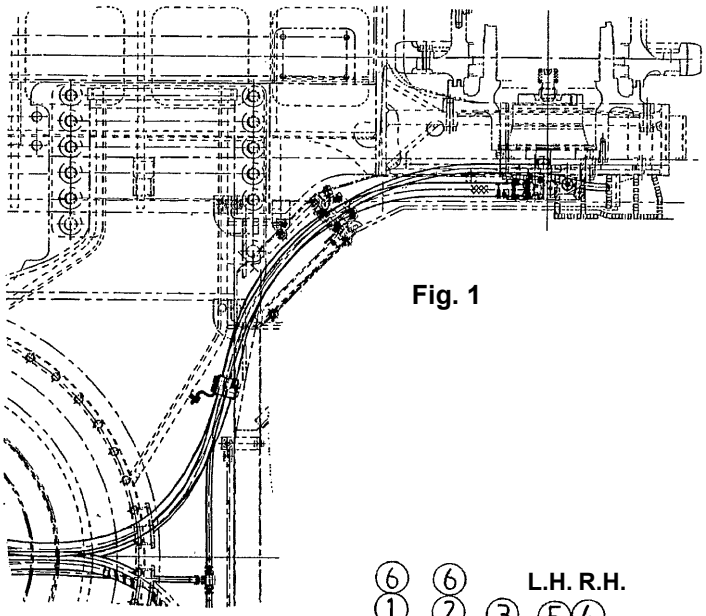

Fig. 1

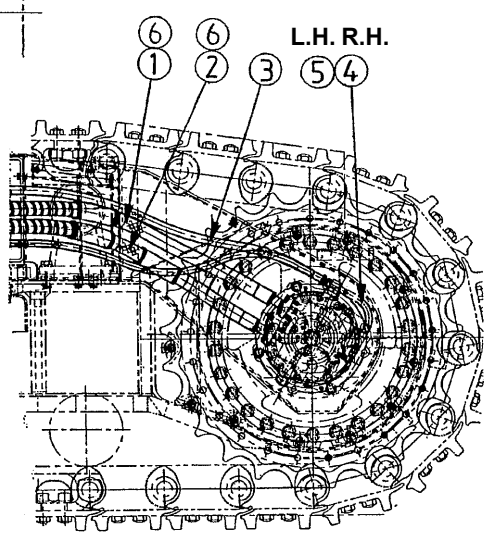

Fig. 2

No.	Parts already installed to body	Q'ty
1	209-64-12131	2
2	209-64-12141	2
3	209-62-42610	2
4	209-62-42520	1
5	209-62-42510	1

No.	Loose-supply items	Q'ty
6	07000-13032	4

Precautions	Necessary tools		Necessary equipment	
• Before removing the oil stopper of each hose, turn the bolt slowly to release the internal pressure.	Name	Q'ty	Name	Q'ty
	Width across flats 32 spanner	2		
	Width across flats 24 spanner	2		
	Width across flats 22 spanner	2		
	KW12P impact	1		
	L150 extension	1		
	M17 socket	1		
	Others			

https://truckmanualshub.com/

Assembly procedure	
A-2	**Installation of Travel Pipe (2/3)**

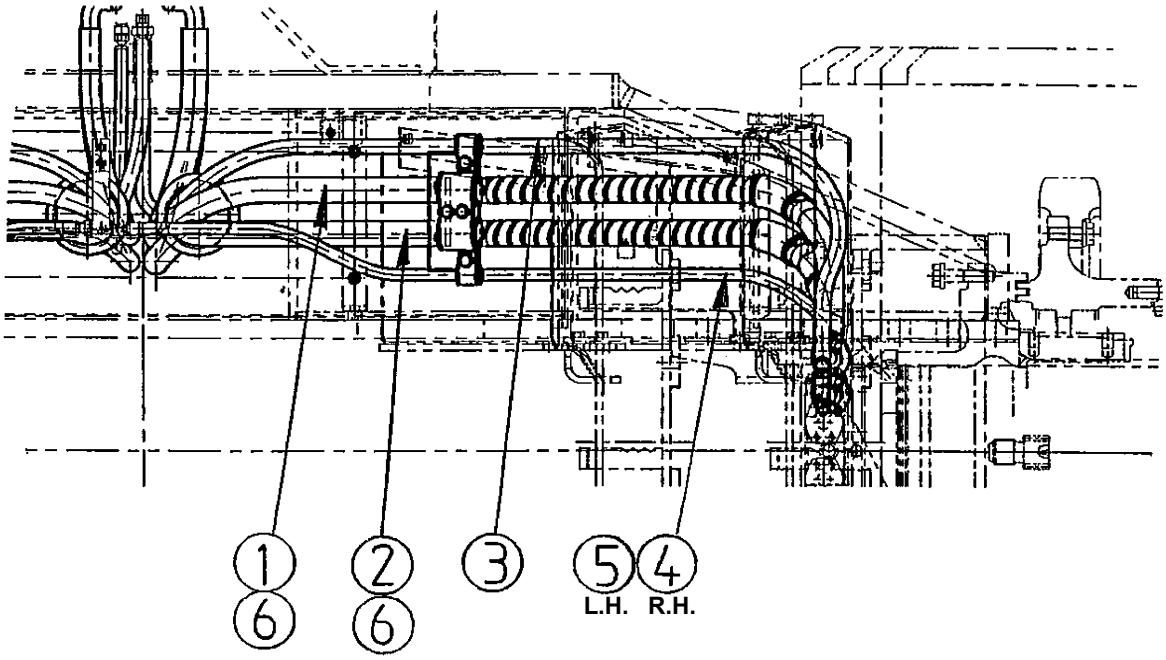

Fig. 3

No.	Parts already installed to body	Q'ty
1	209-64-12131	2
2	209-64-12141	2
3	209-62-42610	2
4	209-62-42520	1
5	209-62-42510	1

No.	Loose-supply items	Q'ty
6	07000-13032	4

Precautions	Necessary tools		Necessary equipment	
	Name	Q'ty	Name	Q'ty
	Others			

Assembly procedure	Installation of Travel Pipe (3/3)
A-2	

(1) Arrange the pilot hoses (4) (L.H.), (5) (R.H.) for selecting machine speed and the drain hoses (3) (Figs 1,2 and 3)

(2) Arrange the main hoses (1) and (2) on the travel motor side (Figs 1,2 and 3). Use new O-rings (6) out of the loose-supply items and use split flange, bolt and washer out of the travel motor parts.

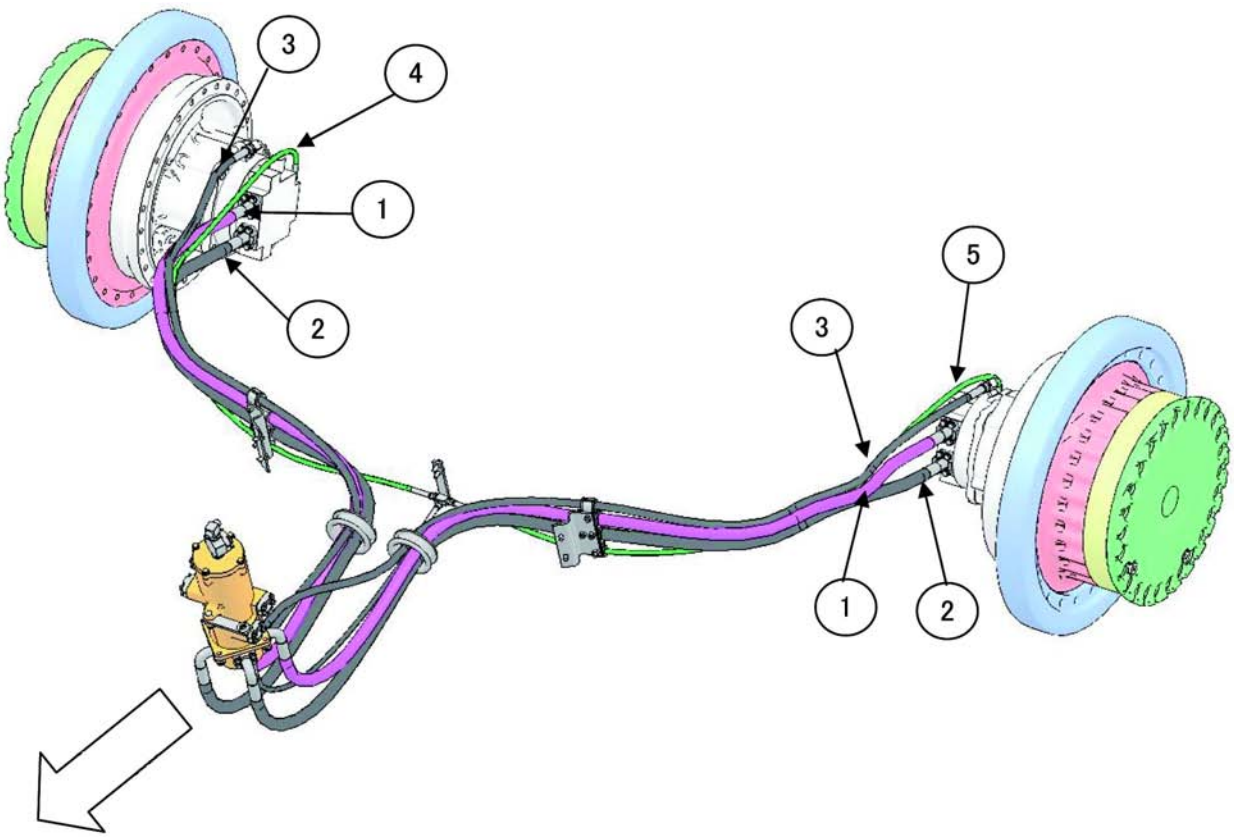

No.	Parts already installed to body	Q'ty
1	209-64-12131	2
2	209-64-12141	2
3	209-62-42610	2
4	209-62-42520	1
5	209-62-42510	1

No.	Loose-supply items	Q'ty
6	07000-13032	4

Precautions	Necessary tools		Necessary equipment	
	Name	Q'ty	Name	Q'ty
	Others			

https://truckmanualshub.com/

Assembly procedure	Installation of Top Guard
A-3	

- Assemble top guard as shown in the diagram below.

kg Top guard : 55 kg

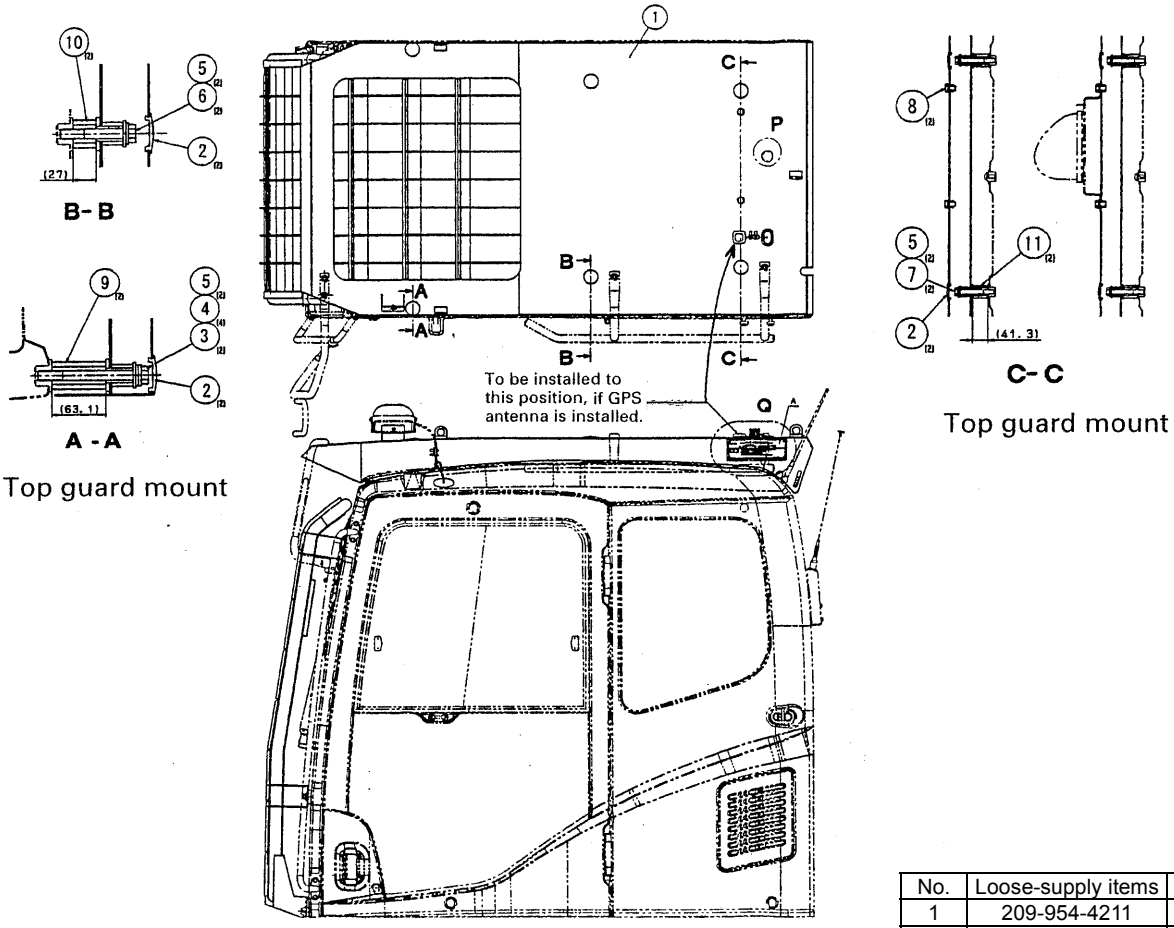

The mounting parts at the front, central, and rear sections are different from one another.

No.	Loose-supply items	Q'ty
1	209-954-4211	1
2	195-Z11-2970	6
3	01011-81220	2
4	01643-31232	4
5	130-43-64260	6
6	01024-81280	2
7	01024-81295	2
8	01024-01220	2
9	20Y-954-4220	2
10	20Y-954-4240	2
11	20Y-954-4230	2

Precautions	Necessary tools		Necessary equipment	
	Name	Q'ty	Name	Q'ty
	Others			

Assembly procedure	Installation of Radiator Cover
A-4	

- Set the radiator covers (1) and (2) on the body and fix them using the bolts and the washers (3) – (6).

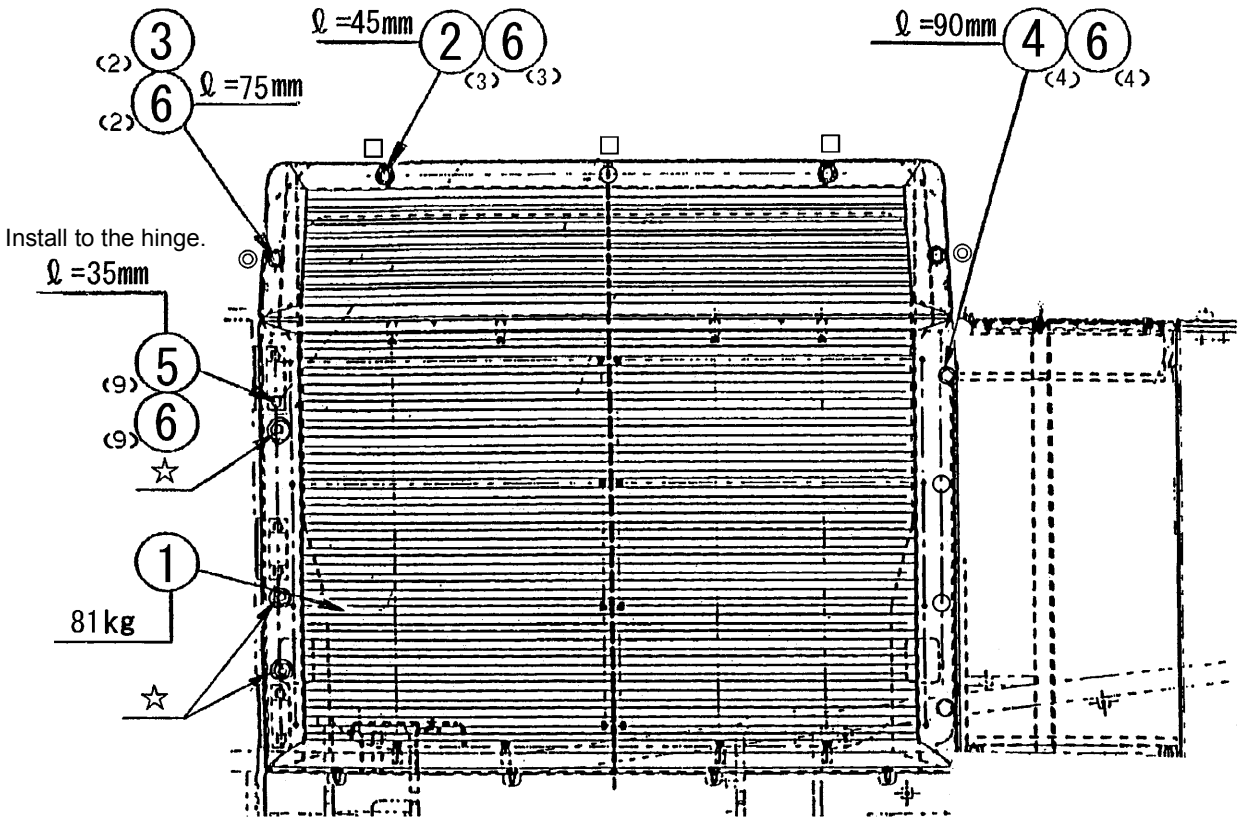

	No.	Loose-supply items	Q'ty
	1	209-54-41500	1
□	2	01010-81245	3
◎	3	01010-81275	2
	4	01010-81290	4
☆	5	01010-81235	9
	6	01643-31232	17

Precautions	Necessary tools		Necessary equipment	
	Name	Q'ty	Name	Q'ty
Remove the plugs for rust prevention set in the mounting tapped holes. Of the 9 hinge mounting bolts, install the 3 bolts with the ☆ mark when the duct is closed and align with the position of the duct.				
	Others			

https://truckmanualshub.com/

Assembly procedure	
A-5	**Installation of Rearview Mirror (1/4)**

- Install parts (1) – (5) to the handrail at the front of the machine right side.

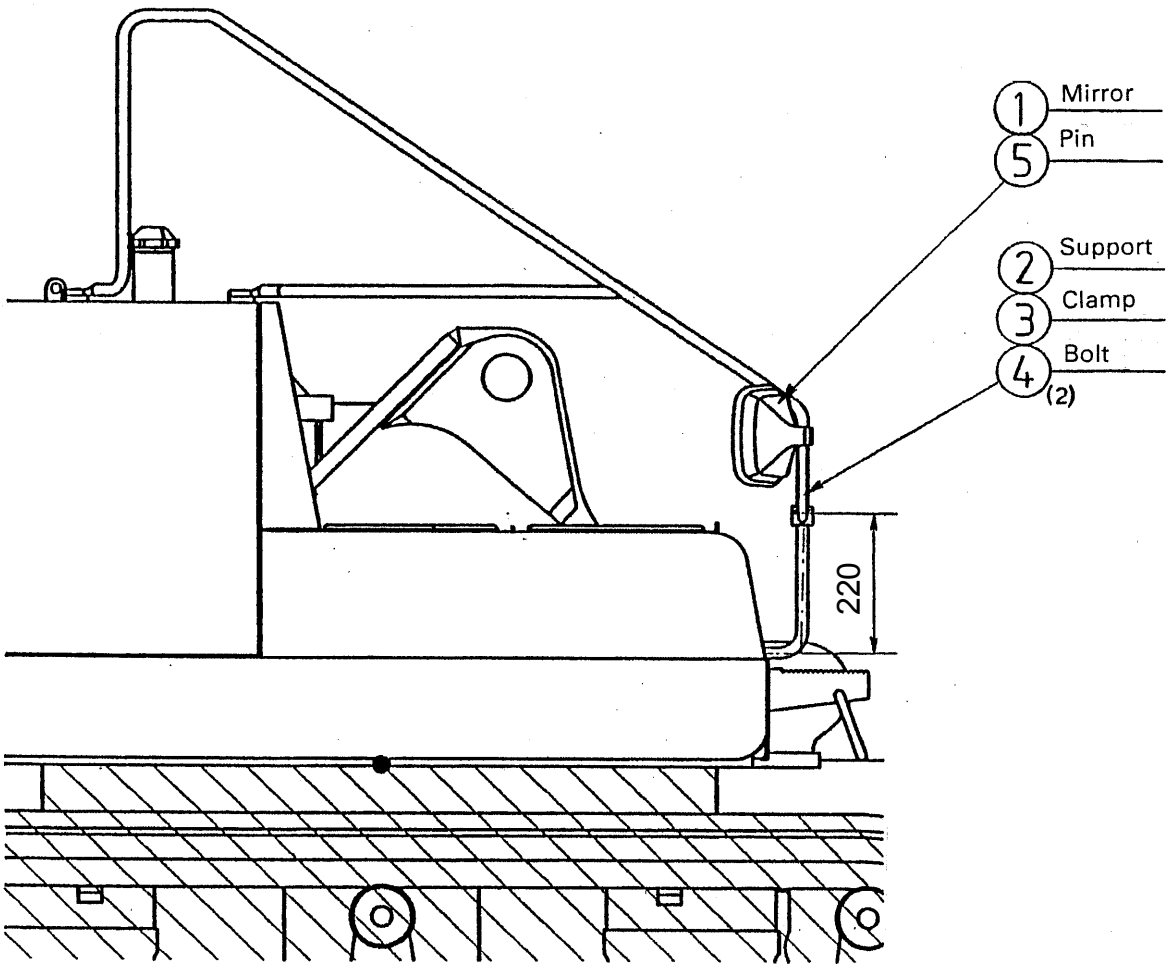

No.	Loose-supply items	Q'ty
1	421-54-25610	1
2	209-53-11450	1
3	20Y-54-61630	1
4	01252-71030	2
5	04025-00632	1

Precautions	Necessary tools		Necessary equipment	
	Name	Q'ty	Name	Q'ty
	Others			

https://truckmanualshub.com/

Assembly procedure	
A-5	**Installation of Rearview Mirror (2/4)**

- Pass pin (5) through the hole in ball busing (A), hold the mirror with the holder of mirror (1), then secure in position and check that the mirror does not move.

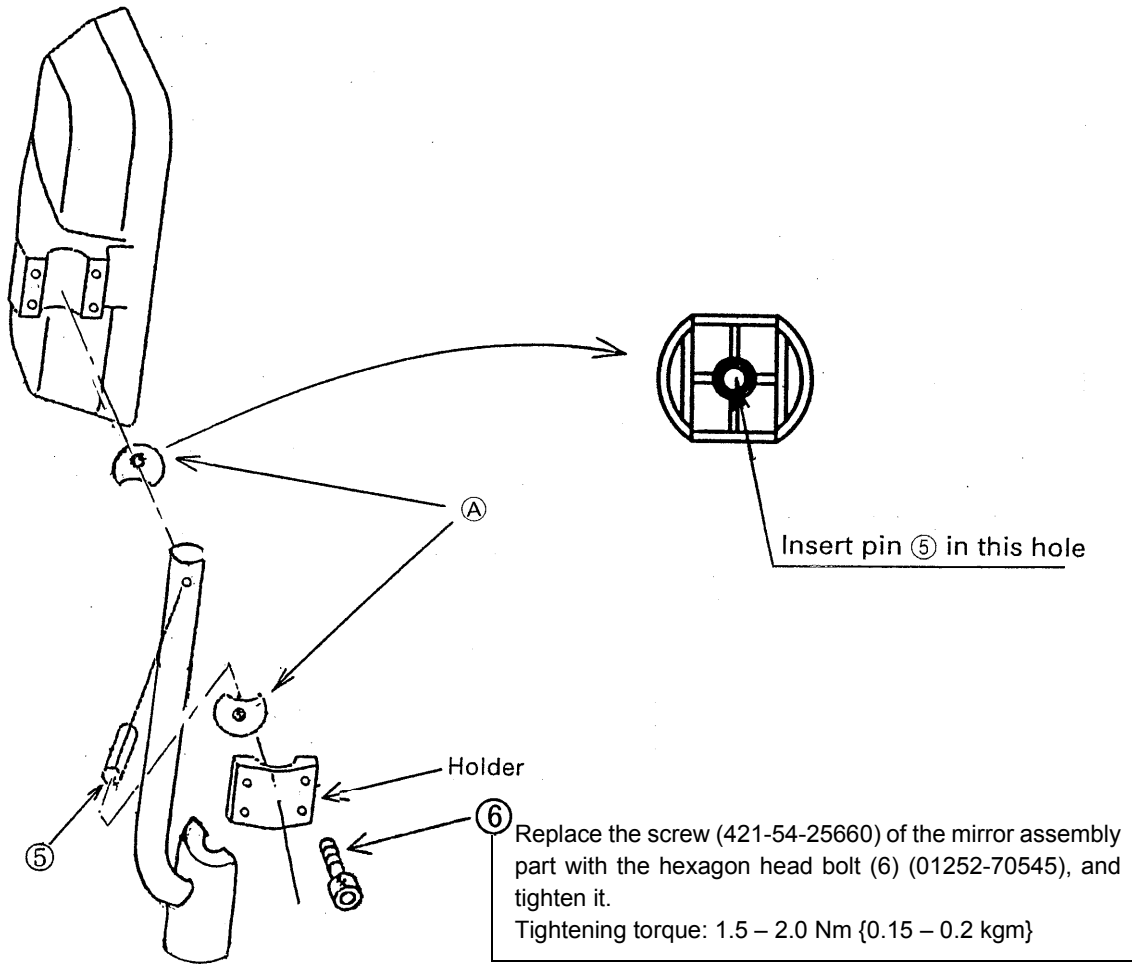

Precautions	Necessary tools		Necessary equipment	
	Name	Q'ty	Name	Q'ty
	Others			

https://truckmanualshub.com/

Assembly procedure	
A-5	**Installation of Rearview Mirror (3/4)**

With Top Guard

- Install parts (1) – (5) to the handrail at the front of the operator's cab.

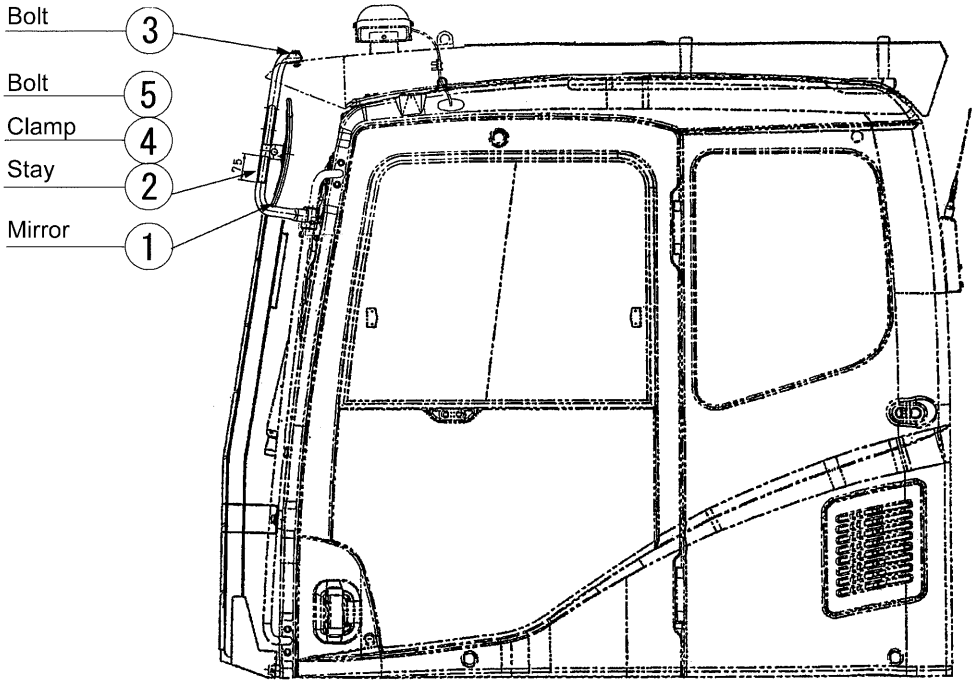

No.	Loose-supply items	Q'ty
1	20Y-54-28911	1
2	209-53-13630	1
3	01024-D1235	2
4	20Y-54-35430	1
5	01252-71025	2

Precautions	Necessary tools		Necessary equipment	
	Name	Q'ty	Name	Q'ty
	Others			

https://truckmanualshub.com/

Assembly procedure	
A-5	**Installation of Rearview Mirror (4/4)**

Without Top Guard

- Install parts (1) – (5) to the handrail at the front of the operator's cab.

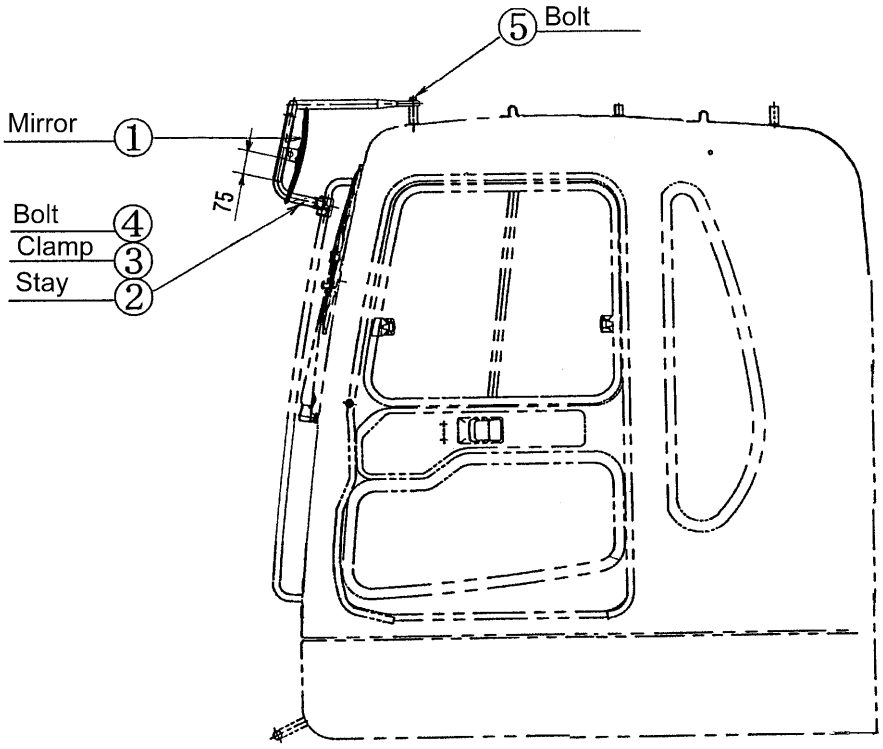

No.	Loose-supply items	Q'ty
1	20Y-54-28911	1
2	209-53-13691	1
3	20Y-54-35430	1
4	01252-71025	2
5	01024-D1245	1

Precautions	Necessary tools		Necessary equipment	
	Name	Q'ty	Name	Q'ty
	Others			

Assembly procedure	
A-6	**Installation of Left Side Step**

(1) Using bolts (5), temporarily tighten brackets (3) to chassis.

(2) Sling steps (1) and (2) with crane, using bolts (6) and washers (7), install them to bracket.
(2-1) Adjust the heights of steps (1) and (2) using brackets (3).

(3) Tighten bracket and mounting bolts. (* in Fig.)

(4) Using bolts (5), install grip (4) to chassis.

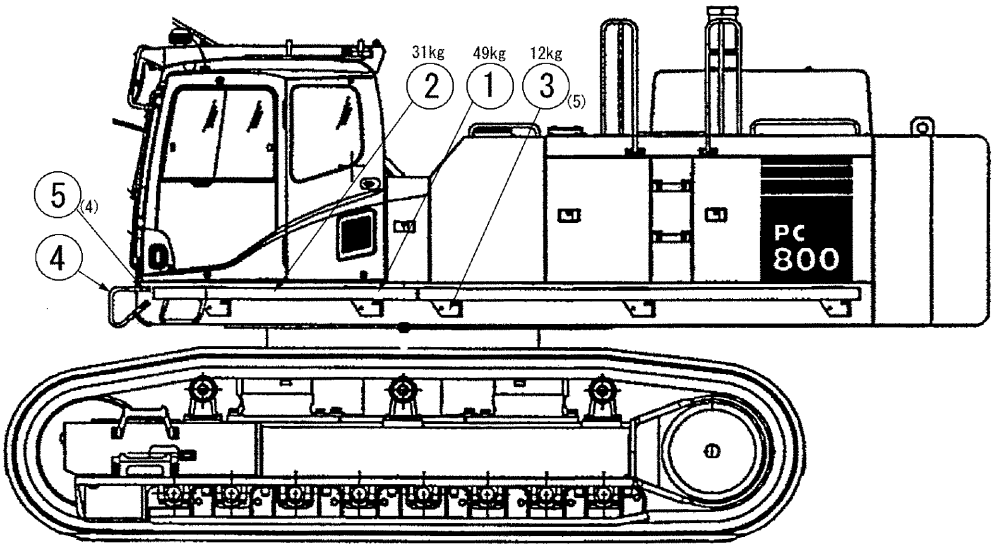

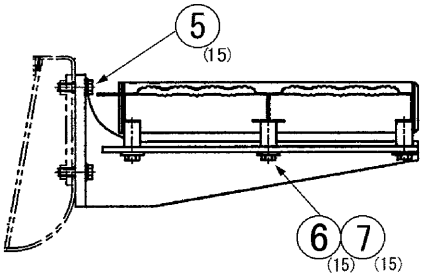

No.	Loose-supply items	Q'ty
1	209-53-13751	1
2	209-53-13741	1
3	209-53-13761	5
4	209-53-13620	1
5	01024-81245	19
6	01010-81230	15
7	175-54-34170	15

Precautions	Necessary tools		Necessary equipment	
	Name	Q'ty	Name	Q'ty
Remove the rust prevention plug knocked into the mounting tap hole.	KW12P impact	1		
	L150 extension	1		
	M19 socket	1		
	Others			

Assembly procedure	Installation of Handrail
A-7	

(1) Install step (1) on the left side cover with bolts (2).

(2) Install handrails (3) and (4) with bolts (2).

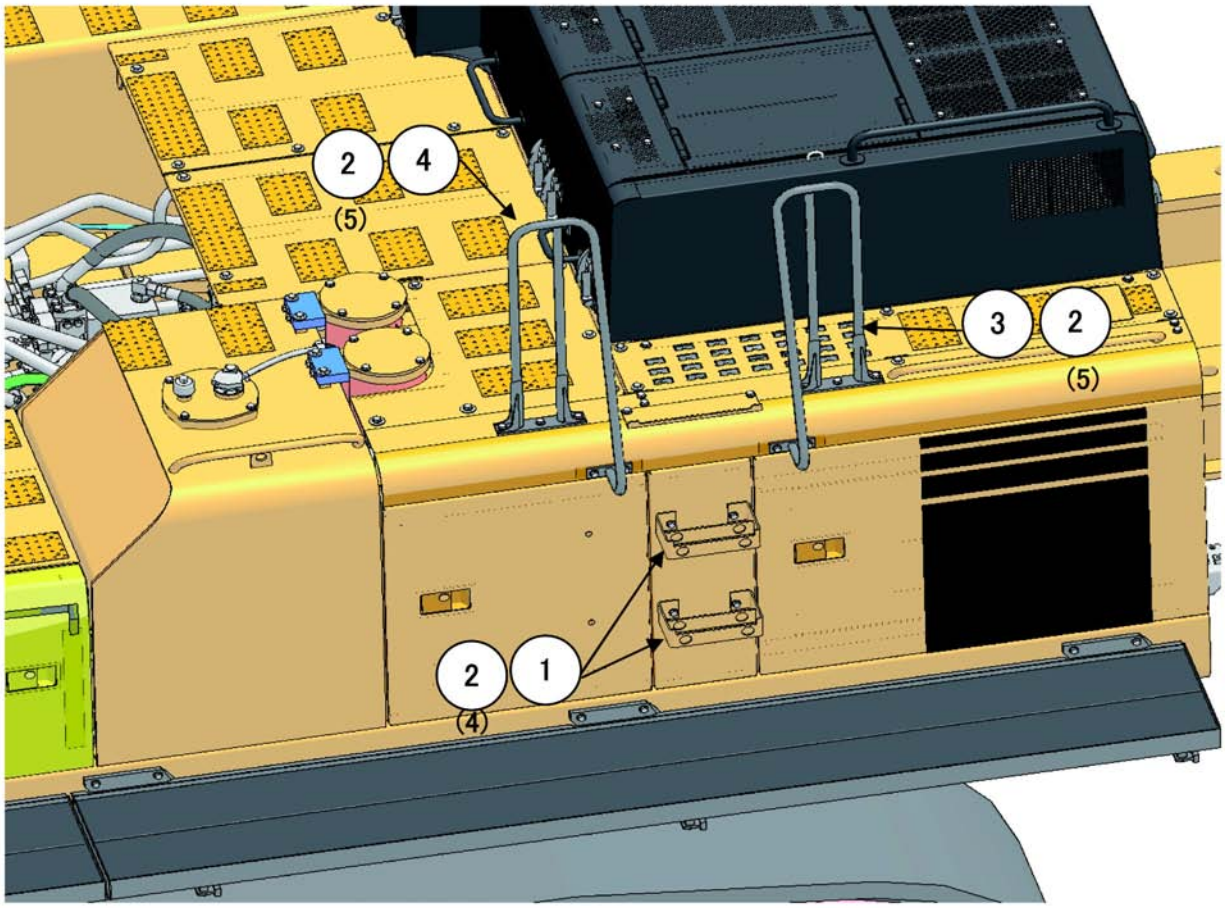

No.	Loose-supply items	Q'ty
1	01010-81230	10
2	01643-31232	10
3	209-54-77581	1
4	209-54-77571	1

Precautions	Necessary tools		Necessary equipment	
	Name	Q'ty	Name	Q'ty
	KW12P impact	1		
	L150 extension	1		
	M19 socket	1		
	Others			

https://truckmanualshub.com/

Assembly procedure	
A-8	**Installation of Handrail (With top guard) (1/2)**

- Install handrail (1) with bolts (2) and spacers (3).

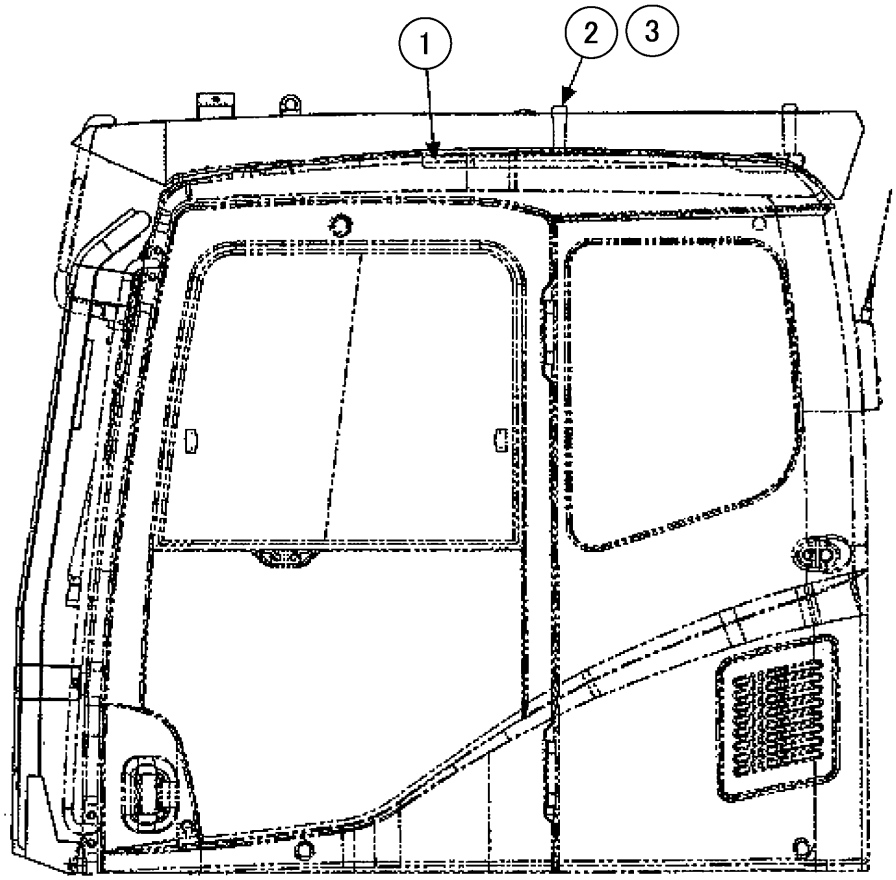

No.	Loose-supply items	Q'ty
1	209-53-13640	1
2	01024-D1260	2
3	195-33-11220	2

Precautions	Necessary tools		Necessary equipment	
	Name	Q'ty	Name	Q'ty
	KW12P impact	1		
	M19 socket	1		
	Others			

https://truckmanualshub.com/

Assembly procedure	Installation of Handrail (With top guard) (2/2)
A-8	

- Install handrail (1) with bolts (2), (4) and pipes (3), (5).

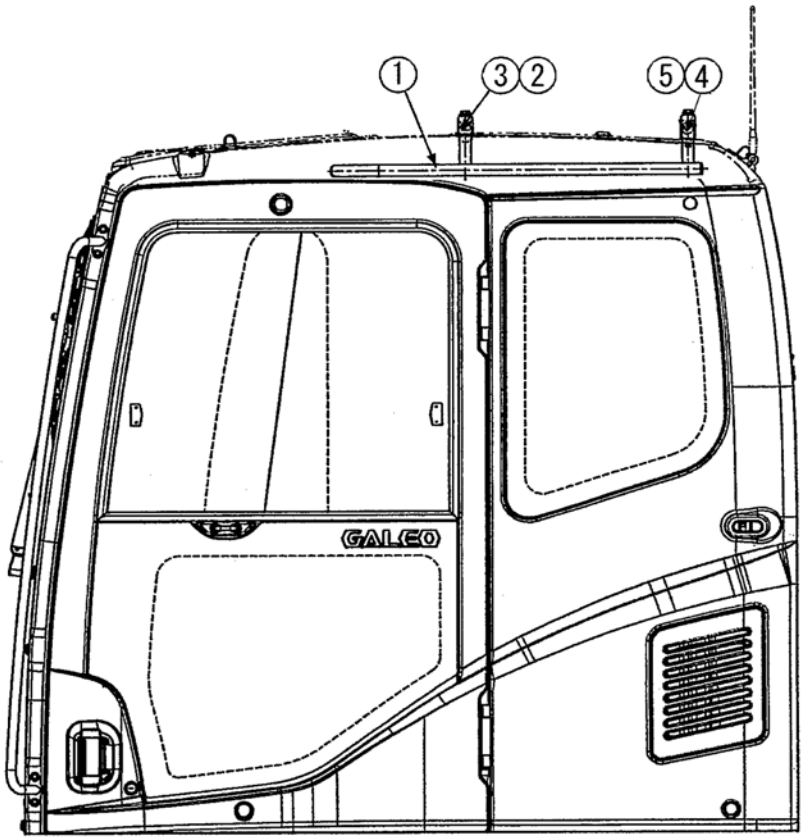

No.	Loose-supply items	Q'ty
1	209-53-13640	1
2	01024-D1260	1
3	20Y-954-4240	1
4	01024-D1275	1
5	20Y-954-4230	1

Precautions	Necessary tools		Necessary equipment	
	Name	Q'ty	Name	Q'ty
	KW12P impact	1		
	M19 socket	1		
	Others			

https://truckmanualshub.com/

Assembly procedure	
A-9	**Installation of Muffler Tail Tube**

(1) Fix the muffler tail tube (1) to the top of the hood by using the bolts (3) and the washer (4).

(2) Fix a rain cap (2) to the muffler tail tube.

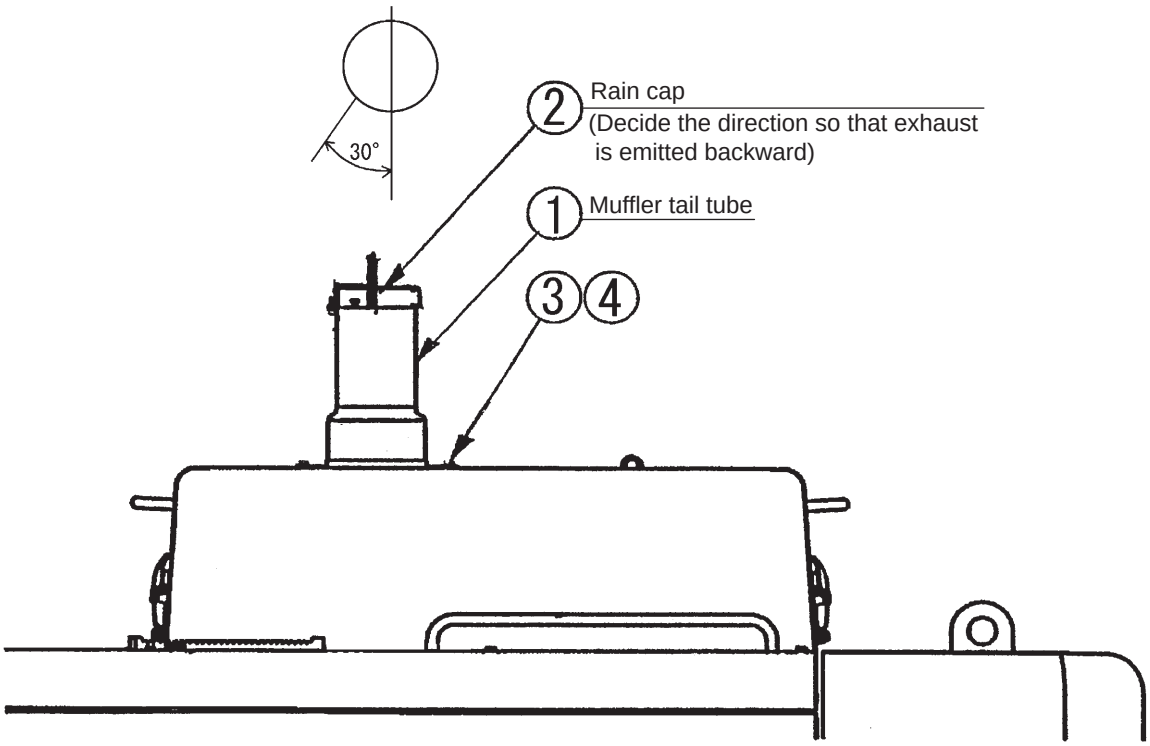

View from machine left side

No.	Loose-supply items	Q'ty
1	209-01-77241	1
2	6164-12-5900	1
3	01010-81230	4
4	175-54-34170	4

Precautions	Necessary tools		Necessary equipment	
	Name	Q'ty	Name	Q'ty
	KW12P impact	1		
	M19 socket	1		
	Others			

https://truckmanualshub.com/

Assembly procedure	
A-10	**Sticking Sheet to Counterweight**

- Stick sheets to the surfaces of the counterweight in front of the machine as shown below.

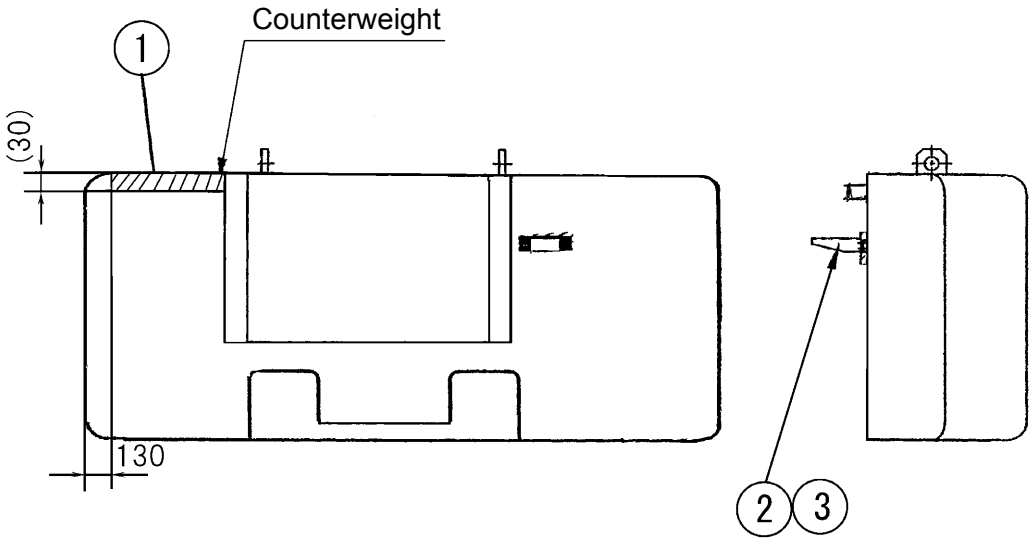

★ Note that steps (2) and (3) should be installed after the counterweight is mounted.

No.	Loose-supply items	Q'ty
1	209-46-41230	1
2	209-54-42190	1
3	01024-81220	4

Precautions	Necessary tools		Necessary equipment	
Remove all oil and rust from the surface where the sheet is to be stuck.	Name	Q'ty	Name	Q'ty
	Others			

https://truckmanualshub.com/

Assembly procedure	
A-11	**Installation of Counterweight**

(1) Lift the counterweight assembly (1) and install it to the body.

(2) Use the bolt (2) (6 pcs.) and the spacer (3) (6 pcs.) for the installation.
- ★ Bolt tightening torque : 3825 ± 392 Nm {390 ± 40 kgm}
- ★ If no large torque wrench is available, tighten according to the turning angle below.
  - (1) Initial torque : Tighten to 1470 Nm {150 kgm}
  - (2) After that : Tighten 90° ± 5°

★ When installing the counterweight, open the door at the rear of the hood.

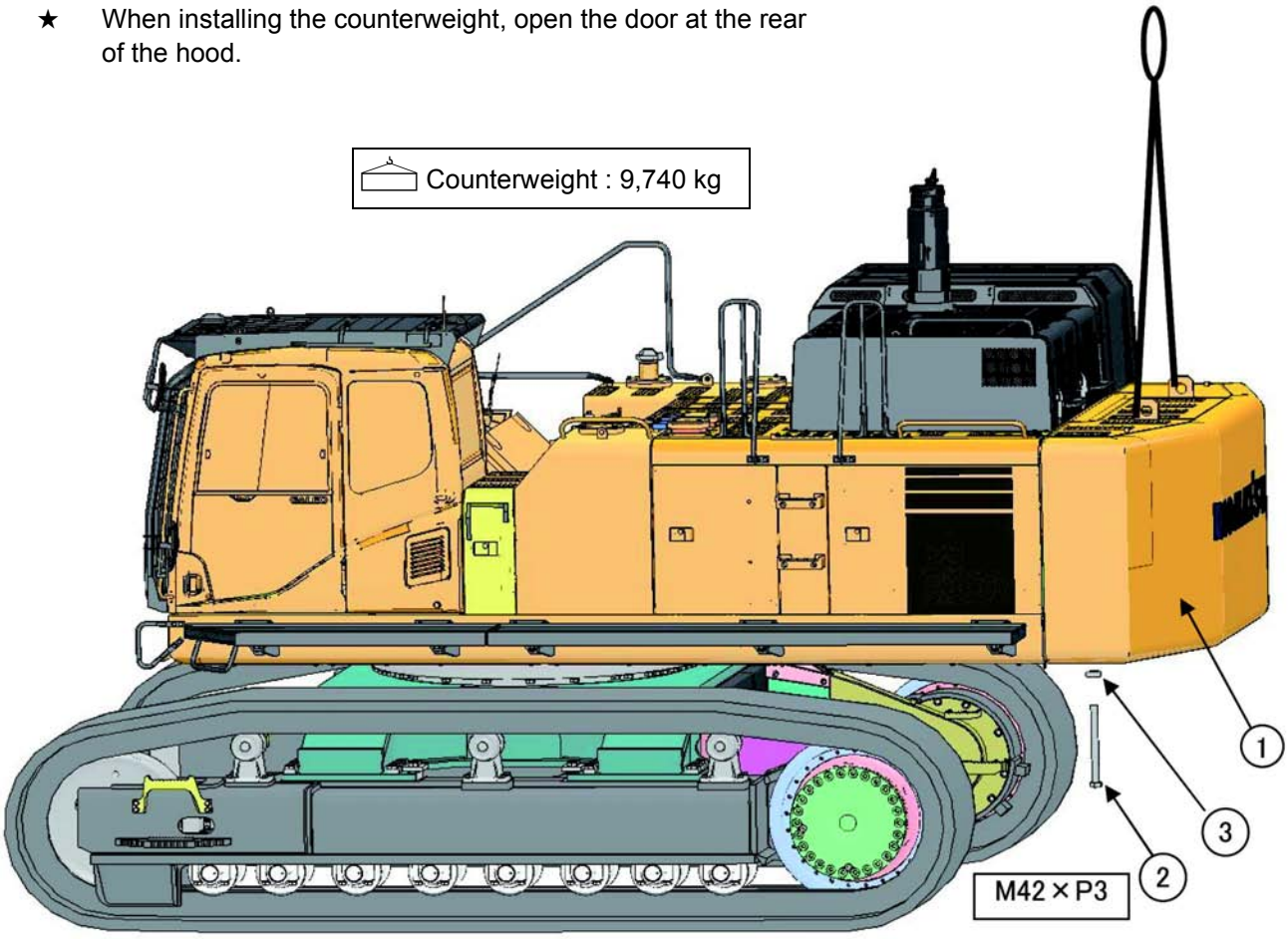

No.	Loose-supply items	Q'ty
2	209-46-51190	6
3	209-46-11210	6

Precautions	Necessary tools		Necessary equipment	
	Name	Q'ty	Name	Q'ty
Install the counterweight so that there will be the reference space of 15 mm between the weight and the revolving frame or so that the left level difference equals to the right one.	Torque wrench (4,118,8 Nm {420 kgm})	1	45 t crane	1
	38sq. × 65 mm socket	1		
	KW45FS impact	1		
	M65SP socket	1		
	ø30 x 5000 mm wire	2		
	SD30 shackle	2		
	Others			

https://truckmanualshub.com/

Assembly procedure	
A-12	**Installation of ORBCOMM Antenna (if equipped)**

(1) Remove the cap from the antenna mounting part and install the antenna.

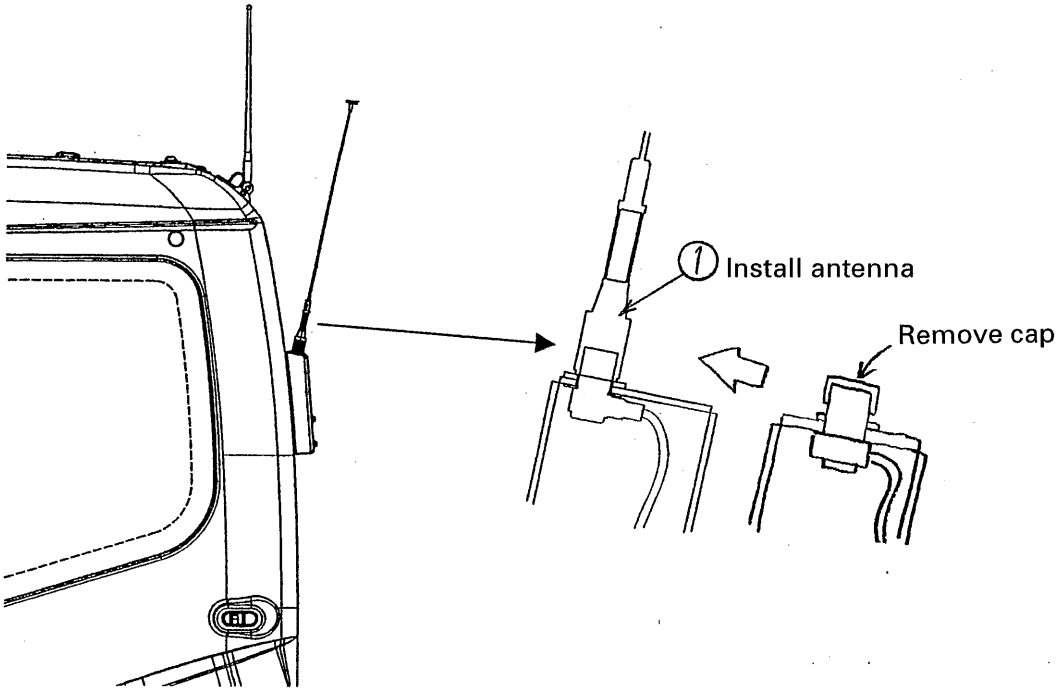

No.	Loose-supply items	Q'ty
1	7826-20-9200	1

Precautions	Necessary tools		Necessary equipment	
	Name	Q'ty	Name	Q'ty
	Others			

https://truckmanualshub.com/

Assembly procedure	
A-13	**Installation of Step Light (1/2)**

When installing OPG TOP GUARD

(1) Install step light (1) to the top guard.

(2) Remove the rubber cap shown in section A-A, take out the connector, and connect the step light connector.

(3) Install the grommet of the step light to the cab and apply silicone seal all round it. In addition, tape the end of the grommet.

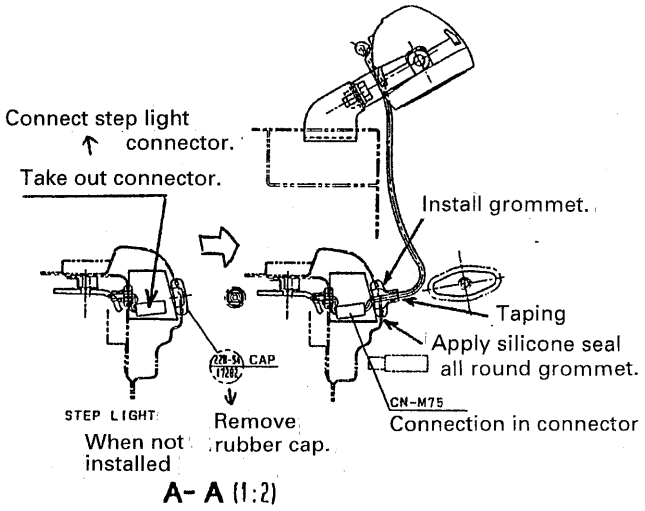

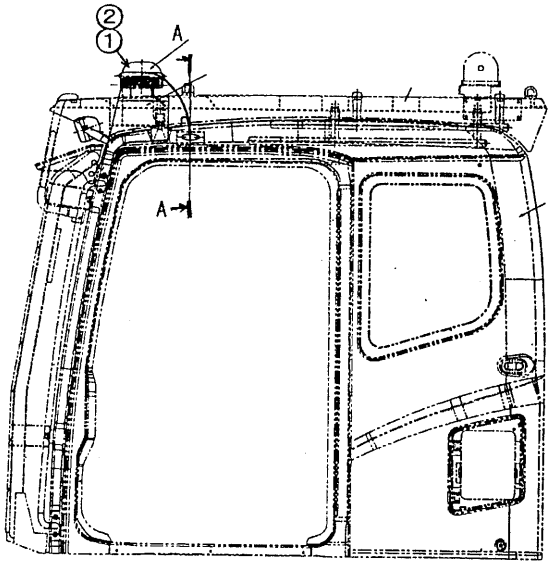

No.	Loose-supply items	Q'ty
1	209-53-14430	1
2	01024-D1020	1

Precautions	Necessary tools		Necessary equipment	
	Name	Q'ty	Name	Q'ty
	Others			

https://truckmanualshub.com/

Assembly procedure	
A-13	**Installation of Step Light (2/2)**

When not installing OPG TOP GUARD

(1) Install bracket ③ to the cab. (Secure 1 place together with the cab handrail.)

(2) Install step light ① to bracket ③.

(3) Remove the rubber cap shown in section C-C, take out the connector, and connect the step light connector.

(4) Install the grommet of the step light to the cab and apply silicone seal all round it. In addition, tape the end of the grommet.

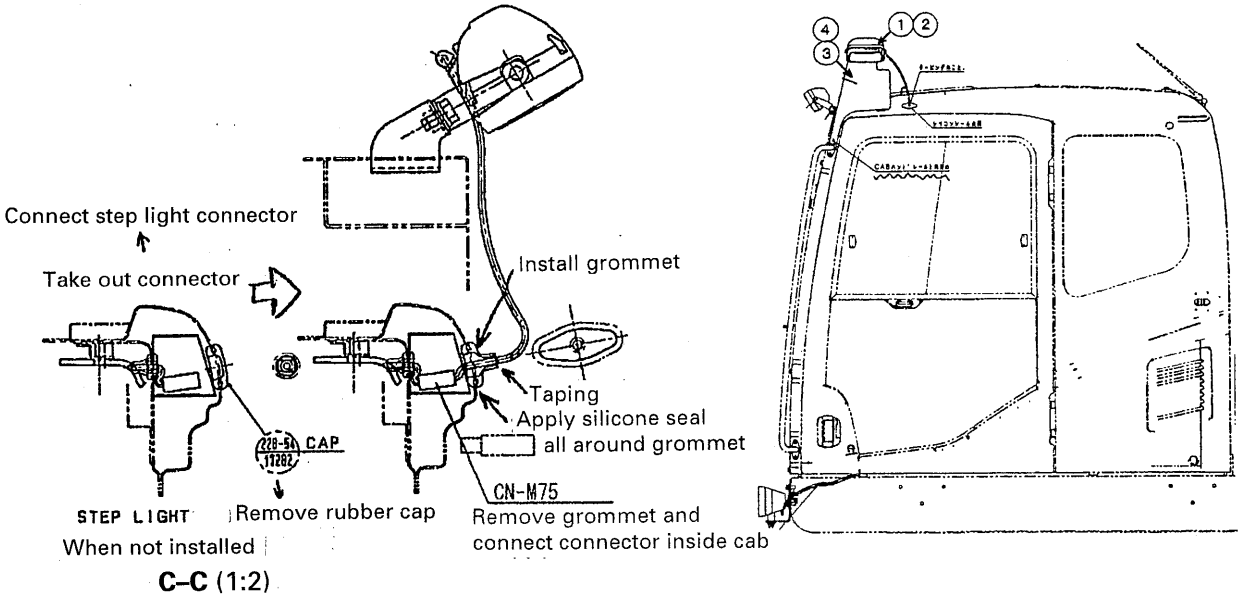

No.	Loose-supply items	Q'ty
1	209-53-14430	1
2	01024-D1020	1
3	209-53-14421	1
4	01024-D1220	1

Precautions	Necessary tools		Necessary equipment	
	Name	Q'ty	Name	Q'ty
	Others			

https://truckmanualshub.com/

Assembly procedure	
A-14	**Air Bleeding of Travel Motor**

1. Start and rotate engine at the low idle.

2. Loosen air bleeding plug (1) one turn (both right and left ones).
   ★ Do not loosen air bleeding plug (1) more than one turn.

3. Repeat forward and backward travel operations four to five times.

4. Tighten air bleeding plug (1) when air bleeding plug (1) discharges oil without white bubble.

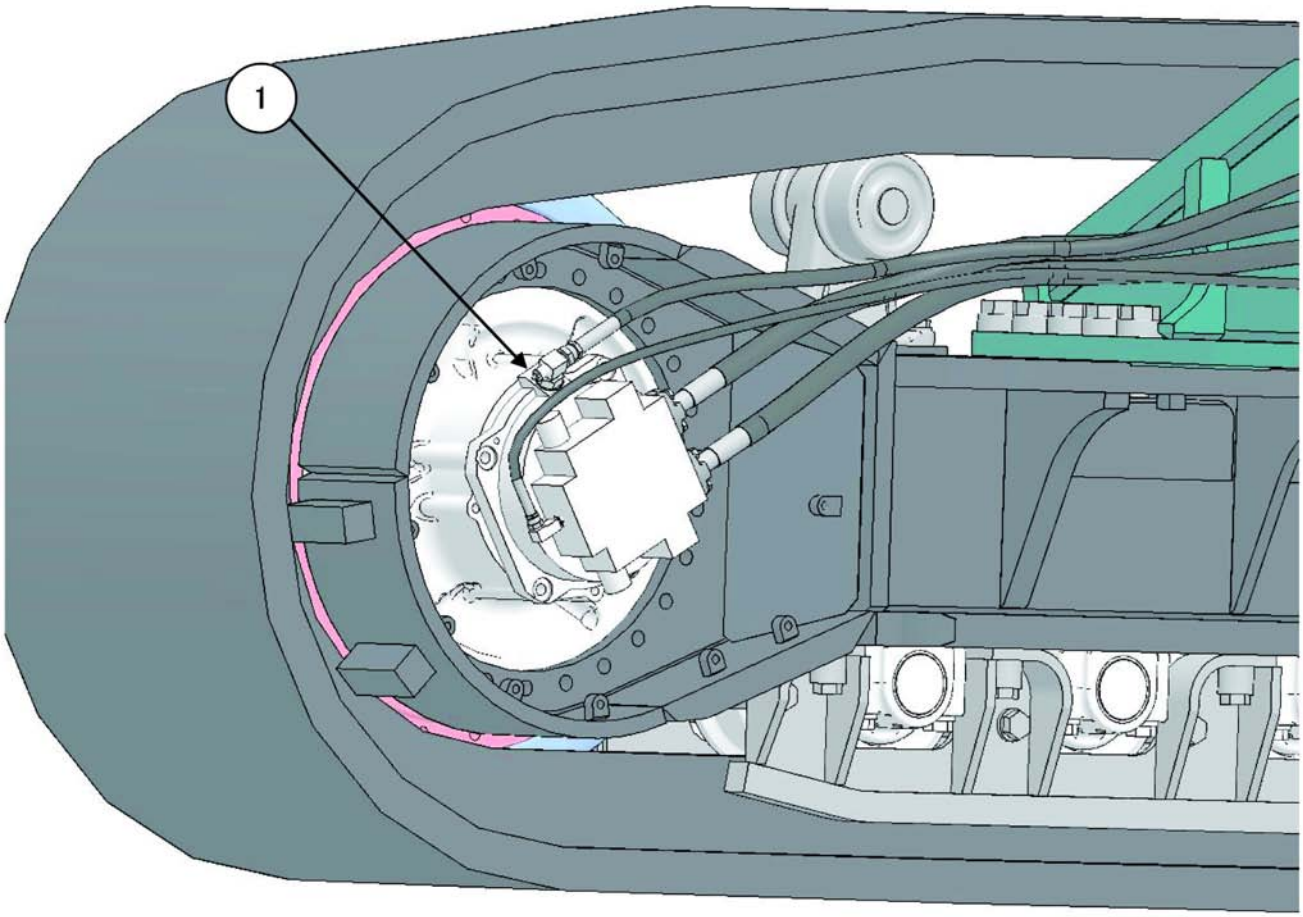

Precautions	Necessary tools		Necessary equipment	
	Name	Q'ty	Name	Q'ty
	Width across flats 10 wrench	1	Oil pan plate	1
	Others			

Assembly procedure	Installation of Travel Piping Cover (1/2)
A-15	

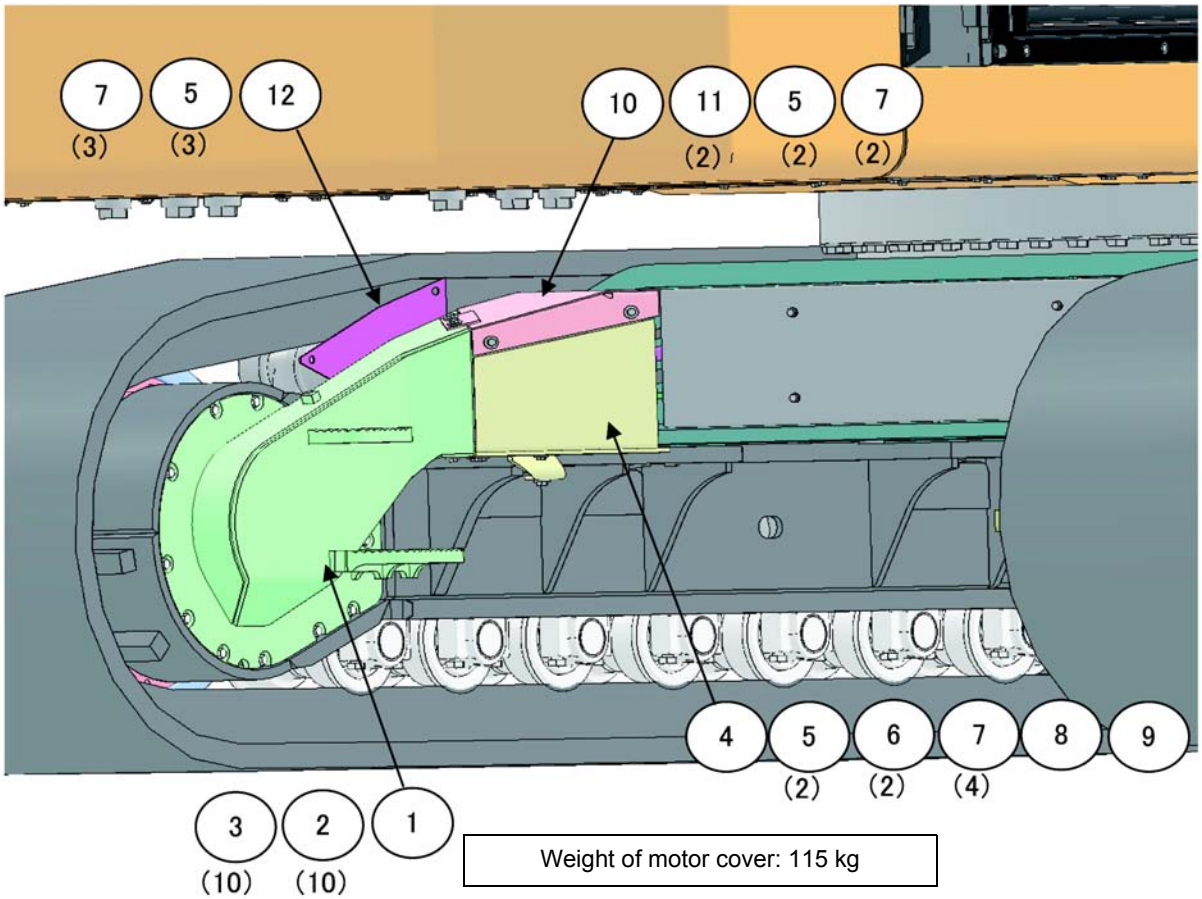

Weight of motor cover: 115 kg

★ Swing upper structure to a position where the motor cover can be slung.

1. Install left travel piping cover.

★ Cover installing order: (1), (4), (10), (12).

No.	Loose-supply items	Q'ty
1	209-30-41310	1
2	01010-81645	10
3	01643-31645	10
4	209-30-41350	1
5	01010-81230	7
6	01010-81245	2
7	175-54-34170	11
8	01010-81640	1
9	21T-54-16150	1
10	209-30-41370	1
11	01010-81240	2
12	209-30-41330	1

Precautions	Necessary tools		Necessary equipment	
	Name	Q'ty	Name	Q'ty
	M16 Eyebolt	1	25 ton crane	1
	ø10 × 3000 wire	1		
	KW10P impact	1		
	KW20P impact	1		
	M19 socket	1		
	M24 socket	1		
	Others			

Assembly procedure	
A-15	**Installation of Travel Piping Cover (2/2)**

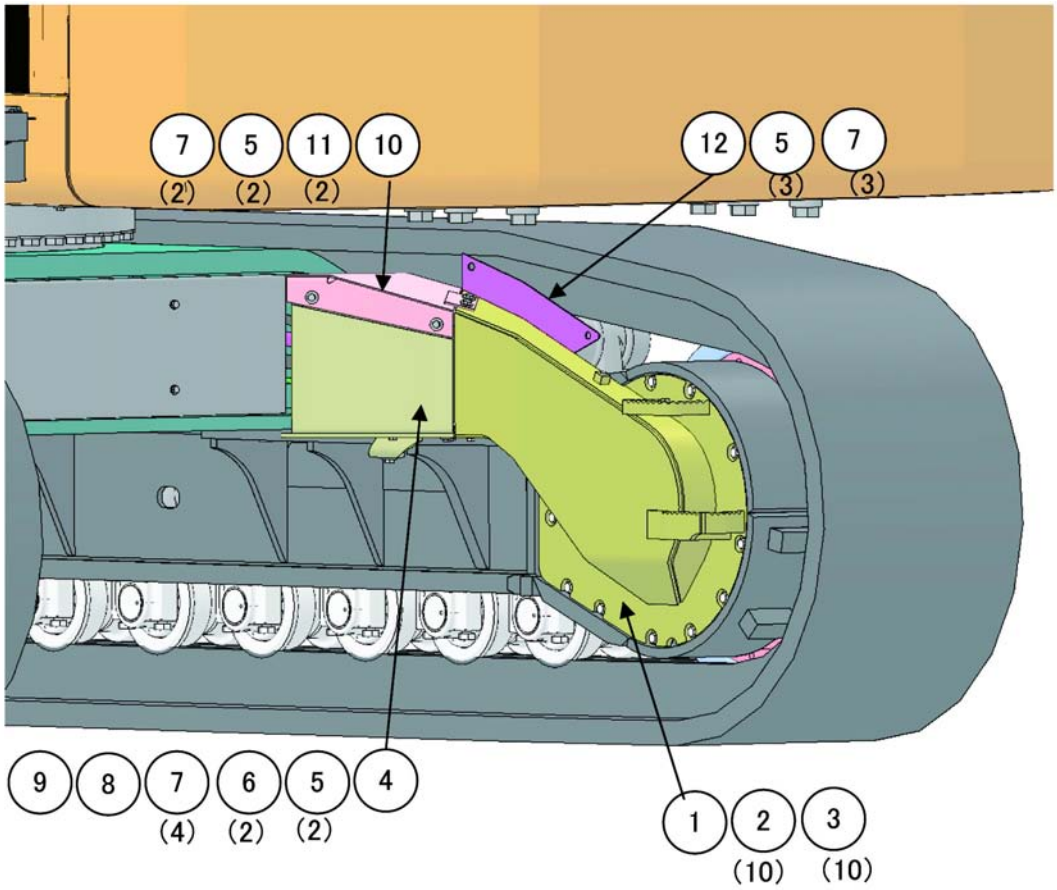

2. Install right travel piping cover.

★ Cover installing order: (1), (4), (10), (12).

No.	Loose-supply items	Q'ty
1	209-30-41320	1
2	01010-81645	10
3	01643-31645	10
4	209-30-41360	1
5	01010-81230	7
6	01010-81245	2
7	175-54-34170	11
8	01010-81640	1
9	21T-54-16150	1
10	209-30-41380	1
11	01010-81240	2
12	209-30-41330	1

Precautions	Necessary tools		Necessary equipment	
	Name	Q'ty	Name	Q'ty
	M16 Eyebolt	1	25 ton crane	1
	ø10 × 3000 wire	1		
	KW10P impact	1		
	KW20P impact	1		
	M19 socket	1		
	M24 socket	1		
	Others			

https://truckmanualshub.com/

Assembly procedure	
A-16	**Testing Track Shoe Tension (1/3)**

Testing and adjusting track shoe tension

⚠ Warning

An operator and a worker shall always work together, and the operator shall manipulate the machine in accordance with signals of the worker. Since the machine is raised for inspection of track tension, fall of machine due to erroneous handling is quite dangerous. Never move the machine during the inspection.

The wear of the pins and bushings on the undercarriage will vary with the working conditions and type of soil, so inspect the track tension frequently in order to maintain the standard tension.
Stop the machine on firm, horizontal ground when carrying out the inspection and maintenance.

TESTING

(1) Run the engine at low idling, then travel the machine forward for a distance equal to the track length on ground and stop the machine slowly.

(2) Place wooden bar (3) on top of the track from No.2 roller (1) to No.3 roller (2).

(3) Measure the maximum deflection between the bottom surface of the wooden bar and the surface of the track shoe.
Deflection "a" should be 10 to 30 mm.

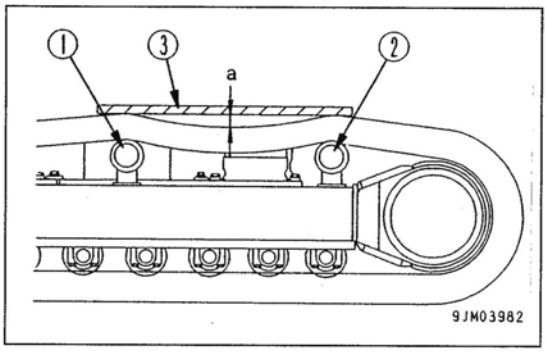

Precautions	Necessary tools		Necessary equipment	
	Name	Q'ty	Name	Q'ty
	Others			

https://truckmanualshub.com/

Testing Track Shoe Tension (2/3)

ADJUSTING

Warning

The internal high pressure grease may burst out. Do not loosen the valve more than one turn when it is required. Also, do not loosen any parts other than the valve at the time. Keep your head away from the valve.

Increasing Track Shoe Tension

(1) Pump in grease through valve (1) using a grease gun.

(2) To check that the tension is correct, move the machine slowly forward and in reverse.

(3) Check the track tension again, and if the tension is not correct, adjust it again.

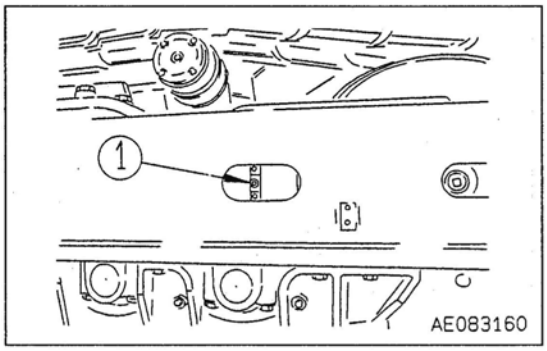

(4) Continue to pump in grease until (A) becomes 148 mm. If the tension is still loose, the pin and bushing are excessively worn, so they must be either turned or replaced. Please contact your Komatsu distributor.

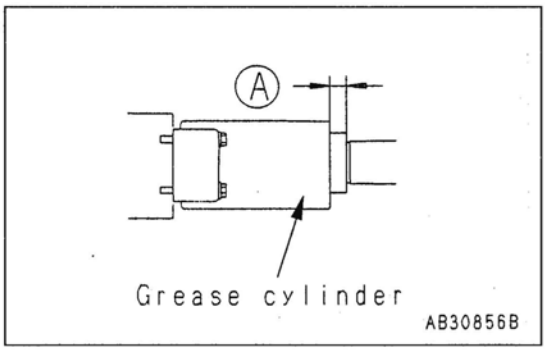

Precautions	Necessary tools		Necessary equipment	
	Name	Q'ty	Name	Q'ty
	Others			

https://truckmanualshub.com/

Assembly procedure	Testing Track Shoe Tension (3/3)
A-16	

Increasing Track Shoe Tension

⚠ Warning

It is extremely dangerous to release the grease by any method except the procedure given below.

⚠ Warning

- Don't stand at the front.
- Don't look inside.

(1) Loosen plug (1) gradually to release the grease.

(2) Turn plug (1) a maximum of one turn.

(3) If the grease does not come out smoothly, move the machine forwards and backwards a short distance.

(4) Tighten plug (1).

(5) To check that the tension is correct, move the machine slowly forward.

(6) Check the track tension again, and if the tension is not correct, adjust it again.

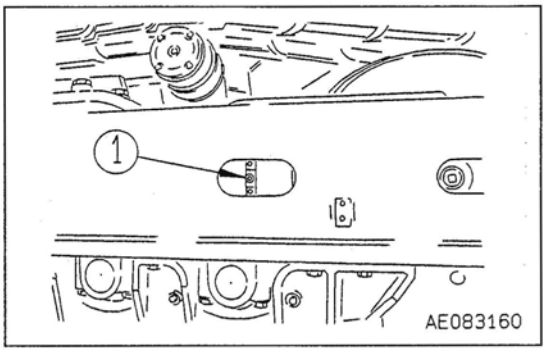

Precautions	Necessary tools		Necessary equipment	
	Name	Q'ty	Name	Q'ty
	Others			

https://truckmanualshub.com/

RECOMMENDED FUEL, COOLANT, AND LUBRICANT

- Komatsu genuine oils are adjusted to maintain the reliability and durability of Komatsu construction equipment and components.
  In order to keep your machine in the best conditioner for long periods of time, it is essential to follow the instructions in this Operation and Maintenance Manual.
- Failure to follow these recommendations may result in shortened life or excess wear of the engine, power train, cooling system, and/or other components.
- Commercially available lubricant additives may be good for the machine, but they may also cause harm. Komatsu does not recommend any commercially available lubricant additive.
- Use the oil recommended according to the ambient temperature in the chart below.
- Specified capacity means the total amount of oil including the oil in the tank and the piping. Refill capacity means the amount of oil needed to refill the system during inspection and maintenance.
- When starting the engine in temperatures below 0°C (32°F), be sure to use the recommended multi-grade oil, even if the ambient temperature may become higher during the course of the day.
- If the machine is operated at a temperature below -20°C (-4°F), a separate device is needed, so consult your Komatsu distributor.
- When the fuel sulfur content is less than 0.2%, change the engine oil according to the period inspection table given in this Operation and Maintenance Manual.
  If the fuel sulfur content is more than 0.2%, change the oil according to the following table.

Sulfur content (%)	Oil change interval
Less than 0.2 %	500 hours
0.2 to 0.5 %	250 hours
0.5 and up	Not recommendable (*)

* If using these fuels, serious troubles may occur because of early deterioration of engine oil or early wear of engine internal parts. If using them by necessity for local situations, be sure to inform customers about the following.

1) Be sure to check Total Basic Number (TBN) of oil frequently by TBN handy checker etc., and change oil based on the result.
2) Always be aware that oil change interval is extremely shorter than standard.
3) Be sure to carry out periodic engine inspection by distributor's expert since change interval of periodic replacement parts and overhaul interval are also shorter.

Reservoir	Fluid Type	Ambient Temperature, degrees Celsius -22 -4 14 32 50 68 86 104 122 °F -30 -20 -10 0 10 20 30 40 50 °C	Recommended Komatsu Fluids
Engine oil pan	Engine oil	(Note.1)	Komatsu EOS0W30
		(Note.1)	Komatsu EOS5W40
			Komatsu EO10W30-DH
			Komatsu EO15W40-DH
			Komatsu EO30-DH
Swing machinery case Final drive case	Powertrain oil (Note.2)		TO30
Coupling case	Powertrain oil		TO10
			TO30
Hydraulic system	Powertrain oil		TO10
	Hydraulic oil		HO46-HM
Grease fitting	Hyper grease (Note.3)		G2-T, G2-TE
	Lithium EP grease		G2-LI
Cooling system	Supercoolant AF-NAC (Note.4)		AF-NAC
Fuel tank	Diesel fuel		ASTM Grade No.1-D S15 ASTM Grade No.1-D S500
			ASTM Grade No.2-D S15 ASTM Grade No.2-D S500

https://truckmanualshub.com/

Check Fuel, Coolant and Oil Levels (2/3)

		Engine Oil pan	Swing machinery case (Each)	Final drive case (Each)	Coupling case	Hydraulic oil system	Cooling system	Fuel tank
Specified capacity	Liter	58	24.5	20	7	800	104	980
	US gal	15.32	6.47	5.28	1.85	211.36	27.48	258.92
Refill capacity	Liter	53	24.5	20	7	470	-	-
	US gal	14.00	6.47	5.28	1.85	124.17	-	-

NOTICE

Always use diesel oil for the fuel.

To ensure good fuel consumption characteristics and exhaust gas characteristics, the engine mounted on this machine uses an electronically controlled high-pressure fuel injection device. This device requires high precision parts and lubrication, so if low viscosity fuel with low lubricating ability is used, the durability may drop markedly.

Note 1: HTHS (High-Temperature High-Shear Viscosity 150°C), specified by ASTM D4741 must be equal to or higher than 3.5 mPa-S. Komatsu EOS0W30 and EOS5W40 are the most suitable oils.

Note 2: Powertrain oil has different properties from engine oil. Be sure to use the recommended oils.

Note 3: Hyper grease (G2-T, G2-TE) has a high performance.
When it is necessary to improve the lubricating ability of the grease in order to prevent squeaking of pins and bushings, the use of G2-T or G2-TE is recommended.

Note. 4: Supercoolant (AF-NAC)

1) Coolant has the important function of anticorrosion as well as antifreeze.
   Even in the areas where freezing is not an issue, the use of antifreeze coolant is essential.
   Komatsu machines are supplied with Komatsu Supercoolant AF-NAC. Komatsu Supercoolant AF-NAC has excellent anticorrosion, antifreeze and cooling properties and can be used continuously for 2 years or 4000 hours.
   Komatsu Supercoolant AF-NAC is strongly recommended wherever available.
2) For details of the ratio when diluting super coolant with water, see "CLEAN INSIDE OF COOLING SYSTEM (PAGE 4-24)".
   Supercoolant AF-NAC may be supplied in premix. In this case, always top off with premix solution. (never dilute with water)
3) To maintain the anticorrosion properties of Supercoolant AF-NAC, always keep the density of Supercoolant between 30% and 68%.

RECOMMENDED BRANDS, RECOMMENDED QUALITY FOR PRODUCTS OTHER THAN KOMATSU GENUINE OIL

When using commercially available oils other than Komatsu genuine oil, consult your Komatsu distributor.

https://truckmanualshub.com/

Assembly procedure

A-17

Check Fuel, Coolant and Oil Levels (3/3)

For coolant ratio to water, investigate past minimum temperature and decide it according to the following Mixing Proportion Table. In this case, regard temperatures about 10°C lower than the actual temperatures as the minimum temperature in the table.

Mixing Proportion Table of Water and Coolant

Minimum temperatures (°C) / Mixing amounts (ℓ)	−10 or higher	−20	−30	−40	−50
Coolant	28.5	38.9	47.5	55.1	60.8
Water	66.5	56.1	47.5	39.9	34.2

⚠ Warning

The coolant is inflammable. So, keep it away from fire.

Use tap water as the cooling water.

We recommend you to control mixing ration with an antifreeze concentration meter.

⚠ Warning

When removing the drain plug, use care not to be drenched by coolant mixed water.

Precautions	Necessary tools		Necessary equipment	
• Non-amine Supercoolant (Blue) is added when shipped. Do not mix coolant of different type with it.	Name	Q'ty	Name	Q'ty
	Others			

https://truckmanualshub.com/

Assembly procedure	
A-18	**Parts to be Touched up after Field Assembly**

After assembling the large-sized hydraulic excavator in the field, touch up the following parts.

(1) Underside of front and rear of boom

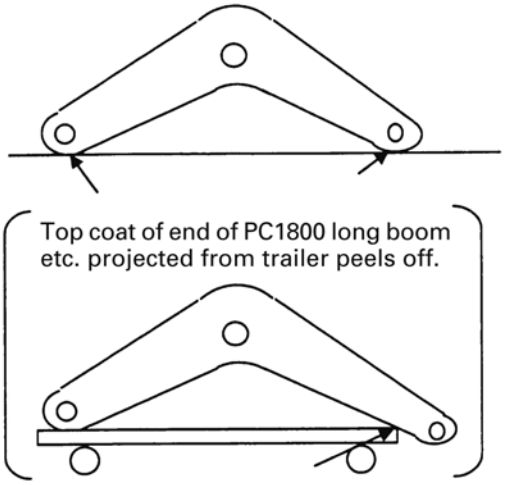

(2) Underside of arm

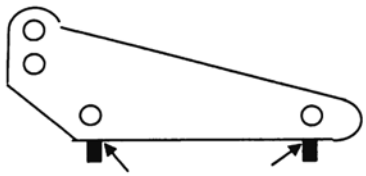

(3) Underside of counterweight

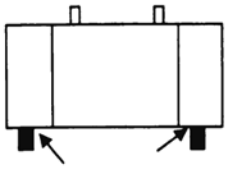

(4) Underside of bucket

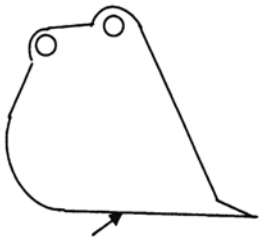

When the machine is used on the seashore, etc. where it is rusted easily, touch up the following parts, too.

- Unpainted parts of machined surfaces of flanges after installing piping
- Grease tubes
- Metallic hose bands, etc.

Use rust-prevent clear paint for touching up the machined surfaces, etc.
(Recommended brand: KOMATSU genuine rust-preventive clear paint)

Precautions	Necessary tools		Necessary equipment	
	Name	Q'ty	Name	Q'ty
	Others			

https://truckmanualshub.com/

B. ASSEMBLING OF WORK EQUIPMENT OF BACKHOE

• Clean the mounting pin and pin hole and check them for a flaw.

https://truckmanualshub.com/

Assembly procedure	Assembly of Arm Cylinder
B-1	

(1) Remove the stopper fixed to the boom and the arm cylinder foot pin.

Arm cylinder foot pin: 24 kg × 2

(2) For PC800 only, set the O-ring (07000-12130, 2 pcs.) to the arm cylinder foot.

(3) Lift the arm cylinder and fit it to the hole positions on the arm side.

Arm cylinder: 870 kg (PC800, PC800LC)
493 kg × 2 (PC800SE, PC850, PC850SE)

Adjustment should be made using the shim (2) so that the clearance becomes less than 1 mm.

(4) Insert the arm cylinder foot pin.

Inside of pin hole: Lithium grease

(5) Install the stopper plate.
Tightening torque of the plate fixing bolt: 245 – 309 Nm {25 – 31.5 kgm}

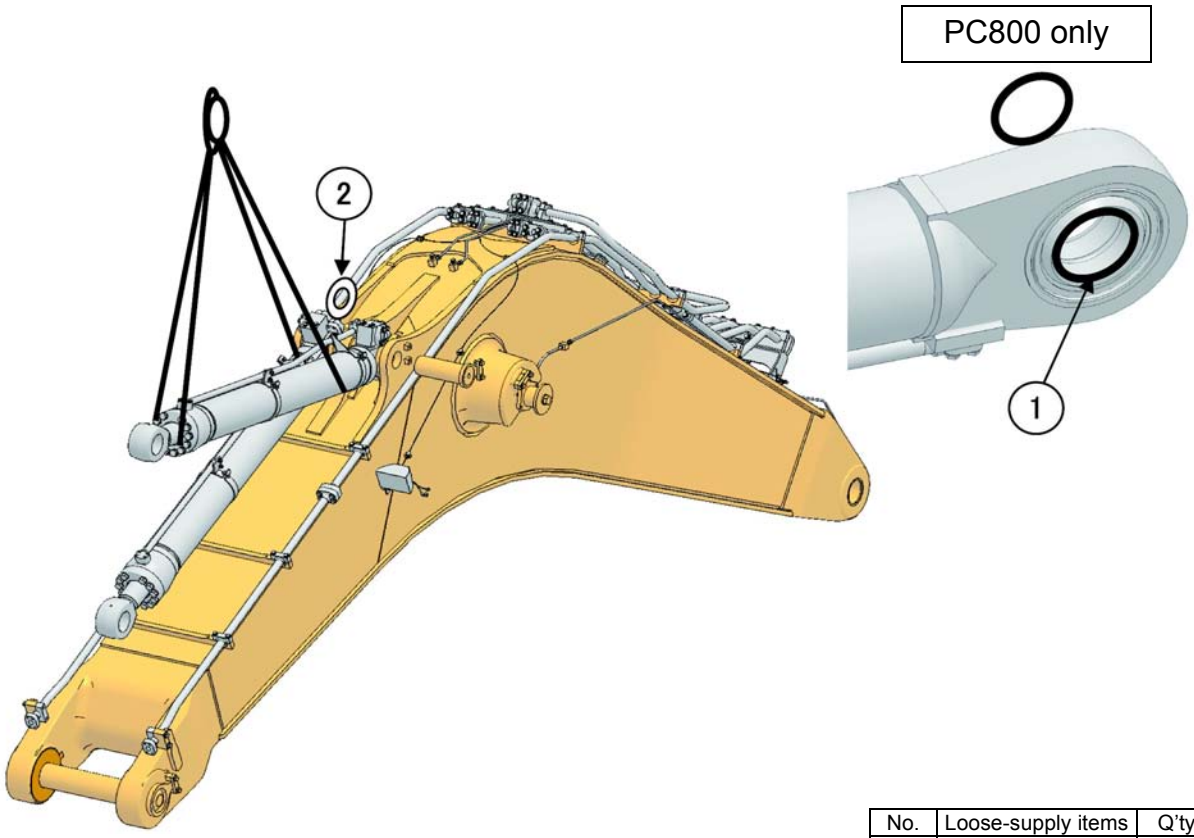

No.	Loose-supply items	Q'ty
1	07000-12130	4
2	207-70-11360	7

Precautions	Necessary tools		Necessary equipment	
	Name	Q'ty	Name	Q'ty
	50 mm wide, 3000 mm Nylon sling	2	25 ton crane	1
	KW20P impact wrench	1		
	M24 socket	1		
	Others			

https://truckmanualshub.com/

Assembly procedure	
B-2	**Connection of Arm Cylinder Hoses (1/2)**

(1) Remove the oil stopper plug from the arm cylinder pipe, replace the O-rings (07000-13048, 8 pcs. for PC850, 07000-13038, 4 pcs.) at the hose connection with new ones and connect the arm cylinder hoses (07098-01414, 1 pc. 07098-01417, 1 pc. and 209-62-41910, 1 pc. 209-62-41920, 1 pc. and 07099-01417, 2 pcs. for PC850) there.

★ Use split flange and bolt out of the oil stopper parts.

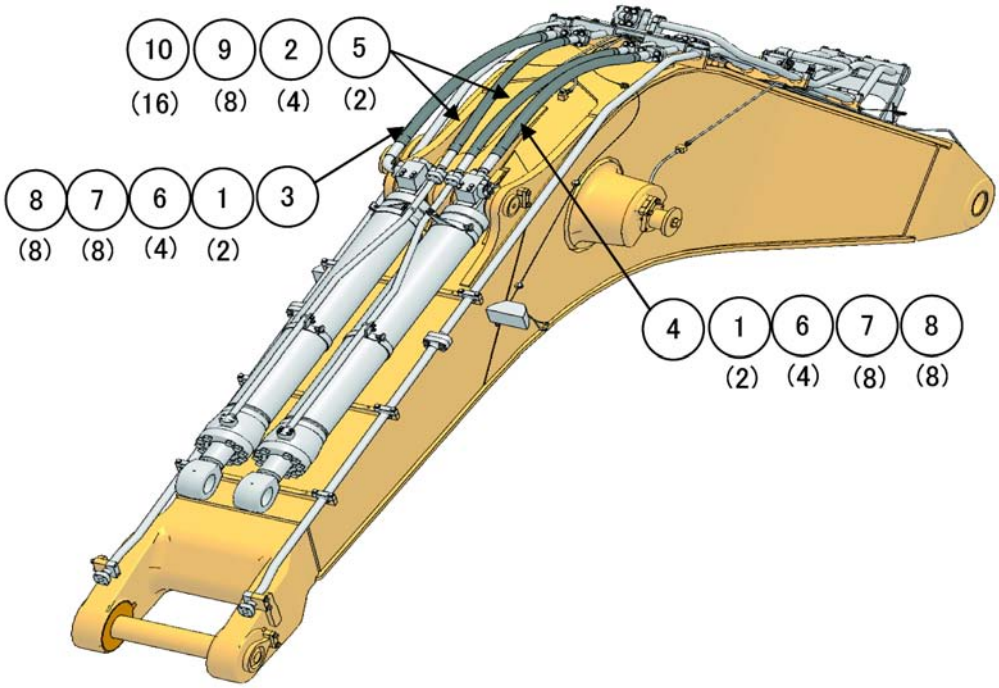

No.	Loose-supply items	Q'ty	Remarks
1	07000-13048	4	
2	07000-13038	4	
3	07098-01414	1	
4	209-62-41920	1	L: 1350
5	07099-01214	2	
No.	Housing fixing items	Q'ty	Remarks
6	07371-51470	8	
7	01010-81455	16	
8	01643-31445	16	
9	07371-51260	8	
10	01024-81245	16	

Precautions	Necessary tools		Necessary equipment	
	Name	Q'ty	Name	Q'ty
1. Use care not to let the arm cylinder rod jump out during the work. 2. Remove and store the flange, O-rings and heads so that you can reuse them later. 3. When connecting the hoses, take extremely care not to clinch or damage the O-rings. 4. Also, take extremely care not to enter a foreign material into the hydraulic circuit.	KW12P impact	1		
	L150 extension	1		
	M22 socket	1		
	Others			

Assembly procedure	Connection of Arm Cylinder Hoses (2/2)
B-2	

(1) Remove the oil stopper plug from the arm cylinder pipe, and replace four O-rings (2) at the hose end with new ones (Part No. 07000-13038). Then, connect the arm cylinder hoses (1) (07084-01213 × 2).

★ Use the oil stopper parts for split flange, bolts, and the like.

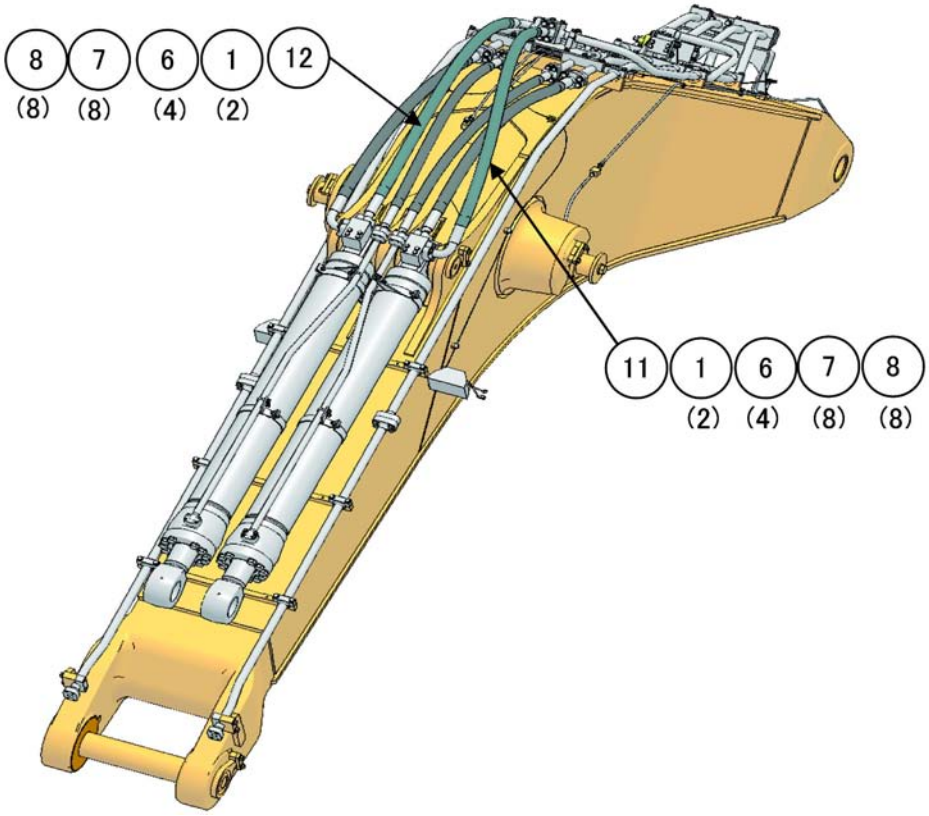

No.	Loose-supply items	Q'ty	Remarks
1	07000-13048	4	
11	07098-01417	1	
12	209-62-41910	1	L: 1650
No.	Housing fixing items	Q'ty	Remarks
6	07371-51470	8	
7	01010-81455	16	
8	01643-31445	16	

Precautions	Necessary tools		Necessary equipment	
	Name	Q'ty	Name	Q'ty
1. Use care not to let the arm cylinder rod jump out during the work. 2. Remove and store the flange, O-rings and heads so that you can reuse them later. 3. When connecting the hoses, take extremely care not to clinch or damage the O-rings. 4. Also, take extremely care not to enter a foreign material into the hydraulic circuit.	KW12P impact	1		
	L150 extension	1		
	M22 socket	1		
	Others			

Assembly procedure	
B-3	**Installation of Boom Cylinder Foot**

(1) Lift the boom cylinder with the crane and bring it to the body pin hole.

(2) Set the O-ring (07000-12130, 4 pcs, for the left and right cylinders) out of the loose-supply items on the boom cylinder foot and push pins in it.

Inside of pin hole: Lithium grease

(3) Check the clearance (outside the machine) between the cylinder pin and the body, decide the size and quantity of shim so that the clearance becomes below 1 mm and insert them there. Adjust the left and right cylinders with shims (outside the machine).

(4) Sandwich the boom cylinder stand (wooden block) between the cylinder and the revolving frame.
(Height should be 40 to 50 mm, and width should be equal to or less than 90 mm)

(5) Push the boom foot pins in the holes completely and fit the lockplates there.

Tightening torque of the plate fixing bolt:
245 – 309 Nm {25 – 31 kgm}

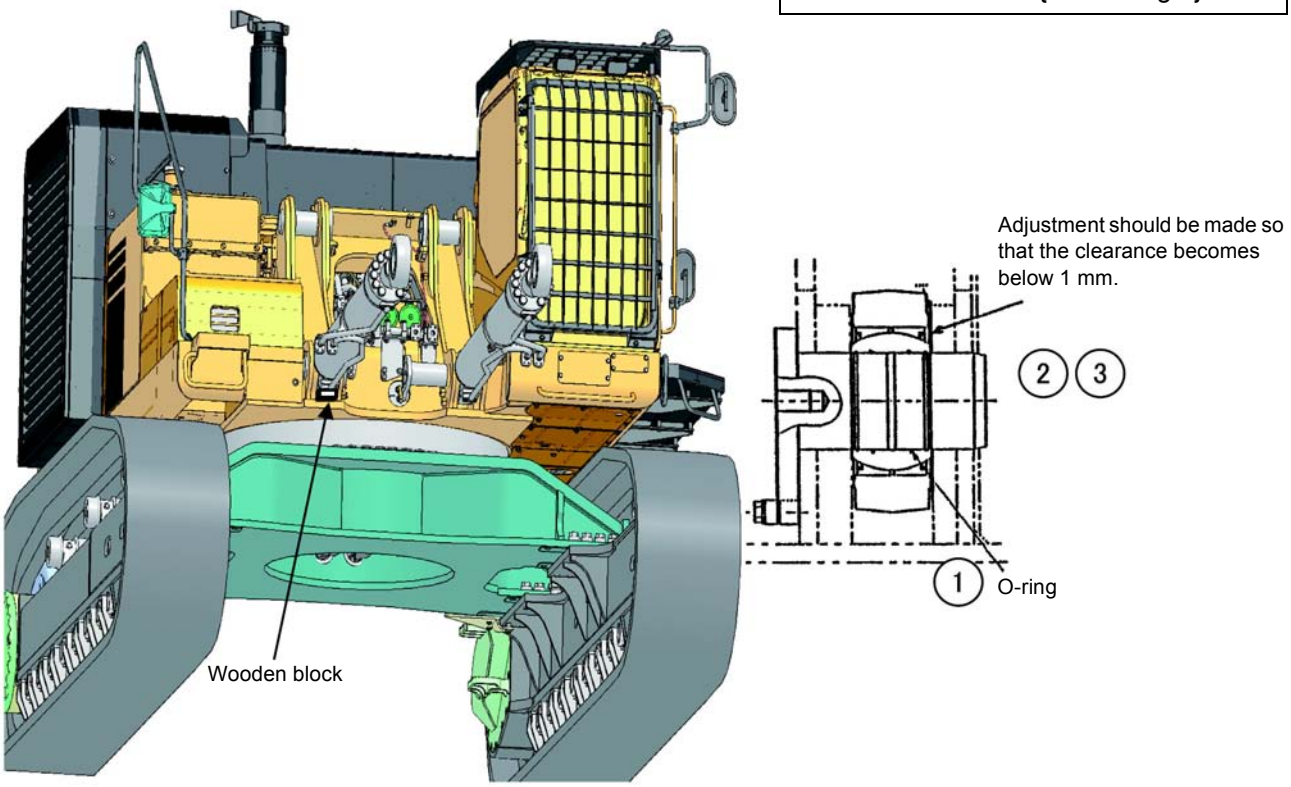

Precautions	Necessary tools		Necessary equipment	
	Name	Q'ty	Name	Q'ty
★ Assemble the boom cylinder foot so that the greasing port faces down.	50 mm wide, 3000 mm Nylon sling	2		
★ Use the adjustment shims (209-75-51230, 1.0 mm thick, and 209-72-51240, 1.5 mm thick) to decide their combination.	KW20P impact wrench	1		
	M24 socket	1		
	Others			

https://truckmanualshub.com/

Assembly procedure	
B-4	**Relieving Remaining Pressure from Hydraulic Circuit**

When removing hydraulic pipes, be sure to relieve remaining pressure in accordance with the following procedures:

(1) Remove the cap from the hydraulic oil tank.

⚠ When removing the cap from the oil it slowly to relieve pressure in the tank and remove it carefully.

(2) Lower the lock lever and keep it locked.

(3) Start the engine, operate it for about 10 seconds and stop the engine.

★ Do not increase the engine speed to over 1,000 rpm.

★ Keep the control lever of the work equipment neutral.

(4) Turn the starting switch to ON, set the lock lever to “Free” and set the control lever of each work equipment to Full Stroke within 5 to 6 seconds after stopping the engine.

★ Repeat the procedures (2) to (4) three times.

(5) After relieving remaining pressure, set the cap to the oil filler port of the hydraulic oil tank so that dust do not enter the tank.

(6) Lower the lock lever and keep it locked.

Precautions	Necessary tools		Necessary equipment	
	Name	Q’ty	Name	Q’ty
	Others			

https://truckmanualshub.com/

Assembly procedure	
B-5	**Installation of Boom Cylinder Hoses**

(1) Remove the blind plug from the boom cylinder tube.

(2) Arrange the boom cylinder hose (1) (07099-01216, 4 pcs.) to the normal circuit as shown below. Replace the O-ring (2) (07000-13038, 8 pcs.) at the hose connection with the new one out of the loose-supply items.

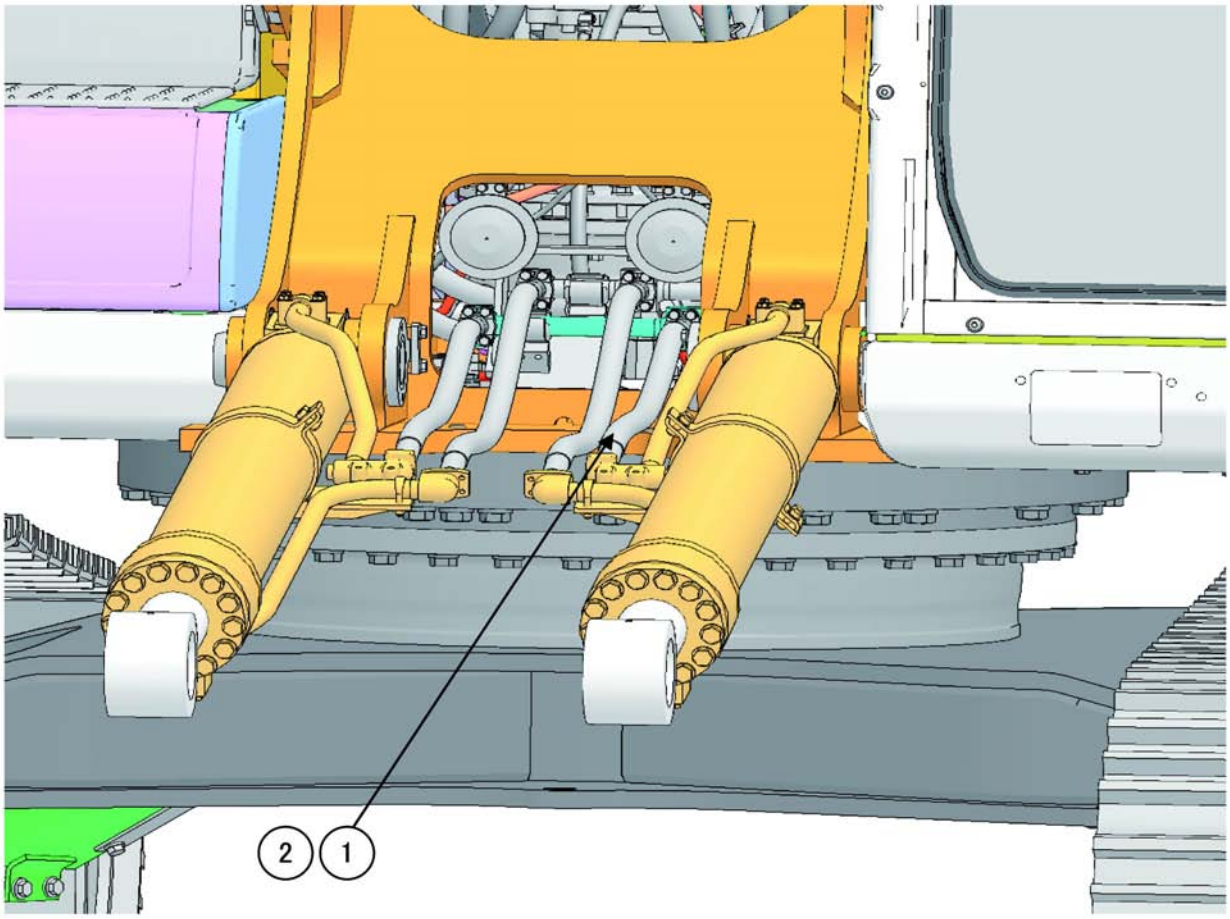

No.	Loose-supply items	Q'ty
2	07000-13038	8

Precautions	Necessary tools		Necessary equipment	
	Name	Q'ty	Name	Q'ty
	KW12P Impact	1	Oil pan (small)	1
	L150 extension	1		
	M19 socket	1		
	Others			

https://truckmanualshub.com/

Assembly procedure	Assembly of Boom Assembly
B-6	

(1) Lift the boom assembly with the crane and bring it to the body pin hole.

Boom assembly: 7,510 kg (PC800, PC800LC)
7,770 kg (PC850)
6,950 kg (PC800SE, PC850SE)

(2) Fitting of Boom Foot Pin.
Insert a boom foot pin (which had been fitted on the revolving side) in a hole one side first and bring the body to the pin hole on the other side. When the boom is inclined to the left or right at the time, balance it by using the jib crane.

★ Check the clearance between the boom foot and the machine outside, decide the size and quantity of shim so that the clearance becomes below 1 mm and insert the shim between them.
Use the adjustment shims (209-70-71640, 1.0 mm thick, and 209-70-71650, 1.5 mm thick) to decide their combination.

★ Adjust the clearance with shims at one place outside.

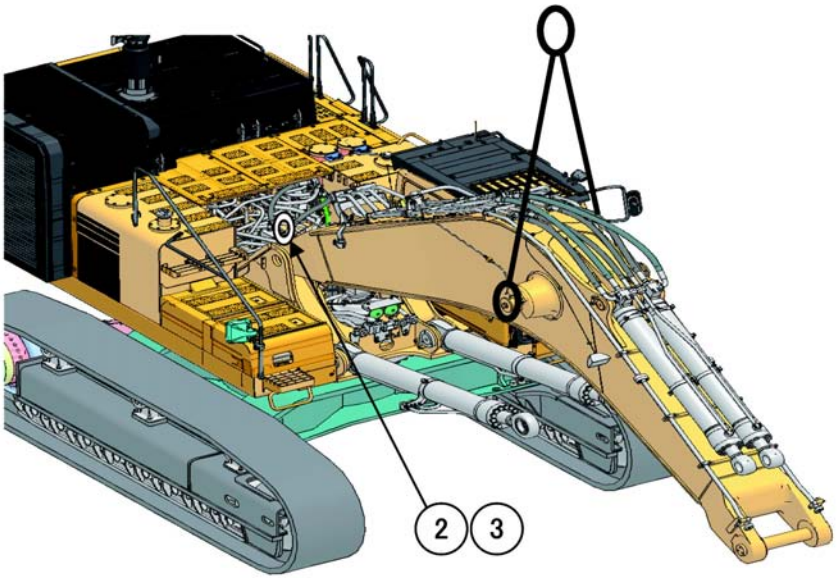

(3) Insert the boom foot pins fully on both the left and right sides and fit lockplates there.

Tightening torque of the plate fixing bolt:
245 – 309 Nm {25 – 31 kgm}

Inside of pin hole: Lithium grease

No.	Loose-supply items	Q'ty
1	209-72-11261	4
2	209-70-71650	4
3	209-70-71640	2

Precautions	Necessary tools		Necessary equipment	
	Name	Q'ty	Name	Q'ty
★ Since four seals (209-72-11261) have been fitted to the boom foot as shown below, use care not to break them when inserting pins.	ø20 × 5000 mm wire	2	25 ton crane	1
	SD30 shackle	2		
	Large hammer (plastic)	1		
	KW20P impact	1		
	M24 socket	1		
	Others			

Assembly procedure	
B-7	**Hose Connection of Arm and Bucket Circuits**

(1) Remove oil stopper plug from hose and oil stopper plug from boom tube.

(2) Connect on-boom arm cylinder, bucket cylinder hose (2) with regular circuits as shown below.

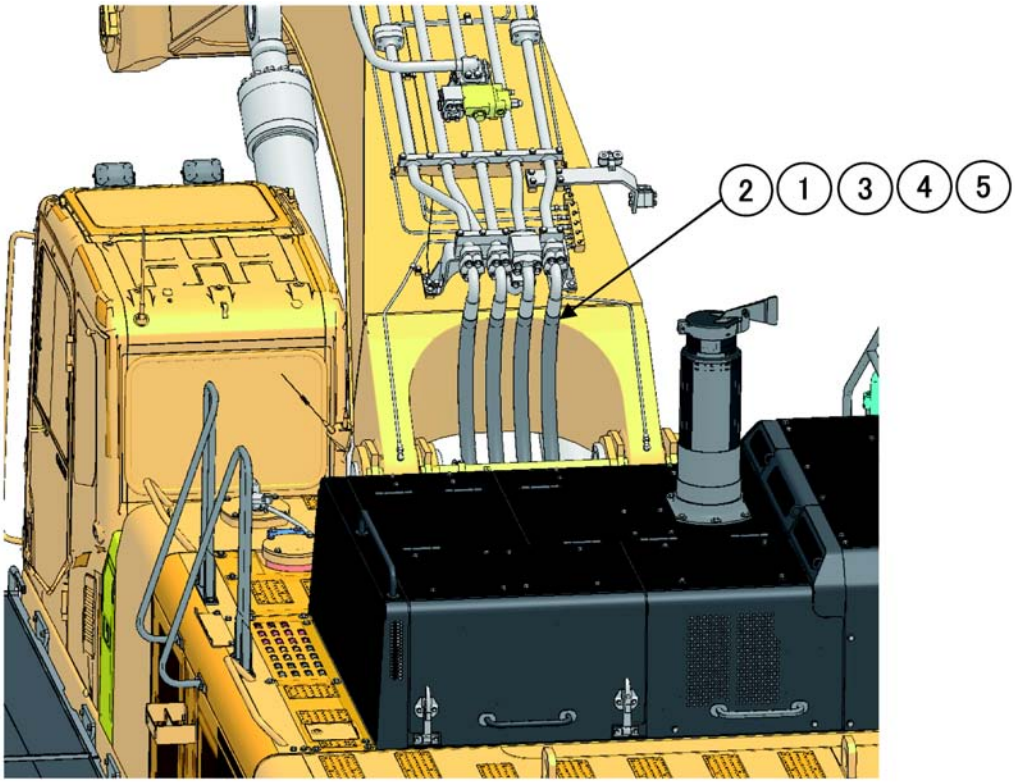

No.	Main body mounted items	Q'ty
1	209-72-11261	4
No.	Loose-supply items	Q'ty
2	07098-01414	4
3	07371-51470	8
4	01010-81455	16
5	01643-31445	16

Precautions	Necessary tools		Necessary equipment	
	Name	Q'ty	Name	Q'ty
1. When removing oil stopper plug from hose, care should be taken and rotate bolt slowly to let out pressure.	KW12P Impact	1		
2. Store the removed flange, O-ring, and head in order so that they can be used again.	L150 Extension	1		
3. When connecting hose, great care should be taken so that O-rings do not get caught.	M22 Socket	1		
4. When connecting hose, great care should be taken so that dusts do not fall in the circuits.				
	Others			

Assembly procedure	Installation of Quick Return Hose
B-8	

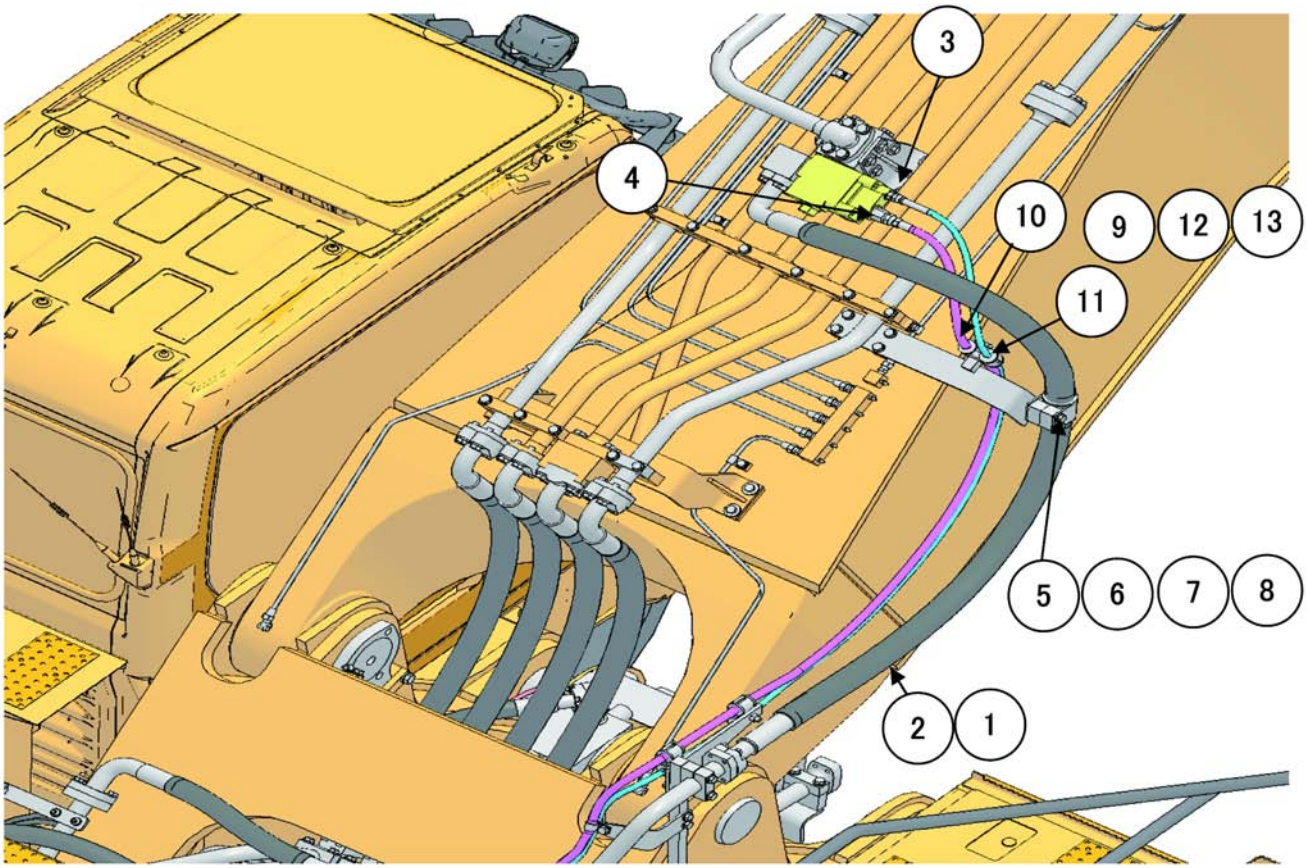

(1) Install quick return hose (2) there after fitted with O-ring (1).

(2) Install hose clamps (5), (6), (7), and (8).

(3) Connect the quick return hose (2) with main body mounted pilot hose after fitted with O-rings (3) and (4).

(4) Install hose clamps (9), (10), (11), (12), and (13).

★ Use split flange and bolt out of the oil stopper parts.

★ Air bleeding should be made for arm cylinder only.

No.	Loose-supply items	Q'ty	Remarks
1	07000-13048	2	
2	209-62-41931	1	L: 2800
3	02896-11009	1	
4	02896-11012	1	
5	07094-11432	2	
6	07095-14449	1	
7	01011-81200	2	
8	01643-31232	2	
9	07094-30315	2	
10	07095-00314	1	
11	07095-00317	1	
12	01010-81265	1	
13	01643-31232	1	

Precautions	Necessary tools		Necessary equipment	
	Name	Q'ty	Name	Q'ty
1. Store the removed flange, O-ring, and head in order so that they can be used again.	KW12P Impact	1		
2. When connecting hose, great care should be taken so that O-rings do not get caught.	M19 Socket	1		
3. When connecting hose, great care should be taken so that dusts do not fall in the circuits.	M17 Socket	1		
	L150 Extension	1		
	Others			

https://truckmanualshub.com/

Assembly procedure	
B-9	**Installation of Boom Cylinder**

(1) Remove the stopper fixed to the boom and the boom cylinder top pin (1).

Boom cylinder to pin: 33kg

(2) Start the engine and idle it as a low speed.

(3) Lift the cylinder (2), extend the rod slowly and fit it to the pin hole.

Boom cylinder: 775 kg × 2

(4) Insert the cylinder top pin in the pin hole.

Inside of pin hole: Lithium grease.

Tightening torque of the plate fixing bolt: 245 – 309 Nm {25 – 31.5 kgm}

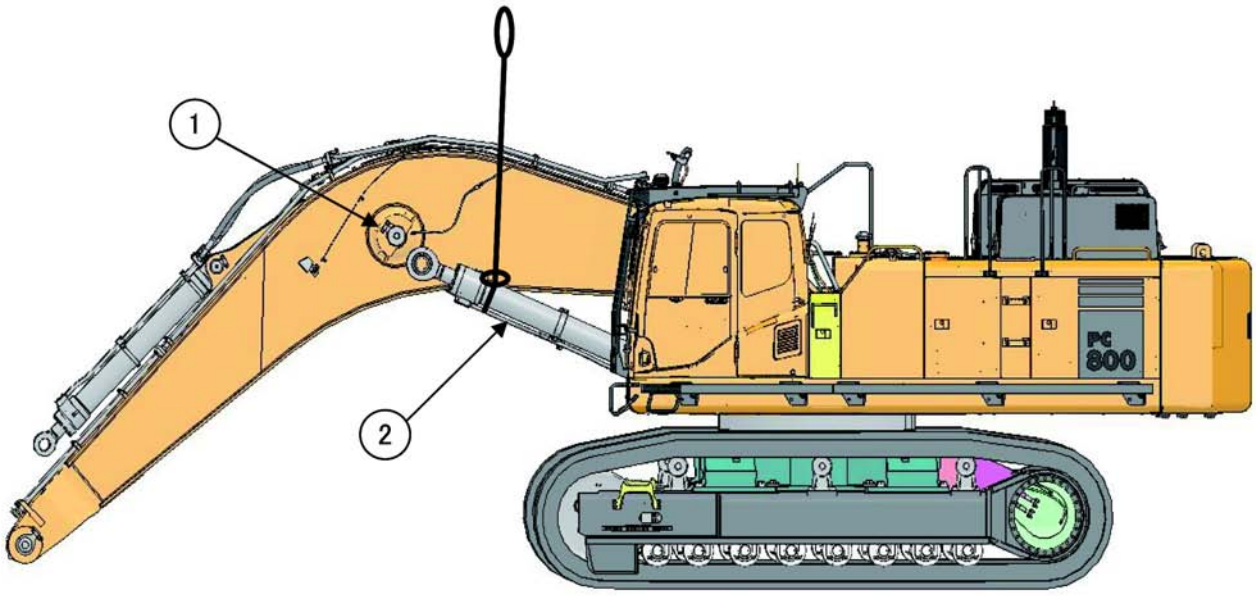

Precautions	Necessary tools		Necessary equipment	
	Name	Q'ty	Name	Q'ty
★ Extend the cylinder slowly, nor operate it quickly, nor bring it to the stroke end. Since air gathers inside the cylinder at the first time, the cylinder may not move for 10 seconds or more, but do not bring the lever to the full stroke point.	50 mm wide, 3000 mm Nylon sling	2	25 ton crane	1
	KW20P impact wrench	1		
	M24 socket	1		
	Large hammer	1		
	Others			

https://truckmanualshub.com/

Assembly procedure	Installation of Arm Assembly (1/2)
B-10	

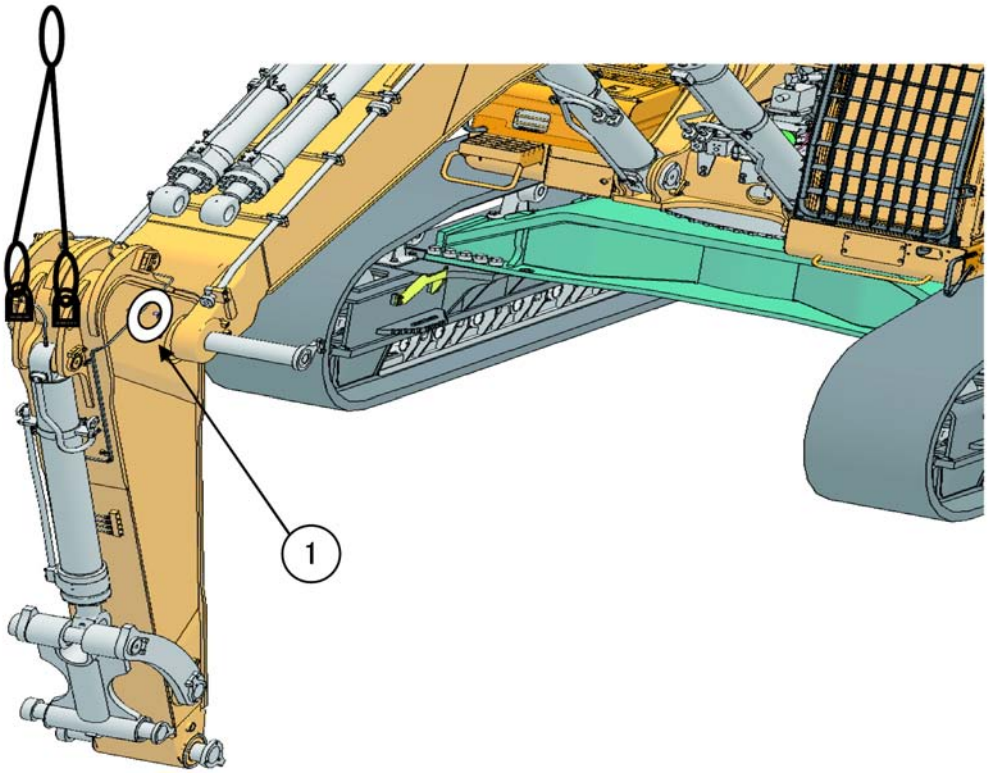

(1) Remove the stopper of the boom top pin fixed to the boom and pull out the top pin.

Boom top pin: 110 kg

(2) Lift the arm assembly, bring it to the boom hole.
Adjustment should be made using the shim (1) so that the clearance between the boom inside width and the arm outside width becomes less than 1 mm.

Arm assembly: 3,970 kg (PC800, PC800LC)
4,880 kg (PC800SE, PC850SE)
4,485 kg (PC850)

(3) Fit the stopper to the pin.
Tightening torque of the plate fixing bolt: 245 – 309 Nm {25 – 31.5 kgm}

(4) Remove the stopper of the arm cylinder top pin fixed to the arm side and pull out the top pin.

Arm cylinder top pin: 24 kg × 2 (PC850, PC800SE, and PC850SE)
30 kg (PC800, 800LC)

No.	Loose-supply items	Q'ty
1	209-70-71641	1

Precautions	Necessary tools		Necessary equipment	
	Name	Q'ty	Name	Q'ty
★ Since the seal (209-72-11261, 2 pcs.) is fitted to the inside of the arm side bushing, use care not to break it when inserting the pin.	ø20 x 5000 mm wire	2	25 ton crane	1
	SD30 shackle	2	Five-stage step	2
	Large hammer (plastic)	1		
	KW20P impact	1		
	M24 socket	1		
	Others			

https://truckmanualshub.com/

Assembly procedure	Installation of Arm Assembly (2/2)
B-10	

(5) Start the engine, idle it and extend the arm cylinder rod slowly to adjust the pin hole position. At the time, lift the arm cylinder with the crane for positioning during operation of the arm cylinder.
★ Assembly should be made so that the lubrication hole faces upward.

(6) Push the arm cylinder top pin in the pin hole.

Inside of pin hole: Lithium grease

(7) Fit the stopper to the pin.
Tightening torque of the plate fixing bolt: 245 – 309 Nm {25 – 31.5 kgm}

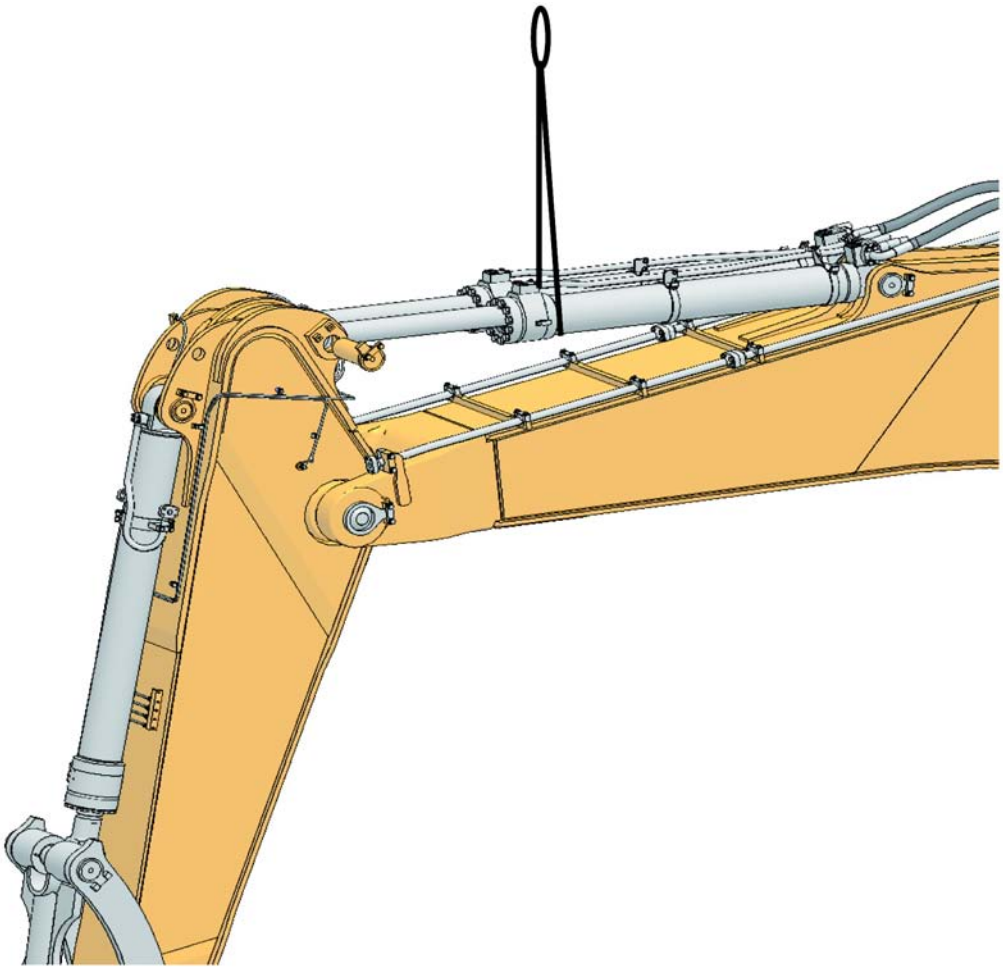

Precautions	Necessary tools		Necessary equipment	
	Name	Q'ty	Name	Q'ty
★ Operate the cylinder slowly. Do not operate it quickly and do not bring it to the stroke end. Since air gathers inside the cylinder at the first time, it may not move for over 10 seconds, but do not move the lever to the full stroke.	ø20 x 5000 mm wire	2	25 ton crane	1
	SD30 shackle	2	Five-stage step	2
	Large hammer (plastic)	1		
	KW20P impact	1		
	M24 socket	1		
	Others			

https://truckmanualshub.com/

Assembly procedure	
B-11	**Installation of Hose between Boom and Bucket Cylinder**

(1) Remove oil stopper plug from bucket cylinder tube.

(2) Connect two bucket cylinder hoses (2) there after they are fitted with O-rings (1).

★ Use split flange and bolt out of the oil stopper parts.

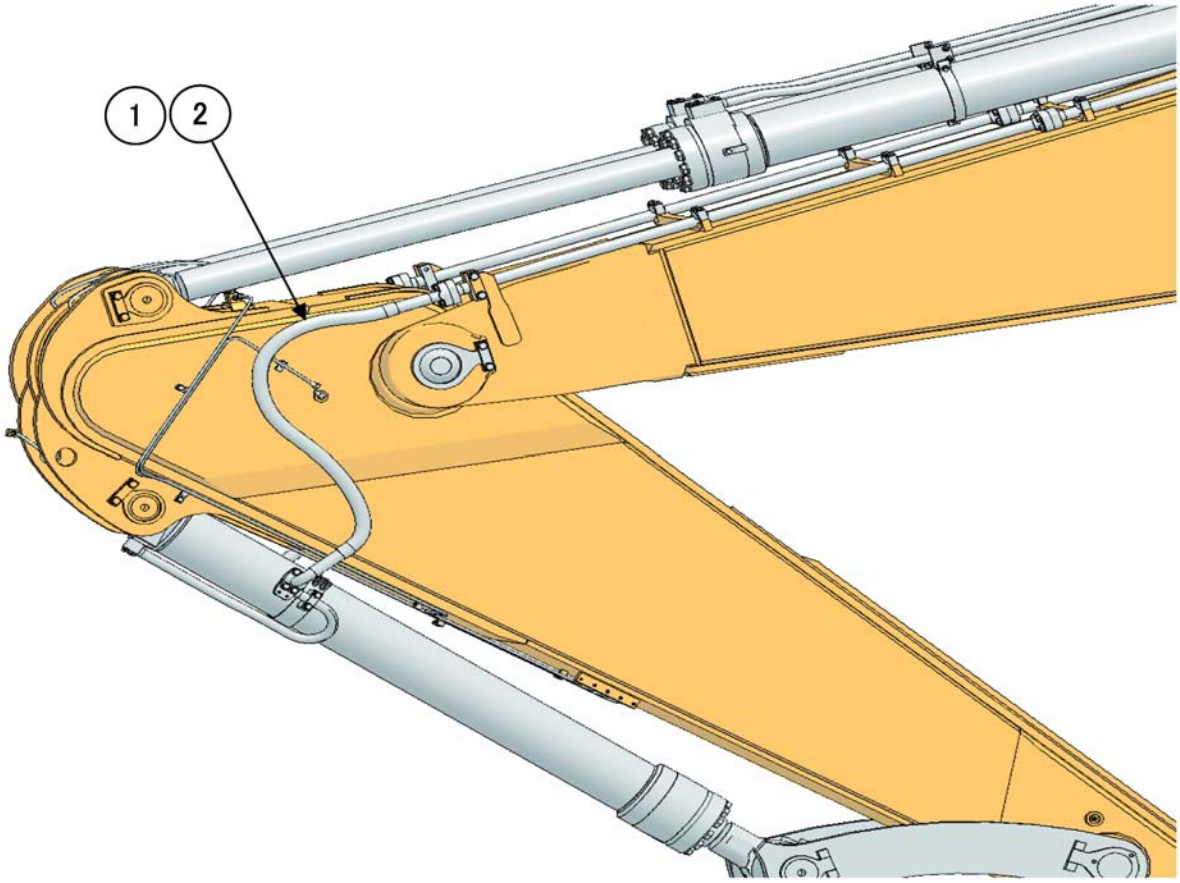

No.	Loose-supply items	Q'ty
	The parts below are for PC800, 850-8	
1	07000-13038	4
2	07098-21219	2
	The parts below are for PC800SE, 850SE-8	
1	07000-13038	4
2	07098-21221	2

Precautions	Necessary tools		Necessary equipment	
	Name	Q'ty	Name	Q'ty
1. Store the flanges, O-rings and heads used for transportation for re-use in the future. 2. Connect hoses carefully so that they do not get caught between other parts. 3. Connect hoses carefully so that they do not interfere with other parts and are not twisted. 4. When connecting hoses, use care not to let dusts enter the circuit.	KW12P Impact	1	Five-stage step	1
	L150 Extension	1	Oil pan plate	1
	M19 Socket	1		
	Others			

https://truckmanualshub.com/

Assembly procedure

B-12

Installation of Bucket Assembly

(1) Push in the arm to bucket connection pin and adjust the clearance to the range from 0.5 to 1.0 mm by using the bushing (209-939-5410) and shim (209-939-5431 (t=1.0) 9 pcs. and 209-939-5441 (t = 0.5 mm) 2 pcs.) out of the loose-supply items. Then, tighten the cover mounting bolt (M24).

★ Inside bushing: anti-friction compound (LM-P).

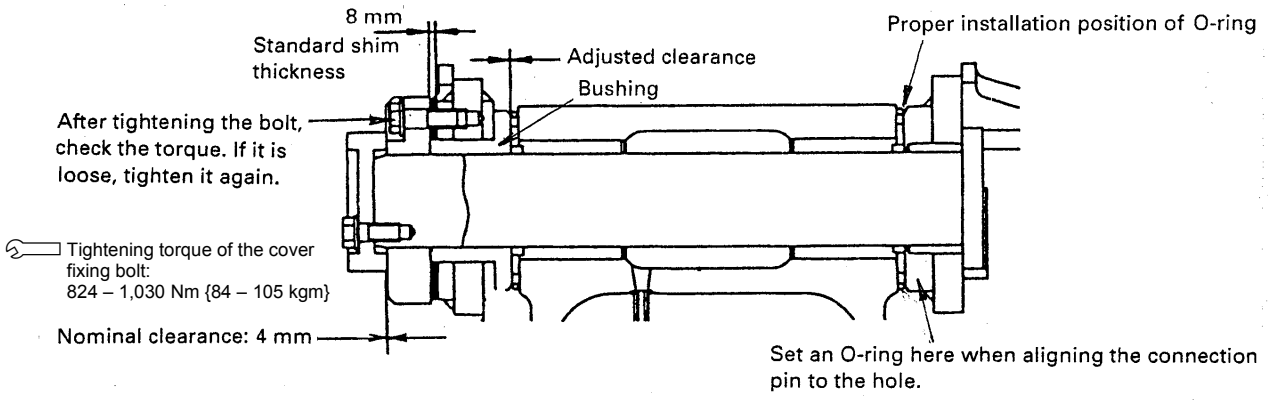

(2) Set two O-rings (21N-70-13150) for preventing earth and sand from penetrating into the bucket arm connection pin to the normal positions and fix a pin stopper.

(3) Lift the link and align the bucket to link connection pin to the hole while operating the bucket cylinder.

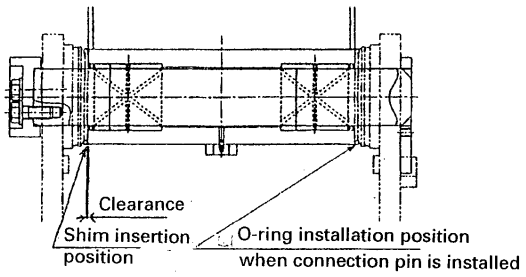

(4) Push in the link to bucket connection pin and adjust the clearance to less than 1 mm by using the shim (209-72-11220, 1 pc. t = 1 mm) out of the loose-supply items. Then, install O-rings (208-70-33181, 2 pcs.) for dust prevention to the proper position, and fix the pin stopper.

★ Since the seal (209-72-12211, 2 pcs.) to the boss on the link side (link to bucket connection), use care not to break them when inserting the pin.

No.	Loose-supply items	Q'ty
	208-70-33181	2
	209-72-11220	2
	21N-70-13150	2
	209-939-5441	2
	209-939-5431	9
	209-939-5410	1

Precautions	Necessary tools		Necessary equipment	
	Name	Q'ty	Name	Q'ty
★ Be sure to operate the cylinder slowly. Do not operate it quickly and do not bring it to the stroke end. Since air gathers inside the cylinder at the first time, the cylinder may not operate for 10 seconds or more, but do not move the lever to the full stroke.	ø20 x 5000 mm wire	1	25 ton crane	1
	KW20P impact	1		
	M36 socket	1		
	Torque wrench (100 kg)	1		
	Others			

https://truckmanualshub.com/

Assembly procedure

B-13

Lubrication Piping to Work Equipment

(1) Remove the oil stopper plugs from the cylinder side and from the hose nipple side, remove the nipple from the hose and set it to the cylinder side, and connect the lubrication hose (2 places) ⓐ for the boom cylinder.

(2) Remove the oil stopper plugs from the cylinder side and from the hose elbow side, remove the elbow from the hose and set it to the cylinder side, and connect the lubrication hose for the arm cylinder foot ⓑ (2 places in case of PC850, PC800SE and PC850SE).

(3) Remove the oil stopper plugs from the cylinder side and from the hose elbow side, remove the elbow from the hose and set it to the cylinder side, and connect the lubrication hose for the bucket cylinder foot ⓒ.

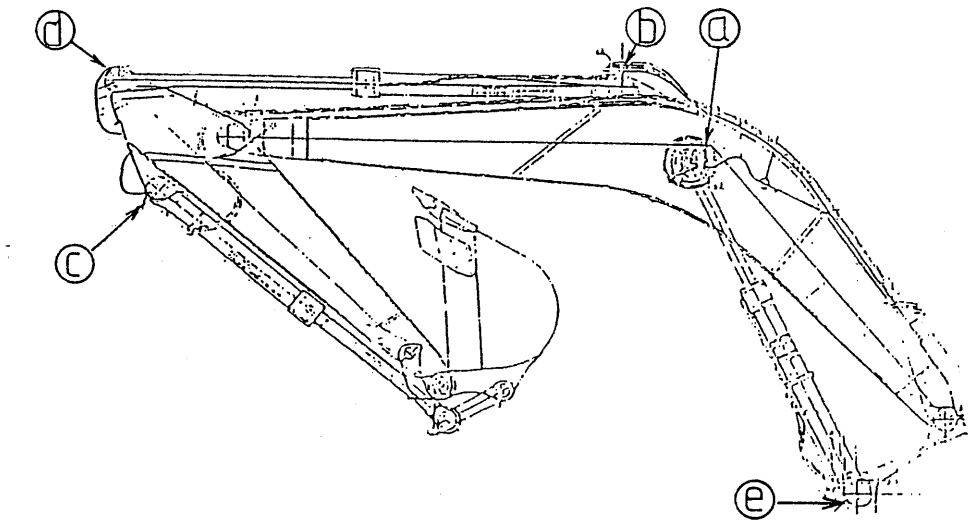

(4) Remove the oil stopper plugs from the cylinder side and from the hose elbow side, remove the elbow from the hose and set it to the cylinder side, and connect the lubrication hose for the arm cylinder top ⓓ.

(5) Remove the oil stopper plugs from the right and left cylinder sides and set the grease nipple (07020-00000, 2 pcs.) for the boom cylinder foot ⓔ to the both cylinders.

No.	Loose-supply items	Q'ty
	07020-00000	2

Precautions	Necessary tools		Necessary equipment	
	Name	Q'ty	Name	Q'ty
	Others			

https://truckmanualshub.com/

Assembly procedure	
B-14	**Air Bleeding from Cylinder**

After assembling the work equipment, start the engine, idle it at a low speed and bleed air from the cylinders as follows:

(1) Extend and contract each cylinder 4 or 5 times without bringing it to the stroke end (up to about 100 mm before the stroke end).

★ Since a lot air remains inside the circuit at the first time of operation, the work equipment does not operate for 10 seconds or more, but do not move the lever to the full stroke.

(2) Keep the engine idling at the low speed and move each cylinder slowly (for 10 seconds or more) in the fine operation mode from 100 mm before the stroke end to the stroke end to extend it fully. And retain the work equipment lever at the full stroke point for 3 minutes.

(3) Idle the engine at a high speed and move each cylinder slowly (for 10 seconds or more) in the fine operation mode from 100 mm before the stroke end to the stroke end to extend it fully. And retain the work equipment lever at the full stroke point for 1 minute.

★ The procedures (1) to (3) can bleed air from each cylinder.

★ If the engine is rotated at a high speed or each cylinder is moved to the stroke end from the beginning, air in each cylinder may break piston packing.

Precautions	Necessary tools		Necessary equipment	
	Name	Q'ty	Name	Q'ty
	Others			

https://truckmanualshub.com/

Assembly procedure	Wiring of Work Equipment
B-15	

(1) Connect the connector (CN-A13) A of the working lamp cable to the body cable.

(2) Install the working lamp (both the right and left ones) as shown below:

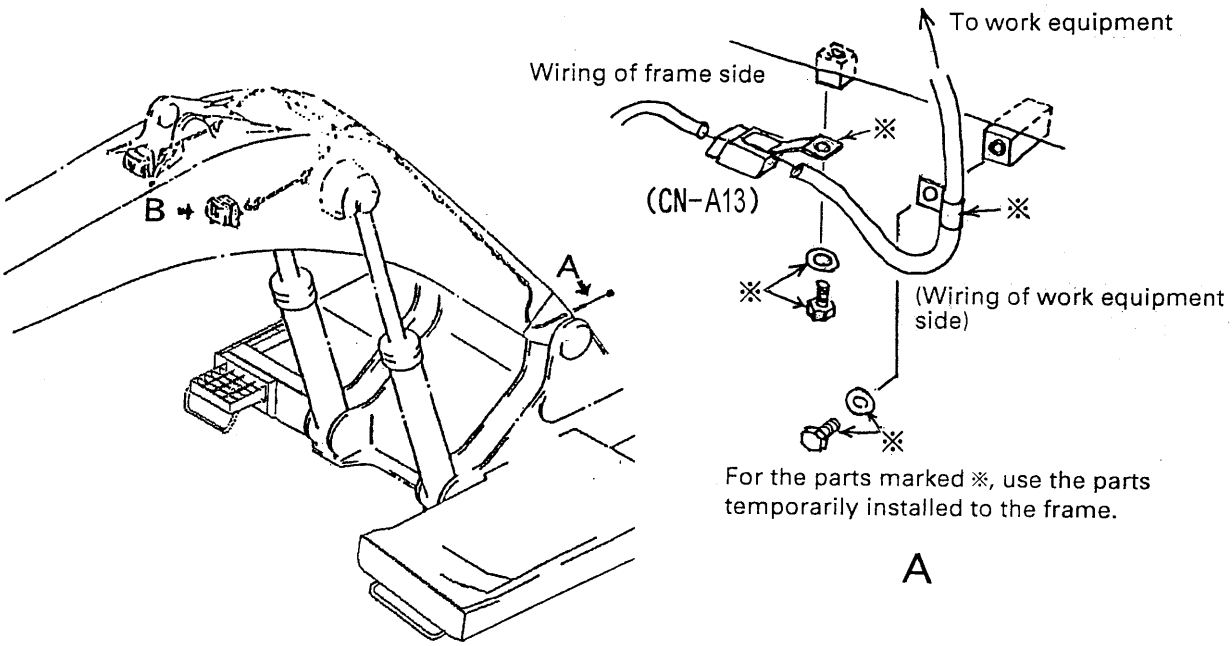

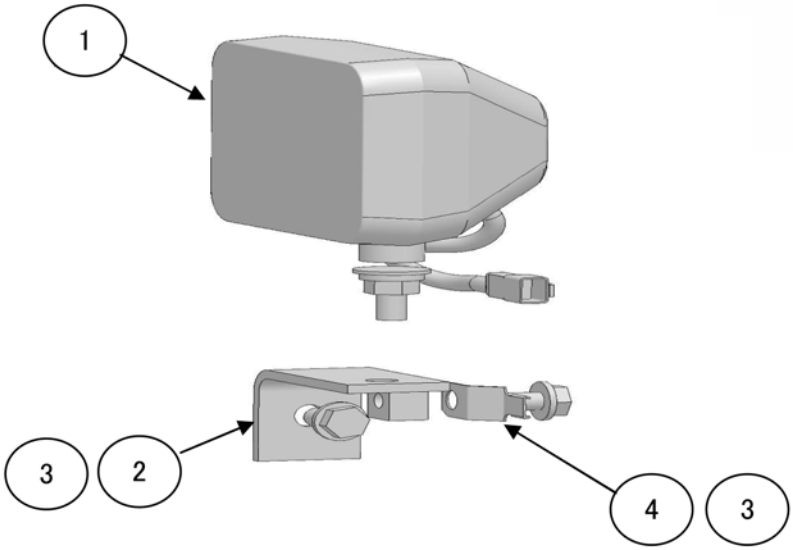

No.	Loose-supply items	Q'ty
1	21T-06-32810	2
2	20Y-06-21551	2
3	01024-81230	4
4	08193-20012	2

Precautions	Necessary tools		Necessary equipment	
	Name	Q'ty	Name	Q'ty
	KW12P impact	1		
	M19 socket	1		
	Width across flats 22 spanner	1		
	Others			

https://truckmanualshub.com/

Assembly procedure	
B-16	**Greasing after Assembling Work Equipment**

For better initial fitting, apply molybdenum disulfide grease to each pin of the work equipment during the first 1 month of a new machine or until the grease in the first grease pail (16 kg) is used up.

(KOMATSU item No. SYGA-16CNM (16-kg can))

<Precautions>

(1) Do not apply molybdenum disulfide grease to the swing circle bearing. (Since the balls are in contact with the races by points, they are worn quickly.)

(2) Do not apply molybdenum disulfide grease to the pin holes when assembling the work equipment. (After the grease at the pin fixing parts dries up, those parts are rusted easily and the pin may be fixed.)

Precautions	Necessary tools		Necessary equipment	
	Name	Q'ty	Name	Q'ty
	Others			

https://truckmanualshub.com/

M. PROCEDURE FOR INSPECTION AND MAINTENANCE AFTER COMPLETION OF ASSEMBLY

https://truckmanualshub.com/

Assembly procedure	
M-1	**Inspection of Oil Level in Hydraulic Tank and Refill (1/2)**

Check Oil Level in Hydraulic Tank, Add Oil

WARNING

- **The parts and oil are at high temperature immediately after the engine is stopped, and may cause burns. Wait for the temperature to go down before starting the work.**
- **When removing the oil filler cap, turn it slowly to release the internal pressure, then remove it.**

1. Set the work equipment in the posture shown in the diagram on the right, then check the oil level and add oil if necessary.
2. If the machine is not in the condition shown in the diagram on the right, start the engine, run the engine at low speed, retract the arm and bucket cylinder fully, lower the boom, put the bucket teeth in contact with the ground, then stop the engine.
3. Within 15 seconds after stopping the engine, move each control lever (for work equipment and travel) to the full stroke in all directions to release the internal pressure.
4. Open cover (1) on the left side of the machine and check sight gauge (G). The oil level should be between the H and L marks.
5. If the level is below the L mark, add oil through oil filler (F) at the top of the hydraulic tank.

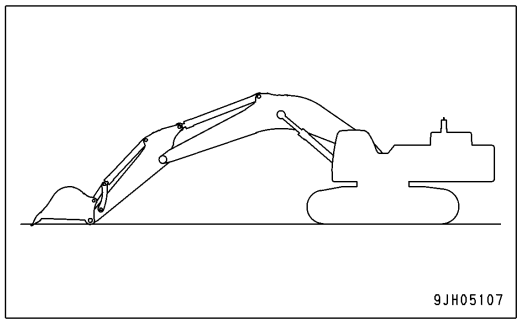

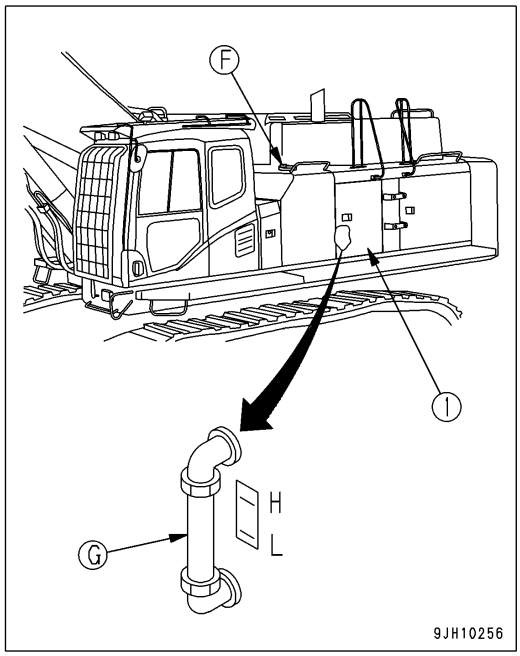

REMARK

The oil level will vary depending upon the oil temperature.
Accordingly, use the following as a guide:

- Before starting operation: Between H and L levels
  (Oil temperature 10 to 30°C (50 to 86°F))
- Normal operation: Around H level
  (Oil temperature 50 to 80°C (122 to 176°F))

Precautions	Necessary tools		Necessary equipment	
	Name	Q'ty	Name	Q'ty
	Others			

https://truckmanualshub.com/

Assembly procedure	
M-1	**Inspection of Oil Level in Hydraulic Tank and Refill (2/2)**

NOTICE

Do not fill with hydraulic oil exceeding the "H" level, otherwise there will be damage on the hydraulic system, or oil will spurt out.

When having filled with hydraulic oil above "H" level by mistake, swing the upper structure so that drain plug (P) in the lower part of the suction tube comes in between the right and left track shoes, stop the engine and drain excess oil from drain plug (P) after making sure that oil has cooled down enough.

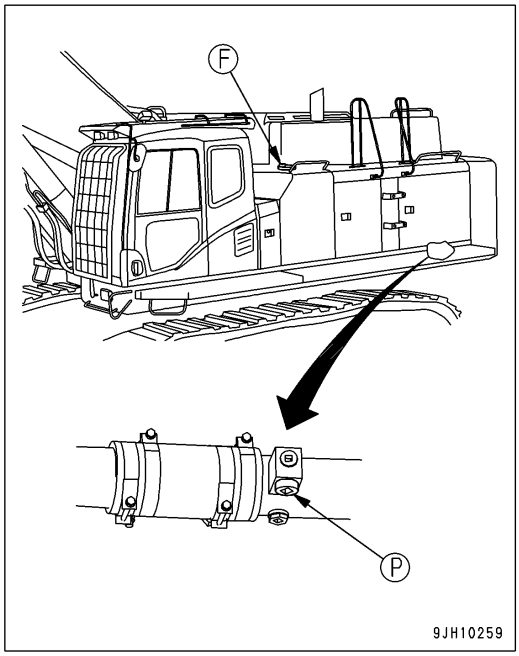

Precautions	Necessary tools		Necessary equipment	
	Name	Q'ty	Name	Q'ty
	Others			

https://truckmanualshub.com/

Assembly procedure	Replacement of Return Filter (Standard Filter to Flushing Filter) (1/3)
M-2	

The return filter element for hydraulic oil is replaced with the special elements ① and plate ② for flushing as follows:

★ When replacing the element, take out the element slowly so that refuses adhered to the element do not fall inside. Also, take out refuses by hand from the case.

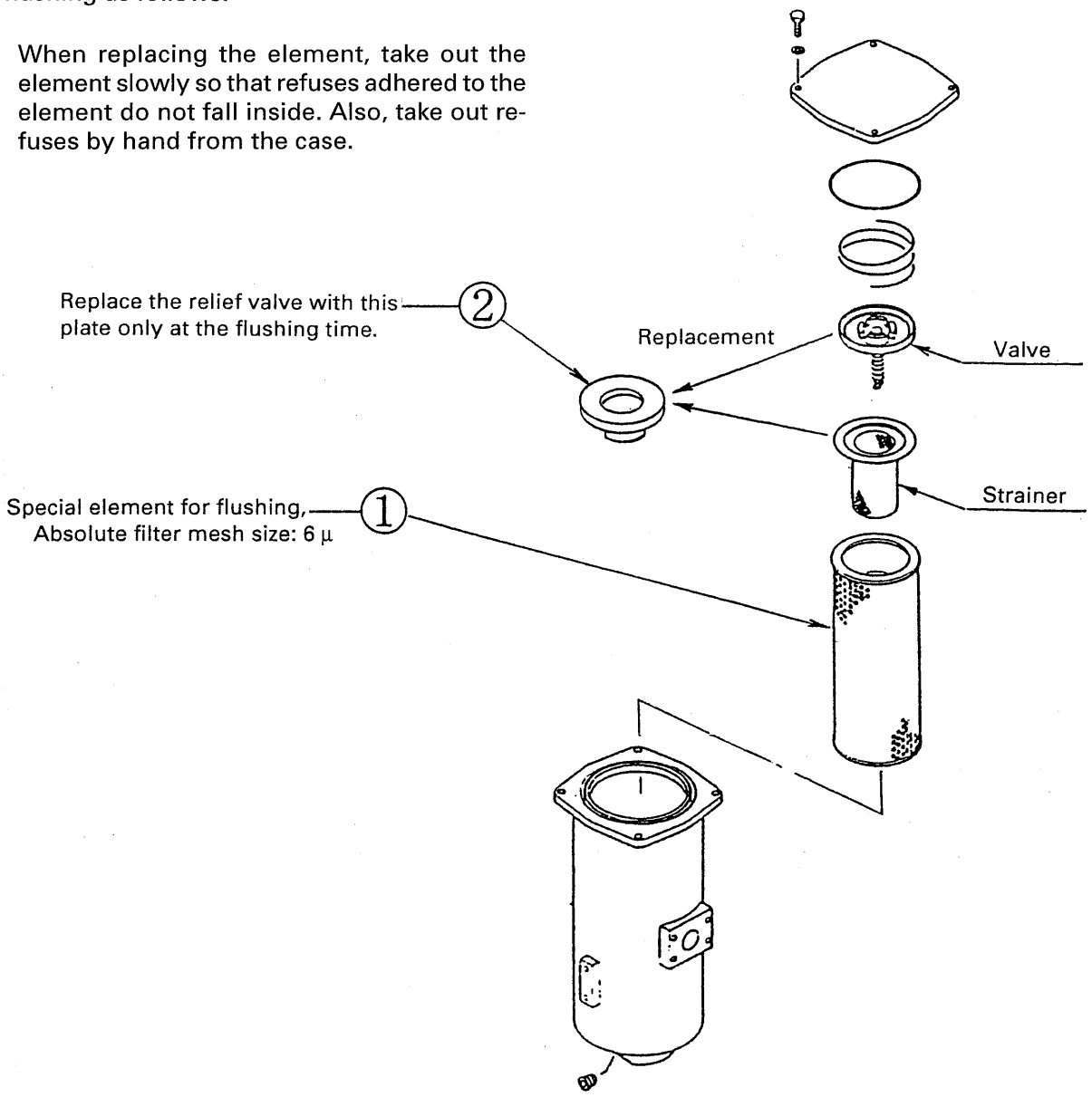

No.	Loose-supply items	Q'ty
1	209-60-77551	2
2	21T-60-13730	2

Precautions	Necessary tools		Necessary equipment	
	Name	Q'ty	Name	Q'ty
Store the removed standard element (209-60-77532) 2 pcs., strainer (206-60-31140) 2 pcs. and valve (20Y-60-31131) 2 pcs. in order because they are used again after flushing.			
	Others			

https://truckmanualshub.com/

Assembly procedure	Replacement of Return Filter (Flushing Filter to Standard Filter) (2/3)
M-2	

Reinstall the removed return filter element ①, strainer ② and valve ③.

★ When replacing the element, take out the element slowly so that refuses adhered to the element do not fall inside. Also, take out refuses by hand from the case.

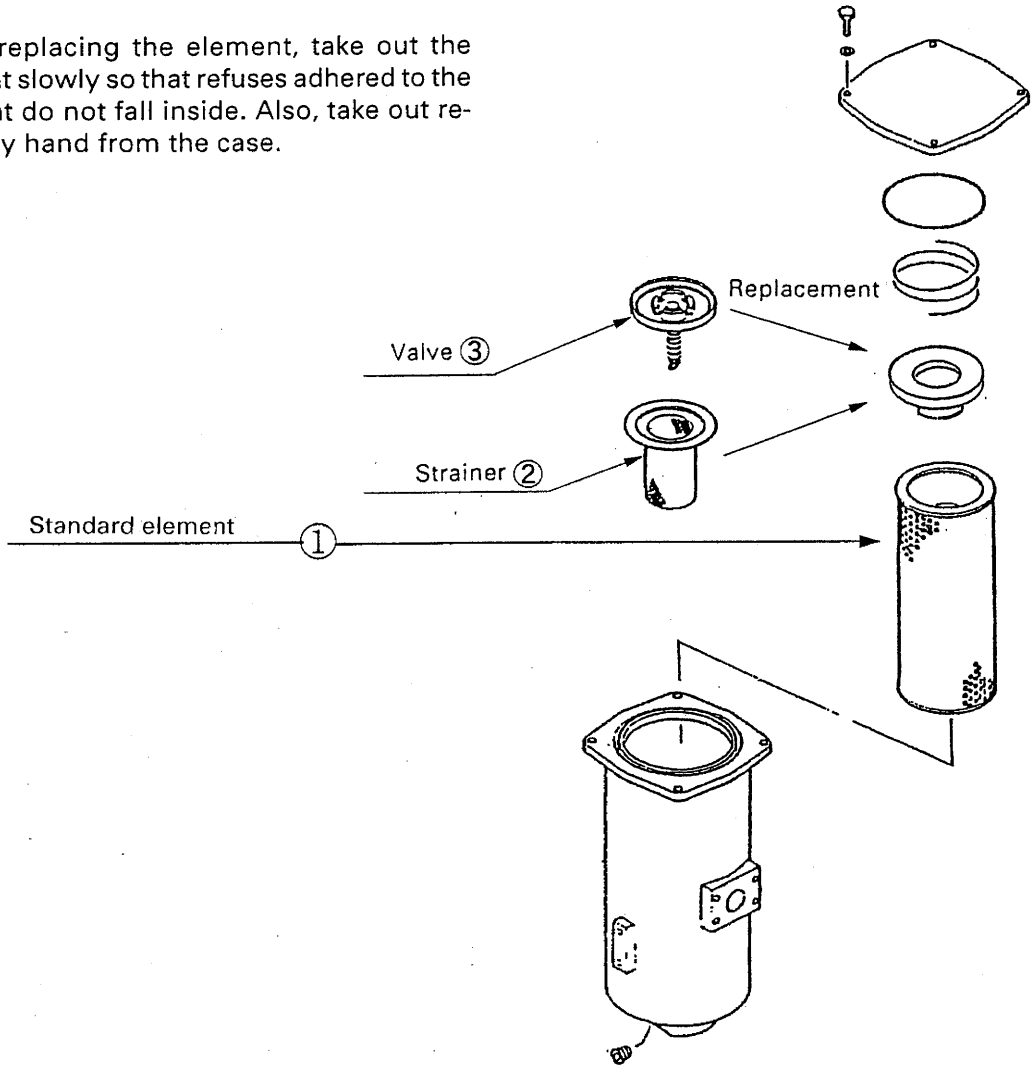

Precautions	Necessary tools		Necessary equipment	
	Name	Q'ty	Name	Q'ty
	Others			

https://truckmanualshub.com/

Assembly procedure	Replacement of Return Filter (Standard Filter ↔ Flushing Filter) (3/3)
M-2	

State of Inserted Element

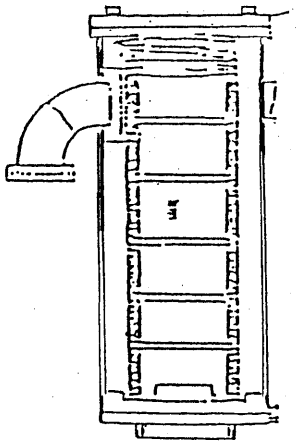

Fig. 1 Correct State

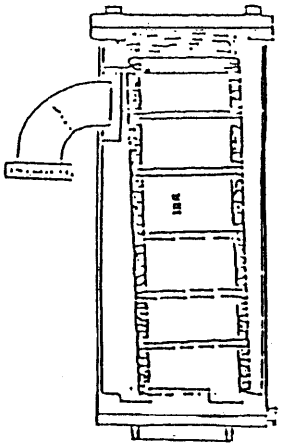

Fig. 2 Incorrect State

Caution:
Do not insert the element so that it stands on the step at the bottom of the case as shown in Fig. 2. When the filter case is filled with oil, it is difficult to check if the element is inserted correctly, so turn the element by hand after inserting it in the case. When it turns smoothly, it is considered to be inserted correctly.

Precautions	Necessary tools		Necessary equipment	
The flushing filter must be discarded after use. The flushing filter is not allowed to be reused.	Name	Q'ty	Name	Q'ty
	Others			

https://truckmanualshub.com/

Assembly procedure	
M-3	**Flushing of Hydraulic Circuit (1/2)**

After completion of assembling, flush the hydraulic circuit as follows:

★ Rotate the engine at the low idle (in the E mode) with the lever in the neutral position for 15 minutes, and follow the procedures below.

(1) Flushing of Work Equipment Pipes
Extend and contract each cylinder for several minutes with reaching them to the stroke end.

a) Extension and contraction of bucket cylinder for 5 minutes

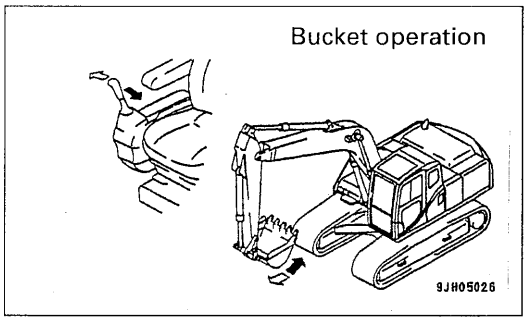

(b) Extension and contraction of arm cylinder for 5 minutes.

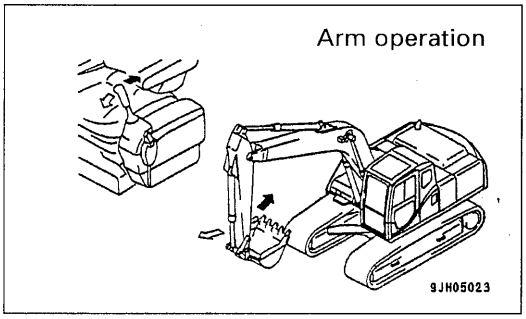

(c) Extension and contraction of boom cylinder for 5 minutes

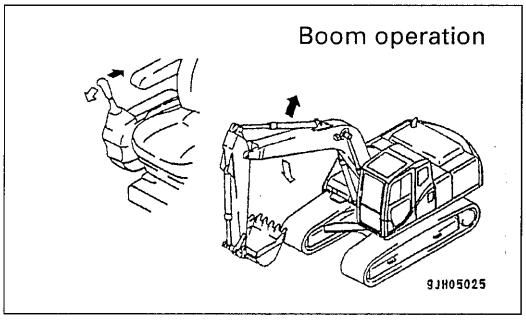

Precautions	Necessary tools		Necessary equipment	
	Name	Q'ty	Name	Q'ty
Full operation may damage the element since the relief valve of the filter is closed.				
	Others			

https://truckmanualshub.com/

Assembly procedure	
M-3	**Flushing of Hydraulic Circuit (2/2)**

(2) Flushing of Swing Circuit
Right swing and left swing for 3 minutes each

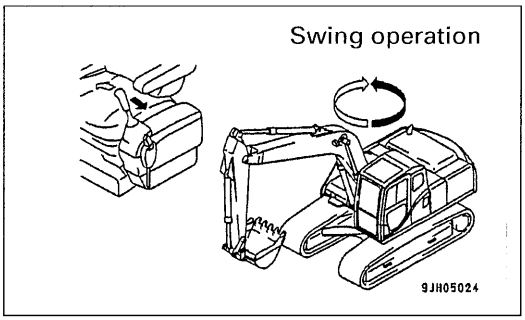

(3) Flushing of Travel Circuit
Press the ground with the work equipment as illustrated here to raise one side of the machine, and operate the travel lever as follows:

- Forward travel and backward travel to the right
  For 3 minutes each
- Forward travel and backward travel to the left
  For 3 minutes each

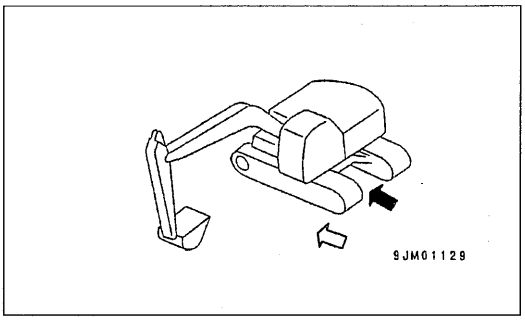

Precautions	Necessary tools		Necessary equipment	
	Name	Q'ty	Name	Q'ty
	Others			

https://truckmanualshub.com/

Error Code (1/2)

Turn the starting switch ON, operate on the multi-monitor panel in the following procedure, and make sure that no error codes have been generated.

Function for Abnormality Record [02]
The monitor panel records failures that occurred on the machines in the past after classifying them into failures in the electric system and those in the mechanical system. Information on them can be displayed through the following operation.

1) Selection of menu
Select “02 Abnormality Record” in the initial display of Service Menu and depress [✓] switch.

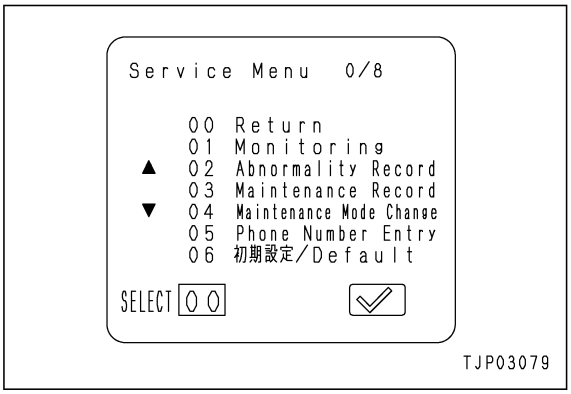

2) Selection of Submenu
Select an appropriate item from Submenu in the Abnormality Record display and depress [✓] switch.

No.	Abnormality Record Submenu
00	Return (termination of Abnormality Record)
01	Electrical Systems
02	Mechanical Systems

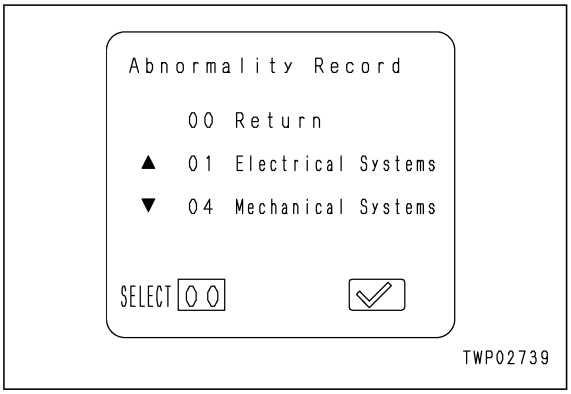

3) Information shown in display of Abnormality Record in the electrical system
[1]: The numerator expresses sequence of failure occurrence, counting from the latest one. The denominator expresses the total number of a specific failure recorded.
[2]: Error Code
[3]: Failure Code (section in 4 digits and phenomenon in 2 digits)
[4]: Time elapsed since the occurrence of the first failure
[5]: Contents of failure
★ Refer to "Table for error code No. and failure code No." in Operator's Menu.

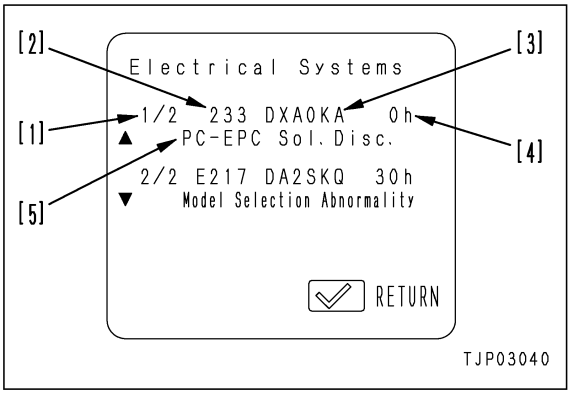

4) Information shown in display of Abnormality Record in the mechanical systems
[1]: Record No.
[2]: Contents of Abnormality
[3]: Failure Code (section in 4 digits and phenomenon in 2 digits)
[4]: Total number of occurrence
[5]: Service meter reading at the initial occurrence
★ Refer to "Table for error code No. and failure code No." in Operator's Menu.

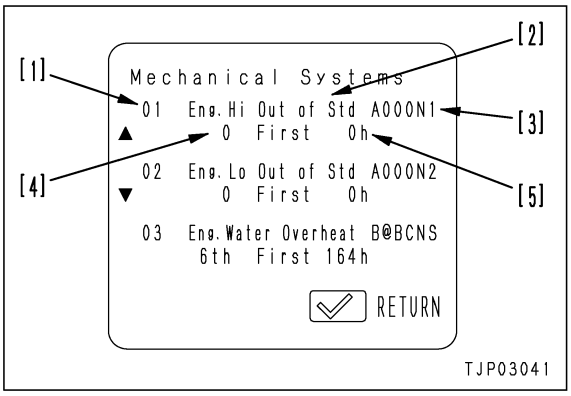

https://truckmanualshub.com/

Error Code (2/2)

5) Resetting Electrical Systems
   - ★ Resetting the Abnormality Record (deletion) is possible only with the electrical system. The Abnormality Record in the mechanical system cannot be reset.
   - ★ For resetting any specific or all information in the Electrical Systems, follow the operation explained below.

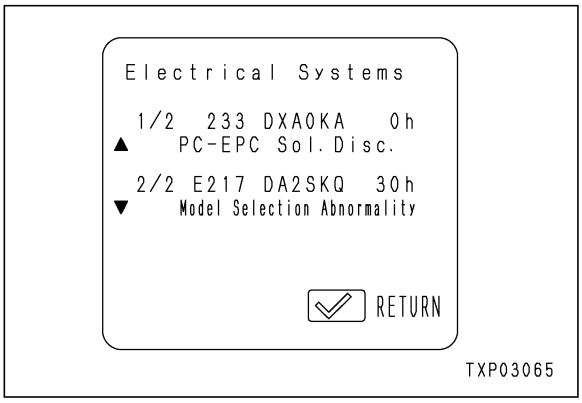

i) Through the following switch operation, call the resetting display in the display of Electrical Systems.
   - Switch operation:
     [△] +[1] → [2] → [3]
   - ★ This is the same switch operation in changing the display to Service Menu.

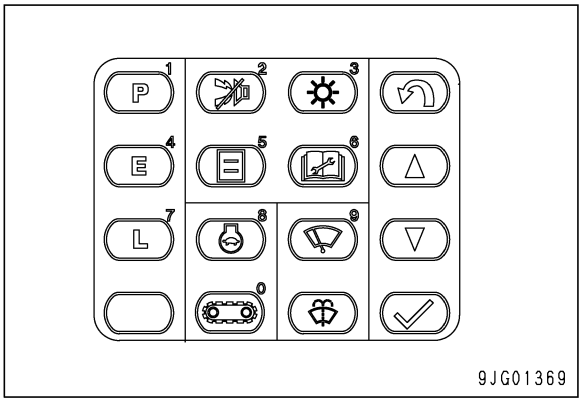

ii) Operate the switch, following the instructions shown in the resetting display.
   - ★ When resetting specific information only, call the display of that specific information and reset it with either [△] switch or [▽] switch.
   - ★ When resetting all the information, a display of any information will do.

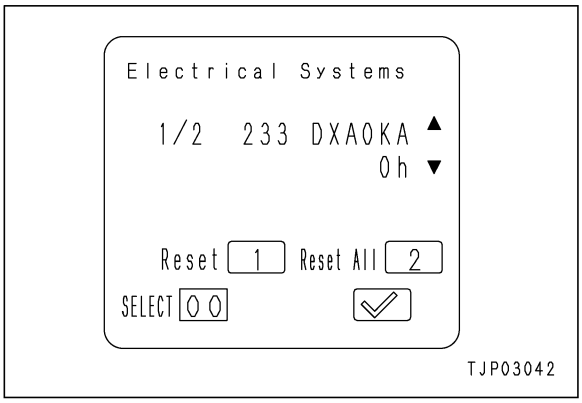

https://truckmanualshub.com/

C. ASSEMBLING OF WORK EQUIPMENT OF LOADING SHOVEL

• Clean the mounting pin hole and check them for a flaw.

https://truckmanualshub.com/

C- 1 Releasing residual pressure in hydraulic circuit

When removing the hydraulic piping, be sure to release the residual pressure according to the following procedure

(1) Set the lock lever in the FREE position.
(2) Remove the oil filler cap of the hydraulic tank.
(3) Run the engine about 10 seconds, and then stop it.
  ★ Limit the engine speed to 1,000 rpm.
  ★ Keep the work equipment control levers in neutral.
  ★ Raise the hydraulic safety lock to the FREE position.
(4) Move each work equipment control lever to the stroke end within 5 - 6 seconds after stopping the engine.
  ★ Repeat steps (3) and (4) 3 times.
  ⚠ When removing the oil filler cap of the hydraulic tank, turn it slowly to release the internal pressure, and then remove it.
(5) After releasing the residual pressure, install the oil filler cap of the hydraulic tank to prevent dirt from entering the tank.
(6) Lower the safety lock to the LOCK position.

Precautions	Part sent individually		
	No.	Part No.	Q' ty

https://truckmanualshub.com/

C- 2 Pulling out boom foot pin and boom cylinder foot pin

(1) Remove the boom foot pin stopper fixed to the chassis and pull out the pin.
(2) Remove the boom cylinder foot pin stopper fixed to the chassis and pull out the pin.
★ Use forcing screws (24mm, P=3.0) to pull out the pins.

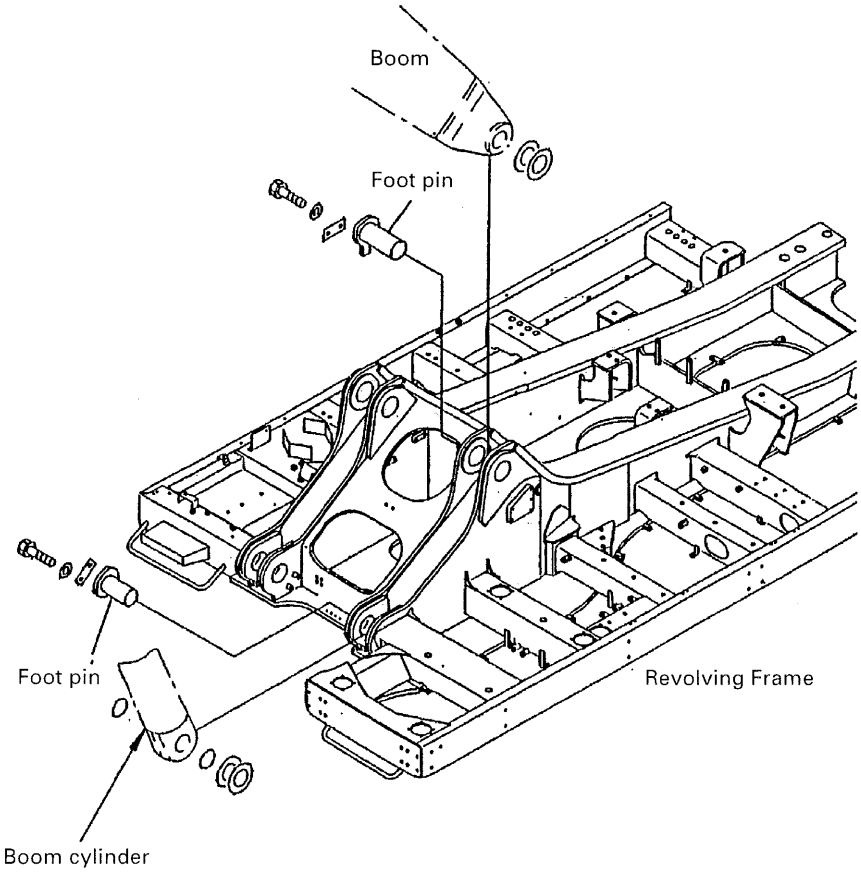

Precautions	Part sent individually		
	No.	Part No.	Q' ty

https://truckmanualshub.com/

C- 3 Installation of boom and arm assembly

(1) Install the seals (209-72-11261, 4 pieces) to the boom foot.
(2) Sling the boom and arm assembly with a crane and match it to the pin holes of the chassis.
(3) Apply lithium grease to the pin holes and inside of the bushing.
(4) Install the boom foot pin. (See the figure below.)
If the boom leans to the right or left at this time, balance it with a jib crane.

★ Install the seals (209-72-11261, 4 pieces) to the boom foot as shown in the figure below. Take care not to damage those seals when inserting the pin.

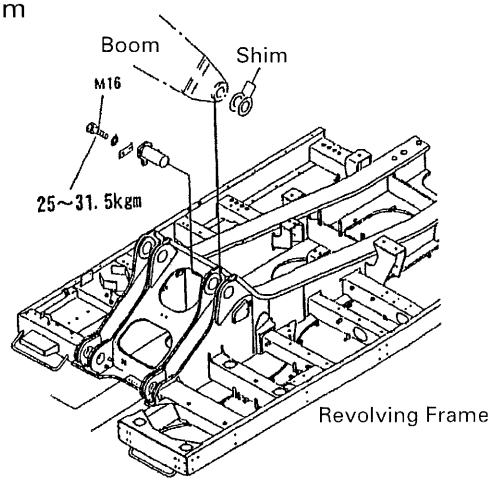

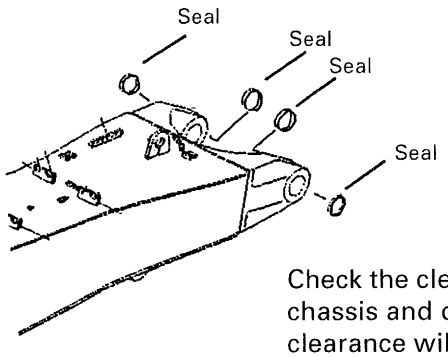

Check the clearance at the boom foot on the outside of the chassis and decide the thickness of the shim so that the clearance will be less than 1 mm. Combine the 1.0-mm thick shim (209-72-11180, 2 pieces) and 1.5-mm thick shim (209-72-11190, 4 pieces) to obtain the necessary thickness. (Adjust the shim at 1 outside position.)

(5) Push in the boom foot pin completely and install the lock plate.

Precautions	Part sent individually		
	No.	Part No.	Q' ty
	3	209-72-11180	2
	2	209-72-11190	4
	1	209-72-11261	4

https://truckmanualshub.com/

C- 4 Installation of flushing piping between chassis and boom

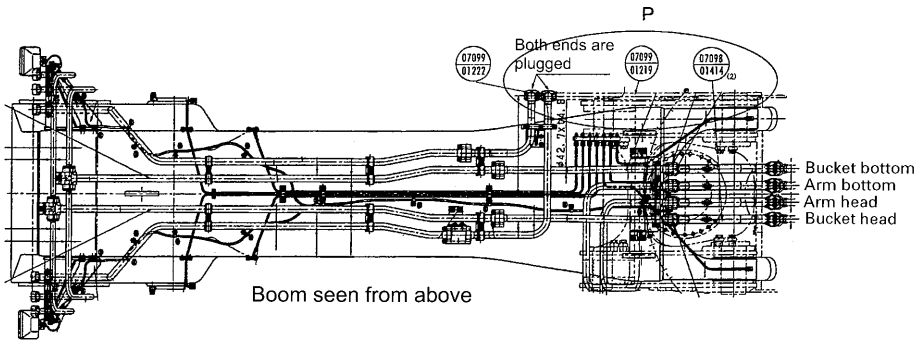

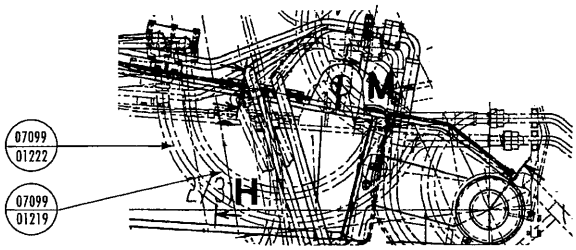

P (seen from side)

(1) Remove the plugs from the piping on the boom side and the hoses on the chassis side and install the hoses between the chassis and boom.

For bottom dump —— Hose (07099-01219, 07099-01222, 2 pieces)
O-ring (07000-13038, 4 pieces)
Split flange (07371-51260, 8 pieces)
Bolt (01010-51245, 16 pieces)
Washer (01643-31232, 16 pieces)

For bucket —— Hose (07098-01414, 2 pieces)
O-ring (07000-13048, 4 pieces)
Split flange (07371-51470, 8 pieces)
Bolt (01010-81455, 16 pieces)
Washer (01643-31445, 16 pieces)

Precautions	Part sent individually		
	No.	Part No.	Q' ty
1. Keep the flanges, O-rings, and heads used for transportation so that they can be reused.			
2. When connecting each hose, take extreme care that the O-rings will not be caught.			
3. When connecting each hose, take extreme care that dirt will not enter the circuit.			

https://truckmanualshub.com/

C- 5 Installation of flushing piping for boom cylinder and arm cylinder

Connection of flushing piping for work equipment piping

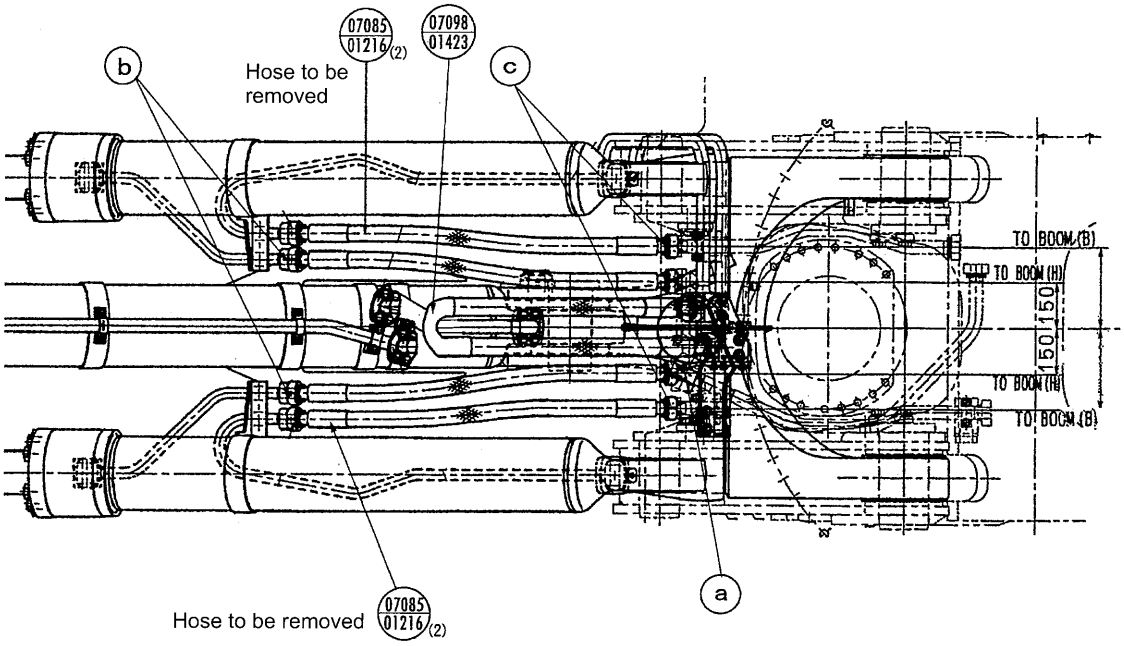

Boom seen from below

(1) Install the hose (07098-01423) to part ⓐ to short the arm cylinder circuit as shown above.

(2) Remove the boom cylinder bottom circuit hoses. (2 pieces of both cylinders on the outside of the work equipment)
Install boom cylinder head hose end ⓑ to part ⓒ to short the boom cylinder circuit.

[Reuse the removed split flanges, bolts, washers, and O-rings. Take care that dirt will not enter the circuit.]

Precautions	Part sent individually		
	No.	Part No.	Q' ty
1. Keep the flanges, O-rings, and heads used for transportation so that they can be reused.	2	07099-01216	4
2. When connecting each hose, take extreme care that the O-rings will not be caught.	1	07098-01423	1
3. When connecting each hose, take extreme care that dirt will not enter the circuit.			

https://truckmanualshub.com/

C- 6 Installation of flushing piping for bucket cylinder

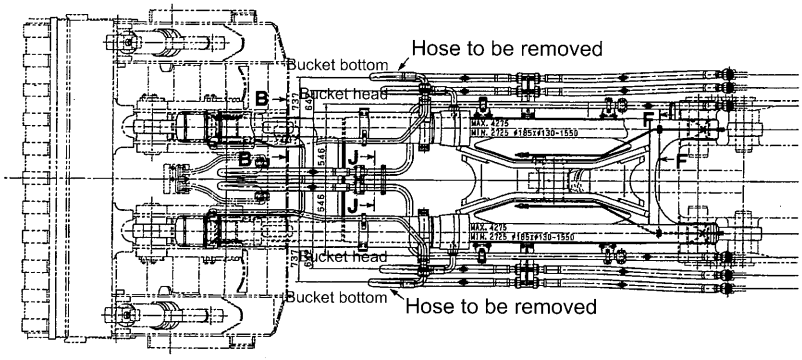

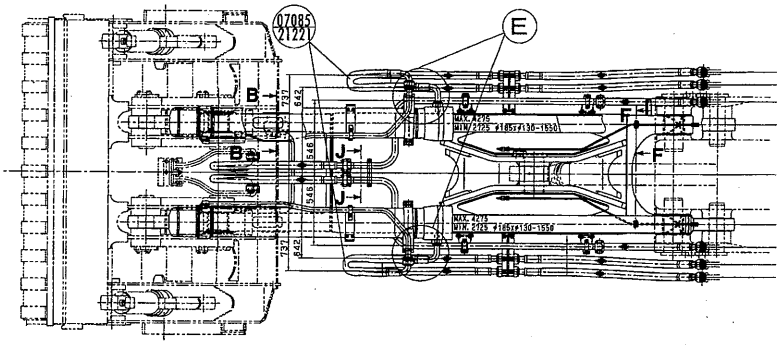

(1) Remove the bucket cylinder bottom hoses (2 pieces on both outsides of the work equipment).

(2) Install the cylinder hoses (07085-21221) to part Ⓔ to short the bucket cylinder circuit as shown below.

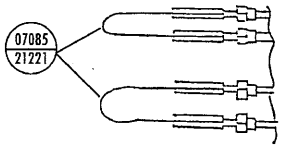

(Reuse the removed split flanges, bolts, and O-rings.)

Precautions	Part sent individually		
	No.	Part No.	Q' ty
	1	07085-21221	4

https://truckmanualshub.com/

C- 7 Installation of flushing piping for bottom dump cylinder (1/2)

Remove 1 of the 2 bottom dump cylinder hoses (07099-21216). Disconnect the end of the other hose from part Ⓕ and connect it part Ⓖ to short the bottom dump circuit.
(See the figure below.)

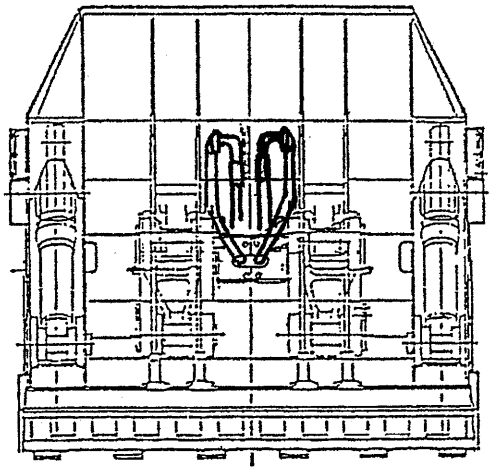

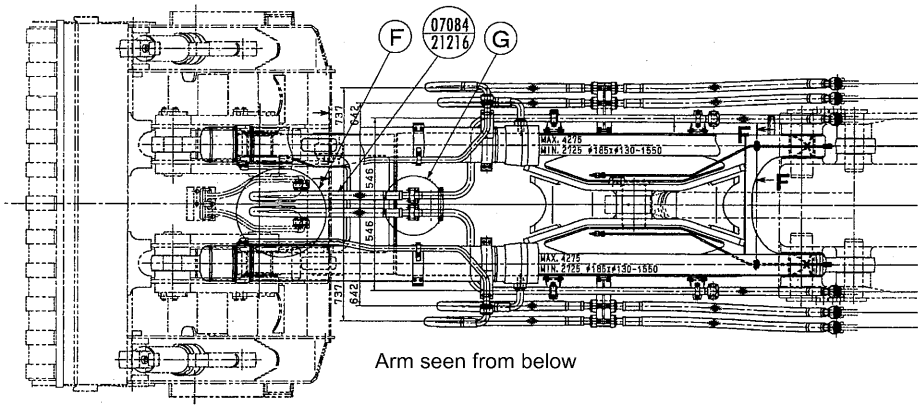

Arm seen from below

Short-circuit state →

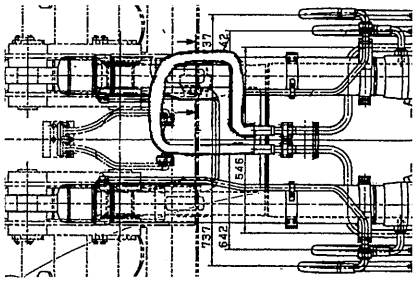

(Reuse the removed split flanges, bolts, washers, and O-rings.)

Precautions	Part sent individually		
	No.	Part No.	Q' ty
1. Keep the flanges, O-rings, and heads used for transportation so that they can be reused.			
2. When connecting each hose, take extreme care that the O-rings will not be caught.			
3. When connecting each hose, take extreme care that dirt will not enter the circuit.			

https://truckmanualshub.com/

C- 7 Installation of flushing piping for bottom dump cylinder (2/2)

⚠ Even if the bucket assembly is disassembled as shown below, short the bottom dump circuit at part Ⓖ similarly to the above.

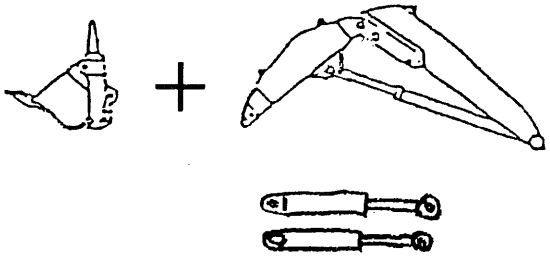

Bucket cylinder

Precautions	Part sent individually		
	No.	Part No.	Q' ty

https://truckmanualshub.com/

C- 8 Installation of boom cylinder

(1) Remove the stopper fixed to the boom, and then remove the boom cylinder top pin.

Boom cylinder: 730 kg

Boom cylinder top pin: 26 kg

(2) Run the engine at low idling.
(3) Sling the cylinder and push the rod slowly to match the pin holes.
(4) Drive in the cylinder top pin.
Inside of bushing: Apply lithium grease.

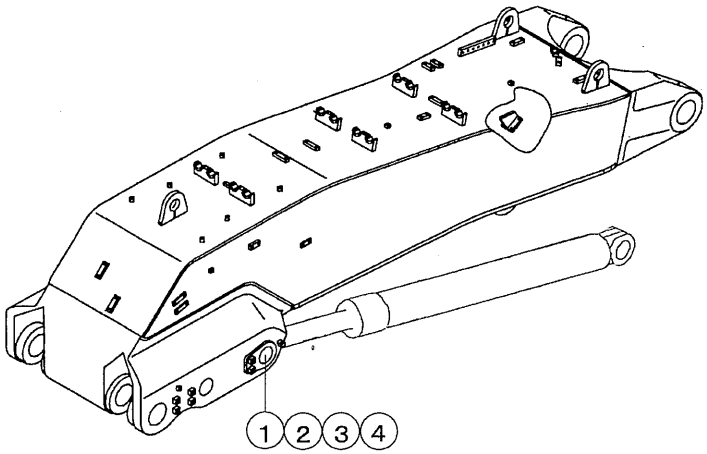

★ Move the cylinder slowly. Do not move it quickly or move it to the stroke end. It may not start for more than 10 seconds at first because of air in it. Do not move the lever to the stroke end at this time.

(5) Install both side cylinders as same procedure.

(6) Install the stopper

Precautions	Part sent individually		
	No.	Part No.	Q' ty
	4	01643-31645	4
	3	01010-81640	4
	2	207-70-11230	2
	1	209-72-51180	2

https://truckmanualshub.com/

C- 9 Installation of boom cylinder foot

(1) Sling the boom cylinder with the crane and match it to the pin holes.
(2) Fit the O-rings (Parts sent individually) (07000-12130, 4 pieces for both cylinders) to the boom cylinder foots and push in the pins.

★ Inside of bushing: Apply lithium grease.

(3) Check the clearance between the cylinder and chassis (outside of the chassis). Decide the thickness of the shim to be inserted to reduce the clearance to below 1 mm. Adjust the shims for both cylinders. (Outside of chassis)
(4) Push in the boom foot pin completely and install the lock plate.
(5) Install the above parts to both sides similarly.

★ Assemble the parts so that the grease hole of the boom cylinder bottom will be on the lower side.

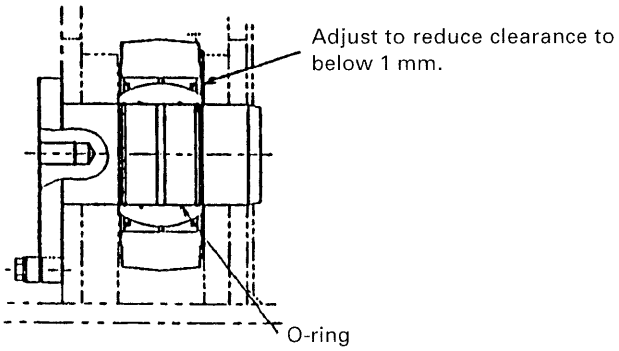

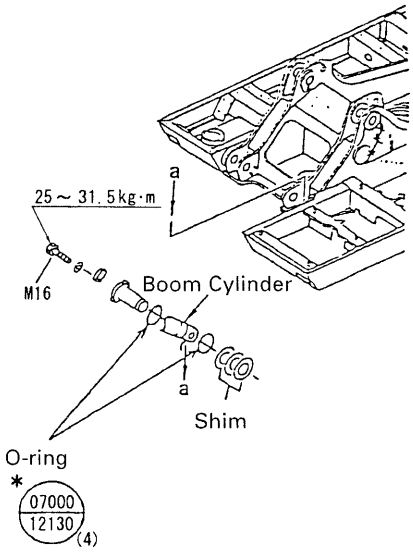

★ Combine the 1.0-mm thick shim (209-72-51230, 4 pieces) and 1.5-mm thick shim (209-72-51240, 4 pieces) to obtain the necessary thickness.

Precautions	Part sent individually		
	No.	Part No.	Q' ty
	3	209-72-51230	4
	2	209-72-51240	4
	1	07000-12130	4

https://truckmanualshub.com/

C-10 Installation of boom cylinder hoses

(1) Remove the tube plug on the boom cylinder.
(2) Install the boom cylinder hoses (07085-01216, 4 pieces) to the regular circuit as shown below.

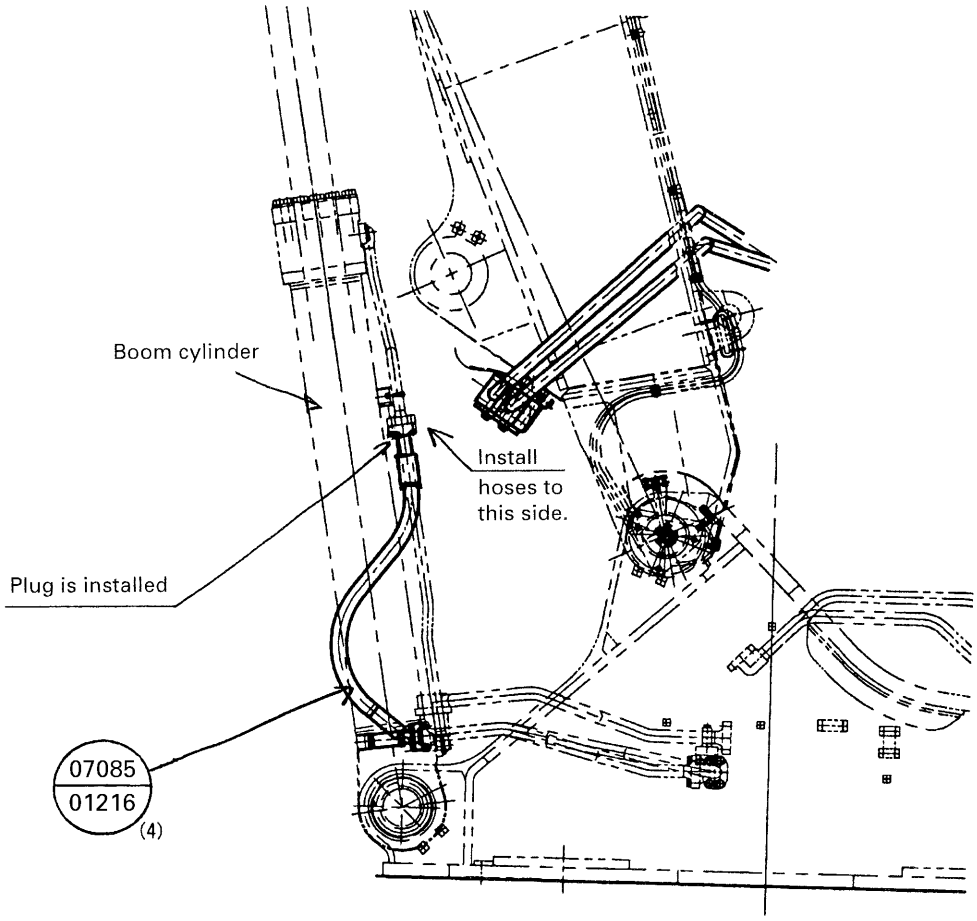

Precautions	Part sent individually		
	No.	Part No.	Q' ty
	1	07085-01216	4

https://truckmanualshub.com/

C-11 Installation of boom cylinder rod pin

(1) Remove the stopper fixed to the boom, and then remove the boom cylinder rod pin.
(2) Run the engine at low idling.
(3) Sling the cylinder and push the rod slowly to match the pin holes.
(4) Drive in the cylinder rod pin.
(5) Install both cylinders according to the same procedure.
(6) Install the stopper. (Tightening torque of M16 bolt: 15 - 31.5 kg-m)

★ Move the cylinder slowly. Do not move it quickly or move it to the stroke end. It may not start for more than 10 seconds at first because of air in it. Do not move the lever to the stroke end at this time.

Precautions	Part sent individually		
	No.	Part No.	Q' ty

https://truckmanualshub.com/

C-12 Installation of arm cylinder hoses

(1) Remove the tube oil stopper on the arm cylinder side and that on the boom side.
(2) Install the arm cylinder hoses (07084-21411) to the regular circuit (See the figure below). Replace the hose O-rings (07000-13048, 4 pieces) with new ones.

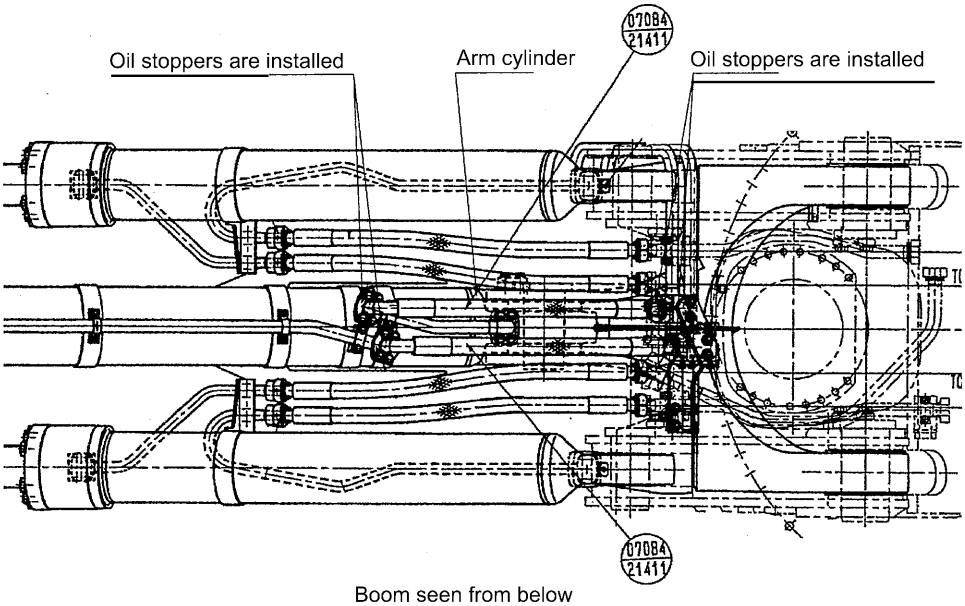

Boom seen from below

Precautions	Part sent individually		
	No.	Part No.	Q' ty
1. Keep the flanges, O-rings, and heads used for transportation so that they can be reused.	3	07084-21411	1
2. When connecting each hose, take extreme care that the O-rings will not be caught.	2	07084-21411	1
3. When connecting each hose, take extreme care that dirt will not enter the circuit.	1	209-72-11261	4

https://truckmanualshub.com/

C-13 Installation of bucket cylinder

(1) Remove the stopper fixed to the boom, and then remove the bucket cylinder rod pin.

Bucket cylinder: 630 kg

(2) Run the engine at low idling.
(3) Sling the cylinder and push the rod slowly to match the pin holes.
(4) Install the cylinder rod pin.
Inside of bushing: Apply lithium grease.

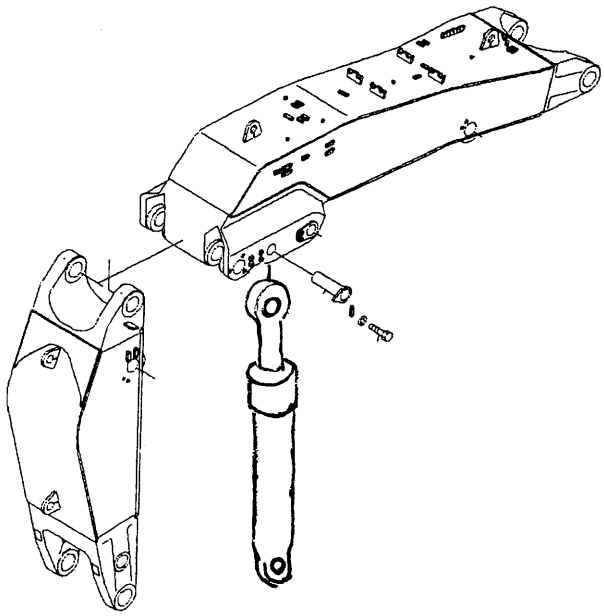

★ Move the cylinder slowly. Do not move it quickly or move it to the stroke end. It may not start for more than 10 seconds at first because of air in it. Do not move the lever to the stroke end at this time.

(5) Install the stopper.

Precautions	Part sent individually		
	No.	Part No.	Q' ty

https://truckmanualshub.com/

C-14 Installation of bucket cylinder hose

Installation of bucket cylinder piping
- Return the hoses connected for flushing.
- Replace the hose O-rings (07000-13038, 8 pieces) with new ones.

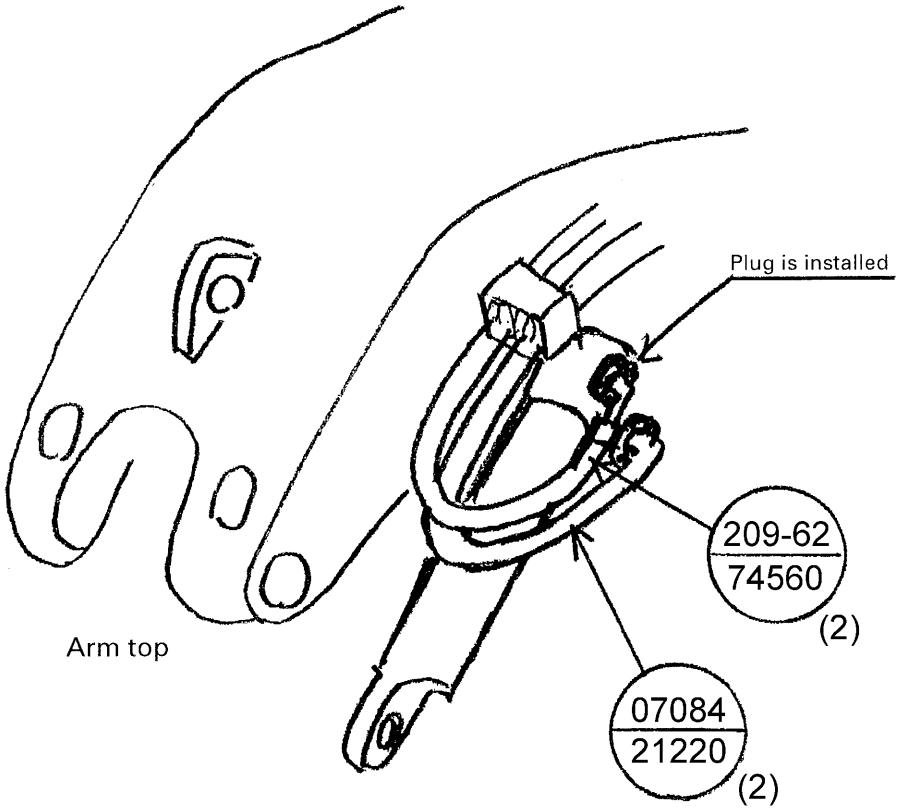

Precautions	Part sent individually		
	No.	Part No.	Q' ty
	3	07084-21220	2
	2	209-62-74560	2
	1	07000-13038	8

https://truckmanualshub.com/

C-15 Installation of connecting hoses between chassis and boom top

(1) Remove the tube plugs on the boom side.
(2) Hoses for boom, arm cylinder, and bucket cylinder
(07098-01414, 4 pieces)
Hoses for bottom dump cylinder
(07099-01219, 07099-01222, 2 pieces)

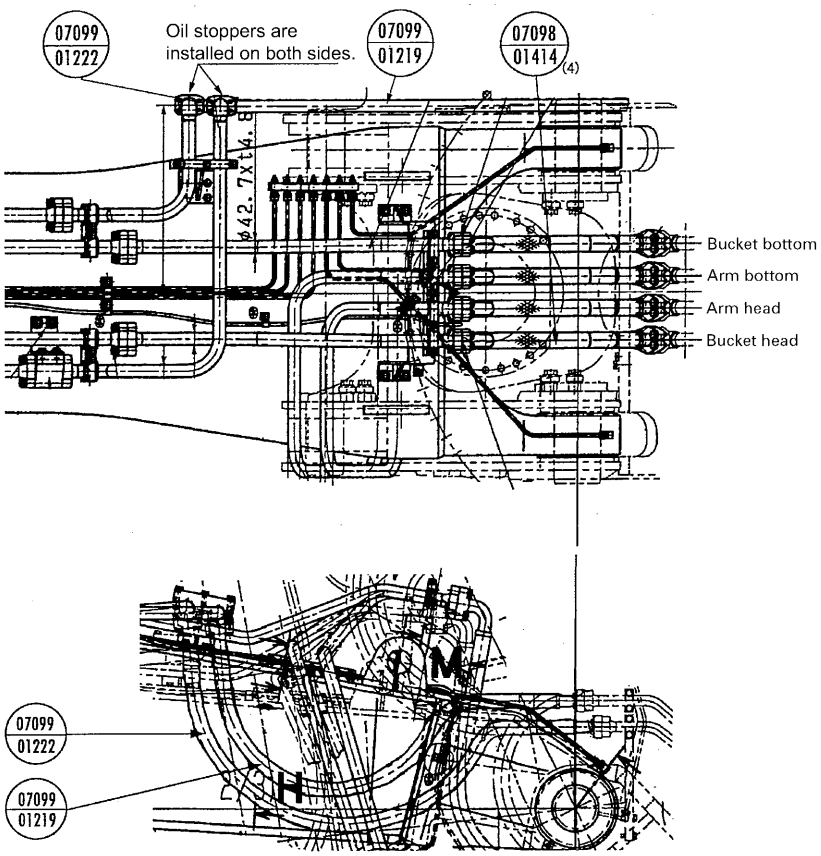

Precautions	Part sent individually		
	No.	Part No.	Q' ty
	3	07099-01222	1
	2	07099-01219	1
	1	07098-01414	4

https://truckmanualshub.com/

C-16 Installation of bottom dump cylinder hoses

Installation of bottom dump cylinder piping

(1) When the bucket assembly is installed to the arm as shown at right

1) Return the bottom dump cylinder hoses (07084-21216, 2 pieces) connected for flushing. Replace the hose O-rings (07000-13038, 3 pieces) with new ones.

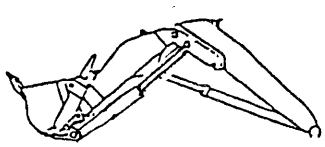

(2) When the bucket assembly is disassembled as shown at right, install the bucket and bucket cylinder according to the procedure shown in the following pages, and then install the bottom dump cylinder hoses (07084-21214, 2 pieces).

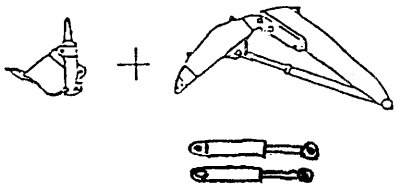

- Similarly to (1), replace the O-rings (07000-13038, 4 pieces) with new ones.

Precautions	Part sent individually		
	No.	Part No.	Q' ty

https://truckmanualshub.com/

C-17 Installation of bucket assembly (1/2)

(1) Remove the bucket-arm connecting pins (fixed to the bucket) and bucket-link connecting pins (fixed to the bucket).
(2) Run the engine at low idling and move the boom cylinder and arm cylinders slowly to match the holes for the bucket-arm connecting pins.

⚠
- Move the cylinder slowly. Do not move it quickly or move it to the stroke end.
- It may not start for more than 10 seconds at first because of air in it. Do not move the lever to the stroke end at this time.
- Keep the arc-level selector switch in the arc digging position.

(3) Push in bucket-arm connecting pins (1) and install plates (2) with bolts (3) and washers (4). (Tightening torque: 15 - 31.5 kgm)
(4) Install fittings (5) (07020-00000, 2 pieces).

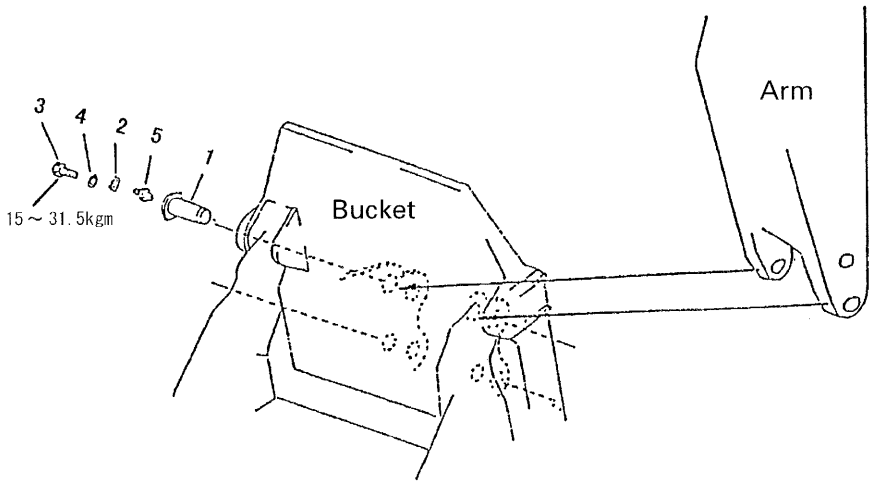

Precautions	Part sent individually		
	No.	Part No.	Q' ty

https://truckmanualshub.com/

C-17 Installation of bucket assembly (2/2)

(5) Match the holes for the bucket cylinder-bucket connecting pins.
(6) Push in bucket cylinder-bucket connecting pins (6) and install plates (7) with bolts (9) and washers (8).
(Tightening torque: 15 - 31.5 kg-m)

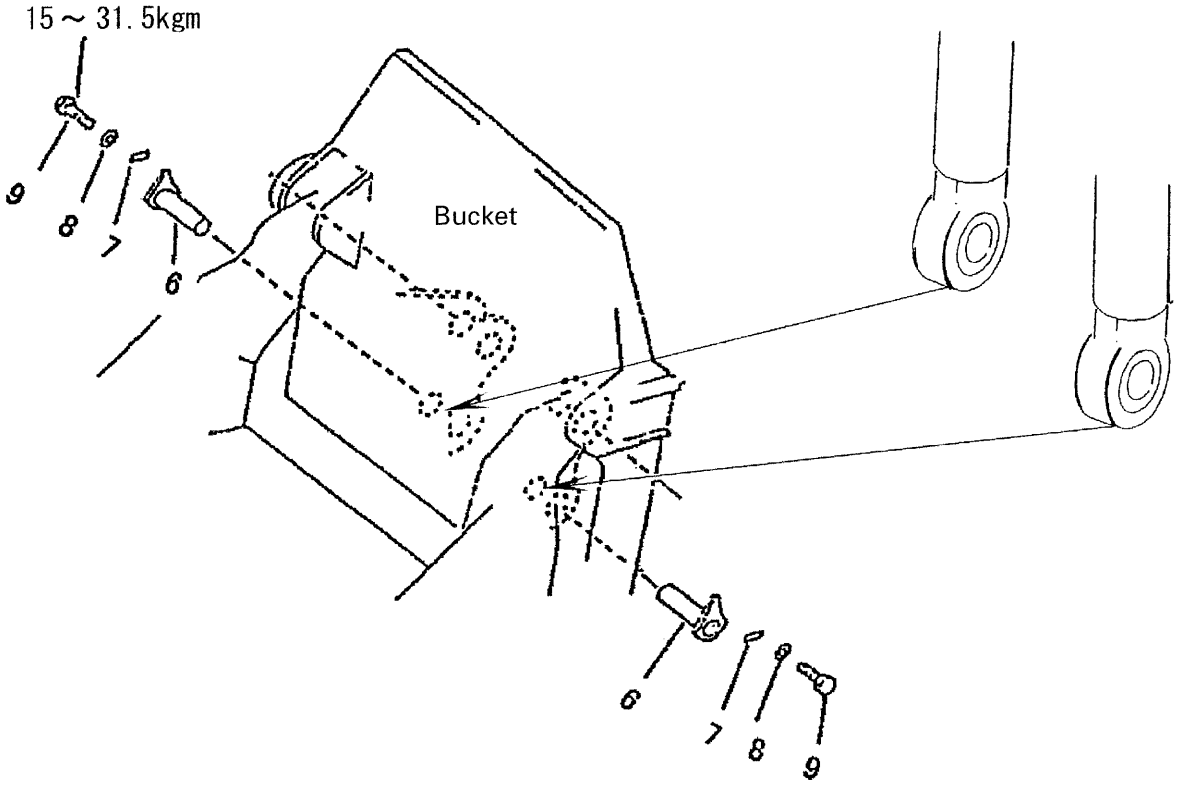

Precautions	Part sent individually		
	No.	Part No.	Q' ty

https://truckmanualshub.com/

C-18 Installation of working lamps

- Install lamps (1) (20Y-06-25310) with plates (4) (20Y-06-21551), bolts (2) (01010-51430), and washers (3) (01643-31445) and connect the connector. (Install the lamps to both sides of the boom.)

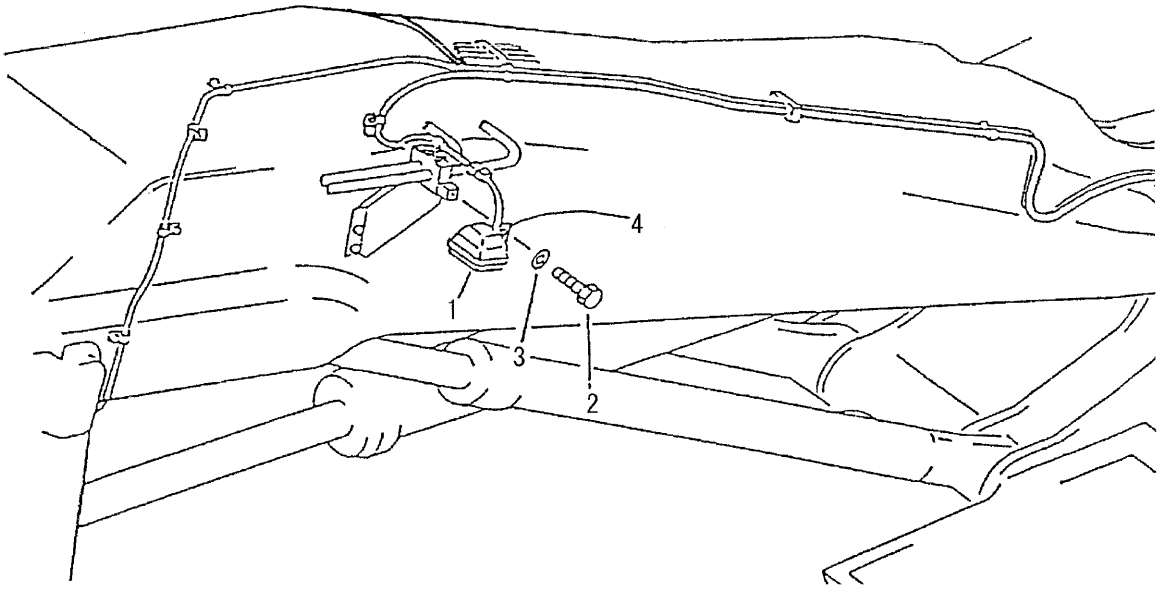

Precautions	Part sent individually		
	No.	Part No.	Q' ty
	4	20Y-06-21551	2
	3	01643-31445	2
	2	01010-51430	2
	1	20Y-06-25310	2

https://truckmanualshub.com/

C-19 Installation of work equipment grease piping

(1) Install grease fittings (07020-00000, 2 pieces) to the boom cylinder foot.
(2) Install the grease piping of the boom cylinder top and bucket cylinder top to parts (a).

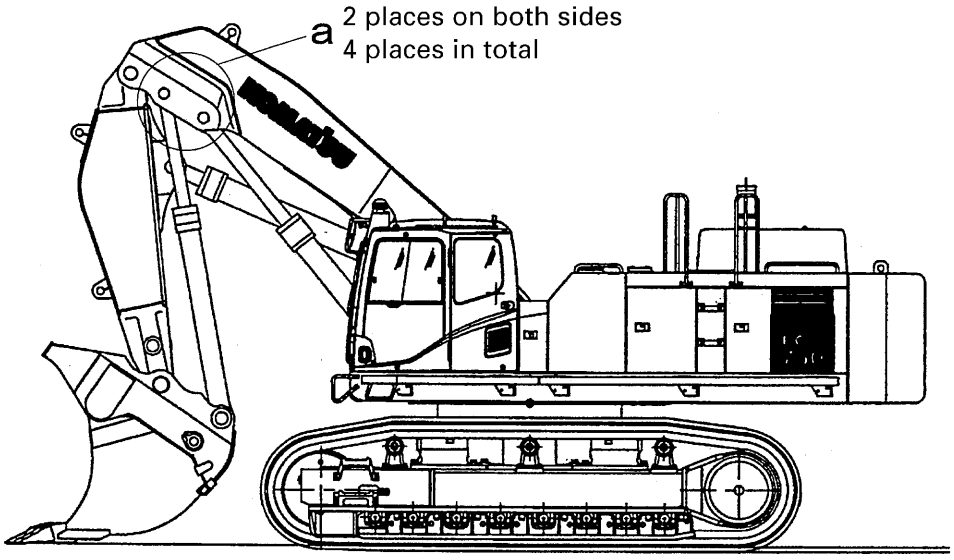

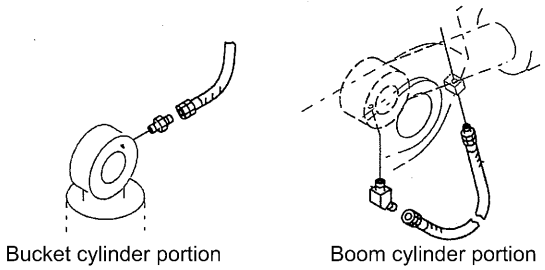

Detail a

Precautions	Part sent individually		
	No.	Part No.	Q' ty
	1	07020-00000	2

https://truckmanualshub.com/

C-20 Greasing after assembling of work equipment

- Supply each pin of the work equipment with molybdenum disulfide grease to fit it well for the first 1 month of new machine or until the first grease pail (16 kg) is used up. [Komatsu genuine grease No. SYGA-16CNM (16 kg)]

<Precautions>

(1) Do not apply molybdenum disulfide grease to the swing circle bearing. (Since the balls contact the races by points, they will be worn quickly.)

(2) Do not apply molybdenum disulfide grease to the pin holes when assembling the work equipment.
(After the grease in the pin fitting parts dries up, the parts are rusted easily and pins may be fixed.)

Precautions	Part sent individually		
	No.	Part No.	Q' ty

https://truckmanualshub.com/

C-21 Bleeding air from work equipment circuit

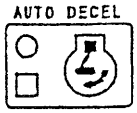

After assembling the work equipment piping, bleed the air from it.

(1) Run the engine at low idling.

(2) Move each cylinder to about 100 mm before each stroke end 4 - 5 times.

(3) Keeping the engine speed at low idling, move each cylinder from the point of 100 mm before the stroke end to the stroke end very slowly (taking at least 10 seconds), and then keep the work equipment control lever at the stroke end for 3 minutes.

[Bleed the air from the boom cylinder, arm cylinder, and bucket cylinder at the extraction stroke end, but bleed the air from the bottom dump cylinder at the retraction stroke end (opening end of the bucket).]

★ The cylinder may not start for more than 10 seconds at first because of the much air in the circuit. Do not move the lever to the stroke end at this time.

(4) Keeping the engine speed at high idling, move each cylinder from the point of 100 mm before the stroke end to the stroke end very slowly (taking at least 10 seconds), and then keep the work equipment control lever at the stroke end for 3 minutes.

[Bleed the air from the boom cylinder, arm cylinder, and bucket cylinder at the extraction stroke end, but bleed the air from the bottom dump cylinder at the retraction stroke end (opening end of the bucket).]

★ The air in each cylinder is bled by performing steps (2) - (4).

★ If the engine speed is heightened or each cylinder is moved to the stroke end from the first, the piston packing may be damaged by the air in the cylinder.

Precautions	Part sent individually		
	No.	Part No.	Q' ty

https://truckmanualshub.com/

C-22 Checking oil level in hydraulic tank and adding oil

Checking oil level in hydraulic tank and adding new oil

(1) Run the engine at low speed, retract the arm cylinder, extract the bucket cylinder, lower the boom until the bucket bottom touches the ground, and stop the engine.

(2) Move the control levers (work equipment and travel) to each stroke end to release the internal pressure.

(3) Check the oil level by sight gauge (G).

(4) If the oil level is below line L of sight gauge (G), add engine oil (CD SAE10W, regardless of the temperature) through oil filler (F).
★ Do not add oil above line H.

⚠ Before removing the oil filler cap, loosen it gradually and leave it for several minutes to release the air in the tank. After the air pressure in the tank is lowered sufficiently, remove the cap.

★ Since the oil level varies with the oil temperature, note the following.
- When the engine is cold (When the oil temperature is 10 - 30°C), the oil level should be around the L level.
- When the engine is warmed up (When the oil temperature is 50 - 80°C), the oil level should be around the H level.

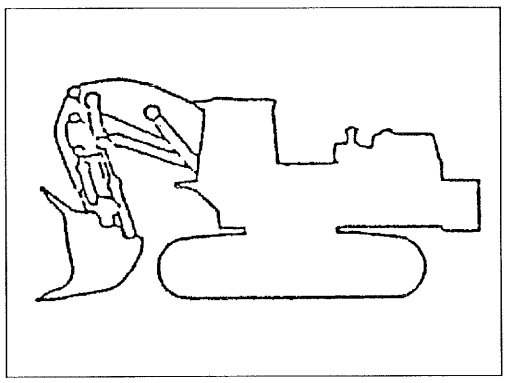

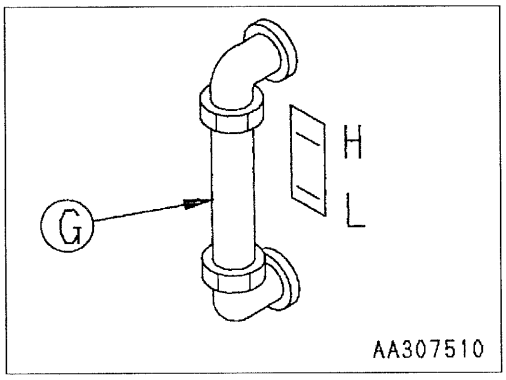

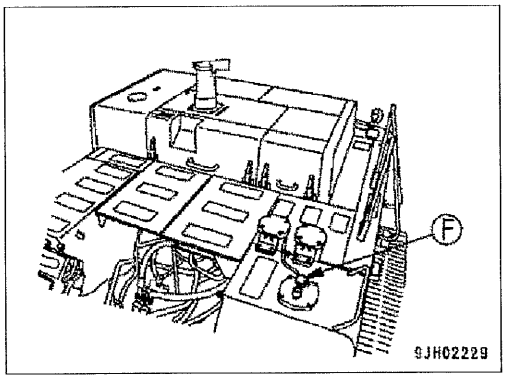

Precautions	Part sent individually		
	No.	Part No.	Q' ty

https://truckmanualshub.com/

Assembly procedure	Replacement of Return Filter (Standard Filter to Flushing Filter) (1/3)
C-23	

The return filter element for hydraulic oil is replaced with the special elements ① and plate ② for flushing as follows:

★ When replacing the element, take out the element slowly so that refuses adhered to the element do not fall inside. Also, take out refuses by hand from the case.

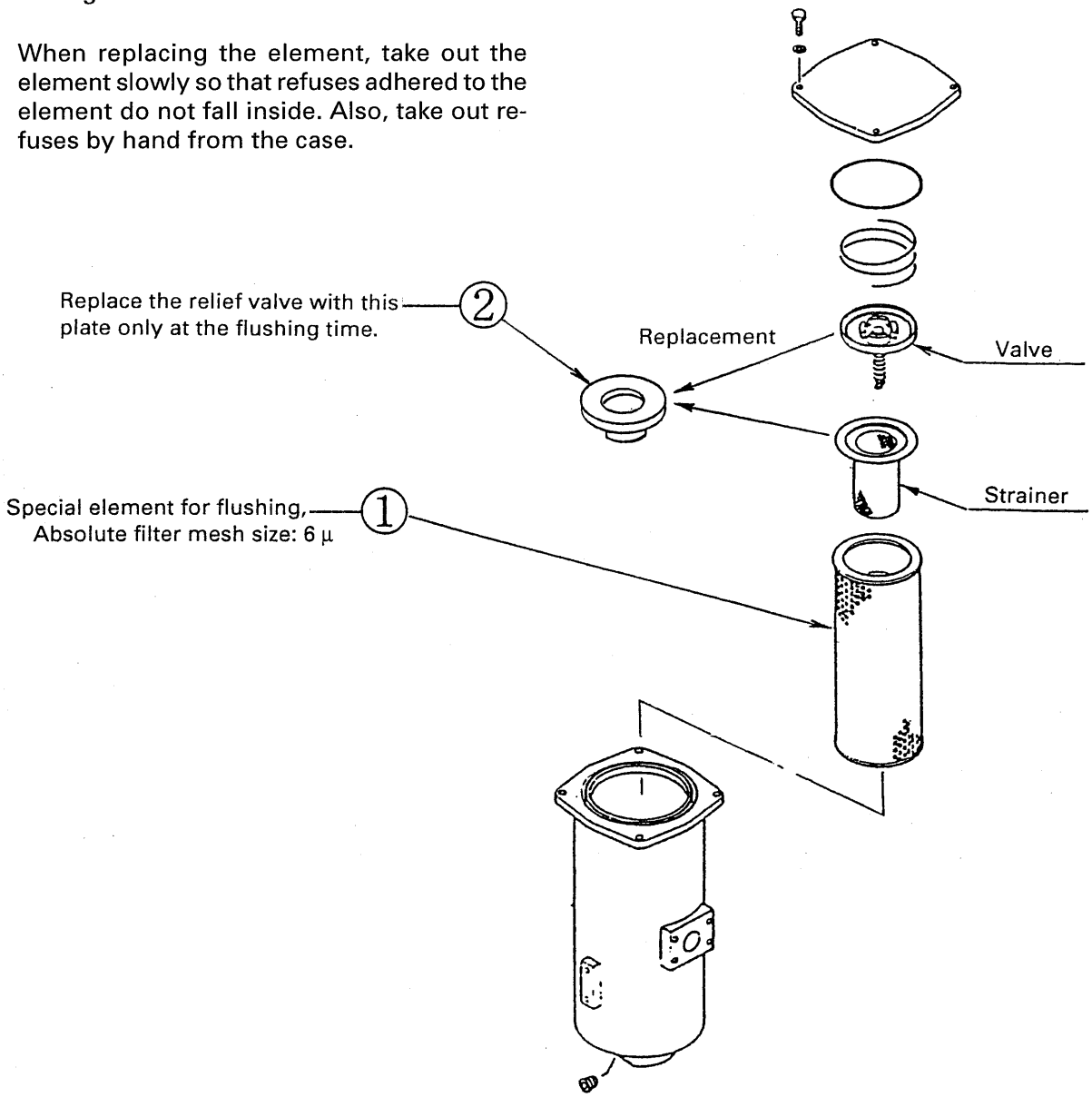

No.	Loose-supply items	Q'ty
1	209-60-77551	2
2	21T-60-13730	2

Precautions	Necessary tools		Necessary equipment	
	Name	Q'ty	Name	Q'ty
Store the removed standard element (209-60-77530) 2 pcs., strainer (206-60-41221) 2 pcs. and valve (12R-60-11300) 2 pcs. in order because they are used again after flushing.			
	Others			

https://truckmanualshub.com/

Assembly procedure	Replacement of Return Filter (Flushing Filter to Standard Filter) (2/3)
C-23	

Reinstall the removed return filter element ①, strainer ② and valve ③.

★ When replacing the element, take out the element slowly so that refuses adhered to the element do not fall inside. Also, take out refuses by hand from the case.

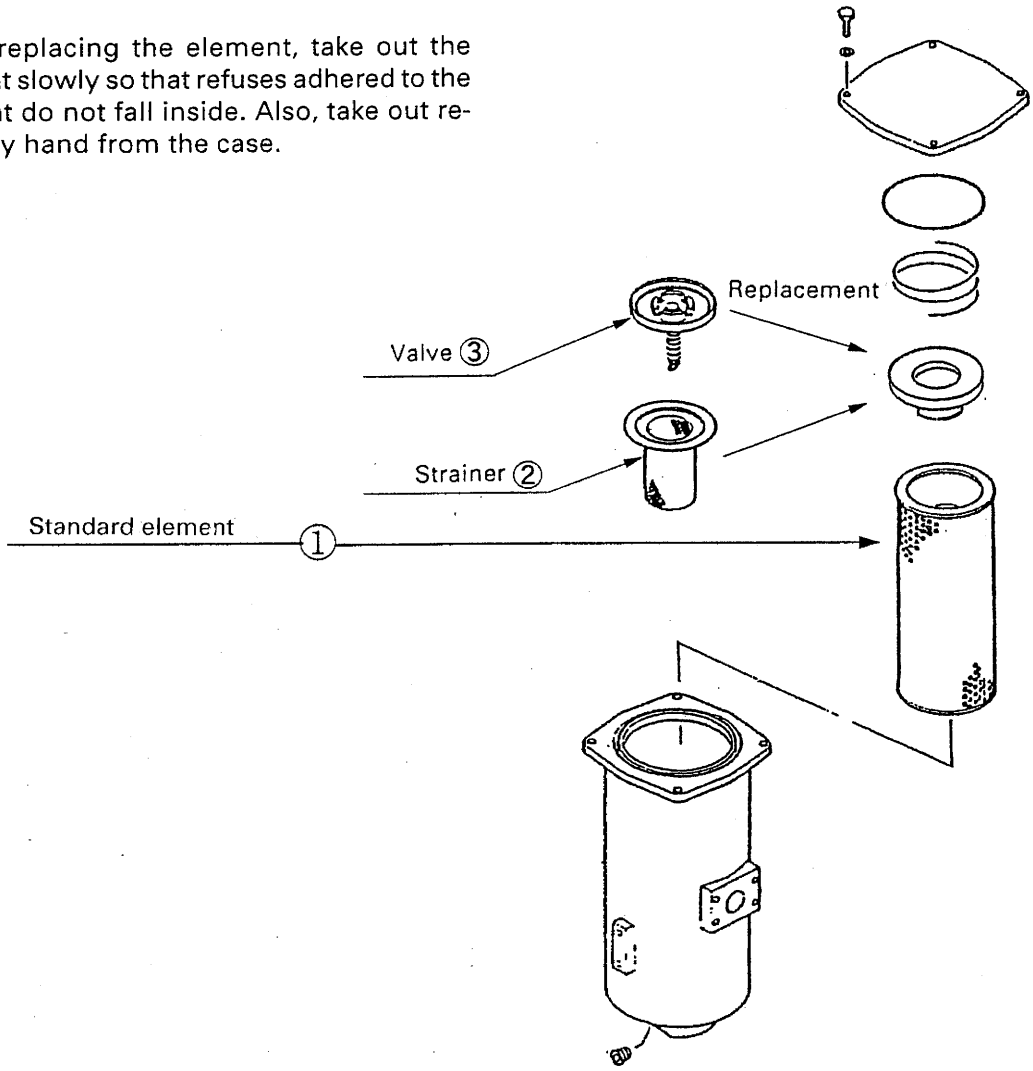

Precautions	Necessary tools		Necessary equipment	
	Name	Q'ty	Name	Q'ty
Store the removed standard element (07063-01210)2 pcs., strainer (206-60-41220) 2 pcs. and valve (12R-60-11300) 2 pcs. in order because they are used again after flushing.			
	Others			

https://truckmanualshub.com/

Assembly procedure	Replacement of Return Filter (Standard Filter ↔ Flushing Filter) (3/3)
C-23	

State of Inserted Element

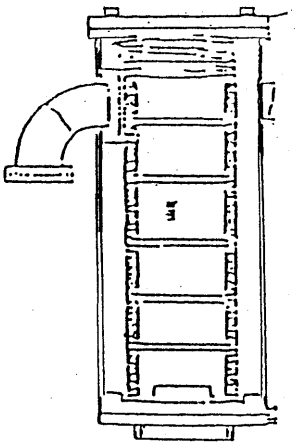

Fig. 1 Correct State

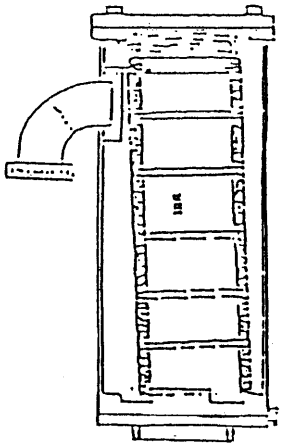

Fig. 2 Incorrect State

Caution:
Do not insert the element so that it stands on the step at the bottom of the case as shown in Fig. 2. When the filter case is filled with oil, it is difficult to check if the element is inserted correctly, so turn the element by hand after inserting it in the case. When it turns smoothly, it is considered to be inserted correctly.

Precautions	Necessary tools		Necessary equipment	
	Name	Q'ty	Name	Q'ty
	Others			

https://truckmanualshub.com/

Flushing of Hydraulic Circuit (1/2)

After completion of assembling, flush the hydraulic circuit as follows:

★ Rotate the engine at the **low idle** and follow the procedures below:

(1) Flushing of Work Equipment Pipes
Extend and contract each cylinder for several minutes with reaching them to the stroke end.

a) Extension and contraction of bucket cylinder for 5 minutes

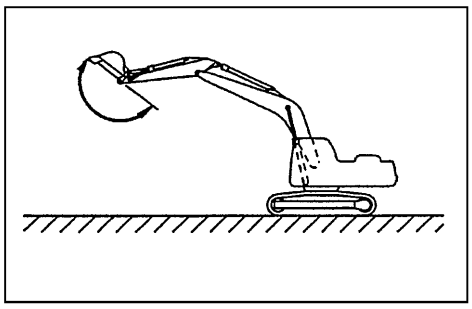

(b) Extension and contraction of arm cylinder for 5 minutes.

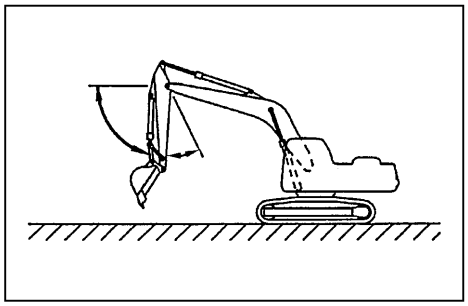

(c) Extension and contraction of boom cylinder for 5 minutes

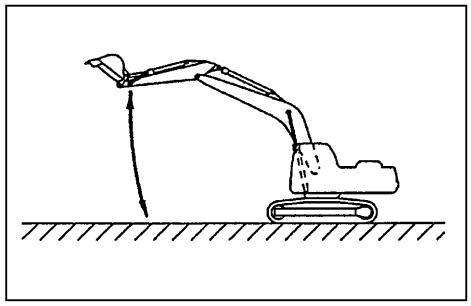

(d) Extension and contraction of bottom dump cylinder for 5 minutes

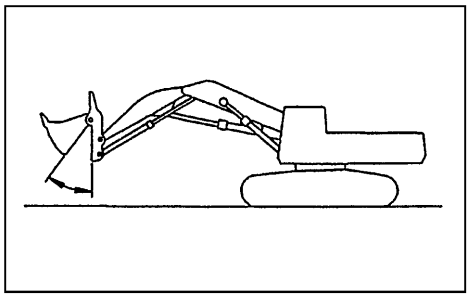

https://truckmanualshub.com/

Assembly procedure	
C-24	**Flushing of Hydraulic Circuit (2/2)**

(2) Flushing of Swing Circuit
Right swing and left swing for 3 minutes each

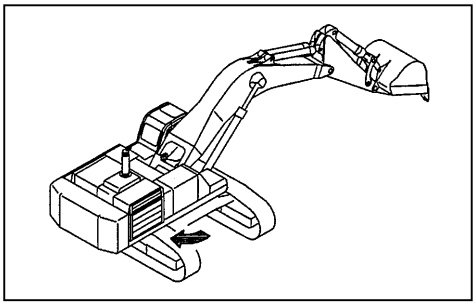

(3) Flushing of Travel Circuit
Press the ground with the work equipment as illustrated here to raise one side of the machine, and operate the travel lever as follows:

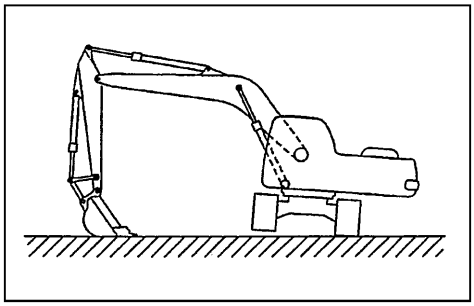

- Forward travel and backward travel to the right
  For 3 minutes each
- Forward travel and backward travel to the left
  For 3 minutes each

Precautions	Necessary tools		Necessary equipment	
	Name	Q'ty	Name	Q'ty
	Others			

https://truckmanualshub.com/

KOMATSU

Report No. _____

FIELD ASSEMBLY INSPECTION REPORT

After completion of assembling a machine, make inspections according to these check sheets for assuring machine performance and quality.

Model - Type	Machine Serial No.	User Unit No.	Engine Model	Engine Serial No.
Backhoe spec.			**SAA6D140E-5**	

Service Meter Reading	Date of Inspection
Location of Machine at Inspection	
Distributor's Name	

	Attachment 1	Attachment 2
Manufacturer		
Model		
Serial No.		

Customer's Name	Address:	Signature:	Delivery Report No. attached
		Date:	

Inspector's Comments:

Inspector's Name:	KOMATSU USE ONLY :
Title	C. Sheet Receiving Date :
Signature:	By :
	Remark:

Check sheets filling instructions:

1. Use following indexes for entry of judgement

☑ ..... Normal
☒ ..... Abnormal
⊠ ..... Correction made on abnormal point
⧄ ..... Not applied

2. Enter actually measured values in parenthese, [ ].

Notes:

(1) Criteria are based on the standards when the machine is shipped out of the factory.

(2) **This FIELD ASSEMBLY INSPECTION REPORT is for "A" specification.**

SUBMITTANCE OF THIS REPORT (AND CHECK SHEETS) TO KOMATSU IS ONE OF THE CONDITIONS OF WARRANTY VALIDATION, COPY FOR KOMATSU SHALL BE FORWARDED TO THE KOMATSU REGIONAL OFFICE TOGETHER WITH THE COPY OF DELIVERY SERVICE REPORT.

https://truckmanualshub.com/

Category	Revision	Check item				Local assembly time		After hours of operation		Judgement standard
Checks before assembly		Oil and water levels			Actual measurement					
		Cooling water		Soft water	[ ]					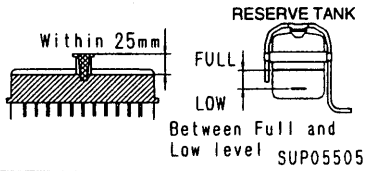
		Anti-freeze (A, B, C, D, E)		Density of anti-freeze	[ ]					A: -50 – -40°C D: -20 – -10°C B: -40 – -30°C E: -10 – 0°C C: -30 – -20°C (Not necessary in summer)
		Engine oil		SAE10W CD SAE30 CD	[ ]					$L-H^{+5}$mm (10 minutes after stopping engine)
		PTO oil		SAE10W CD SAE30 CD	[ ]					$L^{+5}-H$ (10 minutes after stopping engine)
		Swing machinery gear case oil		SAE30 CD	[ ]					$L^{+5}-H^{+10}$ (10 minutes after stopping engine)
		Final drive gear case oil	Right	SAE30 CD	[ ]					Bottom edge of level plug: 0 to –10 mm
			Left	SAE30 CD	[ ]					
		Hydraulic oil		SAE10W CD	[ ]					Between the H and L marks.
		Battery electrolyte		–	[ ]					Within 13 mm from bottom surface of filler port
		Engine No. [ ]								
		Service meter	When accepted [ ]		After check [ ]					
Checks during assembly										
		Loose, untightened lock bolts for connecting pins								There must be none.
		Loose, untightened split flange bolts for work equipment piping								There must be none.
		Forgotten, missing, catching O-rings for work equipment piping								There must be none.
		Loose, twisted connections for grease piping								There must be none.
		Shim adjustment for work equipment pins								Max. 1 mm (for locations, see assembly procedure manual)
		Improperly inserted wiring, unconnected wiring								There must be none.
		Loose, untightened ladder mounting bolts								There must be none.

https://truckmanualshub.com/

Category	Revision	Check item	Local assembly time		After hours of operation		Judgement standard
Checks during assembly		Loose, untightened counterweight bolts					There must be none.
		Stepped clearance between counterweight and frame					Max. 15 mm
		Loose, untightened operator's cab mounting bolts					There must be none.
		Loose, untightened operator's seat mounting bolts					There must be none.
		Loose, untightened mounting bolts and joints for travel					There must be none.
		Forgotten, missing, catching O-rings for travel					There must be none.
		Loose, untightened track frame mounting bolts					There must be none.
		Loose, untightened bolts for travel motor cover					There must be none.
		Are there any other parts not yet installed (rear view mirror, etc.)?					There must be none.
		Bleed air from hydraulic pump					Follow instructions in assembly procedure manual.
		Bleed air from travel motor					Follow instructions in assembly procedure manual.
		Flush hydraulic circuit					Follow instructions in assembly procedure manual.
		Bleed air from work equipment cylinder circuit					Follow instructions in assembly procedure manual.
		Grease all parts of work equipment					All locations must be greased.
		Add hydraulic oil					Add to between L and H marks at inspection posture
		Add fuel, washer fluid					Fill tank.
		Dirty oil on paintwork, damage to paintwork at any part					Clean, repair damaged paintwork

https://truckmanualshub.com/

Category	Revision	Check item	Local assembly time	After hours of operation	Judgement standard
Check monitor		Monitor display 1. Check of monitor function When the starting switch is turned ON, the gauges, CHECK items, and all display items on the monitor should light up. At the same the alarm buzzer should sound.			Display should be as on left.
		2. Check of gauges and CHECK items When starting switch is turned to ON (all lamps on), all display lamps should go out after approx. 3 sec. For another 2 seconds, only the gauges are displayed, and the CHECK and monitor items disappear.			
		3. Check of monitor items After starting the engine, the caution lamps should not light up and the alarm buzzer should not sound when the engine speed is low idling – high idling.			
		Operation of service meter			There should be no scratches or misting of the lens or variation in operation.

MONITOR

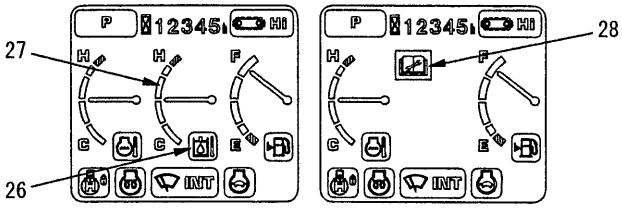

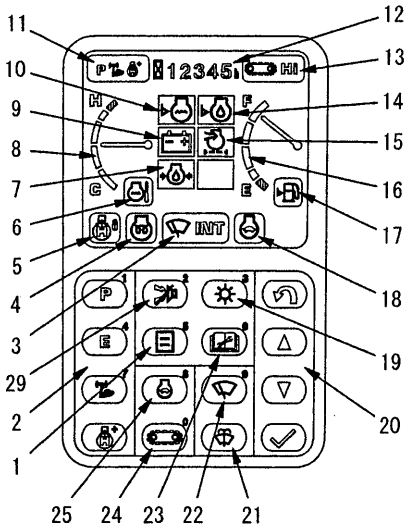

1. User mode adjustment switch
2. Working mode select switch
3. Wiper monitor
4. Preheating monitor
5. Swing lock monitor
6. Coolant temperature monitor
7. Engine oil pressure monitor
8. Coolant temprature gauge
9. Battery charge monitor
10. Coolant level monitor
11. Working mode monitor
12. Service meter
13. Travel speed monitor
14. Engine oil level monitor
15. Air cleaner clogging monitor
16. Fuel gauge
17. Fuel level monitor
18. Auto-deceleration monitor
19. Screen adjust switch
20. Input control switch
21. Window washer switch
22. Wiper switch
23. Maintenance switch
24. Travel speed selector switch
25. Auto-deceleration switch
26. Hydraulic oil temperature monitor
27. Hydraulic oil temperature gauge
28. Maintenance interval monitor
29. Alarm buzzer stop switch

https://truckmanualshub.com/

Category	Revision	Check item	Local assembly time	After hours of operation	Judgement standard
Check of switches, control levers		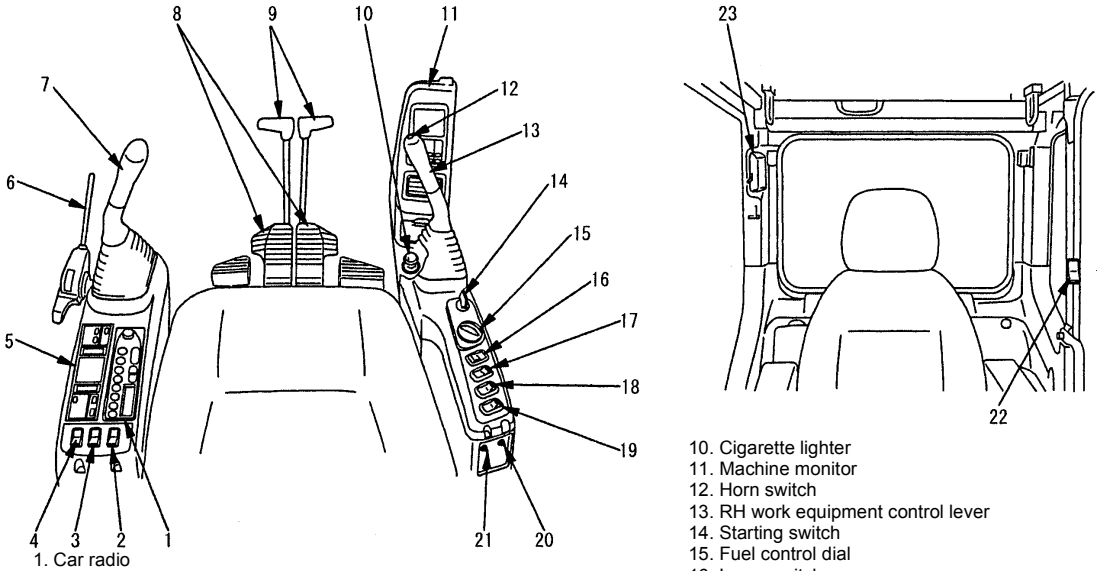 1. Car radio 2. Lower wiper switch (fixed front window cab specs, if equipped) 3. Revolving warning lamp switch (if equipped) 4. Large capacity air conditioner blower switch (if equipped) 5. Air conditioner control switch 6. Lock lever 7. LH work equipment control lever 8. Travel pedal 9. Travel lever 10. Cigarette lighter 11. Machine monitor 12. Horn switch 13. RH work equipment control lever 14. Starting switch 15. Fuel control dial 16. Lamp switch 17. Swing lock switch 18. Machine push-up switch 19. Boom shockless control switch 20. Swing holding brake release switch 21. Emergency pump drive switch 22. Step light switch 23. Room lamp switch			
		Operation of horn switch			Press the switch on the right footrest to sound the horn. At the same time, the flashing light (if equipped) at the bottom front of the cab will flash for approx. 5 seconds.
		Operation of lock lever			Push down the lever to apply the lock. Engine can be started but all work equipment control levers do not move Push up the lever to release the lock. Engine cannot be started but all work equipment levers move.
		Operation of fuel control dial			MAX: Full speed Min: Low idle
		Operation of preheating pilot			Rotate the key at the preheating position so that the monitor display shows "preheating ON". The preheating pilot will flash after approx. 30 seconds to indicate the completion of preheating.

https://truckmanualshub.com/

Category	Revision	Check item	Local assembly time	After hours of operation	Judgement standard
Check of switches, control levers		Operation of working mode selector switch			P lights up: Heavy-duty operations E lights up: Fuel-efficient operations Monitor display changes in synchronous with the switch operation. Engine switches to or from the full operation
		Operation of auto-deceleration switch			ON lights up: Auto-deceleration is actuated. OFF: Auto-deceleration is cancelled. Each time the switch is pressed, the monitor display changes so that ON or OFF state can be selected.
		Operation of travel speed switch			Lo lights up: Low speed travel High lights up: High speed travel Monitor display changes in synchronous with the switch operation. When the engine is started, the travel speed is automatically set to Lo.
		Operation of heavy lift switch			ON lights up: Boom lifting force is increased. OFF: Normal Each time the switch is pressed, the monitor display changes so that ON or OFF state can be selected.
		Operation of swing priority mode switch			ON lights up: Able to swing 180° while loading OFF: Normal work (able to swing 90° while loading) Each time the switch is pressed, the monitor display changes so that ON or OFF state can be selected.
		Operation of wiper switch			ON: lights up: Wiper moves continuously INT: lights up: Wiper moves intermittently OFF: Wiper stops Each time the switch is pressed, the monitor display changes so that any state can be selected.
		Operation of window washer switch			Window washer fluid is sprayed out to the front glass (in combination with wiper) when the switch is pressed continuously.
		Operation of cigarette lighter			This is used to light cigarettes. To use, push the lighter in. After a few seconds it will spring back, and glow.
		Operation of lamp switch			This switch is used to turn on the front lamps, working lamps, additional lamp at the top front of the cab, and monitor lighting.
		Operation of swing lock switch			ON position (actuated): The swing lock is always applied, and the upper structure will not swing even if the swing is operated. In this condition, the swing lock monitor lights up. OFF position (cancelled): Swing operation is possible. In this condition, the swing lock monitor goes off.
		Operation of machine push-up switch			Low pressure setting: The boom thrust force is weak. High pressure setting: The boom thrust force becomes more powerful.
		Operation of boom shockless control switch (if equipped)			ON: While the boom stop operation, shock of the work equipment is controlled.
		Operation of step light switch (if equipped)			• When the switch is pressed, the step light will light up for approx. 60 seconds. • Even if the starting switch key is at the OFF position, the step light will light up for approx. 60 seconds when the switch is pressed.

https://truckmanualshub.com/

Category	Revision	Check item	Local assembly time	After hours of operation	Judgement standard
Check of switches, control levers		Operation of room lamp switch			ON position: Room lamp lights up OFF position: Room lamp lights off Even if the starting switch key is at the OFF position, the room lamp will light up when the switch is pressed.
		Operation of emergency pump drive switch When the monitor display shows E02 (TVC valve system error), move the switch "up" to make it possible to carry out work			When normal: Switch is pushed down: When switch is pushed up, alarm buzzer sounds.
		Operation of swing holding brake release switch When the monitor display shows E03 (Swing brake system error), move the switch "up" to cancel the brake, and it becomes possible to actuate the swing. However, the swing brake remains released.			When normal: Switch is pushed down When switch is pushed up, alarm buzzer sounds, and swing lock symbol flashes
		Operation of alarm buzzer stop switch			This is used to stop alarm buzzer if it sounds to warn of an abnormality of warning item during engine operation.
		Operation of lower wiper switch (if equipped)			ON: Lower wiper moves. OFF: Lower wiper stops.
		Operation of travel levers			FORWARD: The lever is pushed forward. (The pedal is angled forward) REVERSE: The lever is pulled back. (The pedal is angled back) N (Neutral): The machine stops
		Operation of LH work equipment control lever (with auto-deceleration device)			This lever is used to operate the arm and upper structure. Arm operation: (a) Arm OUT, (b) Arm IN Swing operation: (c) Swing to right, (d) Swing to left 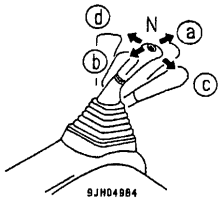 N (Neutral): When the lever in this position, the upper structure and the arm will be retained in the position in which they stop.
		Operation of RH work equipment control lever (with auto-deceleration device)			This lever is used to operate the boom and bucket. Boom operation: (a) RAISE, (b) LOWER Bucket operation: (c) DUMP, (d) CURL 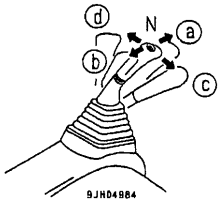 N (Neutral): When the lever in this position, the upper structure and the arm will be retained in the position in which they stop.
		Confirmation of failure history (Both electrical and mechanical)			Delete the failure history after confirming that no abnormality sign is displayed. Confirm that no failure history is provided after completion of the test.

https://truckmanualshub.com/

Category	Revision	Check item	Local assembly time	After hours of operation	Judgement standard
Swing performance		Swing operation running in: Engine high idling speed, (Work equipment posture: Max. reach) 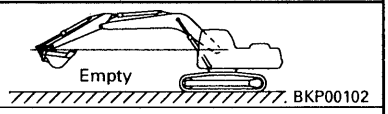			
		Constant swing speed [Right rpm] [Left rpm]			6.8 ± 0.4 rpm
		Brake angle			Max. 70 (Feeling)
		Swing variation, hunting			There must be none.
		Abnormal noise, irregular swing			There must be none.
Travel performance		Travel operation running in: Engine high idling speed. (Work equipment posture: Travel posture) 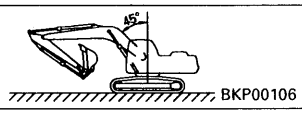			
		Abnormal noise, heat from carrier roller, track roller, idler			There must be no abnormal noise or abnormal heat.
		Operation of travel brake			Must brake securely without pulling to one side.
		Abnormal noise, irregular travel			There must be none.
		Travel deviation (feeling)			There must be no abnormal deviation from fine control range to full stroke range (feeling).
		Travel deviation (measured) (Only when it is considered that there is abnormality.) — High speed: Forward [ ] mm/20m; Reverse [ ] mm/20m			Max. 200 mm/20m
		Low speed: Forward [ ] mm/20m; Reverse [ ] mm/20m			Max. 200 mm/20m
		Track rotating speed — High speed – Right: Forward [ ] sec; Reverse [ ] sec			53.6 ± 5.4 / 5 turns Difference between left and right:
		High speed – Left: Forward [ ] sec; Reverse [ ] sec			
		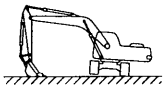 Low speed – Right: Forward [ ] sec; Reverse [ ] sec			82 ± 8.0 / 5 turns Difference between left and right: 1.2 sec
		Low speed – Left: Forward [ ] sec; Reverse [ ] sec			
					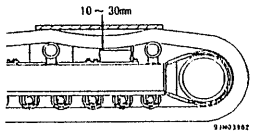
		Track tension — Right [ ] mm; Left [ ] mm			

https://truckmanualshub.com/

Note: All judgement standard values for speeds are the values in DH mode.

Category	Revision	Check item	Local assembly time	After hours of operation	Judgement standard
Work equipment performance		Work equipment operation running in: Engine high idling speed, (Note: Boom cylinder to ground level) Pressurized; each port relief 2 minutes, shock 20 times (except BOOM LOWER). Work equipment posture In A mode 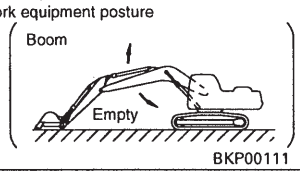 BKP00111 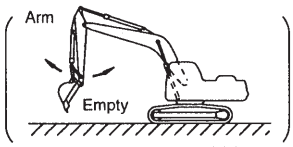 BKP00112 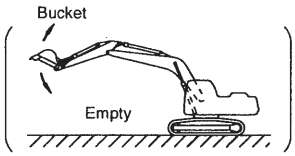 BKP00113				
		Work equipment speed (Incl. cushion actuating time) Boom RAISE sec [ ] LOWER sec [ ]				RAISE: 5.3 ± 0.5 sec. (PC800(LC), 850) 5.6 ± 0.6 sec. (PC800SE, 850SE) LOWER: 4.3 ± 0.4 sec. (PC800) 4.2 ± 0.4 sec. (PC850) 4.4 ± 0.4 sec. (PC800SE, 850SE)
		Arm IN sec [ ] OUT sec [ ]				IN: 4.7 ± 0.5 sec. (PC800) 5.4 ± 0.5 sec. (PC850, 800SE, 850SE) OUT: 3.4 ± 0.3 sec. (PC800) 3.8 ± 0.4 sec. (PC850, 800SE, 850SE)
		Bucket CURL sec [ ] DUMP sec [ ]				CURL: 3.3 ± 0.3 sec. (PC800) 3.6 ± 0.4 sec. (PC850) 4.6 ± 0.4 sec. (PC800SE, 850SE) DUMP: 3.1 ± 0.3 sec. (PC800) 3.4 ± 0.3 sec. (PC850) 4.2 ± 0.4 sec. (PC800SE, 850SE)
		Work equipment time lag (Engine low idling) Boom LOWER sec [ ] Only when there is considered to be abnormality.				Max. 5.5 sec.
		Arm IN sec [ ] Only when there is considered to be abnormality.				Max. 5.2 sec.
		Bucket DUMP sec [ ] Only when there is considered to be abnormality.				Max. 3.5 sec.
		Abnormal noise from hydraulic pump, PTO				There must be no abnormality during operation under no load and during relief.
		Generation of heat by PTO				There must be no abnormal generation of heat.
		Engine partial performance				There must be no hunting at any speed under no load, there must be no stalling of engine even at low idling and relief.
		Fine control performance				Must operate smoothly.
		Operation when raising chassis (Including machine push-up function)				There must be no escape of boom, arm, or bucket ON: Machine is lifted up. OFF: Machine is not lifted up.
		Abnormal noise, grating noise from work equipment				There must be none.
		Shock at end of cylinder stroke (Shock at end of stroke for BOOM RAISE and ARM IN)				Cushion must be fully effective.
		Function of accumulator				Immediately after engine is stopped, boom cylinder must move from fully extended position to ground level. (Arm at max. reach)

https://truckmanualshub.com/

Category	Revision	Check item	Local assembly time		After hours of operation		Judgement standard
During operation		Check all parts					
		Operating force of control lever when each actuator is actuated.					• There must be no catching during operation. • Must return naturally to neutral.
		Feeling and noise of vibration in operator's cab					There must be none.
		Vibration noise from frame, guard, ladder					There must be none.
Around operator's cab		Movement of doors and windows					Must move smoothly.
		Door, window locks					Must lock securely.
		Adjustment of operator's seat					Must be possible to make all adjustments.
Undercarriage		Oil leakage (Idler, roller, sprocket, final drive gear case, motor, brake valve)					There must be none.
		Interference at any part					There must be none.
		Looseness of track shoe bolt					There must be none.
		Contact of link tread					There must be no overlapping, separation, or missing or broken parts.
Around chassis		Oil leakage (Center swivel, pump, solenoid valve, relief valve, control valve, PPC valve, swing motor, brake valve, shuttle valve, swing machinery, hydraulic tank, piping)					There must be none.
		Leakage of fuel [Fuel tank, engine, piping]					There must be none.
		Leakage of water from engine cooling water system					There must be none.
		Leakage of oil from engine lubrication system					There must be none.
		Leakage of gas from engine gas system					There must be none.
		Movement of covers					Must move smoothly.
		Cover locks					Must lock securely.

https://truckmanualshub.com/

Category	Revision	Check item	Local assembly time		After hours of operation		Judgement standard
Around chassis		Operation of grease pump					Must work smoothly.
		Looseness, insufficient insertion of electric wiring terminals					There must be none.
		Position for passing electrical wiring throuth					There must be a clearance of at least 10 mm from any moving part or edge.
		Leakage of air from air system					There must be none.
		IInterference at any part					There must be none.
Around work equipment		Oil leakage [Cylinder, piping, block]					There must be none.
		Grease leakage from grease piping					There must be none.
		Interference of work equipment					There must be none.
		Looseness of work equipment piping clamps, play in piping					There must be none.
		Twisting of hydraulic hoses and operation of work equipment when turning over					There must be none.

https://truckmanualshub.com/

Note: If the operation or function is defective, measure as necessary. All judgement standard values for speeds are the values in P mode.

Category	Revision	Check item	Local assembly time	After hours of operation	Judgement standard
Main measurement items		**1. Engine speed**			
		Low idling speed [rpm]			825 ± 25 rpm
		High idling speed (When lever is operated a little) [rpm]			1980 ± 50 rpm (In P mode)
		High idling (When lever is not operated)			1880 rpm (In P mode)
		Speed at boom raise relief (Heavy lift: OFF) [rpm]			Min. 1700 rpm } at P mode
		Speed at boom raise relief (Heavy lift: ON) [rpm]			Min. 1700 rpm } at P mode
		2. Rediator fan speed [55] for service mode Confirmed (on fan rotation 100 % fixed mode)			
		Speed at engine rated speed [rpm]			1050 ± 50 rpm (Engine full, Oil temp. 50°C)
		3. Oil pressure measurement Confirmed on the monitoring mode [01100] for F pump and [01101] for R pump			
		Control valve main set pressure F pump [MPa {kg/cm²}]			31.4 $^{+1.0}_{-1.5}$ MPa {320 $^{+10}_{-15}$ kg/cm²} } At engine high idle, boom raise, P mode and Heavy lift OFF, relief
		Control valve main set pressure R pump [MPa {kg/cm²}]			31.4 $^{+1.0}_{-1.5}$ MPa {320 $^{+10}_{-15}$ kg/cm²} } At engine high idle, boom raise, P mode and Heavy lift OFF, relief
		Control valve main set pressure (increase) F pump [MPa {kg/cm²}]			31.4 $^{+1.0}_{-1.5}$ MPa {320 $^{+10}_{-15}$ kg/cm²} } At engine high idle, boom raise, P mode and Heavy lift OFF, relief
		Control valve main set pressure (increase) R pump [MPa {kg/cm²}]			31.4 $^{+1.0}_{-1.5}$ MPa {320 $^{+10}_{-15}$ kg/cm²} } At engine high idle, boom raise, P mode and Heavy lift OFF, relief
		Swing relief set pressure [MPa {kg/cm²}]			27.9 $^{+2.5}_{-0.5}$ MPa {285 $^{+25}_{-5}$ kg/cm²} } At engine high idle, swing and P mode, relief
		Self pressure reducing valve output pressure [MPa {kg/cm²}]			3.33 $^{+0.49}_{0}$ MPa {34 $^{+5}_{0}$ kg/cm²} (At engine high idle, neutral)
		4. Current value measurement Confirmed on the monitoring mode [01300] for F pump and [01302] for R pump			
		At neutral / Boom RAISE			
		Pump EPC current value F pump [mA] [mA]			At neutral 250 ± 20 mA } Engine high idle
		Pump EPC current value R pump [mA] [mA]			Boom RAISE 540 ± 120 mA } Engine high idle
		Note: Measure the following J/S differential pressure only if the NC valve output pressure does not pass the test.			
		Confirmed on the monitoring mode [13802] for F pump and [13803] for R pump			
		At neutral / Boom RAISE			
		J/S differential pressure sensor voltage F pump [V] [V]			At neutral Min.3 V } Engine high idle
		J/S differential pressure sensor voltage R pump [V] [V]			Boom RAISE Min. 1.2 V } Engine high idle

https://truckmanualshub.com/

Category	Revision	Check item			Local assembly time	After hours of operation	Judgement standard
Main measurement items		**5. Hydrauric drift of work equipment** (bucket unloaded, hydraulic oil temperature 50 ± 5°C)					
		Bucket tooth tip		[mm]			Max. 900 mm/15 minutes
		Note: Measure the hydraulic drift of the following cylinders only if the hydraulic drift at the bucket tooth tip does not pass the test.					Rated load: PC800, 850: 5,000 kg; PC800SE, 850SE: 6,500 kg; Oil temperature: 45 – 55°C
		Boom cylinder		[mm]			Max. 60(35) mm/15 minutes
		Arm cylinder		[mm]			Max. 165(70) mm/15 minutes
		Bucket cylinder		[mm]			Max. 50(15) mm/15 minutes
							( ): Work equipment: no load
		6. Operation force, travel					
		Boom lever	Operating force	[RAISE N {kg}] [LOWER N {kg}]			15.7 ± 4.9 N {1.6 ± 0.5 kg}
			Stroke	RAISE [mm] LOWER [mm] PLAY [mm]			Stroke: 85 ± 10 mm; Play: Max. 10 mm
		Swing lever	Operating force	[RIGHT N {kg}] [LEFT N {kg}]			12.8 ± 3.9 N {1.3 ± 0.4 kg}
			Stroke	RIGHT [mm] LEFT [mm] PLAY [mm]			Stroke: 85 ± 10 mm; Play: Max. 10 mm
		Bucket lever	Operating force	[CURL N {kg}] [DUMP N {kg}]			12.8 ± 3.9 N {1.3 ± 0.4 kg}
			Stroke	CURL [mm] DUMP [mm] PLAY [mm]			Stroke: 85 ± 10 mm; Play: Max. 10 mm
		Arm lever	Operating force	[IN N {kg}] [OUT N {kg}]			15.7 ± 4.9 N {1.6 ± 0.5 kg}
			Stroke	IN [mm] OUT [mm] PLAY [mm]			Stroke: 85 ± 10 mm; Play: Max. 10 mm
		Right travel lever	Operation force	[FOR-WARD N {kg}] [RE-VERSE N {kg}]			24.5 ± 5.9 N {2.5 ± 0.6 kg}
			Stroke	FORWARD [mm] REVERSE [mm] PLAY [mm]			Stroke: 115 ± 15 mm; Play: Max. 10 mm
		Left travel lever	Operation force	[FOR-WARD N {kg}] [RE-VERSE N {kg}]			24.5 ± 5.9 N {2.5 ± 0.6 kg}
			Stroke	FORWARD [mm] REVERSE [mm] PLAY [mm]			Stroke: 115 ± 15 mm; Play: Max. 10 mm

At engine high idle, relief

https://truckmanualshub.com/

KOMATSU

Report No. _____

FIELD ASSEMBLY INSPECTION REPORT

After completion of assembling a machine, make inspections according to these check sheets for assuring machine performance and quality.

Model - Type	Machine Serial No.	User Unit No.	Engine Model	Engine Serial No.
PC800-8 **Loading Shovel spec.**			**SAA6D140E-5**	

Service Meter Reading	Date of Inspection

Location of Machine at Inspection

Distributor's Name

	Attachment 1	Attachment 2
Manufacturer		
Model		
Serial No.		

Customer's Name	Address:	Signature:	Delivery Report No. attached
		Date:	

Inspector's Comments:

Inspector's Name:	KOMATSU USE ONLY :
Title	C. Sheet Receiving Date :
Signature:	By :
	Remark:

Check sheets filling instructions:

1. Use following indexes for entry of judgement

☑ ..... Normal
☒ ..... Abnormal
⊠ ..... Correction made on abnormal point
⧄ ..... Not applied

2. Enter actually measured values in parenthese, [ ].

Notes:

(1) Criteria are based on the standards when the machine is shipped out of the factory.

(2) **This FIELD ASSEMBLY INSPECTION REPORT is for "A" specification.**

SUBMITTANCE OF THIS REPORT (AND CHECK SHEETS) TO KOMATSU IS ONE OF THE CONDITIONS OF WARRANTY VALIDATION, COPY FOR KOMATSU SHALL BE FORWARDED TO THE KOMATSU REGIONAL OFFICE TOGETHER WITH THE COPY OF DELIVERY SERVICE REPORT.

https://truckmanualshub.com/

Category	Revision	Check item				Local assembly time		After hours of operation		Judgement standard
Checks before assembly		Oil and water levels			Actual measurement					
		Cooling water		Soft water	[ ]					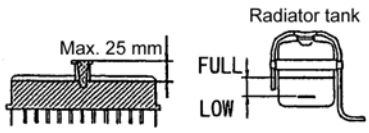 Between Full and Low level
		Anti-freeze (A, B, C, D, E)		Density of anti-freeze	[ ]					A:−50 – −40°C D: −20 – −10°C B:−40 – −30°C E: −10 – 0°C C:−30 – −20°C (Not necessary in summer)
		Engine oil		EO15-40CD	[ ]					$L–H^{+5mm}$ (10 minutes after stopping engine)
		PTO oil		EO30-CD	[ ]					$L^{+5}–H$ (10 minutes after stopping engine)
		Swing machinery gear case oil		EO30-CD	[ ]					$L^{+5}–H^{+10}$ (10 minutes after stopping engine)
		Final drive gear case oil	Right	EO30-CD	[ ]					Bottom edge of level plug: 0 to −10 mm
			Left	EO30-CD	[ ]					
		Hydraulic oil		EO10W	[ ]					Between the H and L marks.
		Battery electrolyte		–	[ ]					Within 13 mm from bottom surface of filler port
		Engine No. [ ]								
		Service meter	When accepted [ ]		After check [ ]					
Checks during assembly										
		Loose, untightened lock bolts for connecting pins								There must be none.
		Loose, untightened split flange bolts for work equipment piping								There must be none.
		Forgotten, missing, catching O-rings for work equipment piping								There must be none.
		Loose, twisted connections for grease piping								There must be none.
		Shim adjustment for work equipment pins								Max. 1 mm (for locations, see assembly procedure manual)
		Improperly inserted wiring, unconnected wiring								There must be none.
		Loose, untightened ladder mounting bolts								There must be none.

https://truckmanualshub.com/

Category	Revision	Check item	Local assembly time		After hours of operation		Judgement standard
Checks during assembly		Loose, untightened counterweight bolts					There must be none.
		Stepped clearance between counterweight and frame					Max. 15 mm
		Loose, untightened operator's cab mounting bolts					There must be none.
		Loose, untightened operator's seat mounting bolts					There must be none.
		Loose, untightened mounting bolts and joints for travel					There must be none.
		Forgotten, missing, catching O-rings for travel					There must be none.
		Loose, untightened track frame mounting bolts					There must be none.
		Loose, untightened bolts for travel motor cover					There must be none.
		Are there any other parts not yet installed (rear view mirror, etc.)?					There must be none.
		Bleed air from pump					Follow instructions in assembly procedure manual.
		Bleed air from travel motor					Follow instructions in assembly procedure manual.
		Flush hydraulic circuit					Follow instructions in assembly procedure manual.
		Bleed air from work equipment cylinder circuit					Follow instructions in assembly procedure manual.
		Grease all parts of work equipment					All locations must be greased.
		Add hydraulic oil					Add to between L and H marks at inspection posture
		Add fuel, washer fluid					Fill tank.
		Dirty oil on paintwork, damage to paintwork at any part					Clean, repair damaged paintwork

https://truckmanualshub.com/

Category	Revision	Check item	Local assembly time	After hours of operation	Judgement standard
Check monitor		Monitor display 1. Check of monitor function When the starting switch is turned ON, the gauges, CHECK items, and all display items on the monitor should light up. At the same the alarm buzzer should sound.			Display should be as on left.
		2. Check of gauges and CHECK items When starting switch is turned to ON (all lamps on), all display lamps should go out after approx. 3 sec. For another 2 seconds, only the gauges are displayed, and the CHECK and monitor items disappear.			
		3. Check of monitor items After starting the engine, the caution lamps should not light up and the alarm buzzer should not sound when the engine speed is low idling – high idling.			
		Operation of service meter			There should be no scratches or misting of the lens or variation in operation.

MONITOR

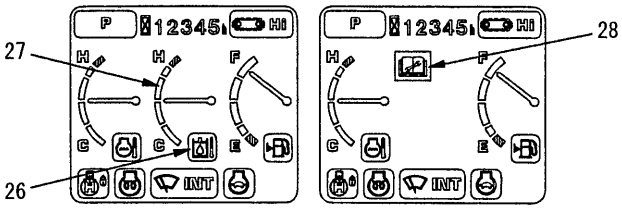

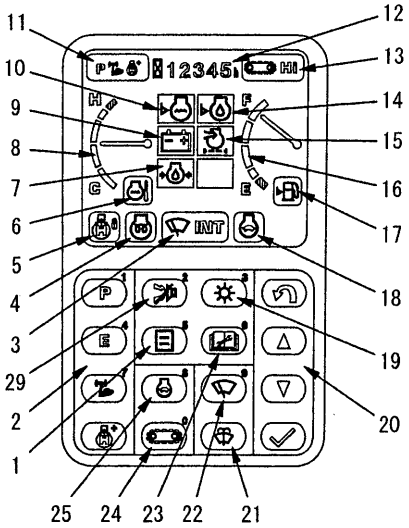

1. User mode adjustment switch
2. Working mode select switch
3. Wiper monitor
4. Preheating monitor
5. Swing lock monitor
6. Coolant temperature monitor
7. Engine oil pressure monitor
8. Coolant temprature gauge
9. Battery charge monitor
10. Coolant level monitor
11. Working mode monitor
12. Service meter
13. Travel speed monitor
14. Engine oil level monitor
15. Air cleaner clogging monitor
16. Fuel gauge
17. Fuel level monitor
18. Auto-deceleration monitor
19. Screen adjust switch
20. Input control switch
21. Window washer switch
22. Wiper switch
23. Maintenance switch
24. Travel speed selector switch
25. Auto-deceleration switch
26. Hydraulic oil temperature monitor
27. Hydraulic oil temperature gauge
28. Maintenance interval monitor
29. Alarm buzzer stop switch

https://truckmanualshub.com/

Category	Revision	Check item	Local assembly time	After hours of operation	Judgement standard
Check of switches, control levers		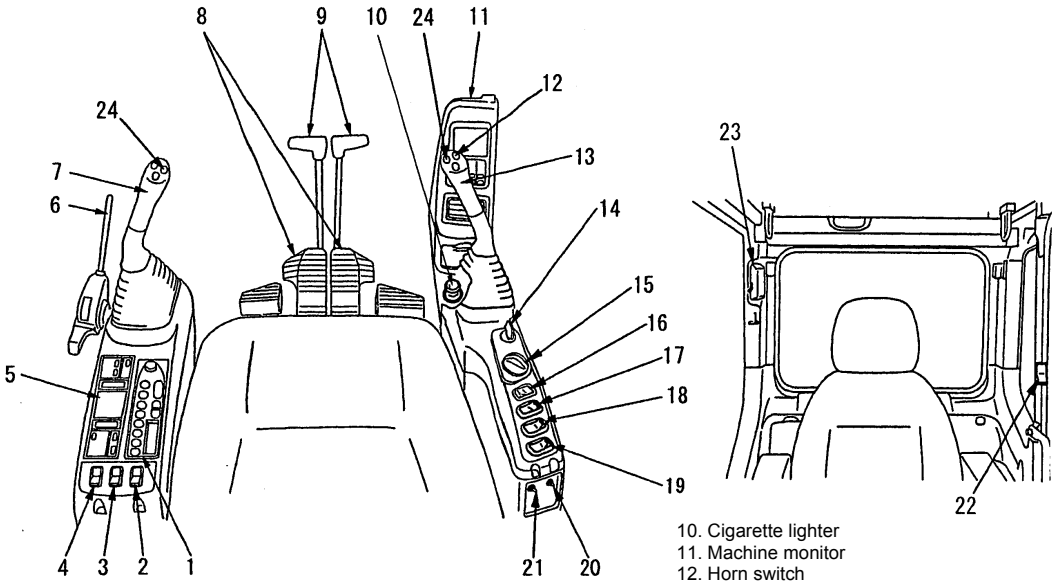 1. Car radio 2. Lower wiper switch (fixed front window cab specs, if equipped) 3. Revolving warning lamp switch (if equipped) 4. Large capacity air conditioner blower switch (if equipped) 5. Air conditioner control switch 6. Lock lever 7. LH work equipment control lever 8. Travel pedal 9. Travel lever 10. Cigarette lighter 11. Machine monitor 12. Horn switch 13. RH work equipment control lever 14. Starting switch 15. Fuel control dial 16. Lamp switch 17. Swing lock switch 18. Machine push-up switch 19. Boom shockless control switch 20. Swing holding brake release switch 21. Emergency pump drive switch 22. Step light switch 23. Room lamp switch 24. Bottom dump switch			
		Operation of horn switch			Press the switch on the right footrest to sound the horn. At the same time, the flashing light (if equipped) at the bottom front of the cab will flash for approx. 5 seconds.
		Operation of lock lever			Push down the lever to apply the lock. Engine can be started but all work equipment control levers do not move Push up the lever to release the lock. Engine cannot be started but all work equipment levers move.
		Operation of fuel control dial			MAX: Full speed Min: Low idle
		Operation of preheating pilot			Rotate the key at the preheating position so that the monitor display shows "preheating ON". The preheating pilot will flash after approx. 30 seconds to indicate the completion of preheating.

https://truckmanualshub.com/

Category	Revision	Check item	Local assembly time	After hours of operation	Judgement standard
Check of switches, control levers		Operation of working mode selector switch			P lights up: Heavy-duty operations E lights up: Fuel-efficient operations Monitor display changes in synchronous with the switch operation. Engine switches to or from the full operation
		Operation of auto-deceleration switch			ON lights up: Auto-deceleration is actuated. OFF: Auto-deceleration is cancelled. Each time the switch is pressed, the monitor display changes so that ON or OFF state can be selected.
		Operation of travel speed switch			Lo lights up: Low speed travel High lights up: High speed travel Monitor display changes in synchronous with the switch operation. When the engine is started, the travel speed is automatically set to Lo.
		Operation of heavy lift switch			ON lights up: Boom lifting force is increased. OFF: Normal Each time the switch is pressed, the monitor display changes so that ON or OFF state can be selected.
		Operation of swing priority mode switch			ON lights up: Able to swing 180° while loading OFF: Normal work (able to swing 90° while loading) Each time the switch is pressed, the monitor display changes so that ON or OFF state can be selected.
		Operation of wiper switch			ON: lights up: Wiper moves continuously INT: lights up: Wiper moves intermittently OFF: Wiper stops Each time the switch is pressed, the monitor display changes so that any state can be selected.
		Operation of window washer switch			Window washer fluid is sprayed out to the front glass (in combination with wiper) when the switch is pressed continuously.
		Operation of cigarette lighter			This is used to light cigarettes. To use, push the lighter in. After a few seconds it will spring back, and glow.
		Operation of lamp switch			This switch is used to turn on the front lamps, working lamps, additional lamp at the top front of the cab, and monitor lighting.
		Operation of swing lock switch			ON position (actuated): The swing lock is always applied, and the upper structure will not swing even if the swing is operated. In this condition, the swing lock monitor lights up. OFF position (cancelled): Swing operation is possible. In this condition, the swing lock monitor goes off.
		Operation of machine push-up switch			Low pressure setting: The boom thrust force is weak. High pressure setting: The boom thrust force becomes more powerful.
		Operation of boom shockless control switch (if equipped)			ON: While the boom stop operation, shock of the work equipment is controlled.
		Operation of step light switch (if equipped)			• When the switch is pressed, the step light will light up for approx. 60 seconds. • Even if the starting switch key is at the OFF position, the step light will light up for approx. 60 seconds when the switch is pressed.

https://truckmanualshub.com/

Category	Revision	Check item	Local assembly time	After hours of operation	Judgement standard
Check of switches, control levers		Operation of room lamp switch			ON position: Room lamp lights up OFF position: Room lamp lights off Even if the starting switch key is at the OFF position, the room lamp will light up when the switch is pressed.
		Operation of emergency pump drive switch When the monitor display shows E02 (TVC valve system error), move the switch "up" to make it possible to carry out work			When normal: Switch is pushed down: When switch is pushed up, alarm buzzer sounds.
		Operation of swing holding brake release switch When the monitor display shows E03 (Swing brake system error), move the switch "up" to cancel the brake, and it becomes possible to actuate the swing. However, the swing brake remains released.			When normal: Switch is pushed down When switch is pushed up, alarm buzzer sounds, and swing lock symbol flashes
		Operation of alarm buzzer stop switch			This is used to stop alarm buzzer if it sounds to warn of an abnormality of warning item during engine operation.
		Operation of lower wiper switch (if equipped)			ON: Lower wiper moves. OFF: Lower wiper stops.
		Operation of travel levers			FORWARD: The lever is pushed forward. (The pedal is angled forward) REVERSE: The lever is pulled back. (The pedal is angled back) N (Neutral): The machine stops
		Operation of LH work equipment control lever (with auto-deceleration device)			This lever is used to operate the arm and upper structure. Arm operation: (a) Arm OUT, (b) Arm IN Swing operation: (c) Swing to right, (d) Swing to left 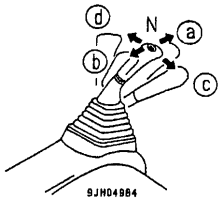 N (Neutral): When the lever in this position, the upper structure and the arm will be retained in the position in which they stop.
		Operation of RH work equipment control lever (with auto-deceleration device)			This lever is used to operate the boom and bucket. Boom operation: (a) RAISE, (b) LOWER Bucket operation: (c) DUMP, (d) CURL 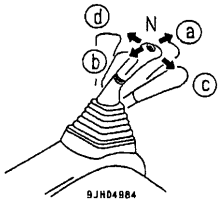 N (Neutral): When the lever in this position, the upper structure and the arm will be retained in the position in which they stop.
		Confirmation of failure history (Both electrical and mechanical)			Delete the failure history after confirming that no abnormality sign is displayed. Confirm that no failure history is provided after completion of the test.
		The operation of bottom dump switch			Right: Bottom opened Left: Bottom closed

https://truckmanualshub.com/

Category	Revision	Check item	Local assembly time	After hours of operation	Judgement standard
Swing performance		Swing operation running in: Engine high idle speed, P mode (Work equipment posture: Max. reach) 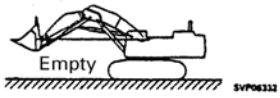			
		Constant swing speed [Right rpm] [Left rpm]			6.8 ± 0.4 rpm
		Brake angle			Max. 70° (Feeling)
		Swing variation, hunting			There must be none.
		Abnormal noise, irregular swing			There must be none.
Travel performance		Travel operation running in: Engine high idle speed. (Work equipment posture: Travel posture) 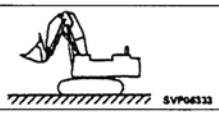			
		Abnormal noise, heat from carrier roller, track roller, idler			There must be no abnormal noise or abnormal heat.
		Operation of travel brake			Must brake securely without pulling to one side.
		Abnormal noise, irregular travel			There must be none.
		Travel deviation (feeling)			There must be no abnormal deviation from fine control range to full stroke range (feeling).
		Travel deviation (measured) (Only when it is considered that there is abnormality.) — High speed [Forward mm/20m] [Reverse mm/20m]			Max. 200 mm/20m
		Low speed [Forward mm/20m] [Reverse mm/20m]			Max. 200 mm/20m
		Track rotating speed — High speed – Right [Forward sec] [Reverse sec]			53.6 ± 5.4 sec/5 turns Difference between left and right:
		High speed – Left [Forward sec] [Reverse sec]			
		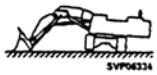 Low speed – Right [Forward sec] [Reverse sec]			85 ± 8.5 sec/5 turns Difference between left and right: 1.2 sec.
		Low speed – Left [Forward sec] [Reverse sec]			
					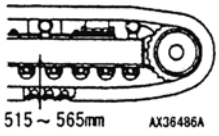
		Track tension [Right mm] [Left mm]			

https://truckmanualshub.com/

Category	Revision	Check item	Local assembly time	After hours of operation	Judgement standard
Work equipment performance		Work equipment operation running in: Engine midrange speed, all cylinders full stroke 3 times (Note: Boom cylinder to ground level) Pressurized; each port relief 2 minutes, shock 20 times (except BOOM LOWER). Work equipment posture 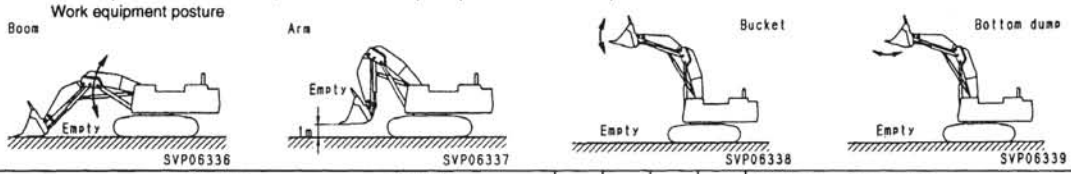 			
		Work equipment speed — Boom: RAISE sec [ ] LOWER sec [ ]			RAISE: 5.7 ± 0.6 sec. LOWER: 5.0 ± 0.5 sec.
		Arm (arc): OUT sec [ ] IN sec [ ]			IN: 4.3 ± 0.4 sec. OUT: 2.5 ± 0.3 sec.
		Bucket: CURL sec [ ] DUMP sec [ ]			CURL: 4.3 ± 0.4 sec. DUMP: 4.0 ± 0.4 sec.
		Bottom dump: OPEN sec [ ] CLOSE sec [ ]			OPEN: 1.6 ± 0.3 sec. CLOSE: 1.7 ± 0.3 sec.
		Work equipment time lag (Engine low idling) — Boom: LOWER sec [ ] Only when there is considered to be abnormality.			Max. 3 sec.
		Arm: IN sec [ ] Only when there is considered to be abnormality.			Max. 3 sec.
		Bucket: DUMP sec [ ] Only when there is considered to be abnormality.			Max. 3 sec.
		Bottom dump: CLOSE sec [ ] Only when there is considered to be abnormality.			Max. 3 sec.
		Abnormal noise from pump, PTO			There must be no abnormality during operation under no load and during relief.
		Generation of heat by PTO			There must be no abnormal generation of heat.
		Engine partial performance			There must be no hunting at any speed under no load, there must be no stalling of engine even at low idling and relief.
		Fine control performance			Must operate smoothly.
		Operation when raising chassis (Including machine push-up function)			There must be no escape of boom, arm, or bucket ON: Machine is lifted up. OFF: Machine is not lifted up.
		Abnormal noise, grating noise from work equipment			There must be none.
		Shock at end of cylinder stroke (Shock at end of stroke for BOOM RAISE and ARM IN)			Cushion must be fully effective.
		Function of accumulator			Immediately after engine is stopped, boom cylinder must move from fully extended position to ground level. (Arm at max. reach)

https://truckmanualshub.com/

Category	Revision	Check item	Local assembly time		After hours of operation		Judgement standard
During operation		Check all parts					
		Operating force of control lever when each actuator is actuated.					• There must be no catching during operation. • Must return naturally to neutral.
		Feeling and noise of vibration in operator's cab					There must be none.
		Vibration noise from frame, guard, ladder					There must be none.
Around operator's cab		Movement of doors and windows					Must move smoothly.
		Door, window locks					Must lock securely.
		Adjustment of operator's seat					Must be possible to make all adjustments.
Undercarriage		Oil leakage (Idler, roller, sprocket, final drive gear case, motor, brake valve)					There must be none.
		Interference at any part					There must be none.
		Looseness of track shoe bolt					There must be none.
		Contact of link tread					There must be no overlapping, separation, or missing or broken parts.
Around chassis		Oil leakage (Center swivel, pump, solenoid valve, relief valve, control valve, PPC valve, swing motor, brake valve, shuttle valve, swing machinery, hydraulic tank, piping)					There must be none.
		Leakage of fuel [Fuel tank, engine, piping]					There must be none.
		Leakage of water from engine cooling water system					There must be none.
		Leakage of oil from engine lubrication system					There must be none.
		Leakage of gas from engine gas system					There must be none.
		Movement of covers					Must move smoothly.
		Cover locks					Must lock securely.

https://truckmanualshub.com/

Category	Revision	Check item	Local assembly time		After hours of operation		Judgement standard
Around chassis		Operation of grease pump					Must work smoothly.
		Looseness, insufficient insertion of electric wiring terminals					There must be none.
		Position for passing electrical wiring throuth					There must be a clearance of at least 10 mm from any moving part or edge.
		Leakage of air from air system					There must be none.
		IInterference at any part					There must be none.
Around work equipment		Oil leakage [Cylinder, piping, block, slow return]					There must be none.
		Grease leakage from grease piping					There must be none.
		Contact between bucket and arm stopper (CURL side)					One side in contact, clearance at other side within 5 mm.
		Contact between bucket and arm stopper (DUMP side)					One side in contact, clearance at other side within 5 mm.
		Contact between front bucket and rear bucket stopper					One side in contact, clearance at other side within 10 mm.

https://truckmanualshub.com/

Note: If the operation or function is defective, measure as necessary. All judgement standard values for speeds are the values in A mode.

Category	Revision	Check item	Local assembly time		After hours of operation		Judgement standard
Main measurement items		**1. Engine speed**					
		Low idling speed [rpm]					825 ± 50 rpm
		High idling speed [rpm]					1980 ± 50 rpm * Min. 1880 rpm **
		Speed at boom raise relief (Heavy lift: OFF) [rpm]					Min. 1700 rpm } at P mode
		Speed at boom raise relief (Heavy lift: ON) [rpm]					Min. 1700 rpm } at P mode
		2. Radiator fan speed [55] for service mode Confirmed (on fan rotation 100 % fixed mode)					
		Speed at engine rated speed [rpm]					1050 ± 50 rpm (Engine full, Oil temp. 50°C)
		3. Oil pressure measurement Confirmed on the monitoring mode [01100] for F pump and [01101] for R pump					
		Control valve main set pressure F pump [MPa {kg/cm²}]					$31.4^{+1.0}_{-1.5}$ MPa {320^{+10}_{-15} kg/cm²} } At engine high idle, boom raise, P mode and Heavy lift OFF, relief
		Control valve main set pressure R pump [MPa {kg/cm²}]					$31.4^{+1.0}_{-1.5}$ MPa {320^{+10}_{-15} kg/cm²} } At engine high idle, boom raise, P mode and Heavy lift OFF, relief
		Control valve main set pressure (increase) F pump [MPa {kg/cm²}]					$31.4^{+1.0}_{-1.5}$ MPa {320^{+10}_{-15} kg/cm²} } At engine high idle, boom raise, P mode and Heavy lift OFF, relief
		Control valve main set pressure (increase) R pump [MPa {kg/cm²}]					$31.4^{+1.0}_{-1.5}$ MPa {320^{+10}_{-15} kg/cm²} } At engine high idle, boom raise, P mode and Heavy lift OFF, relief
		Swing relief set pressure [MPa {kg/cm²}]					$27.9^{+2.5}_{-0.5}$ {285^{+25}_{-5} kg/cm²} } At engine high idle, swing and P mode, relief
		Self pressure reducing valve output pressure [MPa {kg/cm²}]					$3.33^{+0.49}_{0}$ MPa {34^{+5}_{0} kg/cm²} (At engine high idle, neutral)
		4. Current value measurement Confirmed on the monitoring mode [01300] for F pump and [01302] for R pump					
		At neutral / Boom RAISE					
		Pump EPC current value F pump [mA] [mA]					At neutral 250 ± 20 mA } Engine high idle
		Pump EPC current value R pump [mA] [mA]					Boom RAISE 540 ± 120 mA } Engine high idle
		Note: Measure the following J/S differential pressure only if the NC valve output pressure does not pass the test.					
		Confirmed on the monitoring mode [13802] for F pump and [13803] for R pump					
		At neutral / Boom RAISE					
		J/S differential pressure sensor voltage F pump [V] [V]					At neutral Min.3 V } Engine high idle
		J/S differential pressure sensor voltage R pump [V] [V]					Boom RAISE Min. 1.2 V } Engine high idle

* (When lever is operated a little and working mode is P)
** (When auto-decelerator is turned off and lever is at OFF)

https://truckmanualshub.com/

Category	Revision	Check item			Local assembly time		After hours of operation		Judgement standard	
Main measurement items		**5. Hydrauric drift of work equipment** (bucket unloaded, 50 ± 5˚C)								
		Bucket tooth tip		[mm]					Max. 350 mm/15 minutes	
		Note: Measure the hydraulic drift of the following cylinders only if the hydraulic drift at the bucket tooth tip does not pass the test.								
		Boom cylinder		[mm]					Max. 7 mm/minutes	
		Arm cylinder		[mm]					Max. 7 mm/minutes	
		Bucket cylinder		[mm]					Max. 7 mm/minutes	
		6. Operation force, travel								
		Boom lever	Operating force	[RAISE N {kg}] [LOWER N {kg}]					15. 7 ± 2.9 N {1.6 ± 0.3 kg}	At engine high idle, relief
			Stroke	RAISE [mm] LOWER [mm] PLAY [mm]					Stroke: 85 ± 10 mm Play: Max. 10 mm	
		Swing lever	Operating force	[RIGHT N {kg}] [LEFT N {kg}]					12.8 ± 3.9 N {1.3 ± 0.4 kg}	
			Stroke	RIGHT [mm] LEFT [mm] PLAY [mm]					Stroke: 85 ± 10 mm Play: Max. 10 mm	
		Bucket lever	Operating force	[CURL N {kg}] [DUMP N {kg}]					12.8 ± 3.9 N {1.3 ± 0.4 kg}	
			Stroke	CURL [mm] DUMP [mm] PLAY [mm]					Stroke: 85 ± 10 mm Play: Max. 10 mm	
		Arm lever	Operating force	[IN N {kg}] [OUT N {kg}]					15.7 ± 4.9 N {1.6 ± 0.5 kg}	
			Stroke	IN [mm] OUT [mm] PLAY [mm]					Stroke: 85 ± 10 mm Play: Max. 10 mm	
		Right travel lever	Operation force	[FOR-WARD N {kg}] [RE-VERSE N {kg}]					24.5 ± 5.9 N {2.5 ± 0.6 kg}	
			Stroke	FORWARD [mm] REVERSE [mm] PLAY [mm]					Stroke: 115 ± 15 mm Play: Max. 10 mm	
		Left travel lever	Operation force	[FOR-WARD N {kg}] [RE-VERSE N {kg}]					24.5 ± 5.9 N {2.5 ± 0.6 kg}	
			Stroke	FORWARD [mm] REVERSE [mm] PLAY [mm]					Stroke: 115 ± 15 mm Play: Max. 10 mm	
		Measure the travel of the lever at the center of the lever tip								