https://truckmanualshub.com/

EEPB000800

PARTS BOOK

PC05-6F

HYDRAULIC EXCAVATOR

SERIAL NUMBERS **PC05-6F** - **F10001** AND UP

KOMATSU

https://truckmanualshub.com/

FOREWORD

When ordering a part, please specify the model number, the engine serial number and the reading of the service meter.

For complete understanding, the parts list is written as follows:

Fig. number	Figure numbers are not continuous.
Description	"•" is put in front of the name of an assembly component and the item is entered next to the assembly. If a part marked with "•" is an assembly, its component is marked with "••".
Quantity	The number of pieces per set used for assembly is specified. For assembly or part group components, the number of pieces per assembly is specified.
Serial number	The engine or machine serial number in which the part is used.
Codes	The codes and part numbers specified in the "Part No." and "Part Name" columns represent the following:

□	The part specified in the line above is applicable instead of this part.
⊡	This part is applicable instead of the part specified in the line immediately above.
◆	This part and the part specified in the line immediately above are interchangeable.
⊠	This part is not supplied anymore. The part specified in the above line is supplied instead.
■	The part specified in the "Part Name" column is applicable instead of this part if it is used as a set.
▽	This part is not supplied anymore. The part specified in the "Part Name" column is supplied instead as a set.
▲	Part supplied as semi-finished. It must be reworked before use.

Codes

☆	Supplied as a set rather than singly.
★	Supplied as a set rather than singly. It is supplied singly by specific dealers only.
⦿	Part group. This part is not considered a supply part.
====	The parts surrounded by this line are components of the part group specified above.
G-1, G-2	Part group numbers.
KIT	Kit components. For kit components, please refer to the service kit table.

This parts list specifies not only standard accessories but also optional parts and attachments.
To order a part, please contact your nearest Komatsu dealer.

https://truckmanualshub.com/

AVANT-PROPOS

Lorsque vous passez une commande pour une pièce détachée, vous êtes prié de spécifier le numéro du modèle, le numéro de série du moteur et la lecture du compteur de service.

Pour une complète compréhension, la liste des pièces est écrite comme suit:

Numéro de Fig.	Les numéros des figures ne sont pas corrélatifs.
Description	"•" est placé avant le nom de la composante d'assemblage et l'élément est entré à côté de l'assemblage. Si la pièce marquée d'un "•" est un assemblage, ses composantes sont marquées d'un "••".
Quantité	Le nombre de pièces par jeu utilisé pour l'assemblage est spécifié. Pour l'assemblage ou groupe de pièces composantes, le nombre de pièces par assemblage est spécifié.
Numéro de série	Le numéro de série du moteur ou machine dans lequel la pièce est utilisée.
Codifications	Les codifications et numéros de pièce spécifiés dans les colonnes "No. de Pièce" et "Nom de Pièce" représentent le suivant:

❑	La pièce spécifiée dans la ligne ci-dessus est applicable au lieu de cette pièce.
▣	Cette pièce est applicable au lieu de la pièce spécifiée dans la ligne immédiatement au-dessus.
◆	Cette pièce et la pièce spécifiée dans la ligne immédiatement au-dessus sont interchangeables.
⊠	Cette pièce n'est plus fournie. A sa place, la pièce spécifiée dans la ligne ci-dessus est fournie.
■	La pièce spécifiée dans la colonne "Nom de Pièce" est applicable à la place de cette pièce lorque la pièce est utilisée comme un jeu.
▽	Cette pièce n'est plus fournie. La pièce spécifiée dans la colonne "Nom de Pièce" est fournie à sa place comme un jeu.
▲	Pièce fourni en semi-finition. Elle doit être usinée avant l'utilisation.

Codifications	
☆	Fourni comme un jeu plutôt qu'en unité.
★	Fourni comme un jeu plutôt qu'en unité. Est fourni en unité seulement par des fournisseurs spécifiés.
⦿	Groupe de pièces. Cette pièce n'est pas considérée comme une pièce de fourniture.
====	Les pièces entourées de cette ligne sont composantes du groupe de pièces spécifié ci-dessus.
G-1, G-2	Numéros de groupe de pièces.
KIT	Composants de trousse. Pour les composants de trousse, consultez la table des trousses de service.

Cette liste de pièces ne spécifie pas seulement les accessoires standard, mais aussi les pièces et accessoires en option.
Pour passer une commande de pièce, vous êtes prié de prendre contact avec votre fournisseur Komatsu le plus proche.

https://truckmanualshub.com/

VORWORT

Bei der Bestellung von Teilen bitte die Modellnummer, die Seriennummer des Motors und den Stand des Betriebsstundenzählers angeben.

Um Fehler bei der Bestellung zu vermeiden, die folgenden Hinweise beachten:

Bild Nr.	Die Bilder sind nicht fortlaufend numeriert.
Beschreibung	Jedes Bauteil ist mit "•" gekennzeichnet und hinter der entsprechenden Baugruppe aufgeführt. Ist die Baugruppe selbst mit "•" gekennzeichnet, sind die entsprechenden Bauteile mit "••" gekennzeichnet.
Menge	Die Anzahl der Teile für einen Satz ist vorgegeben. Bei Baugruppen und Aggregaten ist die Anzahl der Teile für eine Baugruppe angegeben.
Serien-Nr.	Die Serien-Nr. von Motor oder Maschine, in die das entsprechende Teil eingebaut wird.
Zeichen	Die in den Spalten "Teile-Nr." und "Teile-Bezeichnung" verwendeten Zeichen haben folgende Bedeutung:

□	Dieses Teil kann anstelle des oben aufgeführten Teils verwendet werden.
⊡	Dieses Teil kann anstelle des in der vorangegangenen Zeile aufgeführten Teils verwendet werden.
◆	Dieses Teil ist mit dem in der vorangegangenen Zeile aufgeführten Teil austauschbar.
⊠	Dieses Teil kann nicht mehr geliefert werden. Es wird durch das obenaufgeführte Teil ersetzt.
■	Dieses Teil kann durch das in der Spalte "Teilebezeichnung" aufgeführte Teil ersetzt werden, wenn das Teil zusammen mit anderen Teilen als Einheit verwendet wird.
▽	Dieses Teil kann nicht mehr geliefert werden. Stattdessen wird die in Spalte "Teile-Bezeichnung" aufgeführte Einheit geliefert.
▲	Dieses Teil wird im vorbearbeiteten Zustand geliefert und muß vor dem Einbau nachbearbeitet werden.

Zeichen

☆	Dieses Teil wird nicht als Einzelteil, sondern nur als Bausatz geliefert.
★	Dieses Teil wird nicht als Einzelteil, sondern nur als Bausatz geliefert und kann nur über bestimmte Händler als Einzelteil bezogen werden.
⊙	Baugruppe; wird nicht zu den Ersatzteilen gerechnet.
====	Die Teile innerhalb dieser Markierung gehören zur oben aufgeführten Baugruppe.
G-1, G-2	Baugruppen-Nr.
KIT	Dieses Teil ist nur als Satz erhältlich. Siehe Auflistung der als Satz gelieferten Ersatzteile.

In dieser Ersatzteilliste ist das Standard und Sonderzubehör aufgeführt.
Bestellungen nimmt Ihr zustandiger Komatsu-Händler entgegen.

https://truckmanualshub.com/

PROLOGO

Cuando solicite una parte, sírvase especificar el número de modelo, el número de serie del motor y la lectura del serviciómetro.

Para un completo entendimiento, la lista de partes está redactada de la siguiente manera:.

Número de fig.	Los números de figura no son continuos.
Descripción	"•" se coloca enfrente del nombre de un componente de conjunto y el item es ingresado luego al conjunto. Si una parte marcada con "•" es un conjunto, su componente está marcado con "••".
Cantidad	Se especifica el número de piezas por juego utilizadas para un conjunto. Se especifica para un conjunto o componentes de grupo de parte, el número de piezas por conjunto.
Número de serie	El número de serie del motor o máquina en que se utiliza la parte.
Códigos	Los códigos y números de parte especificados en las columnas "No. de Parte" y "Nombre de Parte" representan lo siguiente:

□	La parte especificada en la linea anterior es aplicable en lugar de esta parte.
⊡	Esta parte es aplicable en lugar de la parte especificada en la línea inmediatamente anterior.
◆	Esta parte y la parte especificada en la línea inmediatamente anterior son intercambiables.
⊠	Esta parte se ha dejado de suministrar. En lugar de ésta, se suministra la parte especificada en la línea anterior.
■	La parte especificada en la columna "Nombre de Parte" es aplicable en lugar de esta parte si se utiliza como un conjunto.
▽	Esta parte se ha dejado de suministrar. En lugar de ésta, se suministra la parte especificada en la columna "Nombre de Parte" como un conjunto.
▲	Parte suministrada como semi-terminada. Tiene que ser modificada antes del uso.

Códigos

☆	Suministrado como un conjunto en lugar de individualmente.
★	Suministrado como un conjunto en lugar de individualmente. Es suministrado individualmente por distribuidores específicos solamente.
⊙	Grupo de parte. Esta parte no es considerada una parte de suministro.
= = = =	Las partes rodeadas por esta línea son componentes del grupo de partes especificado antes.
G-1, G-2	Números de grupo de partes.
KIT	Componentes de juego. Para componentes de juego, sírvase referirse al cuadro de juego de servicio.

Esta lista de partes especifica no solamente accesorios normales sino también partes y accesorios opcionales.
Para solicitar una parte, sírvase comunicarse con su distribuidor Komatsu más cercano.

https://truckmanualshub.com/

PREFÁCIO

Ao solicitar uma peça sobressalente, favor especificar o número do modelo, o número de série do motor e a leitura do medidor de serviço.

Para uma fácil compreensão, a lista de peças sobressalentes é indicada como segue:

Número do desenho	Os números dos desenhos nem sempre são contínuos.
Descrição	Todos os componentes e peças que compõe o conjunto levam o sinal "•" na frente do seu nome, e vêm descriminados em seguida ao nome do conjunto. Além disso, se o componente com o sinal "•" já fôr um conjunto, seus componentes vêm marcados com o sinal "••".
Quantidade	Está especificada a quantidade de componentes utitizados em um conjunto. Contudo, no caso de peças de montagem ou de grupo de peças, está especificada a quantidade de componentes por conjunto.
Número de série	Está especificado o número da série do motor ou da máquina no qual a peça sobressalente é usada.
Códigos	Os códigos e números de peças sobressalentes especificados na coluna do "No da Peça" e do "Nome de Peça" representa o seguinte:

□	Pode-se usar a peça especificada na linha acima, no lugar desta.
⊡	Esta peça pode ser usada no lugar da peça especificada na linha imediatamente acima.
◆	Esta peça e aquela especificada na linha imediatamente acima são intercambiáveis.
⊠	Esta peça não é mais fornecida. No lugar desta, é fornecida a peça especificada na linha imediatamente acima.
■	A peça especificada na coluna de "Nome de Paça" pode ser utilizada no lugar desta, se aquela for usada como conjunto.
▽	Esta peça não é mais fornecida. A peça especificada na coluna de "Nome da Peça" é fornecida no lugar desta, como conjunto.
▲	Esta peça é fornecida como semi-acabada. Necessita de um trabalho adicional antes de sua utilização.

Códigos

☆	Não é fornecida somente a peça, e sim em conjunto.
★	Não é fornecida somente a peça, e sim em conjunto. Porèm, pode ser fornecida somente a revendedores especiais.
⦿	Especifica o grupo de peças. Estas peças não são consideradas peças de suprimento.
====	As peças circundadas com esta linha são componentes do grupo de peças especificadas acima.
G-1, G-2	Número de grupo de peças.
KIT	Componentes de "kits". Para peças que compõe o "kit", favor consultar a tabela de "kit" de serviço.

Esta lista de peças sobressalentes especifica não apenas os acessórios padrões e sim também, as peças opcionais e os pertences.
Para solicitar uma peça sobressalente, favor entrar em contato com o seu revendedor Komatsu mais próximo.

https://truckmanualshub.com/

تقديم

عند طلب قطع الغيار، يرجى تحديد رقم الموديل، رقم التسلسل للمحرك وقراءة عداد الخدمة.

وللفهم الكامل فان قائمة قطع الغيار تكتب كالتالي :

رقم الشكل	ارقام الأشكال ليس من الضرورى ان تكون متسلسلة.
الوصف	توضع العلامة "." امام إسم الجزء من مجموعة وتدخل المادة بعد المجموعة. وإذا كانت قطعة الغيار ذات العلامة "." هي مجموعة أجزاء، فان مكوناتها يشار إليها بالعلامة "..".
الكمية	يحدد عدد القطع المستخدمة في التجميع بكل مجموعة. ومن أجل المجموعة او الأجزاء المكونة لمجموعات، فانه يحدد عدد القطع لكل مجموعة.
رقم التسلسل	رقم تسلسل المحرك او الماكينة التي تستعمل فيها القطعة.
رموز الدلالة	الرموز وارقام القطع المحددة في أعمدة "رقم القطعة" و"اسم القطعة" هي كما يلي :

□	القطعة المعينة في السطر السابق يمكن استخدامها بدلا من هذه القطعة.
⊡	هذه القطعة يمكن استخدامها بدلا من القطعة المعينة في السطر السابق مباشرة.
◆	هذه القطعة والقطعة المعينة في السطر السابق مباشرة هما قابلتان للتبادل.

رموز الدلالة	
⊠	هذه القطعة توقف تزويدها. ويتم تزويد القطعة المعينة في السطر السابق بدلا منها.
■	القطعة المعينة في عمود "اسم القطعة" يمكن استخدامها بدلا من هذه القطعة إذا استعملت كمجموعة.
▼	هذه القطعة توقف تزويدها. والقطعة المعينة في عمود "اسم القطعة" مستخدمة بدلا منها كمجموعة.
△	يتم تزويد القطعة شبه منتهية الصنع. ويجب إنهاء تصنيعها قبل الاستعمال.
☆	يتم تزويدها كمجموعة وليس إفراديا.
★	يتم تزويدها كمجموعة وليس إفراديا. يمكن تزويدها إفراديا بواسطة بائعين معينين فقط.
⊙	مجموعة قطع. هذه القطعة لا تعتبر قطعة في التزويد.
= = = =	القطع المحاطة بهذا الخط هي مكونات لمجموعة القطع المعينة سابقا.
G-1, G-2	ارقام مجموعات القطع.
KIT	أجزاء مكونة لطقم. لمكونات الطقم، يرجى الرجوع الى جدول طقم الخدمة.

هذه القائمة للقطع لا تحدد فقط الملحقات القياسية، بل أيضا القطع والمرفقات الاختيارية.
لطلب قطعة غيار، يرجى الاتصال بأقرب موزع لكوماتسو لديكم.

https://truckmanualshub.com/

PC05-6F Serial No. F10001 and up

ENGINE KC80462 Engine No. J30479T and up

CONTENTS

REFERENCE NUMBER TABLE

PC05-6F HYDRAULIC EXCAVATOR (KE) 20M-00-X6100 [Includes Tool and Spare Parts (fig. 9901, 9905)]
(TBG) 20M-00-X6200
(KAC) 20M-00-X6300

0. ENGINE

	FIG. NO.	PAGE
01. CYLINDER HEAD		
CYLINDER HEAD	0101	1- 2
ROCKER SHAFT	0111	1- 4
LUBRICATING OIL FILLER AND BREATHER	0115	1- 6
EXHAUST MANIFOLD	0120	1- 8
02. CYLINDER BLOCK		
CYLINDER BLOCK	0201	2- 2
TIMING GEAR AND CAMSHAFT	0207	2- 4
TIMING GEAR AND CAMSHAFT	0208	2- 6
LUBRICATING OIL SUMP	0212	2- 8
FLYWHEEL AND STARTER RING	0221	2-10
CRANKSHAFT	0231	2-12
CONROD AND PISTON	0237	2-14
FRONT END DRIVE INPUT	0238	2-16
GEAR DRIVE AUXILIARY DRIVE OPTIONS	0239	2-18
03. LUBRICATING OIL SYSTEM		
LUBRICATING OIL PUMP	0301	3- 2
LUBRICATING OIL FILTER AND INTEGRAL OIL COOLER	0310	3- 4
04. FUEL SYSTEM		
FUEL INJECTION EQUIPMENT (DIESEL)	0402	4- 2
ATOMISER	0425	4- 4
LOW PRESSURE FUEL SYSTEM	0429	4- 6
LOW PRESSURE FUEL SYSTEM	0433	4- 8
FUEL INJECTION EQUIPMENT (DIESEL)	0451	4-10
05. COOLING SYSTEM		
WATER PUMP, THERMOSTAT AND HEAT EXCHANGER	0503	5- 2
06. ELECTRICAL SYSTEM		
ALTERNATOR AND GENERATOR	0601	6- 2
STARTER MOTOR	0621	6- 4
APPLICATION MISCELLANEOUS AND AUXILIAIRES	0633	6- 6
ALTERNATOR AND GENERATOR	0641	6- 8
STARTER MOTOR	0661	6-10
COLD THROTTLE AND STOP CONTROLS	0665	6-12
TACHOMETER AND HOUR CORDER	0666	6-14
ENGINE LIFTING	0671	6-16
09. GASKET KIT		
JOINTS AND GASKET - COMPLETE SERVICE KIT	0991	9- 2
01. ENGINE RELATED PARTS AND ELECTRICAL SYSTEM		
BRACKET (SERIAL No. F10001 - F10488)	1001	1- 2
BRACKET (SERIAL No. F15001)	1002	1- 4
POWER TAKE OFF	1011	1- 6
PIPE, EXHAUST	1102	1- 8
AIR FILTER	1105	1-10
AIR FILTER (TBG SPEC.)	1107	1-12
RADIATOR	1201	1-14
FUEL TANK AND PIPING	1302	1-16
BATTERY	1401	1-18
INSTRUMENT PANEL	1411	1-20
INSTRUMENT PANEL (TBG SPEC.)	1413	1-22
ELECTRICAL SYSTEM (INSTRUMENT PANEL LINE)	1501	1-24
ELECTRICAL SYSTEM - CHASSIS LINE	1502	1-26
02. SWING AND FINAL DRIVE		
CIRCLE SWING	2501	2- 2
03. UNDER CARRIAGE		
TRACK FRAME (FOR STEEL TRACK SHOE)	3001	3- 2
TRACK FRAME (FOR RUBBER SHOE)	3002	3- 4
HYDRAULIC PIPING (TRAVEL MOTOR LINE)	3061	3- 6

https://truckmanualshub.com/

FRONT IDLER ..... 3201 ..... 3- 8
RECOIL SPRING (FOR STEEL TRACK SHOE) 3211 3-10
RECOIL SPRING (FOR RUBBER SHOE) 3212 3-12
TRACK ROLLER 3301 3-14
SPROCKET 3351 3-16
TRACK SHOE (DOUBLE GROUSER) 3421 3-18
TRACK SHOE WITH HOLES 3423 3-20
RUBBER SHOE 3491 3-22

04. CONTROL SYSTEM AND REVOLVING FRAME
FUEL CONTROL LEVER ..... 4001 ..... 4- 2
TRAVEL CONTROL LEVER ..... 4102 ..... 4- 4
BOOM SWING CONTROL PEDAL ..... 4205 ..... 4- 6
WORK EQUIPMENT CONTROL LEVER ..... 4212 ..... 4- 8
BLADE CONTROL LEVER 4214 4-10
WORK EQUIPMENT LOCK LEVER 4300 4-12
WORK EQUIPMENT LOCK LEVER (TBG SPEC.) 4301 4-14
ATTACHMENT CONTROL PEDAL 4401 4-16
REVOLVING FRAME 4602 4-18

05. GUARD
MACHINE CAB ..... 5001 ..... 5- 2
FLOOR - PLATE ..... 5102 ..... 5- 4
CANOPY ..... 5202 ..... 5- 6
OPERATOR'S SEAT ..... 5702 ..... 5- 8
OPERATOR'S SEAT (TBG SPEC.) 5703 5-10

06. WORK EQUIPMENT CONTROL SYSTEM
HYDRAULIC TANK ..... 6001 ..... 6- 2
7-SPOOL CONTROL VALVE (1/2) ..... 6201 ..... 6- 4
7-SPOOL CONTROL VALVE (2/2) ..... 6202 ..... 6- 6
CONTROL VALVE (FOR ATTACHMENT) ..... 6211 ..... 6- 8
SELECTOR VALVE 6251 6-10
SWIVEL JOINT 6401 6-12
TRAVEL MOTOR (1/3) 6431 6-14
TRAVEL MOTOR (2/3) 6432 6-16
TRAVEL MOTOR (3/3) 6433 6-18
SWING MOTOR 6441 6-20

HYDRAULIC PIPING (SUCTION-RETURN LINE) 6502 6-22
HYDRAULIC PIPING (TRAVEL AND BLADE LINE) 6602 6-24
HYDRAULIC PIPING (SWING MOTOR AND BOOM SWING LINE) 6611 6-26
HYDRAULIC PIPING (BOOM ARM, BUCKET CYLINDER LINE) 6702 6-28
HYDRAULIC PIPING (THREE WAY VALVE) 6722 6-30
HYDRAULIC PIPING (FOR ATTACHMENT) 6726 6-32
HYDRAULIC PIPING (FOR ATTACHMENT) (WITH ADDITIONAL PUMP) 6730 6-34
BOOM OVERLOADING ALARM 6802 6-36

07. WORK EQUIPMENT
SWING BRACKET ..... 7001 ..... 7- 2
BOOM ..... 7003 ..... 7- 4
BOOM (TBG SPEC.) ..... 7005 ..... 7- 6
HYDRAULIC PIPING: BOOM AND ARM - BUCKET ..... 7101 ..... 7- 8
HYDRAULIC PIPING: BOOM AND ARM - BUCKET (TBG SPEC.) 7103 7-10
HYDRAULIC PIPING (ATTACHMENT LINE) 7122 7-12
HYDRAULIC PIPING (ATTACHMENT LINE) (TBG SPEC.) 7123 7-14
SWING CYLINDER (SERIAL No. F10001 - F10488) 7181 7-16
SWING CYLINDER (SERIAL No. F15001) 7182 7-18
SWING CYLINDER (SERIAL No. F10001 - F10488)
(90° SWING CYLINDER, R.H.) (ONLY WITH CANOPY) 7183 7-20
SWING CYLINDER (SERIAL No. F15001)
(90° SWING CYLINDER, R.H.) (ONLY WITH CANOPY) 7184 7-22
BOOM CYLINDER 7185 7-24
BOOM CYLINDER (OPTIONAL FOR MACHINE WITH CANOPY) 7187 7-26
ARM 7201 7-28
LONG ARM 7203 7-30
ARM CYLINDER 7381 7-32
BUCKET LINK 7401 7-34
BUCKET CYLINDER 7581 7-36
BUCKET (350 mm) 7600 7-38
BUCKET WITH HOOK (350 mm) 7601 7-40
BUCKET (250 mm) 7602 7-42
BUCKET WITH HOOK (250 mm) 7603 7-44
BLADE SUB GROUP 7701 7-46
HYDRAULIC PIPING (BLADE CYLINDER LINE) 7711 7-48
BLADE CYLINDER 7721 7-50

https://truckmanualshub.com/

09. MARK PLATE, TOOL AND KIT

MARKS AND PLATES (EUROPE) ..... 9802 ..... 9- 2

MARKS AND PLATES (ITALIAN) ..... 9804 ..... 9- 6

MARKS AND PLATES (GERMAN) 9810 9-10

MARKS AND PLATES (FRENCH) 9811 9-14

TOOL 9901 9-18

SPARE PARTS 9905 9-20

99. NUMERICAL INDEX

NUMERICAL INDEX 1

https://truckmanualshub.com/

CYLINDER HEAD

https://truckmanualshub.com/

FIG. 0101 CYLINDER HEAD

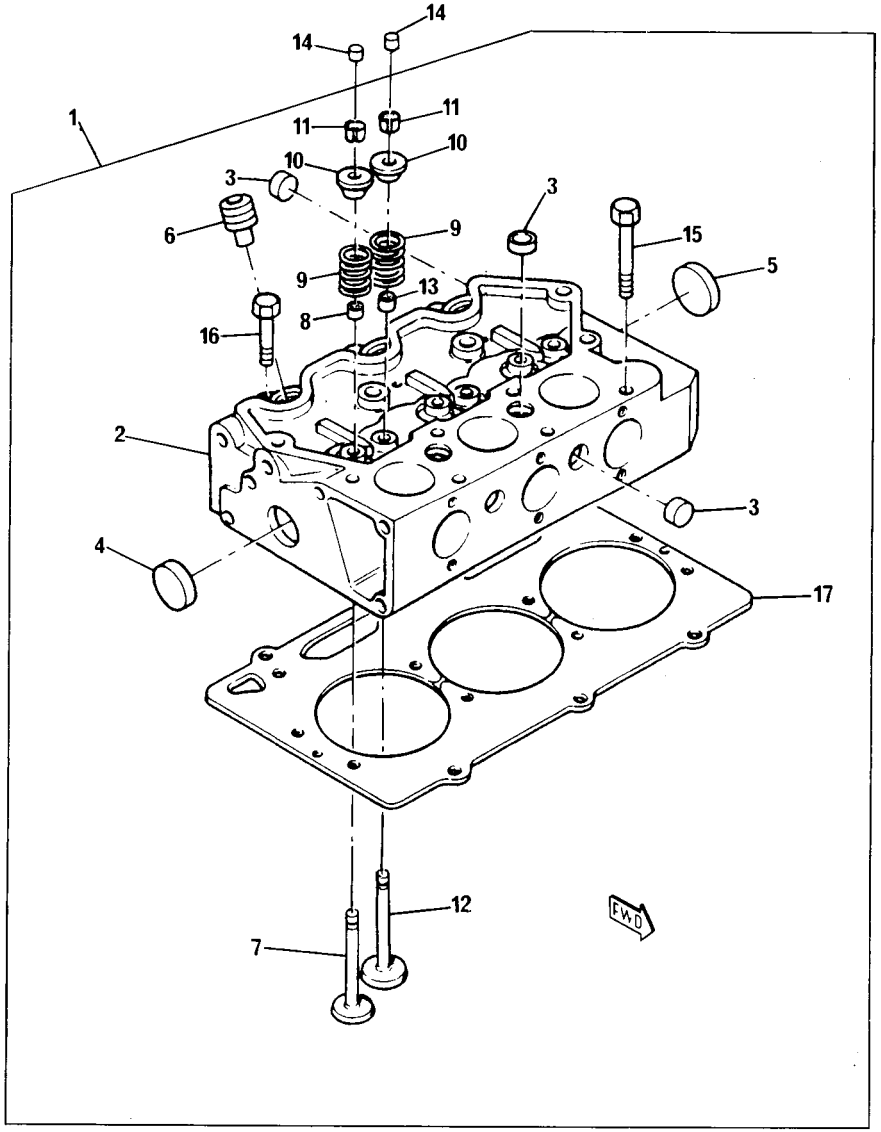

FIG. N°. :0101

INDEX N°.	PART N°.	DESCRIPTION	Q.TY	SERIAL N°. KC80462
—	PK871120102	ENGINE ASSY.	1	J30479T -
1	PK111086010	KIT, CYLINDER HEAD	1	J30479T -
2	PK111086010	. CYLINDER HEAD	1	J30479T -
3	PK064200018	. . PLUG	6	J30479T -
4	PK064200015	. . PLUG	2	J30479T -
5	PK064200030	. . PLUG	2	J30479T -
6	PK111316260	. . INSERT	3	J30479T -
7	PK120166240	. VALVE INLET	3	J30479T -
8	PK120406070	. SEAL (KIT)	3	J30479T -
9	PK198216700	. SPRING	6	J30479T -
10	PK120186080	. CAP	6	J30479T -
11	PK120226070	. COTTER	12	J30479T -
12	PK120176250	. VALVE EXHAUST	3	J30479T -
13	PK120406050	. SEAL (KIT)	3	J30479T -
14	PK120216040	CAP	6	J30479T -
15	PK111136230	SCREW	11	J30479T -
16	PK111136240	SCREW	3	J30479T -
17	PK111147240	GASKET (KIT)	1	J30479T -

https://truckmanualshub.com/

FIG. 0111 ROCKER SHAFT

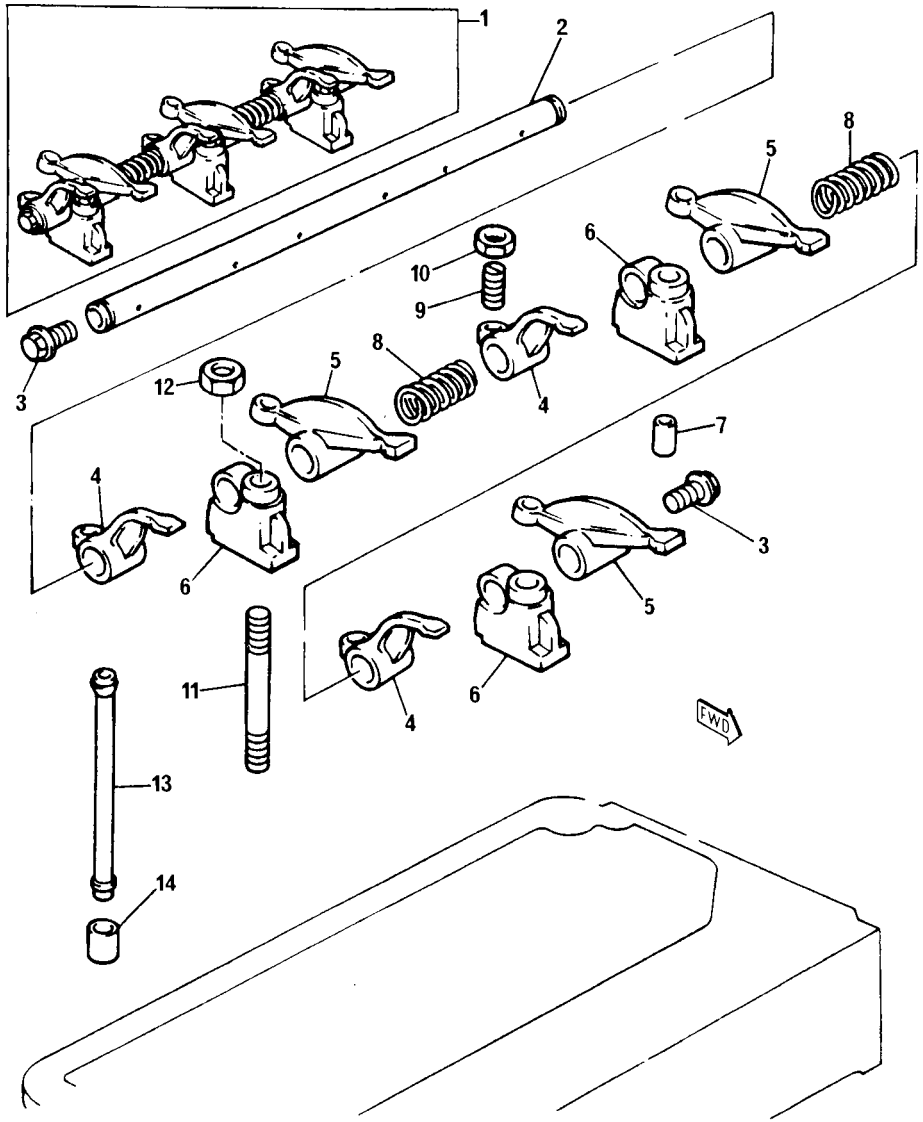

FIG. N°. :0111

INDEX N°.	PART N°.	DESCRIPTION	Q.TY	SERIAL N°. KC80462
1	PK120336010	ROCKER SHAFT ASSY.	1	J30479T -
2	PK120316171	. ROCKER SHAFT	1	J30479T -
3	PK064609006	. PLUG	2	J30479T -
4	PK120366162	. LEVER	3	J30479T -
5	PK120366152	. LEVER	3	J30479T -
6	PK120346170	. BRACKET	3	J30479T -
7	PK030300325	. PIN	1	J30479T -
8	PK198216780	. SPRING	2	J30479T -
9	PK199486220	. ADJUSTING SCREW	6	J30479T -
10	PK020109076	. NUT	6	J30479T -
11	PK012109177	STUD	3	J30479T -
12	PK023100008	NUT	3	J30479T -
13	PK120456201	ROD	6	J30479T -
14	PK120116100	TAPPET	6	J30479T -

https://truckmanualshub.com/

FIG. 0115 LUBRICATING OIL FILLER AND BREATHER

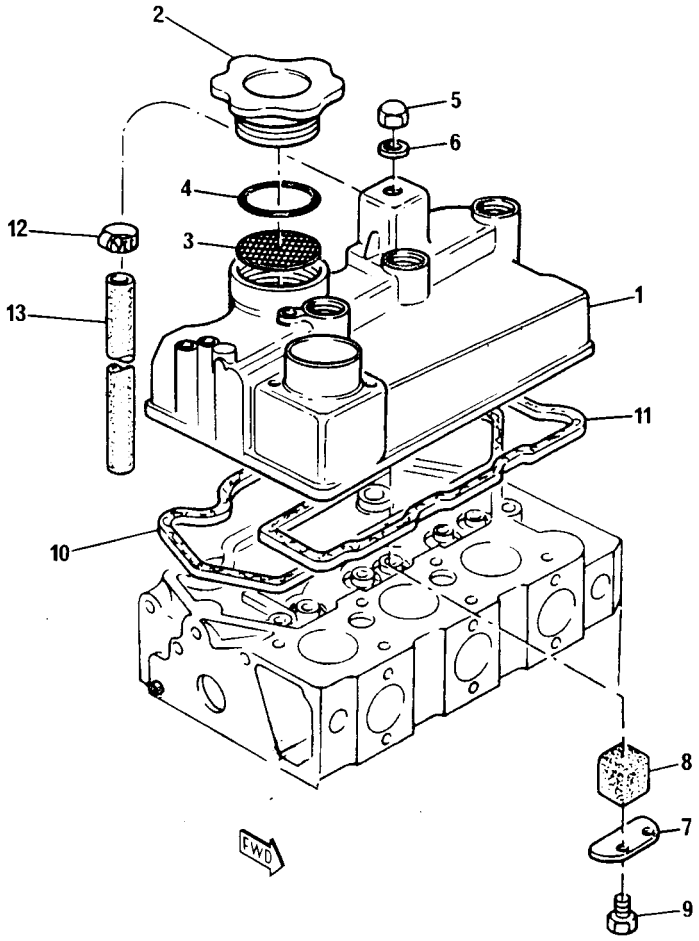

FIG. N°. :0115

INDEX N°.	PART N°.	DESCRIPTION	Q.TY	SERIAL N°. KC80462
1	PK111026431	COVER	1	J30479T -
2	PK198436010	CAP	1	J30479T -
3	☆	. PLATE	1	J30479T -
4	PK052100400	SEAL	1	J30479T -
5	PK024500008	NUT	3	J30479T -
6	PK198996060	WASHER	3	J30479T -
7	PK110666050	PLATE	1	J30479T -
8	PK110666060	GAUZE	1	J30479T -
9	PK011300612	BOLT	2	J30479T -
10	PK052109061	JOINT (KIT)	1	J30479T -
11	PK111996271	JOINT (KIT)	1	J30479T -
12	PK198346090	CLIP	1	J30479T -
13	PK068122560	HOSE	1	J30479T -

https://truckmanualshub.com/

FIG. 0120 EXHAUST MANIFOLD

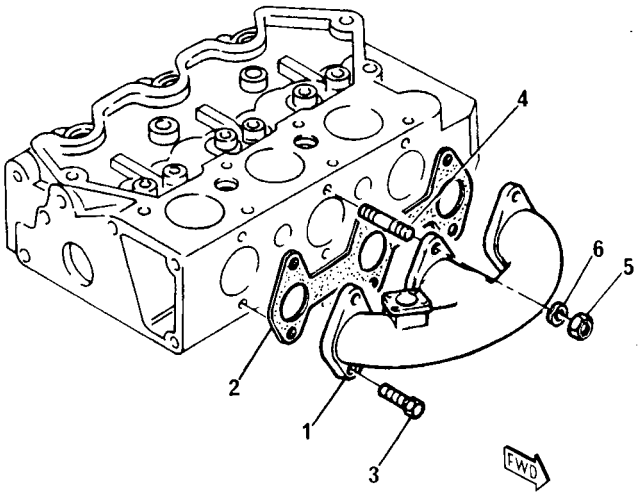

FIG. N°. :0120

INDEX N°.	PART N°.	DESCRIPTION	Q.TY	SERIAL N°. KC80462
1	PK135616342	EXHAUST MANIFOLD	1	J30479T -
2	PK135996541	JOINT (KIT)	1	J30479T -
3	PK011310625	SCREW	3	J30479T -
4	PK012110625	STUD	3	J30479T -
5	PK020100006	NUT	3	J30479T -
6	PK027100006	WASHER	3	J30479T -

https://truckmanualshub.com/

CYLINDER BLOCK

https://truckmanualshub.com/

FIG. 0201 CYLINDER BLOCK

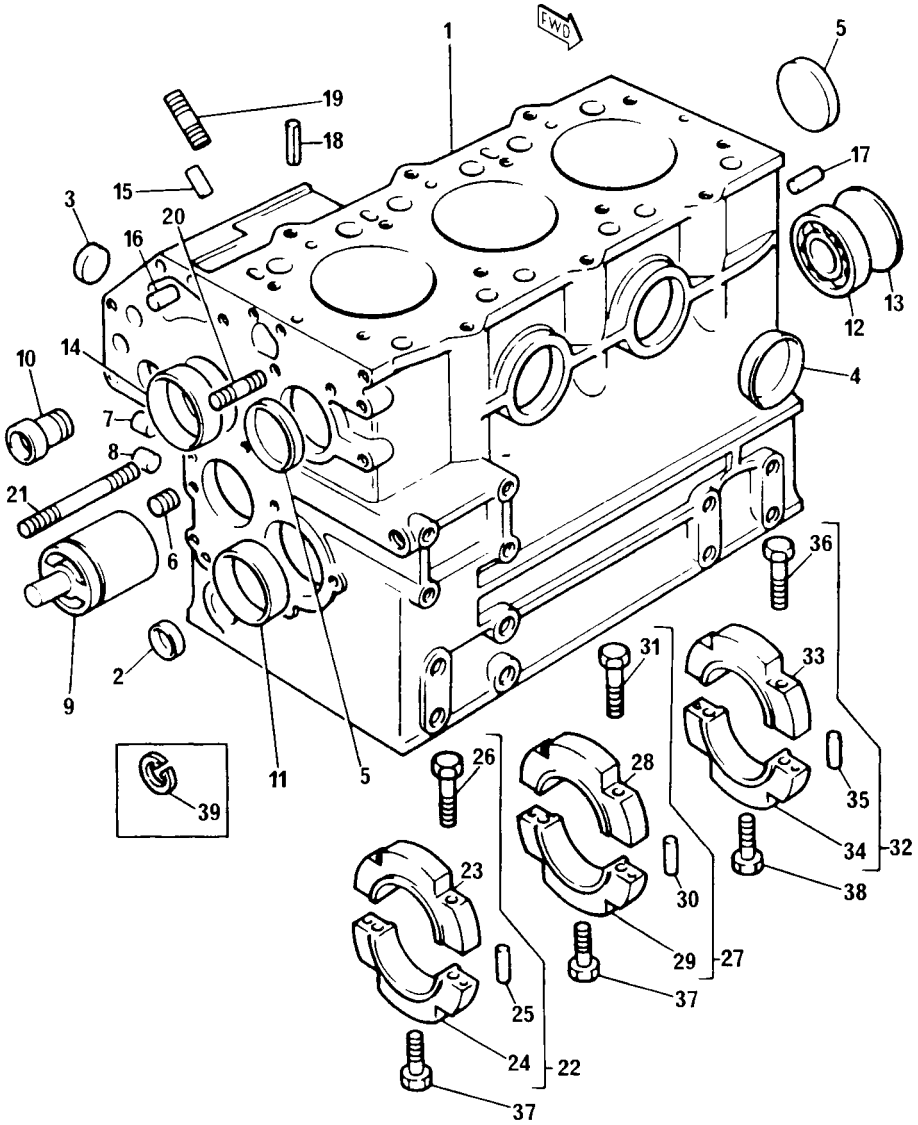

FIG. N°. :0201

INDEX N°.	PART N°.	DESCRIPTION	Q.TY	SERIAL N°. KC80462
1	PK110186010	KIT, CYLINDER BLOCK	1	J30479T -
2	PK064200015	. PLUG	1	J30479T -
3	PK064200025	. PLUG	1	J30479T -
4	PK064200035	. PLUG	2	J30479T -
5	PK064200040	. PLUG	2	J30479T -
6	PK198466050	. PLUG	1	J30479T -
7	PK198466030	. PLUG	4	J30479T -
8	PK198466010	. PLUG	4	J30479T -
9	PK165296140	. HUB	1	J30479T -
10	PK198517090	. BUSH	1	J30479T -
11	PK198517080	. BUSH (—) 0.25 mm	1	J30479T -
	PK198517084	. BUSH (—) 0.50 mm	AR	J30479T -
	PK198517087	. BUSH	AR	J30479T -
12	PK040106203	. BEARING	1	J30479T -
13	PK064100045	. PLUG	1	J30479T -
14	PK042303015	. BUSH	1	J30479T -
15	PK030500512	. DOWEL	2	J30479T -
16	PK030500616	. DOWEL	2	J30479T -
17	PK030501025	. DOWEL	2	J30479T -
18	PK030309005	. PIN	2	J30479T -
19	PK012100620	. STUD	2	J30479T -
20	PK012100635	. STUD	1	J30479T -
21	PK012100660	. STUD	1	J30479T -
22	PK110156111	. BEARING CAP	1	J30479T -
23	☆	. . CAP	1	J30479T -
24	☆	. . CAP	1	J30479T -
25	PK030500612	. . DOWEL	2	J30479T -
26	PK010810840	. . SCREW	2	J30479T -
27	PK110156121	. BEARING CAP	1	J30479T -
28	☆	. . CAP	1	J30479T -
29	☆	. . CAP	1	J30479T -
30	PK030500612	. . DOWEL	2	J30479T -
31	PK010810840	. . SCREW	2	J30479T -
32	PK110156131	. BEARING CAP	1	J30479T -
33	☆	. . CAP	1	J30479T -
34	☆	. . CAP	1	J30479T -
35	PK030500612	. . DOWEL	2	J30479T -
36	PK010810840	. . SCREW	2	J30479T -
37	PK011310850	. SCREW	1	J30479T -
38	PK010700845	. SCREW	2	J30479T -
39	PK036509005	. CIRCLIP	1	J30479T -

https://truckmanualshub.com/

FIG. 0207 TIMING GEAR AND CAMSHAFT

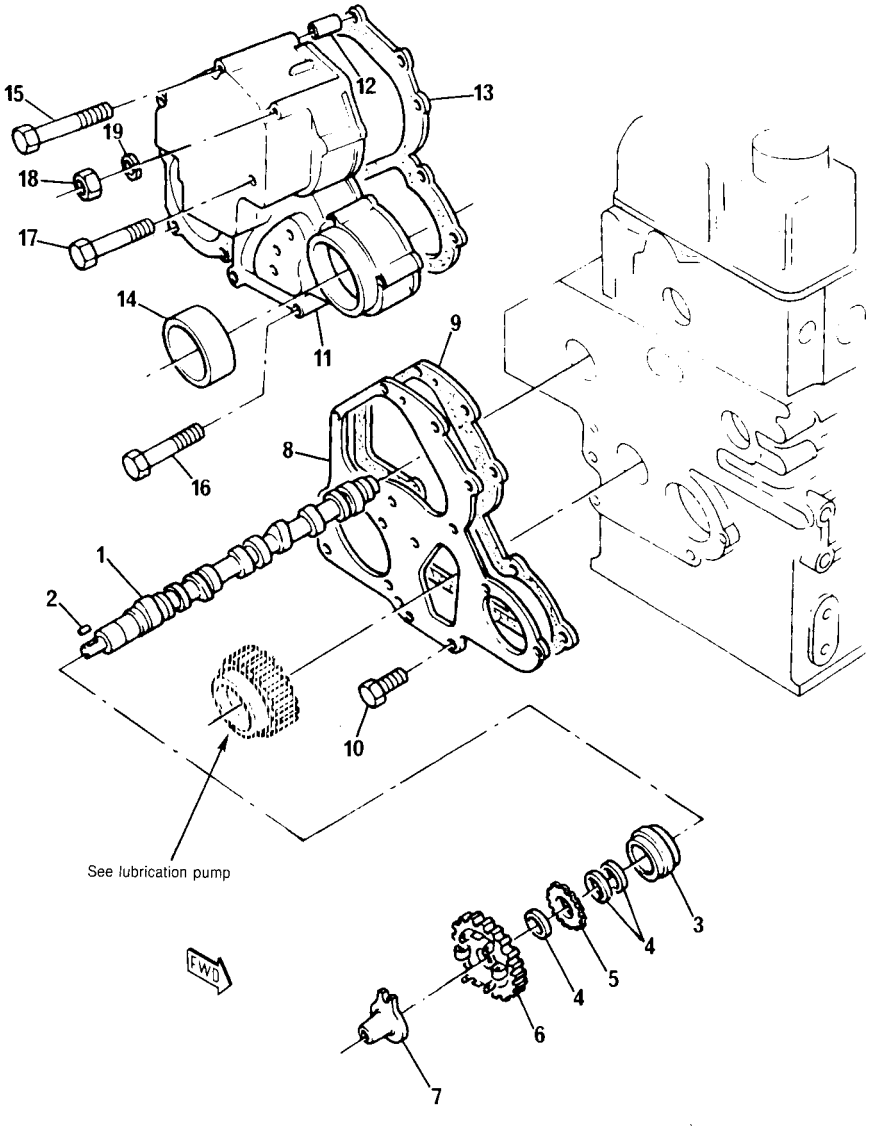

FIG. N°. :0207

INDEX N°.	PART N°.	DESCRIPTION	Q.TY	SERIAL N°. KC80462
1	PK120026090	CAMSHAFT	1	J30479T -
2	PK034100508	. KEY	1	J30479T -
3	PK040109048	. BEARING	1	J30479T -
4	PK199216230	. SPACER	3	J30479T -
5	PK120736081	. GEAR	1	J30479T -
6	PK120016001	. GEAR	1	J30479T -
7	PK125256120	. TAPPET	1	J30479T -
8	PK165166181	PLATE	1	J30479T -
9	PK165996300	JOINT (KIT)	1	J30479T -
10	PK011140612	SCREW	3	J30479T -
11	PK165106290	CASE	1	J30479T -
12	PK030300414	. PIN	1	J30479T -
13	PK165996310	JOINT (KIT)	1	J30479T -
14	PK198636090	SEAL	1	J30479T -
15	PK011300680	SCREW	2	J30479T -
16	PK011300640	SCREW	5	J30479T -
17	PK011300660	SCREW	4	J30479T -
18	PK020100006	NUT	1	J30479T -
19	PK027100006	WASHER	1	J30479T -

https://truckmanualshub.com/

FIG. 0208 TIMING GEAR AND CAMSHAFT

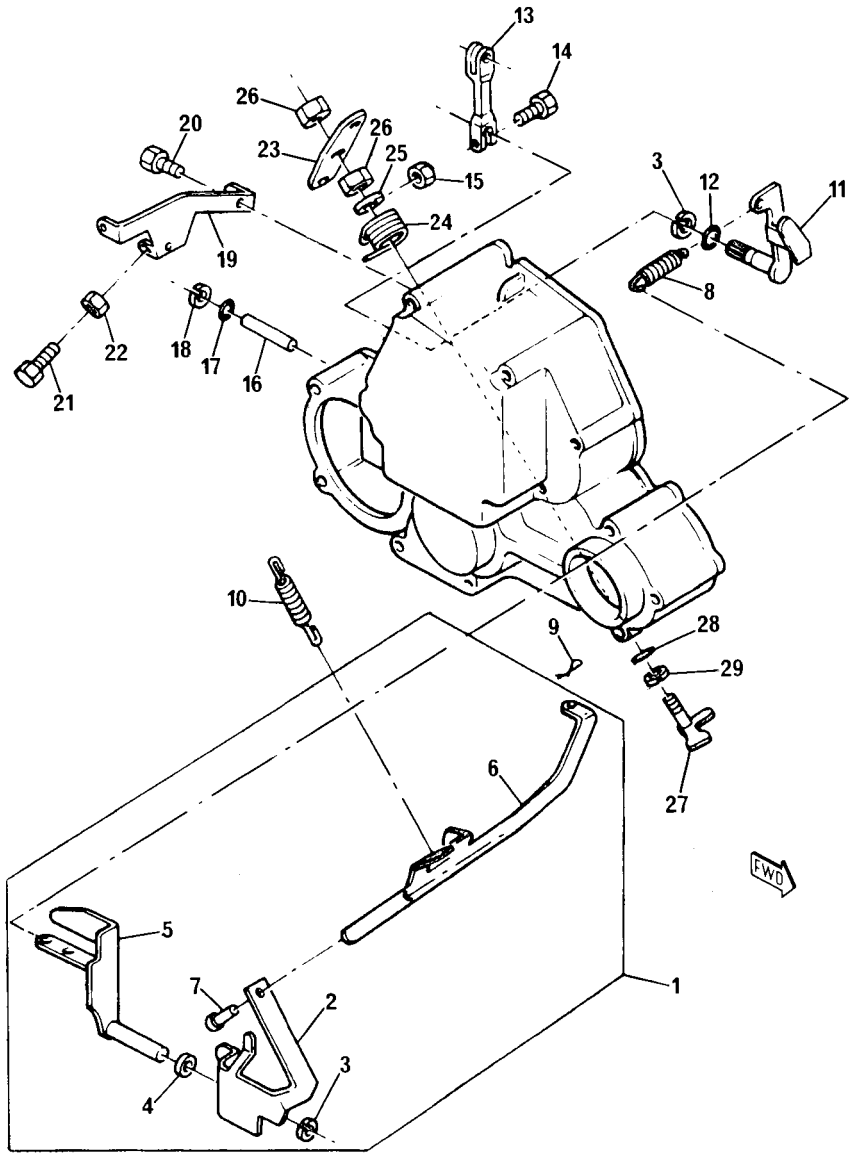

FIG. N°. :0208

INDEX N°.	PART N°.	DESCRIPTION	Q.TY	SERIAL N°. KC80462
1	PK125046160	LEVER	1	J30479T -
2	☆	. LEVER	1	J30479T -
3	PK036800008	. CIRCLIP	2	J30479T -
4	PK026200010	. WASHER	1	J30479T -
5	PK125406071	. LEVER	1	J30479T -
6	☆	. LINK	1	J30479T -
7	☆	. PIN	1	J30479T -
8	PK198217200	SPRING	1	J30479T -
9	PK031100004	PIN	1	J30479T -
10	PK198216731	SPRING	1	J30479T -
11	PK125156170	ARM	1	J30479T -
12	PK052100070	O-RING	1	J30479T -
13	PK125416020	LEVER	1	J30479T -
14	PK010110630	SCREW	1	J30479T -
15	PK020100006	NUT	1	J30479T -
16	PK125116130	SHAFT	1	J30479T -
17	PK052100030	O-RING	1	J30479T -
18	PK036800005	CIRCLIP	1	J30479T -
19	PK125976120	STAY	1	J30479T -
20	PK011300616	SCREW	2	J30479T -
21	PK010109264	SCREW	2	J30479T -
22	PK023100006	NUT	2	J30479T -
23	PK125176071	LEVER	1	J30479T -
24	PK198216760	SPRING	1	J30479T -
25	PK026200008	WASHER	1	J30479T -
26	PK020300008	NUT	2	J30479T -
27	PK125156180	ARM	1	J30479T -
28	PK052100050	O-RING	1	J30479T -
29	PK036800006	CIRCLIP	1	J30479T -

https://truckmanualshub.com/

FIG. 0212 LUBRICATING OIL SUMP

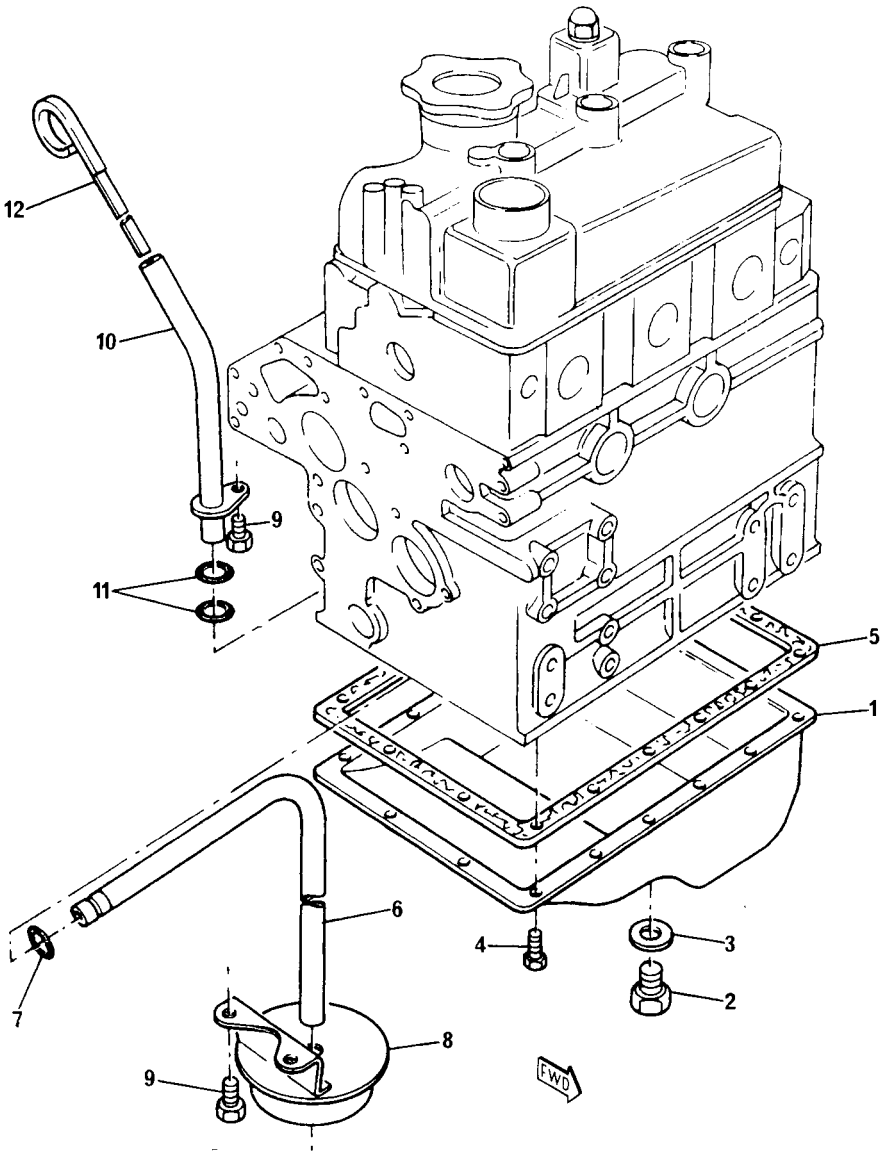

FIG. N°. :0212

INDEX N°.	PART N°.	DESCRIPTION	Q.TY	SERIAL N°. KC80462
1	PK110706850	SUMP	1	J30479T -
2	PK010401212	PLUG (EXCEPT TBG)	1	J30479T -
	20M-01-R2071	PLUG (ONLY FOR TBG)	1	J30479T -
3	PK025100012	WASHER	1	J30479T -
4	PK010109235	SCREW	20	J30479T -
5	PK110996491	JOINT (KIT)	1	J30479T -
6	PK140986480	PIPE	1	J30479T -
7	PK052109076	O-RING	1	J30479T -
8	PK140406270	STRAINER	1	J30479T -
9	PK011300612	BOLT	3	J30479T -
10	PK110756201	TUBE	1	J30479T -
11	PK052100100	O-RING	2	J30479T -
12	PK198416371	DIPSTICK	1	J30479T -

https://truckmanualshub.com/

FIG. 0221 FLYWHEEL AND STARTER RING

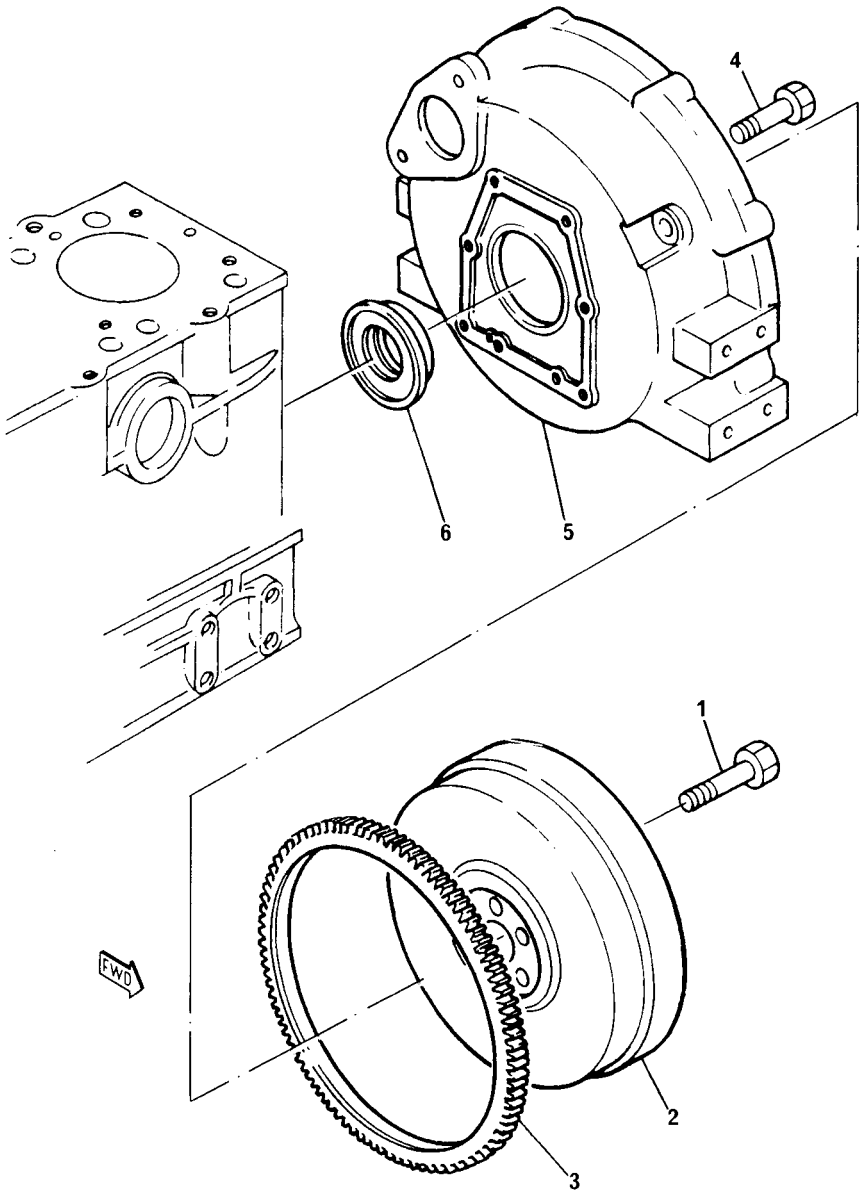

FIG. N°. :0221

INDEX N°.	PART N°.	DESCRIPTION	Q.TY	SERIAL N°. KC80462
1	PK010109340	SCREW	6	J30479T -
2	PK115357230	FLYWHEEL	1	J30479T -
3	PK115376130	STARTER RING	1	J30479T -
4	PK010111020	SCREW	8	J30479T -
5	PK110446441	FLYWHEEL HOUSING	1	J30479T -
6	PK198636080	SEAL	1	J30479T -

https://truckmanualshub.com/

FIG. 0231 CRANKSHAFT

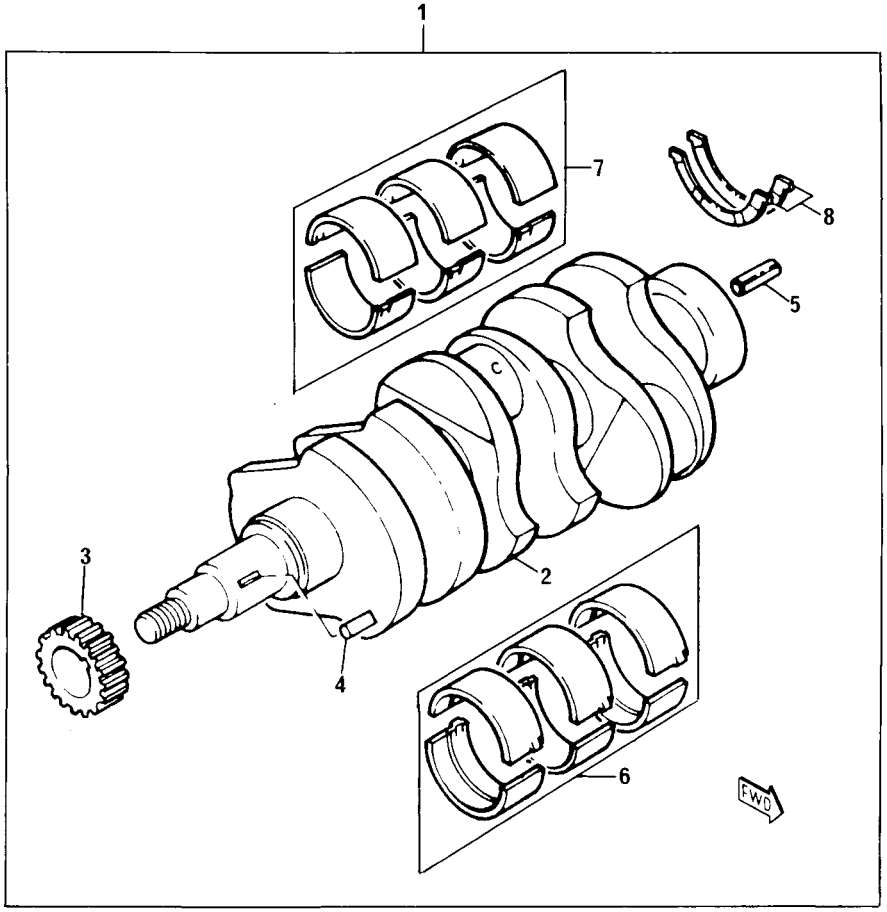

FIG. N°. :0231

INDEX N°.	PART N°.	DESCRIPTION	Q.TY	SERIAL N°. KC80462
1	PK115236010	KIT, CRANKSHAFT	1	J30479T -
2	☆	. CRANKSHAFT	1	J30479T -
3	PK115276180	. GEAR	1	J30479T -
4	PK030509020	. KEY	1	J30479T -
5	PK030300816	. PIN	1	J30479T -
6	PK198586010	. KIT, BEARING	1	J30479T -
	PK198586014	. KIT, BEARING (—) 0.25 mm	AR	J30479T -
	PK198586017	. KIT, BEARING (—) 0.50 mm	AR	J30479T -
7	PK198586020	. KIT, BEARING	1	J30479T -
	PK198586024	. KIT, BEARING (—) 0.25 mm	AR	J30479T -
	PK198586027	. KIT, BEARING (—) 0.50 mm	AR	J30479T -
8	PK199266170	. WASHER	2	J30479T -

https://truckmanualshub.com/

FIG. 0237 CONROD AND PISTON

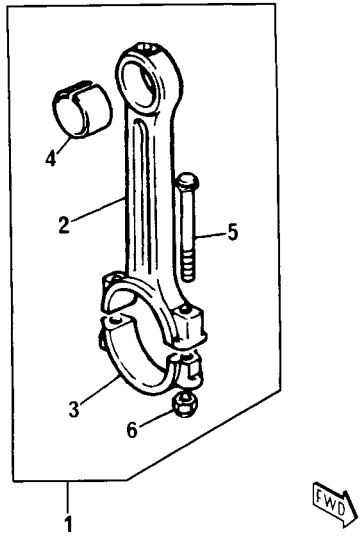

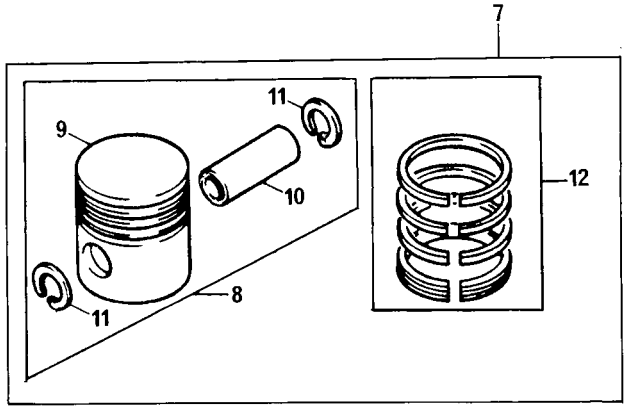

FIG. N°. :0237

INDEX N°.	PART N°.	DESCRIPTION	Q.TY	SERIAL N°. KC80462
1	PK115026191	KIT, CONROD	3	J30479T -
2	☆	. ROD	1	J30479T -
3	☆	. CAP	1	J30479T -
4	PK198517125	. BUSH	1	J30479T -
5	PK115176150	. SCREW	2	J30479T -
6	PK020109075	. NUT	2	J30479T -
7	PK115016501	KIT, PISTON	3	J30479T -
	PK115016505	KIT, PISTON (+) 0.5 mm	AR	J30479T -
	PK115016508	KIT, PISTON (+) 1.0 mm	AR	J30479T -
8	PK115016750	. KIT, PISTON	1	J30479T -
	PK115016754	. KIT, PISTON (+) 0.5 mm	1	J30479T -
	PK115016757	. KIT, PISTON (+) 1.0 mm	1	J30479T -
9	☆	. . PISTON	1	J30479T -
10	PK115326231	. . GUDGEON PIN	1	J30479T -
11	PK036500021	. . CIRCLIP	2	J30479T -
12	PK115107191	. KIT, PISTON RING	1	J30479T -
	PK115107194	. KIT, PISTON RING (+) 0.5 mm	1	J30479T -
	PK115107196	. KIT, PISTON RING (+) 1.0 mm	1	J30479T -

https://truckmanualshub.com/

FIG. 0238 FRONT END DRIVE INPUT

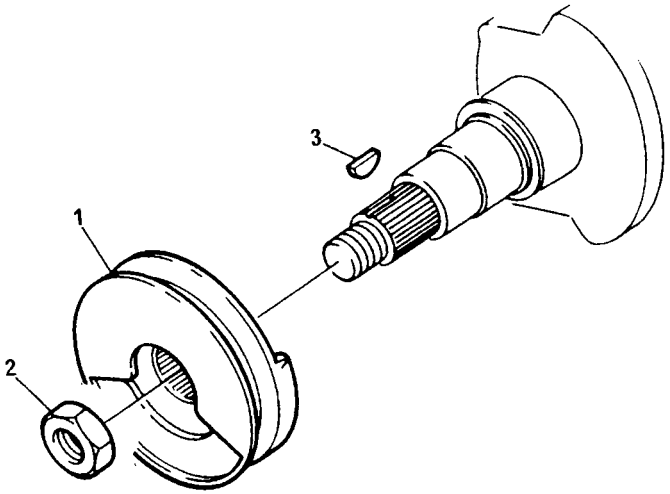

FIG. N°. :0238

INDEX N°.	PART N°.	DESCRIPTION	Q.TY	SERIAL N°. KC80462
1	PK115396910	PULLEY	1	J30479T -
2	PK020800018	NUT	1	J30479T -
3	PK034100508	KEY	1	J30479T -

https://truckmanualshub.com/

FIG. 0239 GEAR DRIVE AUXILIARY DRIVE OPTIONS

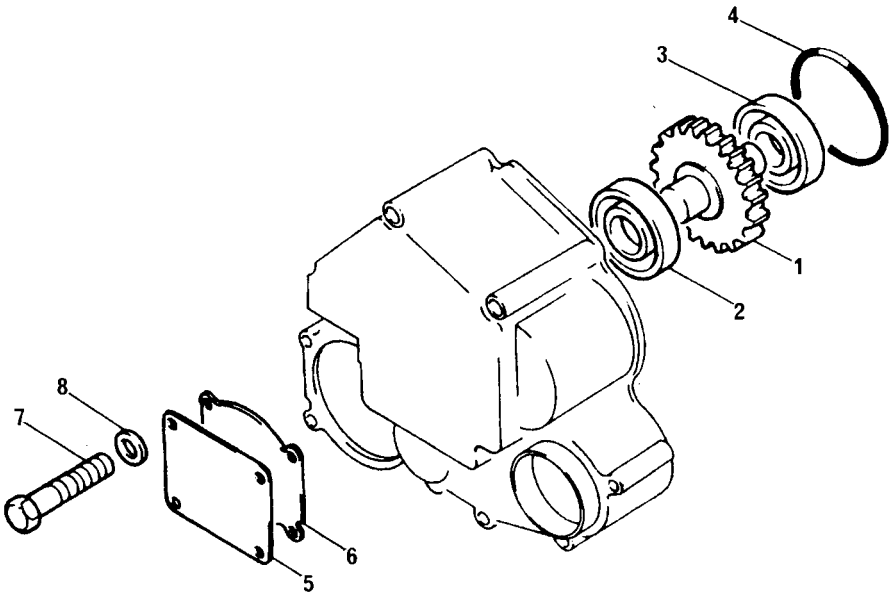

FIG. N°. :0239

INDEX N°.	PART N°.	DESCRIPTION	Q.TY	SERIAL N°. KC80462
1	PK340460130	GEAR	1	J30479T -
2	PK040106004	BEARING	1	J30479T -
3	PK040136004	BEARING	1	J30479T -
4	PK052300700	O-RING (KIT)	1	J30479T -
5	PK165206010	PLATE	1	J30479T -
6	PK165996110	JOINT (KIT)	1	J30479T -
7	PK011300860	SCREW	4	J30479T -
8	PK023100008	NUT	4	J30479T -

https://truckmanualshub.com/

LUBRICATING OIL SYSTEM

https://truckmanualshub.com/

FIG. 0301 LUBRICATING OIL PUMP

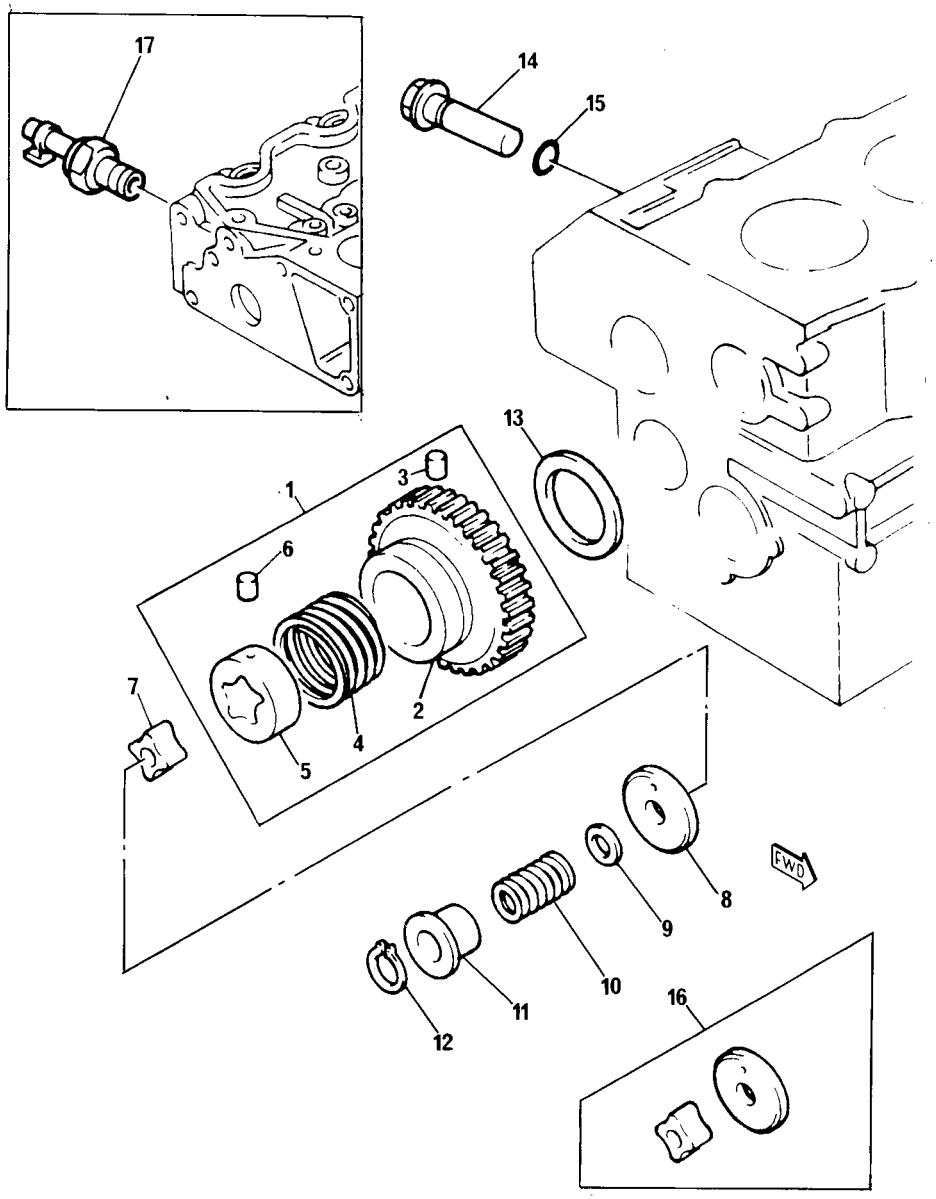

FIG. N°. :0301

INDEX N°.	PART N°.	DESCRIPTION	Q.TY	SERIAL N°. KC80462
1	PK165026100	GEAR	1	J30479T -
2	PK165266180	. GEAR	1	J30479T -
3	PK030509018	. DOWEL	1	J30479T -
4	PK198216821	. SPRING	1	J30479T -
5	PK140166160	. VANE	1	J30479T -
6	PK198517290	. BUSH	1	J30479T -
7	PK140166130	ROTOR	1	J30479T -
8	PK140116140	COVER	1	J30479T -
9	PK199286150	SHIM (+) 0.10 mm	AR	J30479T -
	PK199286160	SHIM (+) 0.15 mm	AR	J30479T -
	PK199286170	SHIM (+) 0.20 mm	AR	J30479T -
	PK199286180	SHIM (+) 0.50 mm	AR	J30479T -
10	PK198216720	SPRING	1	J30479T -
11	PK199236540	COLLAR	1	J30479T -
12	PK036800010	CIRCLIP	1	J30479T -
13	PK199266180	WASHER	1	J30479T -
14	PK140036111	VALVE	1	J30479T -
15	PK052100150	O-RING	1	J30479T -
16	PK140186010	KIT, REPAIR	AR	J30479T -
17	PK185246060	SWITCH	1	J30479T -

https://truckmanualshub.com/

FIG. 0310 LUBRICATING OIL FILTER AND INTEGRAL OIL COOLER

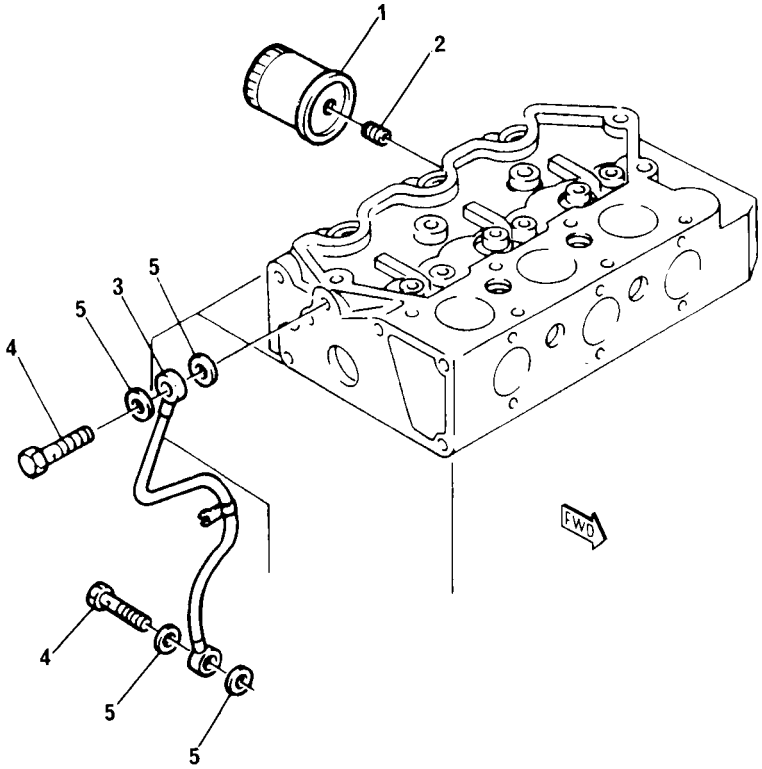

FIG. N°. :0310

INDEX N°.	PART N°.	DESCRIPTION	Q.TY	SERIAL N°. KC80462
1	PK140516190	OIL FILTER	1	J30479T -
2	PK140546020	CONNNECTION	1	J30479T -
3	PK140606670	PIPE	1	J30479T -
4	PK198486780	BOLT	2	J30479T -
5	PK198996060	WASHER	4	J30479T -

https://truckmanualshub.com/

FUEL SYSTEM

https://truckmanualshub.com/

FIG. 0402 FUEL INJECTION EQUIPMENT (DIESEL)

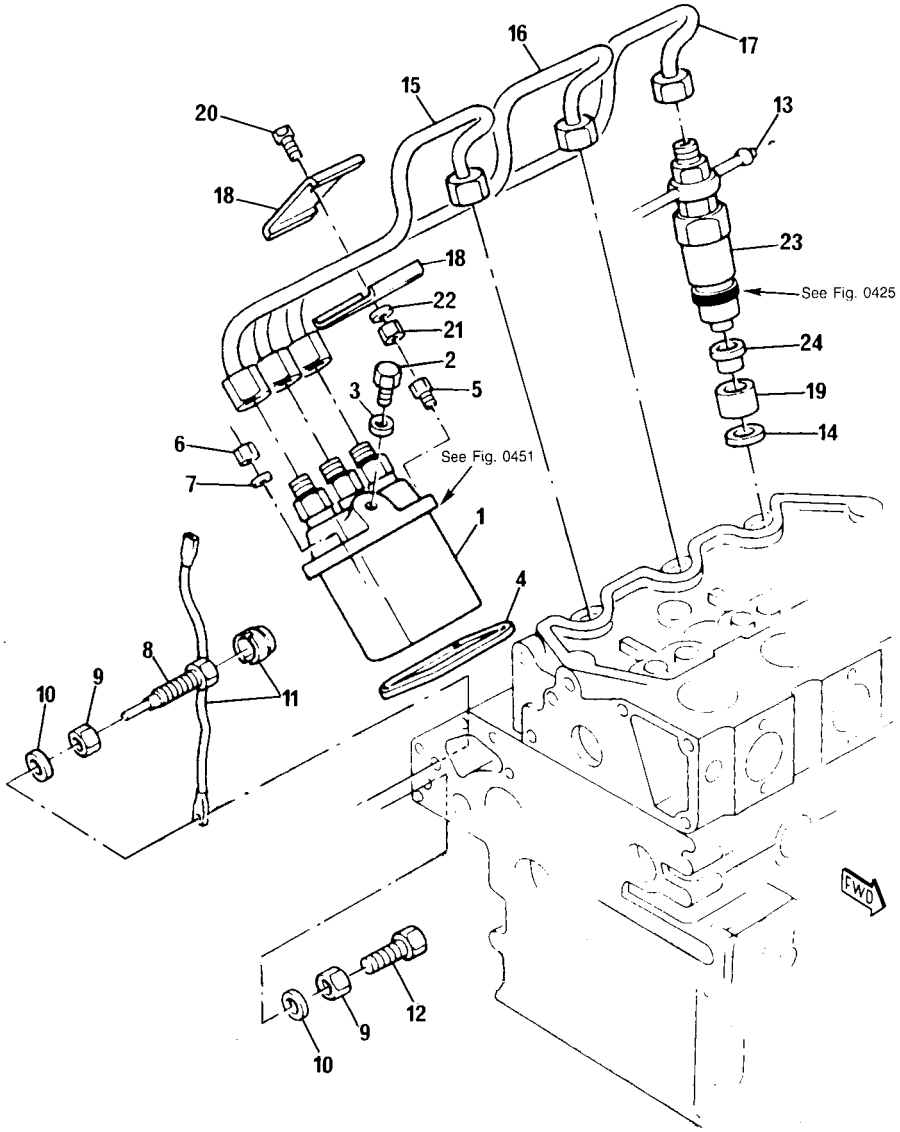

FIG. N°. :0402

INDEX N°.	PART N°.	DESCRIPTION	Q.TY	SERIAL N°. KC80462
1	(PK131017310)	INJECTION PUMP (SEE FIG. 0451)	1	J30479T -
2	PK131236201	SCREW	1	J30479T -
3	PK025100006	WASHER	1	J30479T -
4	PK131437310	SHIM	AR	J30479T -
	PK131437320	SHIM	AR	J30479T -
	PK131437330	SHIM	AR	J30479T -
	PK131437340	SHIM	AR	J30479T -
5	PK011300620	SCREW	2	J30479T -
6	PK023100006	NUT	2	J30479T -
7	PK027109010	WASHER	2	J30479T -
8	PK131466060	SCREW	1	J30479T -
9	PK023109002	NUT	2	J30479T -
10	PK025100010	WASHER	2	J30479T -
11	PK198236030	WIRE	1	J30479T -
12	PK010109270	SCREW	1	J30479T -
13	PK131606150	LEAK-OFF PIPE	1	J30479T -
14	PK198996050	SEAL	3	J30479T -
15	PK131506650	INJECTION PIPE	1	J30479T -
16	PK131506660	INJECTION PIPE	1	J30479T -
17	PK131506670	INJECTION PIPE	1	J30479T -
18	PK199106020	DAMPER	4	J30479T -
19	PK111316260	INSERT	3	J30479T -
20	PK010100625	SCREW	2	J30479T -
21	PK020100006	NUT	2	J30479T -
22	PK027100006	WASHER	2	J30479T -
23	(PK131406330)	ATOMISER (SEE FIG. 0425)	3	J30479T -
24	PK111346020	CAP	3	J30479T -

https://truckmanualshub.com/

FIG. 0425 ATOMISER

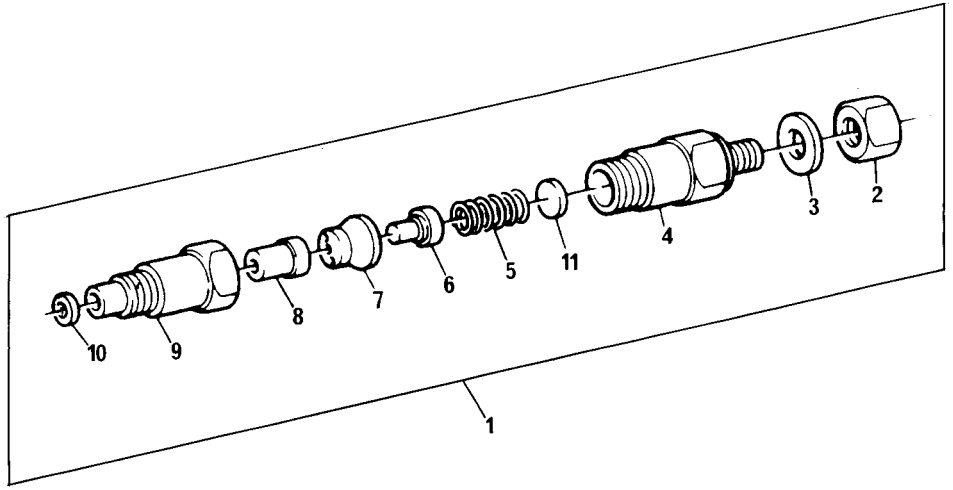

FIG. N°. :0425

INDEX N°.	PART N°.	DESCRIPTION	Q.TY	SERIAL N°. KC80462
1	PK131406330	ATOMISER ASSY.	1	J30479T -
2	PK131446008	. ECROU	1	J30479T -
3	PK131426120	. WASHER	1	J30479T -
4	PK131446054	. BODY	1	J30479T -
5	PK131446011	. GASKET	1	J30479T -
6	PK131446012	. SPRING	1	J30479T -
7	PK131446013	. PIN	1	J30479T -
8	PK131416140	. SPACER	1	J30479T -
9	PK131446042	. NOZZLE	1	J30479T -
10	PK131426130	. NUT	1	J30479T -
11	PK131436540	WASHER (+) 1.00 mm	AR	J30479T -
	PK131436550	WASHER (+) 1.05 mm	AR	J30479T -
	PK131436560	WASHER (+) 1.10 mm	AR	J30479T -
	PK131436570	WASHER (+) 1.15 mm	AR	J30479T -
	PK131436580	WASHER (+) 1.20 mm	AR	J30479T -
	PK131436590	WASHER (+) 1.25 mm	AR	J30479T -
	PK131436600	WASHER (+) 1.30 mm	AR	J30479T -
	PK131436610	WASHER (+) 1.35 mm	AR	J30479T -
	PK131436620	WASHER (+) 1.40 mm	AR	J30479T -
	PK131436630	WASHER (+) 1.45 mm	AR	J30479T -
	PK131436640	WASHER (+) 1.50 mm	AR	J30479T -
	PK131436650	WASHER (+) 1.55 mm	AR	J30479T -
	PK131436660	WASHER (+) 1.60 mm	AR	J30479T -
	PK131436670	WASHER (+) 1.65 mm	AR	J30479T -
	PK131436680	WASHER (+) 1.70 mm	AR	J30479T -
	PK131436690	WASHER (+) 1.75 mm	AR	J30479T -
	PK131436700	WASHER (+) 1.80 mm	AR	J30479T -
	PK131436710	WASHER (+) 1.85 mm	AR	J30479T -
	PK131436720	WASHER (+) 1.90 mm	AR	J30479T -
	PK131436730	WASHER (+) 1.95 mm	AR	J30479T -

https://truckmanualshub.com/

FIG. 0429 LOW PRESSURE FUEL SYSTEM

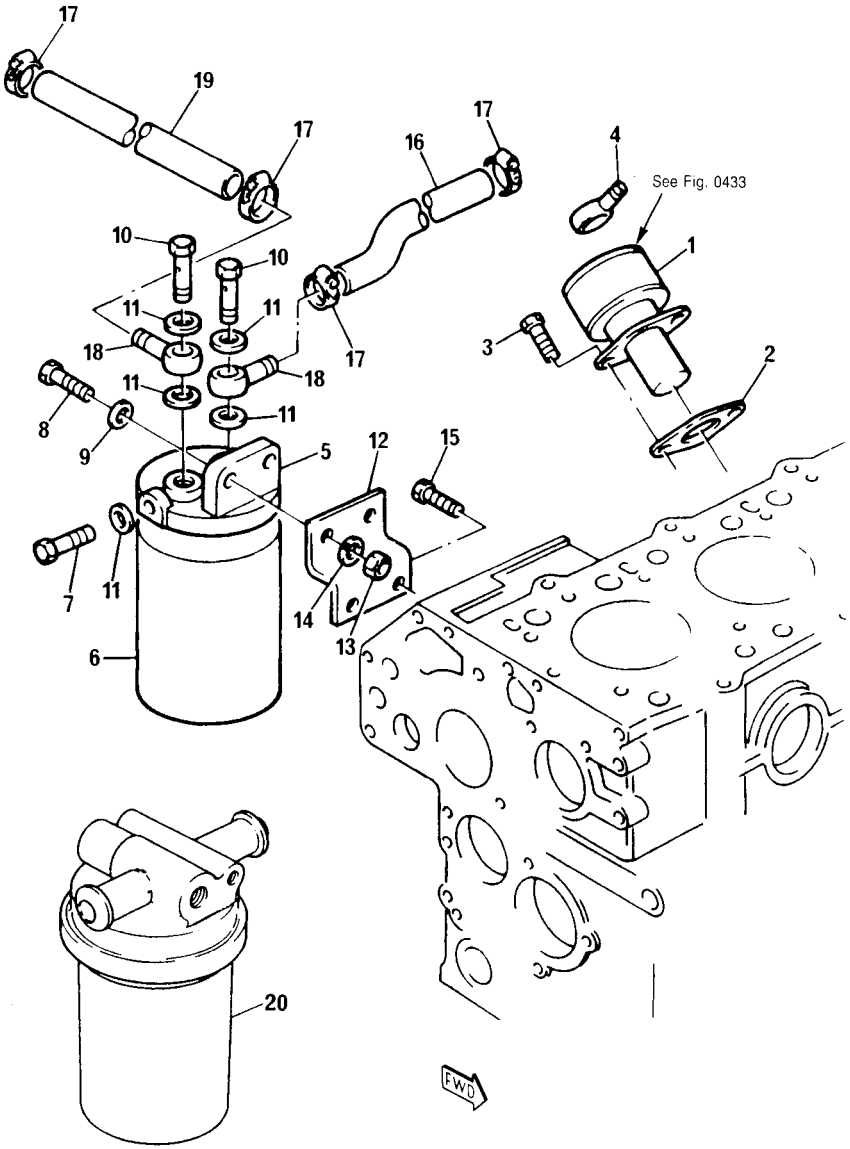

FIG. N°. :0429

INDEX N°.	PART N°.	DESCRIPTION	Q.TY	SERIAL N°. KC80462
1	(PK130506140)	LIFT PUMP (SEE FIG. 0433)	1	J30479T -
2	PK130996070	JOINT (KIT)	1	J30479T -
3	PK011300616	SCREW	2	J30479T -
4	PK198486840	CONNECTION	2	J30479T -
5	PK130306021	FILTER	1	J30479T -
6	PK130366020	. ELEMENT	1	J30479T -
7	PK130396030	. PLUG	1	J30479T -
8	PK010101035	. SCREW	2	J30479T -
9	PK026100010	. WASHER	2	J30479T -
10	PK130436011	. BOLT	2	J30479T -
11	PK130326051	. WASHER	5	J30479T -
12	PK130976200	BRACKET	1	J30479T -
13	PK020100010	NUT	2	J30479T -
14	PK027100010	WASHER	2	J30479T -
15	PK011310816	SCREW	2	J30479T -
16	PK068209084	HOSE	1	J30479T -
17	PK067100015	CLIP	4	J30479T -
18	PK131246090	CONNECTION	2	J30479T -
19	PK068209104	PIPE	1	J30479T -
20	PK130306180	WATER SEPARATOR	1	J30479T -

https://truckmanualshub.com/

FIG. 0433 LOW PRESSURE FUEL SYSTEM

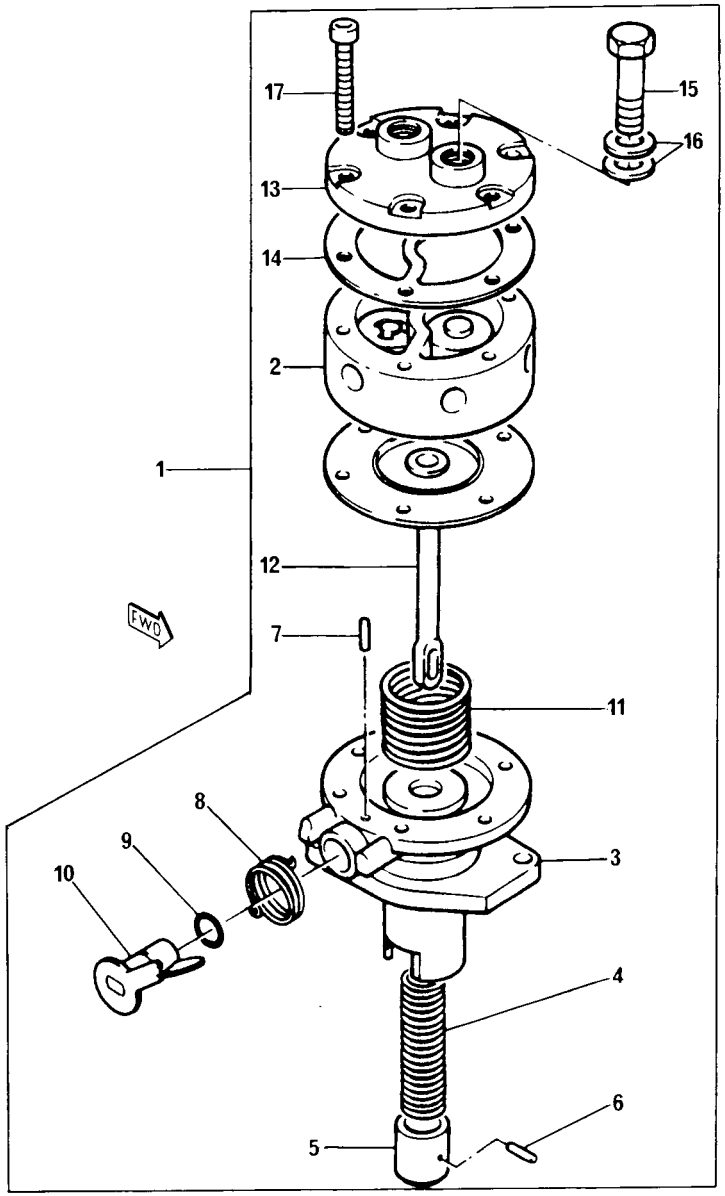

FIG. N°. :0433

INDEX N°.	PART N°.	DESCRIPTION	Q.TY	SERIAL N°. KC80462
1	PK130506140	LIFT PUMP ASSY.	1	J30479T -
2	☆	. BODY	1	J30479T -
3	PK130516080	. BODY	1	J30479T -
4	PK130516081	. SPRING	1	J30479T -
5	PK130516082	. PLUNGER	1	J30479T -
6	PK130516085	. PIN	1	J30479T -
7	PK130516088	. PIN	1	J30479T -
8	PK130516083	. SPRING	1	J30479T -
9	PK131226180	. O-RING	1	J30479T -
10	PK130516086	. LEVER	1	J30479T -
11	PK130516087	. SPRING	1	J30479T -
12	PK130516084	. DIAPHRAGM	1	J30479T -
13	PK130516090	. CAP	1	J30479T -
14	PK130516089	. GASKET	1	J30479T -
15	PK130516092	. BOLT	2	J30479T -
16	PK130516069	. WASHER	4	J30479T -
17	PK130516091	. SCREW	6	J30479T -

https://truckmanualshub.com/

FIG. 0451 FUEL INJECTION EQUIPMENT (DIESEL)

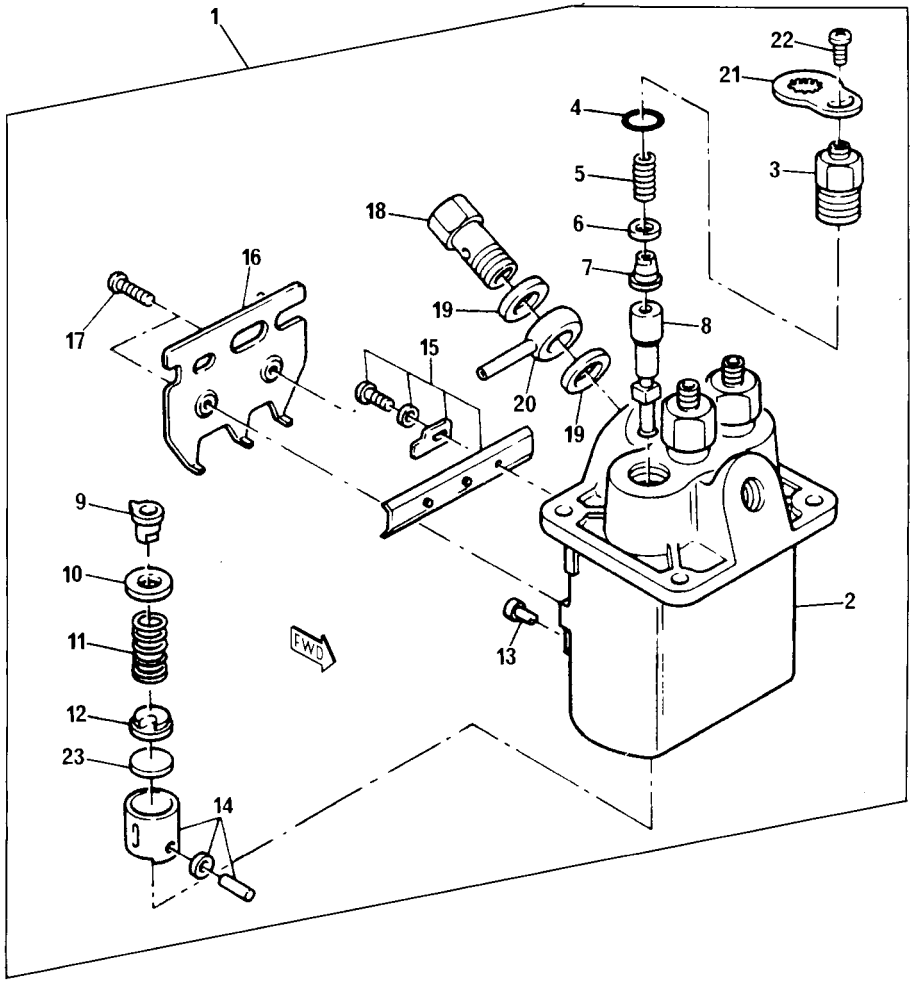

FIG. N°. :0451

INDEX N°.	PART N°.	DESCRIPTION	Q.TY	SERIAL N°. KC80462
1	PK131017310	INJECTION PUMP ASSY.	1	J30479T -
2	PK131296665	. HOUSING	1	J30479T -
3	PK131196120	. HOLDER	3	J30479T -
4	PK131226170	. O-RING	3	J30479T -
5	PK131176430	. SPRING	3	J30479T -
6	PK131186100	. GASKET	3	J30479T -
7	PK131156160	. VALVE	3	J30479T -
8	PK131116390	. ELEMENT	3	J30479T -
9	PK131296638	. SLEEVE	3	J30479T -
10	PK131296620	. SEAT	3	J30479T -
11	PK131176440	. SPRING	3	J30479T -
12	PK131296621	. SEAT	3	J30479T -
13	PK131296651	. PIN	3	J30479T -
14	PK131256120	. TAPPET	3	J30479T -
15	PK131296636	. RACK	1	J30479T -
16	PK131296650	. BRACKET	1	J30479T -
17	PK131136320	. SCREW	2	J30479T -
18	PK131236190	. BOLT	1	J30479T -
19	PK131426180	. WASHER	2	J30479T -
20	PK131246130	. NIPPLE	1	J30479T -
21	PK131296662	. PLATE	3	J30479T -
22	PK131136330	. SCREW	3	J30479T -
23	PK131296622	PLATE (+) 1.85 mm	AR	J30479T -
	PK131296623	PLATE (+) 1.90 mm	AR	J30479T -
	PK131296624	PLATE (+) 1.95 mm	AR	J30479T -
	PK131296625	PLATE (+) 2.00 mm	AR	J30479T -
	PK131296626	PLATE (+) 2.05 mm	AR	J30479T -
	PK131296627	PLATE (+) 2.10 mm	AR	J30479T -
	PK131296628	PLATE (+) 2.15 mm	AR	J30479T -
	PK131296629	PLATE (+) 2.20 mm	AR	J30479T -
	PK131296630	PLATE (+) 2.25 mm	AR	J30479T -
	PK131296631	PLATE (+) 2.30 mm	AR	J30479T -
	PK131296632	PLATE (+) 2.35 mm	AR	J30479T -
	PK131296633	PLATE (+) 2.40 mm	AR	J30479T -
	PK131296634	PLATE (+) 2.45 mm	AR	J30479T -
	PK131296635	PLATE (+) 2.50 mm	AR	J30479T -

https://truckmanualshub.com/

COOLING SYSTEM

https://truckmanualshub.com/

FIG. 0503 WATER PUMP, THERMOSTAT AND HEAT EXCHANGER

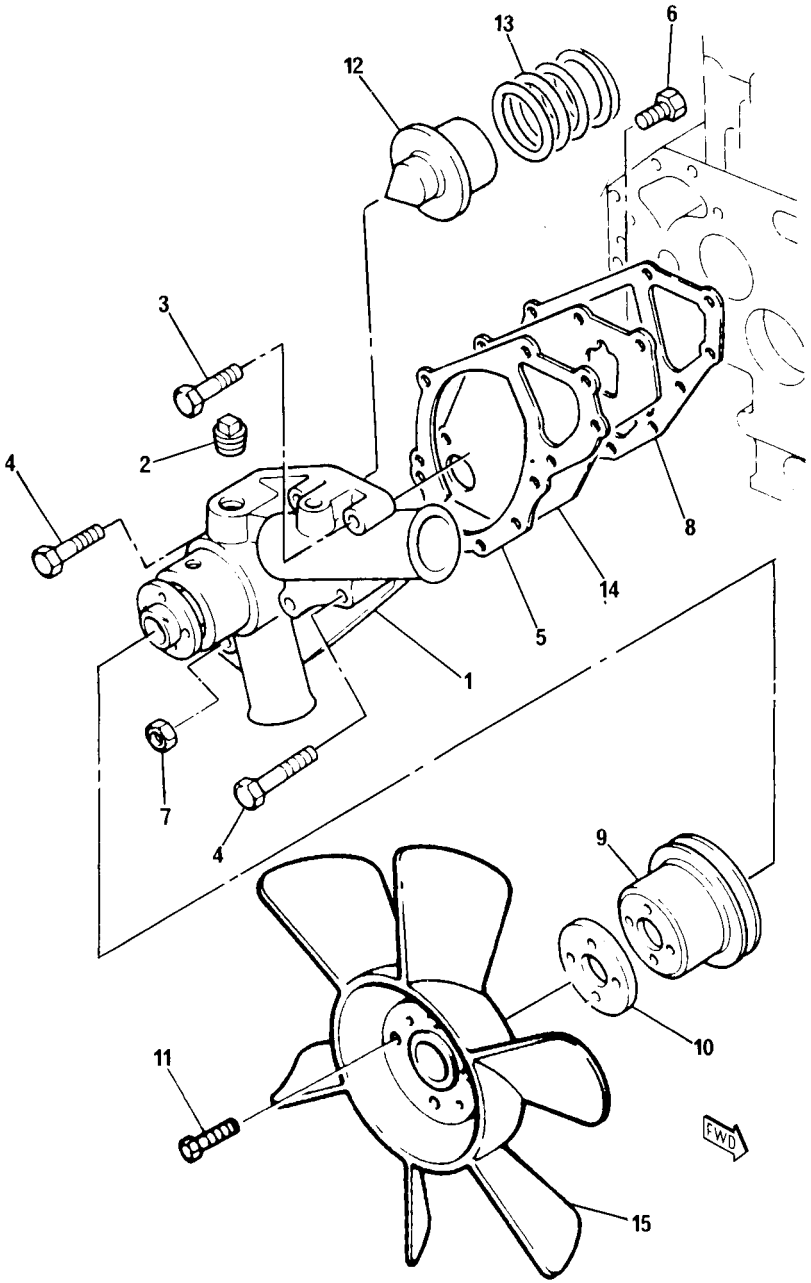

FIG. N°. :0503

INDEX N°.	PART N°.	DESCRIPTION	Q.TY	SERIAL N°. KC80462
1	PK145016471	WATER PUMP ASSY.	1	J30479T -
2	PK064500030	PLUG	2	J30479T -
3	PK011300660	SCREW	1	J30479T -
4	PK011300635	SCREW	4	J30479T -
5	PK145996280	JOINT (KIT)	1	J30479T -
6	PK011300616	SCREW	1	J30479T -
7	PK023100006	NUT	1	J30479T -
8	PK145996270	JOINT (KIT)	1	J30479T -
9	PK145336490	PULLEY	1	J30479T -
10	PK145386520	PLATE	1	J30479T -
11	PK011310614	SCREW	4	J30479T -
12	PK145206021	THERMOSTAT	1	J30479T -
13	PK198216790	SPRING	1	J30479T -
14	PK145146090	PLATE	1	J30479T -
15	PK145306460	FAN	1	J30479T -

https://truckmanualshub.com/

ELECTRICAL SYSTEM

https://truckmanualshub.com/

FIG. 0601 ALTERNATOR AND GENERATOR

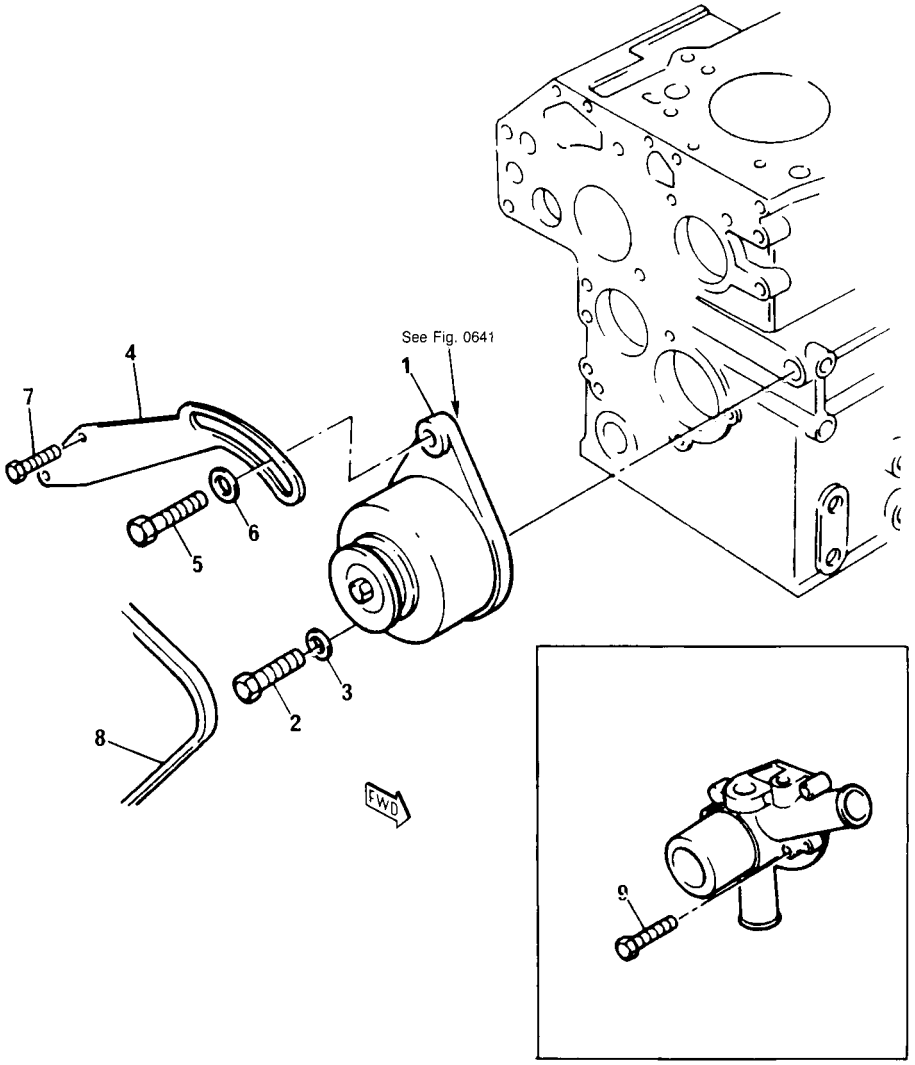

FIG. N°. :0601

INDEX N°.	PART N°.	DESCRIPTION	Q.TY	SERIAL N°. KC80462
1	(PK185046160)	ALTERNATOR (SEE FIG. 0641)	1	J30479T -
2	PK011301035	SCREW	1	J30479T -
3	PK026100010	WASHER	1	J30479T -
4	PK185726370	LEVER	1	J30479T -
5	PK011310830	SCREW	1	J30479T -
6	PK026100008	WASHER	2	J30479T -
7	PK011300640	SCREW	2	J30479T -
8	PK080109049	BELT	1	J30479T -
9	PK011300645	SCREW	2	J30479T -

https://truckmanualshub.com/

FIG. 0621 STARTER MOTOR

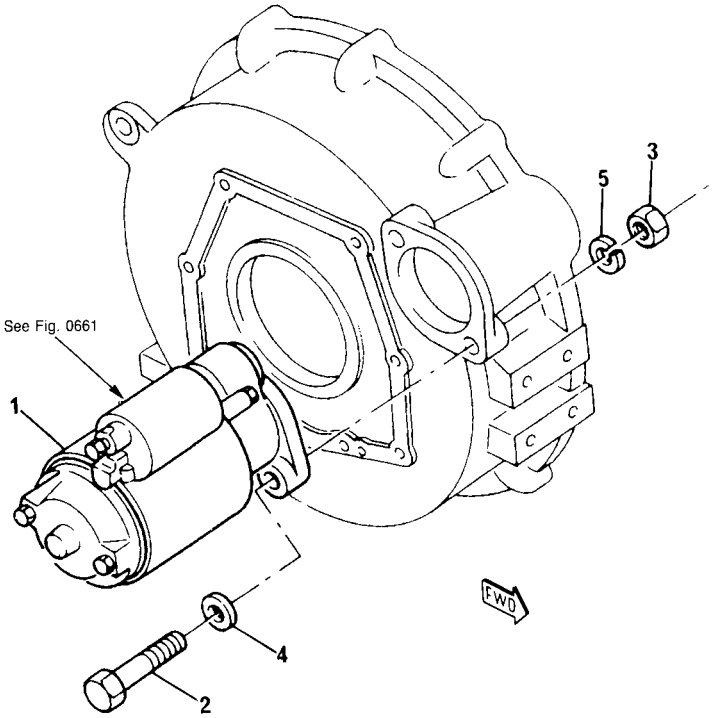

FIG. N°. :0621

INDEX N°.	PART N°.	DESCRIPTION	Q.TY	SERIAL N°. KC80462
1	(PK185086321)	STARTER MOTOR (SEE FIG. 0661)	1	J30479T -
2	PK010101045	SCREW	2	J30479T -
3	PK020100010	NUT	2	J30479T -
4	PK026200010	WASHER	2	J30479T -
5	PK027100010	WASHER	2	J30479T -

https://truckmanualshub.com/

FIG. 0633 APPLICATION MISCELLANEOUS AND AUXILIAIRES

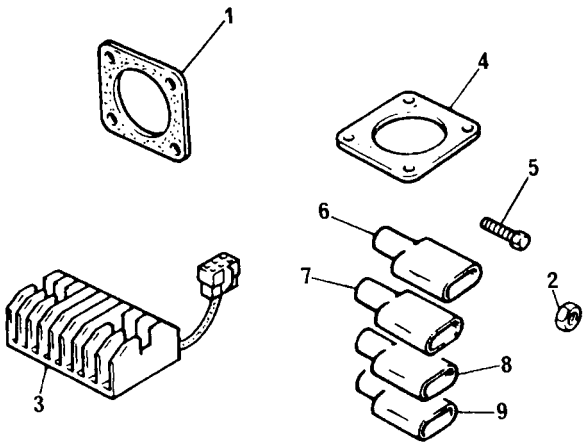

FIG. N°. :0633

INDEX N°.	PART N°.	DESCRIPTION	Q.TY	SERIAL N°. KC80462
1	PK314990013	JOINT	1	J30479T -
2	PK020100008	NUT	1	J30479T -
3	PK185516060	REGULATOR	1	J30479T -
4	PK314120070	FLANGE	1	J30479T -
5	PK011310825	SCREW	4	J30479T -
6	PK385620200	CONNECTION	2	J30479T -
7	PK385620010	CONNECTION	1	J30479T -
8	PK385620140	CONNECTION	1	J30479T -
9	PK385620270	CONNECTION	1	J30479T -

https://truckmanualshub.com/

FIG. 0641 ALTERNATOR AND GENERATOR

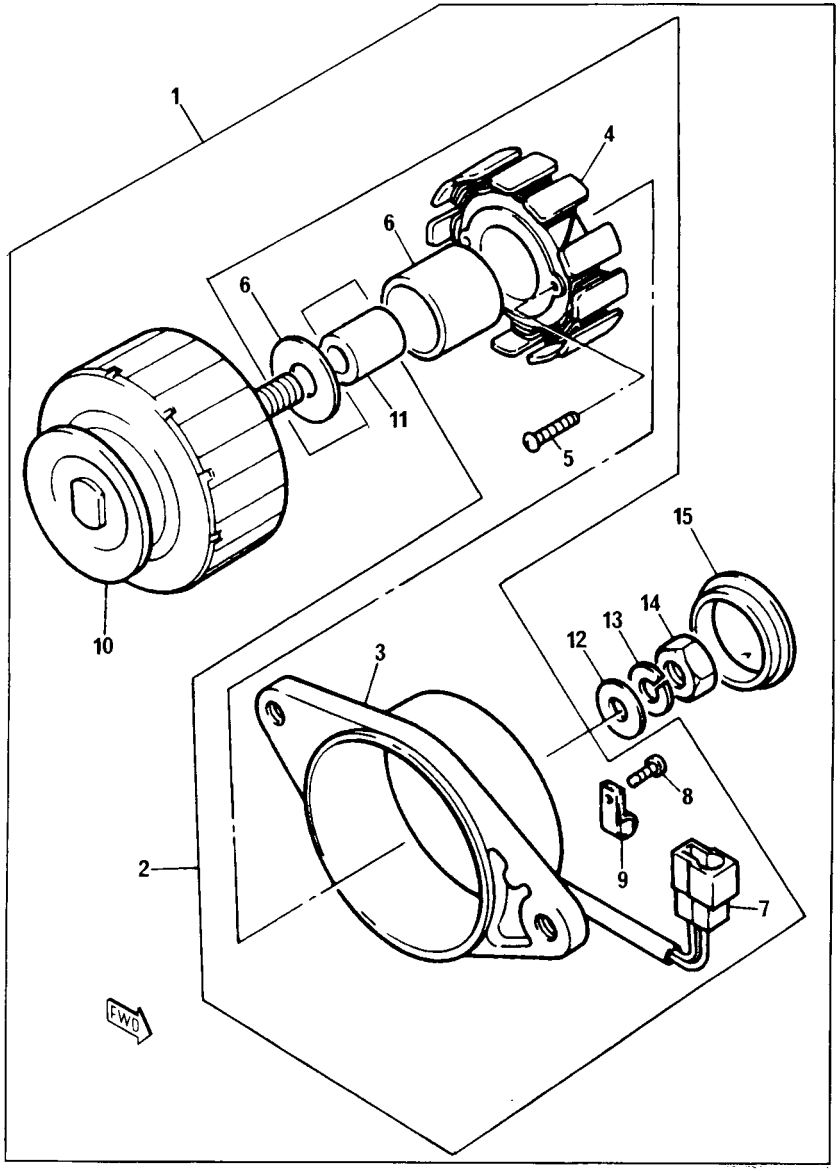

FIG. N°. :0641

INDEX N°.	PART N°.	DESCRIPTION	Q.TY	SERIAL N°. KC80462
1	PK185046160	ALTERNATOR ASSY.	1	J30479T -
2	PK185446200	. PLATE	1	J30479T -
3	PK185716190	. . PLATE	1	J30479T -
4	PK185446201	. . STATOR	1	J30479T -
5	PK015140425	. . SCREW	2	J30479T -
6	PK040126201	. . BEARING	4	J30479T -
7	PK185446203	. . CONNECTION	1	J30479T -
8	PK015140408	. . SCREW	1	J30479T -
9	PK185446204	. . CLAMP	1	J30479T -
10	PK185446199	. PULLEY	1	J30479T -
11	PK199236510	. COLLAR	1	J30479T -
12	PK026100010	. WASHER	1	J30479T -
13	PK027100010	. WASHER	1	J30479T -
14	PK020210010	. NUT	1	J30479T -
15	PK185446202	. CAP	1	J30479T -

https://truckmanualshub.com/

FIG. 0661 STARTER MOTOR

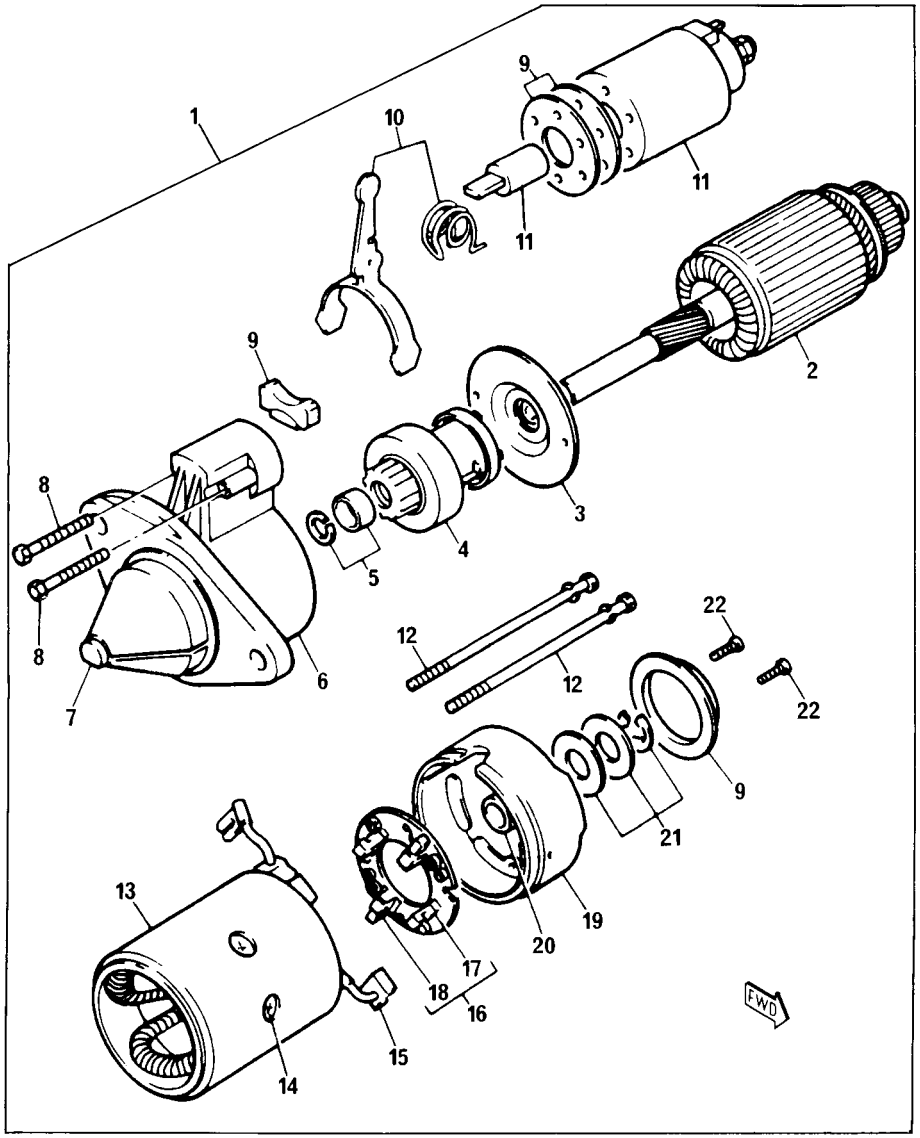

FIG. N°. :0661

INDEX N°.	PART N°.	DESCRIPTION	Q.TY	SERIAL N°. KC80462
1	PK185086321	STARTER MOTOR ASSY.	1	J30479T -
2	PK185846159	. ARMATURE	1	J30479T -
3	PK185846163	. PLATE	1	J30479T -
4	PK185866050	. GEAR	1	J30479T -
5	PK185846127	. PINION	1	J30479T -
6	PK185846454	. CASE	1	J30479T -
7	PK185846134	. . BUSH	1	J30479T -
8	PK185846300	. BOLT	2	J30479T -
9	PK185846136	. COVER	3	J30479T -
10	PK185846165	. LEVER	1	J30479T -
11	PK185816180	. SWITCH	1	J30479T -
12	PK185846166	. BOLT	2	J30479T -
13	PK185846160	. COIL	1	J30479T -
14	PK185846161	. . SCREW	4	J30479T -
15	PK185416130	. . BRUSH	2	J30479T -
16	PK185416150	. HOLDER	1	J30479T -
17	PK185416141	. . BRUSH	2	J30479T -
18	PK185846119	. . SPRING	4	J30479T -
19	PK185846449	. COVER	1	J30479T -
20	PK185846131	. . BUSH	1	J30479T -
21	PK185846126	. WASHER	1	J30479T -
22	PK015140412	. SCREW	2	J30479T -

https://truckmanualshub.com/

FIG. 0665 COLD THROTTLE AND STOP CONTROLS

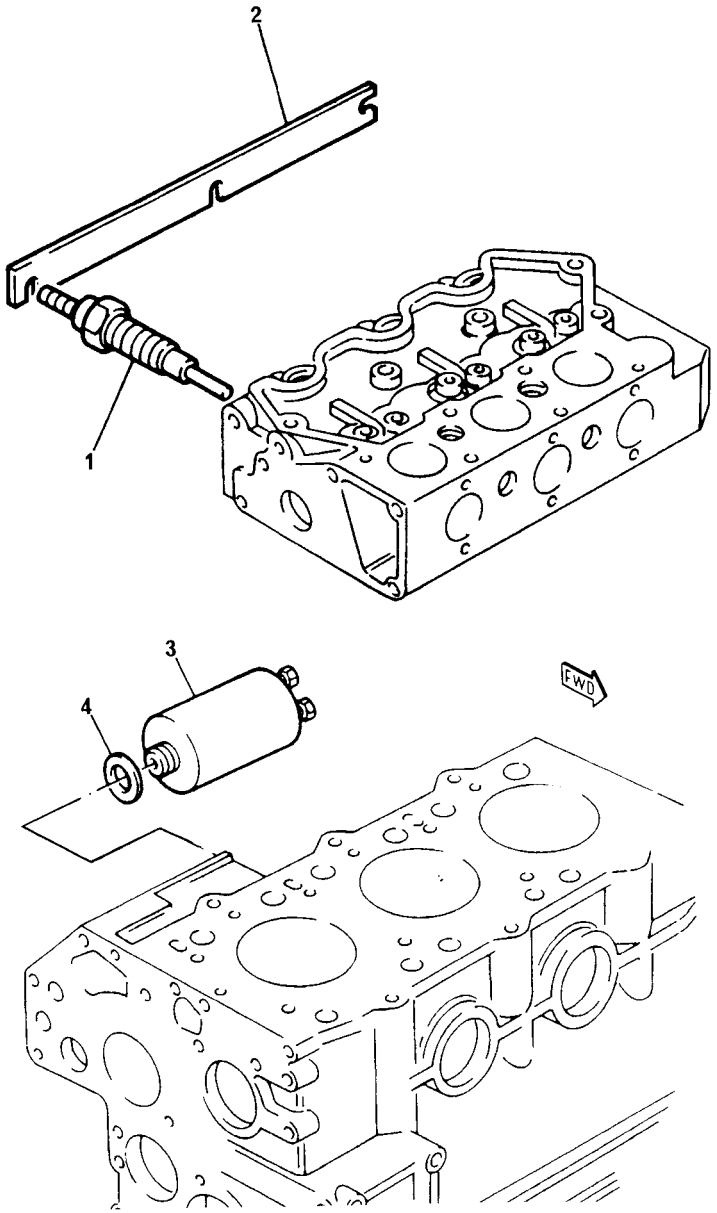

FIG. N°. :0665

INDEX N°.	PART N°.	DESCRIPTION	Q.TY	SERIAL N°. KC80462
1	PK185366060	HEATER	3	J30479T -
2	PK185376110	BAR	1	J30479T -
3	PK185206082	SOLENOID	1	J30479T -
4	PK025100016	WASHER	1	J30479T -

https://truckmanualshub.com/

FIG. 0666 TACHOMETER AND HOUR CORDER

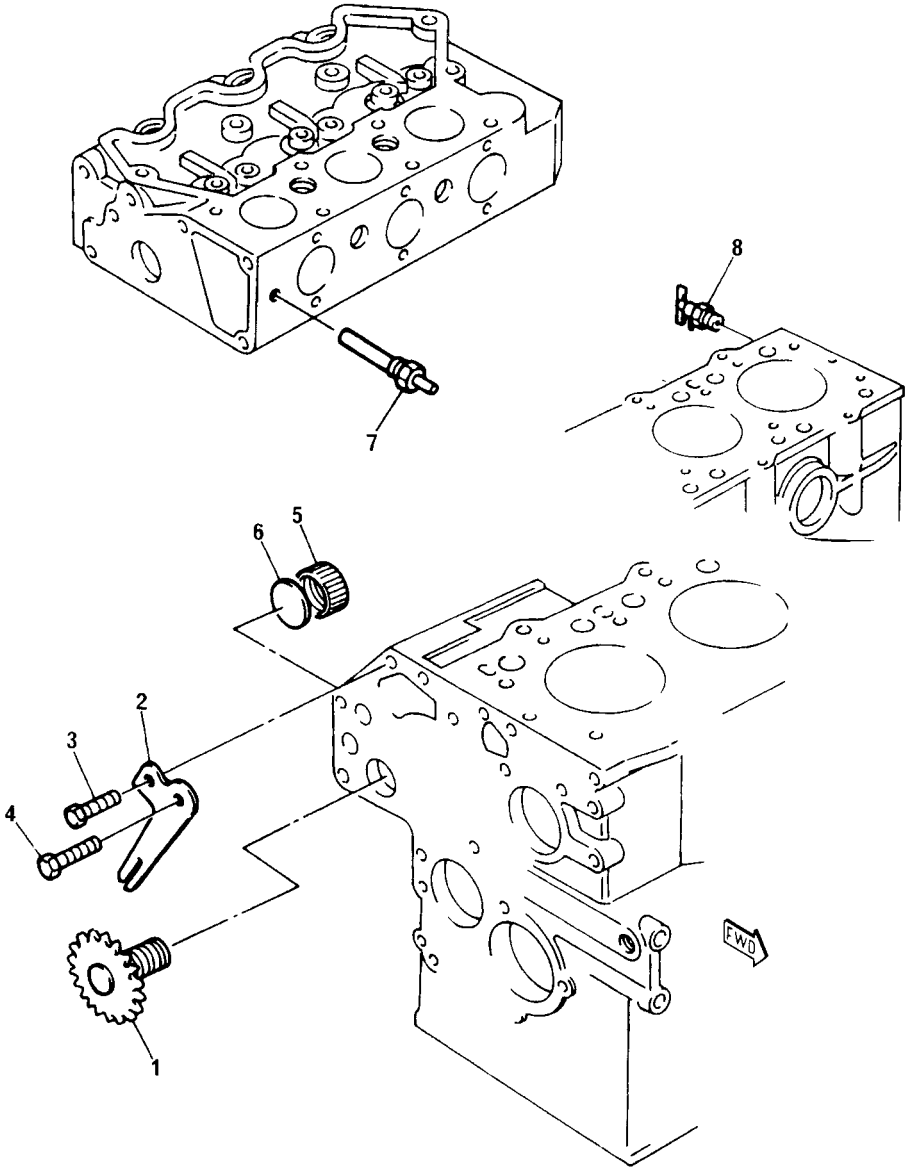

FIG. N°. :0666

INDEX N°.	PART N°.	DESCRIPTION	Q.TY	SERIAL N°. KC80462
1	PK120076070	SHAFT	1	J30479T -
2	PK199566651	PLATE	1	J30479T -
3	PK011310612	SCREW	1	J30479T -
4	PK010700610	SCREW	1	J30479T -
5	PK199376230	CAP	1	J30479T -
6	PK120996060	SEAL	1	J30479T -
7	PK385720230	SENDER	1	J30479T -
8	PK198736120	COCK	1	J30479T -

https://truckmanualshub.com/

FIG. 0671 ENGINE LIFTING

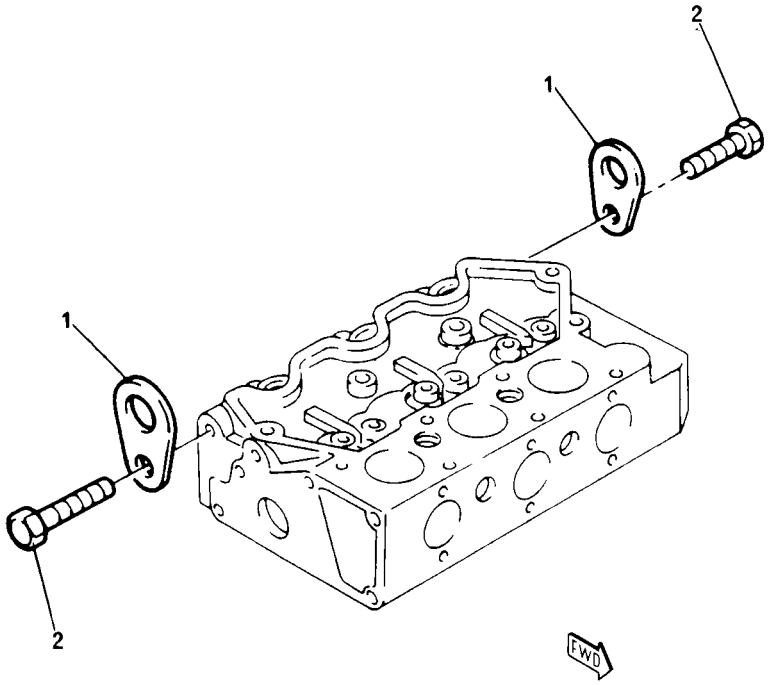

FIG. N°. :0671

INDEX N°.	PART N°.	DESCRIPTION	Q.TY	SERIAL N°. KC80462
1	PK195816200	PLATE	2	J30479T -
2	PK011310816	SCREW	2	J30479T -

https://truckmanualshub.com/

GASKET KIT

https://truckmanualshub.com/

FIG. 0991 JOINTS AND GASKET - COMPLETE SERVICE KIT

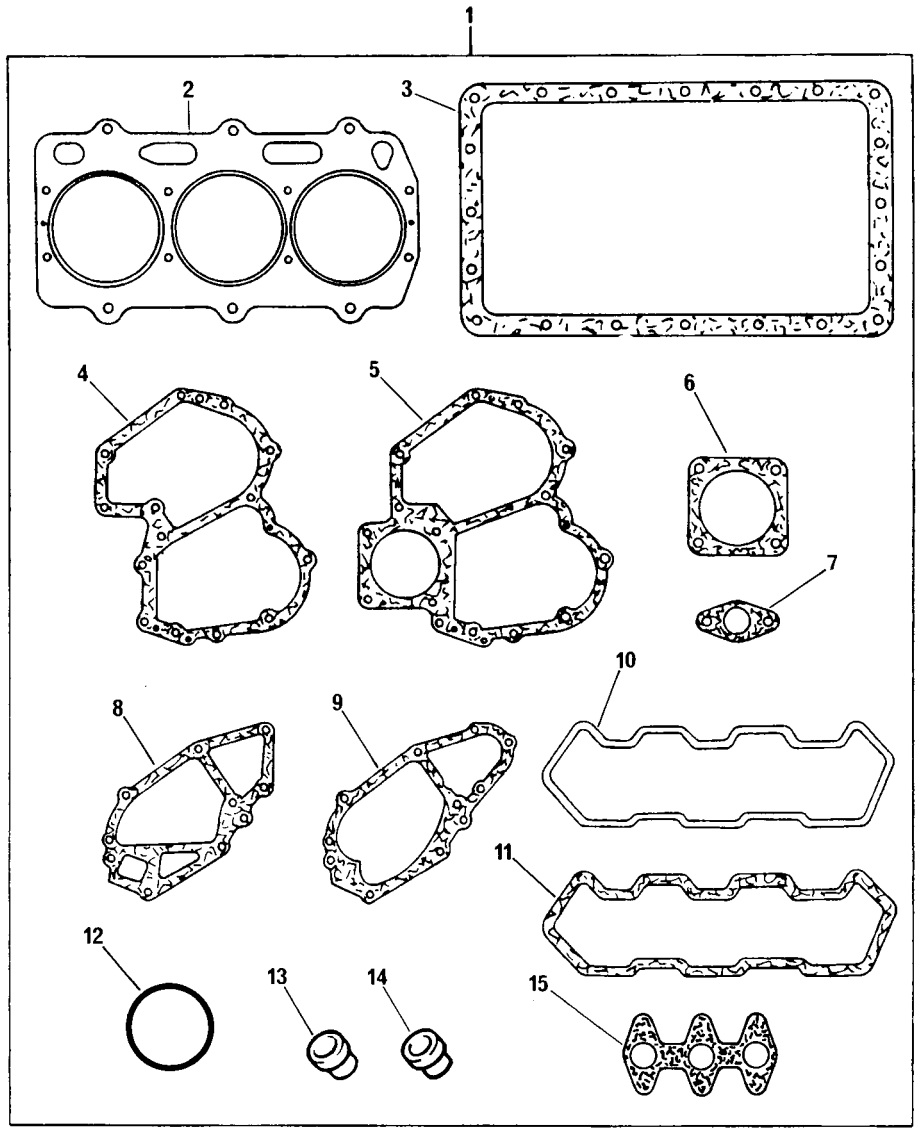

FIG. N°. :0991

INDEX N°.	PART N°.	DESCRIPTION	Q.TY	SERIAL N°. KC80462
1	PK195906600	KIT JOINT/GASKET	AR	J30479T -
2	PK111147240	. GASKET	1	J30479T -
3	PK110996491	. JOINT	1	J30479T -
4	PK165996300	. JOINT	1	J30479T -
5	PK165996310	. JOINT	1	J30479T -
6	PK165996110	. JOINT	1	J30479T -
7	PK130996070	. JOINT	1	J30479T -
8	PK145996280	. JOINT	1	J30479T -
9	PK145996270	. JOINT	1	J30479T -
10	PK052109061	. JOINT	1	J30479T -
11	PK111996271	. JOINT	1	J30479T -
12	PK052300700	. O-RING	1	J30479T -
13	PK120406070	. SEAL	3	J30479T -
14	PK120406050	. SEAL	3	J30479T -
15	PK135996541	. JOINT	1	J30479T -

https://truckmanualshub.com/

ENGINE RELATED PARTS AND ELECTRICAL SYSTEM

https://truckmanualshub.com/

FIG. 1001 BRACKET (SERIAL No. F10001 - F10488)

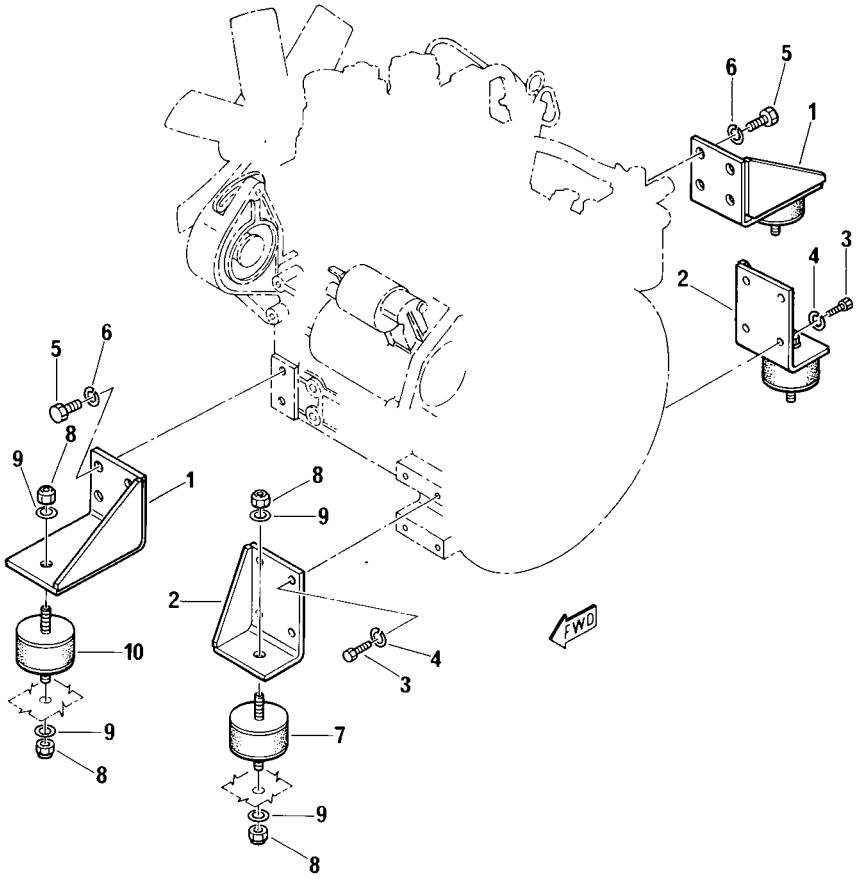

FIG. N°. :1001

INDEX N°.	PART N°.	DESCRIPTION	Q.TY	SERIAL N°. PC05-6F
1	20W-01-R2011	FRONT BRACKET	2	F10001 - F10488
2	20W-01-R2061	REAR BRACKET	2	F10001 - F10488
3	02010-70622	BOLT	6	F10001 - F10488
4	PZF802150510	WASHER, SPRING	6	F10001 - F10488
5	20M-01-68510	BOLT	8	F10001 - F10488
6	PZF802150512	WASHER, SPRING	8	F10001 - F10488
7	20M-01-R2081	REAR CUSHION	2	F10001 - F10488
8	PZF801852212	NUT	8	F10001 - F10488
9	01643-31232	WASHER	8	F10001 - F10488
10	20M-01-R2091	FRONT CUSHION	2	F10001 - F10488

https://truckmanualshub.com/

FIG. 1002 BRACKET (SERIAL No. F15001)

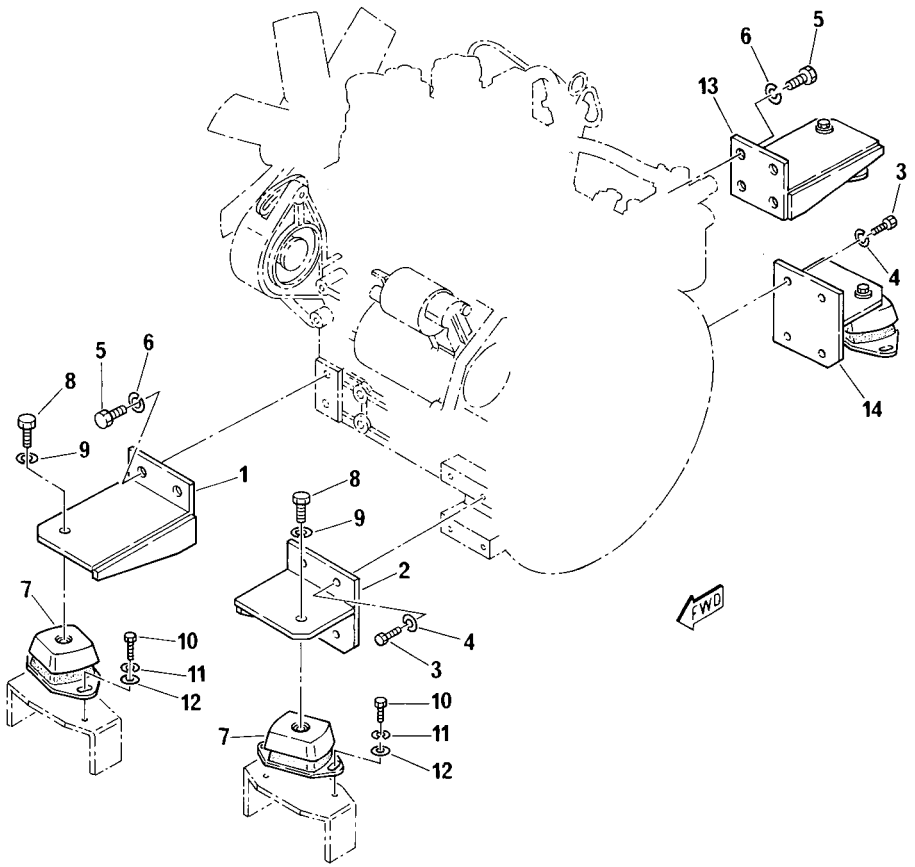

FIG. N°. :1002

INDEX N°.	PART N°.	DESCRIPTION	Q.TY	SERIAL N°. PC05-6F
1	20W-01-R2161	FRONT BRACKET, L.H.	1	F15001 -
2	20W-01-R2181	REAR BRACKET, L.H.	1	F15001 -
3	02010-70622	BOLT	6	F15001 -
4	PZF802150510	WASHER, SPRING	6	F15001 -
5	20M-01-68510	BOLT	8	F15001 -
6	PZF802150512	WASHER, SPRING	8	F15001 -
7	PZF808001046	CUSHION	4	F15001 -
8	01010-51230	BOLT	4	F15001 -
9	PZF802150512	WASHER, SPRING	4	F15001 -
10	01010-50820	BOLT	8	F15001 -
11	PZF802150508	WASHER, SPRING	8	F15001 -
12	PZF802070008	WASHER	8	F15001 -
13	20W-01-R2151	FRONT BRACKET, R.H.	1	F15001 -
14	20W-01-R2171	REAR BRACKET, R.H.	1	F15001 -

https://truckmanualshub.com/

FIG. 1011 POWER TAKE OFF

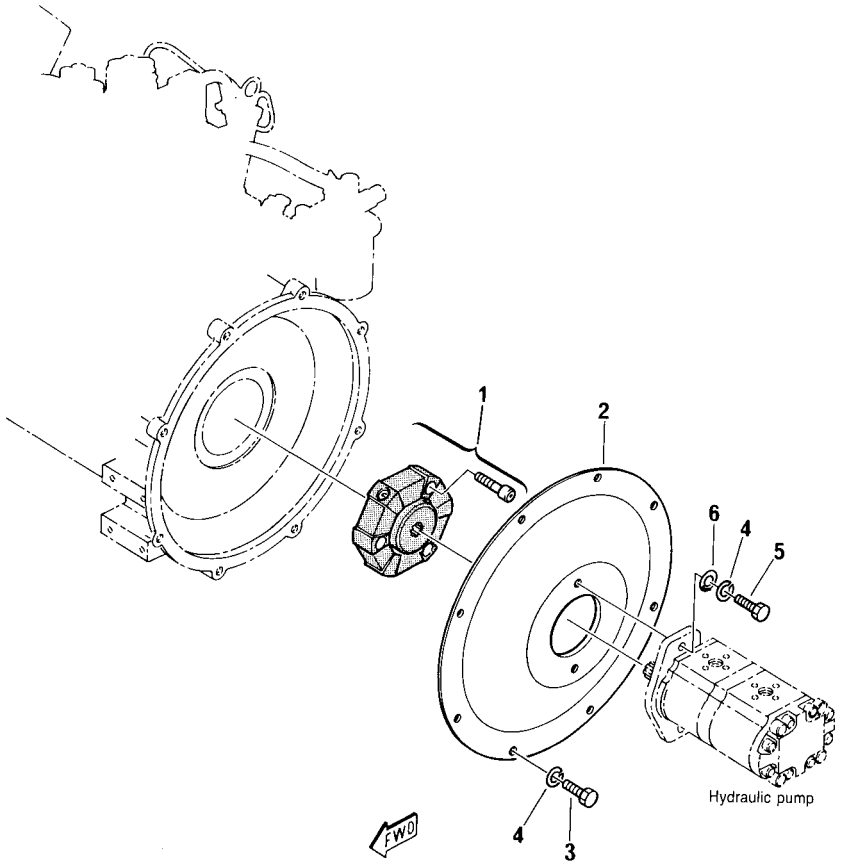

FIG. N°. :1011

INDEX N°.	PART N°.	DESCRIPTION	Q.TY	SERIAL N°. PC05-6F
1	20N-01-R5001	COUPLING ASSY.	1	F10001 -
2	20W-01-R5011	COVER	1	F10001 -
3	02010-70622	BOLT	6	F10001 -
4	PZF802150510	WASHER, SPRING	8	F10001 -
5	01010-51030	BOLT	2	F10001 - F15275
	PZF801105546	BOLT	2	F15276 -
6	01643-31032	WASHER	2	F10001 -

https://truckmanualshub.com/

FIG. 1102 PIPE, EXHAUST

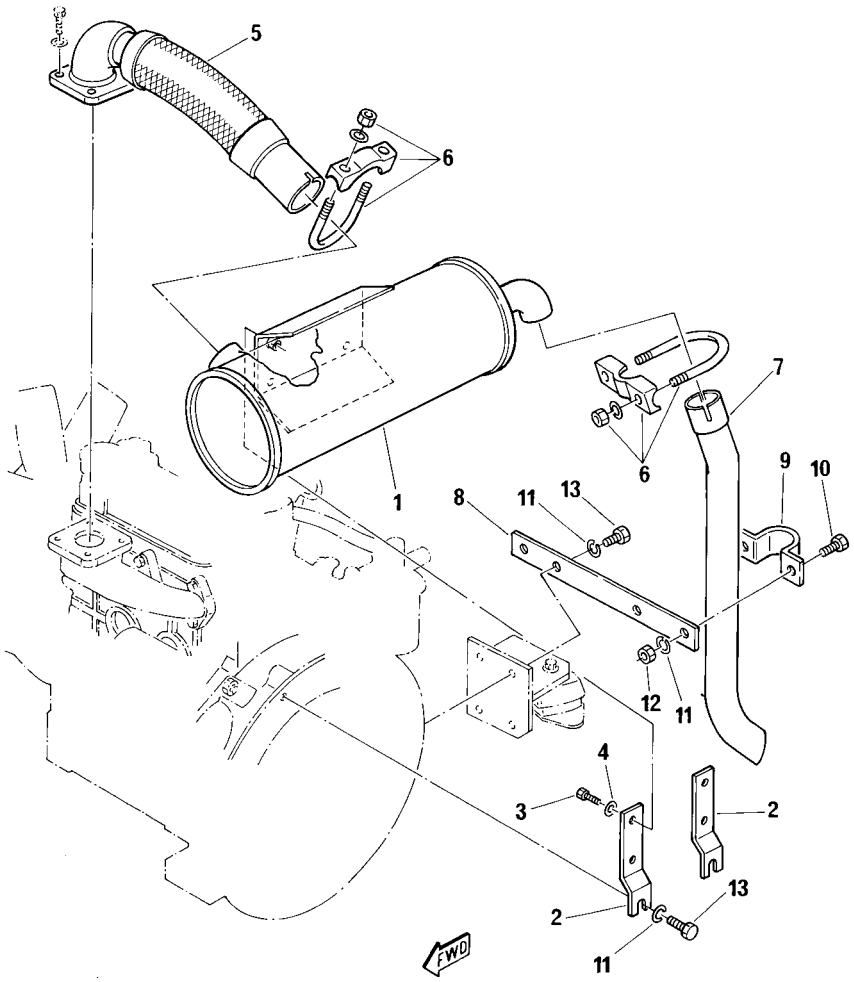

FIG. N°. 1102

INDEX N°.	PART N°.	DESCRIPTION	Q.TY	SERIAL N°. PC05-6F
1	20M-02-R1041	MUFFLER	1	F10001 -
2	20M-02-R1011	MUFFLER BRACKET	2	F10001 -
3	01010-50820	BOLT	4	F10001 -
4	PZF802150508	WASHER, SPRING	4	F10001 -
5	20M-02-R1051	HOSE	1	F10001 -
6	PZF802660074	CLAMP	2	F10001 -
7	20M-02-R1001	PIPE, EXHAUST	1	F10001 -
8	20M-02-R1021	BRACKET	1	F10001 -
9	20N-01-R1031	CLAMP	1	F10001 -
10	01010-51025	BOLT	2	F10001 -
11	PZF802150510	WASHER, SPRING	6	F10001 -
12	01580-11008	NUT	2	F10001 -
13	02010-70632	BOLT	4	F10001 -

https://truckmanualshub.com/

FIG. 1105 AIR FILTER

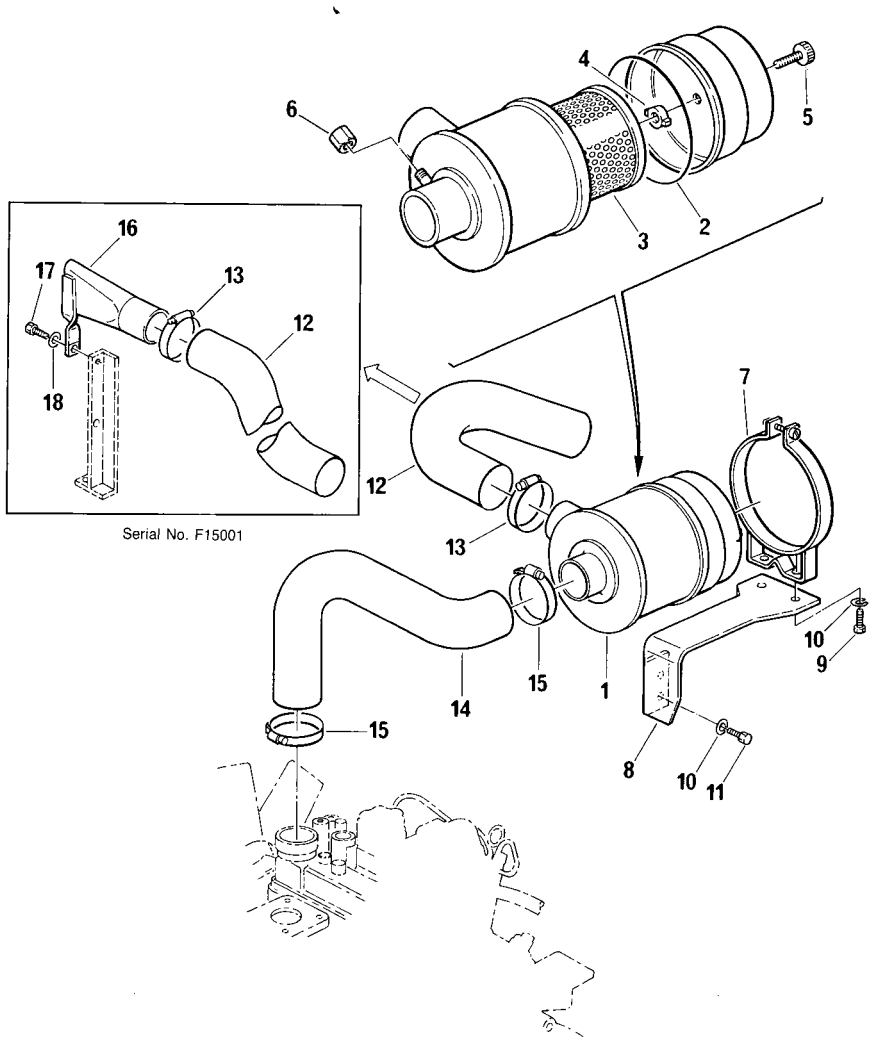

Serial No. F15001

FIG. N°. :1105

INDEX N°.	PART N°.	DESCRIPTION	Q.TY	SERIAL N°. PC05-6F
1	20M-01-R3111	AIR FILTER ASSY.	1	F10001 -
2	20M-01-R3091	. SEAL	1	F10001 -
3	20M-01-R3061	. ELEMENT	1	F10001 -
4	20M-01-R3081	. NUT	1	F10001 -
5	20M-01-R3071	. BOLT, WING	1	F10001 -
6	20M-01-R3101	. PLUG	1	F10001 -
7	PZF200514067	CLAMP	1	F10001 -
8	20L-02-R3201	BRACKET	1	F10001 -
9	01010-50816	BOLT	2	F10001 -
10	PZF802150508	WASHER, SPRING	4	F10001 -
11	PZF801014066	BOLT	2	F10001 -
12	20M-01-R3021	HOSE	1	F10001 - F10488
	20M-01-R3221	HOSE	1	F15001 -
13	PZF802660176	CLAMP	2	F15001 -
14	20M-01-R3011	HOSE	1	F10001 -
15	PZF802660012	CLAMP	2	F10001 -
16	20M-01-R3211	PIPE	1	F15001 -
17	01010-50825	BOLT	1	F15001 -
18	01643-30823	WASHER	1	F15001 -

https://truckmanualshub.com/

FIG. 1107 AIR FILTER (TBG SPEC.)

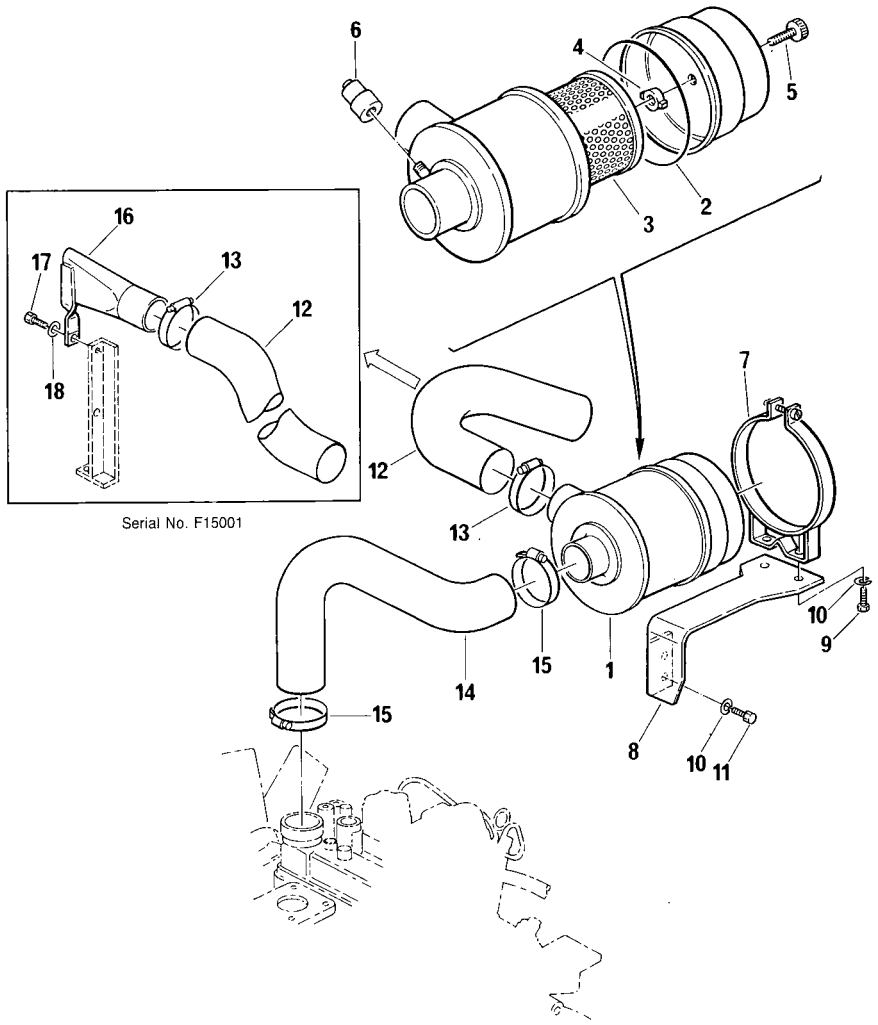

FIG. N°. :1107

INDEX N°.	PART N°.	DESCRIPTION	Q.TY	SERIAL N°. PC05-6F
1	20M-01-R3111	AIR FILTER ASSY.	1	F10001 -
2	20M-01-R3091	. SEAL	1	F10001 -
3	20M-01-R3061	. ELEMENT	1	F10001 -
4	20M-01-R3081	. NUT	1	F10001 -
5	20M-01-R3071	. BOLT, WING	1	F10001 -
6	600-18-R3121	STOPPAGE INDICATOR	1	F10001 -
7	PZF200514067	CLAMP	1	F10001 -
8	20L-02-R3201	BRACKET	1	F10001 -
9	01010-50816	BOLT	2	F10001 -
10	PZF802150508	WASHER, SPRING	4	F10001 -
11	PZF801014066	BOLT	2	F10001 -
12	20M-01-R3021	HOSE	1	F10001 - F10488
	20M-01-R3221	HOSE	1	F15001 -
13	PZF802660176	CLAMP	2	F15001 -
14	20M-01-R3011	HOSE	1	F10001 -
15	PZF802660012	CLAMP	2	F10001 -
16	20M-01-R3211	PIPE	1	F15001 -
17	01010-50825	BOLT	1	F15001 -
18	01643-30823	WASHER	1	F15001 -

https://truckmanualshub.com/

FIG. 1201 RADIATOR

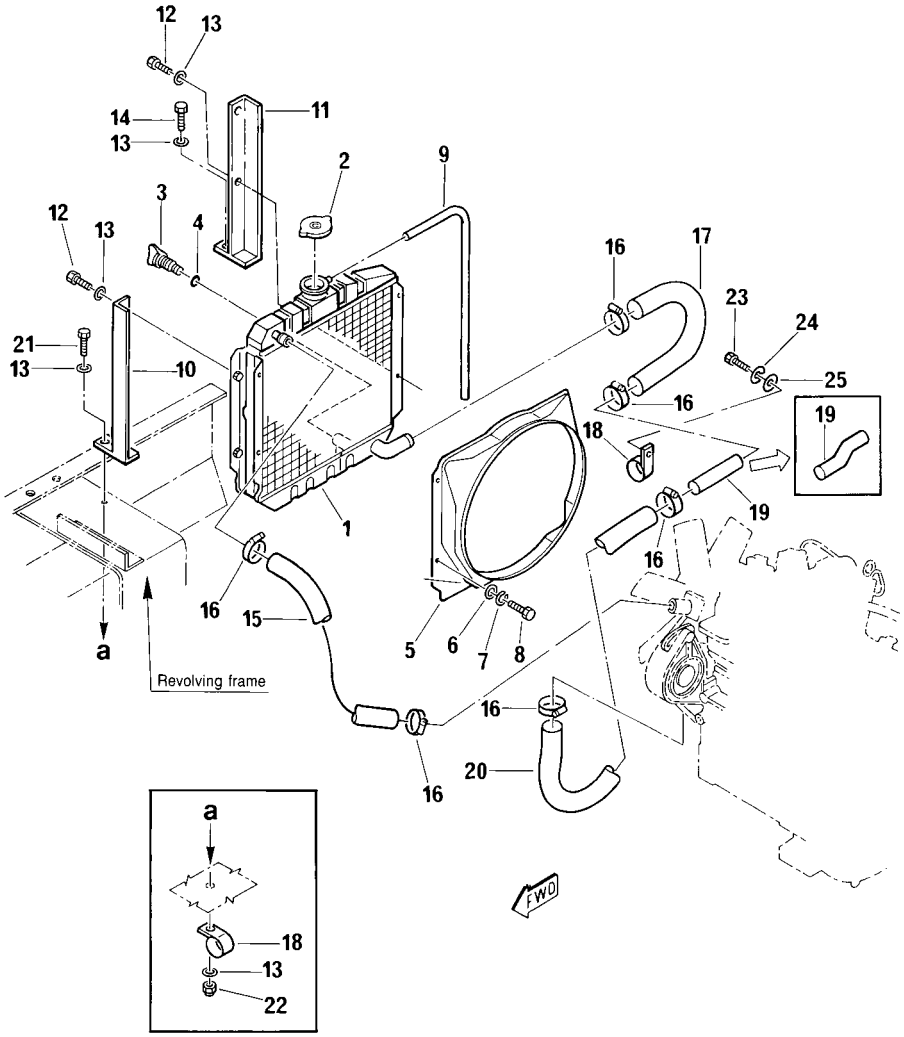

From serial n° F10001 to serial n° F15220

FIG. N°. :1201

INDEX N°.	PART N°.	DESCRIPTION	Q.TY	SERIAL N°. PC05-6F
1	20N-03-48500	RADIATOR ASSY.	1	F10001 -
2	20M-03-11130	. CAP	1	F10001 -
3	20N-03-11181	. PLUG, DRAIN	1	F10001 -
4	07000-01007	. O-RING	1	F10001 -
5	20N-03-41120	. SHROUD	1	F10001 -
6	01643-30823	. WASHER	4	F10001 -
7	PZF802150508	. WASHER, SPRING	4	F10001 -
8	01010-50816	. BOLT	4	F10001 -
9	07270-00870	. HOSE	1	F10001 -
10	20M-03-R2001	FRONT BRACKET	1	F10001 -
11	20M-03-R2011	REAR BRACKET	1	F10001 -
12	01010-50820	BOLT	3	F10001 -
13	01643-30823	WASHER	6	F10001 - F15220
	01643-30823	WASHER	5	F15221 -
14	01010-50825	BOLT	1	F10001 -
15	20M-03-R1031	UPPER HOSE	1	F10001 -
16	PZF802660007	CLAMP	6	F10001 -
17	20M-03-R1011	LOWER HOSE	1	F10001 -
18	PZF802660034	CLAMP	2	F10001 - F15220
	PZF802660034	CLAMP	1	F15221 -
19	20M-03-R1041	HOSE	1	F10001 - F10488
	20M-03-R1101	HOSE	1	F15001 -
20	20M-03-R1021	LOWER HOSE	1	F10001 -
21	01010-50840	BOLT	1	F10001 - F15220
	01010-50825	BOLT	1	F15221 -
22	PZF801852208	NUT	1	F10001 - F15220
23	PZF801014551	BOLT	1	F10001 -
24	PZF802150506	WASHER, SPRING	1	F10001 -
25	01643-30623	WASHER	1	F10001 -

https://truckmanualshub.com/

FIG. 1302 FUEL TANK AND PIPING

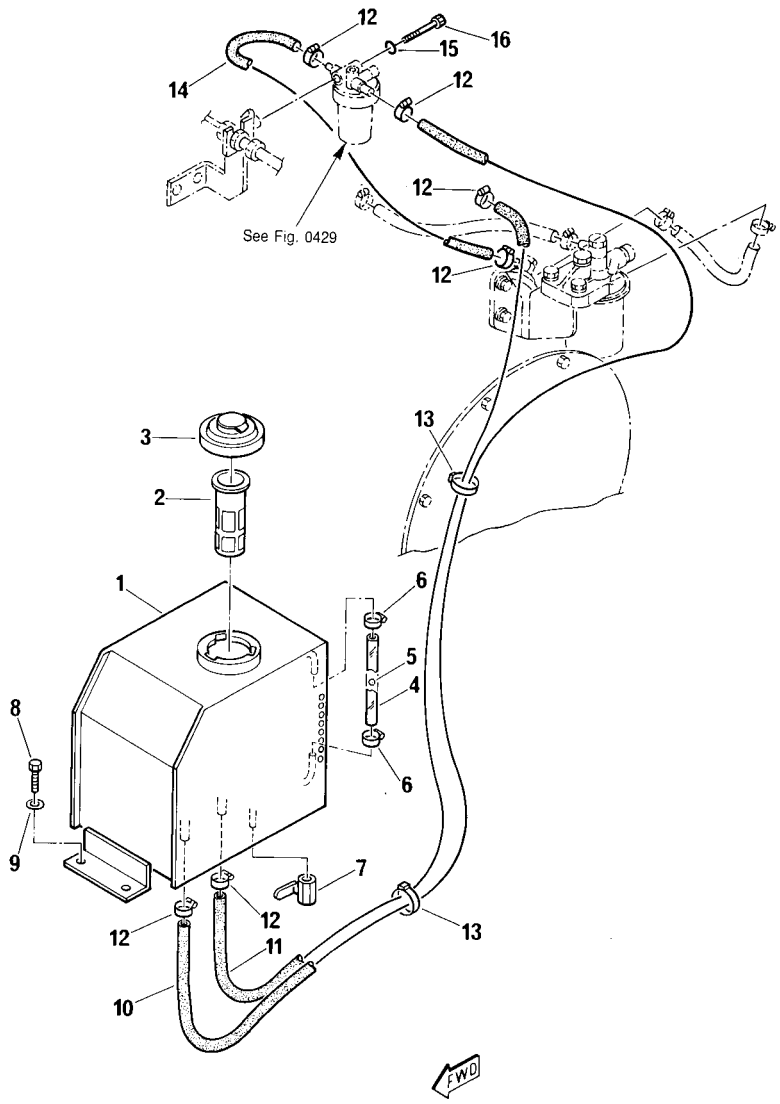

FIG. N°. :1302

INDEX N°.	PART N°.	DESCRIPTION	Q.TY	SERIAL N°. PC05-6F
1	20W-04-R1001	TANK	1	F10001 -
2	PZF848200022	FILTER	1	F10001 -
3	20Y-04-R1071	PLUG	1	F10001 -
4	PZF852951112	TUBE	1	F10001 -
5	20R-04-21210	BALL	1	F10001 -
6	PZF802660002	CLAMP	2	F10001 -
7	PZF500361465	COCK	1	F10001 -
8	01010-50820	BOLT	4	F10001 -
9	01643-30823	WASHER	4	F10001 -
10	20M-04-R2031	TUBE	1	F10001 -
11	20M-04-R2021	TUBE	1	F10001 -
12	PZF802660002	CLAMP	6	F10001 -
13	PZF885180004	CLAMP	2	F10001 -
14	20W-04-R2061	TUBE	1	F10001 -
15	01643-30823	WASHER	1	F10001 -
16	01010-50860	BOLT	1	F10001 -

https://truckmanualshub.com/

FIG. 1401 BATTERY

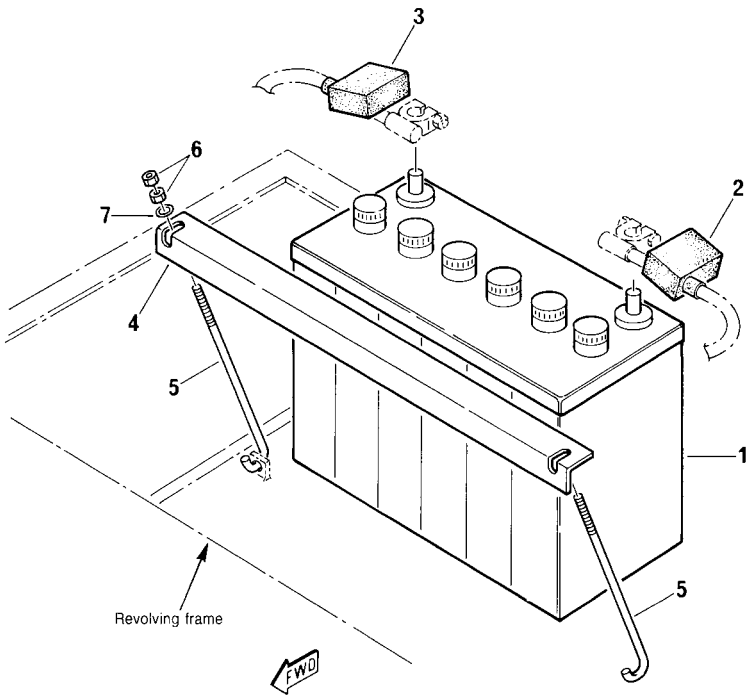

FIG. N°. :1401

INDEX N°.	PART N°.	DESCRIPTION	Q.TY	SERIAL N°. PC05-6F
1	PZF885010014	BATTERY	1	F10001 -
2	Z7820-R2151	TERMINAL, L.H.	1	F10001 -
3	Z7820-R2161	TERMINAL, D.H.	1	F10001 -
4	20M-06-48410	HOLDER	1	F10001 -
5	20M-06-R3021	ROD	2	F10001 -
6	01580-10605	NUT	4	F10001 -
7	01643-30623	WASHER	2	F10001 -

https://truckmanualshub.com/

FIG. 1411 INSTRUMENT PANEL

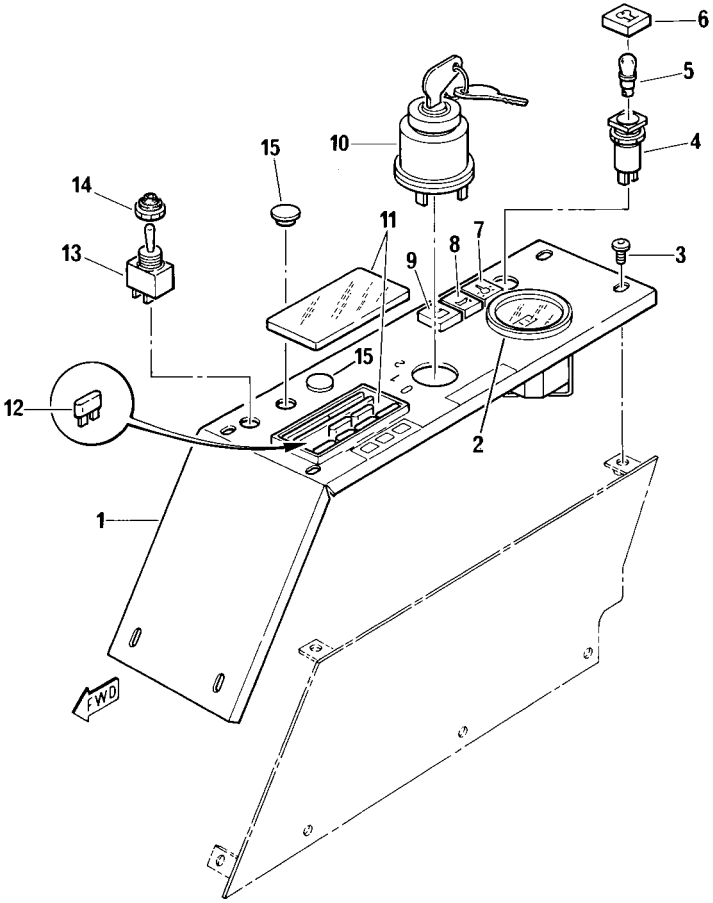

FIG. N°. :1411

INDEX N°.	PART N°.	DESCRIPTION	Q.TY	SERIAL N°. PC05-6F
1	20W-06-R1251	INSTRUMENT PANEL	1	F10001 -
2	20N-06-R2121	METER, SERVICE	1	F10001 -
3	20N-06-R1351	SCREW	6	F10001 -
4	20M-06-R1151	WARNING LIGHT	4	F10001 -
5	20M-06-R1201	BULB	4	F10001 -
6	20M-06-R1161	WARNING PREHEATING	1	F10001 -
7	20M-06-R1171	WARNING TEMPERATURE	1	F10001 -
8	20M-06-R1181	WARNING OIL PRESSURE	1	F10001 -
9	20M-06-R1191	WARNING GENERATOR	1	F10001 -
10	20S-06-31130	SWITCH, STARTING	1	F10001 -
11	20R-06-R1221	BOX, FUSE	1	F10001 -
12	PZF885091006	. FUSE 7.5A.	1	F10001 -
	PZF885091007	. FUSE 10A.	4	F10001 -
	PZF885091008	. FUSE 15A.	1	F10001 -
	PZF885091009	. FUSE 30A.	2	F10001 -
13	20N-06-R1231	SWITCH, LAMP	1	F10001 -
14	20N-06-R1241	NUT	1	F10001 -
15	20M-06-R1211	PLUG	2	F10001 -

https://truckmanualshub.com/

FIG. 1413 INSTRUMENT PANEL (TBG SPEC.)

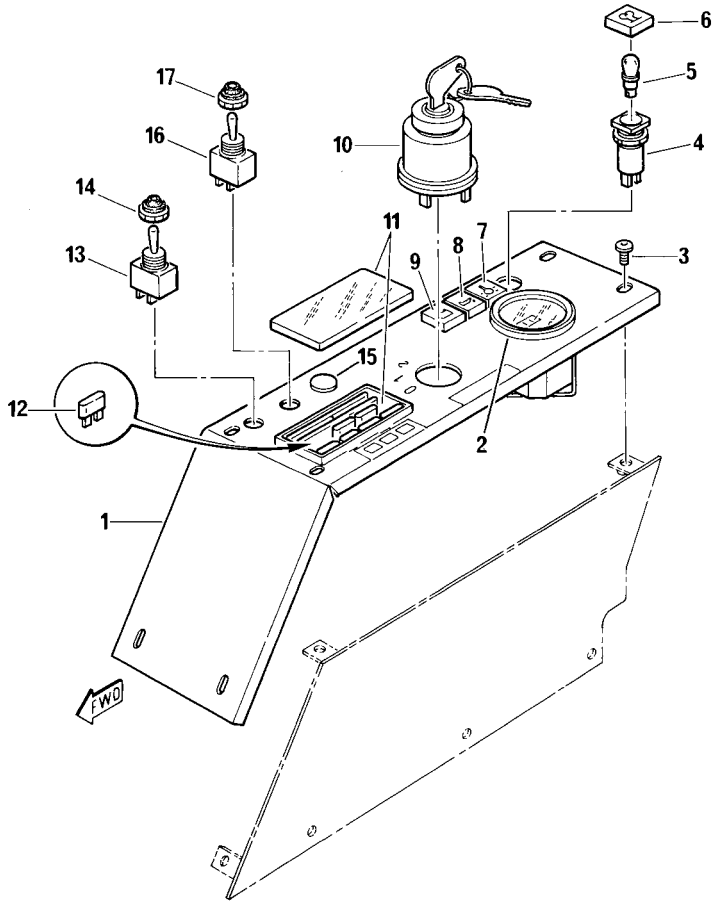

FIG. N°. :1413

INDEX N°.	PART N°.	DESCRIPTION	Q.TY	SERIAL N°. PC05-6F
1	20W-06-R1251	INSTRUMENT PANEL	1	F10001
2	20N-06-R2121	METER, SERVICE	1	F10001
3	20N-06-R1351	SCREW	6	F10001
4	20M-06-R1151	WARNING LIGHT	4	F10001
5	20M-06-R1201	BULB	4	F10001
6	20M-06-R1161	WARNING PREHEATING	1	F10001
7	20M-06-R1171	WARNING TEMPERATURE	1	F10001
8	20M-06-R1181	WARNING OIL PRESSURE	1	F10001
9	20M-06-R1191	WARNING GENERATOR	1	F10001
10	20S-06-31130	SWITCH, STARTING	1	F10001
11	20R-06-R1221	BOX, FUSE	1	F10001
12	PZF885091006	. FUSE 7.5A.	1	F10001
	PZF885091007	. FUSE 10A.	4	F10001
	PZF885091008	. FUSE 15A.	1	F1000
	PZF885091009	. FUSE 30A.	2	F10001
13	20N-06-R1231	SWITCH, LAMP	1	F10001
14	20N-06-R1241	NUT	1	F10001
15	20M-06-R1211	PLUG	1	F10001
16	20N-06-R1231	SWITCH, HORN	1	F10001
17	20N-06-R1241	NUT	1	F10001

https://truckmanualshub.com/

FIG. 1501 ELECTRICAL SYSTEM (INSTRUMENT PANEL LINE)

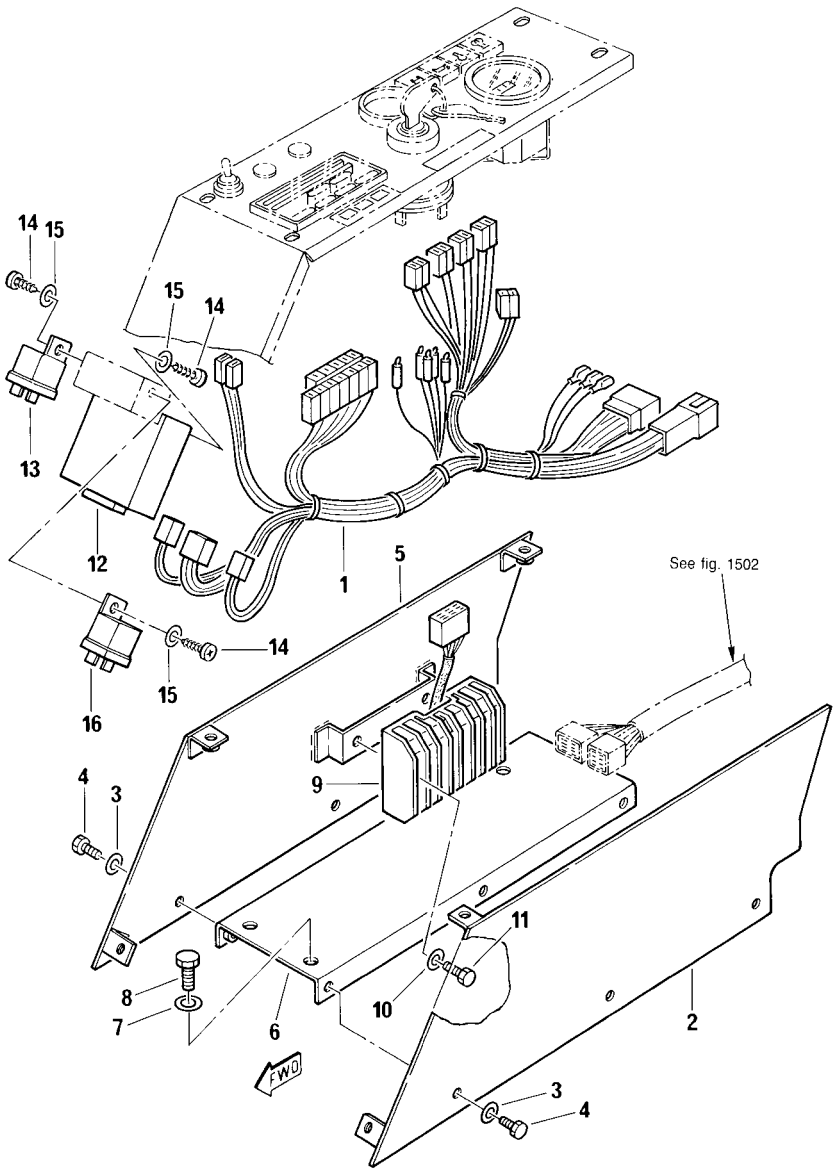

FIG. N°. :1501

INDEX N°.	PART N°.	DESCRIPTION	Q.TY	SERIAL N°. PC05-6F
1	20M-06-R1121	WIRE ASSY.	1	F10001 -
2	20M-06-48122	INSIDE PLATE	1	F10001 -
3	01643-30623	WASHER	6	F10001 -
4	01010-50610	BOLT	6	F10001 -
5	20W-06-R1081	OUTSIDE PLATE	1	F10001 -
6	20M-06-48150	PLATE	1	F10001 -
7	01643-30823	WASHER	4	F10001 -
8	01010-50816	BOLT	4	F10001 -
9	PK185516060	REGULATOR	1	F10001 -
10	PZF802150506	WASHER SPRING	2	F10001 -
11	PZF801014047	BOLT	2	F10001 -
12	PZF885411104	TIMER	1	F10001 -
13	PZF885070011	STARTING RELAY	1	F10001 -
14	PZF801370040	SELF-DRILLING SCREW	3	F10001 -
15	01641-20508	WASHER	3	F10001 -
16	PZF885411064	STARTING RELAY	1	F10201 -

https://truckmanualshub.com/

FIG. 1502 ELECTRICAL SYSTEM - CHASSIS LINE

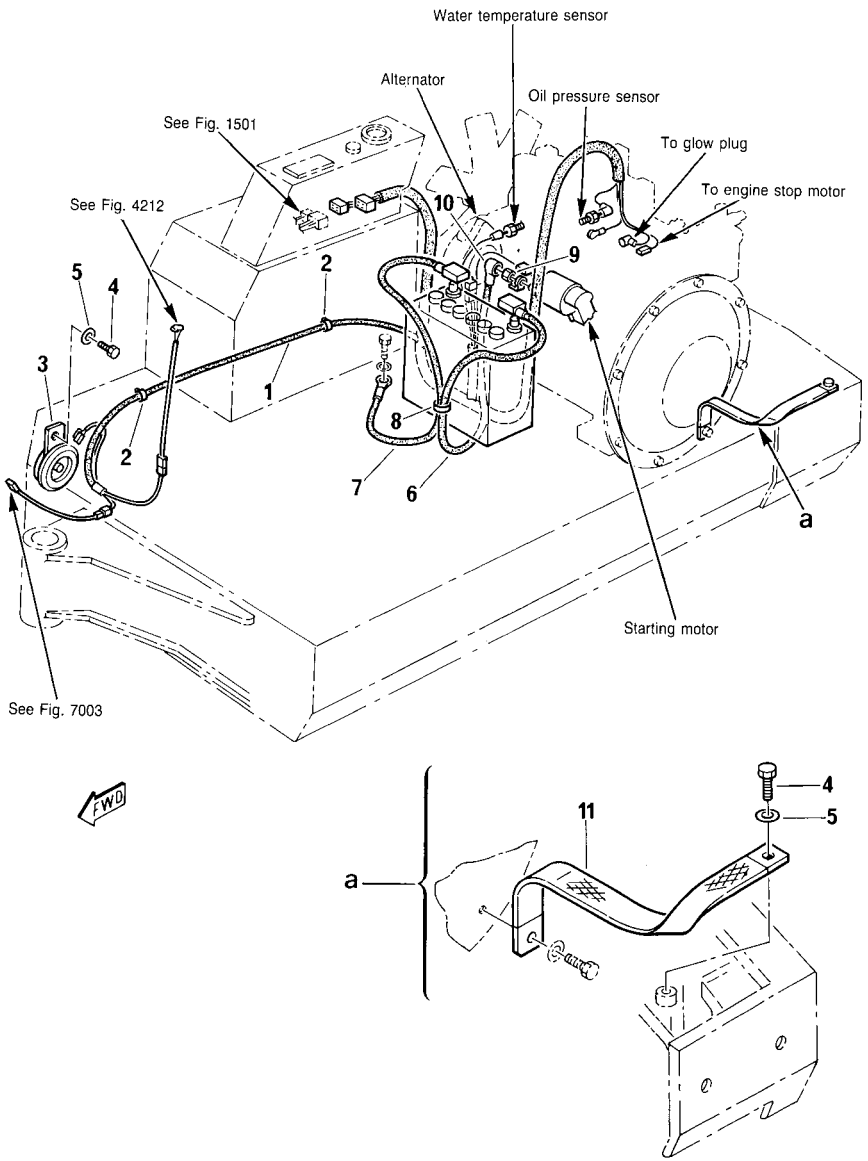

FIG. N°. :1502

INDEX N°.	PART N°.	DESCRIPTION	Q.TY	SERIAL N°. PC05-6F
1	20M-06-R2091	WIRE ASSY.	1	F10001 -
2	PZF885180004	CLAMP	3	F10001 -
3	20N-06-R2131	HORN	1	F10001 -
4	01010-50816	BOLT	2	F10001 -
5	01643-30823	WASHER	2	F10001 -
6	20M-06-R2061	BATTERY WIRE (+)	1	F10001 -
7	20M-06-R2051	BATTERY WIRE (—)	1	F10001 -
8	PZF885180005	CLAMP	3	F10001 -
9	01580-10806	NUT	1	F10001 -
10	PZF885240002	TERMINAL CAP	1	F10001 -
11	20M-06-R2041	EARTH WIRE	1	F10001 -

https://truckmanualshub.com/

SWING AND FINAL DRIVE

https://truckmanualshub.com/

FIG. 2501 CIRCLE SWING

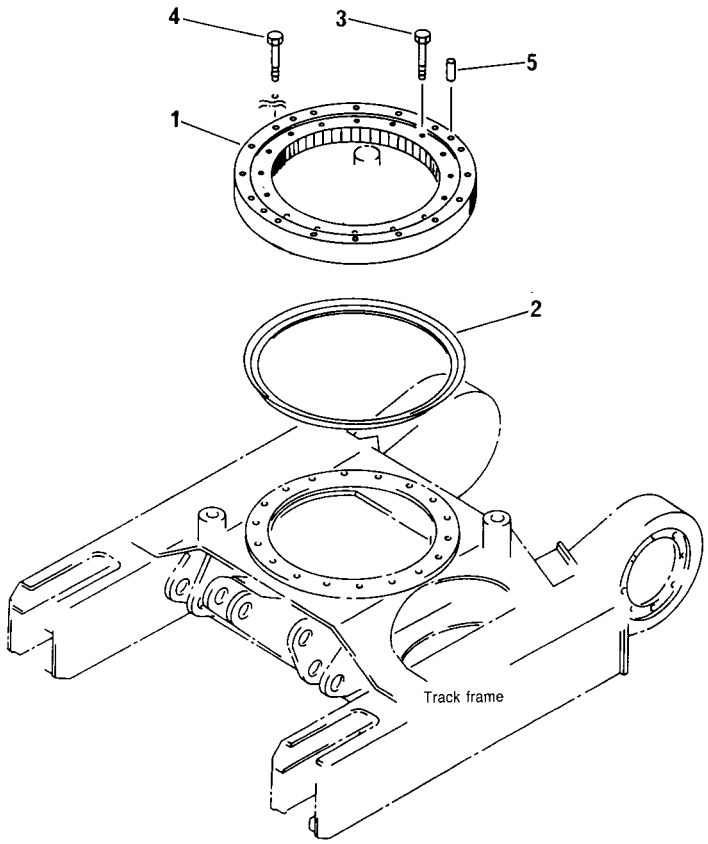

FIG. N°. :2501

INDEX N°.	PART N°.	DESCRIPTION	Q.TY	SERIAL N°. PC05-6F
1	20M-25-R1021	CIRCLE, SWING	1	F10001 -
2	20M-25-R1011	. SEAL	AR	F10001 -
3	01010-51050	BOLT	18	F10001 -
4	01010-51030	BOLT	13	F10001 -
5	PZF802540120	PIN, DOWEL	2	F10001 -

https://truckmanualshub.com/

UNDER CARRIAGE

https://truckmanualshub.com/

FIG. 3001 TRACK FRAME (FOR STEEL TRACK SHOE)

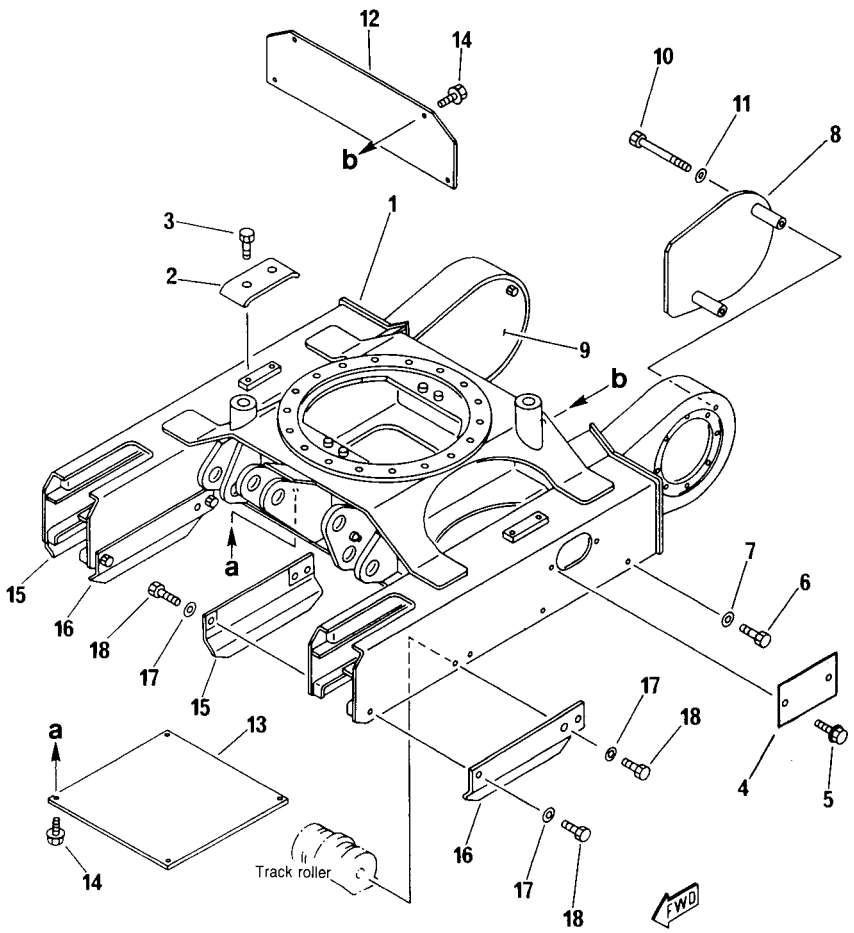

FIG. N°. :3001

INDEX N°.	PART N°.	DESCRIPTION	Q.TY	SERIAL N°. PC05-6F
1	20W-30-11111	TRACK FRAME	1	F10001 -
2	20M-30-11830	PLATE	2	F10001 -
3	01010-51016	BOLT	4	F10001 -
4	20N-30-41240	COVER	2	F10001 -
5	01435-01020	BOLT	4	F10001 -
6	01010-51025	BOLT	4	F10001 -
7	01643-31032	WASHER	4	F10001 -
8	20M-30-48120	COVER, L.H.	1	F10001 -
9	20M-30-48130	COVER, R.H.	1	F10001 -
10	01010-50875	BOLT	4	F10001 -
11	01643-30823	WASHER	4	F10001 -
12	20W-30-11130	COVER	1	F10001 -
13	20M-30-31630	COVER	1	F10001 -
14	01435-00816	BOLT	8	F10001 -
15	20W-30-11820	GUARD, R.H.	2	F10001 -
16	20W-30-11810	GUARD, L.H.	2	F10001 -
17	01643-31032	WASHER	8	F10001 -
18	01010-51025	BOLT	8	F10001 -

https://truckmanualshub.com/

FIG. 3002 TRACK FRAME (FOR RUBBER SHOE)

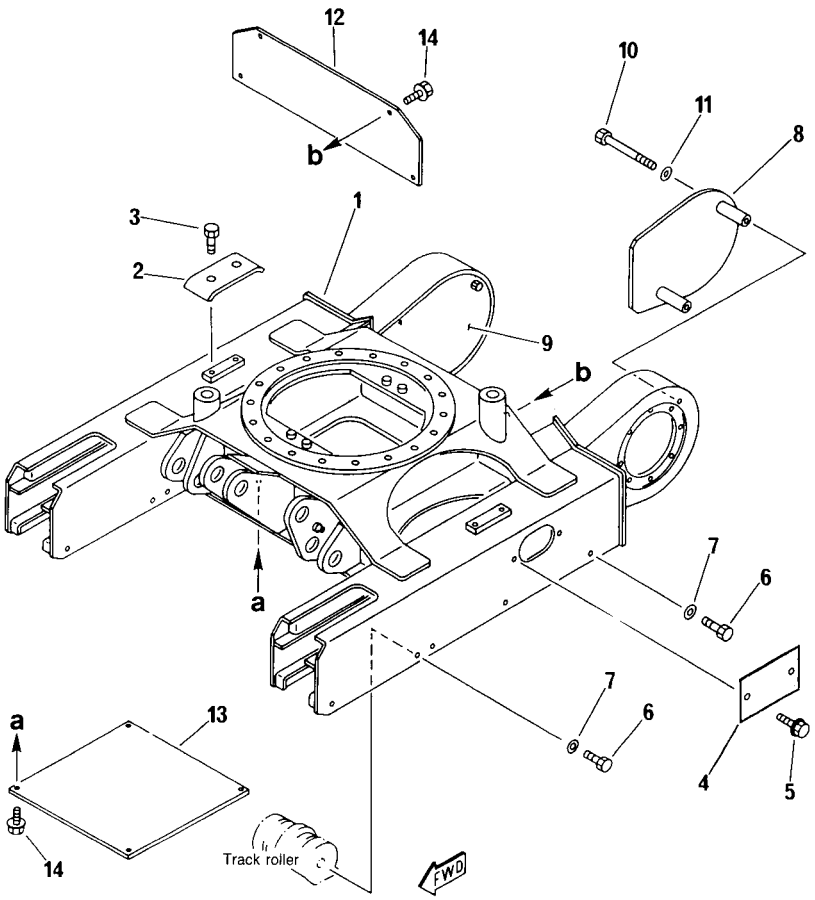

FIG. N°. :3002

INDEX N°.	PART N°.	DESCRIPTION	Q.TY	SERIAL N°. PC05-6F
1	20W-30-11111	TRACK FRAME	1	F10001 -
2	20M-30-11830	PLATE	2	F10001 -
3	01010-51016	BOLT	4	F10001 -
4	20N-30-41240	COVER	2	F10001 -
5	01435-01020	BOLT	4	F10001 -
6	01010-51025	BOLT	12	F10001 -
7	01643-31032	WASHER	12	F10001 -
8	20M-30-48120	COVER, L.H.	1	F10001 -
9	20M-30-48130	COVER, R.H.	1	F10001 -
10	01010-50875	BOLT	4	F10001 -
11	01643-30823	WASHER	4	F10001 -
12	20W-30-11130	COVER	1	F10001 -
13	20M-30-31630	COVER	1	F10001 -
14	01435-00816	BOLT	8	F10001 -

https://truckmanualshub.com/

FIG. 3061 HYDRAULIC PIPING (TRAVEL MOTOR LINE)

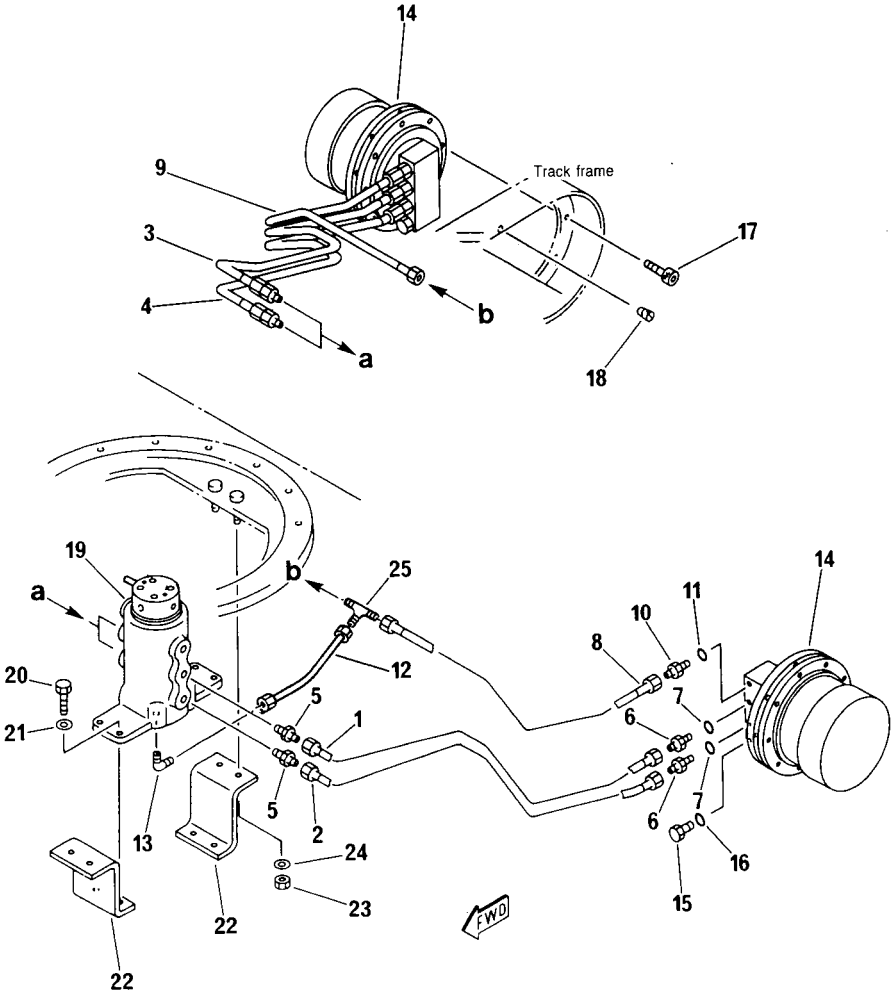

FIG. N°. :3061

INDEX N°.	PART N°.	DESCRIPTION	Q.TY	SERIAL N°. PC05-6F
1	20W-62-R1011	TUBE	1	F10001 -
2	20W-62-R1041	TUBE	1	F10001 -
3	20W-62-R1051	TUBE	1	F10001 -
4	20W-62-R1061	TUBE	1	F10001 -
5	20W-62-R1541	UNION	4	F10001 -
6	20W-62-R1521	UNION	4	F10001 -
7	PZF855051113	. O-RING	1	F10001 -
8	20W-62-R1071	TUBE, L.H.	1	F10001 -
9	20W-62-R1081	TUBE, R.H.	1	F10001 -
10	20W-62-R1531	UNION	2	F10001 -
11	PZF855051111	. O-RING	1	F10001 -
12	20W-62-R1091	TUBE	1	F10001 -
13	20M-62-R1551	ELBOW	1	F10001 -
14	(20M-60-40100)	TRAVEL MOTOR ASSY. (SEE FIG. 6431)	2	F10001 - F15502
	(20M-60-40101	TRAVEL MOTOR ASSY. (SEE FIG. 6431)	2	F15503 -
15	20N-62-R1461	PLUG	2	F10001 -
16	PZF855021111	O-RING	2	F10001 -
17	01252-41025	BOLT	14	F10001 -
18	PZF500366044	PLUG	2	F10001 -
19	(703-05-12150)	SWIVEL JOINT ASSY. (SEE FIG. 6401)	1	F10001 -
20	01010-50825	BOLT	4	F10001 -
21	01643-30823	WASHER	4	F10001 -
22	20W-62-11220	BRACKET	2	F10001 -
23	01580-11008	NUT	4	F10001 -
24	01643-31032	WASHER	4	F10001 -
25	PZF500351510	UNION «T»	1	F10001 -

https://truckmanualshub.com/

FIG. 3201 FRONT IDLER

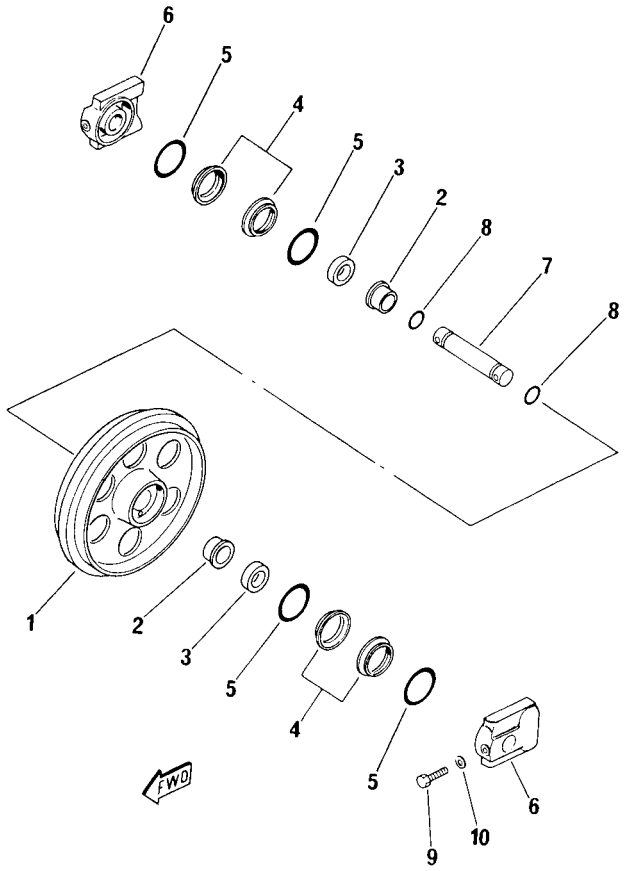

FIG. N°. :3201

INDEX N°.	PART N°.	DESCRIPTION	Q.TY	SERIAL N°. PC05-6F
—	20W-30-R2001	IDLER ASSY.	2	F10001 -
1	20M-30-R2011	. IDLER	1	F10001 -
2	20M-30-R2031	. BUSHING	2	F10001 -
3	20M-30-11140	. COLLAR	2	F10001 -
	110-30-R2121	. FLOAT. SEAL ASSY.	2	F10001 -
4	110-30-R2051	. . SEAL RING ASSY.	2	F10001 -
5	110-30-R2041	. . O-RING	2	F10001 -
6	20M-30-11150	. SUPPORT	2	F10001 -
7	20M-30-31121	. SHAFT	1	F10001 -
8	PZF855021812	. O-RING	2	F10001 -
9	01090-50840	. BOLT	2	F10001 -
10	01643-30823	. WASHER	2	F10001 -

https://truckmanualshub.com/

FIG. 3211 RECOIL SPRING (FOR STEEL TRACK SHOE)

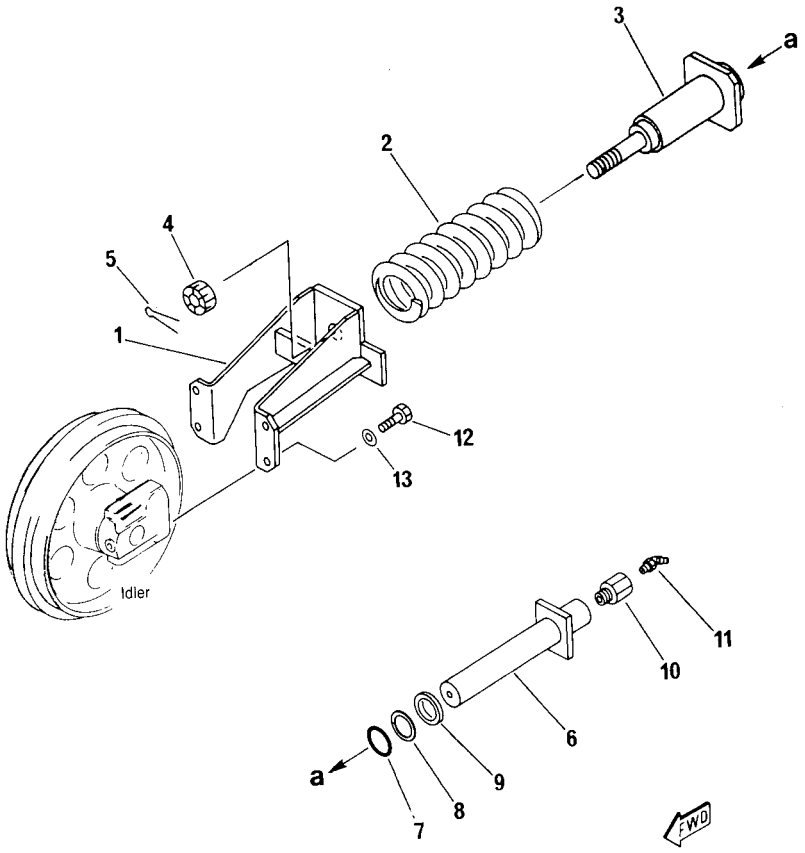

FIG. N°. :3211

INDEX N°.	PART N°.	DESCRIPTION	Q.TY	SERIAL N°. PC05-6F
1	20W-30-13110	BRACKET	2	F10001 -
2	20M-30-11330	SPRING, RECOIL	2	F10001 -
3	20W-30-13121	CYLINDER	2	F10001 -
4	PZF801802218	NUT	2	F10001 -
5	PZF802610072	PIN, COTTER	2	F10001 -
6	20M-30-31231	ROD	2	F10001 -
7	PZF855021217	O-RING	2	F10001 -
8	PZF855080217	RING, BACK-UP	2	F10001 -
9	20M-30-31250	SEAL, DUST	2	F10001 -
10	20M-30-31240	VALVE	2	F10001 -
11	PZF860020005	FITTING, GREASE	2	F10001 -
12	01010-51025	BOLT	8	F10001 -
13	01643-31032	WASHER	8	F10001 -

https://truckmanualshub.com/

FIG. 3212 RECOIL SPRING (FOR RUBBER SHOE)

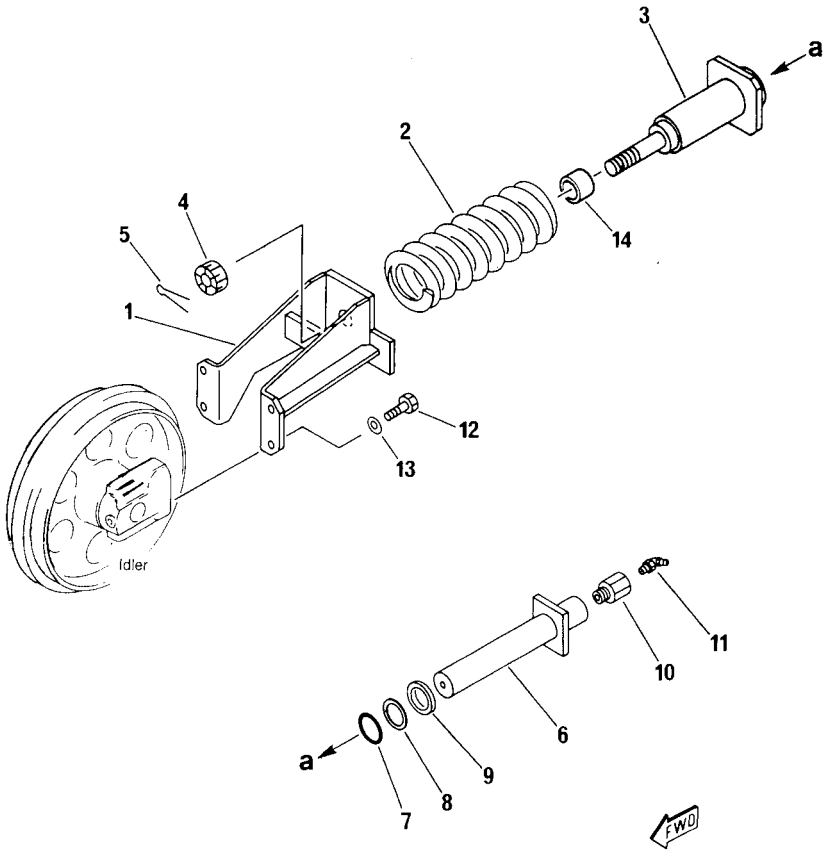

FIG. N°. :3212

INDEX N°.	PART N°.	DESCRIPTION	Q.TY	SERIAL N°. PC05-6F
1	20W-30-13110	BRACKET	2	F10001 -
2	20M-30-11330	SPRING, RECOIL	2	F10001 -
3	20W-30-13121	CYLINDER	2	F10001 -
4	PZF801802218	NUT	2	F10001 -
5	PZF802610072	PIN, COTTER	2	F10001 -
6	20M-30-31231	ROD	2	F10001 -
7	PZF855021217	O-RING	2	F10001 -
8	PZF855080217	RING, BACK-UP	2	F10001 -
9	20M-30-31250	SEAL, DUST	2	F10001 -
10	20M-30-31240	VALVE	2	F10001 -
11	PZF860020005	FITTING, GREASE	2	F10001 -
12	01010-51025	BOLT	8	F10001 -
13	01643-31032	WASHER	8	F10001 -
14	20W-35-15120	SPACER	2	F10001 -

https://truckmanualshub.com/

FIG. 3301 TRACK ROLLER

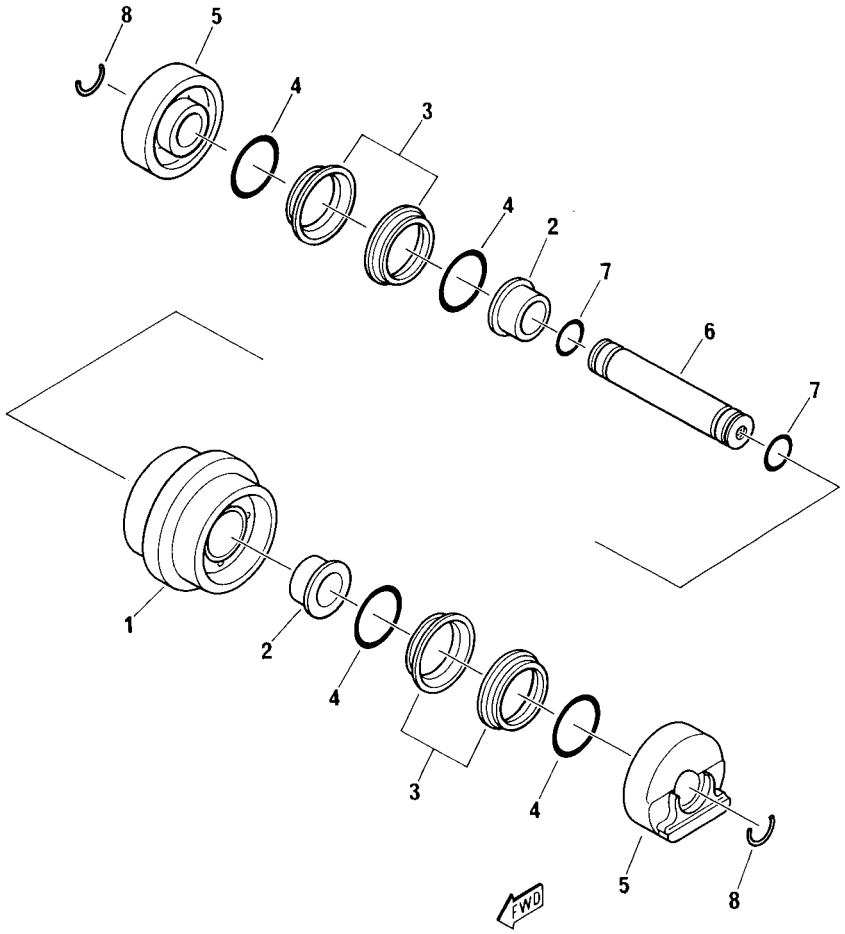

FIG. N°. :3301

INDEX N°.	PART N°.	DESCRIPTION	Q.TY	SERIAL N°. PC05-6F
—	20M-30-31301	TRACK ROLLER ASSY.	6	F10001 -
1	20M-30-31310	. ROLLER	1	F10001 -
2	20M-30-31130	. BUSHING	2	F10001 -
	110-30-R2121	. FLOAT. SEAL ASSY.	2	F10001 -
3	110-30-R2051	. . SEAL RING ASSY.	2	F10001 -
4	110-30-R2041	. . O-RING	2	F10001 -
5	20M-30-31530	. COLLAR	2	F10001 -
6	20M-30-31321	. SHAFT	1	F10001 -
7	PZF855021812	. O-RING	2	F10001 -
8	20R-30-11270	. RING, SNAP	2	F10001 -

https://truckmanualshub.com/

FIG. 3351 SPROCKET

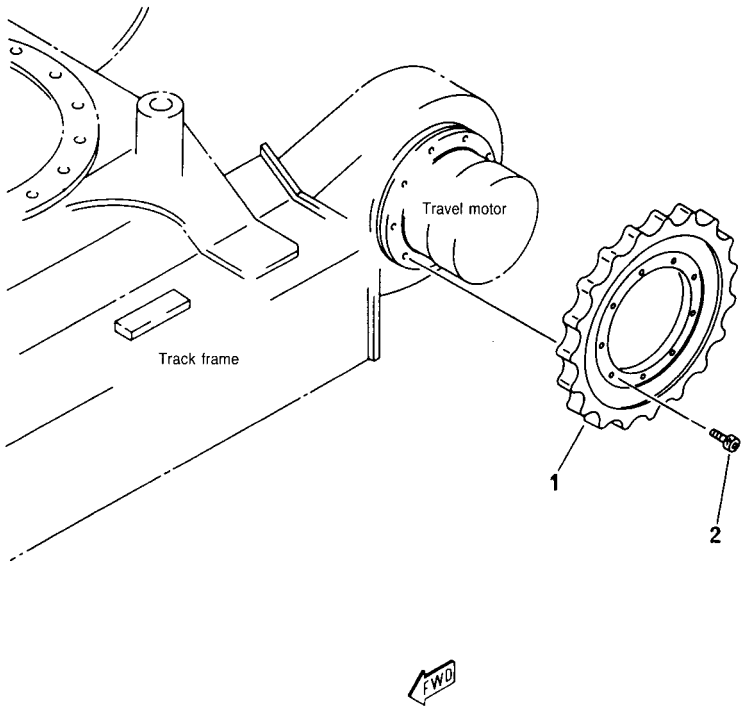

FIG. N°. 3351

INDEX N°.	PART N°.	DESCRIPTION	Q.TY	SERIAL N°. PC05-6F
1	20M-27-48111	SPROCKET	2	F10001 -
2	01252-41025	BOLT	18	F10001 -

https://truckmanualshub.com/

FIG. 3421 TRACK SHOE (DOUBLE GROUSER)

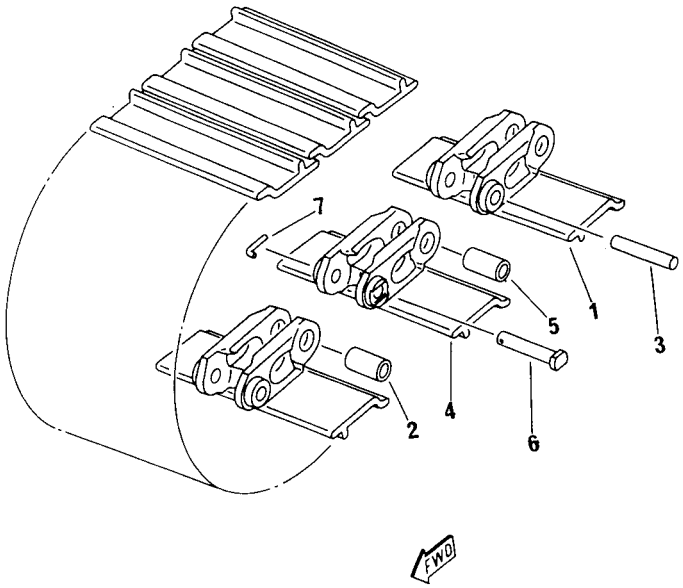

FIG. N°. :3421

INDEX N°.	PART N°.	DESCRIPTION	Q.TY	SERIAL N°. PC05-6F
—	20W-32-11000	TRACK SHOE ASSY.	2	F10001 -
1	20W-32-11110	. SHOE, ASSY.	31	F10001 -
2	20M-32-11140	. . BUSHING	1	F10001 -
3	20M-32-11160	. PIN	31	F10001 -
4	20W-32-11210	. SHOE ASSY., MASTER	1	F10001 -
5	20M-32-11140	. . BUSHING	1	F10001 -
6	20M-32-11240	. PIN, MASTER	1	F10001 -
7	20M-32-11250	. PIN, LOCK	1	F10001 -

https://truckmanualshub.com/

FIG. 3423 TRACK SHOE WITH HOLES

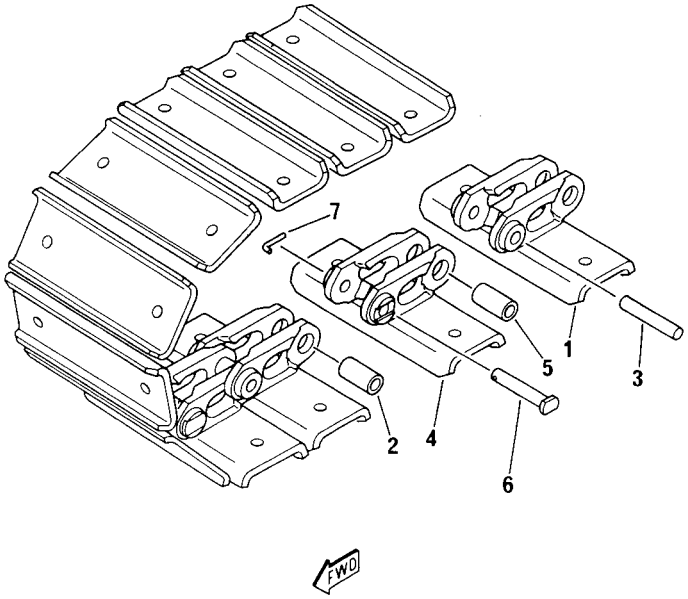

FIG. N°. :3423

INDEX N°.	PART N°.	DESCRIPTION	Q.TY	SERIAL N°. PC05-6F
—	20M-32-13000	TRACK SHOE ASSY.	2	F10001 -
1	20M-32-13110	. SHOE ASSY., REGULAR	31	F10001 -
2	20M-32-11140	. . BUSHING	1	F10001 -
3	20M-32-11160	. PIN, REGULAR	31	F10001 -
4	20M-32-13210	. SHOE ASSY., MASTER	1	F10001 -
5	20M-32-11140	. . BUSHING	1	F10001 -
6	20M-32-11240	. PIN, MASTER	1	F10001 -
7	20M-32-11250	. PIN, LOCK	1	F10001 -

https://truckmanualshub.com/

FIG. 3491 RUBBER SHOE

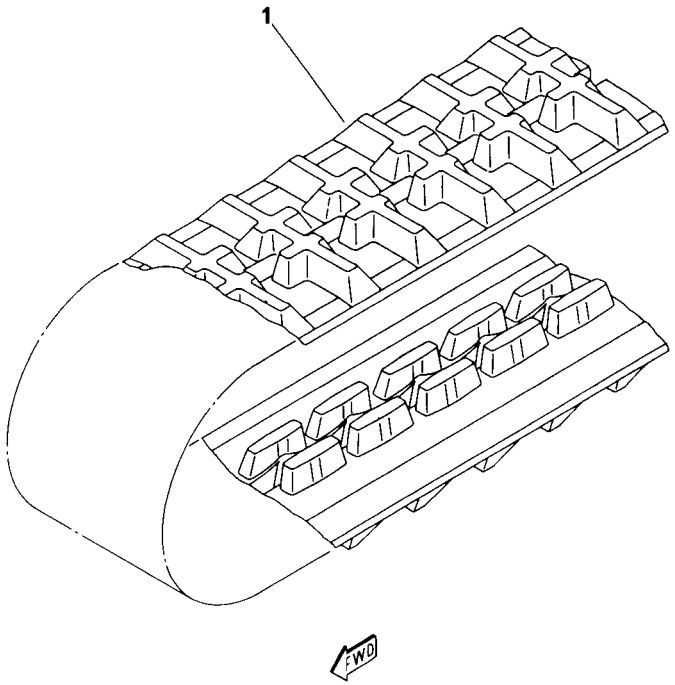

FIG. N°. :3491

INDEX N°.	PART N°.	DESCRIPTION	Q.TY	SERIAL N°. PC05-6F
1	20W-35-15111	RUBBER SHOE ASSY.	2	F10001 -

https://truckmanualshub.com/

CONTROL SYSTEM AND REVOLVING FRAME

https://truckmanualshub.com/

FIG. 4001 FUEL CONTROL LEVER

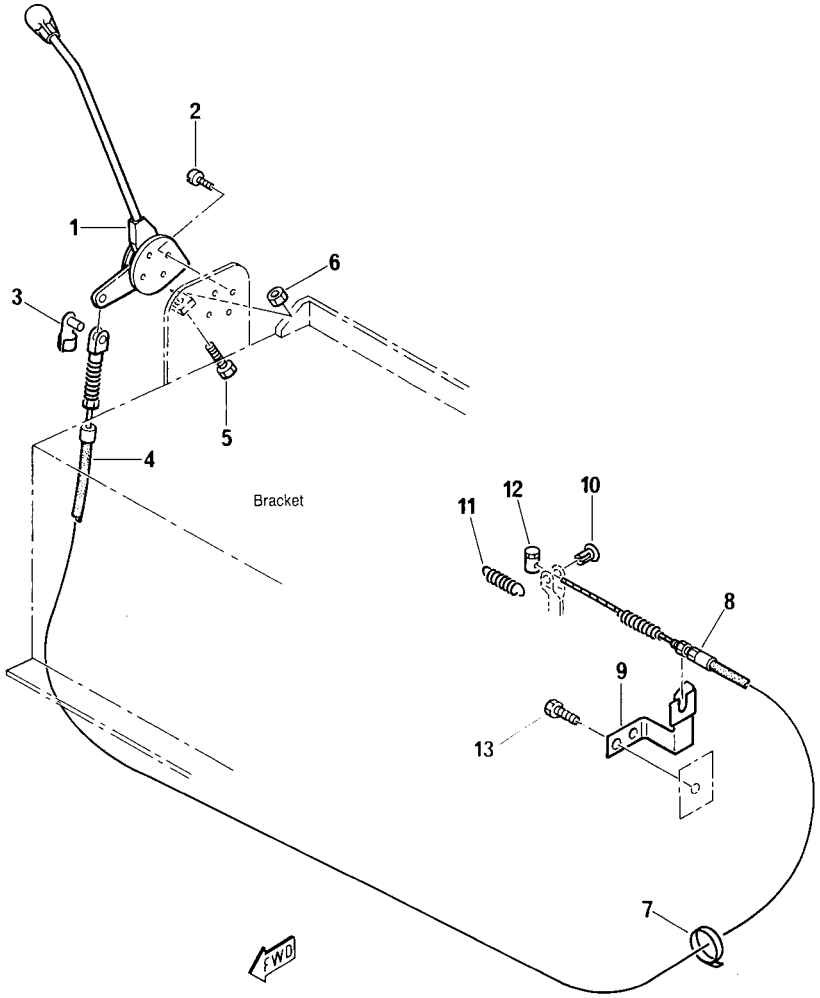

FIG. N°. :4001

INDEX N°.	PART N°.	DESCRIPTION	Q.TY	SERIAL N°. PC05-6F
1	20M-43-R5071	LEVER	1	F10001 -
2	PZF801160125	BOLT	4	F10001 -
3	PZF802725016	BOLT	1	F10001 -
4	20M-43-R5051	WIRE	1	F10001 -
5	01010-50625	BOLT	1	F10001 -
6	01580-10605	NUT	1	F10001 -
7	PZF885180005	CLAMP	1	F10001 -
8	PZF883000082	REGULATOR	1	F10001 -
9	20N-43-R5011	BRACKET	1	F10001 -
10	20M-43-R5141	BOLT	1	F10001 -
11	PZF500610566	SPRING	1	F10001 -
12	PZF883000101	SLEEVE	1	F10001 -
13	01010-50870	BOLT	2	F10001 -

https://truckmanualshub.com/

FIG. 4102 TRAVEL CONTROL LEVER

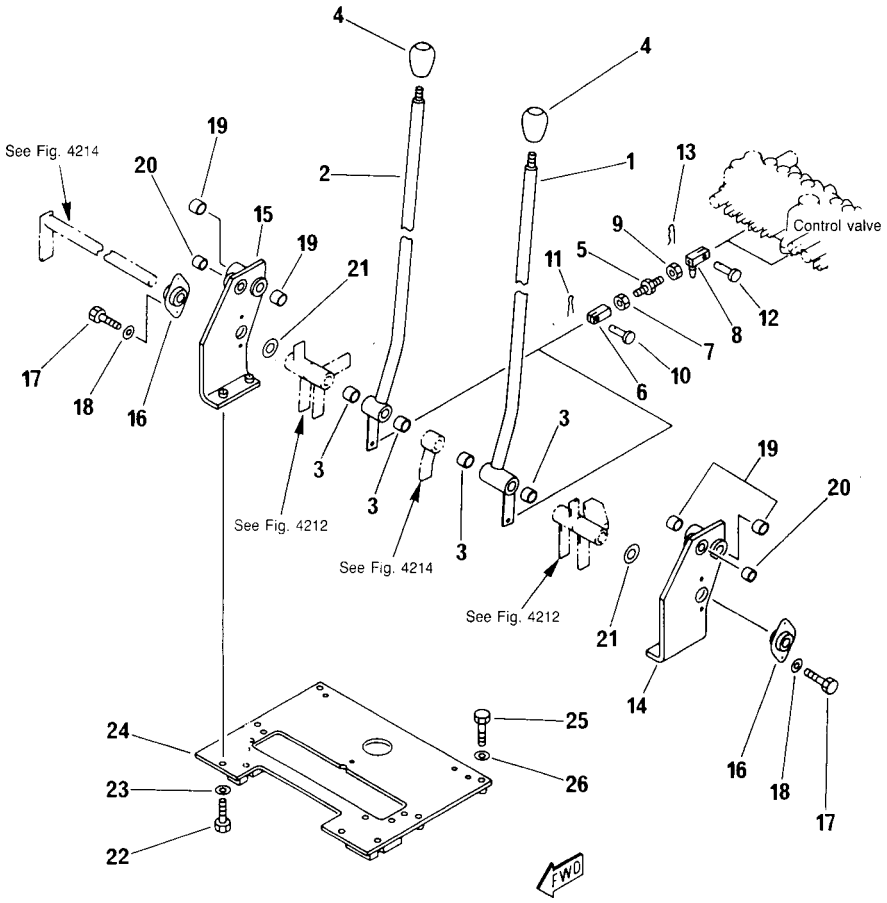

FIG. N°. :4102

INDEX N°.	PART N°.	DESCRIPTION	Q.TY	SERIAL N°. PC05-6F
1	20M-43-R1051	LEVER, L.H.	1	F10001 -
2	20M-43-R1081	LEVER, D.H.	1	F10001 -
3	195-43-R1091	BEARING	4	F10001 -
4	203-43-41910	KNOB	2	F10001 -
5	20W-43-11210	ROD	2	F10001 -
6	20M-43-48271	YOKE	2	F10001 -
7	01580-10806	NUT	2	F10001 -
8	20W-43-11220	YOKE, L.H. THREAD	2	F10001 -
9	01508-20805	NUT, L.H. THREAD	2	F10001 -
10	PZF500611649	PIN	2	F10001 -
11	PZF802610040	PIN, COTTER	2	F10001 -
12	PZF500611648	PIN	2	F10001 -
13	PZF802610010	PIN, SNAP	2	F10001 -
14	20M-43-48131	BRACKET, L.H.	1	F10001 -
15	20M-43-68120	BRACKET, R.H.	1	F10001 -
16	20N-43-R4111	BEARING	2	F10001 -
17	01010-50816	BOLT	4	F10001 -
18	01643-30823	WASHER	4	F10001 -
19	PZF805630027	BUSHING	4	F10001 -
20	PZF805630021	BUSHING	2	F10001 -
21	PZF802040032	WASHER	2	F10001 -
22	01010-50825	BOLT	4	F10001 -
23	01643-30823	WASHER	4	F10001 -
24	20W-43-11111	PLATE	1	F10001 -
25	01010-50835	BOLT	6	F10001 -
26	01643-30823	WASHER	6	F10001 -

https://truckmanualshub.com/

FIG. 4205 BOOM SWING CONTROL PEDAL

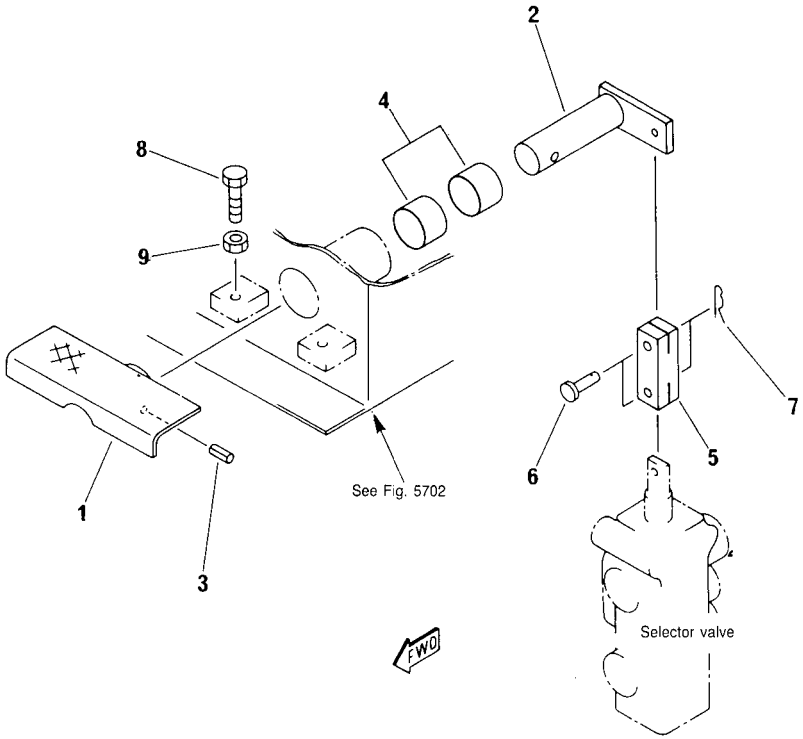

FIG. N°. :4205

INDEX N°.	PART N°.	DESCRIPTION	Q.TY	SERIAL N°. PC05-6F
1	20M-43-48811	PEDAL	1	F10001 -
2	20M-43-48820	LEVER	1	F10001 -
3	PZF802510223	PIN, SPRING	1	F10001 -
4	PZF805630027	BUSHING	2	F10001 -
5	20M-43-39720	YOKE	1	F10001 -
6	PZF500611653	PIN	2	F10001 -
7	PZF802610010	PIN, SNAP	2	F10001 -
8	01016-50835	BOLT	2	F10001 -
9	01580-10806	NUT	2	F10001 -

https://truckmanualshub.com/

FIG. 4212 WORK EQUIPMENT CONTROL LEVER

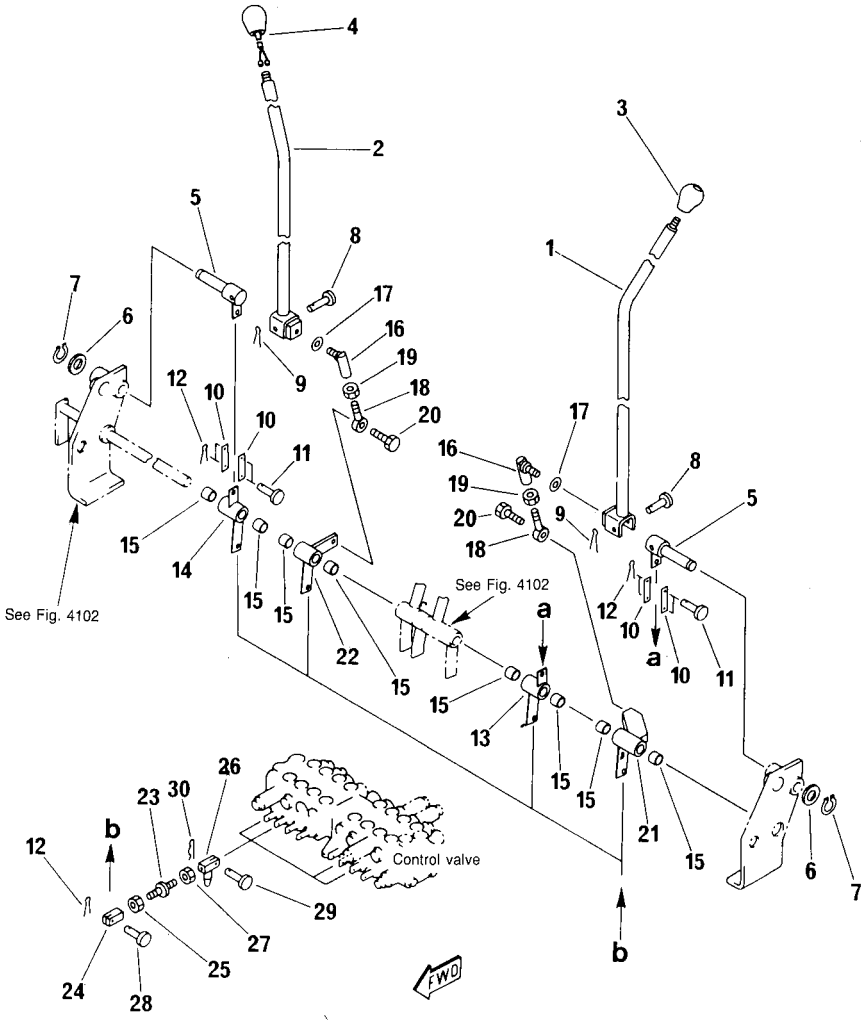

FIG. N°. :4212

INDEX N°.	PART N°.	DESCRIPTION	Q.TY	SERIAL N°. PC05-6F
1	20W-43-12113	LEVER, L.H.	1	F10001 -
2	20W-43-12123	LEVER, R.H.	1	F10001 -
3	203-43-41910	KNOB, LEVER L.H.	1	F10001 -
4	203-06-R2291	KONB, LEVER R.H.	1	F10001 -
5	20M-43-R2051	LEVER	2	F10001 -
6	PZF802070020	WASHER	2	F10001 -
7	PZF802250020	RING, SNAP	2	F10001 -
8	20T-43-11310	PIN	2	F10001 -
9	PZF802610055	PIN, COTTER	2	F10001 -
10	20M-43-06140	LEVER	4	F10001 -
11	PZF500611647	PIN	4	F10001 -
12	PZF802610040	PIN, COTTER	8	F10001 -
13	20M-43-06160	LEVER, L.H.	1	F10001 -
14	20M-43-06180	LEVER, R.H.	1	F10001 -
15	195-43-R1091	BEARING	8	F10001 -
16	20T-43-R2331	JOINT	2	F10001 -
17	01643-31032	WASHER	4	F10001 -
18	20T-43-R2341	END, ROD	2	F10001 -
19	01580-11008	NUT	2	F10001 -
20	01010-51030	SCREW	2	F10001 -
21	20M-43-06150	LEVER, L.H.	1	F10001 -
22	20M-43-06170	LEVER, R.H.	1	F10001 -
23	20W-43-11210	ROD	4	F10001 -
24	20M-43-48271	YOKE	4	F10001 -
25	01580-10806	NUT	4	F10001 -
26	20W-43-11220	YOKE, THREAD	4	F10001 -
27	01508-20805	NUT, L.H.	4	F10001 -
28	PZF500611649	PIN	4	F10001 -
29	PZF500611648	PIN	4	F10001 -
30	PZF802610010	PIN, COTTER	4	F10001 -

https://truckmanualshub.com/

FIG. 4214 BLADE CONTROL LEVER

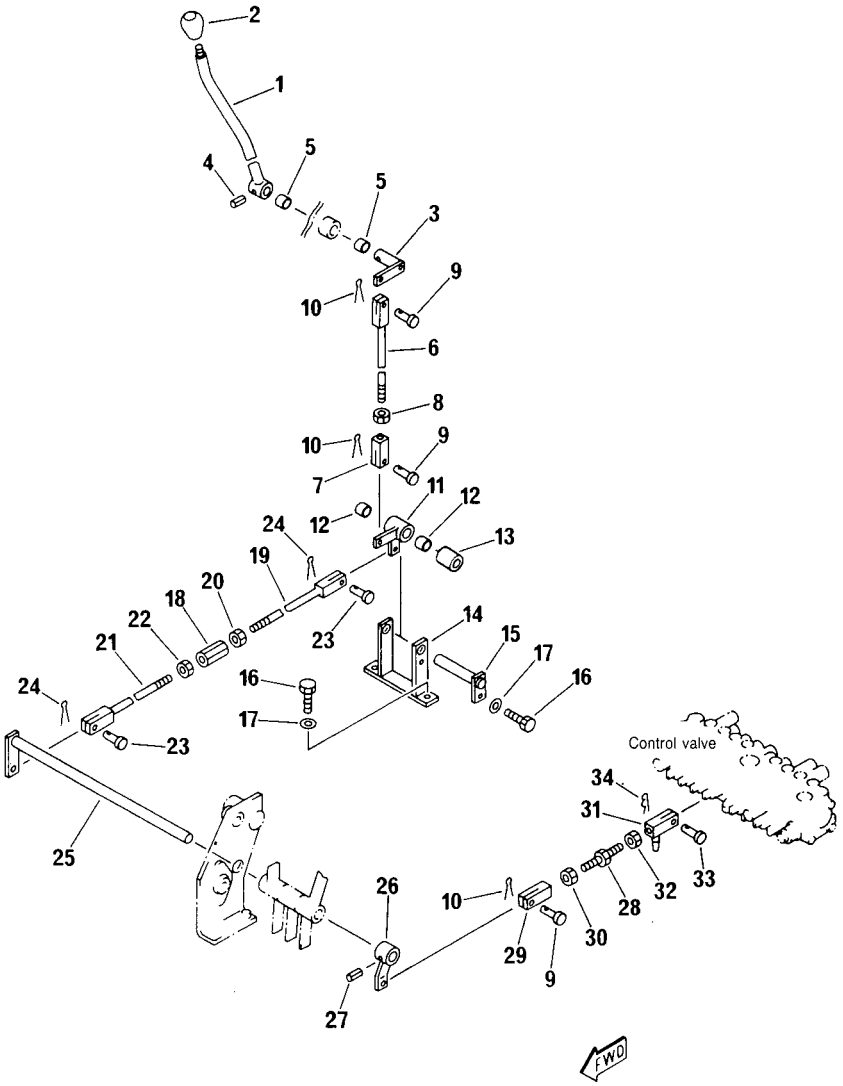

FIG. N°. :4214

INDEX N°.	PART N°.	DESCRIPTION	Q.TY	SERIAL N°. PC05-6F
1	20W-43-14110	LEVER	1	F10001 -
2	203-43-41910	KNOB	1	F10001 -
3	20M-43-48651	LEVER	1	F10001 -
4	PZF802510223	PIN, SPRING	1	F10001 -
5	PZF805630027	BUSHING	2	F10001 -
6	20M-43-48520	ROD	1	F10001 -
7	PZF802720033	YOKE	1	F10001 -
8	01580-10806	NUT	1	F10001 -
9	PZF500611649	PIN	3	F10001 -
10	PZF802610040	PIN, COTTER	3	F10001 -
11	20M-43-48621	LEVER	1	F10001 -
12	PZF805630027	BUSHING	2	F10001 -
13	20M-43-48631	SPACER	1	F10001 -
14	20M-43-48611	BRACKET	1	F10001 -
15	20M-43-48641	PIN	1	F10001 -
16	01010-50820	BOLT	3	F10001 -
17	01643-30823	WASHER	3	F10001 -
18	20S-43-31270	BUCKLE, TURN	1	F10001 -
19	20W-43-13170	ROD	1	F10001 -
20	01508-41006	NUT, L.H. THREAD	1	F10001 -
21	PZF200496196	ROD	1	F10001 -
22	PZF801713209	NUT	1	F10001 -
23	PZF500611650	PIN	2	F10001 -
24	PZF802610055	PIN, COTTER	2	F10001 -
25	20M-43-67410	SHAFT	1	F10001 -
26	20M-43-67420	LEVER	1	F10001 -
27	PZF802510223	PIN, SPRING	1	F10001 -
28	20W-43-11210	ROD	1	F10001 -
29	20M-43-48271	YOKE	1	F10001 -
30	01580-10806	NUT	1	F10001 -
31	20W-43-11220	YOKE	1	F10001 -
32	01508-20805	NUT, L.H.	1	F10001 -
33	PZF500611648	PIN	1	F10001 -
34	PZF802610010	PIN, COTTER	1	F10001 -

https://truckmanualshub.com/

FIG. 4300 WORK EQUIPMENT LOCK LEVER

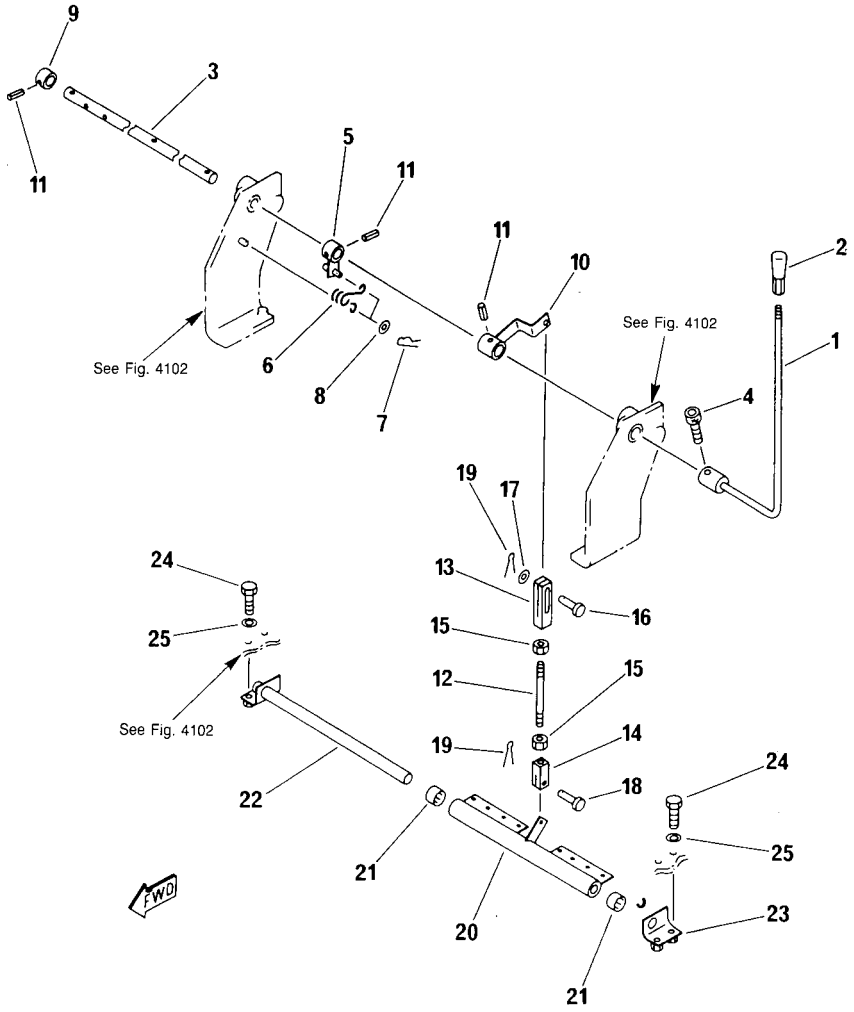

FIG. N°. 4300

INDEX N°.	PART N°.	DESCRIPTION	Q.TY	SERIAL N°. PC05-6F
1	20M-43-48493	LEVER	1	F10001 -
2	PZF802640722	KNOB	1	F10001 -
3	20M-43-48412	PIN	1	F10001 -
4	01252-40820	BOLT	1	F10001 -
5	20W-43-12520	LEVER	1	F10001 -
6	PZF804040009	SPRING	1	F10001 -
7	PZF802610040	PIN, SNAP	2	F10001 -
8	01643-30623	WASHER	2	F10001 -
9	20M-43-48510	BUSHING	1	F10001 -
10	20W-43-12510	LEVER	1	F10001 -
11	PZF802510197	PIN, SPRING	3	F10001 -
12	PZF500022801	ROD	1	F10001 -
13	20W-43-12530	YOKE	1	F10001 -
14	PZF802720032	YOKE	1	F10001 -
15	01580-10806	NUT	2	F10001 -
16	PZF500611647	PIN	1	F10001 -
17	01643-30823	WASHER	1	F10001 -
18	PZF500611649	PIN	1	F10001 -
19	PZF802610040	PIN, COTTER	2	F10001 -
20	20W-43-12570	LEVER	1	F10001 -
21	195-61-R2281	BEARING	2	F10001 -
22	20W-43-12550	BRACKET, R.H.	1	F10001 -
23	20W-43-12560	BRACKET, L.H.	1	F10001 -
24	01010-50820	BOLT	4	F10001 -
25	01643-30823	WASHER	4	F10001 -

https://truckmanualshub.com/

FIG. 4301 WORK EQUIPMENT LOCK LEVER (TBG SPEC.)

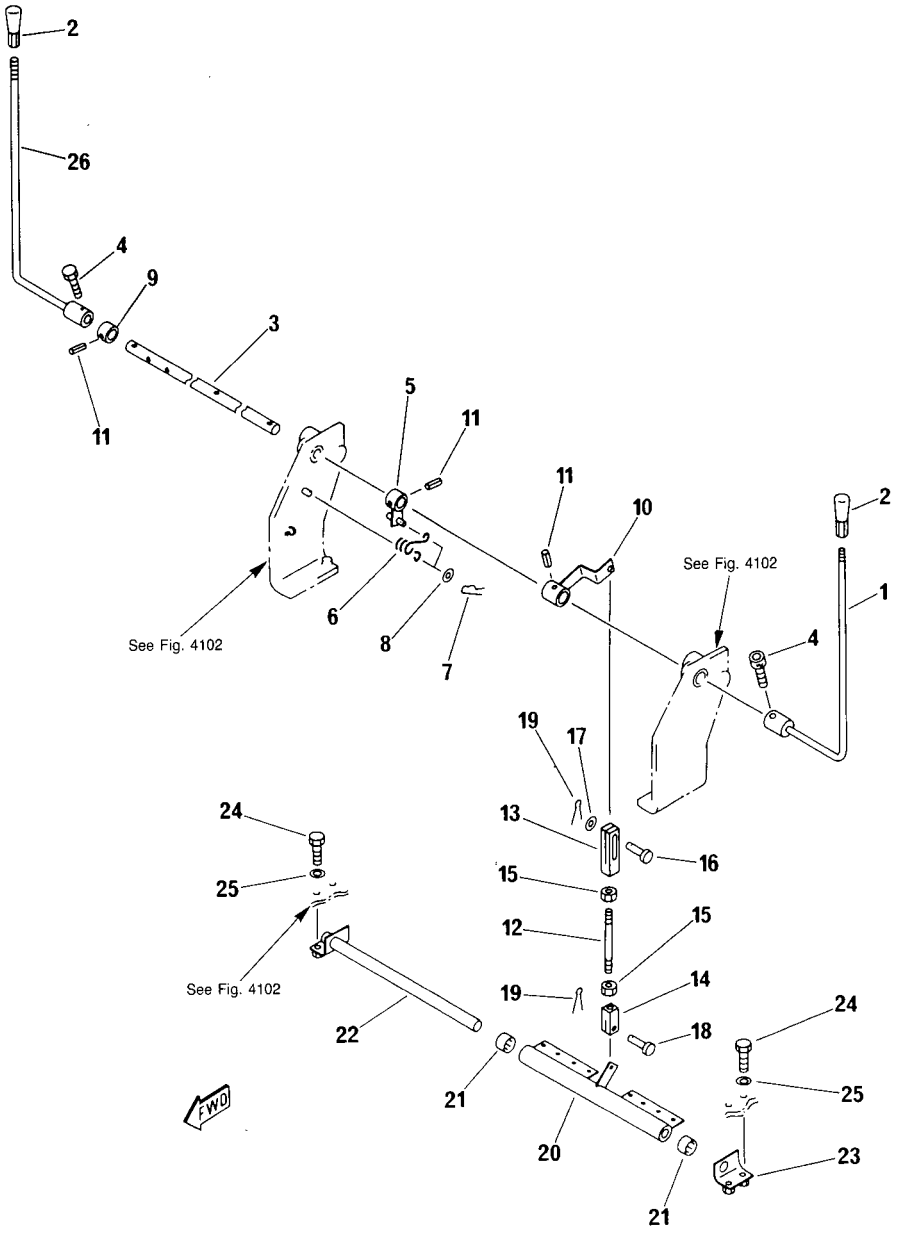

FIG. N°. :4301

INDEX N°.	PART N°.	DESCRIPTION	Q.TY	SERIAL N°. PC05-6F
1	20M-43-48493	LEVER	1	F10001 -
2	PZF802640722	KNOB	2	F10001 -
3	20M-43-48412	PIN	1	F10001 -
4	01252-40820	BOLT	2	F10001 -
5	20W-43-12520	LEVER	1	F10001 -
6	PZF804040009	SPRING	1	F10001 -
7	PZF802610040	PIN, SNAP	2	F10001 -
8	01643-30623	WASHER	2	F10001 -
9	20M-43-48510	BUSHING	1	F10001 -
10	20W-43-12510	LEVER	1	F10001 -
11	PZF802510197	PIN, SPRING	3	F10001 -
12	PZF500022801	ROD	1	F10001 -
13	20W-43-12530	YOKE	1	F10001 -
14	PZF802720032	YOKE	1	F10001 -
15	01580-10806	NUT	2	F10001 -
16	PZF500611647	PIN	1	F10001 -
17	01643-30823	WASHER	1	F10001 -
18	PZF500611649	PIN	1	F10001 -
19	PZF802610040	PIN, COTTER	2	F10001 -
20	20W-43-12570	LEVER	1	F10001 -
21	195-61-R2281	BEARING	2	F10001 -
22	20W-43-12550	BRACKET, R.H.	1	F10001 -
23	20W-43-12560	BRACKET, L.H.	1	F10001 -
24	01010-50820	BOLT	4	F10001 -
25	01643-30823	WASHER	4	F10001 -
26	20M-43-R2321	LEVER, R.H.	1	F10001 -

https://truckmanualshub.com/

FIG. 4401 ATTACHMENT CONTROL PEDAL

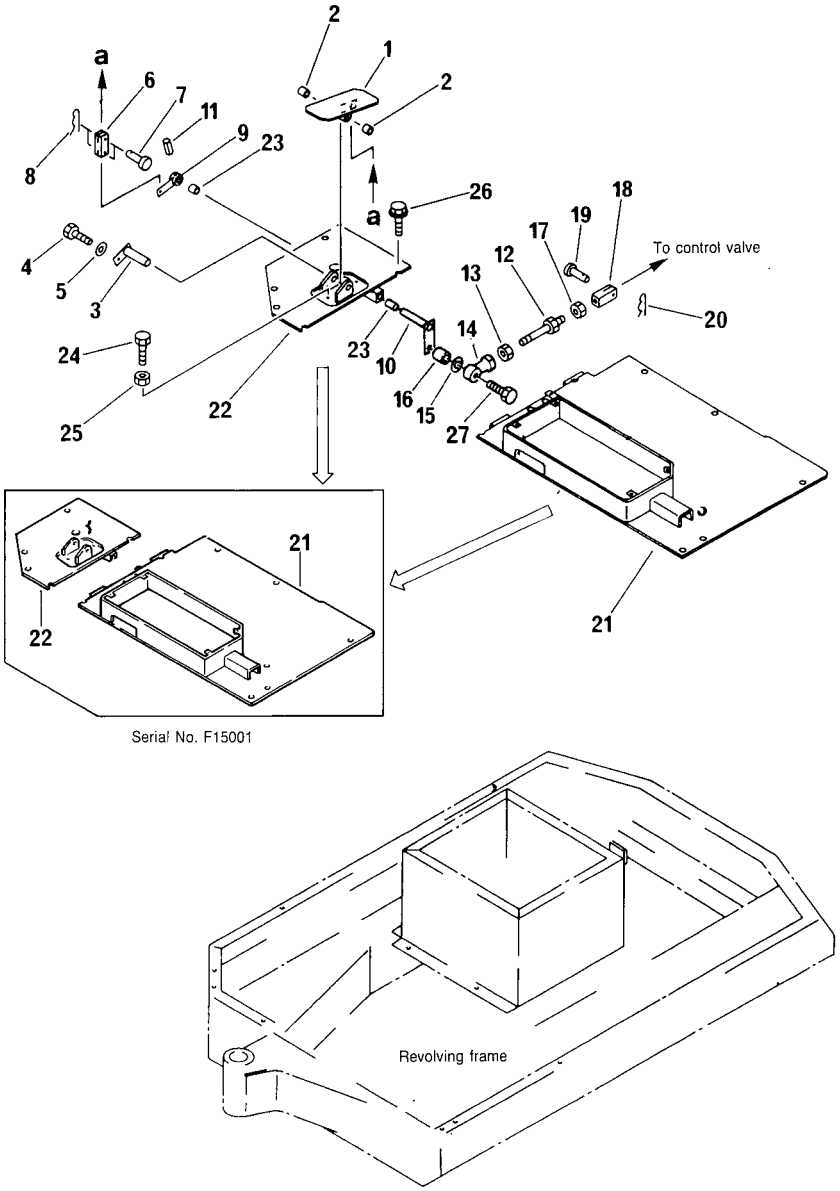

FIG. N°. :4401

INDEX N°.	PART N°.	DESCRIPTION	Q.TY	SERIAL N°. PC05-6F
1	20M-973-5340	PEDAL	1	F10001 - F15220
	20M-43-R6121	PEDAL	1	F15221 -
2	PZF805630021	BUSHING	2	F10001 -
3	20M-973-5350	PIN	1	F10001 -
4	01010-50816	BOLT	1	F10001 -
5	01643-30823	WASHER	1	F10001 -
6	20M-973-4390	YOKE	1	F10001 -
7	PZF500611649	PIN	2	F10001 -
8	PZF802620095	PIN, COTTER	2	F10001 -
9	20M-973-5360	LEVER	1	F10001 -
10	20M-973-5370	LEVER	1	F10001 -
11	PZF802510193	PIN, SPRING	1	F10001 -
12	PZF200496197	ROD	1	F10001 -
13	01508-20805	NUT, L.H. THREAD	1	F10001 -
14	PZF805850209	END, ROD L.H. THREAD	1	F10001 -
15	PZF802040025	WASHER	1	F10001 -
16	20M-43-R6091	SPACER	1	F10001 -
17	01580-10806	NUT	1	F10001 -
18	20M-973-R051	YOKE	1	F10001 -
19	PZF500611668	PIN	1	F10001 -
20	PZF802610010	PIN	1	F10001 -
21	20M-54-67210	FLOOR, L.H.	1	F10001 - F10488
	20M-54-R1141	FLOOR, L.H.	1	F15001 -
22	20M-973-R111	FLOOR, R.H.	1	F10001 - F10488
	20M-973-R131	FLOOR, R.H.	1	F15001 -
23	PZF805630021	BUSHING	2	F10001 -
24	01010-50835	BOLT	2	F10001 -
25	01580-10806	NUT	2	F10001 -
26	01435-00816	BOLT	7	F10001 -
27	01010-50830	BOLT	1	F10001 -

https://truckmanualshub.com/

FIG. 4602 REVOLVING FRAME

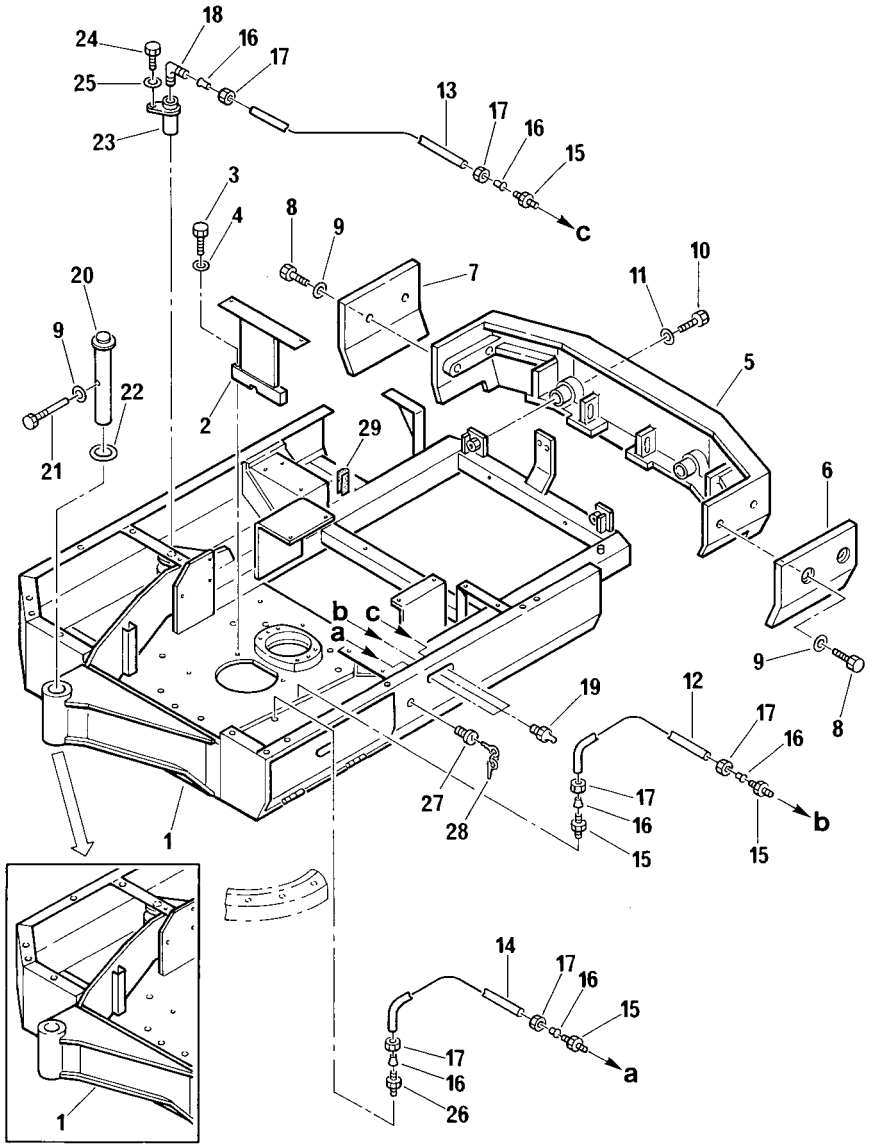

Serial No. F15001

FIG. N°. :4602

INDEX N°.	PART N°.	DESCRIPTION	Q.TY	SERIAL N°. PC05-6F
1	20M-46-R1001	FRAME REVOLVING	1	F10001 - F10488
	20M-46-R1781	FRAME REVOLVING	1	F15001 -
2	20M-46-48310	STOPPER	1	F10001 -
3	01010-50855	BOLT	2	F10001 -
4	01643-30823	WASHER	2	F10001 -
5	20M-46-62110	WEIGHT	1	F10001 -
6	20M-46-68120	PROTECTOR, L.H.	1	F10001 -
7	20M-46-68130	PROTECTOR, R.H.	1	F10001 -
8	01010-51225	BOLT	4	F10001 -
9	01643-31232	WASHER	5	F10001 -
10	01010-51470	BOLT	2	F10001 -
11	01643-31445	WASHER	2	F10001 -
12	20M-46-R1631	TUBE	1	F10001 -
13	20N-46-R1611	TUBE	1	F10001 -
14	20M-46-R1631	TUBE	1	F10001 -
15	20R-46-R1591	CONNECTOR	4	F10001 -
16	PZF500362601	SLEEVE	6	F10001 -
17	PZF200364909	NUT	6	F10001 -
18	20R-46-R1601	ELBOW	1	F10001 -
19	PZF860010009	FITTING, GREASE	3	F10001 -
20	20M-70-48211	PIN	1	F10001 -
21	20M-70-34150	BOLT	1	F10001 -
22	20M-70-14120	PLATE	1	F10001 -
23	20W-70-11210	PIN	1	F10001 -
24	01010-51020	BOLT	1	F10001 -
25	01643-31032	WASHER	1	F10001 -
26	20N-46-R1621	CONNECTOR	1	F10001 -
27	20N-54-R2231	LOCK	1	F10001 -
28	PZF816212433	KEY	1	F10001 -
29	PZF855710058	SEAL	AR	F10001 -

https://truckmanualshub.com/

GUARD

https://truckmanualshub.com/

FIG. 5001 MACHINE CAB

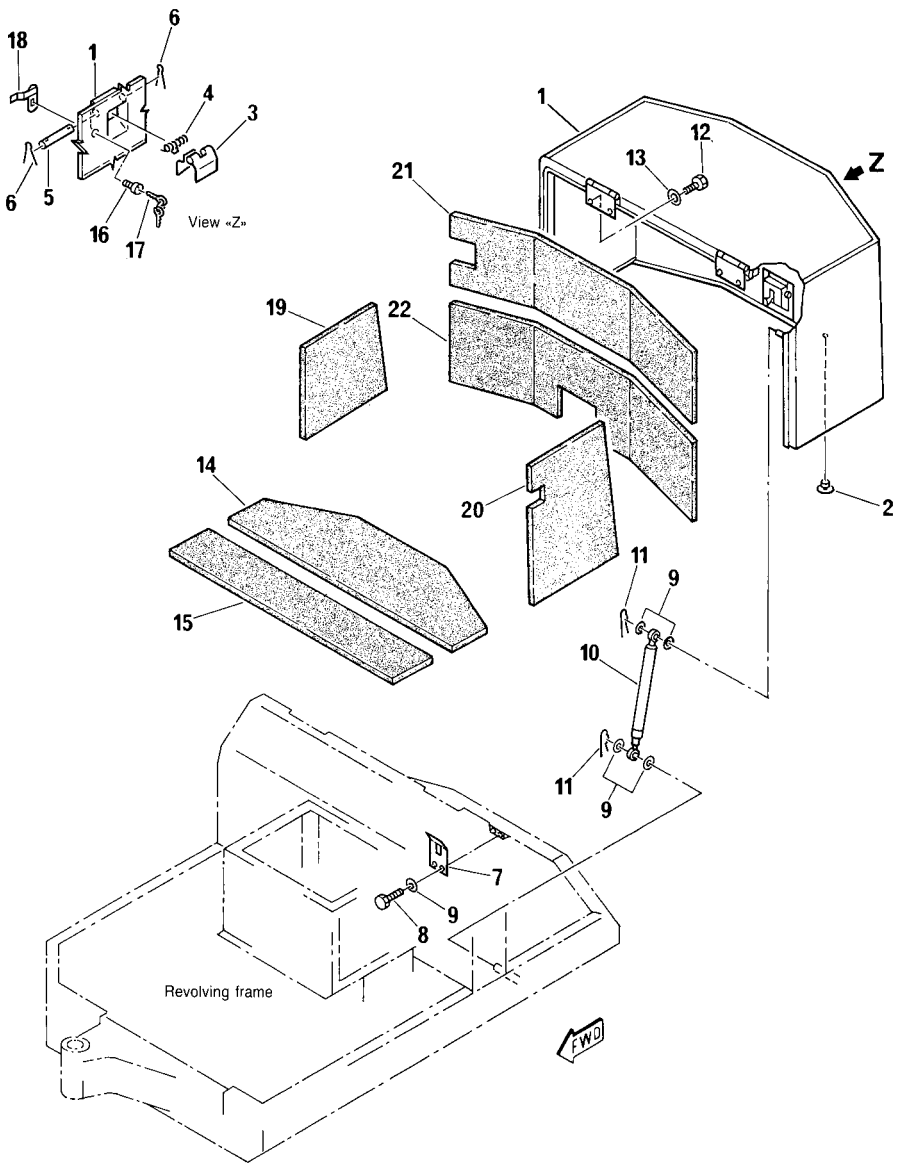

FIG. N°. :5001

INDEX N°.	PART N°.	DESCRIPTION	Q.TY	SERIAL N°. PC05-6F
1	20W-54-R2011	HOOD	1	F10001 -
2	20W-54-12210	STOPPER	2	F10001 -
3	20S-54-R2061	LEVER	1	F10001 -
4	20T-54-26430	SPRING	1	F10001 -
5	20S-54-21460	PIN	1	F10001 -
6	PZF802610055	PIN, COTTER	2	F10001 -
7	20W-54-12220	LOCK	1	F10001 -
8	01010-50825	BOLT	2	F10001 -
9	01643-30823	WASHER	8	F10001 -
10	20M-54-R2101	SPRING	1	F10001 -
11	PZF802610027	PIN, SNAP	2	F10001 -
12	01010-51025	BOLT	4	F10001 -
13	01643-31032	WASHER	4	F10001 -
14	20W-54-12131	SHEET	1	F10001 -
15	20W-54-12141	SHEET	1	F10001 -
16	20N-54-R2231	LOCK	1	F10001 -
17	PZF816212433	DOUBLE KEY	1	F10001 -
18	20R-54-R2151	STRIKER LOCK	1	F10001 -
19	20M-54-R2191	SHEET	1	F15001 -
20	20M-54-R2181	SHEET	1	F15001 -
21	20M-54-R2201	SHEET	1	F15001 -
22	20M-54-R2211	SHEET	1	F15001 -

https://truckmanualshub.com/

FIG. 5102 FLOOR - PLATE

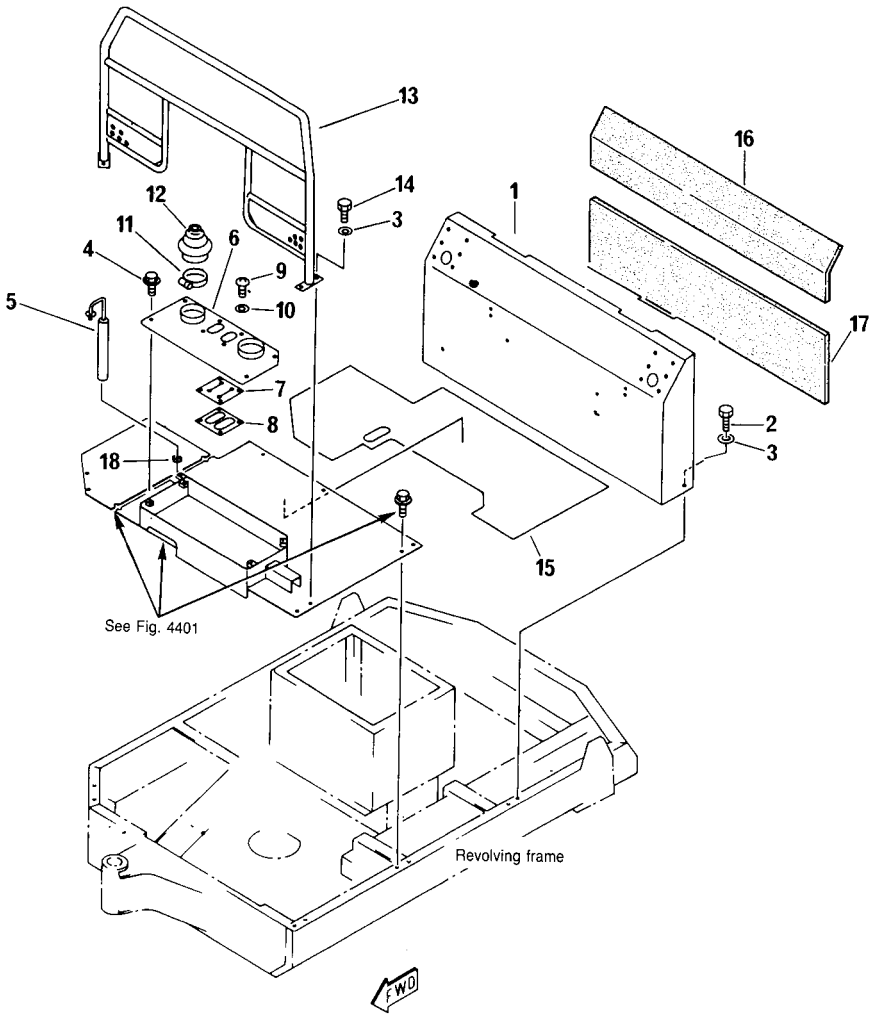

FIG. N°. :5102

INDEX N°.	PART N°.	DESCRIPTION	Q.TY	SERIAL N°. PC05-6F
1	20M-54-R1091	COVER	1	F10001 -
2	01010-51030	BOLT	4	F10001 -
3	01643-31032	WASHER	8	F10001 -
4	01435-00816	BOLT	4	F10001 -
5	250-15-41180	PIN	1	F10001 -
6	20W-54-R1031	COVER	1	F10001 -
7	20M-54-48231	RUBBER	1	F10001 -
8	20M-54-48241	PLATE	1	F10001 -
9	PZF801370065	SCREW	4	F10001 -
10	01641-20508	WASHER	4	F10001 -
11	PZF802660015	CLAMP	2	F10001 -
12	20M-54-48252	BOOT	2	F10001 -
13	20W-54-11130	STAY	1	F10001 -
14	01010-51025	BOLT	4	F10001 -
15	20M-973-6750	SHEET	1	F10001 -
16	20M-54-R1161	SHEET	1	F15001 -
17	20M-54-R1151	SHEET	1	F15001 -
18	PZF885410048	RUBBER	2	F15201 -

https://truckmanualshub.com/

FIG. 5202 CANOPY

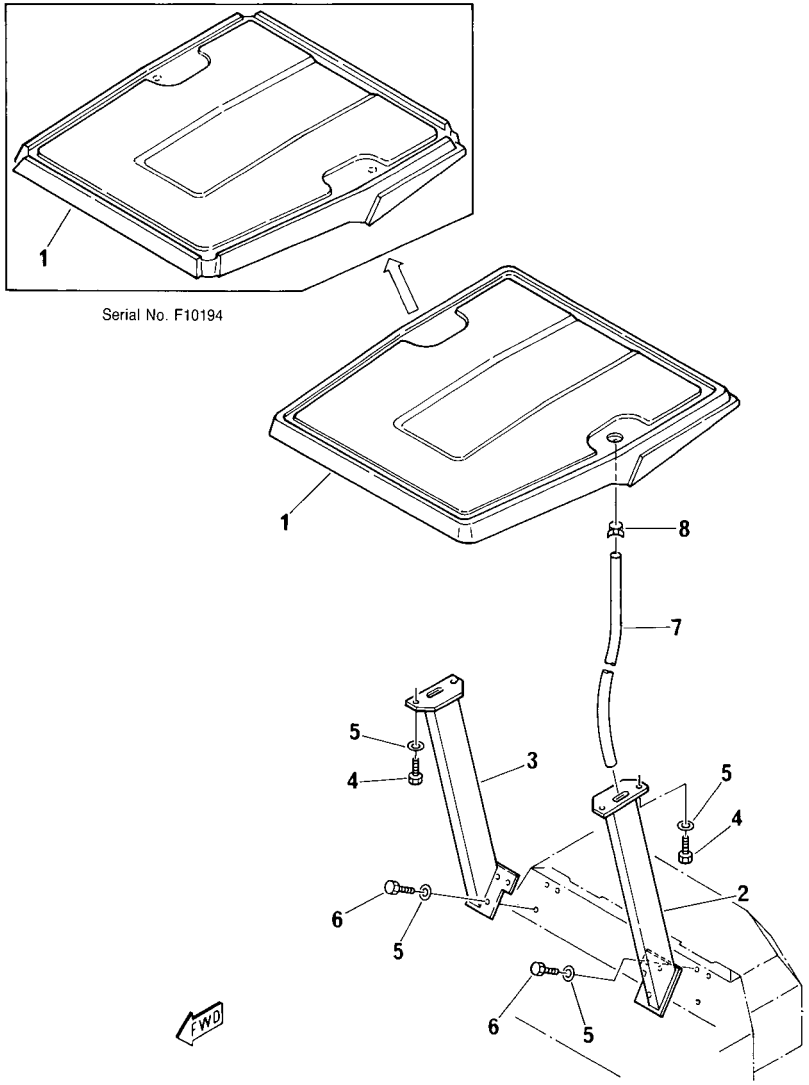

FIG. N°. :5202

INDEX N°.	PART N°.	DESCRIPTION	Q.TY	SERIAL N°. PC05-6F
1	20S-54-R3031	ROOF ASSY.	1	F10001 - F10193
	20S-54-33111	ROOF ASSY.	1	F10194 -
2	20M-54-44111	POLE, L.H.	1	F10001 -
3	20M-54-44121	POLE, R.H.	1	F10001 -
4	01010-51030	BOLT	4	F10001 -
5	01643-31032	WASHER	10	F10001 -
6	01010-51035	BOLT	6	F10001 -
7	PZF852951118	HOSE	1	F10001 - F10193
8	PZF802660110	CLIP	1	F10001 - F10193

https://truckmanualshub.com/

FIG. 5702 OPERATOR'S SEAT

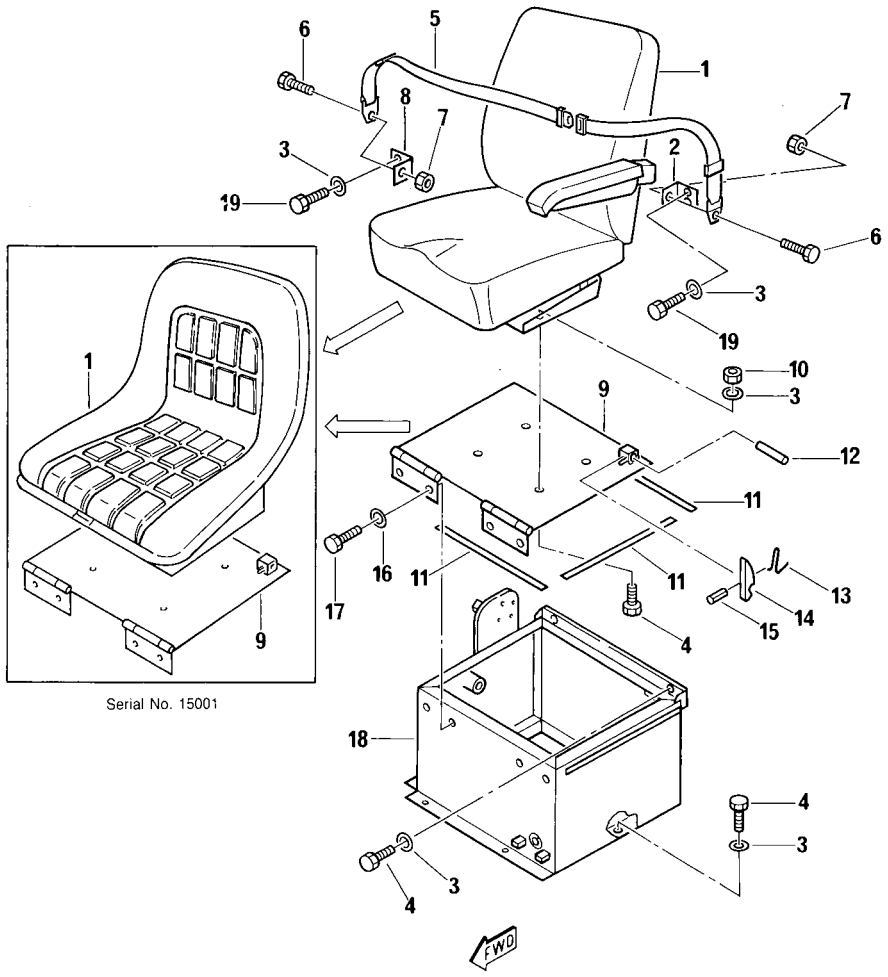

Serial No. 15001

FIG. N°. 5702

INDEX N°.	PART N°.	DESCRIPTION	Q.TY	SERIAL N°. PC05-6F
1	20M-57-R1171	SEAT	1	F10001 - F10488
	20M-57-R1241	SEAT	1	F15001 -
2	20M-57-R2041	BRACKET, L.H.	1	F10001 -
3	01643-30823	WASHER	14	F10001 -
4	01010-50820	BOLT	10	F10001 -
5	20N-57-R1101	SEAT BELT ASSY.	1	F10001 -
6	PZF801050037	. BOLT	2	F10001 -
7	PZF801730002	. NUT	2	F10001 -
8	20M-57-R2051	BRACKET, R.H.	1	F10001 -
9	20M-57-R1051	BRACKET	1	F10001 - F10488
	20M-57-R1251	BRACKET	1	F15001 -
10	01580-00806	NUT	4	F10001 -
11	20M-57-48331	SEAL, DUST	4	F10001 -
12	111-86-19545	PIN	1	F10001 -
13	111-86-19535	SPRING	1	F10001 -
14	20M-57-19250	HOOK	1	F10001 -
15	PZF802510115	PIN, SPRING	1	F10001 -
16	01643-31032	WASHER	4	F10001 -
17	01010-51020	BOLT	4	F10001 -
18	20M-57-R1061	BRACKET	1	F10001 -
19	01010-50825	BOLT	4	F10001 -

https://truckmanualshub.com/

FIG. 5703 OPERATOR'S SEAT (TBG SPEC.)

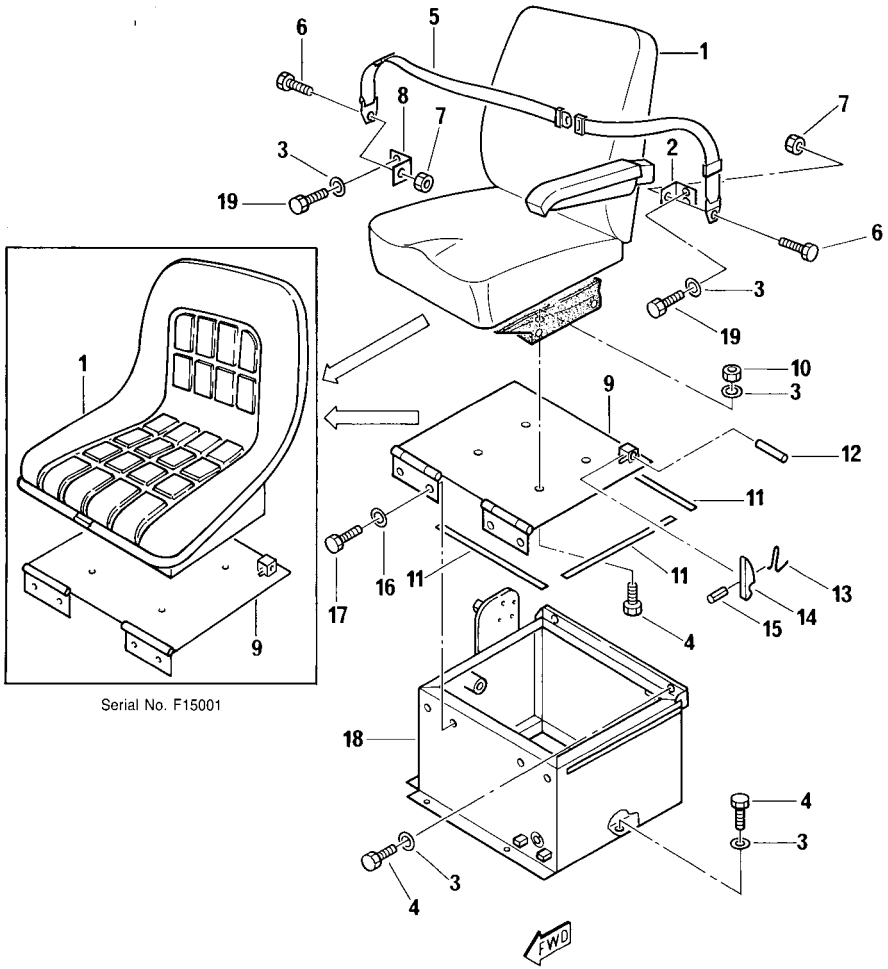

Serial No. F15001

FIG. N°. :5703

INDEX N°.	PART N°.	DESCRIPTION	Q.TY	SERIAL N°. PC05-6F
1	20M-57-R1161	SEAT	1	F10001 - F10488
	20M-57-R1241	SEAT	1	F15001 -
2	20M-57-R2041	BRACKET, L.H.	1	F10001 -
3	01643-30823	WASHER	14	F10001 -
4	01010-50820	BOLT	10	F10001 -
5	20N-57-R1101	SEAT BELT ASSY.	1	F10001 -
6	PZF801050037	. BOLT	2	F10001 -
7	PZF801730002	. NUT	2	F10001 -
8	20M-57-R2051	BRACKET, R.H.	1	F10001 -
9	20M-57-R1051	BRACKET	1	F10001 - F10488
	20M-57-R1251	BRACKET	1	F15001 -
10	01580-00806	NUT	4	F10001 -
11	20M-57-48331	SEAL, DUST	4	F10001 -
12	111-86-19545	PIN	1	F10001 -
13	111-86-19535	SPRING	1	F10001 -
14	20M-57-19250	HOOK	1	F10001 -
15	PZF802510115	PIN, SPRING	1	F10001 -
16	01643-31032	WASHER	4	F10001 -
17	01010-51020	BOLT	4	F10001 -
18	20M-57-R1061	BRACKET	1	F10001 -
19	01010-50825	BOLT	4	F10001 -

https://truckmanualshub.com/

WORK EQUIPMENT CONTROL SYSTEM

https://truckmanualshub.com/

FIG. 6001 HYDRAULIC TANK

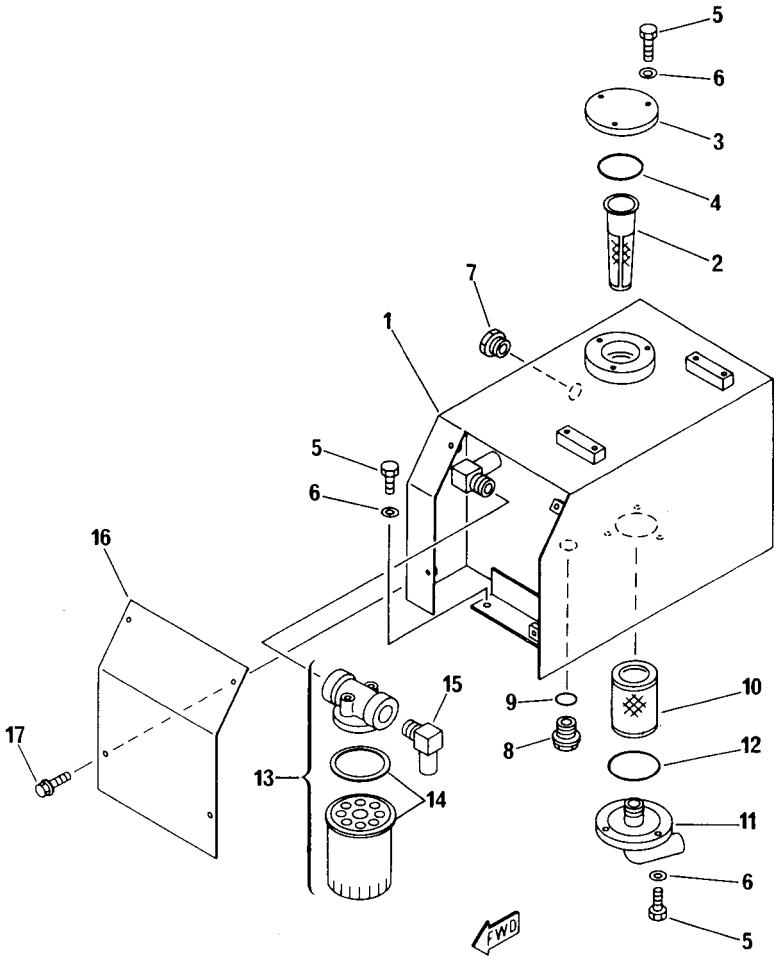

FIG. N°. :6001

INDEX N°.	PART N°.	DESCRIPTION	Q.TY	SERIAL N°. PC05-6F
1	20M-60-R1001	TANK, HYDRAULIC	1	F10001 -
2	PZF848200023	STRAINER	1	F10001 -
3	20M-60-48120	FLANGE	1	F10001 -
4	PZF855021229	O-RING	1	F10001 -
5	01010-50820	BOLT	10	F10001 -
6	01643-30823	WASHER	10	F10001 -
7	20N-60-R1131	GAUGE	1	F10001 -
8	PZF500366041	PLUG	1	F10001 -
9	PZF855021211	O-RING	1	F10001 -
10	20M-60-R1041	STRAINER	1	F10001 -
11	20M-60-31211	FLANGE	1	F10001 -
12	PZF855021232	O-RING	1	F10001 -
13	20M-60-R1101	OIL FILTER ASSY.	1	F10001 -
14	20M-60-R1151	. CARTRIDGE ASSY.	1	F10001 -
15	20M-60-R1051	ELBOW	1	F10001 -
16	20M-60-48130	COVER	1	F10001 -
17	01435-00816	BOLT	4	F10001 -

https://truckmanualshub.com/

FIG. 6201 7-SPOOL CONTROL VALVE (1/2)

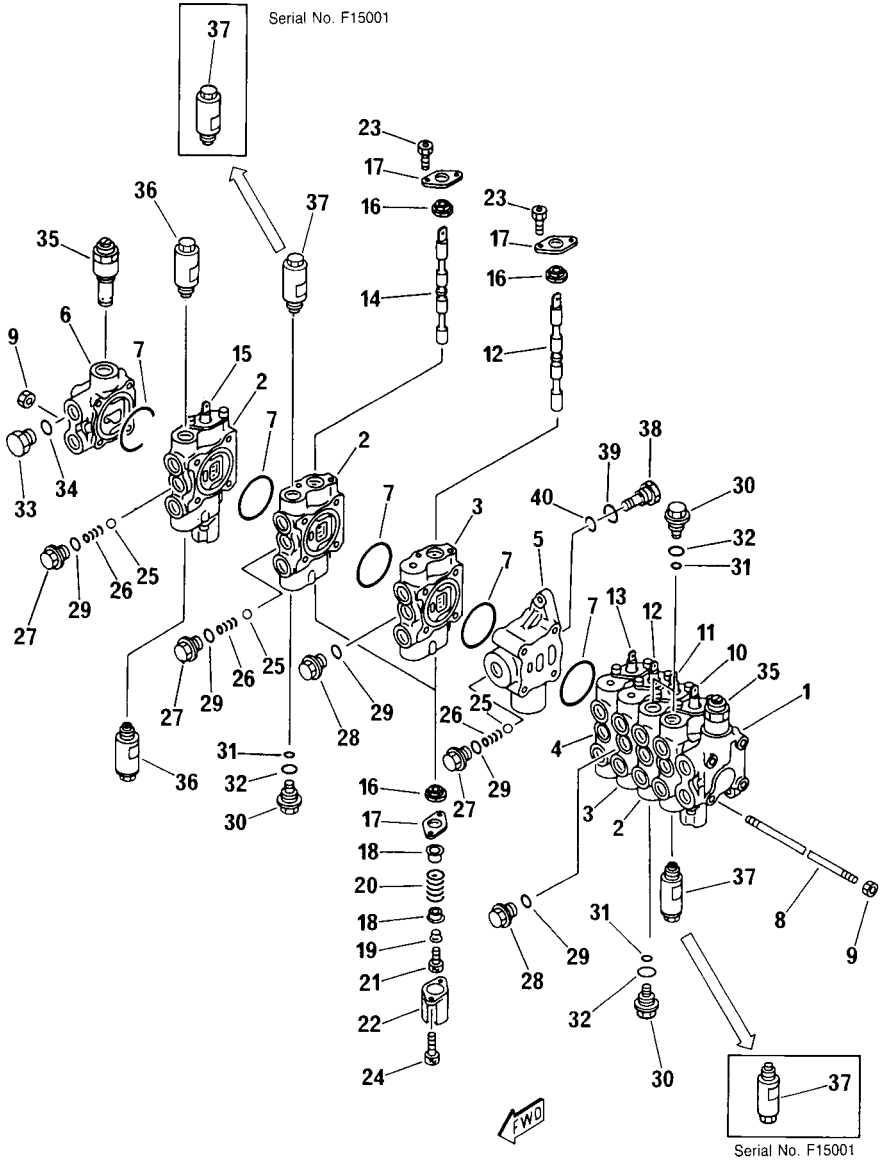

FIG. N°. :6201

INDEX N°.	PART N°.	DESCRIPTION	Q.TY	SERIAL N°. PC05-6F
—	709-37-11900	VALVE ASSY.	1	F10001 - F10488
	709-37-12400	VALVE ASSY.	1	F15001 -
1	☆	. BLOCK	1	F10001 -
2	☆	. BLOCK	4	F10001 -
3	☆	. BLOCK	2	F10001 -
4	☆	. BLOCK	1	F10001 -
5	☆	. BLOCK	1	F10001 -
6	☆	. BLOCK	1	F10001 -
7	07000-12055	. O-RING	9	F10001 -
8	709-37-11510	. STUD	4	F10001 -
9	01580-10806	. NUT	8	F10001 -
10	☆	. SPOOL, BOOM	1	F10001 -
11	☆	. SPOOL BUCKET	1	F10001 -
12	☆	. SPOOL, TRAVEL	2	F10001 -
13	☆	. SPOOL, BLADE	1	F10001 -
14	☆	. SPOOL, ARM	1	F10001 -
15	☆	. SPOOL, SWING	1	F10001 -
16	709-32-11530	. SEAL, DUST	14	F10001 -
17	709-32-11540	. PLATE	14	F10001 -
18	709-32-11550	. RETAINER	14	F10001 -
19	709-32-11560	. COLLAR	7	F10001 -
20	709-32-11580	. SPRING	7	F10001 -
21	01252-30620	. BOLT	7	F10001 -
22	709-32-11570	. COVER	7	F10001 -
23	01252-30610	. BOLT	14	F10001 -
24	01252-30616	. BOLT	14	F10001 -
25	04260-01270	. BALL	6	F10001 -
26	709-32-11820	. SPRING	6	F10001 -
27	709-32-11810	. PLUG	6	F10001 -
28	709-32-11930	. PLUG	2	F10001 -
29	07002-11823	. O-RING	8	F10001 -
30	709-32-11830	. PLUG	4	F10001 -
31	709-32-11840	. O-RING	4	F10001 -
32	07002-02034	. O-RING	4	F10001 -
33	07040-12012	. PLUG	1	F10001 -
34	07002-02034	. O-RING	1	F10001 -
35	700-28-54000	. VALVE ASSY., MAIN RELIEF	2	F10001 -
36	709-30-62801	. VALVE ASSY., SUCTION AND SAFETY -	2	F10001 -
37	709-30-62201	. VALVE ASSY., SUCTION AND SAFETY -	2	F10001 - F10488
	709-30-62301	. VALVE ASSY., SUCTION AND SAFETY	2	F15001 -
38	709-32-11860	PLUG	1	F10001 -
39	PZF855021211	O-RING	1	F10001 -
40	PZF855021015	O-RING	1	F10001 -

https://truckmanualshub.com/

FIG. 6202 7-SPOOL CONTROL VALVE (2/2)

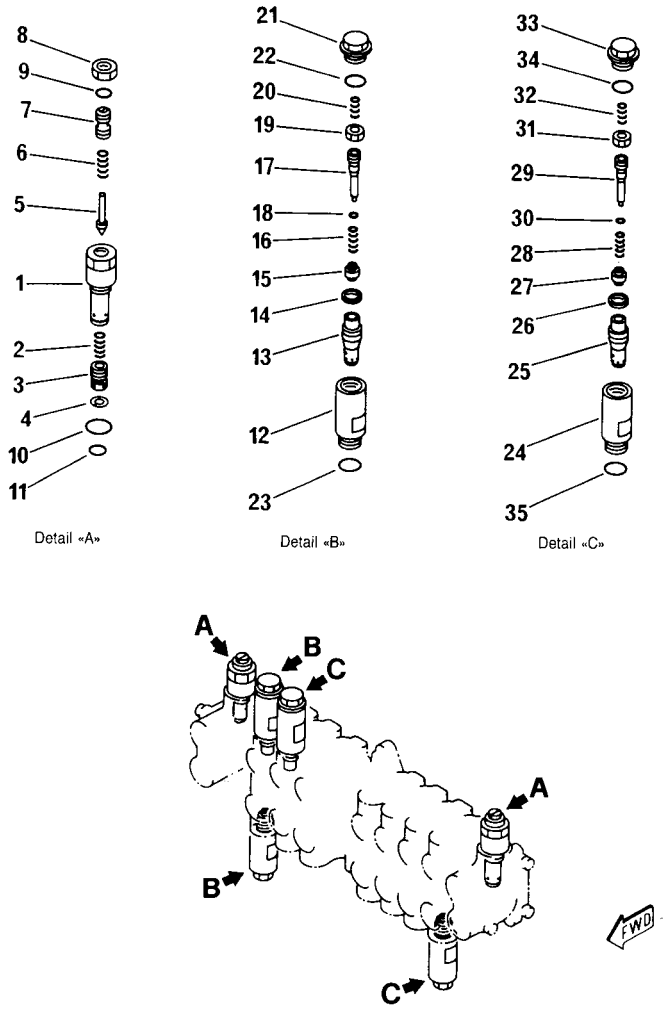

FIG. N°. :6202

INDEX N°.	PART N°.	DESCRIPTION	Q.TY	SERIAL N°. PC05-6F
—	709-37-11900	VALVE ASSY.	1	F10001 - F10488
	709-37-12400	VALVE ASSY.	1	F15001 -
	700-28-54000	. VALVE ASSY., MAIN RELIEF	2	F10001 -
1	☆	. . SLEEVE	1	F10001 -
2	700-20-51430	. . SPRING	1	F10001 -
3	☆	. . VALVE	1	F10001 -
4	700-20-51240	. . RING	1	F10001 -
5	700-80-61190	. . POPPET	1	F10001 -
6	700-20-51350	. . SPRING	1	F10001 -
7	700-20-51340	. . BOLT	1	F10001 -
8	01583-11408	. . NUT	1	F10001 -
9	07000-02011	. . O-RING	1	F10001 -
10	700-22-11410	. . O-RING	1	F10001 -
11	07002-02434	. . O-RING	1	F10001 -
	709-30-62801	. VALVE ASSY., SUCTION AND SAFETY	2	F10001 -
12	709-30-62110	. . SLEEVE	1	F10001 -
13	☆	. . VALVE	1	F10001 -
14	☆	. . SEAL	1	F10001 -
15	☆	. . POPPET	1	F10001 -
16	☆	. . SPRING	1	F10001 -
17	☆	. . PISTON	1	F10001 -
18	☆	. . O-RING	1	F10001 -
19	☆	. . NUT	1	F10001 -
20	700-20-62170	. . SPRING	1	F10001 -
21	709-30-62150	. . PLUG	1	F10001 -
22	07002-12034	. . O-RING	1	F10001 -
23	07002-02034	. . O-RING	1	F10001 -
	709-30-62201	. VALVE ASSY., SUCTION AND SAFETY	2	F10001 - F10488
	709-30-62301	. VALVE ASSY., SUCTION AND SAFETY	2	F15001 -
24	709-30-62110	. . SLEEVE	1	F10001 -
25	☆	. . VALVE	1	F10001 -
26	☆	. . SEAL	1	F10001 -
27	☆	. . POPPET	1	F10001 -
28	☆	. . SPRING	1	F10001 -
29	☆	. . PISTON	1	F10001 -
30	☆	. . O-RING	1	F10001 -
31	☆	. . NUT	1	F10001 -
32	700-20-62170	. . SPRING	1	F10001 -
33	709-30-62150	. . PLUG	1	F10001 -
34	07002-12034	. . O-RING	1	F10001 -
35	07002-02034	. . O-RING	1	F10001 -

https://truckmanualshub.com/

FIG. 6211 CONTROL VALVE (FOR ATTACHMENT)

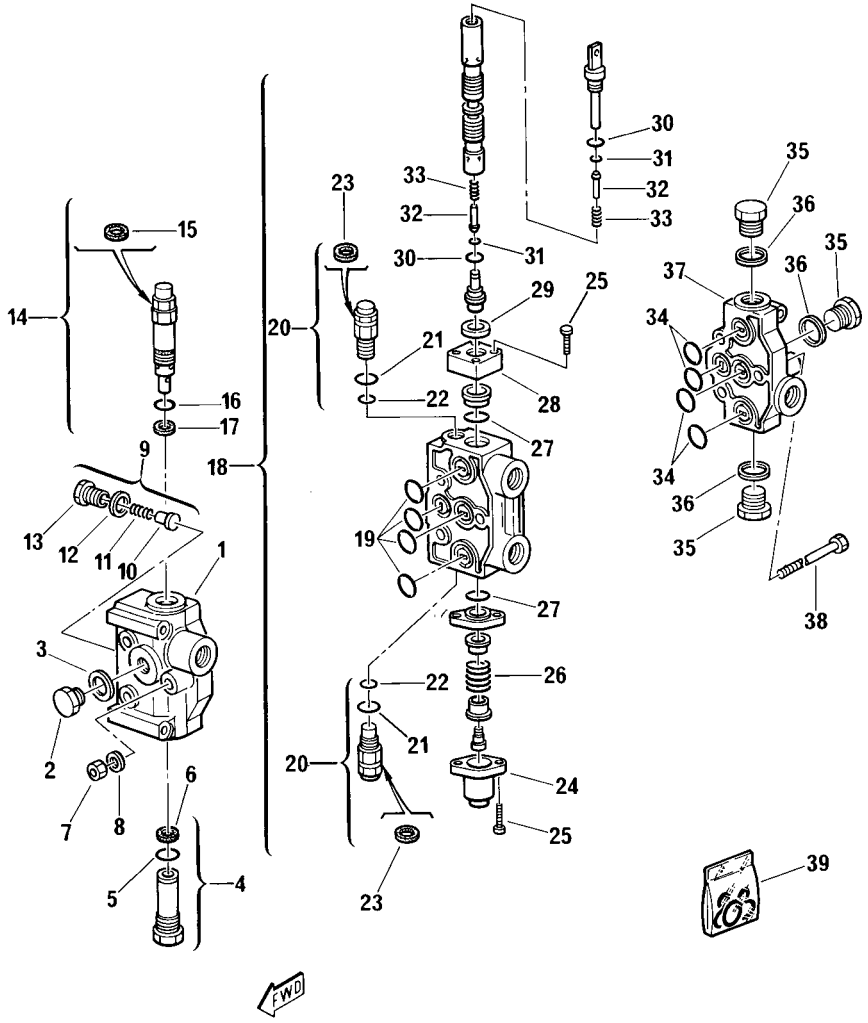

FIG. N°. :6211

INDEX N°.	PART N°.	DESCRIPTION	Q.TY	SERIAL N°. PC05-6F
—	709-31-R7081	DISTRIBUTOR ASSY.	1	F10001 -
1	PZF844100286	. BLOCK	1	F10001 -
2	PZF844100297	. PLUG	1	F10001 -
3	PZF802090218	. SEAL	1	F10001 -
4	PZF844100285	. PLUG	1	F10001 -
5	PZF855021018	. . O-RING	1	F10001 -
6	PZF802090212	. . SEAL	1	F10001 -
7	PZF801703208	. NUT	3	F10001 -
8	PZF802150508	. WASHER	3	F10001 -
9	PZF844100284	. VALVE ASSY.	1	F10001 -
10	PZF844100254	. . VALVE	1	F10001 -
11	PZF844100255	. . SPRING	1	F10001 -
12	PZF855150037	. . SEAL	1	F10001 -
13	PZF844100041	. . PLUG	1	F10001 -
14	PZF844100282	. VALVE ASSY.	1	F10001 -
15	PZF802090209	. . SEAL	1	F10001 -
16	PZF844100257	. . O-RING	1	F10001 -
17	PZF802090214	. . SEAL	1	F10001 -
18	PZF844100287	. ELEMENT ASSY.	1	F10001 -
19	PZF855021018	. . O-RING	4	F10001 -
20	PZF844100281	. . VALVE ASSY.	2	F10001 -
21	PZF855021806	. . . O-RING	1	F10001 -
22	PZF855021011	. . . O-RING	1	F10001 -
23	PZF802090212	. . . SEAL	1	F10001 -
24	PZF844100293	. . COVER	1	F10001 -
25	PZF801220193	. . BOLT	6	F10001 -
26	PZF844100292	. . SPRING	1	F10001 -
27	PZF855021115	. . O-RING	2	F10001 -
28	PZF844100291	. . BRACKET	1	F10001 -
29	PZF855350024	. . SEAL	1	F10001 -
30	PZF844100290	. . O-RING	2	F10001 -
31	PZF855021009	. . O-RING	2	F10001 -
32	PZF844100288	. . PISTON	2	F10001 -
33	PZF844100289	. . SPRING	2	F10001 -
34	PZF855021018	. . O-RING	4	F10001 -
35	PZF844100295	. PLUG	3	F10001 -
36	PZF802090222	. SEAL	3	F10001 -
37	PZF844100294	. DRAIN BLOCK	1	F10001 -
38	PZF801014809	. BOLT	3	F10001 -
39	PZF844100283	. SET OF SEALS	1	F10001 -

https://truckmanualshub.com/

FIG. 6251 SELECTOR VALVE

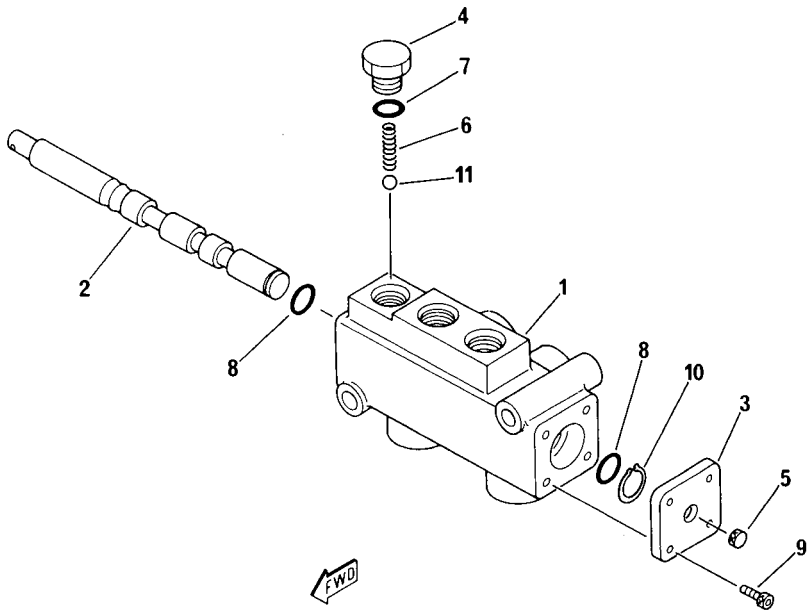

FIG. N°. :6251

INDEX N°.	PART N°.	DESCRIPTION	Q.TY	SERIAL N°. PC05-6F
—	20M-60-39400	SELECTOR VALVE	1	F10001 -
1	☆	. BODY	1	F10001 -
2	☆	. SPOOL	1	F10001 -
3	20M-60-39430	. COVER	1	F10001 -
4	20M-60-39440	. PLUG	1	F10001 -
5	20M-60-39450	. FILTER	1	F10001 -
6	20M-60-39460	. SPRING	1	F10001 -
7	07000-12011	. O-RING	1	F10001 -
8	07000-02012	. O-RING	2	F10001 -
9	01252-30614	. BOLT	4	F10001 -
10	04064-01210	. RING, SNAP	1	F10001 -
11	20M-60-39470	. BALL	1	F10001 -

https://truckmanualshub.com/

FIG. 6401 SWIVEL JOINT

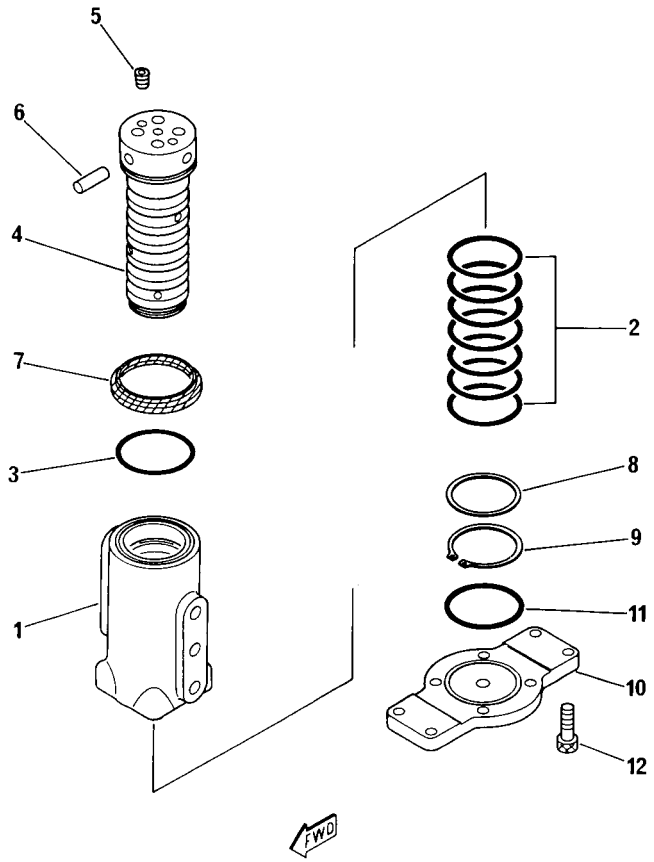

FIG. N°. :6401

INDEX N°.	PART N°.	DESCRIPTION	Q.TY	SERIAL N°. PC05-6F
—	703-05-12150	SWIVEL JOINT ASSY.	1	F10001 -
1	703-05-91140	. ROTOR	1	F10001 -
2	PZF855661166	. O-RING	7	F10001 -
3	PZF855661236	. O-RING	1	F10001 -
4	703-05-92140	. SHAFT	1	F10001 -
5	07043-20108	. PLUG	3	F10001 -
6	703-05-98160	. PIN	1	F10001 -
7	703-05-98140	. SEAL, DUST	1	F10001 -
8	703-05-94120	. RING	1	F10001 -
9	04064-05020	. RING, SNAP	1	F10001 -
10	703-05-93140	. PLATE	1	F10001 -
11	703-05-98150	. O-RING	1	F10001 -
12	01252-30825	. BOLT	4	F10001 -

https://truckmanualshub.com/

FIG. 6431 TRAVEL MOTOR (1/3)

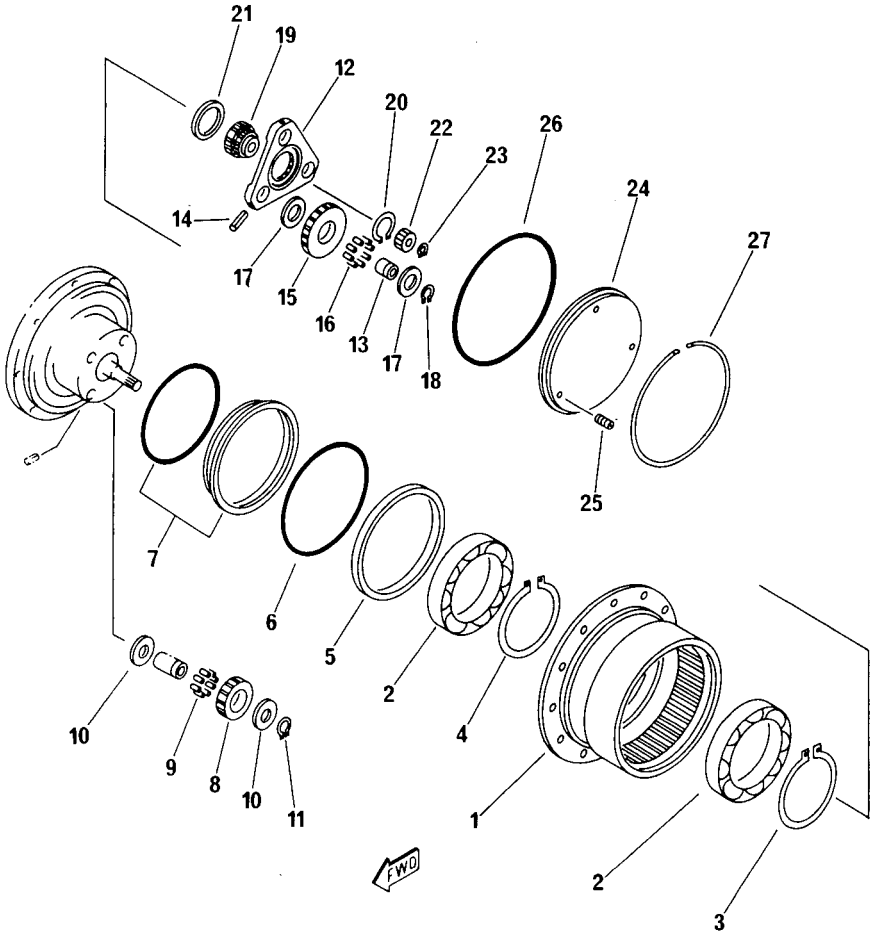

FIG. N°. :6431

INDEX N°.	PART N°.	DESCRIPTION	Q.TY	SERIAL N°. PC05-6F
—	20M-60-40100	TRAVEL MOTOR ASSY.	2	F10001 - F15502
	20M-60-40101	TRAVEL MOTOR ASSY.	2	F15503 -
1	☆	. BODY	1	F10001 -
2	20W-60-12420	. BEARING	2	F10001 -
3	☆	. RING, SNAP	1	F10001 -
4	☆	. RING, SNAP	1	F10001 -
5	☆	. RING, SEAL	1	F10001 -
6	☆	. O-RING (K1)	1	F10001 -
7	20W-60-12410	. FLOATING SEAL ASSY.	1	F10001 -
8	☆	. GEAR	4	F10001 -
9	☆	. NEEDLE	52	F10001 -
10	☆	. WASHER, THRUST	8	F10001 -
11	☆	. RING, SNAP	4	F10001 -
	20W-60-12300	. CARRIER ASSY.	1	F10001 - F15502
	FUCHC-1-2-1475	. CARRIER ASSY.	1	F15503 -
12	☆	. . CARRIER	1	F10001 -
13	☆	. . PIN	3	F10001 -
14	☆	. . PIN, SPRING	3	F10001 -
15	☆	. . GEAR	3	F10001 -
16	☆	. . NEEDLE	39	F10001 -
17	☆	. . WASHER, THRUST	6	F10001 -
18	☆	. . RING, SNAP	3	F10001 -
19	☆	. . GEAR	1	F10001 -
20	20W-60-12380	. . RING, SNAP	1	F10001 -
21	☆	. COLLAR, THRUST	1	F10001 -
22	☆	. GEAR	1	F10001 -
23	20N-60-31740	. RING, SNAP	1	F10001 -
24	☆	. COVER	1	F10001 -
25	20M-60-25370	. PLUG	3	F10001 -
26	☆	. O-RING	1	F10001 -
27	☆	. RING, SNAP (K1)	1	F10001 -

https://truckmanualshub.com/

FIG. 6432 TRAVEL MOTOR (2/3)

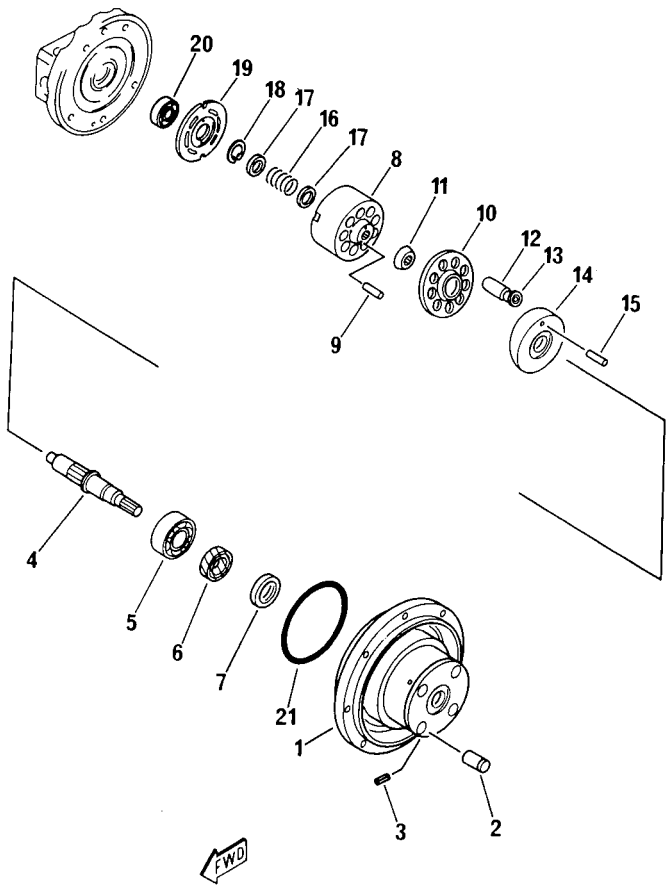

FIG. N°. :6432

INDEX N°.	PART N°.	DESCRIPTION	Q.TY	SERIAL N°. PC05-6F
—	20M-60-40100	TRAVEL MOTOR ASSY.	2	F10001 - F15502
	20M-60-40101	TRAVEL MOTOR ASSY.	2	F15503 -
—	20M-60-40200	. MOTOR AND VALVE A.	1	F10001 -
1	☆	. . BODY	1	F10001 -
2	☆	. . PIN	4	F10001 -
3	04025-00312	. . PIN, SPRING	4	F10001 -
4	☆	. . SHAFT	1	F10001 -
5	20W-60-12740	. . BEARING	1	F10001 -
6	☆	. . SEAL OIL (K2)	1	F10001 -
7	☆	. . RING BACK-UP (K2)	1	F10001 -
8	☆	. . BARREL, CYLINDER	1	F10001 -
9	☆	. . PIN	3	F10001 -
10	☆	. . HOLDER, SHOE	1	F10001 -
11	☆	. . HOLDER, BARREL	1	F10001 -
12	☆	. . PISTON	9	F10001 -
13	☆	. . SHOE	9	F10001 -
14	☆	. . PLATE, SWASH	1	F10001 -
15	20W-60-12770	. . PIN	1	F10001 -
16	☆	. . SPRING	1	F10001 -
17	☆	. . RETAINER	2	F10001 -
18	04065-02812	. . RING	1	F10001 -
19	☆	. . PLATE, VALVE	1	F10001 -
20	20W-60-12750	. . BEARING	1	F10001 -
21	☆	. . O-RING (K2)	1	F10001 -

https://truckmanualshub.com/

FIG. 6433 TRAVEL MOTOR (3/3)

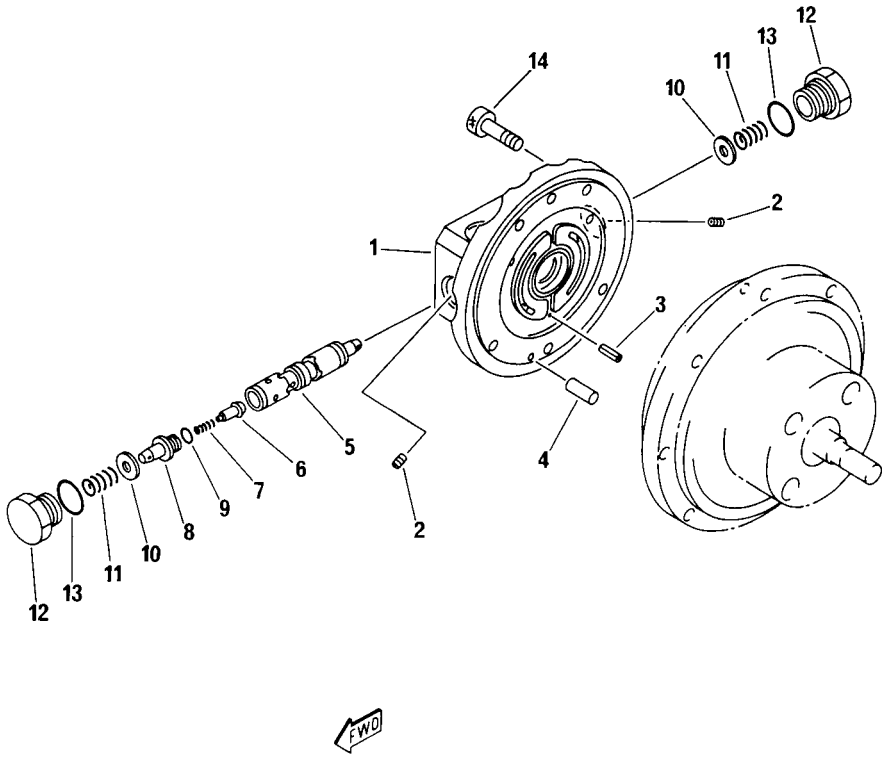

FIG. N°. :6433

INDEX N°.	PART N°.	DESCRIPTION	Q.TY	SERIAL N°. PC05-6F
—	20M-60-40100	TRAVEL MOTOR ASSY.	2	F10001 - F15502
	20M-60-40101	TRAVEL MOTOR ASSY.	2	F15503 -
	20M-60-40200	. MOTOR AND VALVE A.	1	F10001 -
1	☆	. . BODY	1	F10001 -
2	☆	. . PLUG	2	F10001 -
3	04025-00512	. . PIN, SPRING	1	F10001 -
4	20W-60-12780	. . PIN	1	F10001 -
5	☆	. . SPOOL	1	F10001 -
6	☆	. . POPPET	2	F10001 -
7	☆	. . SPRING	2	F10001 -
8	☆	. . GUIDE, SPRING	2	F10001 -
9	☆	. . O-RING (K2)	2	F10001 -
10	☆	. . RING	2	F10001 -
11	☆	. . SPRING	2	F10001 -
12	☆	. . PLUG	2	F10001 -
13	☆	. . O-RING (K2)	2	F10001 -
14	01252-40820	. . BOLT	6	F10001 -
	20W-60-12100	SEAL KIT	1	F10001 -
K1	20W-60-12200	. REDUCT. GEAR KIT	1	F10001 -
K2	20W-60-12700	. VALVE KIT	1	F10001 -

https://truckmanualshub.com/

FIG. 6441 SWING MOTOR

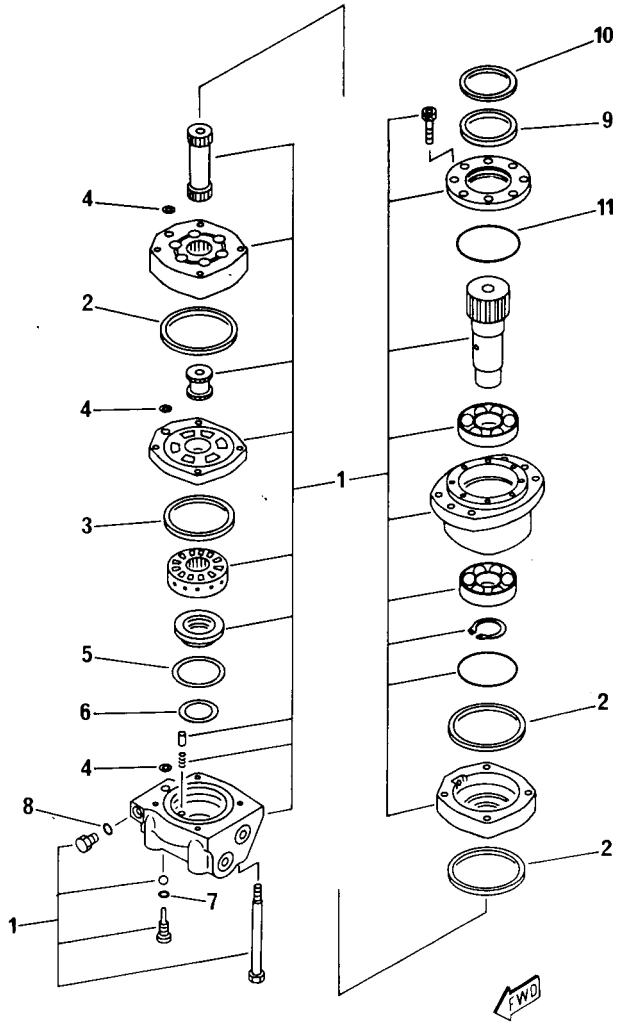

FIG. N°. :6441

INDEX N°.	PART N°.	DESCRIPTION	Q.TY	SERIAL N°. PC05-6F
	20M-60-63000	SWING MOTOR ASSY.	1	F10001 -
1	20M-60-63100	. SWING MOTOR A.	1	F10001 -
2	20N-60-16120	. . RING, DUST	3	F10001 -
3	20N-60-16170	. . RING, SEAL	1	F10001 -
4	20N-60-16140	. . SEAL, OIL	3	F10001 -
5	20N-60-16150	. . SEAL, OUTER	1	F10001 -
6	20M-60-26190	. . SEAL, INNER	1	F10001 -
7	20N-60-16220	. . O-RING	2	F10001 -
8	20N-60-16210	. . O-RING	1	F10001 -
9	20M-60-63110	. RING	1	F10001 -
10	20M-60-63120	. RING, BACK-UP	1	F10001 -
11	20M-60-26240	. O-RING	1	F10001 -

https://truckmanualshub.com/

FIG. 6502 HYDRAULIC PIPING (SUCTION-RETURN LINE)

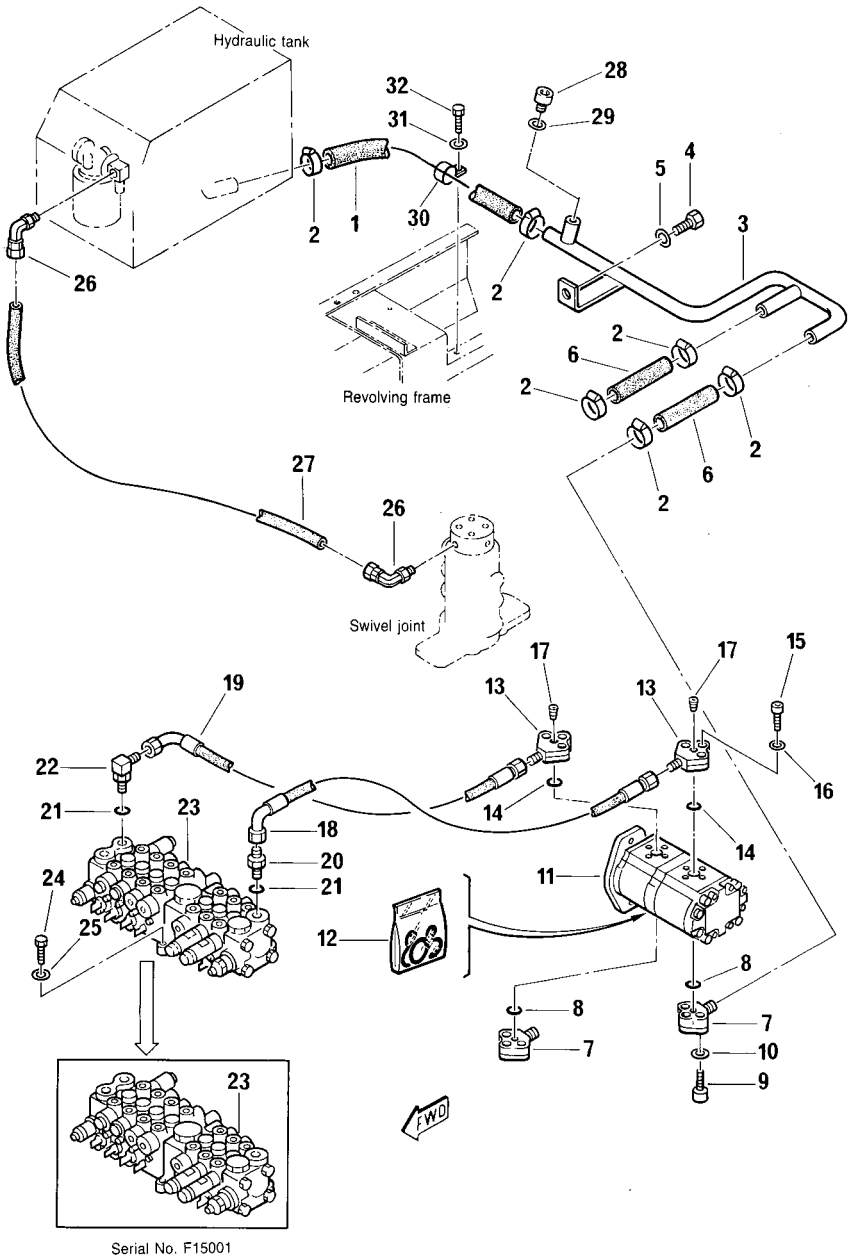

FIG. N°. :6502

INDEX N°.	PART N°.	DESCRIPTION	Q.TY	SERIAL N°. PC05-6F
1	PZF852930104	HOSE	1	F10001 - F15235
	PZF392155014	HOSE	1	F15236 -
2	PZF802660004	CLAMP	6	F10001 -
3	20M-62-R2421	TUBE	1	F10001 -
4	20M-01-68510	BOLT	1	F10001 -
5	PZF802150512	WASHER	1	F10001 -
6	PZF852930102	HOSE	2	F10001 -
7	20M-62-R1421	FLANGE 90°	2	F10001 -
8	PZF855021814	O-RING	2	F10001 -
9	01252-40630	BOLT	6	F10001 -
10	PZF802130008	WASHER	6	F10001 -
11	705-41-R2431	PUMP	1	F10001 -
12	PZF840250005	. SET OF SEALS	1	F10001 -
13	20M-62-R1431	FLANGE 90°	2	F10001 -
14	PZF855021809	O-RING	2	F10001 -
15	01252-40830	BOLT	6	F10001 -
16	PZF802130006	WASHER	6	F10001 -
17	PZF500365402	PLUG	2	F10001 -
18	20W-62-R2011	HOSE	1	F10001 -
19	20W-62-R2451	HOSE	1	F10001 -
20	20W-62-R1581	CONNECTOR	1	F10001 -
21	PZF855661168	O-RING	2	F10001 -
22	20W-62-R1571	ELBOW	1	F10001 -
23	(709-37-11900)	7-SPOOL CONTROL VALVE (SEE FIG. 6201)	1	F10001 - F10488
	(709-37-12400)	7-SPOOL CONTROL VALVE (SEE FIG. 6201)	1	F15001 -
24	01010-50830	BOLT	3	F10001 -
25	01643-30823	WASHER	6	F10001 -
26	PZF500368180	ELBOW	2	F10001 -
27	PZF852951102	TUBE	1	F10001 -
28	PZF500365603	PLUG	1	F10001 -
29	PZF802090014	SEAL	1	F10001 -
30	PZF802660034	CLAMP	1	F15221 -
31	01643-30823	WASHER	1	F15221 -
32	01010-50816	BOLT	1	F15221 -

https://truckmanualshub.com/

FIG. 6602 HYDRAULIC PIPING (TRAVEL AND BLADE LINE)

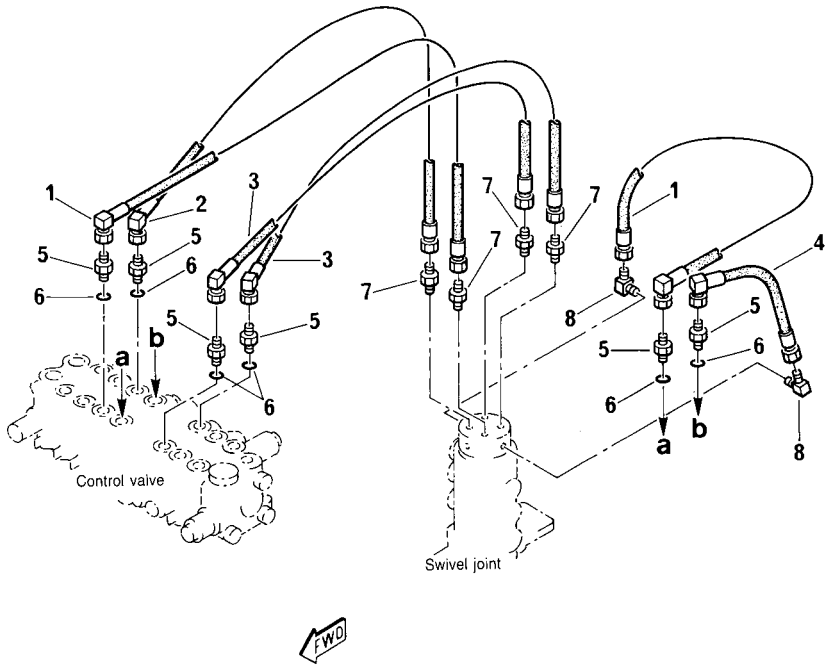

FIG. N°. :6602

INDEX N°.	PART N°.	DESCRIPTION	Q.TY	SERIAL N°. PC05-6F
1	20L-62-R2221	HOSE	2	F10001 -
2	20W-62-R2241	HOSE	1	F10001 -
3	20M-62-R2251	HOSE	2	F10001 -
4	20W-62-R2231	HOSE	1	F10001 -
5	20W-62-R1561	CONNECTOR	6	F10001 -
6	PZF855670004	. O-RING	1	F10001 -
7	20W-62-R1541	CONNECTOR	4	F10001 -
8	20M-62-R1551	ELBOW	2	F10001 -

https://truckmanualshub.com/

FIG. 6611 HYDRAULIC PIPING (SWING MOTOR AND BOOM SWING LINE)

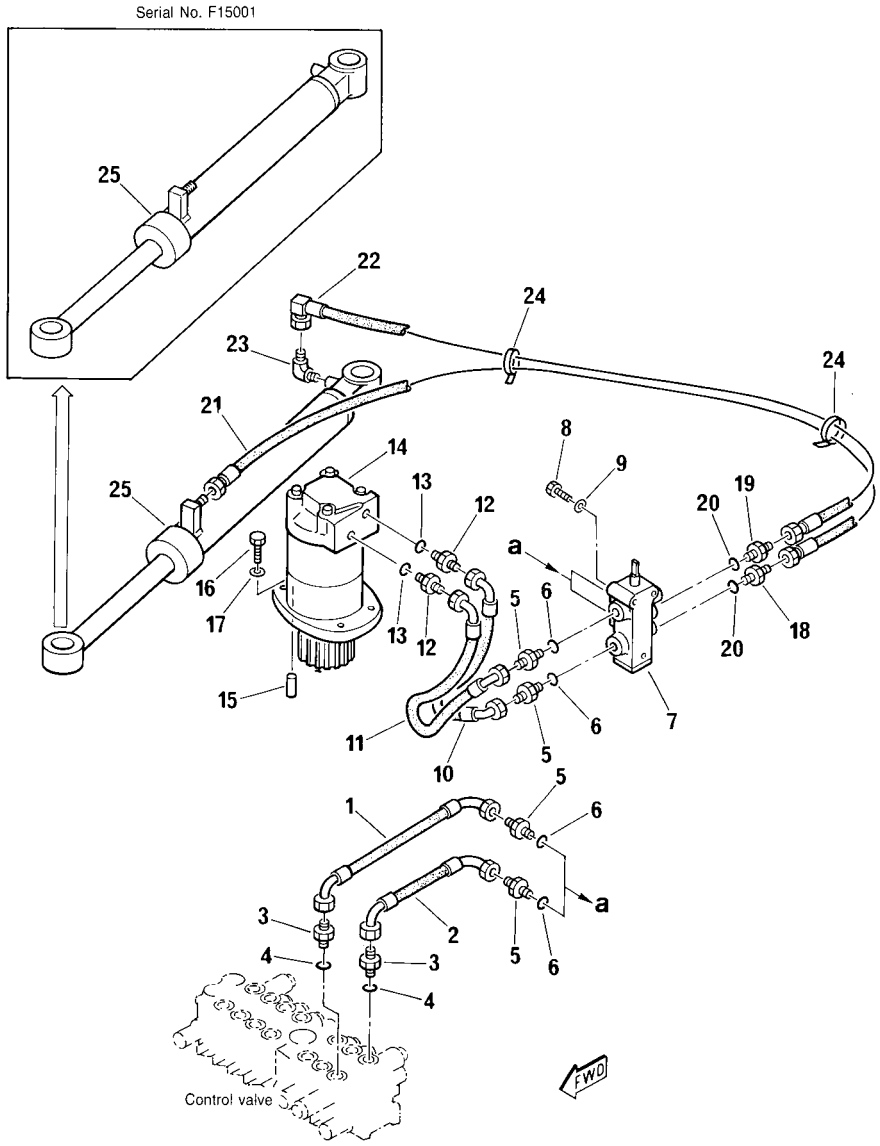

FIG. N°. :6611

INDEX N°.	PART N°.	DESCRIPTION	Q.TY	SERIAL N°. PC05-6F
1	20M-62-R2171	HOSE	1	F10001 -
2	20M-62-R2181	HOSE	1	F10001 -
3	20W-62-R1561	CONNECTOR	2	F10001 -
4	PZF855670004	. O-RING	1	F10001 -
5	20M-62-R1401	CONNECTOR	4	F10001 - F15630
	PZF500355155	CONNECTOR	4	F15631 -
6	PZF855051111	. O-RING	1	F10001 - F15630
	PZF855670006	. O-RING	1	F15631 -
7	(20M-60-39400)	VALVE ASSY. (SEE FIG. 6251)	1	F10001 -
8	01010-50860	BOLT	2	F10001 -
9	01643-30823	WASHER	2	F10001 -
10	20M-62-R2371	HOSE	1	F10001 -
11	20M-62-R2381	HOSE	1	F10001 -
12	20N-62-R1451	CONNECTOR	2	F10001 - F15537
	20M-62-R2751	CONNECTOR	2	F15538 -
13	PZF855051617	. O-RING	1	F10001 - F15537
	PZF855670017	. O-RING	1	F15538 -
14	(20M-60-63000)	SWING MOTOR ASSY. (SEE FIG. 6441)	1	F10001 -
15	20M-26-31150	PIN, DOWEL	2	F10001 -
16	01010-51040	BOLT	4	F10001 -
17	01643-31032	WASHER	4	F10001 -
18	20M-62-R2331	CONNECTOR	1	F10001 -
19	20M-62-R2341	CONNECTOR	1	F10001 -
20	PZF855051111	O-RING	2	F10001 - F15630
	PZF855670006	O-RING	2	F15631 -
21	20N-62-R2401	HOSE	1	F10001 -
22	20M-62-R2351	HOSE	1	F10001 -
23	20M-62-R2361	ELBOW	1	F10001 -
24	PZF885180005	BAND	2	F10001 -
25	(707-00-R4311)	SWING CYLIND. ASSY. (SEE FIG. 7181)	1	F10001 - F10488
	(707-00-R4491)	SWING CYLIND. ASSY. (SEE FIG. 7181)	1	F15001 -
	(707-00-R4461)	90° SWING CYLIND. ASSY., R.H. (ONLY WITH CANOPY) (SEE FIG. 7183)	1	F10001 - F10488
	(707-00-R4541)	90° SWING CYLIND. ASSY., R.H. (ONLY WITH CANOPY) (SEE FIG. 7183)	1	F15001 -

https://truckmanualshub.com/

FIG. 6702 HYDRAULIC PIPING (BOOM ARM, BUCKET CYLINDER LINE)

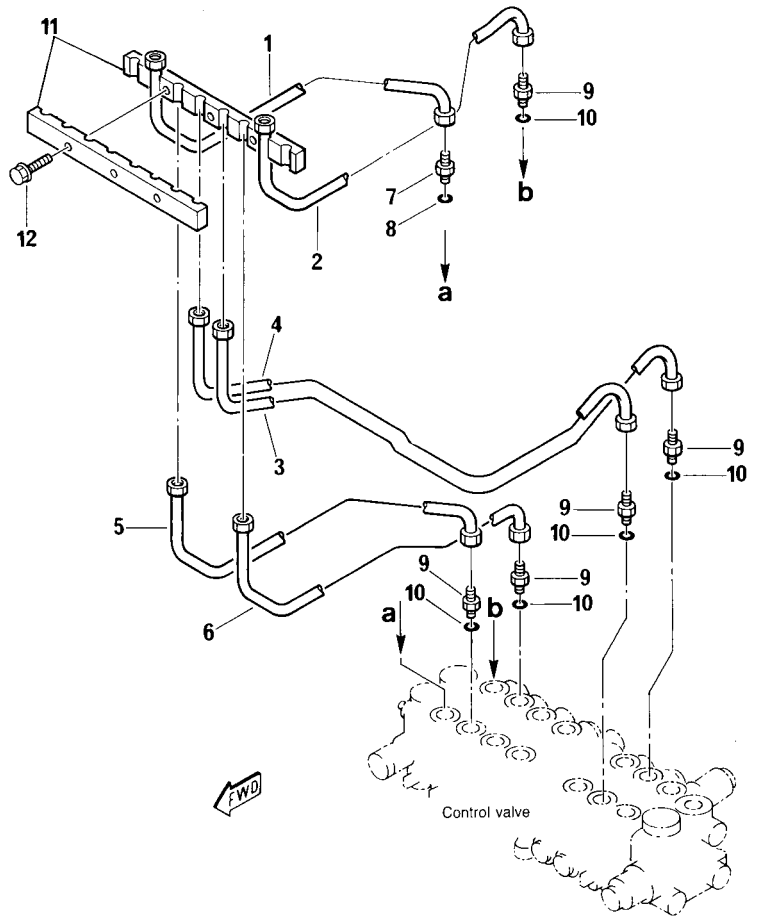

FIG. N°. 6702

INDEX N°.	PART N°.	DESCRIPTION	Q.TY	SERIAL N°. PC05-6F
1	20W-62-R2261	TUBE	1	F10001 -
2	20W-62-R2271	TUBE	1	F10001 -
3	20W-62-R2291	TUBE	1	F10001 -
4	20W-62-R2281	TUBE	1	F10001 -
5	20W-62-R2301	TUBE	1	F10001 -
6	20W-62-R2311	TUBE	1	F10001 -
7	20M-62-R2081	CONNECTOR	1	F10001 -
8	PZF855670004	O-RING	1	F10001 -
9	20W-62-R1561	CONNECTOR	5	F10001 -
10	PZF855670004	. O-RING	1	F10001 -
11	20M-973-R101	CLAMP	1	F10001 -
12	01435-00825	BOLT	3	F10001 -

https://truckmanualshub.com/

FIG. 6722 HYDRAULIC PIPING (THREE WAY VALVE)

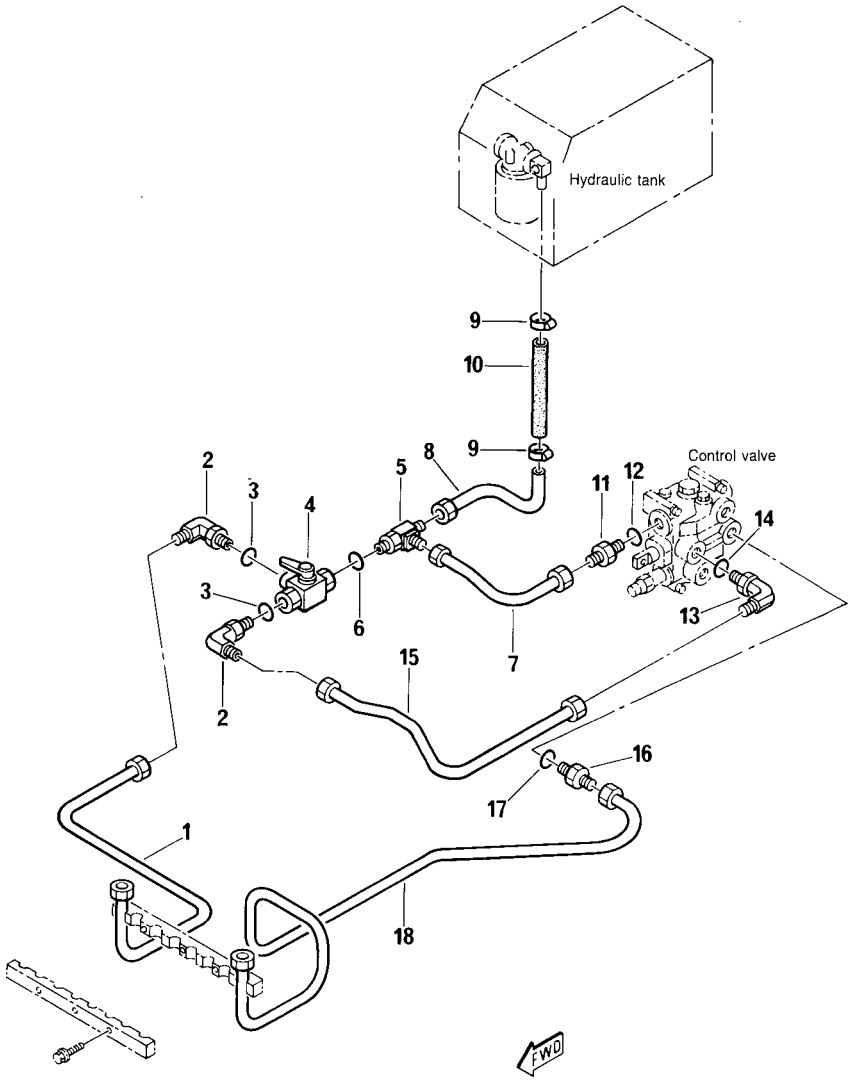

FIG. N°. :6722

INDEX N°.	PART N°.	DESCRIPTION	Q.TY	SERIAL N°. PC05-6F
1	20M-973-R061	TUBE	1	F10001 -
2	20M-973-R271	ELBOW	2	F10001 -
3	PZF855051617	. O-RING	1	F10001 -
4	20M-973-R041	THREE WAY VALVE	1	F10001 -
5	20M-973-R171	«T» CONNECTOR	1	F10001 -
6	PZF855051617	. O-RING	1	F10001 -
7	20M-62-R4021	TUBE	1	F10001 -
8	20M-973-R081	TUBE	1	F10001 -
9	PZF802660004	CLAMP	2	F10001 -
10	PZF852930101	SLEEVE	1	F10001 -
11	780-53-R7091	CONNECTOR	1	F10001 -
12	PZF855051116	. O-RING	1	F10001 -
13	20N-62-R1491	ELBOW	1	F10001 -
14	PZF855051616	. O-RING	1	F10001 -
15	20M-973-R021	TUBE	1	F10001 -
16	20N-62-R1481	CONNECTOR	1	F10001 -
17	PZF855051616	. O-RING	1	F10001 -
18	20M-973-R031	TUBE	1	F10001 -

https://truckmanualshub.com/

FIG. 6726 HYDRAULIC PIPING (FOR ATTACHMENT)

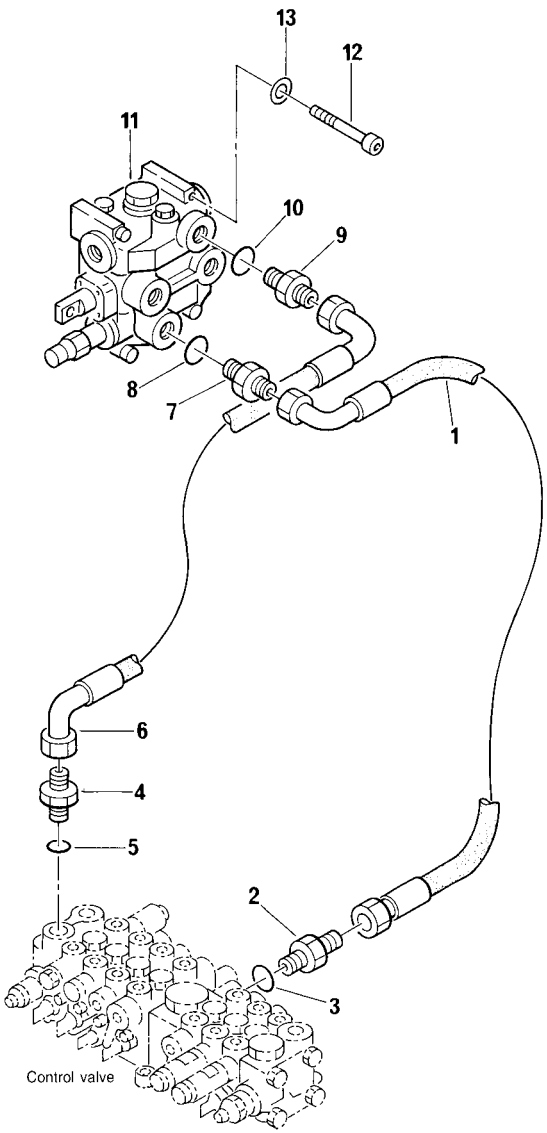

FIG. N°. :6726

INDEX N°.	PART N°.	DESCRIPTION	Q.TY	SERIAL N°. PC05-6F
1	20M-973-R071	HOSE	1	F10001 -
2	20W-62-R1581	CONNECTOR	1	F10001 -
3	PZF855661168	O-RING	1	F10001 -
4	20M-62-R1441	CONNECTOR	1	F10001 -
5	PZF855661168	O-RING	1	F10001 -
6	20M-62-R8091	HOSE	1	F10001 -
7	20N-62-R1431	CONNECTOR	1	F10001 -
8	PZF855051616	. O-RING	1	F10001 -
9	PZF500358764	CONNECTOR	1	F10001 -
10	PZF855051116	. O-RING	1	F10001 -
11	709-31-R7081	DISTRIBUTOR ASSY.	1	F10001 -
12	PZF801105240	BOLT	3	F10001 -
13	01643-30623	WASHER	3	F10001 -

https://truckmanualshub.com/

FIG. 6730 HYDRAULIC PIPING (FOR ATTACHMENT) (WITH ADDITIONAL PUMP)

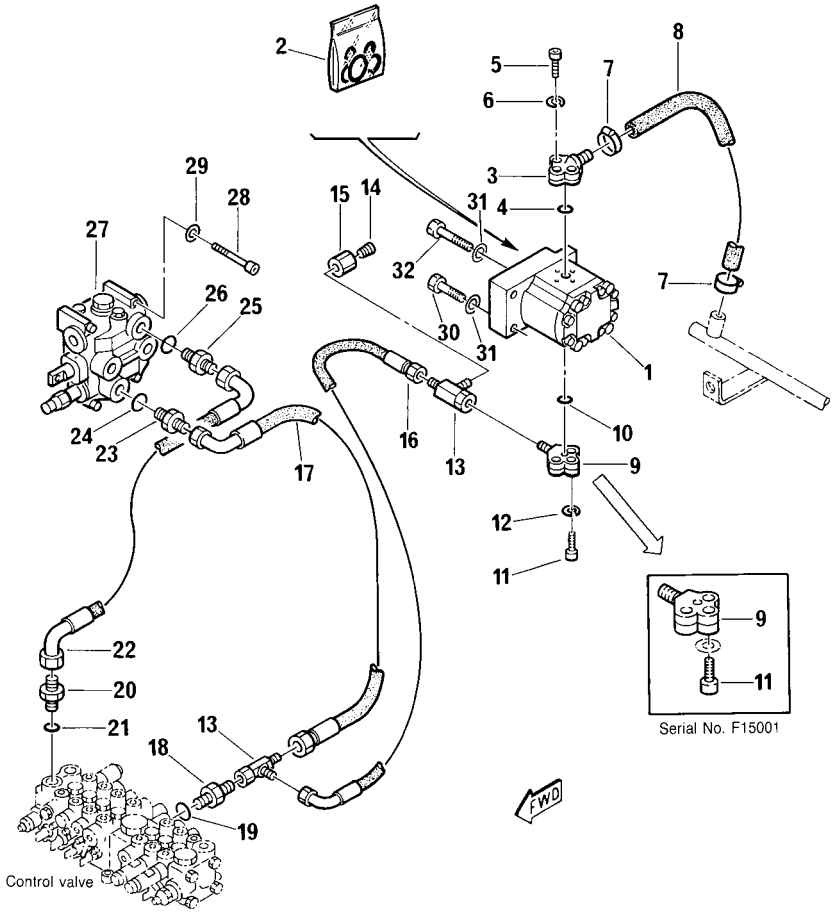

FIG. N°. :6730

INDEX N°.	PART N°.	DESCRIPTION	Q.TY	SERIAL N°. PC05-6F
1	20M-62-R0081	HYDRAULIC PUMP	1	F10001 -
2	PZF840250004	. SET OF PUMP SEALS	1	F10001 -
3	20M-62-R1421	FLANGE 90°	1	F10001 -
4	PZF855021814	O-RING	1	F10001 -
5	01252-40830	BOLT	3	F10001 -
6	PZF802130008	WASHER	3	F10001 -
7	PZF802660004	CLAMP	2	F10001 -
8	PZF852930107	SLEEVE	1	F10001 -
9	Z8731-R1591	FLANGE 90°	1	F10001 - F10488
	Z8731-R2091	FLANGE 90°	1	F15001 -
10	PZF855021809	O-RING	1	F10001 -
11	PZF801105117	BOLT	3	F10001 - F10488
	01252-40635	BOLT	3	F15001 -
12	PZF802130006	WASHER, SPRING	3	F10001 -
13	PZF500355913	«T» CONNECTOR	2	F10001 -
14	PZF500365402	PLUG	1	F10001 -
15	PZF500359253	CONNECTOR	1	F10001 -
16	20M-973-R011	HOSE	1	F10001 -
17	20M-973-R071	HOSE	1	F10001 -
18	20W-62-R1581	CONNECTOR	1	F10001 -
19	PZF855661168	O-RING	1	F10001 -
20	20M-62-R1441	CONNECTOR	1	F10001 -
21	PZF855661168	O-RING	1	F10001 -
22	20M-62-R8091	HOSE	1	F10001 -
23	20N-62-R1431	CONNECTOR	1	F10001 -
24	PZF855051616	. O-RING	1	F10001 -
25	PZF500358764	CONNECTOR	1	F10001 -
26	PZF855051116	. O-RING	1	F10001 -
27	709-31-R7081	DISTRIBUTOR ASSY.	1	F10001 -
28	PZF801105240	BOLT	3	F10001 -
29	01643-30623	WASHER	3	F10001 -
30	PZF801018080	BOLT	2	F10001 -
31	PZF802150508	WASHER, SPRING	4	F10001 -
32	PZF801018550	BOLT	2	F10001 -

https://truckmanualshub.com/

FIG. 6802 BOOM OVERLOADING ALARM

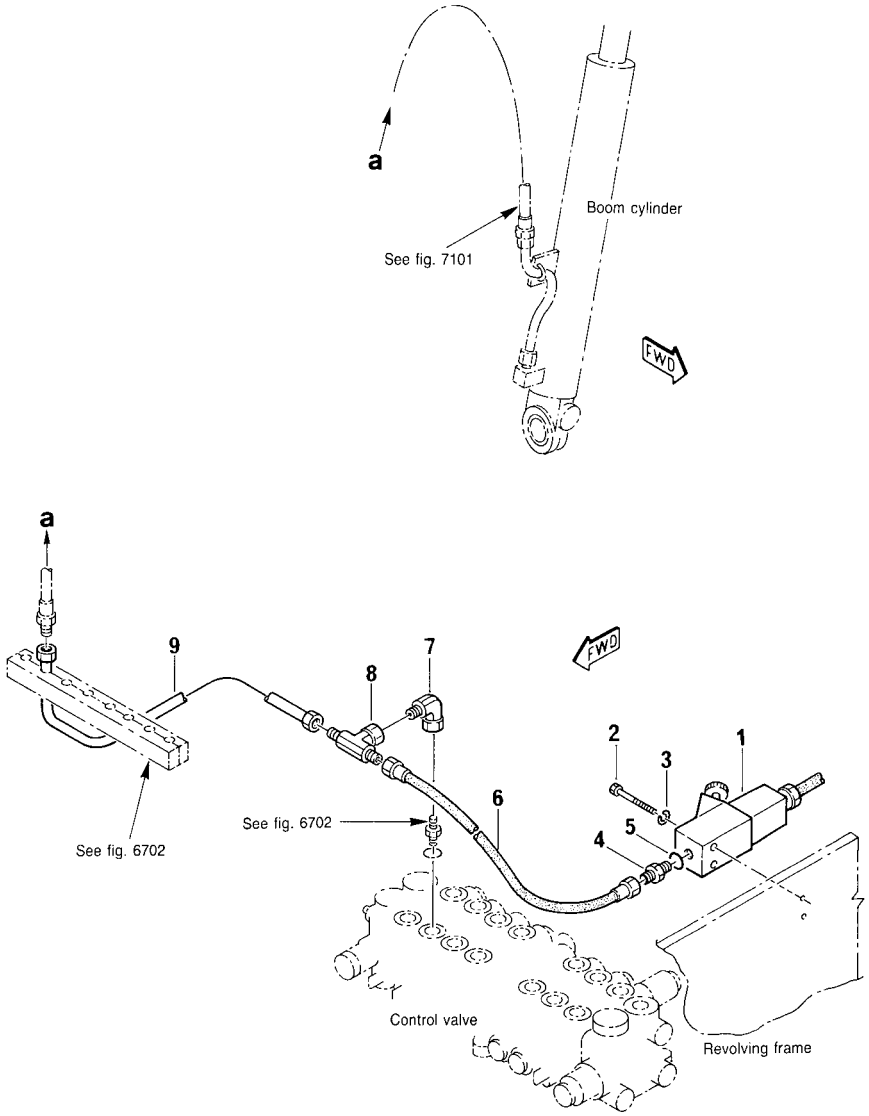

FIG. N°. :6802

INDEX N°.	PART N°.	DESCRIPTION	Q.TY	SERIAL N°. PC05-6F
1	20S-60-13120	VALVE	1	F10001 -
2	PZF801014035	BOLT	2	F10001 -
3	01641-20508	WASHER	2	F10001 -
4	20W-62-R1531	CONNECTOR	1	F10001 -
5	PZF855051111	. O-RING	1	F10001 -
6	20M-62-R2611	HOSE	1	F10001 -
7	PZF500355608	ELBOW	1	F10001 -
8	PZF500352002	CONNECTOR «T»	1	F10001 -
9	20W-62-R2621	PIPE	1	F10001 -

https://truckmanualshub.com/

WORK EQUIPMENT

https://truckmanualshub.com/

FIG. 7001 SWING BRACKET

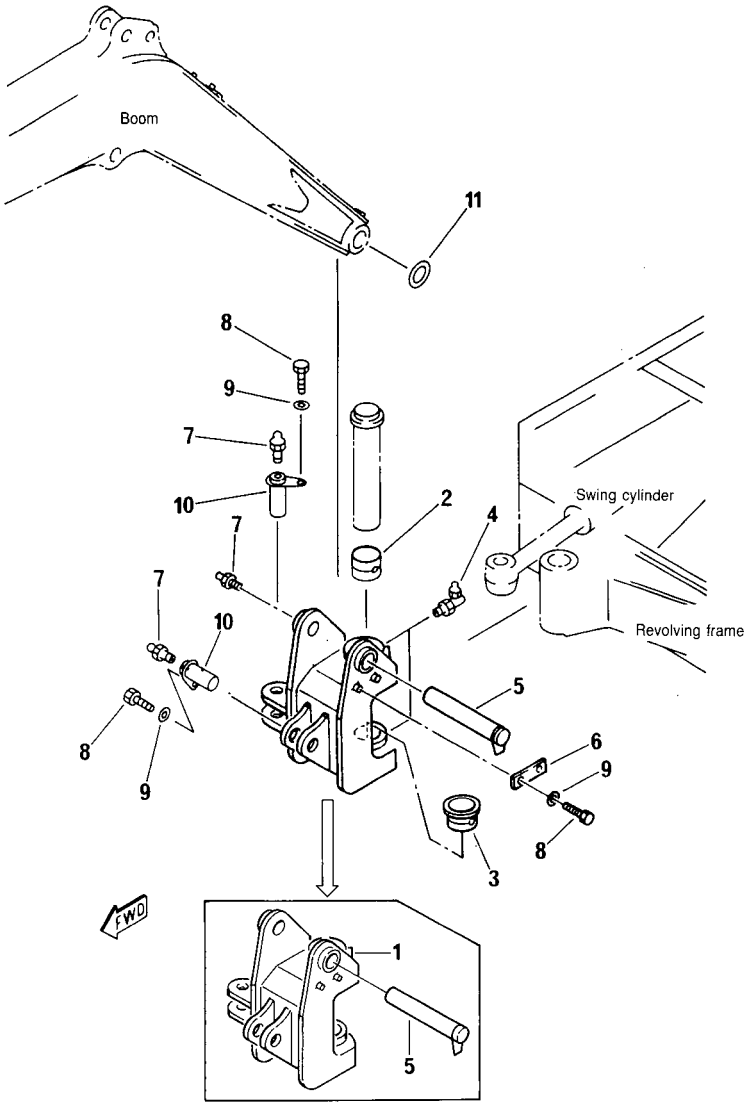

Serial No. F15001

FIG. N°. :7001

INDEX N°.	PART N°.	DESCRIPTION	Q.TY	SERIAL N°. PC05-6F
1	20M-70-61112	SWING BRACKET	1	F10001 - F10488
	20M-70-R1121	SWING BRACKET	1	F15001 -
2	PZF500217352	BUSHING	1	F10001 -
3	20W-70-11131	BUSHING	1	F10001 -
4	PZF860030005	FITTING, GREASE	2	F10001 -
5	20M-70-61220	PIN	1	F10001 - F10488
	20M-70-R1131	PIN	1	F15001 -
6	20M-70-61120	PLATE	1	F10001 -
7	PZF860010009	FITTING, GREASE	3	F10001 -
8	01010-51020	BOLT	4	F10001 -
9	01643-31032	WASHER	4	F10001 -
10	20M-70-11231	PIN	2	F10001 -
11	20N-70-11280	SPACER	AR	F10001 -

https://truckmanualshub.com/

FIG. 7003 BOOM

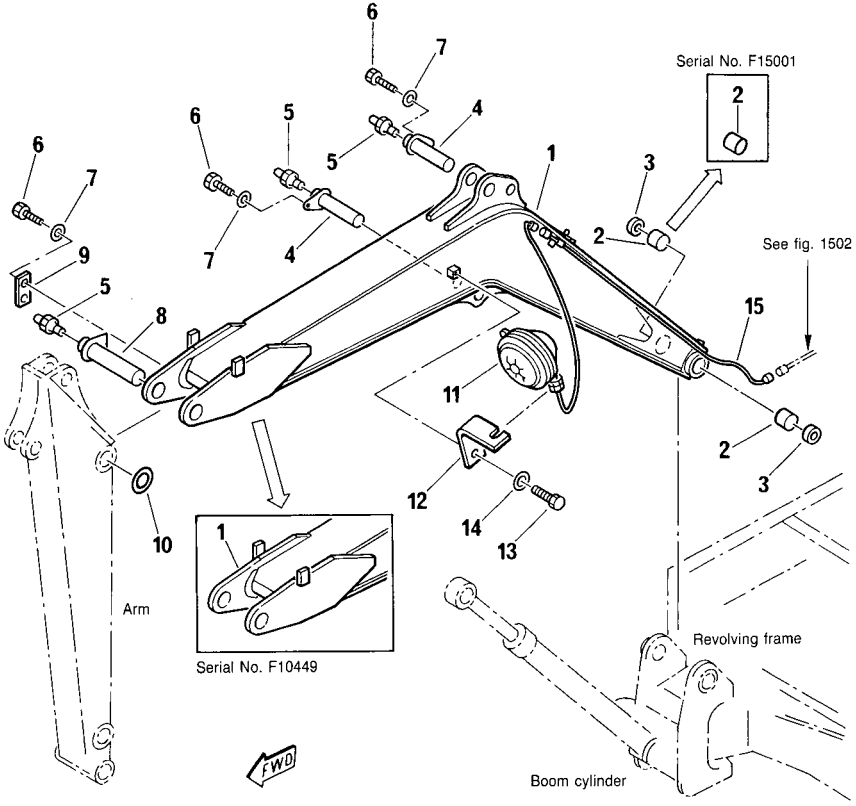

FIG. N°. 7003

INDEX N°.	PART N°.	DESCRIPTION	Q.TY	SERIAL N°. PC05-6F
1	20M-70-R2011	BOOM	1	F10001 - F10448
	20M-70-R2012	BOOM	1	F10449 -
2	PZF500217300	BUSHING	2	F10001 - F10488
	PZF390615003	BUSHING	2	F15001 -
3	PZF855661150	SEAL	2	F10001 -
4	20M-70-11231	PIN	2	F10001 -
5	PZF860010009	FITTING, GREASE	3	F10001 -
6	01010-51020	BOLT	4	F10001 -
7	01643-31032	WASHER	4	F10001 -
8	20M-70-61240	PIN	1	F10001 -
9	20M-70-61120	BRACKET	1	F10001 -
10	20N-70-11280	SPACER	AR	F10001 -
11	PZF885111087	LAMP ASSY.	1	F10001 -
	PZF885141134	. BULB	1	F10001 -
	PZF885141133	. LENS	1	F10001 -
12	20M-06-R2011	BRACKET	1	F10001 -
13	01010-51020	BOLT	1	F10001 -
14	01643-31032	WASHER	1	F10001 -
15	20W-06-R2031	WIRE ASSY.	1	F10001 -

https://truckmanualshub.com/

FIG. 7005 BOOM (TBG SPEC.)

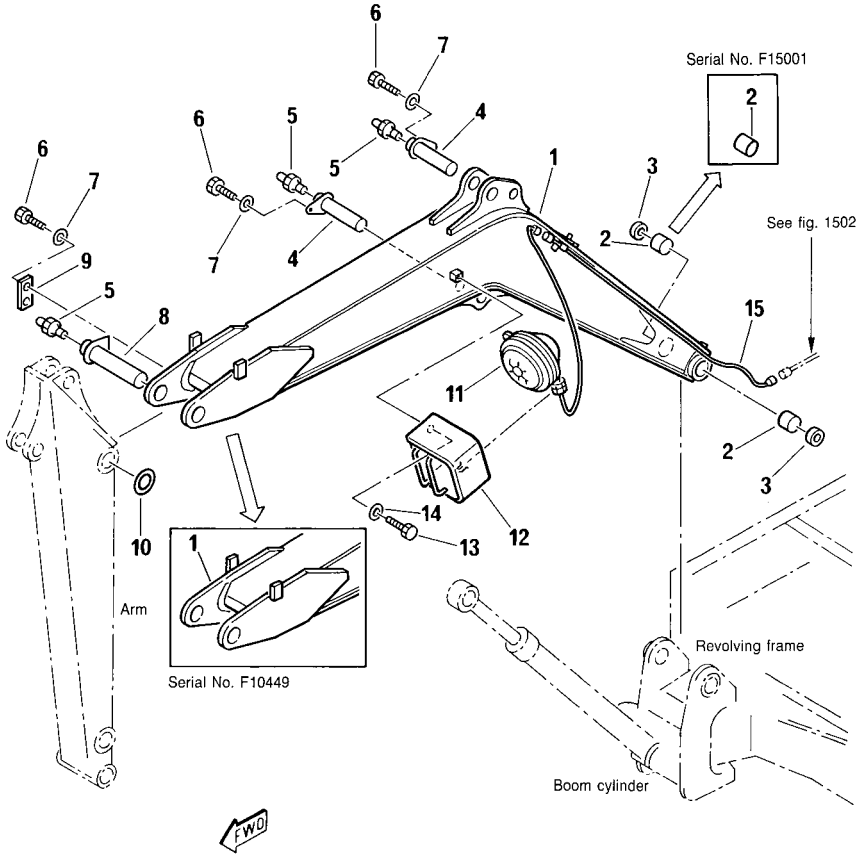

FIG. N°. :7005

INDEX N°.	PART N°.	DESCRIPTION	Q.TY	SERIAL N°. PC05-6F
1	20M-70-R2011	BOOM	1	F10001 - F10448
	20M-70-R2012	BOOM	1	F10449 -
2	PZF500217300	BUSHING	2	F10001 - F10488
	PZF390615003	BUSHING	2	F15001 -
3	PZF855661150	SEAL	2	F10001 -
4	20M-70-11231	PIN	2	F10001 -
5	PZF860010009	FITTING, GREASE	3	F10001 -
6	01010-51020	BOLT	4	F10001 -
7	01643-31032	WASHER	4	F10001 -
8	20M-70-61240	PIN	1	F10001 -
9	20M-70-61120	BRACKET	1	F10001 -
10	20N-70-11280	SPACER	AR	F10001 -
11	PZF885111087	LAMP ASSY.	1	F10001 -
	PZF885141134	. BULB	1	F10001 -
	PZF885141133	. LENS	1	F10001 -
12	20M-06-R2171	BRACKET	1	F10001 -
13	01010-51020	BOLT	1	F10001 -
14	01643-31032	WASHER	1	F10001 -
15	20W-06-R2031	WIRE ASSY.	1	F10001 -

https://truckmanualshub.com/

FIG. 7101 HYDRAULIC PIPING: BOOM AND ARM - BUCKET

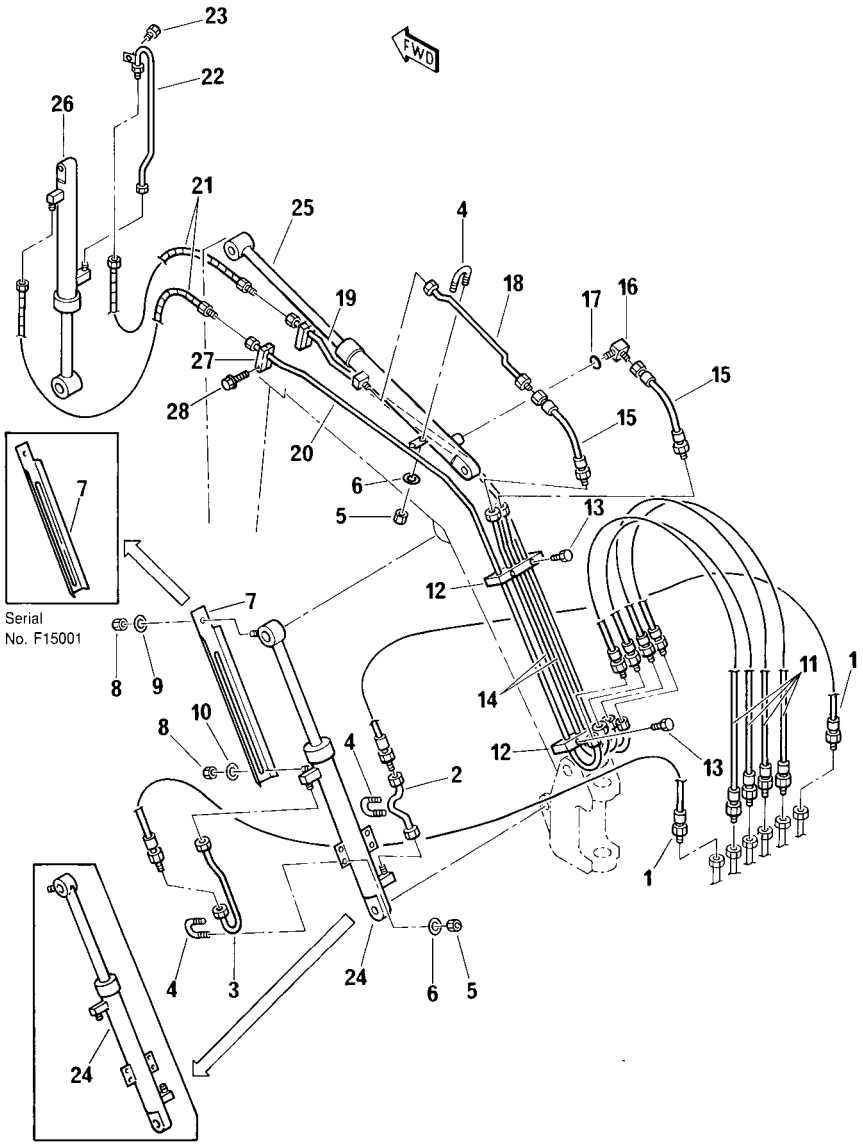

FIG. N°. :7101

INDEX N°.	PART N°.	DESCRIPTION	Q.TY	SERIAL N°. PC05-6F
1	20W-62-R3171	HOSE	2	F10001 -
2	20M-62-R3051	TUBE	1	F10001 -
3	20M-62-R3101	TUBE	1	F10001 -
4	PZF500022878	CLIP	3	F10001 -
5	PZF801852206	NUT	6	F10001 -
6	01643-30623	WASHER	6	F10001 -
7	20M-62-48711	PLATE	1	F10001 - F10488
	20M-62-R3321	PLATE	1	F15001 -
8	01580-10806	NUT	2	F10001 -
9	01643-30823	WASHER	1	F10001 -
10	01643-31032	WASHER	1	F10001 -
11	20W-62-R2411	HOSE	4	F10001 -
12	PZF200399179	CLAMP	2	F10001 -
13	01435-00820	BOLT	6	F10001 -
14	20W-62-R3031	TUBE	2	F10001 -
15	20M-62-R3111	HOSE	2	F10001 -
16	PZF500358155	ELBOW	1	F10001 -
17	PZF855051111	. O-RING	1	F10001 -
18	20M-62-R3291	TUBE	1	F10001 -
19	20W-62-R3011	TUBE	1	F10001 -
20	20W-62-R3021	TUBE	1	F10001 -
21	20M-62-R3161	HOSE	2	F10001 -
22	20M-62-R3151	TUBE	1	F10001 -
23	01435-00816	BOLT	1	F10001 -
24	(707-00-R1011)	BOOM CYLINDER (SEE FIG. 7185)	1	F10001 - F10488
	(707-00-R1181)	BOOM CYLINDER (SEE FIG. 7185)	1	F15001 -
	(707-00-R1161)	BOOM CYLINDER (OPTIONAL FOR MACHINE WITH CANOPY) (SEE FIG. 7187)	1	F10001 -
25	(707-00-R2281)	ARM CYLINDER (SEE FIG. 7381)	1	F10001 -
26	(707-00-R3201)	CYLINDER ASSY. BUCKET (SEE FIG. 7581)	1	F10001 -
27	PZF200390824	CLAMP	2	F10449 -
28	01435-00825	BOLT	2	F10449 -

https://truckmanualshub.com/

FIG. 7103 HYDRAULIC PIPING: BOOM AND ARM - BUCKET (TBG SPEC.)

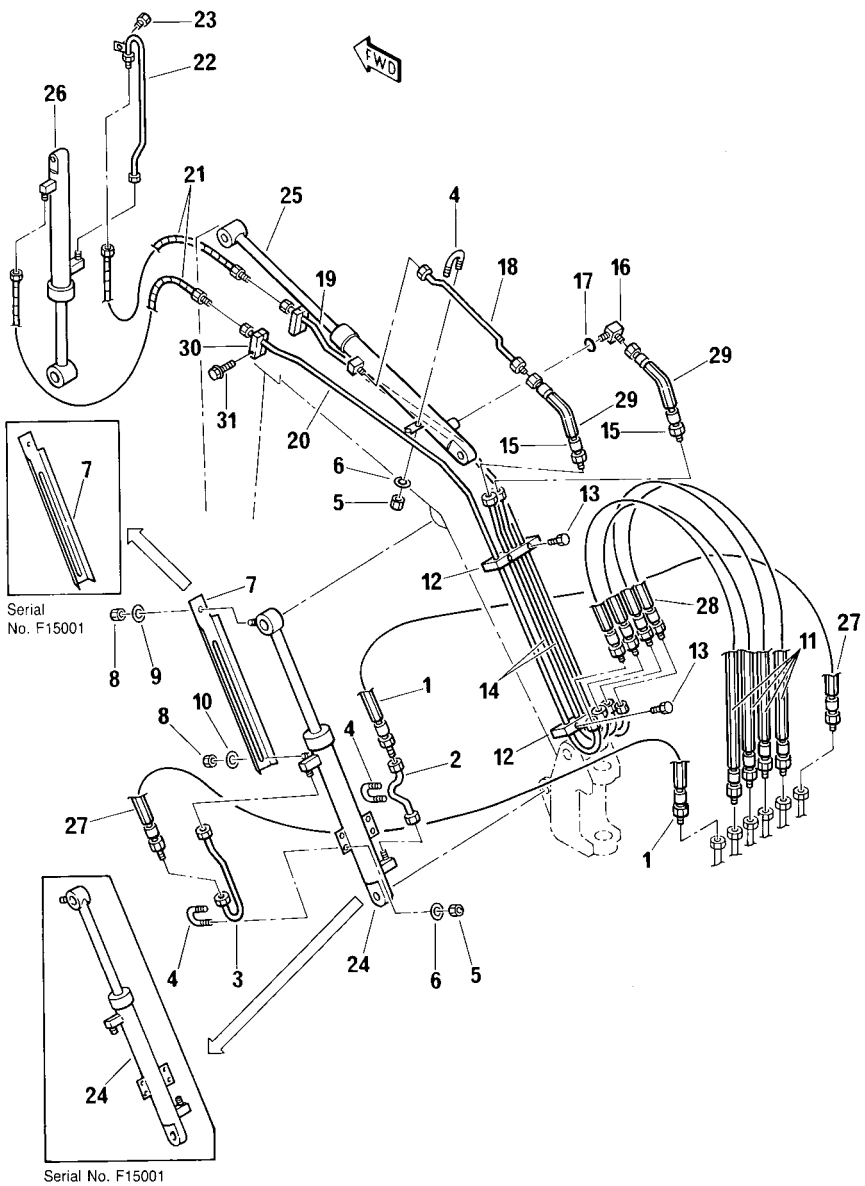

FIG. N°. :7103

INDEX N°.	PART N°.	DESCRIPTION	Q.TY	SERIAL N°. PC05-6F
1	20W-62-R3171	HOSE	2	F10001 -
2	20M-62-R3051	TUBE	1	F10001 -
3	20M-62-R3101	TUBE	1	F10001 -
4	PZF500022878	CLIP	3	F10001 -
5	PZF801852206	NUT	6	F10001 -
6	01643-30623	WASHER	6	F10001 -
7	20M-62-48711	PLATE	1	F10001 - F10488
	20M-62-R3321	PLATE	1	F15001 -
8	01580-10806	NUT	2	F10001 -
9	01643-30823	WASHER	1	F10001 -
10	01643-31032	WASHER	1	F10001 -
11	20W-62-R2411	HOSE	4	F10001 -
12	PZF200399179	CLAMP	2	F10001 -
13	01435-00820	BOLT	6	F10001 -
14	20W-62-R3031	TUBE	2	F10001 -
15	20M-62-R3111	HOSE	2	F10001 -
16	PZF500358155	ELBOW	1	F10001 -
17	PZF855051111	. O-RING	1	F10001 -
18	20M-62-R3291	TUBE	1	F10001 -
19	20W-62-R3011	TUBE	1	F10001 -
20	20W-62-R3021	TUBE	1	F10001 -
21	20M-62-R3161	HOSE	2	F10001 -
22	20M-62-R3151	TUBE	1	F10001 -
23	01435-00816	BOLT	1	F10001 -
24	(707-00-R1011)	BOOM CYLINDER (SEE FIG. 7185)	1	F10001 - F10488
	(707-00-R1181)	BOOM CYLINDER (SEE FIG. 7185)	1	F15001 -
	(707-00-R1161)	BOOM CYLINDER (OPTIONAL FOR MACHINE WITH CANOPY) (SEE FIG. 7187)	1	F10001 -
25	(707-00-R2281)	ARM CYLINDER (SEE FIG. 7381)	1	F10001 -
26	(707-00-R3201)	BUCKET CYLINDER ASSY. (SEE FIG. 7581)	1	F10001 -
27	20M-62-R2481	PLATE	2	F10001 -
28	20M-62-R2471	PLATE	4	F10001 -
29	20M-62-R2461	PLATE	2	F10001 -
30	PZF200390824	CLAMP	2	F10449 -
31	01435-00825	BOLT	2	F10449 -

https://truckmanualshub.com/

FIG. 7122 HYDRAULIC PIPING (ATTACHMENT LINE)

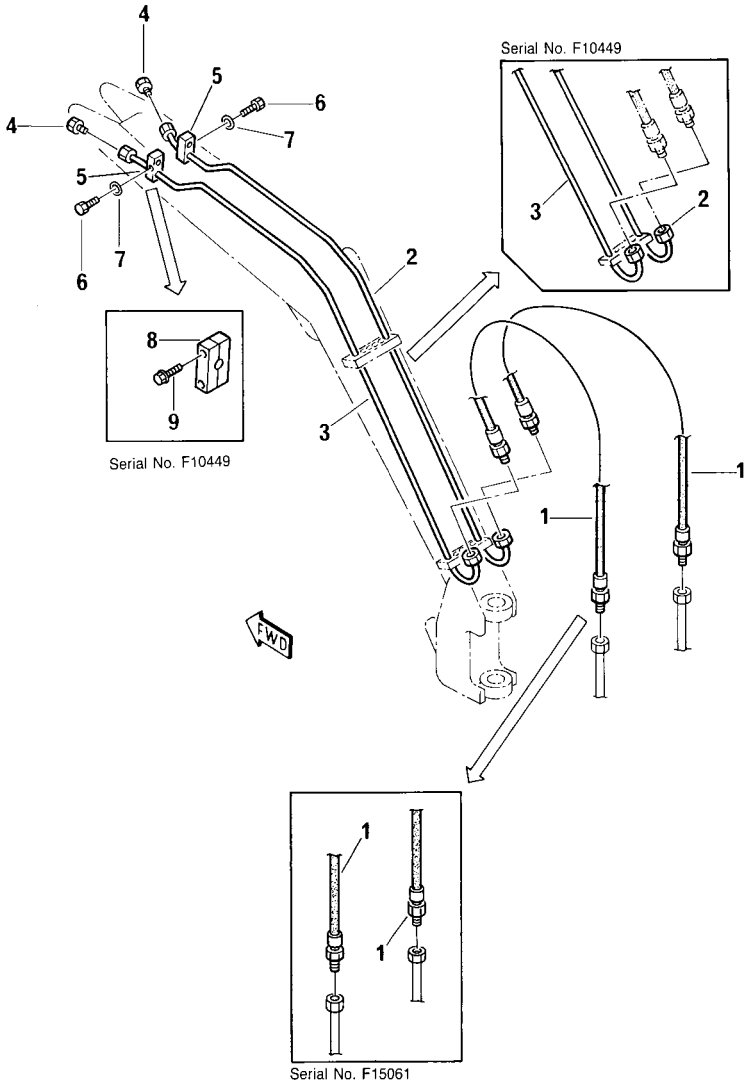

FIG. N°. :7122

INDEX N°.	PART N°.	DESCRIPTION	Q.TY	SERIAL N°. PC05-6F
1	20M-62-R9011	HOSE	2	F10001 - F15060
	PZF392057019	HOSE	2	F15061 -
2	20M-973-R141	TUBE	1	F10001 - F10448
	20M-973-R151	TUBE	1	F10449 -
3	20M-973-R091	TUBE	1	F10001 - F10448
	20M-973-R161	TUBE	1	F10449 -
4	20M-973-R121	PLUG	2	F10001 -
5	PZF200391746	CLAMP	2	F10001 - F10448
6	01010-50825	BOLT	2	F10001 - F10448
7	01643-30823	WASHER	2	F10001 - F10448
8	20M-70-R2231	CLAMP	2	F10449 -
9	01435-00830	BOLT	4	F10449 -

https://truckmanualshub.com/

FIG. 7123 HYDRAULIC PIPING (ATTACHMENT LINE) (TBG SPEC.)

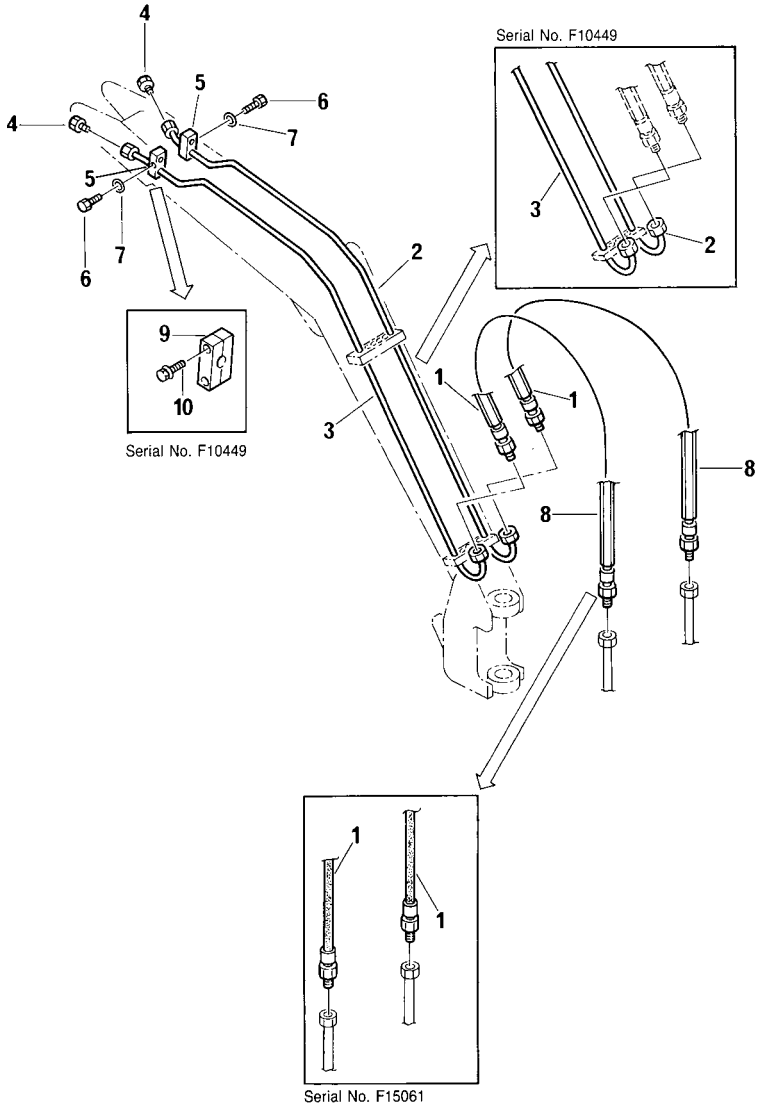

FIG. N°. 7123

INDEX N°.	PART N°.	DESCRIPTION	Q.TY	SERIAL N°. PC05-6F
1	20M-62-R9011	HOSE	2	F10001 - F15060
	PZF392057019	HOSE	2	F15061 -
2	20M-973-R141	TUBE	1	F10001 - F10448
	20M-973-R151	TUBE	1	F10449 -
3	20M-973-R091	TUBE	1	F10001 - F10448
	20M-973-R161	TUBE	1	F10449 -
4	20M-973-R121	PLUG	2	F10001 -
5	PZF200391746	CLAMP	2	F10001 - F10448
6	01010-50825	BOLT	2	F10001 - F10448
7	01643-30823	WASHER	2	F10001 - F10448
8	20M-62-R2491	PLATE	2	F10001 -
9	20M-70-R2231	CLAMP	2	F10449 -
10	01435-00830	BOLT	4	F10449 -

https://truckmanualshub.com/

FIG. 7181 SWING CYLINDER (SERIAL No. F10001 - F10488)

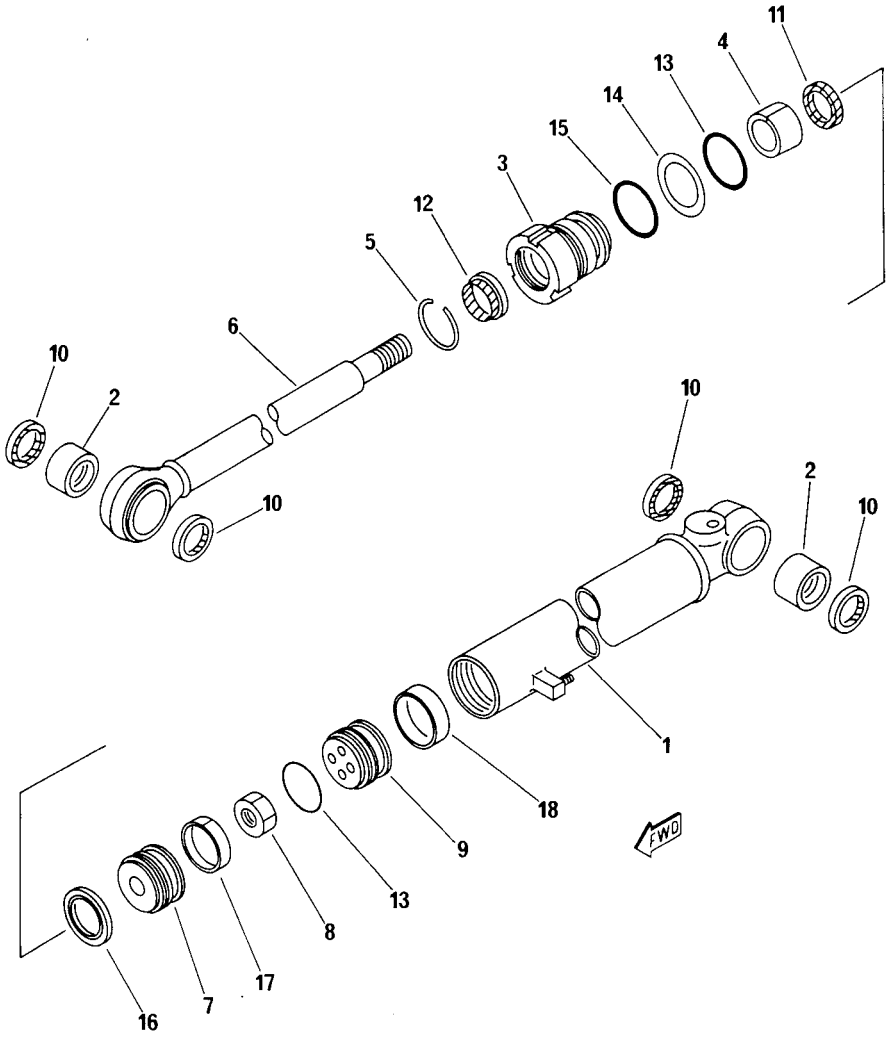

FIG. N°. :7181

INDEX N°.	PART N°.	DESCRIPTION	Q.TY	SERIAL N°. PC05-6F
—	707-00-R4311	SWING CYLINDER ASSY.	1	F10001 - F10488
1	707-63-R4321	. CYLINDER	1	F10001 - F10488
2	PZF500217302	. BUSHING	2	F10001 - F10488
3	707-29-50910	. HEAD, CYLINDER	1	F10001 - F10488
4	PZF500466130	. BUSHING, ROD	1	F10001 - F10488
5	PZF855661161	. RING	1	F10001 - F10488
6	707-58-30690	. ROD, PISTON	1	F10001 - F10488
7	707-36-50560	. PISTON	1	F10001 - F10488
8	PZF801920111	. NUT	1	F10001 - F10488
9	707-81-50160	. SPACER	1	F10001 - F10488
	PZF855661243	. GASKET SET	1	F10001 - F10488
10	☆	. . SEAL, DUST	4	F10001 - F10488
11	☆	. . PACKING, DUST	1	F10001 - F10488
12	☆	. . SEAL, SNAP	1	F10001 - F10488
13	☆	. . O-RING	2	F10001 - F10488
14	☆	. . RING, BACK-UP	1	F10001 - F10488
15	☆	. . O-RING	1	F10001 - F10488
16	☆	. . RING, PISTON	1	F10001 - F10488
17	☆	. . RING, WEAR	1	F10001 - F10488
18	☆	. . RING, WEAR	1	F10001 - F10488

https://truckmanualshub.com/

FIG. 7182 SWING CYLINDER (SERIAL No. F15001)

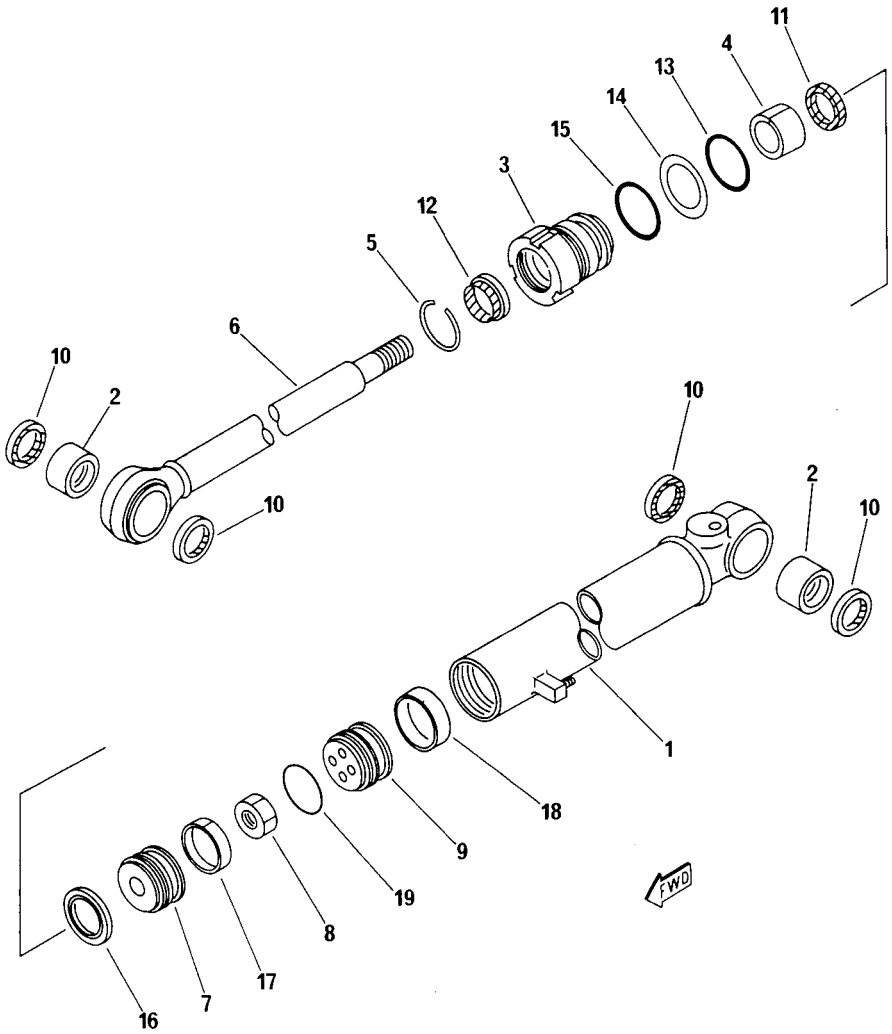

FIG. N°. :7182

INDEX N°.	PART N°.	DESCRIPTION	Q.TY	SERIAL N°. PC05-6F
—	707-00-R4491	SWING CYLINDER ASSY.	1	F15001 -
1	707-11-R4511	. CYLINDER	1	F15001 -
2	PZF500217302	. BUSHING	2	F15001 -
3	707-29-R4501	. HEAD, CYLINDER	1	F15001 -
4	PZF500466130	. BUSHING, ROD	1	F15001 -
5	PZF855661161	. RING	1	F15001 -
6	707-58-30690	. ROD, PISTON	1	F15001 -
7	707-36-60040	. PISTON	1	F15001 -
8	PZF801920111	. NUT	1	F15001 -
9	707-81-R4521	. SPACER	1	F15001 -
	PZF855661245	. GASKET SET	1	F15001 -
10	☆	. . SEAL, DUST	4	F15001 -
11	☆	. . PACKING, DUST	1	F15001 -
12	☆	. . SEAL, SNAP	1	F15001 -
13	☆	. . O-RING	1	F15001 -
14	☆	. . RING, BACK-UP	1	F15001 -
15	☆	. . O-RING	1	F15001 -
16	☆	. . RING, PISTON	1	F15001 -
17	☆	. . RING, WEAR	1	F15001 -
18	☆	. . RING, WEAR	1	F15001 -
19	☆	. . O-RING	1	F15001 -

https://truckmanualshub.com/

FIG. 7183 SWING CYLINDER (SERIAL No. F10001 - F10488)
(90° SWING CYLINDER, R.H.) (ONLY WITH CANOPY)

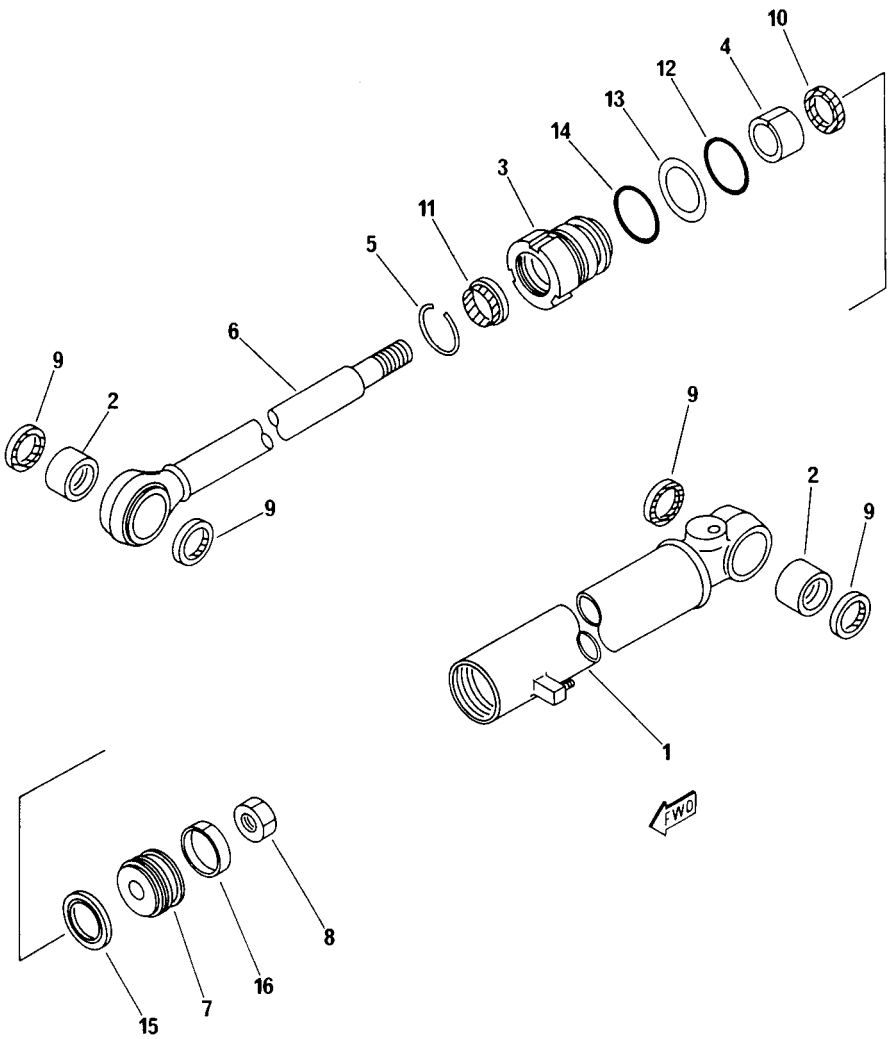

FIG. N°. :7183

INDEX N°.	PART N°.	DESCRIPTION	Q.TY	SERIAL N°. PC05-6F
—	707-00-R4461	SWING CYLINDER ASSY.	1	F10001 - F10488
1	707-63-R4321	. CYLINDER	1	F10001 - F10488
2	PZF500217302	. BUSHING	2	F10001 - F10488
3	707-29-50910	. HEAD, CYLINDER	1	F10001 - F10488
4	PZF500466130	. BUSHING, ROD	1	F10001 - F10488
5	PZF855661161	. RING	1	F10001 - F10488
6	707-58-30690	. ROD, PISTON	1	F10001 - F10488
7	707-36-50560	. PISTON	1	F10001 - F10488
8	PZF801920111	. NUT	1	F10001 - F10488
	PZF855661244	. GASKET SET	1	F10001 - F10488
9	☆	. . SEAL, DUST	4	F10001 - F10488
10	☆	. . PACKING, DUST	1	F10001 - F10488
11	☆	. . SEAL, SNAP	1	F10001 - F10488
12	☆	. . O-RING	1	F10001 - F10488
13	☆	. . RING, BACK-UP	1	F10001 - F10488
14	☆	. . O-RING	1	F10001 - F10488
15	☆	. . RING, PISTON	1	F10001 - F10488
16	☆	. . RING, WEAR	1	F10001 - F10488

https://truckmanualshub.com/

FIG. 7184 SWING CYLINDER (SERIAL No. F15001)
(90° SWING CYLINDER, R.H.) (ONLY WITH CANOPY)

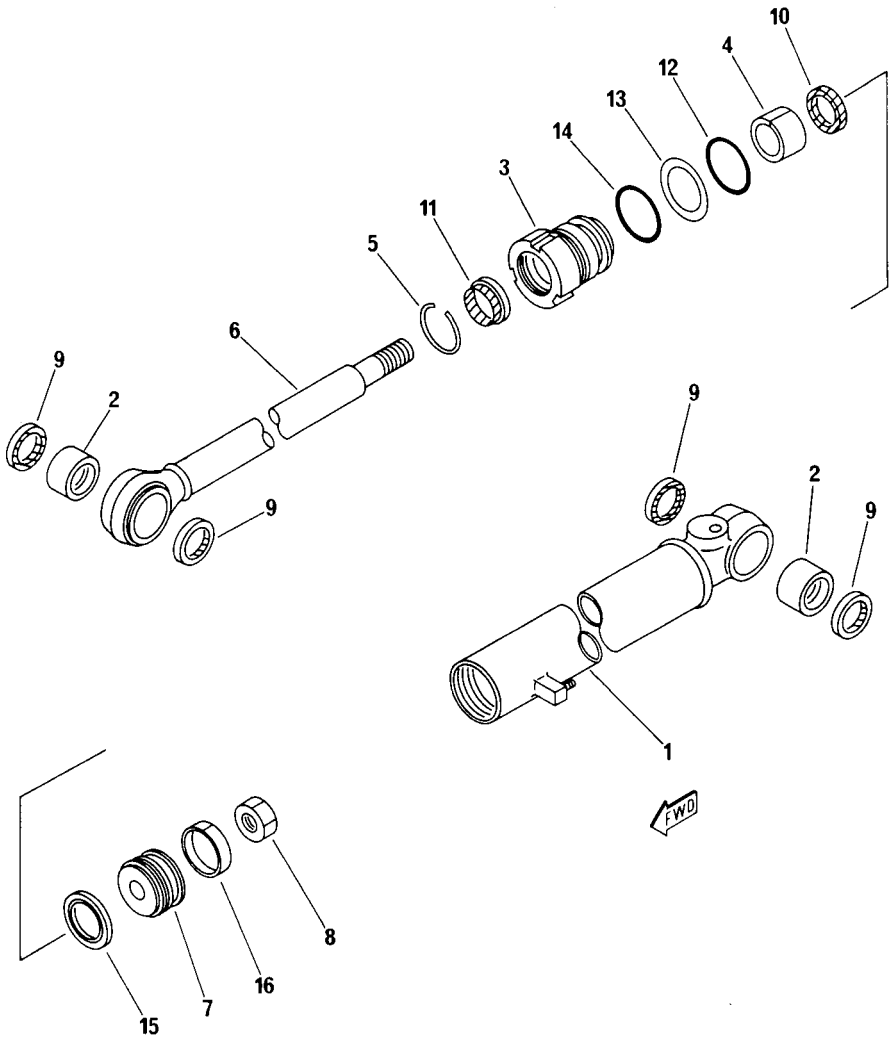

FIG. N°. :7184

INDEX N°.	PART N°.	DESCRIPTION	Q.TY	SERIAL N°. PC05-6F
—	707-00-R4541	SWING CYLINDER ASSY.	1	F15001 -
1	707-11-R4511	. CYLINDER	1	F15001 -
2	PZF500217302	. BUSHING	2	F15001 -
3	707-29-R4501	. HEAD, CYLINDER	1	F15001 -
4	PZF500466130	. BUSHING, ROD	1	F15001 -
5	PZF855661161	. RING	1	F15001 -
6	707-58-30690	. ROD, PISTON	1	F15001 -
7	707-36-60040	. PISTON	1	F15001 -
8	PZF801920111	. NUT	1	F15001 -
	PZF855661246	. GASKET SET	1	F15001 -
9	☆	. . SEAL, DUST	4	F15001 -
10	☆	. . PACKING, DUST	1	F15001 -
11	☆	. . SEAL, SNAP	1	F15001 -
12	☆	. . O-RING	1	F15001 -
13	☆	. . RING, BACK-UP	1	F15001 -
14	☆	. . O-RING	1	F15001 -
15	☆	. . RING, PISTON	1	F15001 -
16	☆	. . RING, WEAR	1	F15001 -

https://truckmanualshub.com/

FIG. 7185 BOOM CYLINDER

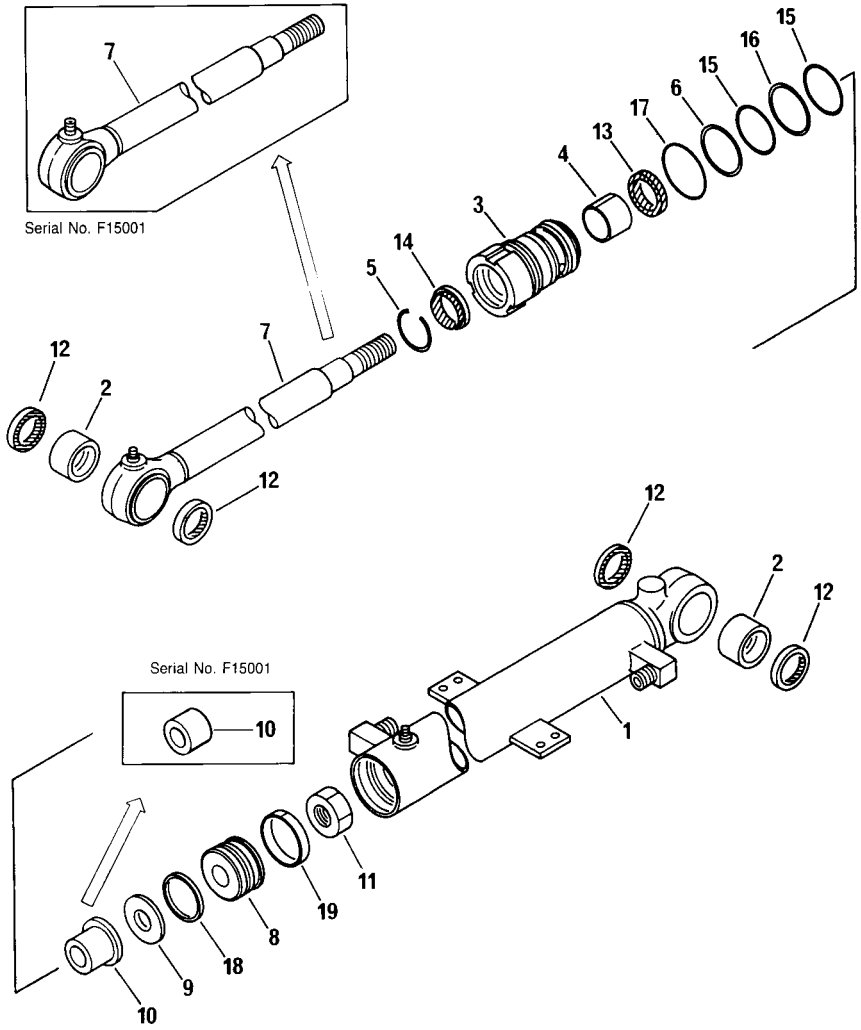

FIG. N°. :7185

INDEX N°.	PART N°.	DESCRIPTION	Q.TY	SERIAL N°. PC05-6F
—	707-00-R1011	BOOM CYLINDER ASSY.	1	F10001 - F10488
	707-00-R1181	BOOM CYLINDER ASSY.	1	F15001 -
1	707-11-R1021	. CYLINDER	1	F10001 -
2	PZF500217302	. BUSHING	2	F10001 -
3	707-29-50130	. HEAD, CYLINDER	1	F10001 -
4	PZF500466130	. BUSHING	1	F10001 -
5	PZF855661161	. RING, SNAP	1	F10001 -
6	PZF855661136	. RING, BACK-UP	1	F10001 -
7	707-58-30520	. ROD, PISTON	1	F10001 - F10488
	707-58-R1191	. ROD, PISTON	1	F15001 -
8	707-36-50530	. PISTON	1	F10001 -
9	707-40-50060	. RETAINER	1	F10001 -
10	707-81-50151	. COLLAR	1	F10001 - F10488
	707-71-R1201	. COLLAR	1	F15001 -
11	PZF801920110	. NUT	1	F10001 -
	PZF855661242	. GASKET SET	1	F10001 -
12	☆	. . SEAL, DUST	4	F10001 -
13	☆	. . PACKING, ROD	1	F10001 -
14	☆	. . SEAL, DUST	1	F10001 -
15	☆	. . O-RING	2	F10001 -
16	☆	. . RING, BACK-UP	1	F10001 -
17	☆	. . O-RING	1	F10001 -
18	☆	. . RING, PISTON	1	F10001 -
19	☆	. . RING, WEAR	1	F10001 -

https://truckmanualshub.com/

FIG. 7187 BOOM CYLINDER (OPTIONAL FOR MACHINE WITH CANOPY)

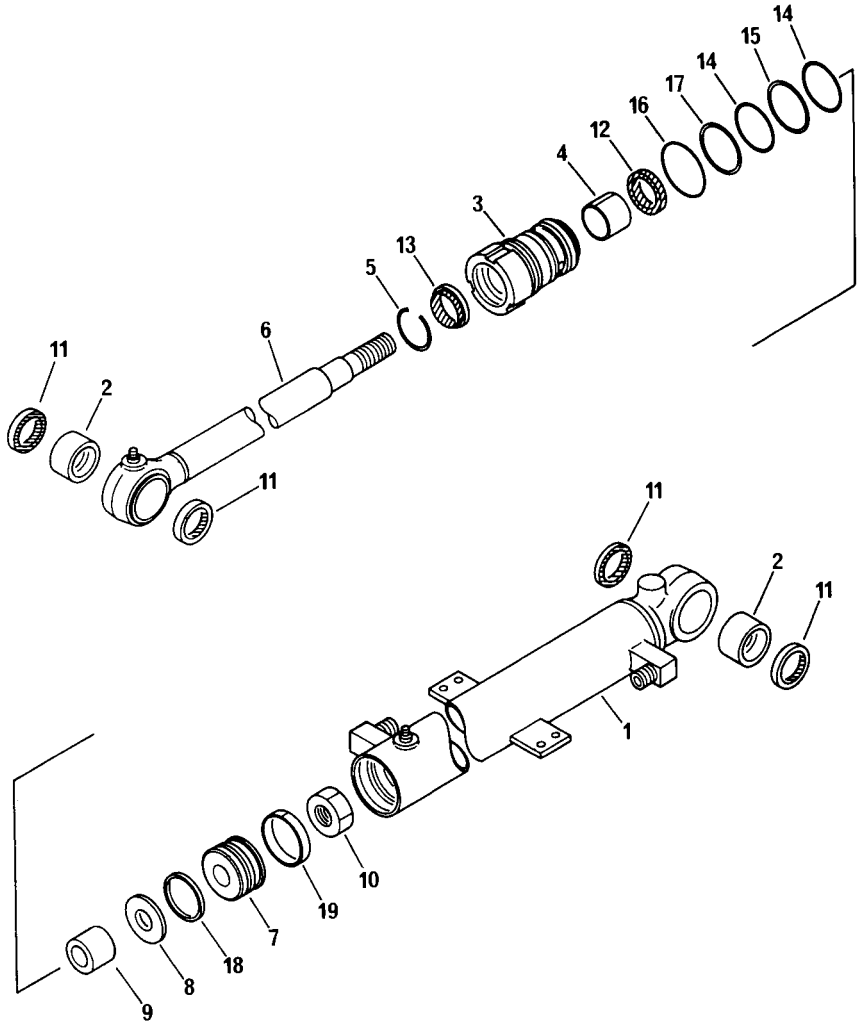

FIG. N°. :7187

INDEX N°.	PART N°.	DESCRIPTION	Q.TY	SERIAL N°. PC05-6F
—	707-00-R1161	BOOM CYLINDER ASSY.	1	F10001 -
1	707-11-R1021	. CYLINDER	1	F10001 -
2	PZF500217302	. BUSHING	2	F10001 -
3	707-29-50130	. HEAD, CYLINDER	1	F10001 -
4	PZF500466130	. BUSHING	1	F10001 -
5	PZF855661161	. RING, SNAP	1	F10001 -
6	707-58-30520	. ROD, PISTON	1	F10001 -
7	707-36-50530	. PISTON	1	F10001 -
8	707-40-50060	. RETAINER	1	F10001 -
9	707-71-R1201	. COLLAR	1	F10001 -
10	PZF801920110	. NUT	1	F10001 -
	PZF855661242	. GASKET SET	1	F10001 -
11	☆	. . SEAL, DUST	4	F10001 -
12	☆	. . PACKING, ROD	1	F10001 -
13	☆	. . SEAL, DUST	1	F10001 -
14	☆	. . O-RING	2	F10001 -
15	☆	. . RING, BACK-UP	1	F10001 -
16	☆	. . O-RING	1	F10001 -
17	☆	. . RING, BACK-UP	1	F10001 -
18	☆	. . RING, PISTON	1	F10001 -
19	☆	. . RING, WEAR	1	F10001 -

https://truckmanualshub.com/

FIG. 7201 ARM

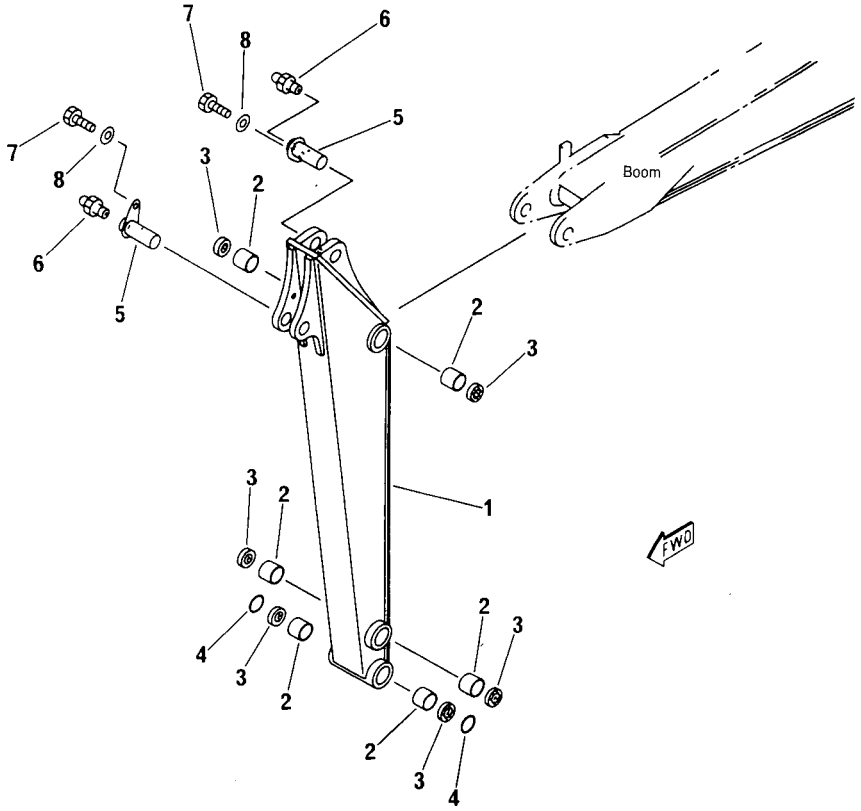

FIG. N°. 7201

INDEX N°.	PART N°.	DESCRIPTION	Q.TY	SERIAL N°. PC05-6F
1	20M-70-63110	ARM ASSY.	1	F10001 -
2	PZF500217300	BUSHING	6	F10001 -
3	PZF855661150	SEAL, DUST	6	F10001 -
4	20D-14-R3161	O-RING	2	F10001 -
5	20M-70-11231	PIN	2	F10001 -
6	PZF860010009	FITTING, GREASE	2	F10001 -
7	01010-51020	BOLT	2	F10001 -
8	01643-31032	WASHER	2	F10001 -

https://truckmanualshub.com/

FIG. 7203 LONG ARM

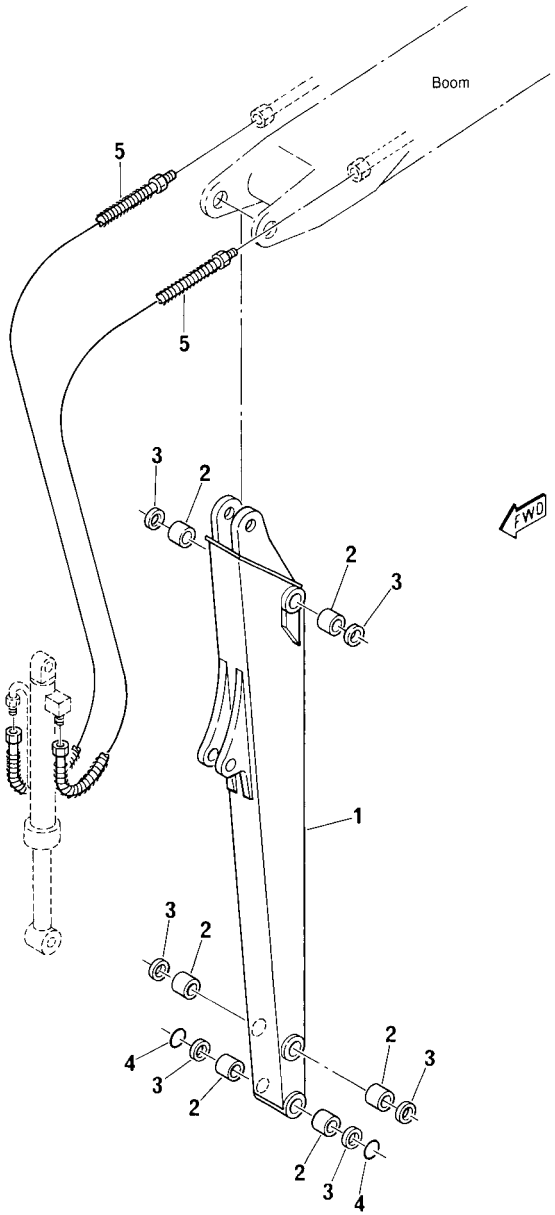

FIG. N°. :7203

INDEX N°.	PART N°.	DESCRIPTION	Q.TY	SERIAL N°. PC05-6F
1	20M-943-6110	ARM ASSY.	1	F10001 -
2	PZF500217300	BUSHING	6	F10001 -
3	PZF855661150	SEAL, DUST	6	F10001 -
4	20D-14-R3161	O-RING	2	F10001 -
5	20M-943-R301	HOSE	2	F10001 -

https://truckmanualshub.com/

FIG. 7381 ARM CYLINDER

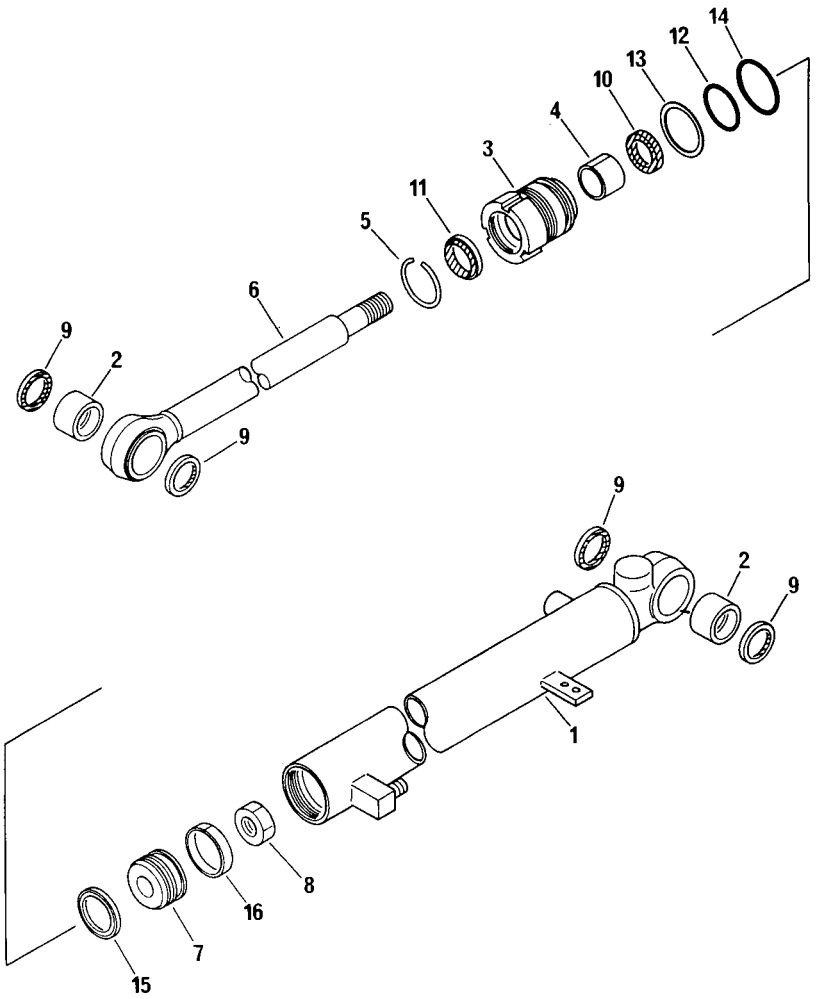

FIG. N°. :7381

INDEX N°.	PART N°.	DESCRIPTION	Q.TY	SERIAL N°. PC05-6F
—	707-00-R2281	ARM CYLINDER ASSY.	1	F10001 -
1	707-63-R2211	. CYLINDER	1	F10001 -
2	PZF500217302	. BUSHING	2	F10001 -
3	707-29-50910	. HEAD, CYLINDER	1	F10001 -
4	PZF500466130	. BUSHING	1	F10001 -
5	PZF855661161	. RING, SNAP	1	F10001 -
6	707-58-30670	. ROD, PISTON	1	F10001 -
7	707-36-50560	. PISTON	1	F10001 -
8	PZF801920111	. NUT	1	F10001 -
	PZF855661247	. GASKET SET	1	F10001 -
9	☆	. . SEAL, DUST	4	F10001 -
10	☆	. . SEAL, DUST	1	F10001 -
11	☆	. . SEAL, DUST	1	F10001 -
12	☆	. . O-RING	1	F10001 -
13	☆	. . RING, BACK-UP	1	F10001 -
14	☆	. . O-RING	1	F10001 -
15	☆	. . RING, PISTON	1	F10001 -
16	☆	. . RING, WEAR	1	F10001 -

https://truckmanualshub.com/

FIG. 7401 BUCKET LINK

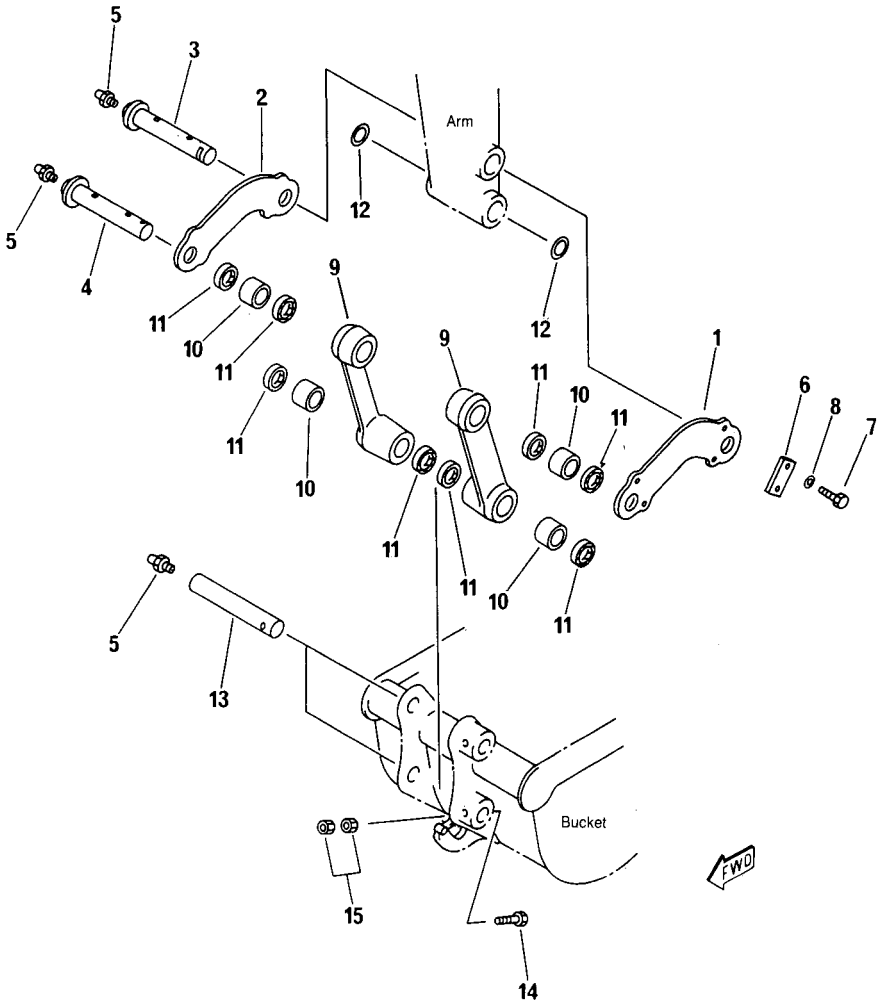

FIG. N°. :7401

INDEX N°.	PART N°.	DESCRIPTION	Q.TY	SERIAL N°. PC05-6F
1	20M-70-48180	LINK, L.H.	1	F10001 -
2	20M-70-48170	LINK, R.H.	1	F10001 -
3	20M-70-11251	PIN	1	F10001 -
4	20M-70-11262	PIN	1	F10001 -
5	PZF860010009	FITTING, GREASE	4	F10001 -
6	PZF500014884	LOCK PLATE	2	F10001 -
7	01010-51020	BOLT	4	F10001 -
8	01643-31032	WASHER	4	F10001 -
9	20M-70-48160	LINK	2	F10001 -
10	PZF500217300	BUSHING	4	F10001 -
11	PZF855661150	SEAL, DUST	8	F10001 -
12	20N-70-11280	SPACER	AR	F10001 -
13	20M-70-11270	PIN	2	F10001 -
14	01010-51070	BOLT	2	F10001 -
15	01580-11008	NUT	4	F10001 -

https://truckmanualshub.com/

FIG. 7581 BUCKET CYLINDER

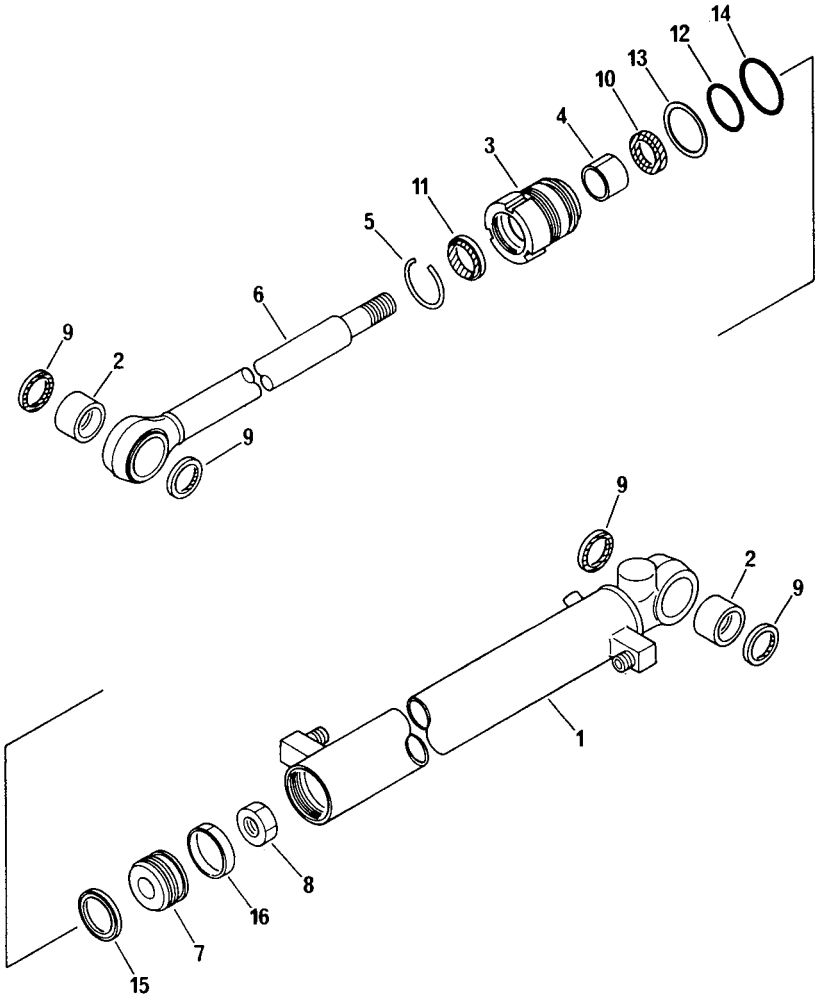

FIG. N°. :7581

INDEX N°.	PART N°.	DESCRIPTION	Q.TY	SERIAL N°. PC05-6F
—	707-00-R3201	BUCKET CYLINDER ASSY.	1	F10001 -
1	707-63-R3291	. CYLINDER	1	F10001 -
2	PZF500217302	. BUSHING	2	F10001 -
3	707-29-50910	. HEAD, CYLINDER	1	F10001 -
4	PZF500466130	. BUSHING	1	F10001 -
5	PZF855661161	. RING, SNAP	1	F10001 -
6	707-58-30680	. ROD	1	F10001 -
7	707-36-50560	. PISTON	1	F10001 -
8	PZF801920111	. NUT	1	F10001 -
	PZF855661247	. GASKET SET	1	F10001 -
9	☆	. . SEAL, DUST	4	F10001 -
10	☆	. . SEAL, DUST	1	F10001 -
11	☆	. . SEAL, DUST	1	F10001 -
12	☆	. . O-RING	1	F10001 -
13	☆	. . RING, BACK-UP	1	F10001 -
14	☆	. . O-RING	1	F10001 -
15	☆	. . RING, PISTON	1	F10001 -
16	☆	. . RING, WEAR	1	F10001 -

https://truckmanualshub.com/

FIG. 7600 BUCKET (350 mm)

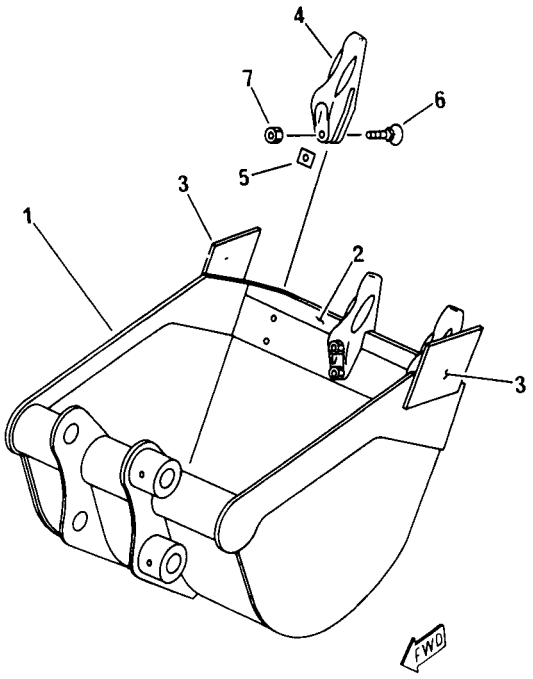

FIG. N°. :7600

INDEX N°.	PART N°.	DESCRIPTION	Q.TY	SERIAL N°. PC05-6F
1	20M-70-R5011	BUCKET ASSY.	1	F10001 -
2	20M-70-R5171	. EDGE (WELDED)	1	F10001 -
3	20W-70-15140	. EDGE SIDE (WELDED)	2	F10001 -
4	20W-70-R5141	TOOTH	3	F10001 -
5	20W-70-15150	SHIM	AR	F10001 -
6	01010-51240	BOLT	6	F10001 -
7	01580-11210	NUT	6	F10001 -

https://truckmanualshub.com/

FIG. 7601 BUCKET WITH HOOK (350 mm)

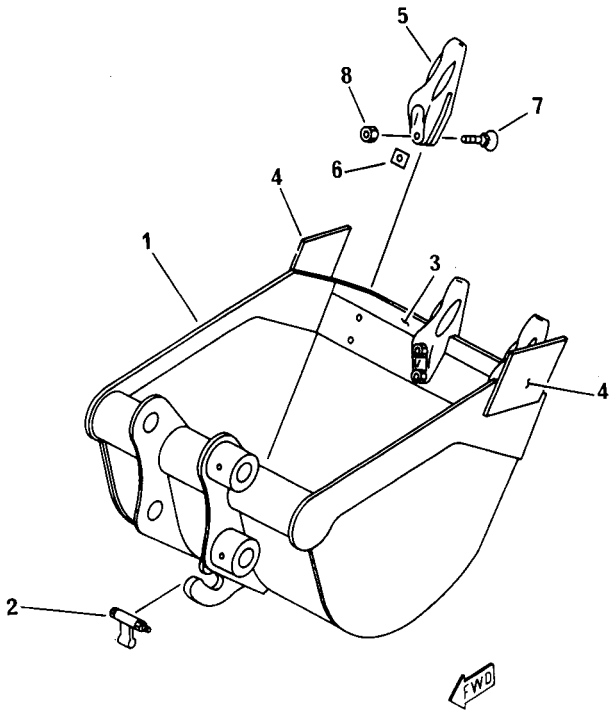

FIG. N°. :7601

INDEX N°.	PART N°.	DESCRIPTION	Q.TY	SERIAL N°. PC05-6F
1	20M-70-R5241	BUCKET ASSY. WITH HOOK	1	F10001 -
2	20N-70-39280	. LEVER	1	F10001 -
3	20M-70-R5171	. EDGE (WELDED)	1	F10001 -
4	20W-70-15140	. EDGE SIDE (WELDED)	2	F10001 -
5	20W-70-R5141	TOOTH	3	F10001 -
6	20W-70-15150	SHIM	AR	F10001 -
7	01010-51240	BOLT	6	F10001 -
8	01580-11210	NUT	6	F10001 -

https://truckmanualshub.com/

FIG. 7602 BUCKET (250 mm)

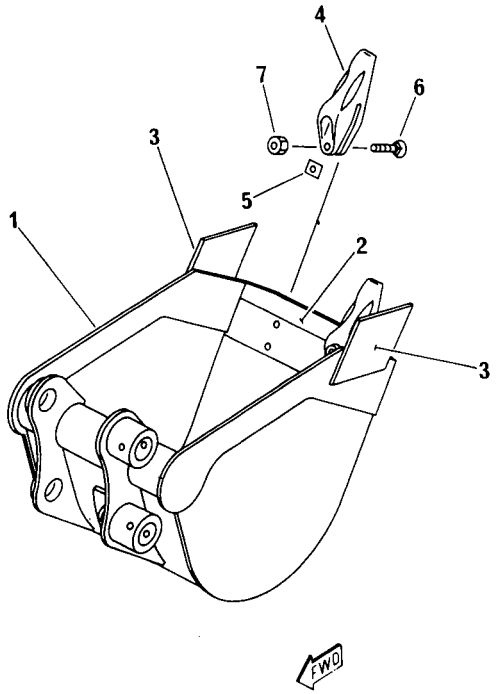

FIG. N°. 7602

INDEX N°.	PART N°.	DESCRIPTION	Q.TY	SERIAL N°. PC05-6F
1	20M-70-R5221	BUCKET ASSY.	1	F10001 -
2	20M-70-R5231	. EDGE (WELDED)	1	F10001 -
3	20W-70-15140	. EDGE SIDE (WELDED)	2	F10001 -
4	20W-70-R5141	TOOTH	2	F10001 -
5	20W-70-15150	SHIM	AR	F10001 -
6	01010-51240	BOLT	4	F10001 -
7	01580-11210	NUT	4	F10001 -

https://truckmanualshub.com/

FIG. 7603 BUCKET WITH HOOK (250 mm)

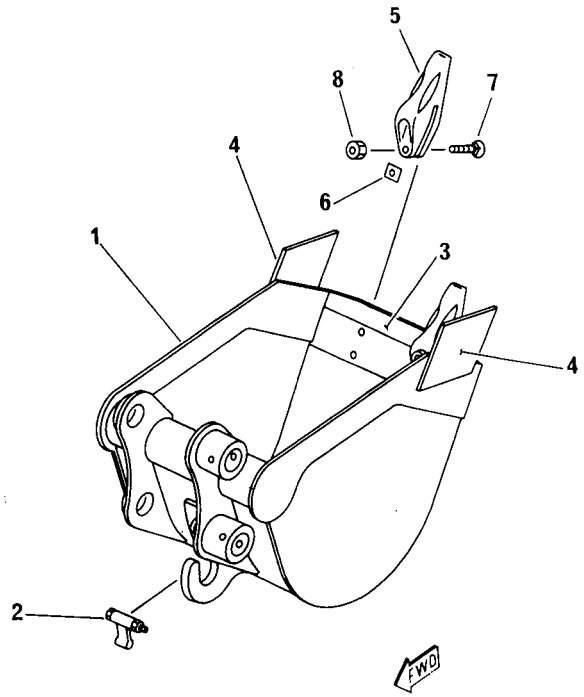

FIG. N°. :7603

INDEX N°.	PART N°.	DESCRIPTION	Q.TY	SERIAL N°. PC05-6F
1	20M-70-R5251	BUCKET ASSY. WITH HOOK	1	F10001 -
2	20N-70-39280	. LEVER	1	F10001 -
3	20M-70-R5231	. EDGE (WELDED)	1	F10001 -
4	20W-70-15140	. EDGE SIDE (WELDED)	2	F10001 -
5	20W-70-R5141	TOOTH	2	F10001 -
6	20W-70-15150	SHIM	AR	F10001 -
7	01010-51240	BOLT	4	F10001 -
8	01580-11210	NUT	4	F10001 -

https://truckmanualshub.com/

FIG. 7701 BLADE SUB GROUP

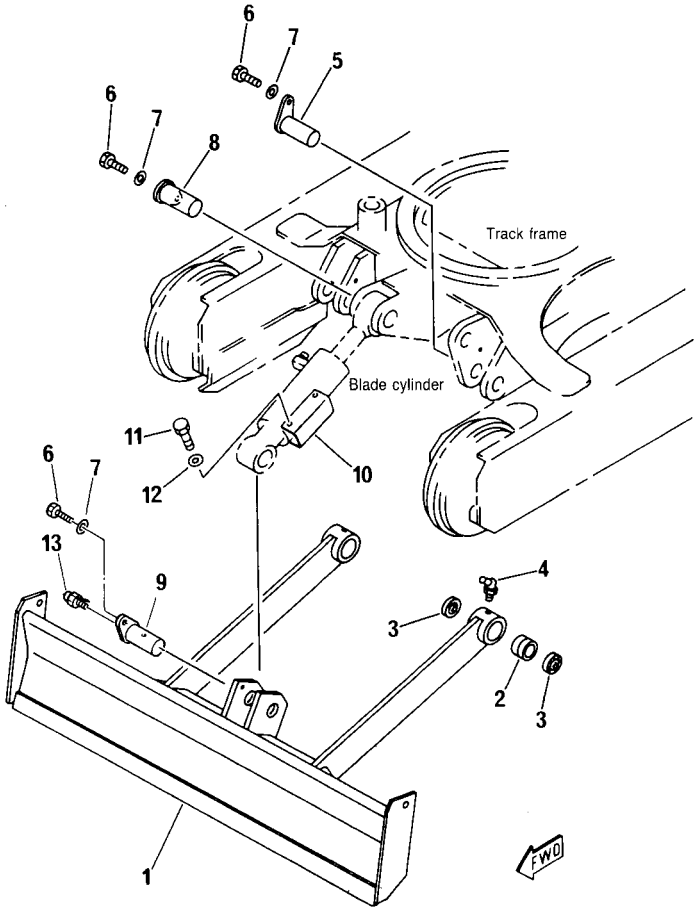

FIG. N°. :7701

INDEX N°.	PART N°.	DESCRIPTION	Q.TY	SERIAL N°. PC05-6F
1	20W-71-11111	BLADE ASSY.	1	F10001 -
2	PZF500217350	BUSHING	2	F10001 -
3	PZF855661150	SEAL, DUST	4	F10001 -
4	PZF860020005	FITTING, GREASE	2	F10001 -
5	20M-71-31120	PIN	2	F10001 -
6	01010-51020	BOLT	4	F10001 -
7	01643-31032	WASHER	4	F10001 -
8	20M-71-31130	PIN	1	F10001 -
9	20M-71-31140	PIN	1	F10001 -
10	20M-71-48121	COVER	1	F10001 -
11	01010-50816	BOLT	4	F10001 -
12	01643-30823	WASHER	4	F10001 -
13	PZF860010009	FITTING, GREASE	1	F10001 -

https://truckmanualshub.com/

FIG. 7711 HYDRAULIC PIPING (BLADE CYLINDER LINE)

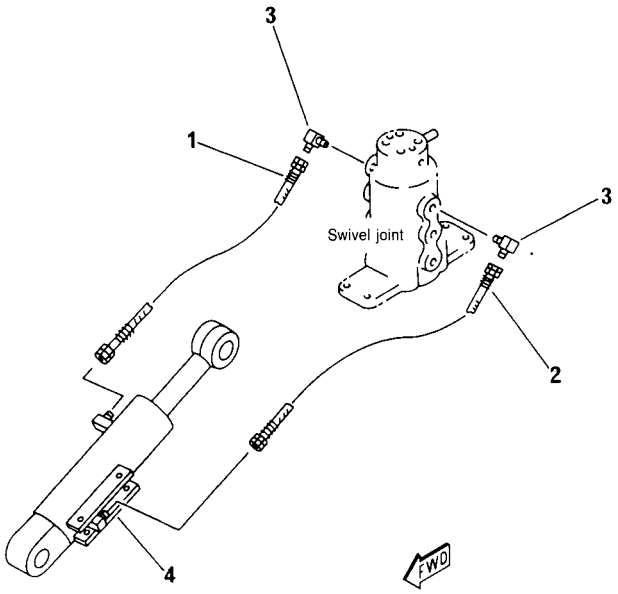

FIG. N°. :7711

INDEX N°.	PART N°.	DESCRIPTION	Q.TY	SERIAL N°. PC05-6F
1	20M-62-R1151	HOSE	1	F10001 -
2	20M-62-R1161	HOSE	1	F10001 -
3	20M-62-R1551	ELBOW	2	F10001 -
4	(707-00-R5361)	BLADE CYLINDER ASSY. (SEE FIG. 7721)	1	F10001 -

https://truckmanualshub.com/

FIG. 7721 BLADE CYLINDER

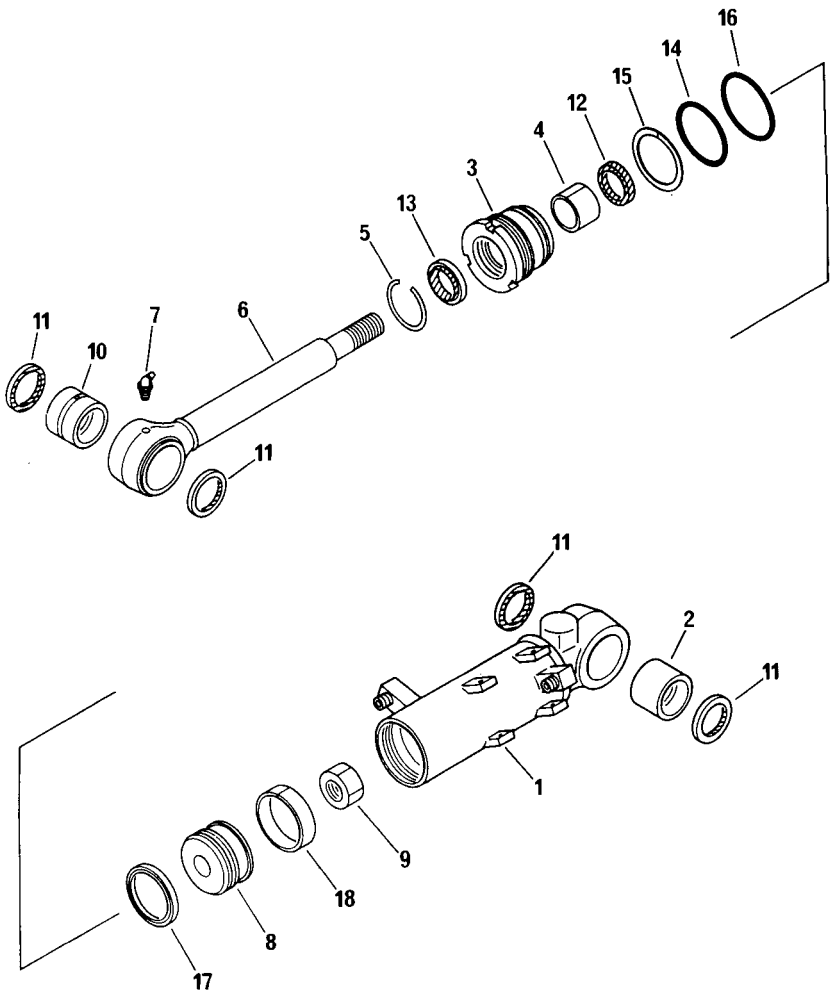

FIG. N°. :7721

INDEX N°.	PART N°.	DESCRIPTION	Q.TY	SERIAL N°. PC05-6F
—	707-00-R5361	BLADE CYLINDER ASSY.	1	F10001 -
1	707-63-R5371	. CYLINDER	1	F10001 -
2	PZF500217301	. BUSHING	1	F10001 -
3	707-29-60930	. HEAD, CYLINDER	1	F10001 -
4	PZF500466130	. BUSHING	1	F10001 -
5	PZF855661161	. RING, SNAP	1	F10001 -
6	707-58-30530	. ROD, PISTON	1	F10001 -
7	PZF860020005	. FITTING, GREASE	1	F10001 -
8	707-36-60040	. PISTON	1	F10001 -
9	PZF801920111	. NUT	1	F10001 -
10	PZF500217351	. BUSHING	1	F10001 -
	PZF855661248	. GASKET SET	1	F10001 -
11	☆	. . SEAL, DUST	4	F10001 -
12	☆	. . PACKING, ROD	1	F10001 -
13	☆	. . PACKING, ROD	1	F10001 -
14	☆	. . O-RING	1	F10001 -
15	☆	. . RING, BACK-UP	1	F10001 -
16	☆	. . O-RING	1	F10001 -
17	☆	. . RING, PISTON	1	F10001 -
18	☆	. . RING, WEAR	1	F10001 -

https://truckmanualshub.com/

MARK PLATE, TOOL AND KIT

https://truckmanualshub.com/

FIG. 9802 MARKS AND PLATES (EUROPE)

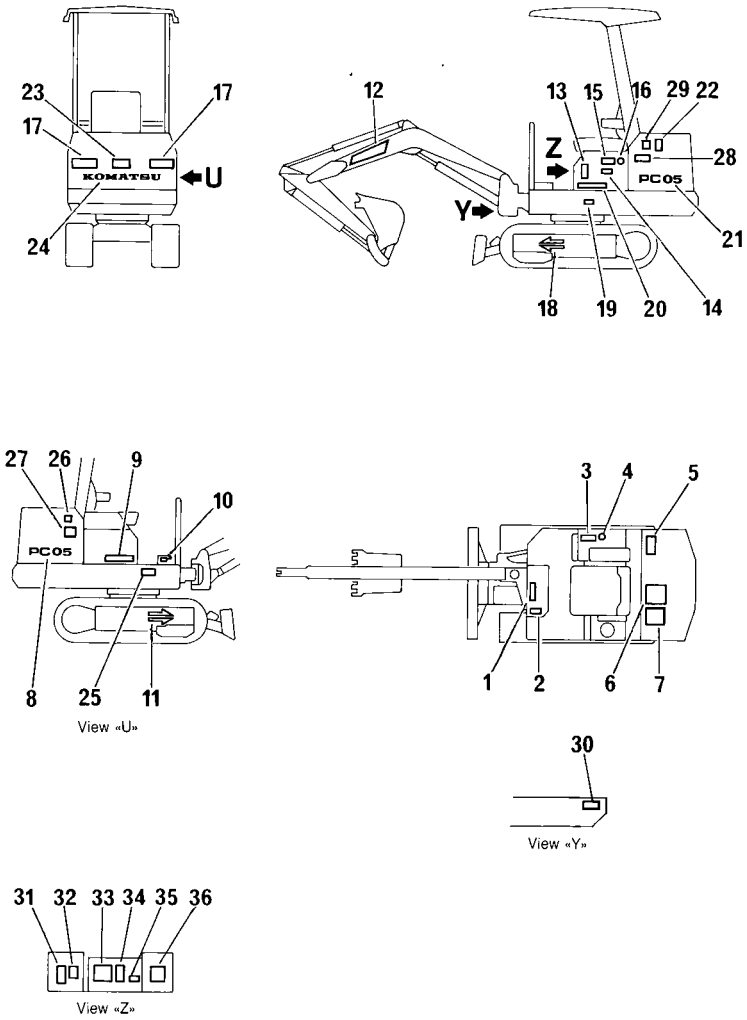

FIG. N°. :9802

INDEX N°.	PART N°.	DESCRIPTION	Q.TY	SERIAL N°. PC05-6F
1	20M-98-48110	PLATE, OPERATING WORK EQUIPMENT CONTROL	1	F10001 -
2	09685-00001	PLATE, LEVER LOCK	1	F10001 -
3	201-98-29340	PLATE, INSTRUCTION HYDRAULIC OIL	1	F10001 -
4	09669-00003	PLATE, CAUTION, HYDRAULIC TANK	1	F10001 -
5	20M-98-23120	PLATE, CAUTION, AIR CLEANER	1	F10001 -
6	20M-98-R1081	CHART, OIL	1	F10001 -
7	20T-98-19120	PLATE, CAUTION	1	F10001 -
8	20M-98-62570	PLATE, MARK, PC05	1	F10001 -
9	20W-98-12510	PLATE, MARK, SYMBOL	1	F10001 -
10	09685-00002	PLATE, OPERATING SWING LOCK LEVER	1	F10001 -
11	20M-98-48250	PLATE, MARK, ARROW	1	F10001 -
12	20M-98-48240	PLATE, MARK, KOMATSU	1	F10001 -
13	09696-10080	PLATE, NOISES AT OPERATOR'S EARS	1	F10001 -
14	09652-21101	PLATE, CAUTION FUEL TANK WATER DRAIN	1	F10001 -
15	09101-02000	PLATE, INSTRUCTION, FUEL	1	F10001 -
16	09669-00002	PLATE, CAUTION, FUEL TANK	1	F10001 -
17	20M-98-48260	PLATE, CAUTION, TURNING AREA	2	F10001 -
18	20M-98-48250	PLATE, MARK, ARROW	1	F10001 -
19	20N-98-48160	PLATE, OPERATING, LUBRICATION	1	F10001 -
20	20W-98-12520	PLATE, MARK, SYMBOL	1	F10001 -
21	20M-98-62570	PLATE, MARK, PC05	1	F10001 -
22	09696-00094	PLATE, SURROUNDING NOISES	1	F10001 -
23	09667-03000	PLATE, SAFETY, ENGINE COVER	1	F10001 -
24	09690-50560	PLATE, MARK, KOMATSU	1	F10001 -
25	20M-98-R6211	PLATE, OPERATING, 3 WAY VALVE	1	F10001 -
26	09668-02000	PLATE, CAUTION, RADIATOR CAP	1	F10001 -
27	09650-21103	PLATE, CAUTION RADIATOR WATER LEVEL	1	F10001 -
28	20N-98-39340	PLATE, CAUTION ENGINE OIL FILTER	1	F10001 -
29	20S-98-12120	PLATE, CAUTION, FUEL FILTER	1	F10001 -
30	PZF816212468	PLATE, NAME, (LIMITED SUPPLY)	1	F10001 -
—	PZF801570027	SCREW	4	F10001 -
31	09653-02000	PLATE, SAFETY, HYDRAULIC CAP	1	F10001 -
32	201-98-29350	PLATE, HYDRAULIC OIL FILTER	1	F10001 -
33	09651-02000	PLATE, SAFETY BEFORE OPERATING MACHINE	1	F10001 -
34	09173-02000	PLATE, SAFETY INSPECTION AND MAINTENANCE	1	F10001 -

https://truckmanualshub.com/

FIG. N°. :9802

INDEX N°.	PART N°.	DESCRIPTION	Q.TY	SERIAL N°. PC05-6F
35	20M-98-48130	PLATE, OPERATING BOOM SWING AND SWING SELECT	1	F10001 -
36	09132-02000	PLATE, SAFETY STARTING AND LEAVING SEAT	1	F10001 -

https://truckmanualshub.com/

FIG. 9804 MARKS AND PLATES (ITALIAN)

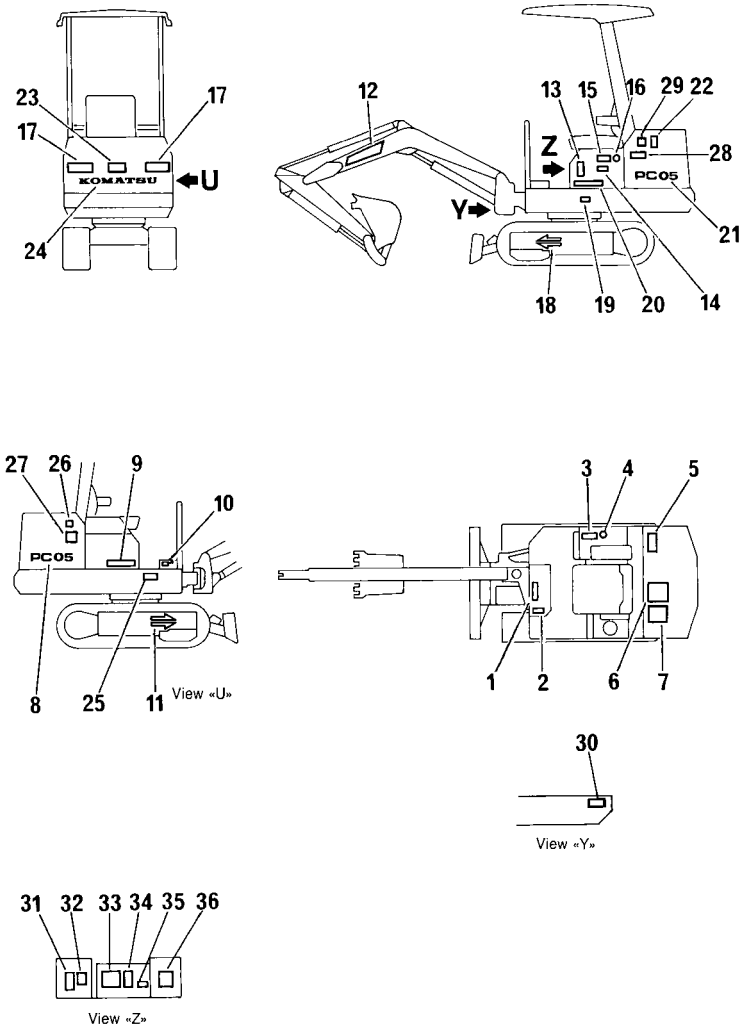

FIG. N°. :9804

INDEX N°.	PART N°.	DESCRIPTION	Q.TY	SERIAL N°. PC05-6F
1	20M-98-48110	PLATE, OPERATING WORK EQUIPMENT CONTROL	1	F10001 -
2	09685-00001	PLATE, LEVER LOCK	1	F10001 -
3	20M-98-R6151	PLATE, INSTRUCTION HYDRAULIC OIL	1	F10001 -
4	09669-00003	PLATE, CAUTION, HYDRAULIC TANK	1	F10001 -
5	20M-98-38460	PLATE, CAUTION, AIR CLEANER	1	F10001 -
6	20M-98-R1391	CHART, OIL	1	F10001 -
7	20M-98-R1781	PLATE, CAUTION	1	F10001 -
8	20M-98-62570	PLATE, MARK, PC05	1	F10001 -
9	20W-98-12510	PLATE, MARK, SYMBOL	1	F10001 -
10	09685-00002	PLATE, OPERATING SWING LOCK LEVER	1	F10001 -
11	20M-98-48250	PLATE, MARK, ARROW	1	F10001 -
12	20M-98-48240	PLATE, MARK, KOMATSU	1	F10001 -
13	09696-10080	PLATE, NOISES AT OPERATOR'S EARS	1	F10001 -
14	PZF816212476	PLATE, CAUTION FUEL TANK WATER DRAIN	1	F10001 -
15	PZF816212480	PLATE, INSTRUCTION, FUEL	1	F10001 -
16	09669-00002	PLATE, CAUTION, FUEL TANK	1	F10001 -
17	20M-98-48730	PLATE, CAUTION, TURNING AREA	2	F10001 -
18	20M-98-48250	PLATE, MARK, ARROW	1	F10001 -
19	20M-98-R1411	PLATE, OPERATING, LUBRICATION	1	F10001 -
20	20W-98-12520	PLATE, MARK, SYMBOL	1	F10001 -
21	20M-98-62570	PLATE, MARK, PC05	1	F10001 -
22	09696-00094	PLATE, SURROUNDING NOISES	1	F10001 -
23	PZF816212473	PLATE, SAFETY, ENGINE COVER	1	F10001 -
24	09690-50560	PLATE, MARK, KOMATSU	1	F10001 -
25	20M-98-R6211	PLATE, OPERATING, 3 WAY VALVE	1	F10001 -
26	PZF816212471	PLATE, CAUTION, RADIATOR CAP	1	F10001 -
27	PZF816212472	PLATE, CAUTION RADIATOR WATER LEVEL	1	F10001 -
28	20M-98-38430	PLATE, CAUTION ENGINE OIL FILTER	1	F10001 -
29	20M-98-R6141	PLATE, CAUTION, FUEL FILTER	1	F10001 -
30	PZF816212466	PLATE, NAME, (LIMITED SUPPLY)	1	F10001 -
—	PZF801570027	SCREW	4	F10001 -
31	PZF816212475	PLATE, SAFETY, HYDRAULIC CAP	1	F10001 -
32	20M-98-R1851	PLATE, HYDRAULIC OIL FILTER	1	F10001 -
33	PZF816212478	PLATE, SAFETY BEFORE OPERATING MACHINE	1	F10001 -
34	PZF816212479	PLATE, SAFETY INSPECTION AND MAINTENANCE	1	F10001 -

https://truckmanualshub.com/

FIG. N°. :9804

INDEX N°.	PART N°.	DESCRIPTION	Q.TY	SERIAL N°. PC05-6F
35	20M-98-48130	PLATE, OPERATING BOOM SWING AND SWING SELECT	1	F10001 -
36	PZF816212477	PLATE, SAFETY STARTING AND LEAVING SEAT	1	F10001 -

https://truckmanualshub.com/

FIG. 9810 MARKS AND PLATES (GERMAN)

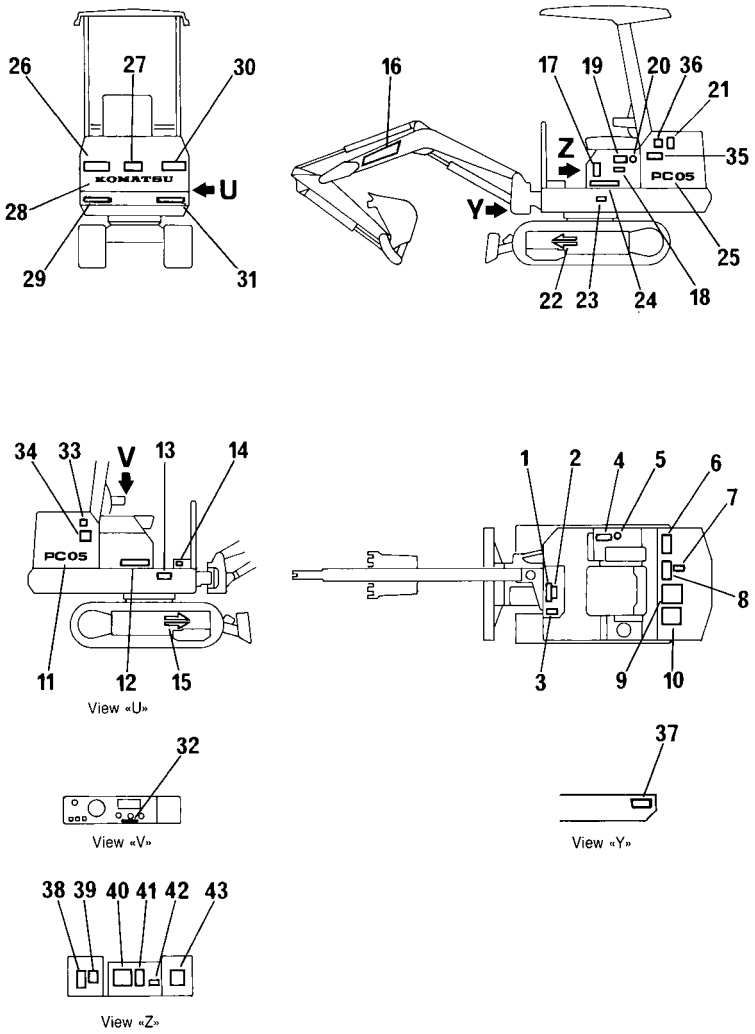

FIG. N°. :9810

INDEX N°.	PART N°.	DESCRIPTION	Q.TY	SERIAL N°. PC05-6F
1	20M-98-48110	PLATE, OPERATING WORK EQUIPMENT CONTROL	1	F10001 -
2	20M-98-22210	PLATE, CAUTION BEFORE OPERATING MACHINE	2	F10001 -
3	09685-00001	PLATE, LEVER LOCK	1	F10001 -
4	201-98-29340	PLATE, INSTRUCTION HYDRAULIC OIL	1	F10001 -
5	09669-00003	PLATE, CAUTION, HYDRAULIC TANK	1	F10001 -
6	20M-98-R1241	PLATE, LIFTING CAPACITY WITH BLADE	1	F10001 -
7	20M-98-23130	PLATE, CAUTION AIR CLEANER	1	F10001 -
8	20M-98-R1251	PLATE, LIFTING CAPACITY W/O BLADE	1	F10001 -
9	20M-98-R1181	CHART, OIL	1	F10001 -
10	20T-98-19350	PLATE, CAUTION	1	F10001 -
11	20M-98-62570	PLATE, MARK, PC05	1	F10001 -
12	20W-98-12510	PLATE, MARK, SYMBOL	1	F10001 -
13	20M-98-R6211	PLATE, THREE WAY VALVE	1	F10001 -
14	09685-00002	PLATE, OPERATING SWING LOCK LEVER	1	F10001 -
15	20M-98-48250	PLATE, MARK, ARROW	1	F10001 -
16	20M-98-48240	PLATE, MARK, KOMATSU	1	F10001 -
17	09696-10080	PLATE, NOISES AT OPERATOR'S EARS	1	F10001 -
18	09652-21101	PLATE, CAUTION FUEL TANK WATER DRAIN	1	F10001 -
19	09101-02000	PLATE, INSTRUCTION, FUEL	1	F10001 -
20	09669-00002	PLATE, CAUTION, FUEL TANK	1	F10001 -
21	09696-00094	PLATE, SURROUNDING NOISES	1	F10001 -
22	20M-98-48250	PLATE, MARK, ARROW	1	F10001 -
23	20N-98-48460	PLATE, INSTRUCTION, LUBRICATION	1	F10001 -
24	20W-98-12520	PLATE, MARK, SYMBOL	1	F10001 -
25	20M-98-62570	PLATE, MARK, PC05	1	F10001 -
26	20M-98-49150	PLATE, CAUTION, TURNING AREA	1	F10001 -
27	20T-98-22330	PLATE, OPERATING, ENGINE COVER	1	F10001 -
28	09690-50560	PLATE, MARK, KOMATSU	1	F10001 -
29	20M-98-69230	PLATE, L.H.	1	F10001 -
30	20M-98-49150	PLATE, CAUTION, TURNING AREA	1	F10001 -
31	20M-98-69240	PLATE, R.H.	1	F10001 -
32	20M-98-49110	PLATE, OPERATING, SELECTOR	1	F10001 -
33	09668-02000	PLATE, CAUTION, RADIATOR CAP	1	F10001 -
34	09650-21103	PLATE, CAUTION RADIATOR WATER LEVEL	1	F10001 -

https://truckmanualshub.com/

FIG. N°. :9810

INDEX N°.	PART N°.	DESCRIPTION	Q.TY	SERIAL N°. PC05-6F
35	20T-98-22230	PLATE, CAUTION ENGINE OIL FILTER	1	F10001 -
36	20S-98-12120	PLATE, CAUTION, FUEL FILTER	1	F10001 -
37	PZF816212465	PLATE, NAME, (LIMITED SUPPLY)	1	F10001 -
—	PZF801570027	SCREW	4	F10001 -
38	09653-02000	PLATE, SAFETY, HYDRAULIC CAP	1	F10001 -
39	201-98-29350	PLATE, HYDRAULIC OIL FILTER	1	F10001 -
40	09651-02000	PLATE, SAFETY BEFORE OPERATING MACHINE	1	F10001 -
41	09173-02000	PLATE, SAFETY INSPECTION AND MAINTENANCE	1	F10001 -
42	20M-98-48130	PLATE, OPERATING BOOM SWING AND SWING SELECT	1	F10001 -
43	09132-02000	PLATE, SAFETY STATING AND LEAVING SEAT	1	F10001 -

https://truckmanualshub.com/

FIG. 9811 MARKS AND PLATES (FRENCH)

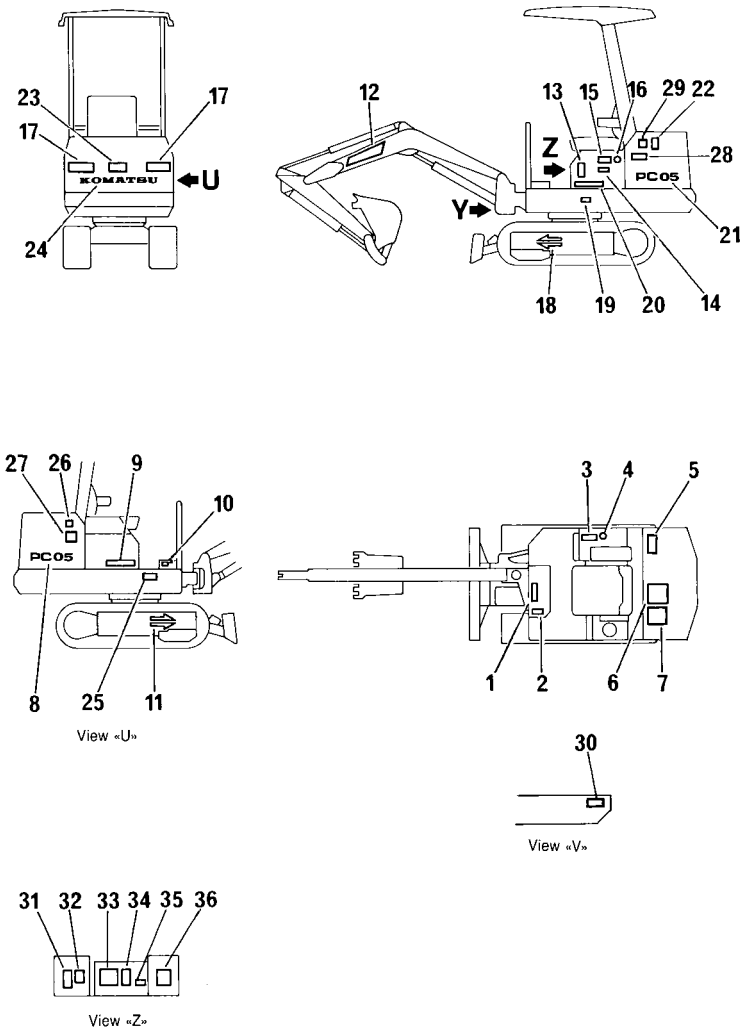

FIG. N°. 9811

INDEX N°.	PART N°.	DESCRIPTION	Q.TY	SERIAL N°. PC05-6F
1	20M-98-48110	PLATE, OPERATING WORK EQUIPMENT CONTROL	1	F10001 -
2	09685-00001	PLATE, LEVER LOCK	1	F10001 -
3	20M-98-R6151	PLATE, INSTRUCTION HYDRAULIC OIL	1	F10001 -
4	09669-00003	PLATE, CAUTION, HYDRAULIC TANK	1	F10001 -
5	20M-98-R6171	PLATE, CAUTION, AIR CLEANER	1	F10001 -
6	20M-98-R6181	CHART, OIL	1	F10001 -
7	20M-98-R1781	PLATE, CAUTION	1	F10001 -
8	20M-98-62570	PLATE, MARK, PC05	1	F10001 -
9	20W-98-12510	PLATE, MARK, SYMBOL	1	F10001 -
10	09685-00002	PLATE, OPERATING SWING LOCK LEVER	1	F10001 -
11	20M-98-48250	PLATE, MARK, ARROW	1	F10001 -
12	20M-98-48240	PLATE, MARK, KOMATSU	1	F10001 -
13	09696-10080	PLATE, NOISES AT OPERATOR'S EARS	1	F10001 -
14	PZF816212476	PLATE, CAUTION FUEL TANK WATER DRAIN	1	F10001 -
15	PZF816212480	PLATE, INSTRUCTION, FUEL	1	F10001 -
16	09669-00002	PLATE, CAUTION, FUEL TANK	1	F10001 -
17	20M-98-48530	PLATE, CAUTION, TURNING AREA	2	F10001 -
18	20M-98-48250	PLATE, MARK, ARROW	1	F10001 -
19	20M-98-R1861	PLATE, OPERATING, LUBRICATION	1	F10001 -
20	20W-98-12520	PLATE, MARK, SYMBOL	1	F10001 -
21	20M-98-62570	PLATE, MARK, PC05	1	F10001 -
22	09696-00094	PLATE, SURROUNDING NOISES	1	F10001 -
23	PZF816212473	PLATE, SAFETY, ENGINE COVER	1	F10001 -
24	09690-50560	PLATE, MARK, KOMATSU	1	F10001 -
25	20M-98-R6211	PLATE, OPERATING, 3 WAY VALVE	1	F10001 -
26	PZF816212471	PLATE, CAUTION, RADIATOR, CAP	1	F10001 -
27	PZF816212472	PLATE, CAUTION RADIATOR WATER LEVEL	1	F10001 -
28	20M-98-R6161	PLATE, CAUTION ENGINE OIL FILTER	1	F10001 -
29	20M-98-R6141	PLATE, CAUTION, FUEL FILTER	1	F10001 -
30	PZF816212467	PLATE, NAME, (LIMITED SUPPLY)	1	F10001 -
—	PZF801570027	SCREW	4	F10001 -
31	PZF816212475	PLATE, SAFETY, HYDRAULIC CAP	1	F10001 -
32	20M-98-R1851	PLATE, HYDRAULIC OIL FILTER	1	F10001 -
33	PZF816212478	PLATE, SAFETY BEFORE OPERATING MACHINE	1	F10001 -
34	PZF816212479	PLATE, SAFETY INSPECTION AND MAINTENANCE	1	F10001 -

https://truckmanualshub.com/

FIG. N°. :9811

INDEX N°.	PART N°.	DESCRIPTION	Q.TY	SERIAL N°. PC05-6F
35	20M-98-48130	PLATE, OPERATING BOOM SWING AND SWING SELECT	1	F10001 -
36	PZF816212477	PLATE, SAFETY STARTING AND LEAVING SEAT	1	F10001 -

https://truckmanualshub.com/

FIG. 9901 TOOL

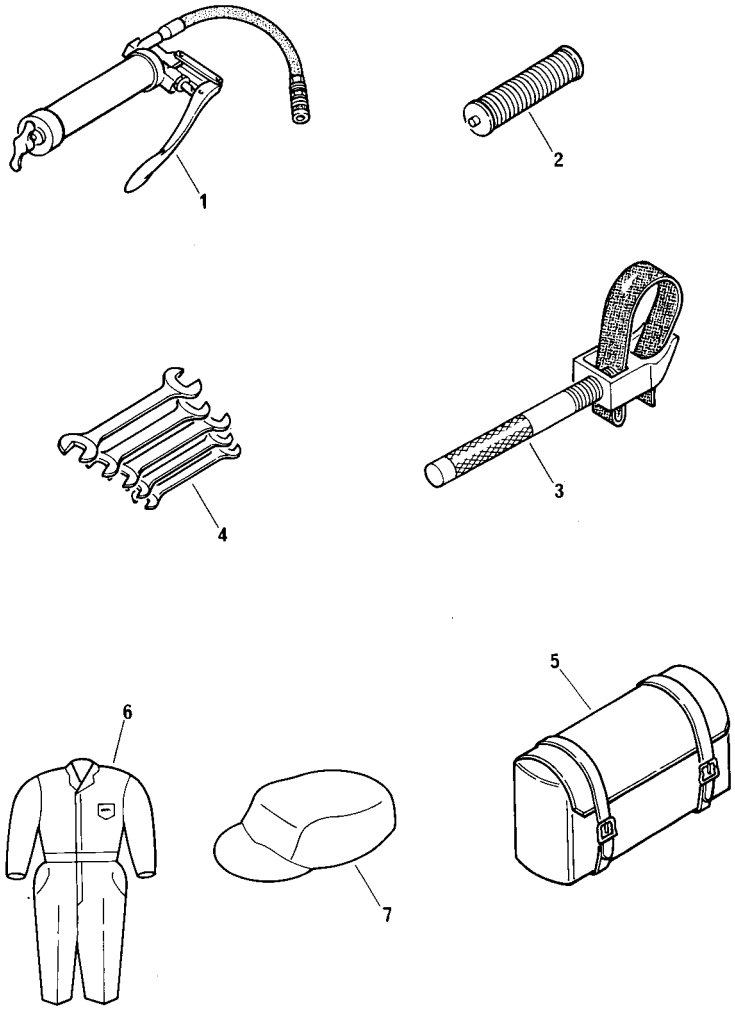

FIG. N°. 9901

INDEX N°.	PART N°.	DESCRIPTION	Q.TY	SERIAL N°. PC05-6F
1	PZF823001135	GREASE PUMP ASSY.	1	F10001 -
2	PZF823001249	. CARTRIDGE, GREASE	1	F10001 -
3	PZF823001143	WRENCH, FILTER	1	F10001 -
4	PZF823000052	WRENCH, SET	1	F10001 -
5	20M-98-R2081	BOX, TOOL	1	F10001 -
6	PZF823001246	OVERALL	1	F10001 -
7	PZF823001248	CAP	1	F10001 -

https://truckmanualshub.com/

FIG. 9905 SPARE PARTS

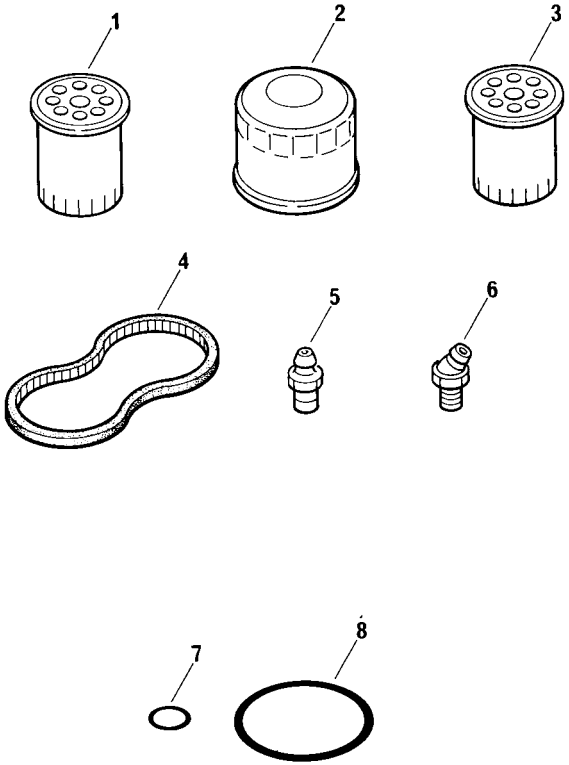

FIG. N°. :9905

INDEX N°.	PART N°.	DESCRIPTION	Q.TY	SERIAL N°. PC05-6F
1	20M-60-R1151	CARTRIDGE HYDRAULIC FILTER	1	F10001 -
2	PK140516190	CARTRIDGE ENGINE OIL FILTER	1	F10001 -
3	PK130366020	ENGINE FUEL FILTER	1	F10001 -
4	PK080109049	V-BELT, COOLING FAN	1	F10001 -
5	PZF860010009	FITTING GREASE	4	F10001 -
6	PZF860020005	FITTING GREASE	4	F10001 -
7	PZF855021211	O-RING, HYDRAULIC TANK DRAIN	1	F10001 -
8	PZF855021232	O-RING, HYDRAULIC FILTER	1	F10001 -

https://truckmanualshub.com/

FIG. 9991 KIT

K1	PZF855661243	CYLINDER HEAD GASKET SET
K2	PZF855661245	CYLINDER HEAD GASKET SET
K3	PZF855661244	CYLINDER HEAD GASKET SET
K4	PZF855661246	CYLINDER HEAD GASKET SET
K5	PZF855661242	CYLINDER HEAD GASKET SET
K6	PZF855661247	CYLINDER HEAD GASKET SET
K7	PZF855661248	CYLINDER HEAD GASKET SET

FIG. N°. :9991

INDEX N°.	PART N°.	DESCRIPTION	Q.TY	SERIAL N°. PC05-6F
K1	PZF855661243	GASKET SET	1	F10001 - F10488
	PZF855661150	. SEAL, DUST	4	F10001 - F10488
	PZF855661135	. PACKING, DUST	1	F10001 - F10488
	PZF855661134	. SEAL, SNAP	1	F10001 - F10488
	PZF855661165	. O-RING	2	F10001 - F10488
	PZF855661136	. RING, BACK-UP	1	F10001 - F10488
	PZF855661164	. O-RING	1	F10001 - F10488
	PZF855661191	. RING, PISTON	1	F10001 - F10488
	PZF855661192	. RING, WEAR	1	F10001 - F10488
	PZF855661156	. RING, WEAR	1	F10001 - F10488
K2	PZF855661245	GASKET SET	1	F15001 -
	PZF855661150	. SEAL, DUST	4	F15001 -
	PZF855661135	. PACKING, DUST	1	F15001 -
	PZF855661134	. SEAL, SNAP	1	F15001 -
	PZF855661166	. O-RING	1	F15001 -
	PZF855661157	. RING, BACK-UP	1	F15001 -
	PZF855661236	. O-RING	1	F15001 -
	PZF855661138	. RING, PISTON	1	F15001 -
	PZF855661139	. RING, WEAR	1	F15001 -
	PZF855661241	. RING, WEAR	1	F15001 -
	PZF855051832	. O-RING	1	F15001 -
K3	PZF855661244	GASKET SET	1	F10001 - F10488
	PZF855661150	. SEAL, DUST	4	F10001 - F10488
	PZF855661135	. PACKING, DUST	1	F10001 - F10488
	PZF855661134	. SEAL, SNAP	1	F10001 - F10488
	PZF855661165	. O-RING	1	F10001 - F10488
	PZF855661136	. RING, BACK-UP	1	F10001 - F10488
	PZF855661164	. O-RING	1	F10001 - F10488
	PZF855661191	. RING, PISTON	1	F10001 - F10488
	PZF855661192	. RING, WEAR	1	F10001 - F10488
K4	PZF855661246	GASKET SET	1	F15001 -
	PZF855661150	. SEAL, DUST	4	F15001 -
	PZF855661135	. PACKING, DUST	1	F15001 -
	PZF855661134	. SEAL, SNAP	1	F15001 -
	PZF855661166	. O-RING	1	F15001 -
	PZF855661157	. RING, BACK-UP	1	F15001 -
	PZF855661236	. O-RING	1	F15001 -
	PZF855661138	. RING, PISTON	1	F15001 -
	PZF855661139	. RING, WEAR	1	F15001 -
K5	PZF855661242	GASKET SET	1	F10001 -
	PZF855661150	. SEAL, DUST	4	F10001 -
	PZF855661135	. PACKING, ROD	1	F10001 -
	PZF855661134	. SEAL, DUST	1	F10001 -
	PZF855661165	. O-RING	2	F10001 -
	PZF855661136	. RING, BACK-UP	1	F10001 -
	PZF855661164	. O-RING	1	F10001 -

https://truckmanualshub.com/

FIG. N°. :9991

INDEX N°.	PART N°.	DESCRIPTION	Q.TY	SERIAL N°. PC05-6F
	PZF855661191	. RING, PISTON	1	F10001 -
	PZF855661192	. RING, WEAR	1	F10001 -
K6	PZF855661247	GASKET SET	1	F10001 -
	PZF855661150	. SEAL, DUST	4	F10001 -
	PZF855661135	. SEAL, DUST	1	F10001 -
	PZF855661134	. SEAL, DUST	1	F10001 -
	PZF855661165	. O-RING	1	F10001 -
	PZF855661136	. RING, BACK-UP	1	F10001 -
	PZF855661164	. O-RING	1	F10001 -
	PZF855661191	. RING, PISTON	1	F10001 -
	PZF855661192	. RING, WEAR	1	F10001 -
K7	PZF855661248	GASKET SET	1	F10001 -
	PZF855661151	. SEAL, DUST	4	F10001 -
	PZF855661135	. PACKING, ROD	1	F10001 -
	PZF855661134	. PACKING, ROD	1	F10001 -
	PZF855661166	. O-RING	1	F10001 -
	PZF855661157	. RING, BACK-UP	1	F10001 -
	PZF855661236	. O-RING	1	F10001 -
	PZF855661138	. RING, PISTON	1	F10001 -
	PZF855661139	. RING, WEAR	1	F10001 -

NUMERICAL INDEX

https://truckmanualshub.com/

PART NO	F/NO	I/NO	M/NO
(20M-60-39400)	6611	7	
(20M-60-40100)	3061	14	
(20M-60-40101)	3061	14-	
(20M-60-63000)	6611	14	
(703-05-12150)	3061	19	
(707-00-R1011)	7101	24	
(707-00-R1011)	7103	24	
(707-00-R1161)	7101	24-	
(707-00-R1161)	7103	24-	
(707-00-R1181)	7101	24-	
(707-00-R1181)	7103	24-	
(707-00-R2281)	7101	25	
(707-00-R2281)	7103	25	
(707-00-R3201)	7101	26	
(707-00-R3201)	7103	26	
(707-00-R4311)	6611	25	
(707-00-R4461)	6611	25-	
(707-00-R4491)	6611	25-	
(707-00-R4541)	6611	25-	
(707-00-R5361)	7711	4	
(709-37-11900)	6502	23	
(709-37-12400)	6502	23-	
(PK130506140)	0429	1	
(PK131017310)	0402	1	
(PK131406330)	0402	23	
(PK185046160)	0601	1	
(PK185086321)	0621	1	
01010-50610	1501	4	
01010-50625	4001	5	
01010-50816	1105	9	
01010-50816	1107	9	
01010-50816	1201	8	
01010-50816	1501	8	
01010-50816	1502	4	
01010-50816	4102	17	
01010-50816	4401	4	
01010-50816	6502	32	
01010-50816	7701	11	
01010-50820	1002	10	
01010-50820	1102	3	
01010-50820	1201	12	
01010-50820	1302	8	
01010-50820	4214	16	
01010-50820	4300	24	
01010-50820	4301	24	
01010-50820	5702	4	
01010-50820	5703	4	
01010-50820	6001	5	
01010-50825	1105	17	
01010-50825	1107	17	

PART NO	F/NO	I/NO	M/NO
01010-50825	1201	14	
01010-50825	1201	21-	
01010-50825	3061	20	
01010-50825	4102	22	
01010-50825	5001	8	
01010-50825	5702	19	
01010-50825	5703	19	
01010-50825	7122	6	
01010-50825	7123	6	
01010-50830	4401	27	
01010-50830	6502	24	
01010-50835	4102	25	
01010-50835	4401	24	
01010-50840	1201	21	
01010-50855	4602	3	
01010-50860	1302	16	
01010-50860	6611	8	
01010-50870	4001	13	
01010-50875	3001	10	
01010-50875	3002	10	
01010-51016	3001	3	
01010-51016	3002	3	
01010-51020	4602	24	
01010-51020	5702	17	
01010-51020	5703	17	
01010-51020	7001	8	
01010-51020	7003	6	
01010-51020	7003	13	
01010-51020	7005	6	
01010-51020	7005	13	
01010-51020	7201	7	
01010-51020	7401	7	
01010-51020	7701	6	
01010-51025	1102	10	
01010-51025	3001	6	
01010-51025	3001	18	
01010-51025	3002	6	
01010-51025	3211	12	
01010-51025	3212	12	
01010-51025	5001	12	
01010-51025	5102	14	
01010-51030	1011	5	
01010-51030	2501	4	
01010-51030	4212	20	
01010-51030	5102	2	
01010-51030	5202	4	
01010-51035	5202	6	
01010-51040	6611	16	
01010-51050	2501	3	
01010-51070	7401	14	

PART NO	F/NO	I/NO	M/NO
01010-51225	4602	8	
01010-51230	1002	8	
01010-51240	7600	6	
01010-51240	7601	7	
01010-51240	7602	6	
01010-51240	7603	7	
01010-51470	4602	10	
01016-50835	4205	8	
01090-50840	3201	9	
01252-30610	6201	23	
01252-30614	6251	9	
01252-30616	6201	24	
01252-30620	6201	21	
01252-30825	6401	12	
01252-40630	6502	9	
01252-40635	6730	11-	
01252-40820	4300	4	
01252-40820	4301	4	
01252-40820	6433	14	
01252-40830	6502	15	
01252-40830	6730	5	
01252-41025	3061	17	
01252-41025	3351	2	
01435-00816	3001	14	
01435-00816	3002	14	
01435-00816	4401	26	
01435-00816	5102	4	
01435-00816	6001	17	
01435-00816	7101	23	
01435-00816	7103	23	
01435-00820	7101	13	
01435-00820	7103	13	
01435-00825	6702	12	
01435-00825	7101	28	
01435-00825	7103	31	
01435-00830	7122	9	
01435-00830	7123	10	
01435-01020	3001	5	
01435-01020	3002	5	
01508-20805	4102	9	
01508-20805	4212	27	
01508-20805	4214	32	
01508-20805	4401	13	
01508-41006	4214	20	
01580-00806	5702	10	
01580-00806	5703	10	
01580-10605	1401	6	
01580-10605	4001	6	
01580-10806	1502	9	
01580-10806	4102	7	

PART NO	F/NO	I/NO	M/NO
01580-10806	4205	9	
01580-10806	4212	25	
01580-10806	4214	8	
01580-10806	4214	30	
01580-10806	4300	15	
01580-10806	4301	15	
01580-10806	4401	17	
01580-10806	4401	25	
01580-10806	6201	9	
01580-10806	7101	8	
01580-10806	7103	8	
01580-11008	1102	12	
01580-11008	3061	23	
01580-11008	4212	19	
01580-11008	7401	15	
01580-11210	7600	7	
01580-11210	7601	8	
01580-11210	7602	7	
01580-11210	7603	8	
01583-11408	6202	8	
01641-20508	1501	15	
01641-20508	5102	10	
01641-20508	6802	3	
01643-30623	1201	25	
01643-30623	1401	7	
01643-30623	1501	3	
01643-30623	4300	8	
01643-30623	4301	8	
01643-30623	6726	13	
01643-30623	6730	29	
01643-30623	7101	6	
01643-30623	7103	6	
01643-30823	1105	18	
01643-30823	1107	18	
01643-30823	1201	6	
01643-30823	1201	13	
01643-30823	1201	13-	
01643-30823	1302	9	
01643-30823	1302	15	
01643-30823	1501	7	
01643-30823	1502	5	
01643-30823	3001	11	
01643-30823	3002	11	
01643-30823	3061	21	
01643-30823	3201	10	
01643-30823	4102	18	
01643-30823	4102	23	
01643-30823	4102	26	
01643-30823	4214	17	
01643-30823	4300	17	

PART NO	F/NO	I/NO	M/NO
01643-30823	4300	25	
01643-30823	4301	17	
01643-30823	4301	25	
01643-30823	4401	5	
01643-30823	4602	4	
01643-30823	5001	9	
01643-30823	5702	3	
01643-30823	5703	3	
01643-30823	6001	6	
01643-30823	6502	25	
01643-30823	6502	31	
01643-30823	6611	9	
01643-30823	7101	9	
01643-30823	7103	9	
01643-30823	7122	7	
01643-30823	7123	7	
01643-30823	7701	12	
01643-31032	1011	6	
01643-31032	3001	7	
01643-31032	3001	17	
01643-31032	3002	7	
01643-31032	3061	24	
01643-31032	3211	13	
01643-31032	3212	13	
01643-31032	4212	17	
01643-31032	4602	25	
01643-31032	5001	13	
01643-31032	5102	3	
01643-31032	5202	5	
01643-31032	5702	16	
01643-31032	5703	16	
01643-31032	6611	17	
01643-31032	7001	9	
01643-31032	7003	7	
01643-31032	7003	14	
01643-31032	7005	7	
01643-31032	7005	14	
01643-31032	7101	10	
01643-31032	7103	10	
01643-31032	7201	8	
01643-31032	7401	8	
01643-31032	7701	7	
01643-31232	1001	9	
01643-31232	4602	9	
01643-31445	4602	11	
02010-70622	1001	3	
02010-70622	1002	3	
02010-70622	1011	3	
02010-70632	1102	13	
04025-00312	6432	3	

PART NO	F/NO	I/NO	M/NO
04025-00512	6433	3	
04064-01210	6251	10	
04064-05020	6401	9	
04065-02812	6432	18	
04260-01270	6201	25	
07000-01007	1201	4	
07000-02011	6202	9	
07000-02012	6251	8	
07000-12011	6251	7	
07000-12055	6201	7	
07002-02034	6201	32	
07002-02034	6201	34	
07002-02034	6202	23	
07002-02034	6202	35	
07002-02434	6202	11	
07002-11823	6201	29	
07002-12034	6202	22	
07002-12034	6202	34	
07040-12012	6201	33	
07043-20108	6401	5	
07270-00870	1201	9	
09101-02000	9802	15	
09101-02000	9810	19	
09132-02000	9802	36	
09132-02000	9810	43	
09173-02000	9802	34	
09173-02000	9810	41	
09650-21103	9802	27	
09650-21103	9810	34	
09651-02000	9802	33	
09651-02000	9810	40	
09652-21101	9802	14	
09652-21101	9810	18	
09653-02000	9802	31	
09653-02000	9810	38	
09667-03000	9802	23	
09668-02000	9802	26	
09668-02000	9810	33	
09669-00002	9802	16	
09669-00002	9804	16	
09669-00002	9810	20	
09669-00002	9811	16	
09669-00003	9802	4	
09669-00003	9804	4	
09669-00003	9810	5	
09669-00003	9811	4	
09685-00001	9802	2	
09685-00001	9804	2	
09685-00001	9810	3	
09685-00001	9811	2	

PART NO	F/NO	I/NO	M/NO
09685-00002	9802	10	
09685-00002	9804	10	
09685-00002	9810	14	
09685-00002	9811	10	
09690-50560	9802	24	
09690-50560	9804	24	
09690-50560	9810	28	
09690-50560	9811	24	
09696-00094	9802	22	
09696-00094	9804	22	
09696-00094	9810	21	
09696-00094	9811	22	
09696-10080	9802	13	
09696-10080	9804	13	
09696-10080	9810	17	
09696-10080	9811	13	
110-30-R2041	3201	5	
110-30-R2041	3301	4	
110-30-R2051	3201	4	
110-30-R2051	3301	3	
110-30-R2121	3201	3-	
110-30-R2121	3301	2-	
111-86-19535	5702	13	
111-86-19535	5703	13	
111-86-19545	5702	12	
111-86-19545	5703	12	
195-43-R1091	4102	3	
195-43-R1091	4212	15	
195-61-R2281	4300	21	
195-61-R2281	4301	21	
201-98-29340	9802	3	
201-98-29340	9810	4	
201-98-29350	9802	32	
201-98-29350	9810	39	
203-06-R2291	4212	4	
203-43-41910	4102	4	
203-43-41910	4212	3	
203-43-41910	4214	2	
20D-14-R3161	7201	4	
20D-14-R3161	7203	4	
20L-02-R3201	1105	8	
20L-02-R3201	1107	8	
20L-62-R2221	6602	1	
20M-01-68510	1001	5	
20M-01-68510	1002	5	
20M-01-68510	6502	4	
20M-01-R2071	0212	2-	
20M-01-R2081	1001	7	
20M-01-R2091	1001	10	
20M-01-R3011	1105	14	

PART NO	F/NO	I/NO	M/NO
20M-01-R3011	1107	14	
20M-01-R3021	1105	12	
20M-01-R3021	1107	12	
20M-01-R3061	1105	3	
20M-01-R3061	1107	3	
20M-01-R3071	1105	5	
20M-01-R3071	1107	5	
20M-01-R3081	1105	4	
20M-01-R3081	1107	4	
20M-01-R3091	1105	2	
20M-01-R3091	1107	2	
20M-01-R3101	1105	6	
20M-01-R3111	1105	1	
20M-01-R3111	1107	1	
20M-01-R3211	1105	16	
20M-01-R3211	1107	16	
20M-01-R3221	1105	12-	
20M-01-R3221	1107	12-	
20M-02-R1001	1102	7	
20M-02-R1011	1102	2	
20M-02-R1021	1102	8	
20M-02-R1041	1102	1	
20M-02-R1051	1102	5	
20M-03-11130	1201	2	
20M-03-R1011	1201	17	
20M-03-R1021	1201	20	
20M-03-R1031	1201	15	
20M-03-R1041	1201	19	
20M-03-R1101	1201	19-	
20M-03-R2001	1201	10	
20M-03-R2011	1201	11	
20M-04-R2021	1302	11	
20M-04-R2031	1302	10	
20M-06-48122	1501	2	
20M-06-48150	1501	6	
20M-06-48410	1401	4	
20M-06-R1121	1501	1	
20M-06-R1151	1411	4	
20M-06-R1151	1413	4	
20M-06-R1161	1411	6	
20M-06-R1161	1413	6	
20M-06-R1171	1411	7	
20M-06-R1171	1413	7	
20M-06-R1181	1411	8	
20M-06-R1181	1413	8	
20M-06-R1191	1411	9	
20M-06-R1191	1413	9	
20M-06-R1201	1411	5	
20M-06-R1201	1413	5	
20M-06-R1211	1411	15	

https://truckmanualshub.com/

PART NO	F/NO	I/NO	M/NO
20M-06-R1211	1413	15	
20M-06-R2011	7003	12	
20M-06-R2041	1502	11	
20M-06-R2051	1502	7	
20M-06-R2061	1502	6	
20M-06-R2091	1502	1	
20M-06-R2171	7005	12	
20M-06-R3021	1401	5	
20M-25-R1011	2501	2	
20M-25-R1021	2501	1	
20M-26-31150	6611	15	
20M-27-48111	3351	1	
20M-30-11140	3201	3	
20M-30-11150	3201	6	
20M-30-11330	3211	2	
20M-30-11330	3212	2	
20M-30-11830	3001	2	
20M-30-11830	3002	2	
20M-30-31121	3201	7	
20M-30-31130	3301	2	
20M-30-31231	3211	6	
20M-30-31231	3212	6	
20M-30-31240	3211	10	
20M-30-31240	3212	10	
20M-30-31250	3211	9	
20M-30-31250	3212	9	
20M-30-31301	3301	1-	
20M-30-31310	3301	1	
20M-30-31321	3301	6	
20M-30-31530	3301	5	
20M-30-31630	3001	13	
20M-30-31630	3002	13	
20M-30-48120	3001	8	
20M-30-48120	3002	8	
20M-30-48130	3001	9	
20M-30-48130	3002	9	
20M-30-R2011	3201	1	
20M-30-R2031	3201	2	
20M-32-11140	3421	2	
20M-32-11140	3421	5	
20M-32-11140	3423	2	
20M-32-11140	3423	5	
20M-32-11160	3421	3	
20M-32-11160	3423	3	
20M-32-11240	3421	6	
20M-32-11240	3423	6	
20M-32-11250	3421	7	
20M-32-11250	3423	7	
20M-32-13000	3423	1-	
20M-32-13110	3423	1	

PART NO	F/NO	I/NO	M/NO
20M-32-13210	3423	4	
20M-43-06140	4212	10	
20M-43-06150	4212	21	
20M-43-06160	4212	13	
20M-43-06170	4212	22	
20M-43-06180	4212	14	
20M-43-39720	4205	5	
20M-43-48131	4102	14	
20M-43-48271	4102	6	
20M-43-48271	4212	24	
20M-43-48271	4214	29	
20M-43-48412	4300	3	
20M-43-48412	4301	3	
20M-43-48493	4300	1	
20M-43-48493	4301	1	
20M-43-48510	4300	9	
20M-43-48510	4301	9	
20M-43-48520	4214	6	
20M-43-48611	4214	14	
20M-43-48621	4214	11	
20M-43-48631	4214	13	
20M-43-48641	4214	15	
20M-43-48651	4214	3	
20M-43-48811	4205	1	
20M-43-48820	4205	2	
20M-43-67410	4214	25	
20M-43-67420	4214	26	
20M-43-68120	4102	15	
20M-43-R1051	4102	1	
20M-43-R1081	4102	2	
20M-43-R2051	4212	5	
20M-43-R2321	4301	26	
20M-43-R5051	4001	4	
20M-43-R5071	4001	1	
20M-43-R5141	4001	10	
20M-43-R6091	4401	16	
20M-43-R6121	4401	1-	
20M-46-48310	4602	2	
20M-46-62110	4602	5	
20M-46-68120	4602	6	
20M-46-68130	4602	7	
20M-46-R1001	4602	1	
20M-46-R1631	4602	12	
20M-46-R1631	4602	14	
20M-46-R1781	4602	1-	
20M-54-44111	5202	2	
20M-54-44121	5202	3	
20M-54-48231	5102	7	
20M-54-48241	5102	8	
20M-54-48252	5102	12	

PART NO	F/NO	I/NO	M/NO
20M-54-67210	4401	21	
20M-54-R1091	5102	1	
20M-54-R1141	4401	21-	
20M-54-R1151	5102	17	
20M-54-R1161	5102	16	
20M-54-R2101	5001	10	
20M-54-R2181	5001	20	
20M-54-R2191	5001	19	
20M-54-R2201	5001	21	
20M-54-R2211	5001	22	
20M-57-19250	5702	14	
20M-57-19250	5703	14	
20M-57-48331	5702	11	
20M-57-48331	5703	11	
20M-57-R1051	5702	9	
20M-57-R1051	5703	9	
20M-57-R1061	5702	18	
20M-57-R1061	5703	18	
20M-57-R1161	5703	1	
20M-57-R1171	5702	1	
20M-57-R1241	5702	1-	
20M-57-R1241	5703	1-	
20M-57-R1251	5702	9-	
20M-57-R1251	5703	9-	
20M-57-R2041	5702	2	
20M-57-R2041	5703	2	
20M-57-R2051	5702	8	
20M-57-R2051	5703	8	
20M-60-25370	6431	25	
20M-60-26190	6441	6	
20M-60-26240	6441	11	
20M-60-31211	6001	11	
20M-60-39400	6251	1-	
20M-60-39430	6251	3	
20M-60-39440	6251	4	
20M-60-39450	6251	5	
20M-60-39460	6251	6	
20M-60-39470	6251	11	
20M-60-40100	6431	1-	
20M-60-40100	6432	1-	
20M-60-40100	6433	1-	
20M-60-40101	6431	1-	
20M-60-40101	6432	1-	
20M-60-40101	6433	1-	
20M-60-40200	6432	1-	
20M-60-40200	6433	1-	
20M-60-48120	6001	3	
20M-60-48130	6001	16	
20M-60-63000	6441	1-	
20M-60-63100	6441	1	

PART NO	F/NO	I/NO	M/NO
20M-60-63110	6441	9	
20M-60-63120	6441	10	
20M-60-R1001	6001	1	
20M-60-R1041	6001	10	
20M-60-R1051	6001	15	
20M-60-R1101	6001	13	
20M-60-R1151	6001	14	
20M-60-R1151	9905	1	
20M-62-48711	7101	7	
20M-62-48711	7103	7	
20M-62-R0081	6730	1	
20M-62-R1151	7711	1	
20M-62-R1161	7711	2	
20M-62-R1401	6611	5	
20M-62-R1421	6502	7	
20M-62-R1421	6730	3	
20M-62-R1431	6502	13	
20M-62-R1441	6726	4	
20M-62-R1441	6730	20	
20M-62-R1551	3061	13	
20M-62-R1551	6602	8	
20M-62-R1551	7711	3	
20M-62-R2081	6702	7	
20M-62-R2171	6611	1	
20M-62-R2181	6611	2	
20M-62-R2251	6602	3	
20M-62-R2331	6611	18	
20M-62-R2341	6611	19	
20M-62-R2351	6611	22	
20M-62-R2361	6611	23	
20M-62-R2371	6611	10	
20M-62-R2381	6611	11	
20M-62-R2421	6502	3	
20M-62-R2461	7103	29	
20M-62-R2471	7103	28	
20M-62-R2481	7103	27	
20M-62-R2491	7123	8	
20M-62-R2611	6802	6	
20M-62-R2751	6611	12-	
20M-62-R3051	7101	2	
20M-62-R3051	7103	2	
20M-62-R3101	7101	3	
20M-62-R3101	7103	3	
20M-62-R3111	7101	15	
20M-62-R3111	7103	15	
20M-62-R3151	7101	22	
20M-62-R3151	7103	22	
20M-62-R3161	7101	21	
20M-62-R3161	7103	21	
20M-62-R3291	7101	18	

PART NO	F/NO	I/NO	M/NO
20M-62-R3291	7103	18	
20M-62-R3321	7101	7-	
20M-62-R3321	7103	7-	
20M-62-R4021	6722	7	
20M-62-R8091	6726	6	
20M-62-R8091	6730	22	
20M-62-R9011	7122	1	
20M-62-R9011	7123	1	
20M-70-11231	7001	10	
20M-70-11231	7003	4	
20M-70-11231	7005	4	
20M-70-11231	7201	5	
20M-70-11251	7401	3	
20M-70-11262	7401	4	
20M-70-11270	7401	13	
20M-70-14120	4602	22	
20M-70-34150	4602	21	
20M-70-48160	7401	9	
20M-70-48170	7401	2	
20M-70-48180	7401	1	
20M-70-48211	4602	20	
20M-70-61112	7001	1	
20M-70-61120	7001	6	
20M-70-61120	7003	9	
20M-70-61120	7005	9	
20M-70-61220	7001	5	
20M-70-61240	7003	8	
20M-70-61240	7005	8	
20M-70-63110	7201	1	
20M-70-R1121	7001	1-	
20M-70-R1131	7001	5-	
20M-70-R2011	7003	1	
20M-70-R2011	7005	1	
20M-70-R2012	7003	1-	
20M-70-R2012	7005	1-	
20M-70-R2231	7122	8	
20M-70-R2231	7123	9	
20M-70-R5011	7600	1	
20M-70-R5171	7600	2	
20M-70-R5171	7601	3	
20M-70-R5221	7602	1	
20M-70-R5231	7602	2	
20M-70-R5231	7603	3	
20M-70-R5241	7601	1	
20M-70-R5251	7603	1	
20M-71-31120	7701	5	
20M-71-31130	7701	8	
20M-71-31140	7701	9	
20M-71-48121	7701	10	
20M-943-6110	7203	1	

PART NO	F/NO	I/NO	M/NO
20M-943-R301	7203	5	
20M-973-4390	4401	6	
20M-973-5340	4401	1	
20M-973-5350	4401	3	
20M-973-5360	4401	9	
20M-973-5370	4401	10	
20M-973-6750	5102	15	
20M-973-R011	6730	16	
20M-973-R021	6722	15	
20M-973-R031	6722	18	
20M-973-R041	6722	4	
20M-973-R051	4401	18	
20M-973-R061	6722	1	
20M-973-R071	6726	1	
20M-973-R071	6730	17	
20M-973-R081	6722	8	
20M-973-R091	7122	3	
20M-973-R091	7123	3	
20M-973-R101	6702	11	
20M-973-R111	4401	22	
20M-973-R121	7122	4	
20M-973-R121	7123	4	
20M-973-R131	4401	22-	
20M-973-R141	7122	2	
20M-973-R141	7123	2	
20M-973-R151	7122	2-	
20M-973-R151	7123	2-	
20M-973-R161	7122	3-	
20M-973-R161	7123	3-	
20M-973-R171	6722	5	
20M-973-R271	6722	2	
20M-98-22210	9810	2	
20M-98-23120	9802	5	
20M-98-23130	9810	7	
20M-98-38430	9804	28	
20M-98-38460	9804	5	
20M-98-48110	9802	1	
20M-98-48110	9804	1	
20M-98-48110	9810	1	
20M-98-48110	9811	1	
20M-98-48130	9802	35	
20M-98-48130	9804	35	
20M-98-48130	9810	42	
20M-98-48130	9811	35	
20M-98-48240	9802	12	
20M-98-48240	9804	12	
20M-98-48240	9810	16	
20M-98-48240	9811	12	
20M-98-48250	9802	11	
20M-98-48250	9802	18	

PART NO	F/NO	I/NO	M/NO
20M-98-48250	9804	11	
20M-98-48250	9804	18	
20M-98-48250	9810	15	
20M-98-48250	9810	22	
20M-98-48250	9811	11	
20M-98-48250	9811	18	
20M-98-48260	9802	17	
20M-98-48530	9811	17	
20M-98-48730	9804	17	
20M-98-49110	9810	32	
20M-98-49150	9810	26	
20M-98-49150	9810	30	
20M-98-62570	9802	8	
20M-98-62570	9802	21	
20M-98-62570	9804	8	
20M-98-62570	9804	21	
20M-98-62570	9810	11	
20M-98-62570	9810	25	
20M-98-62570	9811	8	
20M-98-62570	9811	21	
20M-98-69230	9810	29	
20M-98-69240	9810	31	
20M-98-R1081	9802	6	
20M-98-R1181	9810	9	
20M-98-R1241	9810	6	
20M-98-R1251	9810	8	
20M-98-R1391	9804	6	
20M-98-R1411	9804	19	
20M-98-R1781	9804	7	
20M-98-R1781	9811	7	
20M-98-R1851	9804	32	
20M-98-R1851	9811	32	
20M-98-R1861	9811	19	
20M-98-R2081	9901	5	
20M-98-R6141	9804	29	
20M-98-R6141	9811	29	
20M-98-R6151	9804	3	
20M-98-R6151	9811	3	
20M-98-R6161	9811	28	
20M-98-R6171	9811	5	
20M-98-R6181	9811	6	
20M-98-R6211	9802	25	
20M-98-R6211	9804	25	
20M-98-R6211	9810	13	
20M-98-R6211	9811	25	
20N-01-R1031	1102	9	
20N-01-R5001	1011	1	
20N-03-11181	1201	3	
20N-03-41120	1201	5	
20N-03-48500	1201	1	

PART NO	F/NO	I/NO	M/NO
20N-06-R1231	1411	13	
20N-06-R1231	1413	13	
20N-06-R1231	1413	16	
20N-06-R1241	1411	14	
20N-06-R1241	1413	14	
20N-06-R1241	1413	17	
20N-06-R1351	1411	3	
20N-06-R1351	1413	3	
20N-06-R2121	1411	2	
20N-06-R2121	1413	2	
20N-06-R2131	1502	3	
20N-30-41240	3001	4	
20N-30-41240	3002	4	
20N-43-R4111	4102	16	
20N-43-R5011	4001	9	
20N-46-R1611	4602	13	
20N-46-R1621	4602	26	
20N-54-R2231	4602	27	
20N-54-R2231	5001	16	
20N-57-R1101	5702	5	
20N-57-R1101	5703	5	
20N-60-16120	6441	2	
20N-60-16120	6441	8	
20N-60-16140	6441	4	
20N-60-16150	6441	5	
20N-60-16170	6441	3	
20N-60-16220	6441	7	
20N-60-31740	6431	23	
20N-60-R1131	6001	7	
20N-62-R1431	6726	7	
20N-62-R1431	6730	23	
20N-62-R1451	6611	12	
20N-62-R1461	3061	15	
20N-62-R1481	6722	16	
20N-62-R1491	6722	13	
20N-62-R2401	6611	21	
20N-70-11280	7001	11	
20N-70-11280	7003	10	
20N-70-11280	7005	10	
20N-70-11280	7401	12	
20N-70-39280	7601	2	
20N-70-39280	7603	2	
20N-98-39340	9802	28	
20N-98-48160	9802	19	
20N-98-48460	9810	23	
20R-04-21210	1302	5	
20R-06-R1221	1411	11	
20R-06-R1221	1413	11	
20R-30-11270	3301	8	
20R-46-R1591	4602	15	

https://truckmanualshub.com/

PART NO	F/NO	I/NO	M/NO
20R-46-R1601	4602	18	
20R-54-R2151	5001	18	
20S-06-31130	1411	10	
20S-06-31130	1413	10	
20S-43-31270	4214	18	
20S-54-21460	5001	5	
20S-54-33111	5202	1-	
20S-54-R2061	5001	3	
20S-54-R3031	5202	1	
20S-60-13120	6802	1	
20S-98-12120	9802	29	
20S-98-12120	9810	36	
20T-43-11310	4212	8	
20T-43-R2331	4212	16	
20T-43-R2341	4212	18	
20T-54-26430	5001	4	
20T-98-19120	9802	7	
20T-98-19350	9810	10	
20T-98-22230	9810	35	
20T-98-22330	9810	27	
20W-01-R2011	1001	1	
20W-01-R2061	1001	2	
20W-01-R2151	1002	13	
20W-01-R2161	1002	1	
20W-01-R2171	1002	14	
20W-01-R2181	1002	2	
20W-01-R5011	1011	2	
20W-04-R1001	1302	1	
20W-04-R2061	1302	14	
20W-06-R1081	1501	5	
20W-06-R1251	1411	1	
20W-06-R1251	1413	1	
20W-06-R2031	7003	15	
20W-06-R2031	7005	15	
20W-30-11111	3001	1	
20W-30-11111	3002	1	
20W-30-11130	3001	12	
20W-30-11130	3002	12	
20W-30-11810	3001	16	
20W-30-11820	3001	15	
20W-30-13110	3211	1	
20W-30-13110	3212	1	
20W-30-13121	3211	3	
20W-30-13121	3212	3	
20W-30-R2001	3201	1-	
20W-32-11000	3421	1-	
20W-32-11110	3421	1	
20W-32-11210	3421	4	
20W-35-15111	3491	1	
20W-35-15120	3212	14	

PART NO	F/NO	I/NO	M/NO
20W-43-11111	4102	24	
20W-43-11210	4102	5	
20W-43-11210	4212	23	
20W-43-11210	4214	28	
20W-43-11220	4102	8	
20W-43-11220	4212	26	
20W-43-11220	4214	31	
20W-43-12113	4212	1	
20W-43-12123	4212	2	
20W-43-12510	4300	10	
20W-43-12510	4301	10	
20W-43-12520	4300	5	
20W-43-12520	4301	5	
20W-43-12530	4300	13	
20W-43-12530	4301	13	
20W-43-12550	4300	22	
20W-43-12550	4301	22	
20W-43-12560	4300	23	
20W-43-12560	4301	23	
20W-43-12570	4300	20	
20W-43-12570	4301	20	
20W-43-13170	4214	19	
20W-43-14110	4214	1	
20W-54-11130	5102	13	
20W-54-12131	5001	14	
20W-54-12141	5001	15	
20W-54-12210	5001	2	
20W-54-12220	5001	7	
20W-54-R1031	5102	6	
20W-54-R2011	5001	1	
20W-60-12100	6433	14-	
20W-60-12200	6433	K1	
20W-60-12300	6431	11-	
20W-60-12380	6431	20	
20W-60-12410	6431	7	
20W-60-12420	6431	2	
20W-60-12700	6433	K2	
20W-60-12740	6432	5	
20W-60-12750	6432	20	
20W-60-12770	6432	15	
20W-60-12780	6433	4	
20W-62-11220	3061	22	
20W-62-R1011	3061	1	
20W-62-R1041	3061	2	
20W-62-R1051	3061	3	
20W-62-R1061	3061	4	
20W-62-R1071	3061	8	
20W-62-R1081	3061	9	
20W-62-R1091	3061	12	
20W-62-R1521	3061	6	

PART NO	F/NO	I/NO	M/NO
20W-62-R1531	3061	10	
20W-62-R1531	6802	4	
20W-62-R1541	3061	5	
20W-62-R1541	6602	7	
20W-62-R1561	6602	5	
20W-62-R1561	6611	3	
20W-62-R1561	6702	9	
20W-62-R1571	6502	22	
20W-62-R1581	6502	20	
20W-62-R1581	6726	2	
20W-62-R1581	6730	18	
20W-62-R2011	6502	18	
20W-62-R2231	6602	4	
20W-62-R2241	6602	2	
20W-62-R2261	6702	1	
20W-62-R2271	6702	2	
20W-62-R2281	6702	4	
20W-62-R2291	6702	3	
20W-62-R2301	6702	5	
20W-62-R2311	6702	6	
20W-62-R2411	7101	11	
20W-62-R2411	7103	11	
20W-62-R2451	6502	19	
20W-62-R2621	6802	9	
20W-62-R3011	7101	19	
20W-62-R3011	7103	19	
20W-62-R3021	7101	20	
20W-62-R3021	7103	20	
20W-62-R3031	7101	14	
20W-62-R3031	7103	14	
20W-62-R3171	7101	1	
20W-62-R3171	7103	1	
20W-70-11131	7001	3	
20W-70-11210	4602	23	
20W-70-15140	7600	3	
20W-70-15140	7601	4	
20W-70-15140	7602	3	
20W-70-15140	7603	4	
20W-70-15150	7600	5	
20W-70-15150	7601	6	
20W-70-15150	7602	5	
20W-70-15150	7603	6	
20W-70-R5141	7600	4	
20W-70-R5141	7601	5	
20W-70-R5141	7602	4	
20W-70-R5141	7603	5	
20W-71-11111	7701	1	
20W-98-12510	9802	9	
20W-98-12510	9804	9	
20W-98-12510	9810	12	

PART NO	F/NO	I/NO	M/NO
20W-98-12510	9811	9	
20W-98-12520	9802	20	
20W-98-12520	9804	20	
20W-98-12520	9810	24	
20W-98-12520	9811	20	
20Y-04-R1071	1302	3	
250-15-41180	5102	5	
600-18-R3121	1107	6	
700-20-51240	6202	4	
700-20-51340	6202	7	
700-20-51350	6202	6	
700-20-51430	6202	2	
700-20-62170	6202	20	
700-20-62170	6202	32	
700-22-11410	6202	10	
700-28-54000	6201	35	
700-28-54000	6202	1-	
700-80-61190	6202	5	
703-05-12150	6401	1-	
703-05-91140	6401	1	
703-05-92140	6401	4	
703-05-93140	6401	10	
703-05-94120	6401	8	
703-05-98140	6401	7	
703-05-98150	6401	11	
703-05-98160	6401	6	
705-41-R2431	6502	11	
707-00-R1011	7185	1-	
707-00-R1161	7187	1-	
707-00-R1181	7185	1-	
707-00-R2281	7381	1-	
707-00-R3201	7581	1-	
707-00-R4311	7181	1-	
707-00-R4461	7183	1-	
707-00-R4491	7182	1-	
707-00-R4541	7184	1-	
707-00-R5361	7721	1-	
707-11-R1021	7187	1	
707-11-R1201	7185	1	
707-11-R4511	7182	1	
707-11-R4511	7184	1	
707-29-50130	7185	3	
707-29-50130	7187	3	
707-29-50910	7181	3	
707-29-50910	7183	3	
707-29-50910	7381	3	
707-29-50910	7581	3	
707-29-60930	7721	3	
707-29-R4501	7182	3	
707-29-R4501	7184	3	

PART NO	F/NO	I/NO	M/NO
707-36-50530	7185	8	
707-36-50530	7187	7	
707-36-50560	7181	7	
707-36-50560	7183	7	
707-36-50560	7381	7	
707-36-50560	7581	7	
707-36-60040	7182	7	
707-36-60040	7184	7	
707-36-60040	7721	8	
707-40-50060	7185	9	
707-40-50060	7187	8	
707-58-30520	7185	7	
707-58-30520	7187	6	
707-58-30530	7721	6	
707-58-30670	7381	6	
707-58-30680	7581	6	
707-58-30690	7181	6	
707-58-30690	7182	6	
707-58-30690	7183	6	
707-58-30690	7184	6	
707-58-R1191	7185	7-	
707-63-R2211	7381	1	
707-63-R3291	7581	1	
707-63-R4321	7181	1	
707-63-R4321	7183	1	
707-63-R5371	7721	1	
707-71-R1201	7185	10-	
707-71-R1201	7187	9	
707-81-50151	7185	10	
707-81-50160	7181	9	
707-81-R4521	7182	9	
709-30-62110	6202	12	
709-30-62110	6202	24	
709-30-62150	6202	21	
709-30-62150	6202	33	
709-30-62201	6201	37	
709-30-62201	6202	23-	
709-30-62301	6201	37-	
709-30-62301	6202	23-	
709-30-62801	6201	36	
709-30-62801	6202	11-	
709-31-R7081	6211	1-	
709-31-R7081	6726	11	
709-31-R7081	6730	27	
709-32-11530	6201	16	
709-32-11540	6201	17	
709-32-11550	6201	18	
709-32-11560	6201	19	
709-32-11570	6201	22	
709-32-11580	6201	20	

PART NO	F/NO	I/NO	M/NO
709-32-11810	6201	27	
709-32-11820	6201	26	
709-32-11830	6201	30	
709-32-11840	6201	31	
709-32-11860	6201	38	
709-32-11930	6201	28	
709-37-11510	6201	8	
709-37-11900	6201	1-	
709-37-11900	6202	1-	
709-37-12400	6201	1-	
709-37-12400	6202	1-	
780-53-R7091	6722	11	
FUCHC-1-2-1475	6431	11-	
PK010100625	0402	20	
PK010101035	0429	8	
PK010101045	0621	2	
PK010109235	0212	4	
PK010109264	0208	21	
PK010109270	0402	12	
PK010109340	0221	1	
PK010110630	0208	14	
PK010111020	0221	4	
PK010401212	0212	2	
PK010700610	0666	4	
PK010700845	0201	38	
PK010810840	0201	26	
PK010810840	0201	31	
PK010810840	0201	36	
PK011140612	0207	10	
PK011300612	0115	9	
PK011300612	0212	9	
PK011300616	0208	20	
PK011300616	0429	3	
PK011300616	0503	6	
PK011300620	0402	5	
PK011300635	0503	4	
PK011300640	0207	16	
PK011300640	0601	7	
PK011300645	0601	9	
PK011300660	0207	17	
PK011300660	0503	3	
PK011300680	0207	15	
PK011300860	0239	7	
PK011301035	0601	2	
PK011310612	0666	3	
PK011310614	0503	11	
PK011310625	0120	3	
PK011310816	0429	15	
PK011310816	0671	2	
PK011310825	0633	5	

PART NO	F/NO	I/NO	M/NO
PK011310830	0601	5	
PK011310850	0201	37	
PK012100620	0201	19	
PK012100635	0201	20	
PK012100660	0201	21	
PK012109177	0111	11	
PK012110625	0120	4	
PK015140408	0641	8	
PK015140412	0661	22	
PK015140425	0641	5	
PK020100006	0120	5	
PK020100006	0207	18	
PK020100006	0208	15	
PK020100006	0402	21	
PK020100008	0633	2	
PK020100010	0429	13	
PK020100010	0621	3	
PK020109075	0237	6	
PK020109076	0111	10	
PK020210010	0641	14	
PK020300008	0208	26	
PK020800018	0238	2	
PK023100006	0208	22	
PK023100006	0402	6	
PK023100006	0503	7	
PK023100008	0111	12	
PK023100008	0239	8	
PK023109002	0402	9	
PK024500008	0115	5	
PK025100006	0402	3	
PK025100010	0402	10	
PK025100012	0212	3	
PK025100016	0665	4	
PK026100008	0601	6	
PK026100010	0429	9	
PK026100010	0601	3	
PK026100010	0641	12	
PK026200008	0208	25	
PK026200010	0208	4	
PK026200010	0621	4	
PK027100006	0120	6	
PK027100006	0207	19	
PK027100006	0402	22	
PK027100010	0429	14	
PK027100010	0621	5	
PK027100010	0641	13	
PK027109010	0402	7	
PK030300325	0111	7	
PK030300414	0207	12	
PK030300816	0231	5	

PART NO	F/NO	I/NO	M/NO
PK030309005	0201	18	
PK030500512	0201	15	
PK030500612	0201	25	
PK030500612	0201	30	
PK030500612	0201	35	
PK030500616	0201	16	
PK030501025	0201	17	
PK030509018	0301	3	
PK030509020	0231	4	
PK031100004	0208	9	
PK034100508	0207	2	
PK034100508	0238	3	
PK036500021	0237	11	
PK036509005	0201	39	
PK036800005	0208	18	
PK036800006	0208	29	
PK036800008	0208	3	
PK036800010	0301	12	
PK040106004	0239	2	
PK040106203	0201	12	
PK040109048	0207	3	
PK040126201	0641	6	
PK040136004	0239	3	
PK042303015	0201	14	
PK052100030	0208	17	
PK052100050	0208	28	
PK052100070	0208	12	
PK052100100	0212	11	
PK052100150	0301	15	
PK052100400	0115	4	
PK052109061	0115	10	
PK052109061	0991	10	
PK052109076	0212	7	
PK052300700	0239	4	
PK052300700	0991	12	
PK064100045	0201	13	
PK064200015	0101	4	
PK064200015	0201	2	
PK064200018	0101	3	
PK064200025	0201	3	
PK064200030	0101	5	
PK064200035	0201	4	
PK064200040	0201	5	
PK064500030	0503	2	
PK064609006	0111	3	
PK067100015	0429	17	
PK068122560	0115	13	
PK068209084	0429	16	
PK068209104	0429	19	
PK080109049	0601	8	

https://truckmanualshub.com/

PART NO	F/NO	I/NO	M/NO
PK080109049	9905	4	
PK110156111	0201	22	
PK110156121	0201	27	
PK110156131	0201	32	
PK110186010	0201	1	
PK110446441	0221	5	
PK110666050	0115	7	
PK110666060	0115	8	
PK110706850	0212	1	
PK110756201	0212	10	
PK110996491	0212	5	
PK110996491	0991	3	
PK111026431	0115	1	
PK111086010	0101	1	
PK111086010	0101	2	
PK111136230	0101	15	
PK111136240	0101	16	
PK111147240	0101	17	
PK111147240	0991	2	
PK111316260	0101	6	
PK111316260	0402	19	
PK111346020	0402	24	
PK111996271	0115	11	
PK111996271	0991	11	
PK115016501	0237	7	
PK115016505	0237	7-	
PK115016508	0237	7-	
PK115016750	0237	8	
PK115016754	0237	8-	
PK115016757	0237	8-	
PK115026191	0237	1	
PK115107191	0237	12	
PK115107194	0237	12-	
PK115107196	0237	12-	
PK115176150	0237	5	
PK115236010	0231	1	
PK115276180	0231	3	
PK115326231	0237	10	
PK115357230	0221	2	
PK115376130	0221	3	
PK115396910	0238	1	
PK120016001	0207	6	
PK120026090	0207	1	
PK120076070	0666	1	
PK120116100	0111	14	
PK120166240	0101	7	
PK120176250	0101	12	
PK120186080	0101	10	
PK120216040	0101	14	
PK120226070	0101	11	

PART NO	F/NO	I/NO	M/NO
PK120316171	0111	2	
PK120336010	0111	1	
PK120346170	0111	6	
PK120366152	0111	5	
PK120366162	0111	4	
PK120406050	0101	13	
PK120406050	0991	14	
PK120406070	0101	8	
PK120406070	0991	13	
PK120456201	0111	13	
PK120736081	0207	5	
PK120996060	0666	6	
PK125046160	0208	1	
PK125116130	0208	16	
PK125156170	0208	11	
PK125156180	0208	27	
PK125176071	0208	23	
PK125256120	0207	7	
PK125406071	0208	5	
PK125416020	0208	13	
PK125976120	0208	19	
PK130306021	0429	5	
PK130306180	0429	20	
PK130326051	0429	11	
PK130366020	0429	6	
PK130366020	9905	3	
PK130396030	0429	7	
PK130436011	0429	10	
PK130506140	0433	1	
PK130516069	0433	16	
PK130516080	0433	3	
PK130516081	0433	4	
PK130516082	0433	5	
PK130516083	0433	8	
PK130516084	0433	12	
PK130516085	0433	6	
PK130516086	0433	10	
PK130516087	0433	11	
PK130516088	0433	7	
PK130516089	0433	14	
PK130516090	0433	13	
PK130516091	0433	17	
PK130516092	0433	15	
PK130976200	0429	12	
PK130996070	0429	2	
PK130996070	0991	7	
PK131017310	0451	1	
PK131116390	0451	8	
PK131136320	0451	17	
PK131136330	0451	22	

PART NO	F/NO	I/NO	M/NO
PK131156160	0451	7	
PK131176430	0451	5	
PK131176440	0451	11	
PK131186100	0451	6	
PK131196120	0451	3	
PK131226170	0451	4	
PK131226180	0433	9	
PK131236190	0451	18	
PK131236201	0402	2	
PK131246090	0429	18	
PK131246130	0451	20	
PK131256120	0451	14	
PK131296620	0451	10	
PK131296621	0451	12	
PK131296622	0451	23	
PK131296623	0451	23-	
PK131296624	0451	23-	
PK131296625	0451	23-	
PK131296626	0451	23-	
PK131296627	0451	23-	
PK131296628	0451	23-	
PK131296629	0451	23-	
PK131296630	0451	23-	
PK131296631	0451	23-	
PK131296632	0451	23-	
PK131296633	0451	23-	
PK131296634	0451	23-	
PK131296635	0451	23-	
PK131296636	0451	15	
PK131296638	0451	9	
PK131296650	0451	16	
PK131296651	0451	13	
PK131296662	0451	21	
PK131296665	0451	2	
PK131406330	0425	1	
PK131416140	0425	8	
PK131426120	0425	3	
PK131426130	0425	10	
PK131426180	0451	19	
PK131436540	0425	11	
PK131436550	0425	11-	
PK131436560	0425	11-	
PK131436570	0425	11-	
PK131436580	0425	11-	
PK131436590	0425	11-	
PK131436600	0425	11-	
PK131436610	0425	11-	
PK131436620	0425	11-	
PK131436630	0425	11-	
PK131436640	0425	11-	

PART NO	F/NO	I/NO	M/NO
PK131436650	0425	11-	
PK131436660	0425	11-	
PK131436670	0425	11-	
PK131436680	0425	11-	
PK131436690	0425	11-	
PK131436700	0425	11-	
PK131436710	0425	11-	
PK131436720	0425	11-	
PK131436730	0425	11-	
PK131437310	0402	4	
PK131437320	0402	4-	
PK131437330	0402	4-	
PK131437340	0402	4-	
PK131446008	0425	2	
PK131446011	0425	5	
PK131446012	0425	6	
PK131446013	0425	7	
PK131446042	0425	9	
PK131446054	0425	4	
PK131466060	0402	8	
PK131506650	0402	15	
PK131506660	0402	16	
PK131506670	0402	17	
PK131606150	0402	13	
PK135616342	0120	1	
PK135996541	0120	2	
PK135996541	0991	15	
PK140036111	0301	14	
PK140116140	0301	8	
PK140166130	0301	7	
PK140166160	0301	5	
PK140186010	0301	16	
PK140406270	0212	8	
PK140516190	0310	1	
PK140516190	9905	2	
PK140546020	0310	2	
PK140606670	0310	3	
PK140986480	0212	6	
PK145016471	0503	1	
PK145146090	0503	14	
PK145206021	0503	12	
PK145306460	0503	15	
PK145336490	0503	9	
PK145386520	0503	10	
PK145996270	0503	8	
PK145996270	0991	9	
PK145996280	0503	5	
PK145996280	0991	8	
PK165026100	0301	1	
PK165106290	0207	11	

PART NO	F/NO	I/NO	M/NO
PK165166181	0207	8	
PK165206010	0239	5	
PK165266180	0301	2	
PK165296140	0201	9	
PK165996110	0239	6	
PK165996110	0991	6	
PK165996300	0207	9	
PK165996300	0991	4	
PK165996310	0207	13	
PK165996310	0991	5	
PK185046160	0641	1	
PK185086321	0661	1	
PK185206082	0665	3	
PK185246060	0301	17	
PK185366060	0665	1	
PK185376110	0665	2	
PK185416130	0661	15	
PK185416141	0661	17	
PK185416150	0661	16	
PK185446199	0641	10	
PK185446200	0641	2	
PK185446201	0641	4	
PK185446202	0641	15	
PK185446203	0641	7	
PK185446204	0641	9	
PK185516060	0633	3	
PK185516060	1501	9	
PK185716190	0641	3	
PK185726370	0601	4	
PK185816180	0661	11	
PK185846119	0661	18	
PK185846126	0661	21	
PK185846127	0661	5	
PK185846131	0661	20	
PK185846134	0661	7	
PK185846136	0661	9	
PK185846159	0661	2	
PK185846160	0661	13	
PK185846161	0661	14	
PK185846163	0661	3	
PK185846165	0661	10	
PK185846166	0661	12	
PK185846300	0661	8	
PK185846449	0661	19	
PK185846454	0661	6	
PK185866050	0661	4	
PK195816200	0671	1	
PK195906600	0991	1	
PK198216700	0101	9	
PK198216720	0301	10	

PART NO	F/NO	I/NO	M/NO
PK198216731	0208	10	
PK198216760	0208	24	
PK198216780	0111	8	
PK198216790	0503	13	
PK198216821	0301	4	
PK198217200	0208	8	
PK198236030	0402	11	
PK198346090	0115	12	
PK198416371	0212	12	
PK198436010	0115	2	
PK198466010	0201	8	
PK198466030	0201	7	
PK198466050	0201	6	
PK198486780	0310	4	
PK198486840	0429	4	
PK198517080	0201	11	
PK198517084	0201	11-	
PK198517087	0201	11-	
PK198517090	0201	10	
PK198517125	0237	4	
PK198517290	0301	6	
PK198586010	0231	6	
PK198586014	0231	6-	
PK198586017	0231	6-	
PK198586020	0231	7	
PK198586024	0231	7-	
PK198586027	0231	7-	
PK198636080	0221	6	
PK198636090	0207	14	
PK198736120	0666	8	
PK198996050	0402	14	
PK198996060	0115	6	
PK198996060	0310	5	
PK199106020	0402	18	
PK199216230	0207	4	
PK199236510	0641	11	
PK199236540	0301	11	
PK199266170	0231	8	
PK199266180	0301	13	
PK199286150	0301	9	
PK199286160	0301	9-	
PK199286170	0301	9-	
PK199286180	0301	9-	
PK199376230	0666	5	
PK199486220	0111	9	
PK199566651	0666	2	
PK314120070	0633	4	
PK314990013	0633	1	
PK340460130	0239	1	
PK385620010	0633	7	

PART NO	F/NO	I/NO	M/NO
PK385620140	0633	8	
PK385620200	0633	6	
PK385620270	0633	9	
PK385720230	0666	7	
PK871120102	0101	1-	
PZF200364909	4602	17	
PZF200390824	7101	27	
PZF200390824	7103	30	
PZF200391746	7122	5	
PZF200391746	7123	5	
PZF200399179	7101	12	
PZF200399179	7103	12	
PZF200496196	4214	21	
PZF200496197	4401	12	
PZF200514067	1105	7	
PZF200514067	1107	7	
PZF390615003	7003	2-	
PZF390615003	7005	2-	
PZF392057019	7122	1-	
PZF392057019	7123	1-	
PZF392155014	6502	1-	
PZF500014884	7401	6	
PZF500022801	4300	12	
PZF500022801	4301	12	
PZF500022878	7101	4	
PZF500022878	7103	4	
PZF500217300	7003	2	
PZF500217300	7005	2	
PZF500217300	7201	2	
PZF500217300	7203	2	
PZF500217300	7401	10	
PZF500217301	7721	2	
PZF500217302	7181	2	
PZF500217302	7182	2	
PZF500217302	7183	2	
PZF500217302	7184	2	
PZF500217302	7185	2	
PZF500217302	7187	2	
PZF500217302	7381	2	
PZF500217302	7581	2	
PZF500217350	7701	2	
PZF500217351	7721	10	
PZF500217352	7001	2	
PZF500351510	3061	25	
PZF500352002	6802	8	
PZF500355155	6611	5-	
PZF500355608	6802	7	
PZF500355913	6730	13	
PZF500358155	7101	16	
PZF500358155	7103	16	

PART NO	F/NO	I/NO	M/NO
PZF500358764	6726	9	
PZF500358764	6730	25	
PZF500359253	6730	15	
PZF500361465	1302	7	
PZF500362601	4602	16	
PZF500365402	6502	17	
PZF500365402	6730	14	
PZF500365603	6502	28	
PZF500366041	6001	8	
PZF500366044	3061	18	
PZF500368180	6502	26	
PZF500466130	7181	4	
PZF500466130	7182	4	
PZF500466130	7183	4	
PZF500466130	7184	4	
PZF500466130	7185	4	
PZF500466130	7187	4	
PZF500466130	7381	4	
PZF500466130	7581	4	
PZF500466130	7721	4	
PZF500610566	4001	11	
PZF500611647	4212	11	
PZF500611647	4300	16	
PZF500611647	4301	16	
PZF500611648	4102	12	
PZF500611648	4212	29	
PZF500611648	4214	33	
PZF500611649	4102	10	
PZF500611649	4212	28	
PZF500611649	4214	9	
PZF500611649	4300	18	
PZF500611649	4301	18	
PZF500611649	4401	7	
PZF500611650	4214	23	
PZF500611653	4205	6	
PZF500611668	4401	19	
PZF801014035	6802	2	
PZF801014066	1105	11	
PZF801014066	1107	11	
PZF801014067	1501	11	
PZF801014551	1201	23	
PZF801014809	6211	38	
PZF801018080	6730	30	
PZF801018550	6730	32	
PZF801050037	5702	6	
PZF801050037	5703	6	
PZF801105117	6730	11	
PZF801105240	6726	12	
PZF801105240	6730	28	
PZF801105546	1011	5-	

https://truckmanualshub.com/

PART NO	F/NO	I/NO	M/NO
PZF801160125	4001	2	
PZF801220193	6211	25	
PZF801370040	1501	14	
PZF801370065	5102	9	
PZF801570027	9802	30-	
PZF801570027	9804	30-	
PZF801570027	9810	37-	
PZF801570027	9811	30-	
PZF801703208	6211	7	
PZF801713209	4214	22	
PZF801730002	5702	7	
PZF801730002	5703	7	
PZF801802218	3211	4	
PZF801802218	3212	4	
PZF801852206	7101	5	
PZF801852206	7103	5	
PZF801852208	1201	22	
PZF801852212	1001	8	
PZF801920110	7185	11	
PZF801920110	7187	10	
PZF801920111	7181	8	
PZF801920111	7182	8	
PZF801920111	7183	8	
PZF801920111	7184	8	
PZF801920111	7381	8	
PZF801920111	7581	8	
PZF801920111	7721	9	
PZF802040025	4401	15	
PZF802040032	4102	21	
PZF802070008	1002	12	
PZF802070020	4212	6	
PZF802090014	6502	29	
PZF802090209	6211	15	
PZF802090212	6211	6	
PZF802090212	6211	23	
PZF802090214	6211	17	
PZF802090218	6211	3	
PZF802090222	6211	36	
PZF802130006	6502	16	
PZF802130006	6730	12	
PZF802130008	6502	10	
PZF802130008	6730	6	
PZF802150506	1201	24	
PZF802150506	1501	10	
PZF802150508	1002	11	
PZF802150508	1102	4	
PZF802150508	1105	10	
PZF802150508	1107	10	
PZF802150508	1201	7	
PZF802150508	6211	8	

PART NO	F/NO	I/NO	M/NO
PZF802150508	6730	31	
PZF802150510	1001	4	
PZF802150510	1002	4	
PZF802150510	1011	4	
PZF802150510	1102	11	
PZF802150512	1001	6	
PZF802150512	1002	6	
PZF802150512	1002	9	
PZF802150512	6502	5	
PZF802250020	4212	7	
PZF802510115	5702	15	
PZF802510115	5703	15	
PZF802510193	4401	11	
PZF802510197	4300	11	
PZF802510197	4301	11	
PZF802510223	4205	3	
PZF802510223	4214	4	
PZF802510223	4214	27	
PZF802540120	2501	5	
PZF802610010	4102	13	
PZF802610010	4205	7	
PZF802610010	4212	30	
PZF802610010	4214	34	
PZF802610010	4401	20	
PZF802610027	5001	11	
PZF802610040	4102	11	
PZF802610040	4212	12	
PZF802610040	4214	10	
PZF802610040	4300	7	
PZF802610040	4300	19	
PZF802610040	4301	7	
PZF802610040	4301	19	
PZF802610055	4212	9	
PZF802610055	4214	24	
PZF802610055	5001	6	
PZF802610072	3211	5	
PZF802610072	3212	5	
PZF802620095	4401	8	
PZF802640722	4300	2	
PZF802640722	4301	2	
PZF802660002	1302	6	
PZF802660002	1302	12	
PZF802660004	6502	2	
PZF802660004	6722	9	
PZF802660004	6730	7	
PZF802660007	1201	16	
PZF802660012	1105	15	
PZF802660012	1107	15	
PZF802660015	5102	11	
PZF802660034	1201	18	

PART NO	F/NO	I/NO	M/NO
PZF802660034	1201	18-	
PZF802660034	6502	30	
PZF802660074	1102	6	
PZF802660110	5202	8	
PZF802660176	1105	13	
PZF802660176	1107	13	
PZF802720032	4300	14	
PZF802720032	4301	14	
PZF802720033	4214	7	
PZF802725016	4001	3	
PZF804040009	4300	6	
PZF804040009	4301	6	
PZF805630021	4102	20	
PZF805630021	4401	2	
PZF805630021	4401	23	
PZF805630027	4102	19	
PZF805630027	4205	4	
PZF805630027	4214	5	
PZF805630027	4214	12	
PZF805850209	4401	14	
PZF808001046	1002	7	
PZF816212433	4602	28	
PZF816212433	5001	17	
PZF816212465	9810	37	
PZF816212466	9804	30	
PZF816212467	9811	30	
PZF816212468	9802	30	
PZF816212471	9804	26	
PZF816212471	9811	26	
PZF816212472	9804	27	
PZF816212472	9811	27	
PZF816212473	9804	23	
PZF816212473	9811	23	
PZF816212475	9804	31	
PZF816212475	9811	31	
PZF816212476	9804	14	
PZF816212476	9811	14	
PZF816212477	9804	36	
PZF816212477	9811	36	
PZF816212478	9804	33	
PZF816212478	9811	33	
PZF816212479	9804	34	
PZF816212479	9811	34	
PZF816212480	9804	15	
PZF816212480	9811	15	
PZF823000052	9901	4	
PZF823001135	9901	1	
PZF823001143	9901	3	
PZF823001246	9901	6	
PZF823001248	9901	7	

PART NO	F/NO	I/NO	M/NO
PZF823001249	9901	2	
PZF840250004	6730	2	
PZF840250005	6502	12	
PZF844100041	6211	13	
PZF844100254	6211	10	
PZF844100255	6211	11	
PZF844100257	6211	16	
PZF844100281	6211	20	
PZF844100282	6211	14	
PZF844100283	6211	39	
PZF844100284	6211	9	
PZF844100285	6211	4	
PZF844100286	6211	1	
PZF844100287	6211	18	
PZF844100288	6211	32	
PZF844100289	6211	33	
PZF844100290	6211	30	
PZF844100291	6211	28	
PZF844100292	6211	26	
PZF844100293	6211	24	
PZF844100294	6211	37	
PZF844100295	6211	35	
PZF844100297	6211	2	
PZF848200022	1302	2	
PZF848200023	6001	2	
PZF852930101	6722	10	
PZF852930102	6502	6	
PZF852930104	6502	1	
PZF852930107	6730	8	
PZF852951102	6502	27	
PZF852951112	1302	4	
PZF852951118	5202	7	
PZF855021009	6211	31	
PZF855021011	6211	22	
PZF855021015	6201	40	
PZF855021018	6211	5	
PZF855021018	6211	19	
PZF855021018	6211	34	
PZF855021111	3061	11	
PZF855021111	3061	16	
PZF855021115	6211	27	
PZF855021211	6001	9	
PZF855021211	6201	39	
PZF855021211	9905	7	
PZF855021217	3211	7	
PZF855021217	3212	7	
PZF855021229	6001	4	
PZF855021232	6001	12	
PZF855021232	9905	8	
PZF855021806	6211	21	

PART NO	F/NO	I/NO	M/NO
PZF855021809	6502	14	
PZF855021809	6730	10	
PZF855021812	3201	8	
PZF855021812	3301	7	
PZF855021814	6502	8	
PZF855021814	6730	4	
PZF855051111	6611	6	
PZF855051111	6611	20	
PZF855051111	6802	5	
PZF855051111	7101	17	
PZF855051111	7103	17	
PZF855051113	3061	7	
PZF855051116	6722	12	
PZF855051116	6726	10	
PZF855051116	6730	26	
PZF855051616	6722	14	
PZF855051616	6722	17	
PZF855051616	6726	8	
PZF855051616	6730	24	
PZF855051617	6611	13	
PZF855051617	6722	3	
PZF855051617	6722	6	
PZF855051832	9991	K2-	
PZF855080217	3211	8	
PZF855080217	3212	8	
PZF855150037	6211	12	
PZF855350024	6211	29	
PZF855661134	9991	K1-	
PZF855661134	9991	K2-	
PZF855661134	9991	K3-	
PZF855661134	9991	K4-	
PZF855661134	9991	K5-	
PZF855661134	9991	K6-	
PZF855661134	9991	K7-	
PZF855661135	9991	K1-	
PZF855661135	9991	K2-	
PZF855661135	9991	K3-	
PZF855661135	9991	K4-	
PZF855661135	9991	K5-	
PZF855661135	9991	K6-	
PZF855661135	9991	K7-	
PZF855661136	7185	6	
PZF855661136	9991	K1-	
PZF855661136	9991	K3-	
PZF855661136	9991	K5-	
PZF855661136	9991	K6-	
PZF855661138	9991	K2-	
PZF855661138	9991	K4-	
PZF855661138	9991	K7-	
PZF855661139	9991	K2-	

PART NO	F/NO	I/NO	M/NO
PZF855661139	9991	K4-	
PZF855661139	9991	K7-	
PZF855661150	7003	3	
PZF855661150	7005	3	
PZF855661150	7201	3	
PZF855661150	7203	3	
PZF855661150	7401	11	
PZF855661150	7701	3	
PZF855661150	9991	K1-	
PZF855661150	9991	K2-	
PZF855661150	9991	K3-	
PZF855661150	9991	K4-	
PZF855661150	9991	K5-	
PZF855661150	9991	K6-	
PZF855661151	9991	K7-	
PZF855661156	9991	K1-	
PZF855661157	9991	K2-	
PZF855661157	9991	K4-	
PZF855661157	9991	K7-	
PZF855661161	7181	5	
PZF855661161	7182	5	
PZF855661161	7183	5	
PZF855661161	7184	5	
PZF855661161	7185	5	
PZF855661161	7187	5	
PZF855661161	7381	5	
PZF855661161	7581	5	
PZF855661161	7721	5	
PZF855661164	9991	K1-	
PZF855661164	9991	K3-	
PZF855661164	9991	K5-	
PZF855661164	9991	K6-	
PZF855661165	9991	K1-	
PZF855661165	9991	K3-	
PZF855661165	9991	K5-	
PZF855661165	9991	K6-	
PZF855661166	6401	2	
PZF855661166	9991	K2-	
PZF855661166	9991	K4-	
PZF855661166	9991	K7-	
PZF855661168	6502	21	
PZF855661168	6726	3	
PZF855661168	6726	5	
PZF855661168	6730	19	
PZF855661168	6730	21	
PZF855661191	9991	K1-	
PZF855661191	9991	K3-	
PZF855661191	9991	K5-	
PZF855661191	9991	K6-	
PZF855661192	9991	K1-	

PART NO	F/NO	I/NO	M/NO
PZF855661192	9991	K3-	
PZF855661192	9991	K5-	
PZF855661192	9991	K6-	
PZF855661236	6401	3	
PZF855661236	9991	K2-	
PZF855661236	9991	K4-	
PZF855661236	9991	K7-	
PZF855661241	9991	K2-	
PZF855661242	7185	11-	
PZF855661242	7187	10-	
PZF855661242	9991	K5	
PZF855661243	7181	9-	
PZF855661243	9991	K1	
PZF855661244	7183	8-	
PZF855661244	9991	K3	
PZF855661245	7182	9-	
PZF855661245	9991	K2	
PZF855661246	7184	8-	
PZF855661246	9991	K4	
PZF855661247	7381	8-	
PZF855661247	7581	8-	
PZF855661247	9991	K6	
PZF855661248	7721	10-	
PZF855661248	9991	K7	
PZF855670004	6602	6	
PZF855670004	6611	4	
PZF855670004	6702	8	
PZF855670004	6702	10	
PZF855670006	6611	6-	
PZF855670006	6611	20-	
PZF855670017	6611	13-	
PZF855710058	4602	29	
PZF860010009	4602	19	
PZF860010009	7001	7	
PZF860010009	7003	5	
PZF860010009	7005	5	
PZF860010009	7201	6	
PZF860010009	7401	5	
PZF860010009	7701	13	
PZF860010009	9905	5	
PZF860020005	3211	11	
PZF860020005	3212	11	
PZF860020005	7701	4	
PZF860020005	7721	7	
PZF860020005	9905	6	
PZF860030005	7001	4	
PZF883000082	4001	8	
PZF883000101	4001	12	
PZF885010014	1401	1	
PZF885070011	1501	13	

PART NO	F/NO	I/NO	M/NO
PZF885091006	1411	12	
PZF885091006	1413	12	
PZF885091007	1411	12-	
PZF885091007	1413	12-	
PZF885091008	1411	12-	
PZF885091008	1413	12-	
PZF885091009	1411	12-	
PZF885091009	1413	12-	
PZF885111087	7003	11	
PZF885111087	7005	11	
PZF885141133	7003	11-	
PZF885141133	7005	11-	
PZF885141134	7003	11-	
PZF885141134	7005	11-	
PZF885180004	1302	13	
PZF885180004	1502	2	
PZF885180005	1502	8	
PZF885180005	4001	7	
PZF885180005	6611	24	
PZF885240002	1502	10	
PZF885410048	5102	18	
PZF885411064	1501	16	
PZF885411104	1501	12	
Z7820-R2151	1401	2	
Z7820-R2161	1401	3	
Z8731-R1591	6730	9	
Z8731-R2091	6730	9-	

https://truckmanualshub.com/

https://truckmanualshub.com/

https://truckmanualshub.com/