https://truckmanualshub.com/

Engineering Release Notice (ERN)	Location	Change Description	A = Added D = Deleted	W = Was	Document Release Status **RELEASED**	
		SEE DCN			Date	Modification Count

WIRING DIAGRAM INDEX, 12V

NAME	DESCRIPTION	PAGE
AA	POWER DISTRIBUTION 1/2	2
AB	POWER DISTRIBUTION 2/2	3
AC	KEY SW. , START & CHARGING	4
AD	GROUNDING	5
AE	BATTERY CONFIGURATION	6
AF	GROUNDING 2/2, CUMMINS	7
AG	STARTING AND CHARGING, CUMMINS	8
AH	EFRC CUMMINS	9
BA	VEHICLE ECU 1/4	10
BB	VEHICLE ECU 2/4	11
BC	VEHICLE ECU 3/4 − DCL CONNECTOR	12
BD	VEHICLE ECU 4/4	13
BE	INSTRUMENT CLUSTER 1/3	14
BF	INSTRUMENT CLUSTER 2/3	15
BG	INSTRUMENT CLUSTER 3/3	16
BH	ALLISON BODY BUILDER INTERFACE	17
BI	INSIDE−OUTSIDE AIR TEMP. GAUGE	18
BJ	BODY BUILDER CIRCUITS	19
BK	BODY BUILDER CIRCUITS − 2010 BODYLINK	20
BL	ENGINE BRAKE CONTROL − M−DRIVE	21
BM	TELEMATICS GATEWAY (TGW)	22
BN	BODY BUILDER CIRCUITS	23
BU	QUALCOMM MCP 100 W/SLEEPER	24
BV	QUALCOMM MCP 110 OR 200 W/SLEEPER	25
BW	QUALCOMM MCP 100 W/DAYCAB	26
BX	QUALCOMM MCP 110 & 200 W/DAYCAB	27
CA	ENGINE INTERFACE MP11	28
CB	DPF REGENERATION SYSTEM	29
CC	ENGINE HEATER	30
CD	UREA DOSING SYSTEM	31
CE	ENGINE CONTROL ISL US13 1/2	32
CF	ENGINE CONTROL ISL US13 2/2	33
DA	TRANSMISSION M−DRIVE	34
DB	TRANSMISSION CONTROL: AUTOSHIFT / ULTRASHIFT III	35
DC	TRANSMISSION CONTROL 4th GENERATION 1/2	36
DD	TRANSMISSION CONTROL 4th GENERATION 2/2	37
DE	TRANSMISSION CONTROLS − M−DRIVE	38
EA	ABS−WABCO	39
EB	ABS BENDIX W/ESP (EATON)	40
EC	SUSPENSION ECU 6X2	41

NAME	DESCRIPTION	PAGE
FA	AIR DRYER /HEATED DRAIN	42
FB	CHASSIS SOLENOIDS	43
FD	PARKER PTO	44
FE	CENTRAL TIRE INFLATION	45
GA	LIGHTING CONTROL	46
GD	LIGHTING− FORWARD/SIGNAL (CXU, GU7 & GU8)	47
GE	LIGHTING− FORWARD/SIGNAL (CHU ONLY)	48
GF	LIGHTING −TAIL/PERIMETER	49
GG	TRAILER LIGHTING CONTROL	50
GH	INTERIOR LIGHTING	51
GI	SNOW PLOW PREP CONNECTOR	52
GJ	TRAILER RECEPTACLE CENTER PIN HOT	53
GK	TITAN LIGHTING OPTIONS	54
GL	LIGHTING − BEACON LAMPS	55
GM	LIGHTING: ROOF W/OPTIONS	56
GP	WIPER/WASHER	57
GQ	HORN WIRING/ SPOTLIGHT	58
HA	CLIMATE CONTROL	59
HB	APADS WIRING	60
HC	HEATED SEATS, HEATED WINDSHIELD, AUX FAN 1/2	61
HD	SLEEPER CLIMATE CONTROL	62
HE	SLEEPER FUNCTIONS	63
HF	120V AC SYSTEM / INVERTER	64
HG	HEATED SEATS, HEATED WINDSHIELD, AUX FAN 2/2	65
IA	RH & LH MOTORIZED WINDOWS	66
IC	MIRROR CONTROL 1/2	67
ID	RH ONLY MOTORIZED WINDOWS & DOOR CONTROL	68
IE	RH & LH DOOR CONTROL	69
JA	ADAPTIVE CRUISE CONTROL 1/2	70
JB	ADAPTIVE CRUISE CONTROL 2/2	71
KA	AUDIO SYSTEM	72
KC	POWER OUTLET CONNECTIONS	73
NA	IGNITION & BATTERY SWITCHES & SPARE CONNECTORS	74
NB	JUNCTION POSTS	75
NC	ADDITIONAL IGNITION & BATTERY SWITCHES 1/3	76
ND	H.D. POWER LIFTGATE	77
NE	ADDITIONAL IGNITION & BATTERY SWITCHES 2/3	78
NF	ADDITIONAL IGNITION & BATTERY SWITCHES 3/3	79
XA	DATA LINK /DIAGNOSTICS	80

The copying, distribution and utilization of this document as well as the communication of its contents to others without expressed authorization is prohibited. Offenders will be held liable for payment of damages. All rights reserved in the event of the grant of a patent, utility model or ornamental design registration.

Document Title
WIRE DIAGRAM-CONVENTIONAL
12V MACK, 2013BP

VOLVO

Volvo 3P

Document Type
PRODUCT SCHEMATIC

The legal owner of this document is stated as Design Location in KOLA and in associated Part Version Report

Document No	Issue Index	Volume No	Page No
21628497	**05**	**1 (2)**	**1(80)**

EDM-W 2000-04-01

https://truckmanualshub.com/

WIRING DIAGRAM : AA

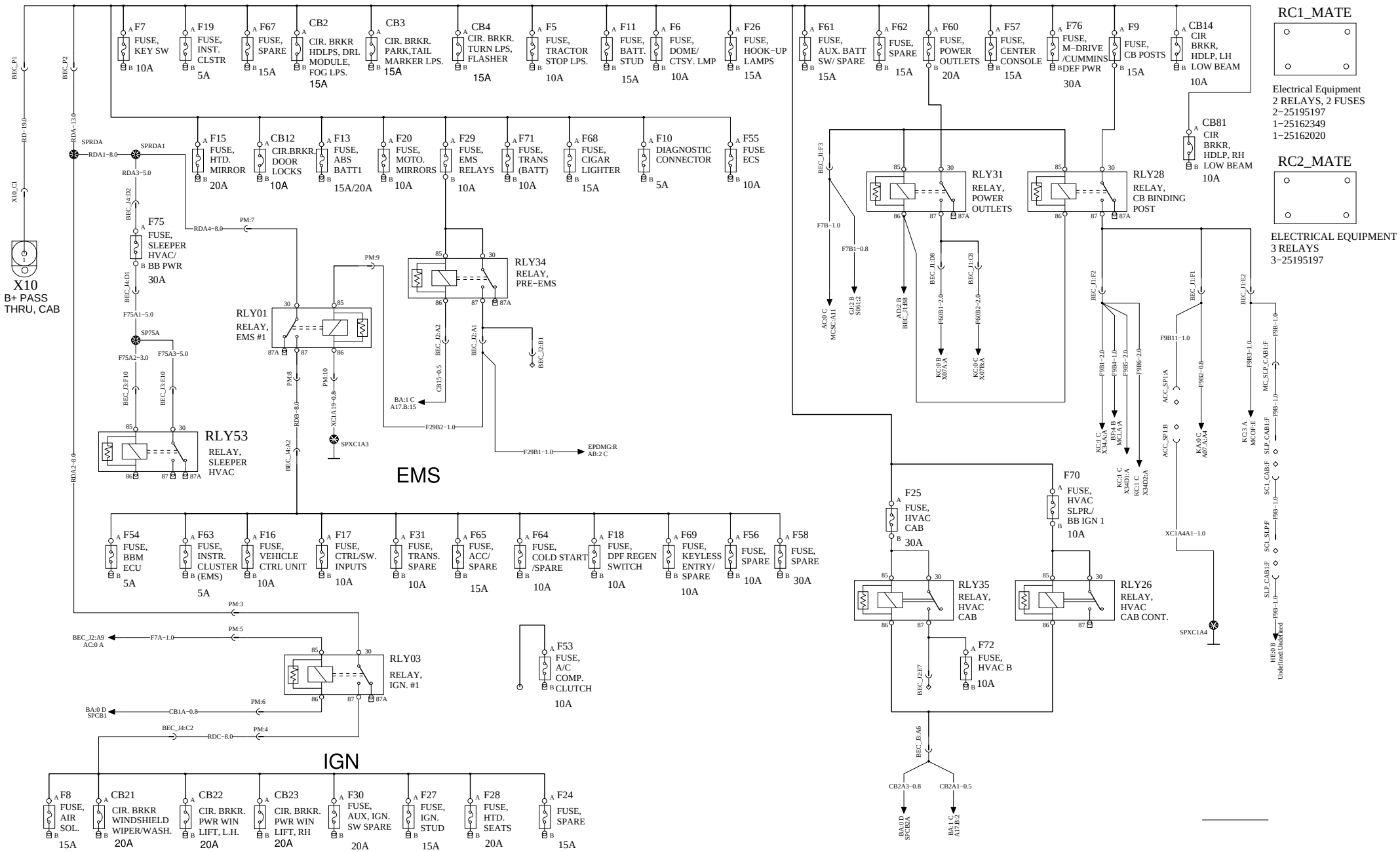

VOLVO Group Trucks Technology	Document title: WIRING DIAGRAM, CONVENTIONAL, 12V MACK, 2013 BP Document type: PRODUCT SCHEMATIC	Document No: 21628497	Issue: 05	Volume: 1 (2)	Page: 2 (80)

https://truckmanualshub.com/

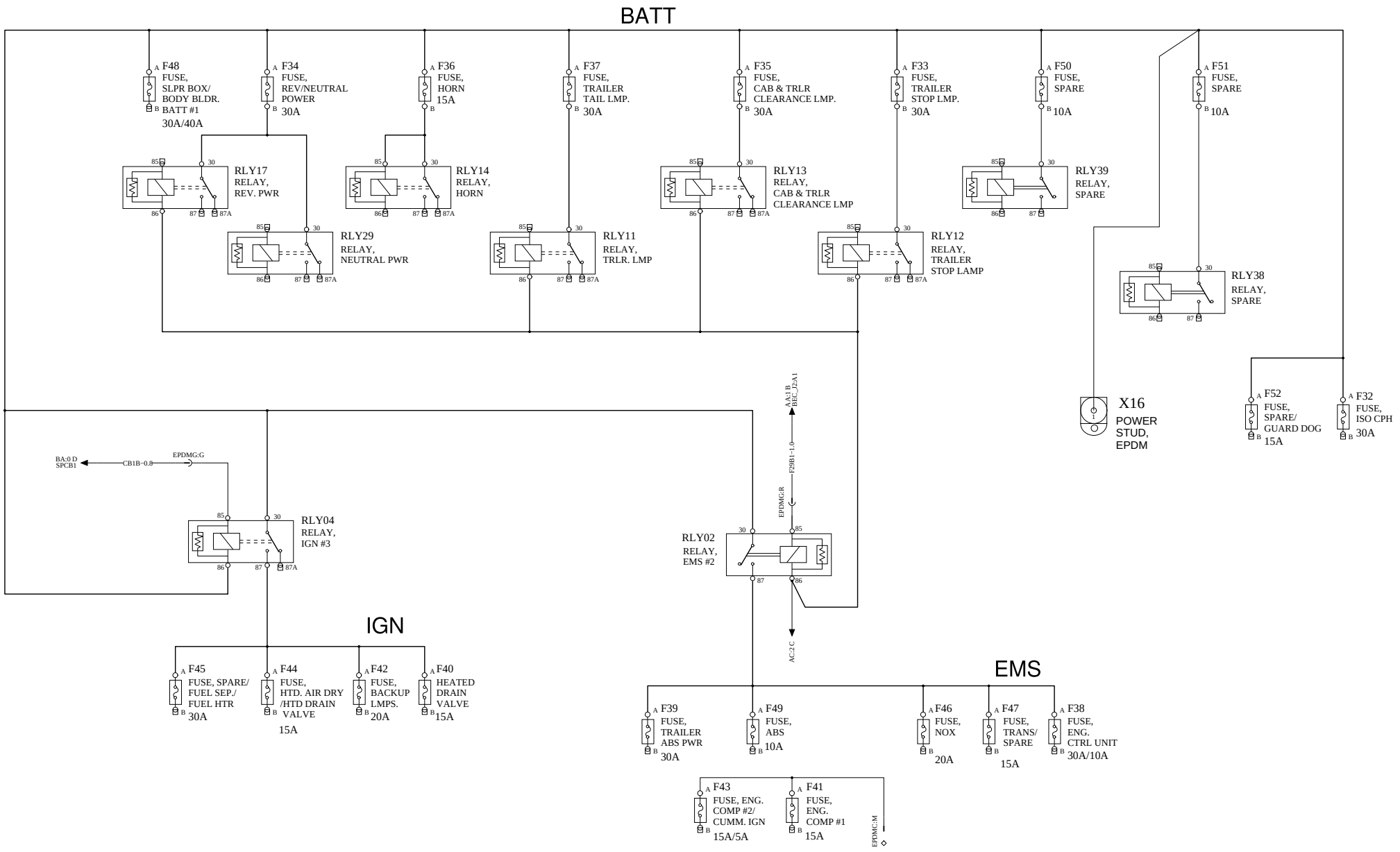

VOLVO Group Trucks Technology	Document title: WIRING DIAGRAM, CONVENTIONAL, 12V MACK, 2013 BP Document type: PRODUCT SCHEMATIC	Document No: 21628497	Issue: 05	Volume: 1 (2)	Page: 3 (80)

KEY SW. , START & CHARGING

https://truckmanualshub.com/

WIRING DIAGRAM : AC

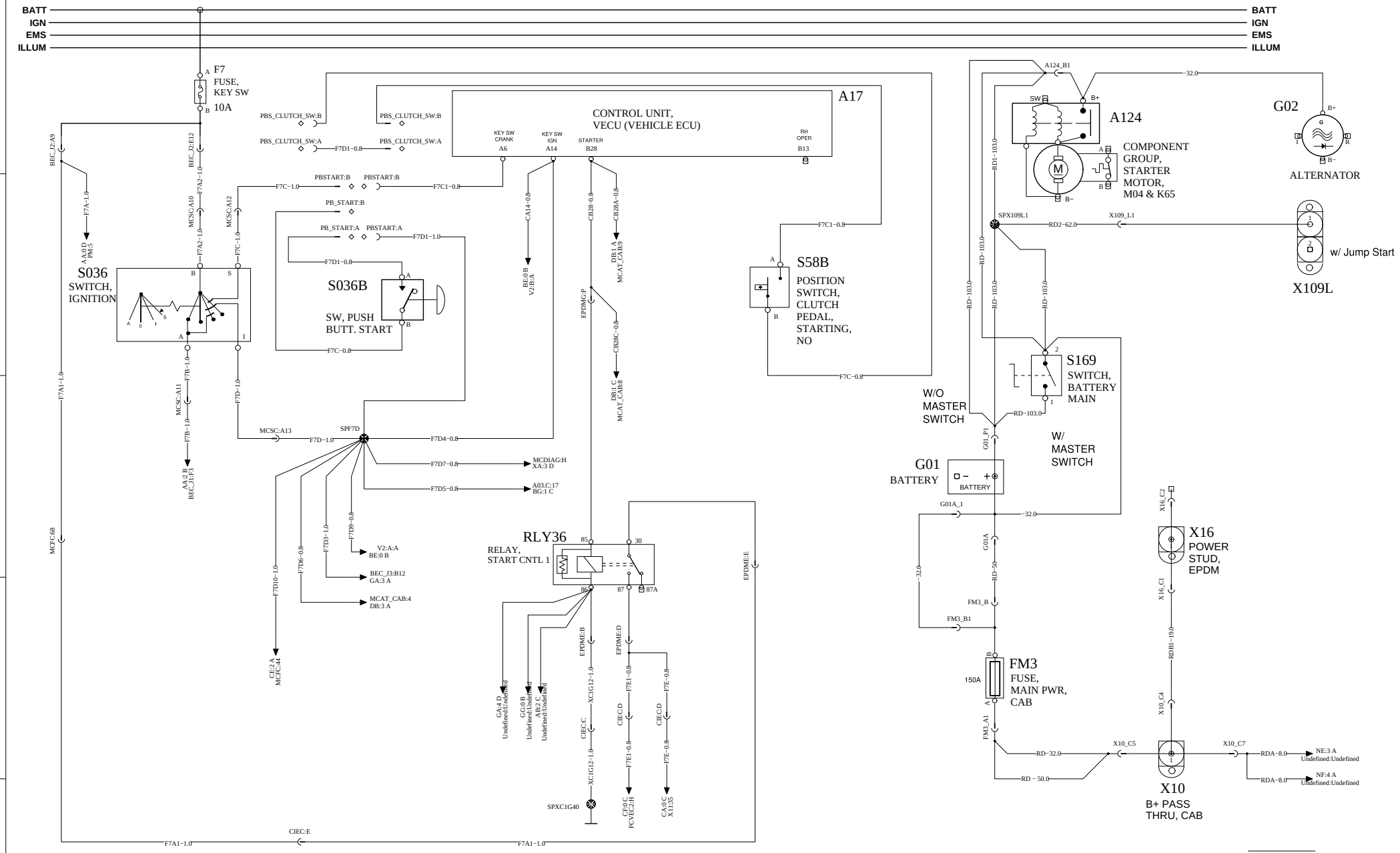

VOLVO Group Trucks Technology	Document title WIRING DIAGRAM, CONVENTIONAL, 12V MACK, 2013 BP Document type PRODUCT SCHEMATIC	Document No 21628497	Issue 05	Volume 1 (2)	Page 4 (80)

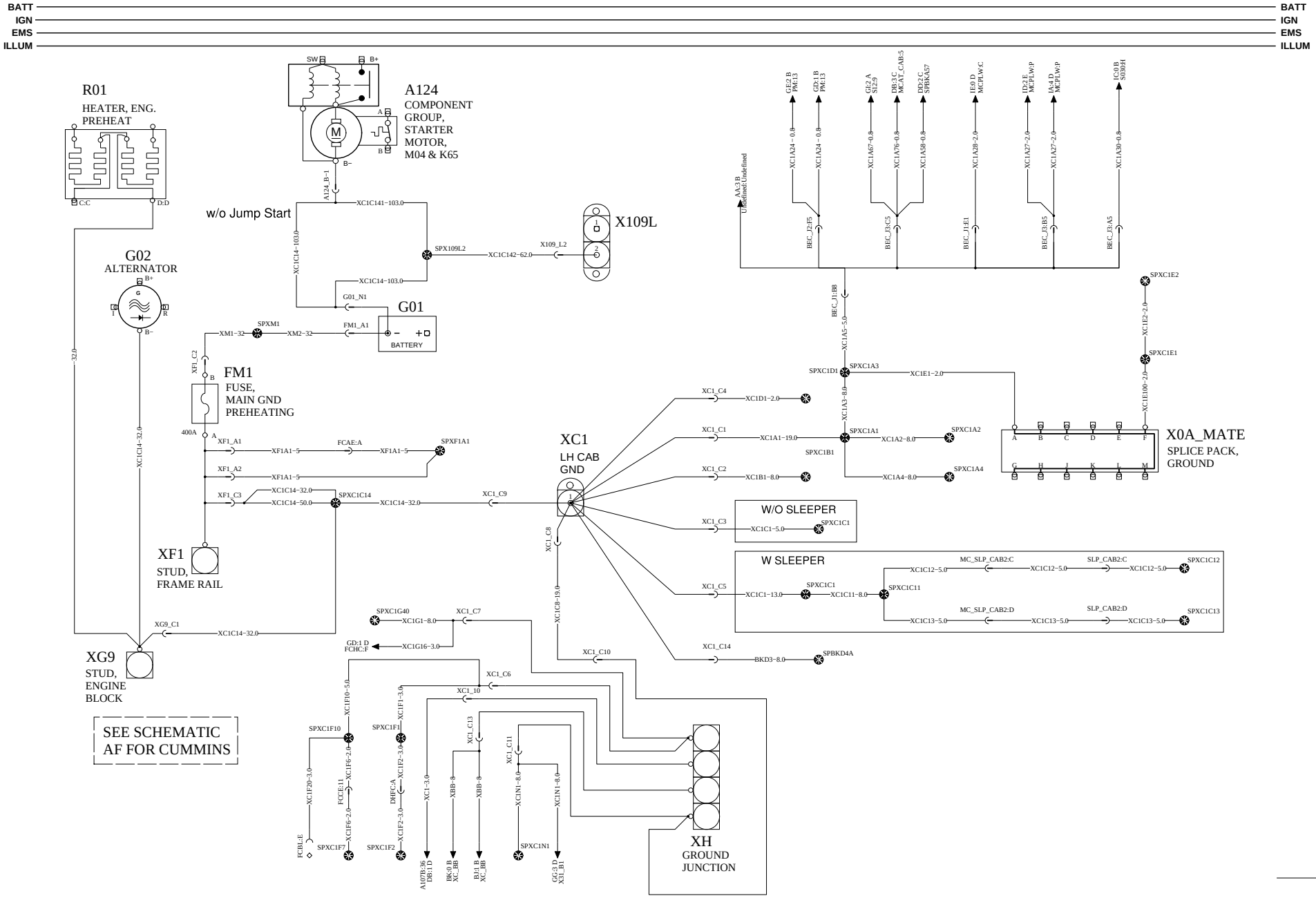
BATT
IGN
EMS
ILLUM
R01
HEATER, ENG. PREHEAT
A124
COMPONENT GROUP, STARTER MOTOR, M04 & K65
w/o Jump Start
X109L
G02
ALTERNATOR
G01
BATTERY
FM1
FUSE, MAIN GND PREHEATING
XF1
STUD, FRAME RAIL
XG9
STUD, ENGINE BLOCK
SEE SCHEMATIC AF FOR CUMMINS
XC1
LH CAB GND
X0A_MATE
SPLICE PACK, GROUND
W/O SLEEPER
W SLEEPER
XH
GROUND JUNCTION

https://truckmanualshub.com/

BATTERY CONFIGURATION

WIRING DIAGRAM: AE

BATT
IGN
EMS
ILLUM

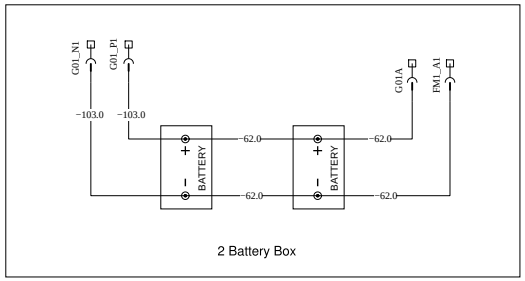

2 Battery Box

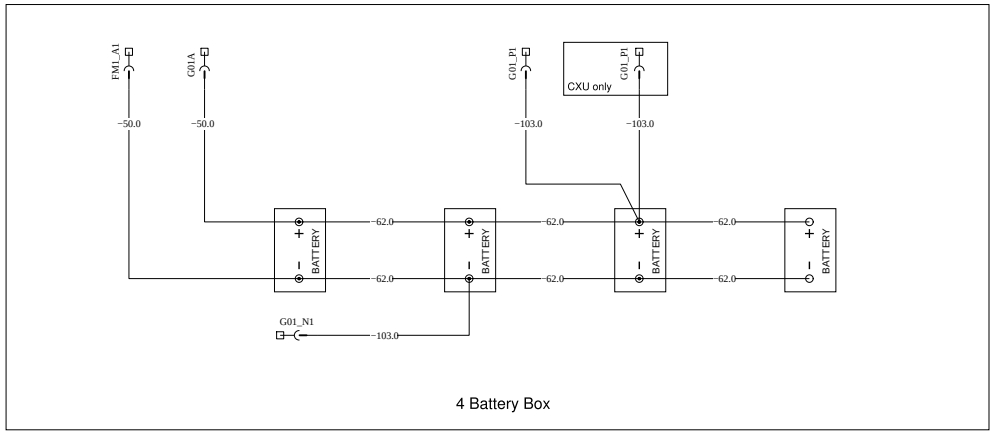

4 Battery Box

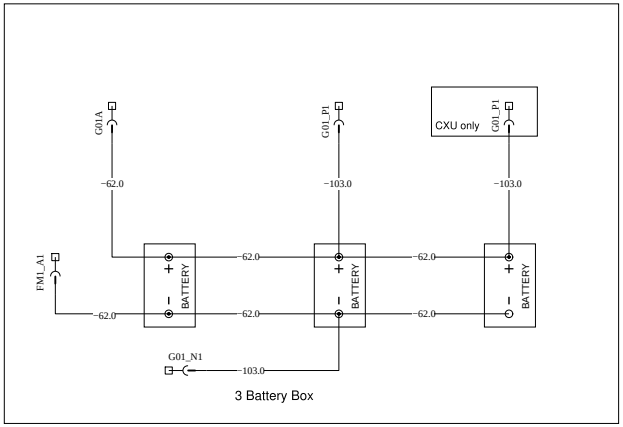

3 Battery Box

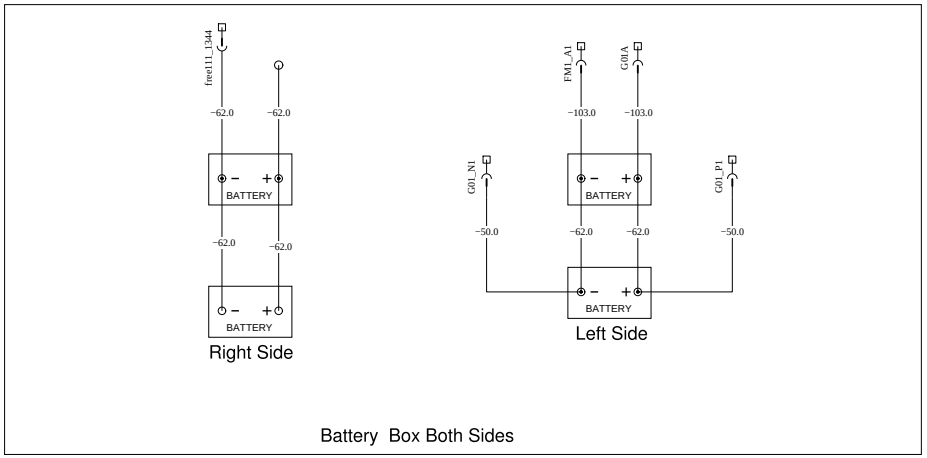

Battery Box Both Sides

VOLVO Group Trucks Technology	Document title WIRING DIAGRAM, CONVENTIONAL, 12V MACK, 2013 BP Document type PRODUCT SCHEMATIC	Document No 21628497	Issue 05	Volume 1 (2)	Page 6 (80)

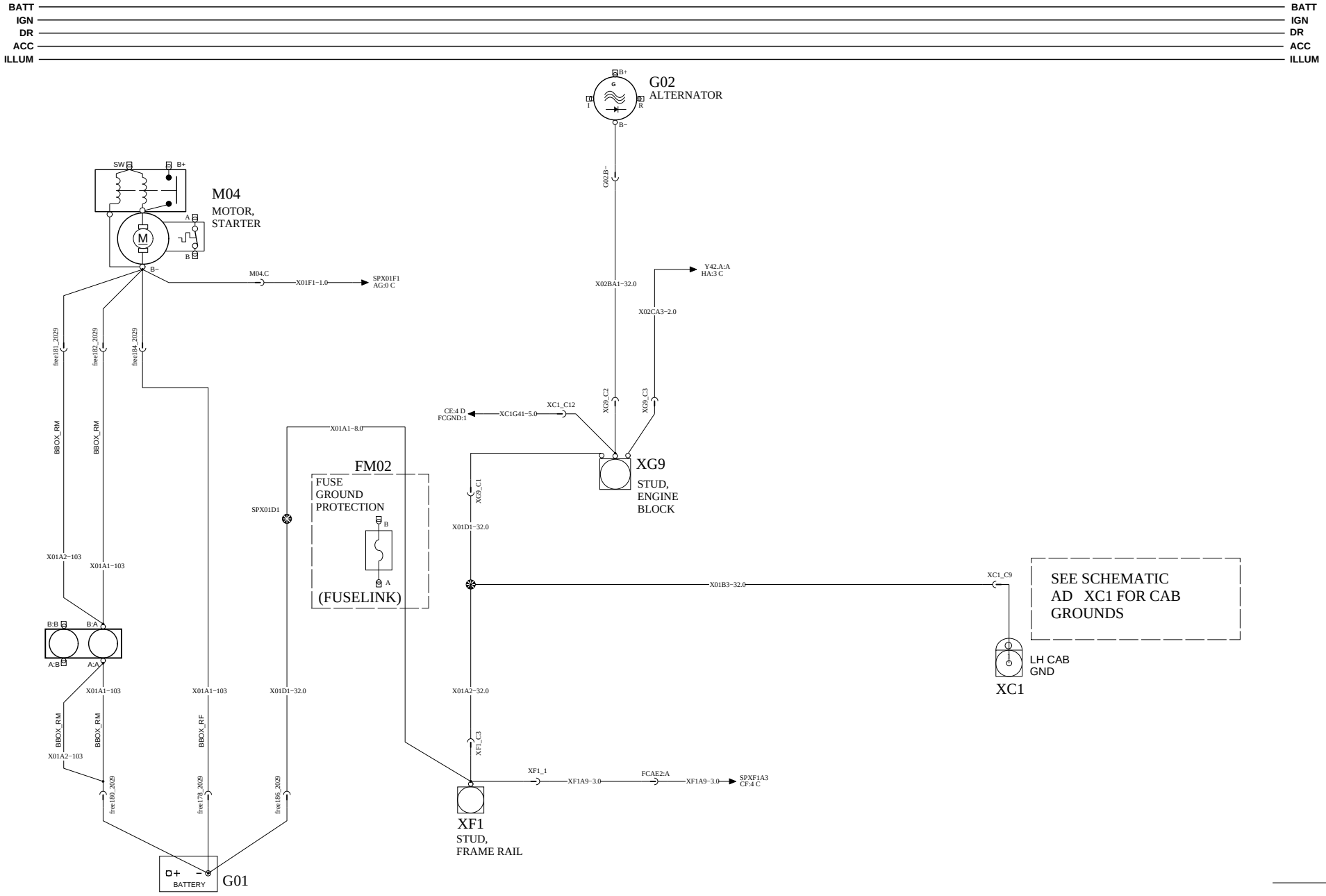

VOLVO Group Trucks Technology	Document title WIRING DIAGRAM, CONVENTIONAL, 12V MACK, 2013 BP Document type PRODUCT SCHEMATIC	Document No 21628497	Issue 05	Volume 1 (2)	Page 7 (80)

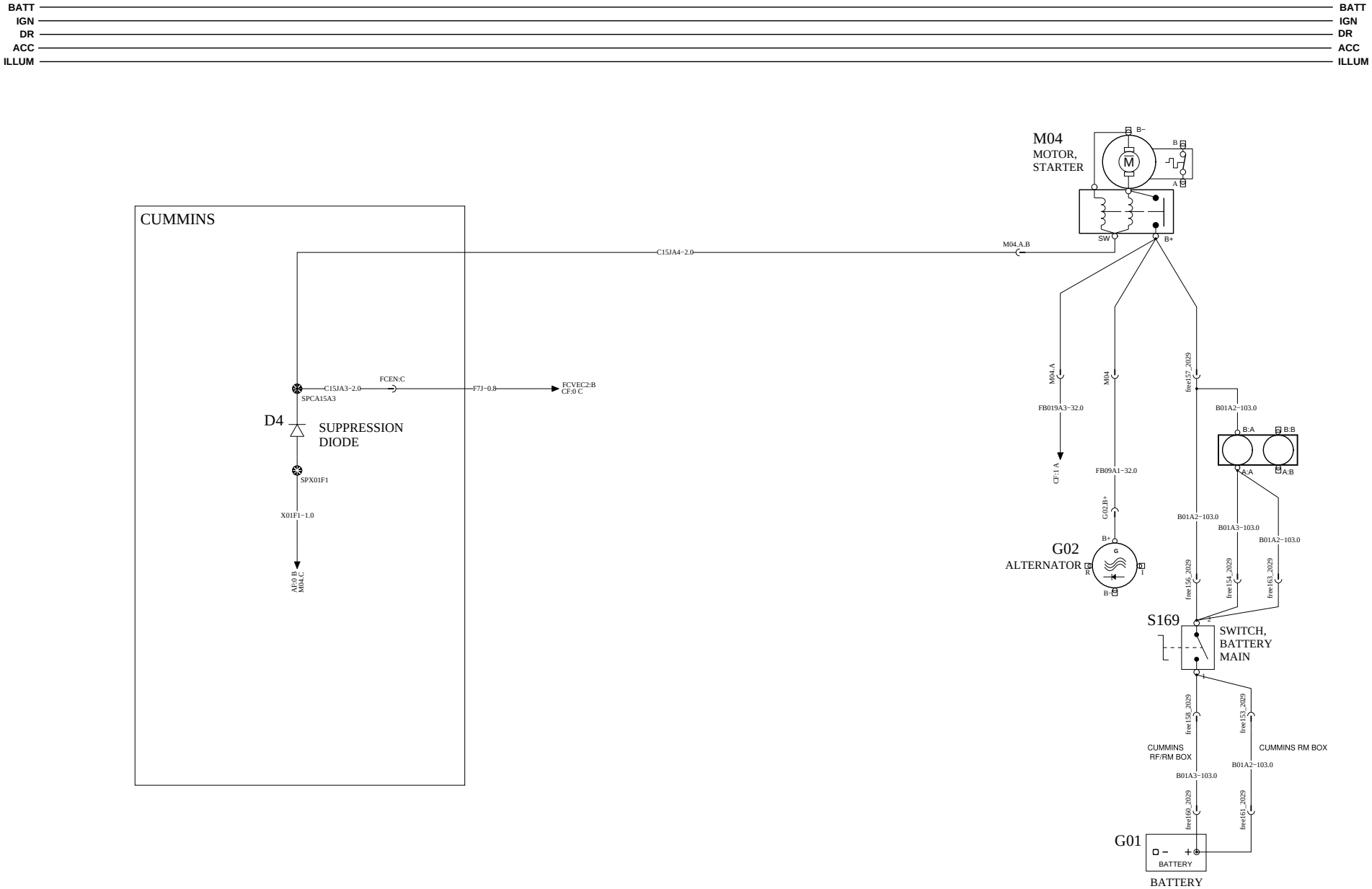

VOLVO Group Trucks Technology	Document title WIRING DIAGRAM, CONVENTIONAL, 12V MACK, 2013 BP Document type PRODUCT SCHEMATIC	Document No 21628497	Issue 05	Volume 1 (2)	Page 8 (80)

https://truckmanualshub.com/

BATT
IGN
EMS
ILLUM

ENG-CU9
EARC

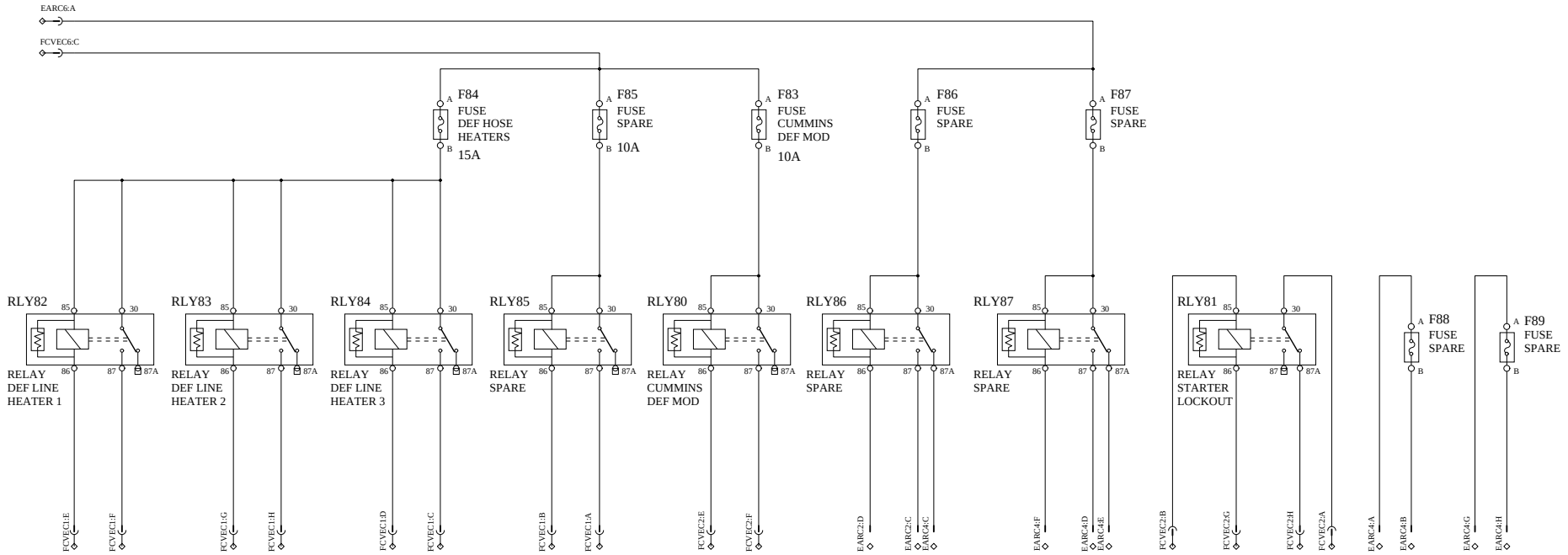

https://truckmanualshub.com/

WIRING DIAGRAM : BA

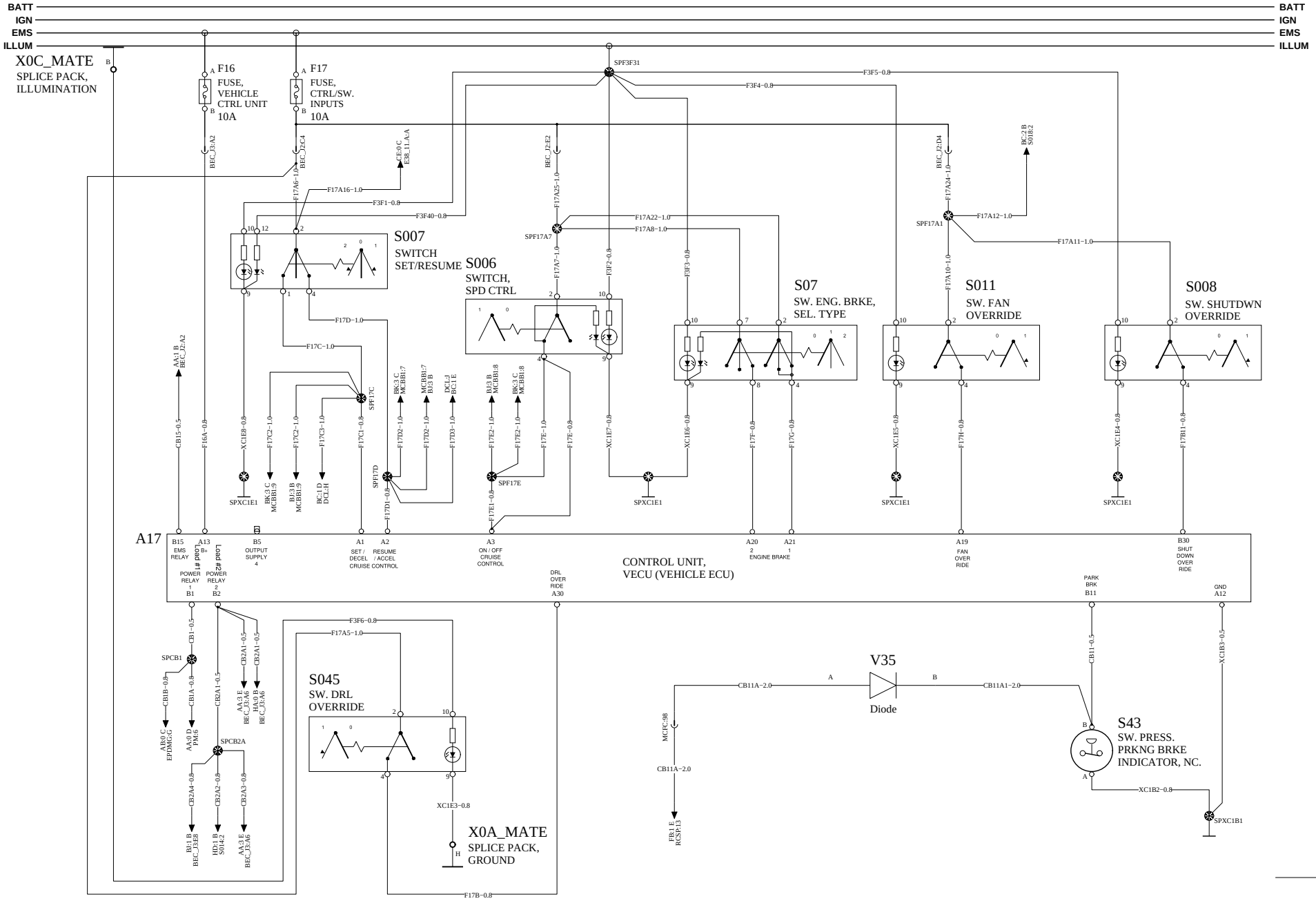

VOLVO Group Trucks Technology	Document title WIRING DIAGRAM, CONVENTIONAL, 12V MACK, 2013 BP Document type PRODUCT SCHEMATIC	Document No 21628497	Issue 05	Volume 1 (2)	Page 10 (80)

https://truckmanualshub.com/

WIRING DIAGRAM : BB

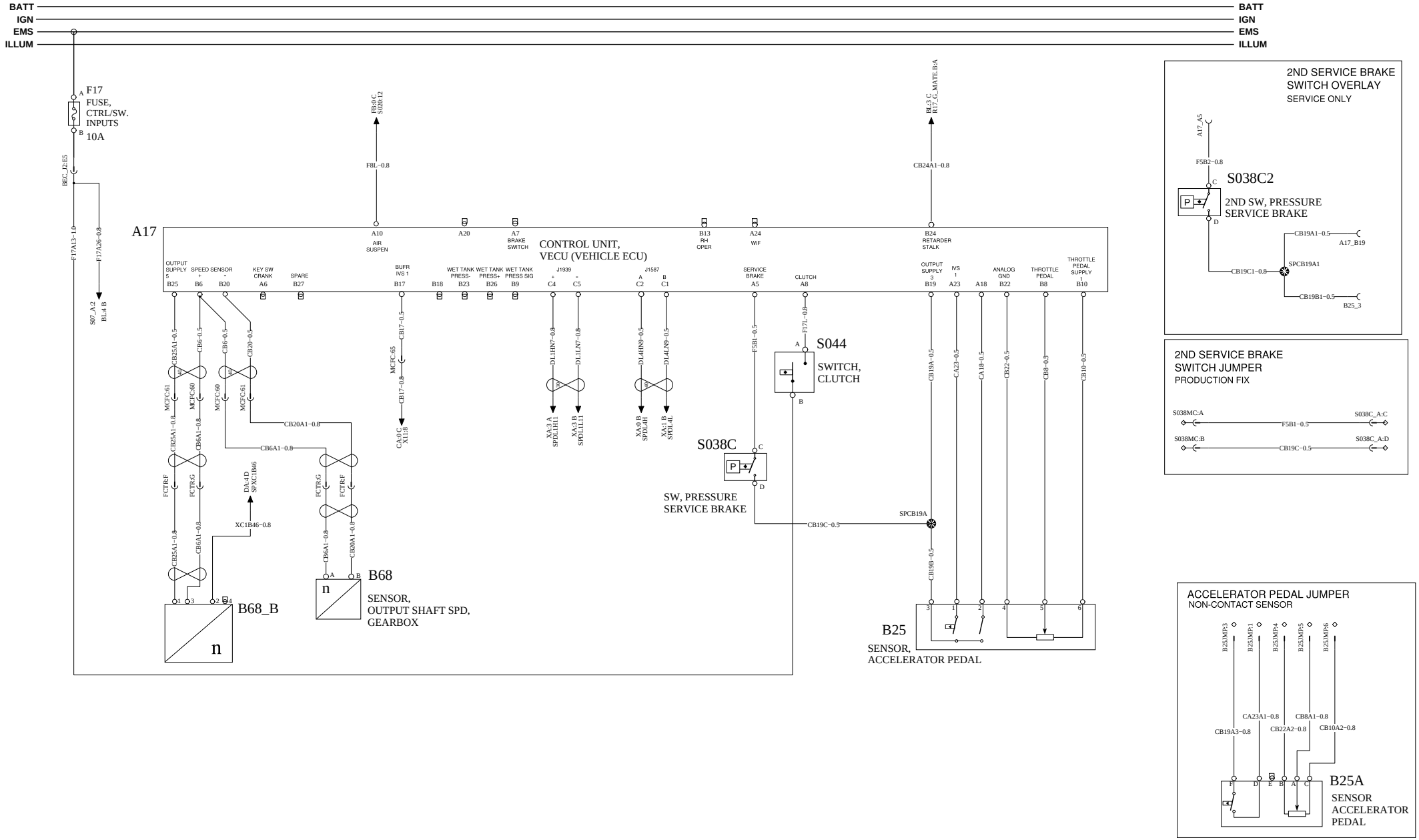

VOLVO Group Trucks Technology	Document title: WIRING DIAGRAM, CONVENTIONAL, 12V MACK, 2013 BP	Document No	Issue	Volume	Page
	Document type: PRODUCT SCHEMATIC	21628497	05	1 (2)	11 (80)

https://truckmanualshub.com/

WIRING DIAGRAM : BC

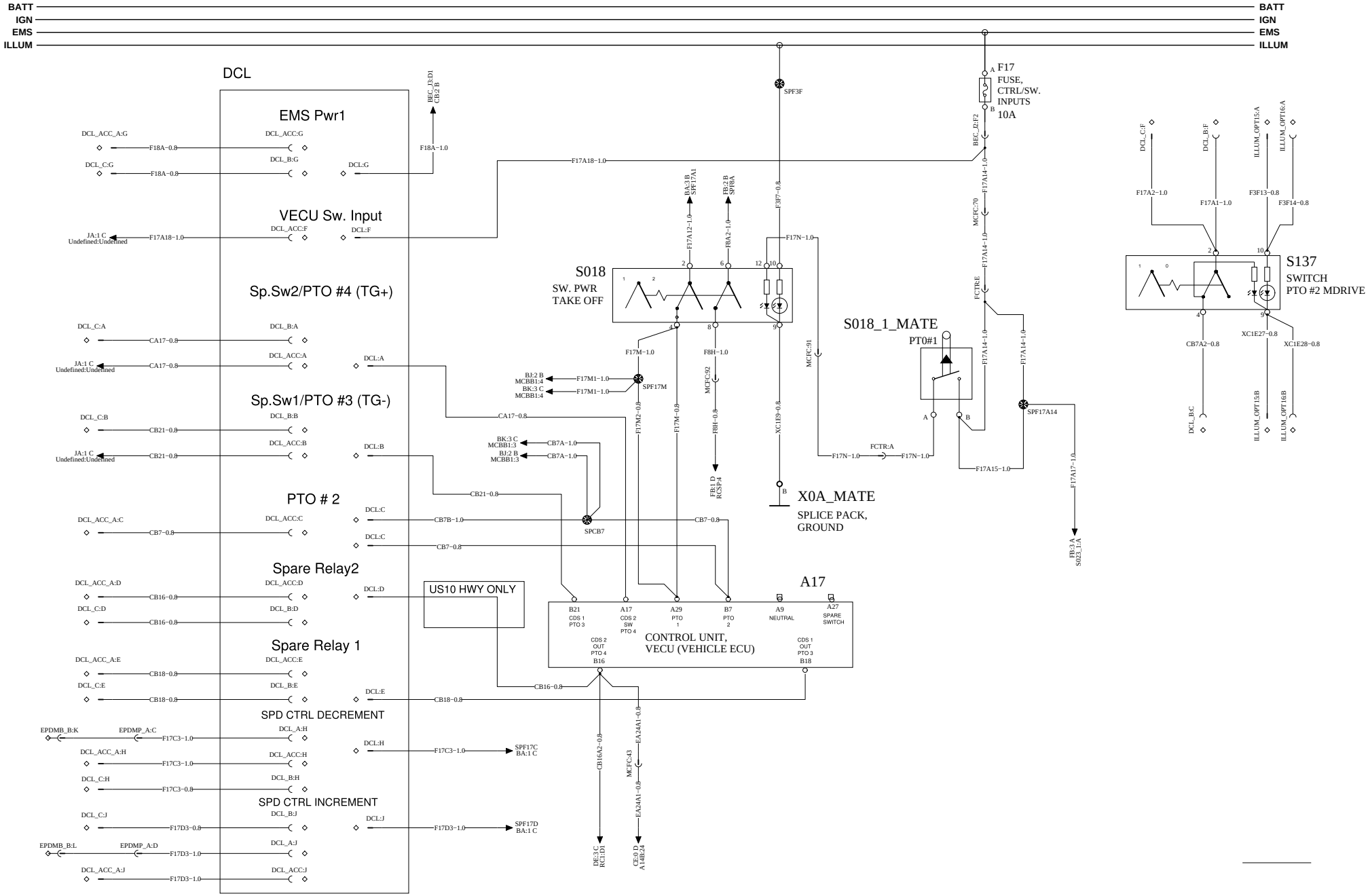

Document title	Document No	Issue	Volume	Page
WIRING DIAGRAM, CONVENTIONAL, 12V MACK, 2013 BP	21628497	05	1 (2)	12 (80)
Document type: PRODUCT SCHEMATIC				

VOLVO Group Trucks Technology

https://truckmanualshub.com/

WIRING DIAGRAM : BD

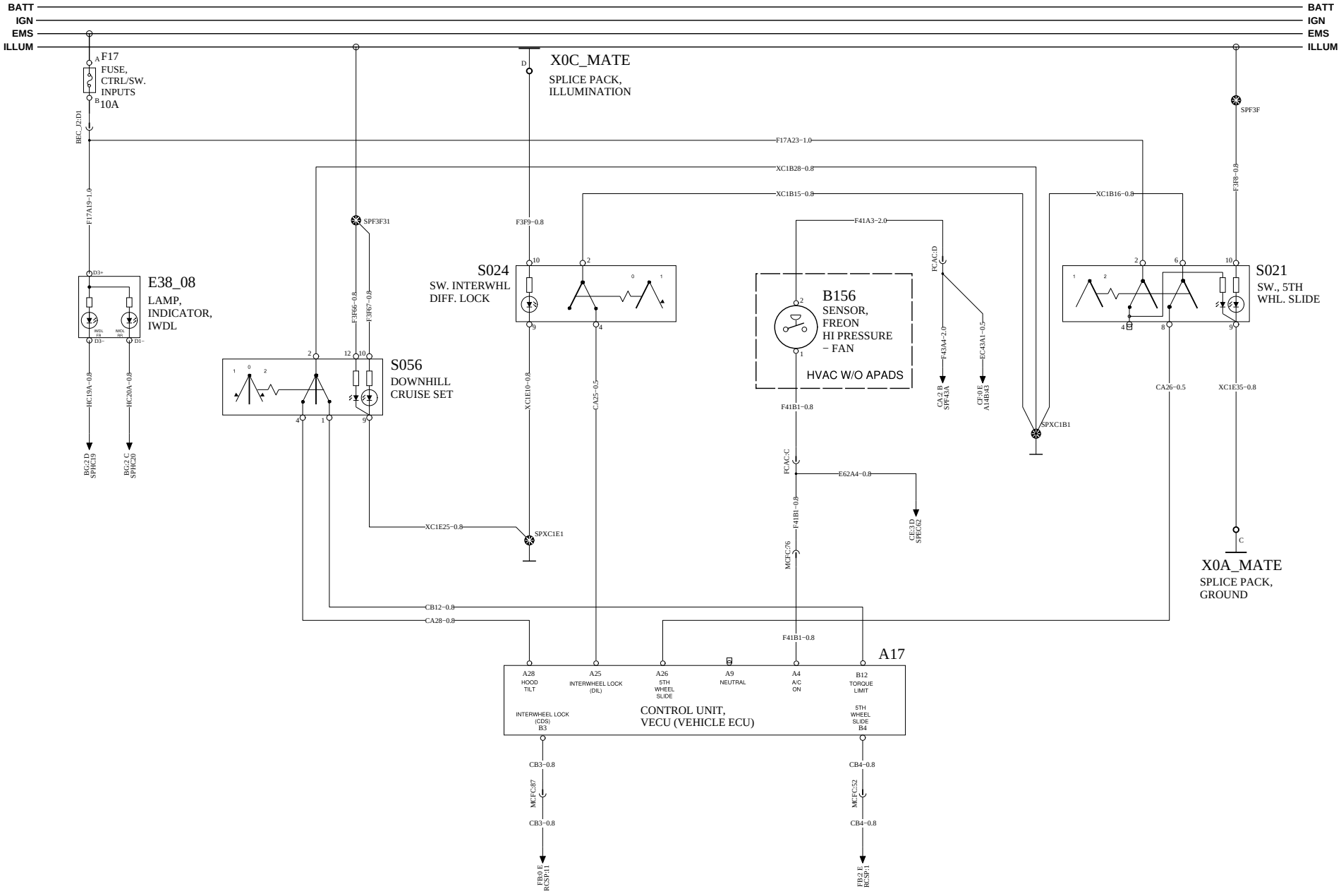

VOLVO Group Trucks Technology	Document title WIRING DIAGRAM, CONVENTIONAL, 12V MACK, 2013 BP Document type PRODUCT SCHEMATIC	Document No 21628497	Issue 05	Volume 1 (2)	Page 13 (80)

https://truckmanualshub.com/

WIRING DIAGRAM : BE

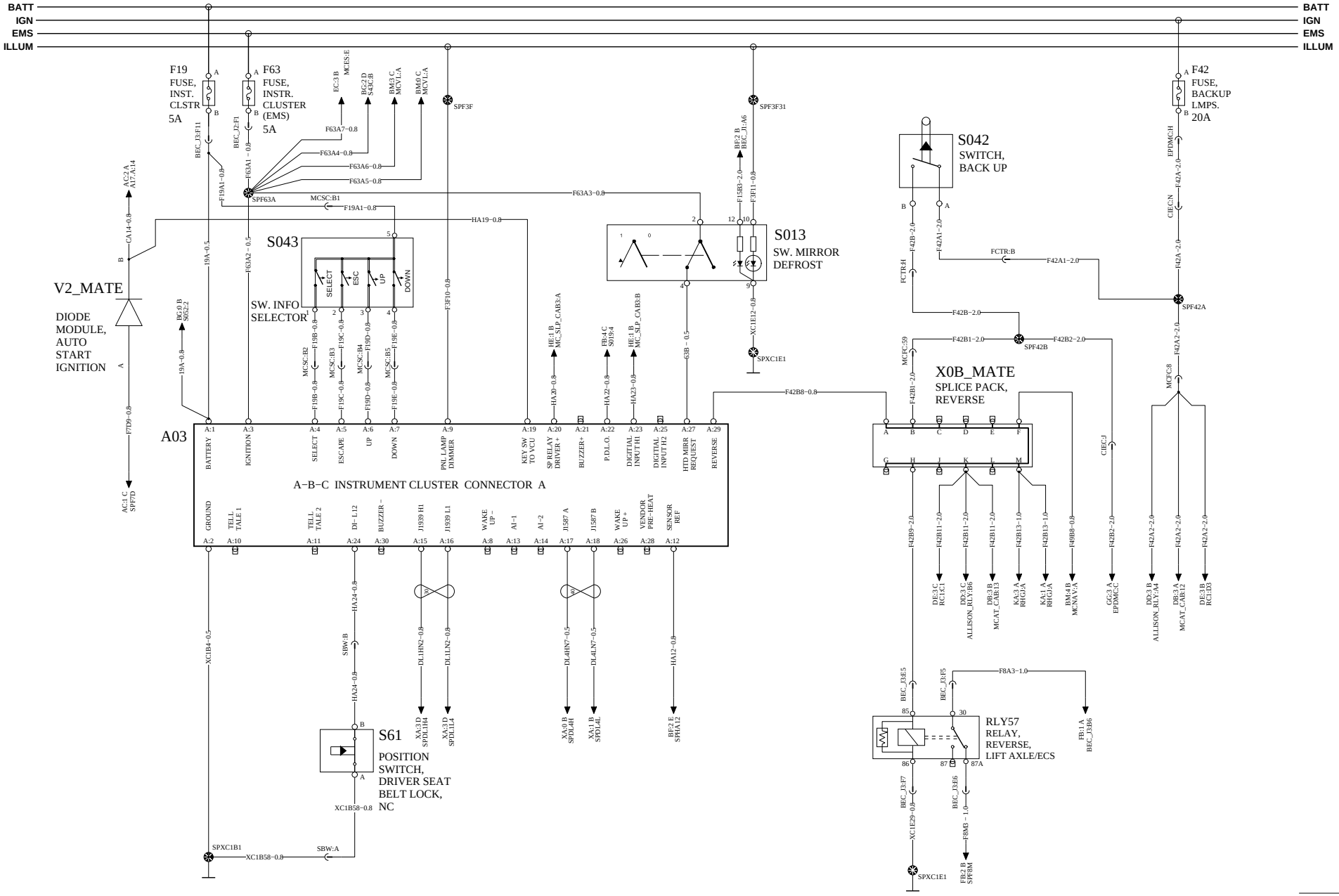

VOLVO Group Trucks Technology	Document title WIRING DIAGRAM, CONVENTIONAL, 12V MACK, 2013 BP Document type PRODUCT SCHEMATIC	Document No 21628497	Issue 05	Volume 1 (2)	Page 14 (80)

https://truckmanualshub.com/

WIRING DIAGRAM : BF

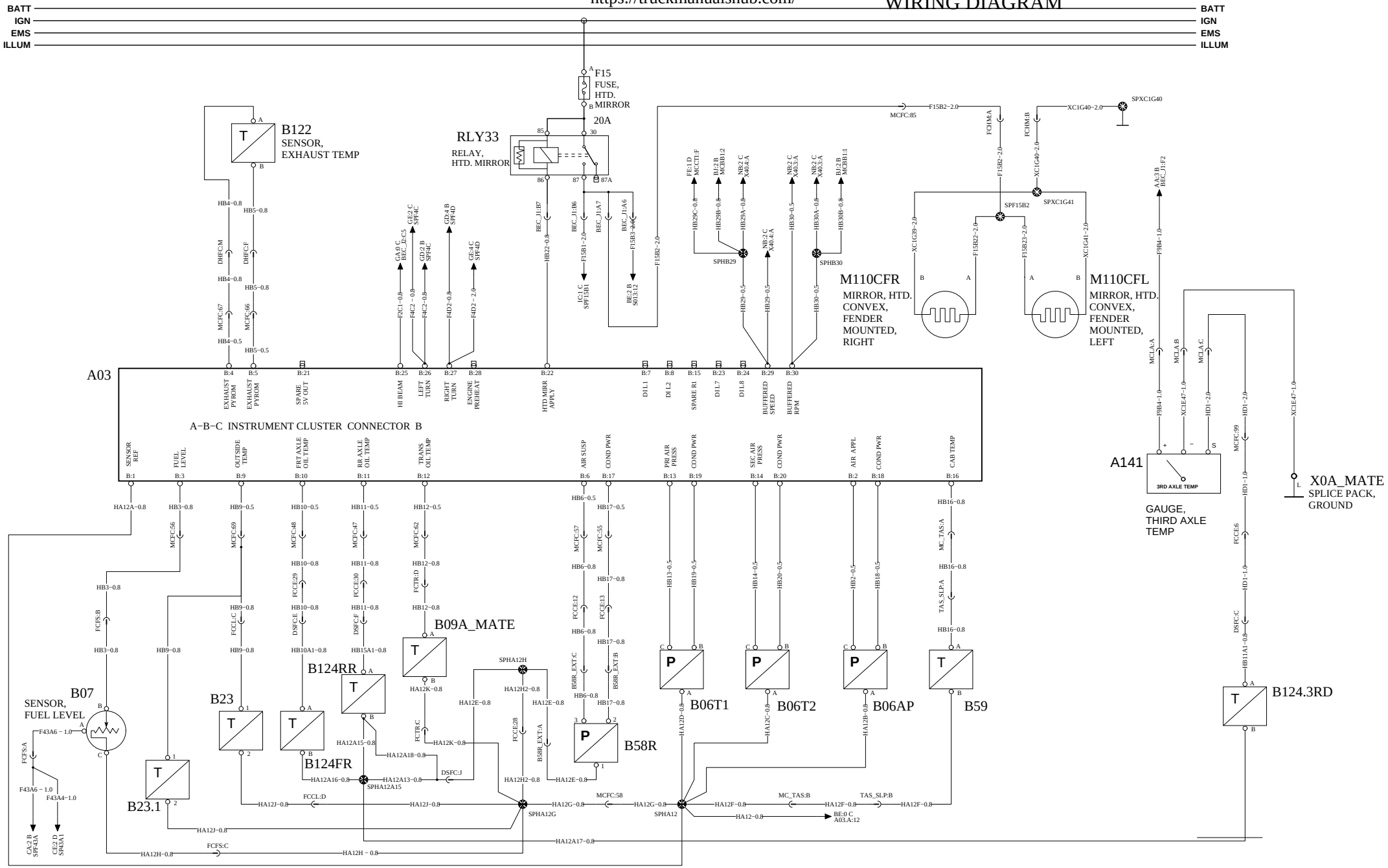

Document title	Document No	Issue	Volume	Page
WIRING DIAGRAM, CONVENTIONAL, 12V MACK, 2013 BP	21628497	05	1 (2)	15 (80)
Document type: PRODUCT SCHEMATIC				

VOLVO Group Trucks Technology

https://truckmanualshub.com/

WIRING DIAGRAM : BG

INSTRUMENT CLUSTER 3/3

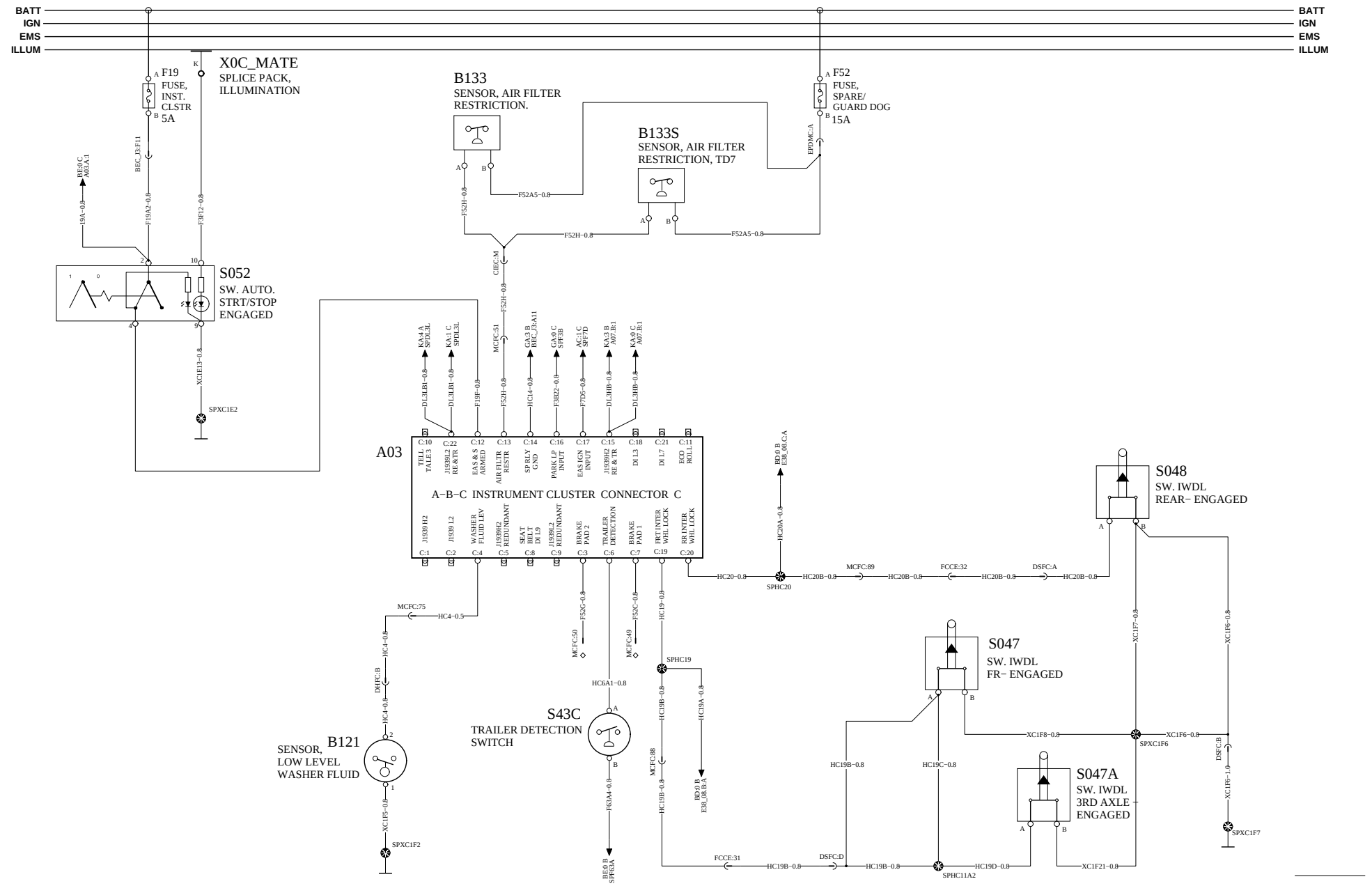

VOLVO Group Trucks Technology	Document title WIRING DIAGRAM, CONVENTIONAL, 12V MACK, 2013 BP Document type PRODUCT SCHEMATIC	Document No 21628497	Issue 05	Volume 1 (2)	Page 16 (80)

BATT — BATT
IGN — IGN
EMS — EMS
ILLUM — ILLUM

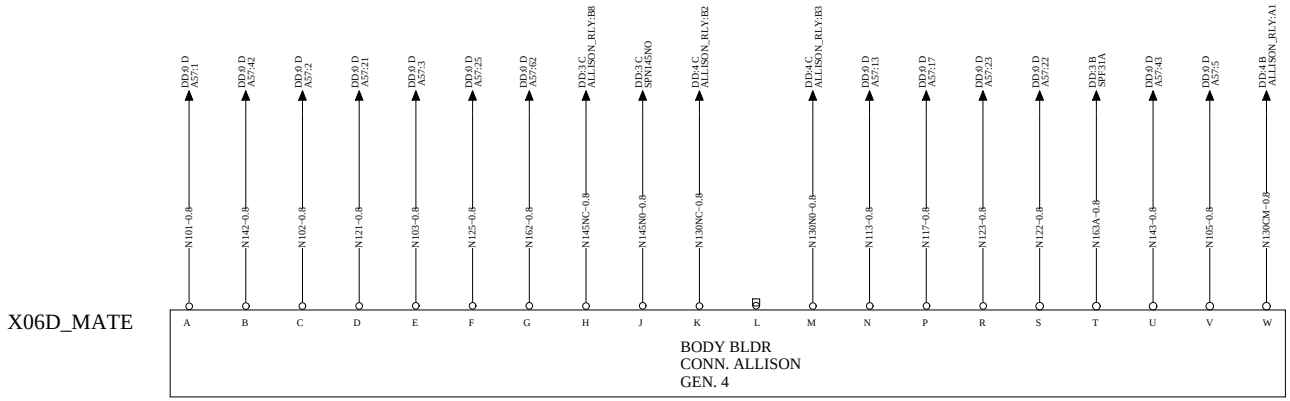

https://truckmanualshub.com/

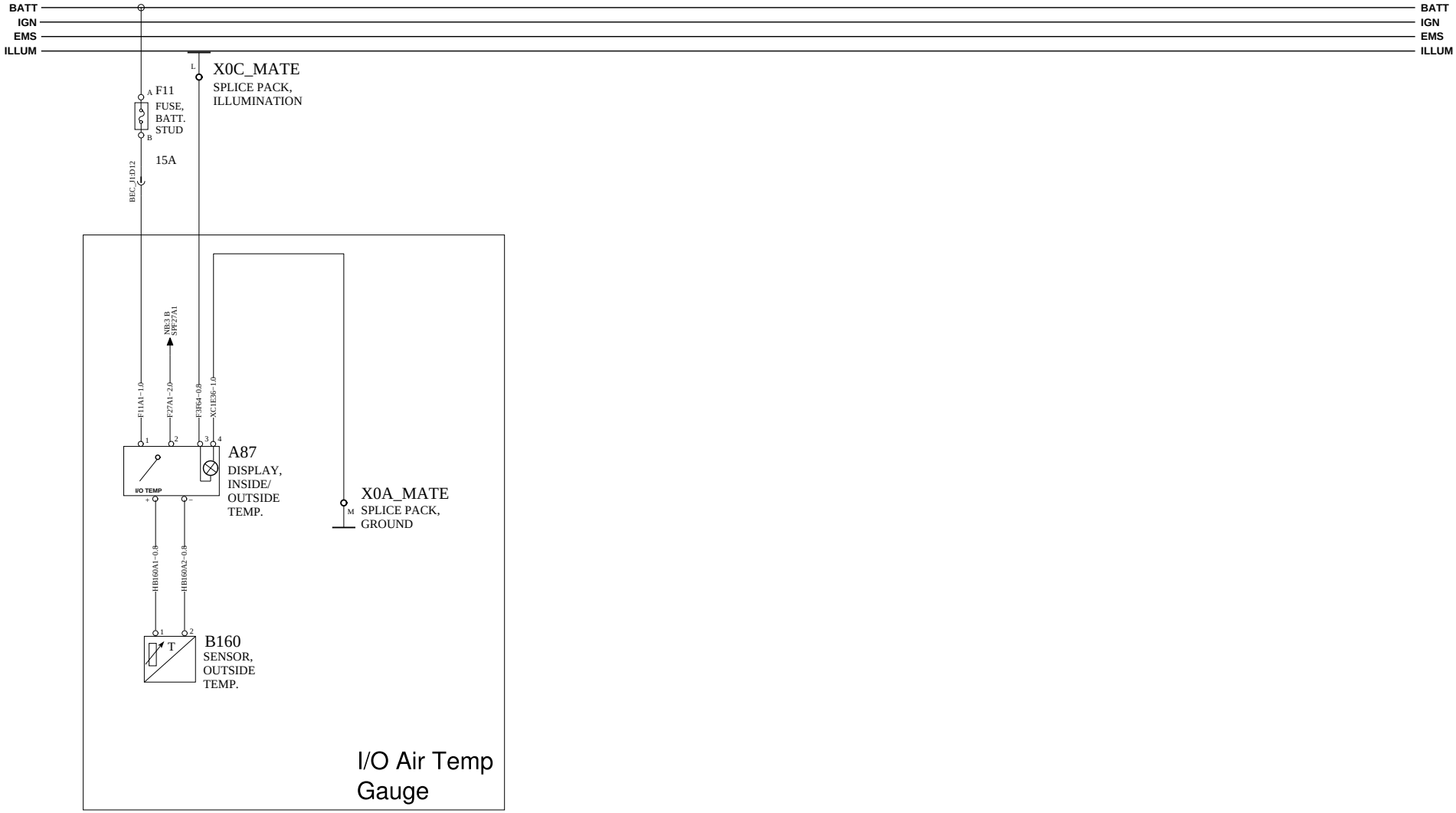

https://truckmanualshub.com/

WIRING DIAGRAM : BJ

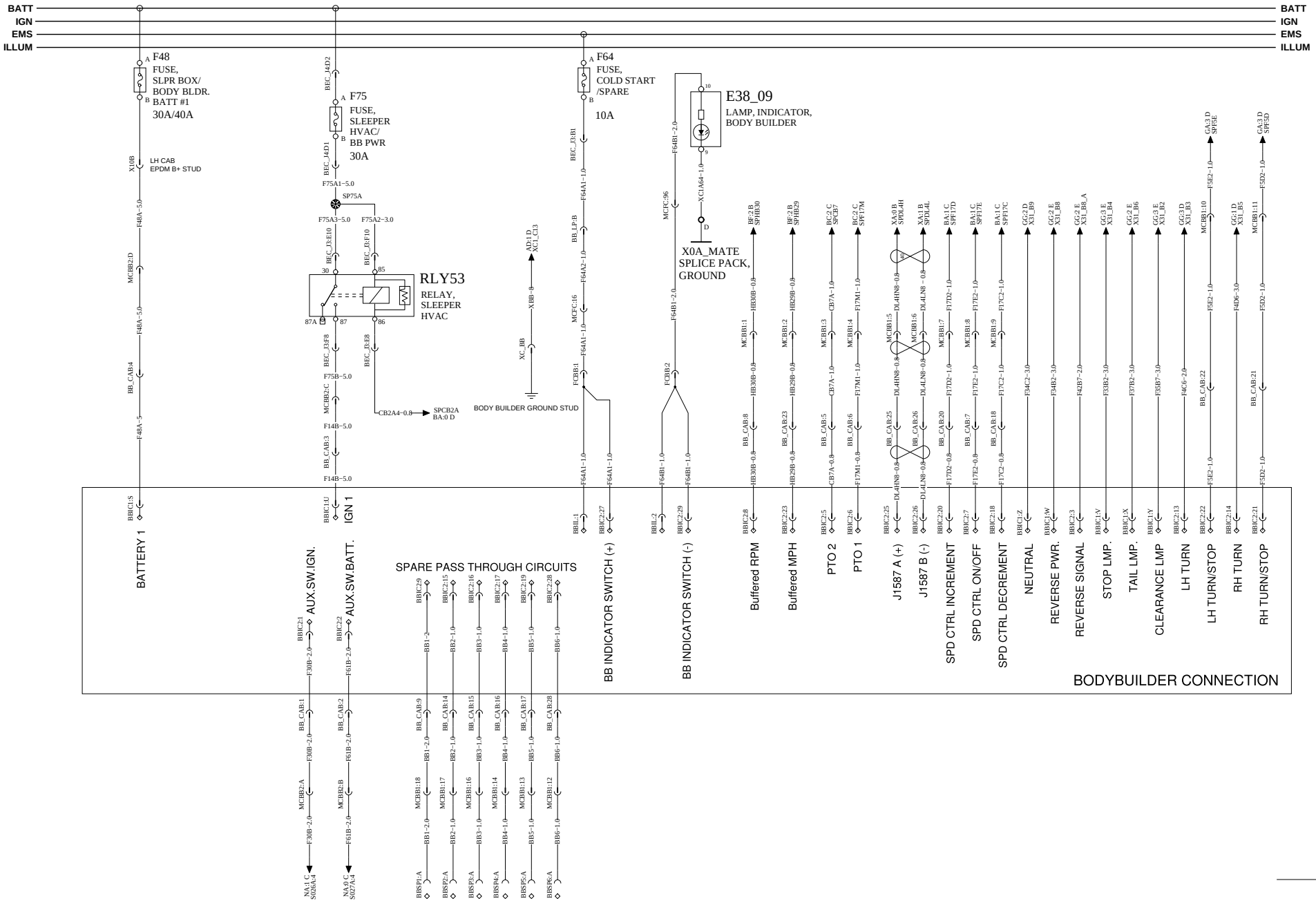

VOLVO Group Trucks Technology	Document title WIRING DIAGRAM, CONVENTIONAL, 12V MACK, 2013 BP Document type PRODUCT SCHEMATIC	Document No 21628497	Issue 05	Volume 1 (2)	Page 19 (80)

https://truckmanualshub.com/

WIRING DIAGRAM : BK

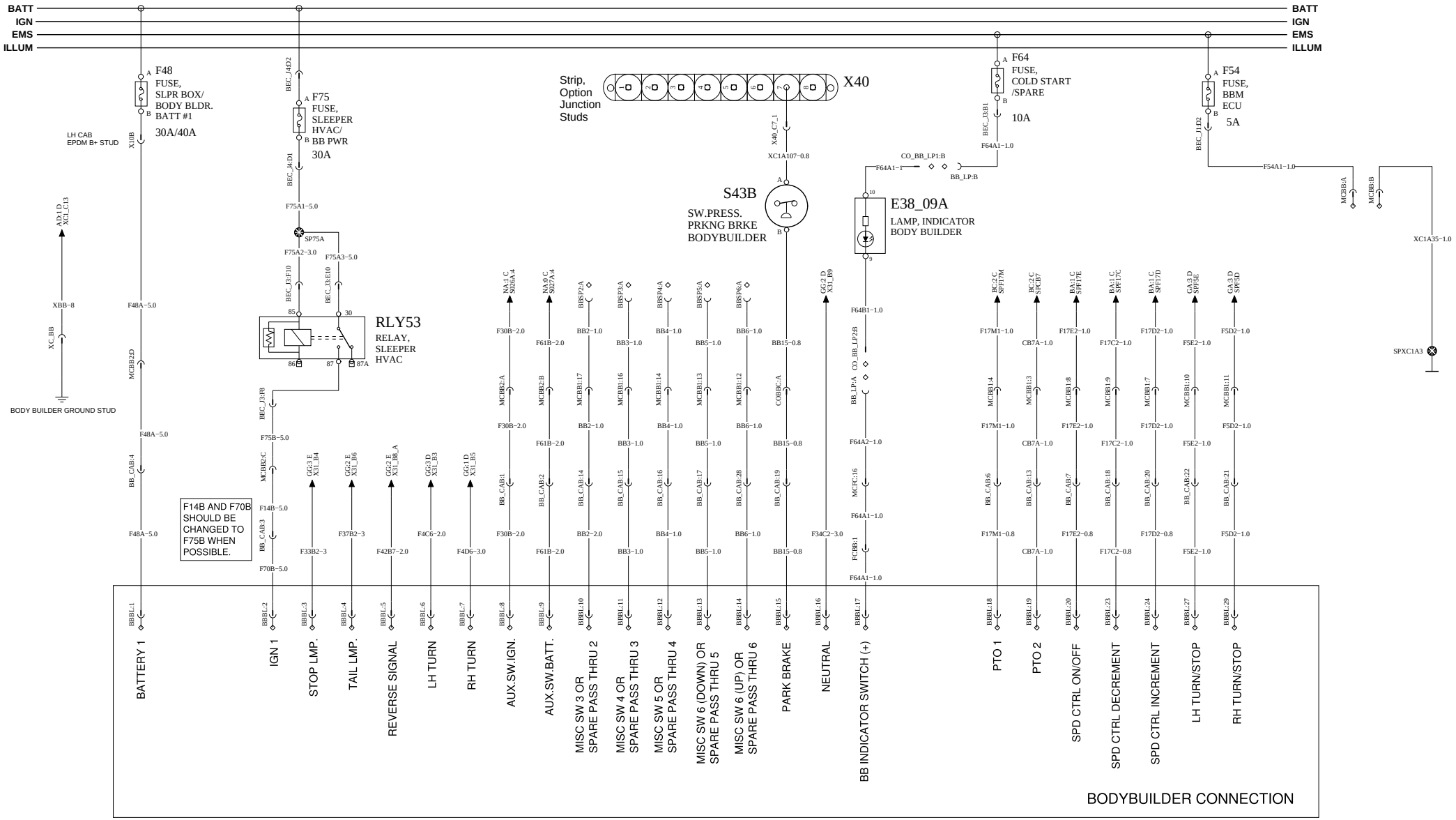

VOLVO Group Trucks Technology	Document title: WIRING DIAGRAM, CONVENTIONAL, 12V MACK, 2013 BP	Document No	Issue	Volume	Page
	Document type: PRODUCT SCHEMATIC	21628497	05	1 (2)	20 (80)

https://truckmanualshub.com/

ENGINE BRAKE CONTROL − M−DRIVE

WIRING DIAGRAM : BL

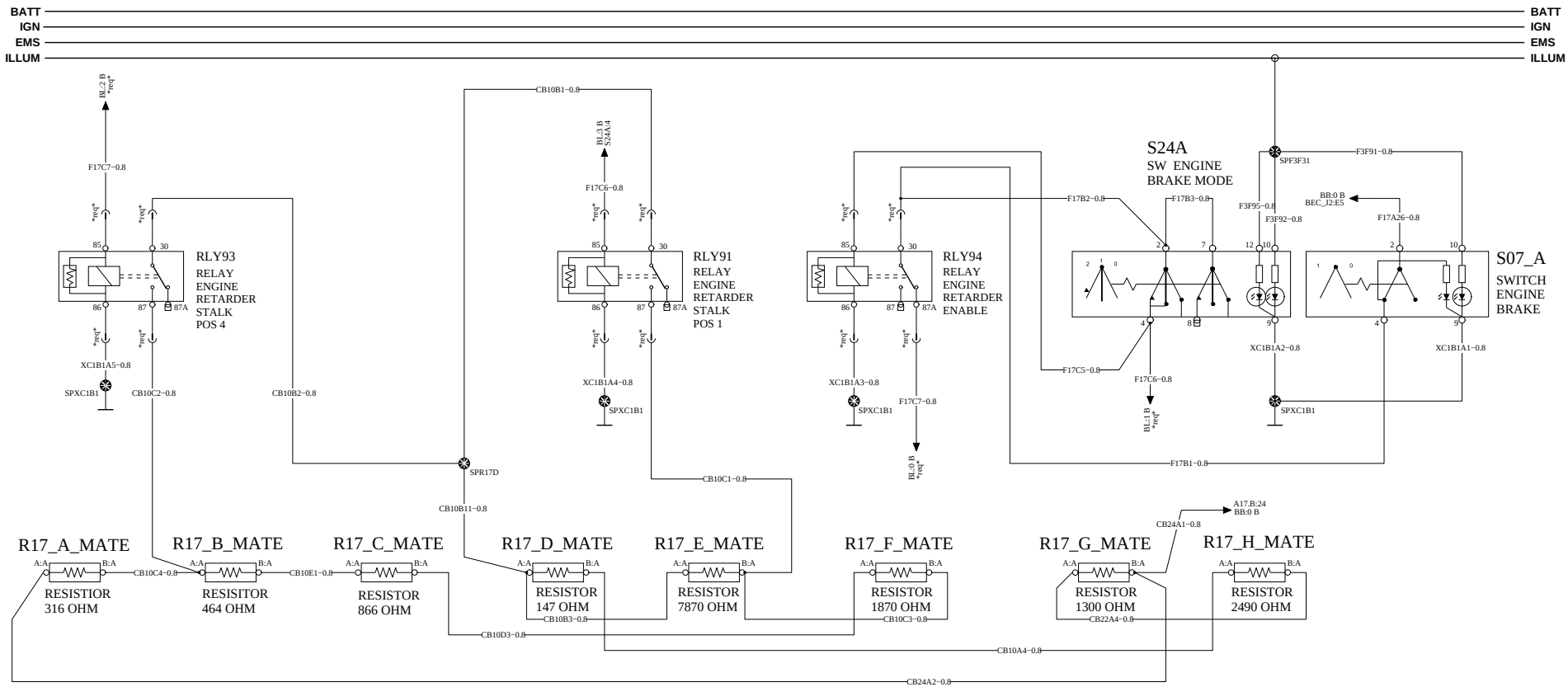

SHEET TO BE DELETED

VOLVO Group Trucks Technology	Document title WIRING DIAGRAM, CONVENTIONAL, 12V MACK, 2013 BP Document type PRODUCT SCHEMATIC	Document No 21628497	Issue 05	Volume 1 (2)	Page 21 (80)

https://truckmanualshub.com/

WIRING DIAGRAM : BM

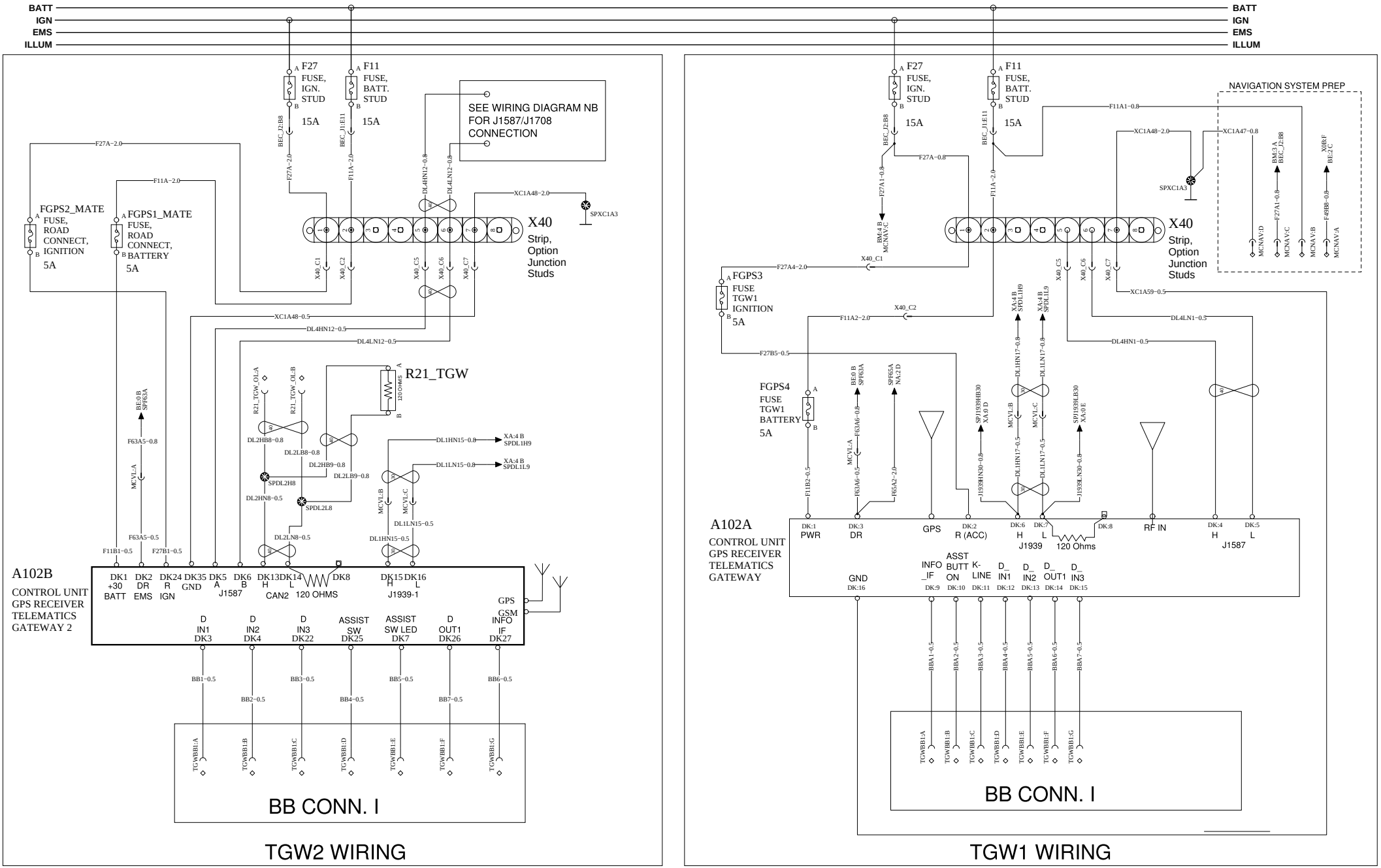

VOLVO Group Trucks Technology	Document title: WIRING DIAGRAM, CONVENTIONAL, 12V MACK, 2013 BP	Document No	Issue	Volume	Page
	Document type: PRODUCT SCHEMATIC	21628497	05	1 (2)	22 (80)

https://truckmanualshub.com/

WIRING DIAGRAM: BN

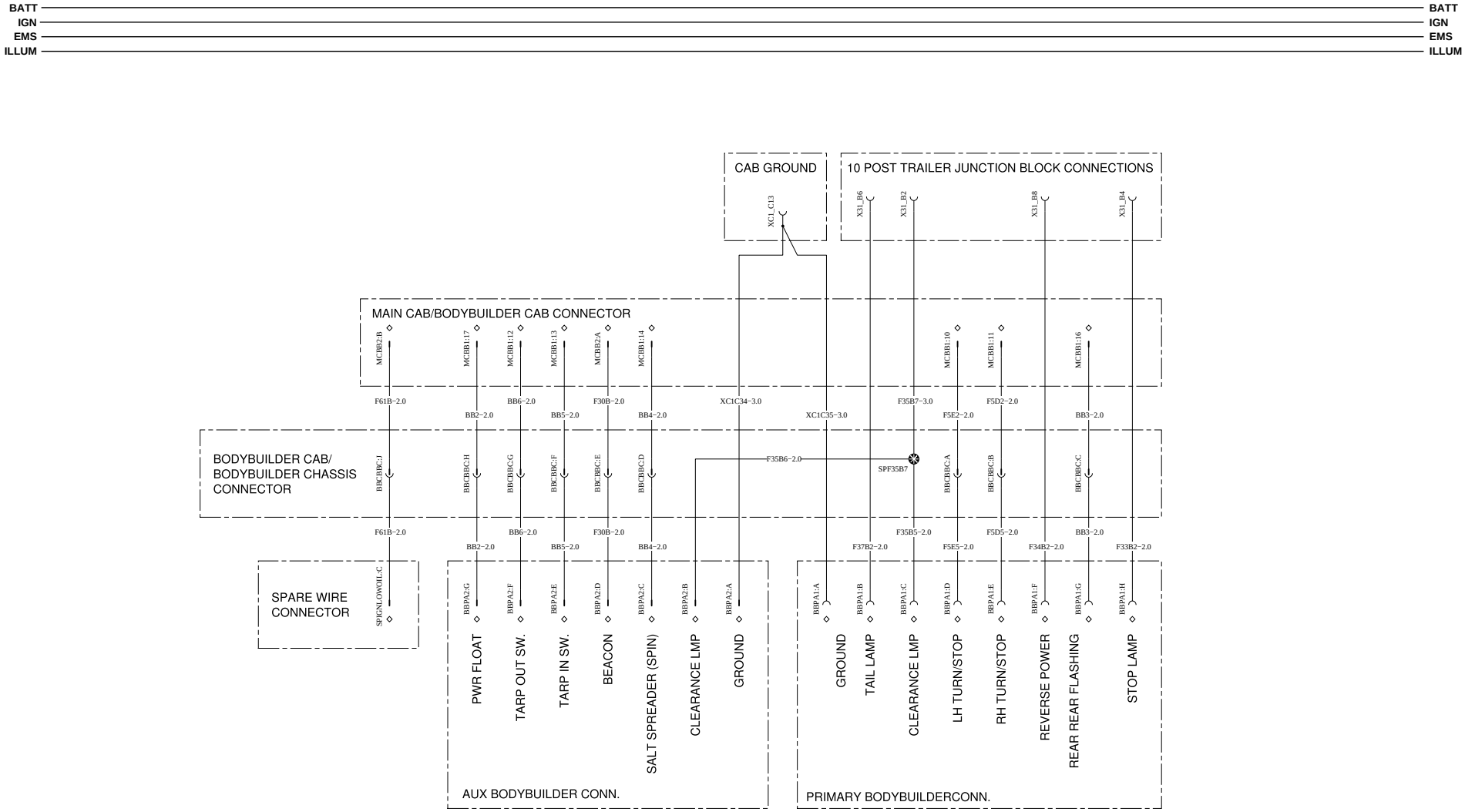

VOLVO Group Trucks Technology	Document title WIRING DIAGRAM, CONVENTIONAL, 12V MACK, 2013 BP Document type PRODUCT SCHEMATIC	Document No 21628497	Issue 05	Volume 1 (2)	Page 23 (80)

https://truckmanualshub.com/

WIRING DIAGRAM : BU

BATT
IGN
EMS
ILLUM

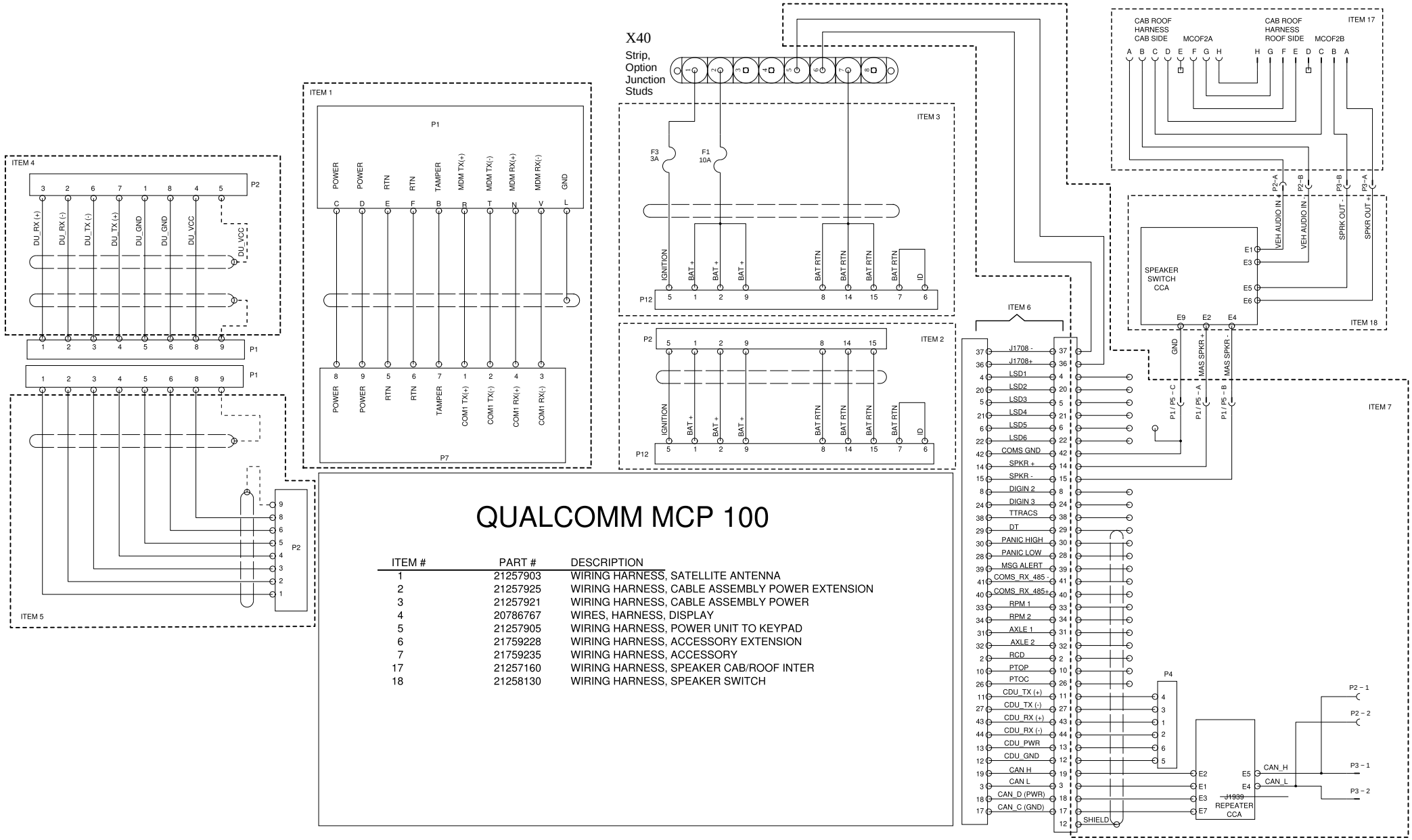

QUALCOMM MCP 100

ITEM #	PART #	DESCRIPTION
1	21257903	WIRING HARNESS, SATELLITE ANTENNA
2	21257925	WIRING HARNESS, CABLE ASSEMBLY POWER EXTENSION
3	21257921	WIRING HARNESS, CABLE ASSEMBLY POWER
4	20786767	WIRES, HARNESS, DISPLAY
5	21257905	WIRING HARNESS, POWER UNIT TO KEYPAD
6	21759228	WIRING HARNESS, ACCESSORY EXTENSION
7	21759235	WIRING HARNESS, ACCESSORY
17	21257160	WIRING HARNESS, SPEAKER CAB/ROOF INTER
18	21258130	WIRING HARNESS, SPEAKER SWITCH

https://truckmanualshub.com/

QUALCOMM MCP 110 OR 200 W/SLEEPER

WIRING DIAGRAM : BV

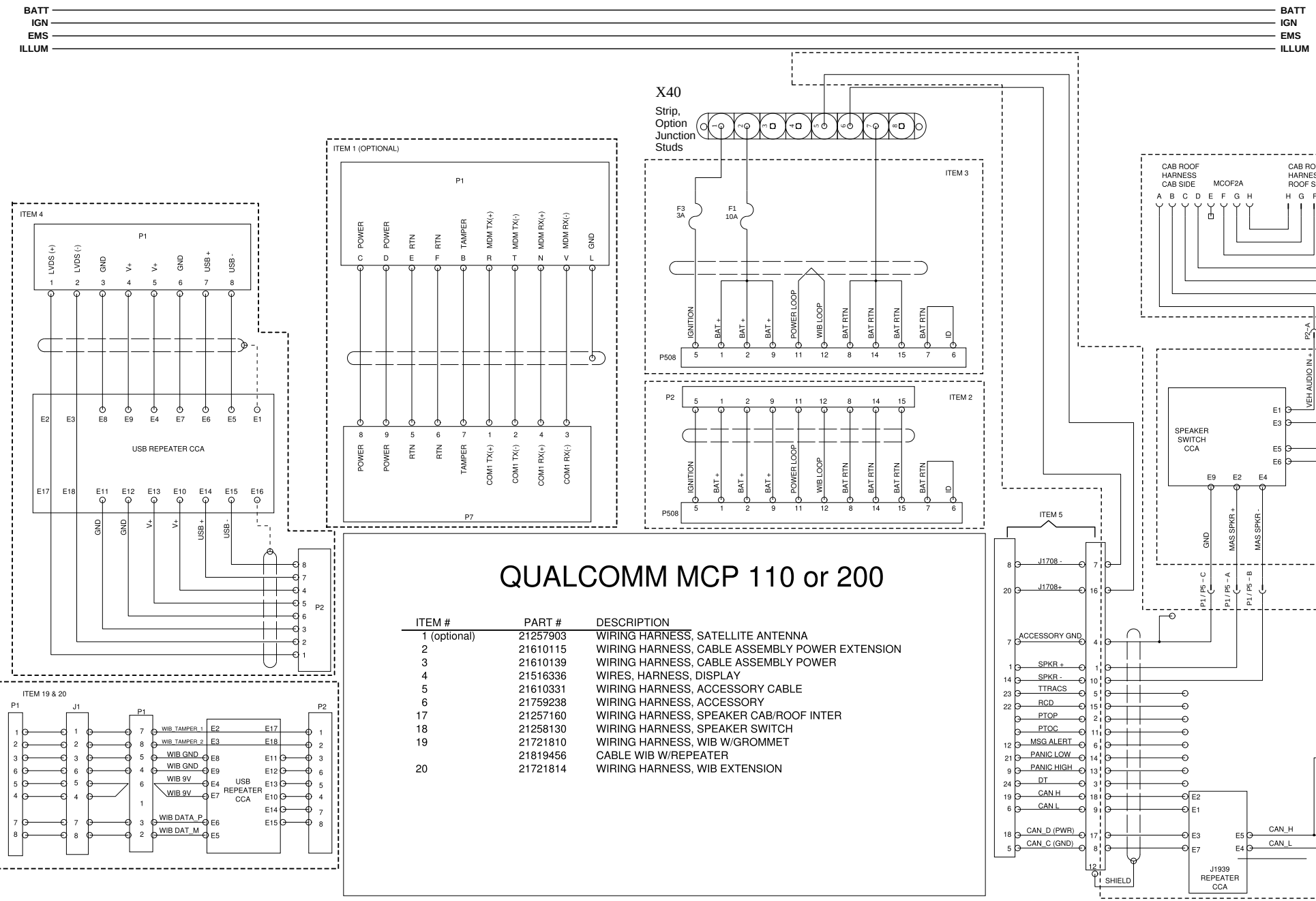

QUALCOMM MCP 110 or 200

ITEM #	PART #	DESCRIPTION
1 (optional)	21257903	WIRING HARNESS, SATELLITE ANTENNA
2	21610115	WIRING HARNESS, CABLE ASSEMBLY POWER EXTENSION
3	21610139	WIRING HARNESS, CABLE ASSEMBLY POWER
4	21516336	WIRES, HARNESS, DISPLAY
5	21610331	WIRING HARNESS, ACCESSORY CABLE
6	21759238	WIRING HARNESS, ACCESSORY
17	21257160	WIRING HARNESS, SPEAKER CAB/ROOF INTER
18	21258130	WIRING HARNESS, SPEAKER SWITCH
19	21721810	WIRING HARNESS, WIB W/GROMMET
	21819456	CABLE WIB W/REPEATER
20	21721814	WIRING HARNESS, WIB EXTENSION

https://truckmanualshub.com/

QUALCOMM MCP 100 W/DAYCAB

WIRING DIAGRAM : BW

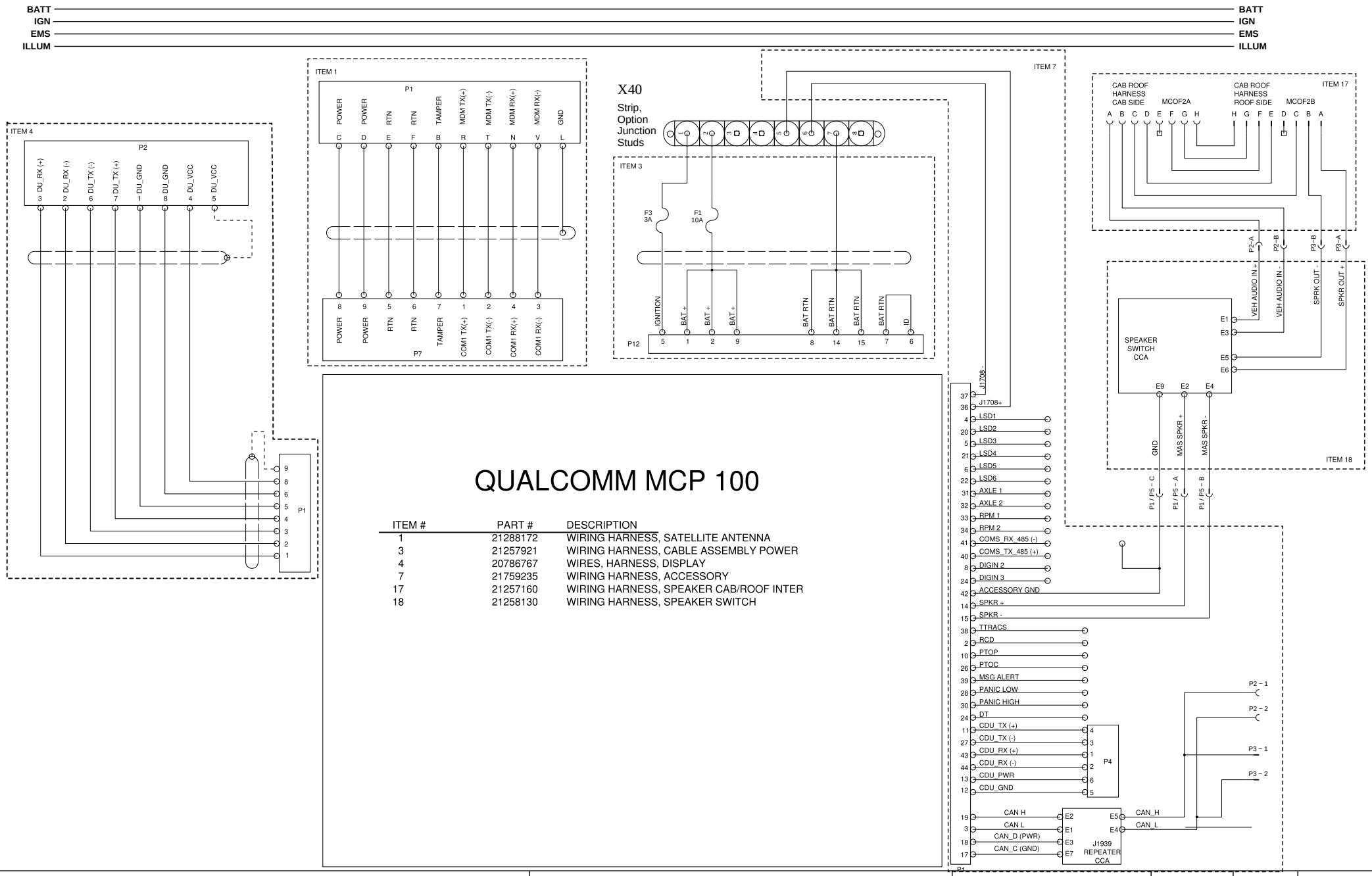

QUALCOMM MCP 100

ITEM #	PART #	DESCRIPTION
1	21288172	WIRING HARNESS, SATELLITE ANTENNA
3	21257921	WIRING HARNESS, CABLE ASSEMBLY POWER
4	20786767	WIRES, HARNESS, DISPLAY
7	21759235	WIRING HARNESS, ACCESSORY
17	21257160	WIRING HARNESS, SPEAKER CAB/ROOF INTER
18	21258130	WIRING HARNESS, SPEAKER SWITCH

VOLVO Group Trucks Technology	Document title: WIRING DIAGRAM, CONVENTIONAL, 12V MACK, 2013 BP Document type: PRODUCT SCHEMATIC	Document No: 21628497	Issue: 05	Volume: 1 (2)	Page: 26 (80)

https://truckmanualshub.com/

WIRING DIAGRAM : BX

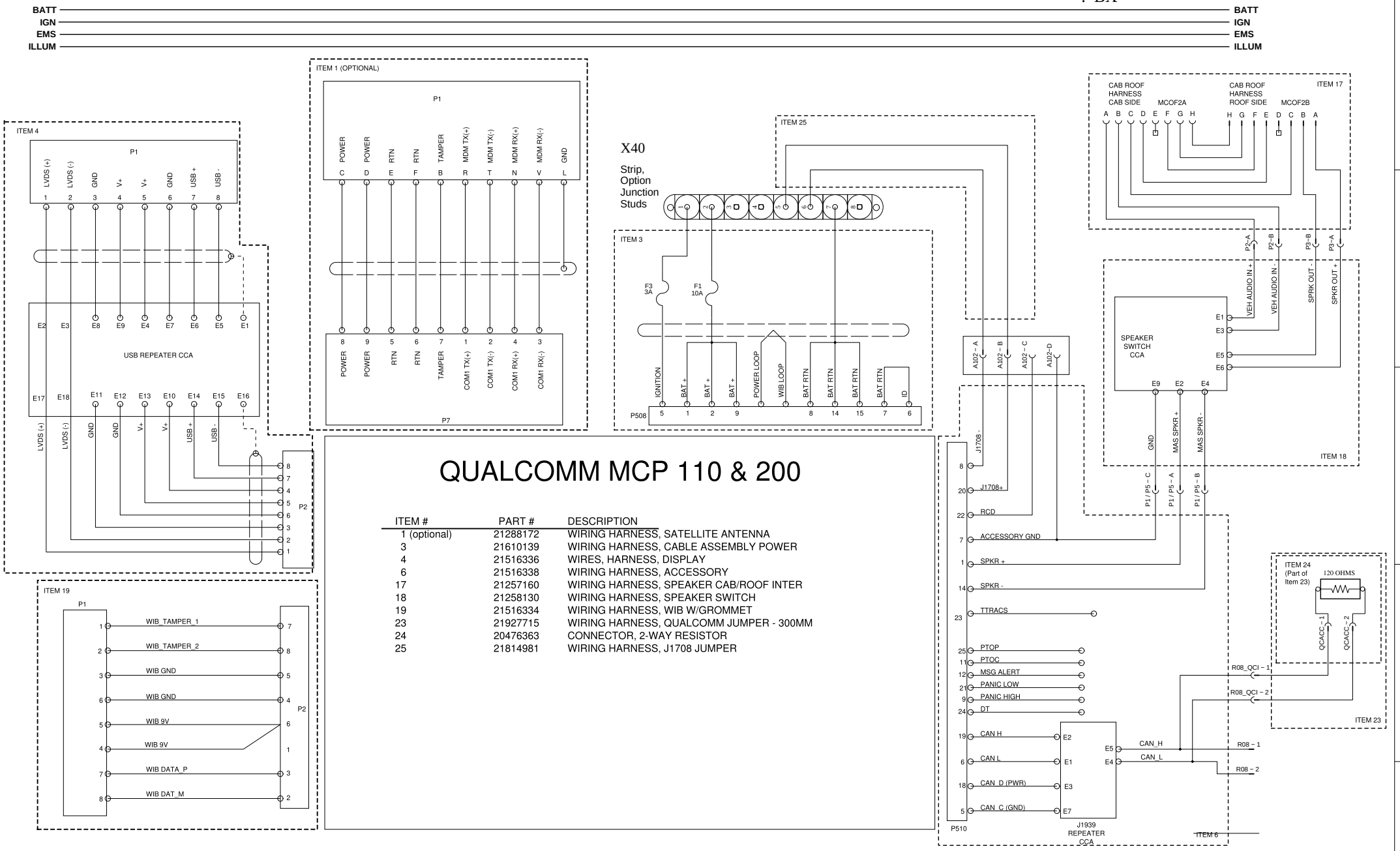

QUALCOMM MCP 110 & 200

ITEM #	PART #	DESCRIPTION
1 (optional)	21288172	WIRING HARNESS, SATELLITE ANTENNA
3	21610139	WIRING HARNESS, CABLE ASSEMBLY POWER
4	21516336	WIRES, HARNESS, DISPLAY
6	21516338	WIRING HARNESS, ACCESSORY
17	21257160	WIRING HARNESS, SPEAKER CAB/ROOF INTER
18	21258130	WIRING HARNESS, SPEAKER SWITCH
19	21516334	WIRING HARNESS, WIB W/GROMMET
23	21927715	WIRING HARNESS, QUALCOMM JUMPER - 300MM
24	20476363	CONNECTOR, 2-WAY RESISTOR
25	21814981	WIRING HARNESS, J1708 JUMPER

https://truckmanualshub.com/

WIRING DIAGRAM : CA

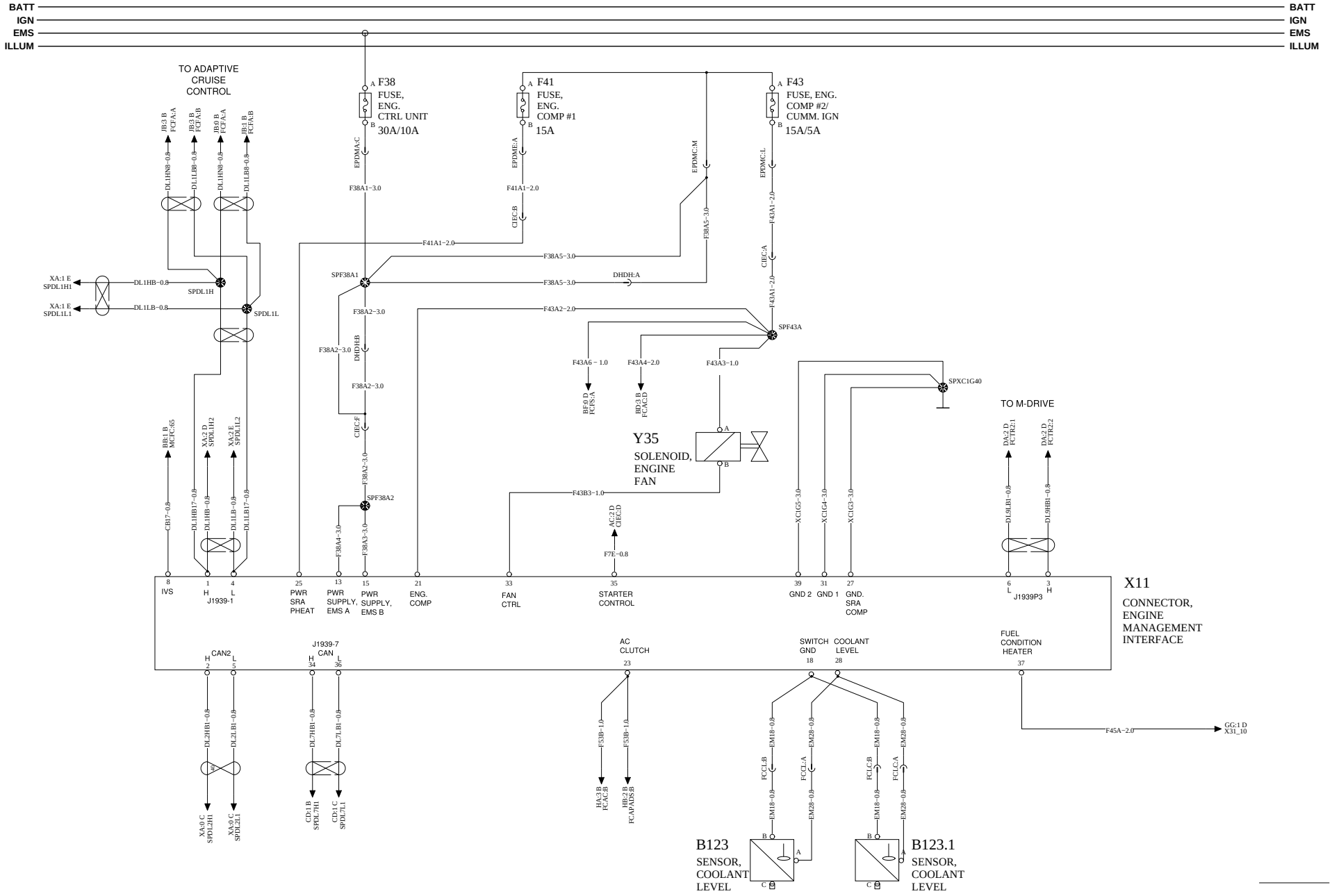

VOLVO Group Trucks Technology	Document title: WIRING DIAGRAM, CONVENTIONAL, 12V MACK, 2013 BP	Document No	Issue	Volume	Page
	Document type: PRODUCT SCHEMATIC	21628497	05	1 (2)	28 (80)

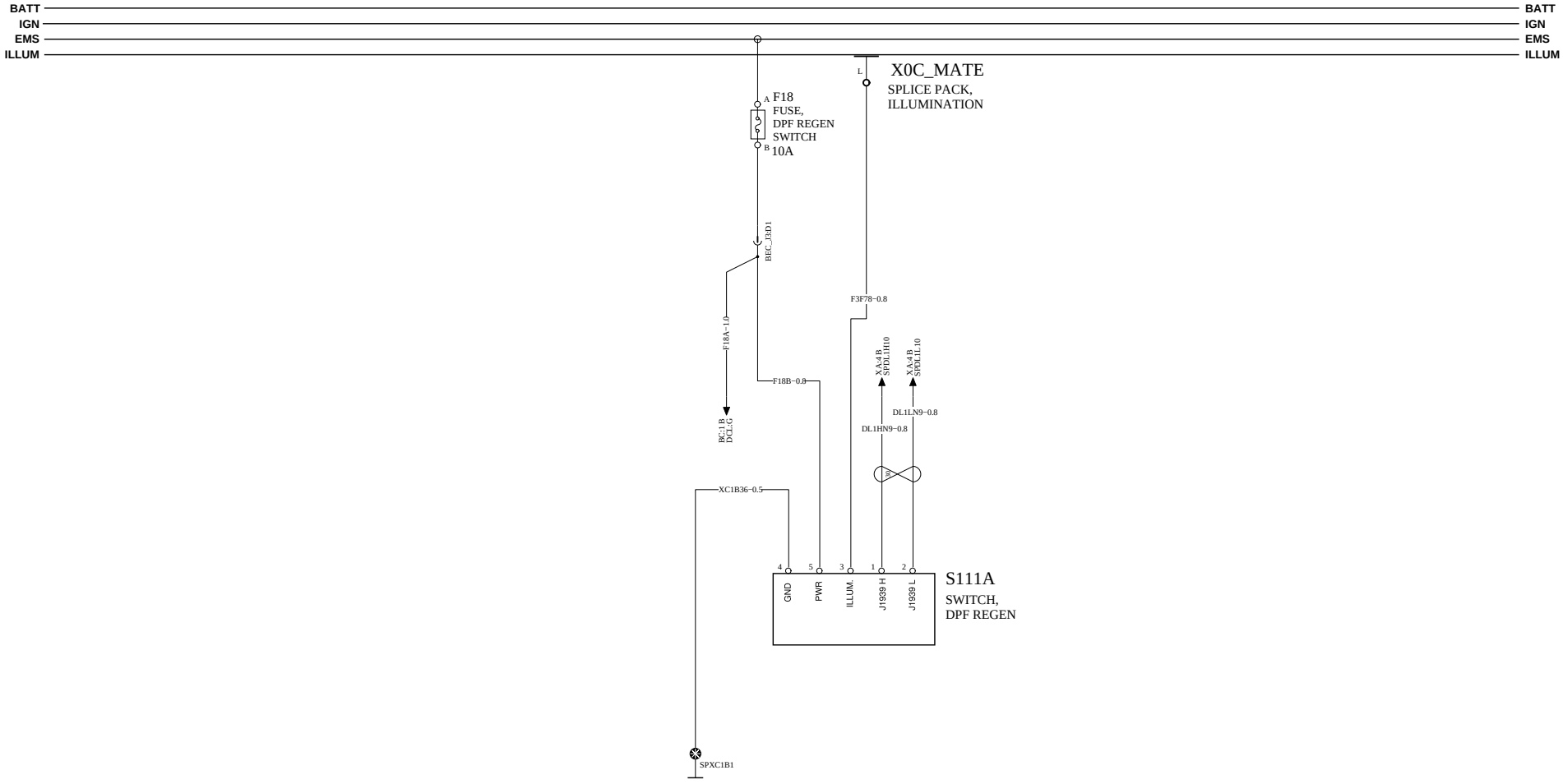
BATT
IGN
EMS
ILLUM
X0C_MATE
SPLICE PACK,
ILLUMINATION
F18
FUSE,
DPF REGEN
SWITCH
10A
BFC_J3JD1
F3F78−0.8
F18A−1.0
F18B−0.8
XA4B
SPDLH10
XA4B
SPDLL10
DL1LN9−0.8
DL1HN9−0.8
BC:1B
DCL:G
XC1B36−0.5
S111A
SWITCH,
DPF REGEN
GND
PWR
ILLUM.
J1939 H
J1939 L
SPXC1B1

https://truckmanualshub.com/

WIRING DIAGRAM : CC

BATT
IGN
EMS
ILLUM

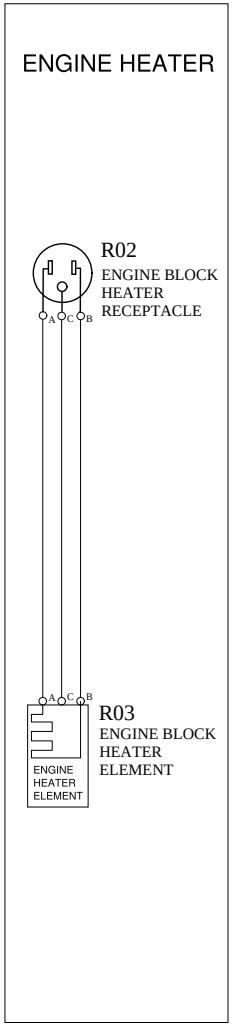

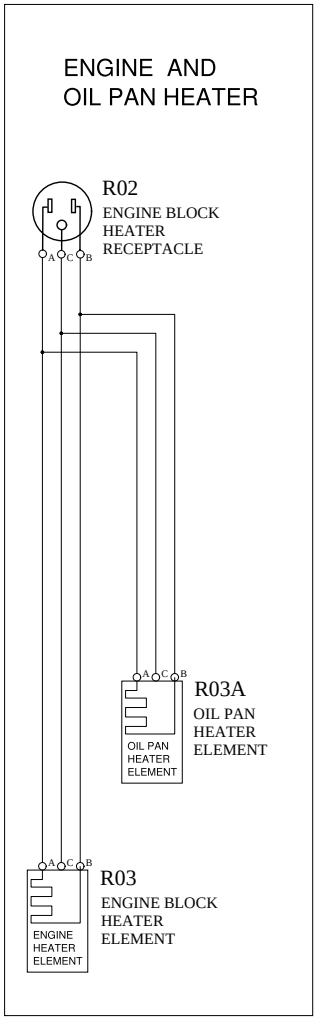

https://truckmanualshub.com/

WIRING DIAGRAM : CD

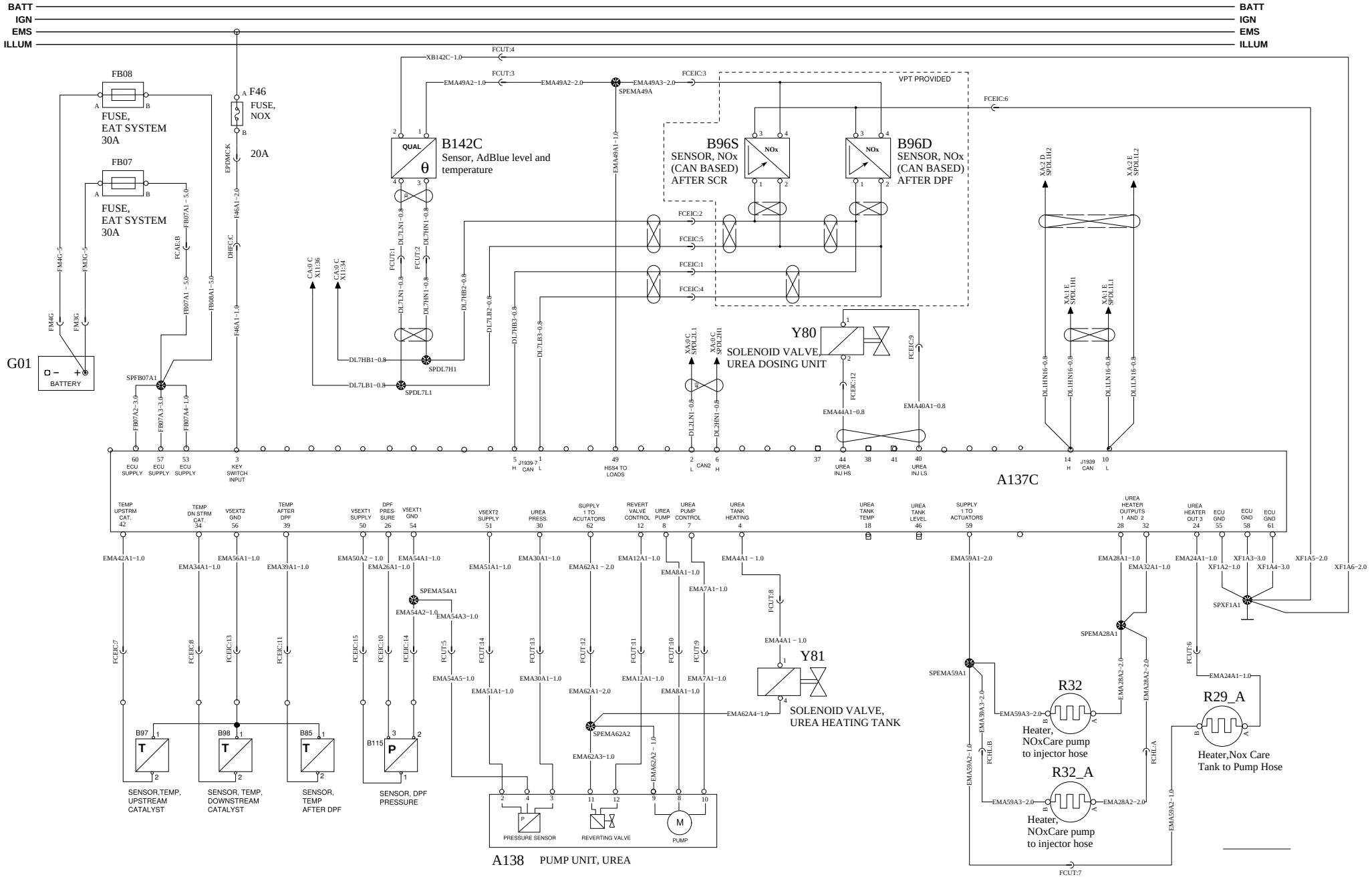

VOLVO Group Trucks Technology	Document title: WIRING DIAGRAM, CONVENTIONAL, 12V MACK, 2013 BP Document type: PRODUCT SCHEMATIC	Document No: 21628497	Issue: 05	Volume: 1 (2)	Page: 31 (80)

https://truckmanualshub.com/

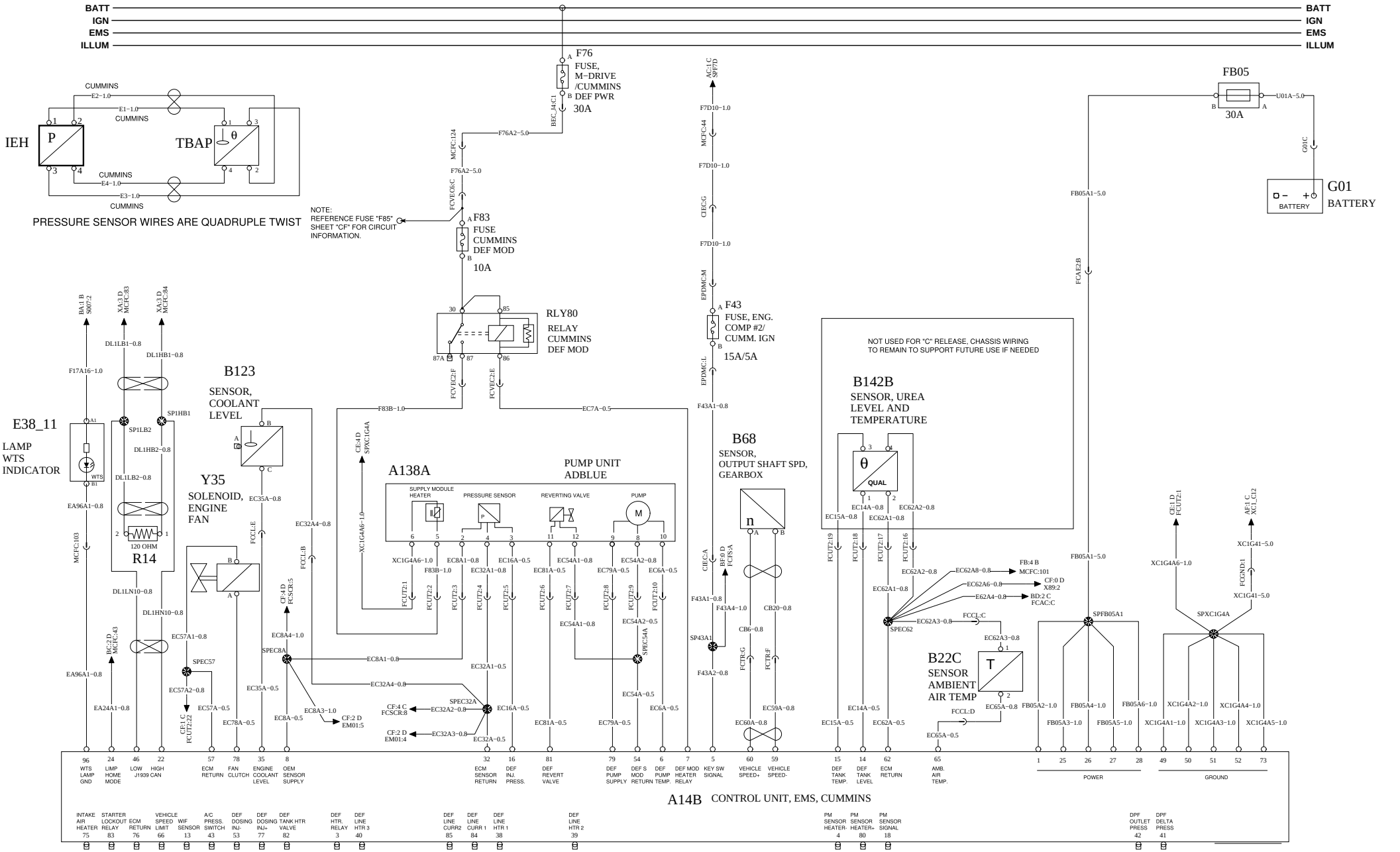

VOLVO Group Trucks Technology	Document title: WIRING DIAGRAM, CONVENTIONAL, 12V MACK, 2013 BP Document type: PRODUCT SCHEMATIC	Document No: 21628497	Issue: 05	Volume: 1 (2)	Page: 32 (80)

https://truckmanualshub.com/

ENGINE CONTROL ISL US13 2/2

WIRING DIAGRAM: CF

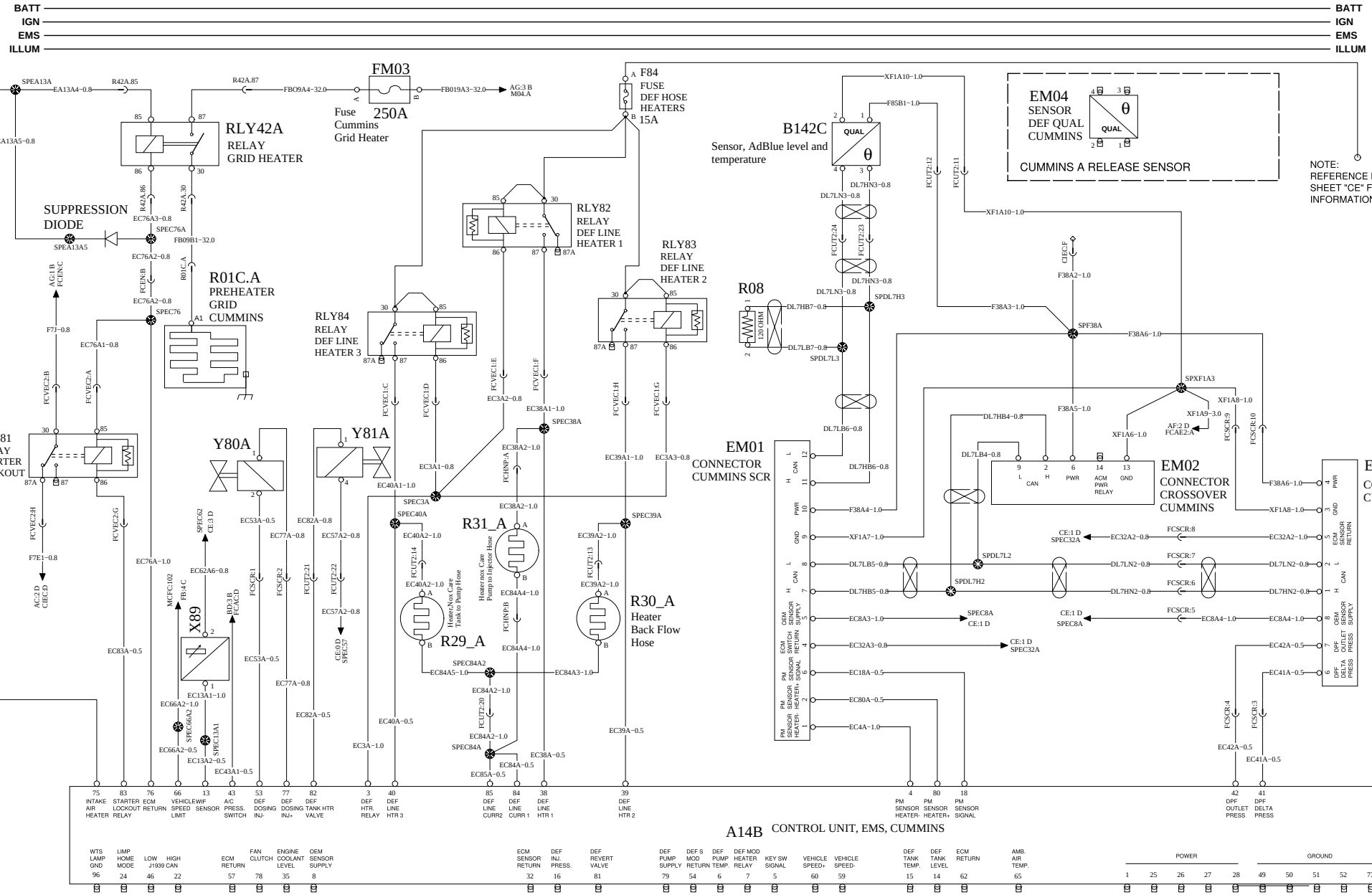

VOLVO Group Trucks Technology	Document title WIRING DIAGRAM, CONVENTIONAL, 12V MACK, 2013 BP	Document No 21628497	Issue 05	Volume 1 (2)	Page 33 (80)
	Document type PRODUCT SCHEMATIC				

https://truckmanualshub.com/

WIRING DIAGRAM : DA

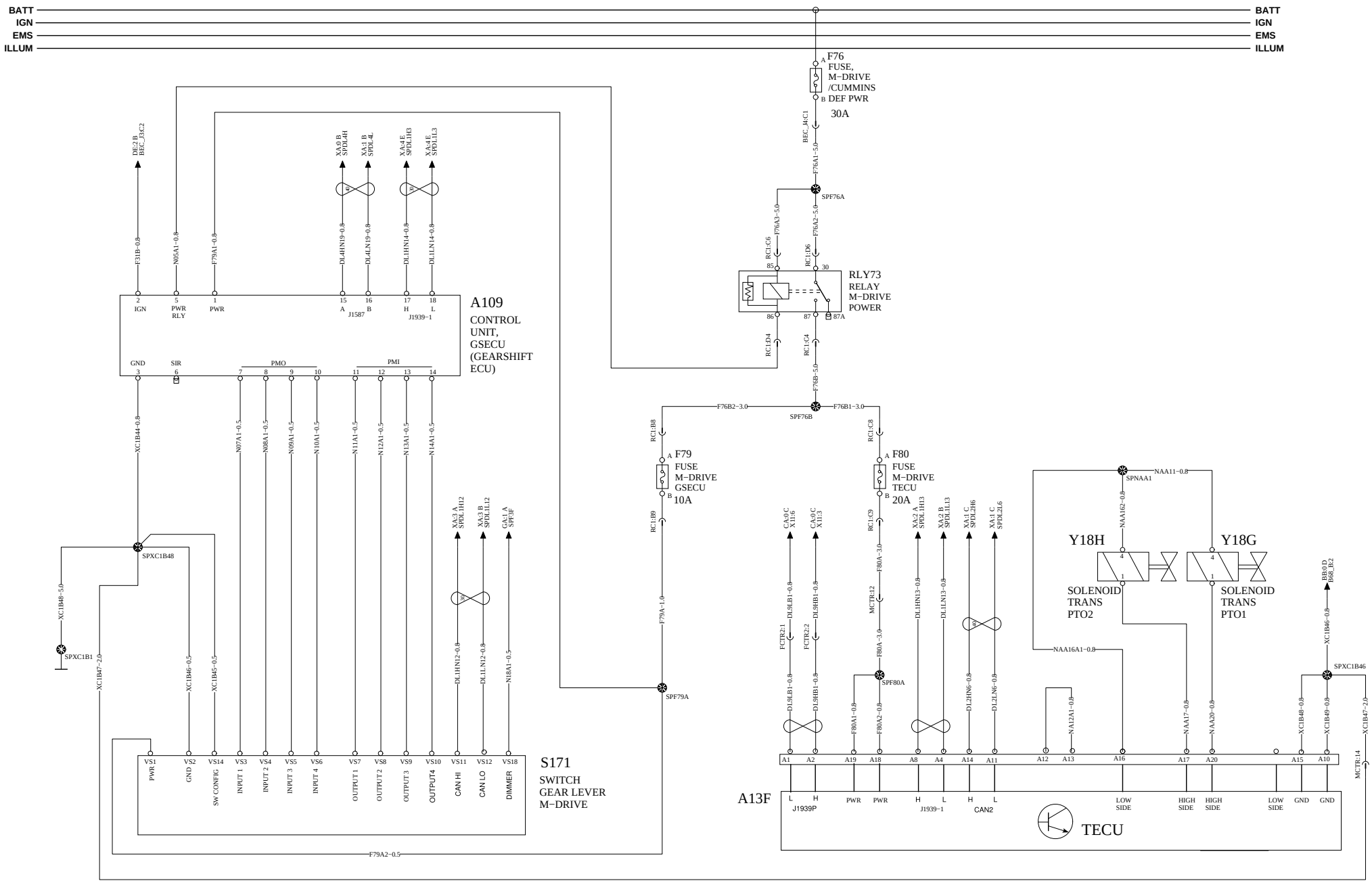

VOLVO Group Trucks Technology	Document title WIRING DIAGRAM, CONVENTIONAL, 12V MACK, 2013 BP Document type PRODUCT SCHEMATIC	Document No 21628497	Issue 05	Volume 1 (2)	Page 34 (80)

https://truckmanualshub.com/

WIRING DIAGRAM : DB

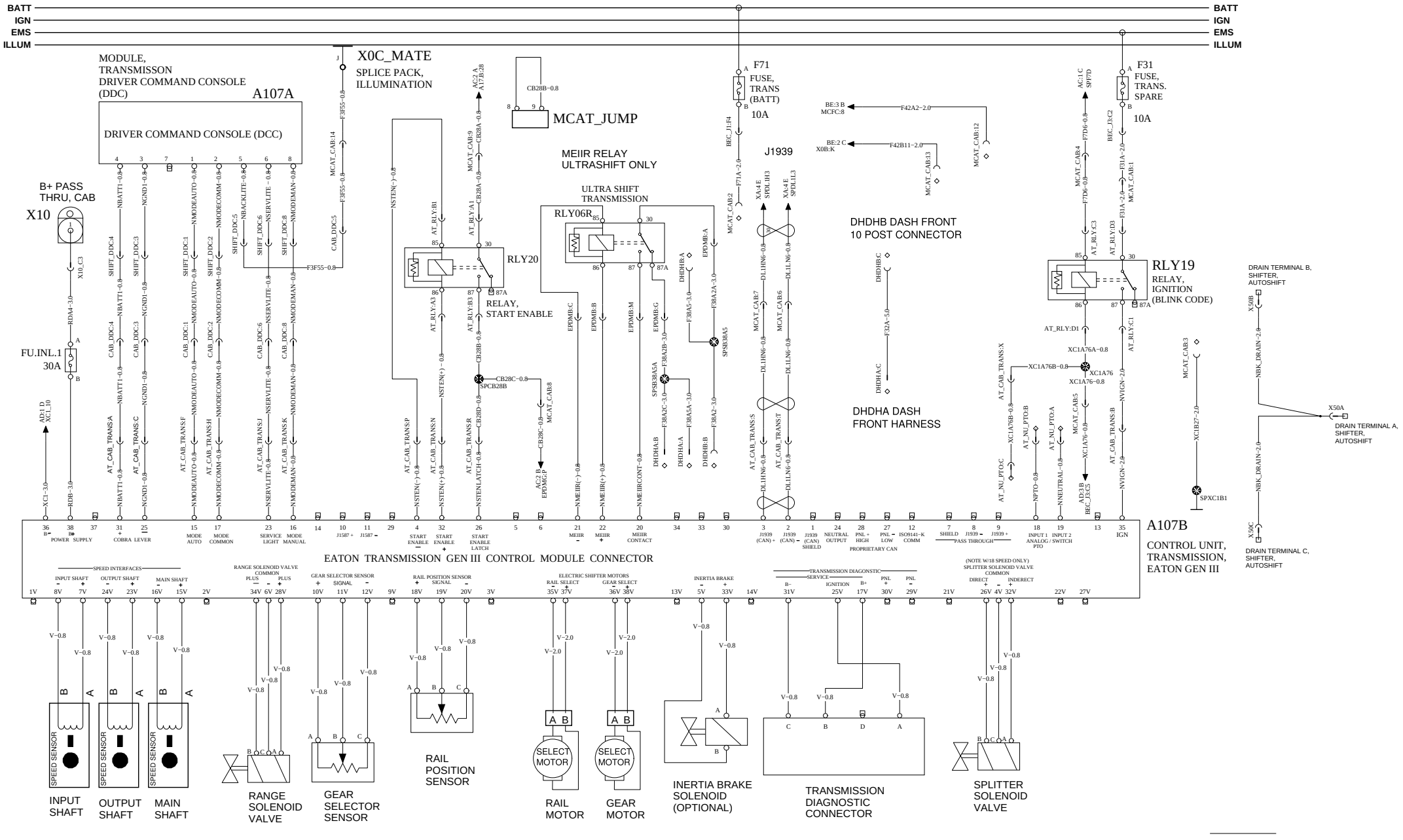

Document title	Document No	Issue	Volume	Page
WIRING DIAGRAM, CONVENTIONAL, 12V MACK, 2013 BP	21628497	05	1 (2)	35 (80)
Document type: PRODUCT SCHEMATIC				

VOLVO Group Trucks Technology

https://truckmanualshub.com/

WIRING DIAGRAM : DC

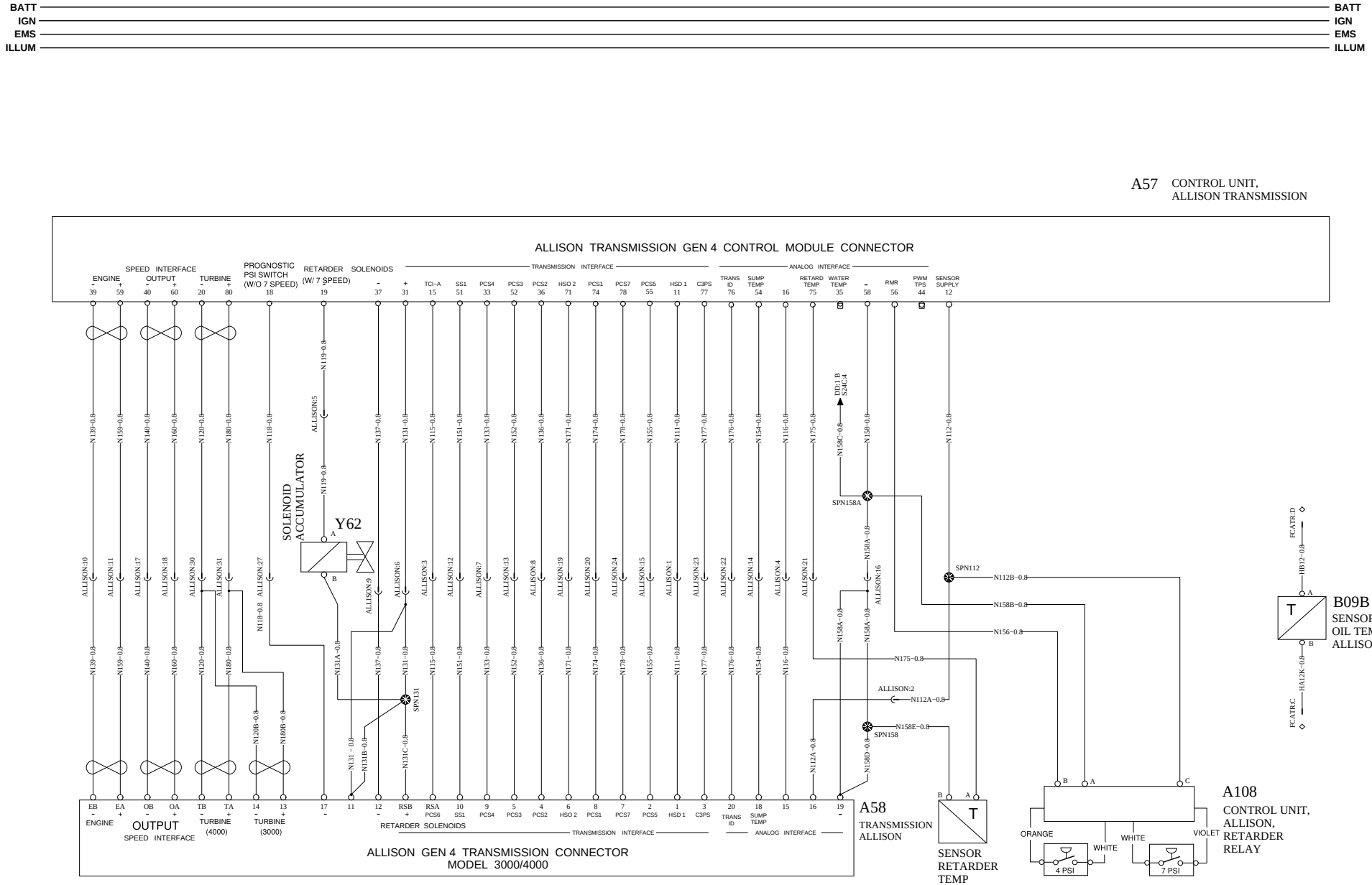

VOLVO Group Trucks Technology	Document title WIRING DIAGRAM, CONVENTIONAL, 12V MACK, 2013 BP	Document No	Issue	Volume	Page
	Document type PRODUCT SCHEMATIC	21628497	05	1 (2)	36 (80)

https://truckmanualshub.com/

WIRING DIAGRAM : DD

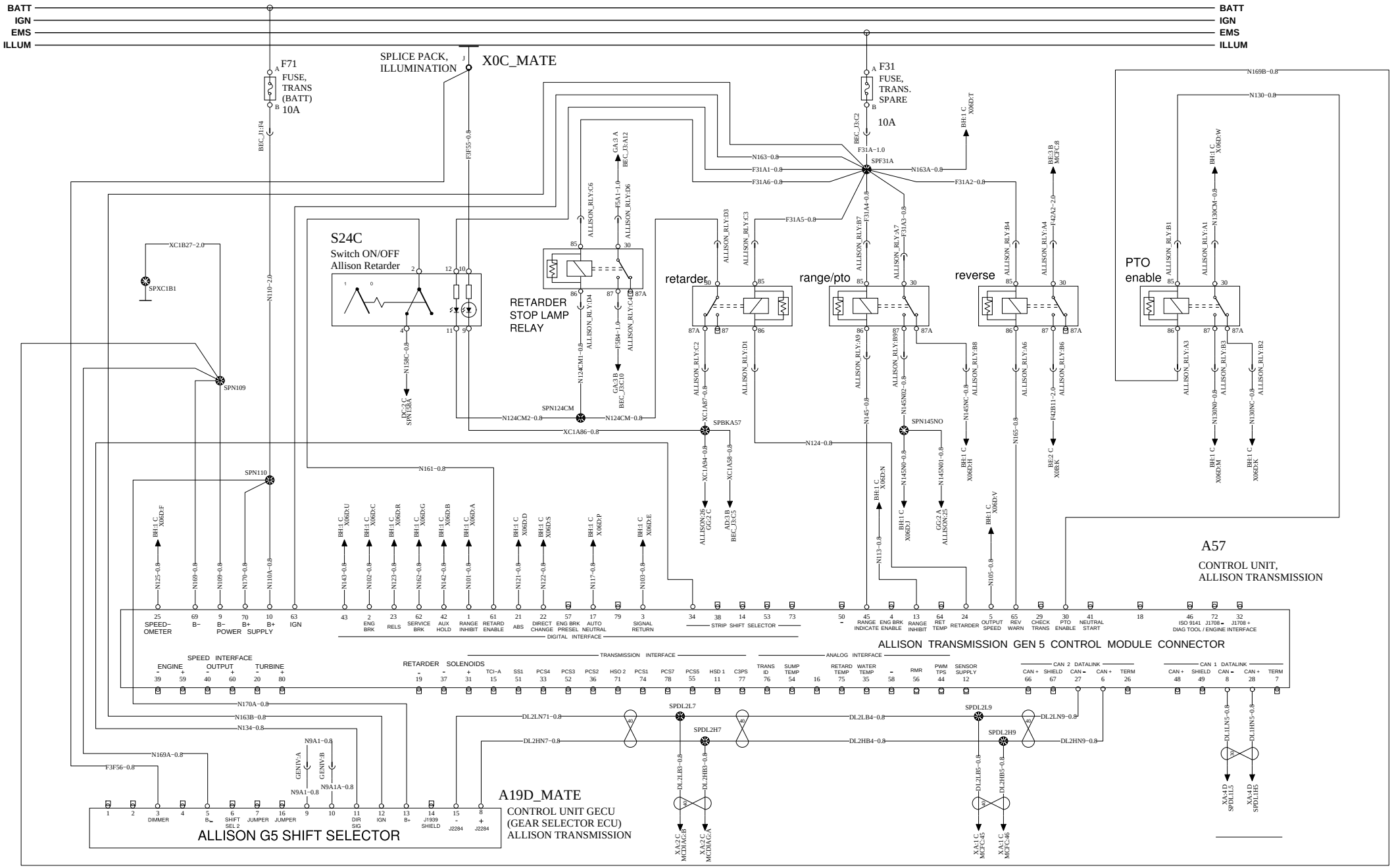

VOLVO Group Trucks Technology	Document title: WIRING DIAGRAM, CONVENTIONAL, 12V MACK, 2013 BP	Document No	Issue	Volume	Page
	Document type: PRODUCT SCHEMATIC	21628497	05	1 (2)	37 (80)

https://truckmanualshub.com/

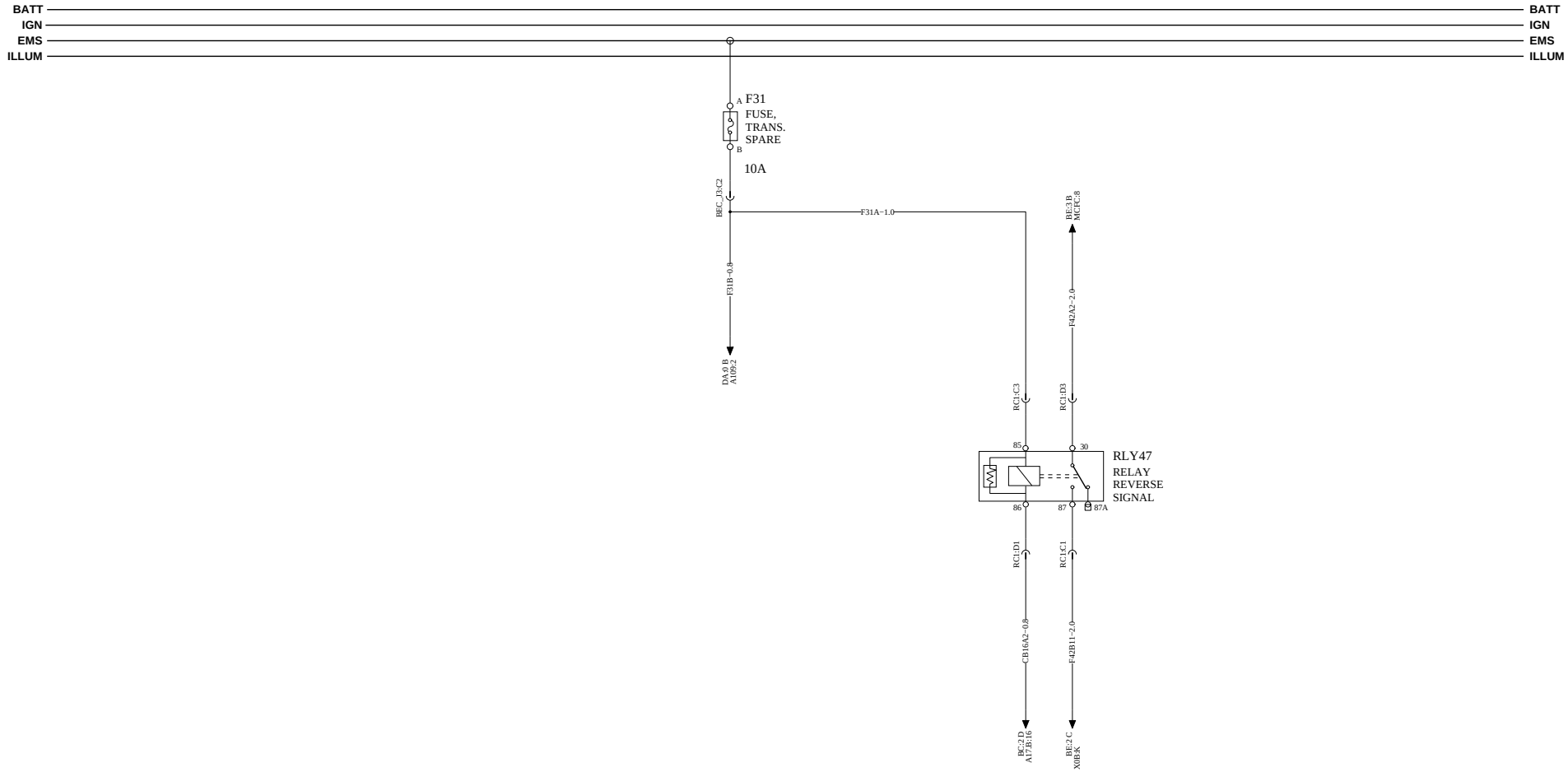

https://truckmanualshub.com/

WIRING DIAGRAM : EA

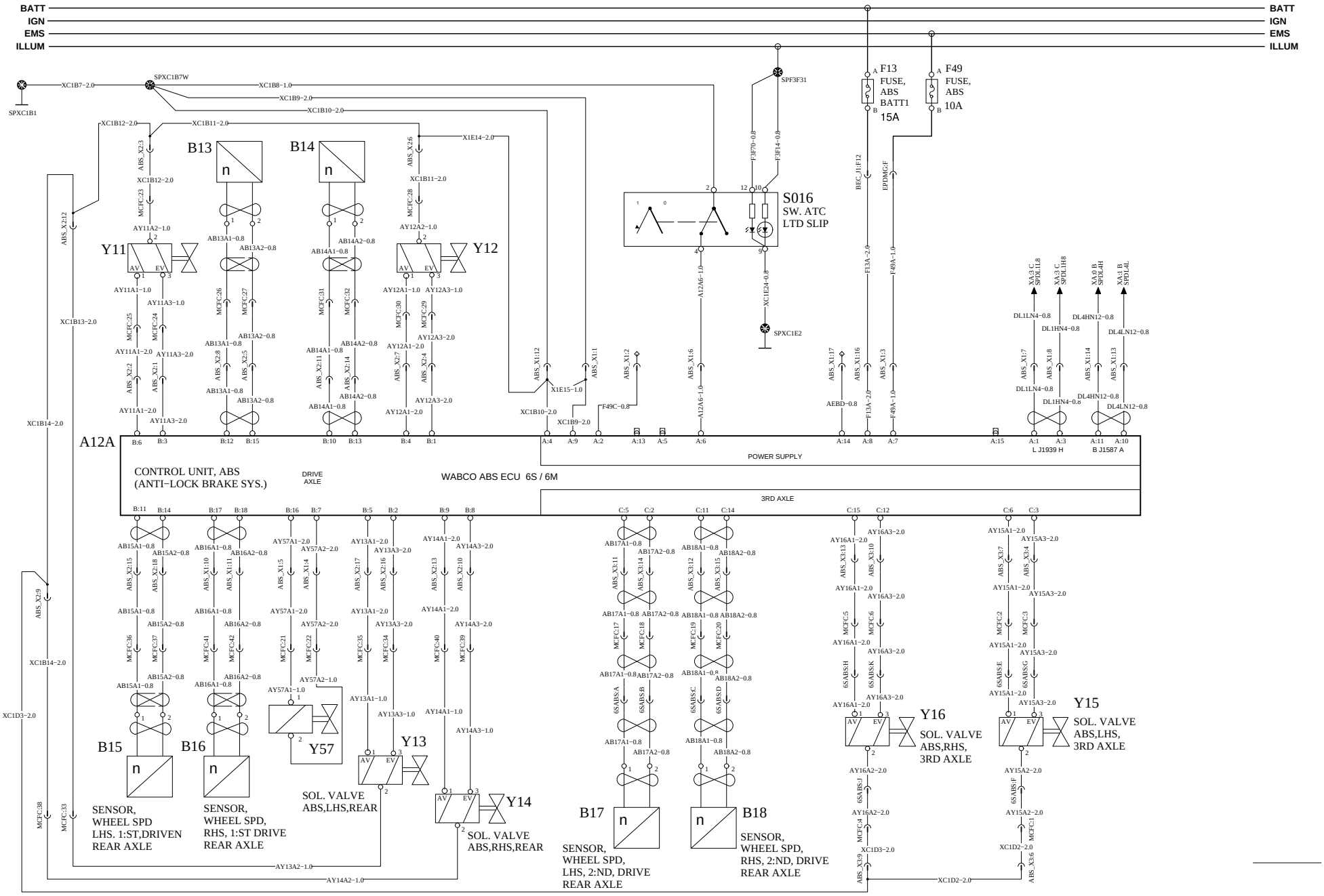

VOLVO Group Trucks Technology	Document title WIRING DIAGRAM, CONVENTIONAL, 12V MACK, 2013 BP Document type PRODUCT SCHEMATIC	Document No 21628497	Issue 05	Volume 1 (2)	Page 39 (80)

ABS BENDIX W/ESP (EATON)

https://truckmanualshub.com/

WIRING DIAGRAM : EB

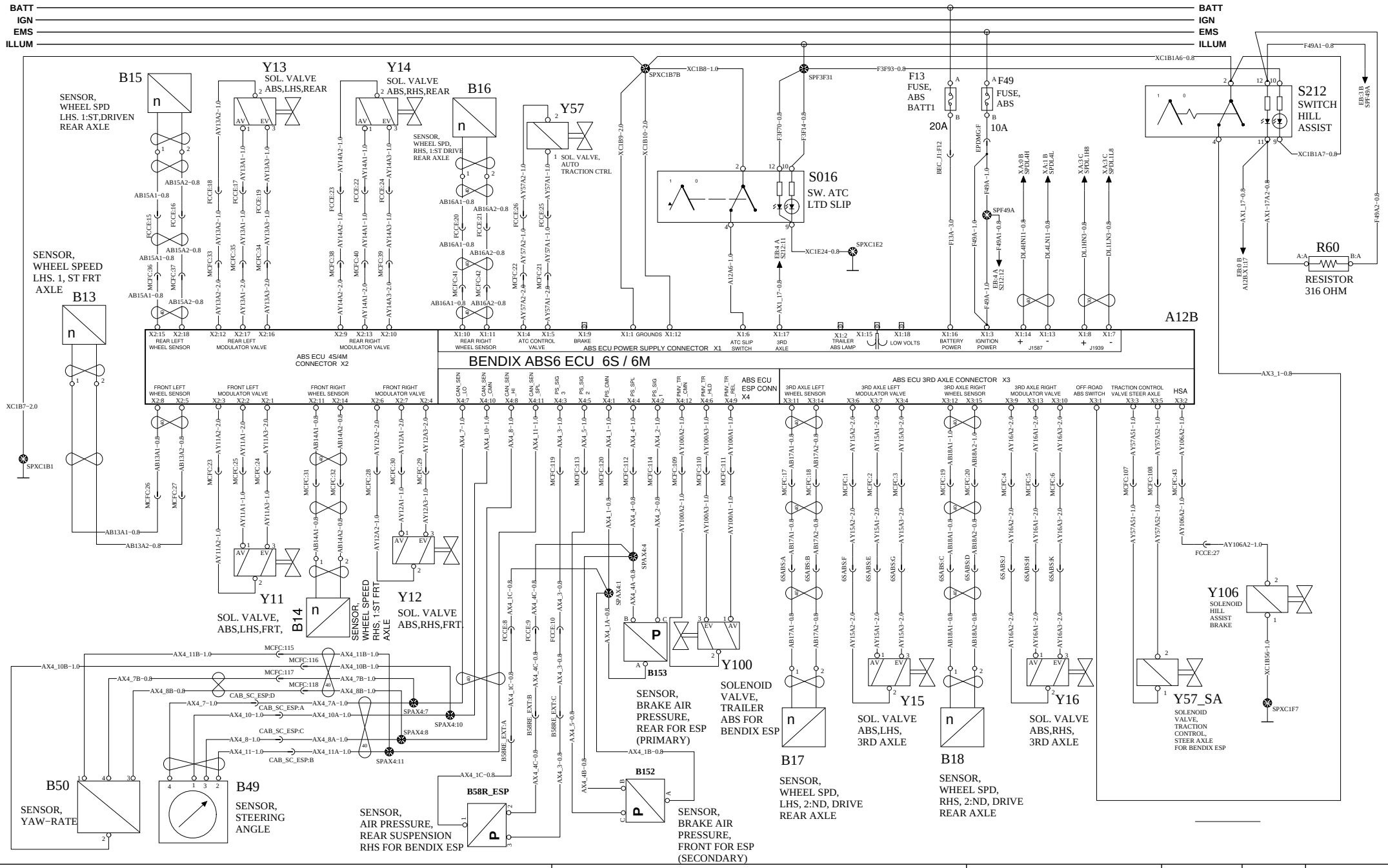

VOLVO Group Trucks Technology	Document title: WIRING DIAGRAM, CONVENTIONAL, 12V MACK, 2013 BP	Document No: 21628497	Issue: 05	Volume: 1 (2)
	Document type: PRODUCT SCHEMATIC			Page: 40 (80)

https://truckmanualshub.com/

SUSPENSION ECU 6X2

WIRING DIAGRAM : EC

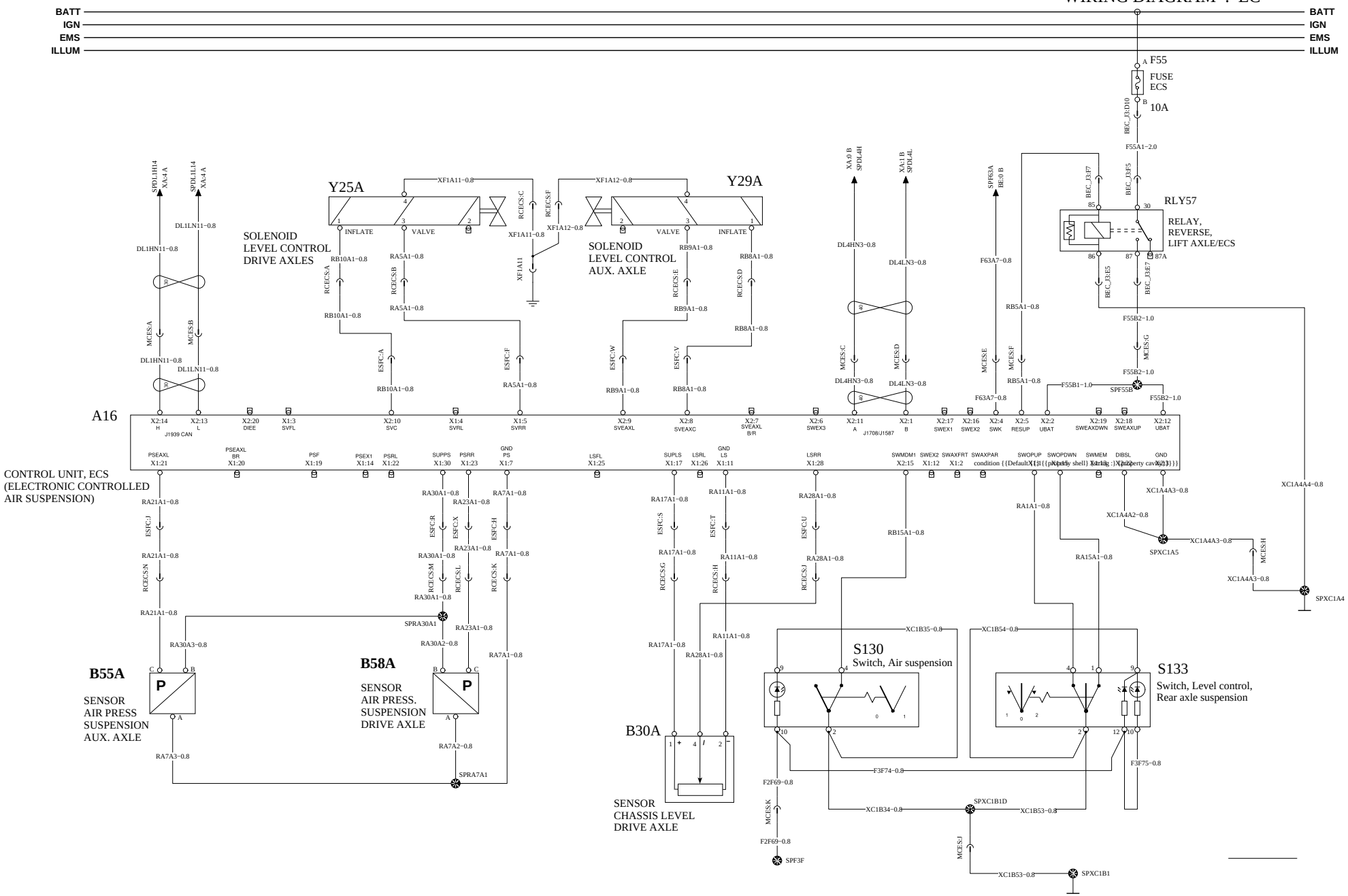

VOLVO Group Trucks Technology	Document title WIRING DIAGRAM, CONVENTIONAL, 12V MACK, 2013 BP Document type PRODUCT SCHEMATIC	Document No 21628497	Issue 05	Volume 1 (2)	Page 41 (80)

https://truckmanualshub.com/

WIRING DIAGRAM : FA

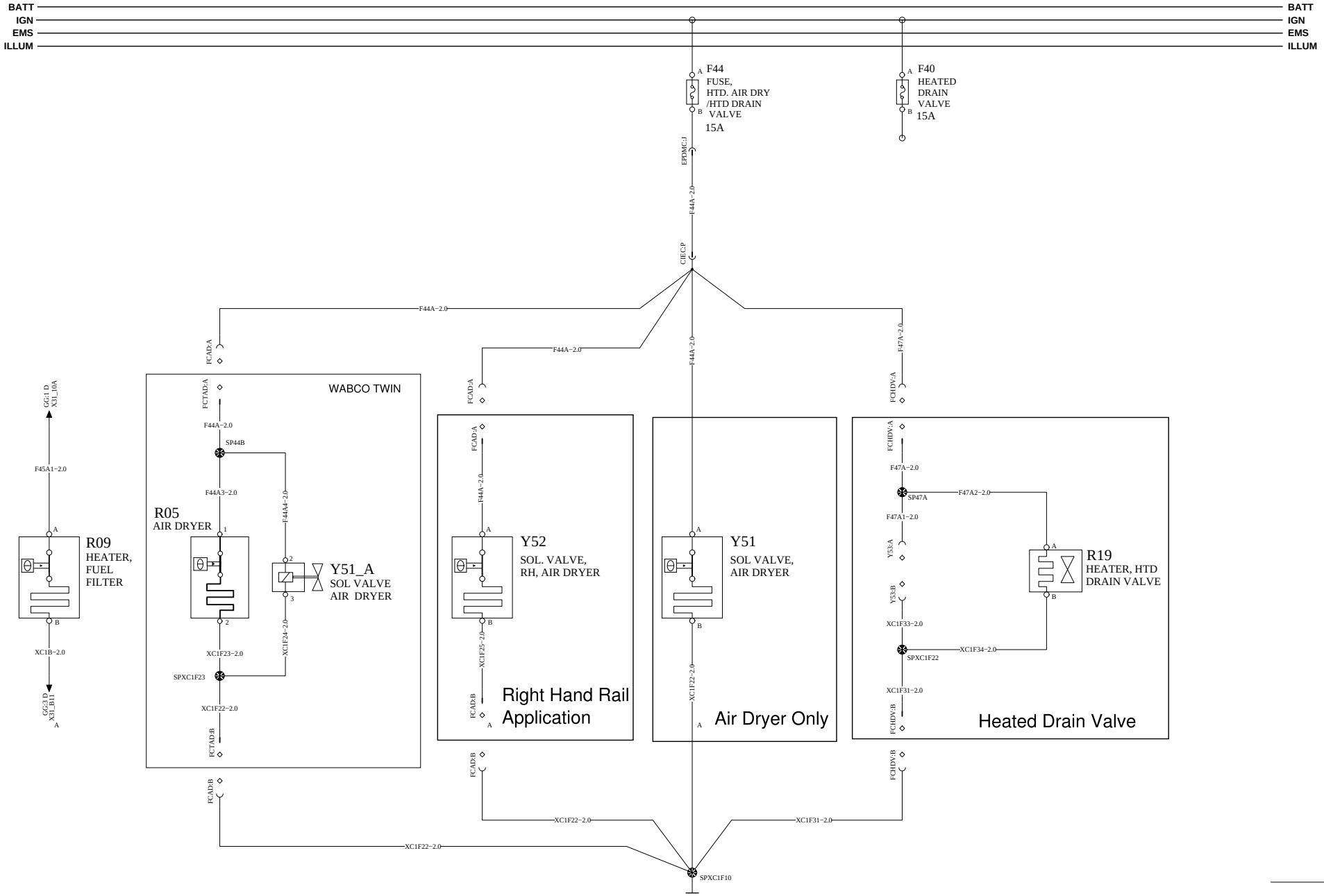

VOLVO Group Trucks Technology	Document title WIRING DIAGRAM, CONVENTIONAL, 12V MACK, 2013 BP Document type PRODUCT SCHEMATIC	Document No 21628497	Issue 05	Volume 1 (2)	Page 42 (80)

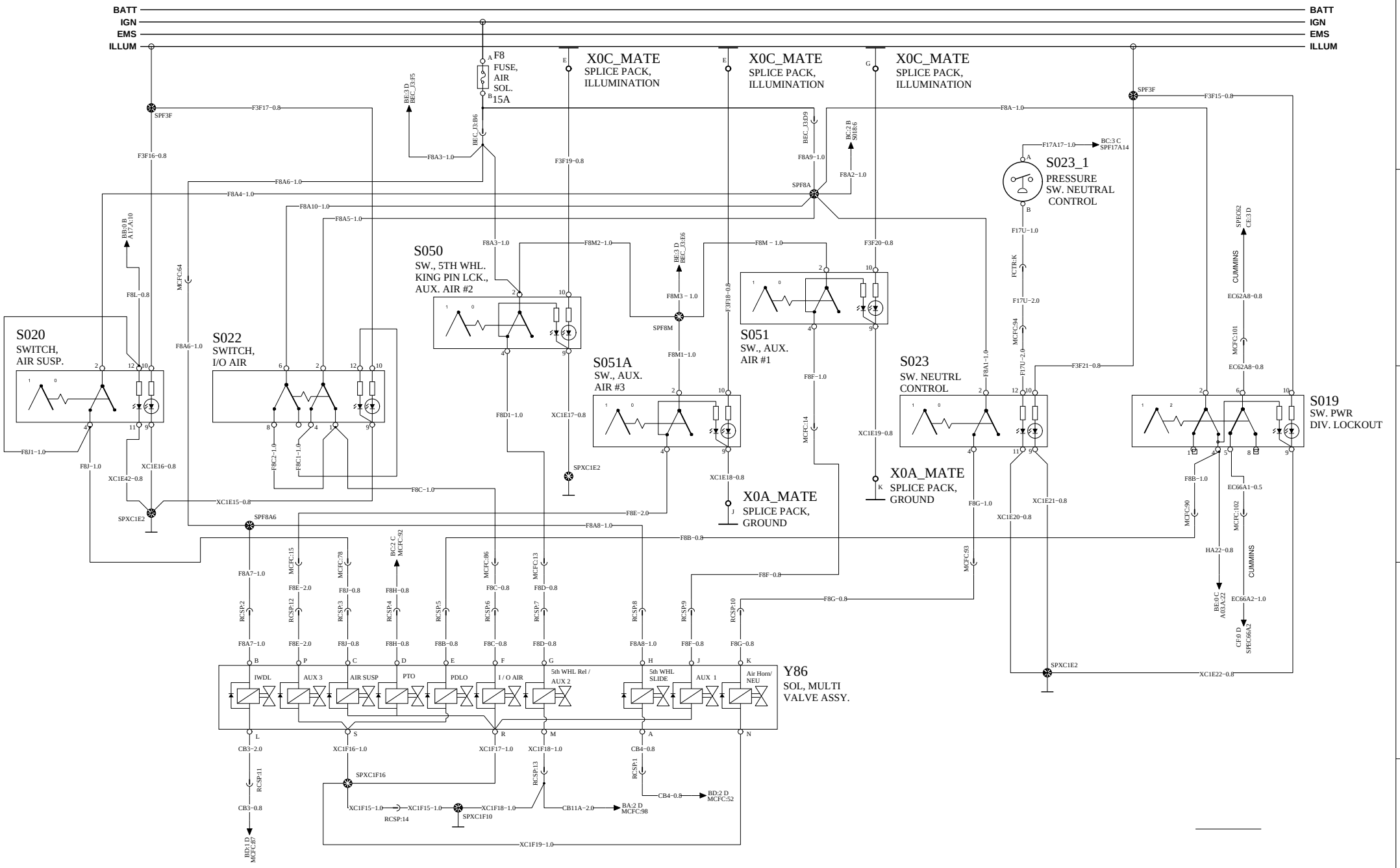

VOLVO Group Trucks Technology	Document title: WIRING DIAGRAM, CONVENTIONAL, 12V MACK, 2013 BP	Document No	Issue	Volume	Page
	Document type: PRODUCT SCHEMATIC	21628497	05	1 (2)	43 (80)

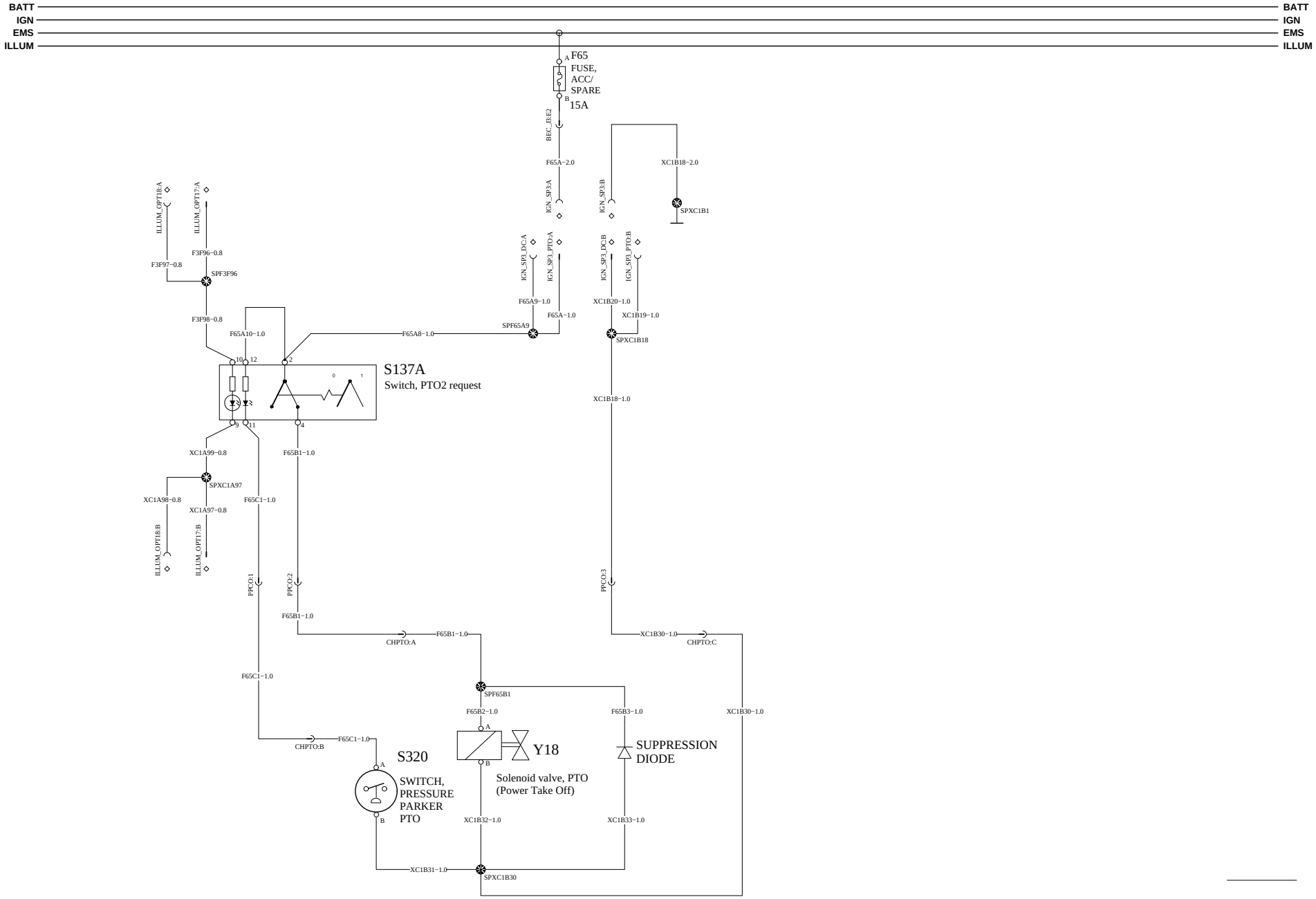
BATT
IGN
EMS
ILLUM
F65
FUSE,
ACC/
SPARE
15A
BEC_B:E2
F65A−2.0
XC1B18−2.0
IGN_SP3:A
IGN_SP3:B
SPXC1B1
ILLUM_OPT18:A
ILLUM_OPT17:A
F3F96−0.8
F3F97−0.8
SPF3F96
F3F98−0.8
IGN_SP3_DC:A
IGN_SP3_PTO:A
IGN_SP3_DC:B
IGN_SP3_PTO:B
F65A9−1.0
XC1B20−1.0
F65A−1.0
XC1B19−1.0
SPF65A9
SPXC1B18
F65A10−1.0
F65A8−1.0
S137A
Switch, PTO2 request
XC1B18−1.0
XC1A99−0.8
F65B1−1.0
SPXC1A97
XC1A98−0.8
F65C1−1.0
XC1A97−0.8
ILLUM_OPT18:B
ILLUM_OPT17:B
PPCO:1
PPCO:2
PPCO:3
CHPTO:A
CHPTO:C
XC1B30−1.0
SPF65B1
F65B2−1.0
F65B3−1.0
CHPTO:B
S320
SWITCH,
PRESSURE
PARKER
PTO
Y18
Solenoid valve, PTO
(Power Take Off)
SUPPRESSION
DIODE
XC1B32−1.0
XC1B33−1.0
XC1B31−1.0
SPXC1B30

https://truckmanualshub.com/

WIRING DIAGRAM : FE

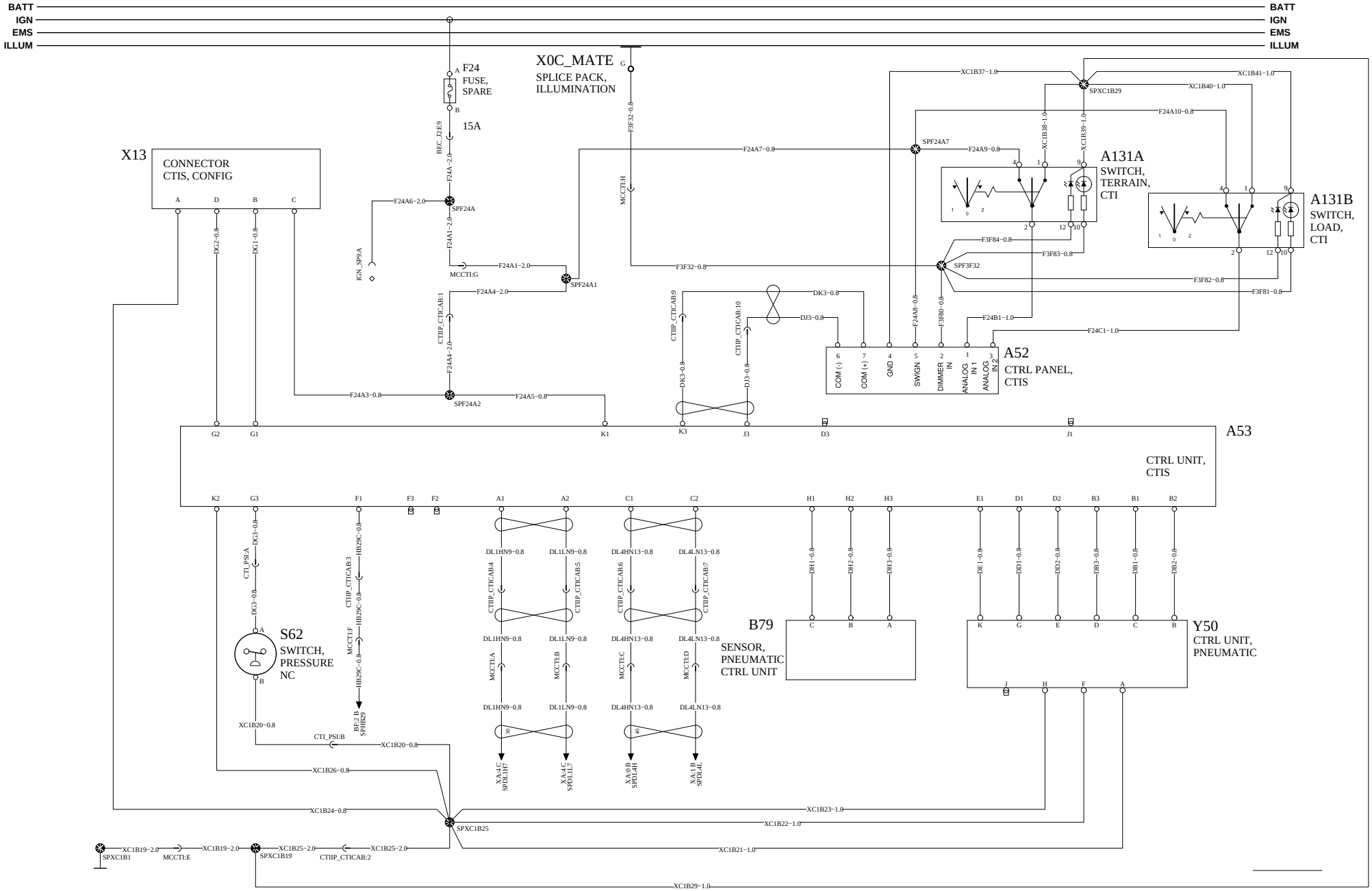

Document title	Document No	Issue	Volume	Page
WIRING DIAGRAM, CONVENTIONAL, 12V MACK, 2013 BP	21628497	05	1 (2)	45 (80)
Document type: PRODUCT SCHEMATIC				

VOLVO Group Trucks Technology

LIGHTING CONTROL

https://truckmanualshub.com/

WIRING DIAGRAM : GA

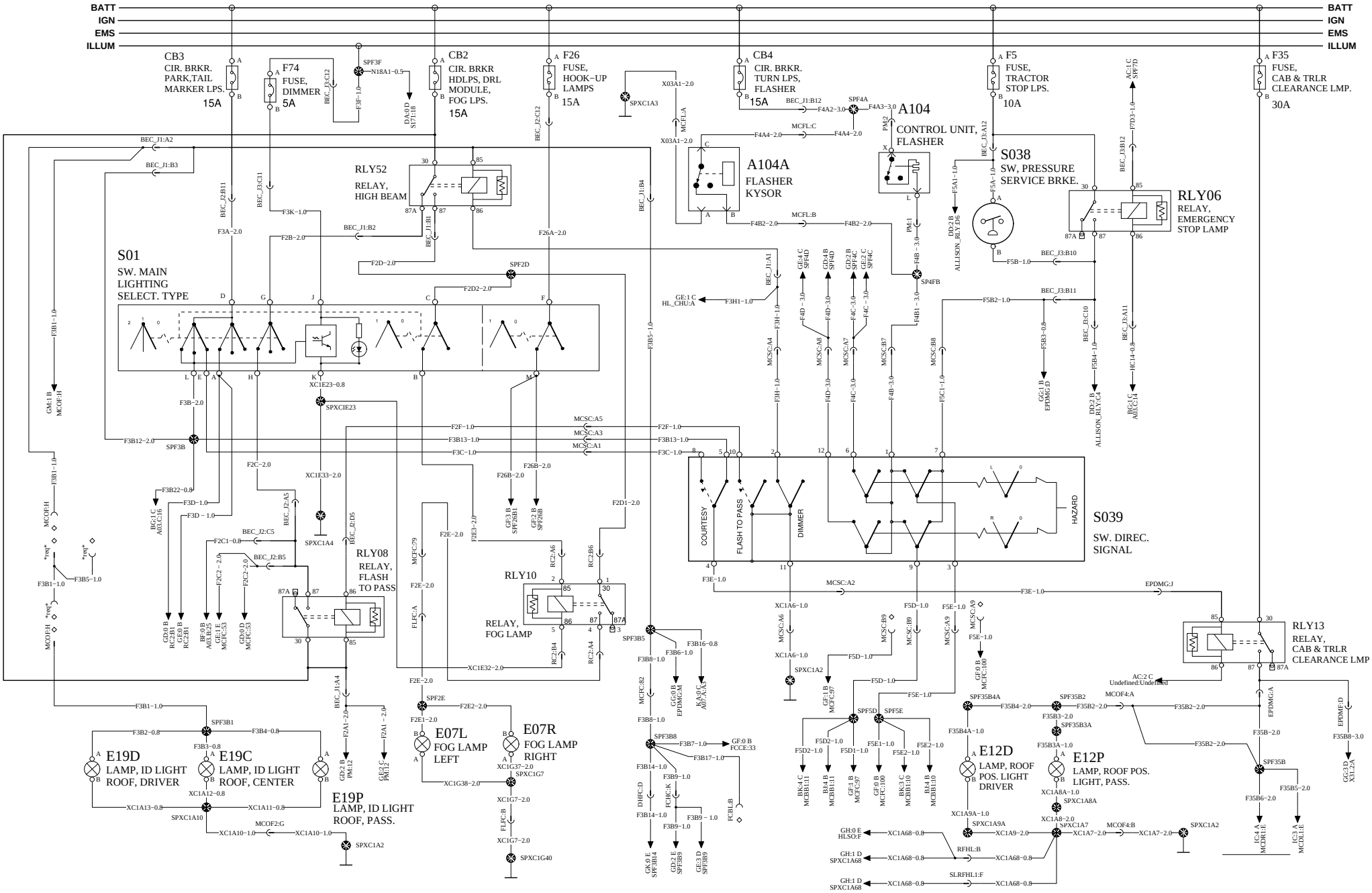

VOLVO Group Trucks Technology	Document title: WIRING DIAGRAM, CONVENTIONAL, 12V MACK, 2013 BP Document type: PRODUCT SCHEMATIC	Document No: 21628497	Issue: 05	Volume: 1 (2)	Page: 46 (80)

https://truckmanualshub.com/

WIRING DIAGRAM : GD

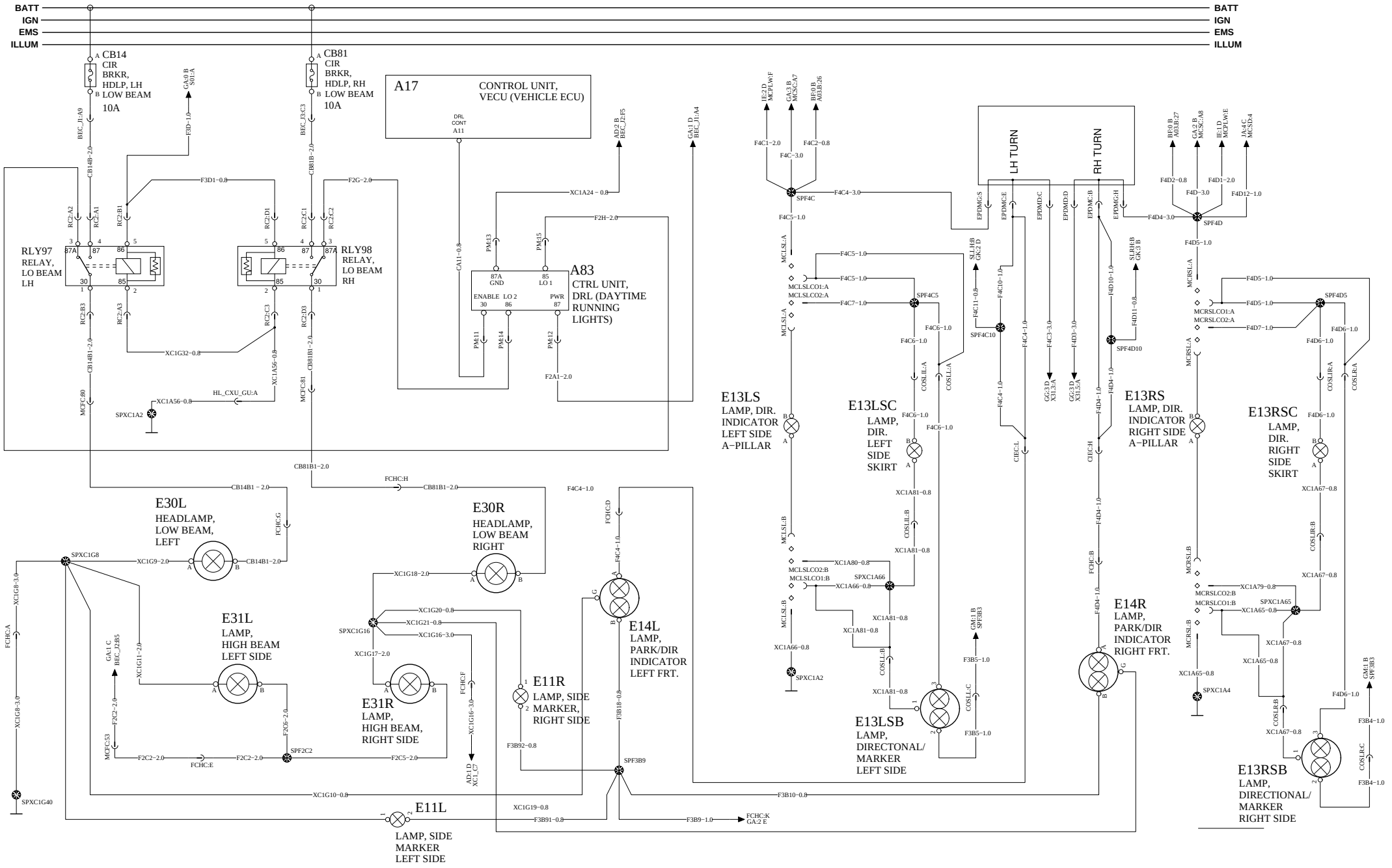

VOLVO Group Trucks Technology	Document title: WIRING DIAGRAM, CONVENTIONAL, 12V MACK, 2013 BP	Document No: 21628497	Issue: 05	Volume: 1 (2)
	Document type: PRODUCT SCHEMATIC			Page: 47 (80)

https://truckmanualshub.com/

WIRING DIAGRAM : GE

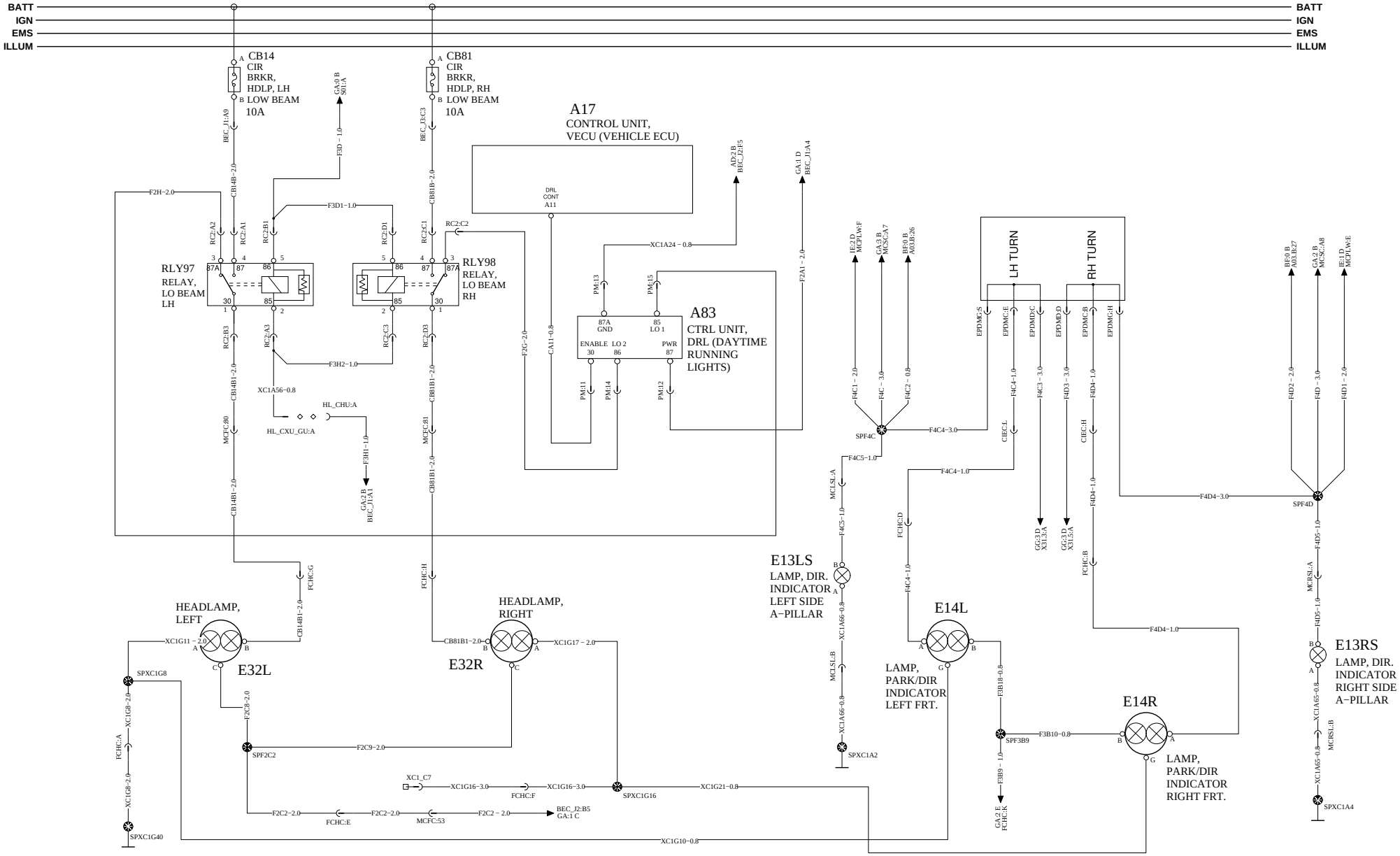

Document title	Document No	Issue	Volume	Page
WIRING DIAGRAM, CONVENTIONAL, 12V MACK, 2013 BP	21628497	05	1 (2)	48 (80)
Document type: PRODUCT SCHEMATIC				

VOLVO Group Trucks Technology

https://truckmanualshub.com/

WIRING DIAGRAM : GF

BATT
IGN
EMS
ILLUM

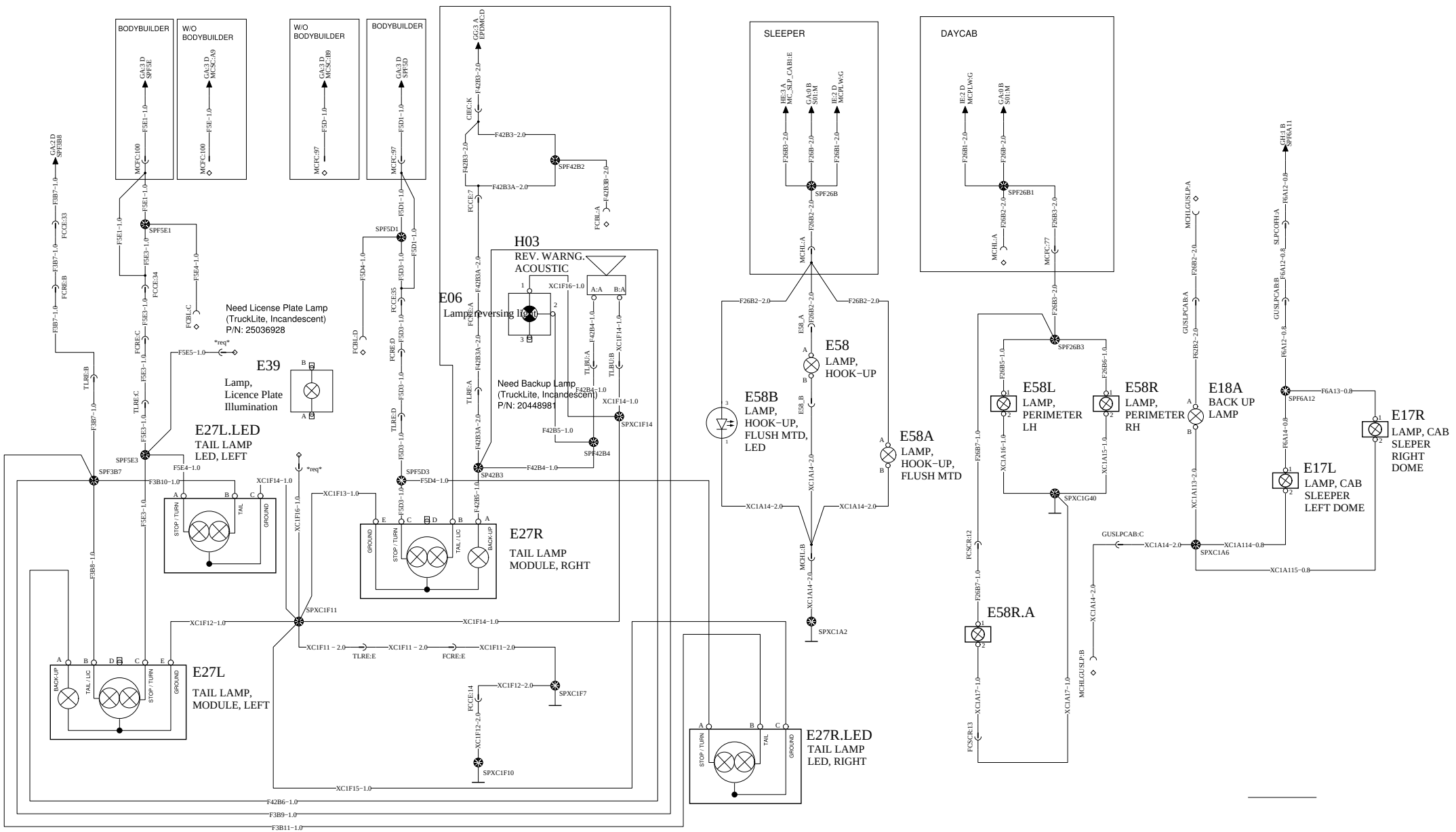

VOLVO Group Trucks Technology	Document title WIRING DIAGRAM, CONVENTIONAL, 12V MACK, 2013 BP Document type PRODUCT SCHEMATIC	Document No 21628497	Issue 05	Volume 1 (2)	Page 49 (80)

TRAILER LIGHTING CONTROL

https://truckmanualshub.com/

WIRING DIAGRAM : GG

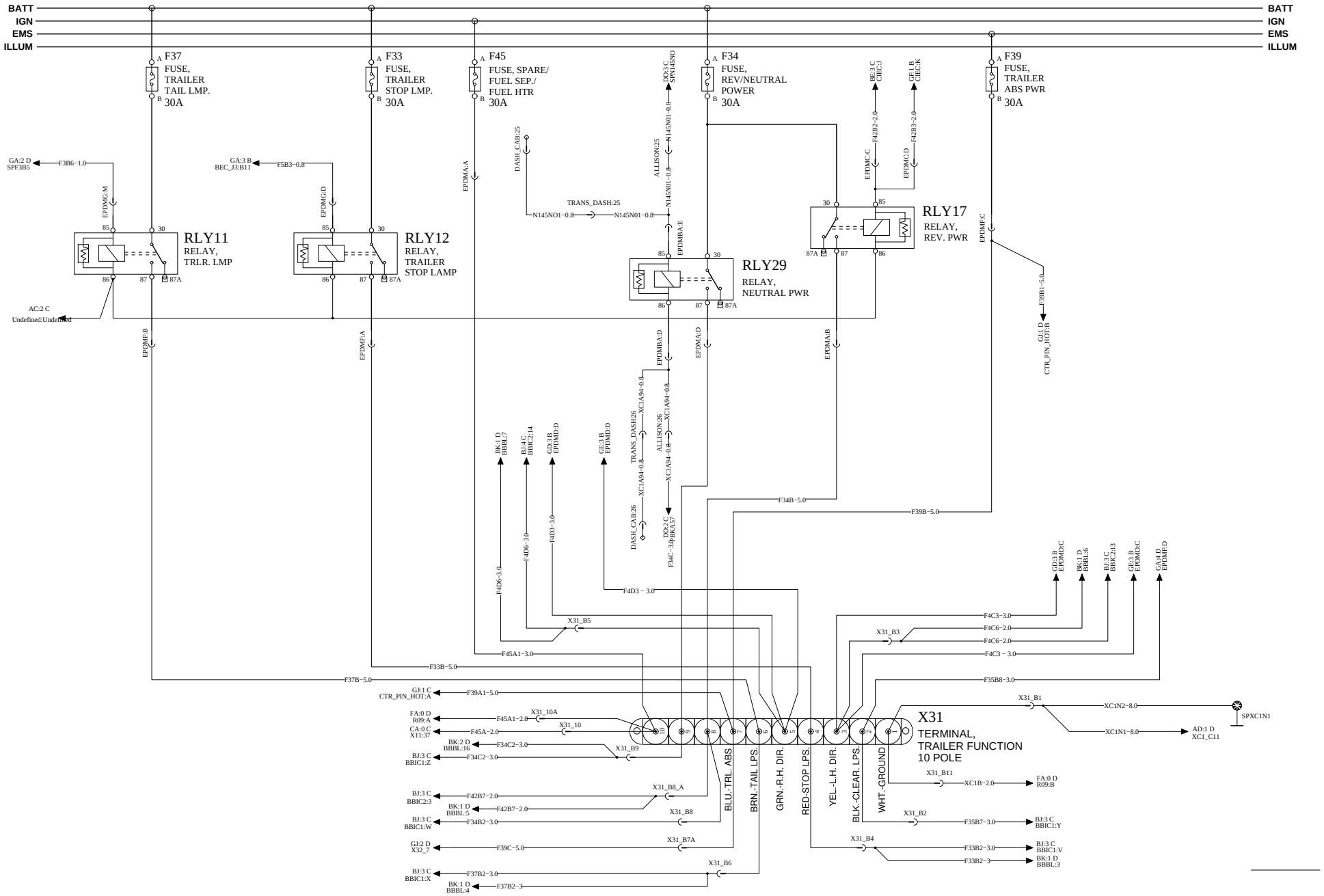

Document title	Document No	Issue	Volume	Page
WIRING DIAGRAM, CONVENTIONAL, 12V MACK, 2013 BP	21628497	05	1 (2)	50 (80)
Document type: PRODUCT SCHEMATIC				

VOLVO Group Trucks Technology

https://truckmanualshub.com/

WIRING DIAGRAM : GH

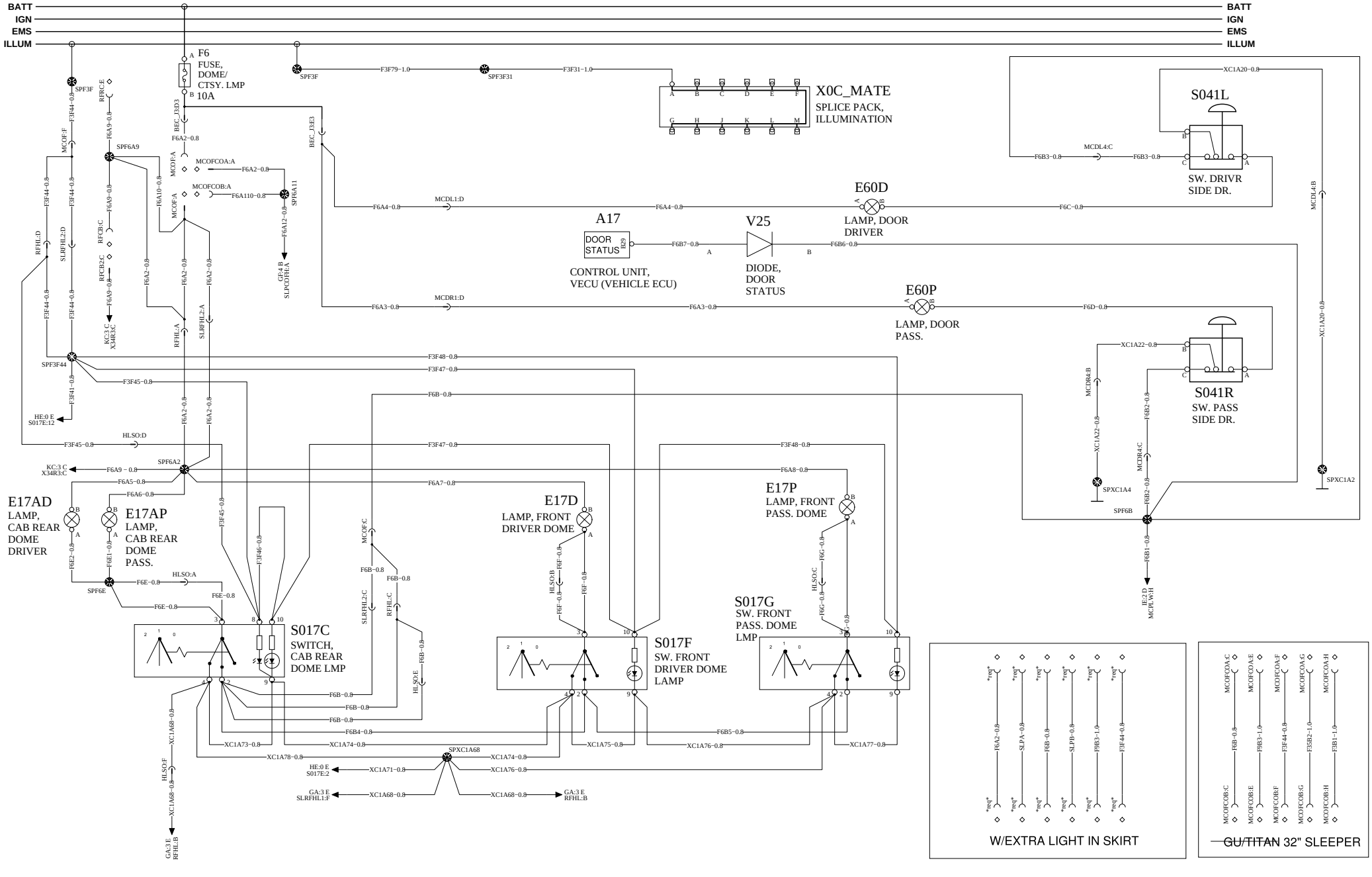

VOLVO Group Trucks Technology	Document title: WIRING DIAGRAM, CONVENTIONAL, 12V MACK, 2013 BP	Document No: 21628497	Issue: 05	Volume: 1 (2)	Page: 51 (80)
	Document type: PRODUCT SCHEMATIC				

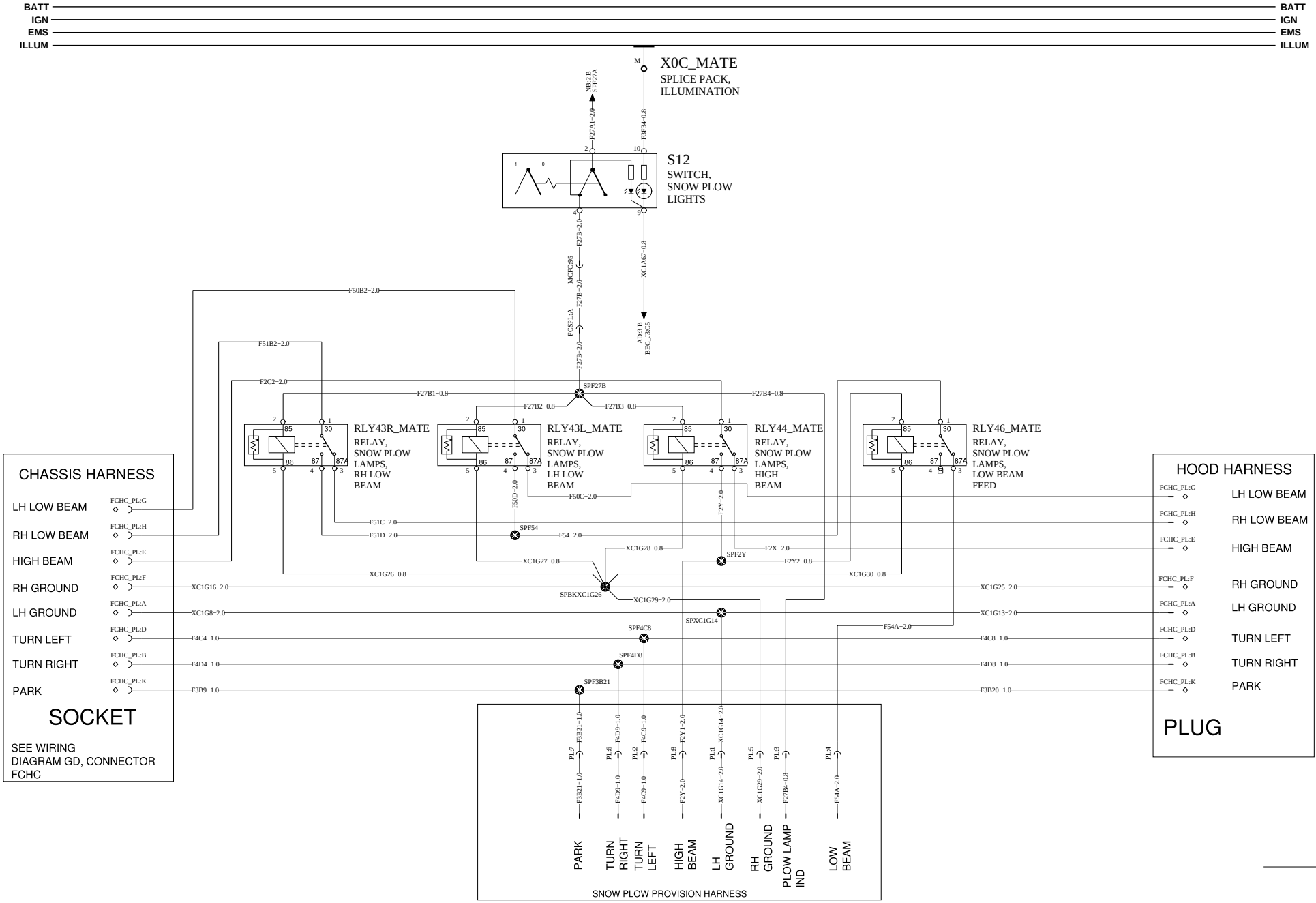

VOLVO Group Trucks Technology	Document title: WIRING DIAGRAM, CONVENTIONAL, 12V MACK, 2013 BP Document type: PRODUCT SCHEMATIC	Document No: 21628497	Issue: 05	Volume: 1 (2)	Page: 52 (80)

TRAILER RECEPTACLE CENTER PIN HOT

https://truckmanualshub.com/

WIRING DIAGRAM : GJ

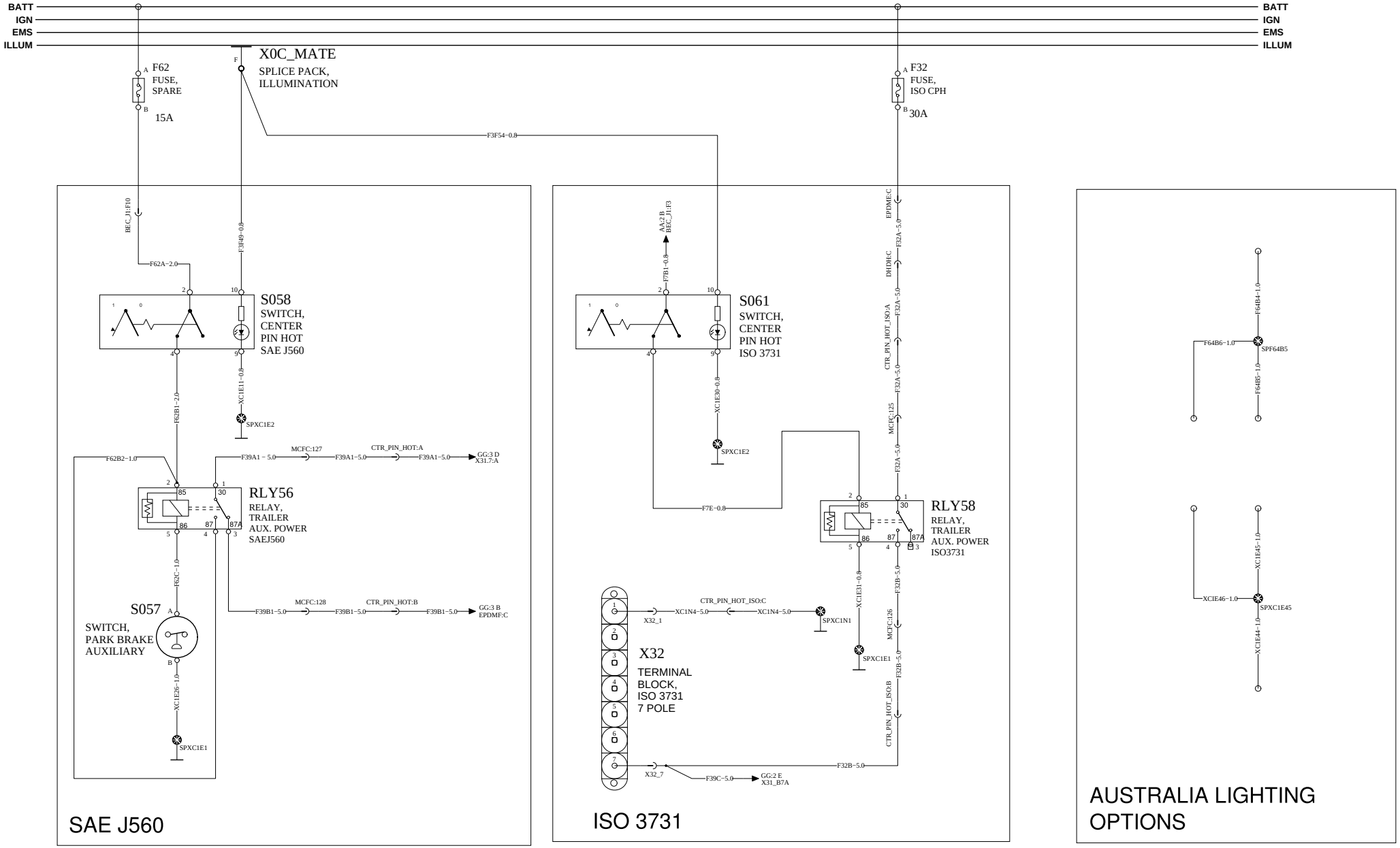

VOLVO Group Trucks Technology	Document title WIRING DIAGRAM, CONVENTIONAL, 12V MACK, 2013 BP Document type PRODUCT SCHEMATIC	Document No 21628497	Issue 05	Volume 1 (2)	Page 53 (80)

TITAN LIGHTING OPTIONS

https://truckmanualshub.com/

WIRING DIAGRAM : GK

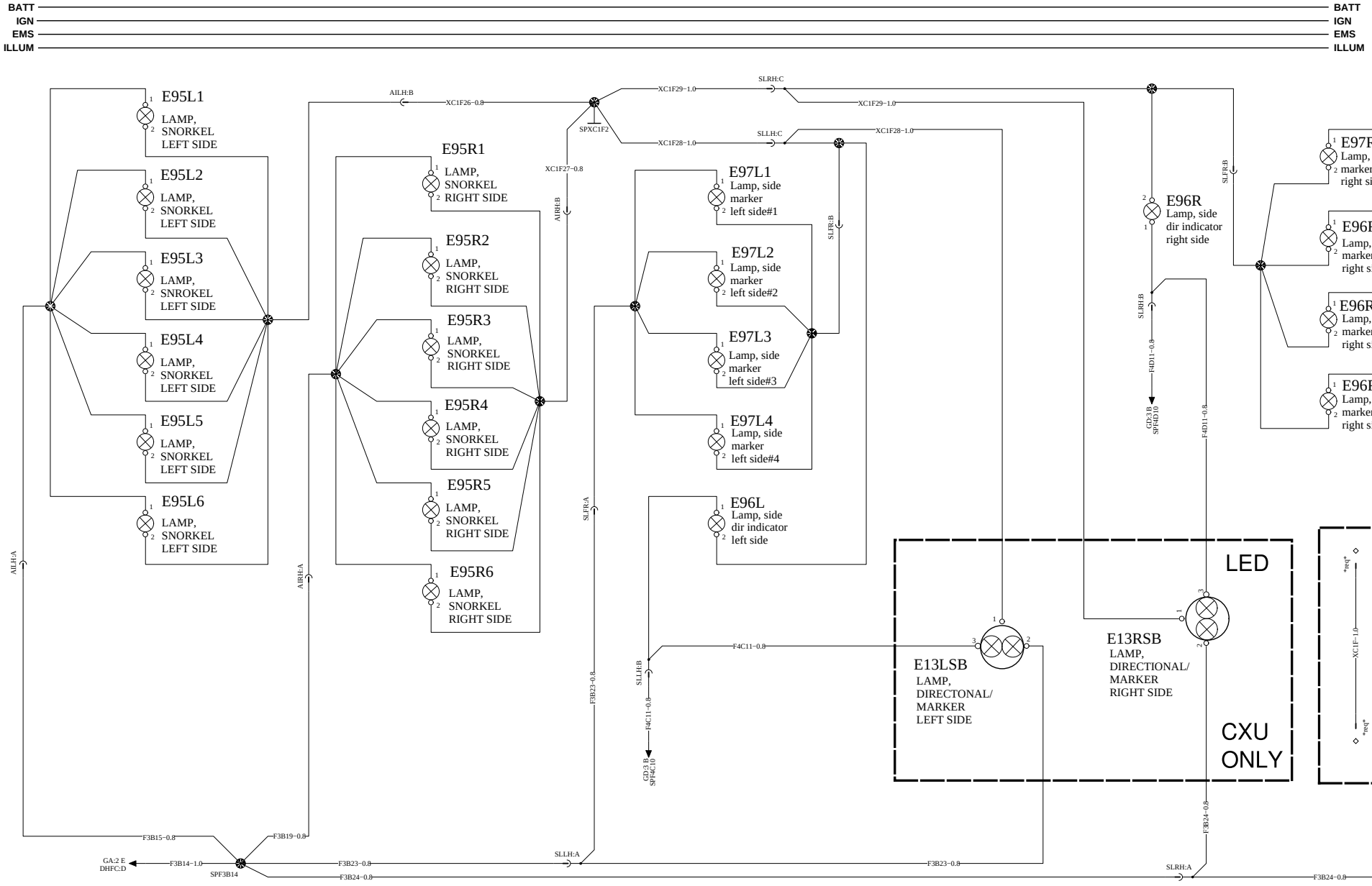

VOLVO Group Trucks Technology	Document title WIRING DIAGRAM, CONVENTIONAL, 12V MACK, 2013 BP Document type PRODUCT SCHEMATIC	Document No 21628497	Issue 05	Volume 1 (2)	Page 54 (80)

https://truckmanualshub.com/

WIRING DIAGRAM : GL

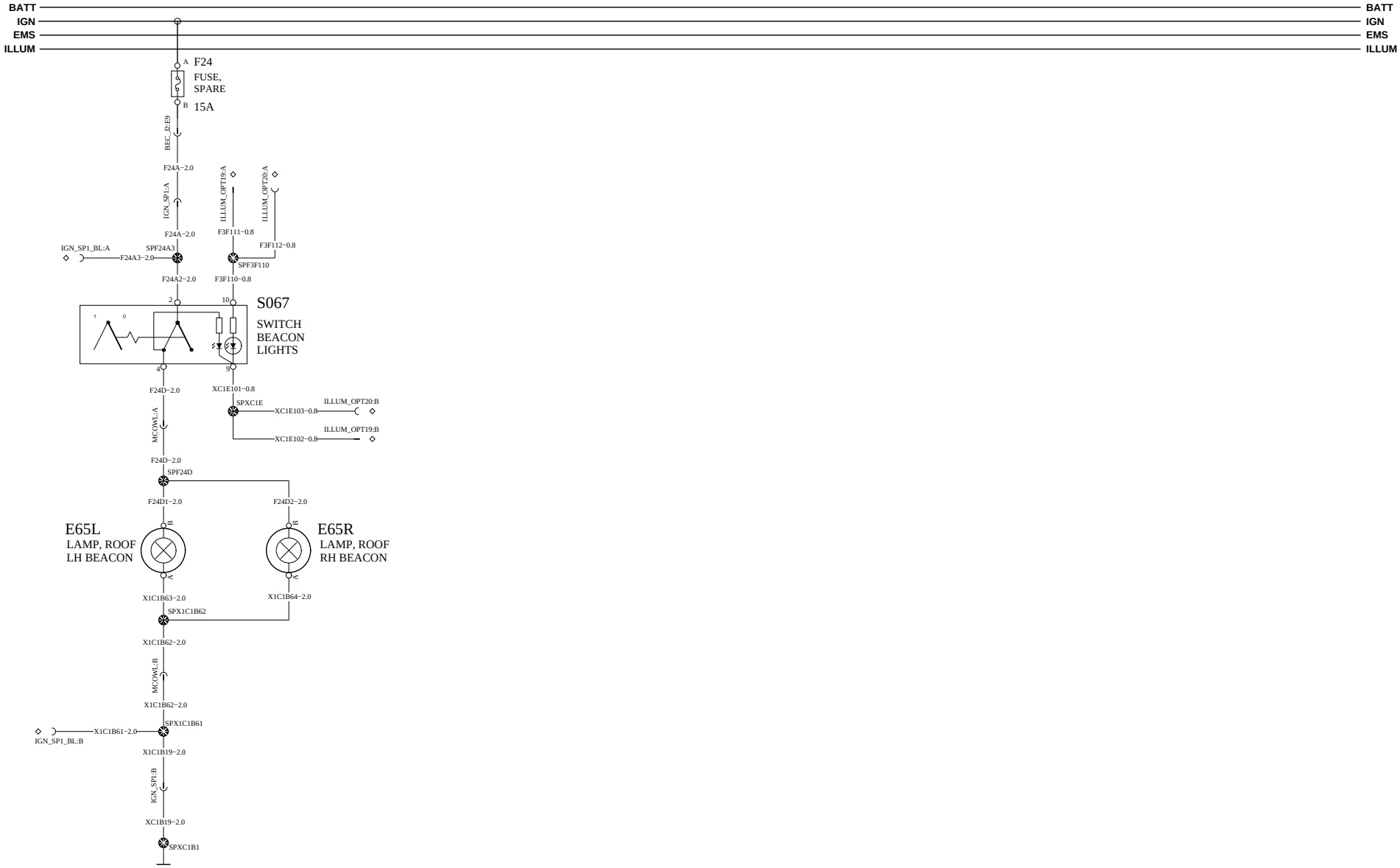

VOLVO Group Trucks Technology	Document title WIRING DIAGRAM, CONVENTIONAL, 12V MACK, 2013 BP Document type PRODUCT SCHEMATIC	Document No 21628497	Issue 05	Volume 1 (2)	Page 55 (80)

https://truckmanualshub.com/

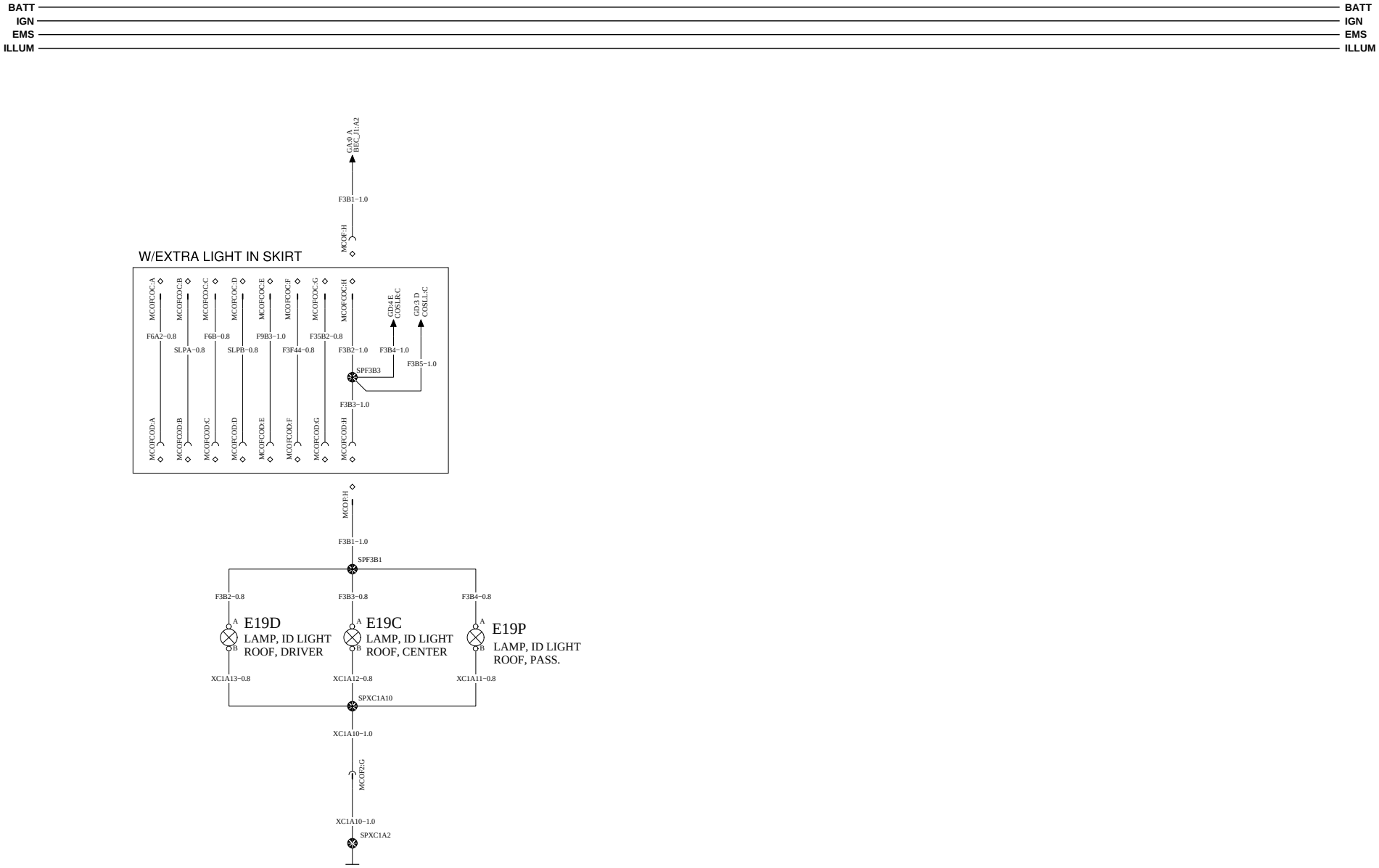

https://truckmanualshub.com/

WIRING DIAGRAM : GP

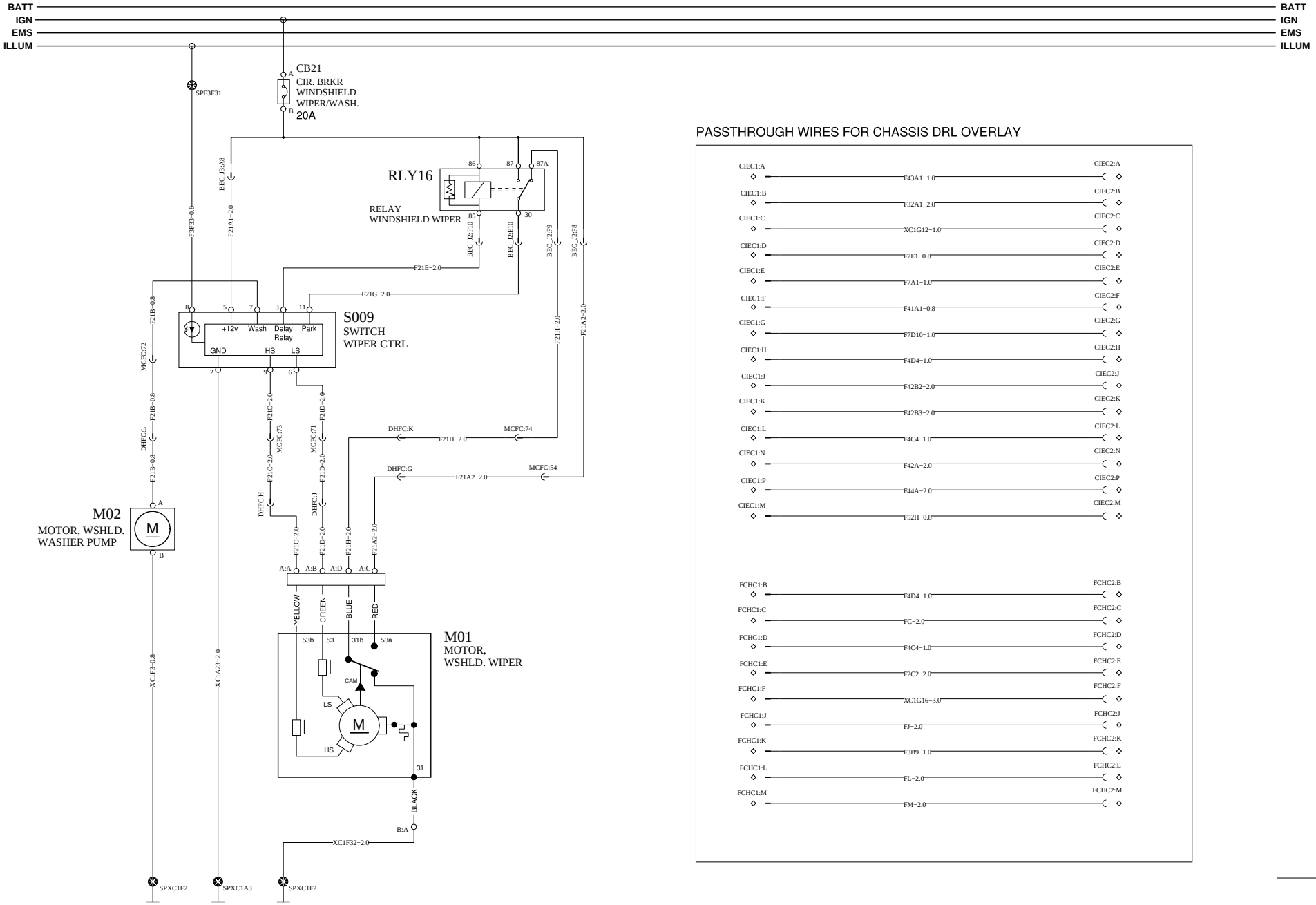

PASSTHROUGH WIRES FOR CHASSIS DRL OVERLAY

https://truckmanualshub.com/

WIRING DIAGRAM : GQ

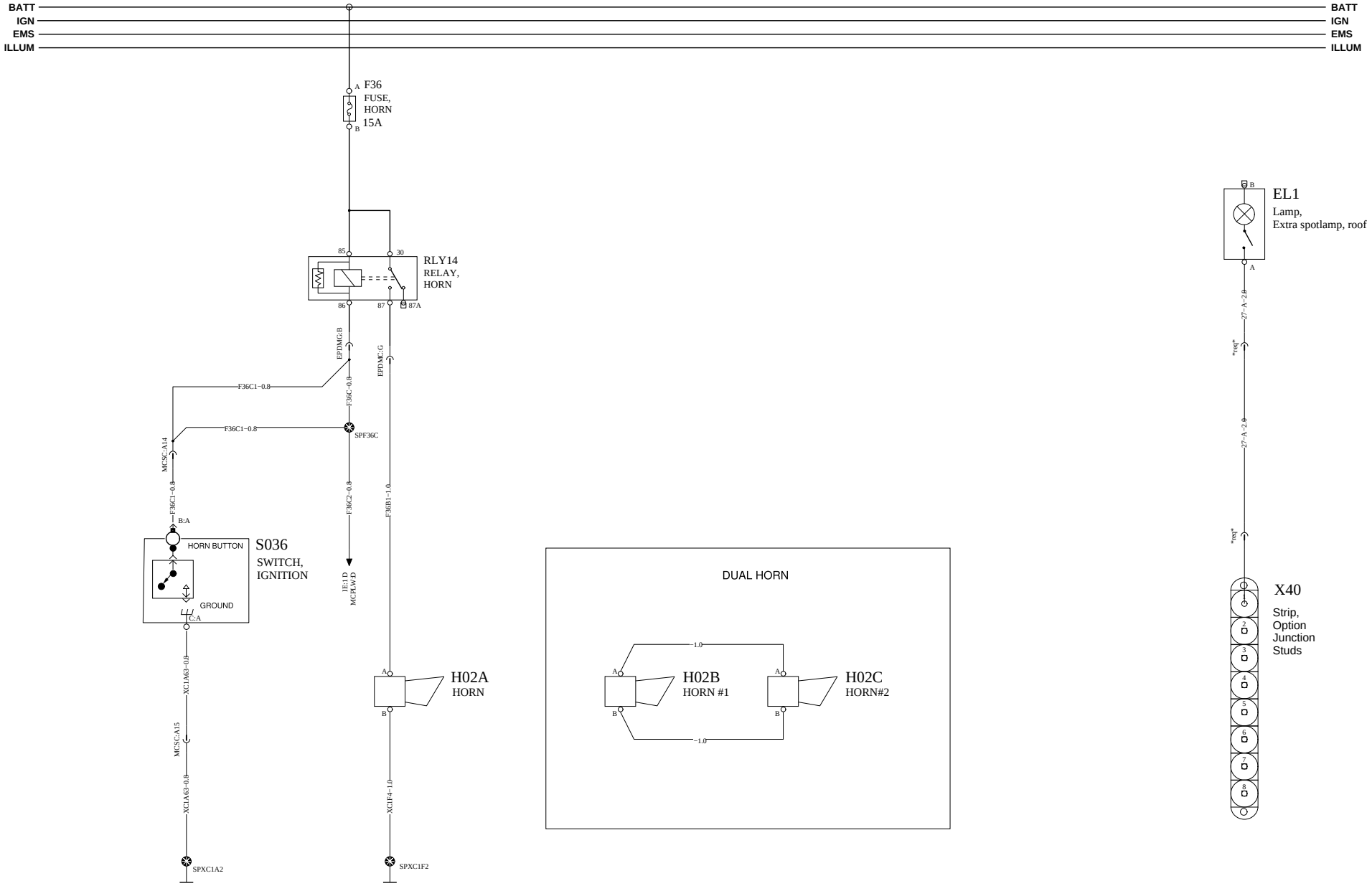

VOLVO Group Trucks Technology	Document title WIRING DIAGRAM, CONVENTIONAL, 12V MACK, 2013 BP Document type PRODUCT SCHEMATIC	Document No 21628497	Issue 05	Volume 1 (2)	Page 58 (80)

CLIMATE CONTROL

https://truckmanualshub.com/

WIRING DIAGRAM : HA

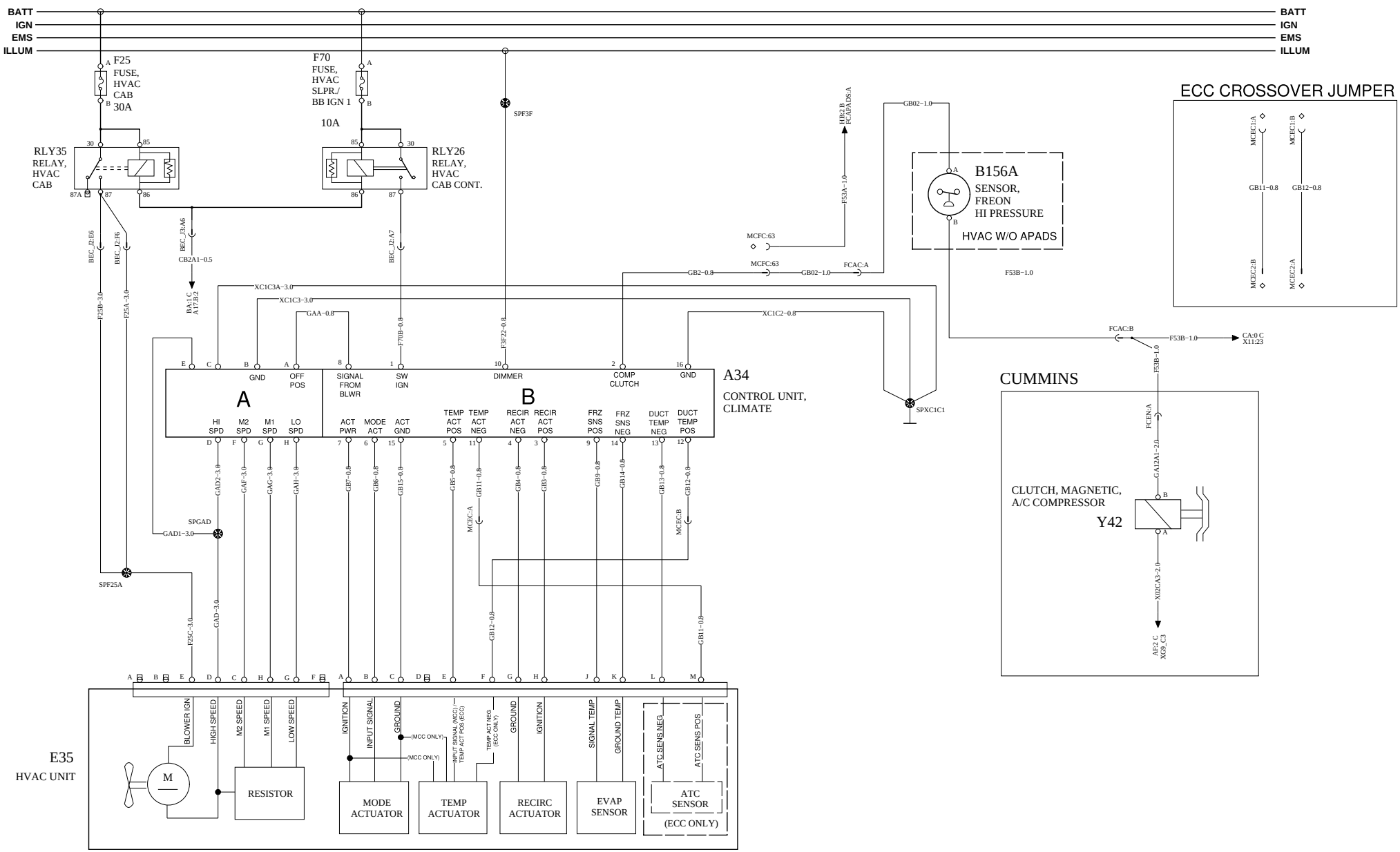

VOLVO Group Trucks Technology	Document title WIRING DIAGRAM, CONVENTIONAL, 12V MACK, 2013 BP Document type PRODUCT SCHEMATIC	Document No 21628497	Issue 05	Volume 1 (2)	Page 59 (80)

BATT
IGN
EMS
ILLUM

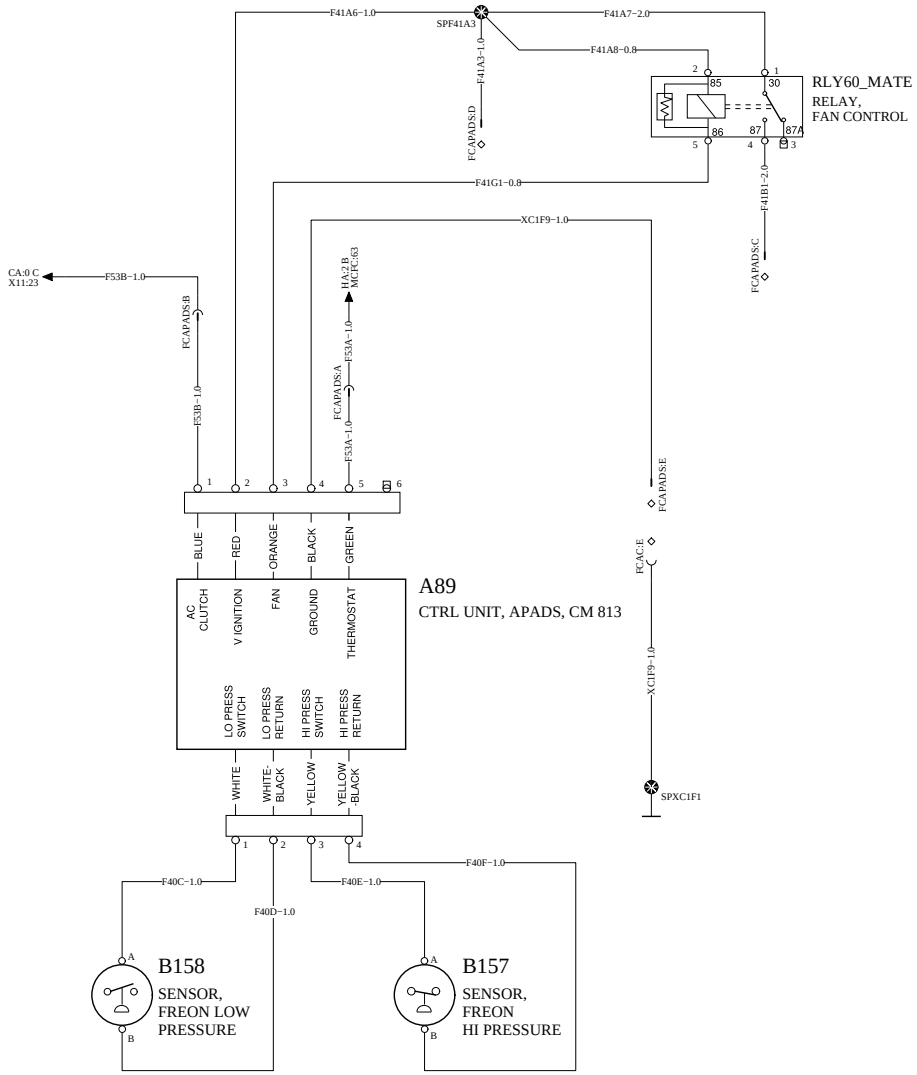

VOLVO Group Trucks Technology	Document title WIRING DIAGRAM, CONVENTIONAL, 12V MACK, 2013 BP Document type PRODUCT SCHEMATIC	Document No 21628497	Issue 05	Volume 1 (2)	Page 60 (80)

https://truckmanualshub.com/

WIRING DIAGRAM : HC

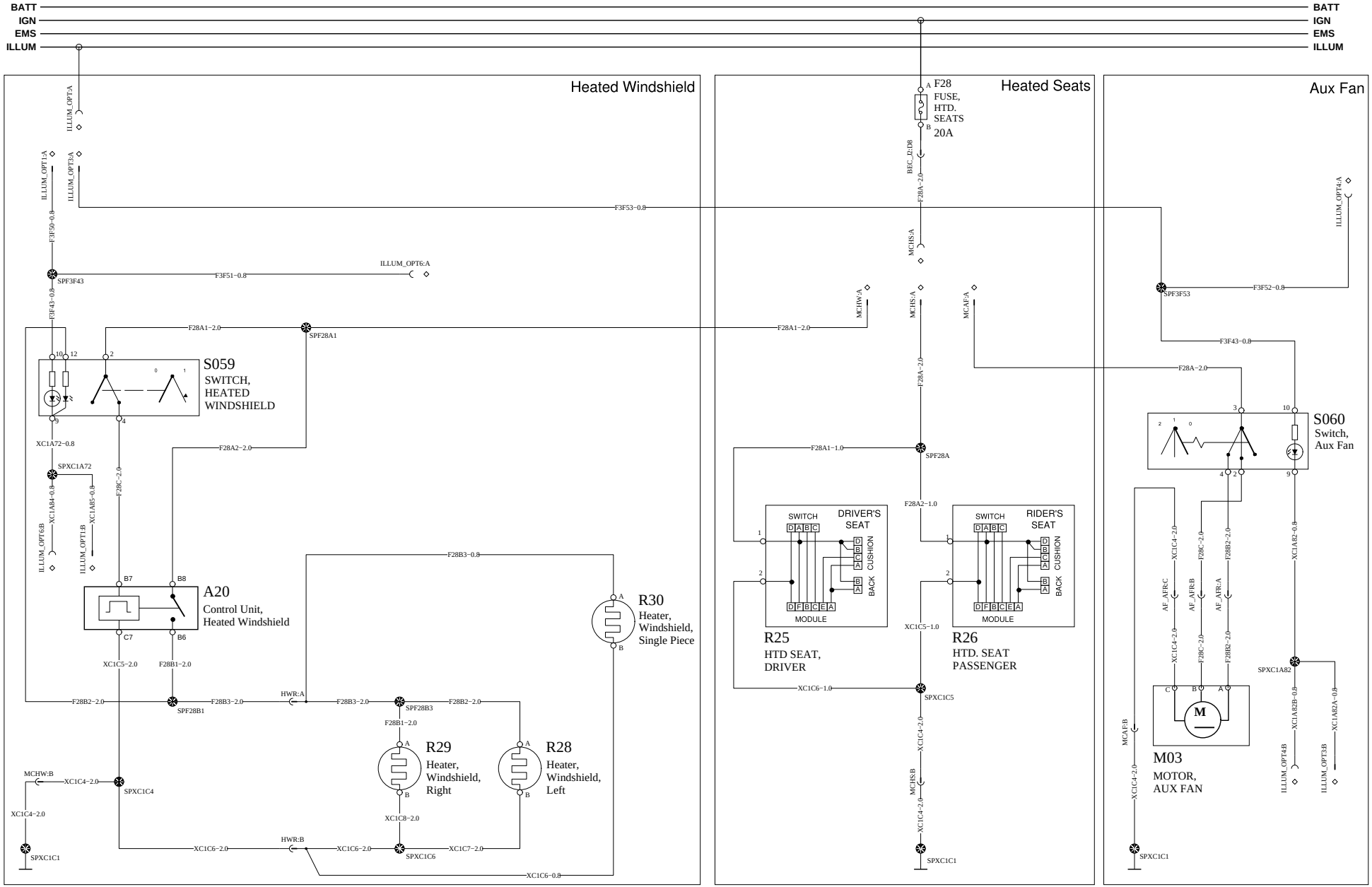

VOLVO Group Trucks Technology	Document title WIRING DIAGRAM, CONVENTIONAL, 12V MACK, 2013 BP Document type PRODUCT SCHEMATIC	Document No 21628497	Issue 05	Volume 1 (2)	Page 61 (80)

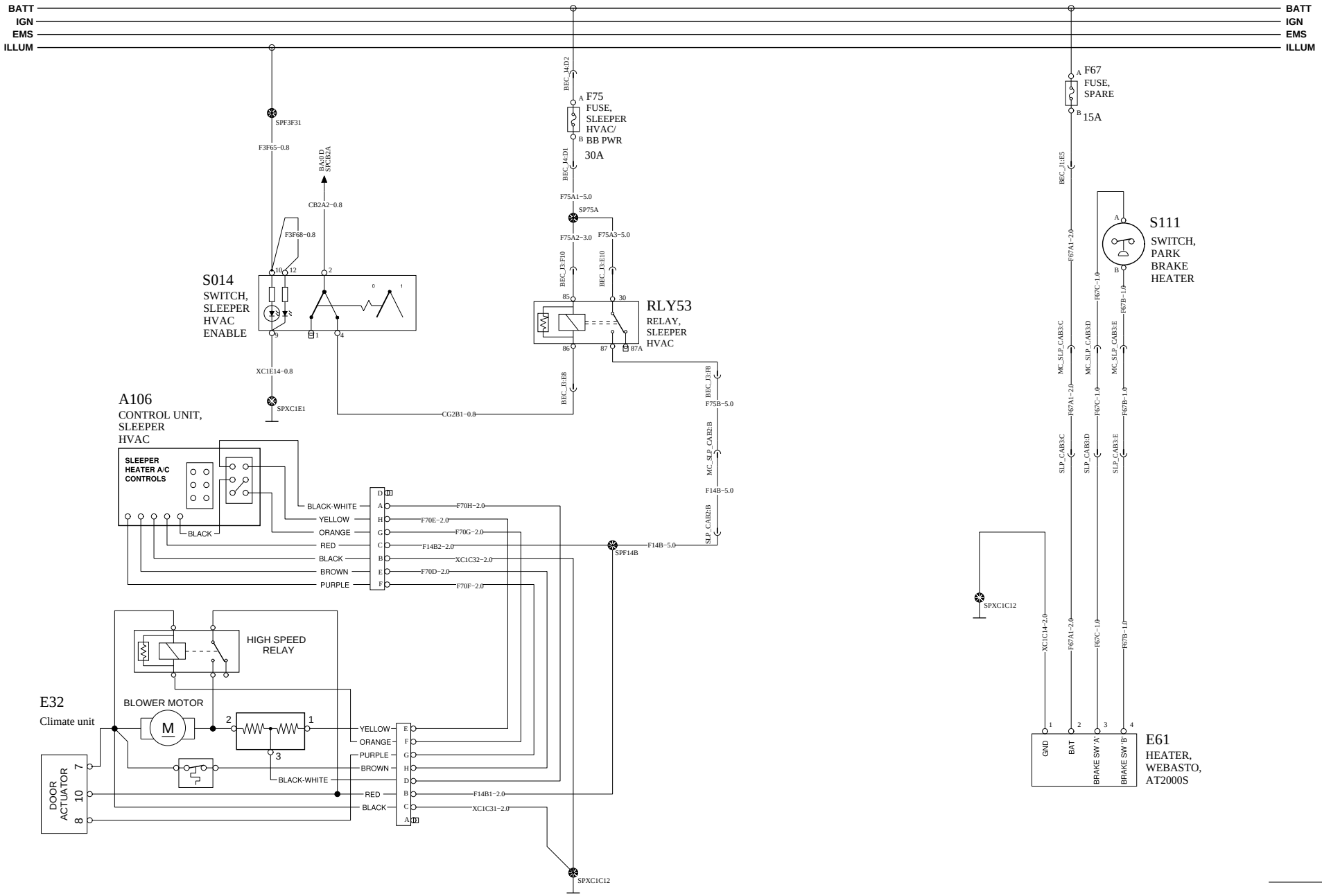

Document title	Document No	Issue	Volume	Page
WIRING DIAGRAM, CONVENTIONAL, 12V MACK, 2013 BP	21628497	05	1 (2)	62 (80)
Document type: PRODUCT SCHEMATIC				

VOLVO Group Trucks Technology

SLEEPER FUNCTIONS

https://truckmanualshub.com/

WIRING DIAGRAM : HE

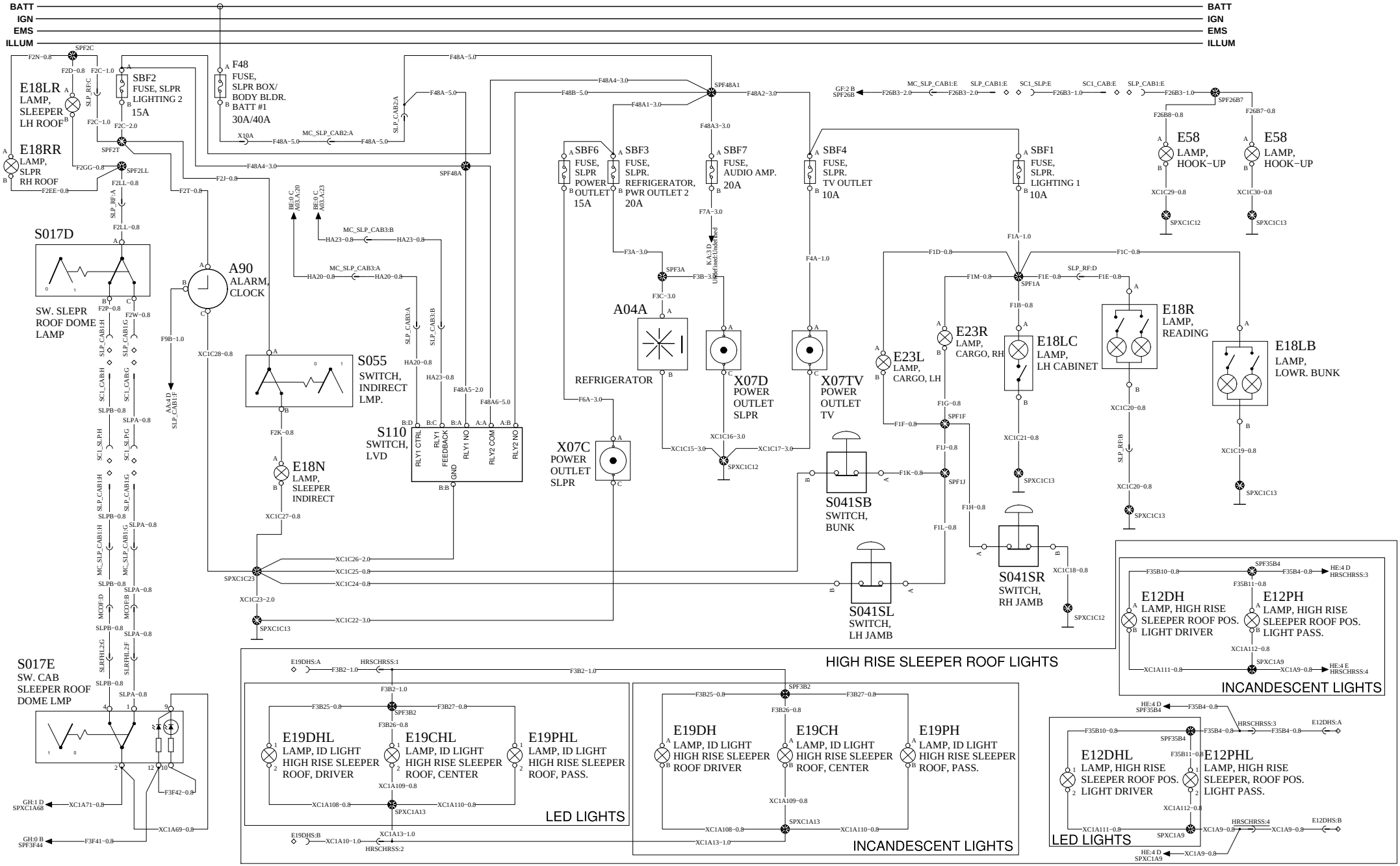

VOLVO Group Trucks Technology	Document title: WIRING DIAGRAM, CONVENTIONAL, 12V MACK, 2013 BP	Document No	Issue	Volume	Page
	Document type: PRODUCT SCHEMATIC	21628497	05	1 (2)	63 (80)

https://truckmanualshub.com/

WIRING DIAGRAM : HF

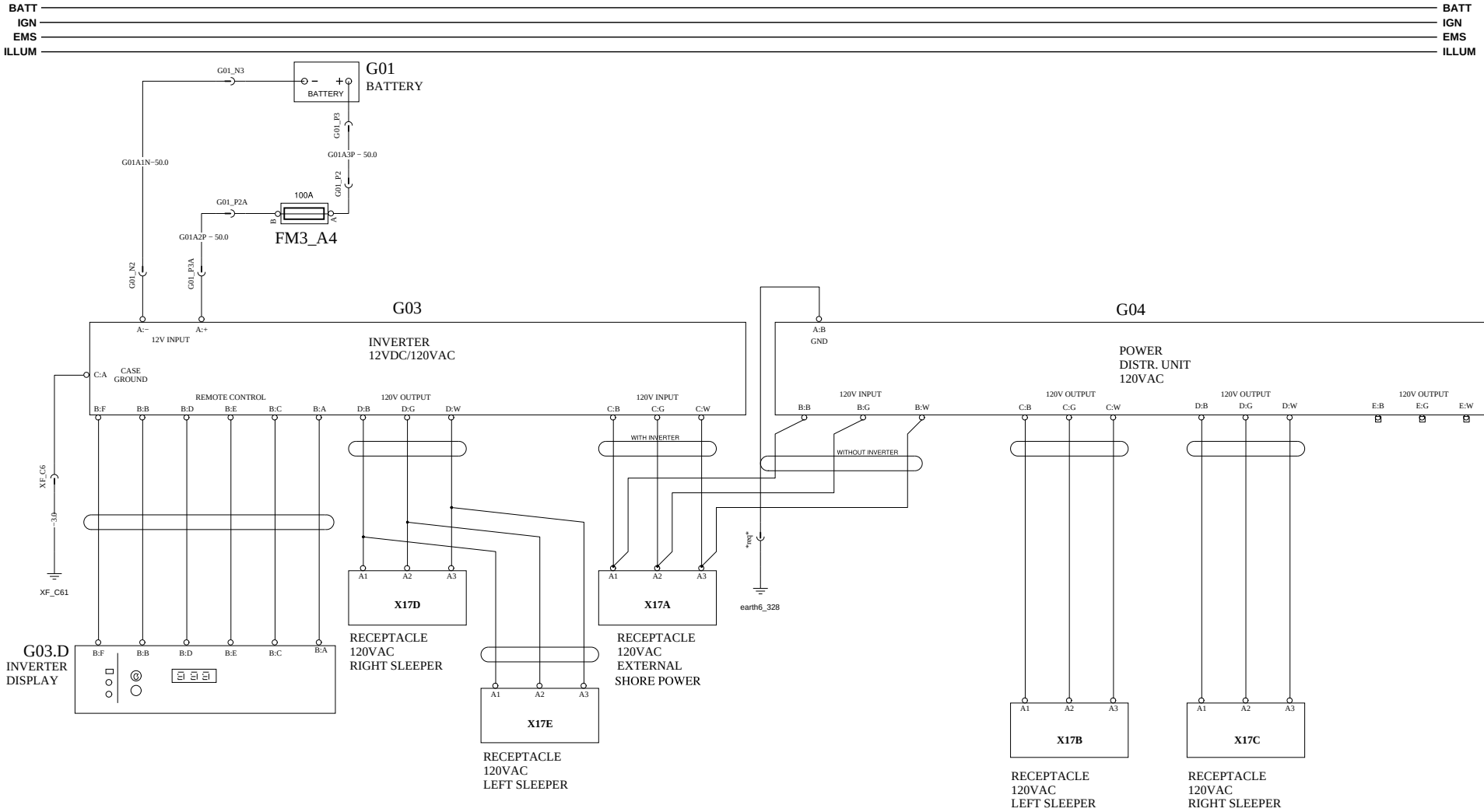

VOLVO Group Trucks Technology	Document title WIRING DIAGRAM, CONVENTIONAL, 12V MACK, 2013 BP Document type PRODUCT SCHEMATIC	Document No 21628497	Issue 05	Volume 1 (2)	Page 64 (80)

https://truckmanualshub.com/

BATT
IGN
EMS
ILLUM

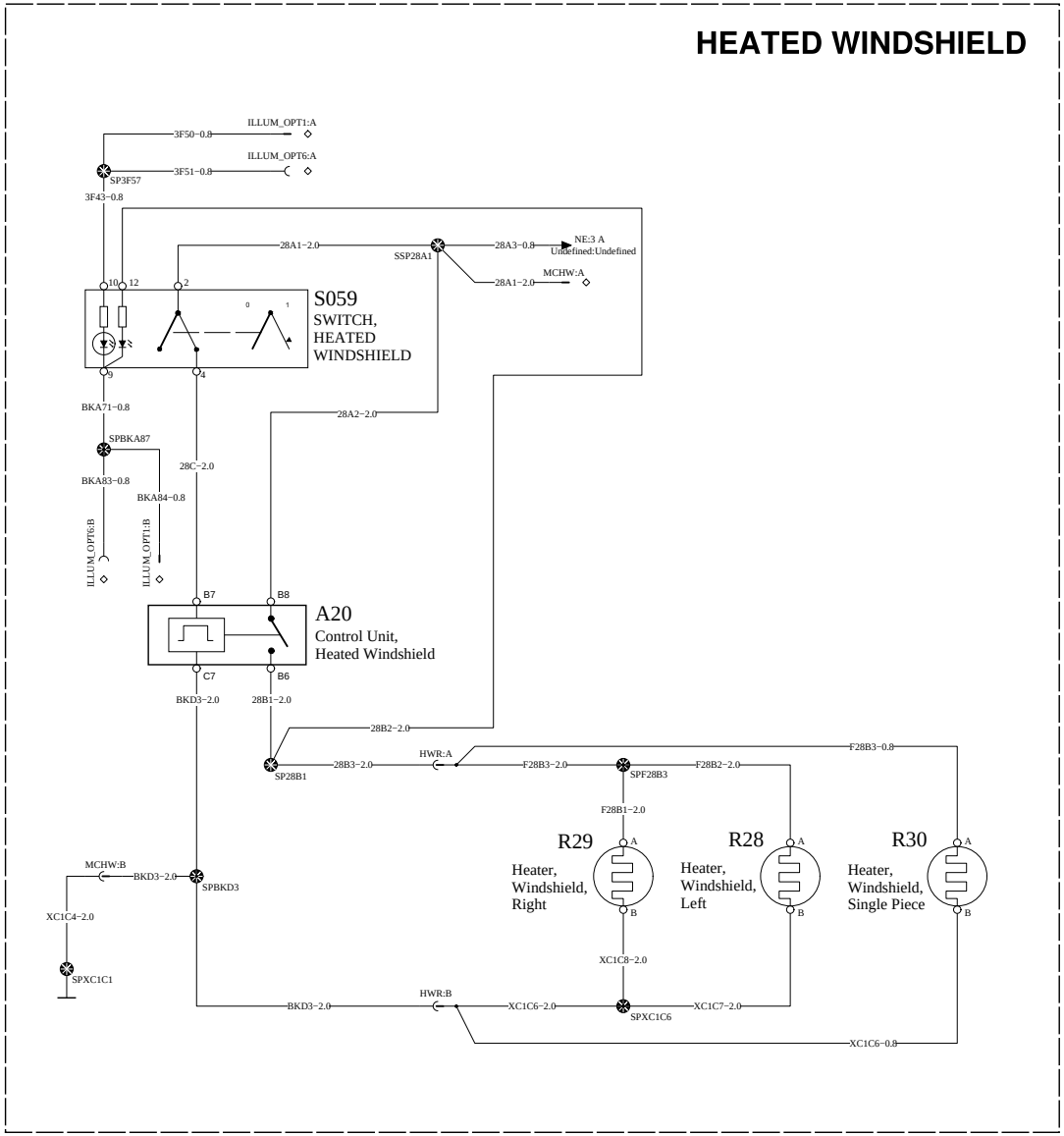

VOLVO Group Trucks Technology	Document title WIRING DIAGRAM, CONVENTIONAL, 12V MACK, 2013 BP Document type PRODUCT SCHEMATIC	Document No 21628497	Issue 05	Volume 1 (2)	Page 65 (80)

RH & LH MOTORIZED WINDOWS

https://truckmanualshub.com/

WIRING DIAGRAM : IA

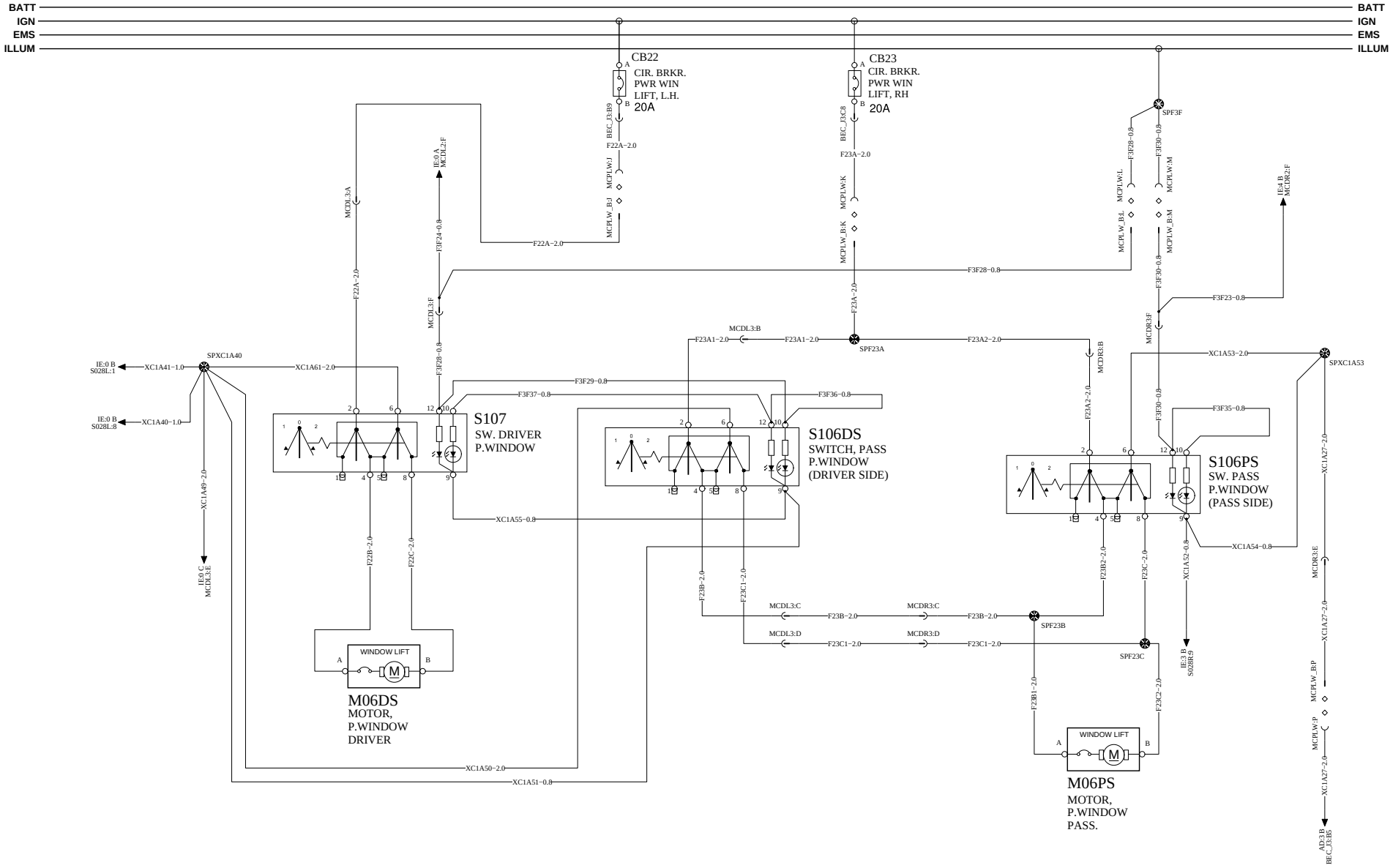

VOLVO Group Trucks Technology	Document title WIRING DIAGRAM, CONVENTIONAL, 12V MACK, 2013 BP	Document No	Issue	Volume	Page
	Document type PRODUCT SCHEMATIC	21628497	05	1 (2)	66 (80)

https://truckmanualshub.com/

WIRING DIAGRAM : IC

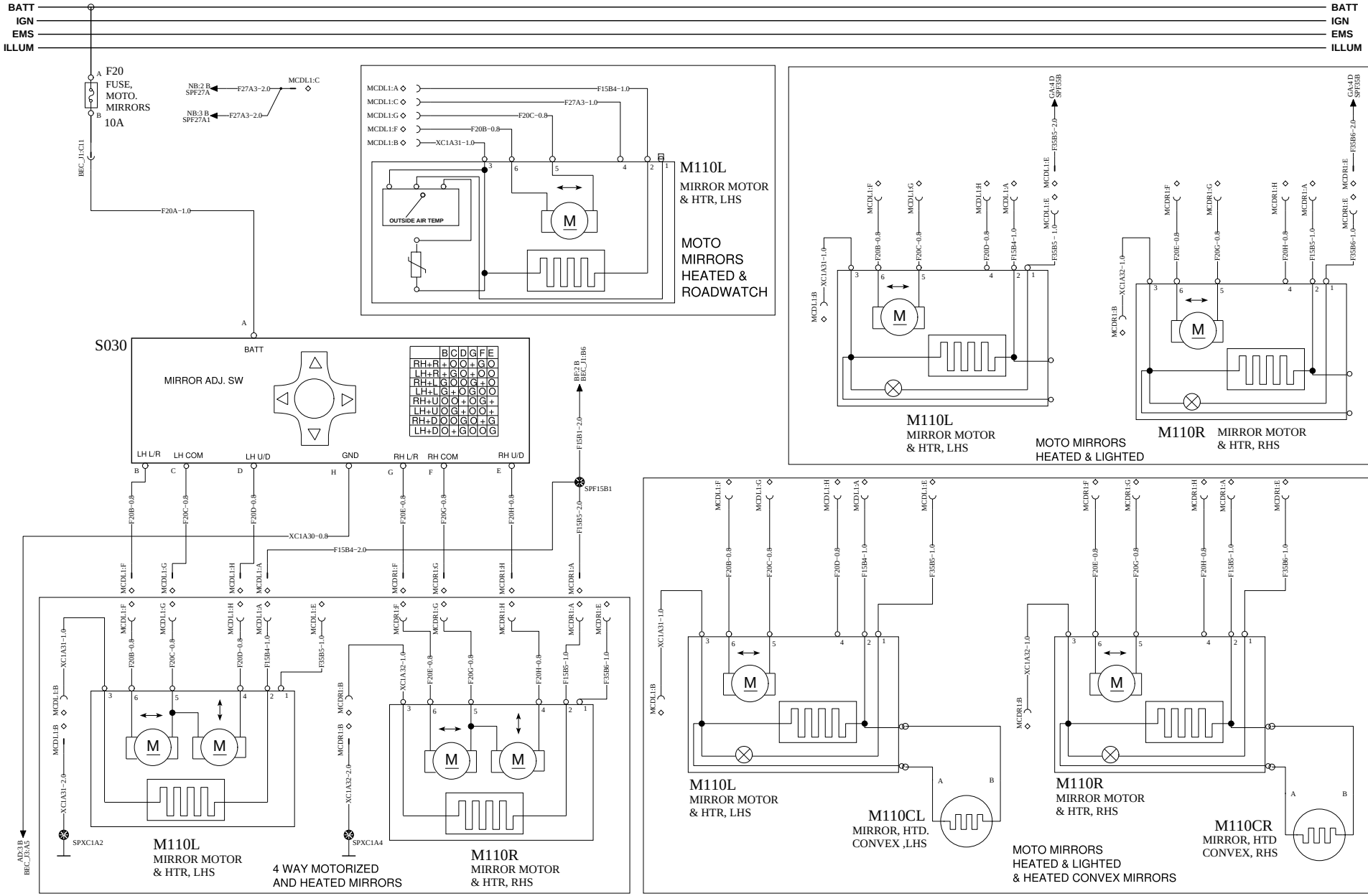

VOLVO Group Trucks Technology	Document title WIRING DIAGRAM, CONVENTIONAL, 12V MACK, 2013 BP Document type PRODUCT SCHEMATIC	Document No 21628497	Issue 05	Volume 1 (2)	Page 67 (80)

RH ONLY MOTORIZED WINDOWS & DOOR CONTROL

https://truckmanualshub.com/

WIRING DIAGRAM : ID

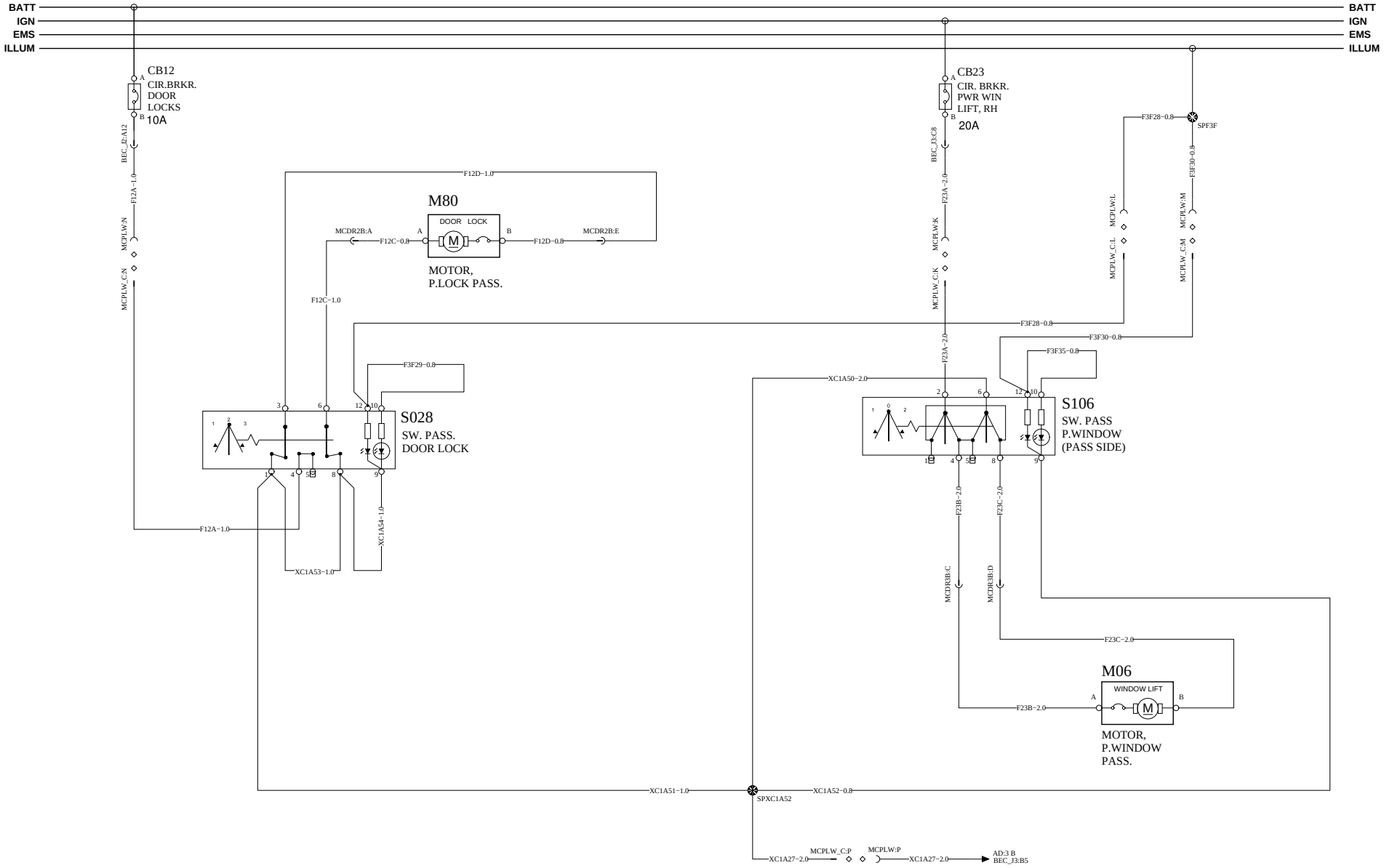

VOLVO Group Trucks Technology	Document title: WIRING DIAGRAM, CONVENTIONAL, 12V MACK, 2013 BP Document type: PRODUCT SCHEMATIC	Document No: 21628497	Issue: 05	Volume: 1 (2)	Page: 68 (80)

RH & LH DOOR CONTROL

https://truckmanualshub.com/

WIRING DIAGRAM : IE

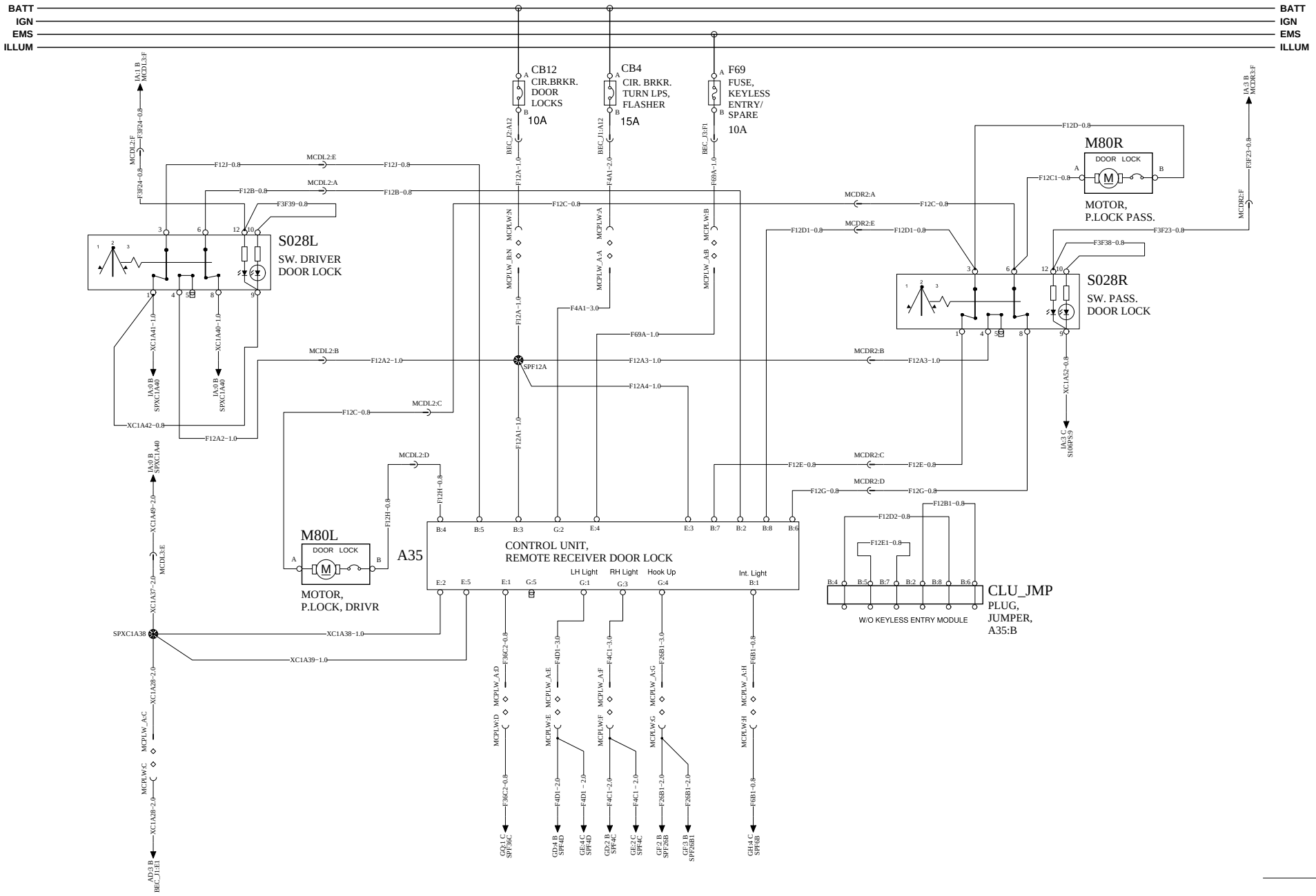

VOLVO Group Trucks Technology	Document title WIRING DIAGRAM, CONVENTIONAL, 12V MACK, 2013 BP Document type PRODUCT SCHEMATIC	Document No 21628497	Issue 05	Volume 1 (2)	Page 69 (80)

https://truckmanualshub.com/

WIRING DIAGRAM : JA

BATT
IGN
EMS
ILLUM

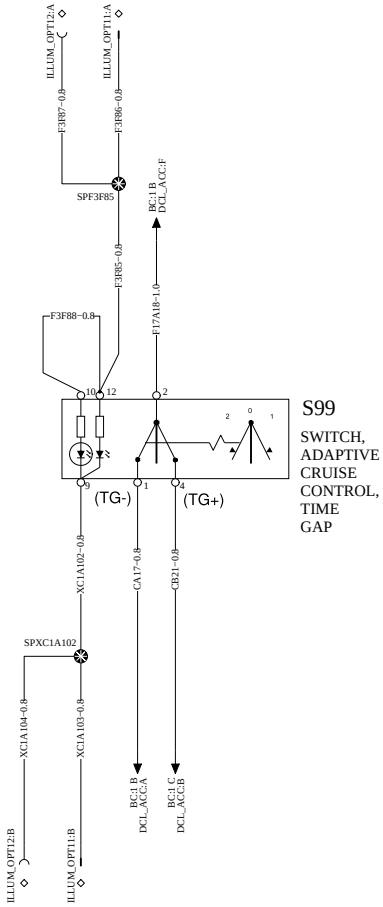

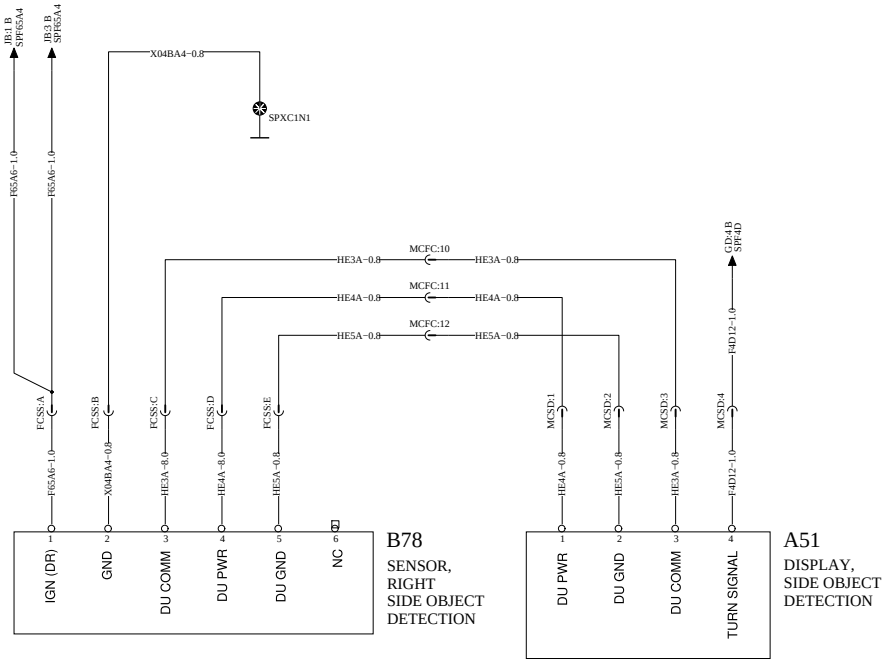

VOLVO Group Trucks Technology	Document title WIRING DIAGRAM, CONVENTIONAL, 12V MACK, 2013 BP Document type PRODUCT SCHEMATIC	Document No 21628497	Issue 05	Volume 1 (2)	Page 70 (80)

https://truckmanualshub.com/

WIRING DIAGRAM : JB

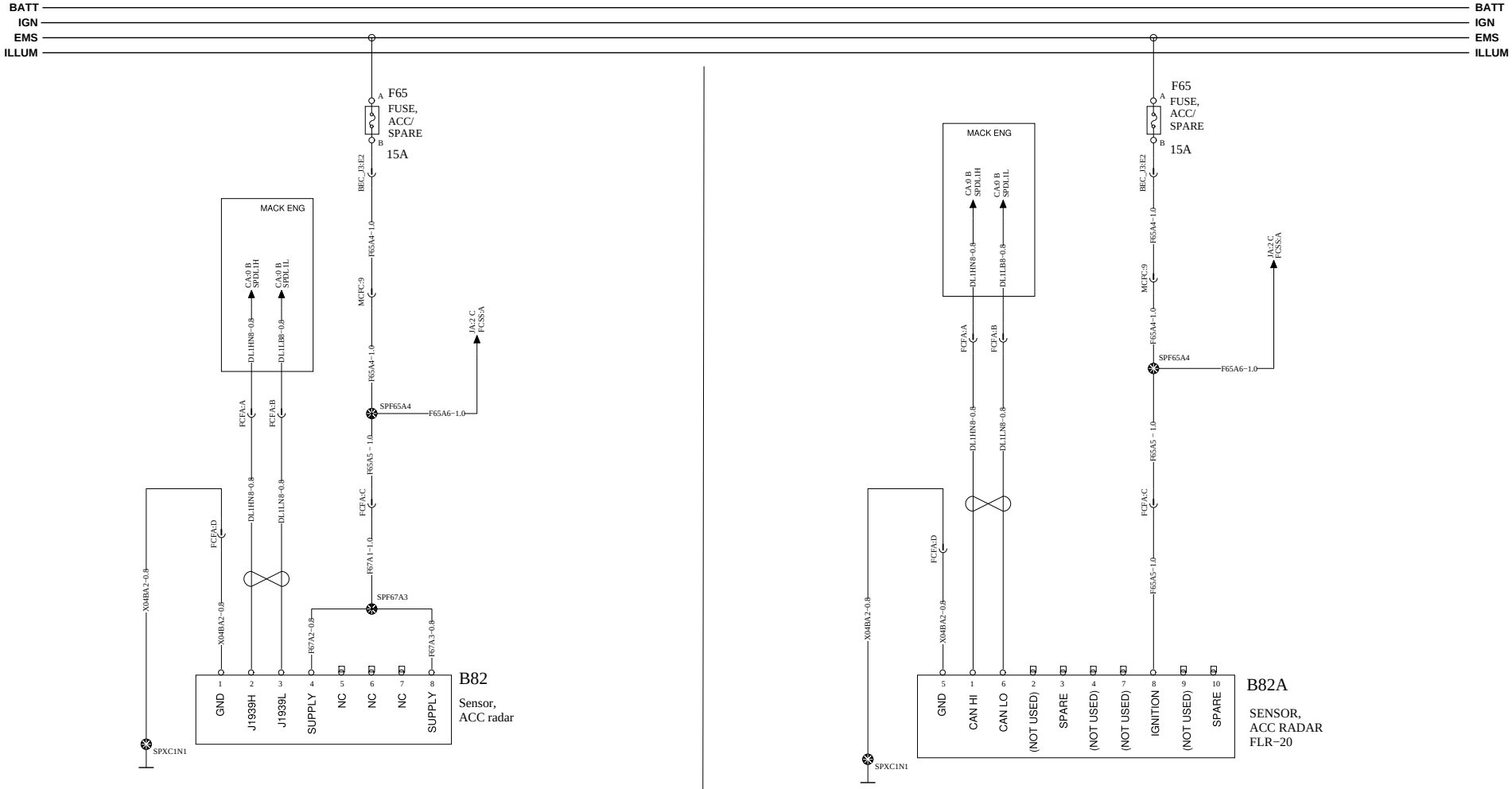

BENDIX FLR-10

BENDIX FLR-20

VOLVO Group Trucks Technology	Document title WIRING DIAGRAM, CONVENTIONAL, 12V MACK, 2013 BP Document type PRODUCT SCHEMATIC	Document No 21628497	Issue 05	Volume 1 (2)	Page 71 (80)

https://truckmanualshub.com/

WIRING DIAGRAM : KA

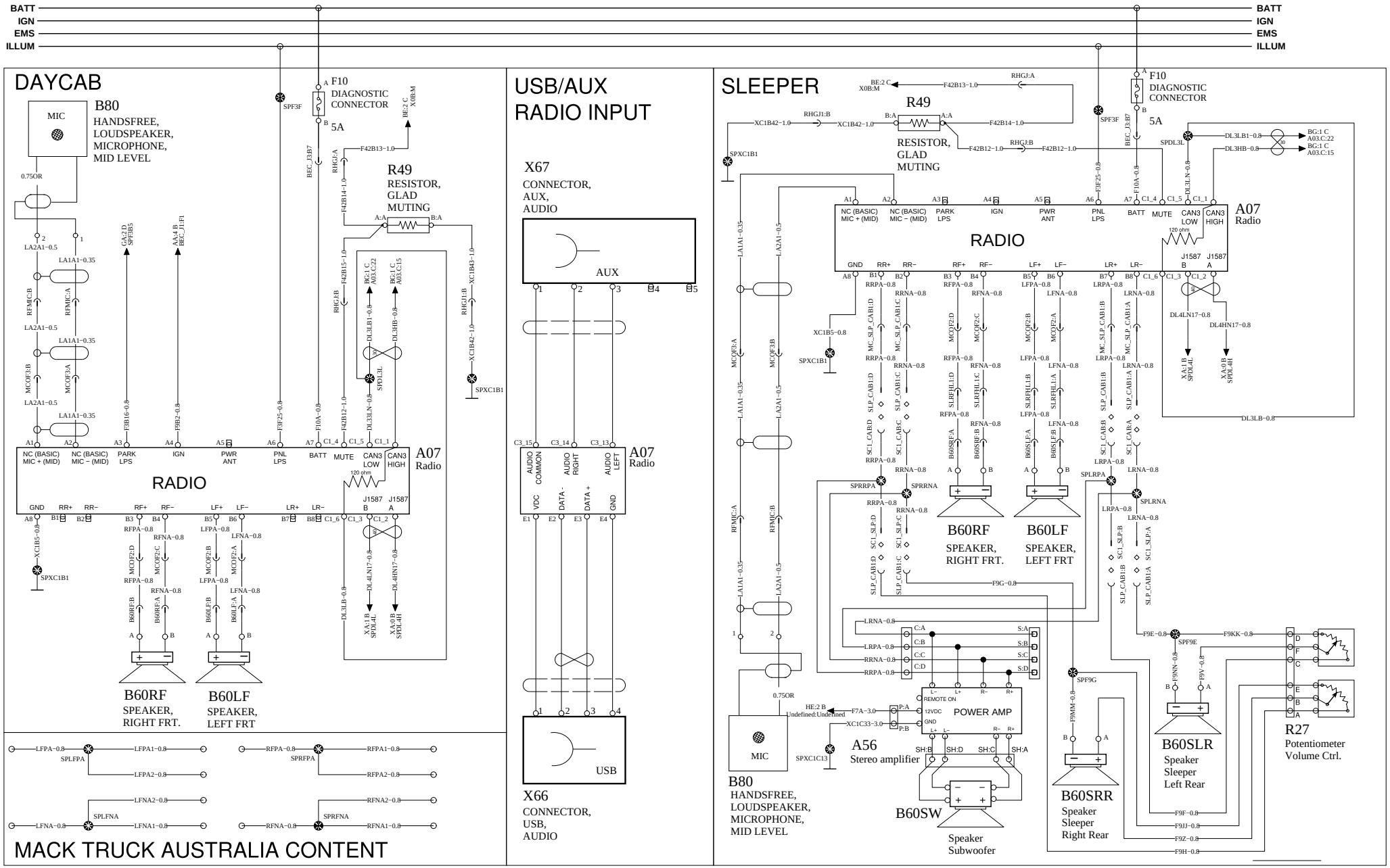

VOLVO Group Trucks Technology	Document title WIRING DIAGRAM, CONVENTIONAL, 12V MACK, 2013 BP Document type PRODUCT SCHEMATIC	Document No 21628497	Issue 05	Volume 1 (2)	Page 72 (80)

https://truckmanualshub.com/

WIRING DIAGRAM : KC

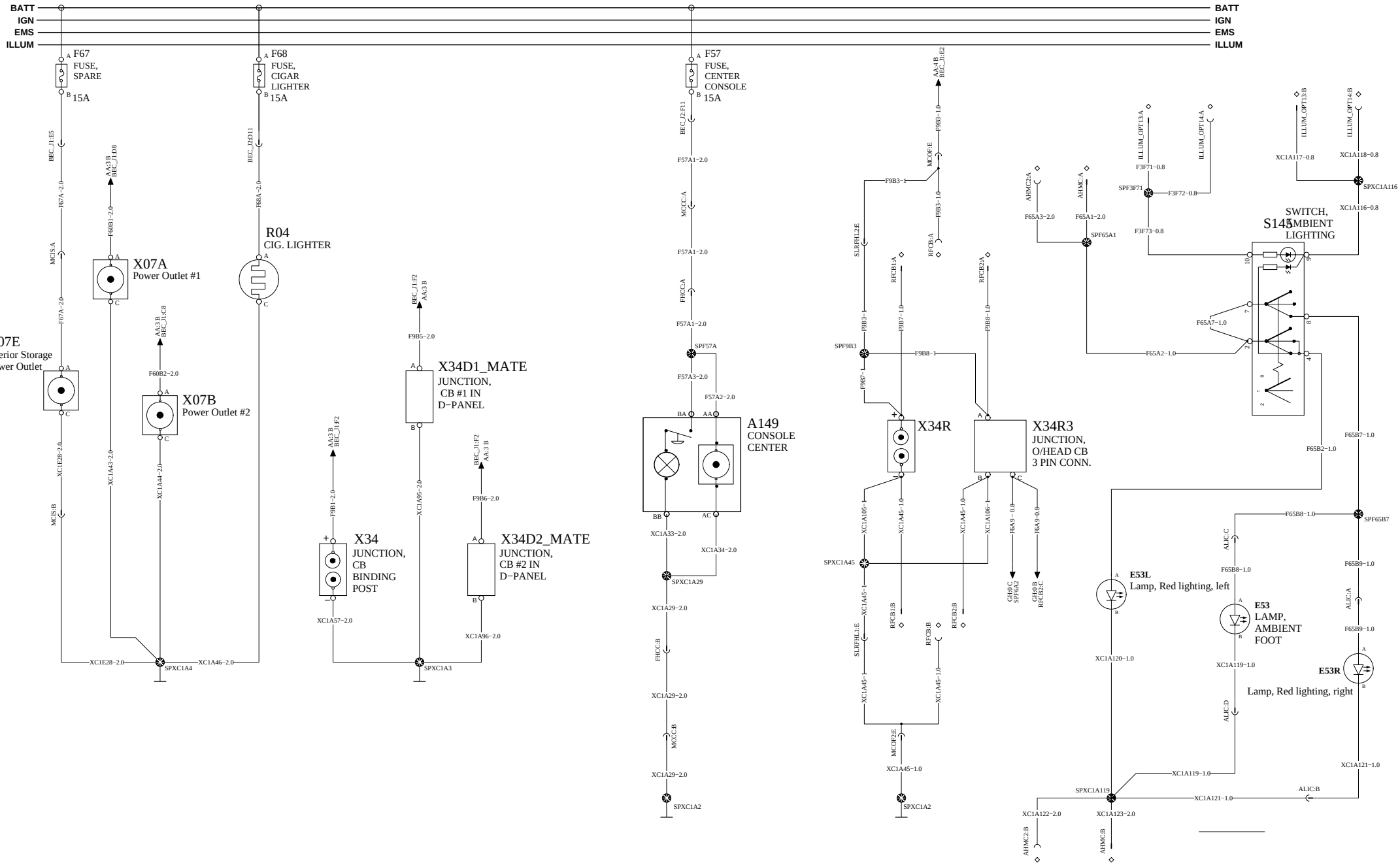

VOLVO Group Trucks Technology	Document title WIRING DIAGRAM, CONVENTIONAL, 12V MACK, 2013 BP Document type PRODUCT SCHEMATIC	Document No 21628497	Issue 05	Volume 1 (2)	Page 73 (80)

https://truckmanualshub.com/

WIRING DIAGRAM : NA

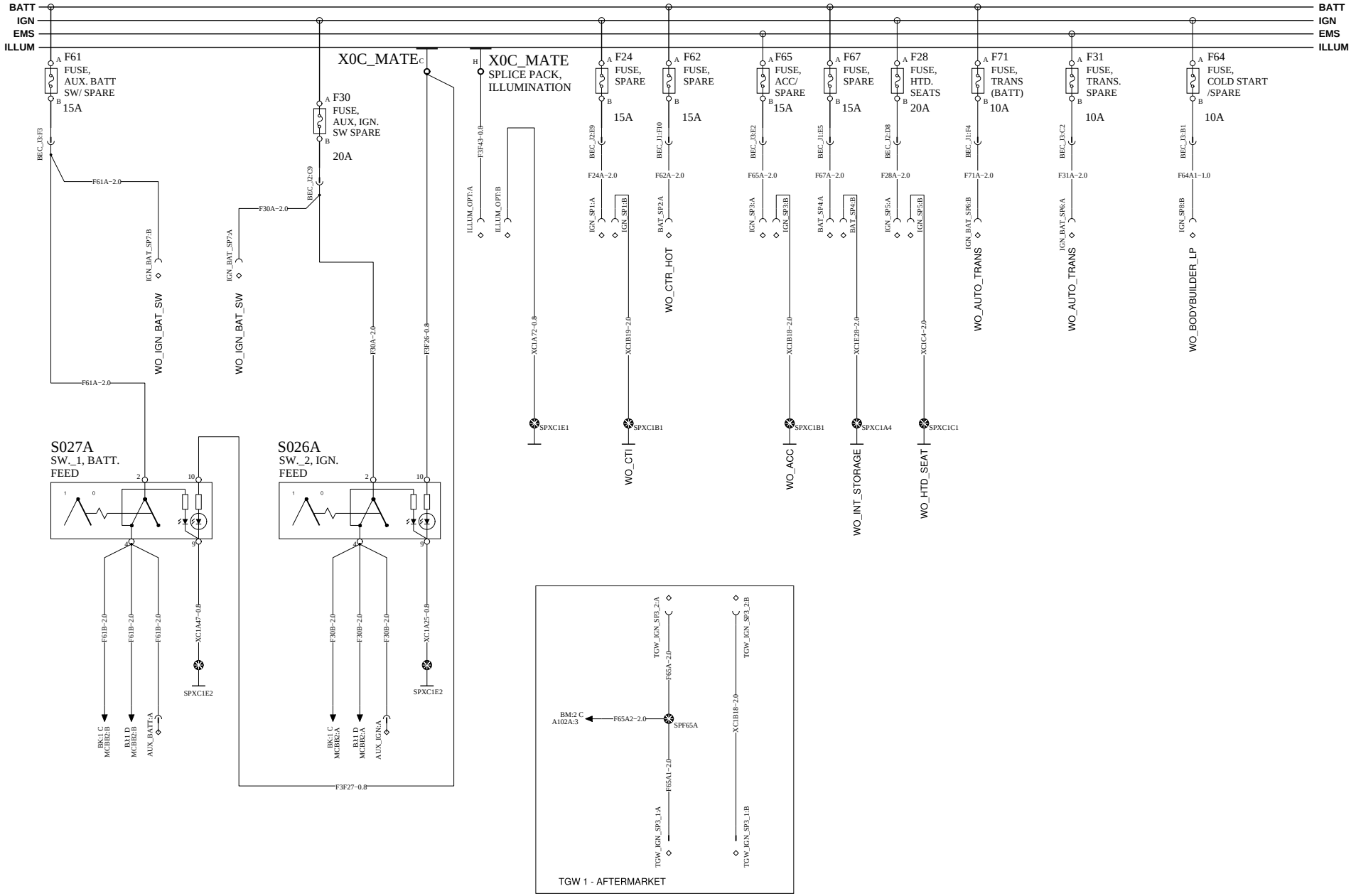

VOLVO Group Trucks Technology	Document title WIRING DIAGRAM, CONVENTIONAL, 12V MACK, 2013 BP Document type PRODUCT SCHEMATIC	Document No 21628497	Issue 05	Volume 1 (2)	Page 74 (80)

https://truckmanualshub.com/

WIRING DIAGRAM : NB

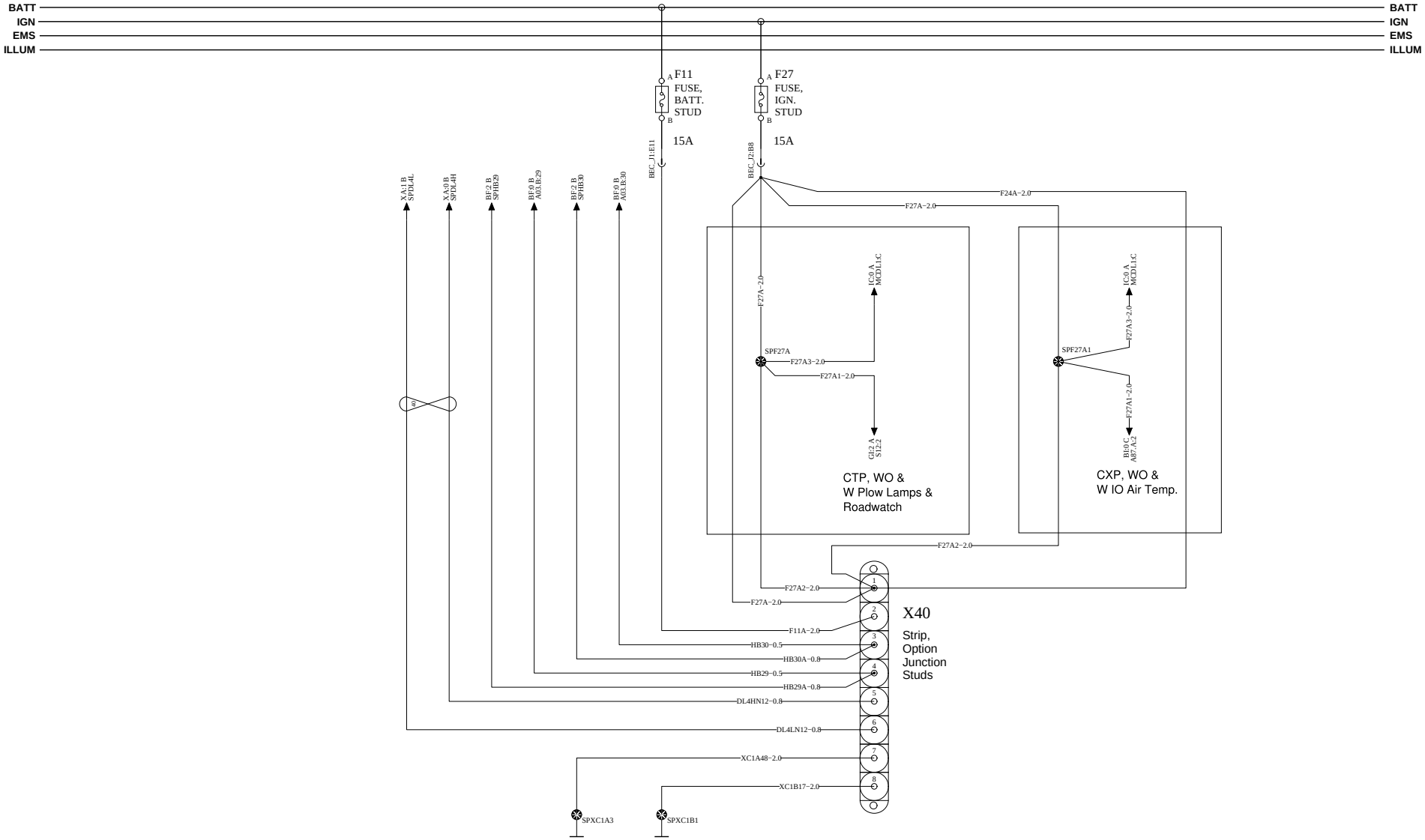

VOLVO Group Trucks Technology	Document title WIRING DIAGRAM, CONVENTIONAL, 12V MACK, 2013 BP Document type PRODUCT SCHEMATIC	Document No 21628497	Issue 05	Volume 1 (2)	Page 75 (80)

https://truckmanualshub.com/

WIRING DIAGRAM : NC

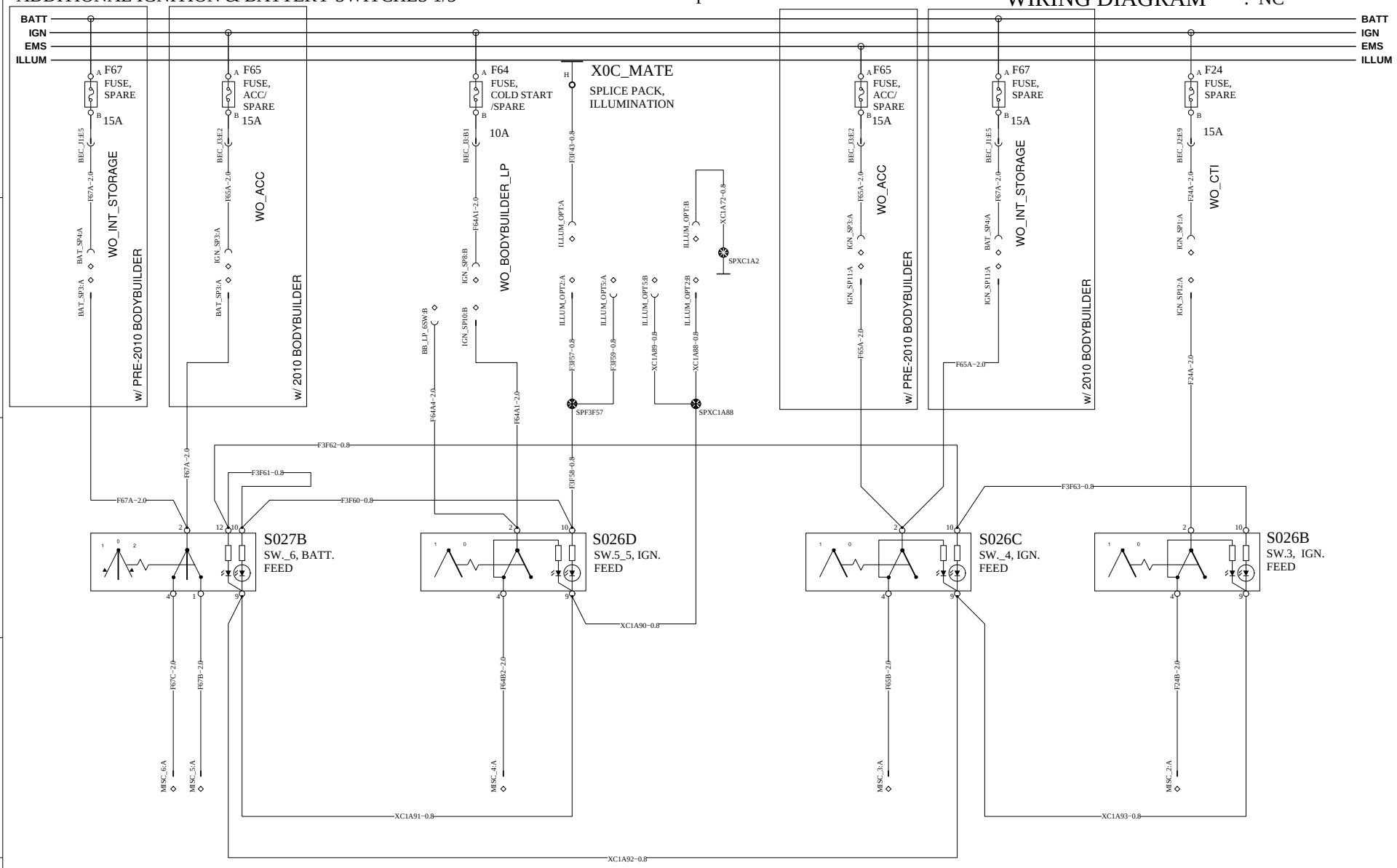

VOLVO Group Trucks Technology	Document title WIRING DIAGRAM, CONVENTIONAL, 12V MACK, 2013 BP Document type PRODUCT SCHEMATIC	Document No 21628497	Issue 05	Volume 1 (2)	Page 76 (80)

https://truckmanualshub.com/

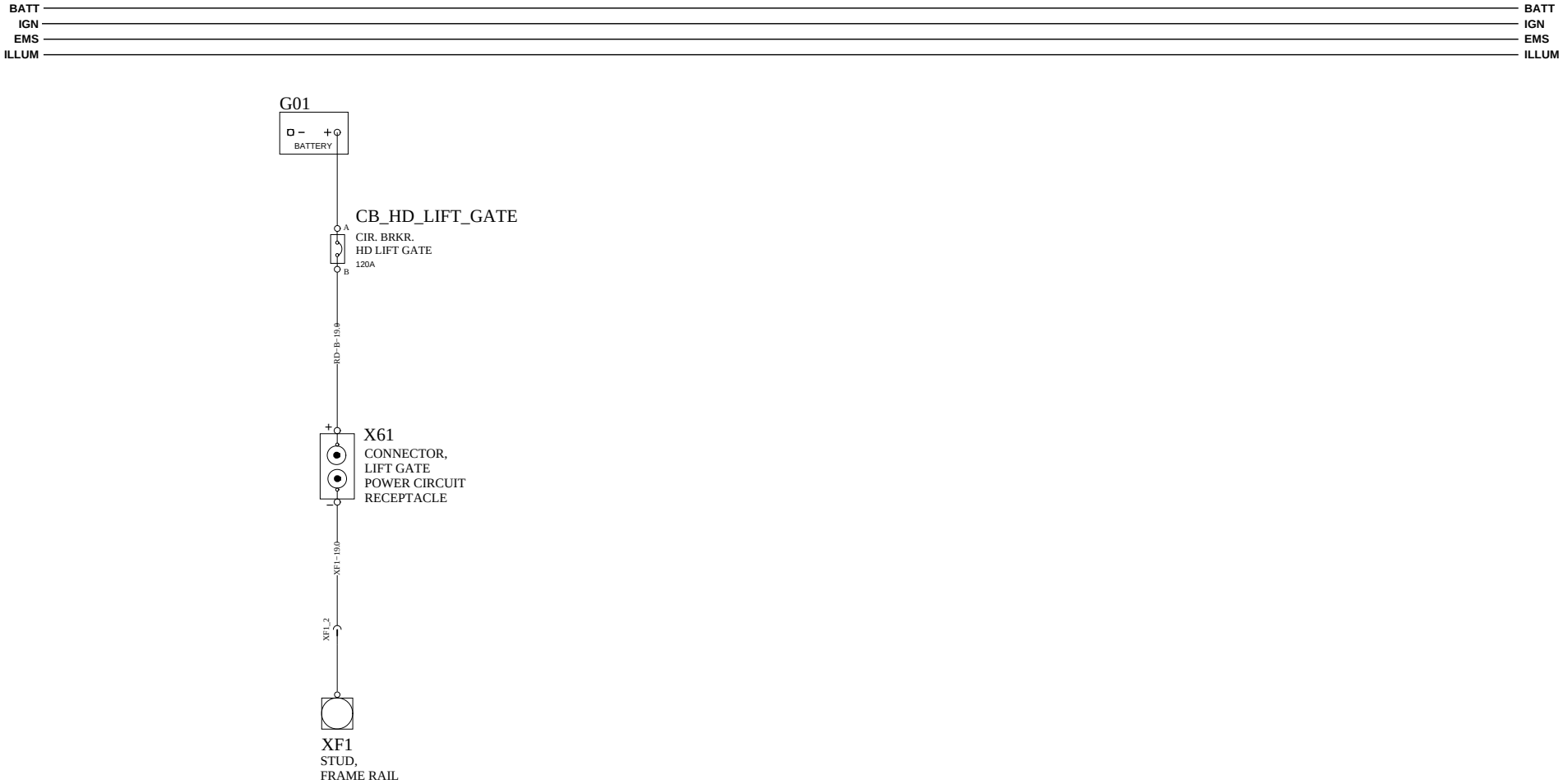

https://truckmanualshub.com/

WIRING DIAGRAM : NE

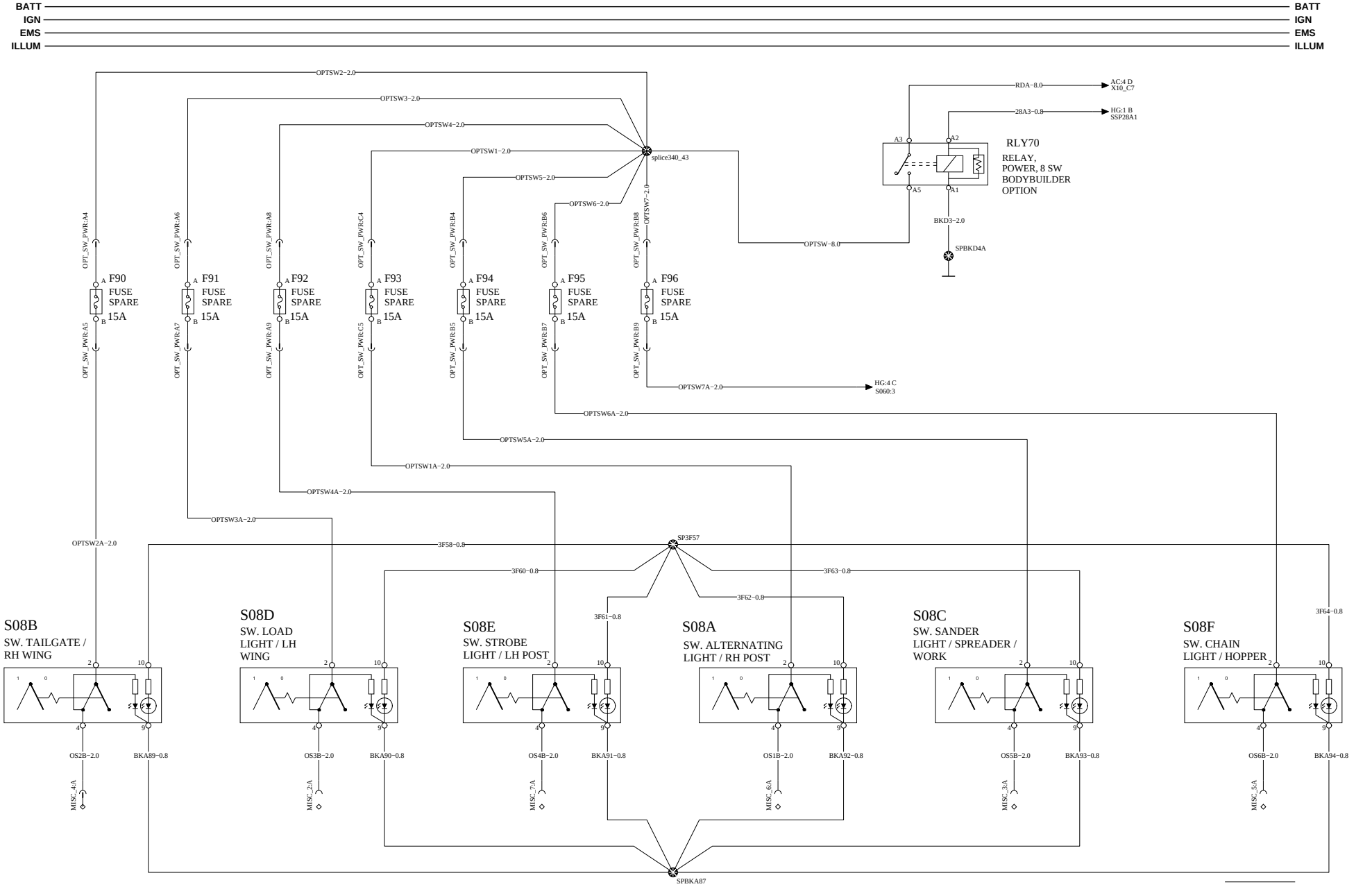

VOLVO Group Trucks Technology	Document title WIRING DIAGRAM, CONVENTIONAL, 12V MACK, 2013 BP Document type PRODUCT SCHEMATIC	Document No 21628497	Issue 05	Volume 1 (2)	Page 78 (80)

https://truckmanualshub.com/

WIRING DIAGRAM : NF

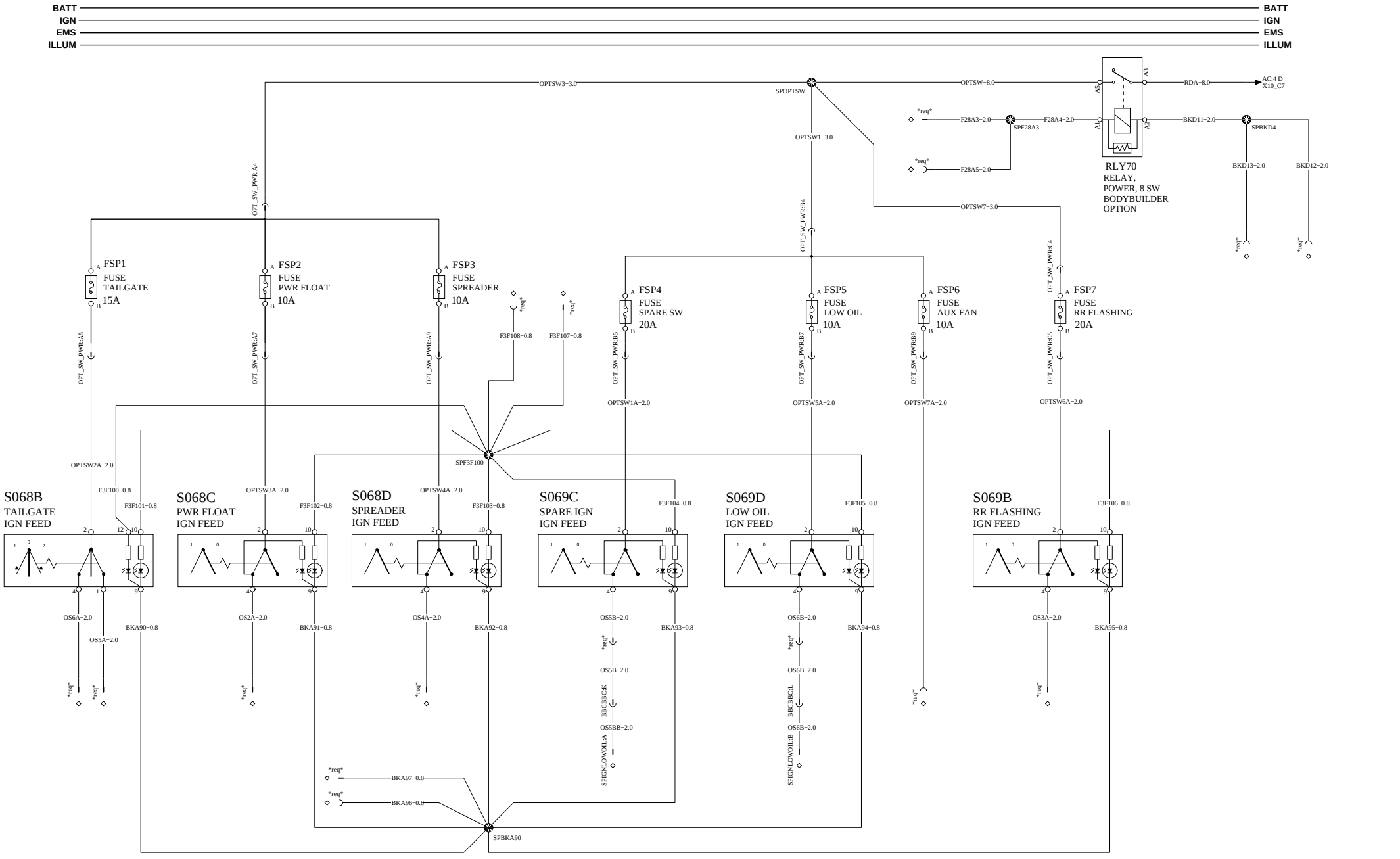

VOLVO Group Trucks Technology	Document title WIRING DIAGRAM, CONVENTIONAL, 12V MACK, 2013 BP Document type PRODUCT SCHEMATIC	Document No 21628497	Issue 05	Volume 1 (2)	Page 79 (80)

DATA LINK /DIAGNOSTICS

https://truckmanualshub.com/

WIRING DIAGRAM : XA

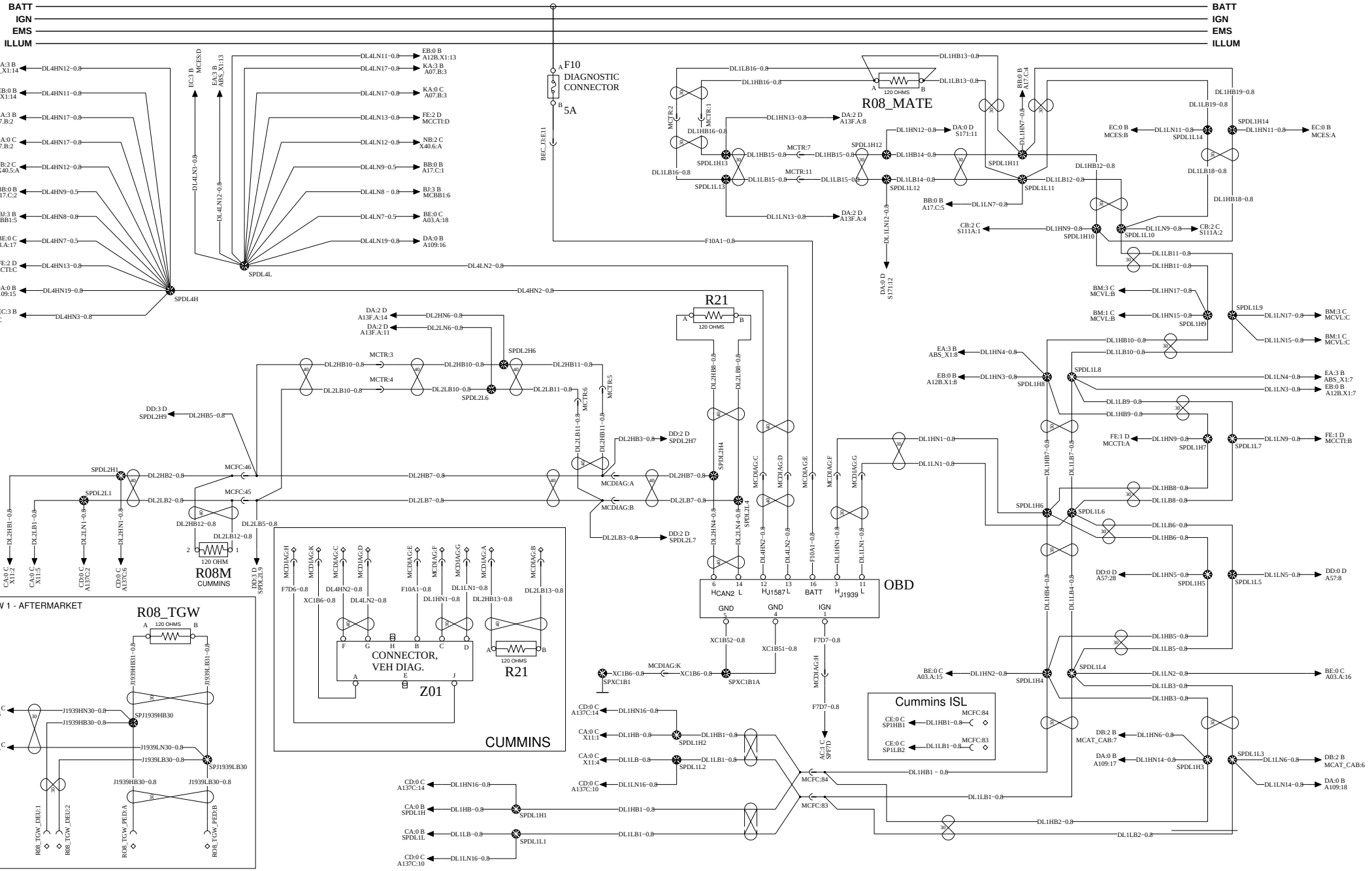

VOLVO Group Trucks Technology	Document title: WIRING DIAGRAM, CONVENTIONAL, 12V MACK, 2013 BP	Document No: 21628497	Issue: 05
	Document type: PRODUCT SCHEMATIC		Volume: 1 (2)
			Page: 80 (80)

https://truckmanualshub.com/

BILL OF MATERIALS INDEX (VOL 2)

NAME	PAGE
GROUND INFORMATION	1
FUSES AND CIRCUIT BREAKERS	3

NAME	PAGE
RELAYS	5
COMPONENTS	6

NAME	PAGE
INLINES	17
SPLICES	25

NAME	PAGE
SHELLS INFORMATION	27
ALL REFERENCES	36

https://truckmanualshub.com/

GROUND INFORMATION

NAME	PAGE
SPX1C1B61	GL 0 D
SPX1C1B62	GL 0 C
SPX01D1	AF 1 C
SPX01F1	AG 0 C
SPX109L1	AC 3 B
SPX109L2	AD 1 B
SPXC1A1	AD 2 C
SPXC1A2	AD 3 C
SPXC1A2	GA 4 E
SPXC1A2	GD 2 D
SPXC1A2	GE 2 D
SPXC1A2	GF 2 D
SPXC1A2	GH 4 C
SPXC1A2	GM 1 E
SPXC1A2	GQ 0 E
SPXC1A2	IC 0 E
SPXC1A2	KC 3 E
SPXC1A2	NC 2 B
SPXC1A3	AA 1 C
SPXC1A3	AD 2 B
SPXC1A3	BK 4 B
SPXC1A3	BM 2 B
SPXC1A3	GA 2 A
SPXC1A3	GP 0 E
SPXC1A3	KC 1 D
SPXC1A3	NB 1 D
SPXC1A4	AA 4 D
SPXC1A4	AD 3 C
SPXC1A4	EC 4 D

NAME	PAGE
SPXC1A4	GA 1 C
SPXC1A4	GD 4 D
SPXC1A4	GE 4 D
SPXC1A4	GH 3 C
SPXC1A4	IC 1 E
SPXC1A4	KC 0 D
SPXC1A4	NA 2 C
SPXC1A5	EC 4 C
SPXC1A6	GF 4 D
SPXC1A7	GA 3 E
SPXC1A8A	GA 3 E
SPXC1A9	HE 4 E
SPXC1A9A	GA 3 E
SPXC1A10	GA 0 E
SPXC1A10	GM 1 D
SPXC1A13	HE 1 E
SPXC1A29	KC 2 D
SPXC1A38	IE 0 D
SPXC1A40	IA 0 B
SPXC1A45	KC 3 D
SPXC1A52	ID 2 D
SPXC1A53	IA 4 B
SPXC1A65	GD 4 D
SPXC1A66	GD 3 D
SPXC1A68	GH 1 D
SPXC1A72	HC 0 C
SPXC1A82	HC 4 D
SPXC1A88	NC 2 B
SPXC1A97	FD 0 C

NAME	PAGE
SPXC1A102	JA 1 D
SPXC1A116	KC 4 B
SPXC1A119	KC 3 E
SPXC1B1	AD 2 C
SPXC1B1	BA 4 E
SPXC1B1	BD 3 C
SPXC1B1	BE 0 E
SPXC1B1	BL 3 B
SPXC1B1	CB 2 D
SPXC1B1	DA 0 D
SPXC1B1	DB 4 C
SPXC1B1	DD 0 B
SPXC1B1	EA 0 A
SPXC1B1	EB 0 C
SPXC1B1	EC 3 E
SPXC1B1	FD 2 B
SPXC1B1	FE 0 E
SPXC1B1	GL 0 D
SPXC1B1	KA 0 C
SPXC1B1	NA 2 C
SPXC1B1	NB 2 D
SPXC1B1	XA 2 D
SPXC1B1A	XA 2 D
SPXC1B1D	EC 3 E
SPXC1B7B	EB 2 A
SPXC1B7W	EA 0 A
SPXC1B18	FD 2 B
SPXC1B19	FE 0 E
SPXC1B25	FE 1 E

NAME	PAGE
SPXC1B29	FE 3 A
SPXC1B30	FD 1 E
SPXC1B46	DA 4 D
SPXC1B48	DA 0 C
SPXC1C1	AD 2 C
SPXC1C1	HA 3 C
SPXC1C1	HC 3 E
SPXC1C1	HG 0 D
SPXC1C1	NA 3 C
SPXC1C4	HC 0 D
SPXC1C5	HC 3 D
SPXC1C6	HC 1 E
SPXC1C6	HG 1 D
SPXC1C11	AD 2 D
SPXC1C12	AD 3 C
SPXC1C12	HD 1 E
SPXC1C12	HE 2 C
SPXC1C13	AD 3 D
SPXC1C13	HE 0 D
SPXC1C13	KA 2 D
SPXC1C14	AD 1 C
SPXC1C23	HE 0 D
SPXC1D1	AD 2 C
SPXC1E	GL 0 C
SPXC1E1	AD 3 B
SPXC1E1	BA 3 C
SPXC1E1	BD 1 C
SPXC1E1	BE 2 B
SPXC1E1	GJ 2 D

NAME	PAGE
SPXC1E1	HD 0 C
SPXC1E1	NA 1 C
SPXC1E2	AD 3 B
SPXC1E2	BG 0 C
SPXC1E2	EA 2 B
SPXC1E2	EB 3 B
SPXC1E2	FB 3 D
SPXC1E2	GJ 2 C
SPXC1E2	NA 1 D
SPXC1E45	GJ 4 D
SPXC1F1	AD 1 D
SPXC1F1	HB 3 D
SPXC1F2	AD 1 E
SPXC1F2	BG 1 E
SPXC1F2	GK 1 A
SPXC1F2	GP 0 E
SPXC1F2	GQ 1 E
SPXC1F6	BG 3 D
SPXC1F7	AD 1 E
SPXC1F7	BG 4 E
SPXC1F7	EB 4 D
SPXC1F7	GF 1 D
SPXC1F10	AD 1 D
SPXC1F10	FA 2 E
SPXC1F10	FB 1 E
SPXC1F10	GF 1 E
SPXC1F11	GF 1 D
SPXC1F14	GF 2 C
SPXC1F16	FB 1 E

NAME	PAGE
SPXC1F22	FA 3 D
SPXC1F23	FA 0 D
SPXC1G4A	CE 4 D
SPXC1G7	GA 1 E
SPXC1G8	GD 0 D
SPXC1G8	GE 0 D
SPXC1G14	GI 2 D
SPXC1G16	GD 1 D
SPXC1G16	GE 2 D
SPXC1G40	AC 2 E
SPXC1G40	AD 1 D
SPXC1G40	BF 4 A
SPXC1G40	CA 3 C
SPXC1G40	GA 1 E
SPXC1G40	GD 0 E
SPXC1G40	GE 0 E
SPXC1G40	GF 3 C
SPXC1G41	BF 3 B
SPXC1N1	AD 1 E
SPXC1N1	GG 4 D
SPXC1N1	GJ 2 D
SPXC1N1	JA 2 B
SPXC1N1	JB 0 D
SPXCIE23	GA 1 C
SPXF1A1	AD 1 C
SPXF1A1	CD 4 D
SPXF1A3	CF 4 C
SPXM1	AD 0 B
X0A_MATE	AD 3 C

https://truckmanualshub.com/

GROUND INFORMATION

NAME	PAGE
X0A_MATE	BA 1 D
X0A_MATE	BC 2 C
X0A_MATE	BD 3 C
X0A_MATE	BF 4 C
X0A_MATE	BI 0 C

NAME	PAGE
X0A_MATE	BJ 2 B
X0A_MATE	FB 2 C
X0B_MATE	BE 2 C
X0C_MATE	BA 0 A
X0C_MATE	BD 2 A

NAME	PAGE
X0C_MATE	BG 0 A
X0C_MATE	BI 1 A
X0C_MATE	CB 2 A
X0C_MATE	DB 1 A
X0C_MATE	DD 1 A

NAME	PAGE
X0C_MATE	FB 2 A
X0C_MATE	FE 2 A
X0C_MATE	GH 2 A
X0C_MATE	GI 2 A
X0C_MATE	GJ 1 A

NAME	PAGE
X0C_MATE	NA 1 A
X0C_MATE	NC 1 A
X06D_MATE	BH 1 C
X07A	KC 0 B
X07B	KC 0 C

NAME	PAGE
X07C	HE 2 C
X07D	HE 2 C
X07E	KC 0 C
X07TV	HE 2 C

https://truckmanualshub.com/

FUSES AND CIRCUIT BREAKERS

FUSE	DESCRIPTION	PAGE
CB2 (15A)	CIR. BRKR HDLPS, DRL MODULE, FOG LPS.	AA 1 A
CB2 (15A)	CIR. BRKR HDLPS, DRL MODULE, FOG LPS.	GA 1 A
CB3 (15A)	CIR. BRKR. PARK,TAIL MARKER LPS.	AA 1 A
CB3 (15A)	CIR. BRKR. PARK,TAIL MARKER LPS.	GA 0 A
CB4 (15A)	CIR. BRKR. TURN LPS, FLASHER	AA 1 A
CB4 (15A)	CIR. BRKR. TURN LPS, FLASHER	GA 2 A
CB4 (15A)	CIR. BRKR. TURN LPS, FLASHER	IE 2 A
CB12 (10A)	CIR.BRKR. DOOR LOCKS	AA 0 A
CB12 (10A)	CIR.BRKR. DOOR LOCKS	ID 0 A
CB12 (10A)	CIR.BRKR. DOOR LOCKS	IE 1 A
CB14 (10A)	CIR BRKR, HDLP, LH LOW BEAM	AA 4 A
CB14 (10A)	CIR BRKR, HDLP, LH LOW BEAM	GD 0 A
CB14 (10A)	CIR BRKR, HDLP, LH LOW BEAM	GE 0 A
CB21 (20A)	CIR. BRKR WINDSHIELD WIPER/WASH.	AA 0 E
CB21 (20A)	CIR. BRKR WINDSHIELD WIPER/WASH.	GP 0 A
CB22 (20A)	CIR. BRKR. PWR WIN LIFT, L.H.	AA 0 E
CB22 (20A)	CIR. BRKR. PWR WIN LIFT, L.H.	IA 2 A
CB23 (20A)	CIR. BRKR. PWR WIN LIFT, RH	AA 0 E
CB23 (20A)	CIR. BRKR. PWR WIN LIFT, RH	IA 2 A
CB23 (20A)	CIR. BRKR. PWR WIN LIFT, RH	ID 3 A
CB81 (10A)	CIR BRKR, HDLP, RH LOW BEAM	AA 4 B
CB81 (10A)	CIR BRKR, HDLP, RH LOW BEAM	GD 1 A
CB81 (10A)	CIR BRKR, HDLP, RH LOW BEAM	GE 1 A
F5 (10A)	FUSE, TRACTOR STOP LPS.	AA 1 A
F5 (10A)	FUSE, TRACTOR STOP LPS.	GA 3 A
F6 (10A)	FUSE, DOME/ CTSY. LMP	AA 2 A
F6 (10A)	FUSE, DOME/ CTSY. LMP	GH 0 A
F7 (10A)	FUSE, KEY SW	AA 0 A
F7 (10A)	FUSE, KEY SW	AC 0 A
F8 (15A)	FUSE, AIR SOL.	AA 0 E
F8 (15A)	FUSE, AIR SOL.	FB 1 A
F9 (15A)	FUSE, CB POSTS	AA 3 A
F10 (5A)	DIAGNOSTIC CONNECTOR	AA 2 B
F10 (5A)	DIAGNOSTIC CONNECTOR	KA 1 A
F10 (5A)	DIAGNOSTIC CONNECTOR	XA 2 A
F11 (15A)	FUSE, BATT. STUD	AA 2 A
F11 (15A)	FUSE, BATT. STUD	BI 0 A
F11 (15A)	FUSE, BATT. STUD	BM 1 A
F11 (15A)	FUSE, BATT. STUD	NB 2 A
F13 (15A/20A)	FUSE, ABS BATT1	AA 1 B
F13 (15A/20A)	FUSE, ABS BATT1	EA 2 A
F13 (15A/20A)	FUSE, ABS BATT1	EB 3 A
F15 (20A)	FUSE, HTD. MIRROR	AA 0 B
F15 (20A)	FUSE, HTD. MIRROR	BF 2 A
F16 (10A)	FUSE, VEHICLE CTRL UNIT	AA 0 D
F16 (10A)	FUSE, VEHICLE CTRL UNIT	BA 0 A
F17 (10A)	FUSE, CTRL/SW. INPUTS	AA 1 D
F17 (10A)	FUSE, CTRL/SW. INPUTS	BA 1 A
F17 (10A)	FUSE, CTRL/SW. INPUTS	BB 0 A
F17 (10A)	FUSE, CTRL/SW. INPUTS	BC 3 A

FUSE	DESCRIPTION	PAGE
F17 (10A)	FUSE, CTRL/SW. INPUTS	BD 0 A
F18 (10A)	FUSE, DPF REGEN SWITCH	AA 2 D
F18 (10A)	FUSE, DPF REGEN SWITCH	CB 2 A
F19 (5A)	FUSE, INST. CLSTR	AA 0 A
F19 (5A)	FUSE, INST. CLSTR	BE 0 A
F19 (5A)	FUSE, INST. CLSTR	BG 0 A
F20 (10A)	FUSE, MOTO. MIRRORS	AA 1 B
F20 (10A)	FUSE, MOTO. MIRRORS	IC 0 A
F24 (15A)	FUSE, SPARE	AA 1 E
F24 (15A)	FUSE, SPARE	FE 1 A
F24 (15A)	FUSE, SPARE	GL 0 A
F24 (15A)	FUSE, SPARE	NA 2 A
F24 (15A)	FUSE, SPARE	NC 3 A
F25 (30A)	FUSE, HVAC CAB	AA 3 C
F25 (30A)	FUSE, HVAC CAB	HA 0 A
F26 (15A)	FUSE, HOOK-UP LAMPS	AA 2 A
F26 (15A)	FUSE, HOOK-UP LAMPS	GA 1 A
F27 (15A)	FUSE, IGN. STUD	AA 1 E
F27 (15A)	FUSE, IGN. STUD	BM 1 A
F27 (15A)	FUSE, IGN. STUD	NB 2 A
F28 (20A)	FUSE, HTD. SEATS	AA 1 E
F28 (20A)	FUSE, HTD. SEATS	HC 3 A
F28 (20A)	FUSE, HTD. SEATS	NA 3 A
F29 (10A)	FUSE, EMS RELAYS	AA 1 B
F30 (20A)	FUSE, AUX, IGN. SW SPARE	AA 1 E
F30 (20A)	FUSE, AUX, IGN. SW SPARE	NA 1 A
F31 (10A)	FUSE, TRANS. SPARE	AA 1 D
F31 (10A)	FUSE, TRANS. SPARE	DB 3 A
F31 (10A)	FUSE, TRANS. SPARE	DD 3 A
F31 (10A)	FUSE, TRANS. SPARE	DE 2 A
F31 (10A)	FUSE, TRANS. SPARE	NA 3 A
F32 (30A)	FUSE, ISO CPH	AB 4 C
F32 (30A)	FUSE, ISO CPH	GJ 3 A
F33 (30A)	FUSE, TRAILER STOP LMP.	AB 3 A
F33 (30A)	FUSE, TRAILER STOP LMP.	GG 1 A
F34 (30A)	FUSE, REV/NEUTRAL POWER	AB 1 A
F34 (30A)	FUSE, REV/NEUTRAL POWER	GG 2 A
F35 (30A)	FUSE, CAB & TRLR CLEARANCE LMP.	AB 2 A
F35 (30A)	FUSE, CAB & TRLR CLEARANCE LMP.	GA 4 A
F36 (15A)	FUSE, HORN	AB 1 A
F36 (15A)	FUSE, HORN	GQ 1 A
F37 (30A)	FUSE, TRAILER TAIL LMP.	AB 2 A
F37 (30A)	FUSE, TRAILER TAIL LMP.	GG 0 A
F38 (30A/10A)	FUSE, ENG. CTRL UNIT	AB 3 D
F38 (30A/10A)	FUSE, ENG. CTRL UNIT	CA 1 A
F39 (30A)	FUSE, TRAILER ABS PWR	AB 2 D
F39 (30A)	FUSE, TRAILER ABS PWR	GG 3 A
F40 (15A)	HEATED DRAIN VALVE	AB 1 D
F40 (15A)	HEATED DRAIN VALVE	FA 3 A
F41 (15A)	FUSE, ENG. COMP #1	AB 2 E

https://truckmanualshub.com/

FUSES AND CIRCUIT BREAKERS

FUSE	DESCRIPTION	PAGE
F41 (15A)	FUSE, ENG. COMP #1	CA 1 A
F42 (20A)	FUSE, BACKUP LMPS.	AB 1 D
F42 (20A)	FUSE, BACKUP LMPS.	BE 3 A
F43 (15A/5A)	FUSE, ENG. COMP #2/ CUMM. IGN	AB 2 E
F43 (15A/5A)	FUSE, ENG. COMP #2/ CUMM. IGN	CA 2 A
F43 (15A/5A)	FUSE, ENG. COMP #2/ CUMM. IGN	CE 2 B
F44 (15A)	FUSE, HTD. AIR DRY /HTD DRAIN VALVE	AB 1 D
F44 (15A)	FUSE, HTD. AIR DRY /HTD DRAIN VALVE	FA 2 A
F45 (30A)	FUSE, SPARE/ FUEL SEP./ FUEL HTR	AB 0 D
F45 (30A)	FUSE, SPARE/ FUEL SEP./ FUEL HTR	GG 1 A
F46 (20A)	FUSE, NOX	AB 3 D
F46 (20A)	FUSE, NOX	CD 0 A
F47 (15A)	FUSE, TRANS/ SPARE	AB 3 D
F48 (30A/40A)	FUSE, SLPR BOX/ BODY BLDR. BATT #1	AB 0 A
F48 (30A/40A)	FUSE, SLPR BOX/ BODY BLDR. BATT #1	BJ 0 A
F48 (30A/40A)	FUSE, SLPR BOX/ BODY BLDR. BATT #1	BK 0 A
F48 (30A/40A)	FUSE, SLPR BOX/ BODY BLDR. BATT #1	HE 0 A
F49 (10A)	FUSE, ABS	AB 2 D
F49 (10A)	FUSE, ABS	EA 3 A
F49 (10A)	FUSE, ABS	EB 3 A
F50 (10A)	FUSE, SPARE	AB 3 A
F51 (10A)	FUSE, SPARE	AB 4 A
F52 (15A)	FUSE, SPARE/ GUARD DOG	AB 4 C
F52 (15A)	FUSE, SPARE/ GUARD DOG	BG 2 A
F53 (10A)	FUSE, A/C COMP. CLUTCH	AA 1 D
F54 (5A)	FUSE, BBM ECU	AA 0 D
F54 (5A)	FUSE, BBM ECU	BK 4 A
F55 (10A)	FUSE ECS	AA 2 B
F55 (10A)	FUSE ECS	EC 3 A
F56 (10A)	FUSE, SPARE	AA 2 D
F57 (15A)	FUSE, CENTER CONSOLE	AA 3 A
F57 (15A)	FUSE, CENTER CONSOLE	KC 2 A
F58 (30A)	FUSE, SPARE	AA 2 D
F60 (20A)	FUSE, POWER OUTLETS	AA 3 A
F61 (15A)	FUSE, AUX. BATT SW/ SPARE	AA 2 A
F61 (15A)	FUSE, AUX. BATT SW/ SPARE	NA 0 A
F62 (15A)	FUSE, SPARE	AA 3 A
F62 (15A)	FUSE, SPARE	GJ 0 A
F62 (15A)	FUSE, SPARE	NA 2 A
F63 (5A)	FUSE, INSTR. CLUSTER (EMS)	AA 0 D
F63 (5A)	FUSE, INSTR. CLUSTER (EMS)	BE 0 A
F64 (10A)	FUSE, COLD START /SPARE	AA 1 D
F64 (10A)	FUSE, COLD START /SPARE	BJ 1 A
F64 (10A)	FUSE, COLD START /SPARE	BK 3 A
F64 (10A)	FUSE, COLD START /SPARE	NA 4 A
F64 (10A)	FUSE, COLD START /SPARE	NC 1 A
F65 (15A)	FUSE, ACC/ SPARE	AA 1 D
F65 (15A)	FUSE, ACC/ SPARE	FD 2 A

FUSE	DESCRIPTION	PAGE
F65 (15A)	FUSE, ACC/ SPARE	JB 1 A
F65 (15A)	FUSE, ACC/ SPARE	NA 2 A
F65 (15A)	FUSE, ACC/ SPARE	NC 2 A
F67 (15A)	FUSE, SPARE	AA 0 A
F67 (15A)	FUSE, SPARE	HD 3 A
F67 (15A)	FUSE, SPARE	KC 0 A
F67 (15A)	FUSE, SPARE	NA 2 A
F67 (15A)	FUSE, SPARE	NC 0 A
F68 (15A)	FUSE, CIGAR LIGHTER	AA 2 B
F68 (15A)	FUSE, CIGAR LIGHTER	KC 0 A
F69 (10A)	FUSE, KEYLESS ENTRY/ SPARE	AA 2 D
F69 (10A)	FUSE, KEYLESS ENTRY/ SPARE	IE 2 A
F70 (10A)	FUSE, HVAC SLPR./ BB IGN 1	AA 3 C
F70 (10A)	FUSE, HVAC SLPR./ BB IGN 1	HA 1 A
F71 (10A)	FUSE, TRANS (BATT)	AA 1 B
F71 (10A)	FUSE, TRANS (BATT)	DB 2 A
F71 (10A)	FUSE, TRANS (BATT)	DD 0 A
F71 (10A)	FUSE, TRANS (BATT)	NA 3 A
F72 (10A)	FUSE, HVAC B	AA 3 D
F74 (5A)	FUSE, DIMMER	GA 1 A
F75 (30A)	FUSE, SLEEPER HVAC/ BB PWR	AA 0 B
F75 (30A)	FUSE, SLEEPER HVAC/ BB PWR	BJ 1 A
F75 (30A)	FUSE, SLEEPER HVAC/ BB PWR	BK 1 A
F75 (30A)	FUSE, SLEEPER HVAC/ BB PWR	HD 1 A
F76 (30A)	FUSE, M-DRIVE /CUMMINS DEF PWR	AA 3 A
F76 (30A)	FUSE, M-DRIVE /CUMMINS DEF PWR	CE 2 A
F76 (30A)	FUSE, M-DRIVE /CUMMINS DEF PWR	DA 2 A
F79 (10A)	FUSE M-DRIVE GSECU	DA 2 C
F80 (20A)	FUSE M-DRIVE TECU	DA 3 C
F83 (10A)	FUSE CUMMINS DEF MOD	AH 2 B
F83 (10A)	FUSE CUMMINS DEF MOD	CE 1 B
F84 (15A)	FUSE DEF HOSE HEATERS	AH 1 B
F84 (15A)	FUSE DEF HOSE HEATERS	CF 2 A
F85 (10A)	FUSE SPARE	AH 1 B
F90 (15A)	FUSE SPARE	NE 0 B
F91 (15A)	FUSE SPARE	NE 0 B
F92 (15A)	FUSE SPARE	NE 1 B
F93 (15A)	FUSE SPARE	NE 1 B
F94 (15A)	FUSE SPARE	NE 1 B
F95 (15A)	FUSE SPARE	NE 2 B
F96 (15A)	FUSE SPARE	NE 2 B
FM3 (150A)	FUSE, MAIN PWR, CAB	AC 3 D
SBF1 (10A)	FUSE, SLPR. LIGHTING 1	HE 3 B
SBF2 (15A)	FUSE, SLPR LIGHTING 2	HE 0 A
SBF3 (20A)	FUSE, SLPR. REFRIGERATOR, PWR OUTLET 2	HE 2 B
SBF4 (10A)	FUSE, SLPR. TV OUTLET	HE 2 B
SBF6 (15A)	FUSE, SLPR POWER OUTLET	HE 2 B
SBF7 (20A)	FUSE, AUDIO AMP.	HE 2 B

https://truckmanualshub.com/

RELAYS

RELAY	DESCRIPTION	PAGE
RLY01	RELAY, EMS #1	AA 1 B
RLY02	RELAY, EMS #2	AB 2 C
RLY03	RELAY, IGN. #1	AA 1 D
RLY04	RELAY, IGN #3	AB 0 C
RLY06	RELAY, EMERGENCY STOP LAMP	GA 3 B
RLY06R	ULTRA SHIFT TRANSMISSION	DB 2 B
RLY08	RELAY, FLASH TO PASS	GA 1 D
RLY10	RELAY, FOG LAMP	GA 2 D
RLY11	RELAY, TRLR. LMP	AB 1 B
RLY11	RELAY, TRLR. LMP	GG 0 B
RLY12	RELAY, TRAILER STOP LAMP	AB 3 B
RLY12	RELAY, TRAILER STOP LAMP	GG 1 B
RLY13	RELAY, CAB & TRLR CLEARANCE LMP	AB 2 B
RLY13	RELAY, CAB & TRLR CLEARANCE LMP	GA 4 D
RLY14	RELAY, HORN	AB 1 B
RLY14	RELAY, HORN	GQ 1 B
RLY16	RELAY WINDSHIELD WIPER	GP 1 B
RLY17	RELAY, REV. PWR	AB 0 B
RLY17	RELAY, REV. PWR	GG 3 B
RLY19	RELAY, IGNITION (BLINK CODE)	DB 3 B
RLY20	RELAY, START ENABLE	DB 1 B
RLY26	RELAY, HVAC CAB CONT.	AA 3 D
RLY26	RELAY, HVAC CAB CONT.	HA 1 A
RLY28	RELAY, CB BINDING POST	AA 3 B
RLY29	RELAY, NEUTRAL PWR	AB 1 B
RLY29	RELAY, NEUTRAL PWR	GG 2 B
RLY31	RELAY, POWER OUTLETS	AA 3 B
RLY33	RELAY, HTD. MIRROR	BF 1 A
RLY34	RELAY, PRE-EMS	AA 1 B
RLY35	RELAY, HVAC CAB	AA 3 D
RLY35	RELAY, HVAC CAB	HA 0 A
RLY36	RELAY, START CNTL 1	AC 2 C
RLY38	RELAY, SPARE	AB 4 B
RLY39	RELAY, SPARE	AB 3 B
RLY42A	RELAY GRID HEATER	CF 0 B
RLY43L_MATE	RELAY, SNOW PLOW LAMPS, LH LOW BEAM	GI 1 C
RLY43R_MATE	RELAY, SNOW PLOW LAMPS, RH LOW BEAM	GI 0 C

RELAY	DESCRIPTION	PAGE
RLY44_MATE	RELAY, SNOW PLOW LAMPS, HIGH BEAM	GI 2 C
RLY46_MATE	RELAY, SNOW PLOW LAMPS, LOW BEAM FEED	GI 3 C
RLY47	RELAY REVERSE SIGNAL	DE 3 C
RLY52	RELAY, HIGH BEAM	GA 1 A
RLY53	RELAY, SLEEPER HVAC	AA 0 C
RLY53	RELAY, SLEEPER HVAC	BJ 1 B
RLY53	RELAY, SLEEPER HVAC	BK 1 B
RLY53	RELAY, SLEEPER HVAC	HD 1 B
RLY54	RELAY, SPARE EPDM	DD 2 B
RLY56	RELAY, TRAILER AUX. POWER SAEJ560	GJ 0 C
RLY57	RELAY, REVERSE, LIFT AXLE/ECS	BE 3 D
RLY57	RELAY, REVERSE, LIFT AXLE/ECS	EC 3 B
RLY58	RELAY, TRAILER AUX. POWER ISO3731	GJ 2 C
RLY60_MATE	RELAY, FAN CONTROL	HB 3 A
RLY70	RELAY, POWER, 8 SW BODYBUILDER OPTION	NE 3 A
RLY70	RELAY, POWER, 8 SW BODYBUILDER OPTION	NF 4 A
RLY73	RELAY M-DRIVE POWER	DA 2 B
RLY80	RELAY CUMMINS DEF MOD	AH 2 C
RLY80	RELAY CUMMINS DEF MOD	CE 1 B
RLY81	RELAY STARTER LOCKOUT	AH 3 C
RLY81	RELAY STARTER LOCKOUT	CF 0 C
RLY82	RELAY DEF LINE HEATER 1	AH 0 C
RLY82	RELAY DEF LINE HEATER 1	CF 1 B
RLY83	RELAY DEF LINE HEATER 2	AH 0 C
RLY83	RELAY DEF LINE HEATER 2	CF 2 B
RLY84	RELAY DEF LINE HEATER 3	AH 1 C
RLY84	RELAY DEF LINE HEATER 3	CF 1 B
RLY85	RELAY SPARE	AH 1 C
RLY86	RELAY SPARE	AH 2 C
RLY87	RELAY SPARE	AH 3 C
RLY91	RELAY ENGINE RETARDER STALK POS 1	BL 1 B
RLY93	RELAY ENGINE RETARDER STALK POS 4	BL 0 B
RLY94	RELAY ENGINE RETARDER ENABLE	BL 2 B
RLY97	RELAY, LO BEAM LH	GD 0 B
RLY97	RELAY, LO BEAM LH	GE 0 B
RLY98	RELAY, LO BEAM RH	GD 1 B
RLY98	RELAY, LO BEAM RH	GE 1 B

https://truckmanualshub.com/

COMPONENTS

COMPONENT	DESCRIPTION	PAGE
A03	INSTRUMENT CLUSTER	BE 0 C
A03	INSTRUMENT CLUSTER	BF 0 B
A03	INSTRUMENT CLUSTER	BG 1 C
A04A	REFRIGERATOR	HE 2 B
A06R1_65	El. adjustable seat (optional fan and heat)	DD 3 B
A06R2_65	El. adjustable seat (optional fan and heat)	DD 3 B
A06R4_65	El. adjustable seat (optional fan and heat)	DD 4 B
A06R5_65	El. adjustable seat (optional fan and heat)	DD 2 B
A07	Radio	KA 3 B
A12A	CONTROL UNIT, ABS (ANTI-LOCK BRAKE SYS.)	EA 0 C
A12B	CONTROL UNIT, ABS (ANTI-LOCK BRAKE SYS.)	EB 0 B
A14B	CONTROL UNIT, EMS, CUMMINS	CE 0 D
A14B	CONTROL UNIT, EMS, CUMMINS	CF 0 E
A16	CONTROL UNIT, ECS (ELECTRONIC CONTROLLED AIR SUSPENSION)	EC 0 C
A17	CONTROL UNIT, VECU (VEHICLE ECU)	AC 2 A
A17	CONTROL UNIT, VECU (VEHICLE ECU)	BA 1 C
A17	CONTROL UNIT, VECU (VEHICLE ECU)	BB 0 B
A17	CONTROL UNIT, VECU (VEHICLE ECU)	BC 2 D
A17	CONTROL UNIT, VECU (VEHICLE ECU)	BD 2 D
A17	CONTROL UNIT, VECU (VEHICLE ECU)	GD 1 A
A17	CONTROL UNIT, VECU (VEHICLE ECU)	GE 2 A
A17	CONTROL UNIT, VECU (VEHICLE ECU)	GH 2 B
A19D_MATE	CONTROL UNIT GECU (GEAR SELECTOR ECU) ALLISON TRANSMISSION	DD 0 E
A20	Control Unit, Heated Windshield	HC 0 C
A20	Control Unit, Heated Windshield	HG 0 C
A34	CONTROL UNIT, CLIMATE	HA 0 B
A35	CONTROL UNIT, REMOTE RECEIVER DOOR LOCK	IE 1 C
A51	DISPLAY, SIDE OBJECT DETECTION	JA 3 D
A52	CTRL PANEL, CTIS	FE 2 B
A53	CTRL UNIT, CTIS	FE 0 C
A56	Stereo amplifier	KA 3 D
A57	CONTROL UNIT, ALLISON TRANSMISSION	DC 0 B
A57	CONTROL UNIT, ALLISON TRANSMISSION	DD 0 D
A58	TRANSMISSION ALLISON	DC 0 D
A83	CTRL UNIT, DRL (DAYTIME RUNNING LIGHTS)	GD 1 B
A83	CTRL UNIT, DRL (DAYTIME RUNNING LIGHTS)	GE 2 B
A87	DISPLAY, INSIDE/ OUTSIDE TEMP.	BI 0 C
A89	CTRL UNIT, APADS, CM 813	HB 2 C
A90	ALARM, CLOCK	HE 0 B
A102A	CONTROL UNIT GPS RECEIVER TELEMATICS GATEWAY	BM 2 C
A102B	CONTROL UNIT GPS RECEIVER TELEMATICS GATEWAY 2	BM 0 D
A104	CONTROL UNIT, FLASHER	GA 3 A
A104A	FLASHER KYSOR	GA 2 A
A106	CONTROL UNIT, SLEEPER HVAC	HD 1 C
A107A	MODULE, TRANSMISSON DRIVER COMMAND CONSOLE (DDC)	DB 0 B
A107B	CONTROL UNIT, TRANSMISSION, EATON GEN III	DB 1 D
A108	CONTROL UNIT, ALLISON, RETARDER RELAY	DC 3 D
A109	CONTROL UNIT, GSECU (GEARSHIFT ECU)	DA 0 B
A124	COMPONENT GROUP, STARTER MOTOR, M04 & K65	AC 3 A
A124	COMPONENT GROUP, STARTER MOTOR, M04 & K65	AD 1 A

https://truckmanualshub.com/

COMPONENTS

COMPONENT	DESCRIPTION	PAGE
A131A	SWITCH, TERRAIN, CTI	FE 3 B
A131B	SWITCH, LOAD, CTI	FE 4 B
A138	PUMP UNIT, UREA	CD 1 E
A138A	PUMP UNIT ADBLUE	CE 1 C
A141	GAUGE, THIRD AXLE TEMP	BF 4 C
A149	CONSOLE CENTER	KC 2 C
B06AP	SENSOR, AIR PRESSURE, BRAKE APP.	BF 3 D
B06T1	SENSOR AIR PRESSURE TANK 1	BF 2 D
B06T2	SENSOR, AIR PRESSURE TANK 2	BF 2 D
B07	SENSOR, FUEL LEVEL	BF 0 D
B09A_MATE	SENSOR, OIL TEMP GEARBOX	BF 1 D
B09B	SENSOR, TRANS OIL TEMP, ALLISON	DC 4 C
B13	SENSOR, WHEEL SPEED LHS. 1, ST FRT AXLE	EA 0 B
B13	SENSOR, WHEEL SPEED LHS. 1, ST FRT AXLE	EB 0 C
B14	SENSOR, WHEEL SPEED RHS, 1:ST FRT AXLE	EA 1 B
B14	SENSOR, WHEEL SPEED RHS, 1:ST FRT AXLE	EB 1 D
B15	SENSOR, WHEEL SPD LHS. 1:ST,DRIVEN REAR AXLE	EA 0 D
B15	SENSOR, WHEEL SPD LHS. 1:ST,DRIVEN REAR AXLE	EB 0 A
B16	SENSOR, WHEEL SPD, RHS, 1:ST DRIVE REAR AXLE	EA 0 D
B16	SENSOR, WHEEL SPD, RHS, 1:ST DRIVE REAR AXLE	EB 1 B
B17	SENSOR, WHEEL SPD, LHS, 2:ND, DRIVE REAR AXLE	EA 2 D
B17	SENSOR, WHEEL SPD, LHS, 2:ND, DRIVE REAR AXLE	EB 2 D
B18	SENSOR, WHEEL SPD, RHS, 2:ND, DRIVE REAR AXLE	EA 2 D
B18	SENSOR, WHEEL SPD, RHS, 2:ND, DRIVE REAR AXLE	EB 3 D
B22C	SENSOR AMBIENT AIR TEMP	CE 3 D
B23	SENSOR AMBIENT AIR	BF 0 D
B23.1	SENSOR, AMBIENT AIR TEMP	BF 0 D
B25	SENSOR, ACCELERATOR PEDAL	BB 3 D
B25A	SENSOR ACCELERATOR PEDAL	BB 4 E
B30A	SENSOR CHASSIS LEVEL DRIVE AXLE	EC 2 D
B49	SENSOR, STEERING ANGLE	EB 0 E
B50	SENSOR, YAW-RATE	EB 0 E
B55A	SENSOR AIR PRESS SUSPENSION AUX. AXLE	EC 0 D
B58A	SENSOR AIR PRESS. SUSPENSION DRIVE AXLE	EC 1 D
B58R	SENSOR, AIR PRESSURE REAR SUSP.	BF 2 D
B58R_ESP	SENSOR, AIR PRESSURE, REAR SUSPENSION RHS FOR BENDIX ESP	EB 1 E
B59	SENSOR, INDOOR TEMP	BF 3 D
B60LF	SPEAKER, LEFT FRT	KA 3 C
B60RF	SPEAKER, RIGHT FRT.	KA 3 C
B60SLR	Speaker Sleeper Left Rear	KA 4 D
B60SRR	Speaker Sleeper Right Rear	KA 3 D
B60SW	Speaker Subwoofer	KA 3 E
B68	SENSOR, OUTPUT SHAFT SPD, GEARBOX	BB 1 D
B68	SENSOR, OUTPUT SHAFT SPD, GEARBOX	CE 2 C
B68_B	Sensor, output shaft speed, gearbox	BB 0 D
B78	SENSOR, RIGHT SIDE OBJECT DETECTION	JA 2 D
B79	SENSOR, PNEUMATIC CTRL UNIT	FE 2 D
B80	HANDSFREE, LOUDSPEAKER, MICROPHONE, MID LEVEL	KA 0 B
B82	Sensor, ACC radar	JB 0 D
B82A	SENSOR, ACC RADAR FLR-20	JB 2 D

https://truckmanualshub.com/

COMPONENTS

COMPONENT	DESCRIPTION	PAGE
B96D	SENSOR, NOx (CAN BASED) AFTER DPF	CD 3 B
B96S	SENSOR, NOx (CAN BASED) AFTER SCR	CD 2 B
B105	SENSOR RETARDER TEMP	DC 3 D
B121	SENSOR, LOW LEVEL WASHER FLUID	BG 1 D
B122	SENSOR, EXHAUST TEMP	BF 0 A
B123	SENSOR, COOLANT LEVEL	CA 2 E
B123	SENSOR, COOLANT LEVEL	CE 0 C
B123.1	SENSOR, COOLANT LEVEL	CA 3 E
B124.3RD	SENSOR, OIL TEMP REAR CENTER AXLE	BF 4 D
B124FR	SENSOR, OIL TEMP FRONT REAR AXLE	BF 1 D
B124RR	SENSOR, OIL TEMP REAR REAR AXLE	BF 1 D
B133	SENSOR, AIR FILTER RESTRICTION.	BG 1 B
B133S	SENSOR, AIR FILTER RESTRICTION, TD7	BG 2 B
B142B	SENSOR, UREA LEVEL AND TEMPERATURE	CE 3 C
B142C	Sensor, AdBlue level and temperature	CD 1 B
B142C	Sensor, AdBlue level and temperature	CF 3 B
B152	SENSOR, BRAKE AIR PRESSURE, FRONT FOR ESP (SECONDARY)	EB 2 E
B153	SENSOR, BRAKE AIR PRESSURE, REAR FOR ESP (PRIMARY)	EB 2 D
B156	SENSOR, FREON HI PRESSURE - FAN	BD 2 B
B156A	SENSOR, FREON HI PRESSURE	HA 3 A
B157	SENSOR, FREON HI PRESSURE	HB 2 D
B158	SENSOR, FREON LOW PRESSURE	HB 1 D
B160	SENSOR, OUTSIDE TEMP.	BI 0 C
CLU_JMP	PLUG, JUMPER, A35:B	IE 3 C
E06	Lamp, reversing light	GF 1 B
E07L	FOG LAMP LEFT	GA 1 D
E07R	FOG LAMP RIGHT	GA 1 D
E11L	LAMP, SIDE MARKER LEFT SIDE	GD 1 E
E11R	LAMP, SIDE MARKER, RIGHT SIDE	GD 1 D
E12D	LAMP, ROOF POS. LIGHT DRIVER	GA 3 D
E12DH	LAMP, HIGH RISE SLEEPER ROOF POS. LIGHT DRIVER	HE 4 D
E12DHL	LAMP, HIGH RISE SLEEPER ROOF POS. LIGHT DRIVER	HE 3 E
E12P	LAMP, ROOF POS. LIGHT, PASS.	GA 3 D
E12PH	LAMP, HIGH RISE SLEEPER ROOF POS. LIGHT PASS.	HE 4 D
E12PHL	LAMP, HIGH RISE SLEEPER, ROOF POS. LIGHT PASS.	HE 4 E
E13LS	LAMP, DIR. INDICATOR LEFT SIDE A-PILLAR	GD 2 C
E13LS	LAMP, DIR. INDICATOR LEFT SIDE A-PILLAR	GE 2 C
E13LSB	LAMP, DIRECTONAL/ MARKER LEFT SIDE	GD 3 D
E13LSB	LAMP, DIRECTONAL/ MARKER LEFT SIDE	GK 3 D
E13LSC	LAMP, DIR. LEFT SIDE SKIRT	GD 3 C
E13RS	LAMP, DIR. INDICATOR RIGHT SIDE A-PILLAR	GD 4 C
E13RS	LAMP, DIR. INDICATOR RIGHT SIDE A-PILLAR	GE 4 D
E13RSB	LAMP, DIRECTIONAL/ MARKER RIGHT SIDE	GD 4 D
E13RSB	LAMP, DIRECTIONAL/ MARKER RIGHT SIDE	GK 3 C
E13RSC	LAMP, DIR. RIGHT SIDE SKIRT	GD 4 C
E14L	LAMP, PARK/DIR INDICATOR LEFT FRT.	GD 2 D
E14L	LAMP, PARK/DIR INDICATOR LEFT FRT.	GE 3 D
E14R	LAMP, PARK/DIR INDICATOR RIGHT FRT.	GD 3 D
E14R	LAMP, PARK/DIR INDICATOR RIGHT FRT.	GE 3 D
E17AD	LAMP, CAB REAR DOME DRIVER	GH 0 C

https://truckmanualshub.com/

COMPONENTS

COMPONENT	DESCRIPTION	PAGE
E17AP	LAMP, CAB REAR DOME PASS.	GH 0 C
E17D	LAMP, FRONT DRIVER DOME	GH 2 C
E17L	LAMP, CAB SLEEPER LEFT DOME	GF 4 C
E17P	LAMP, FRONT PASS. DOME	GH 3 C
E17R	LAMP, CAB SLEPER RIGHT DOME	GF 4 C
E18A	BACK UP LAMP	GF 4 C
E18LB	LAMP, LOWR. BUNK	HE 4 B
E18LC	LAMP, LH CABINET	HE 3 B
E18LR	LAMP, SLEEPER LH ROOF	HE 0 A
E18N	LAMP, SLEEPER INDIRECT	HE 1 C
E18R	LAMP, READING	HE 4 B
E18RR	LAMP, SLPR RH ROOF	HE 0 A
E19C	LAMP, ID LIGHT ROOF, CENTER	GA 0 D
E19C	LAMP, ID LIGHT ROOF, CENTER	GM 1 D
E19CH	LAMP, ID LIGHT HIGH RISE SLEEPER ROOF, CENTER	HE 2 D
E19CHL	LAMP, ID LIGHT HIGH RISE SLEEPER ROOF, CENTER	HE 1 D
E19D	LAMP, ID LIGHT ROOF, DRIVER	GA 0 D
E19D	LAMP, ID LIGHT ROOF, DRIVER	GM 0 D
E19DH	LAMP, ID LIGHT HIGH RISE SLEEPER ROOF DRIVER	HE 2 D
E19DHL	LAMP, ID LIGHT HIGH RISE SLEEPER ROOF, DRIVER	HE 0 D
E19P	LAMP, ID LIGHT ROOF, PASS.	GA 1 D
E19P	LAMP, ID LIGHT ROOF, PASS.	GM 1 D
E19PH	LAMP, ID LIGHT HIGH RISE SLEEPER ROOF, PASS.	HE 3 D
E19PHL	LAMP, ID LIGHT HIGH RISE SLEEPER ROOF, PASS.	HE 1 D
E23L	LAMP, CARGO, LH	HE 3 B
E23R	LAMP, CARGO, RH	HE 3 B
E27L	TAIL LAMP, MODULE, LEFT	GF 0 D
E27L.LED	TAIL LAMP LED, LEFT	GF 0 C
E27R	TAIL LAMP MODULE, RGHT	GF 1 D
E27R.LED	TAIL LAMP LED, RIGHT	GF 2 E
E30L	HEADLAMP, LOW BEAM, LEFT	GD 0 D
E30R	HEADLAMP, LOW BEAM RIGHT	GD 1 D
E31L	LAMP, HIGH BEAM LEFT SIDE	GD 0 D
E31R	LAMP, HIGH BEAM, RIGHT SIDE	GD 1 D
E32	Climate unit	HD 1 D
E32L	HEADLAMP, LEFT	GE 0 D
E32R	HEADLAMP, RIGHT	GE 1 D
E35	HVAC UNIT	HA 0 D
E38_08	LAMP, INDICATOR, IWDL	BD 0 B
E38_09	LAMP, INDICATOR, BODY BUILDER	BJ 2 A
E38_09A	LAMP, INDICATOR BODY BUILDER	BK 2 B
E38_11	LAMP WTS INDICATOR	CE 0 C
E39	Lamp, Licence Plate Illumination	GF 1 C
E53	LAMP, AMBIENT FOOT	KC 4 D
E53L	Lamp, Red lighting, left	KC 3 D
E53R	Lamp, Red lighting, right	KC 4 D
E58	LAMP, HOOK-UP	GF 2 C
E58	LAMP, HOOK-UP	HE 4 A
E58A	LAMP, HOOK-UP, FLUSH MTD	GF 3 C
E58B	LAMP, HOOK-UP, FLUSH MTD, LED	GF 2 C

https://truckmanualshub.com/

COMPONENTS

COMPONENT	DESCRIPTION	PAGE
E58L	LAMP, PERIMETER LH	GF 3 C
E58R	LAMP, PERIMETER RH	GF 3 C
E60D	LAMP, DOOR DRIVER	GH 3 B
E60P	LAMP, DOOR PASS.	GH 3 B
E61	HEATER, WEBASTO, AT2000S	HD 3 D
E65L	LAMP, ROOF LH BEACON	GL 0 C
E65R	LAMP, ROOF RH BEACON	GL 0 C
E95L1	LAMP, SNORKEL LEFT SIDE	GK 0 A
E95L2	LAMP, SNORKEL LEFT SIDE	GK 0 B
E95L3	LAMP, SNROKEL LEFT SIDE	GK 0 B
E95L4	LAMP, SNORKEL LEFT SIDE	GK 0 B
E95L5	LAMP, SNORKEL LEFT SIDE	GK 0 C
E95L6	LAMP, SNORKEL LEFT SIDE	GK 0 C
E95R1	LAMP, SNORKEL RIGHT SIDE	GK 1 A
E95R2	LAMP, SNORKEL RIGHT SIDE	GK 1 B
E95R3	LAMP, SNORKEL RIGHT SIDE	GK 1 B
E95R4	LAMP, SNORKEL RIGHT SIDE	GK 1 C
E95R5	LAMP, SNORKEL RIGHT SIDE	GK 1 C
E95R6	LAMP, SNORKEL RIGHT SIDE	GK 1 C
E96L	Lamp, side dir indicator left side	GK 2 C
E96R	Lamp, side dir indicator right side	GK 3 B
E96R2	Lamp, side marker right side#2	GK 4 B
E96R3	Lamp, side marker right side#3	GK 4 B
E96R4	Lamp, side marker right side#4	GK 4 B
E97L1	Lamp, side marker left side#1	GK 2 B
E97L2	Lamp, side marker left side#2	GK 2 B
E97L3	Lamp, side marker left side#3	GK 2 B
E97L4	Lamp, side marker left side#4	GK 2 C
E97R1	Lamp, side marker right side#1	GK 4 A
EL1	Lamp, Extra spotlamp, roof	GQ 4 B
EM01	CONNECTOR CUMMINS SCR	CF 2 D
EM02	CONNECTOR CROSSOVER CUMMINS	CF 3 C
EM03	CONNECTOR CUMMINS DPF	CF 4 D
EM04	SENSOR DEF QUAL CUMMINS	CF 3 A
FB07	FUSE, EAT SYSTEM	CD 0 B
FB08	FUSE, EAT SYSTEM	CD 0 A
FM1	FUSE, MAIN GND PREHEATING	AD 0 B
FM02	FUSE GROUND PROTECTION	AF 1 C
FM03	Fuse Cummins Grid Heater	CF 1 A
FM3_A4	FUSE INVERTER	HF 1 B
G01	BATTERY	AC 3 C
G01	BATTERY	AD 1 B
G01	BATTERY	AF 0 E
G01	BATTERY	AG 3 E
G01	BATTERY	CD 0 C
G01	BATTERY	CE 4 B
G01	BATTERY	HF 0 A
G01	BATTERY	ND 0 A
G01_1_1213	Battery	AE 0 B
G01_2_1213	Battery	AE 0 D

https://truckmanualshub.com/

COMPONENTS

COMPONENT	DESCRIPTION	PAGE
G01_3_1213	Battery	AE 1 D
G01_4_1213	Battery	AE 1 B
G01_5_1213	Battery	AE 1 D
G01_6_1213	Battery	AE 3 B
G01_7_1213	Battery	AE 2 B
G01_8_1213	Battery	AE 3 B
G01_9_1213	Battery	AE 3 B
G01_11_1213	Battery	AE 2 C
G01_12_1213	Battery	AE 2 D
G01_13_1213	Battery	AE 3 C
G01_14_1213	Battery	AE 3 D
G02	ALTERNATOR	AC 4 A
G02	ALTERNATOR	AD 0 B
G02	ALTERNATOR	AF 2 A
G02	ALTERNATOR	AG 3 C
G03	INVERTER 12VDC/120VAC	HF 0 B
G03.D	INVERTER DISPLAY	HF 0 C
G04	POWER DISTR. UNIT 120VAC	HF 2 B
H02A	HORN	GQ 1 D
H02B	HORN #1	GQ 2 D
H02C	HORN#2	GQ 2 D
H03	REV. WARNG. ACOUSTIC	GF 2 B
M01	MOTOR, WSHLD. WIPER	GP 1 C
M02	MOTOR, WSHLD. WASHER PUMP	GP 0 C
M03	MOTOR, AUX FAN	HC 3 D
M03	MOTOR, AUX FAN	HG 3 D
M04	MOTOR, STARTER	AF 0 A
M04	MOTOR, STARTER	AG 3 B
M110CFL	MIRROR, HTD. CONVEX, FENDER MOUNTED, LEFT	BF 3 B
M110CFR	MIRROR, HTD. CONVEX, FENDER MOUNTED, RIGHT	BF 3 B
M110CL	MIRROR, HTD. CONVEX ,LHS	IC 3 D
M110CR	MIRROR, HTD CONVEX, RHS	IC 4 D
M110L	MIRROR MOTOR & HTR, LHS	IC 0 D
M110R	MIRROR MOTOR & HTR, RHS	IC 1 D
MCAT_JUMP	CONN., JUMPER WIRE	DB 1 A
R01	HEATER, ENG. PREHEAT	AD 0 A
R01C.A	PREHEATER GRID CUMMINS	CF 0 B
R02	ENGINE BLOCK HEATER RECEPTACLE	CC 0 B
R03	ENGINE BLOCK HEATER ELEMENT	CC 0 D
R03A	OIL PAN HEATER ELEMENT	CC 1 C
R04	CIG. LIGHTER	KC 0 B
R05	AIR DRYER	FA 0 D
R08	RESISTOR, TERMINATION CAN-BUS	CF 2 B
R08_MATE	RESISTOR, TERMINATION J1939	XA 3 A
R08M	RESISTOR CAN TERMINATING	XA 0 C
R09	HEATER, FUEL FILTER	FA 0 D
R14	Termination resistor	CE 0 C
R17_A_MATE	RESISTIOR 316 OHM	BL 0 C
R17_B_MATE	RESISITOR 464 OHM	BL 0 C
R17_C_MATE	RESISTOR 866 OHM	BL 1 C

https://truckmanualshub.com/

COMPONENTS

COMPONENT	DESCRIPTION	PAGE
R17_D_MATE	RESISTOR 147 OHM	BL 1 C
R17_E_MATE	RESISTOR 7870 OHM	BL 2 C
R17_F_MATE	RESISTOR 1870 OHM	BL 2 C
R17_G_MATE	RESISTOR 1300 OHM	BL 3 C
R17_H_MATE	RESISTOR 2490 OHM	BL 3 C
R19	HEATER, HTD DRAIN VALVE	FA 3 C
R21	Termination resistor	XA 2 B
R21_TGW	TERMINATION RESISTOR	BM 1 C
R25	HTD SEAT, DRIVER	HC 2 C
R26	HTD. SEAT PASSENGER	HC 3 C
R27	Potentiometer Volume Ctrl.	KA 4 D
R28	Heater, Windshield, Left	HC 1 D
R28	Heater, Windshield, Left	HG 2 D
R29	Heater, Windshield, Right	HC 1 D
R29	Heater, Windshield, Right	HG 1 D
R29_A	Heater,Nox Care Tank to Pump Hose	CD 4 D
R29_A	Heater,Nox Care Tank to Pump Hose	CF 1 D
R30	Heater, Windshield, Single Piece	HC 2 C
R30	Heater, Windshield, Single Piece	HG 2 D
R30_A	Heater Back Flow Hose	CF 2 D
R31_A	Heater nox Care Pump to Injector Hose	CF 1 C
R32	Heater, NOxCare pump to injector hose	CD 3 D
R32_A	Heater, NOxCare pump to injector hose	CD 3 E
R49	RESISTOR, GLAD MUTING	KA 1 B
R60	RESISTOR 316 OHM	EB 4 B
RC1_MATE	Electrical Equipment 2 RELAYS, 2 FUSES 2-25195197 1-25162349 1-25162020	AA 4 A
RC2_MATE	ELECTRICAL EQUIPMENT 3 RELAYS 3-25195197	AA 4 B
S01	SW. MAIN LIGHTING SELECT. TYPE	GA 0 B
S006	SWITCH, SPD CTRL	BA 1 B
S07	SW. ENG. BRKE, SEL. TYPE	BA 2 B
S007	SWITCH SET/RESUME	BA 1 B
S07_A	SWITCH ENGINE BRAKE	BL 4 B
S008	SW. SHUTDWN OVERRIDE	BA 3 B
S08A	SW. ALTERNATING LIGHT / RH POST	NE 2 D
S08B	SW. TAILGATE / RH WING	NE 0 D
S08C	SW. SANDER LIGHT / SPREADER / WORK	NE 3 D
S08D	SW. LOAD LIGHT / LH WING	NE 1 D
S08E	SW. STROBE LIGHT / LH POST	NE 2 D
S08F	SW. CHAIN LIGHT / HOPPER	NE 4 D
S009	SWITCH WIPER CTRL	GP 0 B
S011	SW. FAN OVERRIDE	BA 3 B
S12	SWITCH, SNOW PLOW LIGHTS	GI 2 A
S013	SW. MIRROR DEFROST	BE 2 B
S014	SWITCH, SLEEPER HVAC ENABLE	HD 1 B
S016	SW. ATC LTD SLIP	EA 2 B
S016	SW. ATC LTD SLIP	EB 2 B
S017C	SWITCH, CAB REAR DOME LMP	GH 0 D
S017D	SW. SLEPR ROOF DOME LAMP	HE 0 B
S017E	SW. CAB SLEEPER ROOF DOME LMP	HE 0 E
S017F	SW. FRONT DRIVER DOME LAMP	GH 2 D

https://truckmanualshub.com/

COMPONENTS

COMPONENT	DESCRIPTION	PAGE
S017G	SW. FRONT PASS. DOME LMP	GH 3 D
S018	SW. PWR TAKE OFF	BC 2 B
S018_1_MATE	PT0#1	BC 3 C
S019	SW. PWR DIV. LOCKOUT	FB 4 C
S020	SWITCH, AIR SUSP.	FB 0 C
S021	SW., 5TH WHL. SLIDE	BD 3 B
S022	SWITCH, I/O AIR	FB 1 C
S023	SW. NEUTRL CONTROL	FB 3 C
S023_1	PRESSURE SW. NEUTRAL CONTROL	FB 3 A
S024	SW. INTERWHL DIFF. LOCK	BD 1 B
S24A	SW ENGINE BRAKE MODE	BL 3 B
S24C	Switch ON/OFF Allison Retarder	DD 1 B
S026A	SW._2, IGN. FEED	NA 1 C
S026B	SW.3, IGN. FEED	NC 3 C
S026C	SW._4, IGN. FEED	NC 2 C
S026D	SW.5_5, IGN. FEED	NC 1 C
S027A	SW._1, BATT. FEED	NA 0 C
S027B	SW._6, BATT. FEED	NC 0 C
S028	SW. PASS. DOOR LOCK	ID 1 C
S028L	SW. DRIVER DOOR LOCK	IE 0 B
S028R	SW. PASS. DOOR LOCK	IE 3 B
S030	Switch, Mirror Control	IC 0 B
S036	SWITCH, IGNITION	AC 0 B
S036	SWITCH, IGNITION	GQ 0 C
S036B	SW, PUSH BUTT. START	AC 1 B
S038	SW, PRESSURE SERVICE BRKE.	GA 3 B
S038C	SW, PRESSURE SERVICE BRAKE	BB 2 C
S038C2	2ND SW, PRESSURE SERVICE BRAKE	BB 4 B
S039	SW. DIREC. SIGNAL	GA 2 C
S041L	SW. DRIVR SIDE DR.	GH 4 A
S041R	SW. PASS SIDE DR.	GH 4 C
S041SB	SWITCH, BUNK	HE 3 C
S041SL	SWITCH, LH JAMB	HE 3 D
S041SR	SWITCH, RH JAMB	HE 3 C
S042	SWITCH, BACK UP	BE 3 B
S43	SW. PRESS. PRKNG BRKE INDICATOR, NC.	BA 3 D
S043	SW. INFO SELECTOR	BE 1 B
S43B	SW.PRESS. PRKNG BRKE BODYBUILDER	BK 2 B
S43C	TRAILER DETECTION SWITCH	BG 2 D
S044	SWITCH, CLUTCH	BB 2 B
S045	SW. DRL OVERRIDE	BA 1 D
S047	SW. IWDL FR- ENGAGED	BG 3 D
S047A	SW. IWDL 3RD AXLE - ENGAGED	BG 3 E
S048	SW. IWDL REAR- ENGAGED	BG 3 C
S050	SW., 5TH WHL. KING PIN LCK., AUX. AIR #2	FB 1 B
S051	SW., AUX. AIR #1	FB 2 B
S051A	SW., AUX. AIR #3	FB 2 C
S052	SW. AUTO. STRT/STOP ENGAGED	BG 0 B
S055	SWITCH, INDIRECT LMP.	HE 0 B
S056	DOWNHILL CRUISE SET	BD 1 B

https://truckmanualshub.com/

COMPONENTS

COMPONENT	DESCRIPTION	PAGE
S057	SWITCH, PARK BRAKE AUXILIARY	GJ 0 D
S058	SWITCH, CENTER PIN HOT SAE J560	GJ 0 B
S58B	POSITION SWITCH, CLUTCH PEDAL, STARTING, NO	AC 2 B
S059	SWITCH, HEATED WINDSHIELD	HC 0 B
S059	SWITCH, HEATED WINDSHIELD	HG 0 B
S060	Switch, Aux Fan	HC 4 C
S060	Switch, Aux Fan	HG 4 C
S61	POSITION SWITCH, DRIVER SEAT BELT LOCK, NC	BE 1 D
S061	SWITCH, CENTER PIN HOT ISO 3731	GJ 2 B
S62	SWITCH, PRESSURE NC	FE 0 D
S067	SWITCH BEACON LIGHTS	GL 0 B
S068B	TAILGATE IGN FEED	NF 0 C
S068C	PWR FLOAT IGN FEED	NF 0 C
S068D	SPREADER IGN FEED	NF 1 C
S069B	RR FLASHING IGN FEED	NF 3 C
S069C	SPARE IGN IGN FEED	NF 2 C
S069D	LOW OIL IGN FEED	NF 2 C
S99	SWITCH, ADAPTIVE CRUISE CONTROL, TIME GAP	JA 1 C
S106	SW. PASS P.WINDOW (PASS SIDE)	ID 3 B
S106DS	SWITCH, PASS P.WINDOW (DRIVER SIDE)	IA 2 C
S106PS	SW. PASS P.WINDOW (PASS SIDE)	IA 3 C
S107	SW. DRIVER P.WINDOW	IA 1 C
S110	SWITCH, LVD	HE 1 C
S111	SWITCH, PARK BRAKE HEATER	HD 3 B
S111A	SWITCH, DPF REGEN	CB 2 C
S130	Switch, Air suspension	EC 2 D
S133	Switch, Level control, Rear axle suspension	EC 3 D
S137	SWITCH PTO #2 MDRIVE	BC 4 B
S137A	Switch, PTO2 request	FD 1 B
S145	SWITCH, AMBIENT LIGHTING	KC 4 B
S169	SWITCH, BATTERY MAIN	AC 3 C
S169	SWITCH, BATTERY MAIN	AG 3 D
S171	SWITCH GEAR LEVER M-DRIVE	DA 0 D
S212	SWITCH HILL ASSIST	EB 4 A
S320	SWITCH, PRESSURE PARKER PTO	FD 1 D
V2_MATE	DIODE MODULE, AUTO START IGNITION	BE 0 B
V25	DIODE, DOOR STATUS	GH 2 B
V35	Diode	BA 2 D
X10	B+ PASS THRU, CAB	AA 0 B
X10	B+ PASS THRU, CAB	AC 4 D
X10	B+ PASS THRU, CAB	DB 0 B
X11	CONNECTOR, ENGINE MANAGEMENT INTERFACE	CA 0 C
X13	CONNECTOR CTIS, CONFIG	FE 0 B
X16	POWER STUD, EPDM	AB 3 C
X16	POWER STUD, EPDM	AC 4 C
X17A	RECEPTACLE 120VAC EXTERNAL	HF 1 C
X17B	RECEPTACLE 120VAC LEFT SLEEPER	HF 3 D
X17C	RECEPTACLE 120VAC RIGHT SLEEPER	HF 3 D
X17D	RECEPTACLE 120VAC RIGHT SLEEPER	HF 1 C
X17E	RECEPTACLE 120VAC LEFT SLEEPER	HF 1 D

https://truckmanualshub.com/

COMPONENTS

COMPONENT	DESCRIPTION	PAGE
X31	TERMINAL, TRAILER FUNCTION 10 POLE	GG 3 D
X32	TERMINAL BLOCK, ISO 3731 7 POLE	GJ 2 D
X34	JUNCTION, CB BINDING POST	KC 1 C
X34D1_MATE	JUNCTION, CB #1 IN D-PANEL	KC 1 C
X34D2_MATE	JUNCTION, CB #2 IN D-PANEL	KC 1 C
X34R3	JUNCTION, O/HEAD CB 3 PIN CONN.	KC 3 C
X40	Strip, Option Junction Studs	BK 2 A
X40	Strip, Option Junction Studs	BM 3 B
X40	Strip, Option Junction Studs	BU 2 A
X40	Strip, Option Junction Studs	BV 2 A
X40	Strip, Option Junction Studs	BW 2 A
X40	Strip, Option Junction Studs	BX 2 B
X40	Strip, Option Junction Studs	GQ 4 C
X40	Strip, Option Junction Studs	NB 2 C
X61	CONNECTOR, LIFT GATE POWER CIRCUIT RECEPTACLE	ND 0 B
X66	CONNECTOR, USB, AUDIO	KA 1 D
X67	CONNECTOR, AUX, AUDIO	KA 1 B
X89	Connector, Water-in-fuel Sensor	CF 0 D
X109L	Jump Start Cable Stud	AC 4 B
X109L	Jump Start Cable Stud	AD 2 B
XC1	LH CAB GND	AD 1 C
XC1	LH CAB GND	AF 3 D
XG9	STUD, ENGINE BLOCK	AF 2 C
Y11	SOL. VALVE, ABS,LHS,FRT,	EA 0 B
Y11	SOL. VALVE, ABS,LHS,FRT,	EB 0 C
Y12	SOL. VALVE ABS,RHS,FRT.	EA 1 B
Y12	SOL. VALVE ABS,RHS,FRT.	EB 1 C
Y13	SOL. VALVE ABS,LHS,REAR	EA 1 D
Y13	SOL. VALVE ABS,LHS,REAR	EB 0 A
Y14	SOL. VALVE ABS,RHS,REAR	EA 1 E
Y14	SOL. VALVE ABS,RHS,REAR	EB 1 A
Y15	SOL. VALVE ABS,LHS, 3RD AXLE	EA 3 D
Y15	SOL. VALVE ABS,LHS, 3RD AXLE	EB 3 D
Y16	SOL. VALVE ABS,RHS, 3RD AXLE	EA 2 D
Y16	SOL. VALVE ABS,RHS, 3RD AXLE	EB 3 D
Y18	Solenoid valve, PTO (Power Take Off)	FD 1 D
Y18G	SOLENOID TRANS PTO1	DA 4 D
Y18H	SOLENOID TRANS PTO2	DA 4 D
Y25A	SOLENOID LEVEL CONTROL DRIVE AXLES	EC 1 B
Y29A	SOLENOID LEVEL CONTROL AUX. AXLE	EC 2 B
Y35	SOLENOID, ENGINE FAN	CA 2 C
Y35	SOLENOID, ENGINE FAN	CE 0 D
Y42	CLUTCH, MAGNETIC, A/C COMPRESSOR	HA 3 C
Y50	CTRL UNIT, PNEUMATIC	FE 3 D
Y51	SOL VALVE, AIR DRYER	FA 2 D
Y51_A	SOL VALVE AIR DRYER	FA 1 C
Y52	SOL. VALVE, RH, AIR DRYER	FA 1 D
Y57	SOL. VALVE, AUTO TRACTION CTRL	EA 1 D
Y57	SOL. VALVE, AUTO TRACTION CTRL	EB 1 A
Y57_SA	SOLENOID VALVE, TRACTION CONTROL, STEER AXLE FOR BENDIX ESP	EB 4 D

https://truckmanualshub.com/

COMPONENTS

COMPONENT	DESCRIPTION	PAGE
Y62	SOLENOID ACCUMULATOR	DC 1 C
Y80	SOLENOID VALVE, UREA DOSING UNIT	CD 2 B
Y80A	DEF INJ VALVE	CF 1 C
Y81	SOLENOID VALVE, UREA HEATING TANK	CD 2 D
Y86	SOL, MULTI VALVE ASSY.	FB 0 D
Y100	SOLENOID VALVE, TRAILER ABS FOR BENDIX ESP	EB 2 D
Y106	SOLENOID HILL ASSIST BRAKE	EB 4 D
Z01	CONNECTOR, VEH DIAG.	XA 1 D

https://truckmanualshub.com/

INLINES

INLINE	PAGE
6SABS:A	EA 2 D
6SABS:A	EB 2 D
6SABS:B	EA 2 D
6SABS:B	EB 2 D
6SABS:C	EA 2 D
6SABS:C	EB 3 D
6SABS:D	EA 2 D
6SABS:D	EB 3 D
6SABS:E	EA 3 D
6SABS:E	EB 3 D
6SABS:F	EA 3 E
6SABS:F	EB 3 D
6SABS:G	EA 3 D
6SABS:G	EB 3 D
6SABS:H	EA 2 D
6SABS:H	EB 3 D
6SABS:J	EA 2 E
6SABS:J	EB 3 D
6SABS:K	EA 3 D
6SABS:K	EB 3 D
ABS_X1:1	EA 2 B
ABS_X1:2	EA 2 B
ABS_X1:3	EA 3 B
ABS_X1:4	EA 1 C
ABS_X1:5	EA 1 C
ABS_X1:6	EA 2 B
ABS_X1:7	EA 3 B
ABS_X1:8	EA 3 B
ABS_X1:10	EA 0 C
ABS_X1:11	EA 0 C
ABS_X1:12	EA 1 B
ABS_X1:13	EA 3 B
ABS_X1:14	EA 3 B
ABS_X1:16	EA 2 B
ABS_X1:17	EA 2 B
ABS_X2:1	EA 0 C
ABS_X2:2	EA 0 C
ABS_X2:3	EA 0 A
ABS_X2:4	EA 1 B
ABS_X2:5	EA 0 B
ABS_X2:6	EA 1 A
ABS_X2:7	EA 1 B
ABS_X2:8	EA 0 B
ABS_X2:9	EA 0 D
ABS_X2:10	EA 1 C
ABS_X2:11	EA 1 C
ABS_X2:12	EA 0 B
ABS_X2:13	EA 1 C
ABS_X2:14	EA 1 C
ABS_X2:15	EA 0 C

INLINE	PAGE
ABS_X2:16	EA 1 C
ABS_X2:17	EA 1 C
ABS_X2:18	EA 0 C
ABS_X3:4	EA 3 C
ABS_X3:6	EA 3 E
ABS_X3:7	EA 3 C
ABS_X3:9	EA 2 E
ABS_X3:10	EA 3 C
ABS_X3:11	EA 2 C
ABS_X3:12	EA 2 C
ABS_X3:13	EA 2 C
ABS_X3:14	EA 2 C
ABS_X3:15	EA 2 C
ACC_SP1:A	AA 4 C
ACC_SP1:B	AA 4 C
AF_AFR:A	HC 4 C
AF_AFR:A	HG 3 C
AF_AFR:B	HC 3 C
AF_AFR:B	HG 3 C
AF_AFR:C	HC 3 C
AF_AFR:C	HG 3 C
AHMC2:A	KC 3 B
AHMC2:B	KC 3 E
AHMC:A	KC 3 B
AHMC:B	KC 3 E
AILH:A	GK 0 C
AILH:B	GK 1 A
AIRH:A	GK 1 C
AIRH:B	GK 1 B
ALIC:A	KC 4 D
ALIC:B	KC 4 E
ALIC:C	KC 4 C
ALIC:D	KC 4 D
ALLISON:1	DC 2 C
ALLISON:2	DC 2 D
ALLISON:3	DC 1 C
ALLISON:4	DC 2 C
ALLISON:5	DC 1 C
ALLISON:6	DC 1 C
ALLISON:7	DC 1 C
ALLISON:8	DC 1 C
ALLISON:9	DC 1 C
ALLISON:10	DC 0 C
ALLISON:11	DC 0 C
ALLISON:12	DC 1 C
ALLISON:13	DC 1 C
ALLISON:14	DC 2 C
ALLISON:15	DC 2 C
ALLISON:16	DC 2 C
ALLISON:17	DC 0 C

INLINE	PAGE
ALLISON:18	DC 0 C
ALLISON:19	DC 1 C
ALLISON:20	DC 1 C
ALLISON:21	DC 2 C
ALLISON:22	DC 2 C
ALLISON:23	DC 2 C
ALLISON:24	DC 2 C
ALLISON:25	GG 2 A
ALLISON:26	GG 2 C
ALLISON:27	DC 0 C
ALLISON:30	DC 0 C
ALLISON:31	DC 0 C
ALLISON_RLY:A1	DD 4 B
ALLISON_RLY:A3	DD 4 C
ALLISON_RLY:A4	DD 3 B
ALLISON_RLY:A6	DD 3 C
ALLISON_RLY:A7	DD 3 B
ALLISON_RLY:A9	DD 3 B
ALLISON_RLY:B1	DD 4 B
ALLISON_RLY:B2	DD 4 C
ALLISON_RLY:B3	DD 4 C
ALLISON_RLY:B4	DD 3 B
ALLISON_RLY:B6	DD 3 C
ALLISON_RLY:B7	DD 3 B
ALLISON_RLY:B8	DD 3 C
ALLISON_RLY:B9	DD 3 B
ALLISON_RLY:C2	DD 2 C
ALLISON_RLY:C3	DD 2 B
ALLISON_RLY:C4	DD 2 B
ALLISON_RLY:C6	DD 2 B
ALLISON_RLY:D1	DD 2 C
ALLISON_RLY:D3	DD 2 B
ALLISON_RLY:D4	DD 2 B
ALLISON_RLY:D6	DD 2 B
AT_CAB_TRANS:A	DB 0 C
AT_CAB_TRANS:B	DB 3 C
AT_CAB_TRANS:C	DB 0 C
AT_CAB_TRANS:F	DB 0 C
AT_CAB_TRANS:H	DB 0 C
AT_CAB_TRANS:J	DB 0 C
AT_CAB_TRANS:K	DB 1 C
AT_CAB_TRANS:N	DB 1 C
AT_CAB_TRANS:P	DB 1 C
AT_CAB_TRANS:R	DB 1 C
AT_CAB_TRANS:S	DB 2 C
AT_CAB_TRANS:T	DB 2 C
AT_CAB_TRANS:X	DB 3 C
AT_NU_PTO:A	DB 3 C
AT_NU_PTO:B	DB 3 C
AT_NU_PTO:C	DB 3 C

INLINE	PAGE
AT_RLY:A1	DB 1 B
AT_RLY:A3	DB 1 B
AT_RLY:B1	DB 1 B
AT_RLY:B3	DB 1 B
AT_RLY:C1	DB 3 B
AT_RLY:C3	DB 3 B
AT_RLY:D1	DB 3 B
AT_RLY:D3	DB 3 B
AUX_BATT:A	NA 0 D
AUX_IGN:A	NA 1 D
B25JMP:1	BB 4 D
B25JMP:3	BB 4 D
B25JMP:4	BB 4 D
B25JMP:5	BB 4 D
B25JMP:6	BB 4 D
B58R_EXT:A	BF 1 D
B58R_EXT:B	BF 2 D
B58R_EXT:C	BF 2 D
B58RE_EXT:A	EB 1 D
B58RE_EXT:B	EB 1 D
B58RE_EXT:C	EB 2 D
B60LF:A	KA 0 D
B60LF:B	KA 0 D
B60RF:A	KA 0 D
B60RF:B	KA 0 D
B60SLF:A	KA 3 C
B60SLF:B	KA 3 C
B60SRF:A	KA 3 C
B60SRF:B	KA 3 C
BAT_SP2:A	NA 2 B
BAT_SP3:A	NC 0 B
BAT_SP4:A	NA 2 B
BAT_SP4:A	NC 0 B
BAT_SP4:B	NA 2 B
BB_CAB:1	BJ 1 D
BB_CAB:1	BK 1 C
BB_CAB:2	BJ 1 D
BB_CAB:2	BK 1 C
BB_CAB:3	BJ 1 C
BB_CAB:3	BK 0 C
BB_CAB:4	BJ 0 B
BB_CAB:4	BK 0 C
BB_CAB:5	BJ 2 C
BB_CAB:6	BJ 2 C
BB_CAB:6	BK 3 C
BB_CAB:7	BJ 3 C
BB_CAB:7	BK 3 C
BB_CAB:8	BJ 2 C
BB_CAB:9	BJ 1 D
BB_CAB:13	BK 3 C

INLINE	PAGE
BB_CAB:14	BJ 1 D
BB_CAB:14	BK 1 C
BB_CAB:15	BJ 1 D
BB_CAB:15	BK 2 C
BB_CAB:16	BJ 1 D
BB_CAB:16	BK 2 C
BB_CAB:17	BJ 1 D
BB_CAB:17	BK 2 C
BB_CAB:18	BJ 3 C
BB_CAB:18	BK 3 C
BB_CAB:19	BK 2 C
BB_CAB:20	BJ 3 C
BB_CAB:20	BK 3 C
BB_CAB:21	BJ 4 C
BB_CAB:21	BK 4 C
BB_CAB:22	BJ 4 C
BB_CAB:22	BK 3 C
BB_CAB:23	BJ 2 C
BB_CAB:25	BJ 3 C
BB_CAB:26	BJ 3 C
BB_CAB:28	BJ 1 D
BB_CAB:28	BK 2 C
BB_LP:A	BK 2 C
BB_LP:B	BJ 1 B
BB_LP:B	BK 3 A
BB_LP_6SW:B	NC 1 B
BBBL:1	BK 0 D
BBBL:2	BK 0 D
BBBL:3	BK 1 D
BBBL:4	BK 1 D
BBBL:5	BK 1 D
BBBL:6	BK 1 D
BBBL:7	BK 1 D
BBBL:8	BK 1 D
BBBL:9	BK 1 D
BBBL:10	BK 1 D
BBBL:11	BK 2 D
BBBL:12	BK 2 D
BBBL:13	BK 2 D
BBBL:14	BK 2 D
BBBL:15	BK 2 D
BBBL:16	BK 2 D
BBBL:17	BK 2 D
BBBL:18	BK 3 D
BBBL:19	BK 3 D
BBBL:20	BK 3 D
BBBL:23	BK 3 D
BBBL:24	BK 3 D
BBBL:27	BK 3 D
BBBL:29	BK 4 D

https://truckmanualshub.com/

INLINES

INLINE	PAGE
BBCBBC:A	BN 3 C
BBCBBC:B	BN 3 C
BBCBBC:C	BN 3 C
BBCBBC:D	BN 2 C
BBCBBC:E	BN 1 C
BBCBBC:F	BN 1 C
BBCBBC:G	BN 1 C
BBCBBC:H	BN 1 C
BBCBBC:J	BN 1 C
BBCBBC:K	NF 2 D
BBCBBC:L	NF 2 D
BBIC1:S	BJ 0 C
BBIC1:U	BJ 1 C
BBIC1:V	BJ 3 C
BBIC1:W	BJ 3 C
BBIC1:X	BJ 3 C
BBIC1:Y	BJ 3 C
BBIC1:Z	BJ 3 C
BBIC2:1	BJ 1 D
BBIC2:2	BJ 1 D
BBIC2:3	BJ 3 C
BBIC2:5	BJ 2 C
BBIC2:6	BJ 2 C
BBIC2:7	BJ 3 C
BBIC2:8	BJ 2 C
BBIC2:9	BJ 1 D
BBIC2:13	BJ 3 C
BBIC2:14	BJ 4 C
BBIC2:15	BJ 1 D
BBIC2:16	BJ 1 D
BBIC2:17	BJ 1 D
BBIC2:18	BJ 3 C
BBIC2:19	BJ 1 D
BBIC2:20	BJ 3 C
BBIC2:21	BJ 4 C
BBIC2:22	BJ 4 C
BBIC2:23	BJ 2 C
BBIC2:25	BJ 3 C
BBIC2:26	BJ 3 C
BBIC2:27	BJ 2 C
BBIC2:28	BJ 1 D
BBIC2:29	BJ 2 C
BBIL:1	BJ 1 C
BBIL:2	BJ 2 C
BBPA1:A	BN 2 C
BBPA1:B	BN 2 C
BBPA1:C	BN 2 C
BBPA1:D	BN 3 C
BBPA1:E	BN 3 C
BBPA1:F	BN 3 C

INLINE	PAGE
BBPA1:G	BN 3 C
BBPA1:H	BN 3 C
BBPA2:A	BN 2 C
BBPA2:B	BN 2 C
BBPA2:C	BN 2 C
BBPA2:D	BN 1 C
BBPA2:E	BN 1 C
BBPA2:F	BN 1 C
BBPA2:G	BN 1 C
BBSP1:A	BJ 1 E
BBSP2:A	BJ 1 E
BBSP2:A	BK 1 B
BBSP3:A	BJ 1 E
BBSP3:A	BK 2 B
BBSP4:A	BJ 1 E
BBSP4:A	BK 2 B
BBSP5:A	BJ 1 E
BBSP5:A	BK 2 B
BBSP6:A	BJ 1 E
BBSP6:A	BK 2 B
BEC_J1:A1	GA 2 B
BEC_J1:A2	GA 0 A
BEC_J1:A4	GA 1 D
BEC_J1:A6	BF 2 B
BEC_J1:A7	BF 2 B
BEC_J1:A9	GD 0 A
BEC_J1:A9	GE 0 A
BEC_J1:A12	IE 2 A
BEC_J1:B1	GA 1 B
BEC_J1:B2	GA 1 B
BEC_J1:B3	GA 0 B
BEC_J1:B4	GA 2 B
BEC_J1:B6	BF 2 B
BEC_J1:B7	BF 1 B
BEC_J1:B8	AD 2 B
BEC_J1:B12	GA 2 A
BEC_J1:C8	AA 3 B
BEC_J1:C11	IC 0 A
BEC_J1:D2	BK 4 A
BEC_J1:D8	AA 3 B
BEC_J1:D12	BI 0 A
BEC_J1:E1	AD 3 B
BEC_J1:E2	AA 4 B
BEC_J1:E5	HD 3 A
BEC_J1:E5	KC 0 A
BEC_J1:E5	NA 2 A
BEC_J1:E5	NC 0 A
BEC_J1:E11	BM 1 A
BEC_J1:E11	NB 2 A
BEC_J1:F1	AA 4 B

INLINE	PAGE
BEC_J1:F2	AA 3 B
BEC_J1:F3	AA 2 B
BEC_J1:F4	DB 2 A
BEC_J1:F4	DD 0 A
BEC_J1:F4	NA 3 A
BEC_J1:F10	GJ 0 B
BEC_J1:F10	NA 2 A
BEC_J1:F12	EA 2 B
BEC_J1:F12	EB 3 A
BEC_J2:A1	AA 1 B
BEC_J2:A2	AA 1 B
BEC_J2:A5	GA 1 C
BEC_J2:A7	HA 1 B
BEC_J2:A9	AC 0 A
BEC_J2:A12	ID 0 A
BEC_J2:A12	IE 1 A
BEC_J2:B1	AA 1 C
BEC_J2:B5	GA 1 C
BEC_J2:B8	BM 1 A
BEC_J2:B8	NB 2 A
BEC_J2:B11	GA 0 B
BEC_J2:C4	BA 1 A
BEC_J2:C5	GA 0 C
BEC_J2:C9	NA 1 B
BEC_J2:C12	GA 1 A
BEC_J2:D1	BD 0 A
BEC_J2:D4	BA 3 A
BEC_J2:D5	GA 1 C
BEC_J2:D8	HC 3 A
BEC_J2:D8	NA 3 A
BEC_J2:D11	KC 0 A
BEC_J2:E2	BA 1 A
BEC_J2:E5	BB 0 B
BEC_J2:E6	HA 0 B
BEC_J2:E7	AA 3 D
BEC_J2:E9	FE 1 A
BEC_J2:E9	GL 0 A
BEC_J2:E9	NA 2 A
BEC_J2:E9	NC 3 A
BEC_J2:E10	GP 1 B
BEC_J2:E12	AC 0 A
BEC_J2:F1	BE 0 A
BEC_J2:F2	BC 3 A
BEC_J2:F5	AD 2 B
BEC_J2:F6	HA 0 B
BEC_J2:F8	GP 1 B
BEC_J2:F9	GP 1 B
BEC_J2:F10	GP 1 B
BEC_J2:F11	KC 2 A
BEC_J3:A2	BA 0 A

INLINE	PAGE
BEC_J3:A5	AD 3 B
BEC_J3:A6	AA 3 E
BEC_J3:A6	HA 0 B
BEC_J3:A8	GP 0 B
BEC_J3:A11	GA 3 B
BEC_J3:A12	GA 3 A
BEC_J3:B1	BJ 1 A
BEC_J3:B1	BK 3 A
BEC_J3:B1	NA 4 A
BEC_J3:B1	NC 1 A
BEC_J3:B5	AD 3 B
BEC_J3:B6	FB 1 A
BEC_J3:B7	KA 1 A
BEC_J3:B9	IA 2 A
BEC_J3:B10	GA 3 B
BEC_J3:B11	GA 3 B
BEC_J3:B12	GA 3 A
BEC_J3:C2	DB 3 A
BEC_J3:C2	DD 3 A
BEC_J3:C2	DE 2 B
BEC_J3:C2	NA 3 A
BEC_J3:C3	GD 1 A
BEC_J3:C3	GE 1 A
BEC_J3:C5	AD 3 B
BEC_J3:C8	IA 2 A
BEC_J3:C8	ID 3 A
BEC_J3:C10	GA 3 B
BEC_J3:C11	GA 1 B
BEC_J3:C12	GA 1 A
BEC_J3:D1	CB 2 B
BEC_J3:D3	GH 0 A
BEC_J3:D9	FB 2 A
BEC_J3:D10	EC 3 A
BEC_J3:E2	FD 2 A
BEC_J3:E2	JB 1 A
BEC_J3:E2	NA 2 A
BEC_J3:E2	NC 2 A
BEC_J3:E3	GH 1 A
BEC_J3:E5	BE 3 D
BEC_J3:E5	EC 3 B
BEC_J3:E6	BE 3 D
BEC_J3:E7	EC 3 B
BEC_J3:E8	BJ 1 B
BEC_J3:E8	HD 1 C
BEC_J3:E10	AA 0 C
BEC_J3:E10	BJ 1 B
BEC_J3:E10	BK 1 B
BEC_J3:E10	HD 2 B
BEC_J3:E11	XA 2 A
BEC_J3:F1	IE 2 A

INLINE	PAGE
BEC_J3:F3	NA 0 A
BEC_J3:F5	BE 3 D
BEC_J3:F5	EC 3 B
BEC_J3:F7	BE 3 D
BEC_J3:F7	EC 3 B
BEC_J3:F8	BJ 1 B
BEC_J3:F8	BK 0 C
BEC_J3:F8	HD 2 B
BEC_J3:F10	AA 0 C
BEC_J3:F10	BJ 1 B
BEC_J3:F10	BK 1 B
BEC_J3:F10	HD 1 B
BEC_J3:F11	BE 0 A
BEC_J3:F11	BG 0 A
BEC_J4:A2	AA 1 C
BEC_J4:C1	CE 2 A
BEC_J4:C1	DA 2 A
BEC_J4:C2	AA 0 D
BEC_J4:D1	AA 0 B
BEC_J4:D1	BJ 1 A
BEC_J4:D1	BK 1 A
BEC_J4:D1	HD 1 A
BEC_J4:D2	AA 0 B
BEC_J4:D2	BJ 1 A
BEC_J4:D2	BK 1 A
BEC_J4:D2	HD 1 A
CAB_DDC:1	DB 0 B
CAB_DDC:2	DB 0 B
CAB_DDC:3	DB 0 B
CAB_DDC:4	DB 0 B
CAB_DDC:5	DB 1 B
CAB_DDC:6	DB 0 B
CAB_DDC:8	DB 1 B
CAB_SC_ESP:A	EB 1 D
CAB_SC_ESP:B	EB 1 E
CAB_SC_ESP:C	EB 1 D
CAB_SC_ESP:D	EB 0 D
CHPTO:A	FD 1 D
CHPTO:B	FD 1 D
CHPTO:C	FD 2 D
CIEC1:A	GP 2 B
CIEC1:B	GP 2 B
CIEC1:C	GP 2 B
CIEC1:D	GP 2 B
CIEC1:E	GP 2 B
CIEC1:F	GP 2 B
CIEC1:G	GP 2 B
CIEC1:H	GP 2 B
CIEC1:J	GP 2 C
CIEC1:K	GP 2 C

https://truckmanualshub.com/

INLINES

INLINE	PAGE
CIEC1:L	GP 2 C
CIEC1:M	GP 2 C
CIEC1:N	GP 2 C
CIEC1:P	GP 2 C
CIEC2:A	GP 3 B
CIEC2:B	GP 3 B
CIEC2:C	GP 3 B
CIEC2:D	GP 3 B
CIEC2:E	GP 3 B
CIEC2:F	GP 3 B
CIEC2:G	GP 3 B
CIEC2:H	GP 3 B
CIEC2:J	GP 3 C
CIEC2:K	GP 3 C
CIEC2:L	GP 3 C
CIEC2:M	GP 3 C
CIEC2:N	GP 3 C
CIEC2:P	GP 3 C
CIEC:A	CA 2 B
CIEC:A	CE 2 C
CIEC:B	CA 1 B
CIEC:C	AC 2 D
CIEC:D	AC 2 D
CIEC:E	AC 1 E
CIEC:F	CA 1 C
CIEC:F	CF 3 B
CIEC:G	CE 2 B
CIEC:H	GD 3 C
CIEC:H	GE 3 C
CIEC:J	BE 3 C
CIEC:K	GF 1 B
CIEC:L	GD 3 C
CIEC:L	GE 3 C
CIEC:M	BG 1 B
CIEC:N	BE 3 B
CIEC:P	FA 2 B
CO_BB_LP1:B	BK 3 A
CO_BB_LP2:B	BK 2 B
COBBC:A	BK 2 C
COSLIL:A	GD 3 C
COSLIL:B	GD 3 C
COSLIR:A	GD 4 C
COSLIR:B	GD 4 C
COSLL:A	GD 3 C
COSLL:B	GD 3 D
COSLL:C	GD 3 D
COSLR:A	GD 4 C
COSLR:B	GD 4 D
COSLR:C	GD 4 E
CTI_PSI:A	FE 0 C

INLINE	PAGE
CTI_PSI:B	FE 1 D
CTIIP_CTICAB:1	FE 1 B
CTIIP_CTICAB:2	FE 1 E
CTIIP_CTICAB:3	FE 1 C
CTIIP_CTICAB:4	FE 1 D
CTIIP_CTICAB:5	FE 1 D
CTIIP_CTICAB:6	FE 2 D
CTIIP_CTICAB:7	FE 2 D
CTIIP_CTICAB:9	FE 2 B
CTIIP_CTICAB:10	FE 2 B
CTR_PIN_HOT:A	GJ 1 C
CTR_PIN_HOT:B	GJ 1 D
CTR_PIN_HOT_ISO:A	GJ 3 B
CTR_PIN_HOT_ISO:B	GJ 3 D
CTR_PIN_HOT_ISO:C	GJ 2 D
DASH_CAB:25	GG 1 A
DASH_CAB:26	GG 2 C
DCL:A	BC 1 B
DCL:B	BC 1 C
DCL:C	BC 1 C
DCL:D	BC 1 D
DCL:E	BC 1 D
DCL:F	BC 1 B
DCL:G	BC 1 B
DCL:H	BC 1 D
DCL:J	BC 1 E
DCL_A:H	BC 1 D
DCL_A:J	BC 1 E
DCL_ACC:A	BC 1 B
DCL_ACC:B	BC 1 C
DCL_ACC:C	BC 1 C
DCL_ACC:D	BC 1 D
DCL_ACC:E	BC 1 D
DCL_ACC:F	BC 1 B
DCL_ACC:G	BC 1 A
DCL_ACC:H	BC 1 D
DCL_ACC:J	BC 1 E
DCL_ACC_A:C	BC 0 C
DCL_ACC_A:D	BC 0 D
DCL_ACC_A:E	BC 0 D
DCL_ACC_A:G	BC 0 A
DCL_ACC_A:H	BC 0 D
DCL_ACC_A:J	BC 0 E
DCL_B:A	BC 1 B
DCL_B:B	BC 1 C
DCL_B:C	BC 4 C
DCL_B:D	BC 1 D
DCL_B:E	BC 1 D
DCL_B:F	BC 4 A
DCL_B:G	BC 1 B

INLINE	PAGE
DCL_B:H	BC 1 E
DCL_B:J	BC 1 E
DCL_C:A	BC 0 B
DCL_C:B	BC 0 C
DCL_C:D	BC 0 D
DCL_C:E	BC 0 D
DCL_C:F	BC 3 A
DCL_C:G	BC 0 B
DCL_C:H	BC 0 E
DCL_C:J	BC 0 E
DHDH:A	CA 2 B
DHDH:B	CA 1 B
DHDH:C	GJ 3 B
DHDHA:A	DB 2 C
DHDHA:B	DB 2 C
DHDHA:C	DB 3 C
DHDHB:A	DB 2 B
DHDHB:B	DB 2 C
DHDHB:C	DB 3 B
DHFC:A	AD 1 D
DHFC:B	BG 1 D
DHFC:C	CD 0 B
DHFC:D	GA 2 E
DHFC:F	BF 0 B
DHFC:G	GP 1 C
DHFC:H	GP 0 C
DHFC:J	GP 1 C
DHFC:K	GP 1 C
DHFC:L	GP 0 C
DHFC:M	BF 0 B
DSFC:A	BG 3 C
DSFC:B	BG 4 D
DSFC:C	BF 4 D
DSFC:D	BG 2 E
DSFC:E	BF 1 D
DSFC:F	BF 1 D
DSFC:J	BF 1 E
E12DHS:A	HE 4 D
E12DHS:B	HE 4 E
E19DHS:A	HE 1 D
E19DHS:B	HE 1 E
EARC2:C	AH 2 D
EARC2:D	AH 2 D
EARC4:A	AH 4 D
EARC4:B	AH 4 D
EARC4:C	AH 2 D
EARC4:D	AH 3 D
EARC4:E	AH 3 D
EARC4:F	AH 3 D
EARC4:G	AH 4 D

INLINE	PAGE
EARC4:H	AH 4 D
EARC6:A	AH 0 B
EPDMA:A	GG 1 B
EPDMA:B	GG 2 B
EPDMA:C	CA 1 A
EPDMA:D	GG 2 B
EPDMB:A	DB 2 B
EPDMB:B	DB 2 B
EPDMB:C	DB 2 B
EPDMB:G	DB 2 B
EPDMB:M	DB 2 B
EPDMB_B:K	BC 0 D
EPDMB_B:L	BC 0 E
EPDMBA:D	GG 2 B
EPDMBA:E	GG 2 B
EPDMC:A	BG 2 A
EPDMC:B	GD 3 B
EPDMC:B	GE 3 B
EPDMC:C	GG 3 A
EPDMC:D	GG 3 A
EPDMC:E	GD 3 B
EPDMC:E	GE 3 B
EPDMC:G	GQ 1 B
EPDMC:H	BE 3 A
EPDMC:J	FA 2 A
EPDMC:K	CD 0 A
EPDMC:L	CA 2 A
EPDMC:L	CE 2 C
EPDMC:M	AB 3 E
EPDMC:M	CA 2 A
EPDMC:M	CE 2 B
EPDMD:C	GD 3 B
EPDMD:C	GE 3 B
EPDMD:D	GD 3 B
EPDMD:D	GE 3 B
EPDME:A	CA 1 A
EPDME:B	AC 2 D
EPDME:C	GJ 3 B
EPDME:D	AC 2 D
EPDME:E	AC 2 C
EPDMF:A	GG 1 B
EPDMF:B	GG 0 B
EPDMF:C	GG 3 B
EPDMF:D	GA 4 D
EPDMG:A	GA 4 D
EPDMG:B	GQ 1 B
EPDMG:D	GG 1 B
EPDMG:F	EA 3 B
EPDMG:F	EB 3 A
EPDMG:G	AB 0 C

INLINE	PAGE
EPDMG:H	GD 4 B
EPDMG:H	GE 3 B
EPDMG:J	GA 4 D
EPDMG:M	GG 0 B
EPDMG:P	AC 2 B
EPDMG:R	AB 2 C
EPDMG:S	GD 3 B
EPDMG:S	GE 3 B
EPDMP_A:C	BC 0 D
EPDMP_A:D	BC 0 E
ESFC:A	EC 1 B
ESFC:F	EC 1 B
ESFC:H	EC 1 C
ESFC:J	EC 0 C
ESFC:R	EC 1 C
ESFC:S	EC 2 C
ESFC:T	EC 2 C
ESFC:U	EC 2 C
ESFC:V	EC 2 B
ESFC:W	EC 2 B
ESFC:X	EC 1 C
FCAC:A	HA 2 B
FCAC:B	HA 3 B
FCAC:C	BD 2 C
FCAC:D	BD 3 B
FCAC:E	HB 3 C
FCAD:A	FA 1 C
FCAD:B	FA 1 D
FCAE2:A	AF 2 D
FCAE2:B	CE 3 B
FCAE:A	AD 1 C
FCAE:B	CD 0 B
FCAPADS:A	HB 2 B
FCAPADS:B	HB 2 B
FCAPADS:C	HB 3 B
FCAPADS:D	HB 2 B
FCAPADS:E	HB 3 C
FCATR:C	DC 4 D
FCATR:D	DC 4 C
FCBB:1	BJ 1 B
FCBB:1	BK 2 C
FCBB:2	BJ 2 B
FCBL:A	GF 2 B
FCBL:B	GA 2 E
FCBL:C	GF 0 C
FCBL:D	GF 1 C
FCBL:E	AD 1 E
FCCE:6	BF 4 C
FCCE:7	GF 1 B
FCCE:8	EB 1 D

https://truckmanualshub.com/

INLINES

INLINE	PAGE
FCCE:9	EB 1 D
FCCE:10	EB 2 D
FCCE:11	AD 1 D
FCCE:12	BF 2 D
FCCE:13	BF 2 D
FCCE:14	GF 1 D
FCCE:15	EB 0 B
FCCE:16	EB 0 B
FCCE:17	EB 0 B
FCCE:18	EB 0 B
FCCE:19	EB 0 B
FCCE:20	EB 1 B
FCCE:21	EB 1 B
FCCE:22	EB 1 B
FCCE:23	EB 1 B
FCCE:24	EB 1 B
FCCE:25	EB 1 B
FCCE:26	EB 1 B
FCCE:27	EB 4 C
FCCE:28	BF 1 D
FCCE:29	BF 1 D
FCCE:30	BF 1 D
FCCE:31	BG 2 E
FCCE:32	BG 3 C
FCCE:33	GF 0 B
FCCE:34	GF 0 B
FCCE:35	GF 1 B
FCCL:A	CA 2 D
FCCL:B	CA 2 D
FCCL:B	CE 1 C
FCCL:C	BF 0 D
FCCL:C	CE 3 D
FCCL:D	BF 1 E
FCCL:D	CE 3 D
FCCL:E	CE 0 C
FCEIC:1	CD 2 B
FCEIC:2	CD 2 B
FCEIC:3	CD 2 A
FCEIC:4	CD 2 B
FCEIC:5	CD 2 B
FCEIC:6	CD 3 A
FCEIC:7	CD 0 D
FCEIC:8	CD 0 D
FCEIC:9	CD 3 B
FCEIC:10	CD 1 D
FCEIC:11	CD 1 D
FCEIC:12	CD 2 C
FCEIC:13	CD 0 D
FCEIC:14	CD 1 D
FCEIC:15	CD 1 D

INLINE	PAGE
FCEN:A	HA 3 C
FCEN:B	CF 0 B
FCEN:C	AG 1 B
FCEN:D	CF 0 B
FCFA:A	JB 0 B
FCFA:B	JB 1 B
FCFA:C	JB 1 C
FCFA:D	JB 0 C
FCFS:A	BF 0 D
FCFS:B	BF 0 D
FCFS:C	BF 0 E
FCGND:1	CE 4 D
FCHC1:B	GP 2 D
FCHC1:C	GP 2 D
FCHC1:D	GP 2 D
FCHC1:E	GP 2 D
FCHC1:F	GP 2 D
FCHC1:J	GP 2 D
FCHC1:K	GP 2 D
FCHC1:L	GP 2 D
FCHC1:M	GP 2 E
FCHC2:B	GP 3 D
FCHC2:C	GP 3 D
FCHC2:D	GP 3 D
FCHC2:E	GP 3 D
FCHC2:F	GP 3 D
FCHC2:J	GP 3 D
FCHC2:K	GP 3 D
FCHC2:L	GP 3 D
FCHC2:M	GP 3 E
FCHC:A	GD 0 D
FCHC:A	GE 0 D
FCHC:B	GD 3 D
FCHC:B	GE 3 C
FCHC:D	GD 2 C
FCHC:D	GE 3 C
FCHC:E	GD 0 E
FCHC:E	GE 1 E
FCHC:F	GD 1 D
FCHC:F	GE 1 D
FCHC:G	GD 1 C
FCHC:G	GE 1 C
FCHC:H	GD 1 C
FCHC:H	GE 1 C
FCHC:K	GA 2 E
FCHC_PL:A	GI 0 D
FCHC_PL:B	GI 0 D
FCHC_PL:D	GI 0 D
FCHC_PL:E	GI 0 C
FCHC_PL:F	GI 0 D

INLINE	PAGE
FCHC_PL:G	GI 0 C
FCHC_PL:H	GI 3 C
FCHC_PL:K	GI 0 D
FCHDV:A	FA 3 C
FCHDV:B	FA 3 D
FCHL:A	CD 4 D
FCHL:B	CD 3 D
FCHM:A	BF 3 A
FCHM:B	BF 3 A
FCHNP:A	CF 1 C
FCHNP:B	CF 1 D
FCLC:A	CA 3 D
FCLC:B	CA 3 D
FCRE:A	GF 1 C
FCRE:B	GF 0 B
FCRE:C	GF 0 C
FCRE:D	GF 1 C
FCRE:E	GF 1 D
FCSCR:1	CF 1 C
FCSCR:2	CF 1 C
FCSCR:3	CF 4 D
FCSCR:4	CF 4 D
FCSCR:5	CF 4 D
FCSCR:6	CF 4 D
FCSCR:7	CF 4 C
FCSCR:8	CF 4 C
FCSCR:9	CF 4 C
FCSCR:10	CF 4 C
FCSCR:12	GF 3 D
FCSCR:13	GF 3 E
FCSPL:A	GI 1 B
FCSS:A	JA 2 C
FCSS:B	JA 2 C
FCSS:C	JA 2 C
FCSS:D	JA 2 C
FCSS:E	JA 2 C
FCTAD:A	FA 0 C
FCTAD:B	FA 0 D
FCTR2:1	DA 2 D
FCTR2:2	DA 2 D
FCTR:A	BC 3 C
FCTR:B	BE 3 B
FCTR:C	BF 1 D
FCTR:D	BF 1 D
FCTR:E	BC 3 B
FCTR:F	BB 0 C
FCTR:F	CE 2 D
FCTR:G	BB 0 C
FCTR:G	CE 2 D
FCTR:H	BE 3 B

INLINE	PAGE
FCTR:K	FB 3 B
FCUT2:1	CE 1 D
FCUT2:2	CE 1 D
FCUT2:3	CE 1 D
FCUT2:4	CE 1 D
FCUT2:5	CE 1 D
FCUT2:6	CE 1 D
FCUT2:7	CE 2 D
FCUT2:8	CE 2 D
FCUT2:9	CE 2 D
FCUT2:10	CE 2 D
FCUT2:11	CF 3 B
FCUT2:12	CF 3 B
FCUT2:13	CF 2 C
FCUT2:14	CF 1 C
FCUT2:16	CE 3 C
FCUT2:17	CE 3 C
FCUT2:18	CE 3 C
FCUT2:19	CE 2 C
FCUT2:20	CF 1 D
FCUT2:21	CF 1 C
FCUT2:22	CF 1 C
FCUT2:23	CF 3 B
FCUT2:24	CF 3 B
FCUT:1	CD 1 B
FCUT:2	CD 1 B
FCUT:3	CD 1 A
FCUT:4	CD 1 A
FCUT:5	CD 1 D
FCUT:6	CD 4 D
FCUT:7	CD 3 E
FCUT:8	CD 2 D
FCUT:9	CD 2 D
FCUT:10	CD 2 D
FCUT:11	CD 2 D
FCUT:12	CD 2 D
FCUT:13	CD 1 D
FCUT:14	CD 1 D
FCVEC1:A	AH 1 D
FCVEC1:B	AH 1 D
FCVEC1:C	AH 1 D
FCVEC1:C	CF 1 C
FCVEC1:D	AH 1 D
FCVEC1:D	CF 1 C
FCVEC1:E	AH 0 D
FCVEC1:E	CF 1 C
FCVEC1:F	AH 0 D
FCVEC1:F	CF 2 C
FCVEC1:G	AH 0 D
FCVEC1:G	CF 2 C

INLINE	PAGE
FCVEC1:H	AH 1 D
FCVEC1:H	CF 2 C
FCVEC2:A	AH 3 D
FCVEC2:A	CF 0 C
FCVEC2:B	AH 3 D
FCVEC2:B	CF 0 C
FCVEC2:E	AH 2 D
FCVEC2:E	CE 1 C
FCVEC2:F	AH 2 D
FCVEC2:F	CE 1 C
FCVEC2:G	AH 3 D
FCVEC2:G	CF 0 C
FCVEC2:H	AH 3 D
FCVEC2:H	CF 0 C
FCVEC6:C	AH 0 B
FCVEC6:C	CE 1 B
FHCC:A	KC 2 B
FHCC:B	KC 2 D
FLFC:A	GA 1 D
FLFC:B	GA 1 E
GENIV:A	DD 1 E
GENIV:B	DD 1 E
GUSLPCAB:A	GF 4 B
GUSLPCAB:B	GF 4 B
GUSLPCAB:C	GF 3 D
HL_CHU:A	GE 1 C
HL_CXU_GU:A	GD 0 C
HL_CXU_GU:A	GE 0 C
HLSO:A	GH 0 D
HLSO:B	GH 2 D
HLSO:C	GH 2 D
HLSO:D	GH 0 C
HLSO:E	GH 1 D
HLSO:F	GH 0 E
HRSCHRSS:1	HE 1 D
HRSCHRSS:2	HE 1 E
HRSCHRSS:3	HE 4 D
HRSCHRSS:4	HE 4 E
HWR:A	HC 0 D
HWR:A	HG 1 D
HWR:B	HC 0 E
HWR:B	HG 1 D
IGN_BAT_SP6:A	NA 3 B
IGN_BAT_SP6:B	NA 3 B
IGN_BAT_SP7:A	NA 0 B
IGN_BAT_SP7:B	NA 0 B
IGN_SP1:A	GL 0 B
IGN_SP1:A	NA 2 B
IGN_SP1:A	NC 3 B
IGN_SP1:B	GL 0 D

https://truckmanualshub.com/

INLINES

INLINE	PAGE
IGN_SP1:B	NA 2 B
IGN_SP1_BL:A	GL 0 B
IGN_SP1_BL:B	GL 0 D
IGN_SP3:A	FD 2 B
IGN_SP3:A	NA 2 B
IGN_SP3:A	NC 2 B
IGN_SP3:B	FD 2 B
IGN_SP3:B	NA 2 B
IGN_SP3_DC:A	FD 1 B
IGN_SP3_DC:B	FD 2 B
IGN_SP3_PTO:A	FD 2 B
IGN_SP3_PTO:B	FD 2 B
IGN_SP5:A	NA 3 B
IGN_SP5:B	NA 3 B
IGN_SP8:B	NA 4 B
IGN_SP8:B	NC 1 B
IGN_SP9:A	FE 1 B
IGN_SP10:B	NC 1 B
IGN_SP11:A	NC 2 B
IGN_SP12:A	NC 3 B
ILLUM_OPT1:A	HC 0 A
ILLUM_OPT1:A	HG 1 A
ILLUM_OPT1:B	HC 0 C
ILLUM_OPT1:B	HG 0 C
ILLUM_OPT2:A	NC 1 B
ILLUM_OPT2:B	NC 2 B
ILLUM_OPT3:A	HC 0 A
ILLUM_OPT3:B	HC 4 D
ILLUM_OPT4:A	HC 4 B
ILLUM_OPT4:B	HC 4 D
ILLUM_OPT5:A	NC 1 B
ILLUM_OPT5:B	NC 2 B
ILLUM_OPT6:A	HC 1 B
ILLUM_OPT6:A	HG 1 B
ILLUM_OPT6:B	HC 0 C
ILLUM_OPT6:B	HG 0 C
ILLUM_OPT11:A	JA 1 B
ILLUM_OPT11:B	JA 1 D
ILLUM_OPT12:A	JA 1 B
ILLUM_OPT12:B	JA 0 D
ILLUM_OPT13:A	KC 4 A
ILLUM_OPT13:B	KC 4 A
ILLUM_OPT14:A	KC 4 A
ILLUM_OPT14:B	KC 4 A
ILLUM_OPT15:A	BC 4 A
ILLUM_OPT15:B	BC 4 C
ILLUM_OPT16:A	BC 4 A
ILLUM_OPT16:B	BC 4 C
ILLUM_OPT17:A	FD 0 B
ILLUM_OPT17:B	FD 0 C

INLINE	PAGE
ILLUM_OPT18:A	FD 0 B
ILLUM_OPT18:B	FD 0 C
ILLUM_OPT19:A	GL 0 B
ILLUM_OPT19:B	GL 1 C
ILLUM_OPT20:A	GL 0 B
ILLUM_OPT20:B	GL 1 C
ILLUM_OPT:A	HC 0 A
ILLUM_OPT:A	NA 1 B
ILLUM_OPT:A	NC 1 B
ILLUM_OPT:B	NA 1 B
ILLUM_OPT:B	NC 2 B
MC_SLP_CAB1:A	KA 3 B
MC_SLP_CAB1:B	KA 3 B
MC_SLP_CAB1:C	KA 3 B
MC_SLP_CAB1:D	KA 3 B
MC_SLP_CAB1:E	HE 3 A
MC_SLP_CAB1:F	AA 4 C
MC_SLP_CAB1:G	HE 0 C
MC_SLP_CAB1:H	HE 0 C
MC_SLP_CAB2:A	HE 1 A
MC_SLP_CAB2:B	HD 2 C
MC_SLP_CAB2:C	AD 3 C
MC_SLP_CAB2:D	AD 3 D
MC_SLP_CAB3:A	HE 1 B
MC_SLP_CAB3:B	HE 1 B
MC_SLP_CAB3:C	HD 3 B
MC_SLP_CAB3:D	HD 3 B
MC_SLP_CAB3:E	HD 3 B
MC_TAS:A	BF 3 C
MC_TAS:B	BF 2 E
MCAF:A	HC 3 B
MCAF:B	HC 3 D
MCAT_CAB:1	DB 3 B
MCAT_CAB:2	DB 2 B
MCAT_CAB:3	DB 4 B
MCAT_CAB:4	DB 3 A
MCAT_CAB:5	DB 3 C
MCAT_CAB:6	DB 2 B
MCAT_CAB:7	DB 2 B
MCAT_CAB:8	DB 1 C
MCAT_CAB:9	DB 1 A
MCAT_CAB:12	DB 3 A
MCAT_CAB:13	DB 3 B
MCAT_CAB:14	DB 1 A
MCBB1:1	BJ 2 B
MCBB1:2	BJ 2 B
MCBB1:3	BJ 2 B
MCBB1:3	BK 3 C
MCBB1:4	BJ 2 B
MCBB1:4	BK 3 C

INLINE	PAGE
MCBB1:5	BJ 3 B
MCBB1:6	BJ 3 B
MCBB1:7	BJ 3 B
MCBB1:7	BK 3 C
MCBB1:8	BJ 3 B
MCBB1:8	BK 3 C
MCBB1:9	BJ 3 B
MCBB1:9	BK 3 C
MCBB1:10	BJ 4 B
MCBB1:10	BK 3 C
MCBB1:10	BN 3 B
MCBB1:11	BJ 4 B
MCBB1:11	BK 4 C
MCBB1:11	BN 3 B
MCBB1:12	BJ 1 D
MCBB1:12	BK 2 C
MCBB1:12	BN 1 B
MCBB1:13	BJ 1 D
MCBB1:13	BK 2 C
MCBB1:13	BN 1 B
MCBB1:14	BJ 1 D
MCBB1:14	BK 2 C
MCBB1:14	BN 2 B
MCBB1:16	BJ 1 D
MCBB1:16	BK 2 C
MCBB1:16	BN 3 B
MCBB1:17	BJ 1 D
MCBB1:17	BK 1 C
MCBB1:17	BN 1 B
MCBB1:18	BJ 1 D
MCBB2:A	BJ 1 D
MCBB2:A	BK 1 C
MCBB2:A	BN 1 B
MCBB2:B	BJ 1 D
MCBB2:B	BK 1 C
MCBB2:B	BN 1 B
MCBB2:C	BJ 1 C
MCBB2:C	BK 0 C
MCBB2:D	BJ 0 B
MCBB2:D	BK 0 B
MCBB:A	BK 4 B
MCBB:B	BK 4 B
MCCC:A	KC 2 B
MCCC:B	KC 2 D
MCCTI:A	FE 1 D
MCCTI:B	FE 1 D
MCCTI:C	FE 2 D
MCCTI:D	FE 2 D
MCCTI:E	FE 0 E
MCCTI:F	FE 1 D

INLINE	PAGE
MCCTI:G	FE 1 B
MCCTI:H	FE 2 B
MCDIAG:A	XA 2 C
MCDIAG:B	XA 2 C
MCDIAG:C	XA 2 C
MCDIAG:D	XA 2 C
MCDIAG:E	XA 3 C
MCDIAG:F	XA 3 C
MCDIAG:G	XA 3 C
MCDIAG:H	XA 3 D
MCDIAG:K	XA 2 D
MCDL1:A	IC 0 D
MCDL1:B	IC 0 D
MCDL1:C	IC 0 A
MCDL1:D	GH 1 B
MCDL1:E	IC 3 A
MCDL1:F	IC 0 D
MCDL1:G	IC 0 D
MCDL1:H	IC 0 D
MCDL2:A	IE 1 B
MCDL2:B	IE 1 B
MCDL2:C	IE 1 C
MCDL2:D	IE 1 C
MCDL2:E	IE 1 A
MCDL2:F	IE 0 A
MCDL3:A	IA 1 B
MCDL3:B	IA 2 B
MCDL3:C	IA 2 C
MCDL3:D	IA 2 D
MCDL3:E	IE 0 C
MCDL3:F	IA 1 B
MCDL4:B	GH 4 B
MCDL4:C	GH 3 A
MCDR1:A	IC 1 D
MCDR1:B	IC 1 D
MCDR1:D	GH 1 B
MCDR1:E	IC 4 A
MCDR1:F	IC 1 D
MCDR1:G	IC 1 D
MCDR1:H	IC 1 D
MCDR2:A	IE 2 B
MCDR2:B	IE 2 B
MCDR2:C	IE 2 C
MCDR2:D	IE 2 C
MCDR2:E	IE 2 B
MCDR2:F	IE 4 B
MCDR2B:A	ID 1 B
MCDR2B:E	ID 1 B
MCDR3:B	IA 3 B
MCDR3:C	IA 2 C

INLINE	PAGE
MCDR3:D	IA 2 D
MCDR3:E	IA 4 C
MCDR3:F	IA 3 B
MCDR3B:C	ID 3 C
MCDR3B:D	ID 3 C
MCDR4:B	GH 3 C
MCDR4:C	GH 4 C
MCEC1:A	HA 4 A
MCEC1:B	HA 4 A
MCEC2:A	HA 4 B
MCEC2:B	HA 4 B
MCEC:A	HA 1 C
MCEC:B	HA 2 C
MCES:A	EC 0 B
MCES:B	EC 0 B
MCES:C	EC 3 B
MCES:D	EC 3 B
MCES:E	EC 3 B
MCES:F	EC 3 B
MCES:G	EC 3 B
MCES:H	EC 4 C
MCES:J	EC 3 E
MCES:K	EC 2 E
MCFC:1	EA 3 E
MCFC:1	EB 3 C
MCFC:2	EA 3 D
MCFC:2	EB 3 C
MCFC:3	EA 3 D
MCFC:3	EB 3 C
MCFC:4	EA 2 E
MCFC:4	EB 3 C
MCFC:5	EA 2 D
MCFC:5	EB 3 C
MCFC:6	EA 3 D
MCFC:6	EB 3 C
MCFC:8	BE 3 B
MCFC:9	JB 1 B
MCFC:10	JA 3 C
MCFC:11	JA 3 C
MCFC:12	JA 3 C
MCFC:13	FB 1 D
MCFC:14	FB 2 C
MCFC:15	FB 1 D
MCFC:16	BJ 1 B
MCFC:16	BK 2 C
MCFC:17	EA 2 D
MCFC:17	EB 2 C
MCFC:18	EA 2 D
MCFC:18	EB 2 C
MCFC:19	EA 2 D

https://truckmanualshub.com/

INLINES

INLINE	PAGE
MCFC:19	EB 3 C
MCFC:20	EA 2 D
MCFC:20	EB 3 C
MCFC:21	EA 1 D
MCFC:21	EB 1 B
MCFC:22	EA 1 D
MCFC:22	EB 1 B
MCFC:23	EA 0 B
MCFC:23	EB 0 C
MCFC:24	EA 0 B
MCFC:24	EB 0 C
MCFC:25	EA 0 B
MCFC:25	EB 0 C
MCFC:26	EA 0 B
MCFC:26	EB 0 C
MCFC:27	EA 0 B
MCFC:27	EB 0 C
MCFC:28	EA 1 B
MCFC:28	EB 1 C
MCFC:29	EA 1 B
MCFC:29	EB 1 C
MCFC:30	EA 1 B
MCFC:30	EB 1 C
MCFC:31	EA 1 B
MCFC:31	EB 1 C
MCFC:32	EA 1 B
MCFC:32	EB 1 C
MCFC:33	EA 0 E
MCFC:33	EB 0 B
MCFC:34	EA 1 D
MCFC:34	EB 0 B
MCFC:35	EA 1 D
MCFC:35	EB 0 B
MCFC:36	EA 0 D
MCFC:36	EB 0 B
MCFC:37	EA 0 D
MCFC:37	EB 0 B
MCFC:38	EA 0 E
MCFC:38	EB 1 B
MCFC:39	EA 1 D
MCFC:39	EB 1 B
MCFC:40	EA 1 D
MCFC:40	EB 1 B
MCFC:41	EA 0 D
MCFC:41	EB 1 B
MCFC:42	EA 0 D
MCFC:42	EB 1 B
MCFC:43	BC 2 D
MCFC:43	EB 4 C
MCFC:44	CE 2 A

INLINE	PAGE
MCFC:45	XA 1 C
MCFC:46	XA 1 C
MCFC:47	BF 1 C
MCFC:48	BF 1 C
MCFC:49	BG 2 D
MCFC:50	BG 1 D
MCFC:51	BG 1 B
MCFC:52	BD 2 D
MCFC:53	GD 0 D
MCFC:53	GE 1 E
MCFC:54	GP 1 C
MCFC:55	BF 2 C
MCFC:56	BF 0 C
MCFC:57	BF 2 C
MCFC:58	BF 2 E
MCFC:59	BE 3 B
MCFC:60	BB 0 C
MCFC:61	BB 0 C
MCFC:62	BF 1 C
MCFC:63	HA 2 B
MCFC:64	FB 0 B
MCFC:65	BB 1 B
MCFC:66	BF 0 B
MCFC:67	BF 0 B
MCFC:68	AC 0 C
MCFC:69	BF 0 C
MCFC:70	BC 3 B
MCFC:71	GP 1 C
MCFC:72	GP 0 B
MCFC:73	GP 0 C
MCFC:74	GP 1 C
MCFC:75	BG 1 D
MCFC:76	BD 2 C
MCFC:77	GF 3 B
MCFC:78	FB 1 D
MCFC:79	GA 1 C
MCFC:80	GD 0 C
MCFC:80	GE 0 C
MCFC:81	GD 1 C
MCFC:81	GE 1 C
MCFC:82	GA 2 D
MCFC:83	XA 3 E
MCFC:84	XA 3 E
MCFC:85	BF 3 A
MCFC:86	FB 1 D
MCFC:87	BD 1 D
MCFC:88	BG 2 D
MCFC:89	BG 2 C
MCFC:90	FB 4 C
MCFC:91	BC 2 B

INLINE	PAGE
MCFC:92	BC 2 C
MCFC:93	FB 3 D
MCFC:94	FB 3 B
MCFC:95	GI 1 B
MCFC:96	BJ 2 B
MCFC:97	GF 1 B
MCFC:98	BA 2 D
MCFC:99	BF 4 C
MCFC:100	GF 0 B
MCFC:101	FB 4 B
MCFC:102	FB 4 C
MCFC:103	CE 0 C
MCFC:107	EB 4 C
MCFC:108	EB 4 C
MCFC:109	EB 2 C
MCFC:110	EB 2 C
MCFC:111	EB 2 C
MCFC:112	EB 2 C
MCFC:113	EB 2 C
MCFC:114	EB 2 C
MCFC:115	EB 1 D
MCFC:116	EB 1 D
MCFC:117	EB 1 D
MCFC:118	EB 1 D
MCFC:119	EB 2 C
MCFC:120	EB 2 C
MCFC:124	CE 1 A
MCFC:125	GJ 3 C
MCFC:126	GJ 3 D
MCFC:127	GJ 1 C
MCFC:128	GJ 1 D
MCFL:A	GA 2 A
MCFL:B	GA 2 B
MCFL:C	GA 2 A
MCHL:A	GF 2 B
MCHL:B	GF 2 D
MCHLGUSLP:A	GF 4 B
MCHLGUSLP:B	GF 3 D
MCHS:A	HC 3 B
MCHS:B	HC 3 D
MCHW:A	HC 2 B
MCHW:A	HG 1 B
MCHW:B	HC 0 D
MCHW:B	HG 0 D
MCIS:A	KC 0 B
MCIS:B	KC 0 C
MCLA:A	BF 4 B
MCLA:B	BF 4 B
MCLA:C	BF 4 B
MCLSL:A	GD 2 B

INLINE	PAGE
MCLSL:A	GE 2 C
MCLSL:B	GD 2 D
MCLSL:B	GE 2 D
MCLSLCO1:A	GD 2 B
MCLSLCO1:B	GD 2 D
MCLSLCO2:A	GD 2 B
MCLSLCO2:B	GD 2 D
MCNAV:A	BM 4 B
MCNAV:B	BM 4 B
MCNAV:C	BM 4 B
MCNAV:D	BM 4 B
MCOF2:A	KA 0 C
MCOF2:B	KA 0 C
MCOF2:C	KA 0 C
MCOF2:D	KA 0 C
MCOF2:E	KC 3 D
MCOF2:G	GA 1 E
MCOF2:G	GM 1 D
MCOF3:A	KA 0 C
MCOF3:B	KA 0 C
MCOF4:A	GA 3 D
MCOF4:B	GA 3 E
MCOF:A	GH 0 B
MCOF:B	HE 0 D
MCOF:C	GH 1 C
MCOF:D	HE 0 D
MCOF:E	KC 3 A
MCOF:F	GH 0 A
MCOF:H	GA 0 C
MCOF:H	GM 1 C
MCOFCOA:A	GH 0 B
MCOFCOA:C	GH 4 D
MCOFCOA:E	GH 4 D
MCOFCOA:F	GH 4 D
MCOFCOA:G	GH 4 D
MCOFCOA:H	GH 4 D
MCOFCOB:A	GH 0 B
MCOFCOB:C	GH 4 E
MCOFCOB:E	GH 4 E
MCOFCOB:F	GH 4 E
MCOFCOB:G	GH 4 E
MCOFCOB:H	GH 4 E
MCOFCOC:A	GM 0 B
MCOFCOC:B	GM 0 B
MCOFCOC:C	GM 0 B
MCOFCOC:D	GM 0 B
MCOFCOC:E	GM 0 B
MCOFCOC:F	GM 0 B
MCOFCOC:G	GM 1 B
MCOFCOC:H	GM 1 B

INLINE	PAGE
MCOFCOD:A	GM 0 C
MCOFCOD:B	GM 0 C
MCOFCOD:C	GM 0 C
MCOFCOD:D	GM 0 C
MCOFCOD:E	GM 0 C
MCOFCOD:F	GM 0 C
MCOFCOD:G	GM 1 C
MCOFCOD:H	GM 1 C
MCOWL:A	GL 0 C
MCOWL:B	GL 0 D
MCPLW:A	IE 2 B
MCPLW:B	IE 2 B
MCPLW:C	IE 0 D
MCPLW:D	IE 1 D
MCPLW:E	IE 1 D
MCPLW:F	IE 2 D
MCPLW:G	IE 2 D
MCPLW:H	IE 2 D
MCPLW:J	IA 2 A
MCPLW:K	IA 2 B
MCPLW:K	ID 3 B
MCPLW:L	IA 3 B
MCPLW:L	ID 3 B
MCPLW:M	IA 3 B
MCPLW:M	ID 3 B
MCPLW:N	ID 0 B
MCPLW:N	IE 1 B
MCPLW:P	IA 4 D
MCPLW:P	ID 2 E
MCPLW_A:A	IE 2 B
MCPLW_A:B	IE 2 B
MCPLW_A:C	IE 0 D
MCPLW_A:D	IE 1 D
MCPLW_A:E	IE 1 D
MCPLW_A:F	IE 2 D
MCPLW_A:G	IE 2 D
MCPLW_A:H	IE 2 D
MCPLW_B:J	IA 2 B
MCPLW_B:K	IA 2 B
MCPLW_B:L	IA 3 B
MCPLW_B:M	IA 3 B
MCPLW_B:N	IE 1 B
MCPLW_B:P	IA 4 D
MCPLW_C:K	ID 3 B
MCPLW_C:L	ID 3 B
MCPLW_C:M	ID 3 B
MCPLW_C:N	ID 0 B
MCPLW_C:P	ID 2 E
MCRSL:A	GD 4 B
MCRSL:A	GE 4 C

https://truckmanualshub.com/

INLINES

INLINE	PAGE
MCRSL:B	GD 4 D
MCRSL:B	GE 4 D
MCRSLCO1:A	GD 4 B
MCRSLCO1:B	GD 4 D
MCRSLCO2:A	GD 4 B
MCRSLCO2:B	GD 4 D
MCSC:A1	GA 2 C
MCSC:A2	GA 2 D
MCSC:A3	GA 2 C
MCSC:A4	GA 2 B
MCSC:A5	GA 2 C
MCSC:A6	GA 2 D
MCSC:A7	GA 3 B
MCSC:A8	GA 2 B
MCSC:A9	GA 3 D
MCSC:A10	AC 0 B
MCSC:A11	AC 0 C
MCSC:A12	AC 0 B
MCSC:A13	AC 0 C
MCSC:A14	GQ 0 C
MCSC:A15	GQ 0 D
MCSC:B1	BE 1 B
MCSC:B2	BE 1 B
MCSC:B3	BE 1 B
MCSC:B4	BE 1 B
MCSC:B5	BE 1 B
MCSC:B7	GA 3 B
MCSC:B8	GA 3 B
MCSC:B9	GA 3 D
MCSD:1	JA 3 C
MCSD:2	JA 3 C
MCSD:3	JA 3 C
MCSD:4	JA 4 C
MCTR:1	XA 2 A
MCTR:2	XA 2 A
MCTR:3	XA 1 C
MCTR:4	XA 1 C
MCTR:5	XA 2 C
MCTR:6	XA 2 C
MCTR:7	XA 2 A
MCTR:11	XA 2 B
MCTR:12	DA 3 D
MCTR:14	DA 4 D
MCVL:A	BM 0 C
MCVL:B	BM 1 C
MCVL:C	BM 1 C
MISC_2:A	NC 3 D
MISC_2:A	NE 1 D
MISC_3:A	NC 2 D
MISC_3:A	NE 3 D

INLINE	PAGE
MISC_4:A	NC 1 D
MISC_4:A	NE 0 D
MISC_5:A	NC 0 D
MISC_5:A	NE 4 D
MISC_6:A	NC 0 D
MISC_6:A	NE 2 D
MISC_7:A	NE 2 D
OPT_SW_PWR:A4	NE 0 B
OPT_SW_PWR:A4	NF 0 B
OPT_SW_PWR:A5	NE 0 B
OPT_SW_PWR:A5	NF 0 B
OPT_SW_PWR:A6	NE 0 B
OPT_SW_PWR:A7	NE 0 B
OPT_SW_PWR:A7	NF 0 B
OPT_SW_PWR:A8	NE 1 B
OPT_SW_PWR:A9	NE 1 B
OPT_SW_PWR:A9	NF 1 B
OPT_SW_PWR:B4	NE 1 B
OPT_SW_PWR:B4	NF 2 B
OPT_SW_PWR:B5	NE 1 B
OPT_SW_PWR:B5	NF 2 B
OPT_SW_PWR:B6	NE 2 B
OPT_SW_PWR:B7	NE 2 B
OPT_SW_PWR:B7	NF 2 B
OPT_SW_PWR:B8	NE 2 B
OPT_SW_PWR:B9	NE 2 B
OPT_SW_PWR:B9	NF 3 B
OPT_SW_PWR:C4	NE 1 B
OPT_SW_PWR:C4	NF 3 B
OPT_SW_PWR:C5	NE 1 B
OPT_SW_PWR:C5	NF 3 B
PB_START:A	AC 1 B
PB_START:B	AC 1 B
PBS_CLUTCH_SW:A	AC 1 A
PBS_CLUTCH_SW:B	AC 1 A
PBSTART:A	AC 1 B
PBSTART:B	AC 1 B
PL:1	GI 2 D
PL:2	GI 2 D
PL:3	GI 2 D
PL:4	GI 2 D
PL:5	GI 2 D
PL:6	GI 2 D
PL:7	GI 1 D
PL:8	GI 2 D
PM:1	GA 3 B
PM:2	GA 3 A
PM:3	AA 0 D
PM:4	AA 0 D
PM:5	AA 0 D

INLINE	PAGE
PM:6	AA 0 D
PM:7	AA 0 B
PM:8	AA 1 C
PM:9	AA 1 B
PM:10	AA 1 C
PM:11	GD 1 B
PM:11	GE 1 C
PM:12	GD 2 B
PM:12	GE 2 C
PM:13	GD 1 B
PM:13	GE 2 B
PM:14	GD 1 B
PM:14	GE 2 C
PM:15	GD 1 B
PM:15	GE 2 B
PPCO:1	FD 1 C
PPCO:2	FD 1 C
PPCO:3	FD 2 C
R08_TGW_DEU:1	XA 0 E
R08_TGW_DEU:2	XA 0 E
R21_TGW_OL:A	BM 0 C
R21_TGW_OL:B	BM 1 C
RC1:B8	DA 2 C
RC1:B9	DA 2 C
RC1:C1	DE 3 C
RC1:C3	DE 3 B
RC1:C4	DA 2 B
RC1:C6	DA 2 B
RC1:C8	DA 3 C
RC1:C9	DA 3 C
RC1:D1	DE 3 C
RC1:D3	DE 3 B
RC1:D4	DA 2 B
RC1:D6	DA 2 B
RC2:A1	GD 0 B
RC2:A1	GE 0 B
RC2:A2	GD 0 B
RC2:A2	GE 0 B
RC2:A3	GD 0 B
RC2:A3	GE 0 B
RC2:A4	GA 2 D
RC2:A6	GA 2 C
RC2:B1	GD 0 B
RC2:B1	GE 0 B
RC2:B3	GD 0 B
RC2:B3	GE 0 B
RC2:B4	GA 2 D
RC2:B6	GA 2 C
RC2:C1	GD 1 B
RC2:C1	GE 1 B

INLINE	PAGE
RC2:C2	GD 1 B
RC2:C2	GE 1 B
RC2:C3	GD 1 B
RC2:C3	GE 1 B
RC2:D1	GD 1 B
RC2:D1	GE 1 B
RC2:D3	GD 1 B
RC2:D3	GE 1 B
RCECS:A	EC 1 B
RCECS:B	EC 1 B
RCECS:C	EC 1 B
RCECS:D	EC 2 B
RCECS:E	EC 2 B
RCECS:F	EC 2 B
RCECS:G	EC 2 D
RCECS:H	EC 2 D
RCECS:J	EC 2 D
RCECS:K	EC 1 D
RCECS:L	EC 1 D
RCECS:M	EC 1 D
RCECS:N	EC 0 D
RCSP:1	FB 2 E
RCSP:2	FB 0 D
RCSP:3	FB 1 D
RCSP:4	FB 1 D
RCSP:5	FB 1 D
RCSP:6	FB 1 D
RCSP:7	FB 1 D
RCSP:8	FB 2 D
RCSP:9	FB 2 D
RCSP:10	FB 2 D
RCSP:11	FB 0 E
RCSP:12	FB 1 D
RCSP:13	FB 1 E
RCSP:14	FB 1 E
RFCB1:A	KC 3 B
RFCB1:B	KC 3 D
RFCB2:A	KC 3 B
RFCB2:B	KC 3 D
RFCB2:C	GH 0 B
RFCB:A	KC 3 B
RFCB:B	KC 3 D
RFCB:C	GH 0 B
RFHL:A	GH 0 B
RFHL:B	GA 3 E
RFHL:C	GH 1 D
RFHL:D	GH 0 B
RFMIC:A	KA 0 B
RFMIC:B	KA 0 B
RFRC:E	GH 0 A

INLINE	PAGE
RHGJ1:B	KA 1 B
RHGJ:A	KA 1 A
RHGJ:B	KA 1 B
RO8_TGW_PED:A	XA 0 E
RO8_TGW_PED:B	XA 0 E
S038C_A:C	BB 4 C
S038C_A:D	BB 4 C
S038MC:A	BB 4 C
S038MC:B	BB 4 C
SBW:A	BE 1 E
SBW:B	BE 1 D
SC1_CAB:A	KA 3 C
SC1_CAB:B	KA 3 C
SC1_CAB:C	KA 3 C
SC1_CAB:D	KA 3 C
SC1_CAB:E	HE 3 A
SC1_CAB:F	AA 4 C
SC1_CAB:G	HE 0 C
SC1_CAB:H	HE 0 C
SC1_SLP:A	KA 3 C
SC1_SLP:B	KA 3 C
SC1_SLP:C	KA 3 C
SC1_SLP:D	KA 3 C
SC1_SLP:E	HE 3 A
SC1_SLP:F	AA 4 C
SC1_SLP:G	HE 0 C
SC1_SLP:H	HE 0 C
SHIFT_DDC:1	DB 0 B
SHIFT_DDC:2	DB 0 B
SHIFT_DDC:3	DB 0 B
SHIFT_DDC:4	DB 0 B
SHIFT_DDC:5	DB 0 B
SHIFT_DDC:6	DB 0 B
SHIFT_DDC:8	DB 1 B
SLFR:A	GK 1 C
SLFR:B	GK 2 B
SLLH:A	GK 1 E
SLLH:B	GK 2 D
SLLH:C	GK 2 A
SLP_CAB1:A	KA 3 C
SLP_CAB1:B	KA 3 C
SLP_CAB1:C	KA 3 C
SLP_CAB1:D	KA 3 C
SLP_CAB1:E	HE 3 A
SLP_CAB1:F	AA 4 C
SLP_CAB1:G	HE 0 B
SLP_CAB1:H	HE 0 B
SLP_CAB2:A	HE 1 A
SLP_CAB2:B	HD 2 C
SLP_CAB2:C	AD 3 C

https://truckmanualshub.com/

INLINES

INLINE	PAGE
SLP_CAB2:D	AD 3 D
SLP_CAB3:A	HE 1 B
SLP_CAB3:B	HE 1 B
SLP_CAB3:C	HD 3 C
SLP_CAB3:D	HD 3 C
SLP_CAB3:E	HD 3 C
SLP_RF:A	HE 0 B
SLP_RF:B	HE 4 C
SLP_RF:C	HE 0 A
SLP_RF:D	HE 3 B
SLPCOFH:A	GF 4 B

INLINE	PAGE
SLRFHL1:A	KA 3 C
SLRFHL1:B	KA 3 C
SLRFHL1:C	KA 3 C
SLRFHL1:D	KA 3 C
SLRFHL1:E	KC 3 D
SLRFHL1:F	GA 3 E
SLRFHL2:A	GH 0 B
SLRFHL2:C	GH 1 D
SLRFHL2:D	GH 0 B
SLRFHL2:E	KC 3 B
SLRFHL2:F	HE 0 D

INLINE	PAGE
SLRFHL2:G	HE 0 D
SLRH:A	GK 3 E
SLRH:B	GK 3 B
SLRH:C	GK 2 A
SPIGNLOWOIL:A	NF 2 D
SPIGNLOWOIL:B	NF 2 D
SPIGNLOWOIL:C	BN 1 C
TAS_SLP:A	BF 3 D
TAS_SLP:B	BF 3 E
TGW_IGN_SP3_1:A	NA 2 E
TGW_IGN_SP3_1:B	NA 2 E

INLINE	PAGE
TGW_IGN_SP3_2:A	NA 2 D
TGW_IGN_SP3_2:B	NA 2 D
TGWBB1:A	BM 0 E
TGWBB1:B	BM 0 E
TGWBB1:C	BM 1 E
TGWBB1:D	BM 1 E
TGWBB1:E	BM 1 E
TGWBB1:F	BM 1 E
TGWBB1:G	BM 1 E
TLBU:A	GF 2 C
TLBU:B	GF 2 C

INLINE	PAGE
TLRE:A	GF 1 C
TLRE:B	GF 0 C
TLRE:C	GF 0 C
TLRE:D	GF 1 C
TLRE:E	GF 1 D
TRANS_DASH:25	GG 2 B
TRANS_DASH:26	GG 2 C
Y53:A	FA 3 C
Y53:B	FA 3 D

https://truckmanualshub.com/

SPLICES

SPLICE	PAGE
Power (S)	GK 1 C
SP1HB1 (S)	CE 0 C
SP1LB2 (S)	CE 0 C
SP3F57 (T)	HG 0 B
SP3F57 (T)	NE 2 C
SP4FB (T)	GA 3 B
SP42B3 (S)	GF 1 C
SP43A1 (S)	CE 2 D
SP75A (T)	AA 0 B
SP75A (T)	BJ 1 B
SP75A (T)	BK 1 B
SP75A (T)	HD 1 B
SPAX4:1 (S)	EB 2 D
SPAX4:4 (S)	EB 2 D
SPAX4:7 (T)	EB 1 D
SPAX4:8 (T)	EB 1 D
SPAX4:10 (T)	EB 1 D
SPAX4:11 (T)	EB 1 E
SPBKA57 (T)	DD 2 C
SPBKA87 (T)	HG 0 C
SPBKA87 (T)	NE 2 E
SPBKA90 (T)	NF 1 E
SPBKD4A (T)	AD 2 D
SPBKD4A (T)	HG 3 C
SPBKD4A (T)	NE 3 B
SPBKXC1G26 (S)	GI 2 D
SPCA15A3 (S)	AG 0 B
SPCB1 (T)	BA 0 D
SPCB2A (T)	BA 0 D
SPCB7 (T)	BC 2 C
SPCB19A (T)	BB 3 C
SPCB19A1 (T)	BB 4 B
SPDL1H (S)	CA 0 B
SPDL1H1 (S)	XA 1 E
SPDL1H2 (S)	XA 2 D
SPDL1H3 (S)	XA 4 E
SPDL1H4 (S)	XA 3 D
SPDL1H5 (S)	XA 4 D
SPDL1H6 (S)	XA 3 C
SPDL1H7 (S)	XA 4 C
SPDL1H8 (S)	XA 3 C
SPDL1H9 (S)	XA 4 B
SPDL1H10 (S)	XA 4 B
SPDL1H11 (S)	XA 3 A
SPDL1H12 (S)	XA 3 A
SPDL1H13 (S)	XA 2 A
SPDL1H14 (S)	XA 4 A
SPDL1L (S)	CA 0 B
SPDL1L1 (S)	XA 1 E
SPDL1L2 (S)	XA 2 E

SPLICE	PAGE
SPDL1L3 (S)	XA 4 E
SPDL1L4 (S)	XA 3 D
SPDL1L5 (S)	XA 4 D
SPDL1L6 (S)	XA 3 C
SPDL1L7 (S)	XA 4 C
SPDL1L8 (S)	XA 3 C
SPDL1L9 (S)	XA 4 B
SPDL1L10 (S)	XA 4 B
SPDL1L11 (S)	XA 3 B
SPDL1L12 (S)	XA 3 B
SPDL1L13 (S)	XA 2 B
SPDL1L14 (S)	XA 4 A
SPDL2H1 (S)	XA 0 C
SPDL2H4 (S)	XA 2 C
SPDL2H6 (S)	XA 1 C
SPDL2H7 (S)	DD 2 D
SPDL2H8 (S)	BM 0 C
SPDL2H9 (S)	DD 3 D
SPDL2L1 (S)	XA 0 C
SPDL2L4 (S)	XA 2 C
SPDL2L6 (S)	XA 1 C
SPDL2L7 (S)	DD 2 D
SPDL2L8 (S)	BM 1 C
SPDL2L9 (S)	DD 3 D
SPDL3L (S)	KA 1 C
SPDL4H (S)	XA 0 B
SPDL4L (S)	XA 1 B
SPDL7H1 (S)	CD 1 B
SPDL7H2 (S)	CF 3 D
SPDL7H3 (S)	CF 3 B
SPDL7L1 (S)	CD 1 C
SPDL7L2 (S)	CF 3 C
SPDL7L3 (S)	CF 3 B
SPEA13A (S)	CF 0 A
SPEA13A5 (S)	CF 0 B
SPEC3A (S)	CF 1 C
SPEC8A (S)	CE 1 D
SPEC13A1 (S)	CF 0 D
SPEC32A (S)	CE 1 D
SPEC38A (S)	CF 2 C
SPEC39A (S)	CF 2 C
SPEC40A (S)	CF 1 C
SPEC54A (S)	CE 2 D
SPEC57 (S)	CE 0 D
SPEC62 (S)	CE 3 D
SPEC66A2 (S)	CF 0 D
SPEC76 (S)	CF 0 B
SPEC76A (S)	CF 0 B
SPEC84A (S)	CF 1 D
SPEC84A2 (S)	CF 1 D

SPLICE	PAGE
SPEMA28A1 (S)	CD 3 D
SPEMA49A (S)	CD 2 A
SPEMA54A1 (S)	CD 1 D
SPEMA59A1 (S)	CD 3 D
SPEMA62A2 (S)	CD 2 D
SPF2C2 (S)	GD 1 E
SPF2C2 (S)	GE 0 D
SPF2D (T)	GA 1 B
SPF2E (S)	GA 1 D
SPF2Y (S)	GI 2 C
SPF3B (T)	GA 0 C
SPF3B1 (T)	GA 0 D
SPF3B1 (T)	GM 1 C
SPF3B2 (S)	HE 1 D
SPF3B3 (T)	GM 1 B
SPF3B5 (T)	GA 2 D
SPF3B7 (S)	GF 0 C
SPF3B8 (S)	GA 2 D
SPF3B9 (S)	GD 2 E
SPF3B9 (S)	GE 3 D
SPF3B14 (S)	GK 0 E
SPF3B19 (S)	GK 1 B
SPF3B21 (S)	GI 1 D
SPF3F (T)	BC 2 A
SPF3F (T)	BD 4 A
SPF3F (T)	BE 1 A
SPF3F (T)	EC 2 E
SPF3F (T)	FB 0 A
SPF3F (T)	GA 1 A
SPF3F (T)	GH 0 A
SPF3F (T)	HA 1 A
SPF3F (T)	IA 3 A
SPF3F (T)	ID 3 A
SPF3F (T)	KA 0 A
SPF3F31 (T)	BA 2 A
SPF3F31 (T)	BD 1 B
SPF3F31 (T)	BE 2 A
SPF3F31 (T)	BL 3 A
SPF3F31 (T)	EA 2 A
SPF3F31 (T)	EB 2 A
SPF3F31 (T)	GH 1 A
SPF3F31 (T)	GP 0 A
SPF3F31 (T)	HD 0 A
SPF3F71 (T)	KC 4 B
SPF3F96 (T)	FD 0 B
SPF3F100 (T)	NF 1 C
SPF3F110 (T)	GL 0 B
SPF4A (T)	GA 3 A
SPF4C (T)	GD 2 B
SPF4C (T)	GE 2 C

SPLICE	PAGE
SPF4C5 (T)	GD 3 B
SPF4C8 (S)	GI 2 D
SPF4C10 (S)	GD 3 B
SPF4D (T)	GD 4 B
SPF4D (T)	GE 4 C
SPF4D5 (T)	GD 4 B
SPF4D8 (S)	GI 2 D
SPF4D10 (S)	GD 3 B
SPF5D (T)	GA 3 D
SPF5D1 (S)	GF 1 B
SPF5D3 (S)	GF 1 C
SPF5E (T)	GA 3 D
SPF5E1 (S)	GF 0 B
SPF5E3 (S)	GF 0 C
SPF6A9 (T)	GH 0 A
SPF6A12 (S)	GF 4 C
SPF6B (T)	GH 4 C
SPF7D (T)	AC 1 C
SPF8A (T)	FB 2 B
SPF8A6 (S)	FB 0 C
SPF8M (T)	FB 2 B
SPF15B1 (T)	IC 1 C
SPF15B2 (S)	BF 3 B
SPF17A1 (T)	BA 3 B
SPF17A7 (T)	BA 1 B
SPF17A14 (S)	BC 3 C
SPF17C (T)	BA 1 C
SPF17D (T)	BA 1 C
SPF17E (T)	BA 1 C
SPF17M (T)	BC 2 C
SPF24A (T)	FE 1 B
SPF24A3 (T)	GL 0 B
SPF24D (T)	GL 0 C
SPF25A (T)	HA 0 C
SPF26B (T)	GF 2 B
SPF26B1 (T)	GF 3 B
SPF26B3 (S)	GF 3 C
SPF27A (T)	NB 2 B
SPF27A1 (T)	NB 3 B
SPF31A (T)	DD 3 B
SPF35B (T)	GA 4 D
SPF35B2 (T)	GA 3 D
SPF35B3A (T)	GA 3 D
SPF35B4 (S)	HE 4 D
SPF35B4A (T)	GA 3 D
SPF35B7 (S)	BN 2 C
SPF36C (T)	GQ 1 C
SPF38A (S)	CF 3 B
SPF38A1 (S)	CA 1 B
SPF38A2 (S)	CA 1 C

SPLICE	PAGE
SPF41A3 (S)	HB 2 A
SPF42A (S)	BE 3 B
SPF42B (S)	BE 3 B
SPF42B2 (S)	GF 1 B
SPF42B4 (S)	GF 2 C
SPF43A (S)	CA 2 B
SPF49A (T)	EB 3 B
SPF54 (S)	GI 1 C
SPF55B (T)	EC 3 C
SPF57A (S)	KC 2 B
SPF63A (T)	BE 0 B
SPF65A (T)	NA 2 D
SPF65A1 (T)	KC 3 B
SPF65A4 (S)	JB 1 B
SPF65A9 (T)	FD 1 B
SPF65B7 (T)	KC 4 C
SPF67A3 (S)	JB 1 C
SPF76A (T)	DA 2 B
SPF76B (T)	DA 2 C
SPF79A (T)	DA 2 D
SPF80A (S)	DA 3 D
SPFB05A1 (S)	CE 3 D
SPFB07A1 (S)	CD 0 C
SPGAD (T)	HA 0 C
SPHA12 (T)	BF 2 E
SPHA12A15 (S)	BF 1 E
SPHA12G (S)	BF 1 E
SPHA12H (S)	BF 1 D
SPHB29 (T)	BF 2 B
SPHB30 (T)	BF 2 B
SPHC11A2 (S)	BG 3 E
SPHC19 (T)	BG 2 D
SPHC20 (T)	BG 2 C
SPJ1939HB30 (S)	XA 0 D
SPJ1939LB30 (S)	XA 0 E
SPN109 (T)	DD 0 C
SPN110 (T)	DD 0 C
SPN112 (T)	DC 3 C
SPN124CM (T)	DD 2 C
SPN145NO (T)	DD 3 C
SPN158A (T)	DC 2 C
SPNAA1 (S)	DA 4 C
SPR17D (T)	BL 1 C
SPRA7A1 (S)	EC 1 E
SPRA30A1 (S)	EC 1 D
SPRDA (S)	AA 0 B
SPRDA1 (S)	AA 0 B
SPSB38A5 (S)	DB 2 B
SPSB38A5A (S)	DB 2 C
SPX1C1B61 (T)	GL 0 D

https://truckmanualshub.com/

SPLICES

SPLICE	PAGE
SPX1C1B62 (T)	GL 0 C
SPX01F1 (S)	AG 0 C
SPXC1A1 (T)	AD 2 C
SPXC1A2 (T)	AD 3 C
SPXC1A2 (T)	GA 4 E
SPXC1A2 (T)	GD 2 D
SPXC1A2 (T)	GE 2 D
SPXC1A2 (T)	GF 2 D
SPXC1A2 (T)	GH 4 C
SPXC1A2 (T)	GM 1 E
SPXC1A2 (T)	GQ 0 E
SPXC1A2 (T)	IC 0 E
SPXC1A2 (T)	KC 3 E
SPXC1A2 (T)	NC 2 B
SPXC1A3 (T)	AA 1 C
SPXC1A3 (T)	AD 2 B
SPXC1A3 (T)	BK 4 B
SPXC1A3 (T)	BM 2 B
SPXC1A3 (T)	GA 2 A
SPXC1A3 (T)	GP 0 E
SPXC1A3 (T)	KC 1 D
SPXC1A3 (T)	NB 1 D
SPXC1A4 (T)	AA 4 D
SPXC1A4 (T)	AD 3 C
SPXC1A4 (T)	EC 4 D
SPXC1A4 (T)	GA 1 C
SPXC1A4 (T)	GD 4 D
SPXC1A4 (T)	GE 4 D
SPXC1A4 (T)	GH 3 C

SPLICE	PAGE
SPXC1A4 (T)	IC 1 E
SPXC1A4 (T)	KC 0 D
SPXC1A4 (T)	NA 2 C
SPXC1A5 (T)	EC 4 C
SPXC1A6 (S)	GF 4 D
SPXC1A7 (T)	GA 3 E
SPXC1A8A (T)	GA 3 E
SPXC1A9 (S)	HE 4 E
SPXC1A9A (T)	GA 3 E
SPXC1A10 (T)	GA 0 E
SPXC1A10 (T)	GM 1 D
SPXC1A13 (S)	HE 1 E
SPXC1A29 (S)	KC 2 D
SPXC1A65 (T)	GD 4 D
SPXC1A66 (T)	GD 3 D
SPXC1A97 (T)	FD 0 C
SPXC1A116 (T)	KC 4 B
SPXC1A119 (T)	KC 3 E
SPXC1B1 (T)	AD 2 C
SPXC1B1 (T)	BA 4 E
SPXC1B1 (T)	BD 3 C
SPXC1B1 (T)	BE 0 E
SPXC1B1 (T)	BL 3 B
SPXC1B1 (T)	CB 2 D
SPXC1B1 (T)	DA 0 D
SPXC1B1 (T)	DB 4 C
SPXC1B1 (T)	DD 0 B
SPXC1B1 (T)	EA 0 A
SPXC1B1 (T)	EB 0 C

SPLICE	PAGE
SPXC1B1 (T)	EC 3 E
SPXC1B1 (T)	FD 2 B
SPXC1B1 (T)	FE 0 E
SPXC1B1 (T)	GL 0 D
SPXC1B1 (T)	KA 0 C
SPXC1B1 (T)	NA 2 C
SPXC1B1 (T)	NB 2 D
SPXC1B1 (T)	XA 2 D
SPXC1B1A (T)	XA 2 D
SPXC1B1D (T)	EC 3 E
SPXC1B7B (T)	EB 2 A
SPXC1B7W (T)	EA 0 A
SPXC1B18 (T)	FD 2 B
SPXC1B46 (S)	DA 4 D
SPXC1B48 (T)	DA 0 C
SPXC1C1 (T)	AD 2 C
SPXC1C1 (T)	HA 3 C
SPXC1C1 (T)	HC 3 E
SPXC1C1 (T)	HG 0 D
SPXC1C1 (T)	NA 3 C
SPXC1C11 (T)	AD 2 D
SPXC1C12 (T)	AD 3 C
SPXC1C12 (T)	HD 1 E
SPXC1C12 (T)	HE 2 C
SPXC1D1 (S)	AD 2 C
SPXC1E (T)	GL 0 C
SPXC1E1 (T)	AD 3 B
SPXC1E1 (T)	BA 3 C
SPXC1E1 (T)	BD 1 C

SPLICE	PAGE
SPXC1E1 (T)	BE 2 B
SPXC1E1 (T)	GJ 2 D
SPXC1E1 (T)	HD 0 C
SPXC1E1 (T)	NA 1 C
SPXC1E2 (T)	AD 3 B
SPXC1E2 (T)	BG 0 C
SPXC1E2 (T)	EA 2 B
SPXC1E2 (T)	EB 3 B
SPXC1E2 (T)	FB 3 D
SPXC1E2 (T)	GJ 2 C
SPXC1E2 (T)	NA 1 D
SPXC1F1 (S)	AD 1 D
SPXC1F1 (S)	HB 3 D
SPXC1F2 (S)	AD 1 E
SPXC1F2 (S)	BG 1 E
SPXC1F2 (S)	GK 1 A
SPXC1F2 (S)	GP 0 E
SPXC1F2 (S)	GQ 1 E
SPXC1F6 (S)	BG 3 D
SPXC1F7 (S)	AD 1 E
SPXC1F7 (S)	BG 4 E
SPXC1F7 (S)	EB 4 D
SPXC1F7 (S)	GF 1 D
SPXC1F10 (S)	AD 1 D
SPXC1F10 (S)	FA 2 E
SPXC1F10 (S)	FB 1 E
SPXC1F10 (S)	GF 1 E
SPXC1F11 (S)	GF 1 D
SPXC1F14 (S)	GF 2 C

SPLICE	PAGE
SPXC1F16 (S)	FB 1 E
SPXC1G4A (S)	CE 4 D
SPXC1G7 (S)	GA 1 E
SPXC1G8 (S)	GD 0 D
SPXC1G8 (S)	GE 0 D
SPXC1G14 (S)	GI 2 D
SPXC1G16 (S)	GD 1 D
SPXC1G16 (S)	GE 2 D
SPXC1G40 (S)	AC 2 E
SPXC1G40 (S)	AD 1 D
SPXC1G40 (S)	BF 4 A
SPXC1G40 (S)	CA 3 C
SPXC1G40 (S)	GA 1 E
SPXC1G40 (S)	GD 0 E
SPXC1G40 (S)	GE 0 E
SPXC1G40 (S)	GF 3 C
SPXC1G41 (S)	BF 3 B
SPXC1N1 (S)	AD 1 E
SPXC1N1 (S)	GG 4 D
SPXC1N1 (S)	GJ 2 D
SPXC1N1 (S)	JA 2 B
SPXC1N1 (S)	JB 0 D
SPXCIE23 (T)	GA 1 C
SPXF1A1 (S)	AD 1 C
SPXF1A1 (S)	CD 4 D
SPXF1A3 (S)	CF 4 C

https://truckmanualshub.com/

SHELLS INFORMATION

REF	PARTNUMBER	PAGE
A03	{part_no mate_3962003}	BE 0 C
A03	{part_no mate_3962003}	BF 0 B
A03	{part_no mate_3962003}	BG 1 C
A04A	{part_no 8397341}	HE 2 B
A06R1_65	{part_no mate_957AM14}	DD 3 B
A06R2_65	{part_no mate_957AM14}	DD 3 B
A06R4_65	{part_no mate_957AM14}	DD 4 B
A06R5_65	{part_no mate_957AM14}	DD 2 B
A07	{part_no mate_20449802}	KA 3 B
A12A	{part_no mate_20737552}	EA 0 C
A12B		EB 0 B
A13F	{part_no mate_20393942}	DA 2 D
A14B	{part_no mate_21816112}	CE 0 D
A14B	{part_no mate_21816112}	CF 0 E
A16		EC 0 C
A17	{part_no mate_978310}	AC 2 A
A17	{part_no mate_978310}	BA 1 C
A17	{part_no mate_978310}	BB 0 B
A17	{part_no mate_978310}	BC 2 D
A17	{part_no mate_978310}	BD 2 D
A17	{part_no mate_978310}	GD 1 A
A17	{part_no mate_978310}	GE 2 A
A17	{part_no mate_978310}	GH 2 B
A19D_MATE	{part_no mate_25193428}	DD 0 E
A20	{part_no mate_87RU512M}	HC 0 C
A20	{part_no mate_87RU512M}	HG 0 C
A34	{part_no 8397416}	HA 0 B
A35		IE 1 C
A51	{part_no 956AM15}	JA 3 D
A52	{part_no mate_962AM13}	FE 2 B
A53	{part_no mate_967AM34}	FE 0 C
A56		KA 3 D
A57	{part_no mate_25195172}	DC 0 B
A57	{part_no mate_25195172}	DD 0 D
A58	{part_no mate_967AM84}	DC 0 D
A83	{part_no 958AM4}	GD 1 B
A83	{part_no 958AM4}	GE 2 B
A87	{part_no 20964476}	BI 0 C
A89	{part_no 958AM15}	HB 2 C
A90	{part_no 3944972}	HE 0 B
A102A	{part_no mate_978308}	BM 2 C
A102B		BM 0 D
A104	{part_no mate_912AM7}	GA 3 A
A104A	{part_no 8061093}	GA 2 A
A106	{part_no 598AX13}	HD 1 C
A107A	{part_no 960AM7}	DB 0 B
A107B		DB 1 D
A108	{part_no mate_25099972}	DC 3 D
A109	{part_no mate_978309}	DA 0 B
A124	{part_no 3944972}	AC 3 A

REF	PARTNUMBER	PAGE
A124	{part_no 3944972}	AD 1 A
A131A	{part_no mate_964AM7}	FE 3 B
A131B	{part_no mate_964AM7}	FE 4 B
A137C	{part_no mate_20429843}	CD 0 C
A138	{part_no mate_993376}	CD 1 E
A138A	{part_no mate_993376}	CE 1 C
A141	{part_no mate_86AX406}	BF 4 C
A149	{part_no mate_25192025}	KC 2 C
B06AP	{part_no mate_21430499}	BF 3 D
B06T1	{part_no mate_21430499}	BF 2 D
B06T2	{part_no mate_21430499}	BF 2 D
B07	{part_no 955AM21}	BF 0 D
B09A_MATE	{part_no 8397382}	BF 1 D
B09B	{part_no 954AM13}	DC 4 C
B13	{part_no mate_20720283}	EA 0 B
B13	{part_no mate_20720283}	EB 0 C
B14	{part_no mate_20720283}	EA 1 B
B14	{part_no mate_20720283}	EB 1 D
B15	{part_no mate_25173585}	EA 0 D
B15	{part_no mate_25173585}	EB 0 A
B16	{part_no mate_25173585}	EA 0 D
B16	{part_no mate_25173585}	EB 1 B
B17	{part_no mate_25173585}	EA 2 D
B17	{part_no mate_25173585}	EB 2 D
B18	{part_no mate_25173585}	EA 2 D
B18	{part_no mate_25173585}	EB 3 D
B22C	{part_no mate_21493827}	CE 3 D
B23	{part_no 21402198}	BF 0 D
B23.1	{part_no 21402198}	BF 0 D
B25	{part_no mate_21430517}	BB 3 D
B25A	{part_no mate_8397424}	BB 4 E
B30A	{part_no 1079282}	EC 2 D
B49	{part_no mate_20383174}	EB 0 E
B50	{part_no mate_990506}	EB 0 E
B55A	{part_no mate_20449798}	EC 0 D
B58A	{part_no mate_20449798}	EC 1 D
B58R	{part_no mate_21164765}	BF 2 D
B58R_ESP	{part_no mate_21164765}	EB 1 E
B59	{part_no 8397382}	BF 3 D
B60LF	{part_no 954AM11}	KA 3 C
B60RF	{part_no 954AM11}	KA 3 C
B60SLR	{part_no 954AM11}	KA 4 D
B60SRR	{part_no 954AM11}	KA 3 D
B60SW	{part_no 20383169}	KA 3 E
B68	{part_no generic2F}	BB 1 D
B68	{part_no generic2F}	CE 2 C
B68_B	{part_no mate_984471}	BB 0 D
B78	{part_no 958AM15}	JA 2 D
B79	{part_no 955AM21}	FE 2 D
B80	*opt*	KA 0 B

https://truckmanualshub.com/

SHELLS INFORMATION

REF	PARTNUMBER	PAGE
B82	{part_no mate_21204032}	JB 0 D
B82A	{part_no mate_22065877}	JB 2 D
B96D	{part_no 3944972}	CD 3 B
B96S	{part_no 21354756}	CD 2 B
B105	{part_no mate_954AM44}	DC 3 D
B121	{part_no mate_25171488}	BG 1 D
B122	{part_no 20378258}	BF 0 A
B123	{part_no 8075980}	CA 2 E
B123	{part_no 8075980}	CE 0 C
B123.1	{part_no 8075980}	CA 3 E
B124.3RD	{part_no 8397382}	BF 4 D
B124FR	{part_no 8397382}	BF 1 D
B124RR	{part_no 8397382}	BF 1 D
B133	{part_no 20378258}	BG 1 B
B133S	{part_no 954AM27}	BG 2 B
B142B	{part_no 21354744}	CE 3 C
B142C	{part_no mate_984471}	CD 1 B
B142C	{part_no mate_984471}	CF 3 B
B152	{part_no mate_20815302}	EB 2 E
B153	{part_no mate_20815302}	EB 2 D
B156	{part_no 954AM42}	BD 2 B
B156A	{part_no 954AM80}	HA 3 A
B157	{part_no mate_954AM13}	HB 2 D
B158	{part_no mate_954AM14}	HB 1 D
B160	{part_no 5010306117}	BI 0 C
CB2	*opt*	AA 1 A
CB2	*opt*	GA 1 A
CB3	*opt*	AA 1 A
CB3	*opt*	GA 0 A
CB4	*opt*	AA 1 A
CB4	*opt*	GA 2 A
CB4	*opt*	IE 2 A
CB12	*opt*	AA 0 A
CB12	*opt*	ID 0 A
CB12	*opt*	IE 1 A
CB14	*opt*	AA 4 A
CB14	*opt*	GD 0 A
CB14	*opt*	GE 0 A
CB21	*opt*	AA 0 E
CB21	*opt*	GP 0 A
CB22	*opt*	AA 0 E
CB22	*opt*	IA 2 A
CB23	*opt*	AA 0 E
CB23	*opt*	IA 2 A
CB23	*opt*	ID 3 A
CB81	*opt*	AA 4 B
CB81	*opt*	GD 1 A
CB81	*opt*	GE 1 A
CB_HD_LIFT_GATE	{part_no mate_86AX424}	ND 0 B
CLU_JMP	{part_no 960AM20}	IE 3 C

REF	PARTNUMBER	PAGE
E06	{part_no mate_20449152}	GF 1 B
E07L	{part_no 954AM13}	GA 1 D
E07R	{part_no 954AM13}	GA 1 D
E11L	{part_no mate_20974727}	GD 1 E
E11R	{part_no mate_20974727}	GD 1 D
E12D	{part_no 8397678}	GA 3 D
E12DH	{part_no mate_25098384}	HE 4 D
E12DHL	{part_no 954AM42}	HE 3 E
E12P	{part_no 8397678}	GA 3 D
E12PH	{part_no mate_25098384}	HE 4 D
E12PHL	{part_no 954AM42}	HE 4 E
E13LS	{part_no 8397384}	GD 2 C
E13LS	{part_no 8397384}	GE 2 C
E13LSB	{part_no mate_20449218}	GD 3 D
E13LSB	{part_no mate_20449218}	GK 3 D
E13LSC	{part_no 8397384}	GD 3 C
E13RS	{part_no 8397384}	GD 4 C
E13RS	{part_no 8397384}	GE 4 D
E13RSB	{part_no mate_20449218}	GD 4 D
E13RSB	{part_no mate_20449218}	GK 3 C
E13RSC	{part_no 8397384}	GD 4 C
E14L	{part_no mate_21147165}	GD 2 D
E14L	{part_no mate_21147165}	GE 3 D
E14R	{part_no mate_21147165}	GD 3 D
E14R	{part_no mate_21147165}	GE 3 D
E17AD	{part_no 954AM11}	GH 0 C
E17AP	{part_no 954AM11}	GH 0 C
E17D	{part_no 954AM11}	GH 2 C
E17L	{part_no 954AM42}	GF 4 C
E17P	{part_no 954AM11}	GH 3 C
E17R	{part_no 954AM42}	GF 4 C
E18A	{part_no 954AM13}	GF 4 C
E18LB	{part_no 954AM17}	HE 4 B
E18LC	{part_no 954AM11}	HE 3 B
E18LR	{part_no 955AM21}	HE 0 A
E18N	{part_no 955AM21}	HE 1 C
E18R	{part_no 954AM17}	HE 4 B
E18RR	{part_no 955AM21}	HE 0 A
E19C	{part_no 8397678}	GA 0 D
E19C	{part_no 8397678}	GM 1 D
E19CH	{part_no mate_25098384}	HE 2 D
E19CHL	{part_no 954AM42}	HE 1 D
E19D	{part_no 8397678}	GA 0 D
E19D	{part_no 8397678}	GM 0 D
E19DH	{part_no mate_25098384}	HE 2 D
E19DHL	{part_no 954AM42}	HE 0 D
E19P	{part_no 8397678}	GA 1 D
E19P	{part_no 8397678}	GM 1 D
E19PH	{part_no mate_25098384}	HE 3 D
E19PHL	{part_no 954AM42}	HE 1 D

https://truckmanualshub.com/

SHELLS INFORMATION

REF	PARTNUMBER	PAGE
E23L	{part_no 955AM21}	HE 3 B
E23R	{part_no 955AM21}	HE 3 B
E27L	{part_no mate_25154485}	GF 0 D
E27L.LED	{part_no mate_20449218}	GF 0 C
E27R	{part_no mate_25154485}	GF 1 D
E27R.LED	{part_no mate_20449218}	GF 2 E
E30L	{part_no mate_25002508}	GD 0 D
E30R	{part_no mate_25002508}	GD 1 D
E31L	{part_no mate_25012139}	GD 0 D
E31R	{part_no mate_25012139}	GD 1 D
E32	{part_no 598AX13}	HD 1 D
E32L	{part_no mate_8073950}	GE 0 D
E32R	{part_no mate_8073950}	GE 1 D
E35	{part_no 8397416}	HA 0 D
E38_08	{part_no 21401251}	BD 0 B
E38_09	{part_no mate_21046482}	BJ 2 A
E38_09A	{part_no mate_964AM6}	BK 2 B
E38_11	{part_no 21401251}	CE 0 C
E39	{part_no 8397382}	GF 1 C
E53	{part_no 8397681}	KC 4 D
E53L	{part_no 8397681}	KC 3 D
E53R	{part_no 8397681}	KC 4 D
E58	{part_no 955AM21}	GF 2 C
E58	{part_no 955AM21}	HE 4 A
E58A	{part_no 954AM13}	GF 3 C
E58B	{part_no mate_955AM31}	GF 2 C
E58L	{part_no 8067319}	GF 3 C
E58R	{part_no 8067319}	GF 3 C
E58R.A	{part_no 8067319}	GF 3 D
E60D	{part_no 954AM13}	GH 3 B
E60P	{part_no 954AM13}	GH 3 B
E61	{part_no 956AM14}	HD 3 D
E65L	{part_no 8397340}	GL 0 C
E65R	{part_no 8397340}	GL 0 C
E95L1	{part_no mate_954AM79}	GK 0 A
E95L2	{part_no mate_954AM79}	GK 0 B
E95L3	{part_no mate_954AM79}	GK 0 B
E95L4	{part_no mate_954AM79}	GK 0 B
E95L5	{part_no mate_954AM79}	GK 0 C
E95L6	{part_no mate_954AM79}	GK 0 C
E95R1	{part_no 954AM79}	GK 1 A
E95R2	{part_no 954AM79}	GK 1 B
E95R3	{part_no 954AM79}	GK 1 B
E95R4	{part_no 954AM79}	GK 1 C
E95R5	{part_no 954AM79}	GK 1 C
E95R6	{part_no 954AM79}	GK 1 C
E96L	{part_no 954AM14}	GK 2 C
E96R	{part_no 954AM14}	GK 3 B
E96R2	{part_no 954AM79}	GK 4 B
E96R3	{part_no 954AM79}	GK 4 B

REF	PARTNUMBER	PAGE
E96R4	{part_no 954AM79}	GK 4 B
E97L1	{part_no 954AM14}	GK 2 B
E97L2	{part_no 954AM14}	GK 2 B
E97L3	{part_no 954AM14}	GK 2 B
E97L4	{part_no 954AM14}	GK 2 C
E97R1	{part_no 954AM79}	GK 4 A
EL1	{part_no 25090155}	GQ 4 B
EM01	{part_no mate_21819811}	CF 2 D
EM02	{part_no 20734996}	CF 3 C
EM03	{part_no mate_21829364}	CF 4 D
EM04	{part_no 21255189}	CF 3 A
F5	*opt*	AA 1 A
F5	*opt*	GA 3 A
F6	*opt*	AA 2 A
F6	*opt*	GH 0 A
F7	*opt*	AA 0 A
F7	*opt*	AC 0 A
F8	*opt*	AA 0 E
F8	*opt*	FB 1 A
F9	*opt*	AA 3 A
F10	*opt*	AA 2 B
F10	*opt*	KA 1 A
F10	*opt*	XA 2 A
F11	*opt*	AA 2 A
F11	*opt*	BI 0 A
F11	*opt*	BM 1 A
F11	*opt*	NB 2 A
F13	*opt*	AA 1 B
F13	*opt*	EA 2 A
F13	*opt*	EB 3 A
F15	*opt*	AA 0 B
F15	*opt*	BF 2 A
F16	*opt*	AA 0 D
F16	*opt*	BA 0 A
F17	*opt*	AA 1 D
F17	*opt*	BA 1 A
F17	*opt*	BB 0 A
F17	*opt*	BC 3 A
F17	*opt*	BD 0 A
F18	*opt*	AA 2 D
F18	*opt*	CB 2 A
F19	*opt*	AA 0 A
F19	*opt*	BE 0 A
F19	*opt*	BG 0 A
F20	*opt*	AA 1 B
F20	*opt*	IC 0 A
F24	*opt*	AA 1 E
F24	*opt*	FE 1 A
F24	*opt*	GL 0 A
F24	*opt*	NA 2 A

https://truckmanualshub.com/

SHELLS INFORMATION

REF	PARTNUMBER	PAGE
F24	*opt*	NC 3 A
F25	*opt*	AA 3 C
F25	*opt*	HA 0 A
F26	*opt*	AA 2 A
F26	*opt*	GA 1 A
F27	*opt*	AA 1 E
F27	*opt*	BM 1 A
F27	*opt*	NB 2 A
F28	*opt*	AA 1 E
F28	*opt*	HC 3 A
F28	*opt*	NA 3 A
F29	*opt*	AA 1 B
F30	*opt*	AA 1 E
F30	*opt*	NA 1 A
F31	*opt*	AA 1 D
F31	*opt*	DB 3 A
F31	*opt*	DD 3 A
F31	*opt*	DE 2 A
F31	*opt*	NA 3 A
F32	*opt*	AB 4 C
F32	*opt*	GJ 3 A
F33	*opt*	AB 3 A
F33	*opt*	GG 1 A
F34	*opt*	AB 1 A
F34	*opt*	GG 2 A
F35	*opt*	AB 2 A
F35	*opt*	GA 4 A
F36	*opt*	AB 1 A
F36	*opt*	GQ 1 A
F37	*opt*	AB 2 A
F37	*opt*	GG 0 A
F38	*opt*	AB 3 D
F38	*opt*	CA 1 A
F39	*opt*	AB 2 D
F39	*opt*	GG 3 A
F40	*opt*	AB 1 D
F40	*opt*	FA 3 A
F41	*opt*	AB 2 E
F41	*opt*	CA 1 A
F42	*opt*	AB 1 D
F42	*opt*	BE 3 A
F43	*opt*	AB 2 E
F43	*opt*	CA 2 A
F43	*opt*	CE 2 B
F44	*opt*	AB 1 D
F44	*opt*	FA 2 A
F45	*opt*	AB 0 D
F45	*opt*	GG 1 A
F46	*opt*	AB 3 D
F46	*opt*	CD 0 A

REF	PARTNUMBER	PAGE
F47	*opt*	AB 3 D
F48	*opt*	AB 0 A
F48	*opt*	BJ 0 A
F48	*opt*	BK 0 A
F48	*opt*	HE 0 A
F49	*opt*	AB 2 D
F49	*opt*	EA 3 A
F49	*opt*	EB 3 A
F50	*opt*	AB 3 A
F51	*opt*	AB 4 A
F52	*opt*	AB 4 C
F52	*opt*	BG 2 A
F53	*opt*	AA 1 D
F54	*opt*	AA 0 D
F54	*opt*	BK 4 A
F55	*opt*	AA 2 B
F55	*opt*	EC 3 A
F56	*opt*	AA 2 D
F57	*opt*	AA 3 A
F57	*opt*	KC 2 A
F58	*opt*	AA 2 D
F60	*opt*	AA 3 A
F61	*opt*	AA 2 A
F61	*opt*	NA 0 A
F62	*opt*	AA 3 A
F62	*opt*	GJ 0 A
F62	*opt*	NA 2 A
F63	*opt*	AA 0 D
F63	*opt*	BE 0 A
F64	*opt*	AA 1 D
F64	*opt*	BJ 1 A
F64	*opt*	BK 3 A
F64	*opt*	NA 4 A
F64	*opt*	NC 1 A
F65	*opt*	AA 1 D
F65	*opt*	FD 2 A
F65	*opt*	JB 1 A
F65	*opt*	NA 2 A
F65	*opt*	NC 2 A
F67	*opt*	AA 0 A
F67	*opt*	HD 3 A
F67	*opt*	KC 0 A
F67	*opt*	NA 2 A
F67	*opt*	NC 0 A
F68	*opt*	AA 2 B
F68	*opt*	KC 0 A
F69	*opt*	AA 2 D
F69	*opt*	IE 2 A
F70	*opt*	AA 3 C
F70	*opt*	HA 1 A

https://truckmanualshub.com/

SHELLS INFORMATION

REF	PARTNUMBER	PAGE
F71	*opt*	AA 1 B
F71	*opt*	DB 2 A
F71	*opt*	DD 0 A
F71	*opt*	NA 3 A
F72	*opt*	AA 3 D
F74	*opt*	GA 1 A
F75	*opt*	AA 0 B
F75	*opt*	BJ 1 A
F75	*opt*	BK 1 A
F75	*opt*	HD 1 A
F76	*opt*	AA 3 A
F76	*opt*	CE 2 A
F76	*opt*	DA 2 A
F79	*opt*	DA 2 C
F80	*opt*	DA 3 C
F83	*opt*	AH 2 B
F83	*opt*	CE 1 B
F84	*opt*	AH 1 B
F84	*opt*	CF 2 A
F85	*opt*	AH 1 B
F86	*opt*	AH 2 B
F87	*opt*	AH 3 B
F88	*opt*	AH 4 C
F89	*opt*	AH 4 C
F90	*opt*	NE 0 B
F91	*opt*	NE 0 B
F92	*opt*	NE 1 B
F93	*opt*	NE 1 B
F94	*opt*	NE 1 B
F95	*opt*	NE 2 B
F96	*opt*	NE 2 B
FB05	{part_no mate_8166029}	CE 4 A
FB07	{part_no mate_8166029}	CD 0 B
FB08	{part_no mate_8166029}	CD 0 A
FGPS1_MATE	{part_no mate_8397516}	BM 0 B
FGPS2_MATE	{part_no mate_8397516}	BM 0 B
FGPS3	{part_no mate_8397516}	BM 2 B
FGPS4	{part_no mate_8397516}	BM 2 C
FM1	{part_no mate_8061137}	AD 0 B
FM02	{part_no mate_8061137}	AF 1 C
FM3	{part_no mating_G3003058}	AC 3 D
FM03	{part_no mate_20989336}	CF 1 A
FM3_A4	{part_no mating_G3003056}	HF 1 B
FSP1	*opt*	NF 0 B
FSP2	*opt*	NF 0 B
FSP3	*opt*	NF 1 B
FSP4	*opt*	NF 2 B
FSP5	*opt*	NF 2 B
FSP6	*opt*	NF 3 B
FSP7	*opt*	NF 3 B

REF	PARTNUMBER	PAGE
FU.INL.1	{part_no mate_8166029}	DB 0 C
G02		AF 2 A
G02		AG 3 C
G03		HF 0 B
G03.D		HF 0 C
G04		HF 2 B
H02A	{part_no 8082627}	GQ 1 D
H02B	{part_no mate_954AM28}	GQ 2 D
H02C	{part_no mate_954AM28}	GQ 2 D
H03	{part_no 21402314}	GF 2 B
IEH	{part_no mate_21592559}	CE 0 A
M01	{part_no 25107706}	GP 1 C
M02	{part_no 20378258}	GP 0 C
M03	{part_no 955AM3}	HC 3 D
M03	{part_no 955AM3}	HG 3 D
M04	{part_no 3944972}	AF 0 A
M04	{part_no 3944972}	AG 3 B
M06	{part_no 954AM13}	ID 3 D
M06DS	{part_no 954AM13}	IA 1 D
M06PS	{part_no 954AM13}	IA 3 D
M80	{part_no 954AM27}	ID 1 B
M80L	{part_no 954AM27}	IE 1 C
M80R	{part_no 954AM27}	IE 3 B
M110CFL	{part_no 8397382}	BF 3 B
M110CFR	{part_no 8397382}	BF 3 B
M110CL	{part_no 8397384}	IC 3 D
M110CR	{part_no 8397384}	IC 4 D
M110L	{part_no 958AM43}	IC 0 D
M110R	{part_no 958AM43}	IC 1 D
MCAT_JUMP	{part_no mate_20897152}	DB 1 A
OBD	{part_no mate_21773807}	XA 2 D
R01	{part_no mate_8397662}	AD 0 A
R01C.A	{part_no mate_20989336}	CF 0 B
R02	{part_no 8397382}	CC 0 B
R03	{part_no 8397382}	CC 0 D
R03A	{part_no 8397382}	CC 1 C
R04	{part_no mate_25192026}	KC 0 B
R05	{part_no 954AM43}	FA 0 D
R08	{part_no 3187782}	CF 2 B
R08_MATE	{part_no 20500398}	XA 3 A
R08_TGW	{part_no 20500398}	XA 0 D
R08M	{part_no 3187782}	XA 0 C
R09	{part_no 954AM13}	FA 0 D
R14	{part_no 3187782}	CE 0 C
R17_A_MATE	{part_no 8397402}	BL 0 C
R17_B_MATE	{part_no 8397402}	BL 0 C
R17_C_MATE	{part_no 8397402}	BL 1 C
R17_D_MATE	{part_no 8397402}	BL 1 C
R17_E_MATE	{part_no 8397402}	BL 2 C
R17_F_MATE	{part_no 8397402}	BL 2 C

https://truckmanualshub.com/

SHELLS INFORMATION

REF	PARTNUMBER	PAGE
R17_G_MATE	{part_no 8397402}	BL 3 C
R17_H_MATE	{part_no 8397402}	BL 3 C
R19	*opt*	FA 3 C
R21	{part_no 20500398}	XA 2 B
R21_TGW	{part_no 20500398}	BM 1 C
R25	{part_no 954AM53}	HC 2 C
R26	{part_no 954AM53}	HC 3 C
R27		KA 4 D
R28	{part_no 598AX218}	HC 1 D
R28	{part_no 598AX218}	HG 2 D
R29	{part_no 598AX218}	HC 1 D
R29	{part_no 598AX218}	HG 1 D
R29_A	{part_no 8397384}	CD 4 D
R29_A	{part_no 8397384}	CF 1 D
R30	{part_no 598AX218}	HC 2 C
R30	{part_no 598AX218}	HG 2 D
R30_A	{part_no 8397383}	CF 2 D
R31_A	{part_no 8397382}	CF 1 C
R32	{part_no 8397382}	CD 3 D
R32_A	{part_no 8397382}	CD 3 E
R49	{part_no 25090155}	KA 1 B
R60	{part_no 25090155}	EB 4 B
RLY01	*opt*	AA 1 B
RLY02	*opt*	AB 2 C
RLY03	*opt*	AA 1 D
RLY04	*opt*	AB 0 C
RLY06	*opt*	GA 3 B
RLY06R	*opt*	DB 2 B
RLY08	*opt*	GA 1 D
RLY10	{part_no mate_20865681}	GA 2 D
RLY11	*opt*	AB 1 B
RLY11	*opt*	GG 0 B
RLY12	*opt*	AB 3 B
RLY12	*opt*	GG 1 B
RLY13	*opt*	AB 2 B
RLY13	*opt*	GA 4 D
RLY14	*opt*	AB 1 B
RLY14	*opt*	GQ 1 B
RLY16	*opt*	GP 1 B
RLY17	*opt*	AB 0 B
RLY17	*opt*	GG 3 B
RLY19	{part_no mate_957AM14}	DB 3 B
RLY20	{part_no mate_957AM14}	DB 1 B
RLY26	*opt*	AA 3 D
RLY26	*opt*	HA 1 A
RLY28	*opt*	AA 3 B
RLY29	*opt*	AB 1 B
RLY29	*opt*	GG 2 B
RLY31	*opt*	AA 3 B
RLY33	*opt*	BF 1 A

REF	PARTNUMBER	PAGE
RLY34	*opt*	AA 1 B
RLY35	*opt*	AA 3 D
RLY35	*opt*	HA 0 A
RLY36	*opt*	AC 2 C
RLY38	*opt*	AB 4 B
RLY39	*opt*	AB 3 B
RLY42A		CF 0 B
RLY43L_MATE	{part_no 2MR2144}	GI 1 C
RLY43R_MATE	{part_no 2MR2144}	GI 0 C
RLY44_MATE	{part_no 2MR2144}	GI 2 C
RLY46_MATE	{part_no 2MR2144}	GI 3 C
RLY47	{part_no mate_957AM14}	DE 3 C
RLY52	*opt*	GA 1 A
RLY53	*opt*	AA 0 C
RLY53	*opt*	BJ 1 B
RLY53	*opt*	BK 1 B
RLY53	*opt*	HD 1 B
RLY54	{part_no mate_957AM14}	DD 2 B
RLY56	{part_no mate_20865681}	GJ 0 C
RLY57	*opt*	BE 3 D
RLY57	*opt*	EC 3 B
RLY58	{part_no mate_20865681}	GJ 2 C
RLY60_MATE	{part_no mate_957AM13}	HB 3 A
RLY70	{part_no mate_8098092}	NE 3 A
RLY70	{part_no mate_8098092}	NF 4 A
RLY73	*opt*	DA 2 B
RLY80	{part_no mate_25025122}	AH 2 C
RLY80	{part_no mate_25025122}	CE 1 B
RLY81	{part_no mate_25025122}	AH 3 C
RLY81	{part_no mate_25025122}	CF 0 C
RLY82	{part_no mate_25025122}	AH 0 C
RLY82	{part_no mate_25025122}	CF 1 B
RLY83	{part_no mate_25025122}	AH 0 C
RLY83	{part_no mate_25025122}	CF 2 B
RLY84	{part_no mate_25025122}	AH 1 C
RLY84	{part_no mate_25025122}	CF 1 B
RLY85	{part_no mate_25025122}	AH 1 C
RLY86	*opt*	AH 2 C
RLY87	*opt*	AH 3 C
RLY91	*opt*	BL 1 B
RLY93	*opt*	BL 0 B
RLY94	*opt*	BL 2 B
RLY97	{part_no mate_957AM14}	GD 0 B
RLY97	{part_no mate_957AM14}	GE 0 B
RLY98	{part_no mate_957AM14}	GD 1 B
RLY98	{part_no mate_957AM14}	GE 1 B
S01	{part_no 3186493}	GA 0 B
S006	{part_no mate_21046482}	BA 1 B
S07	{part_no mate_21046489}	BA 2 B
S007	{part_no mate_21046488}	BA 1 B

https://truckmanualshub.com/

SHELLS INFORMATION

REF	PARTNUMBER	PAGE
S07_A	{part_no mate_20864015}	BL 4 B
S008	{part_no mate_21046482}	BA 3 B
S08A	{part_no mate_20864015}	NE 2 D
S08B	{part_no mate_20864015}	NE 0 D
S08C	{part_no mate_20864015}	NE 3 D
S08D	{part_no mate_20864015}	NE 1 D
S08E	{part_no mate_20864015}	NE 2 D
S08F	{part_no mate_20864015}	NE 4 D
S009	{part_no mate_21046488}	GP 0 B
S011	{part_no mate_21046489}	BA 3 B
S12	{part_no mate_20864015}	GI 2 A
S013	{part_no mate_21046489}	BE 2 B
S014	{part_no mate_21046482}	HD 1 B
S016	{part_no mate_21046489}	EA 2 B
S016	{part_no mate_21046489}	EB 2 B
S017C	{part_no mate_964AM6}	GH 0 D
S017D	{part_no mate_8159826}	HE 0 B
S017E	{part_no mate_964AM7}	HE 0 E
S017F	{part_no mate_964AM6}	GH 2 D
S017G	{part_no mate_964AM6}	GH 3 D
S018	{part_no mate_21046482}	BC 2 B
S018_1_MATE	{part_no 954AM13}	BC 3 C
S019	{part_no mate_21046482}	FB 4 C
S020	{part_no mate_21046489}	FB 0 C
S021	{part_no mate_21046489}	BD 3 B
S022	{part_no mate_21046489}	FB 1 C
S023	{part_no mate_21046489}	FB 3 C
S023_1	{part_no 954AM13}	FB 3 A
S024	{part_no mate_21046482}	BD 1 B
S24A	{part_no mate_20864015}	BL 3 B
S24C	{part_no mate_21046489}	DD 1 B
S026A	{part_no mate_21046489}	NA 1 C
S026B	{part_no mate_964AM7}	NC 3 C
S026C	{part_no mate_964AM7}	NC 2 C
S026D	{part_no mate_964AM7}	NC 1 C
S027A	{part_no mate_21046489}	NA 0 C
S027B	{part_no mate_964AM7}	NC 0 C
S028	{part_no mate_964AM6}	ID 1 C
S028L	{part_no mate_964AM7}	IE 0 B
S028R	{part_no mate_964AM7}	IE 3 B
S030	{part_no 8082087}	IC 0 B
S036	{part_no mate_21514134}	AC 0 B
S036	{part_no mate_21514134}	GQ 0 C
S036B	{part_no 954AM17}	AC 1 B
S038	{part_no 20711281}	GA 3 B
S038C	{part_no mate_8076799}	BB 2 C
S038C2	{part_no mate_8076799}	BB 4 B
S039	{part_no mate_21401176}	GA 2 C
S041L	{part_no mate_955AM18}	GH 4 A
S041R	{part_no mate_955AM18}	GH 4 C

REF	PARTNUMBER	PAGE
S041SB	*opt*	HE 3 C
S041SL	*opt*	HE 3 D
S041SR	*opt*	HE 3 C
S042	{part_no 954AM13}	BE 3 B
S43	{part_no mate_20897249}	BA 3 D
S043	{part_no 21403375}	BE 1 B
S43B	{part_no mate_598AX223}	BK 2 B
S43C	{part_no 20711281}	BG 2 D
S044	{part_no mate_20898266}	BB 2 B
S045	{part_no mate_21046489}	BA 1 D
S047	{part_no 8397382}	BG 3 D
S047A	{part_no 8397382}	BG 3 E
S048	{part_no 8397382}	BG 3 C
S050	{part_no mate_21046489}	FB 1 B
S051	{part_no mate_21046489}	FB 2 B
S051A	{part_no mate_21046489}	FB 2 C
S052	{part_no mate_964AM7}	BG 0 B
S055	{part_no mate_8159826}	HE 0 B
S056	{part_no mate_21046482}	BD 1 B
S057	{part_no 21401251}	GJ 0 D
S058	{part_no mate_21046489}	GJ 0 B
S58B	{part_no mate_925AM279}	AC 2 B
S059	{part_no mate_964AM7}	HC 0 B
S059	{part_no mate_964AM7}	HG 0 B
S060	{part_no mate_964AM7}	HC 4 C
S060	{part_no mate_964AM7}	HG 4 C
S61	{part_no 20377693}	BE 1 D
S061	{part_no mate_21046489}	GJ 2 B
S62	{part_no 954AM2}	FE 0 D
S067	{part_no mate_21046489}	GL 0 B
S068B	{part_no mate_20864015}	NF 0 C
S068C	{part_no mate_20864015}	NF 0 C
S068D	{part_no mate_20864015}	NF 1 C
S069B	{part_no mate_20864015}	NF 3 C
S069C	{part_no mate_20864015}	NF 2 C
S069D	{part_no mate_20864015}	NF 2 C
S99	{part_no mate_964AM8}	JA 1 C
S106	{part_no mate_964AM6}	ID 3 B
S106DS	{part_no mate_964AM7}	IA 2 C
S106PS	{part_no mate_964AM7}	IA 3 C
S107	{part_no mate_964AM7}	IA 1 C
S110	{part_no 8397839}	HE 1 C
S111	{part_no mate_20897249}	HD 3 B
S111A	{part_no mate_978305}	CB 2 C
S130	{part_no mate_21046489}	EC 2 D
S133	{part_no mate_21046489}	EC 3 D
S137	{part_no mate_20728759}	BC 4 B
S137A	{part_no mate_21046489}	FD 1 B
S145	{part_no mate_20864015}	KC 4 B
S169	*opt*	AC 3 C

https://truckmanualshub.com/

SHELLS INFORMATION

REF	PARTNUMBER	PAGE
S169	*opt*	AG 3 D
S171	{part_no mate_20915983}	DA 0 D
S212	{part_no mate_21046489}	EB 4 A
S320	{part_no mate_21969052}	FD 1 D
SBF1	*opt*	HE 3 B
SBF2	*opt*	HE 0 A
SBF3	*opt*	HE 2 B
SBF4	*opt*	HE 2 B
SBF6	*opt*	HE 2 B
SBF7	*opt*	HE 2 B
sym349_24	{part_no generic3F}	DB 1 D
sym449_133	{part_no generic3F}	DB 3 D
sym451_174	{part_no 3944972}	DB 0 D
sym452_174	{part_no 3944972}	DB 0 D
sym453_174	{part_no 3944972}	DB 0 D
sym455_174	{part_no 8397384}	DB 2 D
sym639_345	{part_no 8076674}	DB 3 D
sym675_4748	*opt*	BX 4 D
sym680_2029		AG 3 C
sym682_2029		AF 0 D
TBAP	{part_no mate_21592563}	CE 0 A
V2_MATE	{part_no 25090155}	BE 0 B
V25	{part_no 25090155}	GH 2 B
V35	{part_no 25090155}	BA 2 D
X0A_MATE	{part_no 8086030}	AD 3 C
X0A_MATE	{part_no 8086030}	BA 1 D
X0A_MATE	{part_no 8086030}	BC 2 C
X0A_MATE	{part_no 8086030}	BD 3 C
X0A_MATE	{part_no 8086030}	BF 4 C
X0A_MATE	{part_no 8086030}	BI 0 C
X0A_MATE	{part_no 8086030}	BJ 2 B
X0A_MATE	{part_no 8086030}	FB 2 C
X0B_MATE	{part_no 8086030}	BE 2 C
X0C_MATE	{part_no 8086030}	BA 0 A
X0C_MATE	{part_no 8086030}	BD 2 A
X0C_MATE	{part_no 8086030}	BG 0 A
X0C_MATE	{part_no 8086030}	BI 1 A
X0C_MATE	{part_no 8086030}	CB 2 A
X0C_MATE	{part_no 8086030}	DB 1 A
X0C_MATE	{part_no 8086030}	DD 1 A
X0C_MATE	{part_no 8086030}	FB 2 A
X0C_MATE	{part_no 8086030}	FE 2 A
X0C_MATE	{part_no 8086030}	GH 2 A
X0C_MATE	{part_no 8086030}	GI 2 A
X0C_MATE	{part_no 8086030}	GJ 1 A
X0C_MATE	{part_no 8086030}	NA 1 A
X0C_MATE	{part_no 8086030}	NC 1 A
X06D_MATE	{part_no 20897253}	BH 1 C
X07A	{part_no mate_25192025}	KC 0 B
X07B	{part_no mate_25192025}	KC 0 C

REF	PARTNUMBER	PAGE
X07C	{part_no 598AX3}	HE 2 C
X07D	{part_no 598AX3}	HE 2 C
X07E	{part_no mate_955AM39}	KC 0 C
X07TV	{part_no 598AX3}	HE 2 C
X10		AA 0 B
X10		AC 4 D
X10		DB 0 B
X11	{part_no 20567739}	CA 0 C
X13	{part_no 956AM20}	FE 0 B
X16		AB 3 C
X16		AC 4 C
X17A	{part_no 8397382}	HF 1 C
X17B	{part_no 8397382}	HF 3 D
X17C	{part_no 8397382}	HF 3 D
X17D	{part_no 8397382}	HF 1 C
X17E	{part_no 8397382}	HF 1 D
X34	{part_no mate_20898274}	KC 1 C
X34D1_MATE	{part_no 1363046}	KC 1 C
X34D2_MATE	{part_no 1363046}	KC 1 C
X34R	{part_no mate_86AX102}	KC 3 C
X34R3	{part_no 598AX8}	KC 3 C
X61	{part_no mate_86AX425}	ND 0 B
X66	*opt*	KA 1 D
X67	*opt*	KA 1 B
X89	{part_no 8067319}	CF 0 D
XG9	{part_no mate_8397568}	AF 2 C
Y11	{part_no mate_20972778}	EA 0 B
Y11	{part_no mate_20972778}	EB 0 C
Y12	{part_no mate_20972778}	EA 1 B
Y12	{part_no mate_20972778}	EB 1 C
Y13	{part_no mate_21099309}	EA 1 D
Y13	{part_no mate_21099309}	EB 0 A
Y14	{part_no mate_21099309}	EA 1 E
Y14	{part_no mate_21099309}	EB 1 A
Y15	{part_no mate_21099309}	EA 3 D
Y15	{part_no mate_21099309}	EB 3 D
Y16	{part_no mate_21099309}	EA 2 D
Y16	{part_no mate_21099309}	EB 3 D
Y18	{part_no mate_21374176}	FD 1 D
Y18G	{part_no mate_984471}	DA 4 D
Y18H	{part_no mate_984471}	DA 4 D
Y25A	{part_no 1079282}	EC 1 B
Y29A	{part_no 1079282}	EC 2 B
Y35	{part_no 20378258}	CA 2 C
Y35	{part_no 20378258}	CE 0 D
Y42	{part_no 8397382}	HA 3 C
Y50	{part_no 962AM3}	FE 3 D
Y51	{part_no 20711281}	FA 2 D
Y51_A	{part_no mate_20470084}	FA 1 C
Y52	{part_no 912AM12}	FA 1 D

https://truckmanualshub.com/

SHELLS INFORMATION

REF	PARTNUMBER	PAGE
Y57	{part_no mate_25173596}	EA 1 D
Y57	{part_no mate_25173596}	EB 1 A
Y57_SA	{part_no mate_20720284}	EB 4 D
Y62	{part_no mate_954AM77}	DC 1 C
Y80	{part_no mate_990053}	CD 2 B
Y80A	{part_no mate_21356395}	CF 1 C

REF	PARTNUMBER	PAGE
Y81	{part_no 1079282}	CD 2 D
Y81A	{part_no mate_8159013}	CF 1 C
Y86	{part_no 20388011}	FB 0 D
Y100	{part_no mate_20720285}	EB 2 D
Y106	{part_no mate_21099309}	EB 4 D
Z01	{part_no mate_8089062}	XA 1 D

https://truckmanualshub.com/

ALL REFERENCES

REF	PAGE
6SABS:A	EA 2 D
6SABS:A	EB 2 D
6SABS:B	EA 2 D
6SABS:B	EB 2 D
6SABS:C	EA 2 D
6SABS:C	EB 3 D
6SABS:D	EA 2 D
6SABS:D	EB 3 D
6SABS:E	EA 3 D
6SABS:E	EB 3 D
6SABS:F	EA 3 E
6SABS:F	EB 3 D
6SABS:G	EA 3 D
6SABS:G	EB 3 D
6SABS:H	EA 2 D
6SABS:H	EB 3 D
6SABS:J	EA 2 E
6SABS:J	EB 3 D
6SABS:K	EA 3 D
6SABS:K	EB 3 D
A03	BE 0 C
A03	BF 0 B
A03	BG 1 C
A04A	HE 2 B
A06R1_65	DD 3 B
A06R2_65	DD 3 B
A06R4_65	DD 4 B
A06R5_65	DD 2 B
A07	KA 3 B
A12A	EA 0 C
A12B	EB 0 B
A13F	DA 2 D
A14B	CE 0 D
A14B	CF 0 E
A16	EC 0 C
A17	AC 2 A
A17	BA 1 C
A17	BB 0 B
A17	BC 2 D
A17	BD 2 D
A17	GD 1 A
A17	GE 2 A
A17	GH 2 B
A17_A5	BB 4 A
A17_B19	BB 4 B
A19D_MATE	DD 0 E
A20	HC 0 C
A20	HG 0 C
A34	HA 0 B
A35	IE 1 C

REF	PAGE
A51	JA 3 D
A52	FE 2 B
A53	FE 0 C
A56	KA 3 D
A57	DC 0 B
A57	DD 0 D
A58	DC 0 D
A83	GD 1 B
A83	GE 2 B
A87	BI 0 C
A89	HB 2 C
A90	HE 0 B
A102A	BM 2 C
A102B	BM 0 D
A104	GA 3 A
A104A	GA 2 A
A106	HD 1 C
A107A	DB 0 B
A107B	DB 1 D
A108	DC 3 D
A109	DA 0 B
A124	AC 3 A
A124	AD 1 A
A124_B-1	AD 1 B
A124_B1	AC 3 A
A131A	FE 3 B
A131B	FE 4 B
A137C	CD 0 C
A138	CD 1 E
A138A	CE 1 C
A141	BF 4 C
A149	KC 2 C
ABS_X1:1	EA 2 B
ABS_X1:2	EA 2 B
ABS_X1:3	EA 3 B
ABS_X1:4	EA 1 C
ABS_X1:5	EA 1 C
ABS_X1:6	EA 2 B
ABS_X1:7	EA 3 B
ABS_X1:8	EA 3 B
ABS_X1:10	EA 0 C
ABS_X1:11	EA 0 C
ABS_X1:12	EA 1 B
ABS_X1:13	EA 3 B
ABS_X1:14	EA 3 B
ABS_X1:16	EA 2 B
ABS_X1:17	EA 2 B
ABS_X2:1	EA 0 C
ABS_X2:2	EA 0 C
ABS_X2:3	EA 0 A

REF	PAGE
ABS_X2:4	EA 1 B
ABS_X2:5	EA 0 B
ABS_X2:6	EA 1 A
ABS_X2:7	EA 1 B
ABS_X2:8	EA 0 B
ABS_X2:9	EA 0 D
ABS_X2:10	EA 1 C
ABS_X2:11	EA 1 C
ABS_X2:12	EA 0 B
ABS_X2:13	EA 1 C
ABS_X2:14	EA 1 C
ABS_X2:15	EA 0 C
ABS_X2:16	EA 1 C
ABS_X2:17	EA 1 C
ABS_X2:18	EA 0 C
ABS_X3:4	EA 3 C
ABS_X3:6	EA 3 E
ABS_X3:7	EA 3 C
ABS_X3:9	EA 2 E
ABS_X3:10	EA 3 C
ABS_X3:11	EA 2 C
ABS_X3:12	EA 2 C
ABS_X3:13	EA 2 C
ABS_X3:14	EA 2 C
ABS_X3:15	EA 2 C
ACC_SP1:A	AA 4 C
ACC_SP1:B	AA 4 C
AF_AFR:A	HC 4 C
AF_AFR:A	HG 3 C
AF_AFR:B	HC 3 C
AF_AFR:B	HG 3 C
AF_AFR:C	HC 3 C
AF_AFR:C	HG 3 C
AHMC2:A	KC 3 B
AHMC2:B	KC 3 E
AHMC:A	KC 3 B
AHMC:B	KC 3 E
AILH:A	GK 0 C
AILH:B	GK 1 A
AIRH:A	GK 1 C
AIRH:B	GK 1 B
ALIC:A	KC 4 D
ALIC:B	KC 4 E
ALIC:C	KC 4 C
ALIC:D	KC 4 D
ALLISON:1	DC 2 C
ALLISON:2	DC 2 D
ALLISON:3	DC 1 C
ALLISON:4	DC 2 C
ALLISON:5	DC 1 C

REF	PAGE
ALLISON:6	DC 1 C
ALLISON:7	DC 1 C
ALLISON:8	DC 1 C
ALLISON:9	DC 1 C
ALLISON:10	DC 0 C
ALLISON:11	DC 0 C
ALLISON:12	DC 1 C
ALLISON:13	DC 1 C
ALLISON:14	DC 2 C
ALLISON:15	DC 2 C
ALLISON:16	DC 2 C
ALLISON:17	DC 0 C
ALLISON:18	DC 0 C
ALLISON:19	DC 1 C
ALLISON:20	DC 1 C
ALLISON:21	DC 2 C
ALLISON:22	DC 2 C
ALLISON:23	DC 2 C
ALLISON:24	DC 2 C
ALLISON:25	GG 2 A
ALLISON:26	GG 2 C
ALLISON:27	DC 0 C
ALLISON:30	DC 0 C
ALLISON:31	DC 0 C
ALLISON_RLY:A1	DD 4 B
ALLISON_RLY:A3	DD 4 C
ALLISON_RLY:A4	DD 3 B
ALLISON_RLY:A6	DD 3 C
ALLISON_RLY:A7	DD 3 B
ALLISON_RLY:A9	DD 3 B
ALLISON_RLY:B1	DD 4 B
ALLISON_RLY:B2	DD 4 C
ALLISON_RLY:B3	DD 4 C
ALLISON_RLY:B4	DD 3 B
ALLISON_RLY:B6	DD 3 C
ALLISON_RLY:B7	DD 3 B
ALLISON_RLY:B8	DD 3 C
ALLISON_RLY:B9	DD 3 B
ALLISON_RLY:C2	DD 2 C
ALLISON_RLY:C3	DD 2 B
ALLISON_RLY:C4	DD 2 B
ALLISON_RLY:C6	DD 2 B
ALLISON_RLY:D1	DD 2 C
ALLISON_RLY:D3	DD 2 B
ALLISON_RLY:D4	DD 2 B
ALLISON_RLY:D6	DD 2 B
AN_806GS17-2.6	FE 1 D
AP_806GS13-7.1.0	FE 2 D
AR_806GS13-7.1.0	FE 2 C
AT_CAB_TRANS:A	DB 0 C

https://truckmanualshub.com/

ALL REFERENCES

REF	PAGE
AT_CAB_TRANS:B	DB 3 C
AT_CAB_TRANS:C	DB 0 C
AT_CAB_TRANS:F	DB 0 C
AT_CAB_TRANS:H	DB 0 C
AT_CAB_TRANS:J	DB 0 C
AT_CAB_TRANS:K	DB 1 C
AT_CAB_TRANS:N	DB 1 C
AT_CAB_TRANS:P	DB 1 C
AT_CAB_TRANS:R	DB 1 C
AT_CAB_TRANS:S	DB 2 C
AT_CAB_TRANS:T	DB 2 C
AT_CAB_TRANS:X	DB 3 C
AT_NU_PTO:A	DB 3 C
AT_NU_PTO:B	DB 3 C
AT_NU_PTO:C	DB 3 C
AT_RLY:A1	DB 1 B
AT_RLY:A3	DB 1 B
AT_RLY:B1	DB 1 B
AT_RLY:B3	DB 1 B
AT_RLY:C1	DB 3 B
AT_RLY:C3	DB 3 B
AT_RLY:D1	DB 3 B
AT_RLY:D3	DB 3 B
AU_20820857_33122	DB 2 C
AUX_BATT:A	NA 0 D
AUX_IGN:A	NA 1 D
AV_20828057_33121	DB 2 C
AW_20828057_3311	DC 0 D
AX_20828057_3311	DC 0 D
AZ_20828057_3311	DC 0 D
B06AP	BF 3 D
B06T1	BF 2 D
B06T2	BF 2 D
B07	BF 0 D
B09A_MATE	BF 1 D
B09B	DC 4 C
B13	EA 0 B
B13	EB 0 C
B14	EA 1 B
B14	EB 1 D
B15	EA 0 D
B15	EB 0 A
B16	EA 0 D
B16	EB 1 B
B17	EA 2 D
B17	EB 2 D
B18	EA 2 D
B18	EB 3 D
B22C	CE 3 D
B23	BF 0 D

REF	PAGE
B23.1	BF 0 D
B25	BB 3 D
B25_3	BB 4 B
B25A	BB 4 E
B25JMP:1	BB 4 D
B25JMP:3	BB 4 D
B25JMP:4	BB 4 D
B25JMP:5	BB 4 D
B25JMP:6	BB 4 D
B30A	EC 2 D
B49	EB 0 E
B50	EB 0 E
B55A	EC 0 D
B58A	EC 1 D
B58R	BF 2 D
B58R_ESP	EB 1 E
B58R_EXT:A	BF 1 D
B58R_EXT:B	BF 2 D
B58R_EXT:C	BF 2 D
B58RE_EXT:A	EB 1 D
B58RE_EXT:B	EB 1 D
B58RE_EXT:C	EB 2 D
B59	BF 3 D
B60LF	KA 3 C
B60LF:A	KA 0 D
B60LF:B	KA 0 D
B60RF	KA 3 C
B60RF:A	KA 0 D
B60RF:B	KA 0 D
B60SLF:A	KA 3 C
B60SLF:B	KA 3 C
B60SLR	KA 4 D
B60SRF:A	KA 3 C
B60SRF:B	KA 3 C
B60SRR	KA 3 D
B60SW	KA 3 E
B68	BB 1 D
B68	CE 2 C
B68_B	BB 0 D
B78	JA 2 D
B79	FE 2 D
B80	KA 0 B
B82	JB 0 D
B82A	JB 2 D
B96D	CD 3 B
B96S	CD 2 B
B105	DC 3 D
B121	BG 1 D
B122	BF 0 A
B123	CA 2 E

REF	PAGE
B123	CE 0 C
B123.1	CA 3 E
B124.3RD	BF 4 D
B124FR	BF 1 D
B124RR	BF 1 D
B133	BG 1 B
B133S	BG 2 B
B142B	CE 3 C
B142C	CD 1 B
B142C	CF 3 B
B152	EB 2 E
B153	EB 2 D
B156	BD 2 B
B156A	HA 3 A
B157	HB 2 D
B158	HB 1 D
B160	BI 0 C
B211	CD 0 E
BAT_SP2:A	NA 2 B
BAT_SP3:A	NC 0 B
BAT_SP4:A	NA 2 B
BAT_SP4:A	NC 0 B
BAT_SP4:B	NA 2 B
BB_CAB:1	BJ 1 D
BB_CAB:1	BK 1 C
BB_CAB:2	BJ 1 D
BB_CAB:2	BK 1 C
BB_CAB:3	BJ 1 C
BB_CAB:3	BK 0 C
BB_CAB:4	BJ 0 B
BB_CAB:4	BK 0 C
BB_CAB:5	BJ 2 C
BB_CAB:6	BJ 2 C
BB_CAB:6	BK 3 C
BB_CAB:7	BJ 3 C
BB_CAB:7	BK 3 C
BB_CAB:8	BJ 2 C
BB_CAB:9	BJ 1 D
BB_CAB:13	BK 3 C
BB_CAB:14	BJ 1 D
BB_CAB:14	BK 1 C
BB_CAB:15	BJ 1 D
BB_CAB:15	BK 2 C
BB_CAB:16	BJ 1 D
BB_CAB:16	BK 2 C
BB_CAB:17	BJ 1 D
BB_CAB:17	BK 2 C
BB_CAB:18	BJ 3 C
BB_CAB:18	BK 3 C
BB_CAB:19	BK 2 C

REF	PAGE
BB_CAB:20	BJ 3 C
BB_CAB:20	BK 3 C
BB_CAB:21	BJ 4 C
BB_CAB:21	BK 4 C
BB_CAB:22	BJ 4 C
BB_CAB:22	BK 3 C
BB_CAB:23	BJ 2 C
BB_CAB:25	BJ 3 C
BB_CAB:26	BJ 3 C
BB_CAB:28	BJ 1 D
BB_CAB:28	BK 2 C
BB_LP:A	BK 2 C
BB_LP:B	BJ 1 B
BB_LP:B	BK 3 A
BB_LP_6SW:B	NC 1 B
BBBL:1	BK 0 D
BBBL:2	BK 0 D
BBBL:3	BK 1 D
BBBL:4	BK 1 D
BBBL:5	BK 1 D
BBBL:6	BK 1 D
BBBL:7	BK 1 D
BBBL:8	BK 1 D
BBBL:9	BK 1 D
BBBL:10	BK 1 D
BBBL:11	BK 2 D
BBBL:12	BK 2 D
BBBL:13	BK 2 D
BBBL:14	BK 2 D
BBBL:15	BK 2 D
BBBL:16	BK 2 D
BBBL:17	BK 2 D
BBBL:18	BK 3 D
BBBL:19	BK 3 D
BBBL:20	BK 3 D
BBBL:23	BK 3 D
BBBL:24	BK 3 D
BBBL:27	BK 3 D
BBBL:29	BK 4 D
BBCBBC:A	BN 3 C
BBCBBC:B	BN 3 C
BBCBBC:C	BN 3 C
BBCBBC:D	BN 2 C
BBCBBC:E	BN 1 C
BBCBBC:F	BN 1 C
BBCBBC:G	BN 1 C
BBCBBC:H	BN 1 C
BBCBBC:J	BN 1 C
BBCBBC:K	NF 2 D
BBCBBC:L	NF 2 D

https://truckmanualshub.com/

ALL REFERENCES

REF	PAGE
BBIC1:S	BJ 0 C
BBIC1:U	BJ 1 C
BBIC1:V	BJ 3 C
BBIC1:W	BJ 3 C
BBIC1:X	BJ 3 C
BBIC1:Y	BJ 3 C
BBIC1:Z	BJ 3 C
BBIC2:1	BJ 1 D
BBIC2:2	BJ 1 D
BBIC2:3	BJ 3 C
BBIC2:5	BJ 2 C
BBIC2:6	BJ 2 C
BBIC2:7	BJ 3 C
BBIC2:8	BJ 2 C
BBIC2:9	BJ 1 D
BBIC2:13	BJ 3 C
BBIC2:14	BJ 4 C
BBIC2:15	BJ 1 D
BBIC2:16	BJ 1 D
BBIC2:17	BJ 1 D
BBIC2:18	BJ 3 C
BBIC2:19	BJ 1 D
BBIC2:20	BJ 3 C
BBIC2:21	BJ 4 C
BBIC2:22	BJ 4 C
BBIC2:23	BJ 2 C
BBIC2:25	BJ 3 C
BBIC2:26	BJ 3 C
BBIC2:27	BJ 2 C
BBIC2:28	BJ 1 D
BBIC2:29	BJ 2 C
BBIL:1	BJ 1 C
BBIL:2	BJ 2 C
BBPA1:A	BN 2 C
BBPA1:B	BN 2 C
BBPA1:C	BN 2 C
BBPA1:D	BN 3 C
BBPA1:E	BN 3 C
BBPA1:F	BN 3 C
BBPA1:G	BN 3 C
BBPA1:H	BN 3 C
BBPA2:A	BN 2 C
BBPA2:B	BN 2 C
BBPA2:C	BN 2 C
BBPA2:D	BN 1 C
BBPA2:E	BN 1 C
BBPA2:F	BN 1 C
BBPA2:G	BN 1 C
BBSP1:A	BJ 1 E
BBSP2:A	BJ 1 E

REF	PAGE
BBSP2:A	BK 1 B
BBSP3:A	BJ 1 E
BBSP3:A	BK 2 B
BBSP4:A	BJ 1 E
BBSP4:A	BK 2 B
BBSP5:A	BJ 1 E
BBSP5:A	BK 2 B
BBSP6:A	BJ 1 E
BBSP6:A	BK 2 B
BEC_J1:A1	GA 2 B
BEC_J1:A2	GA 0 A
BEC_J1:A4	GA 1 D
BEC_J1:A6	BF 2 B
BEC_J1:A7	BF 2 B
BEC_J1:A9	GD 0 A
BEC_J1:A9	GE 0 A
BEC_J1:A12	IE 2 A
BEC_J1:B1	GA 1 B
BEC_J1:B2	GA 1 B
BEC_J1:B3	GA 0 B
BEC_J1:B4	GA 2 B
BEC_J1:B6	BF 2 B
BEC_J1:B7	BF 1 B
BEC_J1:B8	AD 2 B
BEC_J1:B12	GA 2 A
BEC_J1:C8	AA 3 B
BEC_J1:C11	IC 0 A
BEC_J1:D2	BK 4 A
BEC_J1:D8	AA 3 B
BEC_J1:D12	BI 0 A
BEC_J1:E1	AD 3 B
BEC_J1:E2	AA 4 B
BEC_J1:E5	HD 3 A
BEC_J1:E5	KC 0 A
BEC_J1:E5	NA 2 A
BEC_J1:E5	NC 0 A
BEC_J1:E11	BM 1 A
BEC_J1:E11	NB 2 A
BEC_J1:F1	AA 4 B
BEC_J1:F2	AA 3 B
BEC_J1:F3	AA 2 B
BEC_J1:F4	DB 2 A
BEC_J1:F4	DD 0 A
BEC_J1:F4	NA 3 A
BEC_J1:F10	GJ 0 B
BEC_J1:F10	NA 2 A
BEC_J1:F12	EA 2 B
BEC_J1:F12	EB 3 A
BEC_J2:A1	AA 1 B
BEC_J2:A2	AA 1 B

REF	PAGE
BEC_J2:A5	GA 1 C
BEC_J2:A7	HA 1 B
BEC_J2:A9	AC 0 A
BEC_J2:A12	ID 0 A
BEC_J2:A12	IE 1 A
BEC_J2:B1	AA 1 C
BEC_J2:B5	GA 1 C
BEC_J2:B8	BM 1 A
BEC_J2:B8	NB 2 A
BEC_J2:B11	GA 0 B
BEC_J2:C4	BA 1 A
BEC_J2:C5	GA 0 C
BEC_J2:C9	NA 1 B
BEC_J2:C12	GA 1 A
BEC_J2:D1	BD 0 A
BEC_J2:D4	BA 3 A
BEC_J2:D5	GA 1 C
BEC_J2:D8	HC 3 A
BEC_J2:D8	NA 3 A
BEC_J2:D11	KC 0 A
BEC_J2:E2	BA 1 A
BEC_J2:E5	BB 0 B
BEC_J2:E6	HA 0 B
BEC_J2:E7	AA 3 D
BEC_J2:E9	FE 1 A
BEC_J2:E9	GL 0 A
BEC_J2:E9	NA 2 A
BEC_J2:E9	NC 3 A
BEC_J2:E10	GP 1 B
BEC_J2:E12	AC 0 A
BEC_J2:F1	BE 0 A
BEC_J2:F2	BC 3 A
BEC_J2:F5	AD 2 B
BEC_J2:F6	HA 0 B
BEC_J2:F8	GP 1 B
BEC_J2:F9	GP 1 B
BEC_J2:F10	GP 1 B
BEC_J2:F11	KC 2 A
BEC_J3:A2	BA 0 A
BEC_J3:A5	AD 3 B
BEC_J3:A6	AA 3 E
BEC_J3:A6	HA 0 B
BEC_J3:A8	GP 0 B
BEC_J3:A11	GA 3 B
BEC_J3:A12	GA 3 A
BEC_J3:B1	BJ 1 A
BEC_J3:B1	BK 3 A
BEC_J3:B1	NA 4 A
BEC_J3:B1	NC 1 A
BEC_J3:B5	AD 3 B

REF	PAGE
BEC_J3:B6	FB 1 A
BEC_J3:B7	KA 1 A
BEC_J3:B9	IA 2 A
BEC_J3:B10	GA 3 B
BEC_J3:B11	GA 3 B
BEC_J3:B12	GA 3 A
BEC_J3:C2	DB 3 A
BEC_J3:C2	DD 3 A
BEC_J3:C2	DE 2 B
BEC_J3:C2	NA 3 A
BEC_J3:C3	GD 1 A
BEC_J3:C3	GE 1 A
BEC_J3:C5	AD 3 B
BEC_J3:C8	IA 2 A
BEC_J3:C8	ID 3 A
BEC_J3:C10	GA 3 B
BEC_J3:C11	GA 1 B
BEC_J3:C12	GA 1 A
BEC_J3:D1	CB 2 B
BEC_J3:D3	GH 0 A
BEC_J3:D9	FB 2 A
BEC_J3:D10	EC 3 A
BEC_J3:E2	FD 2 A
BEC_J3:E2	JB 1 A
BEC_J3:E2	NA 2 A
BEC_J3:E2	NC 2 A
BEC_J3:E3	GH 1 A
BEC_J3:E5	BE 3 D
BEC_J3:E5	EC 3 B
BEC_J3:E6	BE 3 D
BEC_J3:E7	EC 3 B
BEC_J3:E8	BJ 1 B
BEC_J3:E8	HD 1 C
BEC_J3:E10	AA 0 C
BEC_J3:E10	BJ 1 B
BEC_J3:E10	BK 1 B
BEC_J3:E10	HD 2 B
BEC_J3:E11	XA 2 A
BEC_J3:F1	IE 2 A
BEC_J3:F3	NA 0 A
BEC_J3:F5	BE 3 D
BEC_J3:F5	EC 3 B
BEC_J3:F7	BE 3 D
BEC_J3:F7	EC 3 B
BEC_J3:F8	BJ 1 B
BEC_J3:F8	BK 0 C
BEC_J3:F8	HD 2 B
BEC_J3:F10	AA 0 C
BEC_J3:F10	BJ 1 B
BEC_J3:F10	BK 1 B

https://truckmanualshub.com/

ALL REFERENCES

REF	PAGE
BEC_J3:F10	HD 1 B
BEC_J3:F11	BE 0 A
BEC_J3:F11	BG 0 A
BEC_J4:A2	AA 1 C
BEC_J4:C1	CE 2 A
BEC_J4:C1	DA 2 A
BEC_J4:C2	AA 0 D
BEC_J4:D1	AA 0 B
BEC_J4:D1	BJ 1 A
BEC_J4:D1	BK 1 A
BEC_J4:D1	HD 1 A
BEC_J4:D2	AA 0 B
BEC_J4:D2	BJ 1 A
BEC_J4:D2	BK 1 A
BEC_J4:D2	HD 1 A
BEC_P1	AA 0 A
BEC_P2	AA 0 A
BL_20828057_3311	DC 0 D
BL_20828057_33111	EA 2 D
BP_20828057_33111	EA 2 D
BQ_806GS13-7.1.0	DC 0 B
BR_806GS13-7.1.0	DC 0 B
BS_806GS17-2.6	FE 1 C
BT_806GS13-7.1.0	FE 2 C
BV_806GS13-7.1.0	FE 2 B
CAB_DDC:1	DB 0 B
CAB_DDC:2	DB 0 B
CAB_DDC:3	DB 0 B
CAB_DDC:4	DB 0 B
CAB_DDC:5	DB 1 B
CAB_DDC:6	DB 0 B
CAB_DDC:8	DB 1 B
CAB_SC_ESP:A	EB 1 D
CAB_SC_ESP:B	EB 1 E
CAB_SC_ESP:C	EB 1 D
CAB_SC_ESP:D	EB 0 D
CB2	AA 1 A
CB2	GA 1 A
CB3	AA 1 A
CB3	GA 0 A
CB4	AA 1 A
CB4	GA 2 A
CB4	IE 2 A
CB12	AA 0 A
CB12	ID 0 A
CB12	IE 1 A
CB14	AA 4 A
CB14	GD 0 A
CB14	GE 0 A
CB21	AA 0 E

REF	PAGE
CB21	GP 0 A
CB22	AA 0 E
CB22	IA 2 A
CB23	AA 0 E
CB23	IA 2 A
CB23	ID 3 A
CB81	AA 4 B
CB81	GD 1 A
CB81	GE 1 A
CB_HD_LIFT_GATE	ND 0 B
CHPTO:A	FD 1 D
CHPTO:B	FD 1 D
CHPTO:C	FD 2 D
CIEC1:A	GP 2 B
CIEC1:B	GP 2 B
CIEC1:C	GP 2 B
CIEC1:D	GP 2 B
CIEC1:E	GP 2 B
CIEC1:F	GP 2 B
CIEC1:G	GP 2 B
CIEC1:H	GP 2 B
CIEC1:J	GP 2 C
CIEC1:K	GP 2 C
CIEC1:L	GP 2 C
CIEC1:M	GP 2 C
CIEC1:N	GP 2 C
CIEC1:P	GP 2 C
CIEC2:A	GP 3 B
CIEC2:B	GP 3 B
CIEC2:C	GP 3 B
CIEC2:D	GP 3 B
CIEC2:E	GP 3 B
CIEC2:F	GP 3 B
CIEC2:G	GP 3 B
CIEC2:H	GP 3 B
CIEC2:J	GP 3 C
CIEC2:K	GP 3 C
CIEC2:L	GP 3 C
CIEC2:M	GP 3 C
CIEC2:N	GP 3 C
CIEC2:P	GP 3 C
CIEC:A	CA 2 B
CIEC:A	CE 2 C
CIEC:B	CA 1 B
CIEC:C	AC 2 D
CIEC:D	AC 2 D
CIEC:E	AC 1 E
CIEC:F	CA 1 C
CIEC:F	CF 3 B
CIEC:G	CE 2 B

REF	PAGE
CIEC:H	GD 3 C
CIEC:H	GE 3 C
CIEC:J	BE 3 C
CIEC:K	GF 1 B
CIEC:L	GD 3 C
CIEC:L	GE 3 C
CIEC:M	BG 1 B
CIEC:N	BE 3 B
CIEC:P	FA 2 B
CLU_JMP	IE 3 C
CO_BB_LP1:B	BK 3 A
CO_BB_LP2:B	BK 2 B
COBBC:A	BK 2 C
COSLIL:A	GD 3 C
COSLIL:B	GD 3 C
COSLIR:A	GD 4 C
COSLIR:B	GD 4 C
COSLL:A	GD 3 C
COSLL:B	GD 3 D
COSLL:C	GD 3 D
COSLR:A	GD 4 C
COSLR:B	GD 4 D
COSLR:C	GD 4 E
CTI_PSI:A	FE 0 C
CTI_PSI:B	FE 1 D
CTIIP_CTICAB:1	FE 1 B
CTIIP_CTICAB:2	FE 1 E
CTIIP_CTICAB:3	FE 1 C
CTIIP_CTICAB:4	FE 1 D
CTIIP_CTICAB:5	FE 1 D
CTIIP_CTICAB:6	FE 2 D
CTIIP_CTICAB:7	FE 2 D
CTIIP_CTICAB:9	FE 2 B
CTIIP_CTICAB:10	FE 2 B
CTR_PIN_HOT:A	GJ 1 C
CTR_PIN_HOT:B	GJ 1 D
CTR_PIN_HOT_ISO:A	GJ 3 B
CTR_PIN_HOT_ISO:B	GJ 3 D
CTR_PIN_HOT_ISO:C	GJ 2 D
d3_4837	FD 2 D
D4	AG 0 C
d11_2029	CF 0 B
DASH_CAB:25	GG 1 A
DASH_CAB:26	GG 2 C
DCL:A	BC 1 B
DCL:B	BC 1 C
DCL:C	BC 1 C
DCL:D	BC 1 D
DCL:E	BC 1 D
DCL:F	BC 1 B

REF	PAGE
DCL:G	BC 1 B
DCL:H	BC 1 D
DCL:J	BC 1 E
DCL_A:H	BC 1 D
DCL_A:J	BC 1 E
DCL_ACC:A	BC 1 B
DCL_ACC:B	BC 1 C
DCL_ACC:C	BC 1 C
DCL_ACC:D	BC 1 D
DCL_ACC:E	BC 1 D
DCL_ACC:F	BC 1 B
DCL_ACC:G	BC 1 A
DCL_ACC:H	BC 1 D
DCL_ACC:J	BC 1 E
DCL_ACC_A:C	BC 0 C
DCL_ACC_A:D	BC 0 D
DCL_ACC_A:E	BC 0 D
DCL_ACC_A:G	BC 0 A
DCL_ACC_A:H	BC 0 D
DCL_ACC_A:J	BC 0 E
DCL_B:A	BC 1 B
DCL_B:B	BC 1 C
DCL_B:C	BC 4 C
DCL_B:D	BC 1 D
DCL_B:E	BC 1 D
DCL_B:F	BC 4 A
DCL_B:G	BC 1 B
DCL_B:H	BC 1 E
DCL_B:J	BC 1 E
DCL_C:A	BC 0 B
DCL_C:B	BC 0 C
DCL_C:D	BC 0 D
DCL_C:E	BC 0 D
DCL_C:F	BC 3 A
DCL_C:G	BC 0 B
DCL_C:H	BC 0 E
DCL_C:J	BC 0 E
DHDH:A	CA 2 B
DHDH:B	CA 1 B
DHDH:C	GJ 3 B
DHDHA:A	DB 2 C
DHDHA:B	DB 2 C
DHDHA:C	DB 3 C
DHDHB:A	DB 2 B
DHDHB:B	DB 2 C
DHDHB:C	DB 3 B
DHFC:A	AD 1 D
DHFC:B	BG 1 D
DHFC:C	CD 0 B
DHFC:D	GA 2 E

https://truckmanualshub.com/

ALL REFERENCES

REF	PAGE
DHFC:F	BF 0 B
DHFC:G	GP 1 C
DHFC:H	GP 0 C
DHFC:J	GP 1 C
DHFC:K	GP 1 C
DHFC:L	GP 0 C
DHFC:M	BF 0 B
DK_20828057_3.3.1.1	EB 0 E
DSFC:A	BG 3 C
DSFC:B	BG 4 D
DSFC:C	BF 4 D
DSFC:D	BG 2 E
DSFC:E	BF 1 D
DSFC:F	BF 1 D
DSFC:J	BF 1 E
E06	GF 1 B
E07L	GA 1 D
E07R	GA 1 D
E11L	GD 1 E
E11R	GD 1 D
E12D	GA 3 D
E12DH	HE 4 D
E12DHL	HE 3 E
E12DHS:A	HE 4 D
E12DHS:B	HE 4 E
E12P	GA 3 D
E12PH	HE 4 D
E12PHL	HE 4 E
E13LS	GD 2 C
E13LS	GE 2 C
E13LSB	GD 3 D
E13LSB	GK 3 D
E13LSC	GD 3 C
E13RS	GD 4 C
E13RS	GE 4 D
E13RSB	GD 4 D
E13RSB	GK 3 C
E13RSC	GD 4 C
E14L	GD 2 D
E14L	GE 3 D
E14R	GD 3 D
E14R	GE 3 D
E17AD	GH 0 C
E17AP	GH 0 C
E17D	GH 2 C
E17L	GF 4 C
E17P	GH 3 C
E17R	GF 4 C
E18A	GF 4 C
E18LB	HE 4 B

REF	PAGE
E18LC	HE 3 B
E18LR	HE 0 A
E18N	HE 1 C
E18R	HE 4 B
E18RR	HE 0 A
E19C	GA 0 D
E19C	GM 1 D
E19CH	HE 2 D
E19CHL	HE 1 D
E19D	GA 0 D
E19D	GM 0 D
E19DH	HE 2 D
E19DHL	HE 0 D
E19DHS:A	HE 1 D
E19DHS:B	HE 1 E
E19P	GA 1 D
E19P	GM 1 D
E19PH	HE 3 D
E19PHL	HE 1 D
E23L	HE 3 B
E23R	HE 3 B
E27L	GF 0 D
E27L.LED	GF 0 C
E27R	GF 1 D
E27R.LED	GF 2 E
E30L	GD 0 D
E30R	GD 1 D
E31L	GD 0 D
E31R	GD 1 D
E32	HD 1 D
E32L	GE 0 D
E32R	GE 1 D
E35	HA 0 D
E38_08	BD 0 B
E38_09	BJ 2 A
E38_09A	BK 2 B
E38_11	CE 0 C
E39	GF 1 C
E53	KC 4 D
E53L	KC 3 D
E53R	KC 4 D
E58	GF 2 C
E58	HE 4 A
E58_A	GF 2 C
E58_B	GF 2 C
E58A	GF 3 C
E58B	GF 2 C
E58L	GF 3 C
E58R	GF 3 C
E58R.A	GF 3 D

REF	PAGE
E60D	GH 3 B
E60P	GH 3 B
E61	HD 3 D
E65L	GL 0 C
E65R	GL 0 C
E95L1	GK 0 A
E95L2	GK 0 B
E95L3	GK 0 B
E95L4	GK 0 B
E95L5	GK 0 C
E95L6	GK 0 C
E95R1	GK 1 A
E95R2	GK 1 B
E95R3	GK 1 B
E95R4	GK 1 C
E95R5	GK 1 C
E95R6	GK 1 C
E96L	GK 2 C
E96R	GK 3 B
E96R2	GK 4 B
E96R3	GK 4 B
E96R4	GK 4 B
E97L1	GK 2 B
E97L2	GK 2 B
E97L3	GK 2 B
E97L4	GK 2 C
E97R1	GK 4 A
EARC2:C	AH 2 D
EARC2:D	AH 2 D
EARC4:A	AH 4 D
EARC4:B	AH 4 D
EARC4:C	AH 2 D
EARC4:D	AH 3 D
EARC4:E	AH 3 D
EARC4:F	AH 3 D
EARC4:G	AH 4 D
EARC4:H	AH 4 D
EARC6:A	AH 0 B
earth3_307	BJ 1 B
earth6_328	HF 2 C
earth8_328	BK 0 B
EL1	GQ 4 B
EM01	CF 2 D
EM02	CF 3 C
EM03	CF 4 D
EM04	CF 3 A
EPDMA:A	GG 1 B
EPDMA:B	GG 2 B
EPDMA:C	CA 1 A
EPDMA:D	GG 2 B

REF	PAGE
EPDMB:A	DB 2 B
EPDMB:B	DB 2 B
EPDMB:C	DB 2 B
EPDMB:G	DB 2 B
EPDMB:M	DB 2 B
EPDMB_B:K	BC 0 D
EPDMB_B:L	BC 0 E
EPDMBA:D	GG 2 B
EPDMBA:E	GG 2 B
EPDMC:A	BG 2 A
EPDMC:B	GD 3 B
EPDMC:B	GE 3 B
EPDMC:C	GG 3 A
EPDMC:D	GG 3 A
EPDMC:E	GD 3 B
EPDMC:E	GE 3 B
EPDMC:G	GQ 1 B
EPDMC:H	BE 3 A
EPDMC:J	FA 2 A
EPDMC:K	CD 0 A
EPDMC:L	CA 2 A
EPDMC:L	CE 2 C
EPDMC:M	AB 3 E
EPDMC:M	CA 2 A
EPDMC:M	CE 2 B
EPDMD:C	GD 3 B
EPDMD:C	GE 3 B
EPDMD:D	GD 3 B
EPDMD:D	GE 3 B
EPDME:A	CA 1 A
EPDME:B	AC 2 D
EPDME:C	GJ 3 B
EPDME:D	AC 2 D
EPDME:E	AC 2 C
EPDMF:A	GG 1 B
EPDMF:B	GG 0 B
EPDMF:C	GG 3 B
EPDMF:D	GA 4 D
EPDMG:A	GA 4 D
EPDMG:B	GQ 1 B
EPDMG:D	GG 1 B
EPDMG:F	EA 3 B
EPDMG:F	EB 3 A
EPDMG:G	AB 0 C
EPDMG:H	GD 4 B
EPDMG:H	GE 3 B
EPDMG:J	GA 4 D
EPDMG:M	GG 0 B
EPDMG:P	AC 2 B
EPDMG:R	AB 2 C

https://truckmanualshub.com/

ALL REFERENCES

REF	PAGE
EPDMG:S	GD 3 B
EPDMG:S	GE 3 B
EPDMP_A:C	BC 0 D
EPDMP_A:D	BC 0 E
ESFC:A	EC 1 B
ESFC:F	EC 1 B
ESFC:H	EC 1 C
ESFC:J	EC 0 C
ESFC:R	EC 1 C
ESFC:S	EC 2 C
ESFC:T	EC 2 C
ESFC:U	EC 2 C
ESFC:V	EC 2 B
ESFC:W	EC 2 B
ESFC:X	EC 1 C
F1_2_4748	BU 2 B
F1_3_4748	BV 2 B
F1_4_4748	BW 2 B
F1_5_4748	BX 2 B
F3_2_4748	BU 2 B
F3_3_4748	BV 2 B
F3_4_4748	BW 2 B
F3_5_4748	BX 2 B
F5	AA 1 A
F5	GA 3 A
F6	AA 2 A
F6	GH 0 A
F7	AA 0 A
F7	AC 0 A
F8	AA 0 E
F8	FB 1 A
F9	AA 3 A
F10	AA 2 B
F10	KA 1 A
F10	XA 2 A
F11	AA 2 A
F11	BI 0 A
F11	BM 1 A
F11	NB 2 A
F13	AA 1 B
F13	EA 2 A
F13	EB 3 A
F15	AA 0 B
F15	BF 2 A
F16	AA 0 D
F16	BA 0 A
F17	AA 1 D
F17	BA 1 A
F17	BB 0 A
F17	BC 3 A

REF	PAGE
F17	BD 0 A
F18	AA 2 D
F18	CB 2 A
F19	AA 0 A
F19	BE 0 A
F19	BG 0 A
F20	AA 1 B
F20	IC 0 A
F24	AA 1 E
F24	FE 1 A
F24	GL 0 A
F24	NA 2 A
F24	NC 3 A
F25	AA 3 C
F25	HA 0 A
F26	AA 2 A
F26	GA 1 A
F27	AA 1 E
F27	BM 1 A
F27	NB 2 A
F28	AA 1 E
F28	HC 3 A
F28	NA 3 A
F29	AA 1 B
F30	AA 1 E
F30	NA 1 A
F31	AA 1 D
F31	DB 3 A
F31	DD 3 A
F31	DE 2 A
F31	NA 3 A
F32	AB 4 C
F32	GJ 3 A
F33	AB 3 A
F33	GG 1 A
F34	AB 1 A
F34	GG 2 A
F35	AB 2 A
F35	GA 4 A
F36	AB 1 A
F36	GQ 1 A
F37	AB 2 A
F37	GG 0 A
F38	AB 3 D
F38	CA 1 A
F39	AB 2 D
F39	GG 3 A
F40	AB 1 D
F40	FA 3 A
F41	AB 2 E

REF	PAGE
F41	CA 1 A
F42	AB 1 D
F42	BE 3 A
F43	AB 2 E
F43	CA 2 A
F43	CE 2 B
F44	AB 1 D
F44	FA 2 A
F45	AB 0 D
F45	GG 1 A
F46	AB 3 D
F46	CD 0 A
F47	AB 3 D
F48	AB 0 A
F48	BJ 0 A
F48	BK 0 A
F48	HE 0 A
F49	AB 2 D
F49	EA 3 A
F49	EB 3 A
F50	AB 3 A
F51	AB 4 A
F52	AB 4 C
F52	BG 2 A
F53	AA 1 D
F54	AA 0 D
F54	BK 4 A
F55	AA 2 B
F55	EC 3 A
F56	AA 2 D
F57	AA 3 A
F57	KC 2 A
F58	AA 2 D
F60	AA 3 A
F61	AA 2 A
F61	NA 0 A
F62	AA 3 A
F62	GJ 0 A
F62	NA 2 A
F63	AA 0 D
F63	BE 0 A
F64	AA 1 D
F64	BJ 1 A
F64	BK 3 A
F64	NA 4 A
F64	NC 1 A
F65	AA 1 D
F65	FD 2 A
F65	JB 1 A
F65	NA 2 A

REF	PAGE
F65	NC 2 A
F67	AA 0 A
F67	HD 3 A
F67	KC 0 A
F67	NA 2 A
F67	NC 0 A
F68	AA 2 B
F68	KC 0 A
F69	AA 2 D
F69	IE 2 A
F70	AA 3 C
F70	HA 1 A
F71	AA 1 B
F71	DB 2 A
F71	DD 0 A
F71	NA 3 A
F72	AA 3 D
F74	GA 1 A
F75	AA 0 B
F75	BJ 1 A
F75	BK 1 A
F75	HD 1 A
F76	AA 3 A
F76	CE 2 A
F76	DA 2 A
F79	DA 2 C
F80	DA 3 C
F83	AH 2 B
F83	CE 1 B
F84	AH 1 B
F84	CF 2 A
F85	AH 1 B
F86	AH 2 B
F87	AH 3 B
F88	AH 4 C
F89	AH 4 C
F90	NE 0 B
F91	NE 0 B
F92	NE 1 B
F93	NE 1 B
F94	NE 1 B
F95	NE 2 B
F96	NE 2 B
FB05	CE 4 A
FB07	CD 0 B
FB08	CD 0 A
FCAC:A	HA 2 B
FCAC:B	HA 3 B
FCAC:C	BD 2 C
FCAC:D	BD 3 B

https://truckmanualshub.com/

ALL REFERENCES

REF	PAGE
FCAC:E	HB 3 C
FCAD:A	FA 1 C
FCAD:B	FA 1 D
FCAE2:A	AF 2 D
FCAE2:B	CE 3 B
FCAE:A	AD 1 C
FCAE:B	CD 0 B
FCAPADS:A	HB 2 B
FCAPADS:B	HB 2 B
FCAPADS:C	HB 3 B
FCAPADS:D	HB 2 B
FCAPADS:E	HB 3 C
FCATR:C	DC 4 D
FCATR:D	DC 4 C
FCBB:1	BJ 1 B
FCBB:1	BK 2 C
FCBB:2	BJ 2 B
FCBL:A	GF 2 B
FCBL:B	GA 2 E
FCBL:C	GF 0 C
FCBL:D	GF 1 C
FCBL:E	AD 1 E
FCCE:6	BF 4 C
FCCE:7	GF 1 B
FCCE:8	EB 1 D
FCCE:9	EB 1 D
FCCE:10	EB 2 D
FCCE:11	AD 1 D
FCCE:12	BF 2 D
FCCE:13	BF 2 D
FCCE:14	GF 1 D
FCCE:15	EB 0 B
FCCE:16	EB 0 B
FCCE:17	EB 0 B
FCCE:18	EB 0 B
FCCE:19	EB 0 B
FCCE:20	EB 1 B
FCCE:21	EB 1 B
FCCE:22	EB 1 B
FCCE:23	EB 1 B
FCCE:24	EB 1 B
FCCE:25	EB 1 B
FCCE:26	EB 1 B
FCCE:27	EB 4 C
FCCE:28	BF 1 D
FCCE:29	BF 1 D
FCCE:30	BF 1 D
FCCE:31	BG 2 E
FCCE:32	BG 3 C
FCCE:33	GF 0 B

REF	PAGE
FCCE:34	GF 0 B
FCCE:35	GF 1 B
FCCL:A	CA 2 D
FCCL:B	CA 2 D
FCCL:B	CE 1 C
FCCL:C	BF 0 D
FCCL:C	CE 3 D
FCCL:D	BF 1 E
FCCL:D	CE 3 D
FCCL:E	CE 0 C
FCEIC:1	CD 2 B
FCEIC:2	CD 2 B
FCEIC:3	CD 2 A
FCEIC:4	CD 2 B
FCEIC:5	CD 2 B
FCEIC:6	CD 3 A
FCEIC:7	CD 0 D
FCEIC:8	CD 0 D
FCEIC:9	CD 3 B
FCEIC:10	CD 1 D
FCEIC:11	CD 1 D
FCEIC:12	CD 2 C
FCEIC:13	CD 0 D
FCEIC:14	CD 1 D
FCEIC:15	CD 1 D
FCEN:A	HA 3 C
FCEN:B	CF 0 B
FCEN:C	AG 1 B
FCEN:D	CF 0 B
FCFA:A	JB 0 B
FCFA:B	JB 1 B
FCFA:C	JB 1 C
FCFA:D	JB 0 C
FCFS:A	BF 0 D
FCFS:B	BF 0 D
FCFS:C	BF 0 E
FCGND:1	CE 4 D
FCHC1:B	GP 2 D
FCHC1:C	GP 2 D
FCHC1:D	GP 2 D
FCHC1:E	GP 2 D
FCHC1:F	GP 2 D
FCHC1:J	GP 2 D
FCHC1:K	GP 2 D
FCHC1:L	GP 2 D
FCHC1:M	GP 2 E
FCHC2:B	GP 3 D
FCHC2:C	GP 3 D
FCHC2:D	GP 3 D
FCHC2:E	GP 3 D

REF	PAGE
FCHC2:F	GP 3 D
FCHC2:J	GP 3 D
FCHC2:K	GP 3 D
FCHC2:L	GP 3 D
FCHC2:M	GP 3 E
FCHC:A	GD 0 D
FCHC:A	GE 0 D
FCHC:B	GD 3 D
FCHC:B	GE 3 C
FCHC:D	GD 2 C
FCHC:D	GE 3 C
FCHC:E	GD 0 E
FCHC:E	GE 1 E
FCHC:F	GD 1 D
FCHC:F	GE 1 D
FCHC:G	GD 1 C
FCHC:G	GE 1 C
FCHC:H	GD 1 C
FCHC:H	GE 1 C
FCHC:K	GA 2 E
FCHC_PL:A	GI 0 D
FCHC_PL:B	GI 0 D
FCHC_PL:D	GI 0 D
FCHC_PL:E	GI 0 C
FCHC_PL:F	GI 0 D
FCHC_PL:G	GI 0 C
FCHC_PL:H	GI 3 C
FCHC_PL:K	GI 0 D
FCHDV:A	FA 3 C
FCHDV:B	FA 3 D
FCHL:A	CD 4 D
FCHL:B	CD 3 D
FCHM:A	BF 3 A
FCHM:B	BF 3 A
FCHNP:A	CF 1 C
FCHNP:B	CF 1 D
FCLC:A	CA 3 D
FCLC:B	CA 3 D
FCRE:A	GF 1 C
FCRE:B	GF 0 B
FCRE:C	GF 0 C
FCRE:D	GF 1 C
FCRE:E	GF 1 D
FCSCR:1	CF 1 C
FCSCR:2	CF 1 C
FCSCR:3	CF 4 D
FCSCR:4	CF 4 D
FCSCR:5	CF 4 D
FCSCR:6	CF 4 D
FCSCR:7	CF 4 C

REF	PAGE
FCSCR:8	CF 4 C
FCSCR:9	CF 4 C
FCSCR:10	CF 4 C
FCSCR:12	GF 3 D
FCSCR:13	GF 3 E
FCSPL:A	GI 1 B
FCSS:A	JA 2 C
FCSS:B	JA 2 C
FCSS:C	JA 2 C
FCSS:D	JA 2 C
FCSS:E	JA 2 C
FCTAD:A	FA 0 C
FCTAD:B	FA 0 D
FCTR2:1	DA 2 D
FCTR2:2	DA 2 D
FCTR:A	BC 3 C
FCTR:B	BE 3 B
FCTR:C	BF 1 D
FCTR:D	BF 1 D
FCTR:E	BC 3 B
FCTR:F	BB 0 C
FCTR:F	CE 2 D
FCTR:G	BB 0 C
FCTR:G	CE 2 D
FCTR:H	BE 3 B
FCTR:K	FB 3 B
FCUT2:1	CE 1 D
FCUT2:2	CE 1 D
FCUT2:3	CE 1 D
FCUT2:4	CE 1 D
FCUT2:5	CE 1 D
FCUT2:6	CE 1 D
FCUT2:7	CE 2 D
FCUT2:8	CE 2 D
FCUT2:9	CE 2 D
FCUT2:10	CE 2 D
FCUT2:11	CF 3 B
FCUT2:12	CF 3 B
FCUT2:13	CF 2 C
FCUT2:14	CF 1 C
FCUT2:16	CE 3 C
FCUT2:17	CE 3 C
FCUT2:18	CE 3 C
FCUT2:19	CE 2 C
FCUT2:20	CF 1 D
FCUT2:21	CF 1 C
FCUT2:22	CF 1 C
FCUT2:23	CF 3 B
FCUT2:24	CF 3 B
FCUT:1	CD 1 B

https://truckmanualshub.com/

ALL REFERENCES

REF	PAGE
FCUT:2	CD 1 B
FCUT:3	CD 1 A
FCUT:4	CD 1 A
FCUT:5	CD 1 D
FCUT:6	CD 4 D
FCUT:7	CD 3 E
FCUT:8	CD 2 D
FCUT:9	CD 2 D
FCUT:10	CD 2 D
FCUT:11	CD 2 D
FCUT:12	CD 2 D
FCUT:13	CD 1 D
FCUT:14	CD 1 D
FCVEC1:A	AH 1 D
FCVEC1:B	AH 1 D
FCVEC1:C	AH 1 D
FCVEC1:C	CF 1 C
FCVEC1:D	AH 1 D
FCVEC1:D	CF 1 C
FCVEC1:E	AH 0 D
FCVEC1:E	CF 1 C
FCVEC1:F	AH 0 D
FCVEC1:F	CF 2 C
FCVEC1:G	AH 0 D
FCVEC1:G	CF 2 C
FCVEC1:H	AH 1 D
FCVEC1:H	CF 2 C
FCVEC2:A	AH 3 D
FCVEC2:A	CF 0 C
FCVEC2:B	AH 3 D
FCVEC2:B	CF 0 C
FCVEC2:E	AH 2 D
FCVEC2:E	CE 1 C
FCVEC2:F	AH 2 D
FCVEC2:F	CE 1 C
FCVEC2:G	AH 3 D
FCVEC2:G	CF 0 C
FCVEC2:H	AH 3 D
FCVEC2:H	CF 0 C
FCVEC6:C	AH 0 B
FCVEC6:C	CE 1 B
FGPS1_MATE	BM 0 B
FGPS2_MATE	BM 0 B
FGPS3	BM 2 B
FGPS4	BM 2 C
FHCC:A	KC 2 B
FHCC:B	KC 2 D
FLFC:A	GA 1 D
FLFC:B	GA 1 E
FM1	AD 0 B

REF	PAGE
FM1_A1	AD 1 B
FM1_A1	AE 1 B
FM02	AF 1 C
FM3	AC 3 D
FM03	CF 1 A
FM3_A1	AC 3 D
FM3_A4	HF 1 B
FM3_B	AC 3 D
FM3_B1	AC 3 D
FM3G	CD 0 B
FM4G	CD 0 B
FSP1	NF 0 B
FSP2	NF 0 B
FSP3	NF 1 B
FSP4	NF 2 B
FSP5	NF 2 B
FSP6	NF 3 B
FSP7	NF 3 B
FU.INL.1	DB 0 C
G01	AC 3 C
G01	AD 1 B
G01	AF 0 E
G01	AG 3 E
G01	CD 0 C
G01	CE 4 B
G01	HF 0 A
G01	ND 0 A
G01_1_1213	AE 0 B
G01_2_1213	AE 0 D
G01_3_1213	AE 1 D
G01_4_1213	AE 1 B
G01_5_1213	AE 1 D
G01_6_1213	AE 3 B
G01_7_1213	AE 2 B
G01_8_1213	AE 3 B
G01_9_1213	AE 3 B
G01_11_1213	AE 2 C
G01_12_1213	AE 2 D
G01_13_1213	AE 3 C
G01_14_1213	AE 3 D
G01_N1	AD 1 B
G01_N1	AE 0 D
G01_N2	HF 0 B
G01_N3	HF 0 A
G01_P1	AC 3 C
G01_P1	AE 0 B
G01_P2	HF 1 B
G01_P2A	HF 0 B
G01_P3	HF 1 A
G01_P3A	HF 0 B

REF	PAGE
G01A	AC 3 C
G01A	AE 1 B
G01A_1	AC 3 C
G01C	CE 4 A
G02	AC 4 A
G02	AD 0 B
G02	AF 2 A
G02	AG 3 C
G02.B+	AG 3 C
G02.B-	AF 2 B
G03	HF 0 B
G03.D	HF 0 C
G04	HF 2 B
GENIV:A	DD 1 E
GENIV:B	DD 1 E
GUSLPCAB:A	GF 4 B
GUSLPCAB:B	GF 4 B
GUSLPCAB:C	GF 3 D
H02A	GQ 1 D
H02B	GQ 2 D
H02C	GQ 2 D
H03	GF 2 B
HL_CHU:A	GE 1 C
HL_CXU_GU:A	GD 0 C
HL_CXU_GU:A	GE 0 C
HLSO:A	GH 0 D
HLSO:B	GH 2 D
HLSO:C	GH 2 D
HLSO:D	GH 0 C
HLSO:E	GH 1 D
HLSO:F	GH 0 E
HRSCHRSS:1	HE 1 D
HRSCHRSS:2	HE 1 E
HRSCHRSS:3	HE 4 D
HRSCHRSS:4	HE 4 E
HWR:A	HC 0 D
HWR:A	HG 1 D
HWR:B	HC 0 E
HWR:B	HG 1 D
IEH	CE 0 A
IGN_BAT_SP6:A	NA 3 B
IGN_BAT_SP6:B	NA 3 B
IGN_BAT_SP7:A	NA 0 B
IGN_BAT_SP7:B	NA 0 B
IGN_SP1:A	GL 0 B
IGN_SP1:A	NA 2 B
IGN_SP1:A	NC 3 B
IGN_SP1:B	GL 0 D
IGN_SP1:B	NA 2 B
IGN_SP1_BL:A	GL 0 B

REF	PAGE
IGN_SP1_BL:B	GL 0 D
IGN_SP3:A	FD 2 B
IGN_SP3:A	NA 2 B
IGN_SP3:A	NC 2 B
IGN_SP3:B	FD 2 B
IGN_SP3:B	NA 2 B
IGN_SP3_DC:A	FD 1 B
IGN_SP3_DC:B	FD 2 B
IGN_SP3_PTO:A	FD 2 B
IGN_SP3_PTO:B	FD 2 B
IGN_SP5:A	NA 3 B
IGN_SP5:B	NA 3 B
IGN_SP8:B	NA 4 B
IGN_SP8:B	NC 1 B
IGN_SP9:A	FE 1 B
IGN_SP10:B	NC 1 B
IGN_SP11:A	NC 2 B
IGN_SP12:A	NC 3 B
ILLUM_OPT1:A	HC 0 A
ILLUM_OPT1:A	HG 1 A
ILLUM_OPT1:B	HC 0 C
ILLUM_OPT1:B	HG 0 C
ILLUM_OPT2:A	NC 1 B
ILLUM_OPT2:B	NC 2 B
ILLUM_OPT3:A	HC 0 A
ILLUM_OPT3:B	HC 4 D
ILLUM_OPT4:A	HC 4 B
ILLUM_OPT4:B	HC 4 D
ILLUM_OPT5:A	NC 1 B
ILLUM_OPT5:B	NC 2 B
ILLUM_OPT6:A	HC 1 B
ILLUM_OPT6:A	HG 1 B
ILLUM_OPT6:B	HC 0 C
ILLUM_OPT6:B	HG 0 C
ILLUM_OPT11:A	JA 1 B
ILLUM_OPT11:B	JA 1 D
ILLUM_OPT12:A	JA 1 B
ILLUM_OPT12:B	JA 0 D
ILLUM_OPT13:A	KC 4 A
ILLUM_OPT13:B	KC 4 A
ILLUM_OPT14:A	KC 4 A
ILLUM_OPT14:B	KC 4 A
ILLUM_OPT15:A	BC 4 A
ILLUM_OPT15:B	BC 4 C
ILLUM_OPT16:A	BC 4 A
ILLUM_OPT16:B	BC 4 C
ILLUM_OPT17:A	FD 0 B
ILLUM_OPT17:B	FD 0 C
ILLUM_OPT18:A	FD 0 B
ILLUM_OPT18:B	FD 0 C

https://truckmanualshub.com/

ALL REFERENCES

REF	PAGE
ILLUM_OPT19:A	GL 0 B
ILLUM_OPT19:B	GL 1 C
ILLUM_OPT20:A	GL 0 B
ILLUM_OPT20:B	GL 1 C
ILLUM_OPT:A	HC 0 A
ILLUM_OPT:A	NA 1 B
ILLUM_OPT:A	NC 1 B
ILLUM_OPT:B	NA 1 B
ILLUM_OPT:B	NC 2 B
KB_20828057_3311	EB 2 C
M01	GP 1 C
M02	GP 0 C
M03	HC 3 D
M03	HG 3 D
M04	AF 0 A
M04	AG 3 B
M04	AG 3 B
M04.A	AG 3 B
M04.A.B	AG 3 B
M04.C	AF 0 B
M06	ID 3 D
M06DS	IA 1 D
M06PS	IA 3 D
M80	ID 1 B
M80L	IE 1 C
M80R	IE 3 B
M110CFL	BF 3 B
M110CFR	BF 3 B
M110CL	IC 3 D
M110CR	IC 4 D
M110L	IC 0 D
M110R	IC 1 D
MC-1_328	HF 3 C
MC-1_411	HF 0 C
MC-1_518	HF 1 C
MC-1_877	HF 2 C
MC-2_328	HF 3 C
MC-4_328	HF 1 C
MC-5_328	HF 1 C
MC_SLP_CAB1:A	KA 3 B
MC_SLP_CAB1:B	KA 3 B
MC_SLP_CAB1:C	KA 3 B
MC_SLP_CAB1:D	KA 3 B
MC_SLP_CAB1:E	HE 3 A
MC_SLP_CAB1:F	AA 4 C
MC_SLP_CAB1:G	HE 0 C
MC_SLP_CAB1:H	HE 0 C
MC_SLP_CAB2:A	HE 1 A
MC_SLP_CAB2:B	HD 2 C
MC_SLP_CAB2:C	AD 3 C

REF	PAGE
MC_SLP_CAB2:D	AD 3 D
MC_SLP_CAB3:A	HE 1 B
MC_SLP_CAB3:B	HE 1 B
MC_SLP_CAB3:C	HD 3 B
MC_SLP_CAB3:D	HD 3 B
MC_SLP_CAB3:E	HD 3 B
MC_TAS:A	BF 3 C
MC_TAS:B	BF 2 E
MCAF:A	HC 3 B
MCAF:B	HC 3 D
MCAT_CAB:1	DB 3 B
MCAT_CAB:2	DB 2 B
MCAT_CAB:3	DB 4 B
MCAT_CAB:4	DB 3 A
MCAT_CAB:5	DB 3 C
MCAT_CAB:6	DB 2 B
MCAT_CAB:7	DB 2 B
MCAT_CAB:8	DB 1 C
MCAT_CAB:9	DB 1 A
MCAT_CAB:12	DB 3 A
MCAT_CAB:13	DB 3 B
MCAT_CAB:14	DB 1 A
MCAT_JUMP	DB 1 A
MCBB1:1	BJ 2 B
MCBB1:2	BJ 2 B
MCBB1:3	BJ 2 B
MCBB1:3	BK 3 C
MCBB1:4	BJ 2 B
MCBB1:4	BK 3 C
MCBB1:5	BJ 3 B
MCBB1:6	BJ 3 B
MCBB1:7	BJ 3 B
MCBB1:7	BK 3 C
MCBB1:8	BJ 3 B
MCBB1:8	BK 3 C
MCBB1:9	BJ 3 B
MCBB1:9	BK 3 C
MCBB1:10	BJ 4 B
MCBB1:10	BK 3 C
MCBB1:10	BN 3 B
MCBB1:11	BJ 4 B
MCBB1:11	BK 4 C
MCBB1:11	BN 3 B
MCBB1:12	BJ 1 D
MCBB1:12	BK 2 C
MCBB1:12	BN 1 B
MCBB1:13	BJ 1 D
MCBB1:13	BK 2 C
MCBB1:13	BN 1 B
MCBB1:14	BJ 1 D

REF	PAGE
MCBB1:14	BK 2 C
MCBB1:14	BN 2 B
MCBB1:16	BJ 1 D
MCBB1:16	BK 2 C
MCBB1:16	BN 3 B
MCBB1:17	BJ 1 D
MCBB1:17	BK 1 C
MCBB1:17	BN 1 B
MCBB1:18	BJ 1 D
MCBB2:A	BJ 1 D
MCBB2:A	BK 1 C
MCBB2:A	BN 1 B
MCBB2:B	BJ 1 D
MCBB2:B	BK 1 C
MCBB2:B	BN 1 B
MCBB2:C	BJ 1 C
MCBB2:C	BK 0 C
MCBB2:D	BJ 0 B
MCBB2:D	BK 0 B
MCBB:A	BK 4 B
MCBB:B	BK 4 B
MCCC:A	KC 2 B
MCCC:B	KC 2 D
MCCTI:A	FE 1 D
MCCTI:B	FE 1 D
MCCTI:C	FE 2 D
MCCTI:D	FE 2 D
MCCTI:E	FE 0 E
MCCTI:F	FE 1 D
MCCTI:G	FE 1 B
MCCTI:H	FE 2 B
MCDIAG:A	XA 2 C
MCDIAG:B	XA 2 C
MCDIAG:C	XA 2 C
MCDIAG:D	XA 2 C
MCDIAG:E	XA 3 C
MCDIAG:F	XA 3 C
MCDIAG:G	XA 3 C
MCDIAG:H	XA 3 D
MCDIAG:K	XA 2 D
MCDL1:A	IC 0 D
MCDL1:B	IC 0 D
MCDL1:C	IC 0 A
MCDL1:D	GH 1 B
MCDL1:E	IC 3 A
MCDL1:F	IC 0 D
MCDL1:G	IC 0 D
MCDL1:H	IC 0 D
MCDL2:A	IE 1 B
MCDL2:B	IE 1 B

REF	PAGE
MCDL2:C	IE 1 C
MCDL2:D	IE 1 C
MCDL2:E	IE 1 A
MCDL2:F	IE 0 A
MCDL3:A	IA 1 B
MCDL3:B	IA 2 B
MCDL3:C	IA 2 C
MCDL3:D	IA 2 D
MCDL3:E	IE 0 C
MCDL3:F	IA 1 B
MCDL4:B	GH 4 B
MCDL4:C	GH 3 A
MCDR1:A	IC 1 D
MCDR1:B	IC 1 D
MCDR1:D	GH 1 B
MCDR1:E	IC 4 A
MCDR1:F	IC 1 D
MCDR1:G	IC 1 D
MCDR1:H	IC 1 D
MCDR2:A	IE 2 B
MCDR2:B	IE 2 B
MCDR2:C	IE 2 C
MCDR2:D	IE 2 C
MCDR2:E	IE 2 B
MCDR2:F	IE 4 B
MCDR2B:A	ID 1 B
MCDR2B:E	ID 1 B
MCDR3:B	IA 3 B
MCDR3:C	IA 2 C
MCDR3:D	IA 2 D
MCDR3:E	IA 4 C
MCDR3:F	IA 3 B
MCDR3B:C	ID 3 C
MCDR3B:D	ID 3 C
MCDR4:B	GH 3 C
MCDR4:C	GH 4 C
MCEC1:A	HA 4 A
MCEC1:B	HA 4 A
MCEC2:A	HA 4 B
MCEC2:B	HA 4 B
MCEC:A	HA 1 C
MCEC:B	HA 2 C
MCES:A	EC 0 B
MCES:B	EC 0 B
MCES:C	EC 3 B
MCES:D	EC 3 B
MCES:E	EC 3 B
MCES:F	EC 3 B
MCES:G	EC 3 B
MCES:H	EC 4 C

https://truckmanualshub.com/

ALL REFERENCES

REF	PAGE
MCES:J	EC 3 E
MCES:K	EC 2 E
MCFC:1	EA 3 E
MCFC:1	EB 3 C
MCFC:2	EA 3 D
MCFC:2	EB 3 C
MCFC:3	EA 3 D
MCFC:3	EB 3 C
MCFC:4	EA 2 E
MCFC:4	EB 3 C
MCFC:5	EA 2 D
MCFC:5	EB 3 C
MCFC:6	EA 3 D
MCFC:6	EB 3 C
MCFC:8	BE 3 B
MCFC:9	JB 1 B
MCFC:10	JA 3 C
MCFC:11	JA 3 C
MCFC:12	JA 3 C
MCFC:13	FB 1 D
MCFC:14	FB 2 C
MCFC:15	FB 1 D
MCFC:16	BJ 1 B
MCFC:16	BK 2 C
MCFC:17	EA 2 D
MCFC:17	EB 2 C
MCFC:18	EA 2 D
MCFC:18	EB 2 C
MCFC:19	EA 2 D
MCFC:19	EB 3 C
MCFC:20	EA 2 D
MCFC:20	EB 3 C
MCFC:21	EA 1 D
MCFC:21	EB 1 B
MCFC:22	EA 1 D
MCFC:22	EB 1 B
MCFC:23	EA 0 B
MCFC:23	EB 0 C
MCFC:24	EA 0 B
MCFC:24	EB 0 C
MCFC:25	EA 0 B
MCFC:25	EB 0 C
MCFC:26	EA 0 B
MCFC:26	EB 0 C
MCFC:27	EA 0 B
MCFC:27	EB 0 C
MCFC:28	EA 1 B
MCFC:28	EB 1 C
MCFC:29	EA 1 B
MCFC:29	EB 1 C

REF	PAGE
MCFC:30	EA 1 B
MCFC:30	EB 1 C
MCFC:31	EA 1 B
MCFC:31	EB 1 C
MCFC:32	EA 1 B
MCFC:32	EB 1 C
MCFC:33	EA 0 E
MCFC:33	EB 0 B
MCFC:34	EA 1 D
MCFC:34	EB 0 B
MCFC:35	EA 1 D
MCFC:35	EB 0 B
MCFC:36	EA 0 D
MCFC:36	EB 0 B
MCFC:37	EA 0 D
MCFC:37	EB 0 B
MCFC:38	EA 0 E
MCFC:38	EB 1 B
MCFC:39	EA 1 D
MCFC:39	EB 1 B
MCFC:40	EA 1 D
MCFC:40	EB 1 B
MCFC:41	EA 0 D
MCFC:41	EB 1 B
MCFC:42	EA 0 D
MCFC:42	EB 1 B
MCFC:43	BC 2 D
MCFC:43	EB 4 C
MCFC:44	CE 2 A
MCFC:45	XA 1 C
MCFC:46	XA 1 C
MCFC:47	BF 1 C
MCFC:48	BF 1 C
MCFC:49	BG 2 D
MCFC:50	BG 1 D
MCFC:51	BG 1 B
MCFC:52	BD 2 D
MCFC:53	GD 0 D
MCFC:53	GE 1 E
MCFC:54	GP 1 C
MCFC:55	BF 2 C
MCFC:56	BF 0 C
MCFC:57	BF 2 C
MCFC:58	BF 2 E
MCFC:59	BE 3 B
MCFC:60	BB 0 C
MCFC:61	BB 0 C
MCFC:62	BF 1 C
MCFC:63	HA 2 B
MCFC:64	FB 0 B

REF	PAGE
MCFC:65	BB 1 B
MCFC:66	BF 0 B
MCFC:67	BF 0 B
MCFC:68	AC 0 C
MCFC:69	BF 0 C
MCFC:70	BC 3 B
MCFC:71	GP 1 C
MCFC:72	GP 0 B
MCFC:73	GP 0 C
MCFC:74	GP 1 C
MCFC:75	BG 1 D
MCFC:76	BD 2 C
MCFC:77	GF 3 B
MCFC:78	FB 1 D
MCFC:79	GA 1 C
MCFC:80	GD 0 C
MCFC:80	GE 0 C
MCFC:81	GD 1 C
MCFC:81	GE 1 C
MCFC:82	GA 2 D
MCFC:83	XA 3 E
MCFC:84	XA 3 E
MCFC:85	BF 3 A
MCFC:86	FB 1 D
MCFC:87	BD 1 D
MCFC:88	BG 2 D
MCFC:89	BG 2 C
MCFC:90	FB 4 C
MCFC:91	BC 2 B
MCFC:92	BC 2 C
MCFC:93	FB 3 D
MCFC:94	FB 3 B
MCFC:95	GI 1 B
MCFC:96	BJ 2 B
MCFC:97	GF 1 B
MCFC:98	BA 2 D
MCFC:99	BF 4 C
MCFC:100	GF 0 B
MCFC:101	FB 4 B
MCFC:102	FB 4 C
MCFC:103	CE 0 C
MCFC:107	EB 4 C
MCFC:108	EB 4 C
MCFC:109	EB 2 C
MCFC:110	EB 2 C
MCFC:111	EB 2 C
MCFC:112	EB 2 C
MCFC:113	EB 2 C
MCFC:114	EB 2 C
MCFC:115	EB 1 D

REF	PAGE
MCFC:116	EB 1 D
MCFC:117	EB 1 D
MCFC:118	EB 1 D
MCFC:119	EB 2 C
MCFC:120	EB 2 C
MCFC:124	CE 1 A
MCFC:125	GJ 3 C
MCFC:126	GJ 3 D
MCFC:127	GJ 1 C
MCFC:128	GJ 1 D
MCFL:A	GA 2 A
MCFL:B	GA 2 B
MCFL:C	GA 2 A
MCHL:A	GF 2 B
MCHL:B	GF 2 D
MCHLGUSLP:A	GF 4 B
MCHLGUSLP:B	GF 3 D
MCHS:A	HC 3 B
MCHS:B	HC 3 D
MCHW:A	HC 2 B
MCHW:A	HG 1 B
MCHW:B	HC 0 D
MCHW:B	HG 0 D
MCIS:A	KC 0 B
MCIS:B	KC 0 C
MCLA:A	BF 4 B
MCLA:B	BF 4 B
MCLA:C	BF 4 B
MCLSL:A	GD 2 B
MCLSL:A	GE 2 C
MCLSL:B	GD 2 D
MCLSL:B	GE 2 D
MCLSLCO1:A	GD 2 B
MCLSLCO1:B	GD 2 D
MCLSLCO2:A	GD 2 B
MCLSLCO2:B	GD 2 D
MCNAV:A	BM 4 B
MCNAV:B	BM 4 B
MCNAV:C	BM 4 B
MCNAV:D	BM 4 B
MCOF2:A	KA 0 C
MCOF2:B	KA 0 C
MCOF2:C	KA 0 C
MCOF2:D	KA 0 C
MCOF2:E	KC 3 D
MCOF2:G	GA 1 E
MCOF2:G	GM 1 D
MCOF3:A	KA 0 C
MCOF3:B	KA 0 C
MCOF4:A	GA 3 D

https://truckmanualshub.com/

ALL REFERENCES

REF	PAGE
MCOF4:B	GA 3 E
MCOF:A	GH 0 B
MCOF:B	HE 0 D
MCOF:C	GH 1 C
MCOF:D	HE 0 D
MCOF:E	KC 3 A
MCOF:F	GH 0 A
MCOF:H	GA 0 C
MCOF:H	GM 1 C
MCOFCOA:A	GH 0 B
MCOFCOA:C	GH 4 D
MCOFCOA:E	GH 4 D
MCOFCOA:F	GH 4 D
MCOFCOA:G	GH 4 D
MCOFCOA:H	GH 4 D
MCOFCOB:A	GH 0 B
MCOFCOB:C	GH 4 E
MCOFCOB:E	GH 4 E
MCOFCOB:F	GH 4 E
MCOFCOB:G	GH 4 E
MCOFCOB:H	GH 4 E
MCOFCOC:A	GM 0 B
MCOFCOC:B	GM 0 B
MCOFCOC:C	GM 0 B
MCOFCOC:D	GM 0 B
MCOFCOC:E	GM 0 B
MCOFCOC:F	GM 0 B
MCOFCOC:G	GM 1 B
MCOFCOC:H	GM 1 B
MCOFCOD:A	GM 0 C
MCOFCOD:B	GM 0 C
MCOFCOD:C	GM 0 C
MCOFCOD:D	GM 0 C
MCOFCOD:E	GM 0 C
MCOFCOD:F	GM 0 C
MCOFCOD:G	GM 1 C
MCOFCOD:H	GM 1 C
MCOWL:A	GL 0 C
MCOWL:B	GL 0 D
MCPLW:A	IE 2 B
MCPLW:B	IE 2 B
MCPLW:C	IE 0 D
MCPLW:D	IE 1 D
MCPLW:E	IE 1 D
MCPLW:F	IE 2 D
MCPLW:G	IE 2 D
MCPLW:H	IE 2 D
MCPLW:J	IA 2 A
MCPLW:K	IA 2 B
MCPLW:K	ID 3 B

REF	PAGE
MCPLW:L	IA 3 B
MCPLW:L	ID 3 B
MCPLW:M	IA 3 B
MCPLW:M	ID 3 B
MCPLW:N	ID 0 B
MCPLW:N	IE 1 B
MCPLW:P	IA 4 D
MCPLW:P	ID 2 E
MCPLW_A:A	IE 2 B
MCPLW_A:B	IE 2 B
MCPLW_A:C	IE 0 D
MCPLW_A:D	IE 1 D
MCPLW_A:E	IE 1 D
MCPLW_A:F	IE 2 D
MCPLW_A:G	IE 2 D
MCPLW_A:H	IE 2 D
MCPLW_B:J	IA 2 B
MCPLW_B:K	IA 2 B
MCPLW_B:L	IA 3 B
MCPLW_B:M	IA 3 B
MCPLW_B:N	IE 1 B
MCPLW_B:P	IA 4 D
MCPLW_C:K	ID 3 B
MCPLW_C:L	ID 3 B
MCPLW_C:M	ID 3 B
MCPLW_C:N	ID 0 B
MCPLW_C:P	ID 2 E
MCRSL:A	GD 4 B
MCRSL:A	GE 4 C
MCRSL:B	GD 4 D
MCRSL:B	GE 4 D
MCRSLCO1:A	GD 4 B
MCRSLCO1:B	GD 4 D
MCRSLCO2:A	GD 4 B
MCRSLCO2:B	GD 4 D
MCSC:A1	GA 2 C
MCSC:A2	GA 2 D
MCSC:A3	GA 2 C
MCSC:A4	GA 2 B
MCSC:A5	GA 2 C
MCSC:A6	GA 2 D
MCSC:A7	GA 3 B
MCSC:A8	GA 2 B
MCSC:A9	GA 3 D
MCSC:A10	AC 0 B
MCSC:A11	AC 0 C
MCSC:A12	AC 0 B
MCSC:A13	AC 0 C
MCSC:A14	GQ 0 C
MCSC:A15	GQ 0 D

REF	PAGE
MCSC:B1	BE 1 B
MCSC:B2	BE 1 B
MCSC:B3	BE 1 B
MCSC:B4	BE 1 B
MCSC:B5	BE 1 B
MCSC:B7	GA 3 B
MCSC:B8	GA 3 B
MCSC:B9	GA 3 D
MCSD:1	JA 3 C
MCSD:2	JA 3 C
MCSD:3	JA 3 C
MCSD:4	JA 4 C
MCTR:1	XA 2 A
MCTR:2	XA 2 A
MCTR:3	XA 1 C
MCTR:4	XA 1 C
MCTR:5	XA 2 C
MCTR:6	XA 2 C
MCTR:7	XA 2 A
MCTR:11	XA 2 B
MCTR:12	DA 3 D
MCTR:14	DA 4 D
MCVL:A	BM 0 C
MCVL:B	BM 1 C
MCVL:C	BM 1 C
MISC_2:A	NC 3 D
MISC_2:A	NE 1 D
MISC_3:A	NC 2 D
MISC_3:A	NE 3 D
MISC_4:A	NC 1 D
MISC_4:A	NE 0 D
MISC_5:A	NC 0 D
MISC_5:A	NE 4 D
MISC_6:A	NC 0 D
MISC_6:A	NE 2 D
MISC_7:A	NE 2 D
MSTC-1_16	CD 3 B
MSTC-1_320	EA 0 D
MSTC-1_1890	CE 0 C
MSTC-1_2048	CA 1 D
MSTC-1_2144	CD 3 B
MSTC-1_2185	CD 1 B
MSTC-1_2972	CD 2 B
MSTC-1_3589	CF 3 B
MSTC-1_3651	CF 3 C
MSTC-1_3667	CF 3 D
MSTC-1_3967	CF 3 B
MSTC-1_5966	CA 0 B
MSTC-2_16	CD 2 B
MSTC-2_320	EA 0 D

REF	PAGE
MSTC-2_2972	CD 2 B
MSTC-2_3651	CF 2 B
MSTC-3_16	CD 2 B
MSTC-3_320	EA 0 B
MSTC-3_1890	CE 0 C
MSTC-3_2972	CD 3 B
MSTC-3_3651	CF 3 C
MSTC-3_4708	CF 4 D
MSTC-4_16	CD 2 B
MSTC-4_320	EA 1 B
MSTC-4_1890	CE 0 D
MSTC-4_2972	CD 2 B
MSTC-4_3651	CF 3 D
MSTC-5_16	CA 0 C
MSTC-6_16	CA 0 B
MSTC-7_16	CA 0 B
MSTC-8_16	CA 0 B
MSTC-9_16	CA 3 C
MSTC-10_16	XA 2 D
MSTC-11_16	XA 2 E
OBD	XA 2 D
OPT_SW_PWR:A4	NE 0 B
OPT_SW_PWR:A4	NF 0 B
OPT_SW_PWR:A5	NE 0 B
OPT_SW_PWR:A5	NF 0 B
OPT_SW_PWR:A6	NE 0 B
OPT_SW_PWR:A7	NE 0 B
OPT_SW_PWR:A7	NF 0 B
OPT_SW_PWR:A8	NE 1 B
OPT_SW_PWR:A9	NE 1 B
OPT_SW_PWR:A9	NF 1 B
OPT_SW_PWR:B4	NE 1 B
OPT_SW_PWR:B4	NF 2 B
OPT_SW_PWR:B5	NE 1 B
OPT_SW_PWR:B5	NF 2 B
OPT_SW_PWR:B6	NE 2 B
OPT_SW_PWR:B7	NE 2 B
OPT_SW_PWR:B7	NF 2 B
OPT_SW_PWR:B8	NE 2 B
OPT_SW_PWR:B9	NE 2 B
OPT_SW_PWR:B9	NF 3 B
OPT_SW_PWR:C4	NE 1 B
OPT_SW_PWR:C4	NF 3 B
OPT_SW_PWR:C5	NE 1 B
OPT_SW_PWR:C5	NF 3 B
PB_START:A	AC 1 B
PB_START:B	AC 1 B
PBS_CLUTCH_SW:A	AC 1 A
PBS_CLUTCH_SW:B	AC 1 A
PBSTART:A	AC 1 B

https://truckmanualshub.com/

ALL REFERENCES

REF	PAGE
PBSTART:B	AC 1 B
PL:1	GI 2 D
PL:2	GI 2 D
PL:3	GI 2 D
PL:4	GI 2 D
PL:5	GI 2 D
PL:6	GI 2 D
PL:7	GI 1 D
PL:8	GI 2 D
PM:1	GA 3 B
PM:2	GA 3 A
PM:3	AA 0 D
PM:4	AA 0 D
PM:5	AA 0 D
PM:6	AA 0 D
PM:7	AA 0 B
PM:8	AA 1 C
PM:9	AA 1 B
PM:10	AA 1 C
PM:11	GD 1 B
PM:11	GE 1 C
PM:12	GD 2 B
PM:12	GE 2 C
PM:13	GD 1 B
PM:13	GE 2 B
PM:14	GD 1 B
PM:14	GE 2 C
PM:15	GD 1 B
PM:15	GE 2 B
Power	GK 1 C
PPCO:1	FD 1 C
PPCO:2	FD 1 C
PPCO:3	FD 2 C
R01	AD 0 A
R01C.A	CF 0 B
R01C.A	CF 0 B
R02	CC 0 B
R03	CC 0 D
R03A	CC 1 C
R04	KC 0 B
R05	FA 0 D
R08	CF 2 B
R08_MATE	XA 3 A
R08_TGW	XA 0 D
R08_TGW_DEU:1	XA 0 E
R08_TGW_DEU:2	XA 0 E
R08M	XA 0 C
R09	FA 0 D
R14	CE 0 C
R17_A_MATE	BL 0 C

REF	PAGE
R17_B_MATE	BL 0 C
R17_C_MATE	BL 1 C
R17_D_MATE	BL 1 C
R17_E_MATE	BL 2 C
R17_F_MATE	BL 2 C
R17_G_MATE	BL 3 C
R17_H_MATE	BL 3 C
R19	FA 3 C
R21	XA 2 B
R21_TGW	BM 1 C
R21_TGW_OL:A	BM 0 C
R21_TGW_OL:B	BM 1 C
R25	HC 2 C
R26	HC 3 C
R27	KA 4 D
R28	HC 1 D
R28	HG 2 D
R29	HC 1 D
R29	HG 1 D
R29_A	CD 4 D
R29_A	CF 1 D
R30	HC 2 C
R30	HG 2 D
R30_A	CF 2 D
R31_A	CF 1 C
R32	CD 3 D
R32_A	CD 3 E
R42A.30	CF 0 B
R42A.85	CF 0 A
R42A.86	CF 0 B
R42A.87	CF 1 A
R49	KA 1 B
R60	EB 4 B
RC1:B8	DA 2 C
RC1:B9	DA 2 C
RC1:C1	DE 3 C
RC1:C3	DE 3 B
RC1:C4	DA 2 B
RC1:C6	DA 2 B
RC1:C8	DA 3 C
RC1:C9	DA 3 C
RC1:D1	DE 3 C
RC1:D3	DE 3 B
RC1:D4	DA 2 B
RC1:D6	DA 2 B
RC1_MATE	AA 4 A
RC2:A1	GD 0 B
RC2:A1	GE 0 B
RC2:A2	GD 0 B
RC2:A2	GE 0 B

REF	PAGE
RC2:A3	GD 0 B
RC2:A3	GE 0 B
RC2:A4	GA 2 D
RC2:A6	GA 2 C
RC2:B1	GD 0 B
RC2:B1	GE 0 B
RC2:B3	GD 0 B
RC2:B3	GE 0 B
RC2:B4	GA 2 D
RC2:B6	GA 2 C
RC2:C1	GD 1 B
RC2:C1	GE 1 B
RC2:C2	GD 1 B
RC2:C2	GE 1 B
RC2:C3	GD 1 B
RC2:C3	GE 1 B
RC2:D1	GD 1 B
RC2:D1	GE 1 B
RC2:D3	GD 1 B
RC2:D3	GE 1 B
RC2_MATE	AA 4 B
RCECS:A	EC 1 B
RCECS:B	EC 1 B
RCECS:C	EC 1 B
RCECS:D	EC 2 B
RCECS:E	EC 2 B
RCECS:F	EC 2 B
RCECS:G	EC 2 D
RCECS:H	EC 2 D
RCECS:J	EC 2 D
RCECS:K	EC 1 D
RCECS:L	EC 1 D
RCECS:M	EC 1 D
RCECS:N	EC 0 D
RCSP:1	FB 2 E
RCSP:2	FB 0 D
RCSP:3	FB 1 D
RCSP:4	FB 1 D
RCSP:5	FB 1 D
RCSP:6	FB 1 D
RCSP:7	FB 1 D
RCSP:8	FB 2 D
RCSP:9	FB 2 D
RCSP:10	FB 2 D
RCSP:11	FB 0 E
RCSP:12	FB 1 D
RCSP:13	FB 1 E
RCSP:14	FB 1 E
RFCB1:A	KC 3 B
RFCB1:B	KC 3 D

REF	PAGE
RFCB2:A	KC 3 B
RFCB2:B	KC 3 D
RFCB2:C	GH 0 B
RFCB:A	KC 3 B
RFCB:B	KC 3 D
RFCB:C	GH 0 B
RFHL:A	GH 0 B
RFHL:B	GA 3 E
RFHL:C	GH 1 D
RFHL:D	GH 0 B
RFMIC:A	KA 0 B
RFMIC:B	KA 0 B
RFRC:E	GH 0 A
RHGJ1:B	KA 1 B
RHGJ:A	KA 1 A
RHGJ:B	KA 1 B
RLY01	AA 1 B
RLY02	AB 2 C
RLY03	AA 1 D
RLY04	AB 0 C
RLY06	GA 3 B
RLY06R	DB 2 B
RLY08	GA 1 D
RLY10	GA 2 D
RLY11	AB 1 B
RLY11	GG 0 B
RLY12	AB 3 B
RLY12	GG 1 B
RLY13	AB 2 B
RLY13	GA 4 D
RLY14	AB 1 B
RLY14	GQ 1 B
RLY16	GP 1 B
RLY17	AB 0 B
RLY17	GG 3 B
RLY19	DB 3 B
RLY20	DB 1 B
RLY26	AA 3 D
RLY26	HA 1 A
RLY28	AA 3 B
RLY29	AB 1 B
RLY29	GG 2 B
RLY31	AA 3 B
RLY33	BF 1 A
RLY34	AA 1 B
RLY35	AA 3 D
RLY35	HA 0 A
RLY36	AC 2 C
RLY38	AB 4 B
RLY39	AB 3 B

https://truckmanualshub.com/

ALL REFERENCES

REF	PAGE
RLY42A	CF 0 B
RLY43L_MATE	GI 1 C
RLY43R_MATE	GI 0 C
RLY44_MATE	GI 2 C
RLY46_MATE	GI 3 C
RLY47	DE 3 C
RLY52	GA 1 A
RLY53	AA 0 C
RLY53	BJ 1 B
RLY53	BK 1 B
RLY53	HD 1 B
RLY54	DD 2 B
RLY56	GJ 0 C
RLY57	BE 3 D
RLY57	EC 3 B
RLY58	GJ 2 C
RLY60_MATE	HB 3 A
RLY70	NE 3 A
RLY70	NF 4 A
RLY73	DA 2 B
RLY80	AH 2 C
RLY80	CE 1 B
RLY81	AH 3 C
RLY81	CF 0 C
RLY82	AH 0 C
RLY82	CF 1 B
RLY83	AH 0 C
RLY83	CF 2 B
RLY84	AH 1 C
RLY84	CF 1 B
RLY85	AH 1 C
RLY86	AH 2 C
RLY87	AH 3 C
RLY91	BL 1 B
RLY93	BL 0 B
RLY94	BL 2 B
RLY97	GD 0 B
RLY97	GE 0 B
RLY98	GD 1 B
RLY98	GE 1 B
rly_1p2t3_24	DB 2 D
rly_1p2t4_24	DB 1 D
RO8_TGW_PED:A	XA 0 E
RO8_TGW_PED:B	XA 0 E
S01	GA 0 B
S006	BA 1 B
S07	BA 2 B
S007	BA 1 B
S07_A	BL 4 B
S008	BA 3 B

REF	PAGE
S08A	NE 2 D
S08B	NE 0 D
S08C	NE 3 D
S08D	NE 1 D
S08E	NE 2 D
S08F	NE 4 D
S009	GP 0 B
S011	BA 3 B
S12	GI 2 A
S013	BE 2 B
S014	HD 1 B
S016	EA 2 B
S016	EB 2 B
S017C	GH 0 D
S017D	HE 0 B
S017E	HE 0 E
S017F	GH 2 D
S017G	GH 3 D
S018	BC 2 B
S018_1_MATE	BC 3 C
S019	FB 4 C
S020	FB 0 C
S021	BD 3 B
S022	FB 1 C
S023	FB 3 C
S023_1	FB 3 A
S024	BD 1 B
S24A	BL 3 B
S24C	DD 1 B
S026A	NA 1 C
S026B	NC 3 C
S026C	NC 2 C
S026D	NC 1 C
S027A	NA 0 C
S027B	NC 0 C
S028	ID 1 C
S028L	IE 0 B
S028R	IE 3 B
S030	IC 0 B
S036	AC 0 B
S036	GQ 0 C
S036B	AC 1 B
S038	GA 3 B
S038C	BB 2 C
S038C2	BB 4 B
S038C_A:C	BB 4 C
S038C_A:D	BB 4 C
S038MC:A	BB 4 C
S038MC:B	BB 4 C
S039	GA 2 C

REF	PAGE
S041L	GH 4 A
S041R	GH 4 C
S041SB	HE 3 C
S041SL	HE 3 D
S041SR	HE 3 C
S042	BE 3 B
S43	BA 3 D
S043	BE 1 B
S43B	BK 2 B
S43C	BG 2 D
S044	BB 2 B
S045	BA 1 D
S047	BG 3 D
S047A	BG 3 E
S048	BG 3 C
S050	FB 1 B
S051	FB 2 B
S051A	FB 2 C
S052	BG 0 B
S055	HE 0 B
S056	BD 1 B
S057	GJ 0 D
S058	GJ 0 B
S58B	AC 2 B
S059	HC 0 B
S059	HG 0 B
S060	HC 4 C
S060	HG 4 C
S61	BE 1 D
S061	GJ 2 B
S62	FE 0 D
S067	GL 0 B
S068B	NF 0 C
S068C	NF 0 C
S068D	NF 1 C
S069B	NF 3 C
S069C	NF 2 C
S069D	NF 2 C
S99	JA 1 C
S106	ID 3 B
S106DS	IA 2 C
S106PS	IA 3 C
S107	IA 1 C
S110	HE 1 C
S111	HD 3 B
S111A	CB 2 C
S130	EC 2 D
S133	EC 3 D
S137	BC 4 B
S137A	FD 1 B

REF	PAGE
S145	KC 4 B
S169	AC 3 C
S169	AG 3 D
S171	DA 0 D
S212	EB 4 A
S320	FD 1 D
SBF1	HE 3 B
SBF2	HE 0 A
SBF3	HE 2 B
SBF4	HE 2 B
SBF6	HE 2 B
SBF7	HE 2 B
SBW:A	BE 1 E
SBW:B	BE 1 D
SC-1_669	KA 1 B
SC-1_4748	BX 0 C
SC-1_5896	KA 0 C
SC-2_669	KA 1 D
SC-2_4318	KA 0 B
SC-2_4748	BX 2 B
SC-3_4318	KA 0 B
SC-3_4748	BX 0 B
SC-4_4318	KA 2 D
SC-4_4748	BX 1 B
SC-5_4318	KA 2 C
SC-6_4318	KA 2 B
SC-9_4748	BU 0 D
SC-10_4748	BU 2 C
SC-11_4748	BU 3 E
SC-12_4748	BU 0 C
SC-13_4748	BU 2 B
SC-14_4748	BU 0 B
SC-15_4748	BU 1 B
SC-16_4748	BU 0 B
SC-17_4748	BV 1 B
SC-18_4748	BV 0 B
SC-19_4748	BV 1 D
SC-20_4748	BV 2 B
SC-21_4748	BV 3 E
SC-22_4748	BV 2 C
SC-23_4748	BW 0 B
SC-24_4748	BW 2 B
SC-25_4748	BW 1 B
SC-26_4748	BW 1 D
SC1_CAB:A	KA 3 C
SC1_CAB:B	KA 3 C
SC1_CAB:C	KA 3 C
SC1_CAB:D	KA 3 C
SC1_CAB:E	HE 3 A
SC1_CAB:F	AA 4 C

https://truckmanualshub.com/

ALL REFERENCES

REF	PAGE
SC1_CAB:G	HE 0 C
SC1_CAB:H	HE 0 C
SC1_SLP:A	KA 3 C
SC1_SLP:B	KA 3 C
SC1_SLP:C	KA 3 C
SC1_SLP:D	KA 3 C
SC1_SLP:E	HE 3 A
SC1_SLP:F	AA 4 C
SC1_SLP:G	HE 0 C
SC1_SLP:H	HE 0 C
SHIFT_DDC:1	DB 0 B
SHIFT_DDC:2	DB 0 B
SHIFT_DDC:3	DB 0 B
SHIFT_DDC:4	DB 0 B
SHIFT_DDC:5	DB 0 B
SHIFT_DDC:6	DB 0 B
SHIFT_DDC:8	DB 1 B
SLFR:A	GK 1 C
SLFR:B	GK 2 B
SLLH:A	GK 1 E
SLLH:B	GK 2 D
SLLH:C	GK 2 A
SLP_CAB1:A	KA 3 C
SLP_CAB1:B	KA 3 C
SLP_CAB1:C	KA 3 C
SLP_CAB1:D	KA 3 C
SLP_CAB1:E	HE 3 A
SLP_CAB1:F	AA 4 C
SLP_CAB1:G	HE 0 B
SLP_CAB1:H	HE 0 B
SLP_CAB2:A	HE 1 A
SLP_CAB2:B	HD 2 C
SLP_CAB2:C	AD 3 C
SLP_CAB2:D	AD 3 D
SLP_CAB3:A	HE 1 B
SLP_CAB3:B	HE 1 B
SLP_CAB3:C	HD 3 C
SLP_CAB3:D	HD 3 C
SLP_CAB3:E	HD 3 C
SLP_RF:A	HE 0 B
SLP_RF:B	HE 4 C
SLP_RF:C	HE 0 A
SLP_RF:D	HE 3 B
SLPCOFH:A	GF 4 B
SLRFHL1:A	KA 3 C
SLRFHL1:B	KA 3 C
SLRFHL1:C	KA 3 C
SLRFHL1:D	KA 3 C
SLRFHL1:E	KC 3 D
SLRFHL1:F	GA 3 E

REF	PAGE
SLRFHL2:A	GH 0 B
SLRFHL2:C	GH 1 D
SLRFHL2:D	GH 0 B
SLRFHL2:E	KC 3 B
SLRFHL2:F	HE 0 D
SLRFHL2:G	HE 0 D
SLRH:A	GK 3 E
SLRH:B	GK 3 B
SLRH:C	GK 2 A
SP1HB1	CE 0 C
SP1LB2	CE 0 C
SP3F57	HG 0 B
SP3F57	NE 2 C
SP4FB	GA 3 B
SP28B1	HG 1 D
SP42B3	GF 1 C
SP43A1	CE 2 D
SP44B	FA 0 C
SP47A	FA 3 C
SP75A	AA 0 B
SP75A	BJ 1 B
SP75A	BK 1 B
SP75A	HD 1 B
SPAX4:1	EB 2 D
SPAX4:4	EB 2 D
SPAX4:7	EB 1 D
SPAX4:8	EB 1 D
SPAX4:10	EB 1 D
SPAX4:11	EB 1 E
SPBKA57	DD 2 C
SPBKA87	HG 0 C
SPBKA87	NE 2 E
SPBKA90	NF 1 E
SPBKD3	HG 0 D
SPBKD4	NF 4 A
SPBKD4A	AD 2 D
SPBKD4A	HG 3 C
SPBKD4A	NE 3 B
SPBKXC1G26	GI 2 D
SPCA15A3	AG 0 B
SPCB1	BA 0 D
SPCB2A	BA 0 D
SPCB7	BC 2 C
SPCB19A	BB 3 C
SPCB19A1	BB 4 B
SPCB28B	DB 1 C
SPDL1H	CA 0 B
SPDL1H1	XA 1 E
SPDL1H2	XA 2 D
SPDL1H3	XA 4 E

REF	PAGE
SPDL1H4	XA 3 D
SPDL1H5	XA 4 D
SPDL1H6	XA 3 C
SPDL1H7	XA 4 C
SPDL1H8	XA 3 C
SPDL1H9	XA 4 B
SPDL1H10	XA 4 B
SPDL1H11	XA 3 A
SPDL1H12	XA 3 A
SPDL1H13	XA 2 A
SPDL1H14	XA 4 A
SPDL1L	CA 0 B
SPDL1L1	XA 1 E
SPDL1L2	XA 2 E
SPDL1L3	XA 4 E
SPDL1L4	XA 3 D
SPDL1L5	XA 4 D
SPDL1L6	XA 3 C
SPDL1L7	XA 4 C
SPDL1L8	XA 3 C
SPDL1L9	XA 4 B
SPDL1L10	XA 4 B
SPDL1L11	XA 3 B
SPDL1L12	XA 3 B
SPDL1L13	XA 2 B
SPDL1L14	XA 4 A
SPDL2H1	XA 0 C
SPDL2H4	XA 2 C
SPDL2H6	XA 1 C
SPDL2H7	DD 2 D
SPDL2H8	BM 0 C
SPDL2H9	DD 3 D
SPDL2L1	XA 0 C
SPDL2L4	XA 2 C
SPDL2L6	XA 1 C
SPDL2L7	DD 2 D
SPDL2L8	BM 1 C
SPDL2L9	DD 3 D
SPDL3L	KA 1 C
SPDL4H	XA 0 B
SPDL4L	XA 1 B
SPDL7H1	CD 1 B
SPDL7H2	CF 3 D
SPDL7H3	CF 3 B
SPDL7L1	CD 1 C
SPDL7L2	CF 3 C
SPDL7L3	CF 3 B
SPEA13A	CF 0 A
SPEA13A5	CF 0 B
SPEC3A	CF 1 C

REF	PAGE
SPEC8A	CE 1 D
SPEC13A1	CF 0 D
SPEC32A	CE 1 D
SPEC38A	CF 2 C
SPEC39A	CF 2 C
SPEC40A	CF 1 C
SPEC54A	CE 2 D
SPEC57	CE 0 D
SPEC62	CE 3 D
SPEC66A2	CF 0 D
SPEC76	CF 0 B
SPEC76A	CF 0 B
SPEC84A	CF 1 D
SPEC84A2	CF 1 D
SPEMA28A1	CD 3 D
SPEMA49A	CD 2 A
SPEMA54A1	CD 1 D
SPEMA59A1	CD 3 D
SPEMA62A2	CD 2 D
SPF1A	HE 3 B
SPF1F	HE 3 C
SPF1J	HE 3 C
SPF2C	HE 0 A
SPF2C2	GD 1 E
SPF2C2	GE 0 D
SPF2D	GA 1 B
SPF2E	GA 1 D
SPF2LL	HE 0 B
SPF2T	HE 0 A
SPF2Y	GI 2 C
SPF3A	HE 2 B
SPF3B	GA 0 C
SPF3B1	GA 0 D
SPF3B1	GM 1 C
SPF3B2	HE 1 D
SPF3B3	GM 1 B
SPF3B5	GA 2 D
SPF3B7	GF 0 C
SPF3B8	GA 2 D
SPF3B9	GD 2 E
SPF3B9	GE 3 D
SPF3B14	GK 0 E
SPF3B19	GK 1 B
SPF3B21	GI 1 D
SPF3F	BC 2 A
SPF3F	BD 4 A
SPF3F	BE 1 A
SPF3F	EC 2 E
SPF3F	FB 0 A
SPF3F	GA 1 A

https://truckmanualshub.com/

ALL REFERENCES

REF	PAGE
SPF3F	GH 0 A
SPF3F	HA 1 A
SPF3F	IA 3 A
SPF3F	ID 3 A
SPF3F	KA 0 A
SPF3F31	BA 2 A
SPF3F31	BD 1 B
SPF3F31	BE 2 A
SPF3F31	BL 3 A
SPF3F31	EA 2 A
SPF3F31	EB 2 A
SPF3F31	GH 1 A
SPF3F31	GP 0 A
SPF3F31	HD 0 A
SPF3F32	FE 3 B
SPF3F43	HC 0 B
SPF3F44	GH 0 B
SPF3F53	HC 3 B
SPF3F57	NC 1 B
SPF3F71	KC 4 B
SPF3F85	JA 1 B
SPF3F96	FD 0 B
SPF3F100	NF 1 C
SPF3F110	GL 0 B
SPF4A	GA 3 A
SPF4C	GD 2 B
SPF4C	GE 2 C
SPF4C5	GD 3 B
SPF4C8	GI 2 D
SPF4C10	GD 3 B
SPF4D	GD 4 B
SPF4D	GE 4 C
SPF4D5	GD 4 B
SPF4D8	GI 2 D
SPF4D10	GD 3 B
SPF5D	GA 3 D
SPF5D1	GF 1 B
SPF5D3	GF 1 C
SPF5E	GA 3 D
SPF5E1	GF 0 B
SPF5E3	GF 0 C
SPF6A2	GH 0 C
SPF6A9	GH 0 A
SPF6A11	GH 1 B
SPF6A12	GF 4 C
SPF6B	GH 4 C
SPF6E	GH 0 D
SPF7D	AC 1 C
SPF8A	FB 2 B
SPF8A6	FB 0 C

REF	PAGE
SPF8M	FB 2 B
SPF9B3	KC 3 B
SPF9E	KA 4 D
SPF9G	KA 3 D
SPF12A	IE 1 B
SPF14B	HD 2 C
SPF15B1	IC 1 C
SPF15B2	BF 3 B
SPF17A1	BA 3 B
SPF17A7	BA 1 B
SPF17A14	BC 3 C
SPF17C	BA 1 C
SPF17D	BA 1 C
SPF17E	BA 1 C
SPF17M	BC 2 C
SPF23A	IA 2 B
SPF23B	IA 3 C
SPF23C	IA 3 D
SPF24A	FE 1 B
SPF24A1	FE 1 B
SPF24A2	FE 1 C
SPF24A3	GL 0 B
SPF24A7	FE 3 A
SPF24D	GL 0 C
SPF25A	HA 0 C
SPF26B	GF 2 B
SPF26B1	GF 3 B
SPF26B3	GF 3 C
SPF26B7	HE 4 A
SPF27A	NB 2 B
SPF27A1	NB 3 B
SPF27B	GI 1 C
SPF28A	HC 3 C
SPF28A1	HC 1 B
SPF28A3	NF 3 A
SPF28B1	HC 0 D
SPF28B3	HC 1 D
SPF28B3	HG 1 D
SPF31A	DD 3 B
SPF35B	GA 4 D
SPF35B2	GA 3 D
SPF35B3A	GA 3 D
SPF35B4	HE 4 D
SPF35B4A	GA 3 D
SPF35B7	BN 2 C
SPF36C	GQ 1 C
SPF38A	CF 3 B
SPF38A1	CA 1 B
SPF38A2	CA 1 C
SPF41A3	HB 2 A

REF	PAGE
SPF42A	BE 3 B
SPF42B	BE 3 B
SPF42B2	GF 1 B
SPF42B4	GF 2 C
SPF43A	CA 2 B
SPF48A	HE 1 B
SPF48A1	HE 2 A
SPF49A	EB 3 B
SPF54	GI 1 C
SPF55B	EC 3 C
SPF57A	KC 2 B
SPF63A	BE 0 B
SPF64B5	GJ 4 B
SPF65A	NA 2 D
SPF65A1	KC 3 B
SPF65A4	JB 1 B
SPF65A9	FD 1 B
SPF65B1	FD 1 D
SPF65B7	KC 4 C
SPF67A3	JB 1 C
SPF76A	DA 2 B
SPF76B	DA 2 C
SPF79A	DA 2 D
SPF80A	DA 3 D
SPFB05A1	CE 3 D
SPFB07A1	CD 0 C
SPGAD	HA 0 C
SPHA12	BF 2 E
SPHA12A15	BF 1 E
SPHA12G	BF 1 E
SPHA12H	BF 1 D
SPHB29	BF 2 B
SPHB30	BF 2 B
SPHC11A2	BG 3 E
SPHC19	BG 2 D
SPHC20	BG 2 C
SPIGNLOWOIL:A	NF 2 D
SPIGNLOWOIL:B	NF 2 D
SPIGNLOWOIL:C	BN 1 C
SPJ1939HB30	XA 0 D
SPJ1939LB30	XA 0 E
SPLFNA	KA 0 E
SPLFPA	KA 0 D
splice340_43	NE 2 A
splice351	GK 0 B
splice352	GK 0 B
splice359	GK 2 B
splice360	GK 2 B
splice363	GK 4 B
splice364	GK 4 B

REF	PAGE
splice429_431	GK 2 A
splice431_431	GK 3 A
splice520_2029	AF 1 C
SPLRNA	KA 3 C
SPLRPA	KA 3 C
SPN109	DD 0 C
SPN110	DD 0 C
SPN112	DC 3 C
SPN124CM	DD 2 C
SPN131	DC 1 D
SPN145NO	DD 3 C
SPN158	DC 2 D
SPN158A	DC 2 C
SPNAA1	DA 4 C
SPOPTSW	NF 2 A
SPR17D	BL 1 C
SPRA7A1	EC 1 E
SPRA30A1	EC 1 D
SPRDA	AA 0 B
SPRDA1	AA 0 B
SPRFNA	KA 1 E
SPRFPA	KA 1 D
SPRRNA	KA 3 C
SPRRPA	KA 3 C
SPSB38A5	DB 2 B
SPSB38A5A	DB 2 C
SPX1C1B61	GL 0 D
SPX1C1B62	GL 0 C
SPX01D1	AF 1 C
SPX01F1	AG 0 C
SPX109L1	AC 3 B
SPX109L2	AD 1 B
SPXC1A1	AD 2 C
SPXC1A2	AD 3 C
SPXC1A2	GA 4 E
SPXC1A2	GD 2 D
SPXC1A2	GE 2 D
SPXC1A2	GF 2 D
SPXC1A2	GH 4 C
SPXC1A2	GM 1 E
SPXC1A2	GQ 0 E
SPXC1A2	IC 0 E
SPXC1A2	KC 3 E
SPXC1A2	NC 2 B
SPXC1A3	AA 1 C
SPXC1A3	AD 2 B
SPXC1A3	BK 4 B
SPXC1A3	BM 2 B
SPXC1A3	GA 2 A
SPXC1A3	GP 0 E

https://truckmanualshub.com/

ALL REFERENCES

REF	PAGE
SPXC1A3	KC 1 D
SPXC1A3	NB 1 D
SPXC1A4	AA 4 D
SPXC1A4	AD 3 C
SPXC1A4	EC 4 D
SPXC1A4	GA 1 C
SPXC1A4	GD 4 D
SPXC1A4	GE 4 D
SPXC1A4	GH 3 C
SPXC1A4	IC 1 E
SPXC1A4	KC 0 D
SPXC1A4	NA 2 C
SPXC1A5	EC 4 C
SPXC1A6	GF 4 D
SPXC1A7	GA 3 E
SPXC1A8A	GA 3 E
SPXC1A9	HE 4 E
SPXC1A9A	GA 3 E
SPXC1A10	GA 0 E
SPXC1A10	GM 1 D
SPXC1A13	HE 1 E
SPXC1A29	KC 2 D
SPXC1A38	IE 0 D
SPXC1A40	IA 0 B
SPXC1A45	KC 3 D
SPXC1A52	ID 2 D
SPXC1A53	IA 4 B
SPXC1A65	GD 4 D
SPXC1A66	GD 3 D
SPXC1A68	GH 1 D
SPXC1A72	HC 0 C
SPXC1A82	HC 4 D
SPXC1A88	NC 2 B
SPXC1A97	FD 0 C
SPXC1A102	JA 1 D
SPXC1A116	KC 4 B
SPXC1A119	KC 3 E
SPXC1B1	AD 2 C
SPXC1B1	BA 4 E
SPXC1B1	BD 3 C
SPXC1B1	BE 0 E
SPXC1B1	BL 3 B
SPXC1B1	CB 2 D
SPXC1B1	DA 0 D
SPXC1B1	DB 4 C
SPXC1B1	DD 0 B
SPXC1B1	EA 0 A
SPXC1B1	EB 0 C
SPXC1B1	EC 3 E
SPXC1B1	FD 2 B

REF	PAGE
SPXC1B1	FE 0 E
SPXC1B1	GL 0 D
SPXC1B1	KA 0 C
SPXC1B1	NA 2 C
SPXC1B1	NB 2 D
SPXC1B1	XA 2 D
SPXC1B1A	XA 2 D
SPXC1B1D	EC 3 E
SPXC1B7B	EB 2 A
SPXC1B7W	EA 0 A
SPXC1B18	FD 2 B
SPXC1B19	FE 0 E
SPXC1B25	FE 1 E
SPXC1B29	FE 3 A
SPXC1B30	FD 1 E
SPXC1B46	DA 4 D
SPXC1B48	DA 0 C
SPXC1C1	AD 2 C
SPXC1C1	HA 3 C
SPXC1C1	HC 3 E
SPXC1C1	HG 0 D
SPXC1C1	NA 3 C
SPXC1C4	HC 0 D
SPXC1C5	HC 3 D
SPXC1C6	HC 1 E
SPXC1C6	HG 1 D
SPXC1C11	AD 2 D
SPXC1C12	AD 3 C
SPXC1C12	HD 1 E
SPXC1C12	HE 2 C
SPXC1C13	AD 3 D
SPXC1C13	HE 0 D
SPXC1C13	KA 2 D
SPXC1C14	AD 1 C
SPXC1C23	HE 0 D
SPXC1D1	AD 2 C
SPXC1E	GL 0 C
SPXC1E1	AD 3 B
SPXC1E1	BA 3 C
SPXC1E1	BD 1 C
SPXC1E1	BE 2 B
SPXC1E1	GJ 2 D
SPXC1E1	HD 0 C
SPXC1E1	NA 1 C
SPXC1E2	AD 3 B
SPXC1E2	BG 0 C
SPXC1E2	EA 2 B
SPXC1E2	EB 3 B
SPXC1E2	FB 3 D
SPXC1E2	GJ 2 C

REF	PAGE
SPXC1E2	NA 1 D
SPXC1E45	GJ 4 D
SPXC1F1	AD 1 D
SPXC1F1	HB 3 D
SPXC1F2	AD 1 E
SPXC1F2	BG 1 E
SPXC1F2	GK 1 A
SPXC1F2	GP 0 E
SPXC1F2	GQ 1 E
SPXC1F6	BG 3 D
SPXC1F7	AD 1 E
SPXC1F7	BG 4 E
SPXC1F7	EB 4 D
SPXC1F7	GF 1 D
SPXC1F10	AD 1 D
SPXC1F10	FA 2 E
SPXC1F10	FB 1 E
SPXC1F10	GF 1 E
SPXC1F11	GF 1 D
SPXC1F14	GF 2 C
SPXC1F16	FB 1 E
SPXC1F22	FA 3 D
SPXC1F23	FA 0 D
SPXC1G4A	CE 4 D
SPXC1G7	GA 1 E
SPXC1G8	GD 0 D
SPXC1G8	GE 0 D
SPXC1G14	GI 2 D
SPXC1G16	GD 1 D
SPXC1G16	GE 2 D
SPXC1G40	AC 2 E
SPXC1G40	AD 1 D
SPXC1G40	BF 4 A
SPXC1G40	CA 3 C
SPXC1G40	GA 1 E
SPXC1G40	GD 0 E
SPXC1G40	GE 0 E
SPXC1G40	GF 3 C
SPXC1G41	BF 3 B
SPXC1N1	AD 1 E
SPXC1N1	GG 4 D
SPXC1N1	GJ 2 D
SPXC1N1	JA 2 B
SPXC1N1	JB 0 D
SPXCIE23	GA 1 C
SPXF1A1	AD 1 C
SPXF1A1	CD 4 D
SPXF1A3	CF 4 C
SPXM1	AD 0 B
SSP28A1	HG 1 B

REF	PAGE
sym344_24	DB 1 D
sym345_24	DB 1 D
sym349_24	DB 1 D
sym449_133	DB 3 D
sym451_174	DB 0 D
sym452_174	DB 0 D
sym453_174	DB 0 D
sym455_174	DB 2 D
sym639_345	DB 3 D
sym675_4748	BX 4 D
sym680_2029	AG 3 C
sym682_2029	AF 0 D
T30_1_2941	XA 3 C
T30_1_3991	XA 1 D
T30_1_5416	EC 0 B
T30_1_5444	EC 0 C
T30_2_2941	XA 3 C
T30_2_3348	XA 0 D
T30_2_4936	CD 1 B
T30_2_5416	XA 2 A
T30_2_5444	XA 4 A
T30_3_2941	XA 3 D
T30_3_3348	XA 0 D
T30_3_5416	XA 2 A
T30_3_5444	XA 3 A
T30_4_2941	XA 3 E
T30_4_3348	XA 0 E
T30_4_5416	XA 3 A
T30_5_2941	XA 4 D
T30_5_3348	XA 0 E
T30_5_5416	XA 2 A
T30_6_2941	XA 3 C
T30_7_2941	XA 3 C
T30_8_2941	XA 4 B
T30_9_2941	XA 3 A
T30_11_2941	XA 4 D
T30_12_2941	XA 4 C
T30_13_2941	XA 4 C
T30_14_2941	XA 4 C
T30_15_2941	XA 4 B
T30_16_2941	XA 4 B
T30_17_2941	XA 3 A
T30_19_2941	BM 1 C
T30_20_2941	BM 1 C
T30_21_2941	BM 3 C
T30_22_2941	BM 3 C
T30_24_2941	DA 1 D
T30_25_2941	DA 1 B
T30_26_2941	BB 1 C
T30_29_2941	CB 2 C

https://truckmanualshub.com/

ALL REFERENCES

REF	PAGE
T30_31_2941	EB 3 B
T30_32_2941	FE 1 D
T30_34_2941	DD 4 D
T30_35_2941	BE 1 C
T30_36_2941	DB 2 B
T30_37_2941	KA 1 B
T30_38_2941	KA 4 A
TAS_SLP:A	BF 3 D
TAS_SLP:B	BF 3 E
TBAP	CE 0 A
TC40-1_1283	EB 3 D
TC40-1_2185	EB 1 B
TC40-1_2941	XA 2 C
TC40-1_2972	CD 2 C
TC40-1_3233	EB 1 D
TC40-1_3354	DD 2 D
TC40-1_3612	BM 1 B
TC40-1_3991	XA 0 C
TC40-1_4654	BM 0 C
TC40-1_5416	EC 3 B
TC40-1_5444	EC 3 C
TC40-2_1283	EB 2 D
TC40-2_2941	XA 2 C
TC40-2_2972	CA 0 D
TC40-2_3233	EB 1 E
TC40-2_3354	DD 2 D
TC40-2_3991	XA 1 D
TC40-2_4654	BM 1 C
TC40-3_2941	BM 0 C
TC40-3_3233	EB 1 D
TC40-3_3612	BM 1 B
TC40-3_3991	XA 1 D
TC40-4_3233	EB 3 B
TC40-5_3354	DD 3 D
TC40-6_2941	XA 0 C
TC40-6_3354	DD 3 E
TC40-8_2941	XA 2 C
TC40-8_3354	DD 2 E
TC40-9_2941	XA 2 C
TC40-10_2941	XA 2 D
TC40-11_2941	XA 2 C
TC40-12_2941	DA 3 D
TC40-14_2941	XA 2 C
TC40-15_2941	XA 1 C
TC40-16_2941	XA 1 C
TC40-17_2941	XA 1 C
TC40-18_2941	BM 4 C
TC40-19_2941	DA 1 B
TC40-20_2941	BB 2 C
TC40-21_2941	BB 0 C

REF	PAGE
TC40-22_2941	BB 0 C
TC40-24_2941	EB 1 B
TC40-26_2941	EB 0 B
TC40-27_2941	EB 0 C
TC40-28_2941	EB 1 C
TC40-29_2941	EB 2 C
TC40-30_2941	EB 3 C
TC40-31_2941	FE 2 D
TC40-33_2941	BE 1 C
TC40-34_2941	BJ 3 B
TC40-35_2941	NB 1 B
TC40-36_2941	KA 1 C
TC40-37_2941	KA 4 B
TC_1_431	EA 2 D
TC_1_1106	DA 2 D
TC_1_2185	EB 0 B
TC_1_3651	CE 2 D
TC_1_5416	DA 3 D
TC_1_5960	JB 0 C
TC_2_431	EA 2 D
TC_2_569	BJ 3 C
TC_2_1284	BB 0 C
TC_2_1532	CE 0 B
TC_2_1668	CE 2 D
TC_2_5416	EA 2 D
TC_2_5960	JB 3 C
TC_3_569	BJ 3 B
TC_3_669	KA 1 D
TC_3_5416	EA 2 D
TC_4_788	CD 2 C
TC_4_1284	BB 0 D
TC_5_5416	EA 1 C
TC_6_5416	EA 0 C
TC_7_5416	EA 0 C
TC_8_971	BB 1 C
TC_8_5416	EA 0 C
TC_9_971	BB 1 C
TC_9_5416	EA 2 C
TC_10_5416	EA 2 C
TC_11_971	DC 0 B
TC_11_5416	EA 3 C
TC_12_5416	EA 3 C
TC_20828057_3311	EB 3 C
TE_20828057_3311	EB 1 B
TF_20828057_3311	EB 0 B
TG_20828057_3311	EB 1 C
TGW_IGN_SP3_1:A	NA 2 E
TGW_IGN_SP3_1:B	NA 2 E
TGW_IGN_SP3_2:A	NA 2 D
TGW_IGN_SP3_2:B	NA 2 D

REF	PAGE
TGWBB1:A	BM 0 E
TGWBB1:B	BM 0 E
TGWBB1:C	BM 1 E
TGWBB1:D	BM 1 E
TGWBB1:E	BM 1 E
TGWBB1:F	BM 1 E
TGWBB1:G	BM 1 E
TH_20828057_3311	EB 0 C
TI_20828057_3311	EB 0 D
TLBU:A	GF 2 C
TLBU:B	GF 2 C
TLRE:A	GF 1 C
TLRE:B	GF 0 C
TLRE:C	GF 0 C
TLRE:D	GF 1 C
TLRE:E	GF 1 D
TRANS_DASH:25	GG 2 B
TRANS_DASH:26	GG 2 C
V2_MATE	BE 0 B
V25	GH 2 B
V35	BA 2 D
X0A_MATE	AD 3 C
X0A_MATE	BA 1 D
X0A_MATE	BC 2 C
X0A_MATE	BD 3 C
X0A_MATE	BF 4 C
X0A_MATE	BI 0 C
X0A_MATE	BJ 2 B
X0A_MATE	FB 2 C
X0B_MATE	BE 2 C
X0C_MATE	BA 0 A
X0C_MATE	BD 2 A
X0C_MATE	BG 0 A
X0C_MATE	BI 1 A
X0C_MATE	CB 2 A
X0C_MATE	DB 1 A
X0C_MATE	DD 1 A
X0C_MATE	FB 2 A
X0C_MATE	FE 2 A
X0C_MATE	GH 2 A
X0C_MATE	GI 2 A
X0C_MATE	GJ 1 A
X0C_MATE	NA 1 A
X0C_MATE	NC 1 A
X06D_MATE	BH 1 C
X07A	KC 0 B
X07B	KC 0 C
X07C	HE 2 C
X07D	HE 2 C
X07E	KC 0 C

REF	PAGE
X07TV	HE 2 C
X10	AA 0 B
X10	AC 4 D
X10	DB 0 B
X10_C1	AA 0 B
X10_C3	DB 0 B
X10_C4	AC 4 D
X10_C5	AC 3 D
X10_C7	AC 4 D
X10A	HE 0 A
X10B	BJ 0 B
X10B	BK 0 A
X11	CA 0 C
X13	FE 0 B
X16	AB 3 C
X16	AC 4 C
X16_C1	AC 4 D
X16_C2	AC 4 C
X17A	HF 1 C
X17B	HF 3 D
X17C	HF 3 D
X17D	HF 1 C
X17E	HF 1 D
X31	GG 3 D
X31_10	GG 1 D
X31_10A	GG 1 D
X31_B1	GG 3 D
X31_B2	BN 2 B
X31_B2	GG 3 E
X31_B3	GG 3 D
X31_B4	BN 3 B
X31_B4	GG 3 E
X31_B5	GG 1 D
X31_B6	BN 2 B
X31_B6	GG 2 E
X31_B7A	GG 2 E
X31_B8	BN 3 B
X31_B8	GG 2 E
X31_B8_A	GG 2 E
X31_B9	GG 2 D
X31_B11	GG 3 D
X32	GJ 2 D
X32_1	GJ 2 D
X32_7	GJ 2 D
X34	KC 1 C
X34D1_MATE	KC 1 C
X34D2_MATE	KC 1 C
X34R	KC 3 C
X34R3	KC 3 C
X40	BK 2 A

https://truckmanualshub.com/

ALL REFERENCES

REF	PAGE
X40	BM 3 B
X40	BU 2 A
X40	BV 2 A
X40	BW 2 A
X40	BX 2 B
X40	GQ 4 C
X40	NB 2 C
X40_C1	BM 1 B
X40_C2	BM 1 B
X40_C5	BM 1 B
X40_C6	BM 1 B
X40_C7	BM 1 B
X40_C7_1	BK 2 A
X50A	DB 4 C
X50B	DB 4 B
X50C	DB 4 C
X61	ND 0 B
X66	KA 1 D
X67	KA 1 B
X89	CF 0 D
X109_L1	AC 3 B

REF	PAGE
X109_L2	AD 1 B
X109L	AC 4 B
X109L	AD 2 B
XC1	AD 1 C
XC1	AF 3 D
XC1_10	AD 1 D
XC1_C1	AD 2 C
XC1_C2	AD 2 C
XC1_C3	AD 2 C
XC1_C4	AD 2 C
XC1_C5	AD 2 D
XC1_C6	AD 1 D
XC1_C7	AD 1 D
XC1_C7	GE 1 D
XC1_C8	AD 1 C
XC1_C9	AD 1 C
XC1_C9	AF 3 C
XC1_C10	AD 1 D
XC1_C11	AD 1 D
XC1_C12	AF 1 C
XC1_C13	AD 1 D

REF	PAGE
XC1_C13	BN 2 B
XC1_C14	AD 2 D
XC1A76	DB 3 C
XC_BB	BJ 1 B
XC_BB	BK 0 B
XF1	AD 0 C
XF1	AF 1 D
XF1	ND 0 C
XF1_1	AF 1 D
XF1_2	ND 0 C
XF1_A1	AD 0 C
XF1_A2	AD 0 C
XF1_C2	AD 0 B
XF1_C3	AD 0 C
XF1_C3	AF 1 D
XF1A11	EC 1 B
XF_C6	HF 0 C
XF_C61	HF 0 C
XG9	AD 0 D
XG9	AF 2 C
XG9_C1	AD 0 D

REF	PAGE
XG9_C1	AF 1 C
XG9_C2	AF 2 C
XG9_C3	AF 2 C
XH	AD 2 D
Y11	EA 0 B
Y11	EB 0 C
Y12	EA 1 B
Y12	EB 1 C
Y13	EA 1 D
Y13	EB 0 A
Y14	EA 1 E
Y14	EB 1 A
Y15	EA 3 D
Y15	EB 3 D
Y16	EA 2 D
Y16	EB 3 D
Y18	FD 1 D
Y18G	DA 4 D
Y18H	DA 4 D
Y25A	EC 1 B
Y29A	EC 2 B

https://truckmanualshub.com/

ALL REFERENCES

REF	PAGE
Y35	CA 2 C
Y35	CE 0 D
Y42	HA 3 C
Y50	FE 3 D
Y51	FA 2 D

REF	PAGE
Y51_A	FA 1 C
Y52	FA 1 D
Y53:A	FA 3 C
Y53:B	FA 3 D
Y57	EA 1 D

REF	PAGE
Y57	EB 1 A
Y57_SA	EB 4 D
Y62	DC 1 C
Y80	CD 2 B
Y80A	CF 1 C

REF	PAGE
Y81	CD 2 D
Y81A	CF 1 C
Y86	FB 0 D
Y100	EB 2 D
Y106	EB 4 D

https://truckmanualshub.com/

ALL REFERENCES

REF	PAGE
Z01	XA 1 D