https://truckmanualshub.com/

Engineering Release Notice (ERN)	Location	Change Description	A = Added D = Deleted	W = Was	Document Release Status **RELEASED**	
D-15704-42		SEE DCN			Date	Modification Count

WIRING DIAGRAM INDEX, 12V

NAME	DESCRIPTION	PAGE		NAME	DESCRIPTION	PAGE
AA	POWER DISTRIBUTION 1/2	2		EC	VEHICLE ECU (ECS)	43
AB	POWER DISTRIBUTION 2/2	3		FA	AIR DRYER/HEATED DRAIN	44
AC	KEY SW., START & CHARGING	4		FB	CHASSIS SOLENOIDS	45
AD	GROUNDING 1/2	5		FD	PARKER PTO	46
AE	BATTERY CONFIGURATION	6		FE	CENTRAL TIRE INFLATION	47
AF	GROUNDING 2/2 CUMMINS	7		GA	LIGHTING CONTROL	48
AG	STARTING AND CHARGING CUMMINS	8		GD	LIGHTING-FORWARD/SIGNAL (CXU,GU7,GU8)	49
AH	EARC CUMMINS	9		GE	LIGHTING-FORWARD/SIGNAL (CHU ONLY)	50
BA	VEHICLE ECU 1/4	10		GF	LIGHTING-TAIL/PERIMETER	51
BB	VEHICLE ECU 2/4	11		GG	TRAILER LIGHTING CONTROL	52
BC	VEHICLE ECU 3/4- DCL CONNECTOR	12		GH	INTERIOR LIGHTING	53
BD	VEHICLE ECU 4/4	13		GI	SNOW PLOW PREP CONNECTOR	54
BE	INSTRUMENT CLUSTER 1/3	14		GJ	TRAILER RECEPTACLE CENTER PIN HOT	55
BF	INSTRUMENT CLUSTER 2/3	15		GK	TITAN LIGHTING OPTIONS	56
BG	INSTRUMENT CLUSTER 3/3	16		GL	LIGHTING – BEACON LAMPS	57
BH	ALLISON BODY BUILDER INTERFACE	17		GM	LIGHTING: ROOF W / OPTIONS	58
BI	INSIDE-OUTSIDE AIR TEMP. GAUGE	18		GP	WIPER WASHER	59
BJ	BODY BUILDER CIRCUITS	19		GQ	HORN WIRING/SPOT LAMP	60
BK	BODY BUILDER CIRCUITS-2010 BODYLINK	20		HA	CLIMATE CONTROL	61
BL	ENGINE BRAKE CONTROL M-DRIVE	21		HB	APADS WIRING	62
BM	TELEMATICS GATEWAY (TGW)	22		HC	HEATED SEATS & WINDSHIELD,AUX FAN 1/2	63
BN	BODY BUILDER CIRCUITS	23		HD	SLEEPER CLIMATE CONTROL	64
BU	QUALCOMM MCP 100 W/SLEEPER	24		HE	SLEEPER FUNCTIONS	65
BV	QUALCOMM MCP 110 OR 200 W/SLEEPER	25		HF	120V AC SYSTEM INVERTER	66
BW	QUALCOMM MCP 100 W/DAYCAB	26		HG	HEATED SEATS & WINDSHIELD, AUX FAN 2/2	67
BX	QUALCOMM MCP 110 OR 200 W/DAYCAB	27		IA	RH & LH MOTORIZED WINDOWS	68
CA	ENGINE INTERFACE MP11	28		IC	MIRROR CONTROL 1/2	69
CB	DPF REGENERATION SYSTEM	29		ID	RH ONLY MOTORIZED WINDOW & DOOR CNTR.	70
CC	ENGINE HEATER	30		IE	RH & LH DOOR CONTROL	71
CD	UREA DOSING SYSTEM	31		JA	ADAPTIVE CRUISE CONTROL 1/2	72
CE	ENGINE CONTROL ISL US13 1/2	32		JB	ADAPTIVE CRUISE CONTROL 2/2	73
CF	ENGINE CONTROL ISL US13 2/2	33		KA	AUDIO SYSTEM	74
CG	ENGINE CONTROL ISX12G 1/2	34		KC	POWER OUTLETS CONNS. FLOOR LIGHTING	75
CH	ENGINE CONTROL ISX12G 2/2	35		NA	IGNITION & BATTERY SW & SPARE CONNS	76
DA	TRANSMISSION M-DRIVE	36		NB	JUNCTION POSTS	77
DB	TRANSMISSION CNTR:AUTOSHIFT/ULTRASHIFT III	37		NC	ADDITIONAL IGN. & BATTERY SWITCHES 1/3	78
DC	TRANSMISSION CNTL:4 GENERATION 1/2	38		ND	H.D. POWER LIFT GATE	79
DD	TRANSMISSION CNTL:4 GENERATION 2/2	39		NE	ADDITIONAL IGN & BATTERY SWITCHES 2/3	80
DE	TRANSMISSION CONTROLS M-DRIVE	40		NF	ADDITIONAL IGN & BATTERY SWITCHES 3/3	81
EA	ABS-WABCO	41		XA	DATA LINK / DIAGNOSTICS	82
EB	ABS BENDIX WITH ESP (EATON)	42		XB	J1939 CAN 1 DIAGRAM	83

The copying, distribution and utilization of this document as well as the communication of its contents to others without expressed authorization is prohibited. Offenders will be held liable for payment of damages. All rights reserved in the event of the grant of a patent, utility model or ornamental design registration.

Document Title
WIRING DIAGRAM
12V MACK, 2013BP
PC28, ENG-CU12

Document Type
TECHNICAL REGULATION

Owner Domain:Document Prefix

MACK

Mack Trucks, Inc.

Document No	Issue Index	Volume No	Page No
22234428	**02**	**01**	**1(83)**

EDM-W 2000-04-01

https://truckmanualshub.com/

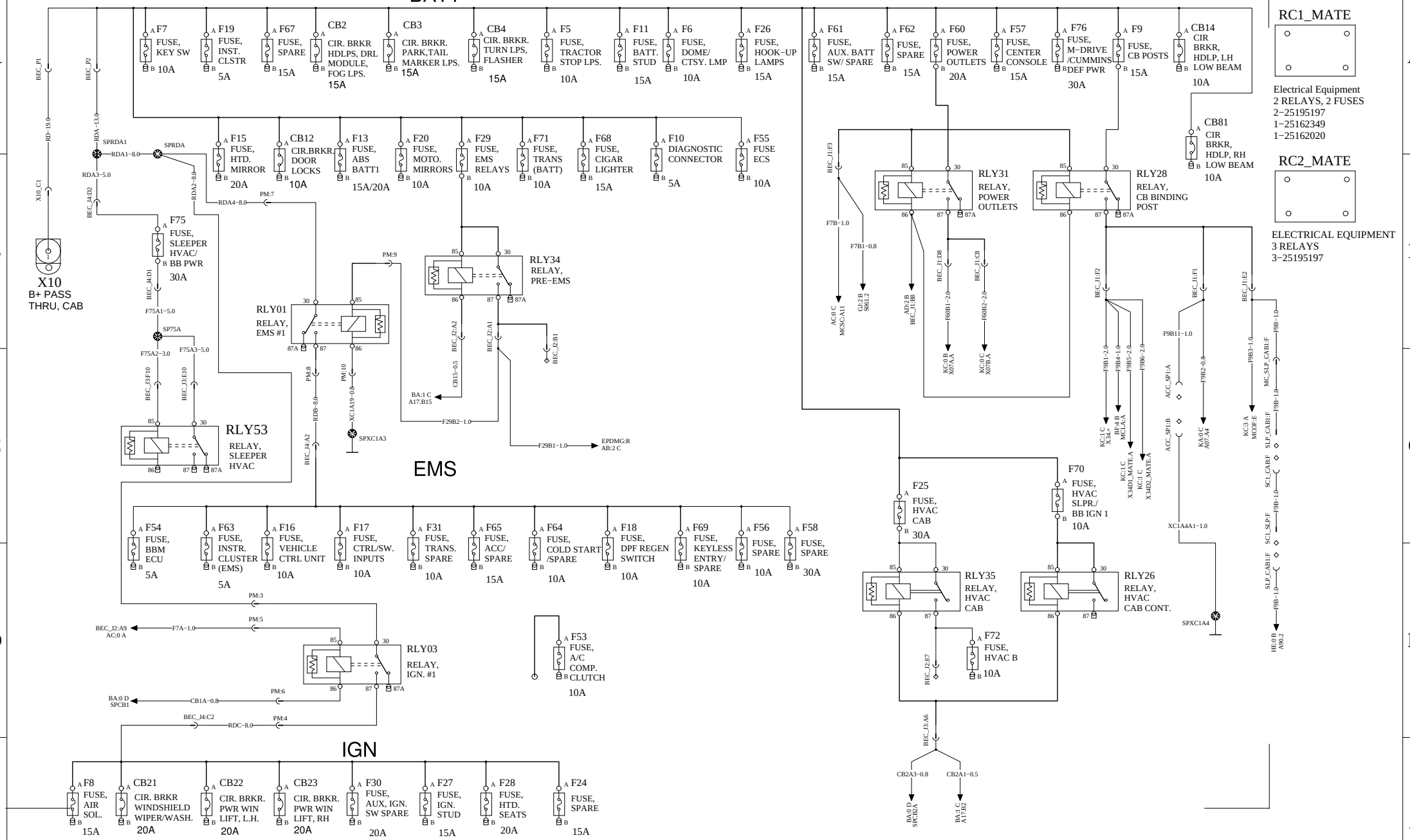

VOLVO Group Trucks Technology	Document title: WIRING DIAGRAM - PC28 - 12V MACK - 2013BP - ENG-CU12	Document No: 22234428	Issue: 02	Volume: 01	Page: 2 (83)
	Document type: PRODUCT SCHEMATIC			

https://truckmanualshub.com/

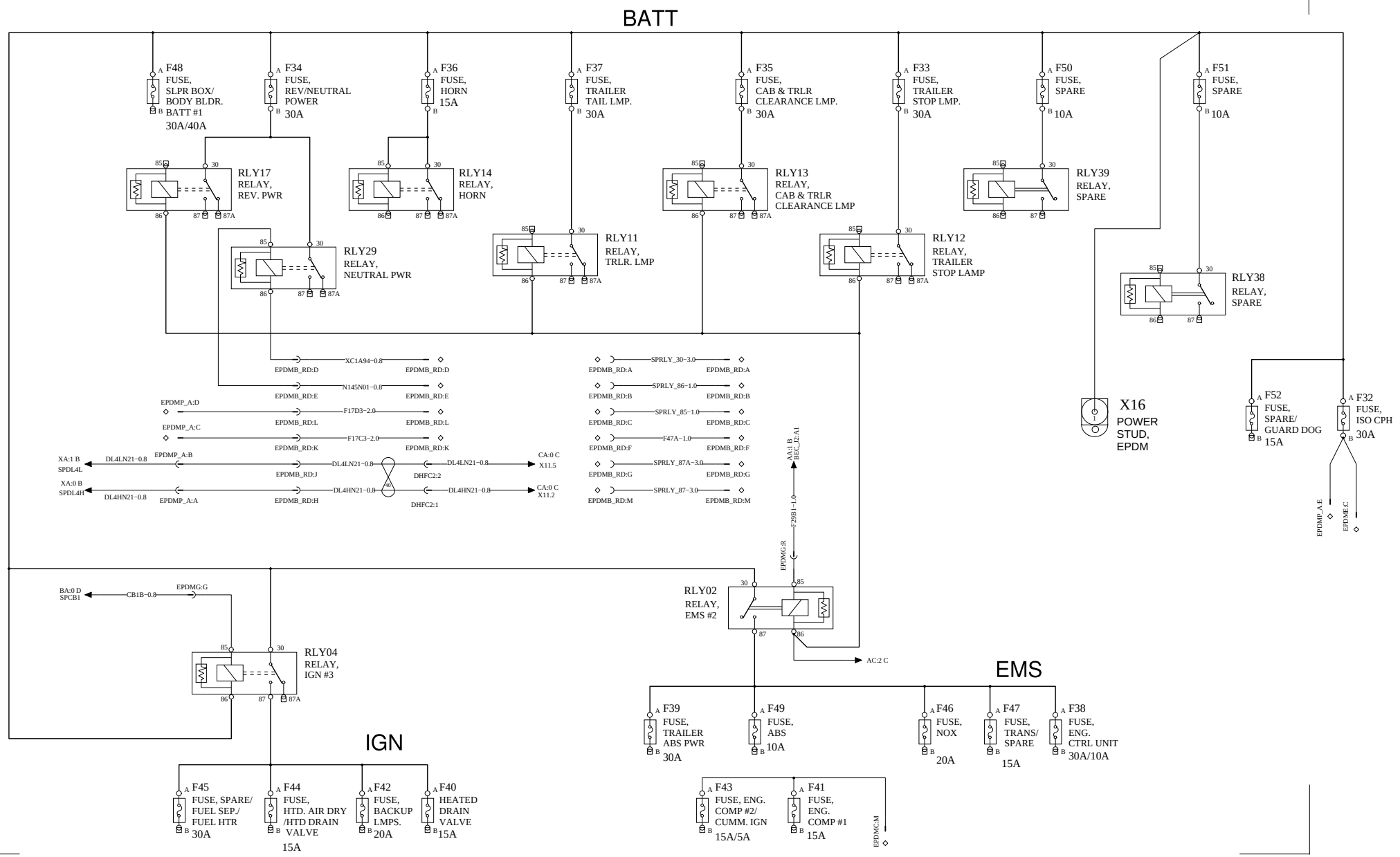

VOLVO Group Trucks Technology	Document title: WIRING DIAGRAM - PC28 - 12V MACK - 2013BP - ENG-CU12	Document No	Issue	Volume	Page
	Document type: PRODUCT SCHEMATIC	22234428	02	01	3 (83)

https://truckmanualshub.com/

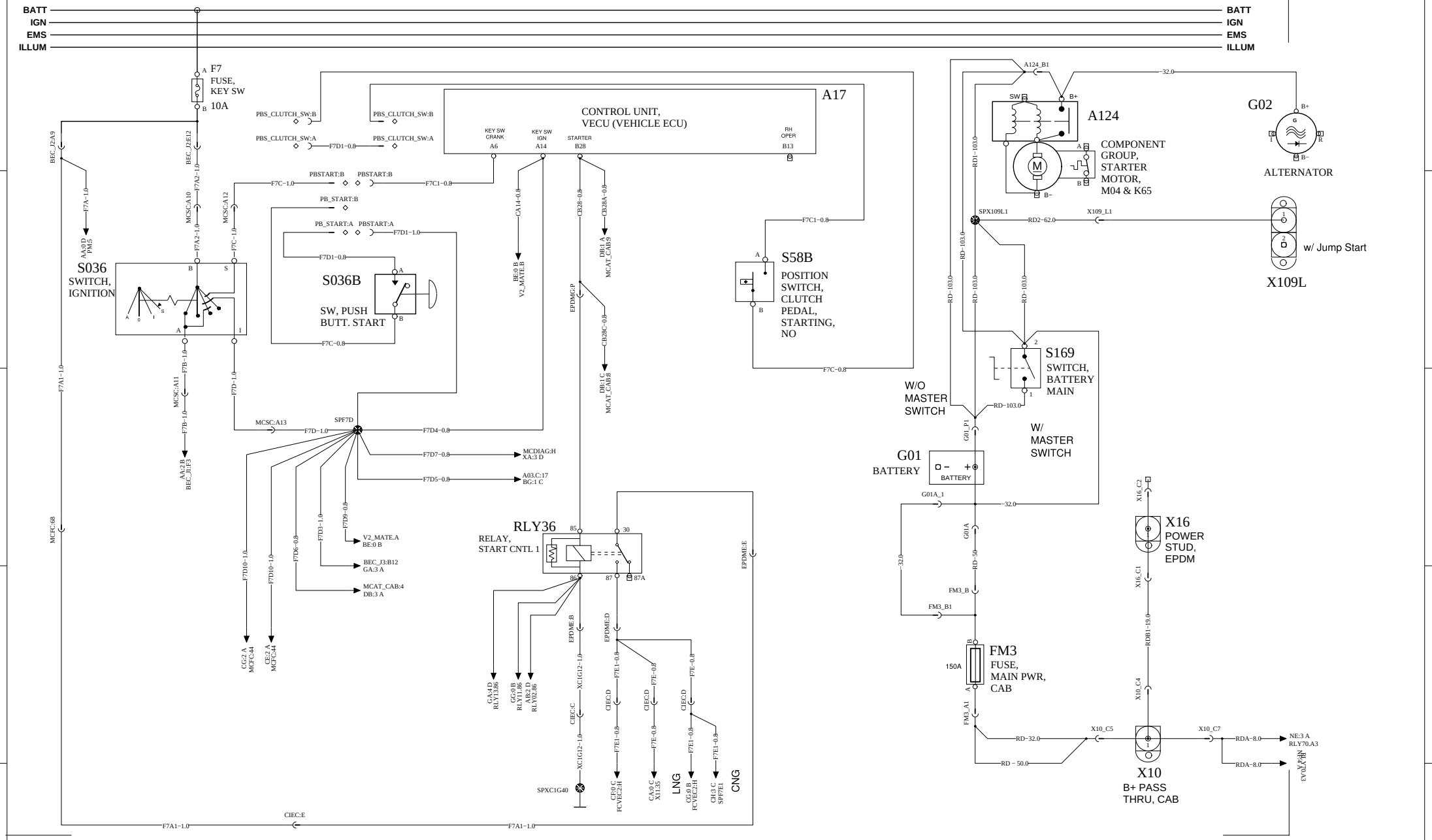

VOLVO	Group Trucks Technology	Document title WIRING DIAGRAM - PC28 - 12V MACK - 2013BP - ENG-CU12 Document type PRODUCT SCHEMATIC	Document No 22234428	Issue 02	Volume 01	Page 4 (83)

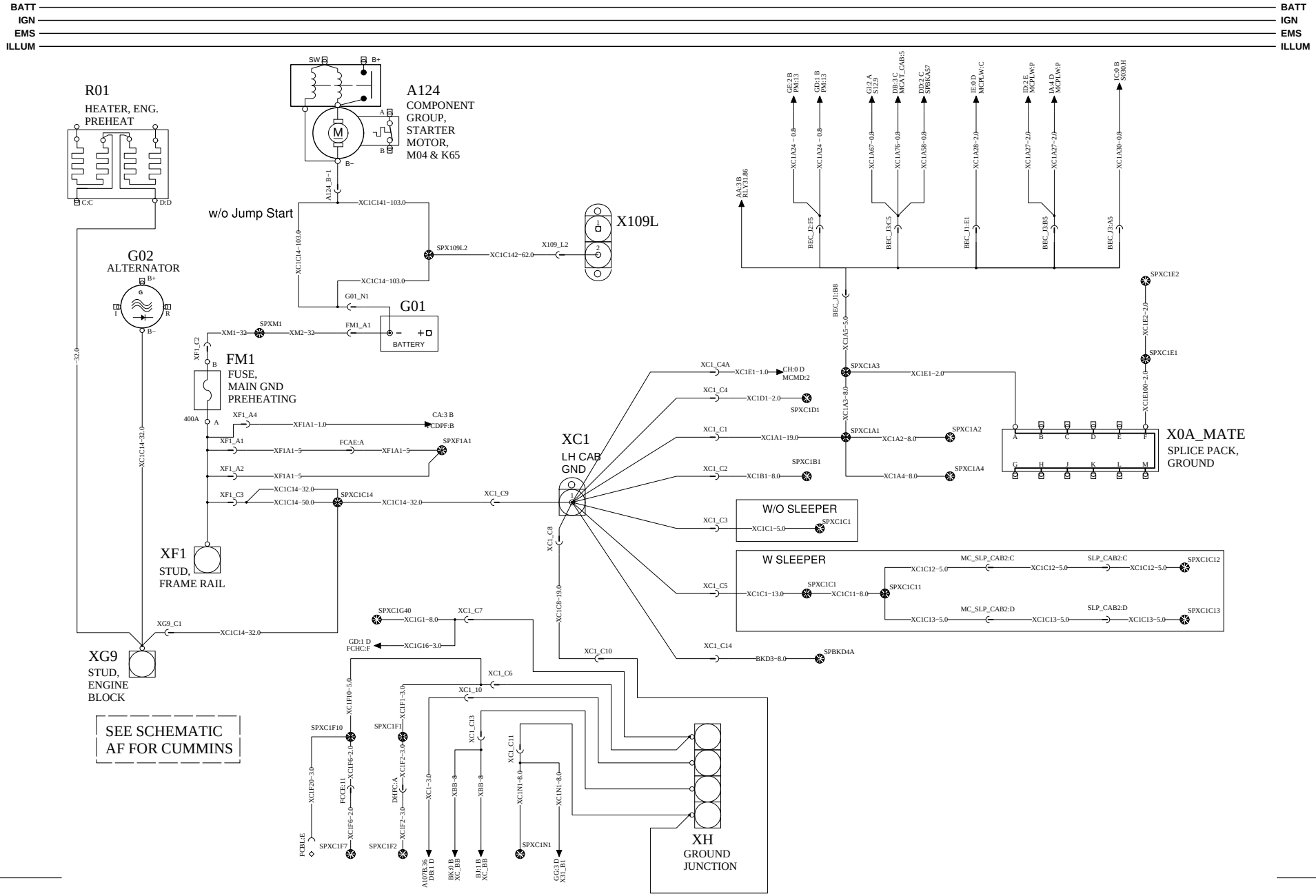
BATT
IGN
EMS
ILLUM
R01
HEATER, ENG. PREHEAT
A124
COMPONENT GROUP, STARTER MOTOR, M04 & K65
w/o Jump Start
X109L
G02
ALTERNATOR
G01
BATTERY
FM1
FUSE, MAIN GND PREHEATING
XF1
STUD, FRAME RAIL
XG9
STUD, ENGINE BLOCK
SEE SCHEMATIC AF FOR CUMMINS
XC1
LH CAB GND
W/O SLEEPER
W SLEEPER
X0A_MATE
SPLICE PACK, GROUND
XH
GROUND JUNCTION

https://truckmanualshub.com/

BATTERY CONFIGURATION

WIRING DIAGRAM: AE

BATT
IGN
EMS
ILLUM

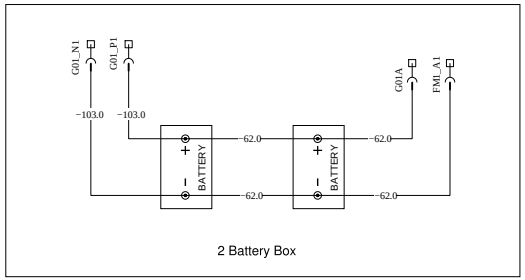

2 Battery Box

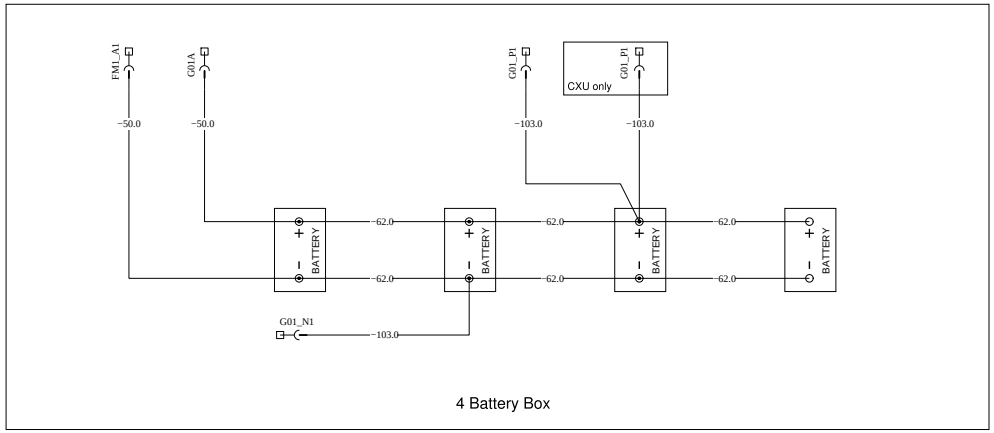

4 Battery Box

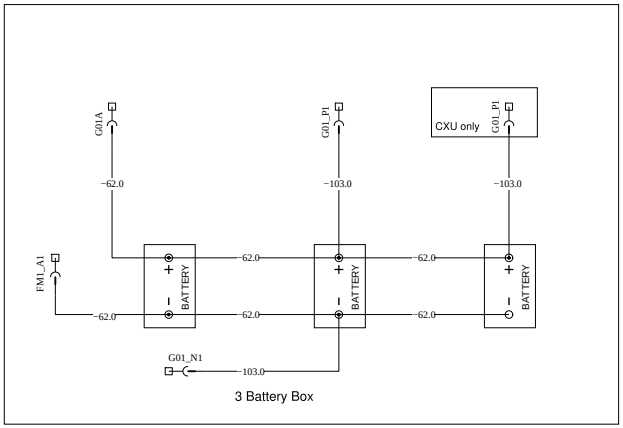

3 Battery Box

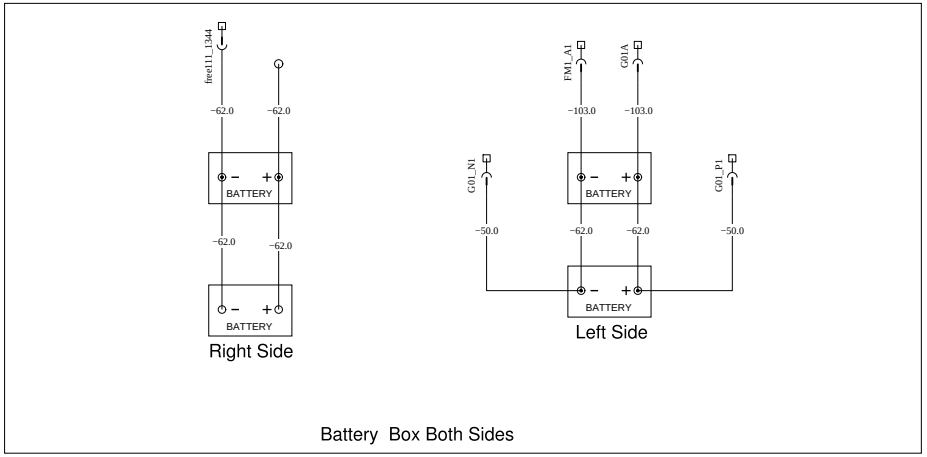

Battery Box Both Sides

VOLVO Group Trucks Technology	Document title WIRING DIAGRAM - PC28 - 12V MACK - 2013BP - ENG-CU12 Document type PRODUCT SCHEMATIC	Document No 22234428	Issue 02	Volume 01	Page 6 (83)

https://truckmanualshub.com/

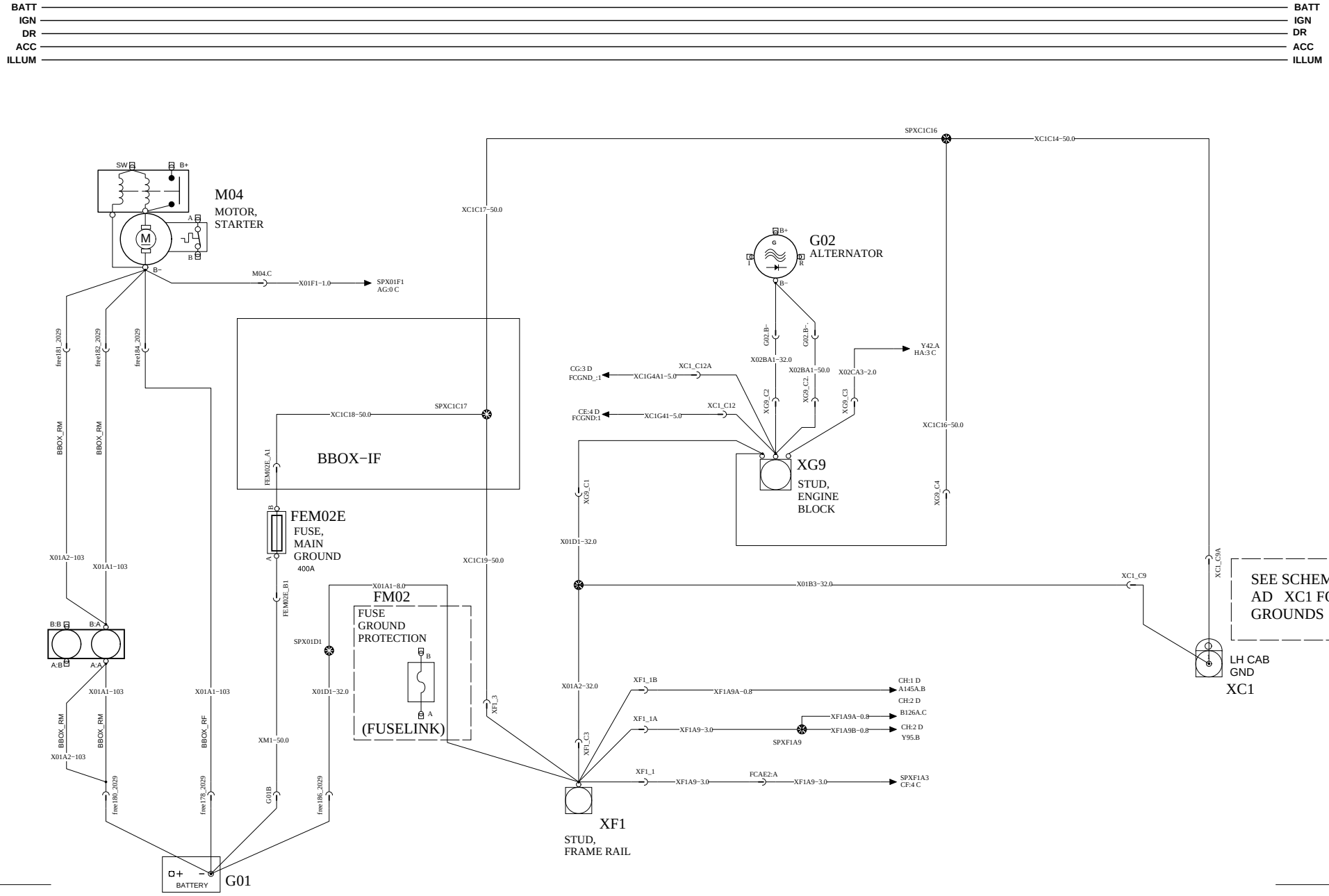

https://truckmanualshub.com/

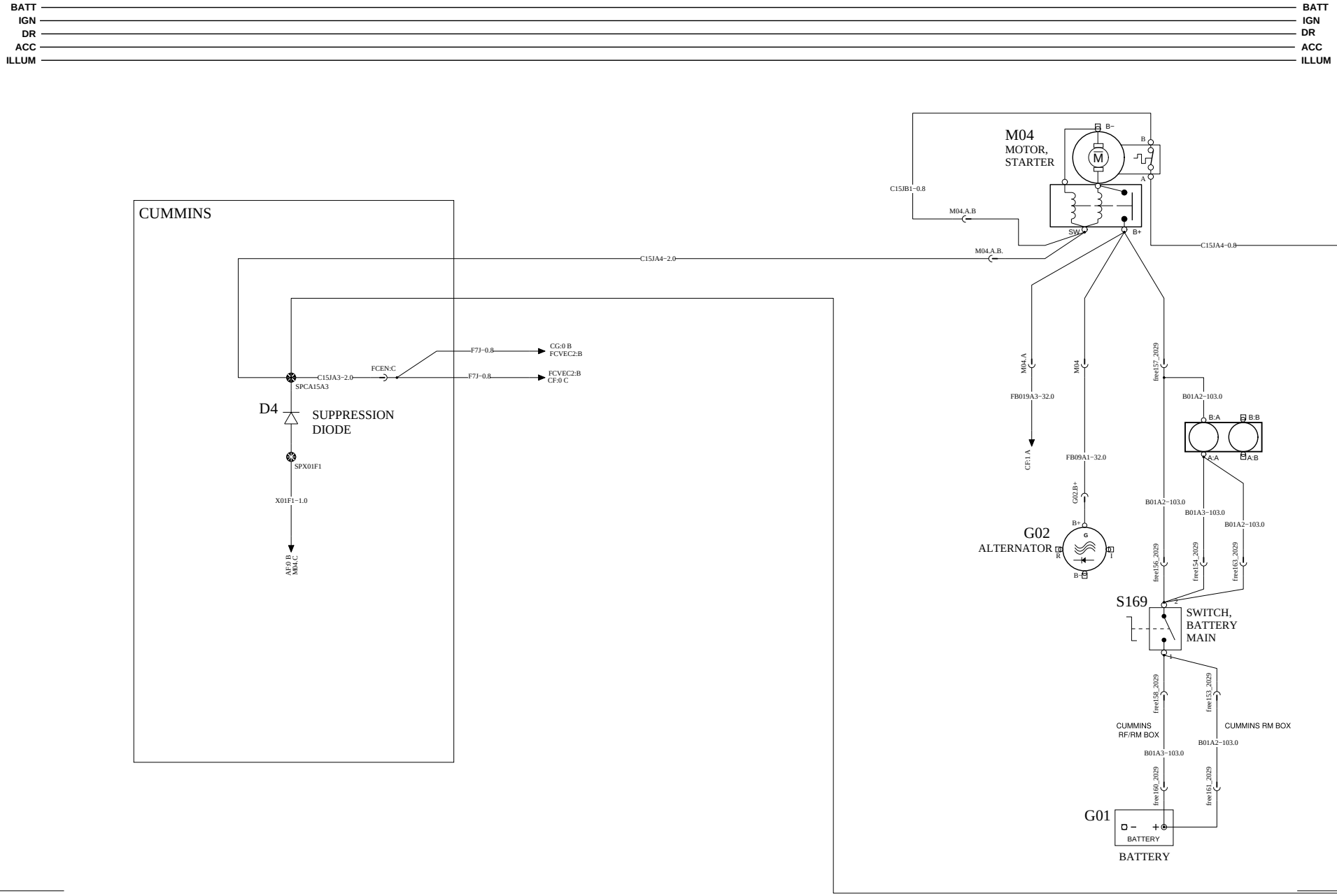

VOLVO	Group Trucks Technology	Document title WIRING DIAGRAM - PC28 - 12V MACK - 2013BP - ENG-CU12 Document type PRODUCT SCHEMATIC	Document No 22234428	Issue 02	Volume 01	Page 8 (83)

https://truckmanualshub.com/

BATT
IGN
EMS
ILLUM

ENG-CU12
EARC

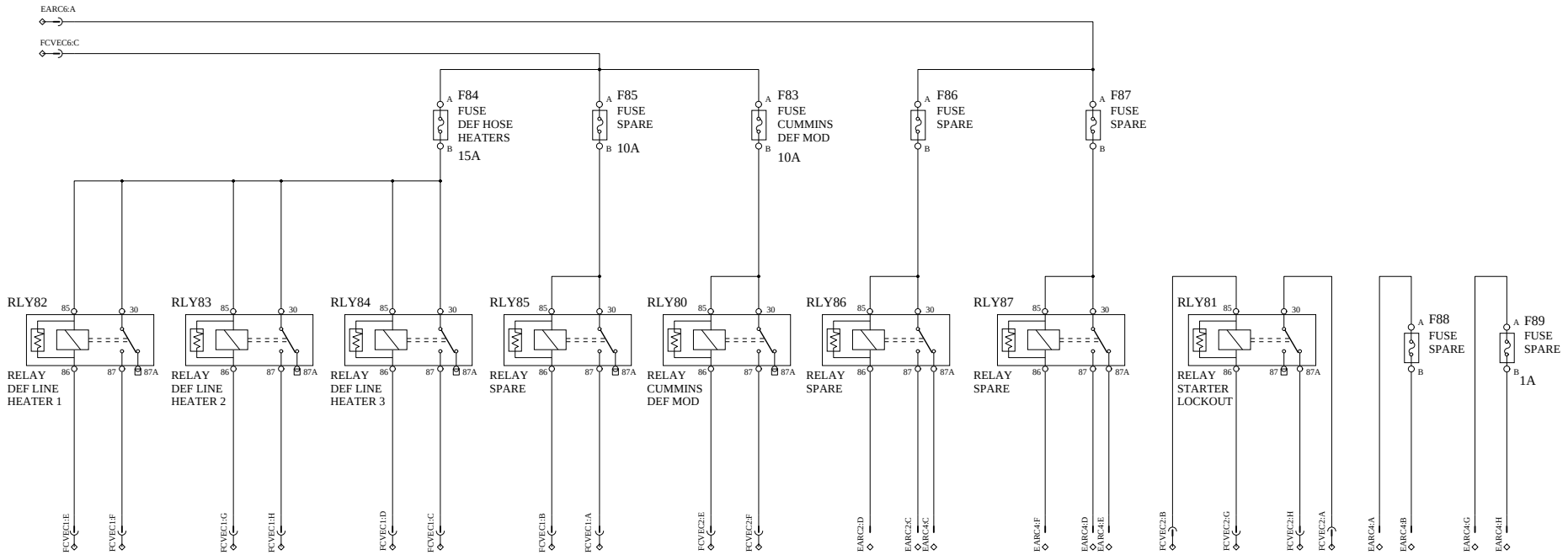

https://truckmanualshub.com/

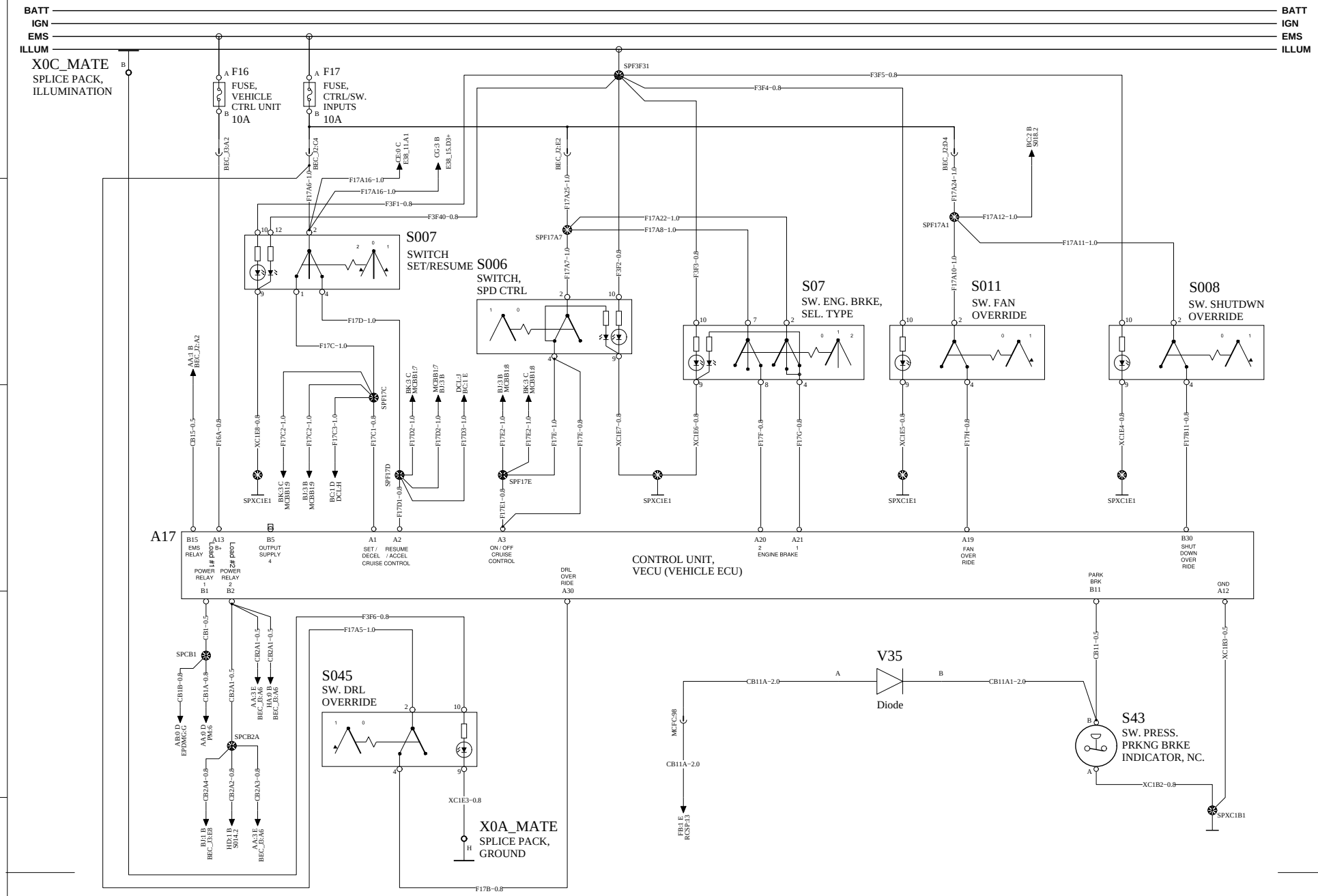

VOLVO Group Trucks Technology	Document title: WIRING DIAGRAM - PC28 - 12V MACK - 2013BP - ENG-CU12	Document No	Issue	Volume	Page
	Document type: PRODUCT SCHEMATIC	22234428	02	01	10 (83)

https://truckmanualshub.com/

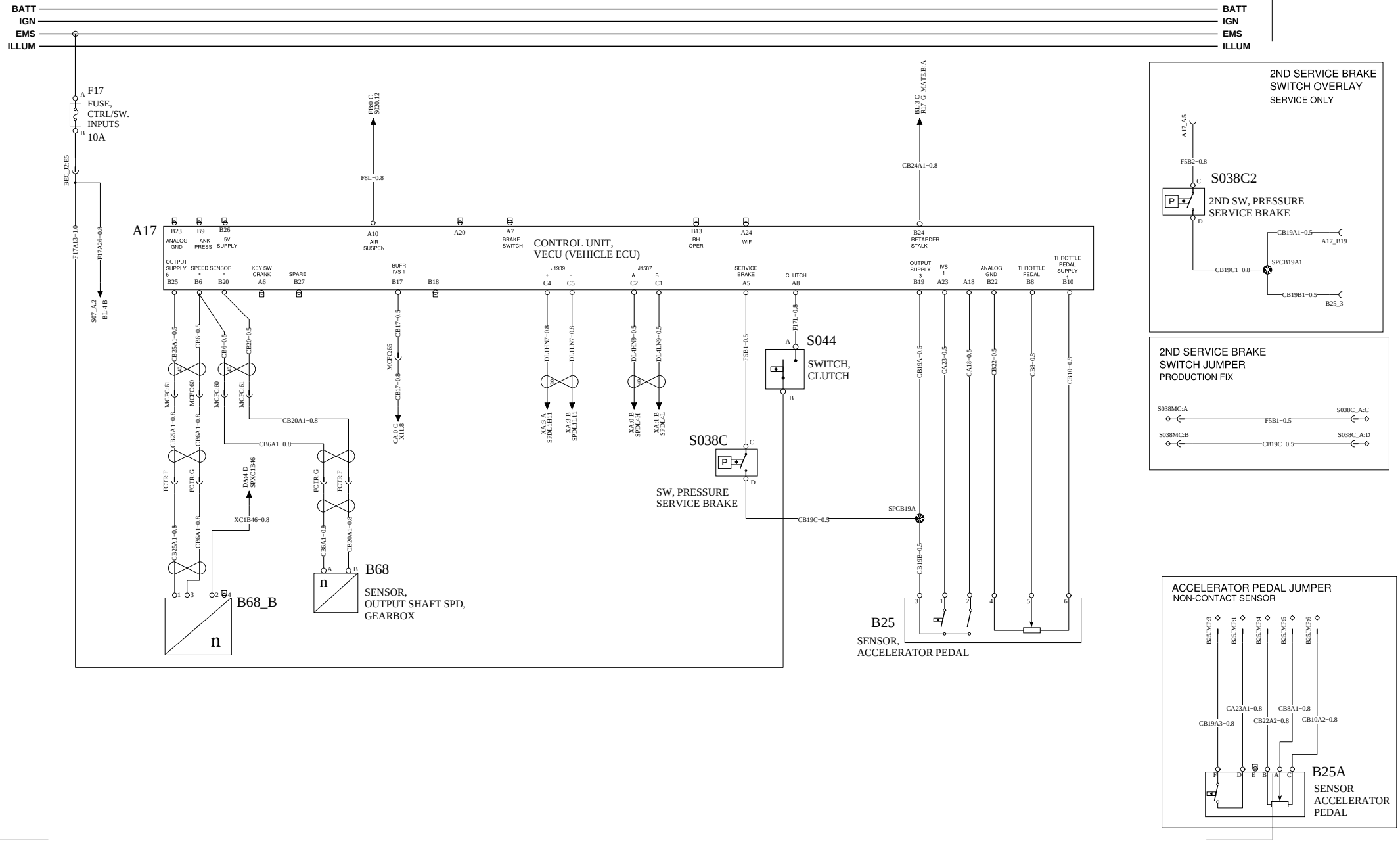

VOLVO	Group Trucks Technology	Document title WIRING DIAGRAM - PC28 - 12V MACK - 2013BP - ENG-CU12 Document type PRODUCT SCHEMATIC	Document No 22234428	Issue 02	Volume 01	Page 11 (83)

https://truckmanualshub.com/

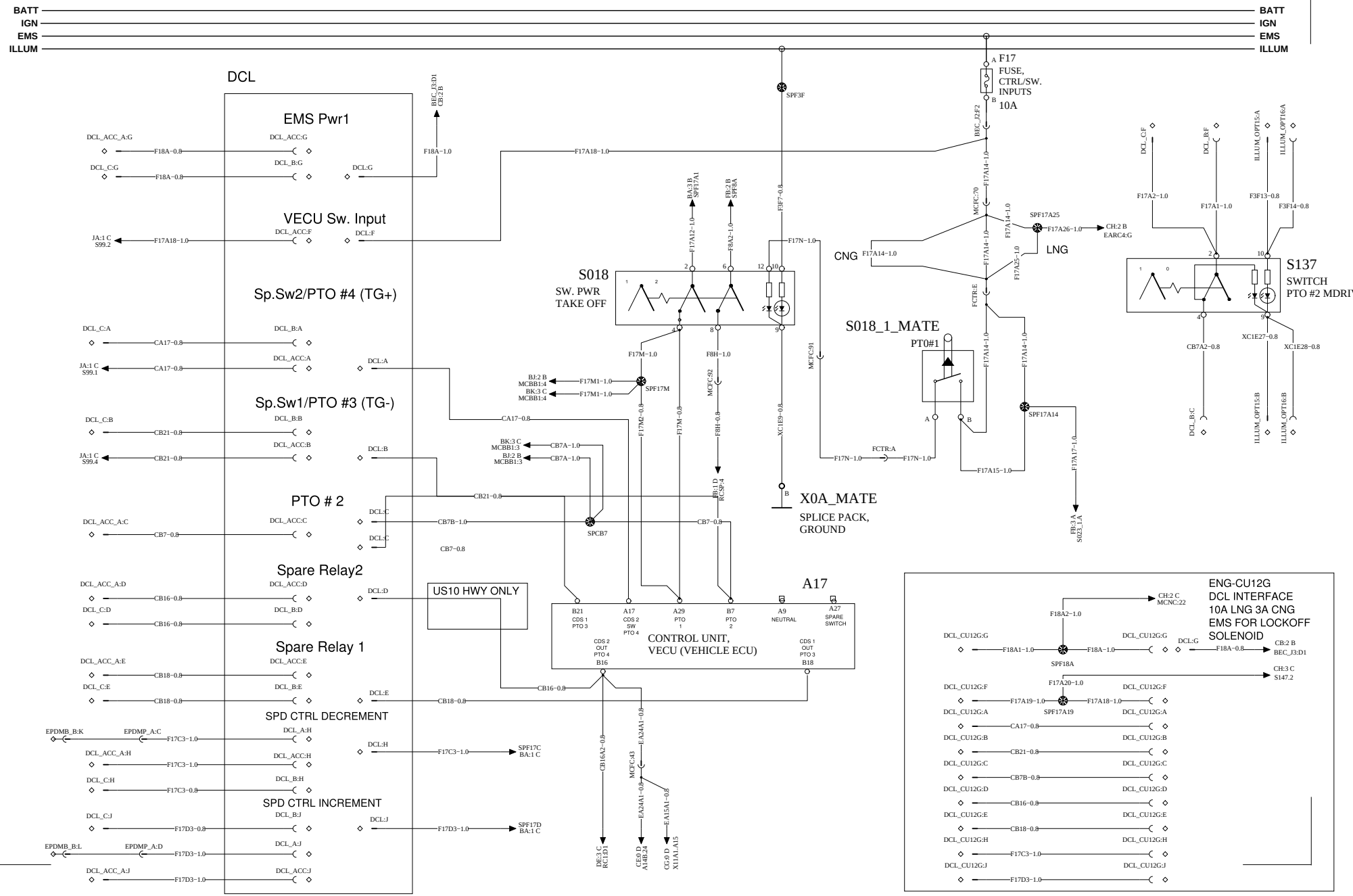

VOLVO Group Trucks Technology	Document title: WIRING DIAGRAM - PC28 - 12V MACK - 2013BP - ENG-CU12	Document No	Issue	Volume	Page
	Document type: PRODUCT SCHEMATIC	22234428	02	01	12 (83)

https://truckmanualshub.com/

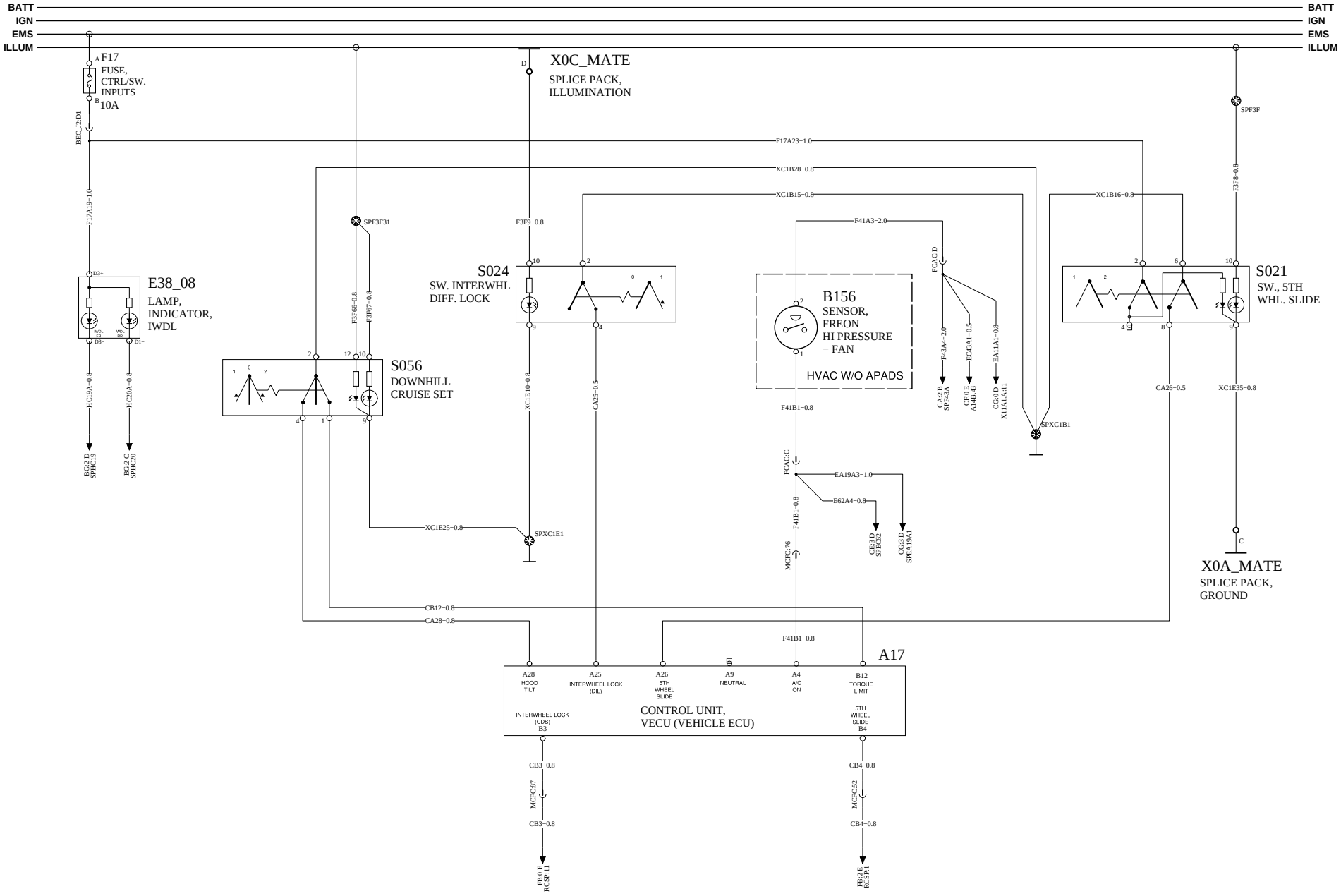

https://truckmanualshub.com/

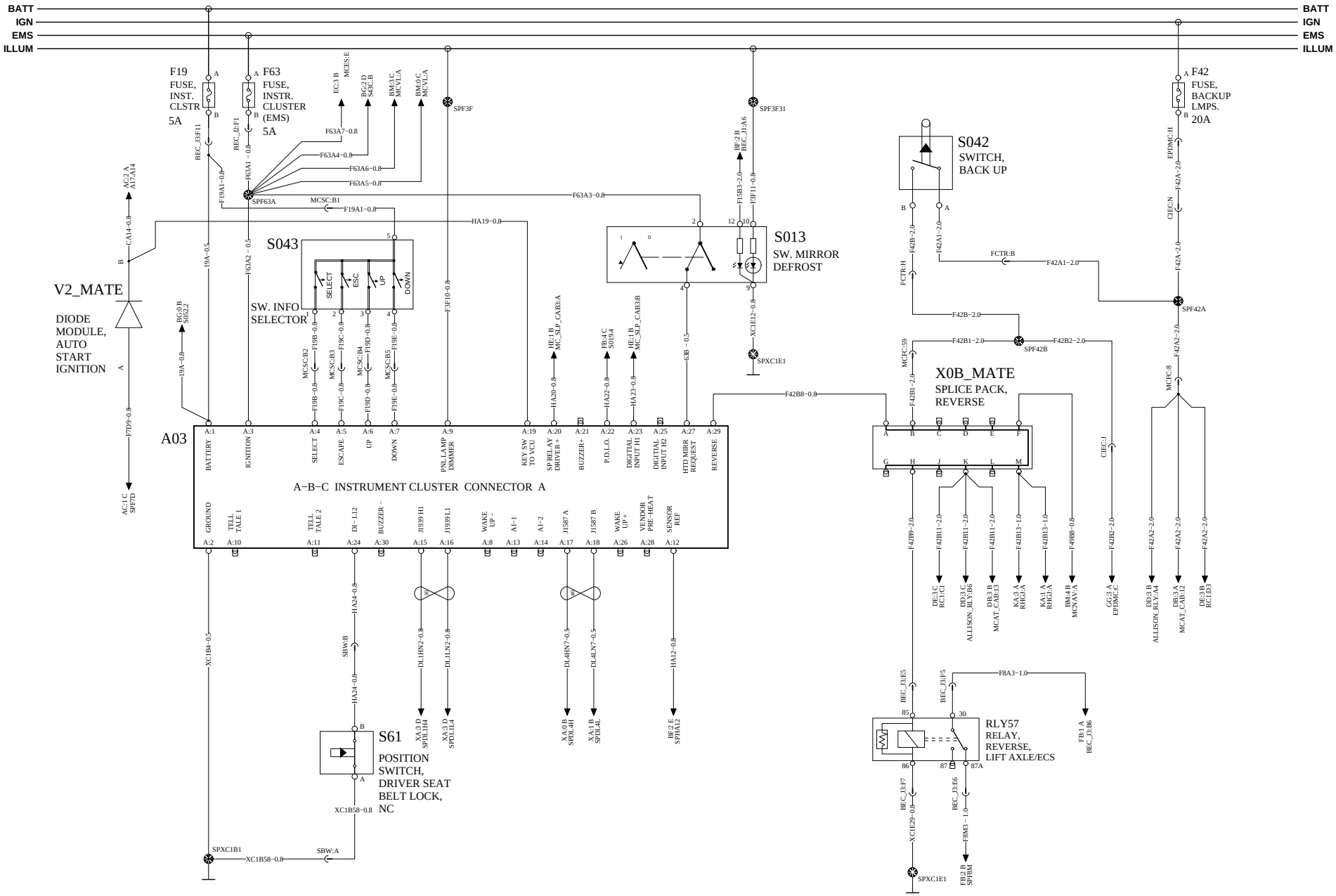

VOLVO Group Trucks Technology	Document title WIRING DIAGRAM - PC28 - 12V MACK - 2013BP - ENG-CU12 Document type PRODUCT SCHEMATIC	Document No 22234428	Issue 02	Volume 01	Page 14 (83)

https://truckmanualshub.com/

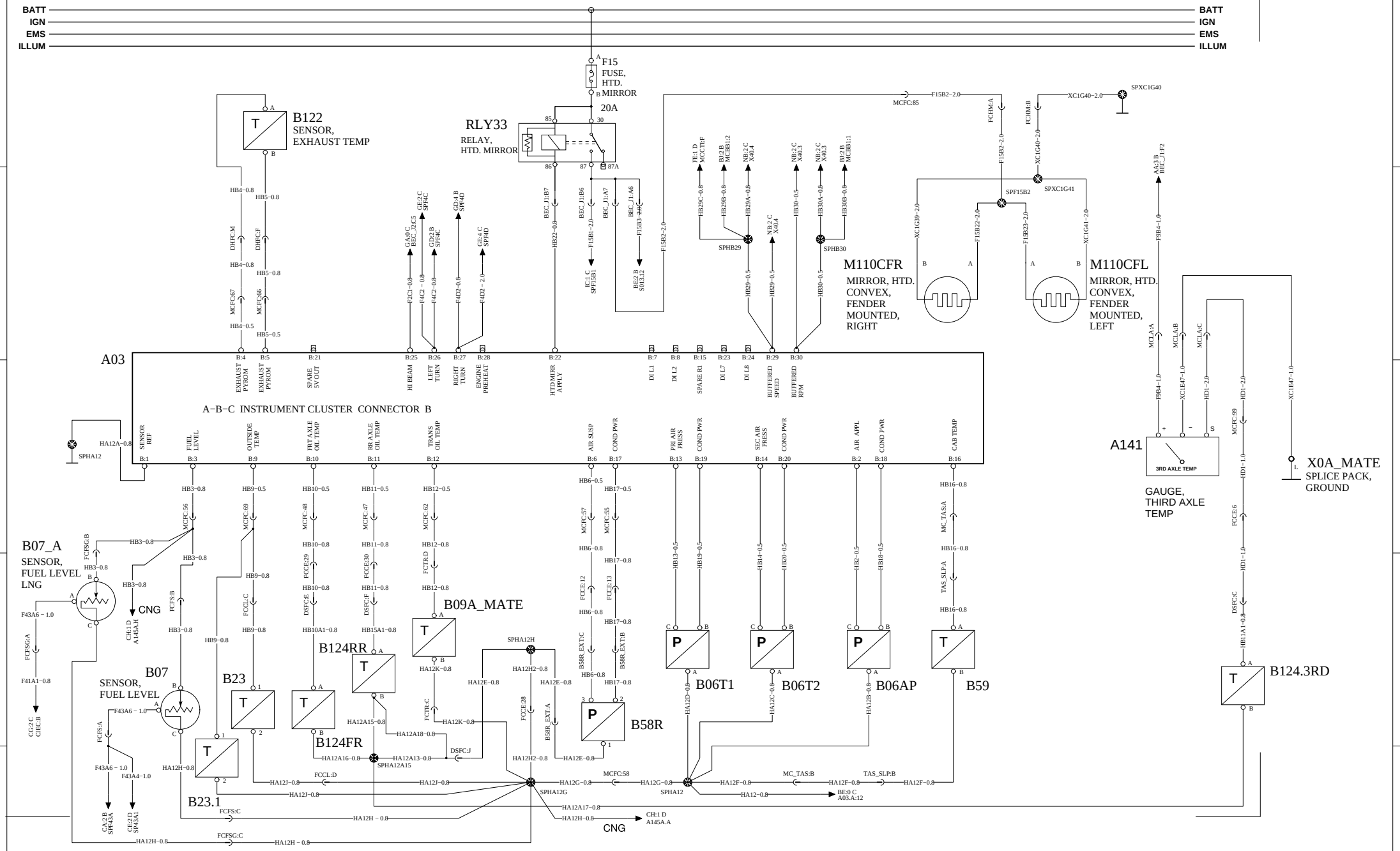

VOLVO Group Trucks Technology	Document title: WIRING DIAGRAM - PC28 - 12V MACK - 2013BP - ENG-CU12	Document No	Issue	Volume	Page
	Document type: PRODUCT SCHEMATIC	22234428	02	01	15 (83)

https://truckmanualshub.com/

INSTRUMENT CLUSTER 3/3

WIRING DIAGRAM: BG

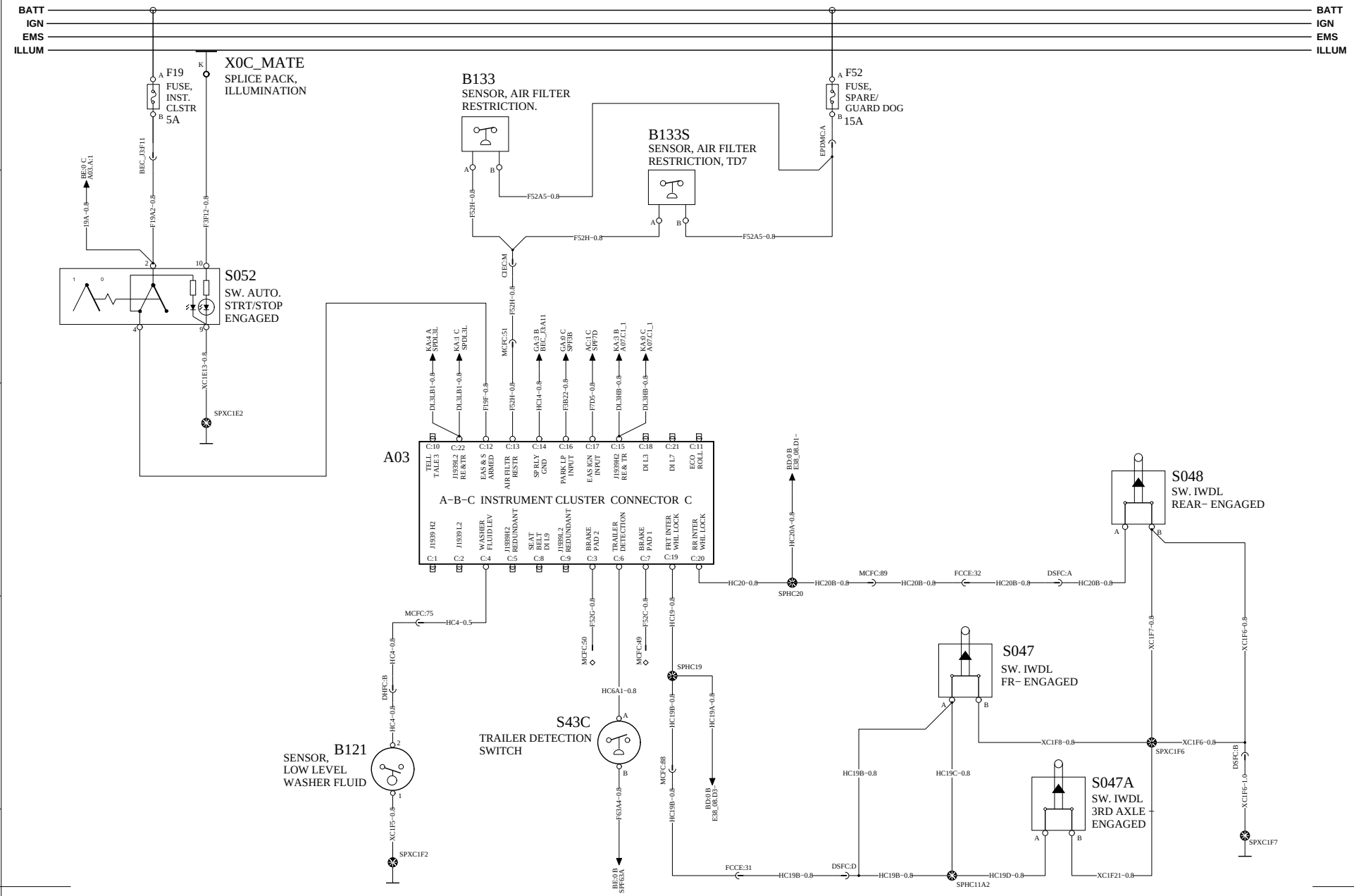

VOLVO	Group Trucks Technology	Document title WIRING DIAGRAM - PC28 - 12V MACK - 2013BP - ENG-CU12 Document type PRODUCT SCHEMATIC	Document No 22234428	Issue 02	Volume 01	Page 16 (83)

BATT
IGN
EMS
ILLUM

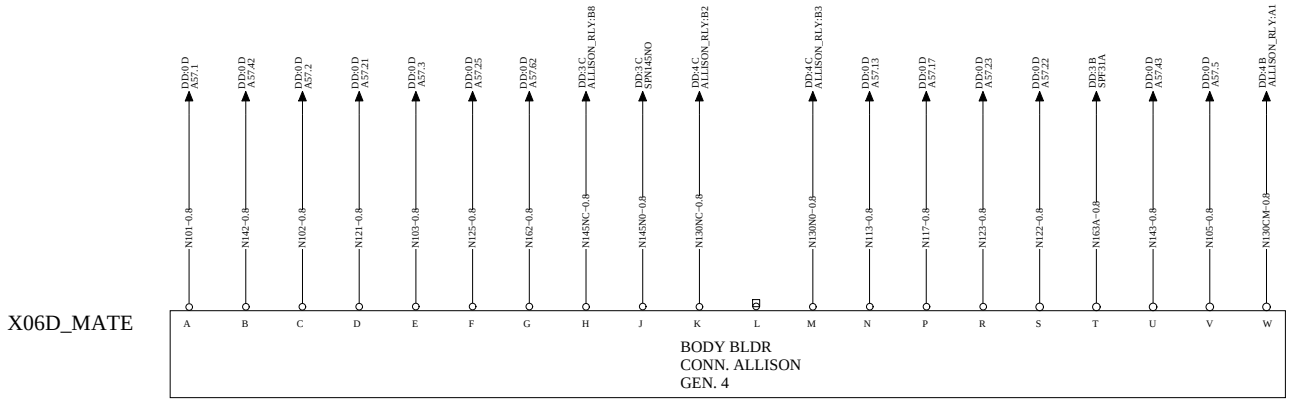

https://truckmanualshub.com/

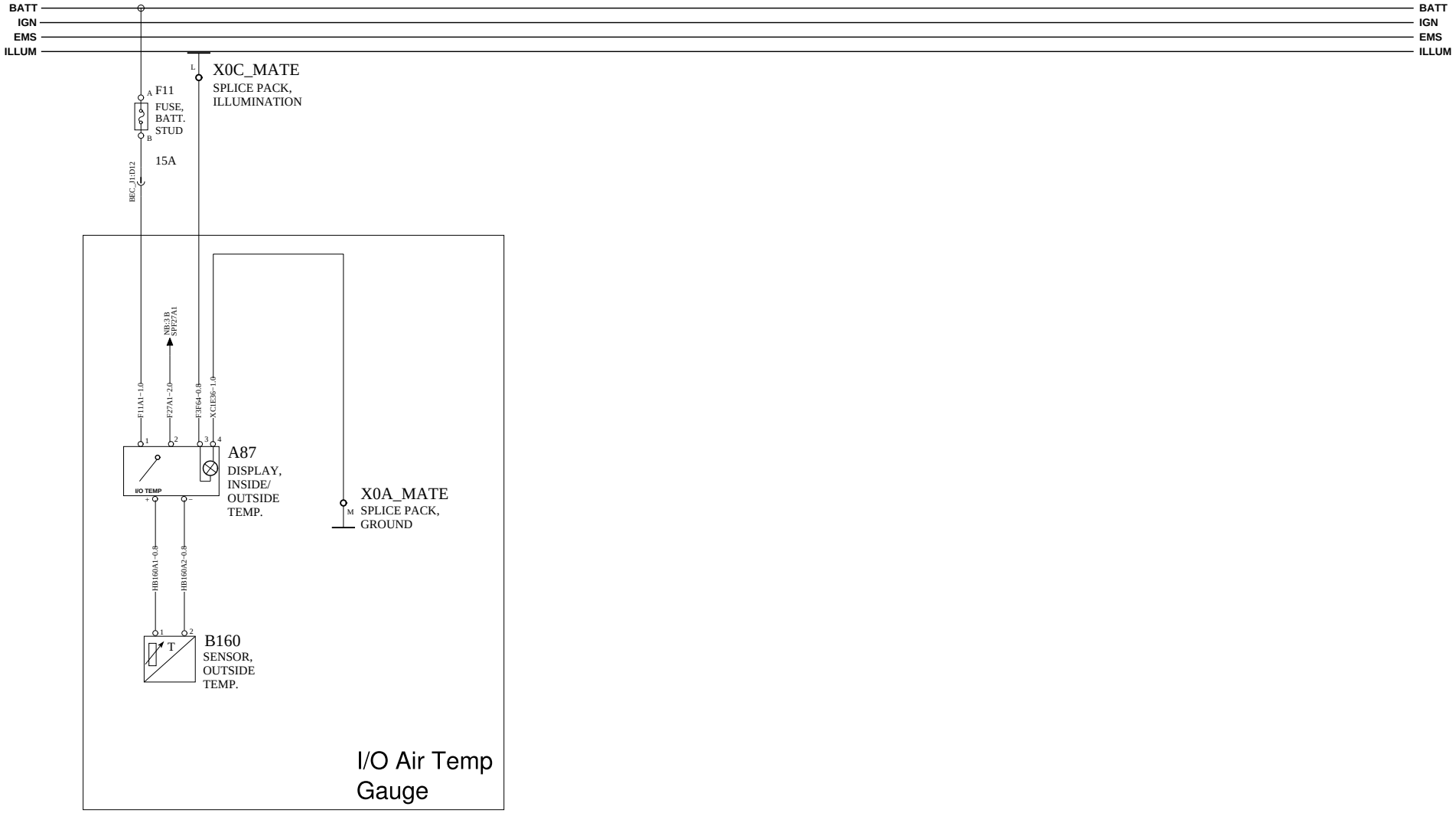

https://truckmanualshub.com/

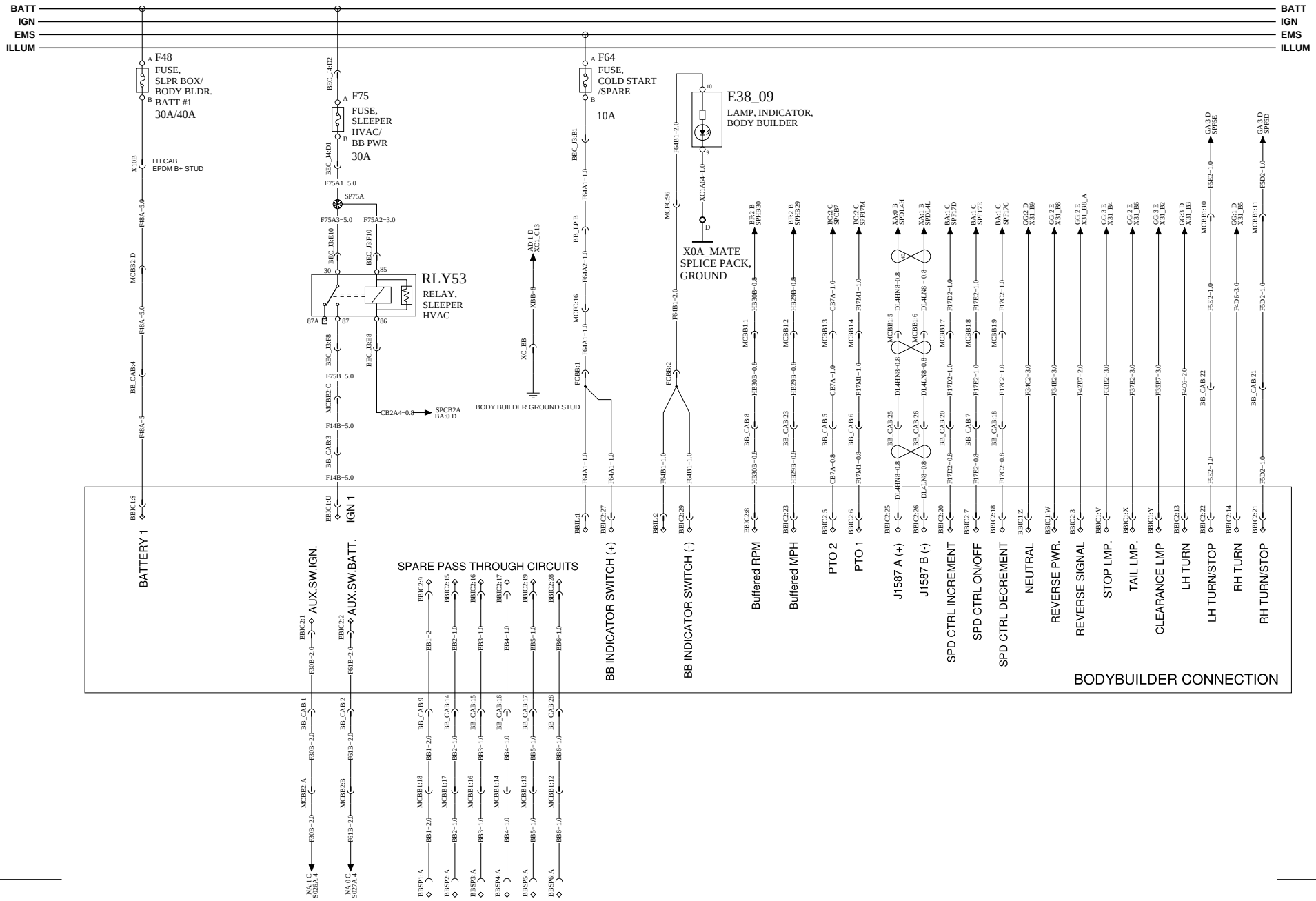

VOLVO Group Trucks Technology	Document title: WIRING DIAGRAM - PC28 - 12V MACK - 2013BP - ENG-CU12	Document No	Issue	Volume	Page
	Document type: PRODUCT SCHEMATIC	22234428	02	01	19 (83)

https://truckmanualshub.com/

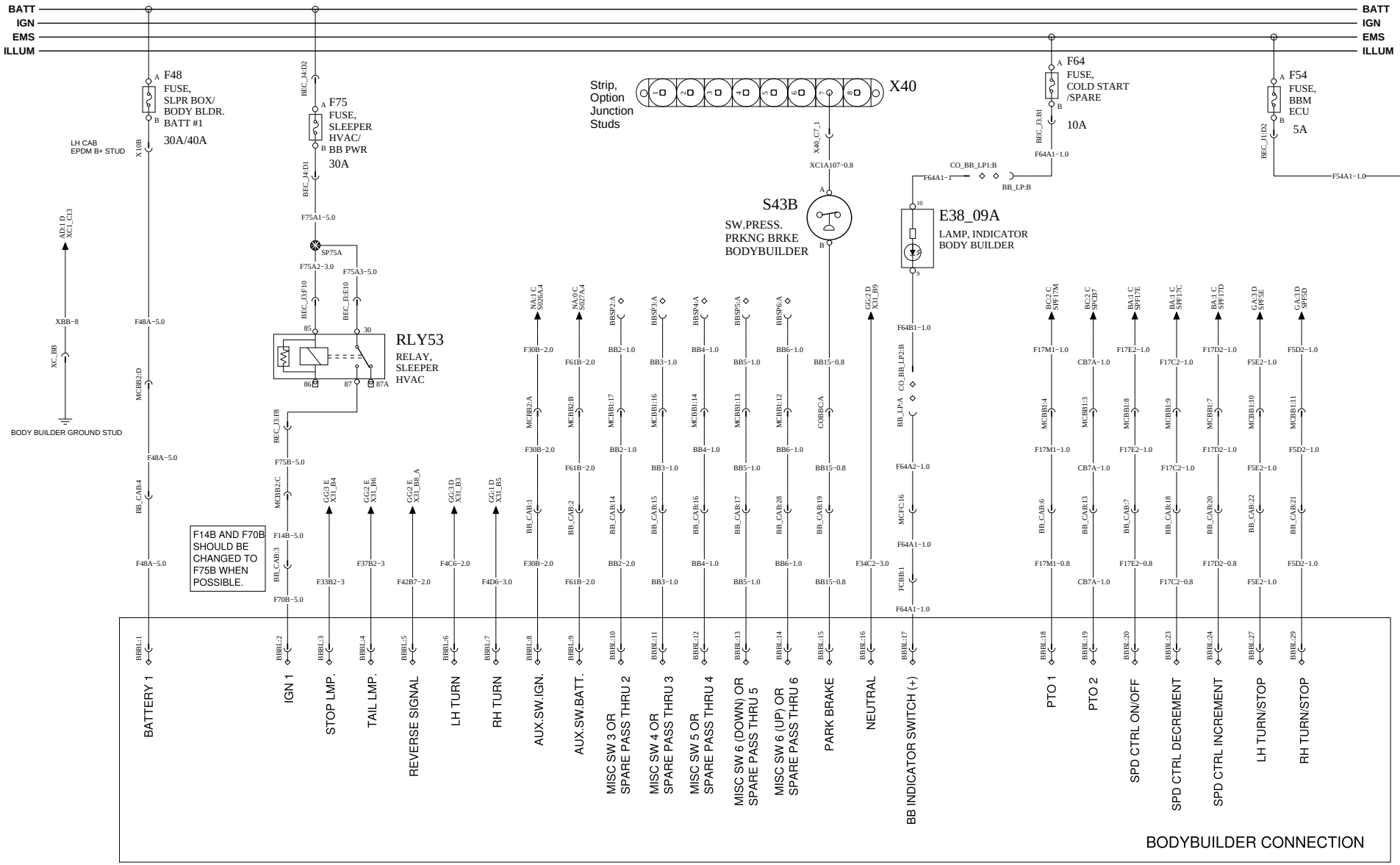

VOLVO Group Trucks Technology	Document title: WIRING DIAGRAM - PC28 - 12V MACK - 2013BP - ENG-CU12	Document No	Issue	Volume	Page
	Document type: PRODUCT SCHEMATIC	22234428	02	01	20 (83)

https://truckmanualshub.com/

ENGINE BRAKE CONTROL − M−DRIVE

WIRING DIAGRAM: BL

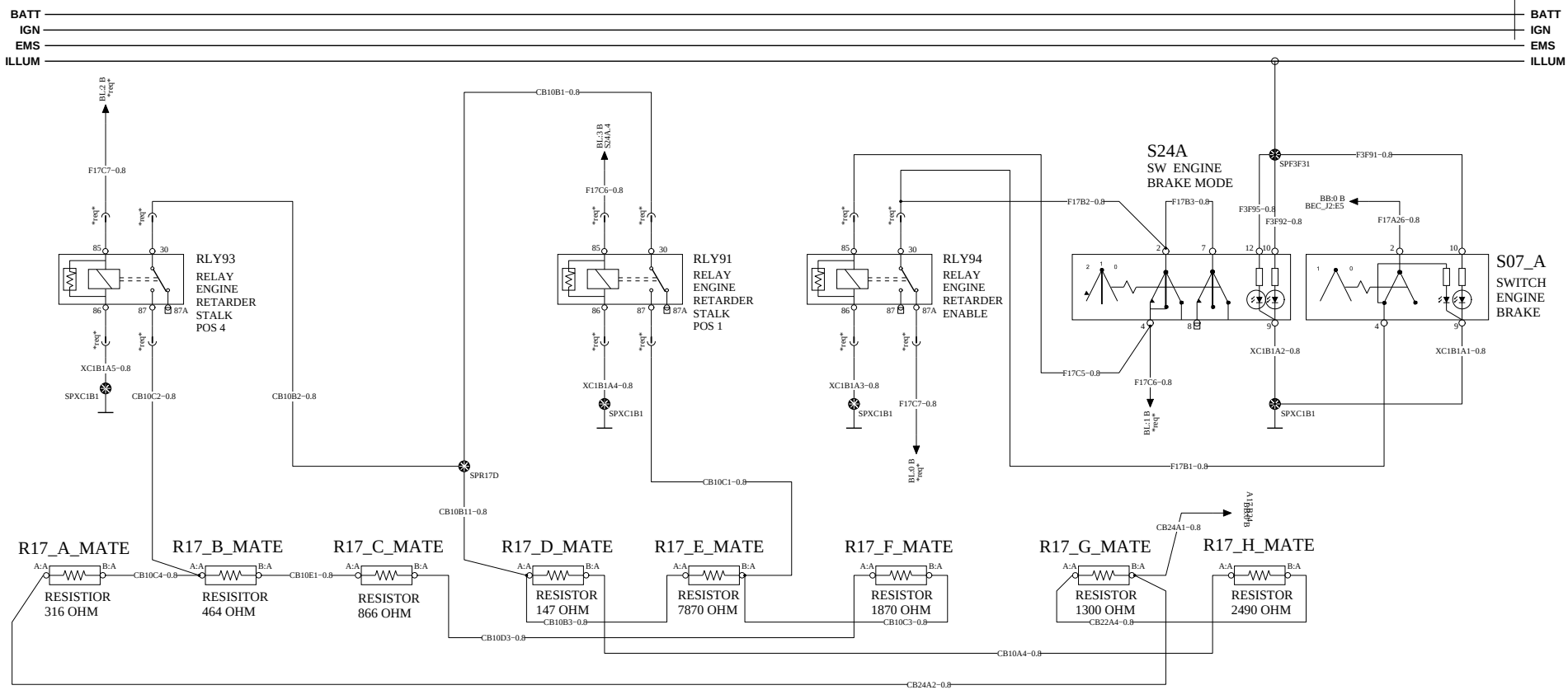

SHEET TO BE DELETED

VOLVO	Group Trucks Technology	Document title WIRING DIAGRAM - PC28 - 12V MACK - 2013BP - ENG-CU12 Document type PRODUCT SCHEMATIC	Document No 22234428	Issue 02	Volume 01	Page 21 (83)

https://truckmanualshub.com/

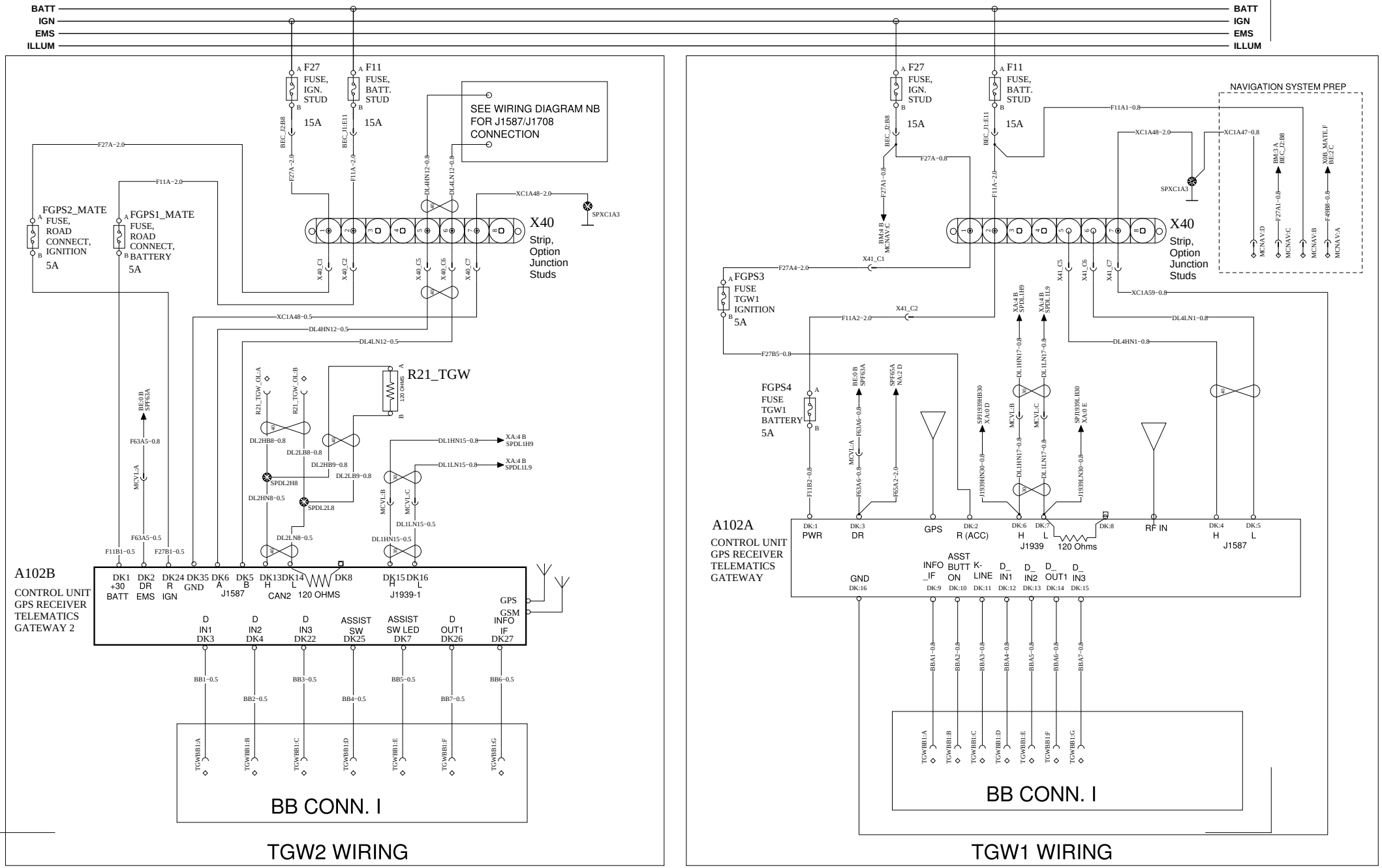

VOLVO	Group Trucks Technology	Document title: WIRING DIAGRAM - PC28 - 12V MACK - 2013BP - ENG-CU12	Document No: 22234428	Issue: 02	Volume: 01
		Document type: PRODUCT SCHEMATIC			Page: 22 (83)

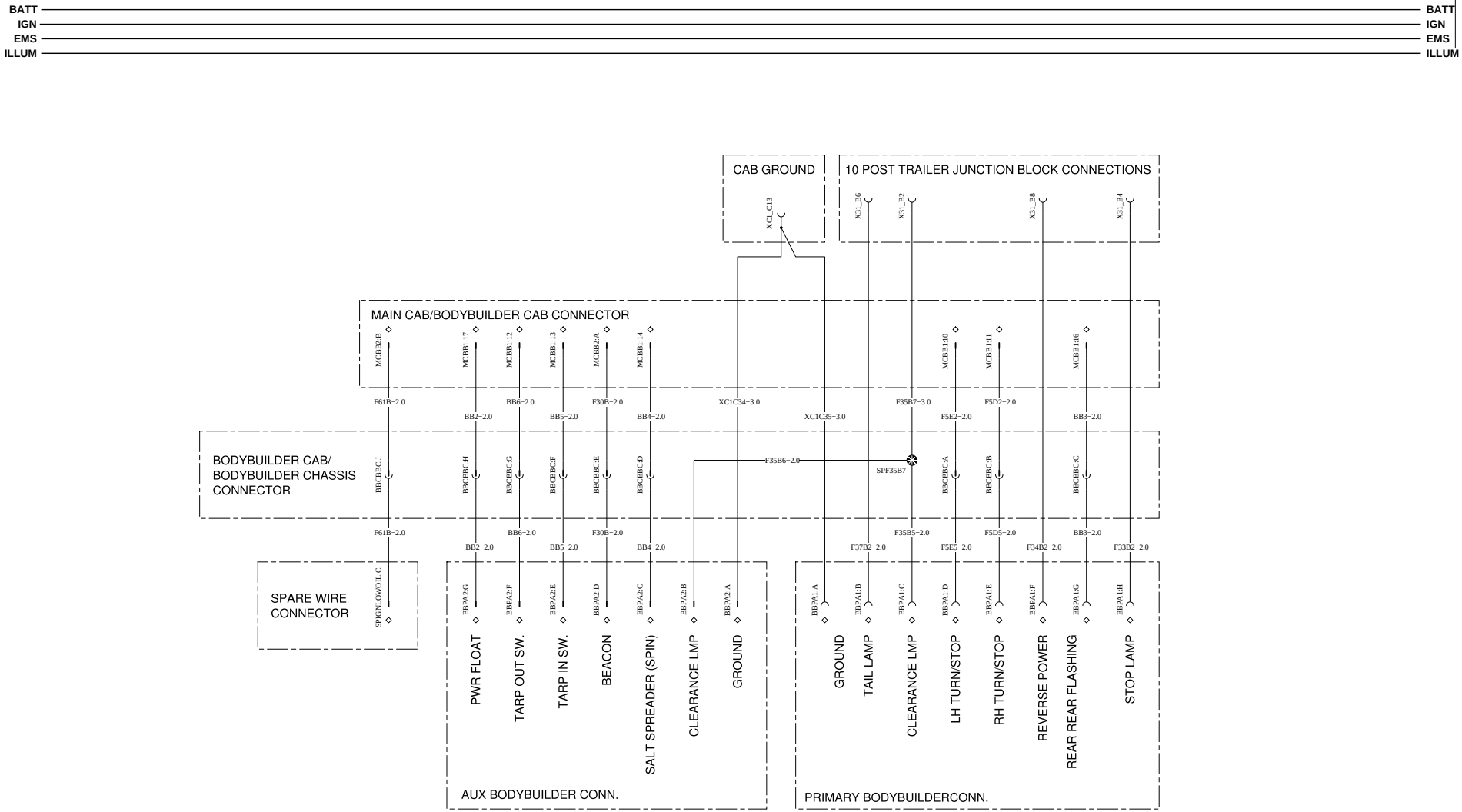
BATT
IGN
EMS
ILLUM
CAB GROUND
XC1_C13
10 POST TRAILER JUNCTION BLOCK CONNECTIONS
X31_B6
X31_B2
X31_B8
X31_B4
MAIN CAB/BODYBUILDER CAB CONNECTOR
MCBB2:B
MCBB1:17
MCBB1:12
MCBB1:13
MCBB2:A
MCBB1:14
MCBB1:10
MCBB1:11
MCBB1:16
F61B-2.0
BB2-2.0
BB6-2.0
BB5-2.0
F30B-2.0
BB4-2.0
XC1C34-3.0
XC1C35-3.0
F35B7-3.0
F5E2-2.0
F5D2-2.0
BB3-2.0
BODYBUILDER CAB/
BODYBUILDER CHASSIS
CONNECTOR
BBCBBC:J
BBCBBC:H
BBCBBC:G
BBCBBC:F
BBCBBC:E
BBCBBC:D
F35B6-2.0
SPF35B7
BBCBBC:A
BBCBBC:B
BBCBBC:C
F35B5-2.0
F5D5-2.0
F37B2-2.0
F5E5-2.0
F34B2-2.0
F33B2-2.0
SPARE WIRE
CONNECTOR
SPIGNLOWOIL:C
BBPA2:G
BBPA2:F
BBPA2:E
BBPA2:D
BBPA2:C
BBPA2:B
BBPA2:A
PWR FLOAT
TARP OUT SW.
TARP IN SW.
BEACON
SALT SPREADER (SPIN)
CLEARANCE LMP
GROUND
AUX BODYBUILDER CONN.
BBPA1:A
BBPA1:B
BBPA1:C
BBPA1:D
BBPA1:E
BBPA1:F
BBPA1:G
BBPA1:H
GROUND
TAIL LAMP
CLEARANCE LMP
LH TURN/STOP
RH TURN/STOP
REVERSE POWER
REAR REAR FLASHING
STOP LAMP
PRIMARY BODYBUILDERCONN.

https://truckmanualshub.com/

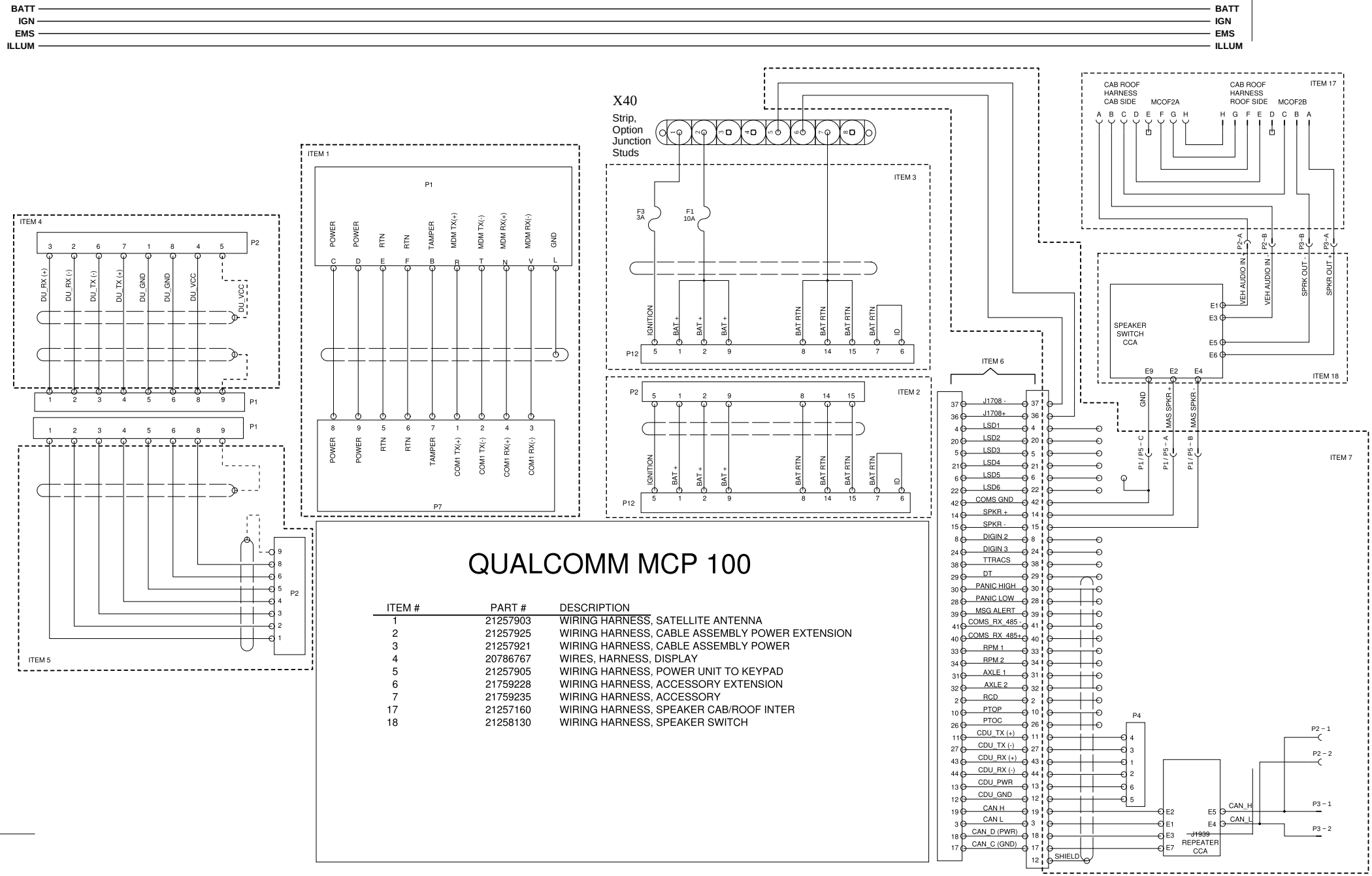

QUALCOMM MCP 100

ITEM #	PART #	DESCRIPTION
1	21257903	WIRING HARNESS, SATELLITE ANTENNA
2	21257925	WIRING HARNESS, CABLE ASSEMBLY POWER EXTENSION
3	21257921	WIRING HARNESS, CABLE ASSEMBLY POWER
4	20786767	WIRES, HARNESS, DISPLAY
5	21257905	WIRING HARNESS, POWER UNIT TO KEYPAD
6	21759228	WIRING HARNESS, ACCESSORY EXTENSION
7	21759235	WIRING HARNESS, ACCESSORY
17	21257160	WIRING HARNESS, SPEAKER CAB/ROOF INTER
18	21258130	WIRING HARNESS, SPEAKER SWITCH

https://truckmanualshub.com/

QUALCOMM MCP 110 OR 200 W/SLEEPER

WIRING DIAGRAM: BV

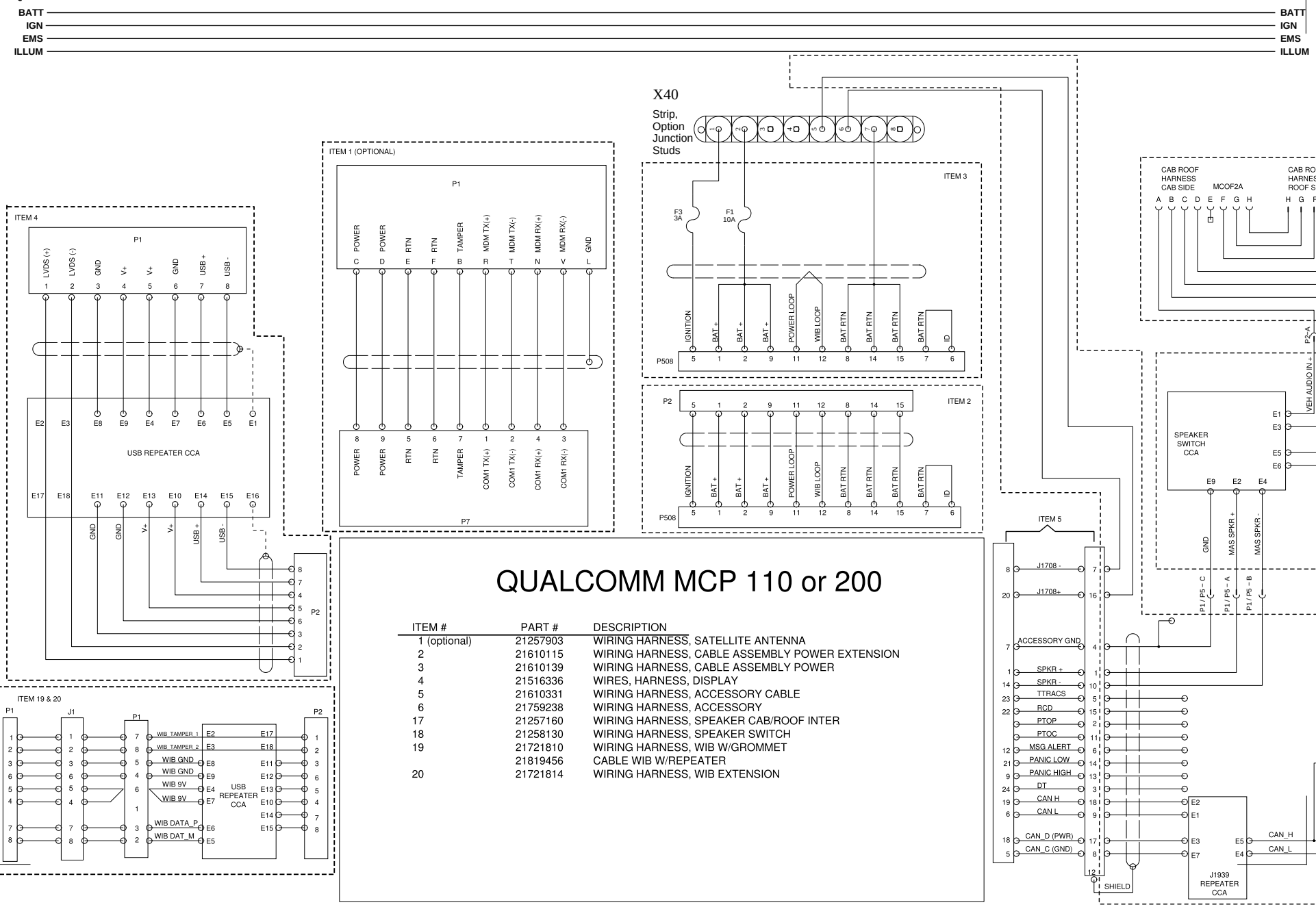

QUALCOMM MCP 110 or 200

ITEM #	PART #	DESCRIPTION
1 (optional)	21257903	WIRING HARNESS, SATELLITE ANTENNA
2	21610115	WIRING HARNESS, CABLE ASSEMBLY POWER EXTENSION
3	21610139	WIRING HARNESS, CABLE ASSEMBLY POWER
4	21516336	WIRES, HARNESS, DISPLAY
5	21610331	WIRING HARNESS, ACCESSORY CABLE
6	21759238	WIRING HARNESS, ACCESSORY
17	21257160	WIRING HARNESS, SPEAKER CAB/ROOF INTER
18	21258130	WIRING HARNESS, SPEAKER SWITCH
19	21721810	WIRING HARNESS, WIB W/GROMMET
	21819456	CABLE WIB W/REPEATER
20	21721814	WIRING HARNESS, WIB EXTENSION

VOLVO Group Trucks Technology	Document title: WIRING DIAGRAM - PC28 - 12V MACK - 2013BP - ENG-CU12	Document No	Issue	Volume	Page
	Document type: PRODUCT SCHEMATIC	22234428	02	01	25 (83)

https://truckmanualshub.com/

QUALCOMM MCP 100 W/DAYCAB

WIRING DIAGRAM: BW

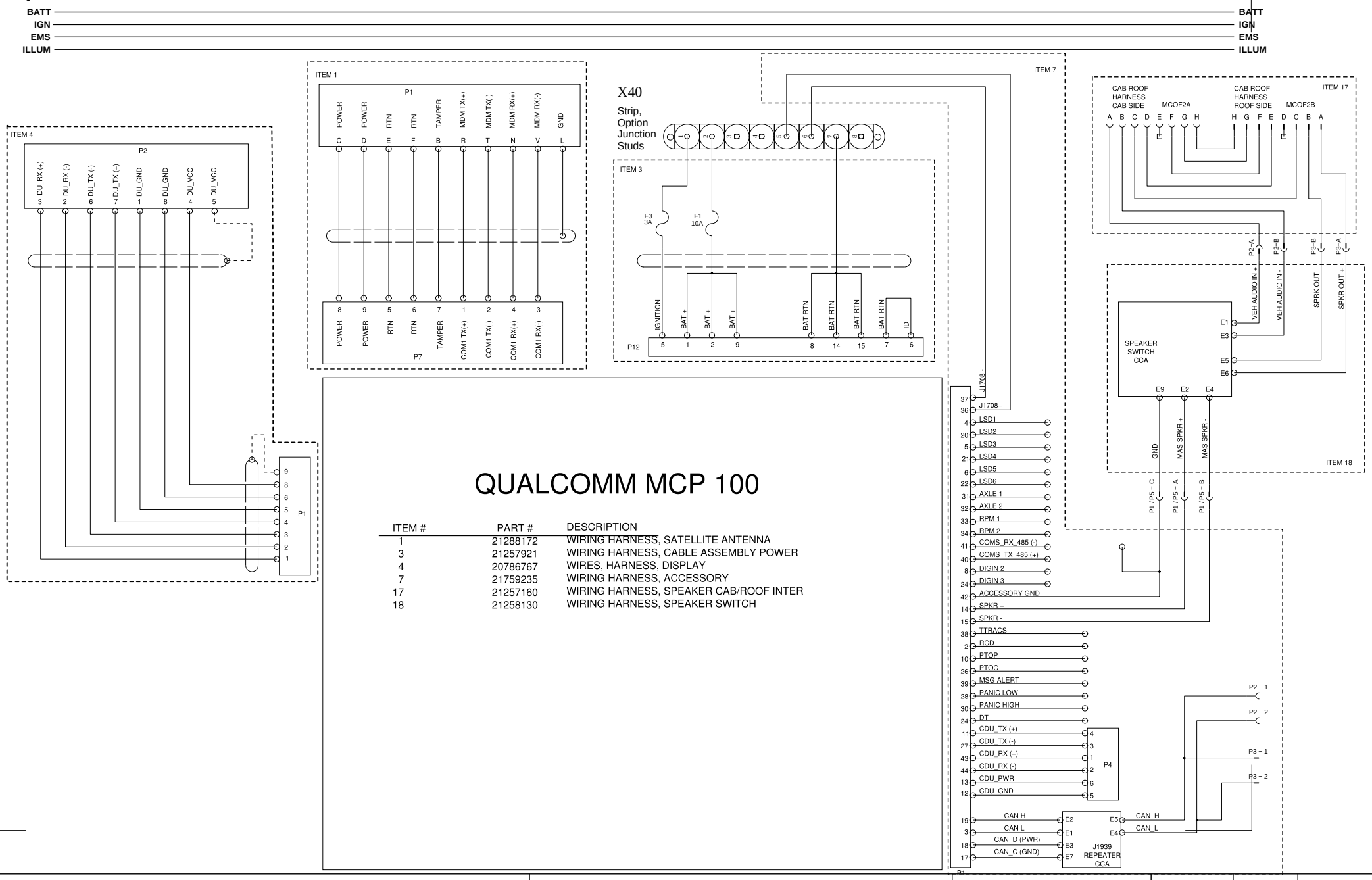

QUALCOMM MCP 100

ITEM #	PART #	DESCRIPTION
1	21288172	WIRING HARNESS, SATELLITE ANTENNA
3	21257921	WIRING HARNESS, CABLE ASSEMBLY POWER
4	20786767	WIRES, HARNESS, DISPLAY
7	21759235	WIRING HARNESS, ACCESSORY
17	21257160	WIRING HARNESS, SPEAKER CAB/ROOF INTER
18	21258130	WIRING HARNESS, SPEAKER SWITCH

https://truckmanualshub.com/

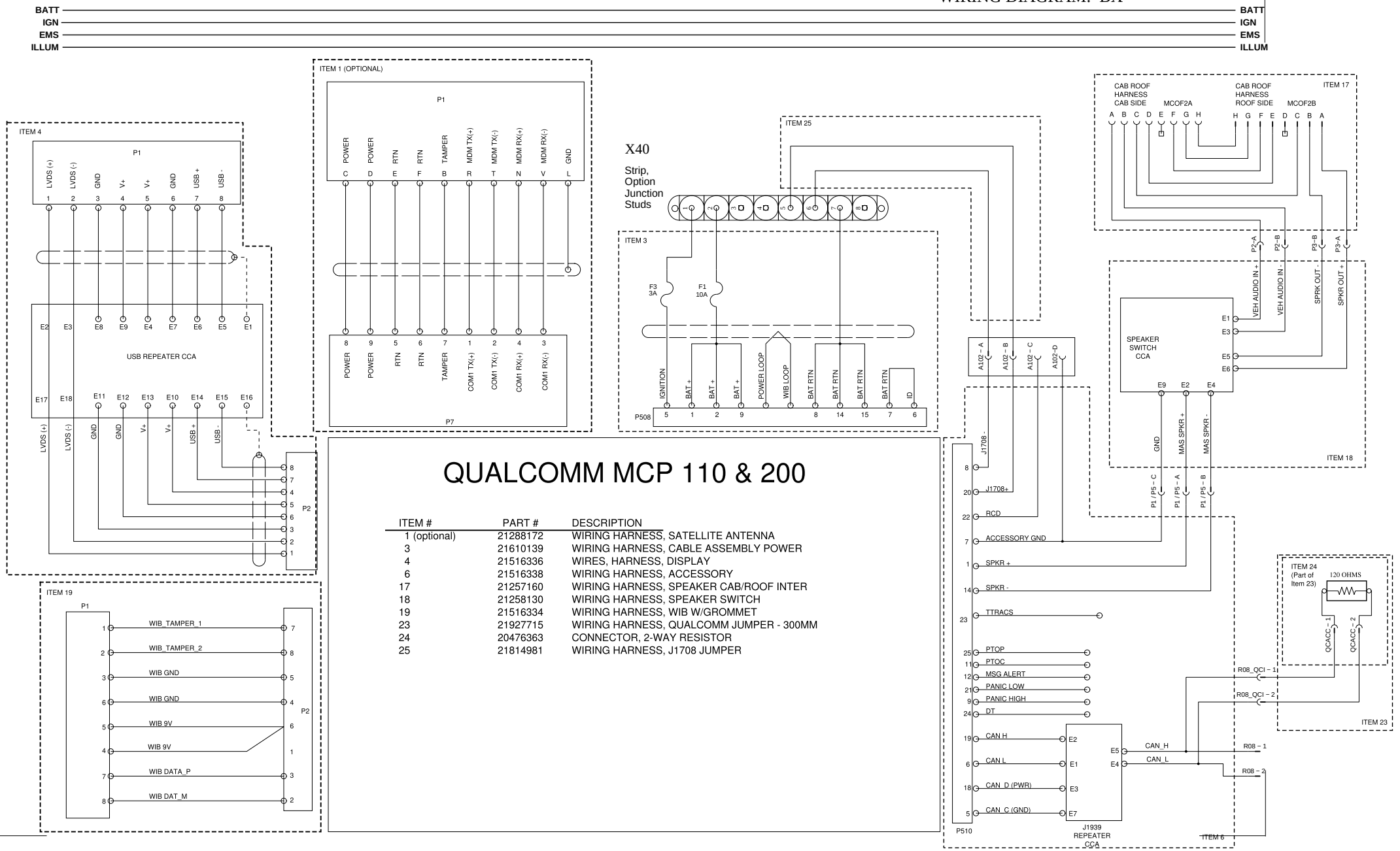

QUALCOMM MCP 110 & 200

ITEM #	PART #	DESCRIPTION
1 (optional)	21288172	WIRING HARNESS, SATELLITE ANTENNA
3	21610139	WIRING HARNESS, CABLE ASSEMBLY POWER
4	21516336	WIRES, HARNESS, DISPLAY
6	21516338	WIRING HARNESS, ACCESSORY
17	21257160	WIRING HARNESS, SPEAKER CAB/ROOF INTER
18	21258130	WIRING HARNESS, SPEAKER SWITCH
19	21516334	WIRING HARNESS, WIB W/GROMMET
23	21927715	WIRING HARNESS, QUALCOMM JUMPER - 300MM
24	20476363	CONNECTOR, 2-WAY RESISTOR
25	21814981	WIRING HARNESS, J1708 JUMPER

https://truckmanualshub.com/

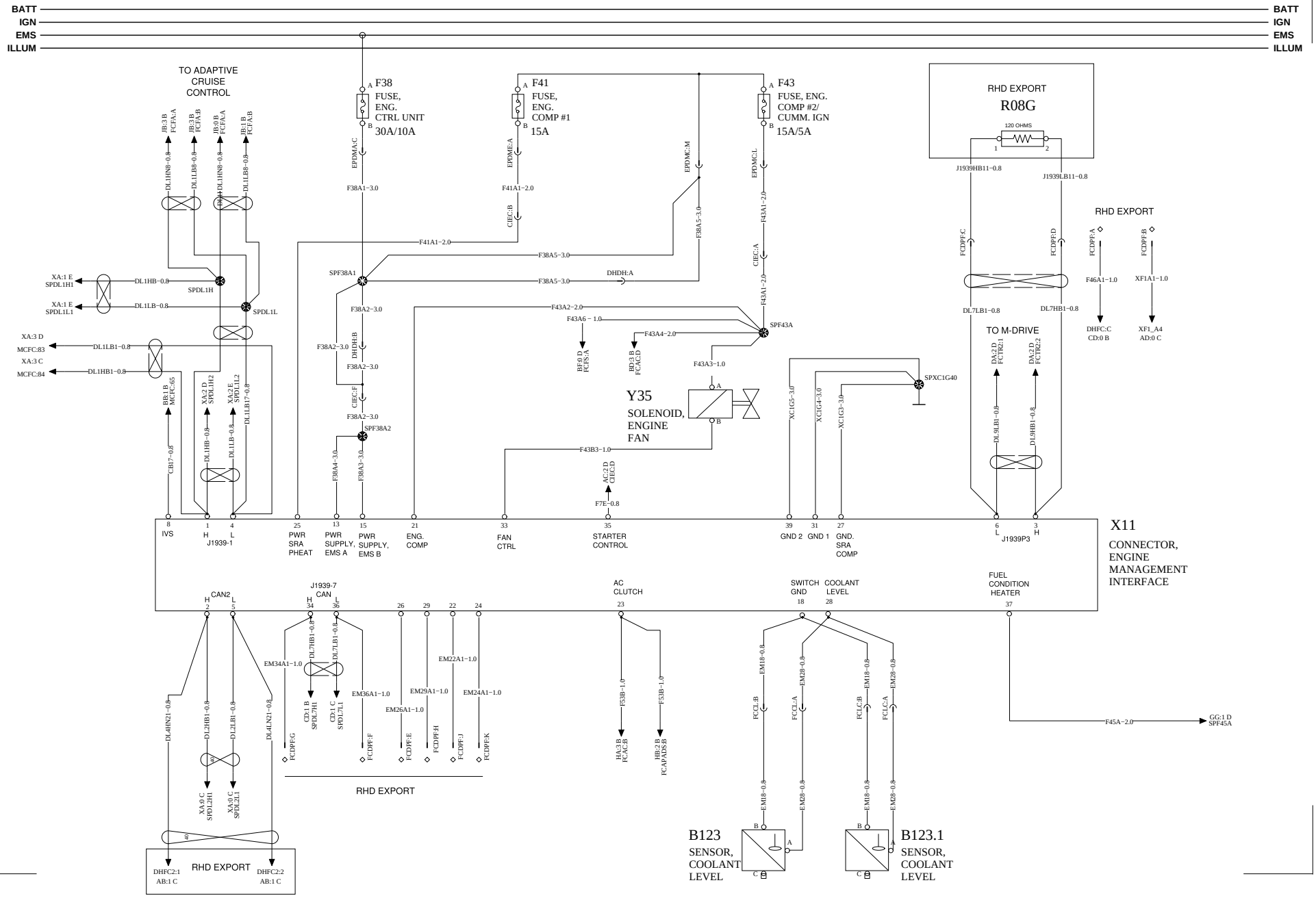

VOLVO Group Trucks Technology	Document title: WIRING DIAGRAM - PC28 - 12V MACK - 2013BP - ENG-CU12	Document No	Issue	Volume	Page
	Document type: PRODUCT SCHEMATIC	22234428	02	01	28 (83)

https://truckmanualshub.com/

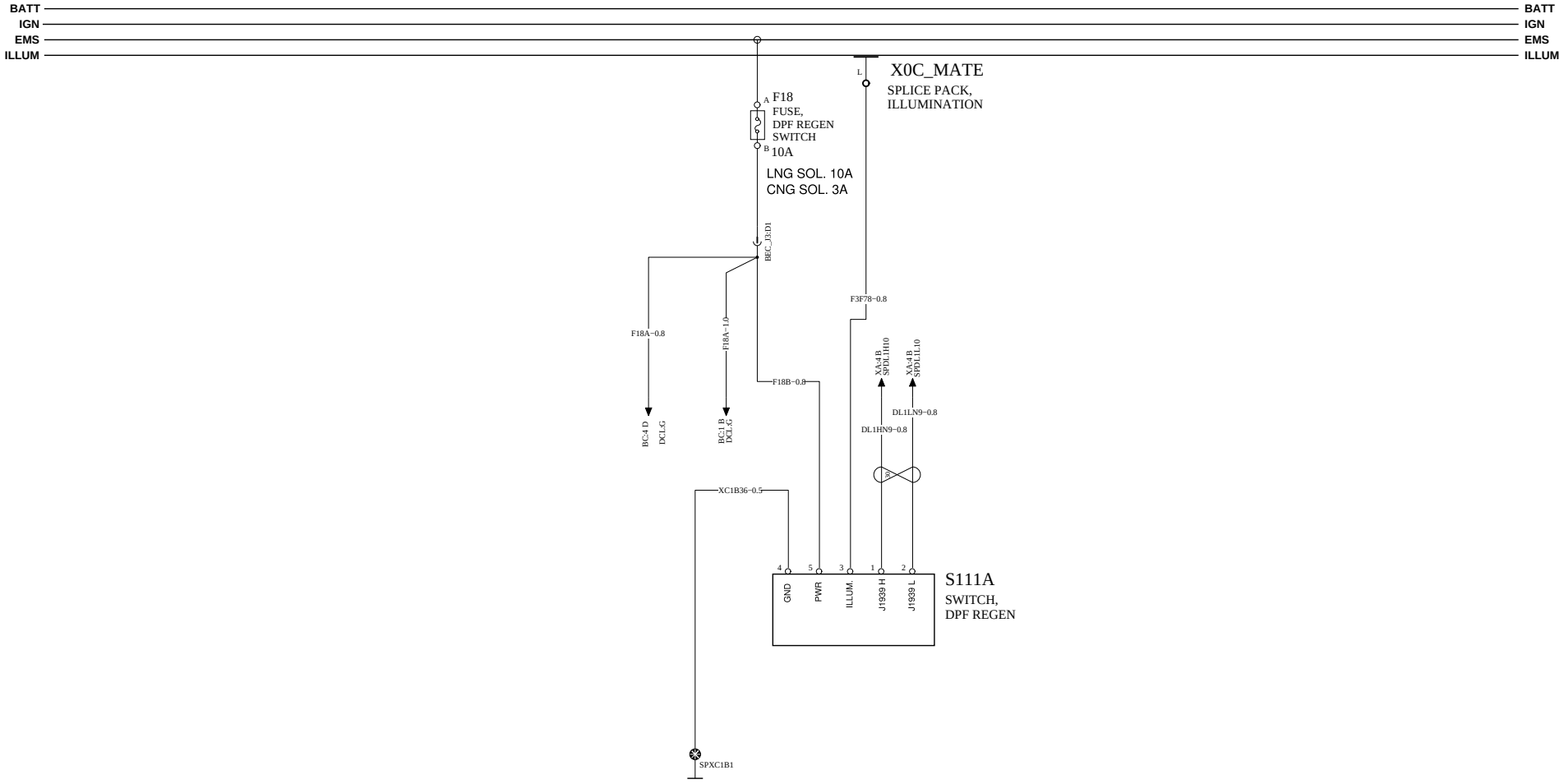

https://truckmanualshub.com/

BATT
IGN
EMS
ILLUM

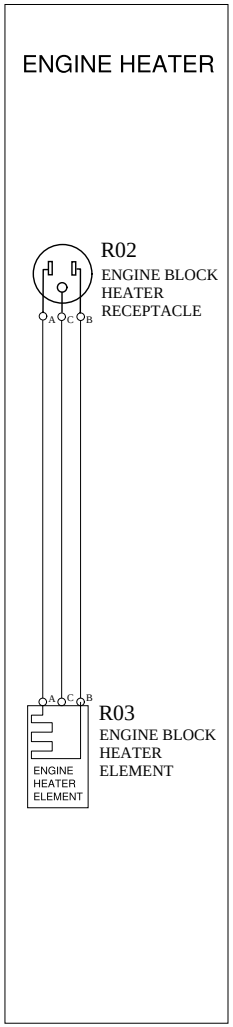

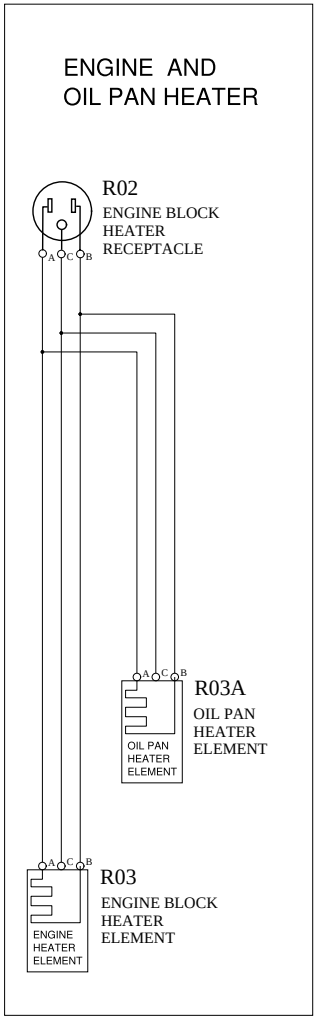

https://truckmanualshub.com/

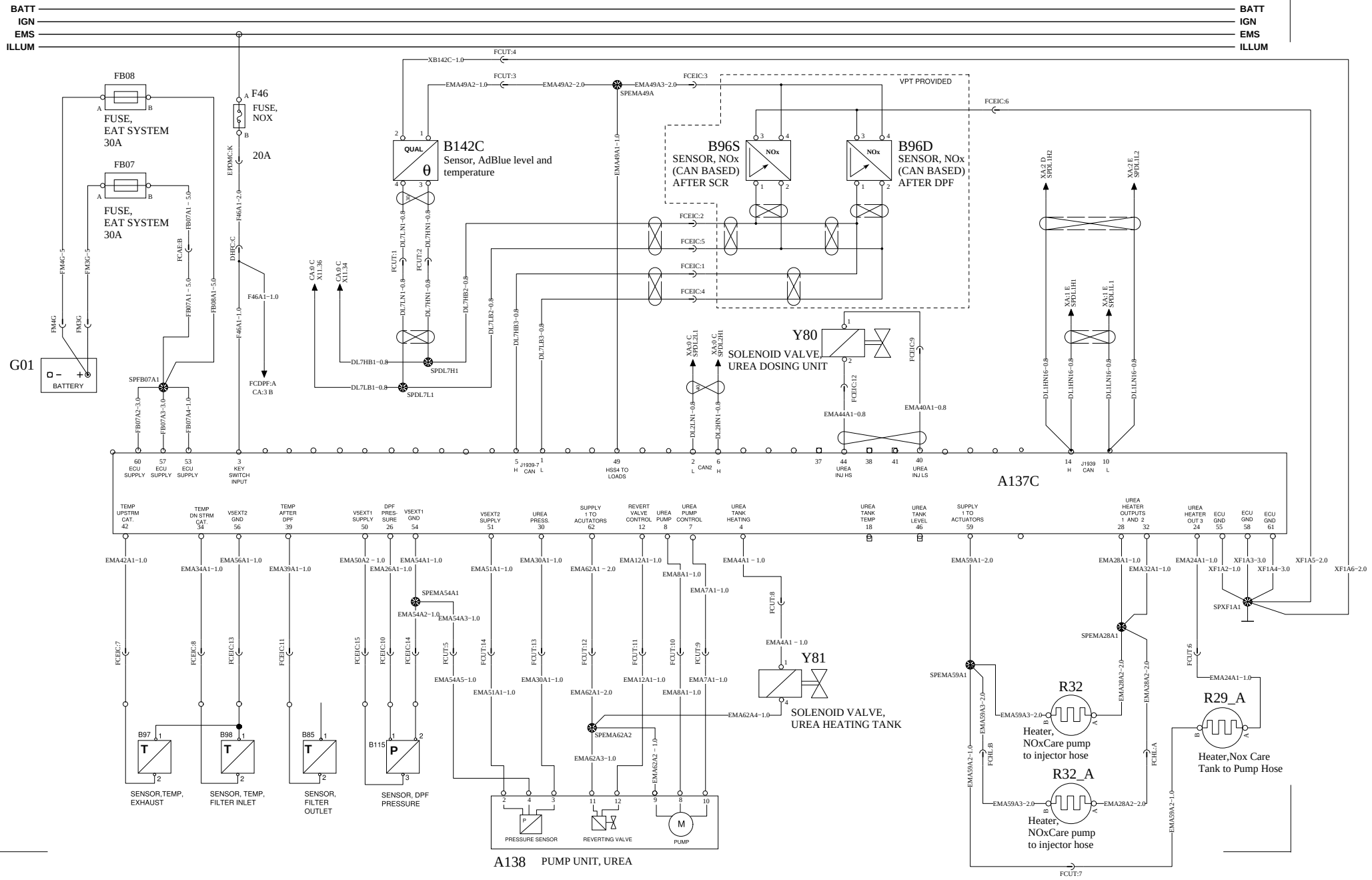

VOLVO	Group Trucks Technology	Document title WIRING DIAGRAM - PC28 - 12V MACK - 2013BP - ENG-CU12 Document type PRODUCT SCHEMATIC	Document No 22234428	Issue 02	Volume 01	Page 31 (83)

https://truckmanualshub.com/

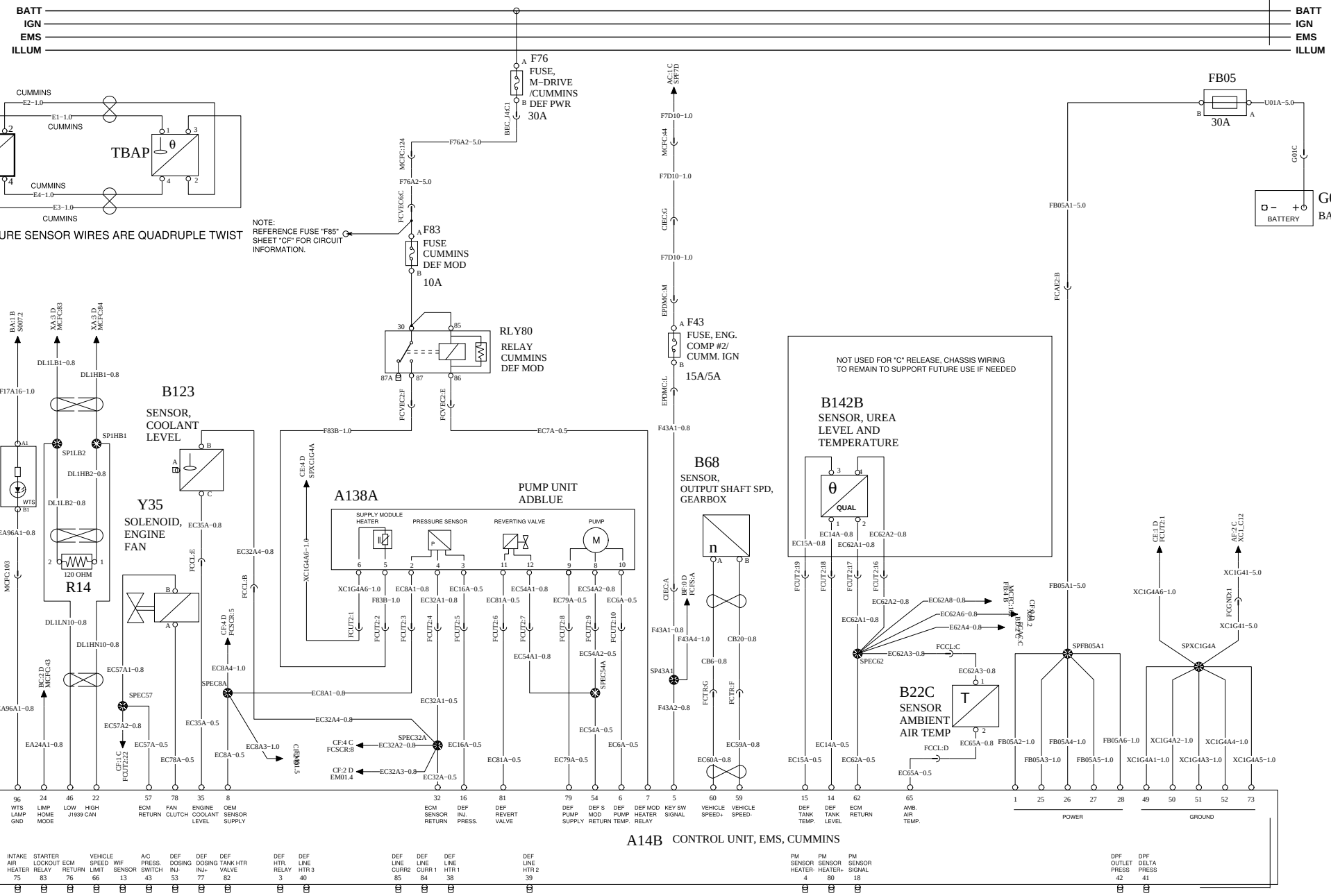

Document title	Document No	Issue	Volume	Page
WIRING DIAGRAM - PC28 - 12V MACK - 2013BP - ENG-CU12	22234428	02	01	32 (83)
Document type: PRODUCT SCHEMATIC				

VOLVO Group Trucks Technology

https://truckmanualshub.com/

ENGINE CONTROL ISL US13 2/2

WIRING DIAGRAM: CF

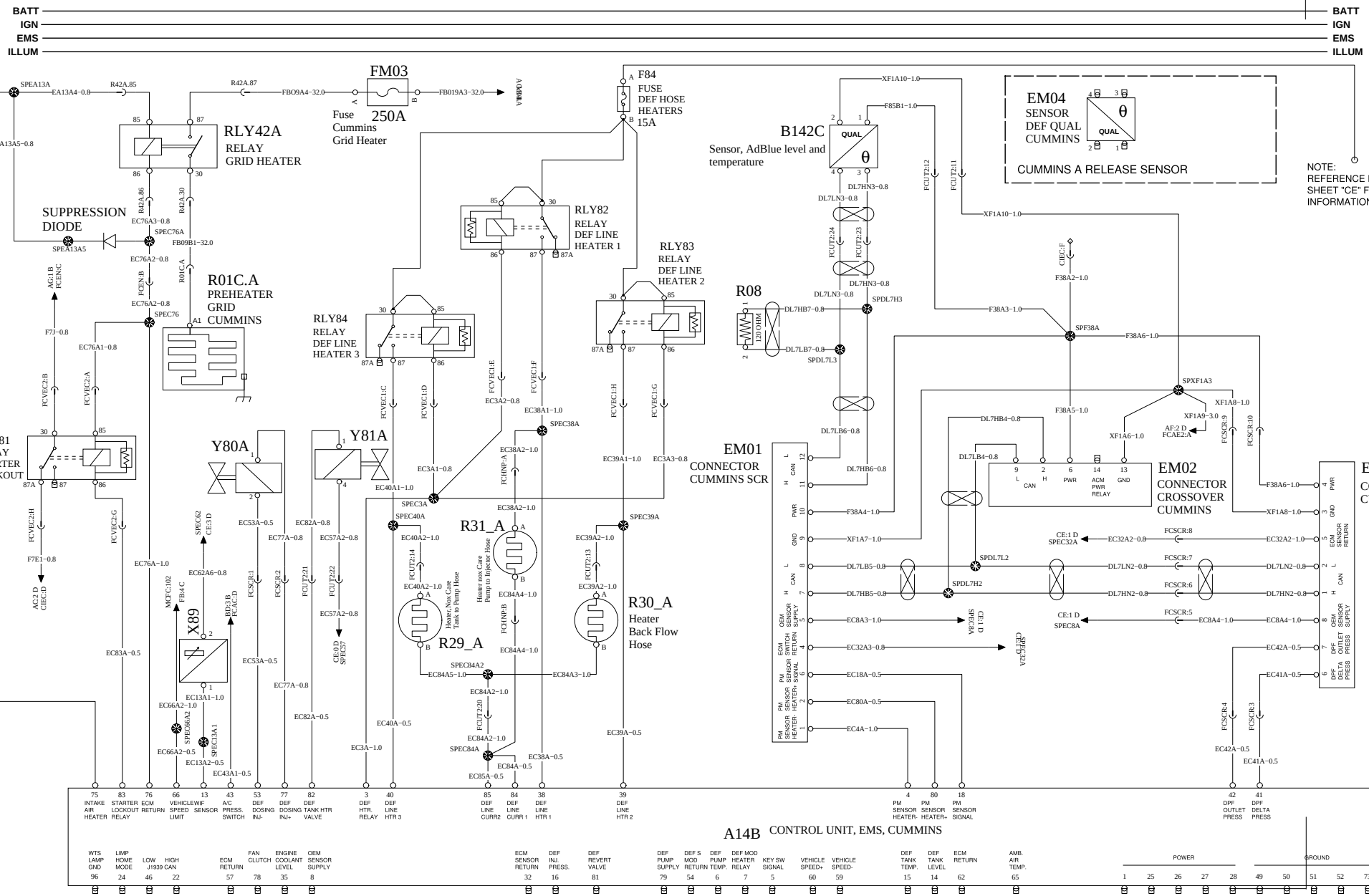

VOLVO	Group Trucks Technology	Document title WIRING DIAGRAM - PC28 - 12V MACK - 2013BP - ENG-CU12 Document type PRODUCT SCHEMATIC	Document No 22234428	Issue 02	Volume 01	Page 33 (83)

https://truckmanualshub.com/

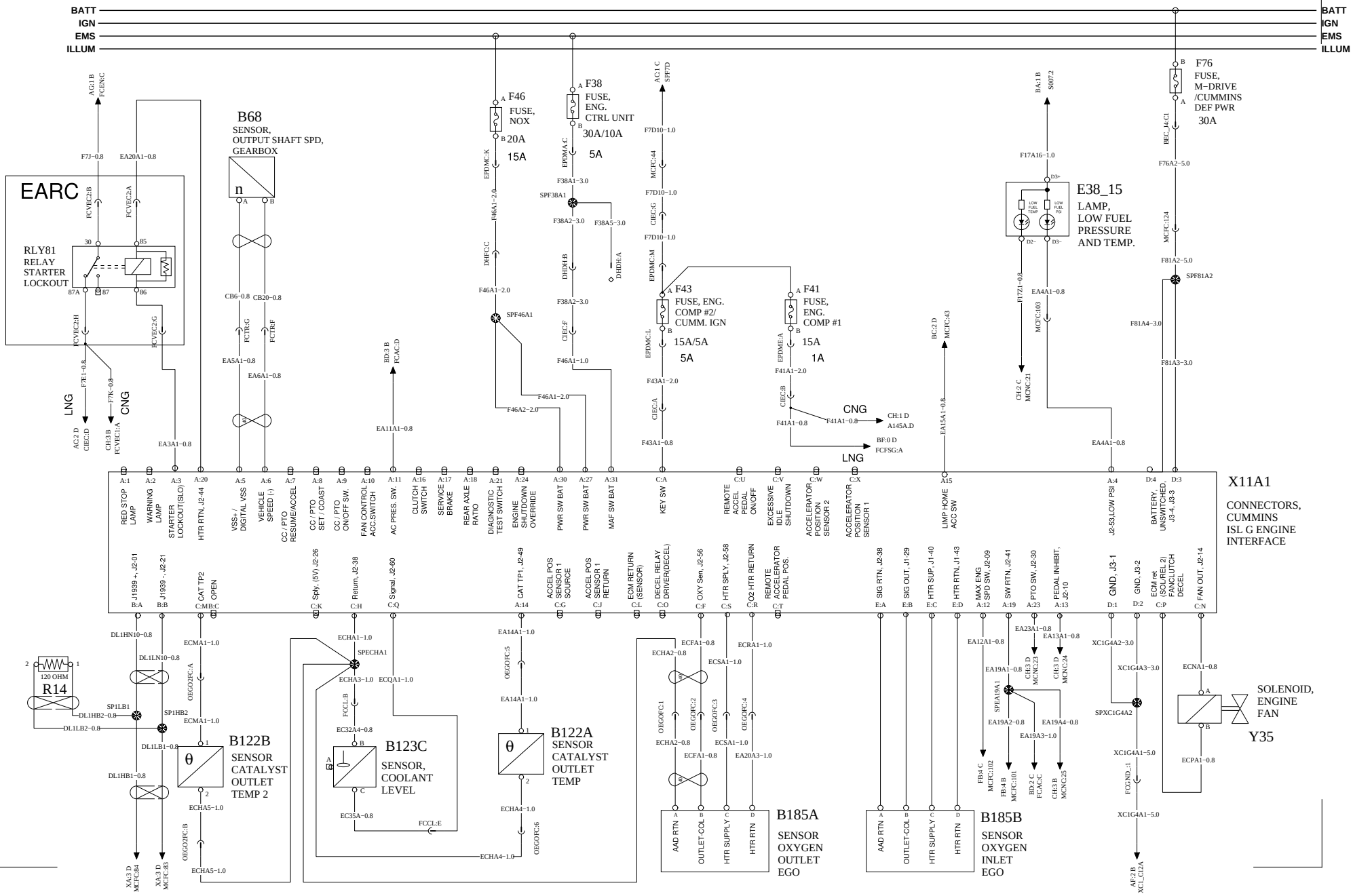

VOLVO	Group Trucks Technology	Document title WIRING DIAGRAM - PC28 - 12V MACK - 2013BP - ENG-CU12 Document type PRODUCT SCHEMATIC	Document No 22234428	Issue 02	Volume 01	Page 34 (89)

https://truckmanualshub.com/

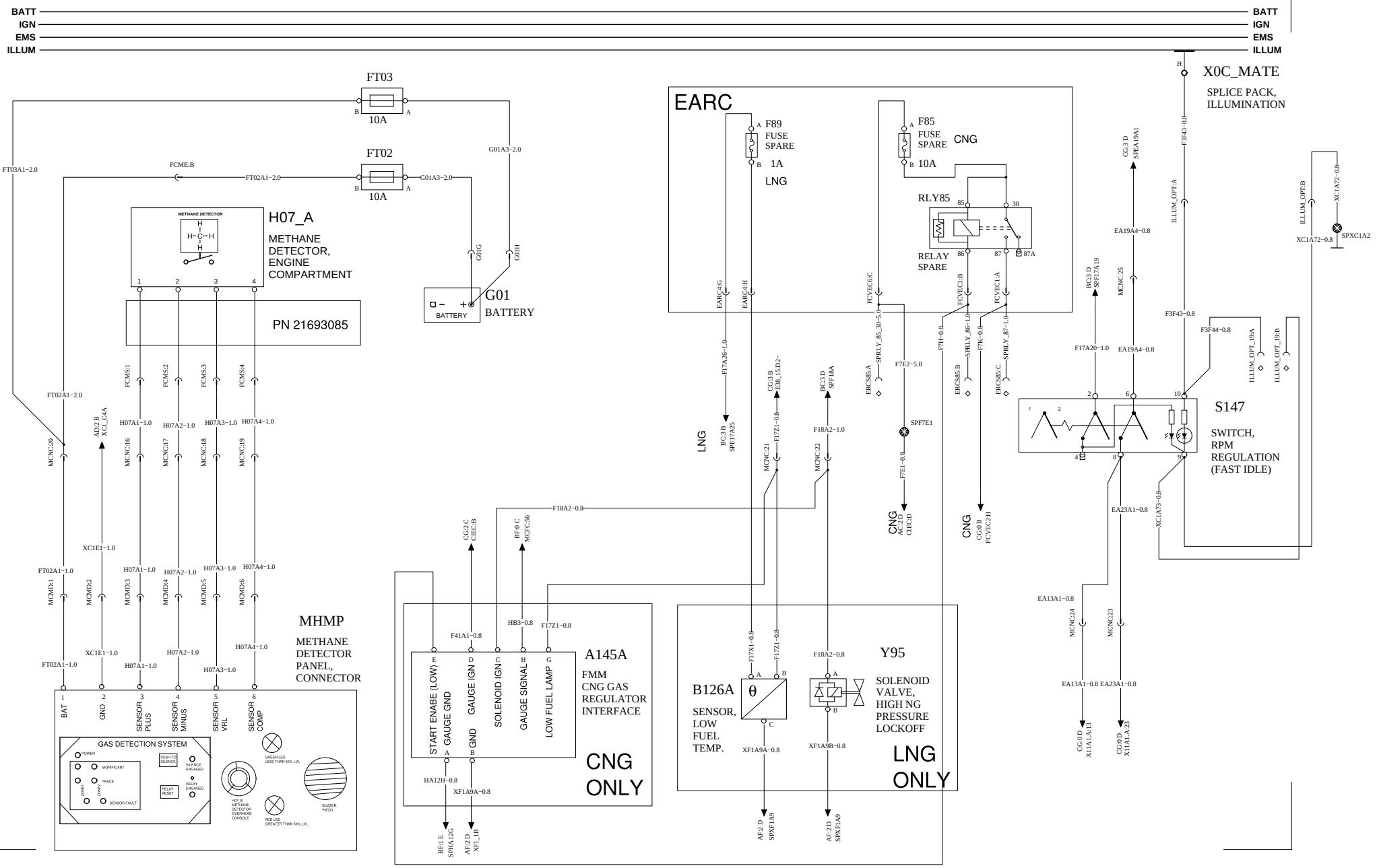

VOLVO Group Trucks Technology	Document title: WIRING DIAGRAM - PC28 - 12V MACK - 2013BP - ENG-CU12 Document type: PRODUCT SCHEMATIC	Document No: 22234428	Issue: 02	Volume: 01	Page: 35 (83)

https://truckmanualshub.com/

TRANSMISSION M−DRIVE

WIRING DIAGRAM: DA

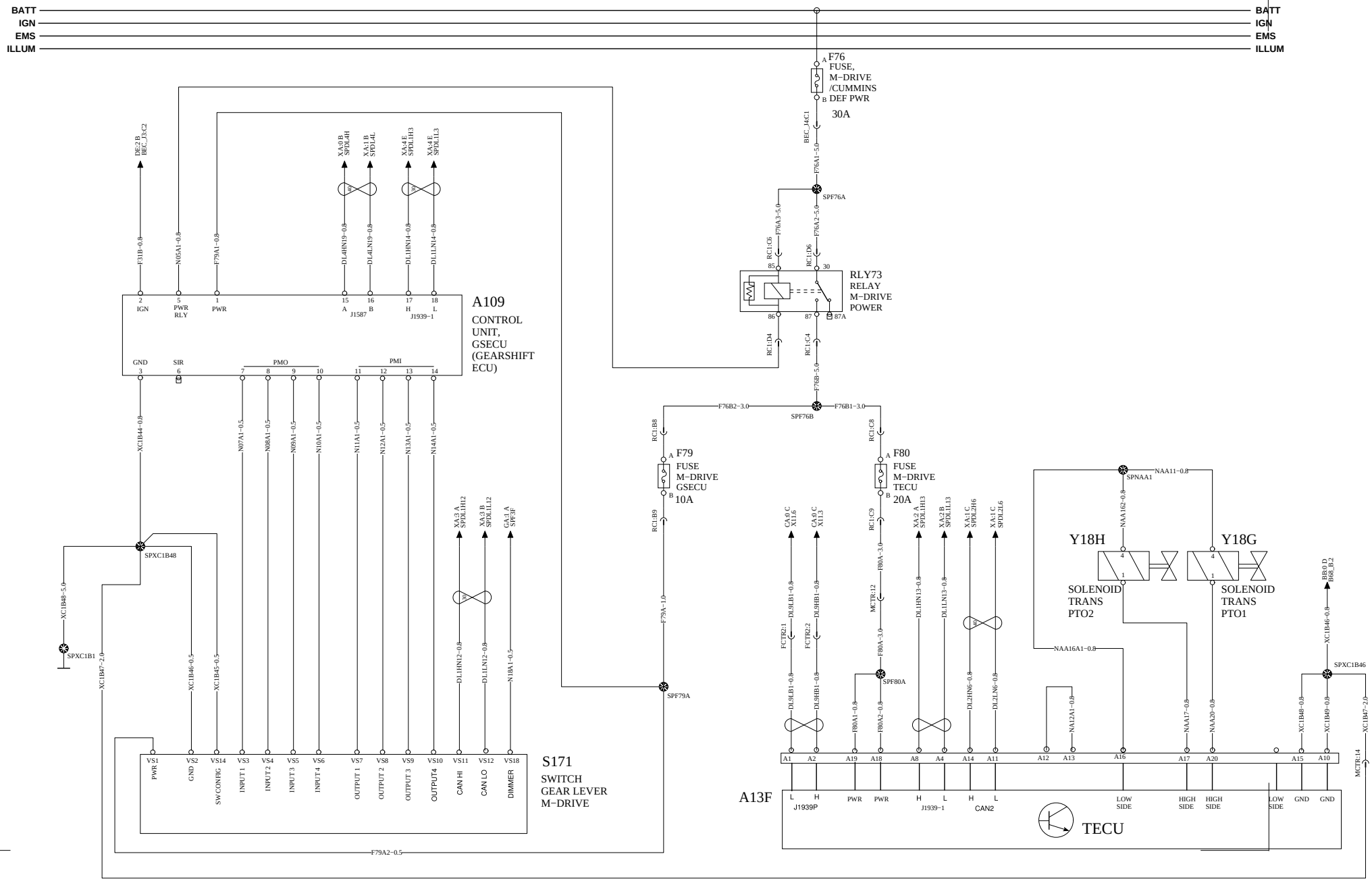

VOLVO	Group Trucks Technology	Document title WIRING DIAGRAM - PC28 - 12V MACK - 2013BP - ENG-CU12 Document type PRODUCT SCHEMATIC	Document No 22234428	Issue 02	Volume 01	Page 36 (83)

https://truckmanualshub.com/

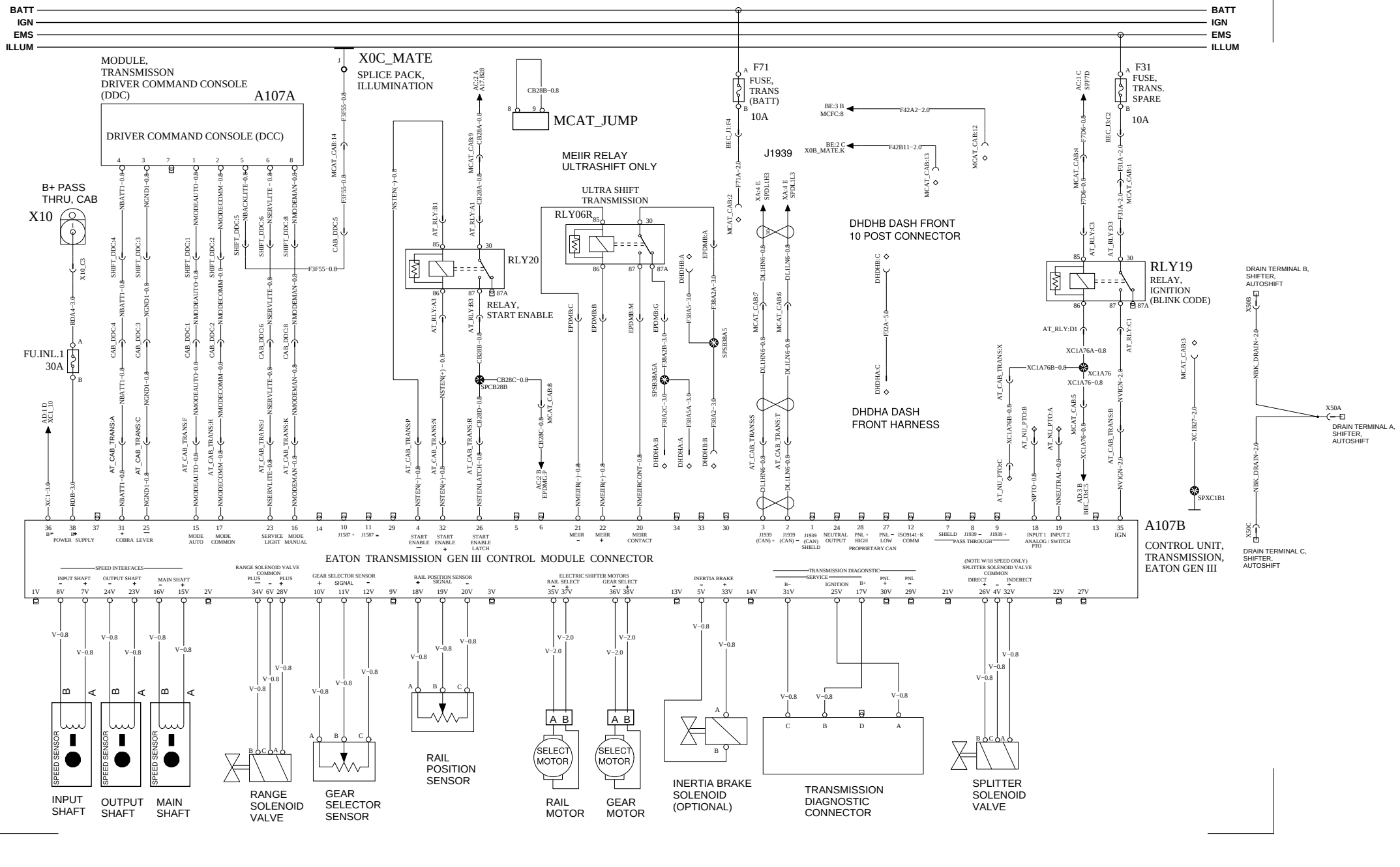

VOLVO	Group Trucks Technology	Document title: WIRING DIAGRAM - PC28 - 12V MACK - 2013BP - ENG-CU12 Document type: PRODUCT SCHEMATIC	Document No: 22234428	Issue: 02	Volume: 01	Page: 37 (83)

https://truckmanualshub.com/

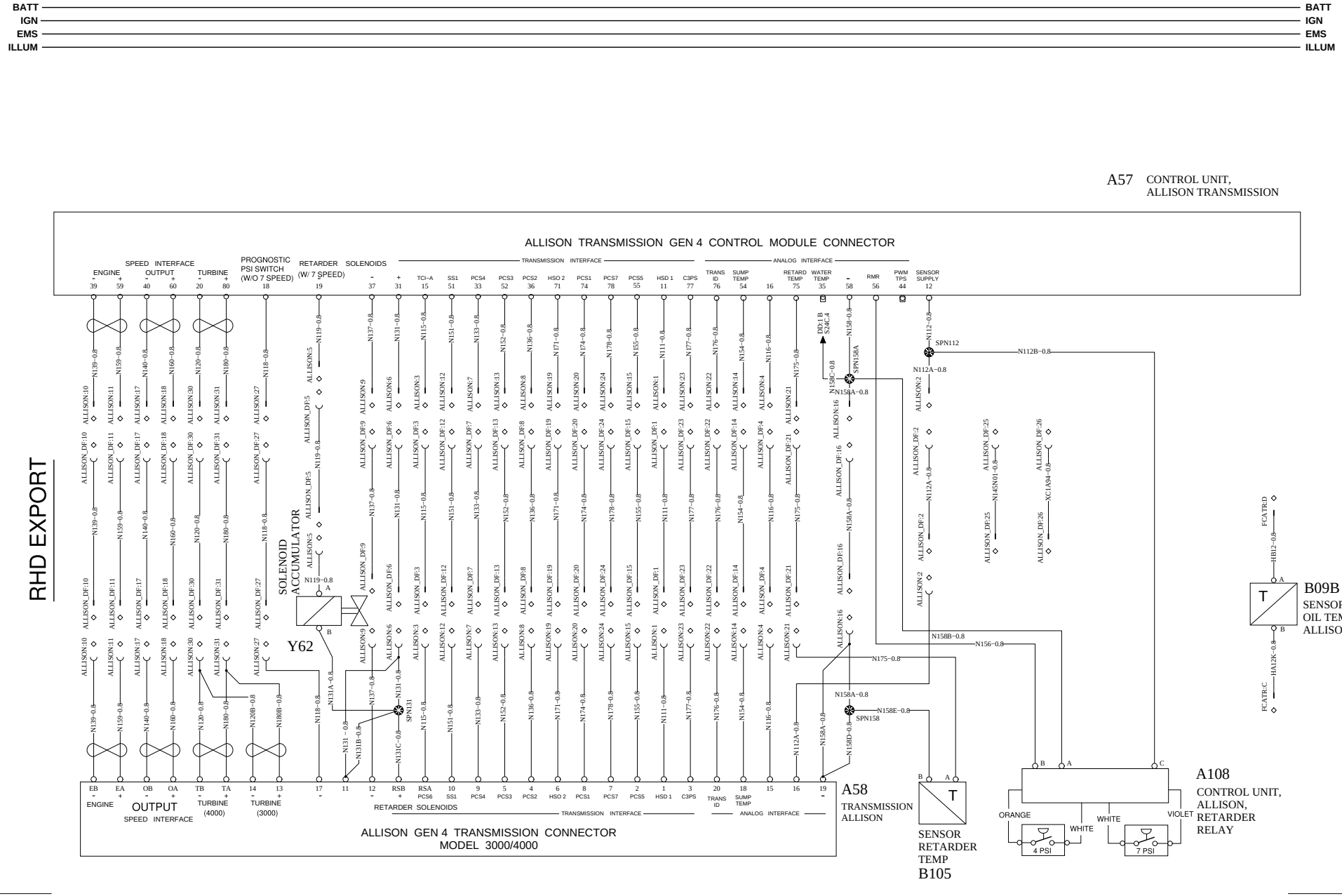

VOLVO	Group Trucks Technology	Document title WIRING DIAGRAM - PC28 - 12V MACK - 2013BP - ENG-CU12 Document type PRODUCT SCHEMATIC	Document No 22234428	Issue 02	Volume 01	Page 38 (83)

https://truckmanualshub.com/

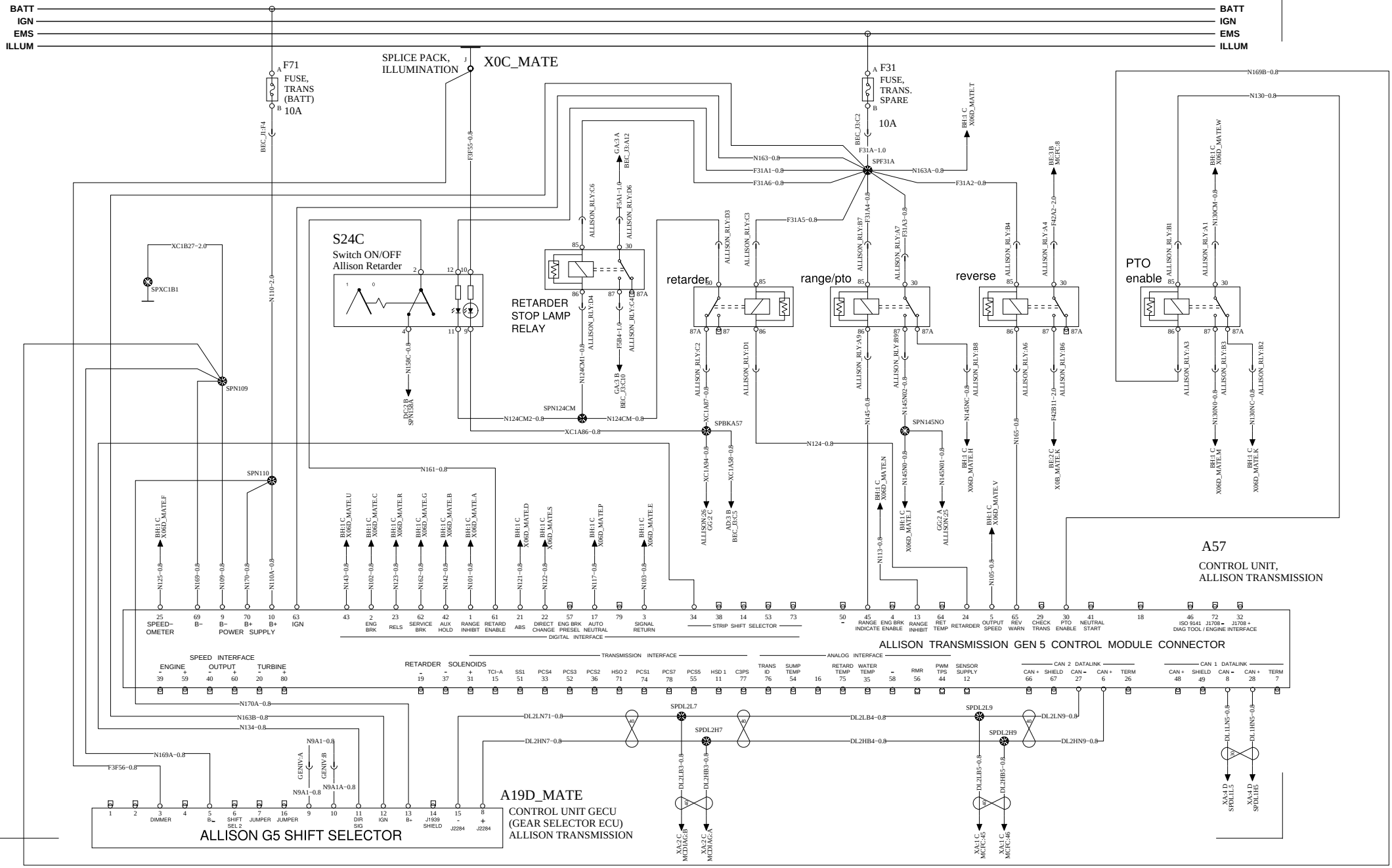

VOLVO	Group Trucks Technology	Document title WIRING DIAGRAM - PC28 - 12V MACK - 2013BP - ENG-CU12 Document type PRODUCT SCHEMATIC	Document No 22234428	Issue 02	Volume 39 (83)
					Page

https://truckmanualshub.com/

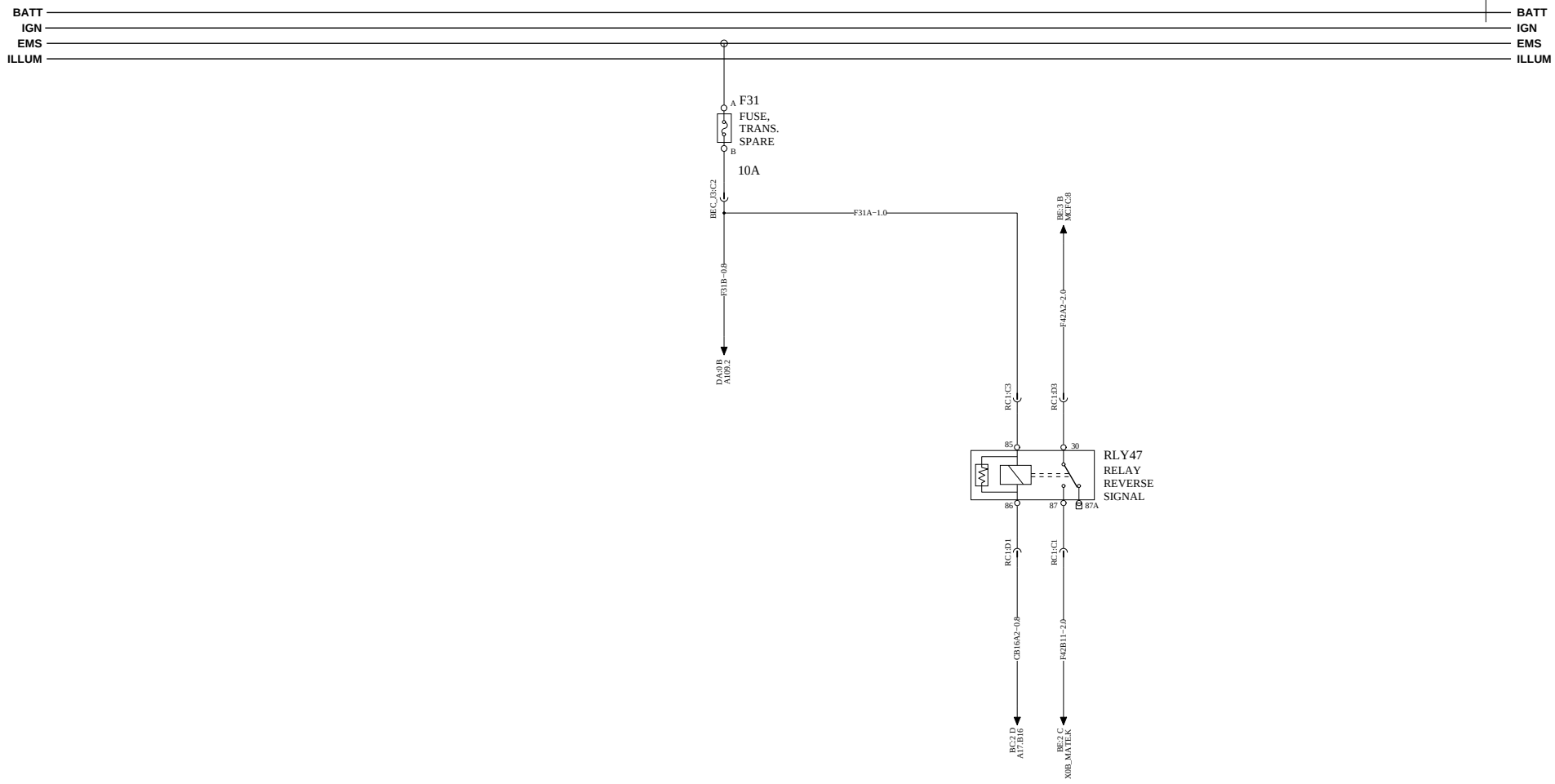

https://truckmanualshub.com/

WIRING DIAGRAM: EA

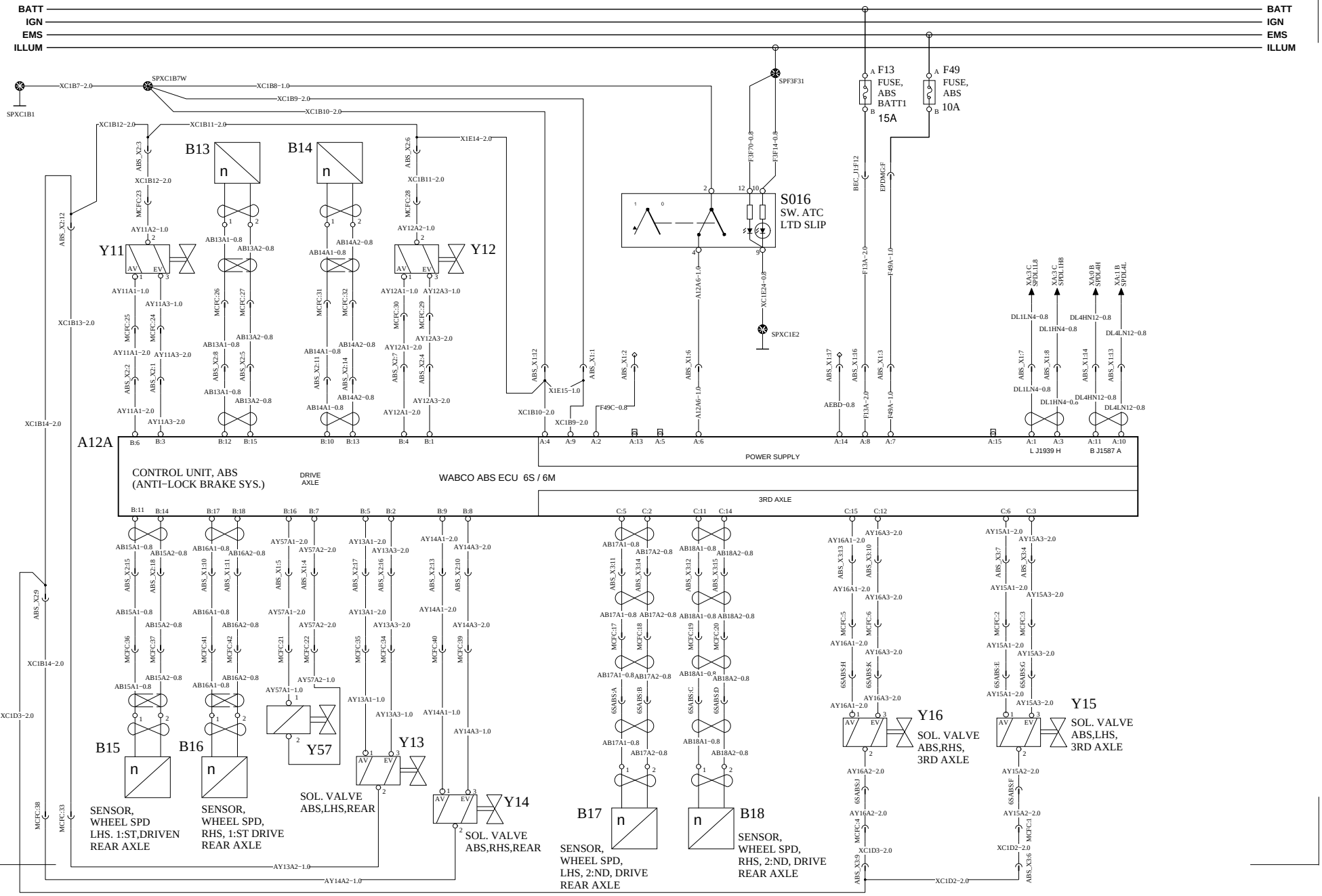

VOLVO	Group Trucks Technology	Document title WIRING DIAGRAM - PC28 - 12V MACK - 2013BP - ENG-CU12 Document type PRODUCT SCHEMATIC	Document No 22234428	Issue 02	Volume 01	Page 41 (83)

ABS BENDIX W/ESP (EATON)

https://truckmanualshub.com/

WIRING DIAGRAM: EB

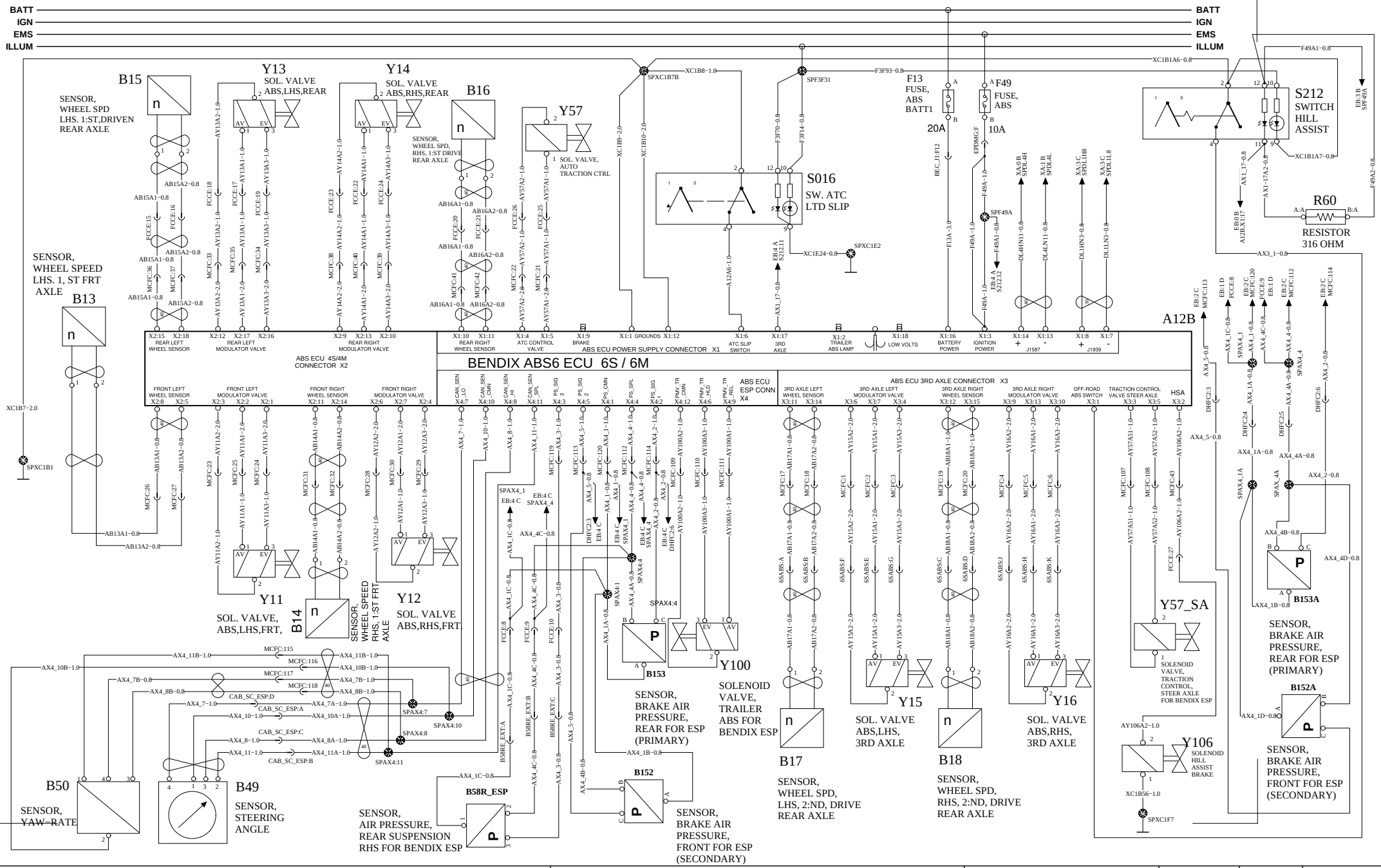

VOLVO Group Trucks Technology	Document title: WIRING DIAGRAM - PC28 - 12V MACK - 2013BP - ENG-CU12	Document No	Issue	Volume	Page
	Document type: PRODUCT SCHEMATIC	22234428	02	01	42 (83)

https://truckmanualshub.com/

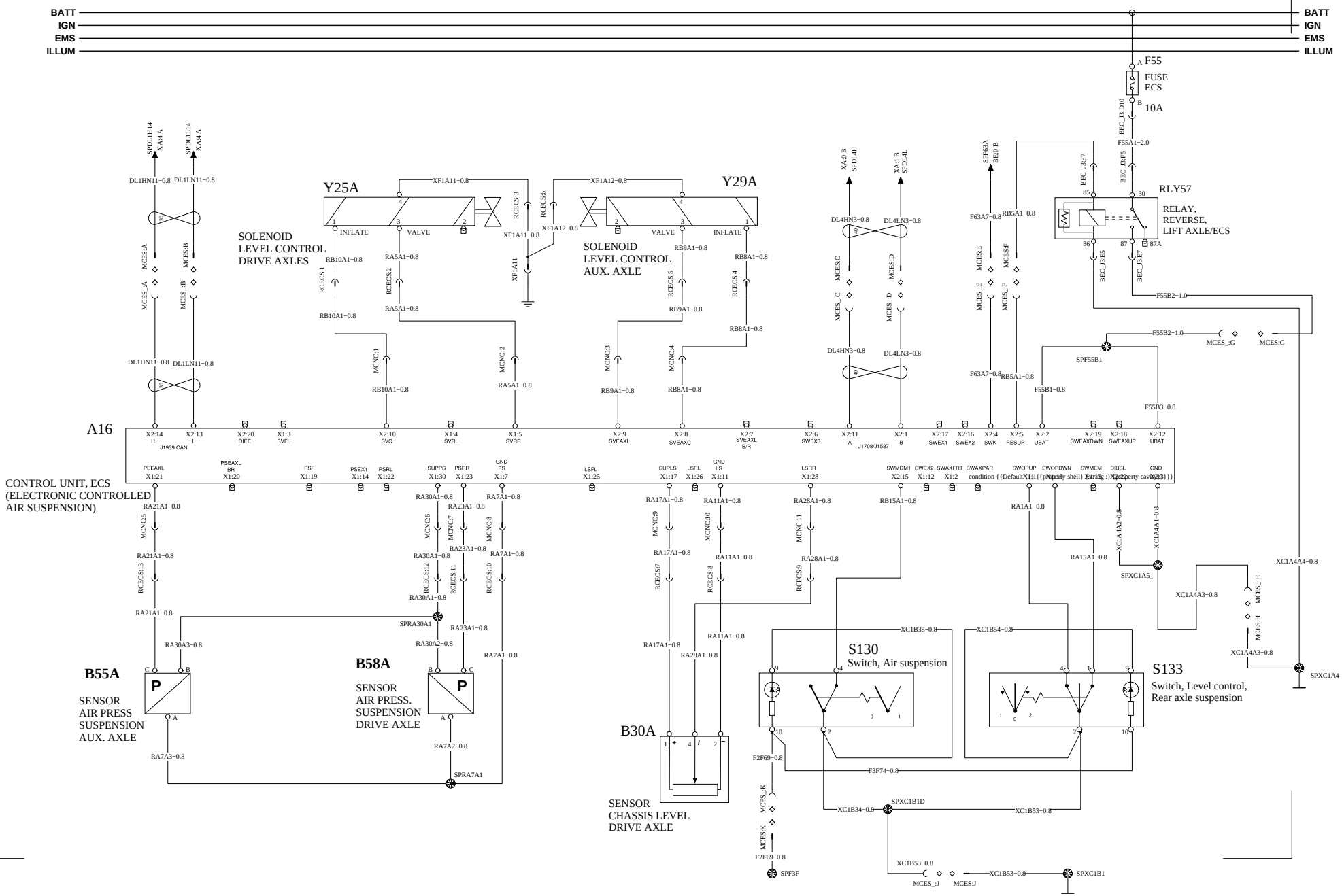

VOLVO	Group Trucks Technology	Document title WIRING DIAGRAM - PC28 - 12V MACK - 2013BP - ENG-CU12 Document type PRODUCT SCHEMATIC	Document No 22234428	Issue 02	Volume 01	Page 43 (83)

https://truckmanualshub.com/

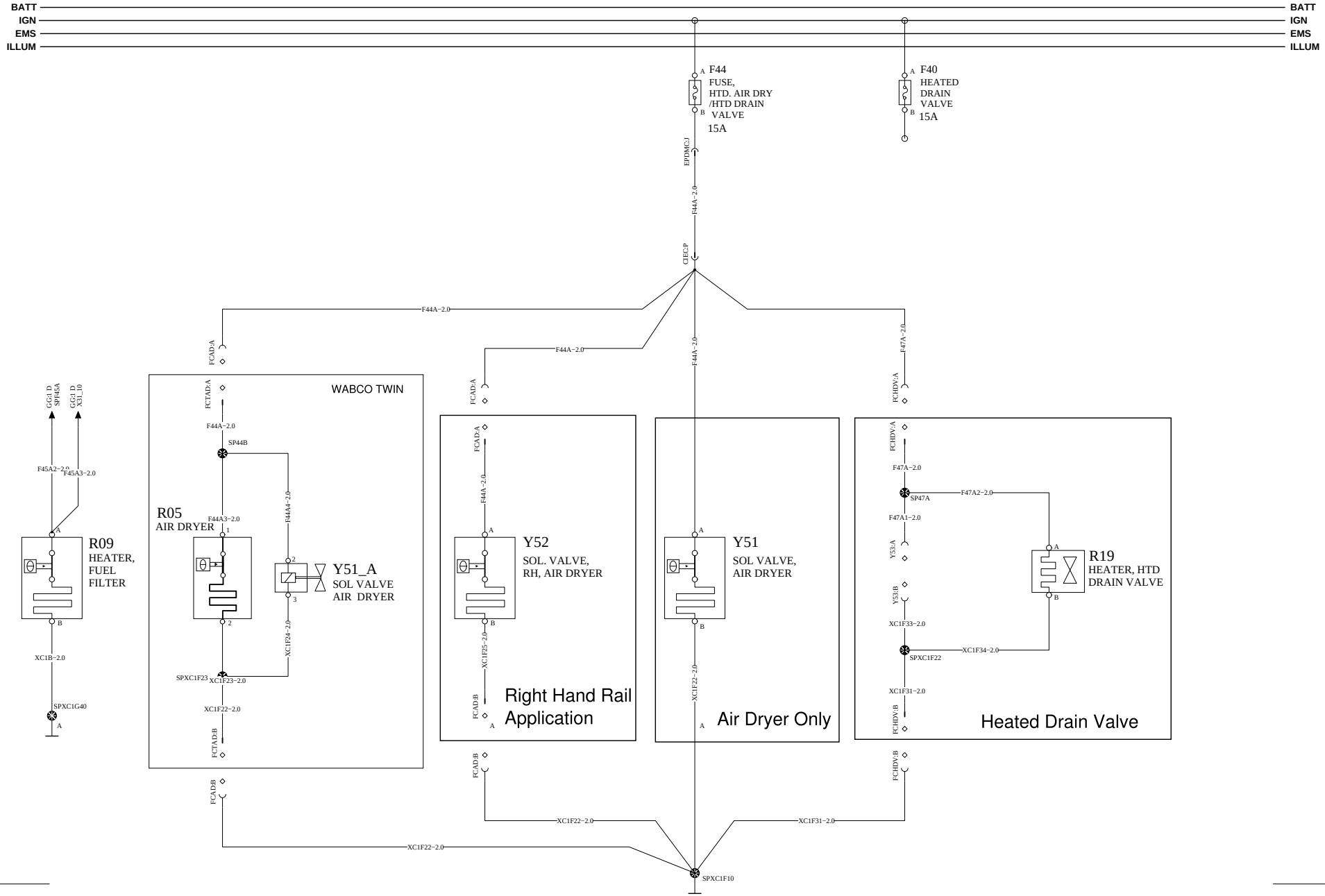

VOLVO Group Trucks Technology	Document title WIRING DIAGRAM - PC28 - 12V MACK - 2013BP - ENG-CU12 Document type PRODUCT SCHEMATIC	Document No 22234428	Issue 02	Volume 01	Page 44 (83)

https://truckmanualshub.com/

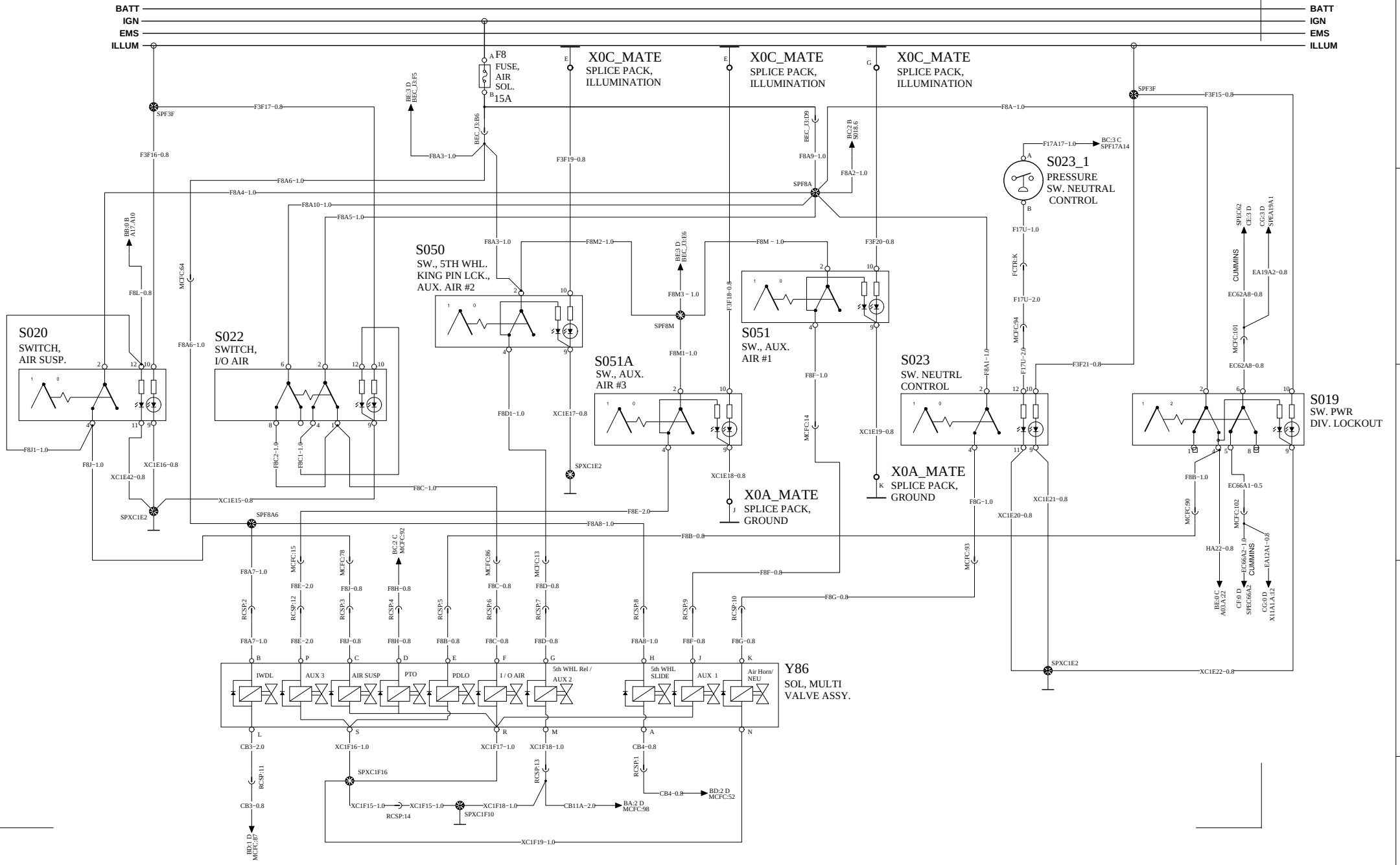

VOLVO	Group Trucks Technology	Document title WIRING DIAGRAM - PC28 - 12V MACK - 2013BP - ENG-CU12 Document type PRODUCT SCHEMATIC	Document No 22234428	Issue 02	Volume 01	Page 45 (83)

https://truckmanualshub.com/

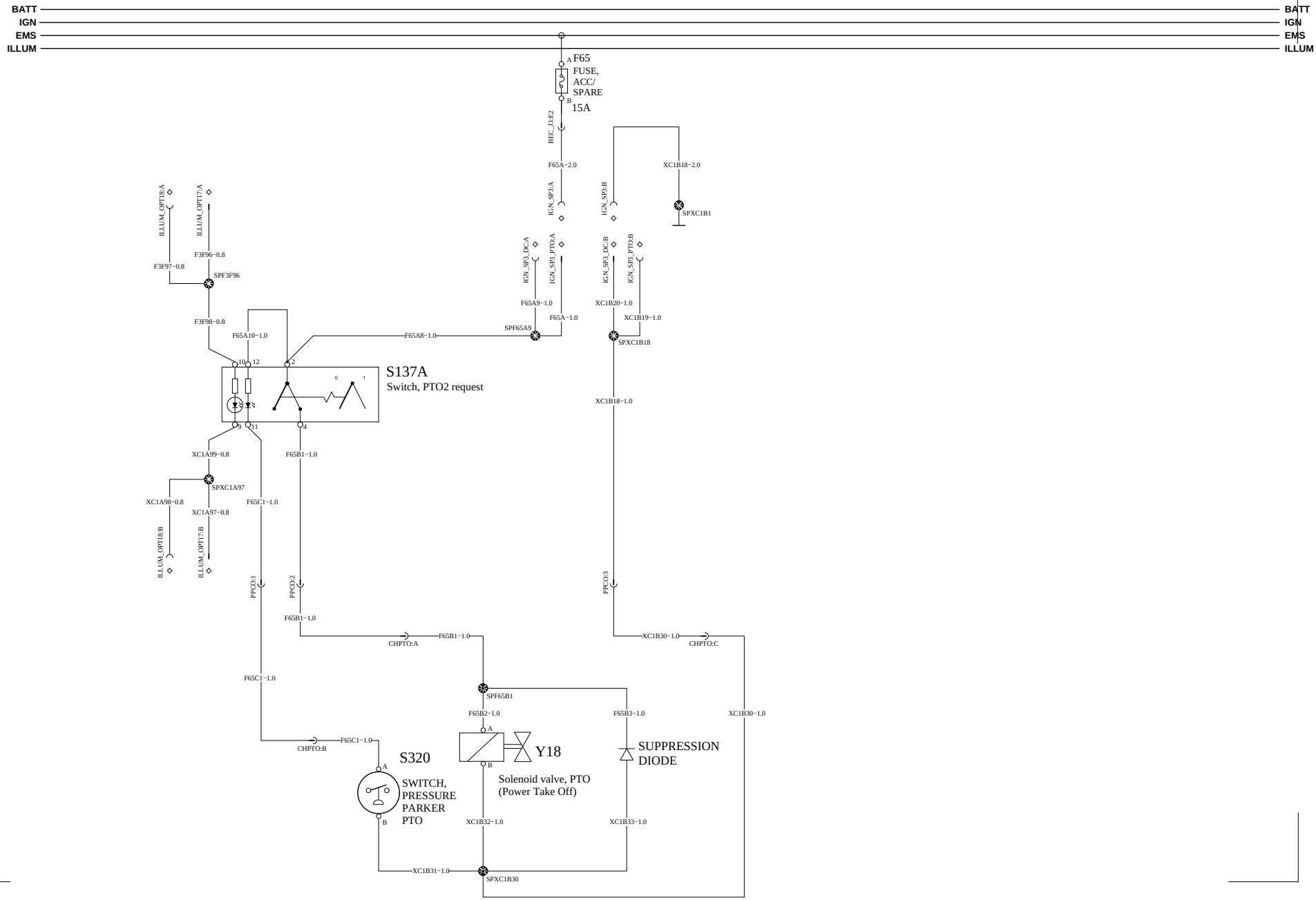

VOLVO Group Trucks Technology	Document title: WIRING DIAGRAM - PC28 - 12V MACK - 2013BP - ENG-CU12	Document No	Issue	Volume	Page
	Document type: PRODUCT SCHEMATIC	22234428	02	01	46 (83)

https://truckmanualshub.com/

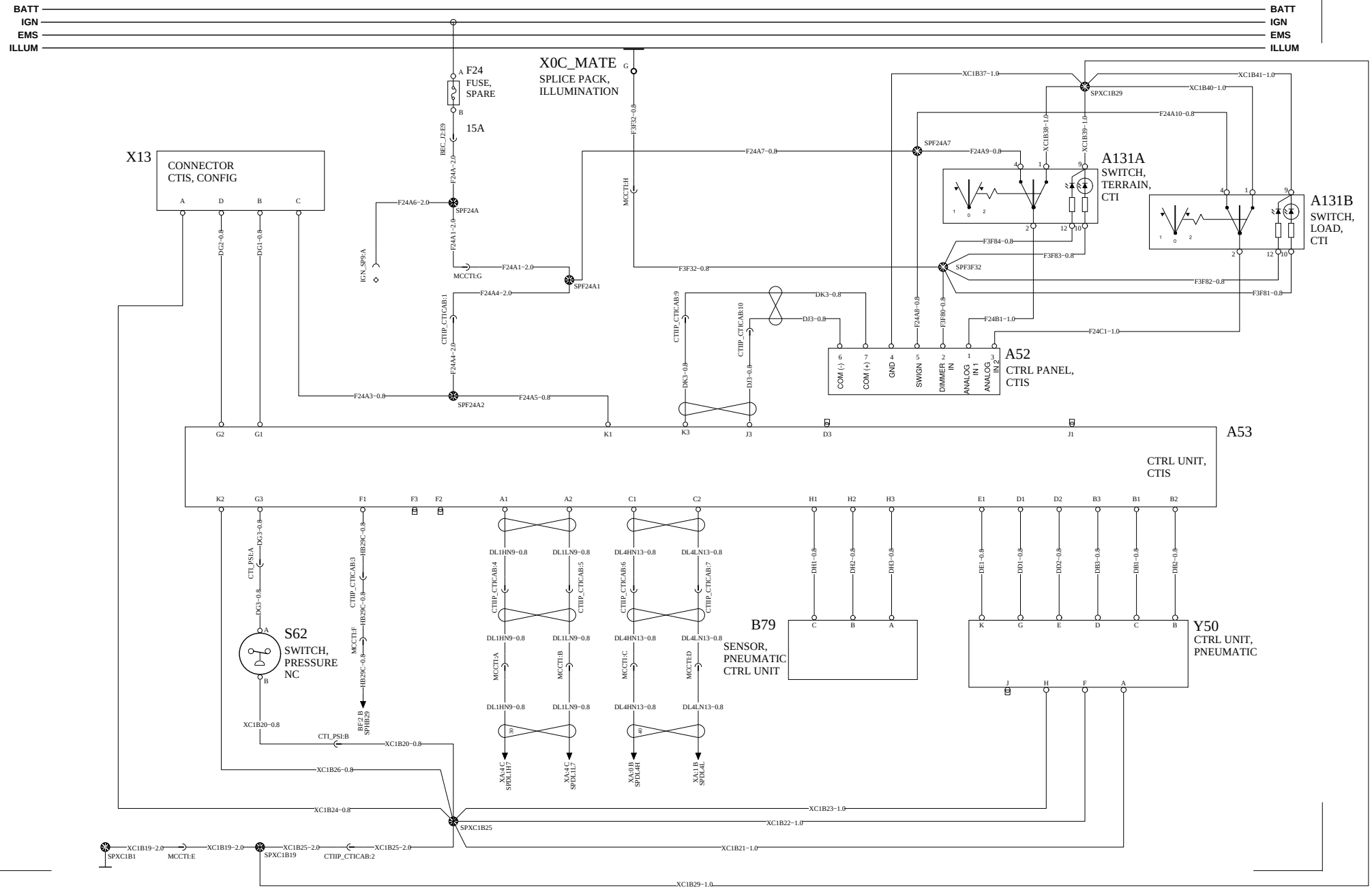

VOLVO	Group Trucks Technology	Document title WIRING DIAGRAM - PC28 - 12V MACK - 2013BP - ENG-CU12 Document type PRODUCT SCHEMATIC	Document No 22234428	Issue 02	Volume 01	Page 47 (83)

https://truckmanualshub.com/

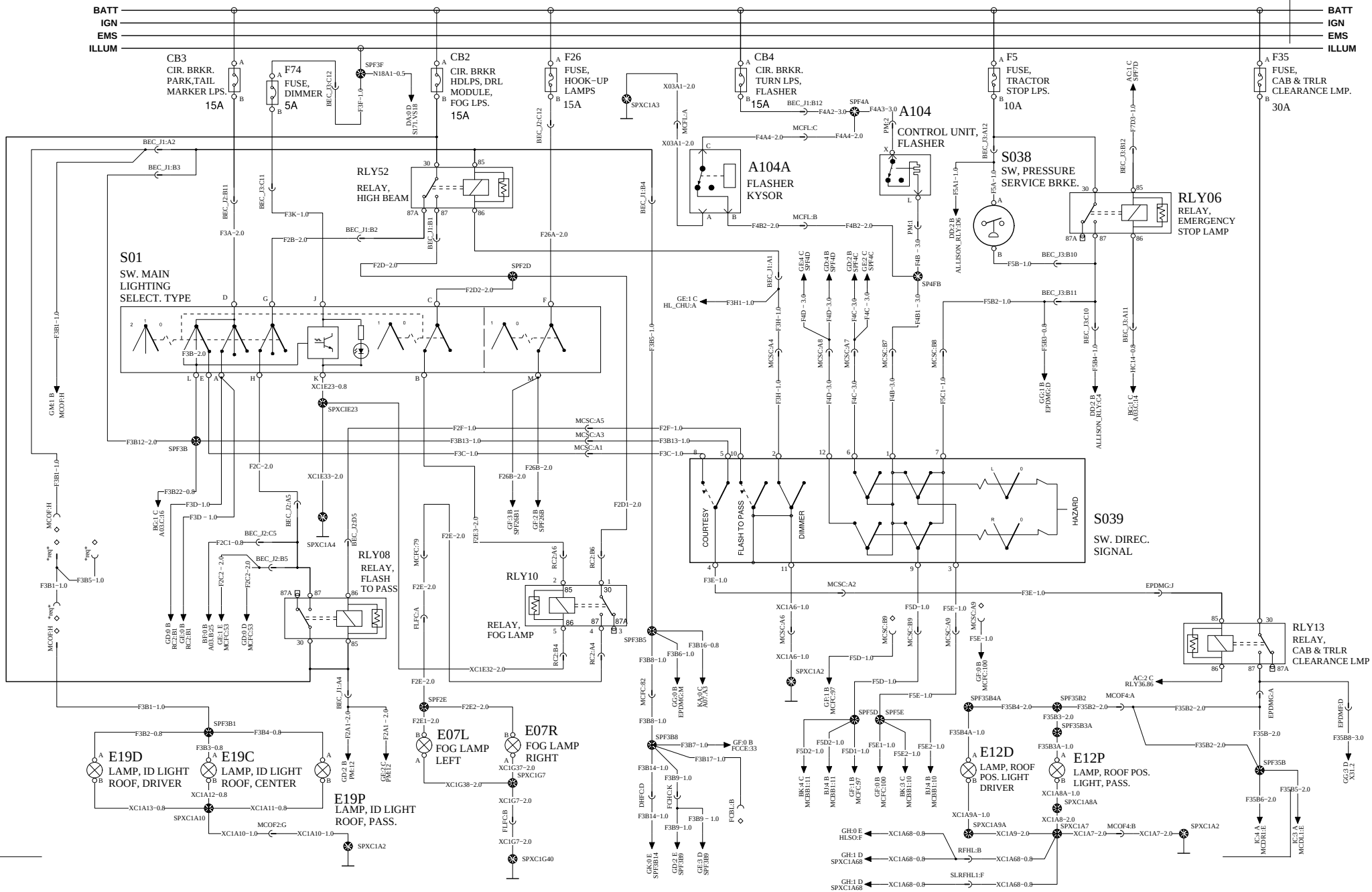

VOLVO Group Trucks Technology	Document title: WIRING DIAGRAM - PC28 - 12V MACK - 2013BP - ENG-CU12	Document No	Issue	Volume	Page
	Document type: PRODUCT SCHEMATIC	22234428	02	01	48 (83)

https://truckmanualshub.com/

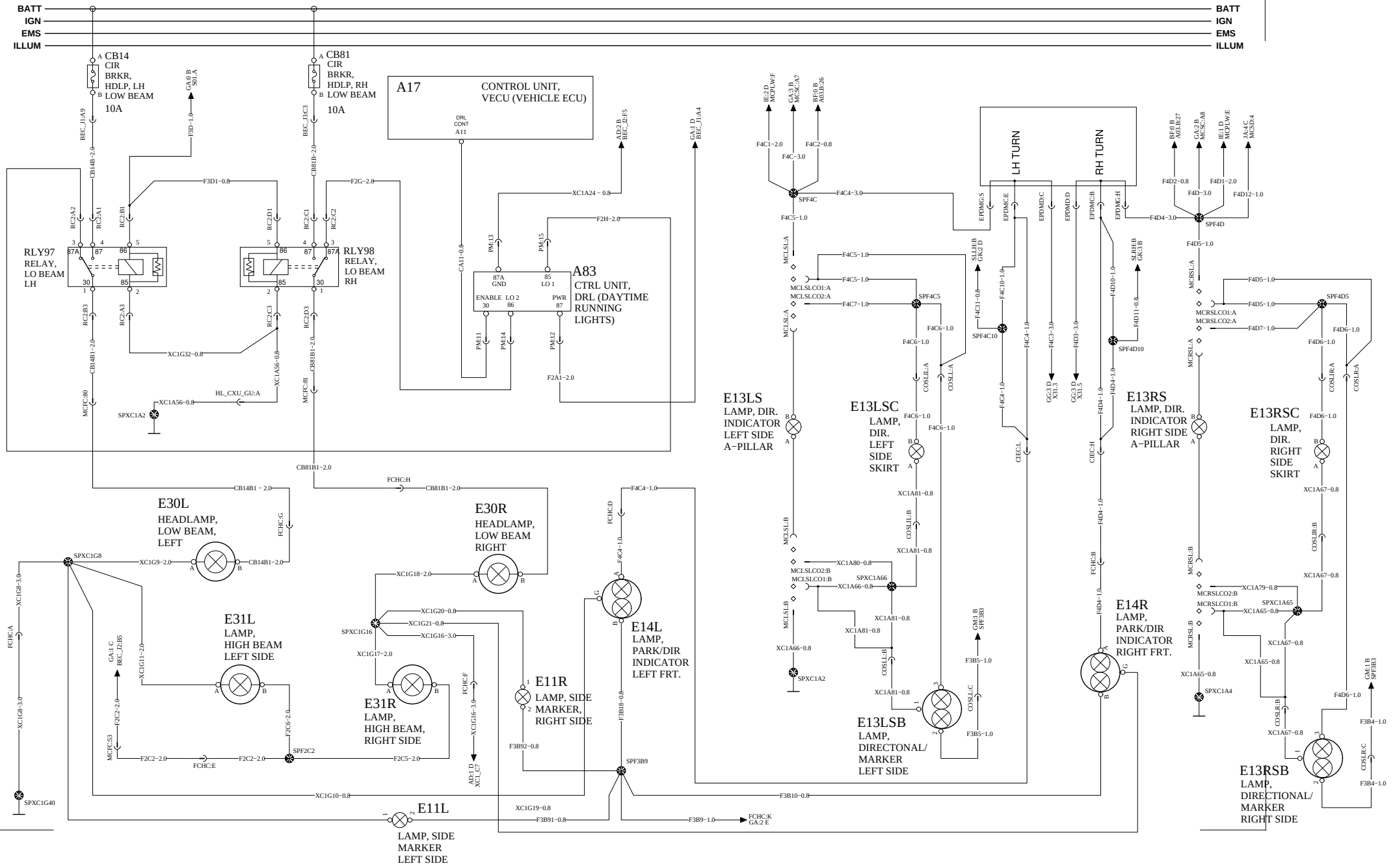

VOLVO Group Trucks Technology	Document title: WIRING DIAGRAM - PC28 - 12V MACK - 2013BP - ENG-CU12	Document No	Issue	Volume	Page
	Document type: PRODUCT SCHEMATIC	22234428	02	01	49 (83)

https://truckmanualshub.com/

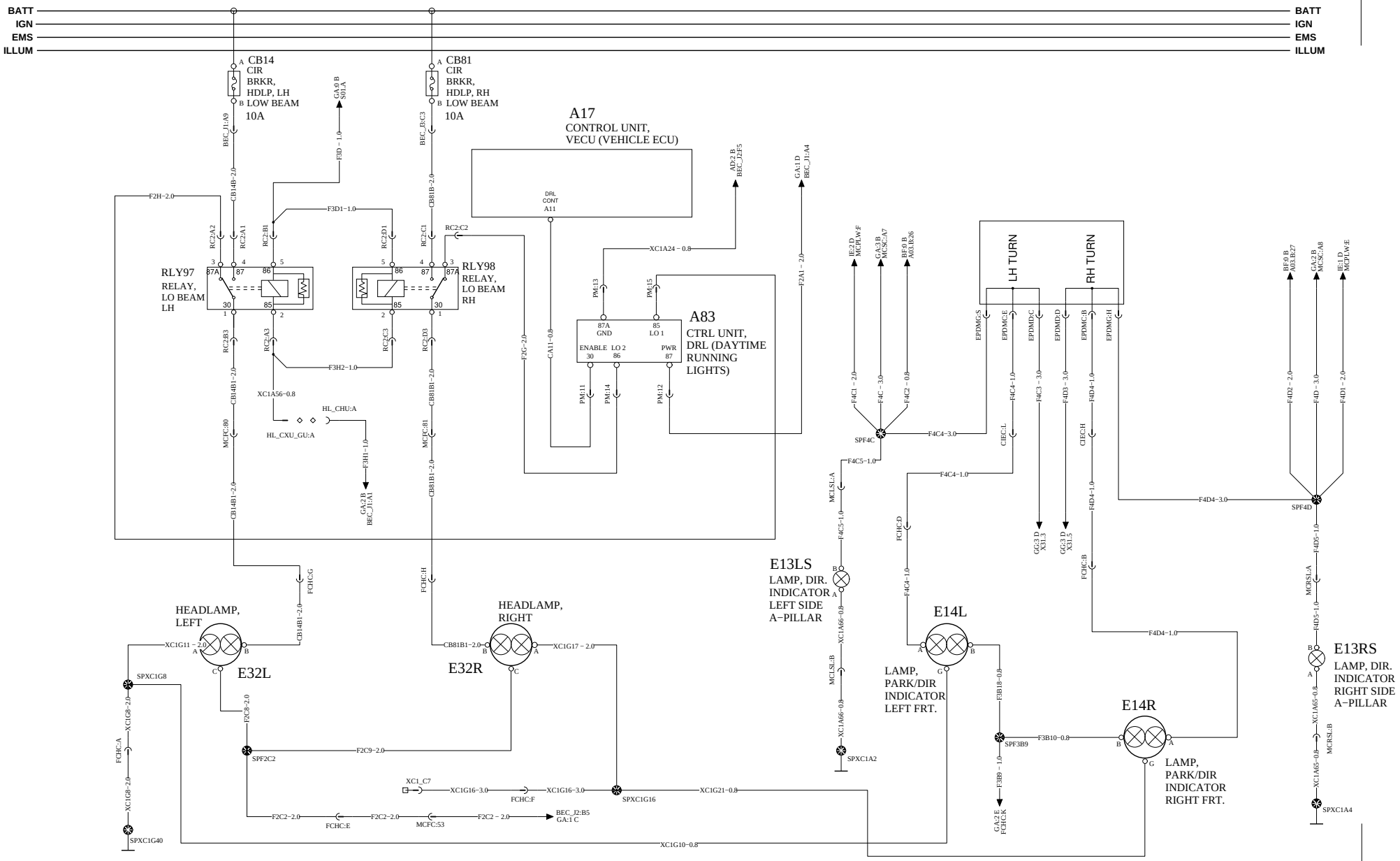

VOLVO	Group Trucks Technology	Document title WIRING DIAGRAM - PC28 - 12V MACK - 2013BP - ENG-CU12 Document type PRODUCT SCHEMATIC	Document No 22234428	Issue 02	Volume 01	Page 50 (83)

https://truckmanualshub.com/

BATT
IGN
EMS
ILLUM

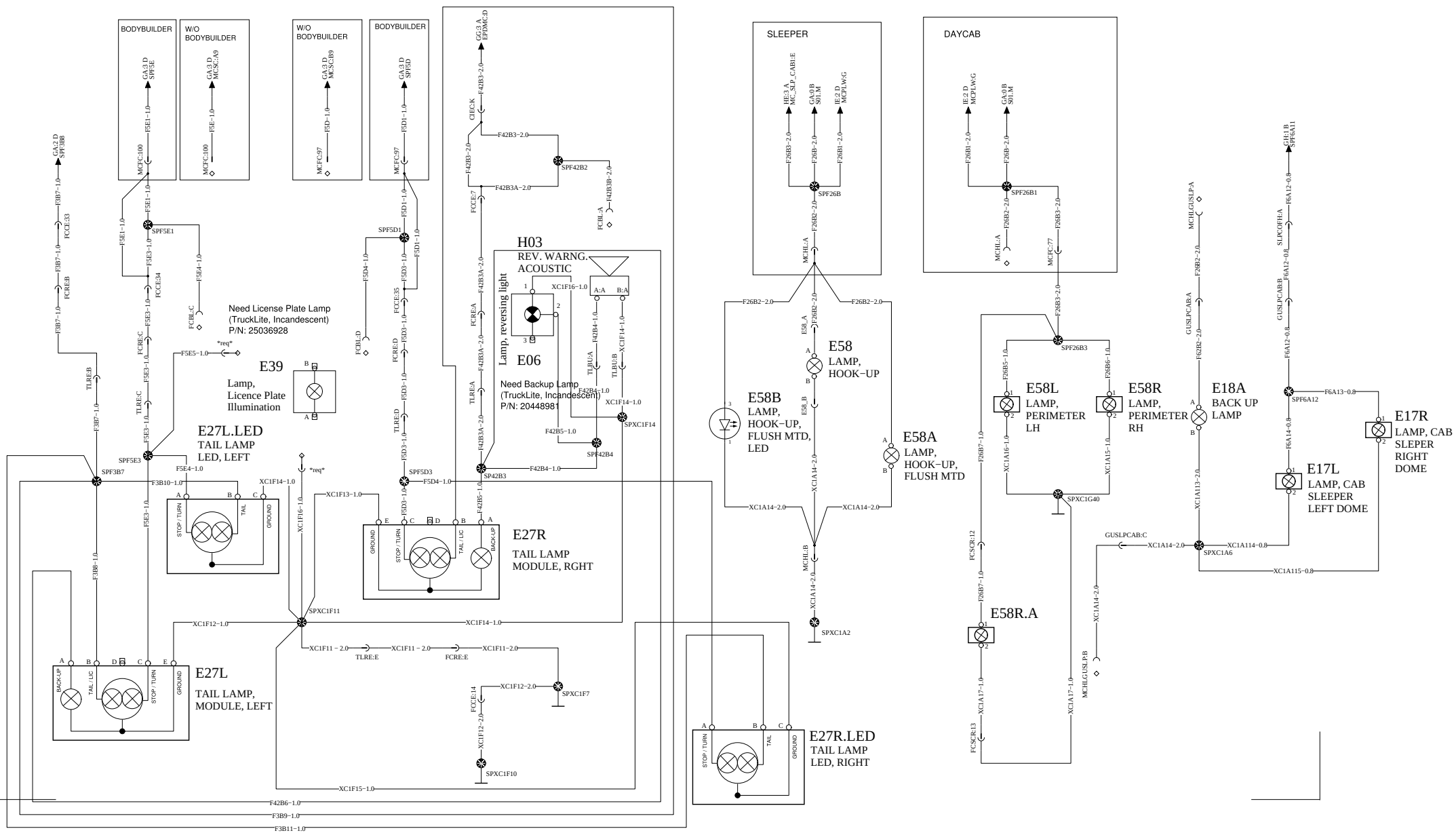

TRAILER LIGHTING CONTROL

https://truckmanualshub.com/

WIRING DIAGRAM: GG

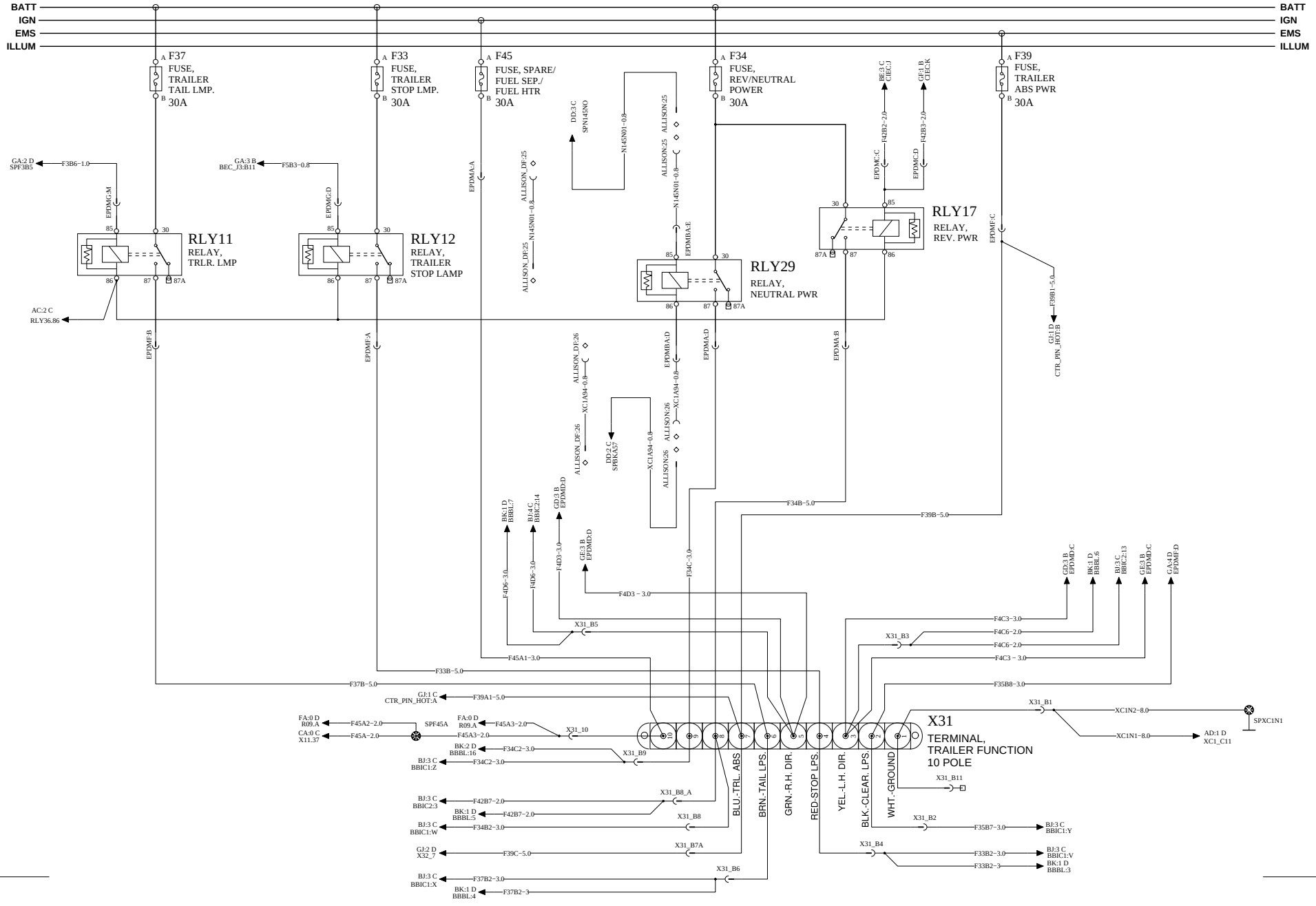

VOLVO Group Trucks Technology	Document title WIRING DIAGRAM - PC28 - 12V MACK - 2013BP - ENG-CU12 Document type PRODUCT SCHEMATIC	Document No 22234428	Issue 02	Volume 01	Page 52 (83)

https://truckmanualshub.com/

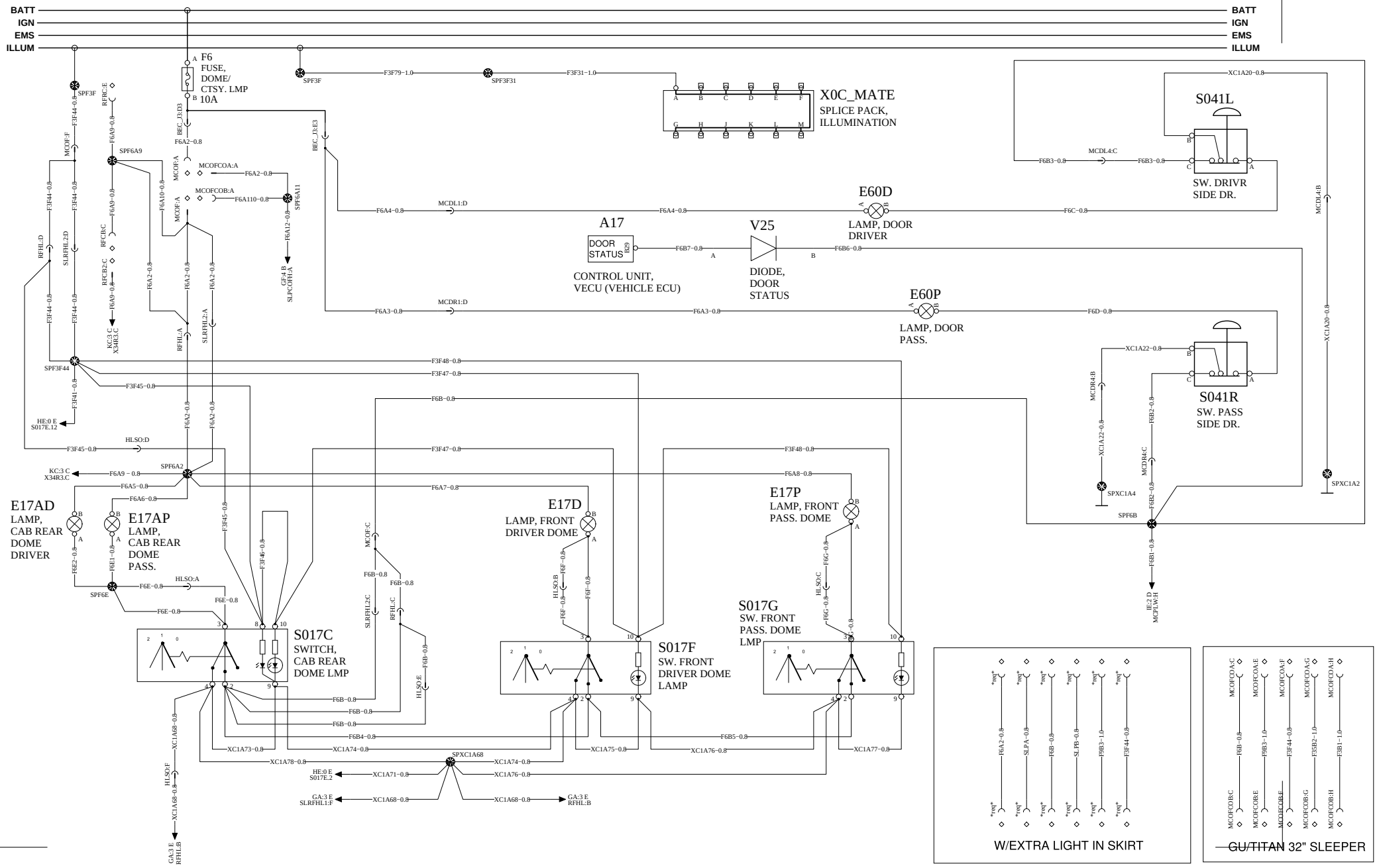

VOLVO Group Trucks Technology	Document title WIRING DIAGRAM - PC28 - 12V MACK - 2013BP - ENG-CU12 Document type PRODUCT SCHEMATIC	Document No 22234428	Issue 02	Volume 01	Page 53 (83)

https://truckmanualshub.com/

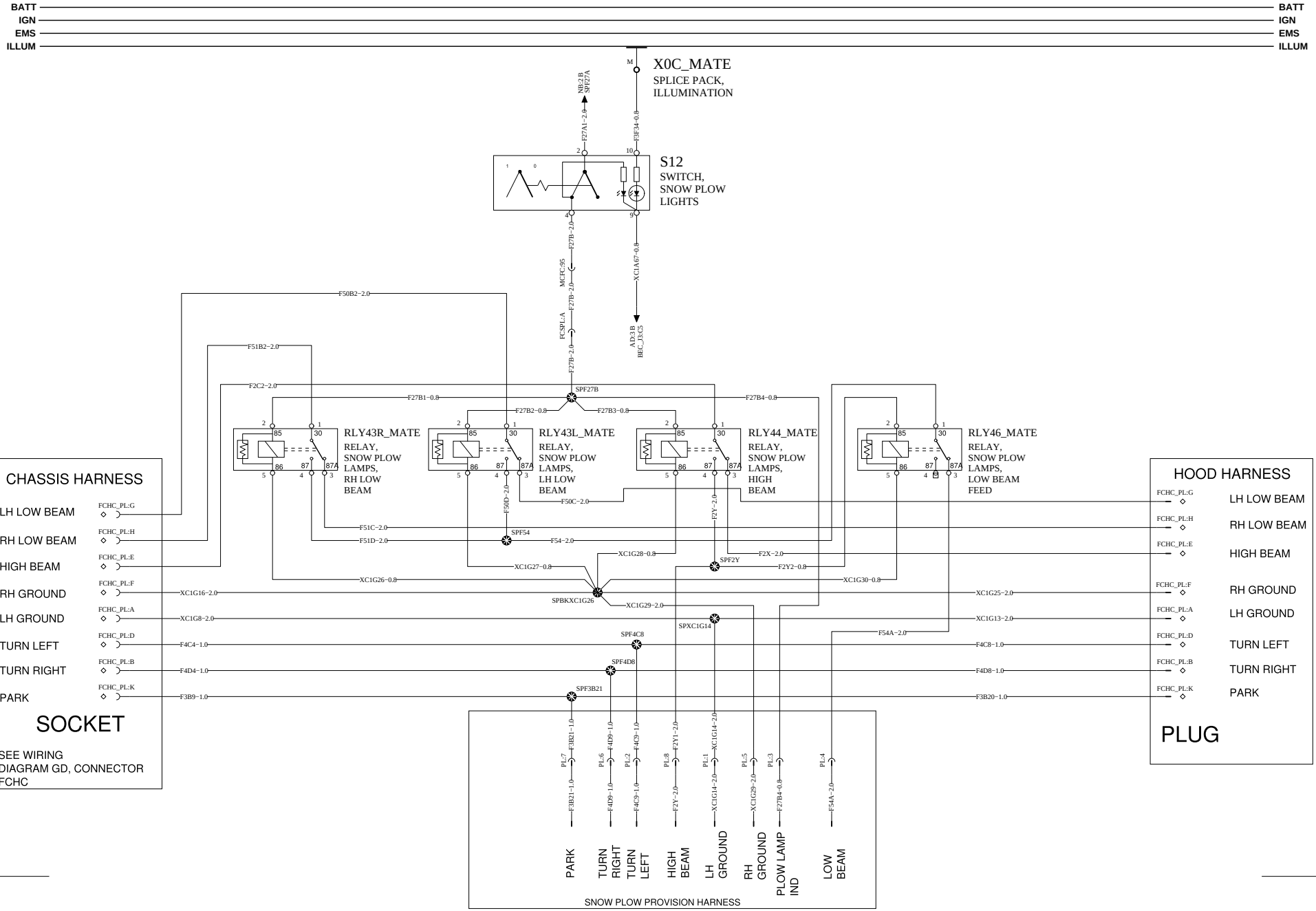

VOLVO	Group Trucks Technology	Document title: WIRING DIAGRAM - PC28 - 12V MACK - 2013BP - ENG-CU12 Document type: PRODUCT SCHEMATIC	Document No: 22234428	Issue: 02	Volume: 01	Page: 54 (83)

TRAILER RECEPTACLE CENTER PIN HOT

https://truckmanualshub.com/

WIRING DIAGRAM: GJ

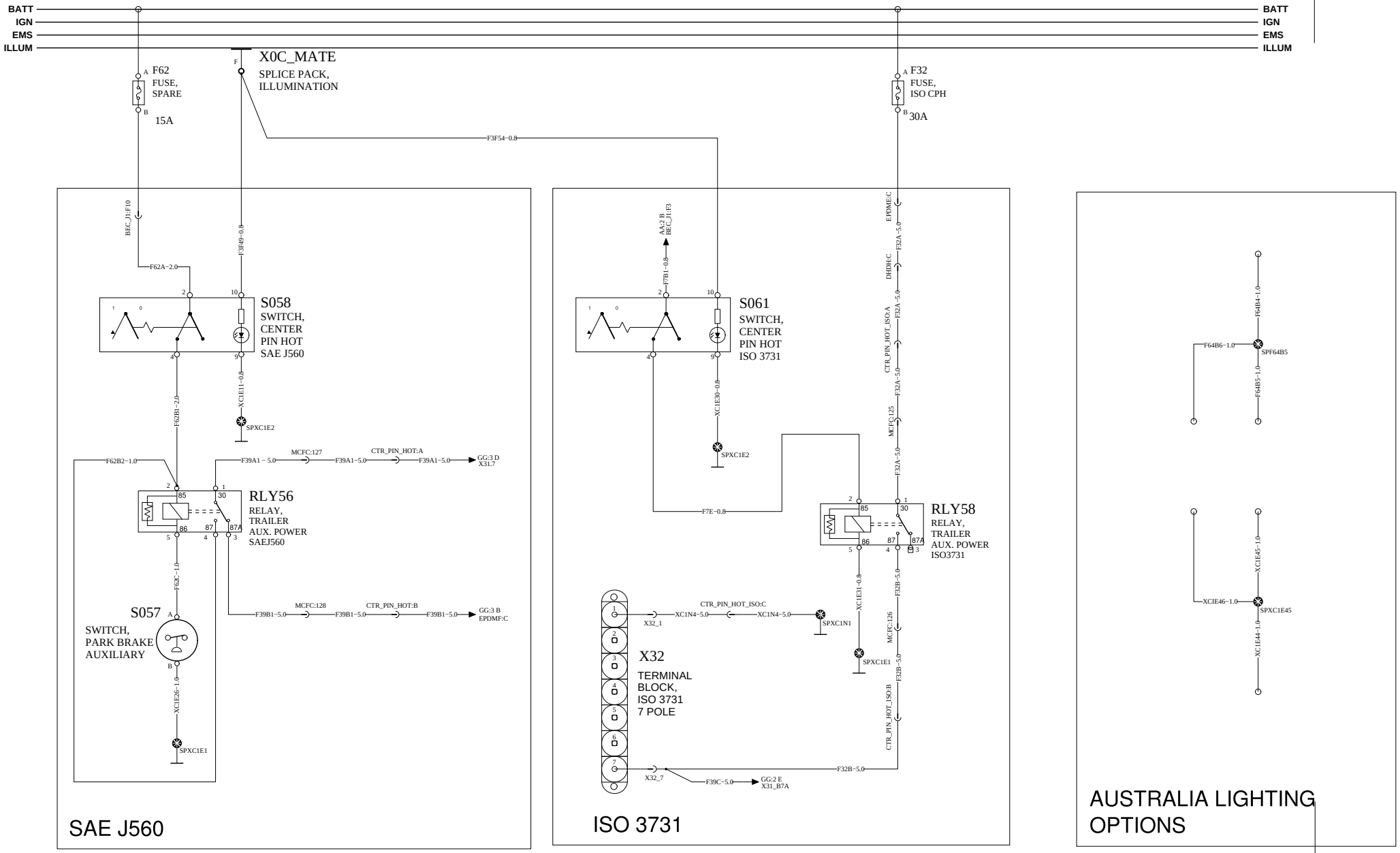

VOLVO	Group Trucks Technology	Document title WIRING DIAGRAM - PC28 - 12V MACK - 2013BP - ENG-CU12 Document type PRODUCT SCHEMATIC	Document No 22234428	Issue 02	Volume 01	Page 55 (83)

TITAN LIGHTING OPTIONS

https://truckmanualshub.com/

WIRING DIAGRAM: GK

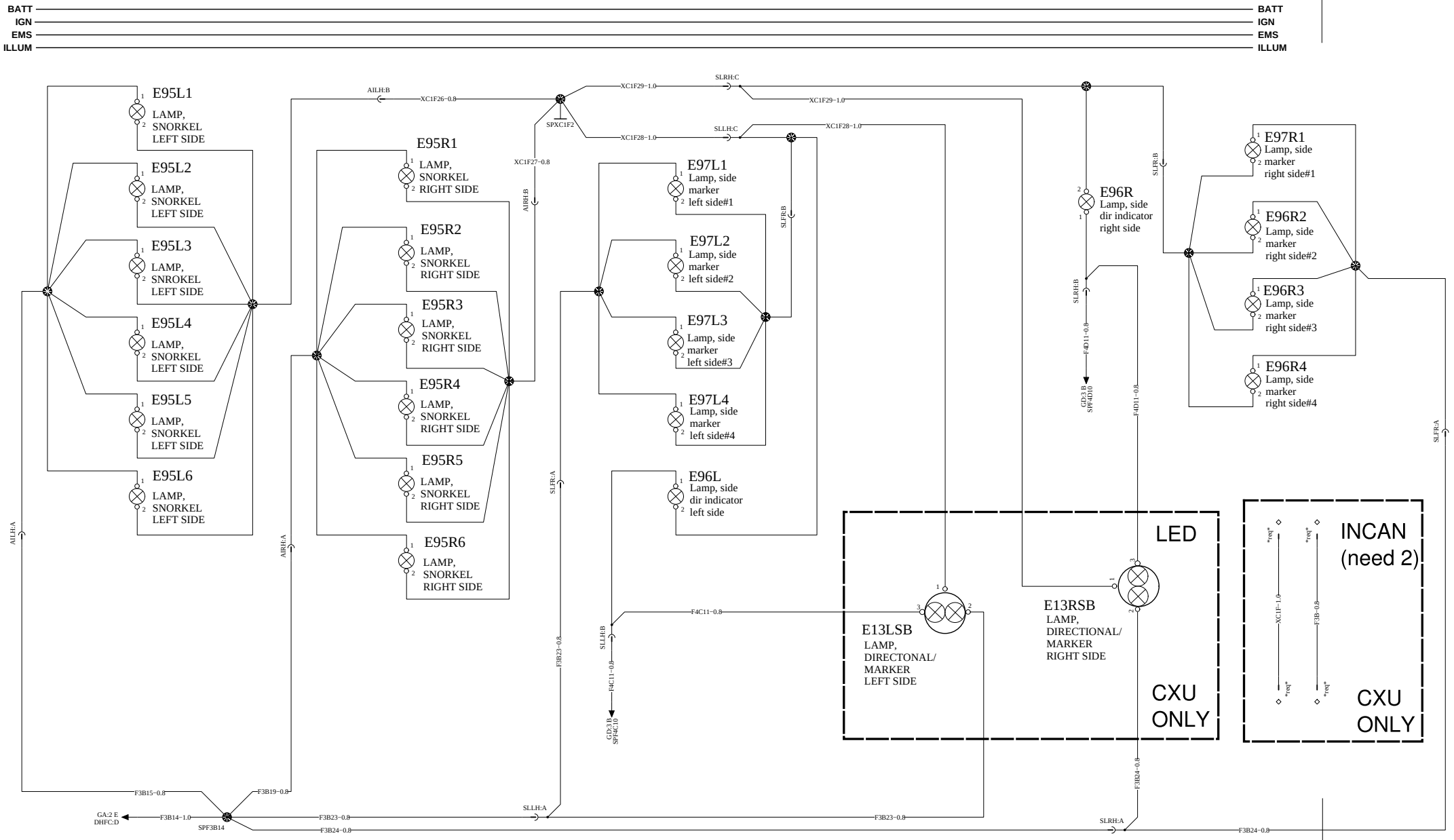

VOLVO	Group Trucks Technology	Document title WIRING DIAGRAM - PC28 - 12V MACK - 2013BP - ENG-CU12 Document type PRODUCT SCHEMATIC	Document No 22234428	Issue 02	Volume 01	Page 56 (83)

https://truckmanualshub.com/

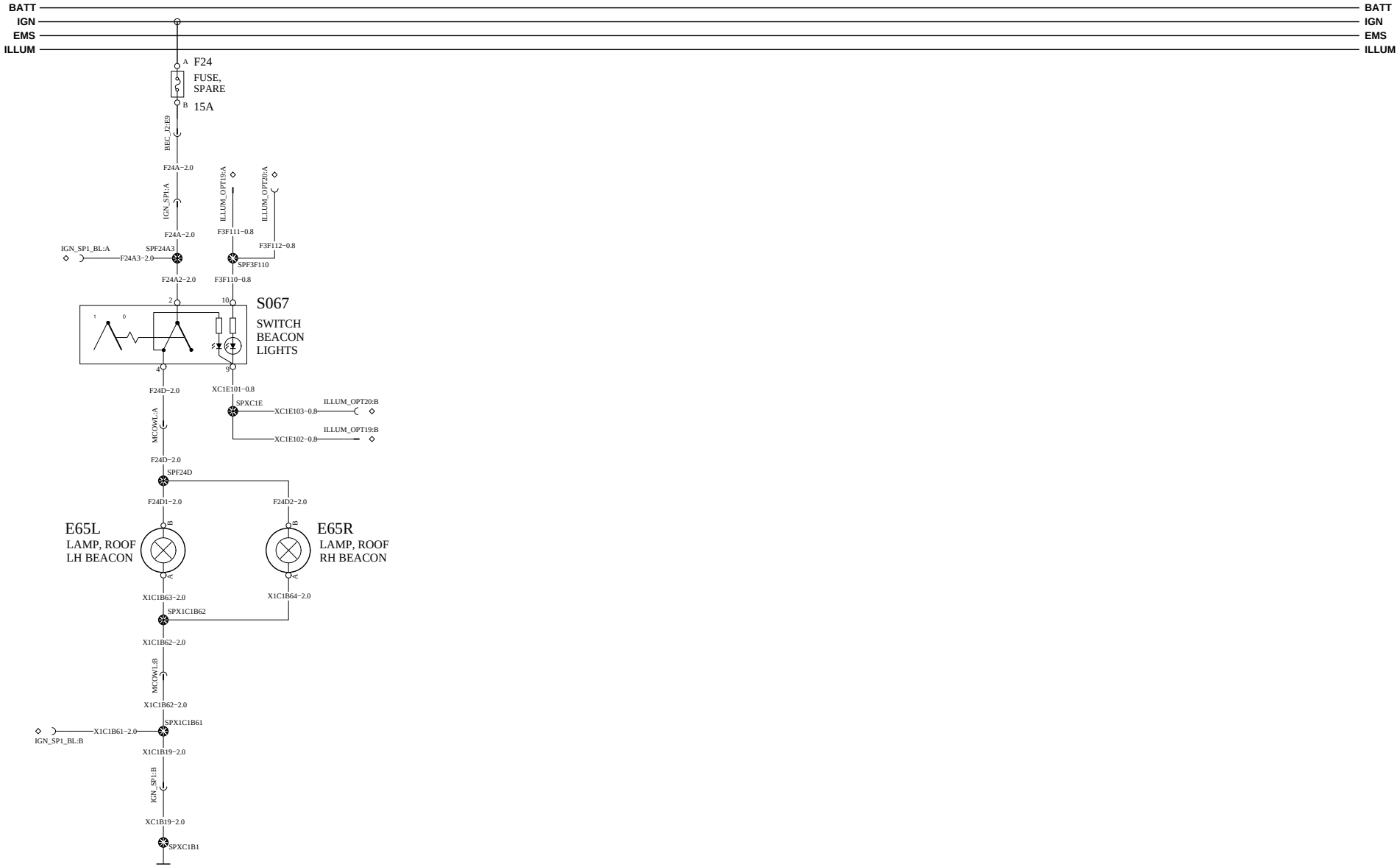

https://truckmanualshub.com/

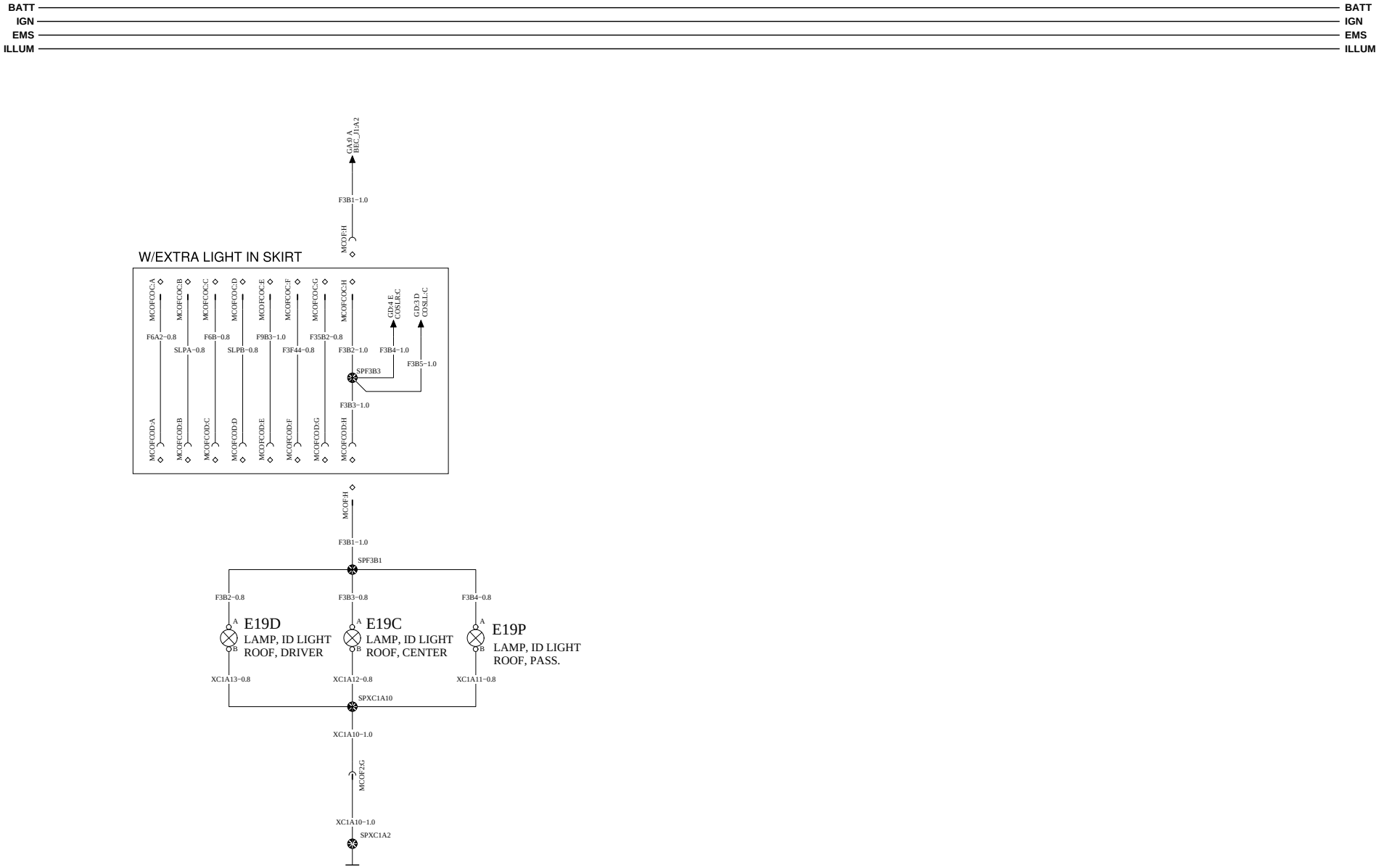

https://truckmanualshub.com/

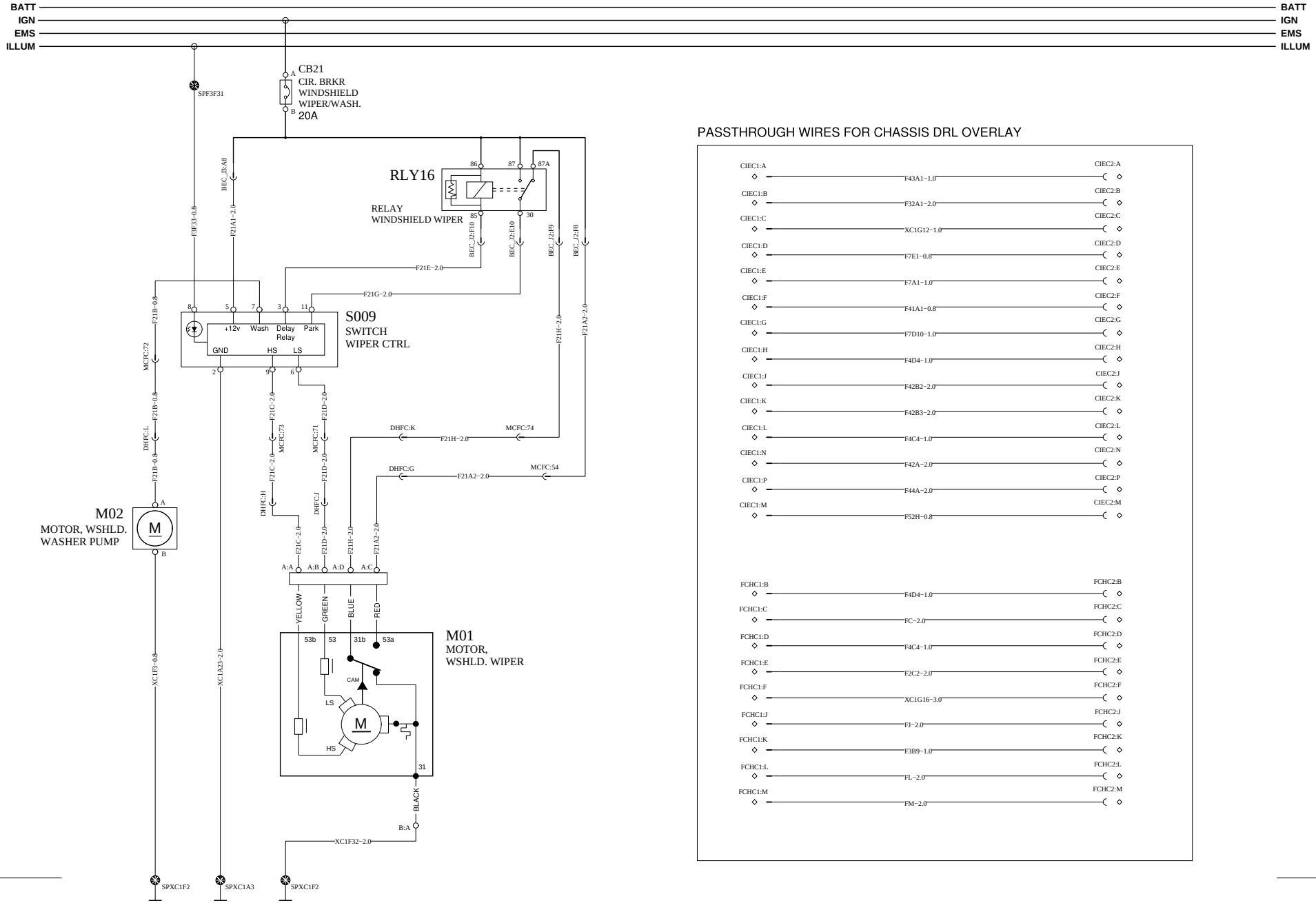

PASSTHROUGH WIRES FOR CHASSIS DRL OVERLAY

https://truckmanualshub.com/

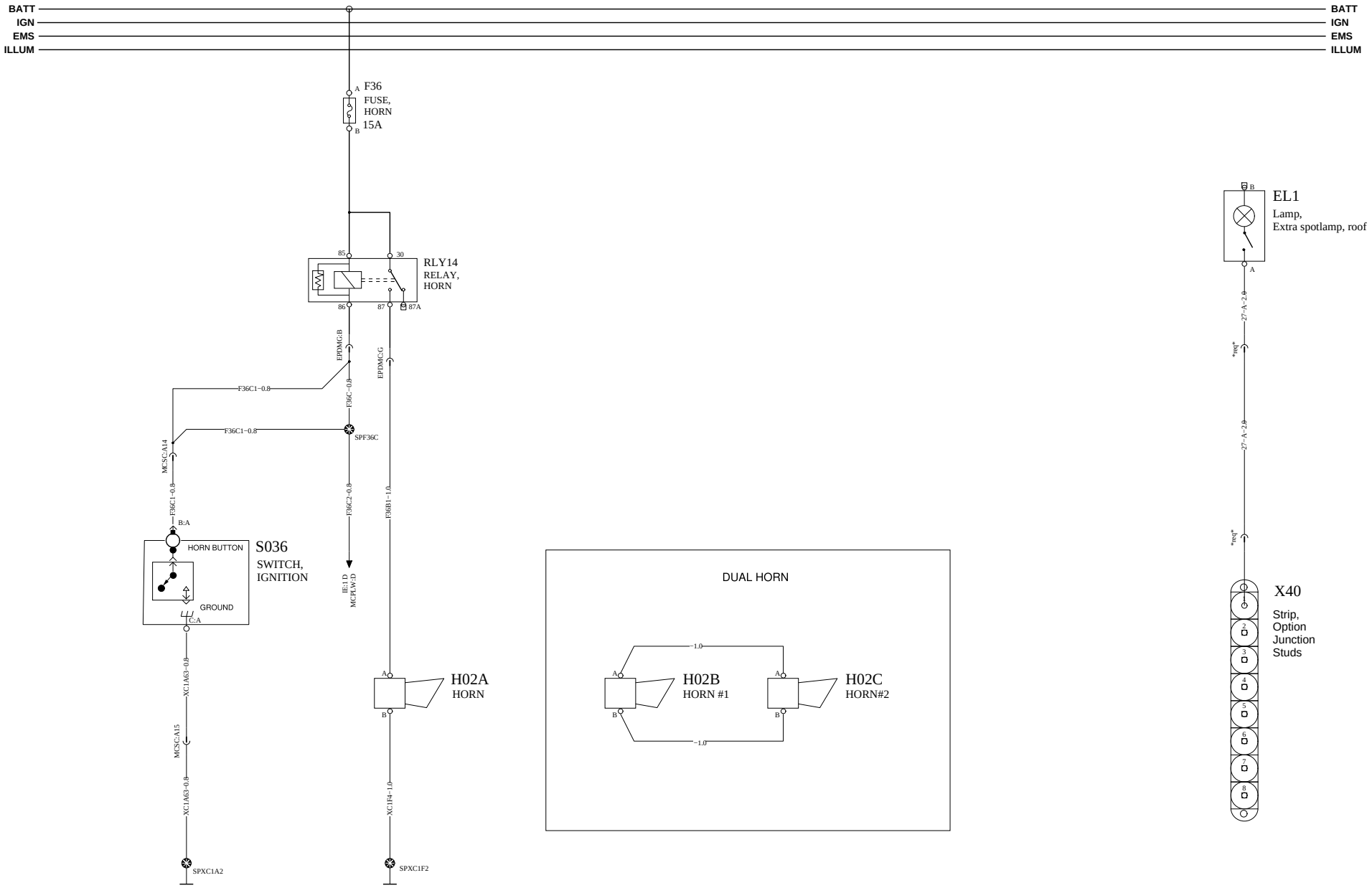

VOLVO	Group Trucks Technology	Document title WIRING DIAGRAM - PC28 - 12V MACK - 2013BP - ENG-CU12 Document type PRODUCT SCHEMATIC	Document No 22234428	Issue 02	Volume 01	Page 60 (83)

https://truckmanualshub.com/

WIRING DIAGRAM: HA

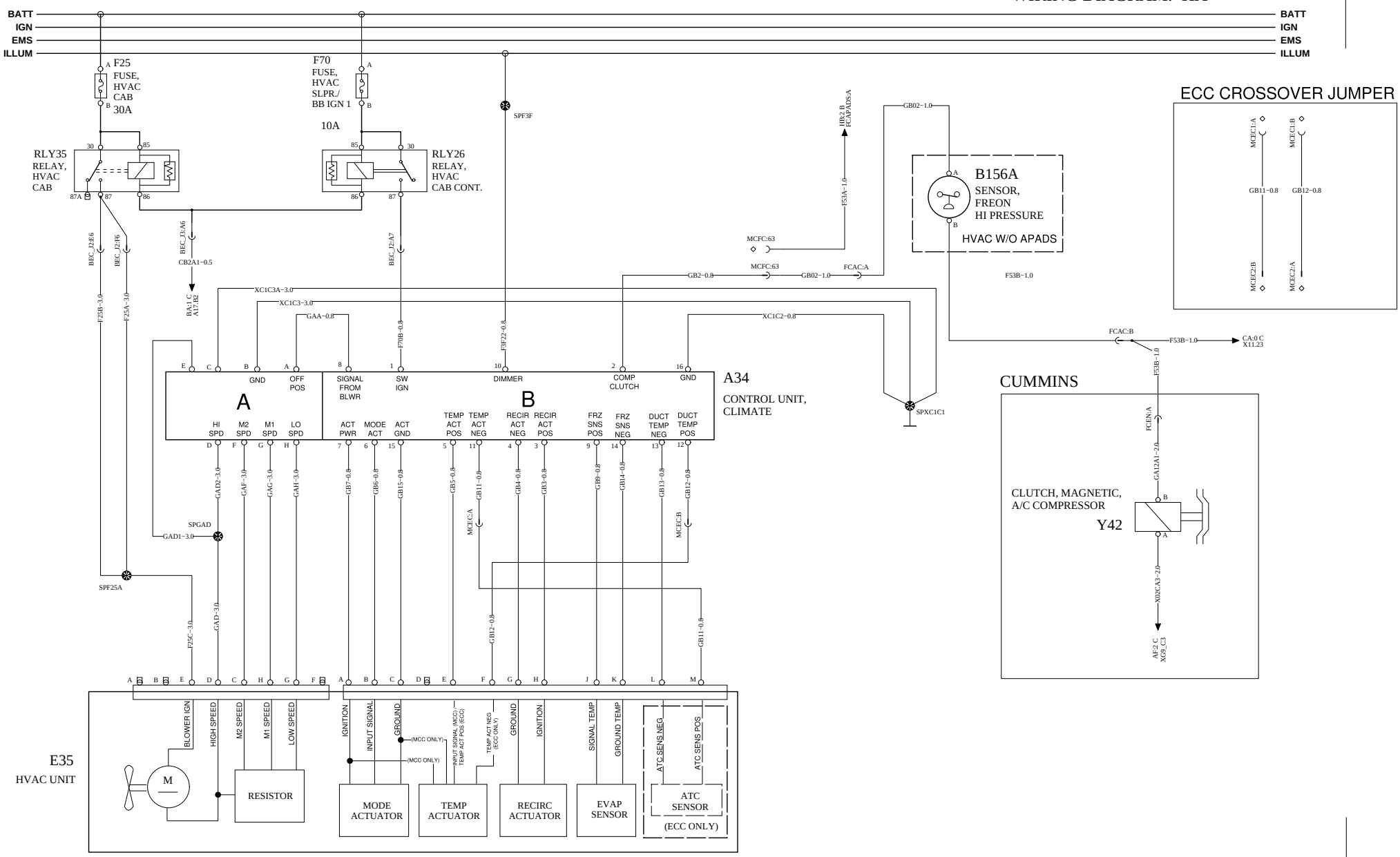

VOLVO	Group Trucks Technology	Document title WIRING DIAGRAM - PC28 - 12V MACK - 2013BP - ENG-CU12 Document type PRODUCT SCHEMATIC	Document No 22234428	Issue 02	Volume 01	Page 61 (83)

BATT
IGN
EMS
ILLUM

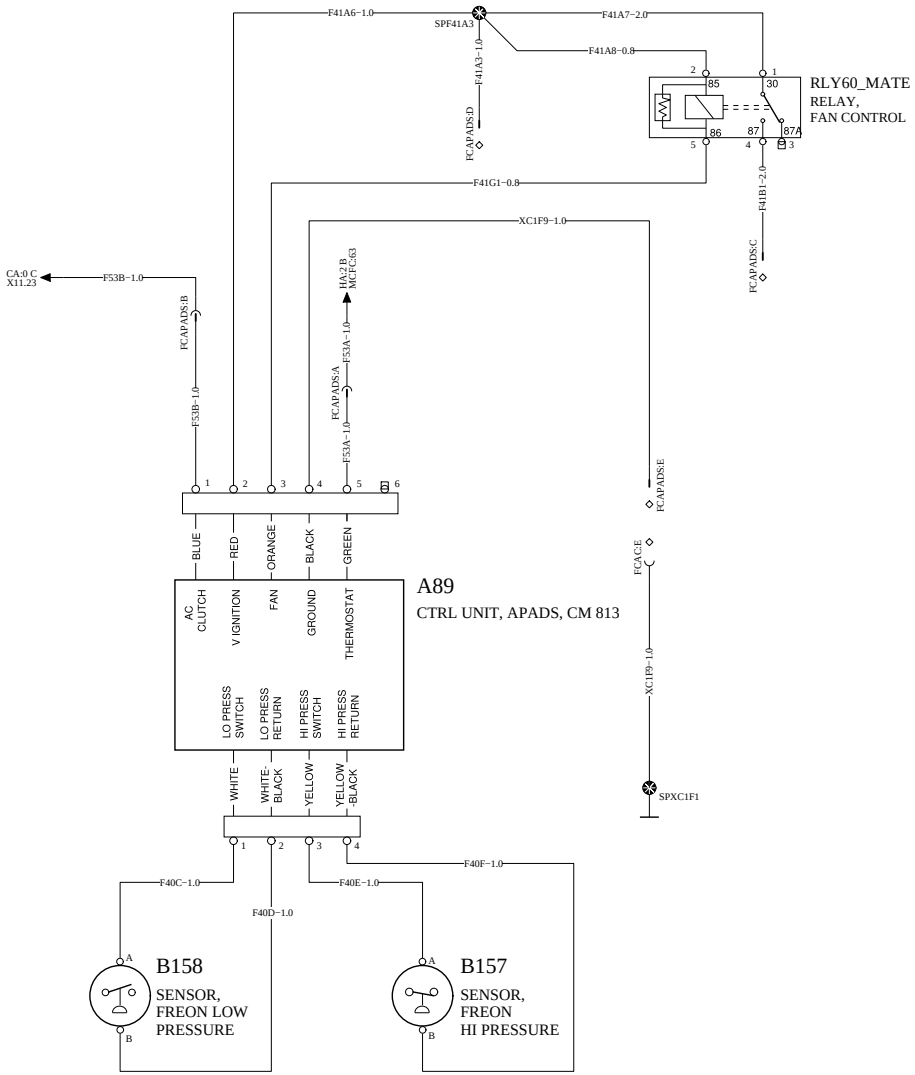

https://truckmanualshub.com/

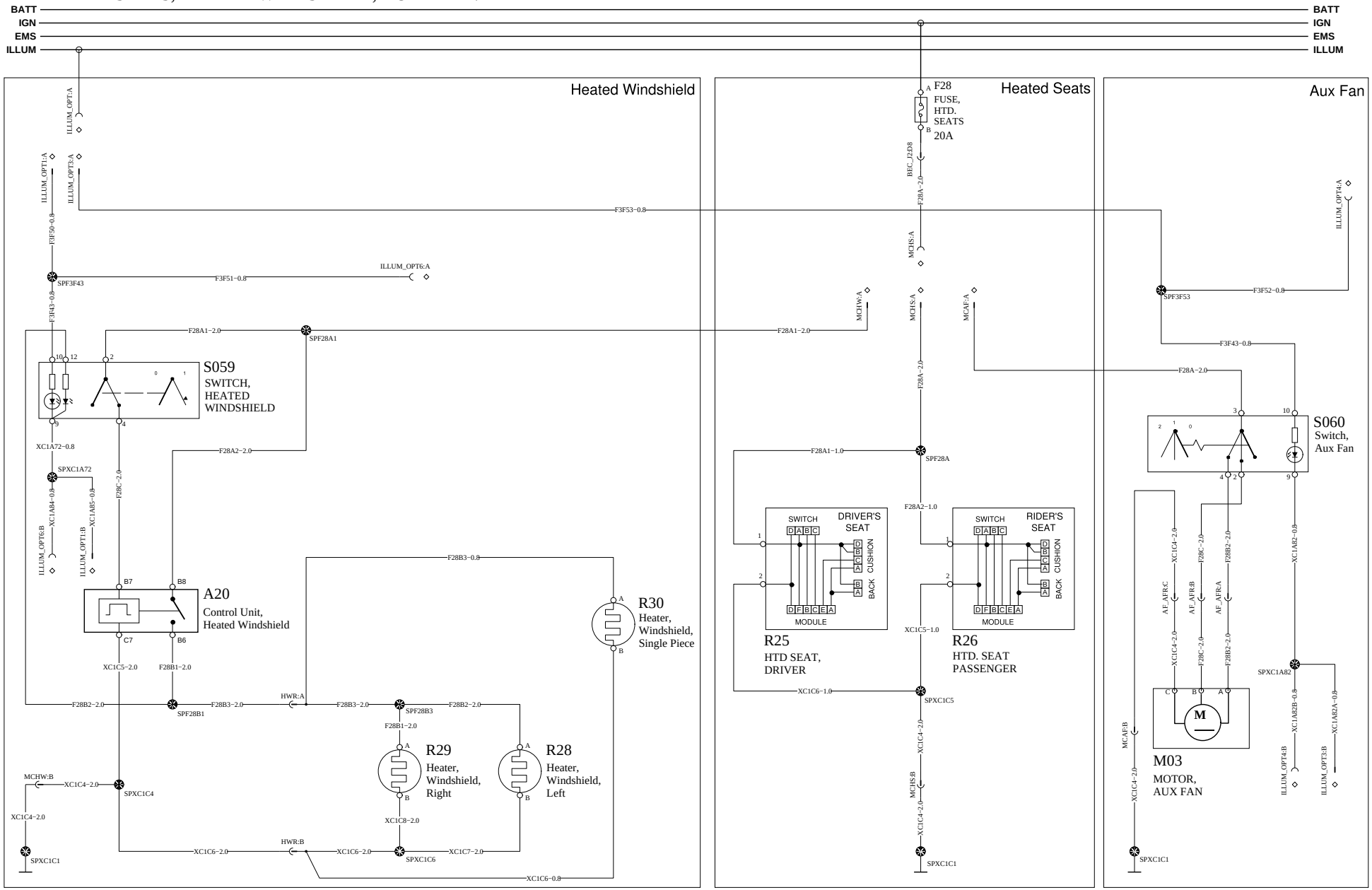

https://truckmanualshub.com/

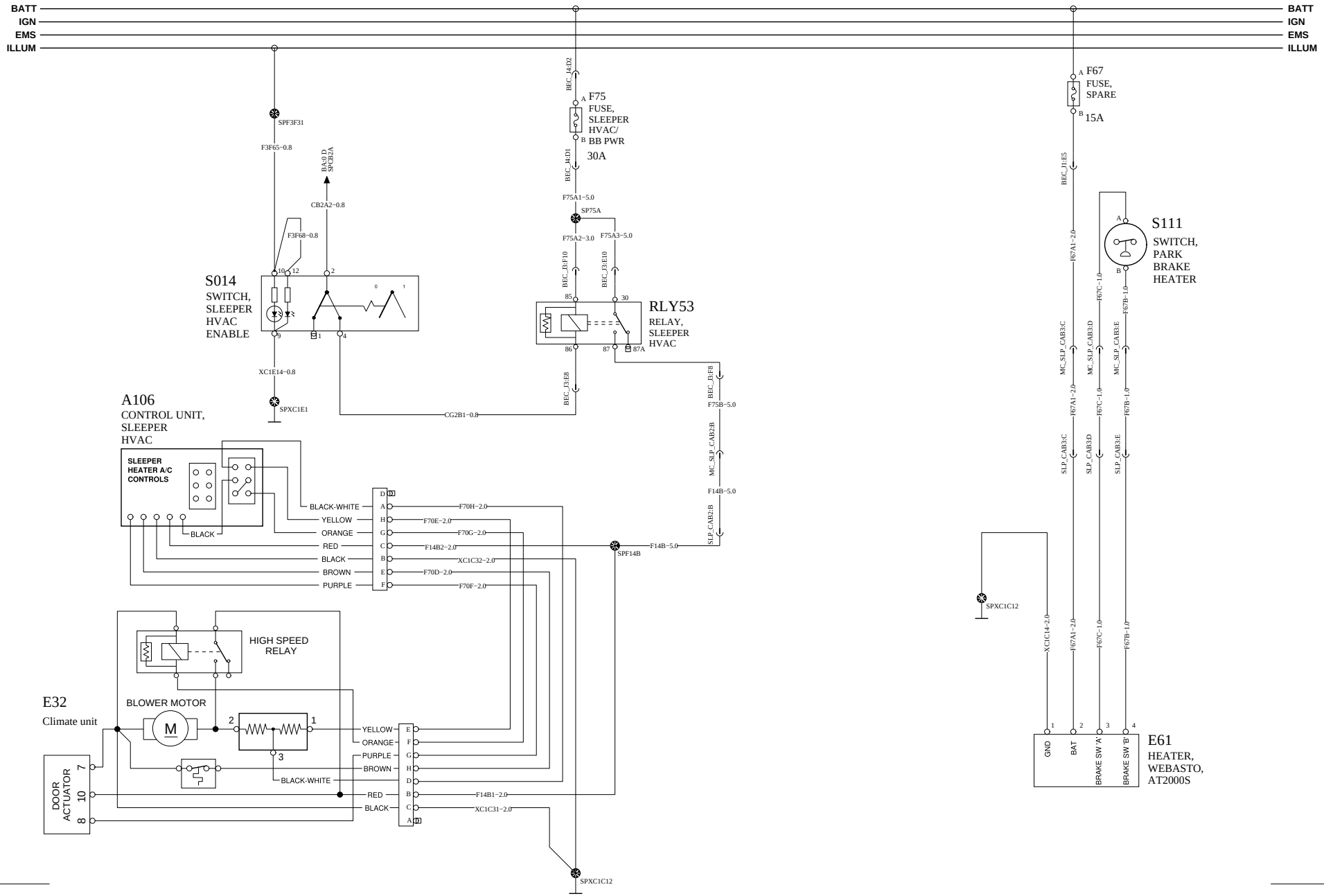

VOLVO	Group Trucks Technology	Document title WIRING DIAGRAM - PC28 - 12V MACK - 2013BP - ENG-CU12 Document type PRODUCT SCHEMATIC	Document No 22234428	Issue 02	Volume 01	Page 64 (83)

https://truckmanualshub.com/

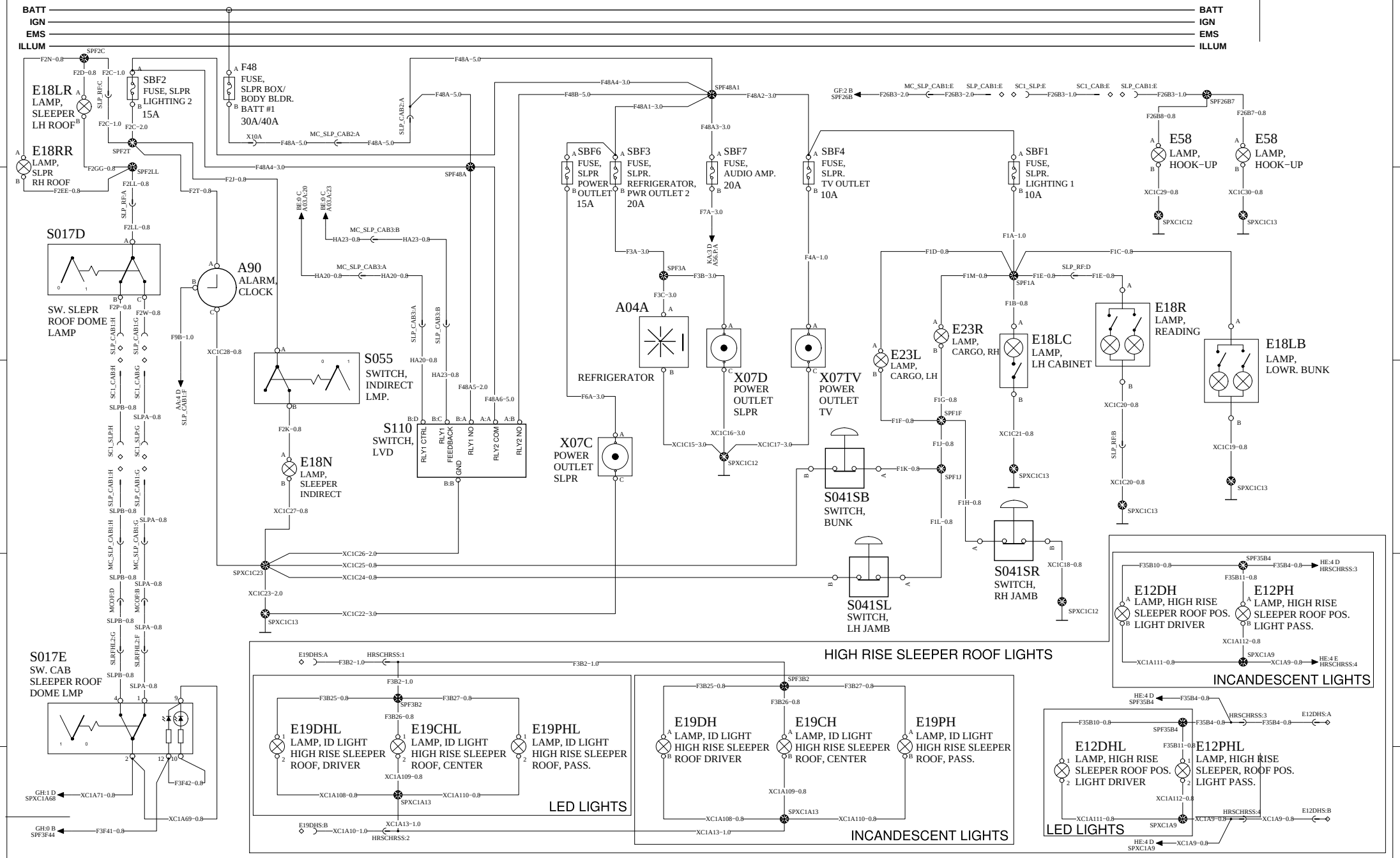

VOLVO	Group Trucks Technology	Document title: WIRING DIAGRAM - PC28 - 12V MACK - 2013BP - ENG-CU12	Document No	Issue	Volume	Page
		Document type: PRODUCT SCHEMATIC	22234428	02	01	65 (83)

120V AC SYSTEM / INVERTER

WIRING DIAGRAM: HF

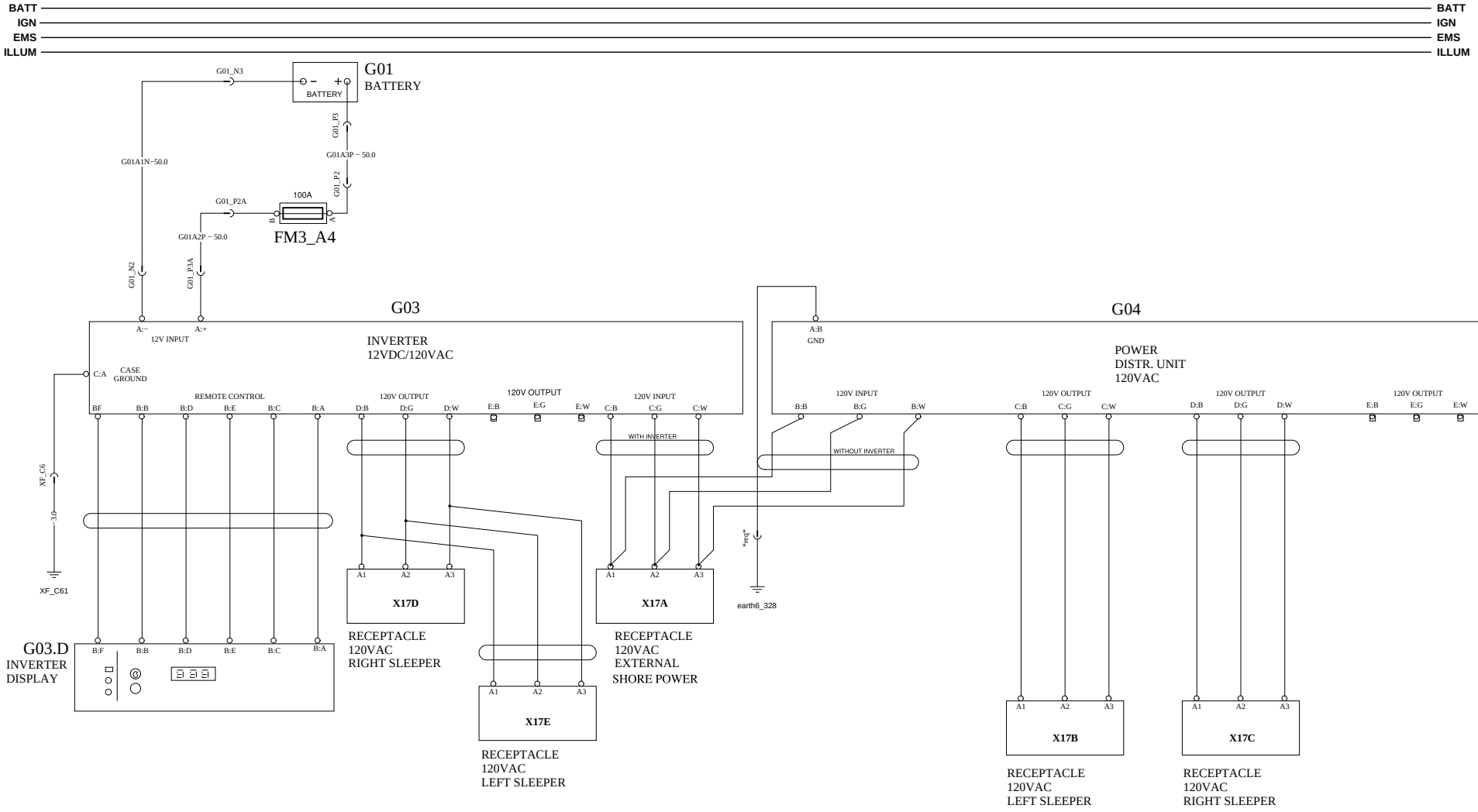

VOLVO	Group Trucks Technology	Document title WIRING DIAGRAM - PC28 - 12V MACK - 2013BP - ENG-CU12 Document type PRODUCT SCHEMATIC	Document No 22234428	Issue 02	Volume 01	Page 66 (83)

https://truckmanualshub.com/

BATT
IGN
EMS
ILLUM

HEATED WINDSHIELD

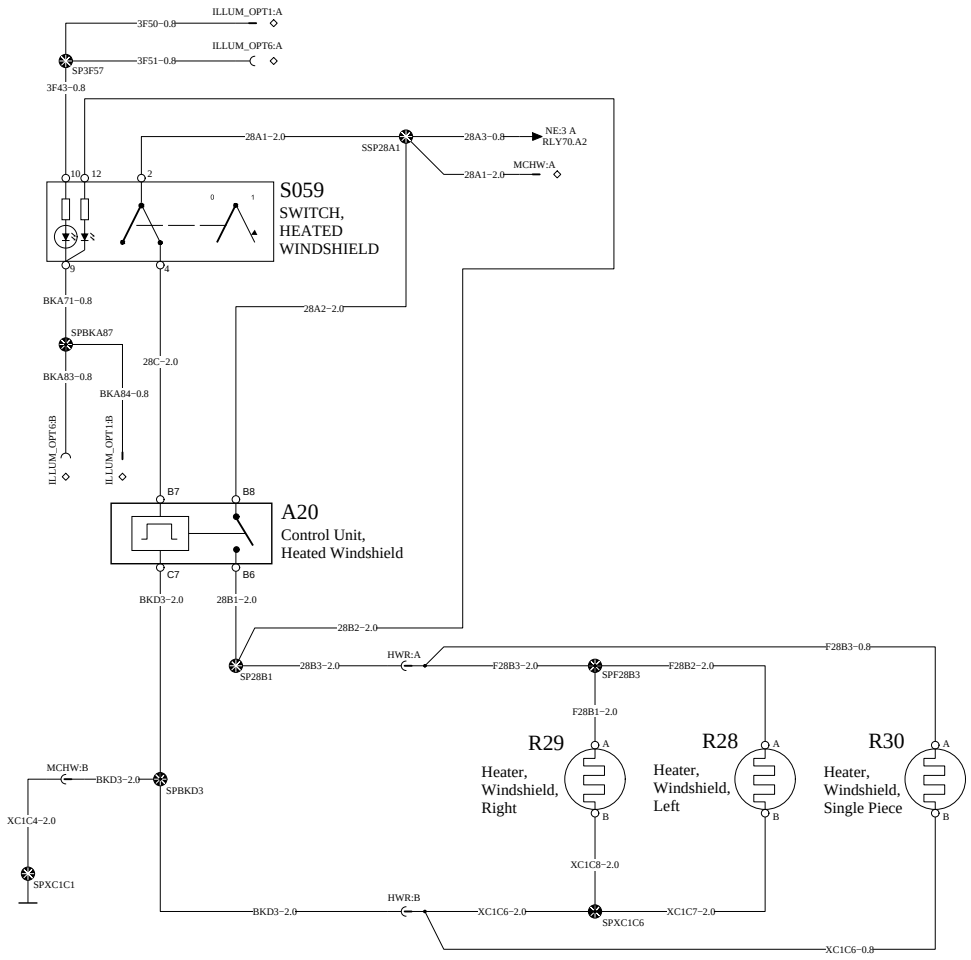

AUX FAN

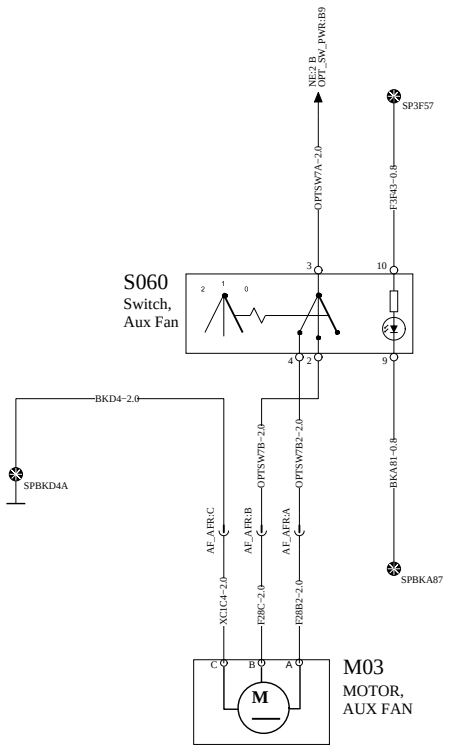

VOLVO Group Trucks Technology	Document title: WIRING DIAGRAM - PC28 - 12V MACK - 2013BP - ENG-CU12	Document No	Issue	Volume	Page
	Document type: PRODUCT SCHEMATIC	22234428	02	01	67 (83)

RH & LH MOTORIZED WINDOWS

https://truckmanualshub.com/

WIRING DIAGRAM: IA

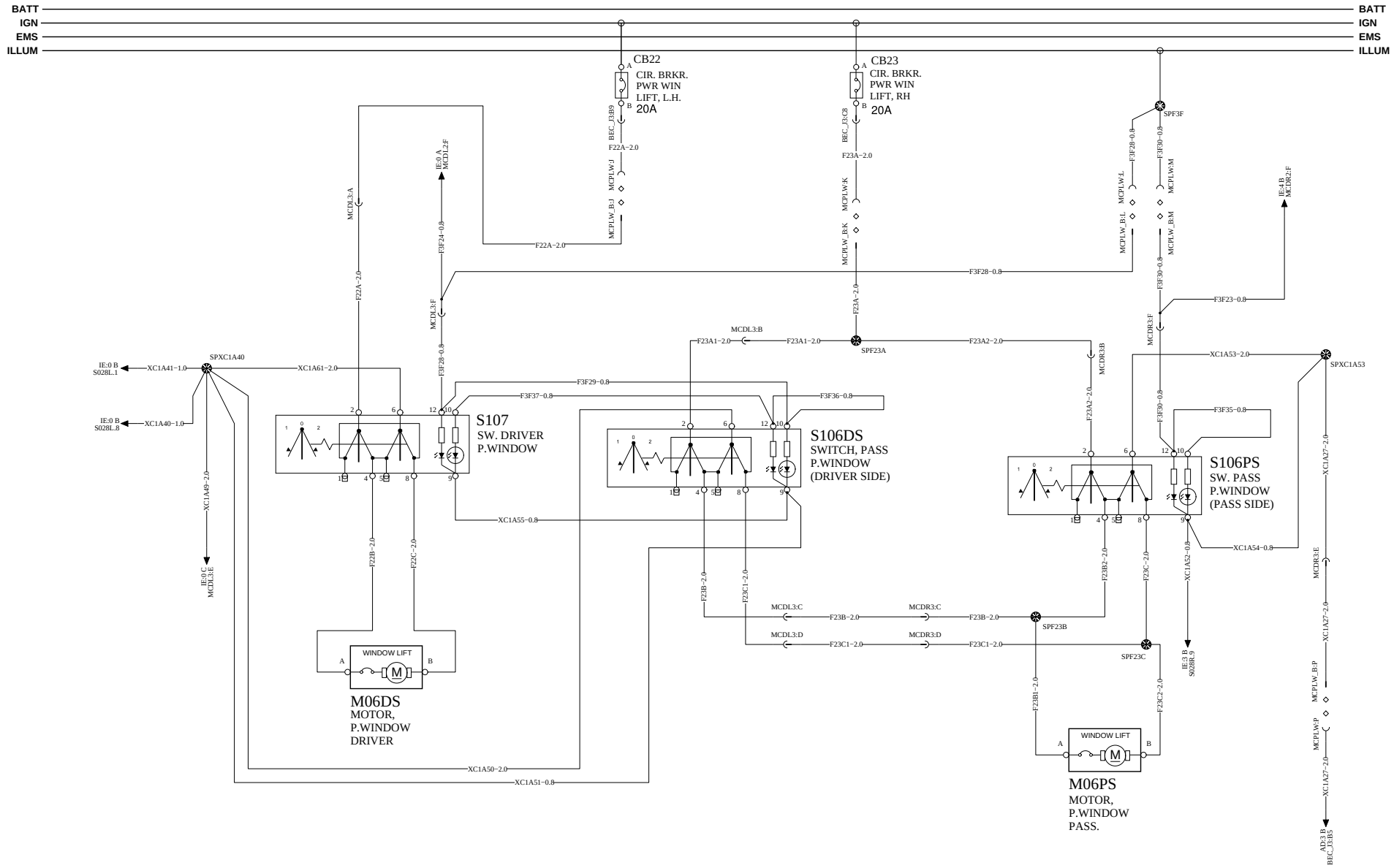

VOLVO Group Trucks Technology	Document title: WIRING DIAGRAM - PC28 - 12V MACK - 2013BP - ENG-CU12	Document No	Issue	Volume	Page
	Document type: PRODUCT SCHEMATIC	22234428	02	01	68 (83)

https://truckmanualshub.com/

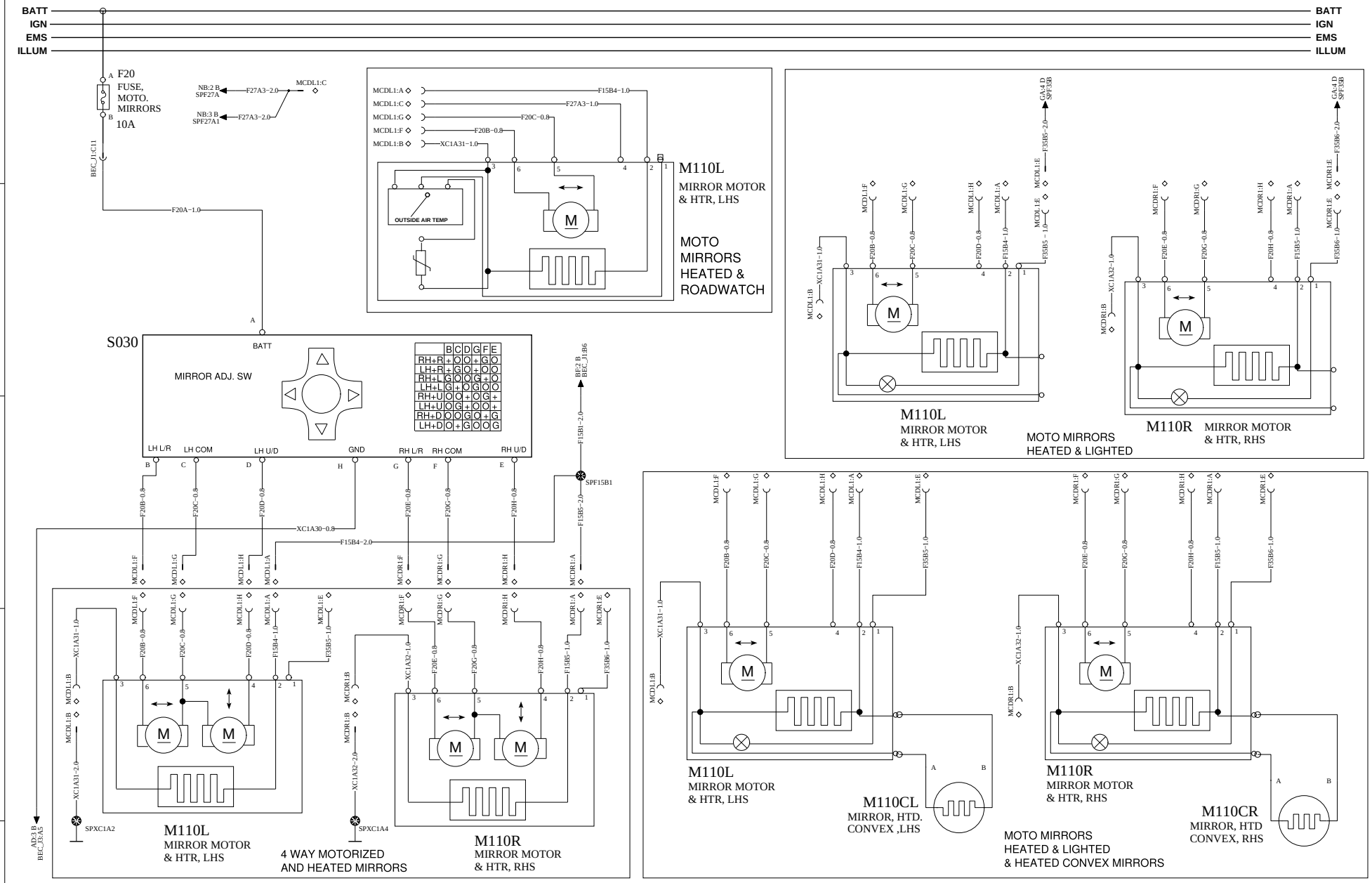

https://truckmanualshub.com/

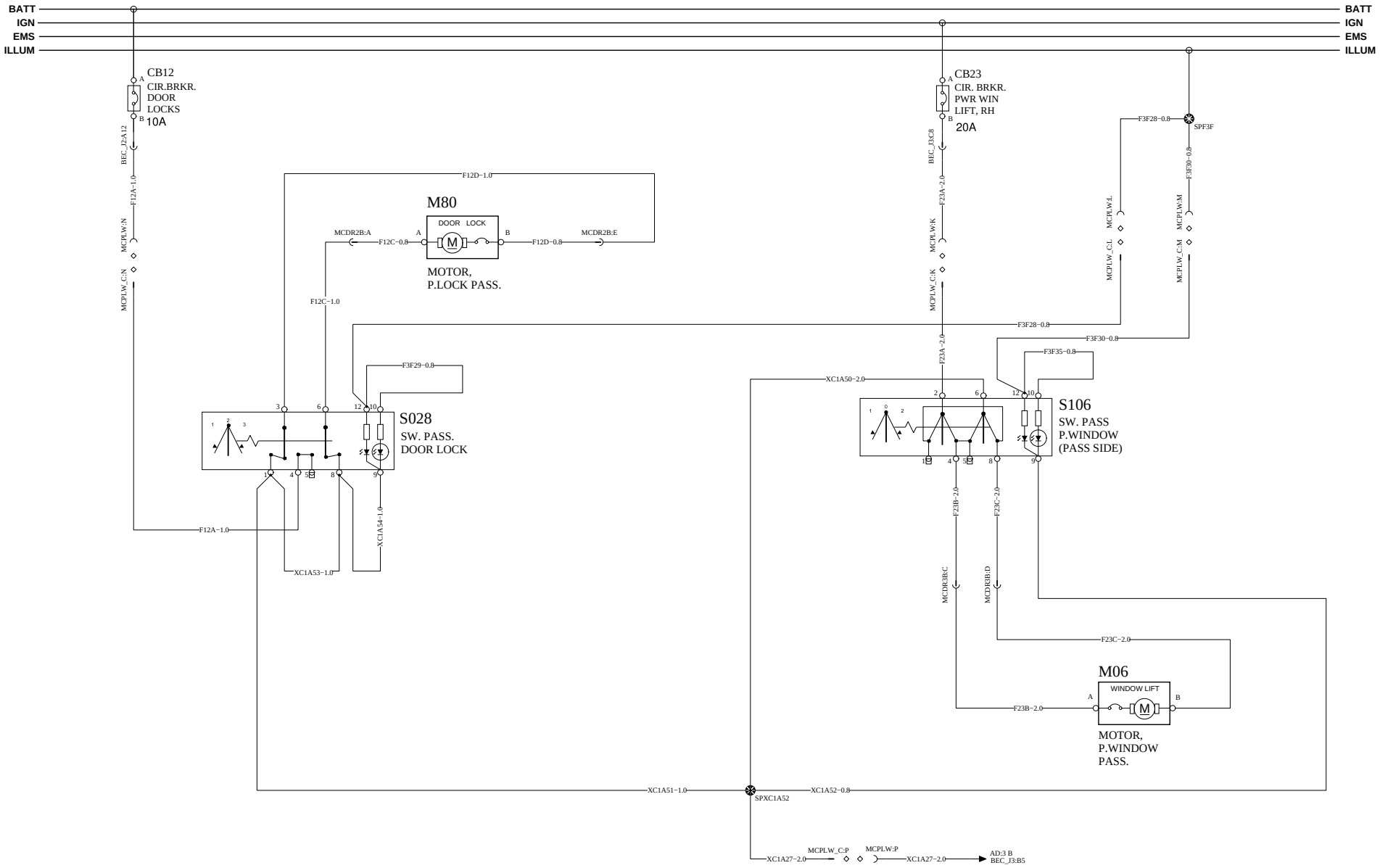

VOLVO Group Trucks Technology	Document title: WIRING DIAGRAM - PC28 - 12V MACK - 2013BP - ENG-CU12	Document No	Issue	Volume	Page
	Document type: PRODUCT SCHEMATIC	22234428	02	01	70 (83)

https://truckmanualshub.com/

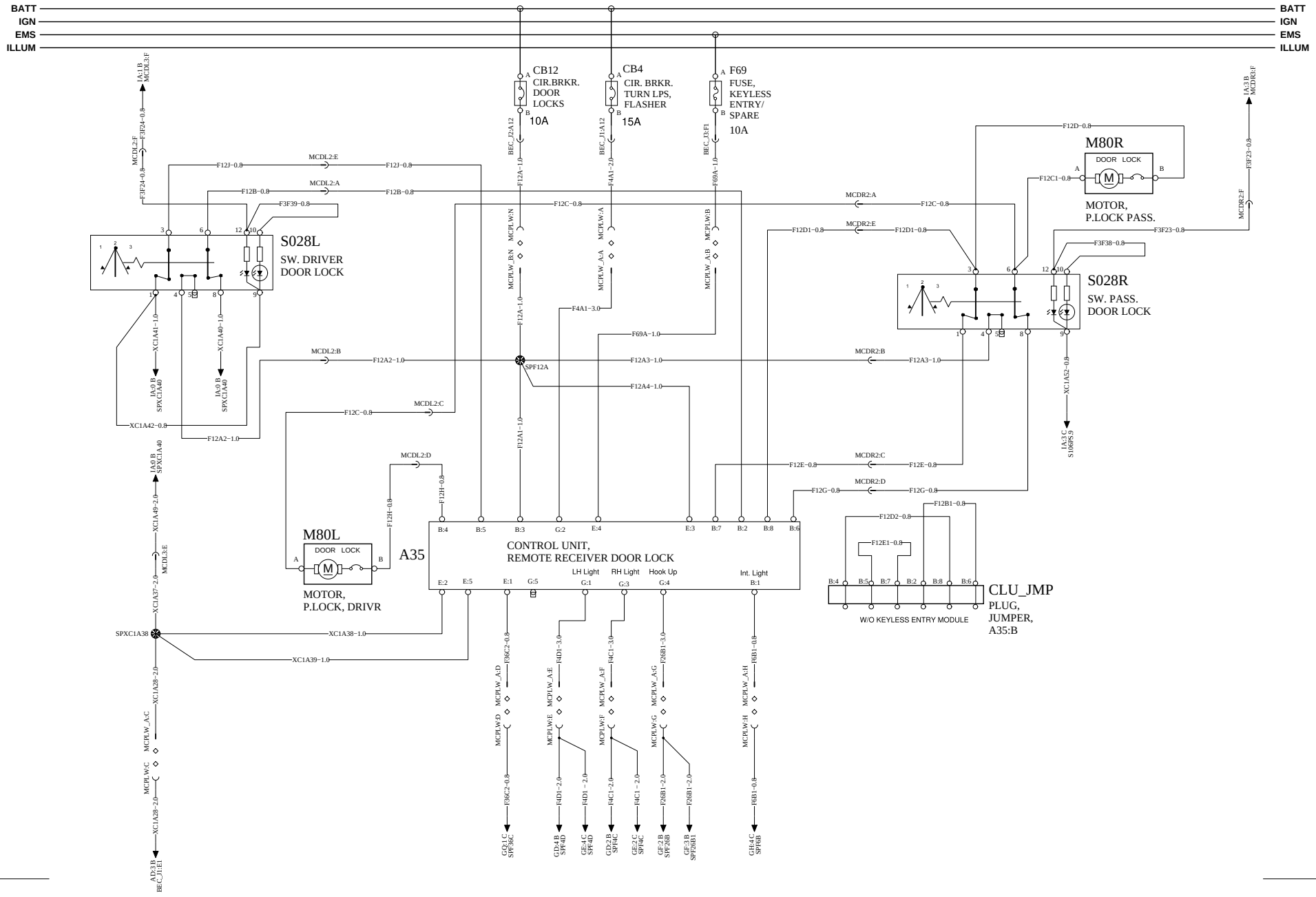

https://truckmanualshub.com/

BATT
IGN
EMS
ILLUM

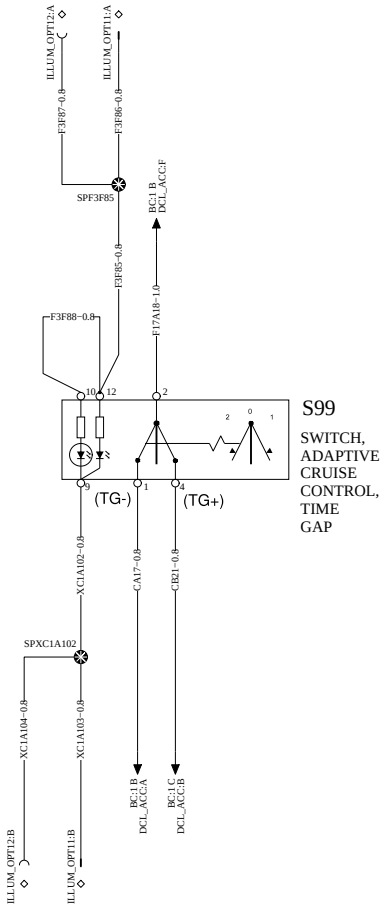

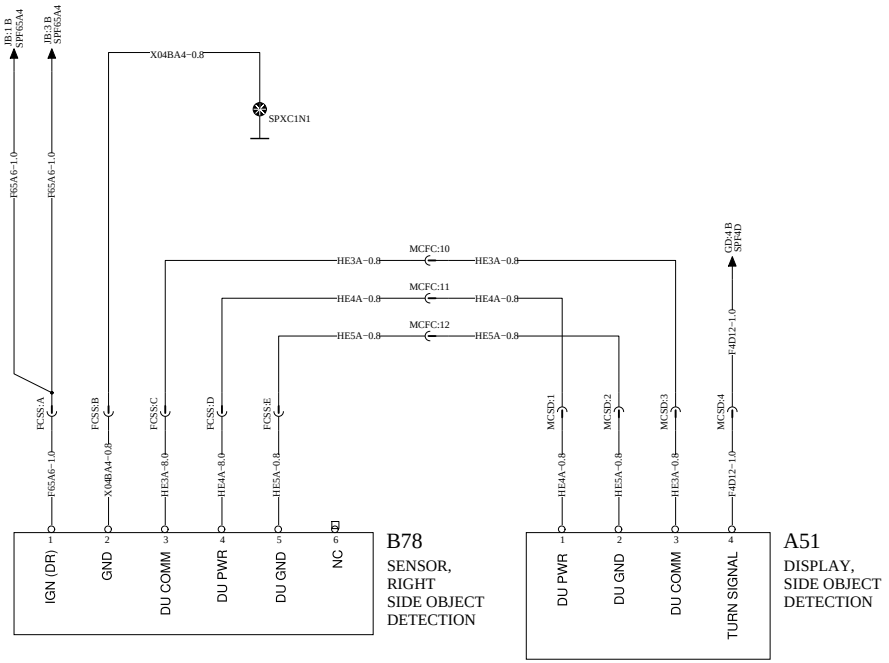

https://truckmanualshub.com/

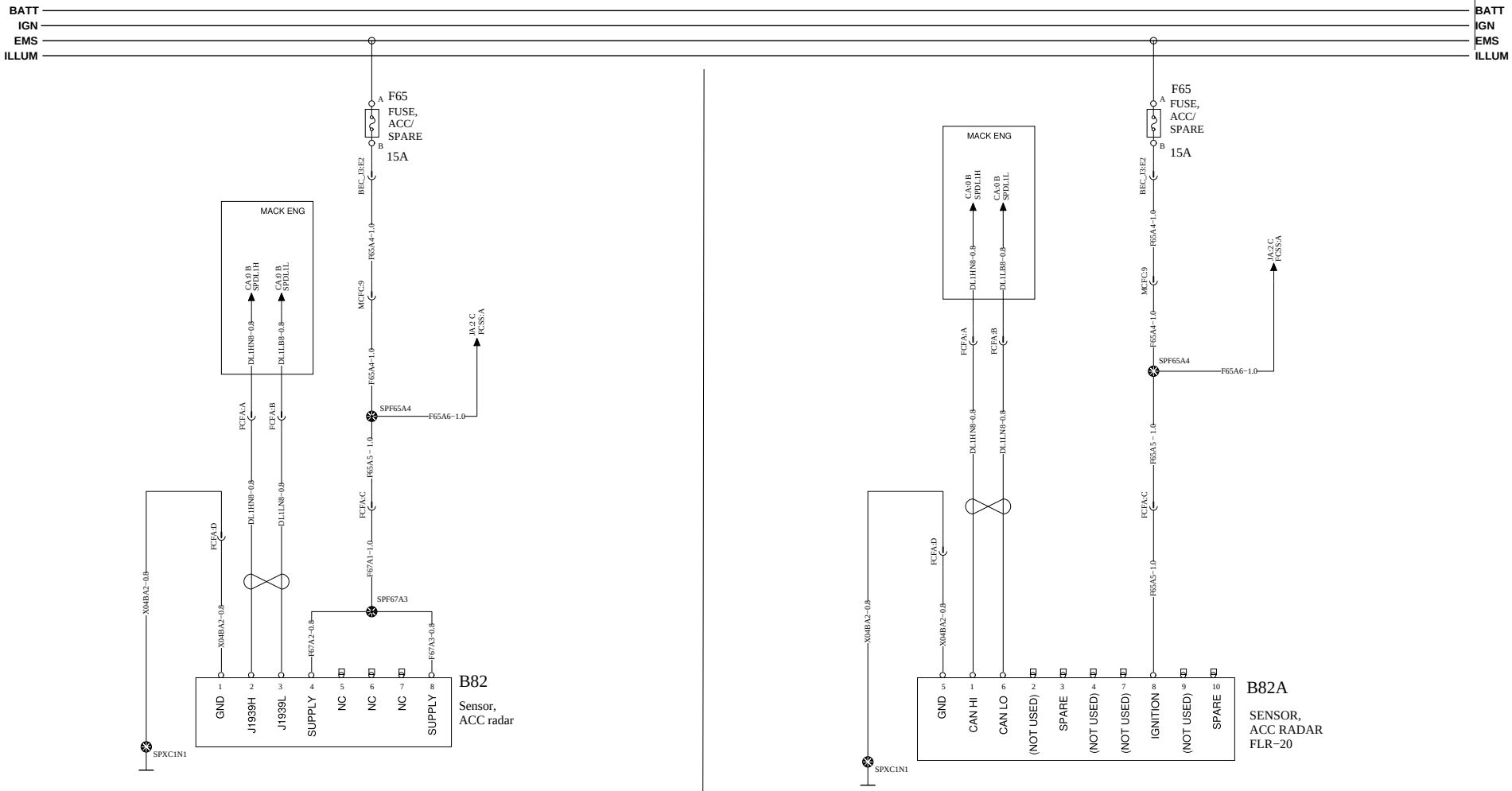

BENDIX FLR-10

BENDIX FLR-20

https://truckmanualshub.com/

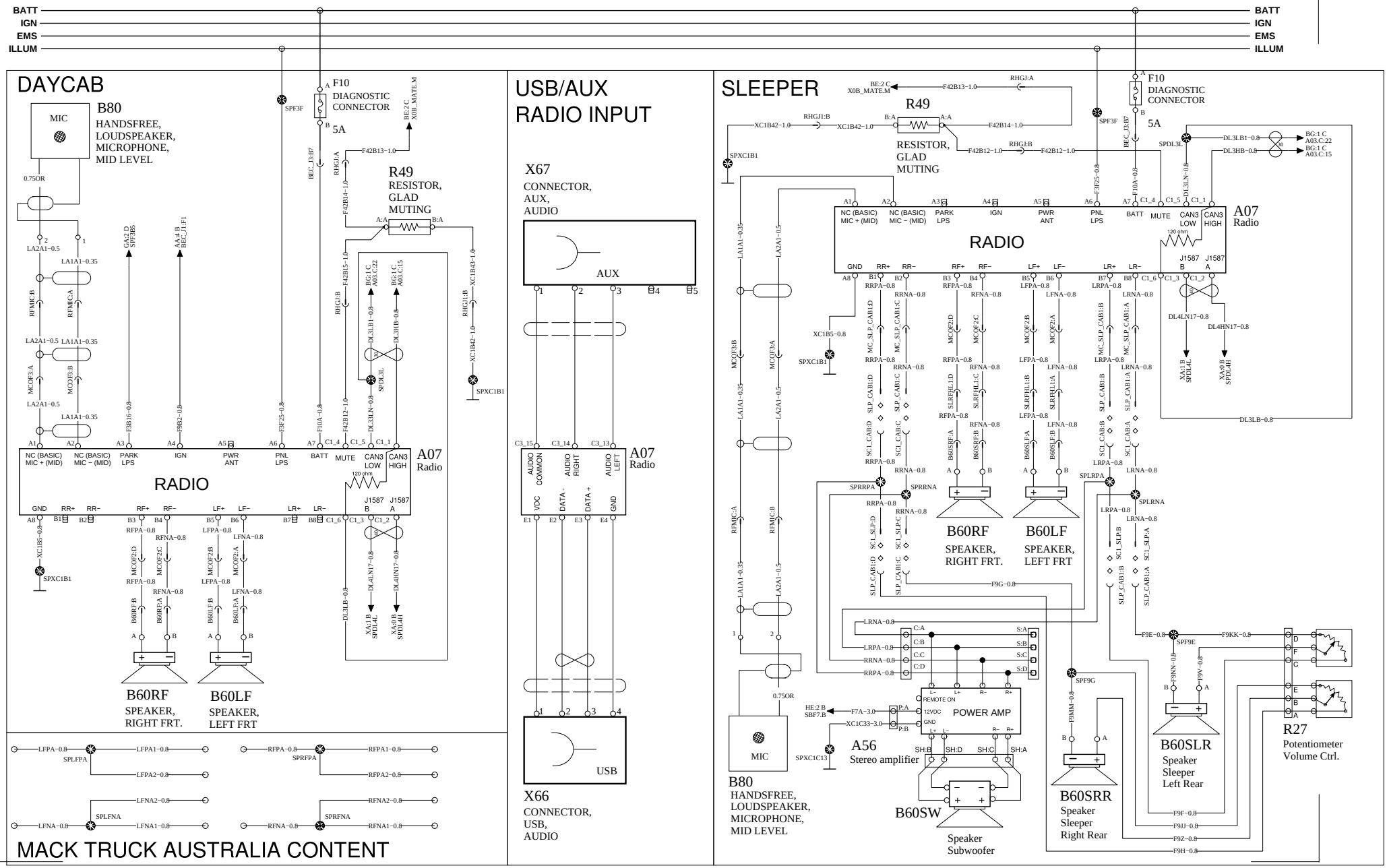

VOLVO	Group Trucks Technology	Document title WIRING DIAGRAM - PC28 - 12V MACK - 2013BP - ENG-CU12 Document type PRODUCT SCHEMATIC	Document No 22234428	Issue 02	Volume 01	Page 74 (83)

https://truckmanualshub.com/

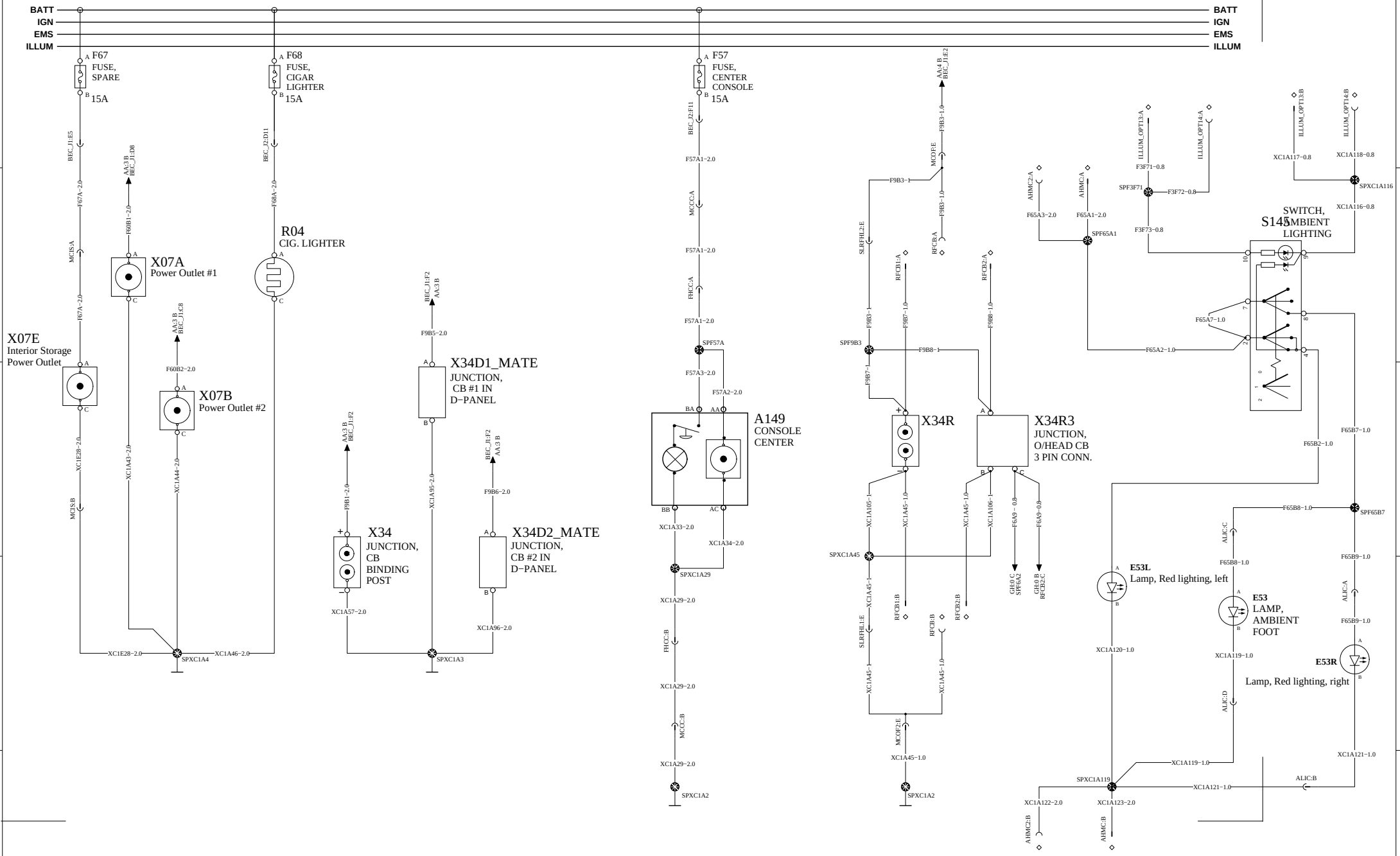

VOLVO Group Trucks Technology	Document title: WIRING DIAGRAM - PC28 - 12V MACK - 2013BP - ENG-CU12	Document No	Issue	Volume	Page
	Document type: PRODUCT SCHEMATIC	22234428	02	01	75 (83)

IGNITION & BATTERY SWITCHES & SPARE CONNECTORS

https://truckmanualshub.com/

WIRING DIAGRAM: NA

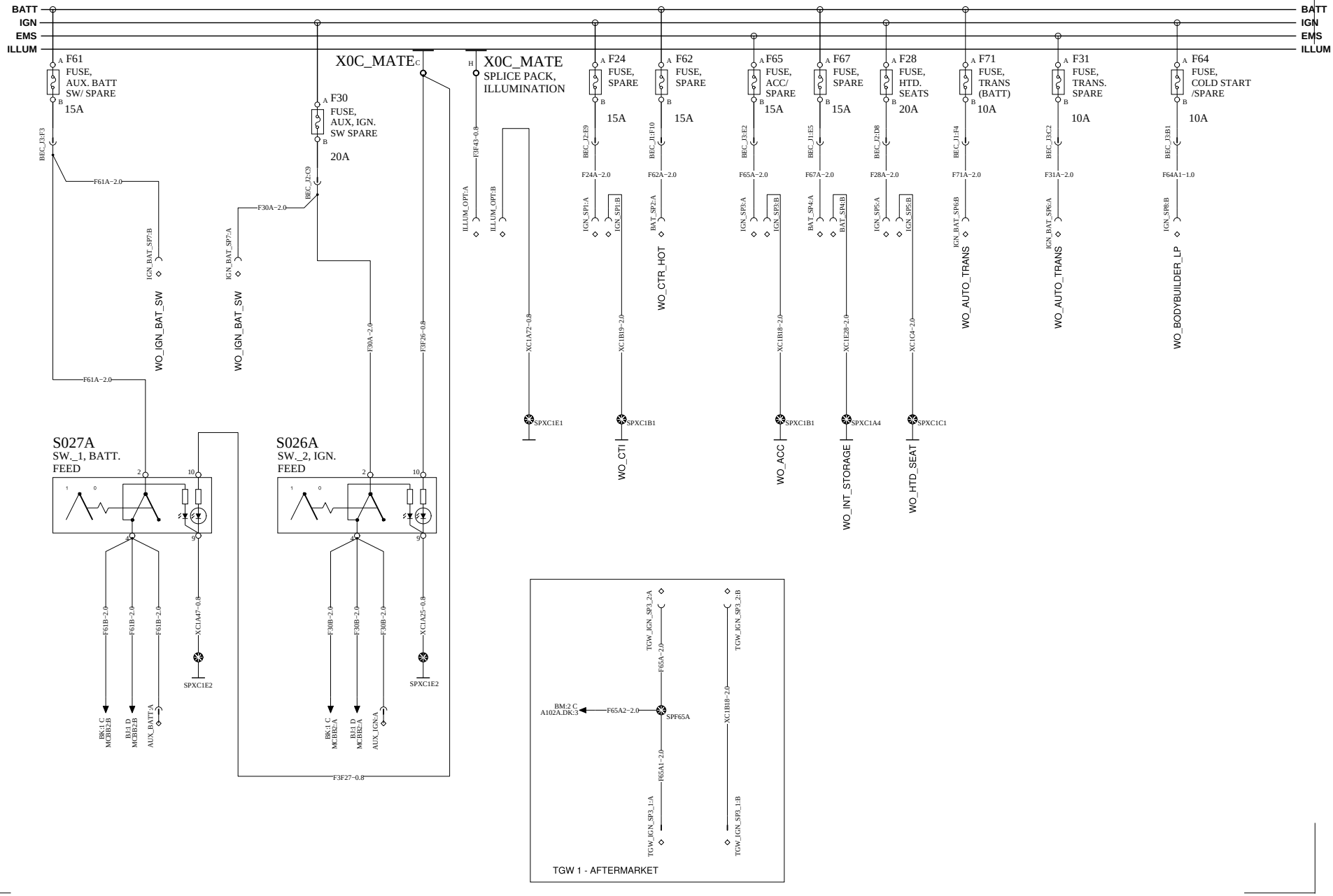

VOLVO Group Trucks Technology	Document title: WIRING DIAGRAM - PC28 - 12V MACK - 2013BP - ENG-CU12	Document No	Issue	Volume	Page
	Document type: PRODUCT SCHEMATIC	22234428	02	01	76 (83)

https://truckmanualshub.com/

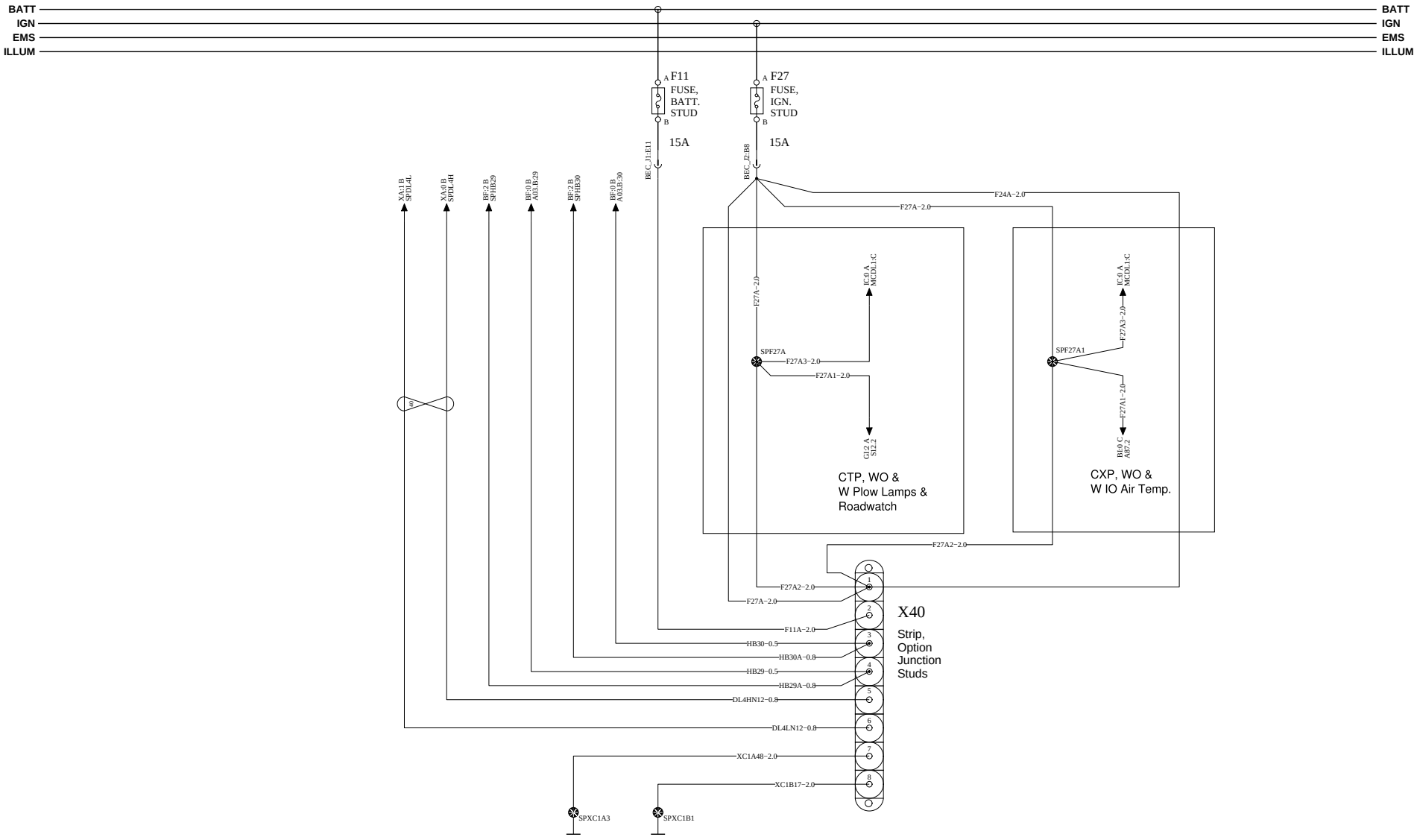

VOLVO	Group Trucks Technology	Document title WIRING DIAGRAM - PC28 - 12V MACK - 2013BP - ENG-CU12 Document type PRODUCT SCHEMATIC	Document No 22234428	Issue 02	Volume 01	Page 77 (83)

https://truckmanualshub.com/

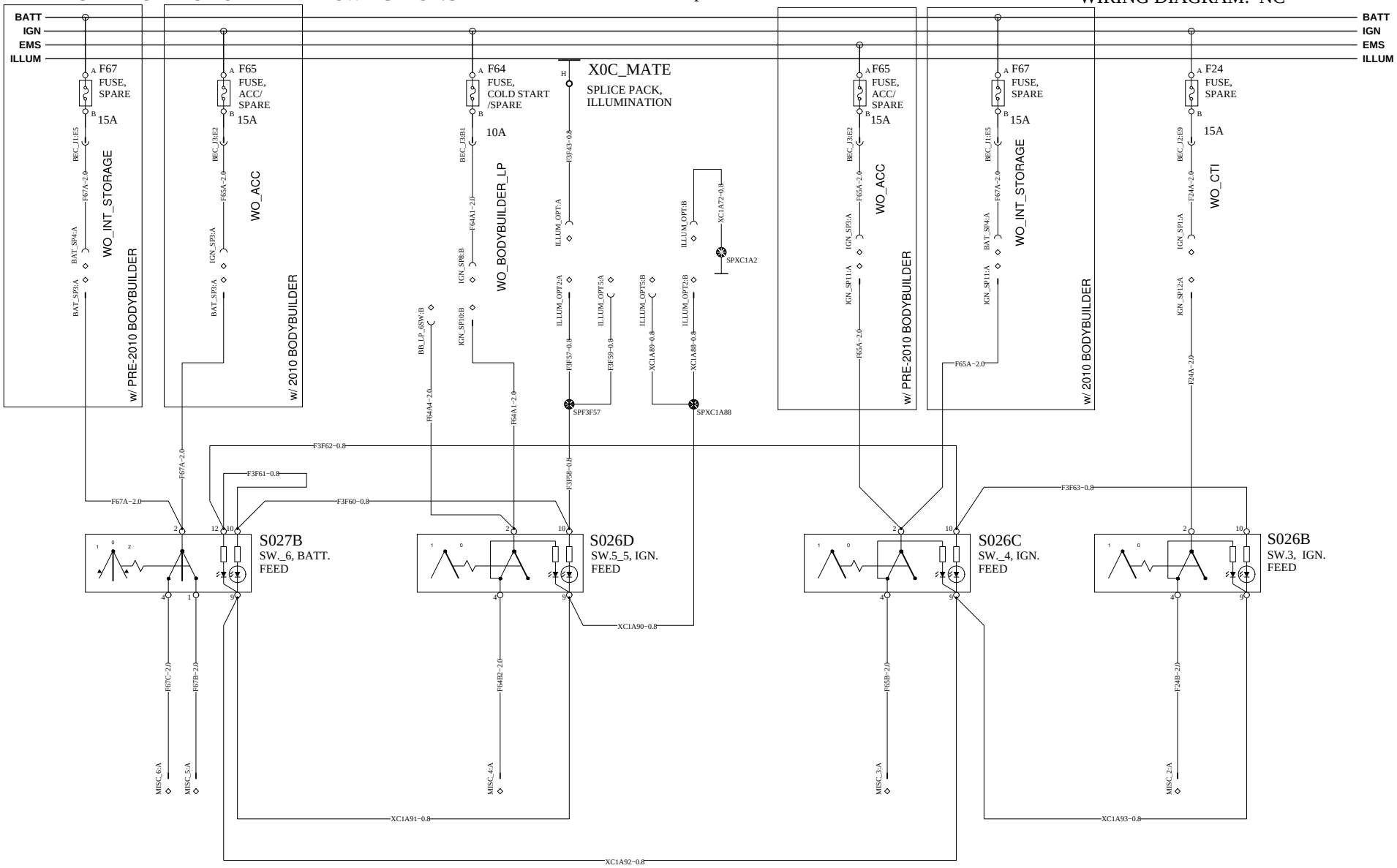

VOLVO Group Trucks Technology	Document title: WIRING DIAGRAM - PC28 - 12V MACK - 2013BP - ENG-CU12 Document type: PRODUCT SCHEMATIC	Document No: 22234428	Issue: 02	Volume: 01	Page: 78 (83)

https://truckmanualshub.com/

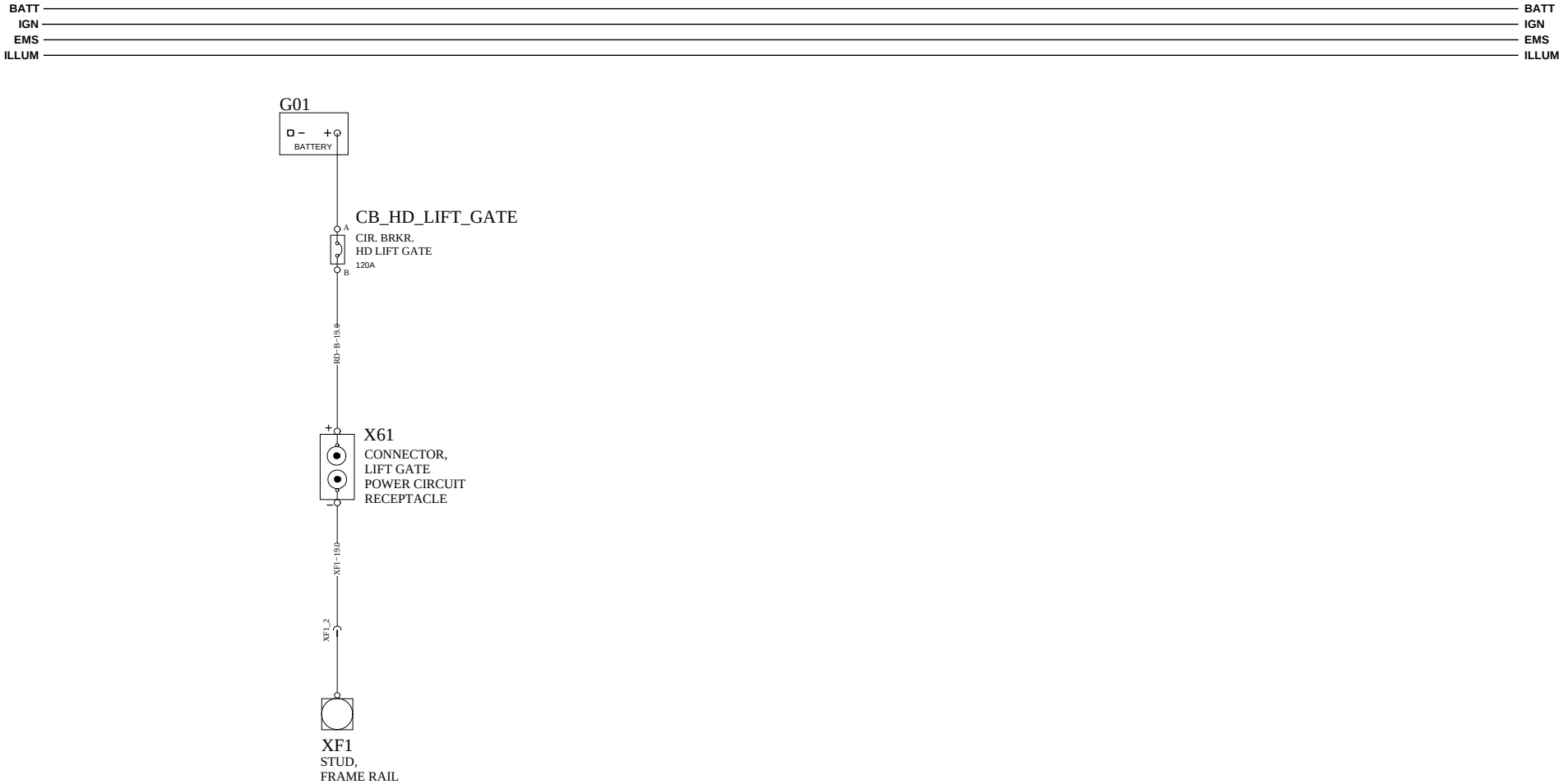

https://truckmanualshub.com/

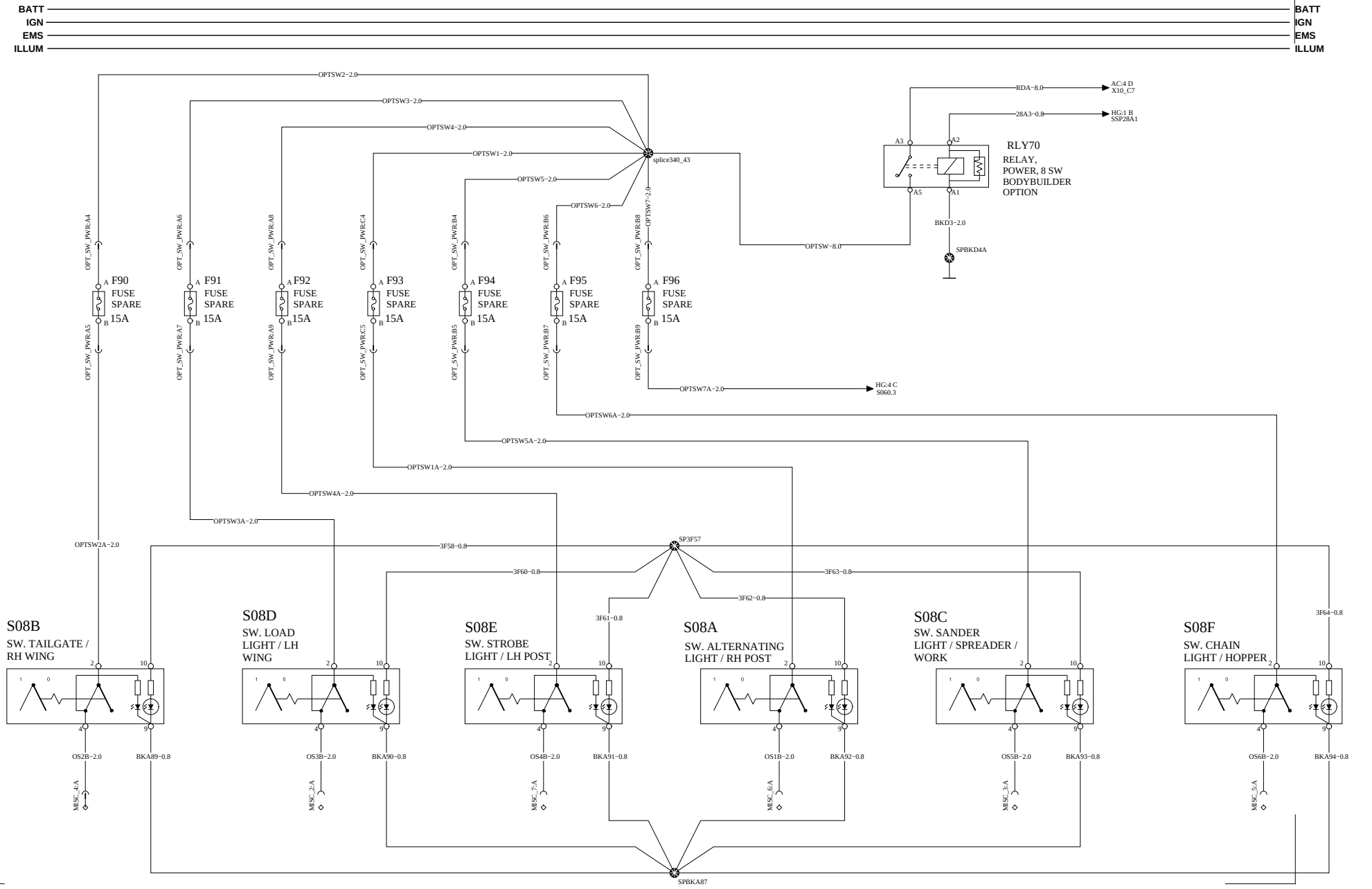

https://truckmanualshub.com/

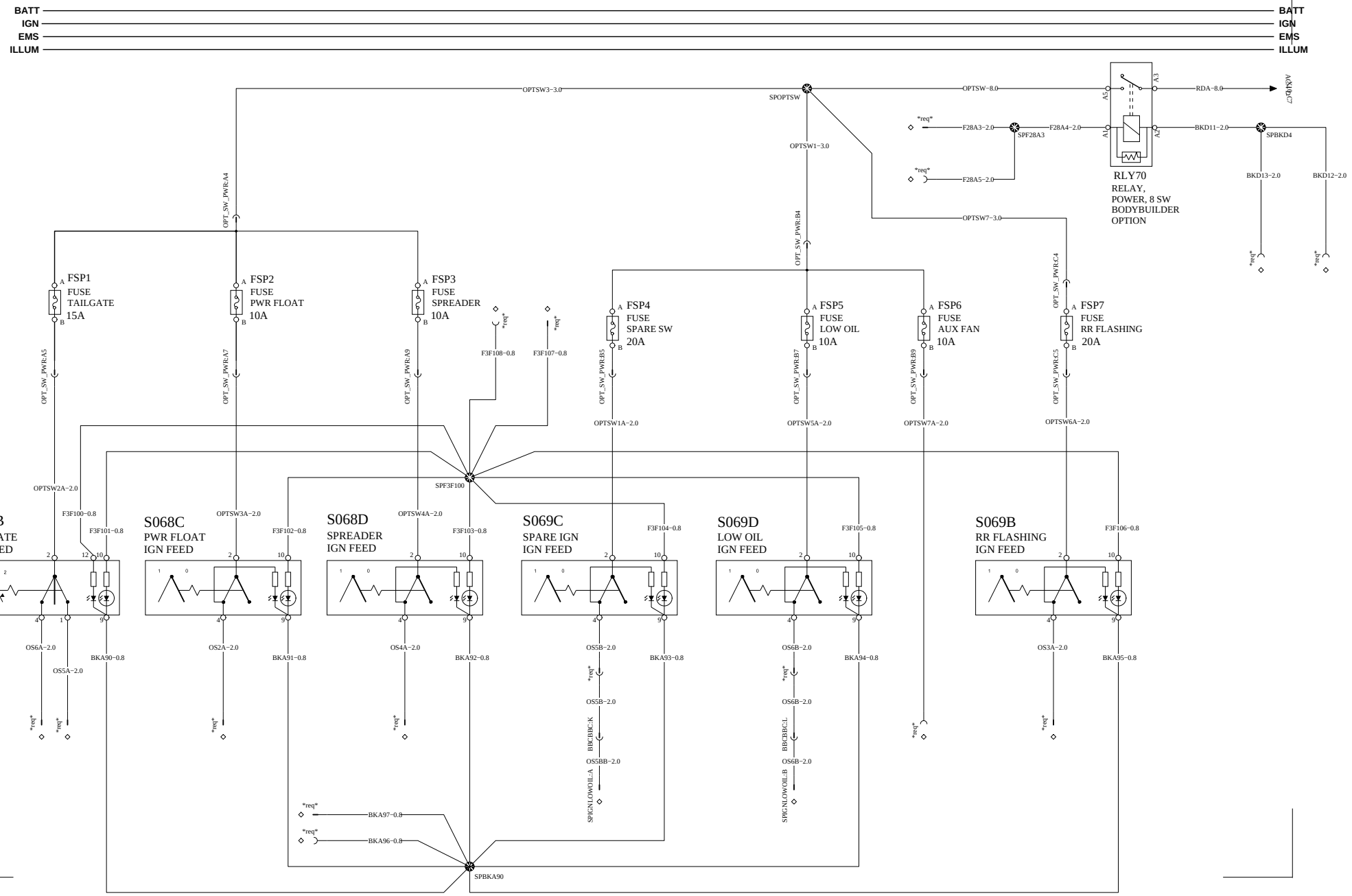

VOLVO	Group Trucks Technology	Document title WIRING DIAGRAM - PC28 - 12V MACK - 2013BP - ENG-CU12 Document type PRODUCT SCHEMATIC	Document No 22234428	Issue 02	Volume 01	Page 81 (83)

https://truckmanualshub.com/

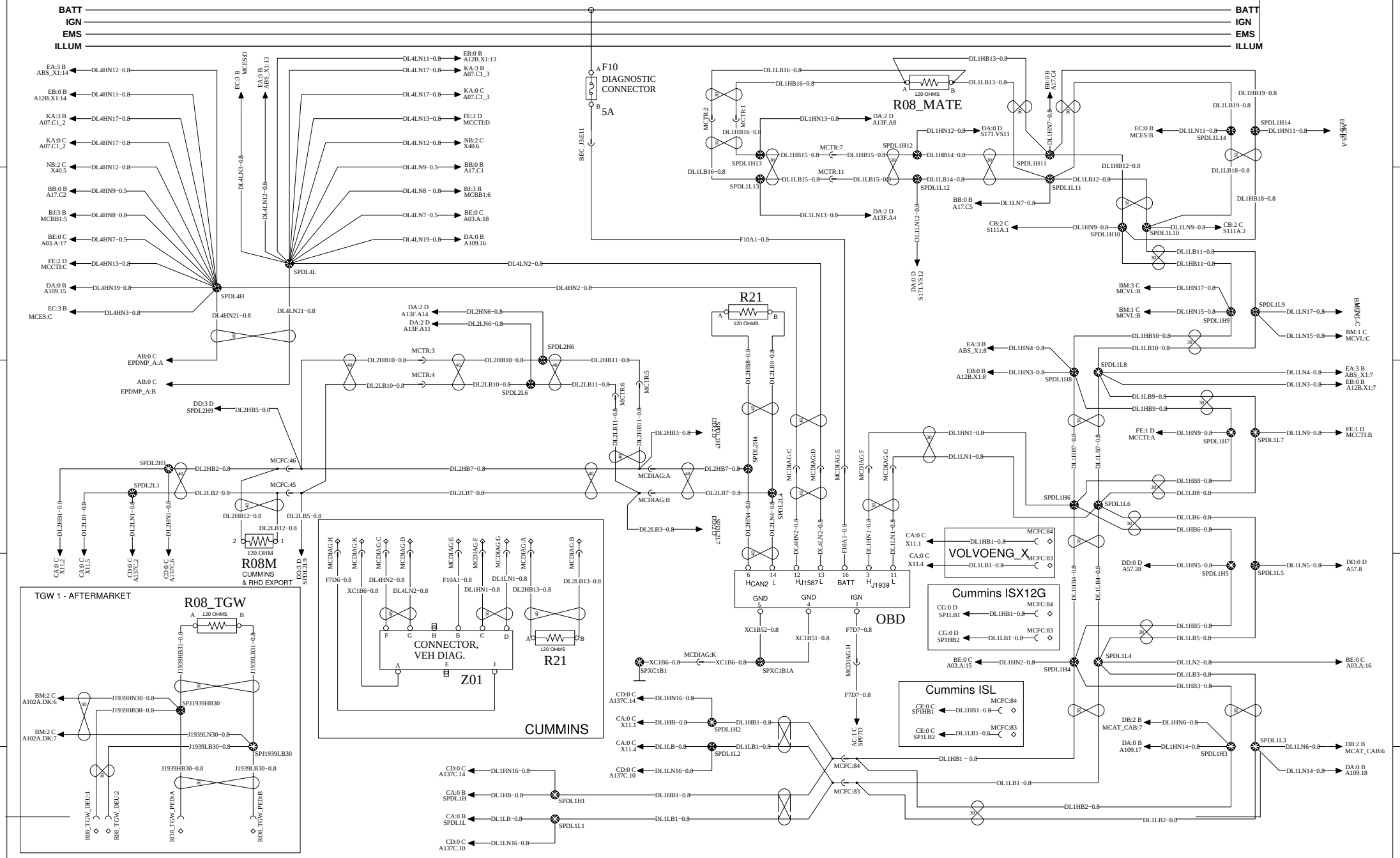

Document title	Document No	Issue	Volume	Page
WIRING DIAGRAM - PC28 - 12V MACK - 2013BP - ENG-CU12	22234428	02	01	82 (83)
Document type: PRODUCT SCHEMATIC				

VOLVO Group Trucks Technology

https://truckmanualshub.com/

J1939 CAN 1 DIAGRAM

WIRING DIAGRAM: XB

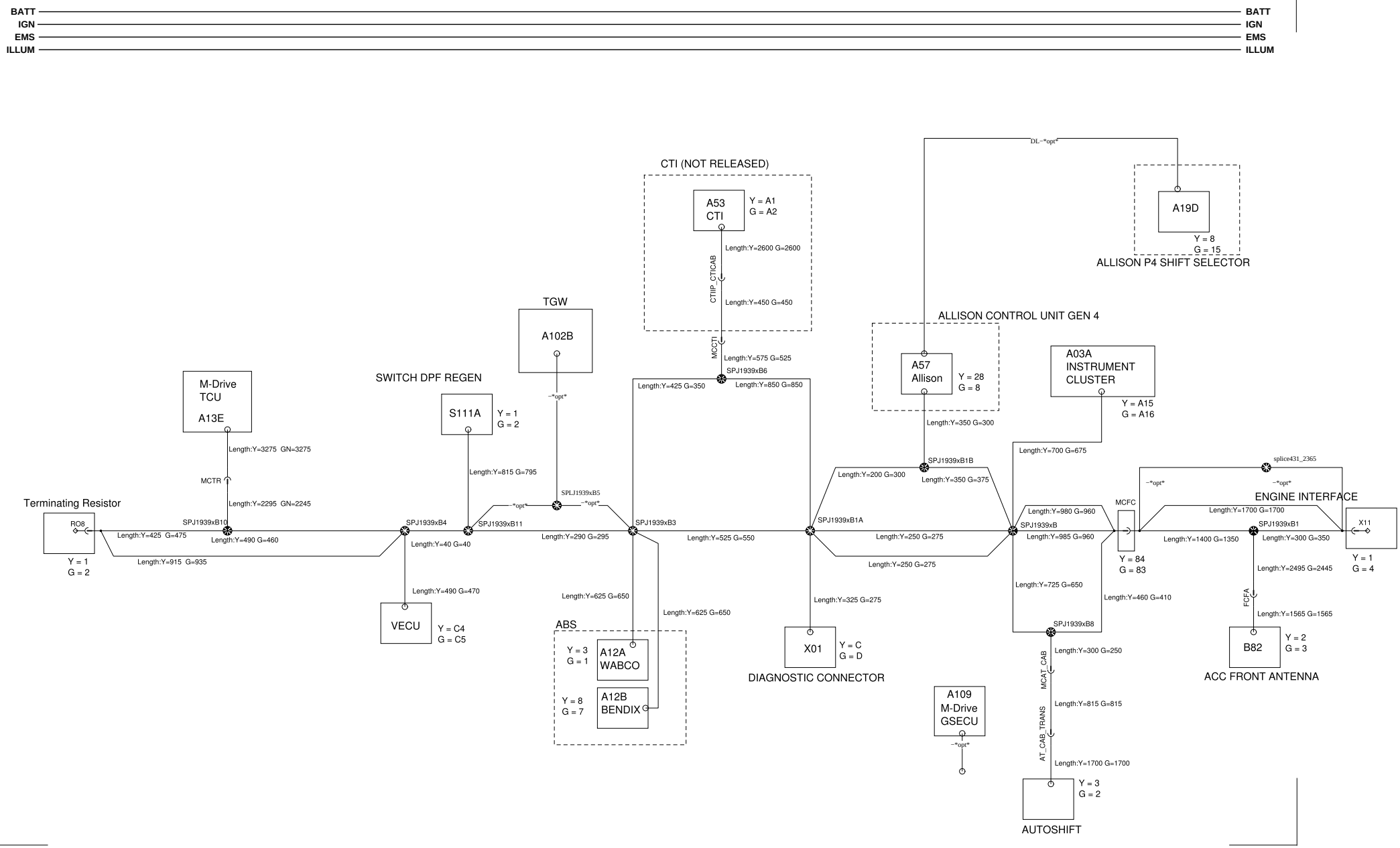

VOLVO Group Trucks Technology	Document title: WIRING DIAGRAM - PC28 - 12V MACK - 2013BP - ENG-CU12	Document No	Issue	Volume	Page
	Document type: PRODUCT SCHEMATIC	22234428	02	01	83 (83)