https://truckmanualshub.com/

CONTAINS NEW AND VERY IMPORTANT INFORMATION CONCERNING COOLANT CONDITIONING

Mack

TS49400

JAN FEB MAR APR MAY JUN JUL AUG SEP OCT NOV DEC

MAINTENANCE AND LUBRICATION

FOR MACK® DIESEL POWERED TRUCKS

https://truckmanualshub.com/

TS49400

© Mack Trucks, Inc. 1999
Printed in U.S.A.

https://truckmanualshub.com/

TS49400

MAINTENANCE AND LUBRICATION FOR MACK® DIESEL POWERED TRUCKS

Operation, maintenance, lubrication and emissions information applicable to MACK chassis powered by Liquefied Natural Gas (LNG) engines will be found in a separate manual designated as TS814. Availability of this manual to be announced.

The information supplied in this manual is not all-inclusive, and cannot take into account all unique situations.

The information, specifications and illustrations in this publication are based on information that was current at the time of publication, and are subject to change without prior notification.

No part of this publication may be reproduced, photocopied or recorded, stored in a retrieval system, or be transmitted in any form, or by any means, either mechanical, electronic, or otherwise without the prior written consent of Mack Trucks, Inc.

© MACK TRUCKS, INC. 1999

https://truckmanualshub.com/

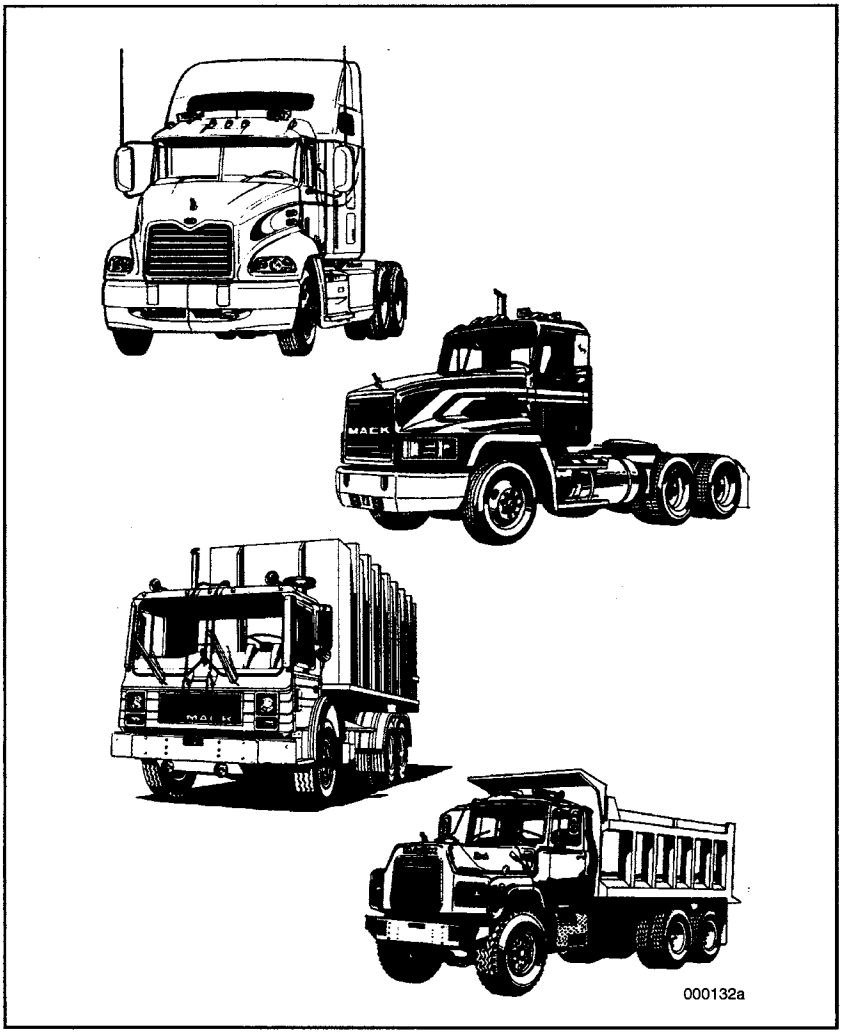

Figure 1 — Mack Truck Applications

https://truckmanualshub.com/

INTRODUCTION

Preventive maintenance is vital to the life of your new MACK truck. This manual explains the proper preventive maintenance and lubrication procedures which should be used on all MACK Class 8 highway chassis.

The MACK Preventive Maintenance and Lubrication program outlined in this manual is designed to ensure a long and productive life from your truck. The program is divided into four maintenance schedules, each addressing items which require periodic inspections to ensure efficient, reliable and trouble-free operation. To allow flexibility in developing a maintenance routine suitable to your operating requirements, maintenance intervals in this manual are arranged in miles/kilometers, hours or days of operation. Maintenance instructions, specifications and capacities are outlined for quick and easy reference. The service manager at your MACK distributor will be happy to assist in customizing a maintenance program tailored to your operating requirements.

Following the MACK Preventive Maintenance Program is highly recommended to all operators of MACK vehicles because it is the key to lower operating costs both in time and money. The bottom line to a well-run maintenance program is less downtime and increased profitability.

https://truckmanualshub.com/

SAFETY INFORMATION

MACK cannot anticipate every possible occurrence which may involve a potential hazard. An accident can be avoided by recognizing potentially hazardous situations before an accident occurs. Correctly performed service procedures are critical to technician safety and the consequent safe, reliable operation of the vehicle.

Do not perform any service procedures or lubrications until this manual has been read and understood.

Some service procedures may require the use of special tools designed for a specific purpose. These tools must be used in the manner described in the instructions. Anyone using a procedure or tool not recommended in this manual must realize he is jeopardizing his safety and the safe operation of the vehicle. Individuals deviating from the instructions set forth in this manual assume all risks of personal injury or damage to equipment.

MAKE SAFETY FIRST . . .

. . . AND MAKE IT LAST

https://truckmanualshub.com/

ADVISORY LABELS

Cautionary *signal words* (Danger-Warning-Caution) may appear in various locations throughout this manual. Information accented by one of these signal words must be observed to minimize the risk of personal injury to service personnel, or the possibility of improper service methods which may damage the vehicle or cause it to be unsafe. Additional Notes and Service Hints are used to emphasize areas of procedural importance and provide suggestions for ease of repair. The following definitions indicate the use of these advisory labels as they appear throughout the manual:

⚠ DANGER

Activities associated with* Danger *indicate that death or serious personal injury may result from failing to heed the advisory. Serious personal injury may be equated to career-ending injury.

⚠ WARNING

Activities associated with *Warning* indicate that personal injury may result from failing to heed the advisory. In this case, personal injury is not equated to career-ending injury, but results in possible change in quality of life.

⚠ CAUTION

Activities associated with ***Caution*** *indicate that product damage may result from failing to heed the advisory. Caution is not used for personal injury.*

NOTE

A procedure, practice, or condition that is essential to emphasize.

SERVICE HINT

A helpful suggestion that will make it quicker and/or easier to perform a procedure, while possibly reducing service cost.

https://truckmanualshub.com/

ASE CERTIFIED ®

WE SUPPORT VOLUNTARY TECHNICIAN CERTIFICATION THROUGH

National Institute for
AUTOMOTIVE SERVICE EXCELLENCE

000133a

Figure 2 — ASE Certification

https://truckmanualshub.com/

MANUAL CONTENTS

MAINTENANCE AND LUBRICATION i
INTRODUCTION iii
SAFETY INFORMATION iv
ADVISORY LABELS v
VEHICLE BREAK-IN 4
DAILY INSPECTION 6
PREVENTIVE MAINTENANCE PROGRAM 10
NOISE EMISSION CONTROL 26
ROAD TEST 29
CHASSIS INSPECTION 35
SPECIFIC MAINTENANCE 65
FASTENER SIZES, TYPES AND GRADES 67
FAN BELTS 75
COOLING SYSTEM 86
COLD WEATHER OPERATION 93
AIR CONDITIONER MAINTENANCE 100
AIR CLEANER MAINTENANCE 102
TURBOCHARGERS 106
CMCAC 108
FUEL SYSTEM 110
CRANKCASE BREATHER FILTER 116
ELECTRICAL SYSTEM 117
LUBRICANT CHANGE INTERVALS 124
LUBRICANT CHANGE PROCEDURES 133
CARRIERS 153
WHEEL BEARINGS 155
KINGPIN LUBRICATION 157
LUBRICATION CHART 158
SPRING CLIP (U-BOLT) TORQUE 165
MACK AIR SUSPENSION 169
LITEFLEX® FIBERGLASS LEAF SPRINGS 177
AXLE ALIGNMENT 182
WHEEL TORQUE PROCEDURES 187
TIRE INFORMATION 196

https://truckmanualshub.com/

TIRE SERVICING 200
AIR BRAKE SYSTEM 202
BRAKE ADJUSTMENT 205
CLUTCH ADJUSTMENT 210
CYLINDER HEAD RETORQUE PROCEDURES . .221
VALVE ADJUSTMENT 222
ENGINE BRAKE MAINTENANCE 231
ENGINE DIAGNOSTIC CHART 234
BRAKE DIAGNOSTIC CHART 255
SPECIFICATIONS AND CAPACITIES 263
LUBRICANT SPECIFICATIONS 265
DIESEL FUEL 274
ANITFREEZE SPECIFICATIONS 281
COOLANT CAPACITIES 283
LUBRICANTS AND CAPACITIES 285
1998 MACK ENGINE LINE-UP 299
CONVERSION CHART 303
INDEX 304
MAINTENANCE RECORD 311
SERVICE LITERATURE 312

https://truckmanualshub.com/

TABLE OF CONTENTS

VEHICLE BREAK-IN 4
DAILY INSPECTION 6
PREVENTIVE MAINTENANCE PROGRAM 10
NOISE EMISSION CONTROL 26
ROAD TEST 29
CHASSIS INSPECTION 35

https://truckmanualshub.com/

VEHICLE BREAK-IN

To get the most from your new MACK truck, and to ensure many years of reliable, trouble-free operation, the following "break-in" procedures are recommended.

During first 3000 Miles (5000 km)

- ✓ After the first 125 miles (200 km), retorque the wheel nuts using an accurately calibrated torque wrench. Recheck this torque again after 500 miles (800 km).
- ✓ Check engine oil and coolant level frequently.
- ✓ Check brake and clutch adjustment per recommended schedules and adjust as needed.
- ✓ Observe instruments often and shut down as soon as possible at first sign of any abnormal readings.
- ✓ Check for leaks, loose fasteners, unusual noises, etc., and correct as necessary.
- ✓ Check spring clip torque (U-bolts). (Reyco suspensions: also check equalizer nut torque.)
- ✓ Check the U-bolt torque on MACK air suspensions at the end of the first 1000 miles (1600 km) of service.

At the end of first 3000 miles (5000 km) or before 4000 miles (6500 km) or 3 to 4 months (whichever comes first)

- ✓ Retorque spring clips (U-bolts). (Reyco suspensions: Retorque spring clips and equalizer nuts.)

At the first A inspection interval

- ✓ Check front and rear axle alignment and adjust if out of specification.
- ✓ Check steering knuckle to axle beam clearance.

https://truckmanualshub.com/

VEHICLE BREAK-IN

Although your new truck has been quality built, inspected, lubricated and final adjustments performed at the MACK Trucks Assembly Plant, an occasional air, oil or coolant leak may develop. Quick action to correct these minor items will prevent a major repair later. Take your truck to the nearest MACK service center as soon as any abnormal condition becomes evident.

NOTE

Refer to tables on pages 15, 18 and 21 for the recommended lubrication change intervals applicable to the following items:

- Gear oils — transmission, rear axle carrier(s), front drive axle carrier, transfer case, flywheel PTO.
- Engine oil, oil filters, fuel filters.

It is important that lubricants, coolants, diesel fuel, etc., meeting the specifications as given in "LUBRICANTS AND CAPACITIES" on page 285 be used in your MACK chassis.

When checking oil levels, the vehicle must be parked on level ground, and the units at normal operating temperature. Components must be filled to the correct level. DO NOT OVERFILL.

The oil and filter change intervals in this manual pertain to components manufactured by Mack Trucks, Inc. For information concerning oil and oil filter change intervals for vendor components, refer to the specific vendor component service literature.

https://truckmanualshub.com/

DAILY INSPECTION

Driver's Daily Inspection

Before beginning the day's operation, make a "walk around" inspection of your truck. The following checklist provides an aid in making a thorough inspection and ensures no item will be overlooked. Make sure any problem is corrected before using the vehicle.

⚠ DANGER

To avoid serious injury, DO NOT step on fuel tanks, battery boxes, frame, etc. Step only on areas where adequate slip resistance surfaces and handholds are provided.

GENERAL APPEARANCE

- ☑ Check the overall condition of the vehicle. Look for signs of leaking fuel, oil, or coolant.
- ☑ Check to see if the chassis is leaning (flat tires, broken springs, etc.).
- ☑ Review the previous chassis inspection sheets. Make sure any reported defects were corrected.

RAISE THE HOOD/TILT THE CAB

- ☑ Check the windshield washer reservoir. Add washer solvent if necessary.

RADIATOR

- ☑ Check the coolant level and add a 40% to 60% mix of antifreeze/water if necessary.
- ☑ Check for coolant leaks.
- ☑ Check the condition of radiator and heater hoses.
- ☑ Clean debris from grille area.

https://truckmanualshub.com/

ENGINE

- ☑ Check crankcase oil level and add recommended engine oil if necessary.
- ☑ Check condition of all engine drive belts.
- ☑ Check for oil, fuel, and air leaks.
- ☑ Check engine and chassis wiring harnesses for frayed or broken wires.

STEERING SYSTEM

- ☑ Check power steering fluid level and add recommended fluid if necessary.
- ☑ Check security of steering gear, pitman arm, and drag link.
- ☑ Check steering shaft U-joints for tightness, cracks, and damage.

CLOSE HOOD/LOWER CAB; SECURE LATCHES

CAB EXTERIOR

- ☑ Check condition of wheels and tires. Inspect each tire for cuts, leaks, punctures, bulges, abnormal wear, and tire match.
- ☑ Check rims for damage and wheel nut tightness. Rust streaks around wheel nut ball seats are an indication of looseness.
- ☑ Check tire pressure while tires are cold.
- ☑ Check oil level of front wheel bearings. Add oil if necessary.
- ☑ Check brake system components.
- ☑ Check electrolyte level in battery and add distilled water if necessary. If the battery is a maintenance-free type, check state of charge indicator. Check the battery cables for condition, chafing, and proper routing.
- ☑ Check condition of fuel tanks and fuel hoses, connectors and pipes.

https://truckmanualshub.com/

- ☑ *Inspect air intake for secure mounting, leaks, or damage. Replace air cleaner element if indicator locks in the red zone or dash-mounted gauge indicates inlet restriction of 20 inches (510 mm) of water for applicable engine (see "AIR CLEANER MAINTENANCE" on page 102).* **Gaseous Emission Control Maintenance.**
- ☑ Clean headlamps, exterior windows, and mirrors. Check windshield and mirrors for cracks. Check operation of all lamps and inspect lenses. Repair any non-operating lamps and replace any broken lenses.

CLIMB INTO CAB

CAB INTERIOR

- ☑ Clean interior windows and dash gauges.
- ☑ Check seatbelts for security and damage.
- ☑ Secure any loose items found in the cab.
- ☑ Check emergency equipment and warning devices.
- ☑ Adjust driver's seat and rearview mirrors.
- ☑ Check clutch pedal free-play.

START THE ENGINE

- ☑ Listen for any unusual noises.
- ☑ Make sure the alarms shut off when oil pressure, air pressure, etc., reach normal operating range.
- ☑ Check operation of horns (both air and electric), windshield wipers and washers, heater and defroster, back-up alarm, and, if so equipped, heated mirrors.
- ☑ Check operation of service brakes.
- ☑ Check application of parking brakes.
- ☑ Observe instruments and verify readings.
  - — **Air pressure gauge** — Low air buzzer should shut off at 70 ± 5 psi (483 ± 34 kPa). Operating range is 105 psi (724 kPa) minimum to 135 psi (931 kPa) maximum.

https://truckmanualshub.com/

— **Oil pressure gauge — E-Tech™:** 10 to 35 psi (69 to 241 kPa) at idle, 30 to 84 psi (207 to 579 kPa) at governed speed. (NOTE: pressures are for MACK E-Tech™ diesel engine only. Consult specific engine operating manual if equipped with an engine other than MACK E-Tech™.)

— **Voltmeter** — With switch ON and engine OFF, indicates condition of battery. With engine running, indicates condition of charging system.

— **Coolant temperature gauge** — Normal operating temperature for a MACK engine is between 170°F and 225°F (77°C and 107°C).

END OF THE DAY

☑ Apply parking brakes, block tires, and completely drain air system.

☑ Drain water from fuel separator.

☑ Check for fuel, oil and coolant leaks.

https://truckmanualshub.com/

PREVENTIVE MAINTENANCE PROGRAM

Mack Preventive Maintenance and Lubrication Program

Your MACK chassis was designed and built with performance, durability and productivity in mind. The MACK Preventive Maintenance and Lubrication programs were developed to maintain your chassis and keep it running the way it was designed to run. Preventive maintenance, not breakdown maintenance, is the key to many years of trouble-free operation.

The MACK Preventive Maintenance and Lubrication program consists of mechanical inspections, lubrication and oil, filter and coolant conditioner change intervals designed to maintain vehicle efficiency and prevent mechanical failure. Since chassis vocation is one of the most important factors to consider when developing a maintenance routine, maintenance schedules are divided into three separate categories as outlined on the following pages.

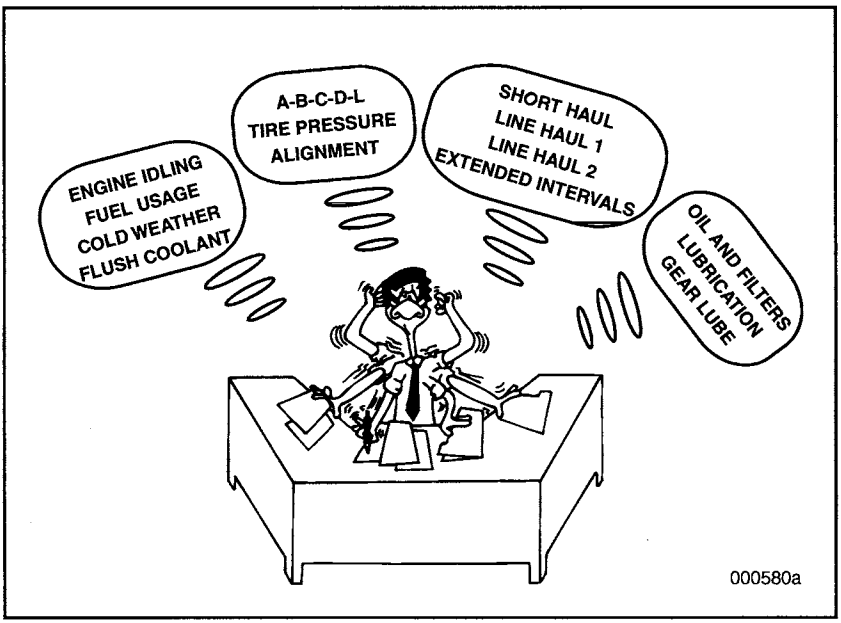

Figure 3 — Developing a Maintenance Program

https://truckmanualshub.com/

Developing your maintenance program is not all that complicated, simply choose the maintenance category that best fits your type of operation.

- **Line Haul 1 — Extended Service Interval** — Point-to-Point, Sustained High-Mileage Operations exceeding 100,000 miles (161 000 km) per year, and an average vehicle speed of 50 mph (80 kmph) or above. To take advantage of the EXTENDED SERVICE INTERVAL, vehicles must be equipped with E-Tech™ or E7 V-MAC® II (1997 or later chassis model year) engines, and average fuel usage must be 6.0 mpg or better. Engine oil specification EO-M PLUS is mandatory, and the engine must be equipped with the Centri-Max® or Centri-Max® PLUS oil filtration system having the OEM centrifugal rotor.

NOTE

Vehicles used in high mileage/high hour pump-off type operations, or other types of high mileage operations where the engine idles for long periods of time, do NOT qualify for **Line Haul 1 — Extended Service Interval.** Vehicles used in these types of operations must use the oil change intervals outlined under **Line Haul 2 — Regular Service Interval** or **Short Haul — Severe Service Interval.** Oil change intervals must be based on hours of engine operation rather than accumulated chassis mileage, and engine operating hours between oil change intervals must not exceed 700 hours for Line Haul 2 operations or 300 hours for Short Haul operations.

https://truckmanualshub.com/

- **Line Haul 2 — Regular Service Interval** — High Mileage Operations exceeding 100,000 miles (161 000 km) per year that do not meet ALL of the requirements for Line Haul 1 — Extended Service Interval. Many operations in this category can base service intervals on accumulated chassis mileage. However, vehicles used for pump-off or similar types of service where the engine idles for long periods of time, require oil change intervals based on hours of engine operation rather than accumulated chassis mileage, even if vehicle usage exceeds 100,000 miles (161 000 km) per year. Engine operating hours must not exceed 700 hours between oil changes. EO-M PLUS specification diesel engine oil is recommended.
- **Short Haul — Severe Service Interval** — Low Mileage/High Hour types of operations such as stop-and-go driving, on/off highway, pick-up and delivery, pump-off operations, etc. EO-M PLUS specification diesel engine oil is mandatory.

Refer to tables on pages 15, 18 and 21 and choose the schedule which best fits your type of operation. For ease of planning, schedules are based on mileage/kilometers or days/hours of operation. Other factors which must be considered are environment, climate, engine idling, usage of engine-driven auxiliary attachments, etc. The service manager at your MACK dealer will be happy to assist in tailoring a maintenance program for your particular operating requirements.

https://truckmanualshub.com/

PREVENTIVE MAINTENANCE PROGRAM

To gain maximum benefit from the MACK Preventive Maintenance Program, Mack Trucks, Inc. recommends the following:

1. **Oil and fuel filters must meet MACK specifications and should be changed within specified intervals.**
2. **MACK specification EO-M PLUS diesel engine oil is mandatory for Line Haul 1 — Extended Service Interval and Short Haul — Severe Service Interval, and is recommended for Line Haul 2 — Regular Service Interval. EO-M and EO-L PLUS specification diesel engine oils are acceptable alternatives for those applications that do not require EO-M PLUS engine oil.**
3. **MACK specification Grade 2D diesel fuel must be used.**
4. **MACK factory specifications must be maintained.**

NOTE

Certain chassis vocations may require more frequent service intervals. When developing a maintenance program, review chassis operating conditions and adjust the service intervals as required. At each maintenance and lubrication interval, look at the condition of chassis lubrication points, condition of components, etc., and adjust your service intervals accordingly. Using a lubricant analysis program performed by a reputable laboratory is the most effective method of determining lubricant change intervals. Alter the maintenance program to meet your needs, but never exceed MACK recommended intervals.

https://truckmanualshub.com/

Line Haul 1 Operating Conditions (Extended Service Interval)

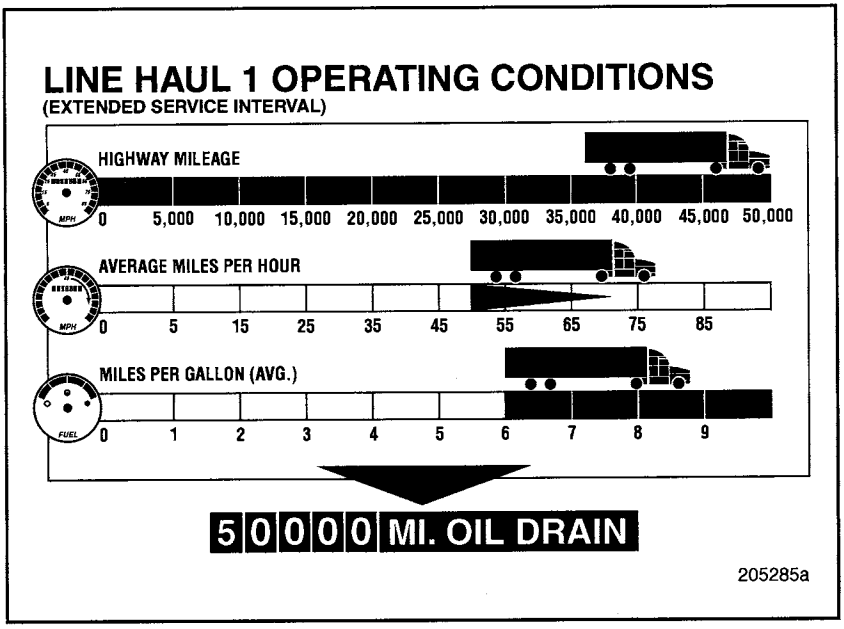

Figure 4 — Line Haul 1 Operating Conditions

https://truckmanualshub.com/

Preventive Maintenance Schedule — Line Haul 1

Includes Changing Engine Oil, Oil and Fuel Filters, and Adding Supplemental Coolant Additive (SCA) Packets.

LINE HAUL 1 — EXTENDED SERVICE INTERVAL

LINE HAUL 1 – Extended Service Interval

MAINTENANCE AND LUBRICATION

Mileage (in Thousands)	25	50	75	100	125	150	175	200
Kilometers (in Thousands)	40	80	121	161	201	241	281	322
Maintenance Schedule (Note 2)†	A	B	A	C	A	B	A	D
Chassis Lubrication (Note 1)†	L	L	L	L	L	L	L	L
Gear Oil Change (Note 3)†	2 years/250,000 miles/402 300 km							

CHANGE ENGINE OIL, OIL AND FUEL FILTERS. ADD SCA PACKETS.

Mileage (in Thousands)	25	50	75	100	125	150	175	200
Kilometers (in Thousands)	40	80	121	161	201	241	281	322
Oil & Filter Change								
Add SCA Packets*		•		•		•		•

† Refer to Notes 1 through 3 in "NOTES TABLE" on page 23.

* Refer to pages 87 through 90 for information concerning coolant conditioning, test strips and supplemental coolant additive packets.

https://truckmanualshub.com/

NOTE

Certain chassis vocations may require more frequent service intervals. When developing a maintenance program, review chassis operating conditions and adjust the service intervals as required. At each maintenance and lubrication interval, look at the condition of chassis lubrication points, condition of components, etc., and adjust your service intervals accordingly. Using a lubricant analysis program performed by a reputable laboratory is the most effective method of determining lubricant change intervals. Alter the maintenance program to meet your needs, but never exceed MACK recommended intervals.

NOTE

Mack Trucks, Inc., has changed the method of conditioning the cooling system. The spin-on coolant conditioner canister containing the supplemental coolant additive (SCA) package is no longer used. The cooling system is now filled with a pre-charged coolant at the factory, and thereafter, coolant is maintained by adding packets containing supplemental coolant additives in powder form directly to the cooling system after first testing the coolant with a test strip. These SCA packets, which are included with the MACK Filter Service Kit, are added to the cooling system at each oil change interval as necessary, after first testing the coolant with a test strip. Refer to the Cooling System section of this manual for additional information.

https://truckmanualshub.com/

Line Haul 2 Operating Conditions (Regular Service Interval)

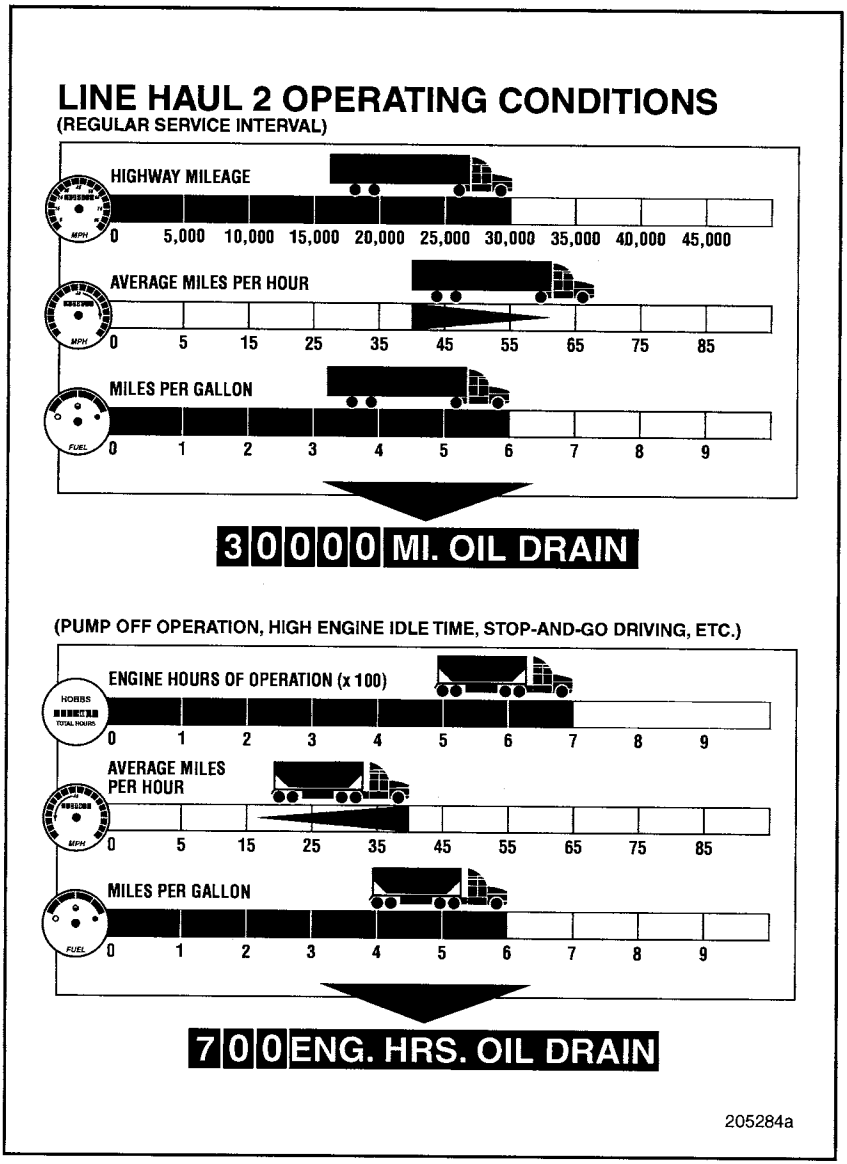

Figure 5 — Line Haul 2 Operating Conditions

https://truckmanualshub.com/

Preventive Maintenance Schedule — Line Haul 2

Includes Changing Engine Oil, Oil and Fuel Filters, and Adding Supplemental Coolant Additive (SCA) Packets.

LINE HAUL 2 — REGULAR SERVICE INTERVAL

LINE HAUL 2 — Regular Service Interval

MAINTENANCE AND LUBRICATION

Mileage (in Thousands)	15	30	45	60	75	90	105	120
Kilometers (in Thousands)	24	48	72	97	121	145	169	193
Maintenance Schedule (Note 2)†	A	B	A	C	A	B	A	D
Chassis Lubrication (Note 1)†	L	L	L	L	L	L	L	L
Gear Oil Change (Note 3)†	2 years/250,000 miles/402 300 km							

CHANGE ENGINE OIL, OIL AND FUEL FILTERS. ADD SCA PACKETS.

Mileage (in Thousands)*	15	30	45	60	75	90	105	120
Kilometers (in Thousands)*	24	48	72	97	121	145	169	193
Engine Hours*		700		1400		2100		2800
Oil & Filter Change								
Add SCA Packets*		•		•		•		•

*Whichever Comes First

† Refer to Notes 1 through 3 in "NOTES TABLE" on page 23.

* Refer to pages 87 through 90 for information concerning coolant conditioning, test strips and supplemental coolant additive packets.

https://truckmanualshub.com/

NOTE

Certain chassis vocations may require more frequent service intervals. When developing a maintenance program, review chassis operating conditions and adjust the service intervals as required. At each maintenance and lubrication interval, look at the condition of chassis lubrication points, condition of components, etc., and adjust your service intervals accordingly. Using a lubricant analysis program performed by a reputable laboratory is the most effective method of determining lubricant change intervals. Alter the maintenance program to meet your needs, but never exceed MACK recommended intervals.

NOTE

Mack Trucks, Inc., has changed the method of conditioning the cooling system. The spin-on coolant conditioner canister containing the supplemental coolant additive (SCA) package is no longer used. The cooling system is now filled with a pre-charged coolant at the factory, and thereafter, coolant is maintained by adding packets containing supplemental coolant additives in powder form directly to the cooling system after first testing the coolant with a test strip. These SCA packets, which are included with the MACK Filter Service Kit, are added to the cooling system at each oil change interval as necessary, after first testing the coolant with a test strip. Refer to the Cooling System section of this manual for additional information.

https://truckmanualshub.com/

Short Haul Operating Conditions (Severe Service Interval)

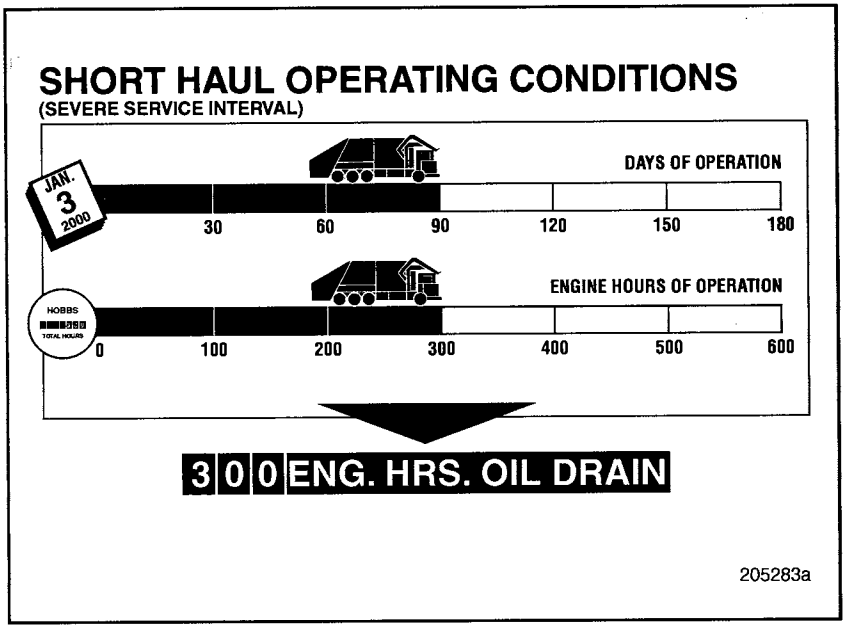

Figure 6 — Short Haul Operating Conditions

https://truckmanualshub.com/

Preventive Maintenance Schedule — Short Haul

Includes Changing Engine Oil, Oil and Fuel Filters, and Adding Supplemental Coolant Additive (SCA) Packets.

SHORT HAUL – Severe Service Interval

MAINTENANCE AND LUBRICATION

Days of Usage*	45	90	135	180	225	270	315	360
Hours of Operation*	150	300	450	600	750	900	1050	1200
Maintenance Schedule (Note 2)†	A	B	A	C	A	B	A	D
Chassis Lubrication (Note 1)†		L		L		L		L
Gear Oil Change (Note 3)†	1 year/1200 hours							

*Whichever Comes First

CHANGE ENGINE OIL, OIL AND FUEL FILTERS. ADD SCA PACKETS.

Days of Usage*	45	90	135	180	225	270	315	360
Hours of Operation*	150	300	450	600	750	900	1050	1200
Oil Only Change††		O				O		
Oil and Filter Change††		✧				✧		
Add SCA Packets**		✧		•		✧		•

*Whichever Comes First

† Refer to Notes 1 through 3 in the following table.

** Refer to pages 87 through 90 for information concerning coolant conditioning, test strips and supplemental coolant additive packets.

†† Oil change is mandatory every 90 days or 300 hours, whichever occurs first. Oil and filter changes, and addition of SCA packets are mandatory every 180 days or 600 hours, whichever occurs first. Oil and filters may be changed, and SCA packets may be added at each 90 day/300 hour interval if so desired.

https://truckmanualshub.com/

NOTE

Certain chassis vocations may require more frequent service intervals. When developing a maintenance program, review chassis operating conditions and adjust the service intervals as required. At each maintenance and lubrication interval, look at the condition of chassis lubrication points, condition of components, etc., and adjust your service intervals accordingly. Using a lubricant analysis program performed by a reputable laboratory is the most effective method of determining lubricant change intervals. Alter the maintenance program to meet your needs, but never exceed MACK recommended intervals.

NOTE

Mack Trucks, Inc., has changed the method of conditioning the cooling system. The spin-on coolant conditioner canister containing the supplemental coolant additive (SCA) package is no longer used. The cooling system is now filled with a pre-charged coolant at the factory, and thereafter, coolant is maintained by adding packets containing supplemental coolant additives in powder form directly to the cooling system after first testing the coolant with a test strip. These SCA packets, which are included with the MACK Filter Service Kit, are added to the cooling system at each oil change interval as necessary, after first testing the coolant with a test strip. Refer to the Cooling System section of this manual for additional information.

https://truckmanualshub.com/

NOTES TABLE

Note 1: Recommended Eaton Clutch Release Bearing and Spicer Life™ driveshaft Lubrication Intervals:

Clutch Release Bearing (Eaton Easy-Pedal and Solo™ Clutches)

- Lubricate at each chassis lubrication interval as follows:
  - Line Haul 1 — 25,000 miles (40 000 km)
  - Line Haul 2 — 15,000 miles (24 000 km) or 700 hours*
  - Short Haul — every 300 hours

Spicer Life™ Driveshaft — U-joint Lubrication

- On-Highway: Every 100,000 miles (161 000 km) or 6 months*
- City: Every 25,000 miles (40 000 km) or 6 months*
- On/Off-Highway: Every 25,000 (40 000 km) or 3 months*

*Whichever occurs first

NOTE

The slip-joints used with Spicer Life™ driveshafts are "Lubed for Life," and protected by a bellows. Lubrication of these slip-joints is not required and the bellows must not be disturbed.

Note 2: For all E-Tech™ and E7 (1997 and later certified) engines, valve lash check and adjustment intervals are 150, 000 mile (241 000 km) or 4500 hours, whichever occurs first.

https://truckmanualshub.com/

Note 3: An extended-service drain interval of 500,000 miles (804 600 km) or 3 years, whichever occurs first, for Line Haul 1 and Line Haul 2 type operations is permissible for MACK geared drivetrain components IF MACK-specific GO-J PLUS Gear Lubricant is used. For Short Haul and other severe types of service operations, an extended drain interval of 80,000 miles (128 800 km), 1 year or 1200 hours, whichever occurs first, is permissible if GO-J PLUS Gear Lubricant is used. An SAE 50 grade synthetic transmission oil, TO-A PLUS, is also available for use in all MACK transmissions. Extended drain intervals for transmissions using TO-A PLUS are 500,000 miles (804 600 km) or 3 years, whichever occurs first, for Line Haul 1 and 2 type operations, and 80,000 miles (128 800 km), 1 year or 1200 hours, whichever occurs first, for Short Haul type operations.

INTERVAL CHART SYMBOLS

	denotes a mandatory oil and filter change at specified interval
O	denotes a mandatory oil change at the specified interval
•	denotes mandatory addition of SCA packets at specified interval
✧	denotes an optional oil and filter change, and addition of SCA packets at specified interval

NOTE

Oil changes, filter changes and chassis lubrication intervals listed in this publication are specifically for chassis equipped with MACK components. For oil and filter change information concerning vendor components (transmissions, axles, etc.), consult the specific vendor component service literature.

https://truckmanualshub.com/

Preventive Maintenance Inspection Instructions

The MACK Preventive Maintenance Program is arranged in easy-to-follow steps. Inspections are arranged in A, B, C, D order:

"A" is a light inspection.

"B" is a more detailed check.

"C" is a more extensive inspection and adjustment.

"D" is a comprehensive inspection and adjustment.

"L" is a chassis lubrication.

Perform a road test before each inspection to determine the road worthiness of the vehicle and isolate any specific problems.

Preventive maintenance inspections worksheets A, B, C and D are available through your MACK dealer, and provide a convenient means of keeping track of the maintenance procedures.

NOTE

Form No. TS491 A & B covers schedules A and B.
Form No. TS491 C & D covers schedules C and D.

Order a supply now so you will have them when needed.

For specific questions concerning service, maintenance and lubrication procedures not covered in this manual, or for components not manufactured by Mack Trucks, Inc., refer to the appropriate section of the operator's manual, master manual or vendor service publications, or consult your MACK dealer.

After performing the operations as listed and noting any adjustments, repairs and replacements on the applicable inspection form, the completed form should be signed by the technician and foreman (or inspector) and filed in the chassis folder.

https://truckmanualshub.com/

NOISE EMISSION CONTROL

Noise Emission Information

Specific maintenance procedures performed at regularly scheduled intervals are necessary for maintaining noise emissions within acceptable limits throughout the life of the vehicle. This manual includes written instructions pertaining to maintenance items which are required to maintain the efficiency of the noise emission control systems.

Explanations of maintenance items for noise-emission-related components are outlined in "CHASSIS INSPECTION" on page 35 of this manual, along with schedules at which each item must be serviced. Noise emission-related maintenance items are noted as such for easy reference. The Preventive Maintenance Schedule charts outline the MACK recommended time or mileage intervals between service schedules.

Mack Trucks, Inc. recommends that copies of all work orders, invoices and other pertinent information relating to vehicle maintenance be kept on file for later reference. A service log can be found at the end of this manual that provides a convenient place for maintaining a record of service work performed on the chassis. Service records, along with this manual, should be passed along to subsequent owners of the vehicle.

The following information concerning noise emission control systems requirements is provided to familiarize the ultimate purchaser of this vehicle with his responsibilities as the owner, as well as the responsibilities of Mack Trucks, Inc. as the manufacturer.

https://truckmanualshub.com/

Noise Emission Control Systems

United States Environmental Protection Agency (EPA) regulations require that vehicle manufacturers provide written instructions for the proper maintenance, use and repair of the vehicle to the ultimate purchaser to provide reasonable assurance of the elimination or minimization of noise emission degradation throughout the life of the vehicle. This manual covers items of maintenance which are necessary to maintain noise emission control efficiency.

Tampering with Noise Control Systems is Prohibited

Among those acts presumed to constitute tampering are those acts listed below:

- Removal, or rendering inoperative, of any exhaust components, including mufflers, heavy or double-wall exhaust tubing, flexible tubing or exhaust pipe clamping.
- Removal, or rendering inoperative, of the temperature-modulated cooling fan system.
- Removal of the cooling fan shroud.
- Removal, or rendering inoperative, of the air cleaner or air intake in-line silencer.
- Removal of the sound deadening material from the hood or cab tunnel.
- Removal, or rendering inoperative, of the engine speed governor so as to allow engine speed to exceed the manufacturer's specifications.
- Removal of splash shields located inside the wheel housings.
- Removal of engine block shields.
- Removal of engine crankcase shields or insulation.
- Removal of insulated rocker arm covers.
- Removal of transmission noise shields.

https://truckmanualshub.com/

Vehicle Identification Number (VIN) and Model Year Designation

U.S. and Canadian motor-vehicle safety standards require that each chassis manufactured by Mack Trucks, Inc. be identified by a 17-character Vehicle Identification Number (VIN). The VIN can be found at several locations on the chassis. Refer to the Operator's Handbook for exact locations.

The tenth digit of the Vehicle Identification Number identifies the chassis model year. Listed below is a sample VIN with the model year designation highlighted, along with a chart explaining the model year code.

SAMPLE VIN —

1M2N178Y4YA012345

MODEL YEAR

YEAR	CODE
1998	W
1999	X
2000	Y
2001	1

MODEL YEAR CODE

000104a

https://truckmanualshub.com/

ROAD TEST

Before proceeding with the chassis inspections, a road test should be performed to determine the road worthiness of the vehicle and to isolate any specific problems.

ENGINE:

	Inspection Schedule
Check operation of engine alarm(s) and shutdown system. The alarms should operate when the key switch is turned ON, before the engine is started, and should shut off when oil pressure, air pressure, etc., reach operating range. On V-MAC equipped vehicles, the electronic malfunction lamp should turn off approximately two seconds after the engine starts. If the alarms fail to function in this test or other malfunctions are noted, repair as necessary.	**A, B, C, D**
Check the operation of the starter drive mechanism (positive action, no unusual noises).	**A, B, C, D**
Check for rough idling, misfiring, bearing noises, piston slap, and knock.	**A, B, C, D**
Check for unusual exhaust. Note the color and intensity of the smoke.	**A, B, C, D**
Record oil pressure psi (kPa) at idle and governed speeds (engine at operating temperature).	**A, B, C, D**
Check voltmeter and record maximum voltage reading.	**A, B, C, D**
Check and record engine temperature in degrees F°(C°) after engine has achieved operating temperature.	**A, B, C, D**
Check tachometer operation throughout engine speed range. Note an unsteady pointer operation.	**A, B, C, D**

https://truckmanualshub.com/

ENGINE: *(continued)*	Inspection Schedule
Check speedometer operation while driving vehicle. Note accuracy and any unsteady pointer operation.	**A, B, C, D**
Check operation of exhaust pyrometer.	**A, B, C, D**
AIR COMPRESSOR:	
Check for proper operation. Build-up time of air pressure from 85 to 100 psi (586 to 690 kPa) should not exceed 25 seconds with engine running at maximum governed no-load speed. Rapidly cycle brake treadle valve until reservoir pressure drops below 105 psi (724 kPa). Note and record pressure at which governor cuts in.	**A, B, C, D**
Governor should cut out when reservoir pressure reaches 125–135 psi (862–931 kPa). Note and record pressure at which the governor cuts out. Check operation of low air pressure indicators, both low air pressure indicator light and audible low-air buzzer.	**A, B, C, D**
CLUTCH:	
Check free pedal. Do not allow less than 1/2 inch of free pedal. Adjust to specifications, if necessary. *(See "CLUTCH ADJUSTMENT" on page 210.)*	**A, B, C, D**
Check clutch release when chassis is stopped and the engine is running at low idle. Verify proper clutch brake operation. Increased pedal effort should be felt approximately 1/2 to 1 inch (12.5–25 mm) from end of clutch pedal travel when pedal is depressed fully.	**A, B, C, D**

https://truckmanualshub.com/

STEERING:

	Inspection Schedule
Check for *bind* in steering.	
Bind may be caused by inadequate lubrication or worn steering or steering axle components.	**A, B, C, D**
Check for excessive *free play* in steering.	
Free play may be caused by excessive steering gear backlash or loose steering linkage.	**A, B, C, D**
Check for *wander.*	
Wander may be caused by insufficient or unequal caster, camber, inadequate lubrication or excessively worn steering or axle components.	**A, B, C, D**
Check for *shimmy* in steering.	
Shimmy may be caused by unbalanced or out-of-round tires, wheels or brake drums, looseness in steering system, unequal front tire pressure (especially with radial tires).	**A, B, C, D**
Check operation of power steering pump for lack of, or erratic, power assist. Check for belt noise or squeal.	**A, B, C, D**

https://truckmanualshub.com/

BRAKES:

	Inspection Schedule
Check for unusual noise during brake operation. Squeal may be caused by glazed lining or lining which is worn to rivets. Chatter may be caused by worn parts.	**A, B, C, D**
Check for pull. Pull may be caused by grease on the linings, worn brake linings and brake drums, misadjustment, or malfunctioning self-adjusters.	**A, B, C, D**
Check for drag. Drag may be caused by misadjustment, loose wheel bearings or by malfunctioning brake camshafts.	**A, B, C, D**
With hydraulically actuated disc brakes, check warning light on dash.	**A, B, C, D**

PARKING BRAKES:

Check application and holding ability of spring brakes. Make sure the warning light indicates spring brake application. Release and reapply the spring brakes.	**A, B, C, D**

HEATER/DEFROSTER:

Check operation: Proper fan speed control. No excessive noises. Proper temperature output.	**A, B, C, D**

https://truckmanualshub.com/

AIR CONDITIONER:

	Inspection Schedule
Check operation. Proper fan speed control. No excessive noises. Proper temperature output.	A, B, C, D
During the off season, operate the air conditioner for five minutes per week to keep the system lubricated. Operate only after the engine compartment is warm and the cab interior is at least 70°F (21°C).	

TRANSMISSION/AUX TRANS./TRANSFER CASE/FLYWHEEL PTO:

Shifting should take place quickly and quietly. If hang-up or clashing occurs, repair or adjustment is necessary.	A, B, C, D
Check lever operation noting any difficult movement or binding which would indicate the need to check the linkage. Check for indications of restricted motion in the linkage which could result in partial gear engagement and transmission damage.	A, B, C, D
Check for bearing and gear noises, or excessive vibration at various road speeds.	A, B, C, D

https://truckmanualshub.com/

CARRIER:

	Inspection Schedule
Check for noise or vibration under drive and coast conditions.	**A, B, C, D**

PROPELLER SHAFT:

Check for noise or vibration at various road speeds.	**A, B, C, D**

ENGINE BRAKE:

Turn the engine brake switch on. Marked deceleration should be noted when the foot is removed from the accelerator pedal.	**A, B, C, D**

ENGINE SHUTDOWN:

Check operation of engine stop control (if so equipped).	**A, B, C, D**

https://truckmanualshub.com/

CHASSIS INSPECTION

CAB:

	Inspection Schedule
Inspect condition of mirrors and cab glass.	**A, B, C, D**
Check operation of horns (air and electric).	**A, B, C, D**
Clean the floor mats and clean any debris from around the treadle valve.	**A, B, C, D**
Observe operation of windshield wipers, making sure they operate in each speed. Check condition and travel of blades.	**A, B, C, D**
Check operation of windshield washers. Make sure the washer reservoir is filled with fluid.	**A, B, C, D**
Check operation and condition of back-up lights, tail lights, brake lights, turn signals, hazard warning flasher, marker lights, headlights (adjust high and low beams if necessary) and instrument panel lights.	**A, B, C, D**
Lubricate the treadle valve and make sure it is securely mounted.	**B, C, D**
Check the engine cover (hood on conventional, cab on COE) for cracks or broken-out sections. ***Noise Emission Control Maintenance.***	**B, C, D**
Check condition and operation of seats and seat-belts, doors and latches, hood and latches.	**C, D**
Check condition of sheet metal, rivets, bumpers and steps. Check the condition of the cab mounting. Inspect and adjust cab rear mounting height (air-suspended cabs). Check for stress cracks on fiberglass cabs.	**C, D**

https://truckmanualshub.com/

	Inspection Schedule
Check the condition of the sound-absorbing material that is affixed to the hood and/or cab. Check for tears and for suitable attachment. Excessive dirt can be removed with a mild soap and water solution. ***Noise Emission Control Maintenance.***	**C, D**
Check the splash shields that are located inside the wheel housings. Look for tears or broken-out sections. ***Noise Emission Control Maintenance.***	**C, D**
Check operation of window regulators.	**C, D**
Torque wiper arm to pivot attachment nuts to 16–20 lb-ft (22–27 N•m).	**D**
V-MAC:	
Check for any faults which may be logged into the V-MAC system. Refer to the V-MAC Operator's Manual or the V-MAC MASTER MANUAL section for complete troubleshooting procedures and fault diagnosis.	**A, B, C, D**
TILT CAB:	
Check cab tilt pump reservoir fluid level. Add fluid if necessary. (See "LUBRICANT SPECIFICATIONS" on page 265.)	**B, C, D**
Check operation and condition of mechanism, latches, safety prop, hinges, and brackets.	**B, C, D**

https://truckmanualshub.com/

BATTERY:

	Inspection Schedule
If low maintenance type battery with removable plastic caps, check that the electrolyte level is a minimum of 3/8 inch (9.5 mm) above plates. Add distilled or good drinking water (no mineral water) if necessary. On maintenance-free batteries with flush-type cover, check state-of-charge indicator.	**A, B, C, D**
Clean battery terminals with solution of baking soda or household ammonia. Flush with clear water and dry. Tighten terminals. Coat terminals with light film of non-metallic grease.	**B, C, D**
Check condition and routing of the battery cables. Make sure there is no possibility of chafing and/or shorting.	**B, C, D**
Test the electrolyte with a hydrometer: 1.250–1.280 battery OK — less than 1.250, remove battery and recharge. Check with high discharge rate cell tester.	**C, D**
Remove battery. Clean top and case. Make sure case is not cracked. Clean, paint and tighten battery hold-down arrangement.	**C, D**

SERIES-PARALLEL SWITCH:

Check connections and condition of contacts.	**C, D**
Check transformer/rectifier unit.	**C, D**

https://truckmanualshub.com/

AIR STARTER:

	Inspection Schedule
Clean the strainer which is in line to the control valve.	C, D
Check air starting system for leakage (should not exceed 2 psi [14 kPa] per hour from 130 psi [897 kPa]).	C, D
Remove safety valve and test; should open at 150 psi (1034 kPa). Check pressure regulator; should open at 95 psi (655 kPa).	C, D
Check operation of control valve. Check operation of check valve by reducing main air reservoir pressure.	C, D
Check air starter reservoir mounting.	C, D

https://truckmanualshub.com/

AIR SYSTEM:

	Inspection Schedule
Inspect the air system for leaks by fully pressurizing the system, releasing the parking brakes and observing any pressure drop as indicated by the dashboard air pressure gauge. Pressure drop should be less than 2 psi per minute for a truck, or less than 3 psi per minute for a tractor and trailer combination. Make a full treadle application and again check for leaks by observing the air pressure gauge. Pressure drop should not exceed 3 psi per minute for a truck, or 4 psi per minute for a tractor and trailer combination.	**A, B, C, D**
With air reservoirs fully charged, drain reservoirs slowly and completely. Spring brakes should apply automatically when air pressure decreases to 40 psi (276 kPa).	**A, B, C, D**
Check alcohol evaporator reservoir level. Add fluid if necessary. (Use only 188 proof methanol alcohol.) Check that the connections are tight.	**A, B, C, D**
Check air dryer for proper operation. Consult the air dryer manufacturer's service literature for recommended service intervals and procedures.	**B, C, D**
Check the condition of all brake hoses. Check for interference and/or chafing.	**B, C, D**
Check mounting of air reservoirs.	**C, D**
Perform dual circuit brake test. (Refer to "Dual Circuit Brake System Function Test" on page 202.)	**C, D**

https://truckmanualshub.com/

Service air system components:

⚠ WARNING

To prevent possible injury, chock wheels and drain air brake system completely before performing any maintenance on air brake system components.

Governor	**Inspection Schedule**
Check governor operation and test for excessive leakage. Replace if necessary.	**B, C, D**
Low Pressure Indicator	
Double Check Valve and Stoplamp Switch	
Check lamps and electrical connections.	**B, C, D**
Check operation and test for excessive leakage. Replace if necessary.	**B, C, D**
Trailer Supply Valve **Tractor Parking Brake Control Valve** **Parking Control Valve** **Trailer Control Valve**	
Check operation of valves and test for excessive leakage. Replace if necessary.	**B, C, D**

https://truckmanualshub.com/

Check Valve **Double Check Valve**	**Inspection Schedule**
Check operation of valves and test for excessive leakage. Replace if necessary.	**B, C, D**

Treadle Valve
Quick Release Valve
Ratio Valve
Pressure Protection Valve
Tractor Protection Valve
Spring Brake Control Valve
Relay Valve

Check operation of valves and test for excessive leakage. Replace if necessary.	**B, C, D**

https://truckmanualshub.com/

COOLING SYSTEM:

	Inspection Schedule
Check the cooling system for leaks.	**A, B, C, D**
Check the coolant level in the radiator, recovery tank or surge tank. Refer to "COOLING SYSTEM" on page 86 for information. Add coolant if necessary. Mack Trucks, Inc. recommends an antifreeze mixture in the range between 40% to 60% depending upon climatic conditions in which the vehicle is operated. Do not exceed a 60% concentration of antifreeze.	**A, B, C, D**

NOTE

Add supplemental coolant additive packets at each oil and filter change interval after first testing coolant. Refer to pages 87 through 90 for detailed information.

Check inside the radiator for corrosion. (See "COOLING SYSTEM" on page 86.)	**A, B, C, D**
Check and record degree of antifreeze protection. Add antifreeze to obtain required protection level for anticipated ambient temperatures.	**A, B, C, D**
Check condition of hoses and clamps. Check for leaks and tighten all hose clamps. ***Gaseous Emission Control Maintenance.***	**A, B, C, D**
Inspect condition of radiator shutter blades. Check the condition of the linkage, making sure the linkage and blades are securely mounted. Check the operation of the shutter control. Shutters should be fully open when engine is at normal operating temperature. Engine overheating or slowly rising engine temperature may be caused by a faulty thermostat, shutterstat, or viscous fan, or faulty shutter operation. ***Gaseous & Noise Emission Control Maintenance.***	**B, C, D**

https://truckmanualshub.com/

COOLING SYSTEM: *(continued)*	Inspection Schedule
Inspect radiator cap gasket. Pressure-test cap. All MACK engines currently use a 10-lb. pressure cap.	C, D
Using compressed air delivered from the rear of the radiator, clean the core fins and tubes. ***Gaseous Emission Control Maintenance.***	C, D
Remove any accumulations of dirt and debris from between the radiator core and the charge air cooler.	C, D
Check condition and security of the radiator mounts.	C, D
Inspect the cooling fan shroud for tears or broken-out sections. Also check for proper alignment between the fan and the shroud. ***Noise Emission Control Maintenance.***	C, D
Inspect the viscous fan and fan clutch for leakage, and make sure they are securely mounted. Inspect the bimetal strip and coil that are located on the forward side of the viscous drive for excessive dirt, and clean if necessary. With the engine stopped (cold engine) turn the fan by hand to ensure the drive is not seized. Inspect the air-controlled fan clutch (if so equipped) for proper operation. Check the fan for bent blades and replace as necessary. ***Noise Emission Control Maintenance.***	C, D

ALTERNATOR:	
Make sure alternator is securely mounted.	B, C, D
Inspect alternator connections. Check voltage and adjust if required.	C, D

https://truckmanualshub.com/

EXTERNAL REGULATOR:

	Inspection Schedule
Check mounting and connections.	**C, D**

BELTS:

Check condition of all drive belts. Replace any frayed, cracked, worn or oil-soaked belts. (Multiple belts must be replaced with matched sets.)	**A, B, C, D**
Using a tension gauge, adjust belt tension. Refer to "ADJUSTMENT:" on page 76.	**A, B, C, D**

NOTE

On chassis equipped with an automatic belt tensioner, belt tension need not be checked as long as the tensioner is in good condition and there is no evidence of a loose belt.

Check condition of the automatic belt tensioner.	**A, B, C, D**
Using a straight edge, check the alignment of all belt pulleys.	**B, C, D**

https://truckmanualshub.com/

ENGINE:

	Inspection Schedule
Check engine oil level. Add oil if necessary. (See "LUBRICANT SPECIFICATIONS" on page 265.)	**A, B, C, D**
Inspect engine for any leakage of fuel, oil, coolant, air, or exhaust. Correct as required.	**A, B, C, D**

NOTE

Information outlining fuel injection nozzle maintenance, fuel filter changes and engine oil and oil filter changes is given in "SPECIFIC MAINTENANCE" on page 65.

Check viscous type dampers for dents and leakage.	**C, D**
Inspect front and rear engine mount insulators for deterioration. If metal members come in contact, replace insulator.	**C, D**
Remove, clean and reinstall the crankcase breather filter element. Check the breather hose for obstructions. ***Gaseous Emission Control Maintenance.***	**D**

https://truckmanualshub.com/

AIR CLEANER:

	Inspection Schedule
Replace the element with a MACK APPROVED element according to MACK recommendations when the indicator locks in the red zone, or the gauge indicates 20 or 25 inches of water for applicable engine. Refer to "AIR CLEANER MAINTENANCE" on page 102 for a listing of inlet restriction per engine model. Reset indicator after element change. The air filter element should be replaced yearly, even if maximum restriction has not been reached. ***Gaseous Emission Control Maintenance.***	**A, B, C, D**

ENGINE AIR INDUCTION SYSTEM:

Inspect condition of all hoses, pipes, ducts, tubing, elbow connections and inline intake silencers. Check for alignment, leakage, engagement and possible interference. Replace any items having cracks or holes. ***Noise & Gaseous Emission Control Maintenance.***	**A, B, C, D**
Inspect all clamps, brackets and fasteners. Torque all hose clamps. (See "HOSE CLAMP TORQUES" on page 99.) ***Noise Emission Control Maintenance.***	**A, B, C, D**
Check all turbocharger connections for tightness and leaks. Repair as necessary.	**A, B, C, D**

NOTE

Additional turbocharger maintenance procedures are given under "TURBOCHARGERS" on page 106.

https://truckmanualshub.com/

CHASSIS MOUNTED CHARGE AIR COOLERS:

	Inspection Schedule
Check all air ducts and gasket connections. Torque hose clamps between 40–55 lb-in (4.5–6.2 N•m). **Gaseous Emission Control Maintenance.**	**A, B, C, D**
Check charge air cooler core fins for external damage, debris or salt corrosion. Use a firm bristle brush to remove corrosion, and compressed air to clean debris from the core. **Gaseous Emission Control Maintenance.**	**C, D**
Check for cracks in the welds that join the side tanks to the core, and check the mounting brackets for security and condition. Torque mounts to 30 lb-ft (41 N•m). **Gaseous Emission Control Maintenance.**	**C, D**

FUEL SYSTEM:

Check nozzle lines for leaks and clamps for tightness. Be sure lines do not rub.	**C, D**

NOTE

Additional injection nozzle maintenance procedures are given in "Fuel Injector Nozzle Maintenance" on page 115.

https://truckmanualshub.com/

FUEL TANKS:

	Inspection Schedule
Check filler cap and gasket for proper sealing.	**B, C, D**
Check for plugged or obstructed fuel tank vents.	**C, D**
Inspect the fuel tank mounting and fuel line clamps.	**C, D**

EXHAUST SYSTEM:

Inspect the muffler for leaks at the seams, and the inlet and outlet connections. Also check for holes in the muffler body. Replace as necessary. ***Noise Emission Control Maintenance.***	**A, B, C, D**
Inspect the exhaust system tubing for holes, including all flexible pipes, and check for exhaust gas leakage at all connections. Replace as necessary. ***Noise Emission Control Maintenance.***	**A, B, C, D**
Check for gasket leakage at the exhaust manifold and at the turbocharger connections. ***Noise Emission Control Maintenance.***	**A, B, C, D**
Inspect the condition of all exhaust system clamps. Tighten or replace as required. ***Noise Emission Control Maintenance.***	**B, C, D**
Check the condition of all exhaust system supports and brackets. Repair or replace as necessary. ***Noise Emission Control Maintenance.***	**B, C, D**

https://truckmanualshub.com/

CLUTCH:

	Inspection Schedule
Inspect linkage for wear.	C, D
Check free pedal. DO NOT allow less than 1/2 inch (12.7 mm) of free pedal. If not within specifications, adjust as necessary. (See "CLUTCH ADJUSTMENT" on page 210.)	C, D

NOTE

Refer to "ADJUSTMENT PROCEDURE:" on page 218 for additional lubrication guidelines applicable to clutch release bearing lubrication, bearing pads, and lube tube (if equipped).

STEERING GEAR:

Inspect linkage, including the steering shaft U-joints and yokes, drag link ends, and cross steer tube ends (tie rods), for wear or looseness.	A, B, C, D
Inspect the condition of the steering gear mounting brackets, and check the tightness of all the fasteners. Inspect the steering gear for leaks.	A, B, C, D
Check the torque of the steering shaft pinch bolts. Replace any corroded pinch bolts or nuts.	C, D

https://truckmanualshub.com/

POWER STEERING:

	Inspection Schedule
Check for leakage in the hoses, pump, steering gear, and reservoir.	**A, B, C, D**
Check fluid level in reservoir and add fluid if necessary.	**A, B, C, D**
Check relief stop settings.	**C, D**
Change power steering fluid and filter. Refer to "Power Steering Oil Change" on page 137 for more information.	**D**

Axle Alignment:

NOTE

For information concerning factors that influence tire wear, tire rotation, driving habits, tire loading, tire inspection, tire selection and inflation pressures, refer to "Factors That Influence Tire Wear" on page 196.

NOTE

At the first A inspection interval, front and rear axle alignment must be checked and adjusted if out of specification. Thereafter, front axle alignment should be checked and adjusted at each C and D interval, and rear axle alignment should be checked and adjusted at each D interval.

https://truckmanualshub.com/

STEERING AXLE AND SUSPENSION

	Inspection Schedule
Under normal use, toe may change and occasional adjustment is recommended to optimize tire wear and handling. Check toe and adjust if out of specification. If driver reports indicate need, or irregular tire wear is present, check caster and adjust if out of specification.	C, D

REAR AXLE(S) AND SUSPENSION

If the vehicle is equipped with one of the following adjustable rear suspensions, MACK AL, AL II, ST, Chalmers, Hendrickson Bar Pin, Neway or Reyco, check axle alignment and adjust as required.	D

NOTE

If the vehicle is equipped with one of the following non-adjustable suspensions, MACK SS, SW or Hendrickson straight pin, tires should be monitored for signs of irregular wear. Tire rotation is recommended to optimize tire life and achieve even wear. The suspension should be monitored for signs of component wear.

Before checking axle alignment on non-adjustable suspensions, a thorough inspection of all components that require maintenance must be performed. Any component in need of replacement or maintenance must be repaired prior to performing an axle alignment. Refer to the *Frame, Springs and Suspension* manual, 14-100, for proper repair/replacement of suspension components.

https://truckmanualshub.com/

FRONT DRIVE AXLE:

	Inspection Schedule
Check carrier lube level. Add oil if necessary.	**C, D**

FRONT AXLE & SUSPENSION:

Check for broken spring leaves.	**A, B, C, D**
Check for wheel seal leaks.	**A, B, C, D**
Check wheel bearing lube level. Add oil if necessary.	**A, B, C, D**

NOTE

Chassis with front driving axles may have oil or grease lubricated front wheel bearings. Consult the specific axle manufacturer's service literature for service procedures and lubrication recommendations.

Check for wear in the kingpins, bushings and bearings by jacking up the front axle and moving the wheel in and out at the top and bottom.	**C, D**
Inspect condition of front axle beam, steering knuckles and tie rod ends.	**C, D**

https://truckmanualshub.com/

FRONT AXLE AND SUSPENSION: *(continued)*	Inspection Schedule
Inspect shock absorbers for control, binding or leaks; insulators and mountings for wear, deterioration or breakage.	C, D
Check for broken center bolts, shifted axle, loose or damaged rebound bumper, spring clips, shackles, spring cap or hanger brackets.	C, D
Torque spring clips (U-bolts). (See "LUBRICATION CHART" on page 158.)	C, D

NOTE

At first A inspection interval, check steering knuckle to front axle beam clearance and adjust if necessary. Thereafter, this check must be performed at each C and D inspection.

Check steering knuckle to front axle beam clearance and adjust if necessary.	C, D
Remove all wheels.	D
Clean and inspect wheel bearings.	D
Repack grease type wheel bearings.	D
Inspect condition of brake lining/disc pads.	D
Measure and record brake lining thickness.	D
Inspect, measure and record drum/rotor wear in inches (mm). Compare measurement with dimension cast into the drum/rotor.	D
Inspect brake spiders, mounting bolts and/or disc calipers.	D
Inspect brake shoes.	D

https://truckmanualshub.com/

FRONT AXLE AND SUSPENSION: *(continued)*	Inspection Schedule
Inspect brake cams and bushings (cam brakes).	D
Inspect plunger seals and plunger (wedge brakes).	D
Replace wheel bearing lube seals.	D
Reinstall wheels and adjust bearings.	D
Fill oil type wheel bearings to specified level. (See "LUBRICANT SPECIFICATIONS" on page 265.)	D

WARNING

It is extremely important to use a retaining method when working on all spring brake chambers. The spring is under heavy compression and can expand rapidly with great force and cause injury.

Check brake air chambers for leakage. Make several brake applications and observe that push rods respond quickly and with no indications of binding. Refer to the *Air and Brake System* service manual for more detailed maintenance information.	A, B, C, D
Measure push rod travel. Stroke should be as short as possible without allowing the brakes to drag. Adjust manual slack adjusters as necessary. Automatic slack adjusters should not require periodic adjustments. Refer to the *Air and Brake System* service manual for more detailed information.	A, B, C, D

https://truckmanualshub.com/

TRANSMISSION/AUX. TRANS. TRANSFER CASE/FLYWHEEL PTO:

	Inspection Schedule
Inspect for leaks at seals, covers and plugs.	**A, B, C, D**
Check lube level. Add oil if necessary. (See "LUBRICANT SPECIFICATIONS" on page 265 for recommended lubricants and capacities. For lubricant change procedures, refer to "LUBRICANT CHANGE PROCEDURES" on page 133.)	**A, B, C, D**
Check condition and tightness of all mounts.	**A, B, C, D**
Inspect all linkages for wear, binding and full engagement in all gears.	**C, D**
Inspect and clean breathers.	**C, D**
Change air filter on air-shifted transmissions.	**C, D**
Service select air valve on air-shifted transmissions.	**C, D**
Service air shift cover on air-shifted transmissions.	**C, D**
Service range shift valve on T200 series transmissions.	**C, D**

https://truckmanualshub.com/

PROPELLER SHAFTS:

	Inspection Schedule
Check tightness of the universal joints. Check for leaks.	**A, B, C, D**
Inspect yokes or flanges for tightness.	**A, B, C, D**
Inspect splines for wear or seizure. Arrows at splined joints must be in alignment with each other to avoid vibration.	**C, D**

CENTER BEARING:

Inspect bearing for wear. Check for loose hanger bolts, deteriorated or worn insulator or cracked support.	**A, B, C, D**

https://truckmanualshub.com/

REAR AXLE & SUSPENSION:

(Also, refer to page 177 for information concerning Liteflex® Fiberglass Leaf Springs)	**Inspection Schedule**
Check for broken spring leaves.	**A, B, C, D**
Check for wheel seal leaks.	**A, B, C, D**
Check condition of spring and trunnion insulators.	**B, C, D**
Inspect axle housing(s) for leakage or cracks.	**C, D**
Check carrier mounting. Check and re-torque hidden capscrews (refer to "Carrier Capscrews" on page 153).	**C, D**
Remove and clean all magnetic plugs in carrier and power divider. Clean magnetic strips and oil trough.	**C, D**
Remove and clean carrier breathers.	**C, D**
Check torque rods for damage. Check torque rod ball joints for wear or deterioration. Check rubber-bushed torque rods for unequal rubber exposure, cracked or ruptured rubber bushings, off-center pins or expanded mounting pin holes.	**C, D**
Check shock absorbers for control, binding or leaks; insulators and mountings for wear, deterioration or breakage.	**C, D**
Check for broken center bolts, and loose or damaged rebound clips, cap retainers, shackles and brackets.	**C, D**
Torque spring clips (U-bolts).	**C, D**

NOTE

On chassis equipped with Reyco Suspensions, check and adjust torque of the spring clips (U-bolts), equalizer nuts, torque arm bolts (at the hangers and axle seats), and torque arm tube clamp nuts at each B, C, and D inspection interval.

https://truckmanualshub.com/

REAR AXLE AND SUSPENSION:

	Inspection Schedule
MACK AIR SUSPENSION Check U-bolt locknut torque.	**B, C, D**
Check main support member fastener torque: AL—Support member to air spring lower mounting bracket. ALII — Support member to cross channel section.	**B, C, D**
Check torque of the following locknuts: Air spring to frame bracket — inboard (AL only) Air spring to frame bracket — outboard (AL & ALII) Air spring to lower mounting bracket (cross channel section) Longitudinal torque rod bar pin Transverse torque rod (AL & ALII frame end — straddle mount) Transverse torque rod (ALII axle bracket end — straddle mount) Transverse torque rod (AL axle bracket end — stud) Frame bracket rebound roller bolt Shock absorber (both ends)	**D**
Check the ride height and adjust the height control valve if necessary.	**D**

https://truckmanualshub.com/

REAR AXLE AND SUSPENSION: *(continued)*	Inspection Schedule
Remove all wheels.	D
Clean and inspect wheel bearings.	D
Repack grease-type wheel bearings.	D
Inspect condition of brake lining/disc pads.	D
Measure and record brake lining thickness.	D
Inspect, measure and record drum/rotor wear in inches (mm). Compare measurements with dimension cast into the drum or rotor.	D
Inspect condition of brake spiders, mounting bolts and disc calipers.	D
Inspect condition of brake shoes. Check lining for flaking, etc.	D
Inspect brake cams and bushings (cam brakes).	D
Inspect plunger seals and plunger (wedge brakes).	D
Replace wheel bearing seals.	D
Fill rear axle to specified level. (See "LUBRICANT SPECIFICATIONS" on page 265.)	D

⚠ WARNING

It is extremely important to use a retaining method when working on all spring brake chambers. The spring is under heavy compression and can expand rapidly with great force and cause injury.

https://truckmanualshub.com/

REAR AXLE AND SUSPENSION: *(continued)*	Inspection Schedule
Check brake air chambers for leakage. Make several brake applications and observe that push rods respond quickly and with no indications of binding. Refer to the *Air and Brake System* service manual 16-104 for more detailed maintenance information.	**A, B, C, D**
Measure push rod travel. Stroke should be as short as possible without allowing the brakes to drag. Adjust manual slack adjusters as necessary. Automatic slack adjusters should not require periodic adjustments. Refer to the *Air and Brake System* service manual 16-104 for more detailed information.	**A, B, C, D**
CARRIER/CARRIERS:	
Inspect for leaks.	**A, B, C, D**
Check carrier(s) lube level. Add required gear oil if necessary.	**A, B, C, D**
TIRES:	
Check condition of tires and proper tire match.	**A, B, C, D**
Check tread depth, wear pattern, and correct inflation pressure (while tires are cold).	**A, B, C, D**
Report any case of uneven or unusual tire wear. Remove and replace any damaged tires.	**A, B, C, D**

https://truckmanualshub.com/

WHEELS/RIMS:

	Inspection Schedule
Check condition of wheels, rims, wheel studs and nuts. Replace if damaged.	A, B, C, D
Torque wheel nuts (rim lug nuts on spoke wheels; wheel lug nuts [inner and outer when applicable] on disc wheels).	A, B, C, D
Torque chain clearance spacers if the chassis is so equipped. See "Chain Clearance Spacers" on page 194.	A, B, C, D

REAR AXLE FLANGE:

Torque axle flange nuts to specifications.	A, B, C, D

FRAME:

Clean frame and crossmembers.	C, D
Inspect side rails, crossmembers, and brackets for looseness, cracks, or fretting.	C, D
Inspect spring brackets and crossmember Huck bolts or bolts.	C, D

https://truckmanualshub.com/

TRAILER CORD:

	Inspection Schedule
Inspect condition of the trailer cord. Look for chafing, missing or loose clamps, bad routing, or loose connections.	A, B, C, D

TRAILER HOSES:

Check that the trailer hoses do not rub against the cab, frame, or any other chassis components. Reroute or clamp as required. Inspect glad hands for defects that may affect sealing.	A, B, C, D

FIFTH WHEEL:

Check fifth wheel mounting, brackets, latching device, body mounts, sills, fastener and sliding mechanism for cracks or fretting. Torque mounting bolts. Instructions vary according to make, follow manufacturer's instructions.	A, B, C, D

https://truckmanualshub.com/

PTO/HOIST:

	Inspection Schedule
Check reservoir fluid level. Add oil if necessary. (See "LUBRICANT SPECIFICATIONS" on page 265.)	**A, B, C, D**
Check operation of controls, PTO, and hoist.	**A, B, C, D**
Inspect condition of mountings, hinges, brackets, linkages and hydraulic units.	**B, C, D**
On chassis equipped with a flywheel PTO having an optional safety fuse clutch, torque driveshaft nut to 100–110 lb-ft (136–149 N•m).	**C, D**

SAFETY EQUIPMENT:

Check pressure on fire extinguisher gauge. Dial should indicate pressure in OK zone.	**A, B, C, D**
On chassis in interstate commerce, check for ICC kit containing flags, reflectors, fuses, etc.	**A, B, C, D**

FLAPS:

Check condition and mounting of flaps. Replace if necessary.	**A, B, C, D**

https://truckmanualshub.com/

https://truckmanualshub.com/

SPECIFIC MAINTENANCE

INFORMATION AND PROCEDURES

FOR COMPONENTS NOT MANUFACTURED BY MACK TRUCKS CONSULT VENDOR SERVICE PUBLICATIONS

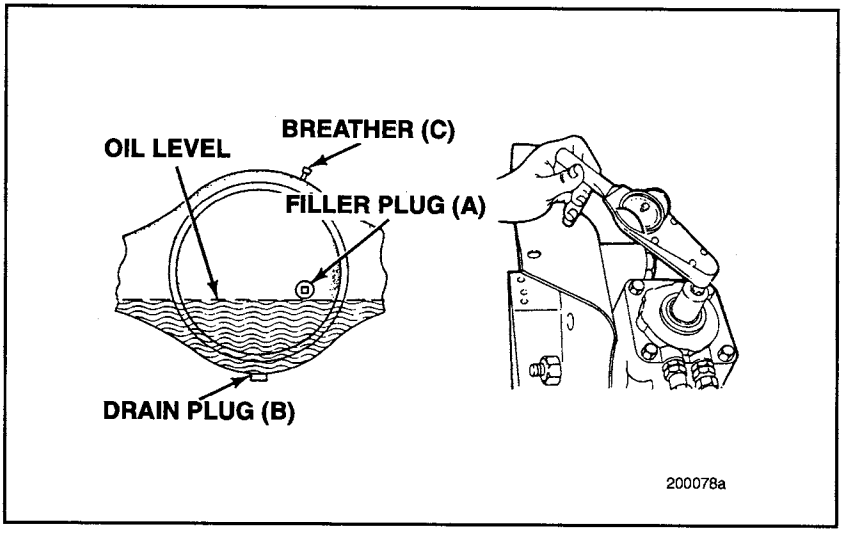

Figure 7 — Specific Maintenance

https://truckmanualshub.com/

TABLE OF CONTENTS

FASTENER SIZES, TYPES AND GRADES 67
FAN BELTS 75
COOLING SYSTEM 86
COLD WEATHER OPERATION 93
AIR CONDITIONER MAINTENANCE 100
AIR CLEANER MAINTENANCE 102
TURBOCHARGERS 106
CMCAC 108
FUEL SYSTEM 110
CRANKCASE BREATHER FILTER 116
ELECTRICAL SYSTEM 117
LUBRICANT CHANGE INTERVALS 124
LUBRICANT CHANGE PROCEDURES 133
CARRIERS 153
WHEEL BEARINGS 155
KINGPIN LUBRICATION 157
LUBRICATION CHART 158
SPRING CLIP (U-BOLT) TORQUE 165
MACK AIR SUSPENSION 169
LITEFLEX® FIBERGLASS LEAF SPRINGS 177
AXLE ALIGNMENT 182
WHEEL TORQUE PROCEDURES 187
TIRE INFORMATION 196
TIRE SERVICING 200
AIR BRAKE SYSTEM 202
BRAKE ADJUSTMENT 205
CLUTCH ADJUSTMENT 210
CYLINDER HEAD RETORQUE PROCEDURES 221
VALVE ADJUSTMENT 222
ENGINE BRAKE MAINTENANCE 231
ENGINE DIAGNOSTIC CHART 234
BRAKE DIAGNOSTIC CHART 255

https://truckmanualshub.com/

FASTENER SIZES, TYPES AND GRADES

Fastener Sizes and Types

The first and most important fact that the technician must know about a fastener is whether it is a U.S. (Inch System) or a metric thread. Next is the size of the fastener, which is usually determined by the diameter of the shank, the length of the fastener, which is usually measured from the bottom of the head to the end of the thread, and the pitch of the threads.

The pitch of U.S. (Inch System) fasteners is measured by determining the number of threads per inch. The two pitches commonly used in vehicles are coarse threads, officially called Unified National Coarse (UNC), and fine threads, officially called Unified National Fine (UNF).

The pitch of metric fasteners is measured by determining the number of threads per millimeter. For example, a bolt with 0.8 pitch would have 125 threads in a 100 millimeter section (100 mm divided by 125 threads equals 0.8), and a bolt with 1.0 pitch would have 100 threads in a 100 millimeter section. Pitch may be measured directly using a ruler and counting the threads. Also, thread pitch gauges are available for both U.S. and metric threads, which makes it easy to check the pitch of a fastener.

https://truckmanualshub.com/

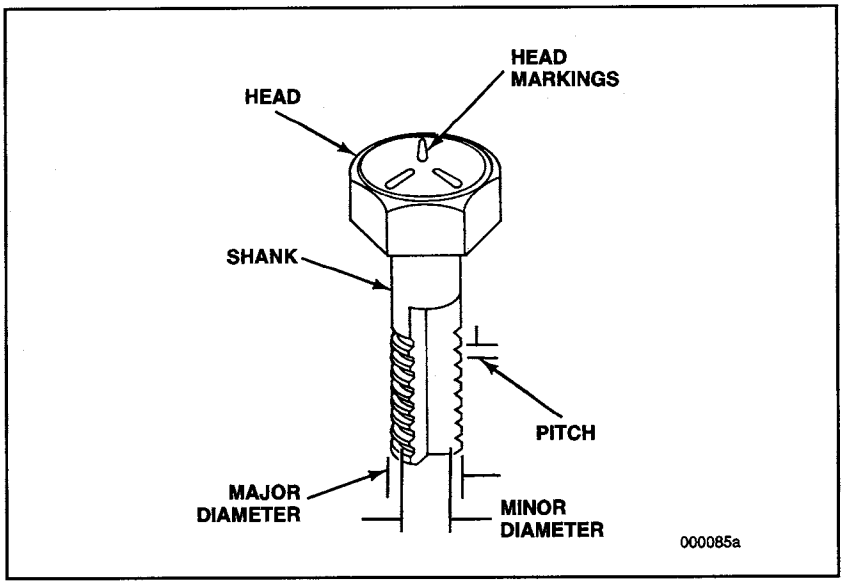

Figure 8 — Fastener Identification

https://truckmanualshub.com/

Fastener Grades

A fastener must be strong enough to do the intended job. U.S. and metric systems both separate their fasteners into grades according to strength and quality. In the U.S. system, slash marks are used on bolt heads to indicate grade. SAE Grade 1 and 2 use no slash marks. These "hardware grades" are used only in the least demanding applications. SAE Grade 5 uses three slash marks on the head. These are most commonly used for vehicle applications. SAE Grade 8 uses six slash marks on the head. These high strength bolts are used where conditions require very high torque.

Locknuts are also divided into grades called A, B, and C. Grade A locknuts are intended for use with SAE Grade 1 and 2 bolts, and the nuts are not marked for identification. Grade B locknuts are intended for use with SAE Grade 5 bolts and are marked either with the letter "B" or three equally spaced symbols (dot, line, letter, or other character). Grade C locknuts are intended for use with SAE Grade 8 bolts and are marked with either the letter "C" or six equally spaced symbols (dot, line, letter, or other character). Another marking alternative is having notches cut circumferentially into each of the six corners of the locknut at approximately mid-height, one row of notches for Grade B and two rows for Grade C.

Metric threaded fasteners are also separated into grades according to strength and quality. Bolts commonly used in vehicles are metric Class 8.8, metric Class 9.8, and metric Class 10.9. These metric bolts are identified by the class number stamped on the head of the bolt. Metric nuts commonly used are Class 9 and Class 10. The metric nuts also have the class number stamped on them for easy identification.

https://truckmanualshub.com/

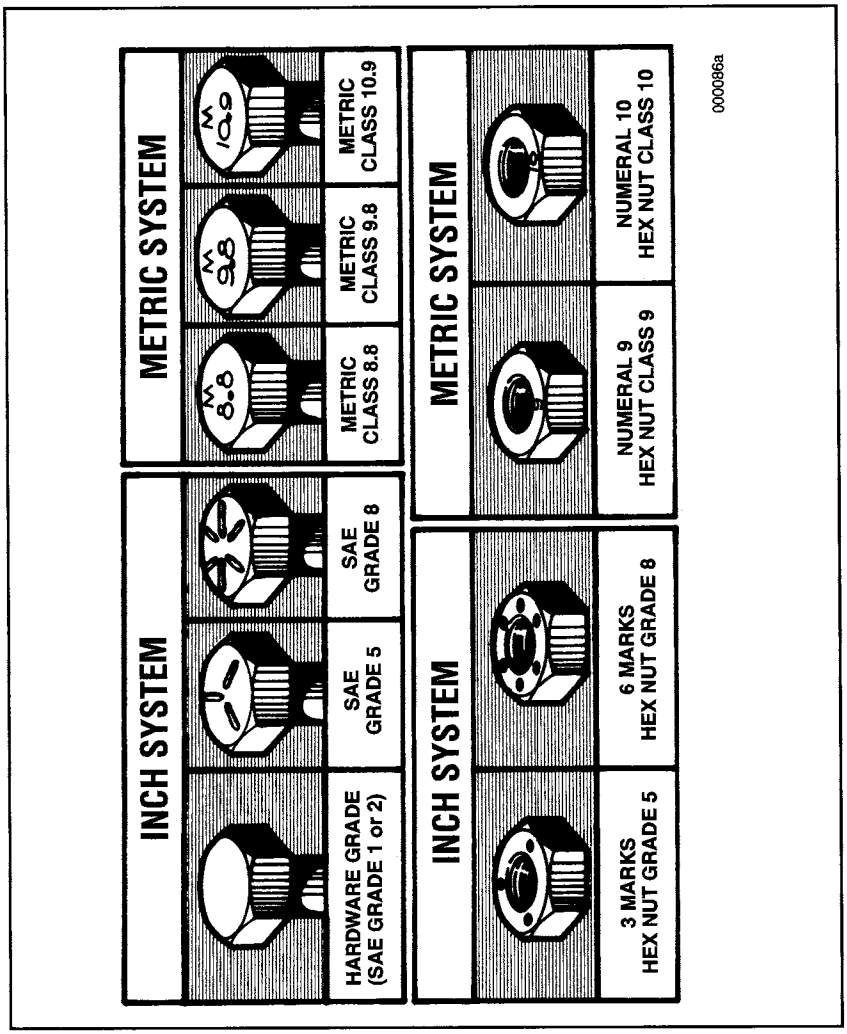

Figure 9 — Fastener Grades

https://truckmanualshub.com/

WARNING

Potential external/internal thread mismatch conditions may occur with certain metric thread/inch thread fastener combinations, and with fastener combinations involving incompatible metric fastener systems. A given thread mismatch can result in thread stripping and/or assembly weakness leading to potential service failure, thereby rendering a vehicle non-operational and/or unsafe for operation.

The specific external/internal thread combinations from which such problems can result are identified and set forth below as thread combinations which must not be utilized in service.

Incompatible Metric vs. Metric Fastener Systems

Potential external/internal thread mismatch can result from use of fasteners from incompatible metric fastener systems. The resulting condition of faulty thread engagement typically produces thread stripping and/or assembly weakness leading to possible service failure.

Domestically procured MACK models may use metric fasteners derived from differing metric fastener systems. It is therefore imperative to identify and use only those fasteners designated for use with the respective vehicle being serviced. Refer to fastener information provided in the applicable vehicle service manual.

Inch Thread vs. Metric Thread Fastener Combinations Contributing to Thread Stripping

The following combinations of inch and metric screws and nuts (or tapped holes) can be given a finger start (at least two full turns), but will strip if fully assembled:

https://truckmanualshub.com/

INCH THREAD VS. METRIC THREAD FASTENER COMBINATIONS CONTRIBUTING TO THREAD STRIPPING

INCH SCREWS		METRIC NUTS	
4-40		M3 x 0.5	
5/16-18		M8 x 1.25	
*5/16-24		M8 x 1.25	
3/8-16		*M10 x 1.25	
*3/8-24	M10 x 1.5	*M10 x 1.25	*M10 x 1.0
7/16-14		*M12 x 1.25	
*7/16-20		M12 x 1.75	*M12 x 1.5
*1/2-20		M14 x 2	
*5/8-18		*M16 x 1.5	
*7/8-14		M24 x 3	
*1-12		M27 x 3	
METRIC SCREWS		**INCH NUTS**	
M3 X 0.5		5-40	
M6 x 1.0		1/4-20	
M6 x 1.0		*1/4-28	
*M8 x 1.0		*5/16-24	
M10 x 1.5		7/16-14	
*M10 x 1.25		7/16-14	
*M10 x 1.0		7/16-14	
M12 x 1.75		1/2-13	
M12 x 1.75		*1/2-20	
*M12 x 1.5		1/2-13	
*M12 x 1.5		*1/2-20	
*M12 x 1.25		1/2-13	
M14 x 2		9/16-12	
*M14 x 1.5		*9/16-18	
*M16 x 1.5		*5/8-18	
*M24 x 2		1-8	

*Fine Thread

https://truckmanualshub.com/

Inch Thread vs. Metric Thread Fastener Combinations Contributing to Assembly Weakness

The following combinations of inch and metric screws and nuts (or tapped holes) can be fully assembled, but the resultant assembly will be 25% to 60% weaker than required. Service failure of the assembly is probable.

https://truckmanualshub.com/

INCH THREAD VS. METRIC THREAD FASTENER COMBINATIONS CONTRIBUTING TO ASSEMBLY WEAKNESS

INCH SCREWS	METRIC NUTS
*4-48	M3 x 0.5
5-40	M3.5 x 0.6
6-40	M3.5 x 0.6
*8-36	M4 x 0.7
*10-32	M5 x 0.8
12-24	M6 x 1.0
*1/4-28	M7 x 1.0
3/8-16	M10 x 1.5
7/16-14	M12 x 1.75
1/2-13	M14 x 2
3/4-10	M20 x 2.5
*3/4-16	*M20 x 1.5
7/8-9	M24 x 3

METRIC SCREWS	INCH NUTS
M3 x 0.5	*5-44
M3.5 x 0.6	*6-40
M4 x 0.7	8-32
M4 x 0.7	*8-36
M5 x 0.8	*10-32
M5 x 0.8	12-24
M5 x 0.8	*12-28
*M12 x 1.25	*1/2-20
M18 x 2.5	3/4-10
*M18 x 1.5	*3/4-16
M24 x 3	1-8
M24 x 2	*1-12

*Fine Thread

https://truckmanualshub.com/

FAN BELTS

V-Belts

In order to obtain maximum belt life, proper maintenance, installation, and adjustment procedures must be followed.

MAINTENANCE:

1. Check the belt tension when performing preventive maintenance inspections A, B, C, and D. If tension is less than 75 lbs. (33 daN), increase to 110–120 lbs. (49–53 daN).

If belts squeak or squeal, clean with hydraulic brake fluid or an approved cleaning fluid. Replace belts that are severely worn or frayed.

INSTALLATION:

1. When identical belts are used on the same drive, they must be replaced as matched sets.
2. To install belts, shorten the distance between the pulley centers and place the belts over the pulleys without force. Do not pry a belt over a pulley.
3. Misalignment of pulleys should not exceed 1/16 inch (1.6 mm) for each foot of distance between pulley centers.
4. Belts should not bottom in pulley grooves or protrude in excess of 3/32 inch (2.4 mm) above top edge of the grooves.
5. Belt riding depth should not vary more than 1/16 inch (1.6 mm) on matched belt sets. Belts should not rub against any adjacent parts of the engine.
6. Sharp edges on the pulley grooves will produce excessive wear and premature failure of a V-belt. Especially with machined pulleys, care should be taken to ensure that a radius of at least 1/16 inch (1.6 mm) is obtained at the outer edge of the grooves.

https://truckmanualshub.com/

ADJUSTMENT:

NOTE

When installing new belts, initially tighten between 130–150 lbs. (58–67 daN) gauge reading.

1. For consistent measurements, use belt tension gauge BT-3373-F to check the belt tension.

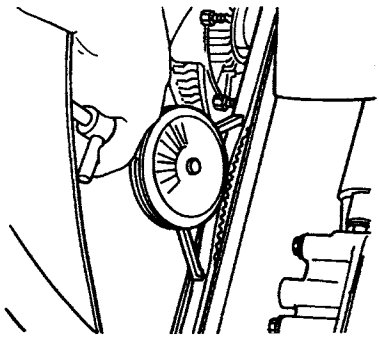

Figure 10 — Checking Belt Tension

1. Check at the center of longest span, and chalk-mark the point checked.
2. Run the engine approximately 5 to 10 minutes, allow the belts to cool, then recheck belt tension at the same point. If belt tension is less than 100 lbs. (45 daN), tighten to approximately 110–120 lbs. (49–53 daN).
   - For belts already in-service, retension to 110–120 lbs. (49–53 daN) when tension drops below 75 lbs. (33 daN).

https://truckmanualshub.com/

Heavy-Duty Banded V-Belts

Heavy-duty banded V-belts may be used on some chassis. When installing, or checking tension of a heavy-duty banded V-belt, tensioning tool J 42185 is required.

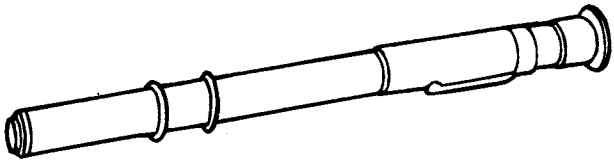

Figure 11 — Tensioning Tool J42185

The following instructions outline the proper belt-tensioning procedures using the J 42185 tensioning tool:

1. Position the lower O-ring at 0.25 inch on the deflection inch scale.
2. Position the upper O-ring in the maximum UP position.
3. Lay a straightedge across the water pump and alternator pulleys.
4. Place the tensioning tool perpendicular to the belt in the center of the longest span, and apply force to deflect the belt 0.25 inch. The lower O-ring must be parallel with the straightedge.
5. Read the position of the upper O-ring on the pound scale to find the belt deflection force in pounds. When the tool is compressed, the upper O-ring slides down the pound scale and remains in position to indicate belt deflection force.
6. Compare the reading with the belt deflection force specifications supplied in “Recommended Procedures for Obtaining Maximum Belt Life.”

https://truckmanualshub.com/

RECOMMENDED PROCEDURES FOR OBTAINING MAXIMUM BELT LIFE

1. Check pulley alignment.
2. Check for a faulty vibration damper.
3. Check for proper viscous fan operation.
4. Clean all pulley grooves (water pump, alternator, crank and air conditioner pulleys) with a suitable solvent.
5. Use the following procedures to ensure proper belt tension at initial installation:
   a. At initial installation, set belt tension to 20–22 lbs. deflection force.
   b. Run the engine for 20 minutes.
   c. Recheck belt tension deflection force. Deflection force should be between 17–19 lbs. Readjust if required.
   d. To ensure that belt tension is stabilized, it is recommended that tension be rechecked three days after initial installation.

Poly V-Belts

Poly V-belts are used on all E-Tech™ engines. Automatic or manual tensioners may be used depending upon engine configuration and application. Belt tensioning should be checked and adjusted, if required, at each A, B, C and D inspection interval. Also, belt condition should be checked when performing the maintenance inspections, and replaced as required. Refer to the following belt replacement criteria.

NOTE

If belts squeak or squeal, clean with hydraulic brake fluid or an approved cleaning fluid. Replace belts that are severely worn or frayed.

https://truckmanualshub.com/

RIB CRACKING

An in-service poly V-belt will go through several phases of cracking during its life. After an extended time in service, minor rib cracks may appear, usually one or two cracks per inch. This cracking is normal.

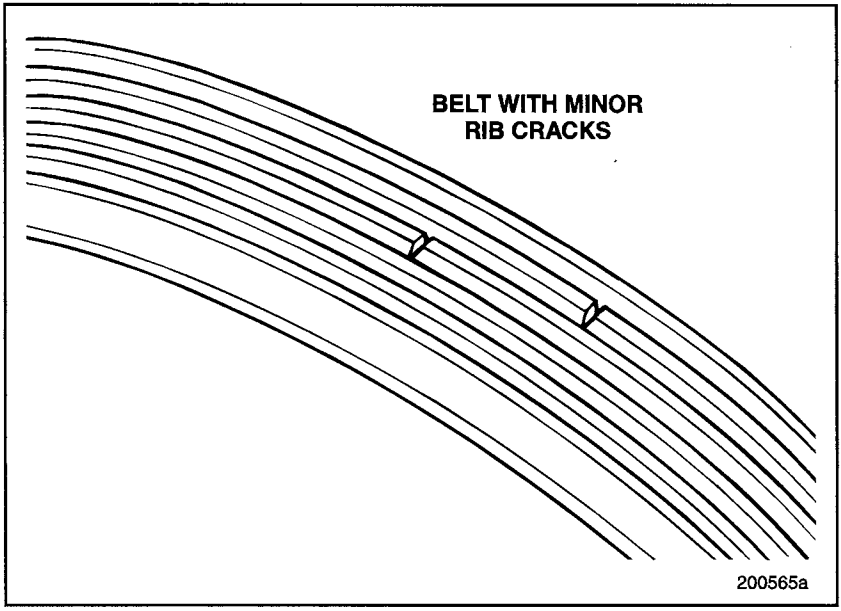

Figure 12 — Belt with Minor Rib Cracks

https://truckmanualshub.com/

Belts should not be replaced unless the ribs exhibit severe multiple cracking as shown below. Multiple cracking will lead to rib chunking.

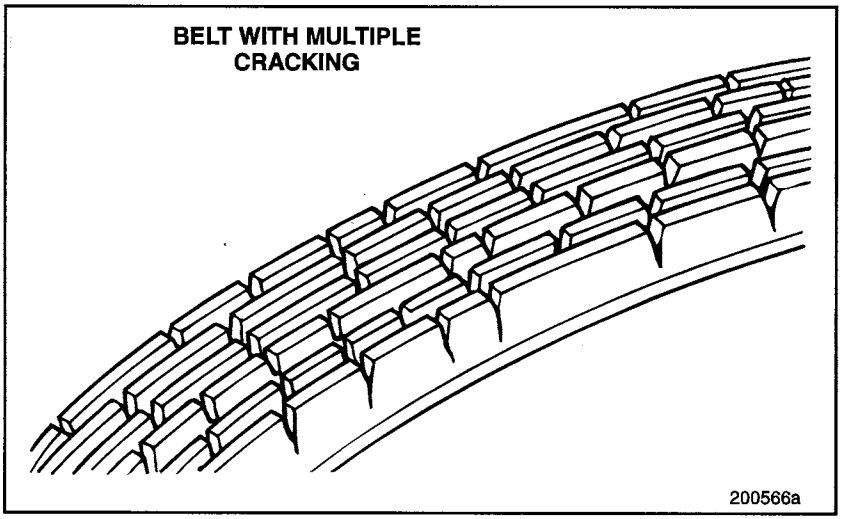

Figure 13 — Belt with Multiple Cracking

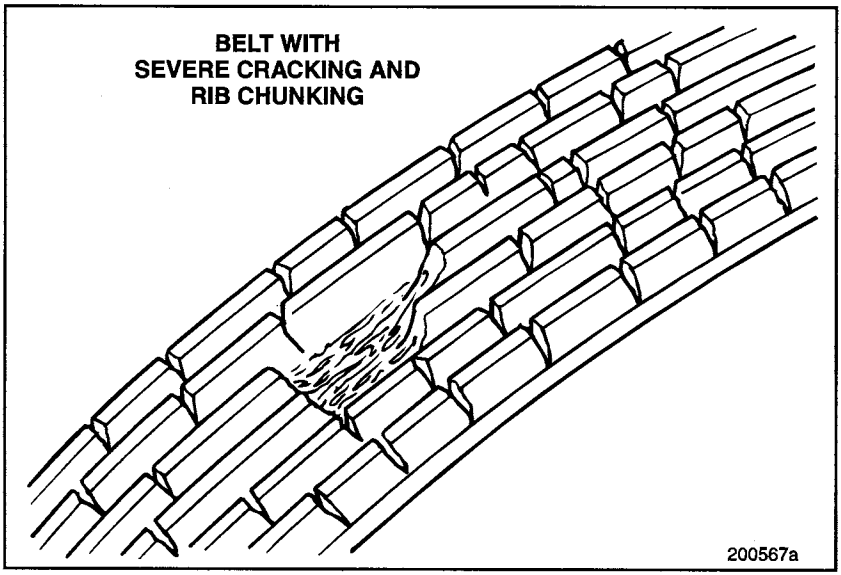

Figure 14 — Belt with Severe Cracking and Rib Chunking

https://truckmanualshub.com/

RIB SIDEWALL GLAZING

When the belt ribs appear to have a shiny surface that is hard and brittle, it is usually an indication of belt slippage. This is attributed to inadequate tension and/or extreme temperature. Both these conditions will lead to severe cracking and belt failure, often with little advance warning. If this occurs, locate the cause and correct before installing a new belt.

https://truckmanualshub.com/

BELT WEAR

Accelerated wear on any part of the belt (fabric backing, tensile cord or rib rubber) is a concern and should be investigated for cause, and corrected before installing a new belt.

POSSIBLE CAUSES OF ACCELERATED BELT WEAR

- Drive Misalignment — Belt performance will be adversely affected when misalignment exceeds 1/16 inch for each 12 inches of belt span.
- Belt Length — Must be correct.
- Environmental Conditions — Temperature, exposure to engine fluids, etc.
- Abrasive Materials — Small stones, metal shavings, etc.

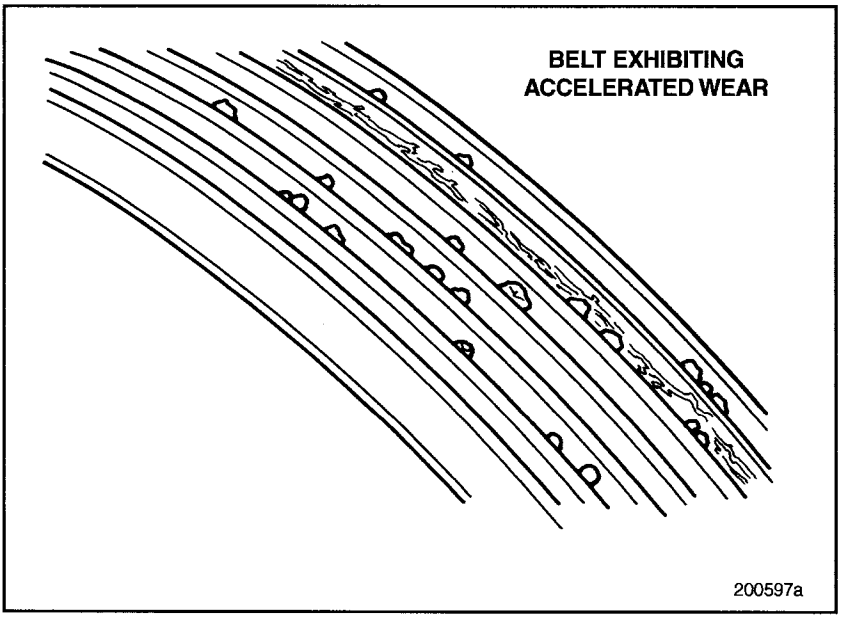

Figure 15 — Belt Exhibiting Accelerated Wear

https://truckmanualshub.com/

FOREIGN OBJECTS

Any object protruding in the path of the belt drive and contacting the belt will cause damage, and eventual failure. Locate the object before installing a new belt. (See Figure 16.)

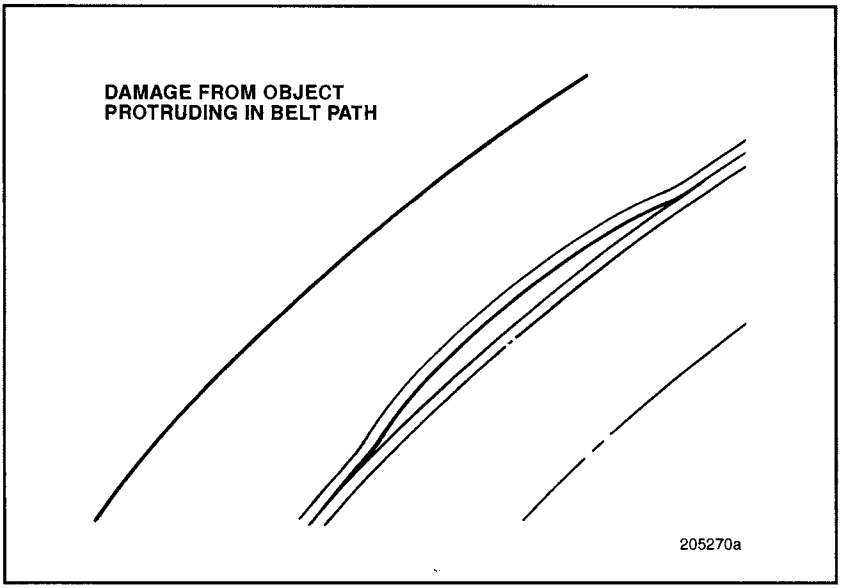

Figure 16 — Damage from Object Protruding in Belt Path

NOISE, VIBRATION AND HARSHNESS (NVH)

Poly V-belt drive systems were designed to prevent Noise, Vibration and Harshness (NVH) problems. Field problems, however, which may be related to NVH causes occasionally occur.

POSSIBLE CAUSES:

Insufficient belt tension may create a high-pitched howl (squeal) or rasping sound during engine acceleration or deceleration.

https://truckmanualshub.com/

Misalignment may cause a chirping noise, especially at, or near idle speed. Rigid bracketing of accessories is a must for reasonably vibration-free belt spans. Some span vibration is to be expected during the range of engine speed and accessory loading.

WARNING

Failure to follow recommended application information and recommended procedures for installation, care maintenance and storage of belts may result in failure to perform properly and may result in damage to property and serious bodily injury. Make sure the belt selected for any application is recommended for that service.

Installation

When identical belts are used on the same drive, they must be replaced as matched sets. Install belts (either manual or automatic tensioning systems) as follows:

- **Manual Tensioning System** — shorten the distance between pulley centers and place the belt over the pulleys without using any force. Do not pry the belt over the pulleys.
- **Automatic Tensioning System** — swing the tensioner to the full sprung position (by rotating the tensioner clockwise), then place the belt over the pulleys. Slowly return the automatic tensioner back to its original position. Do not allow the tensioner to snap against its stops.

https://truckmanualshub.com/

TENSIONING

MANUAL TENSIONING

1. To properly tension a poly V-belt, a belt tensioning gauge, such as Kent-Moore 41251-B or equivalent, is required.

NOTE

When installing new belts, adjust initial tension to 260–280 lbs. (116–125 daN).

2. Check at the center of the longest span, and chalk-mark the point checked.
3. Run the engine approximately 5 to 10 minutes, then recheck at the same point on the belt. If tension drops below 200 lbs. (89 daN), readjust tension to 260–280 lbs. (116–125 daN).

   For belts already in service, adjust the tension to 220–240 lbs. (98–107 daN) when tension drops to 150 lbs. (68 daN).

AUTOMATIC TENSIONING

On chassis having an automatic tensioner, no manual adjustment is required.

https://truckmanualshub.com/

COOLING SYSTEM

WARNING

When removing the radiator cap, shut the engine off and allow to cool. To avoid injury, turn the cap counterclockwise to the first stop, but do not depress. After the pressure has completely dissipated, press the cap downward and continue turning to remove.

NOTE

Change the coolant every two years or 200,000 miles/ 320 000 km, whichever comes first. On chassis having the plastic surge tank/recovery bottle assembly (i.e. CH and RD), do not attempt to refill the cooling system through the recovery bottle. Fill the system through the surge tank, then add make-up coolant to the recovery bottle.

Radiator Pressure Cap

At every C and D inspection interval, check the condition of the radiator cap gasket, and, using a suitable cooling system and radiator cap tester, pressure-test the cap. MACK engines currently use a 10-lb. pressure cap.

Thermostat

Check thermostat operation, particularly during cold weather, to make sure it closes fully, does not allow any leakage and does not open too soon. The thermostat seal should also be checked for leakage. Coolant leaking past the thermostat will cause overcooling.

https://truckmanualshub.com/

Coolant Conditioning

Proper coolant conditioning must be maintained in a diesel engine to provide maximum engine block and cylinder sleeve protection. Engine coolant must contain a proper mixture of water, recommended antifreeze and supplemental coolant additives (SCAs), so that maximum freeze and boil point protection, and protection against cavitation erosion and corrosion is provided. An antifreeze mix in the range between 40% to 60% is required to provide freeze and boiling point protection. A nitrite level between 1200–4000 ppm (parts per million) and a pH level between 8.5–10.5 must be maintained by the SCAs to prevent pitting and erosion of the cylinder sleeves. Additionally, proper levels of SCAs are necessary to prevent corrosion, sludge and/or scale build-up in the cooling system.

NOTE

MACK diesel engines no longer use a spin-on coolant conditioner canister. Chassis are now factory filled with pre-charged coolant, then coolant is maintained by adding supplemental coolant additives at the regular oil change intervals. Each MACK oil filter service kit contains two packets of supplemental coolant additive. These packets, which contain the SCAs in powder form in a dissolvable plastic bag, are added to the cooling system through either the surge tank or directly into the radiator. Envelopes containing two SCA packets are also available through your MACK dealer.

NOTE

The standard factory-fill coolant is a pre-charged, ethylene glycol based product. The color of this coolant is fuchsia (a pinkish/purplish shade), or some variation depending upon mixture. This factory-filled coolant is compatible with all other MACK-approved ethylene glycol coolants.

https://truckmanualshub.com/

Coolant Test Strips

To ensure the coolant is being properly maintained (neither overcharged nor undercharged), coolant test strips (part No. 9953-354102) are available through your MACK dealer. These strips are sold in packages of 50, and include instruction for their use, along with color charts for determining test results.

⚠ CAUTION

Always check coolant nitrite level with a test strip prior to adding antifreeze/water solution to the cooling system, and also before adding the SCA packets. *Use MACK approved coolants. It is the* ***vehicle owner's responsibility*** *to understand the coolant manufacturer's recommendations and use the proper coolants. Under-concentration of SCAs will result in cavitation erosion, pitting and eventual engine failure. Over-concentration may lead to sludge build-up in the cooling system. Additionally, an incorrect pH level will lead to general corrosion of solder, aluminum, copper and iron materials in the cooling system. If the level of SCAs in the coolant is outside the recommended ranges (1200–1400 ppm nitrite level and 8.5–10.5 pH level), drain the system, refill with fresh coolant and add two SCA packets.*

Supplemental Coolant Additive Packets

NOTE

When adding the SCA packets into the plastic surge tank, it may be necessary to use a suction pump (or similar type of device) to remove some coolant to provide room for the packets. Add the excess coolant into the recovery bottle.

https://truckmanualshub.com/

⚠ WARNING

Do NOT open the bag containing the plastic SCA packets until ready to use. Do NOT open the plastic SCA packets. Place the entire sealed plastic packet into the cooling system.

⚠ WARNING

Avoid injury by allowing the cooling system to cool before removing the pressure cap. When removing the pressure cap, shut the engine off. Turn the cap to the first stop, but do not depress. Allow any residual pressure to dissipate. After pressure completely dissipates, press the cap downward and continue turning to remove.

Add the SCA packets to the cooling system as follows:

- On CX, CH and RD6 model chassis, add the SCA packets into the plastic surge tank. The surge tank is the pressurized top tank of the surge tank/recovery bottle arrangement. (The recovery bottle does not have a pressure cap. Refer to the illustration below:)

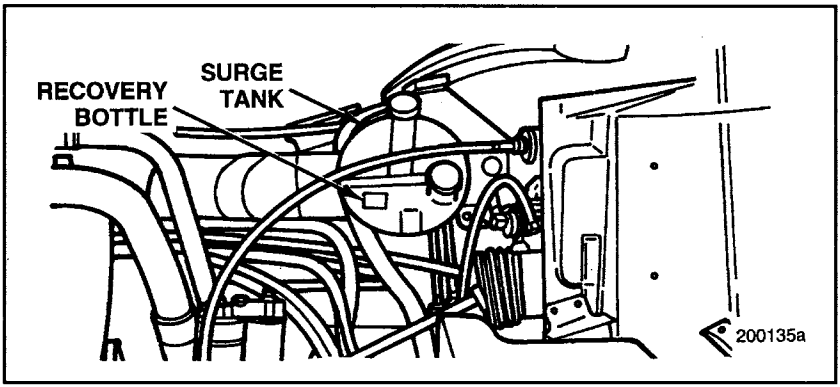

https://truckmanualshub.com/

- On CL, RD8 RB, DM and DMM models, add the SCA packets directly into the radiator.

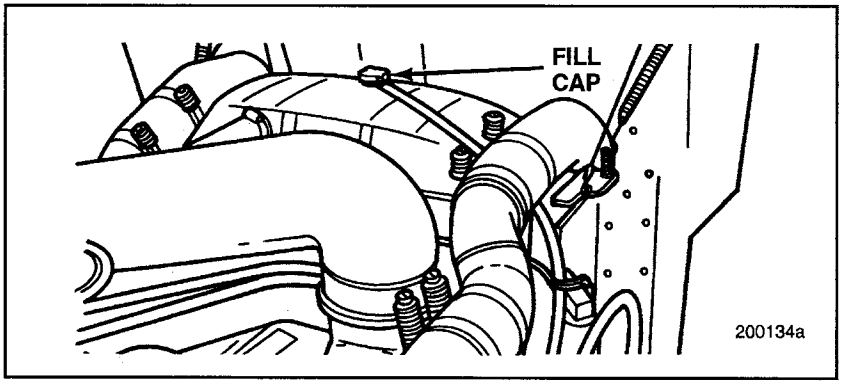

- On LE and MR models, add the SCA packets into the pressurized surge tank which is located behind the cab on the left-hand side of the chassis, mounted above the air cleaner. (Refer to the illustration below:)

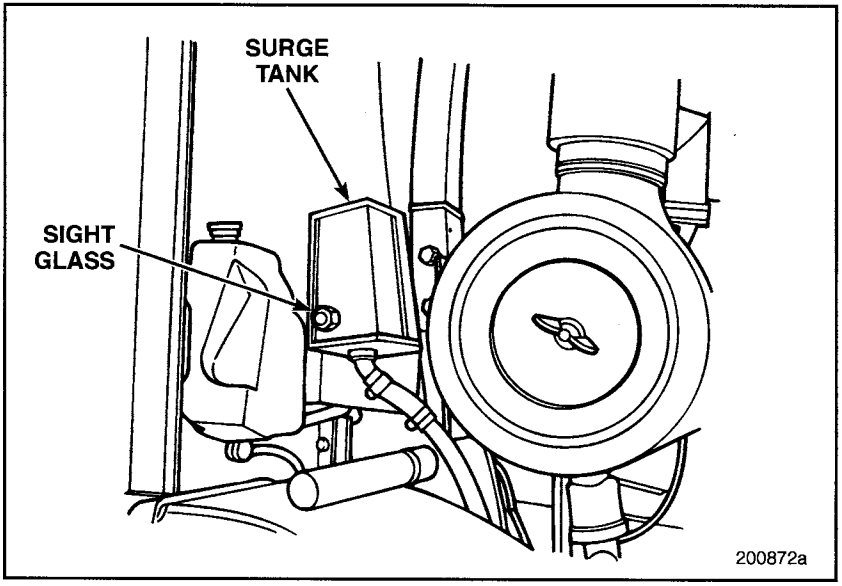

https://truckmanualshub.com/

Cooling System Corrosion

Remove the radiator pressure cap and check inside the radiator for corrosion which may be found around the tube ends. On those radiators that do not have a radiator cap, a limited view of the inside of the radiator may be gained by removing the radiator top tank inspection plate, or by removing one of the radiator inlet fittings. If the radiator is restricted with solder bloom, add one gallon (3.8 liters) of Nalprep 2001 to the cooling system and operate the vehicle for approximately 25,000 miles (40 000 km). After 25,000 miles (40 000 km), drain and flush the cooling system. Refill the system with fresh coolant, then add SCA packets. DO NOT add additional inhibitors. If the engine is equipped with a spin-on coolant conditioner canister, replace with a MACK canister.

Safety Precautions for Viscous Fans

WARNING

Misuse, misapplication or modification of radiator cooling fans can result in serious personal injury and property damage. Basic safety precautions, including the following, should always be followed.

1. DO NOT operate the engine with a defective viscous fan drive, or with a fan which has been bent, mutilated, modified, or damaged. Continued operation could result in serious failure resulting in injury or property damage.
2. If there is evidence of fan drive malfunction or exterior damage to the drive or fan, remove and replace both items. Field repair involving disassembly of the viscous fan drive can be dangerous and is not recommended. Contact your nearest MACK distributor.
3. Replace the fan if there appears to be any indication of corrosion or erosion of the fan.
4. Never attempt to restrict fan blade rotation during engine operation. Serious personal injury, property damage, or damage to the fan drive could result.

https://truckmanualshub.com/

5. DO NOT operate the engine if the fan strikes against any engine component while in operation.
6. Never operate a viscous fan with a closed winterfront. The winterfront center panel must be kept fully open. Do not use cardboard or other similar improvised restrictions.

NOTE

In extremely cold ambient temperatures, consider installing an On/Off fan clutch, rather than using a viscous fan drive. **Refer to Cold Weather Operation Section.**

7. Have the fan inspected by a qualified mechanic if it has been exposed to excessively high temperatures (about 250°F [121°C]), and it contains any plastic or rubber components.
8. DO NOT rebalance the fan. If balancing is necessary, contact your nearest MACK dealer.
9. Perform all required maintenance on the subassembly to which the fan is attached.
10. Ensure that all bolts attaching the fan are tightened to the specified torque.
11. Install the fan only on an engine which has been approved for such fan. (Check the engine manufacturer's part list.) Likewise, install a subassembly to which the fan is attached only if approved or specified for use on the engine.
12. Install the fan so the word "front" stamped on the fan, faces the radiator.
13. DO NOT modify or substitute any parts of the engine unless in accordance with the engine manufacturer's instructions. Take special care not to make modifications which will increase the operating speed of the fan.

https://truckmanualshub.com/

COLD WEATHER OPERATION

Cold weather operations place added demands on a diesel engine. Heavy-duty diesel engines are designed to operate at optimum efficiency when running loaded at, or very near, normal operating temperature where efficient combustion takes place. When operating unloaded, lightly loaded (stop-and-go operations, PTO operations or periods of extended engine idling), or in cold weather conditions, normal operating temperature may not be achieved or maintained. As a result, carbon and/or varnish build-up on the valves may occur, engine oil may become contaminated with combustion by-products and "slobbering" from the exhaust may become evident. In severe instances, heavy deposits of varnish can cause sticking valves which can result in bent valves, bent push rods or similar types of valve train component failure.

When starting a cold engine, or if the vehicle has been parked and the engine coolant has fallen well below normal operating temperature, a fast idle speed of approximately 1200 rpm should be maintained for a quicker engine warm-up.

NOTE

If the vehicle is kept outside during cold temperatures, and cold weather start-up and warm-up to normal operating temperature is difficult, a cylinder block heater is recommended.

During cold weather operations, it is important that coolant system maintenance be performed regularly, and that thermostat operation be checked to make sure it closes fully, does not allow any leakage and does not open too soon. The thermostat seal should also be checked for leakage. Coolant leaking past the thermostat will cause over-cooling.

https://truckmanualshub.com/

Cold Weather Accessories

Cold weather operations place an added demand on a diesel engine. The following chart outlines the various accessories available that are designed to maximize engine reliability when operating in cold weather:

Component	CH	CL	RD6	RD8	RB	DM	DMM	MR	LE
On-Off Fan Drive	X	X	X(1)	X	NA	NA	NA	NA	NA
Shutters	X(2)	X(3)	X(1)	X	X	X	X	X(4)	NA
Dual-Inlet Air Cleaner	X	X	NA	NA	NA	NA	NA	NA	NA
Inside/ Outside Air	NA	NA	X	X	X	X	X	NA	NA
Engine Heater	X	X	X	X	X	X	X	X	X
Fuel Heater	X	X	X	X	X	X	X	X	X
Winterfront	X	X	X	X	X	X	X	X	

(1) Not available on Western Contractor.

(2) Not available with Horton On-Off Fan Drive.

(3) Not available with On-Off Fan Drives.

(4) Not available with Front Engine Power Take-Off.

https://truckmanualshub.com/

WINTERFRONTS/SHUTTERS

Winterfronts or shutters are a major benefit in maintaining the minimum required engine coolant temperature when the ambient temperature drops below freezing. The winterfront or shutters reduce the amount of cold "ram" air through the grille, which can overcool the engine and not allow minimum engine coolant temperature to be achieved and maintained.

If the engine is operated below minimum operating temperature, valve varnishing from incomplete combustion by-products (incompletely burned/unburned fuel and oil) can result. Valve varnishing can cause the valves to stick in the valve guides and may cause bent push rods when the engine is restarted after a shutdown.

If a winterfront is used, a MACK approved pyrometer MUST also be installed and closely monitored while the engine is in operation. DO NOT exceed the temperature limit shown on the pyrometer. If exhaust temperature becomes too high, open the winterfront, downshift or reduce engine power.

⚠ CAUTION

Use only a MACK approved winterfront designed for the specific chassis. Restricted airflow through the charge air cooler can cause higher exhaust temperatures, power loss, excessive fan usage, reduced fuel economy, and possible engine damage. The use of any other type of device, such as a radiator cover, cardboard or similar material, is not approved by Mack Trucks, Inc.

https://truckmanualshub.com/

The MACK approved winterfront employs a closure panel(s) which may be secured in either the fully opened or fully closed position. When ambient temperatures are within the 20°F (–7°C) to –10°F (–23°C) range, the panel(s) must be kept opened. For operation in colder temperatures, –10°F (–23°C) to –40°F (–40°C), the panel(s) should be closed to completely cover the grille.

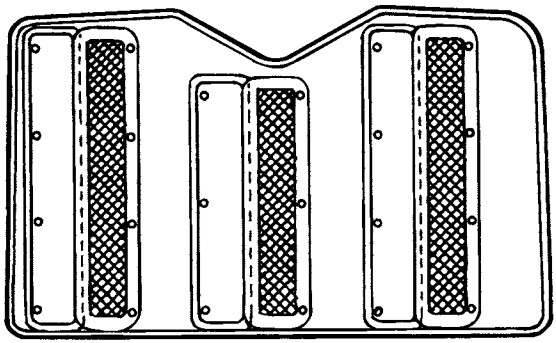

619171a

Figure 17 — Winterfront

NOTE

Winterfront shown in illustration above is for the CX model chassis. Winterfronts for other chassis will look different.

https://truckmanualshub.com/

ENGINE ENCLOSURE/BELLY TARP

A belly tarp is a canvas enclosure that is installed along the bottom of the engine and helps retain heat within the engine compartment. Belly tarps are generally used at colder ambient temperatures when a winterfront alone is not sufficient and may be fabricated from a piece of canvas of sufficient size to completely cover the underside of the engine compartment. The canvas tarp is then secured to the chassis with rubber straps, or "Bungie Cords." Make sure that the tarp does not obstruct the engine breather, interfere with any linkages or contact any part of the exhaust system.

DUAL-INLET AIR CLEANER

Some CH and CL model chassis may be equipped with an optional dual-inlet air cleaner. This type of air cleaner has a second air inlet located above the turbocharger/exhaust pipe to provide a means of heating the intake air during cold weather operations. The air inlet is covered with a manually operated sliding door. When operating in cold weather, loosen the four wing nuts that secure the door, then slide the door to the opened position. Secure the sliding door in the opened position by tightening the wing nuts. Refer to the chart at the end of this section for the suggested temperature ranges as to when the air cleaner sliding door should be closed, and when it should be opened.

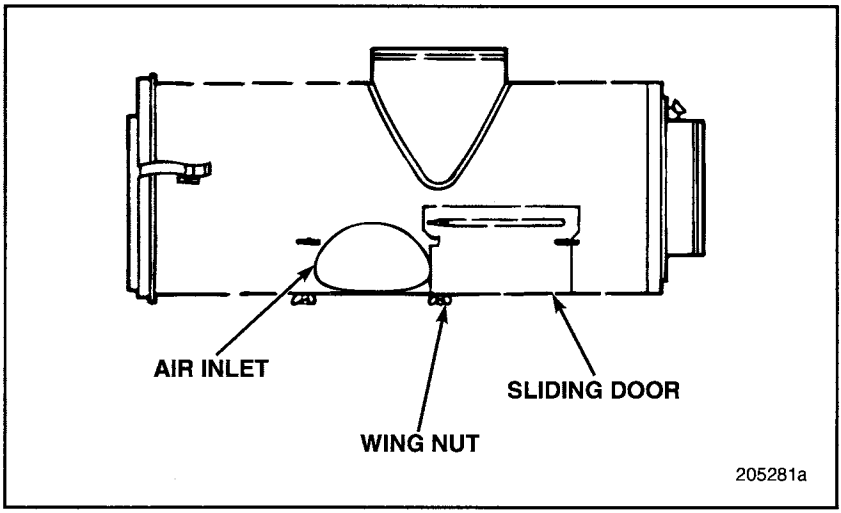

Figure 18 — Dual-Inlet Air Cleaner

https://truckmanualshub.com/

ON/OFF FAN CLUTCH

An ON/OFF fan clutch can help prevent excessive cooling during extremely cold weather operations. Whereas viscous fans often rotate continuously during cold weather, an ON/OFF fan clutch engages only when required by engine coolant temperature, thus reducing unnecessary air movement and helping maintain adequate engine operating temperatures.

COLD-WEATHER ACCESSORY USAGE

Refer to the following chart for the suggested temperature ranges when the various cold-weather accessories should be used.

Expected Coldest Temperature	MACK Approved Winterfront or Shutters	Belly Tarp	On/Off Fan	Inside/ Outside Air Dual-Inlet Air Cleaner
40°F (5°C)	Prohibited	Prohibited	Available	Available
32°F (0°C)	Suggested (Center Panel(s) Fully Opened)	Available		
20°F (–7°C)			Suggested	Suggested (Opened)
10°F (–12°C)				
0°F (–18°C)		Suggested	Recommended	Recommended (Opened)
–10°F (–23°C)	Recommended (Center Panel(s) Fully Closed)			
–20°F (–29°C)		Recommended		
–30°F (–35°C)				
–40°F (–40°C)				

https://truckmanualshub.com/

HOSE CLAMP TORQUES	Lb-in (N•m)
Coolant System	25–30 (2.8–3.4)
Oil Return System	25–30 (2.8–3.4)
Air Inlet System:	
Pressurized hoses*	
• Standard hose clamps (Figure 1)	35–40 (3.9–4.5)
• Spring-loaded T-bolt hose clamps (Figure 2)	45–55 (4.5–6.2)
• High-torque heavy-duty worm clamps (Figure 3)	70–90 (7.9–10.2)
Non-pressurized hoses**	19–21 (2.1–2.4)

* Includes all clamps installed between the turbocharger outlet and the inlet manifold or intercooler header, inlet manifold connecting hose (if used), and tip turbine fan bleed air hose.

** Includes all hoses between the air cleaner and the turbocharger inlet or inlet manifold.

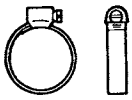

FIGURE 1
STANDARD
HOSE CLAMP

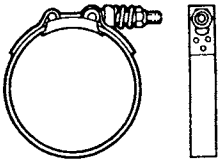

FIGURE 2
SPRING LOADED
T-BOLT CLAMP

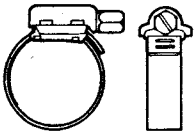

FIGURE 3
EXTRA HEAVY DUTY
HOSE CLAMP

000087a

Figure 19 — Hose Clamp Types

https://truckmanualshub.com/

AIR CONDITIONER MAINTENANCE

Periodic Inspections

To ensure proper air conditioner operation, the following procedures should be performed at each A, B, C and D inspection interval.

1. Inspect evaporator coil (and heater coil if a combination unit) for obstructions, and use compressed air to remove any debris that may be found.

⚠ CAUTION

Use care to prevent damaging the blower wheel blades.

2. Inspect condenser unit and remove any debris with compressed air. Tighten any loose fasteners.
3. Inspect the compressor. Check for loose or broken wires, and tighten nuts and bolts on compressor mounting bracket and clutch.
4. Check compressor drive belt tension and adjust if necessary.
5. Inspect refrigerant hoses for abrasion or wear, and check all connections for leaks.
6. Check condensation drain hose leading from the evaporator and make sure it is not kinked or otherwise restricted.
7. Start the engine, turn the air conditioner ON and listen for any unusual noise coming from the compressor. The compressor clutch should rotate when the thermostatic switch is turned ON, and should not rotate when the switch is turned OFF.
8. Check the receiver/dryer service indicator. The normal color of the service indicator is blue. Replace the receiver/dryer when the service indicator color changes to pink. Refer to the service instruction label found on the receiver/dryer.
9. Determine if system is fully charged. Refer to Air Conditioning Service literature for proper procedures.
10. Check for proper blower speed control.

https://truckmanualshub.com/

11. Determine satisfactory air conditioner performance by measuring the air temperature at the vent nearest to the evaporator. Acceptable air temperature at this location is a thermometer reading below 40°F (4.4°C) with ambient air temperature around 70°F (21°C).

Off-Season Maintenance

During the off-season when the air conditioner is not being used, the system should be operated at least once a week for 3–5 minutes so the bearings and seals in the compressor will remain lubricated. Make sure the engine is at normal operating temperature, and the cab is heated to at least 70°F (21°C) before performing this procedure.

NOTE

For specific information concerning air conditioning maintenance and service procedures, refer to the manufacturer's service manual.

⚠ CAUTION

Beginning with the 1994 model year, air conditioning systems in certain MACK model chassis were factory filled with the new environmentally safe refrigerant R134a. This refrigerant is not a direct replacement for R12 refrigerant, and must only be used in systems designed for its use. DO NOT use R134a in a system already charged with, or designed to use, R12. Conversely, DO NOT use R12 in a system already charged with, or designed to use, R134a.

https://truckmanualshub.com/

AIR CLEANER MAINTENANCE

The air cleaner prevents dust, dirt and other harmful contaminants from entering the engine through the air intake system. Maximum engine protection can only be achieved through regularly scheduled maintenance practices that include periodic air intake system inspections and air filter element changes.

The most efficient method of determining air filter element change intervals is by regularly checking the air filter restriction gauge, which may either be mounted directly to the air cleaner canister, on the air cleaner outlet tube in the case of LE or MR model chassis or inside the cab. The restriction gauge measures the amount of restriction in the air filter element. Some chassis may have a dash-mounted dial-type restriction gauge which measures filter restriction in inches/mm of water.

Change the air filter element in accordance with the procedures as outlined on "AIR CLEANER MAINTENANCE" on page 102 when the restriction gauge red signal locks in full view, or the dash-mounted gauge indicates inlet restriction as follows:

DASH-MOUNTED GAUGE INLET RESTRICTION INDICATION

Engine	Inches/mm of Water
E-Tech™	20"/510 mm
Cummins ISC	25"/635 mm

200248c

https://truckmanualshub.com/

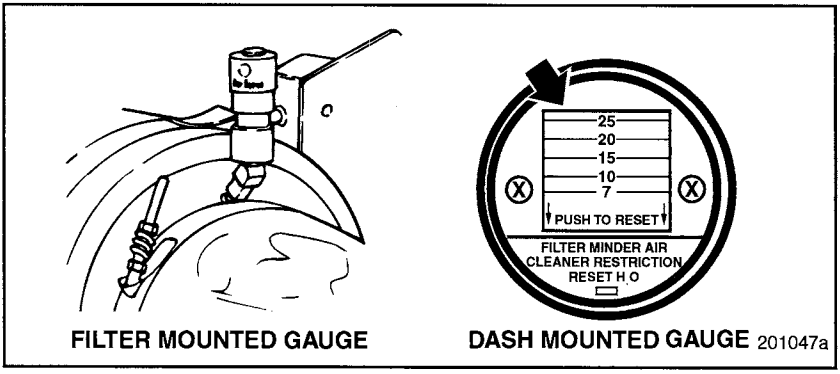

Figure 20 — Air Filter Restriction Gauge

Damage to the air filter element, such as holes in the filter medium, will give an inaccurate restriction reading. Therefore, even if maximum restriction is not indicated, the air filter element should be changed yearly or at 100,000 mile (160 000 km) intervals, whichever comes first.

To properly install a new filter element:

1. Wipe the air cleaner housing clean.
2. Remove the filter element(s).
3. Inspect sealing areas for “dirt tracks” which would indicate that dust has leaked past the seal. If dirt tracks are found, the cause must be determined and corrected.
4. Thoroughly clean the inside of the air cleaner canister with a damp cloth or vacuum cleaner.

https://truckmanualshub.com/

5. If equipped with a metal canister, inspect inside the canister for rust. If rust is present:
   a. Remove the air cleaner canister from the chassis.
   b. Remove all loose rust with a wire brush or a coarse Scotch Brite® pad.
   c. Thoroughly wash the area with PPG DX-440®, or equivalent, wax and grease remover.
   d. Etch and prepare with PPG Metal Prep 79 (DX-579)®, or equivalent.
   e. Rinse with water and dry thoroughly.
   f. Treat the area with undiluted Galvaprep SG DX-520®, or equivalent.
   g. Rinse with water and dry thoroughly.
   h. Paint with PPG DP40/401®, or equivalent.
   i. Reinstall the air cleaner canister.
6. Inspect the sealing areas of the housing for damage. Repair or replace as necessary.
7. Use MACK approved replacement elements and gaskets. Make sure the new elements and gaskets are not damaged. Be sure to use new gaskets each time the element is changed. Install the cover and, depending upon cover configuration, hand tighten the large wing nut in the center of the cover or evenly torque the cover retaining nuts between 8–10 lb-ft (11–14 N•m).

NOTE

DO NOT attempt to clean the air filter element with compressed air, as this could damage the filter medium and possibly result in severe engine damage.

https://truckmanualshub.com/

FOR BEST RESULTS...

USE GENUINE

REPLACEMENT PARTS AND FILTERS

000111a

Figure 21 — Replacement Parts and Filters

https://truckmanualshub.com/

TURBOCHARGERS

Turbochargers are lubricated by oil from the engine. Scheduled engine oil changes take care of any periodic service requirements.

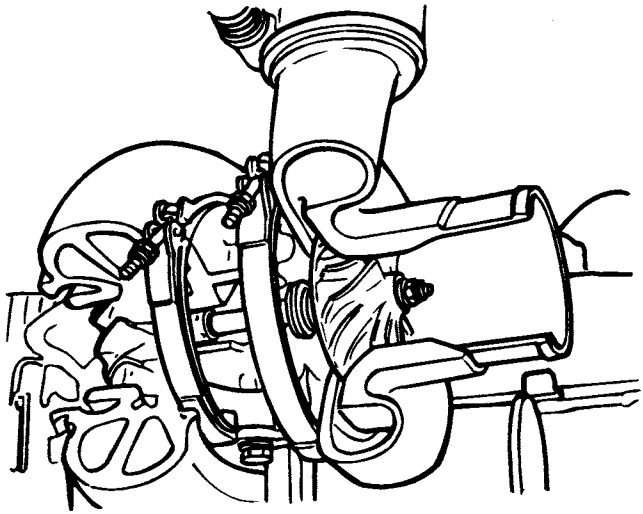

TURBOCHARGER 201048a

Figure 22 — Turbocharger

Because a turbocharger operates at such high speeds, lubrication at start-up and shutdown is of primary importance.

When the engine is started, idle for 3 minutes to allow the oil pressure to build. Accelerating the engine to top rpm immediately after starting may damage the turbocharger.

Likewise, when preparing to shut down, idle the engine for 3 minutes to ensure that the turbocharger is rotating slowly. This idling period dissipates heat and prevents possible turbocharger damage.

https://truckmanualshub.com/

At each 150,000 miles/240 000 km or 4500 hour interval (whichever occurs first), thoroughly clean the outside of the turbocharger. Pay particular attention to the areas of the large intake and exhaust pipe connections. Remove the air intake and exhaust pipes from the turbocharger.

⚠ CAUTION

Prior to inspecting the turbocharger, disconnect the negative battery cable so engine cranking cannot take place.

⚠ CAUTION

DO NOT allow any debris or foreign material to enter the turbocharger openings or connecting pipes.

Inspect both housings and the wheel blades for signs of excessive dirt buildup or oil leakage from the bearing housing. Turn the wheel blades with the fingers while pushing in various directions to check for wheel-to-housing rub. If rubbing or a severe buildup of dirt exists, replace the turbocharger.

After completing the inspection, reinstall the air intake and exhaust pipes.

https://truckmanualshub.com/

CMCAC

The Chassis Mounted Charge Air Cooling (CMCAC) system requires the following maintenance procedures at the recommended intervals.

Daily Maintenance

Using a firm bristle brush and soapy water, remove all bugs, leaves, and other debris from the frontal area.

EVERY A, B, C AND D INSPECTION

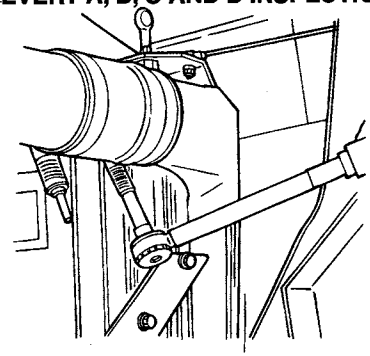

TORQUING HOSE CLAMPS

CHECK ALL AIR DUCTS AND GASKET CONNECTIONS. TORQUE HOSE CLAMPS TO 40–55 LB-IN (4.5–6.2 N•m).

EVERY C AND D INSPECTION

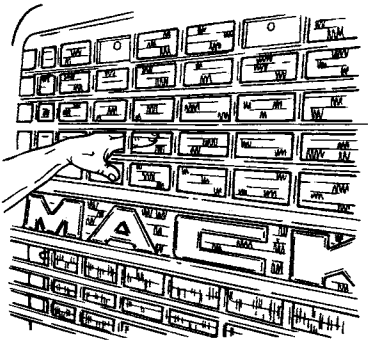

CHECKING CORE FINS

CHECK CORE FINS FOR EXTERNAL DAMAGE, DEBRIS, OR SALT CORROSION. USE A FIRM BRISTLE BRUSH TO REMOVE CORROSION AND COMPRESSED AIR TO CLEAN DEBRIS FROM THE CORE. 201049a

Figure 23 — Charge Air Cooler Maintenance

https://truckmanualshub.com/

EVERY C AND D INSPECTION

EVERY C AND D INSPECTION

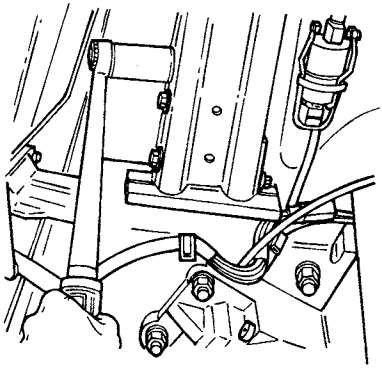

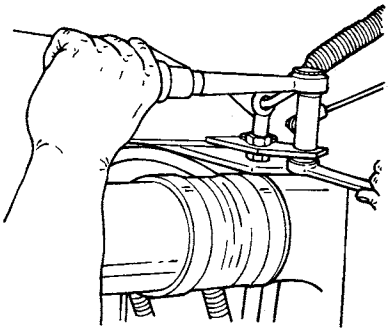

TORQUING CHARGE AIR COOLER MOUNTS

CHECK WELDS JOINING SIDE TANKS TO CORE FOR CRACKS AND MOUNTING BRACKETS FOR SECURITY AND CONDITION. TORQUE THE MOUNTS TO 30 LB-FT (41 N•m).

201050a

Figure 24 — Charge Air Cooler Maintenance

https://truckmanualshub.com/

FUEL SYSTEM

Fuel Filters

At each specified oil and filter change interval, change both the primary and secondary fuel filters. The primary filter on a MACK engine is red and the secondary filter is green. They are NOT interchangeable.

With the more stringent fuel filtration requirements for MACK E-Tech™engines, the fuel filters are NOT interchangeable with those used on E7 engines. Additionally, E-Tech™ fuel filters use METRIC mounting threads. To prevent confusion, E-Tech™ fuel filters are identified by two black 1/4-inch bands around the filters' mid-section.

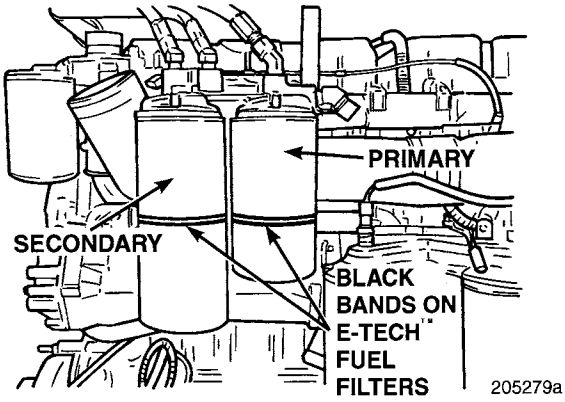

Figure 25 — Fuel Filters

NOTE

Because of ice buildup in the fuel system or fuel waxing which can clog fuel filters, it may be necessary to reduce the time or mileage interval between fuel filter changes during extremely cold weather.

https://truckmanualshub.com/

To install a new filter:

1. Thoroughly wash the area around the fuel filter and mounting adaptor mating area with a suitable solvent and blow dry with compressed air.
2. Using tool J 24783, remove the old filters.
3. Apply a thin film of clean engine oil to the sealing gasket of the new filters.

NOTE

General field practice is to prime the fuel filters before installation. This practice can allow dirt to enter the outlet port of the filter if caution is not used. Use filtered fuel only when priming the filter. Prime through the series of small holes on the top of the filter. DO NOT prime the filter through the center hole.

https://truckmanualshub.com/

4. Install the new filters and tighten an additional 3/4 to 1 turn by hand after the gasket contacts the base.

NOTE

Fuel filters used on E-Tech™ engines have metric threaded spuds. Attempting to install standard E7 fuel filters having English threads on an E-Tech™ engine will result in the following:

Primary Filter — The diameters of the filter threads and the threaded spud are close in size. Although the filter can be started on the spud threads using force, the threads will be damaged.

Secondary Filter — The diameter of the filter threads is smaller than the diameter of the threaded spud. Consequently, the filter cannot be installed.

Attempting to install the E-Tech™ filters on an E7 engine having English threaded spuds would not result in damage to the threads as the diameters of the filter threads are large enough to prevent installation of the filters.

⚠ CAUTION

If priming the fuel system on an E-Tech™ engine becomes necessary, the only acceptable method is to use the hand primer pump located at the front right hand side of the engine. DO NOT attempt to prime the fuel system by applying air pressure to the fuel tank or by using an auxiliary pump, as these methods may result in severe engine damage caused by fuel that leaked past the supply pump seal into the crankcase.

5. Start the engine and check for leaks.

https://truckmanualshub.com/

Fuel/Water Separator

Figure 26 — Fuel Water Separator

Water in the fuel system can result in fuel system freeze-ups (in cold weather), decreased fuel lubrication qualities which can result in accelerated wear of fuel system components, rust corrosion of fuel components, bacterial growth and sludge formation which can reduce power and shorten the life of the fuel filters.

NOTE

Water-in-fuel is most critical on Electronic Unit Pump (EUP) engines due to the very close-tolerance fuel control valve inside the unit pump. Water in the fuel will cause rust corrosion, resulting in an EUP malfunction which can only be corrected by replacing the pump(s). Rust corrosion may also cause pitting of the nozzle springs which can result in spring breakage.

https://truckmanualshub.com/

The MACK water/fuel separator removes water from the fuel system. Small droplets of water in the fuel collect on the filter screen inside the separator. As the droplets accumulate, they drop to the bottom of the separator.

To remove the accumulated water from the separator, loosen the drain plug. Allow the water to drain from the fuel/water separator. When fuel begins to drain from the separator, tighten the drain plug.

NOTE

DO NOT drain the separator while the engine is running.

The fuel/water separator should be drained daily.

The separator element should be replaced at each oil and filter change interval.

https://truckmanualshub.com/

Fuel Injector Nozzle Maintenance

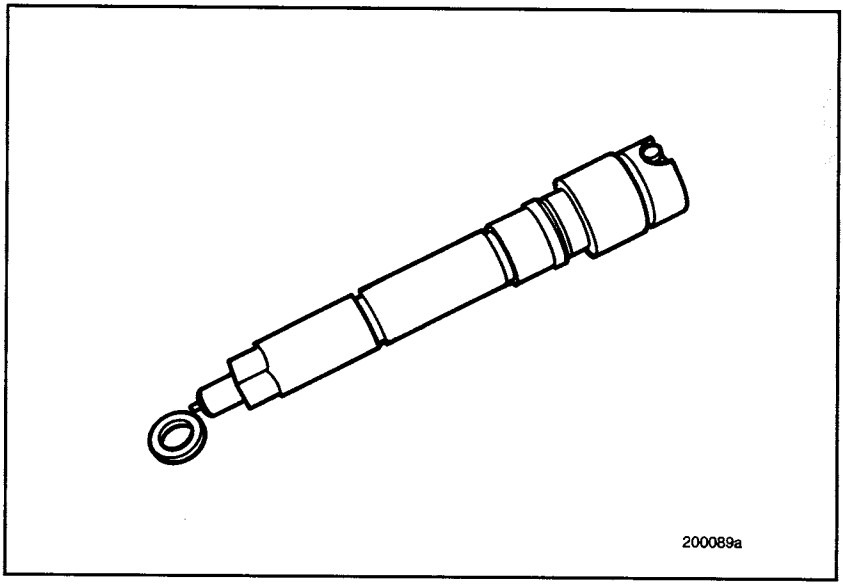

Figure 27 — Fuel Injector Nozzle

At each 150,000 mile/240 000 km or 4500 hour interval (whichever occurs first), remove the injectors from the engine and test the spray pattern and opening pressures. Clean, adjust, repair, or replace as required. When cleaning the nozzles, use only an approved method such as the brass brush, brass wire wheel or ultra-sonic methods as described in the engine tune-up manual. Other types of cleaning methods, such as using a steel wire wheel, will result in damage to the nozzles. Clean out the nozzle holes in the cylinder head, and always use new gaskets and O-rings when reinstalling the injectors.

https://truckmanualshub.com/

CRANKCASE BREATHER FILTER

The E-Tech™ engine has crankcase breather located on the timing cover. The breather contains a removable filter element that must be cleaned at each D inspection interval.

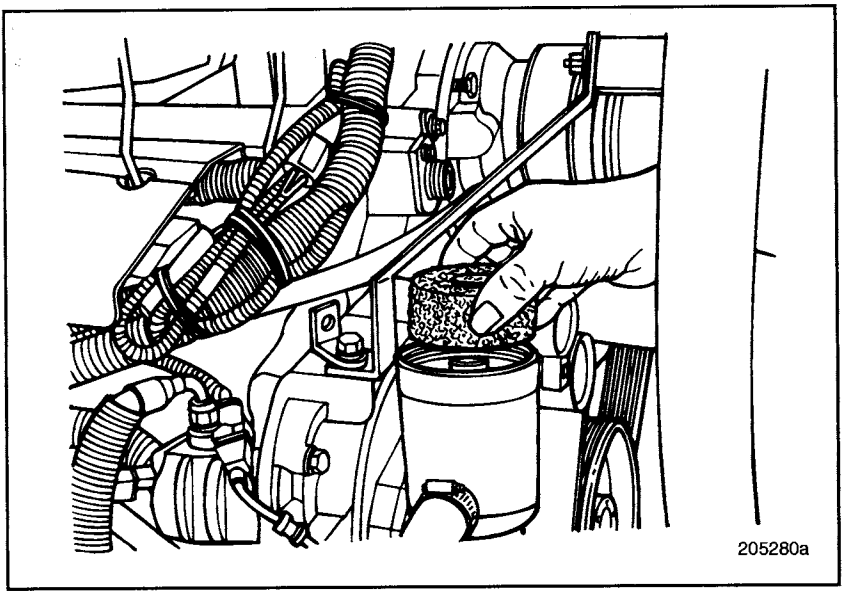

Figure 28 — Crankcase Breather

Clean the filter element as follows:

1. Remove the cover from the top of the canister.
2. Place a thin-blade screwdriver between the outside diameter of the element and the inside wall of the canister.
3. Slide the screwdriver around the inside wall of the canister to break the element free, while exerting upward pressure to remove the element.
4. Wash the filter element in a suitable solvent and blow dry with clean compressed air.
5. Wipe the inside of the canister with a clean cloth.
6. Reinstall the filter element into the canister.
7. Install the canister cover and tighten.

https://truckmanualshub.com/

ELECTRICAL SYSTEM

Batteries

A maintenance-free battery does not require the addition of water for its normal expected life. Typical features include heavy-duty construction and a wrought lead-calcium grid to resist vibration, shock, overcharge, heat and thermal runaway. Nevertheless, these batteries are vulnerable to the ravages of cold weather operation if totally ignored.

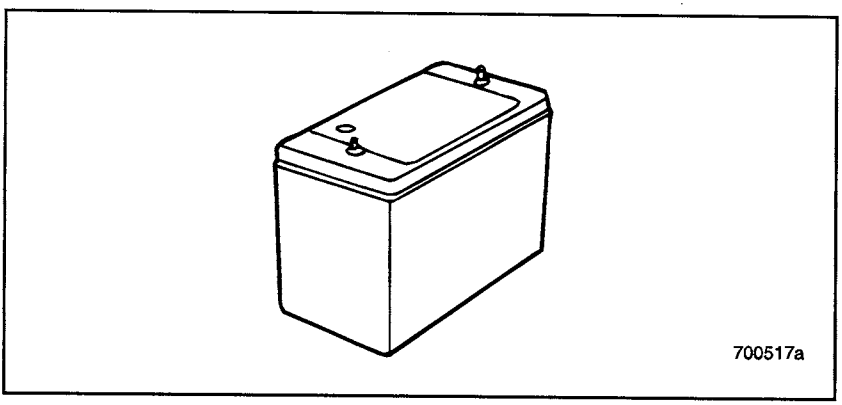

Figure 29 — Battery

Be sure that the batteries used in a particular vehicle are rated for the specified Cold Cranking Amperes (CCAs) necessary to ensure reliable cold weather starts. This is important, since even well-maintained batteries chilled to 0°F (–18°C) may temporarily be capable of providing only 40% of their rated capacity at 80°F (27°C).

Keep the terminals clean to prevent formation of power-robbing corrosion.

In winter, to avoid freezing the electrolyte, the battery must be fully charged. A fully discharged battery will freeze solid at 23°F (–5°C) and possibly sustain permanent damage.

Before the onset of cold weather, be sure to protect this vital component by monitoring its condition as well as inspecting the charging and starting systems.

https://truckmanualshub.com/

Battery Warmer

A battery warmer can be added to raise the temperature of the battery core and facilitate quick starting in cold weather.

Battery Condition

The first procedure when testing a battery is to check for external damage such as a cracked case, loose or corroded terminals, or signs of excessive gassing or overcharging.

A battery must be fully charged before a load test is performed. Test the battery with a hydrometer to determine the level of charge.

On maintenance-free batteries equipped with a built-in hydrometer (eye), the battery condition is interpreted as follows:

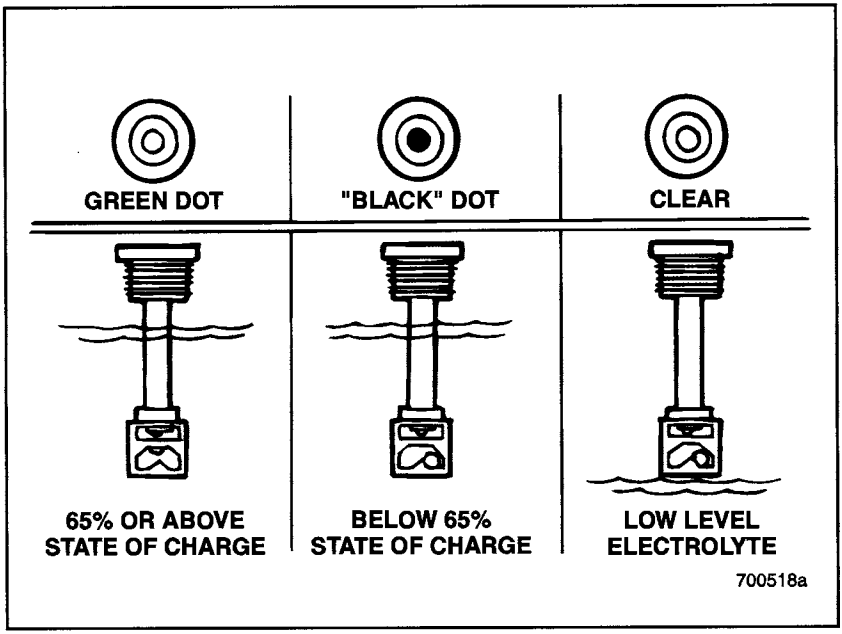

Figure 30 — Battery Condition

https://truckmanualshub.com/

- **Green dot visible** — Any green appearance should be interpreted as a green dot and means that the battery is at or above a 65% state of charge and is ready for use or testing. This does *not* automatically mean that the battery is in good condition.
- **Dark — green dot not visible (black dot)** — This indicates that the battery is below a 65% state of charge and must be charged before testing. A black dot does *not* mean that the battery is automatically bad.
- **Clear or light yellow** — This means that the electrolyte level is below the level of the built-in hydrometer, which may have been caused by tipping of the battery, a cracked case, or overcharging. This battery should be replaced.

https://truckmanualshub.com/

Charging

Charging should be conducted carefully under controlled conditions. Never charge a frozen battery. If a frozen battery is suspected, thaw it in a warm area for several hours before charging.

The following chart shows the normal charging times necessary to reach a full charge at 80°F (26°C). In colder temperatures, the necessary charging time may increase.

Open Circuit Voltage	Battery Specific Gravity*	State of Charge	Charging Time to Full Charge at 80°F**					
			at 60 amps	at 50 amps	at 40 amps	at 30 amps	at 20 amps	at 10 amps
12.6	1.265	100%	Full Charge					
12.4	1.225	75%	15 min.	20 min.	27 min.	35 min.	48 min.	90 min.
12.2	1.190	50%	35 min.	45 min.	55 min.	75 min.	95 min.	180 min.
12.0	1.155	25%	50 min.	65 min.	85 min.	115 min.	145 min.	280 min.
11.8	1.120	0%	65 min.	85 min.	110 min.	150 min.	195 min.	370 min.

* Correct for temperature

** If colder, it will take longer.

https://truckmanualshub.com/

COMPLETELY DISCHARGED BATTERIES

Extremely cold or completely discharged batteries may not initially show a charge since the electrolyte is nearly pure water and, therefore, a poor conductor. As the acid level in the electrolyte increases during charging, the charging current will also increase. Use the following procedure when charging a completely discharged battery:

1. Measure the voltage at the battery terminals. If it is below 10 volts, current will be very low and may not show up on many battery charger ammeters.
2. Set the charger on the high setting.
3. Some chargers have a polarity protection feature which prevents accidental reversal of the charger leads. A completely discharged battery will not have enough voltage to override this feature, making it appear that the battery will not accept a charge. Check the charger manufacturer's instructions on how to bypass this feature.
4. Once the battery starts to accept a charge, the charging rate will rise very rapidly. Carefully monitor the ammeter to prevent too-high a charging rate.
5. Proceed to charge battery at one-tenth of its rated capacity for one-half hour.

   Example: For battery rated at 64 amps, charge at 6.4 amp setting (64A × 1/10 = 6.4A) for one-half hour.

NOTE

Batteries with very low voltage (below 11.6 volts) or those that do not initially accept a charge are not necessarily defective. Batteries that have been discharged for long periods of time may be heavily sulfated or hydrated (containing lead shorts that cause the battery to self-discharge). To accept a charge, batteries with either of these conditions may require a longer charging time or a very high initial charge.

https://truckmanualshub.com/

Use the following chart to determine the time required for the battery to begin accepting a measurable charge. (If the battery has not started to accept a charge after the specified time, it should be replaced.)

Charger Voltage	Hours
16.0 or more	Up to 4
14.0 to 15.9	Up to 8
13.9 or less	Up to 16

Load Test

A battery must be fully charged before performing a load test. To load-test a battery that is fully charged, proceed as follows:

1. Connect a load tester and voltmeter across the battery terminals.
2. Apply a load so that a figure of 300 amps is obtained for 15 seconds to remove the battery surface charge.
3. Wait 60 seconds to let the battery recover and then apply the proper test load to the battery to determine its condition. To get the proper load, use half the cranking performance rating. Read the voltage after 15 seconds. Remember that the minimum voltage varies according to temperature. Consult the following chart for the proper specification. If the battery voltage does not fall below the minimum test voltage after 15 seconds, the battery is acceptable for use.

https://truckmanualshub.com/

Load Test Temperature Correction		
	Temperature	
Minimum Voltage	°F	°C
9.6	70	21
9.5	60	16
9.4	50	10
9.3	40	4
9.1	30	–1
8.9	20	–7
8.7	10	–12
8.5	0	–18

https://truckmanualshub.com/

LUBRICANT CHANGE INTERVALS

Proper lubrication is essential to a well-maintained preventive maintenance program. The following lubricant change interval recommendations are based on extensive laboratory tests, field tests, and trucking industry reports, and are backed by many years of experience in both fleet and single truck operations. These interval recommendations should be used as a starting point to establish the optimum lubrication change interval for your particular operation.

⚠ CAUTION

NEVER exceed the MACK recommended lubrication intervals.

1. DO NOT mix brands or types of lubricants. The chemical additives may not be compatible, and the formation of acid or sludge, or hardening may result.
2. Recommended drain periods according to chassis operating requirements must be followed. Extending the oil drain intervals past what is recommended may break down the stability of the oil by converting the added chemicals into harmful oxidation or corrosion. Past performance is the best guide to economical oil drain periods.

https://truckmanualshub.com/

NOTE

To gain maximum benefit from the MACK Preventive Maintenance Program, Mack Trucks, Inc. recommends the following:

1. Oil and fuel filters must meet MACK specifications and should be changed within specified intervals.
2. MACK specification EO-M PLUS diesel engine oil is mandatory for Line Haul 1 — Extended Service Interval and Short Haul — Severe Service Interval, and is recommended for Line Haul 2 — Regular Service Interval. EO-M and EO-L PLUS specification diesel engine oils are acceptable alternatives for those applications that do not require EO-M PLUS engine oil.
3. MACK specification Grade 2D diesel fuel must be used.
4. MACK factory specifications must be maintained.

Engine Oil, Oil Filter and Fuel Filter Change Intervals

Recommended oil and filter change intervals for vehicles used in Line Haul 1 type operations are as follows:

Line Haul 1 — Extended Service Interval — Sustained High Mileage Operations Exceeding 100,000 miles/161 000 km per year
Miles/Kilometers
50,000/80 000
Oil and Filters

* Whichever occurs first

https://truckmanualshub.com/

NOTE

To take advantage of the Line Haul 1 — EXTENDED SERVICE INTERVAL — the vehicles must be equipped with an E-Tech™ or E7 V-MAC III (1997 or later model year chassis) engine, and average fuel usage must be 6.0 mpg or better, and average vehicle speed must be 50 mph (80 kmph) or more. Engine oil specification EO-M PLUS is mandatory, and the engine must be equipped with the Centri-Max® or Centri-Max® PLUS oil filtration system having the OEM centrifugal rotor.

NOTE

Vehicles used in high mileage/high hour pump-off type operations, or other types of high mileage operations where the engine idles for long periods of time, do NOT qualify for **Line Haul 1 — Extended Service Interval.** Vehicles used in these types of operations must use the oil change intervals outlined under **Line Haul 2 — Regular Service Interval** or **Short Haul — Severe Service Interval.** Oil change intervals must be based on hours of engine operation rather than accumulated chassis mileage, and engine operating hours between oil change intervals must not exceed 700 hours for Line Haul 2 operations or 300 hours for Short Haul operations.

https://truckmanualshub.com/

LUBRICANT CHANGE INTERVALS

Recommended oil and filter change intervals for vehicles used in Line Haul 2 or Short Haul type operations are as follows:

Line Haul 2 — Regular Service Interval — High Mileage Operations Exceeding 100,000 miles/161 000 km per year.	
Miles/Kilometers	**Time**
30,000/48 000*	700 hours*
Oil and Filters	

* Whichever occurs first

NOTE

Vehicles used in Line Haul 2 type operations but used for pump-off or similar types of service where the engine idles for periods of time, must base oil change intervals on hours of engine operation rather than accumulated chassis mileage, even if vehicle usage exceeds 100,000 miles/161 000 km per year.

Short Haul — Severe Service Interval — Low Mileage/High Hour operations such as stop-and-go driving, on/off highway usage, bulk and waste hauling.			
Time			
3 months*	300 hours*	6 months*	600 hours*
Oil Only		Oil and Filters	

* Whichever occurs first

https://truckmanualshub.com/

NOTE

Oil and filters may be changed at the 3-month/300-hour interval for Short Haul type operations if so desired.

Gear Oil Change and Chassis Lubrication Interval

Line Haul 1 — Extended Service Interval — Sustained High Mileage Operations Exceeding 100,000 miles/161 000 km per year		
Miles/Kilometers	**Time**	**Miles/Kilometers**
500,000/804 600*	3 years*	25,000/40 000
Gear Oil Change		Chassis Lubrication

* Whichever occurs first

NOTE

To qualify for the MACK Geared Component Extended Service Drain Interval of 500,000 miles/804 600 km or three years, MACK specification GO-J PLUS gear lubricant is required.

Line Haul 2 — Regular Service Interval — Sustained High Mileage Operations Exceeding 100,000 miles/161 000 km per year		
Miles/Kilometers	**Time**	**Miles/Kilometers**
250,000/402 300*	2 years*	15,000/24 000
Gear Oil Change		Chassis Lubrication

* Whichever occurs first

https://truckmanualshub.com/

Short Haul — Severe Service Interval — Low Mileage/High Hour operations such as stop-and-go driving, on/off highway usage, bulk and waste handling.			
Time		Time	
1 year*	1,200 hours*	3 months*	300 hours*
Gear Oil Change		Chassis Lubrication	

* Whichever occurs first

NOTE

An extended drain interval of 80,000 miles/128 800 km is permissible for vehicles used in short haul type operations if GO-J PLUS gear lubricant is used and vehicle usage exceeds 80,000 miles/128 000 km per year. Otherwise, gear lubricant must be changed at the 1 year or 1200 hour interval, whichever occurs first.

NOTE

An SAE 50 grade synthetic transmission oil, TO-A PLUS, is available for use in MACK transmissions as an extended drain interval lubricant. TO-A PLUS is for use in transmissions only, and not to be used in any other geared components. Drain intervals for TO-A PLUS transmission lubricant are 500,000 miles/804 600 km or 3 years (whichever occurs first) for Line Haul 1 and 2 type operations, and 80,000 miles/128 800 km, 1 year or 1200 hours (whichever occurs first) for Short Haul type operations.

https://truckmanualshub.com/

NOTE

The above chassis lubrication intervals include clutch release bearing lubrication.

Recommended lubricant intervals for Spicer Life™ driveshaft U-joints are as follows:

NOTE

The slip-joints used with Spicer Life™ driveshafts are "Lubed for Life," and protected by a bellows. Lubrication of these slip-joints is not required and the bellows must not be disturbed.

- On-Highway: every 100,000 miles (161 000 km), or 6 months, whichever occurs first.
- City: every 25,000 miles/40 000 km or 6 months, whichever occurs first.
- On/off-highway: every 25,000 miles/40 000 km or 3 months, whichever occurs first.

https://truckmanualshub.com/

NOTE

Your new MACK truck has been prepared for delivery by your MACK Service Center. After delivery, oil change, filter change, and chassis lubrication intervals become your sole responsibility.

It is important that components be filled with lubricants meeting the specifications as given in "LUBRICANT SPECIFICATIONS" on page 265.

When checking oil levels, the vehicle must be parked on level ground and the units at normal operating temperature. Components must be filled to the correct level. DO NOT OVERFILL.

The oil and filter change intervals outlined in this manual pertain to MACK components. For information concerning oil and oil filter change intervals for vendor components, refer to the specific vendor component service literature.

https://truckmanualshub.com/

Figure 31 — Bulldog Lubricants

https://truckmanualshub.com/

LUBRICANT CHANGE PROCEDURES

Oil and Filter Change — E-Tech™

Run the engine until normal operating temperature is reached, then shut off and drain the oil before the engine cools.

Thoroughly clean the area around the filters before removing.

Using tool J 24783, remove both spin-on filters.

Prefill each new oil filter with 2 quarts (1.9 liters) of the recommended engine oil. DO NOT allow any contaminants to enter the filters while prefilling.

Apply a thin film of engine oil to the sealing gasket of the new filters.

Install the filters and tighten an additional 3/4 to 1 turn after the gasket contacts the base.

Fill the crankcase with the recommended engine oil. (See "COOLANT CAPACITIES" on page 283.) If equipped with a REPTO unit, add one additional quart.

Start the engine and check for leaks. Run the engine for approximately five minutes, then shut it off and recheck the oil level. (Allow the vehicle to sit on level ground for 15 minutes before rechecking.) Add oil if necessary.

https://truckmanualshub.com/

Oil level must be between the add and full lines on the dipstick as shown below.

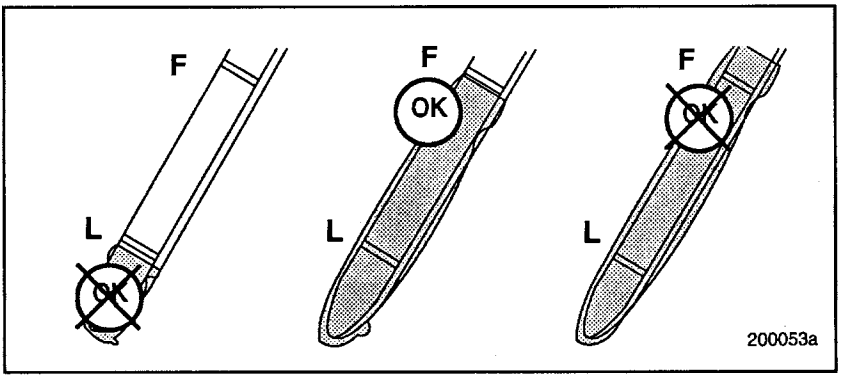

Figure 32 — Dipstick Oil Level Check

Dipstick and oil fill locations are shown in the illustrations below. For accurate oil level readings, the dipstick must be inserted into the dipstick tube with the "L" and "F" markings facing upward. On conventional cabs, this will be with the finger-loop facing outboard, or away from the engine. On LE and MR models, the "F" and "L" marks will be facing up as the dipstick is inserted into the dipstick tube.

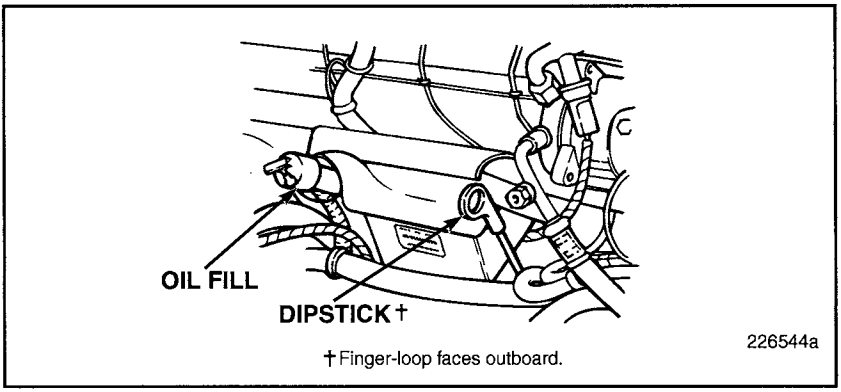

Figure 33 — Conventional Cabs Oil Fill and Dipstick Location

https://truckmanualshub.com/

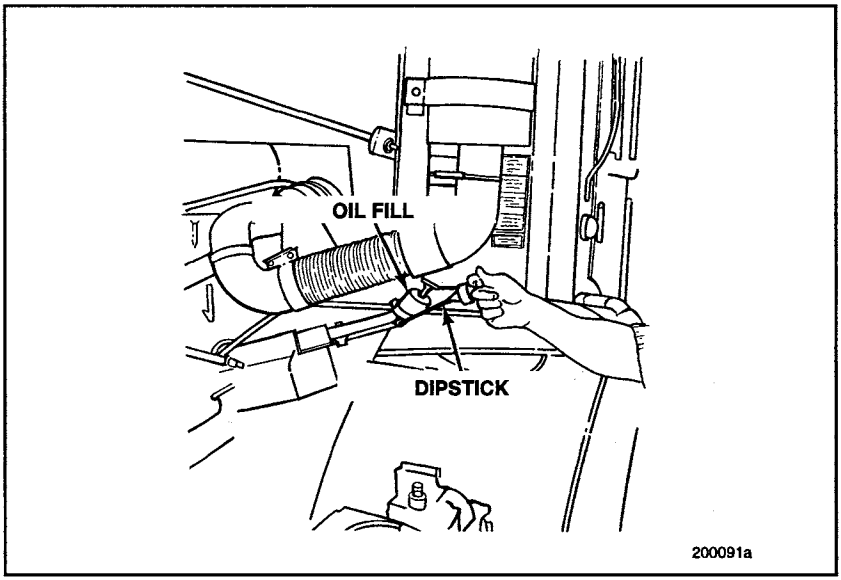

Figure 34 — Cab Forward Chassis Oil Fill and Dipstick Location

†"F" and "L" markings face up.

https://truckmanualshub.com/

Centri-Max® PLUS Oil Filter

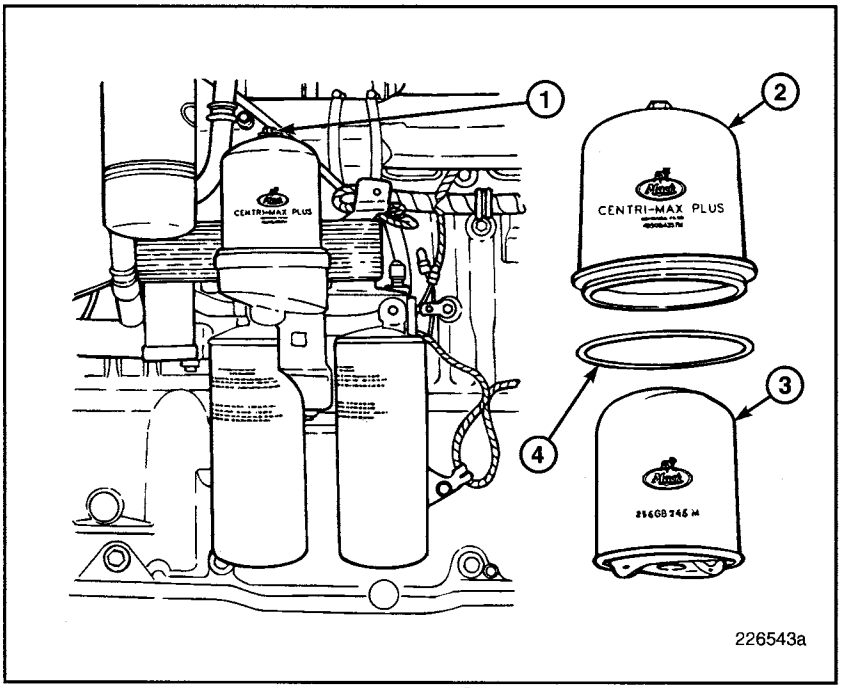

Figure 35 — Centri-Max® PLUS Oil Filter

1. To prevent contamination from entering the engine, thoroughly clean the area around the centrifugal oil filter before removing the cover assembly.
2. Loosen the nut (1) at the top of the cover assembly (2), then remove the cover.
3. Remove and discard the rotor (3).
4. Clean the inside of the cover assembly (2).
5. Install a new rotor (3) over the spindle.

https://truckmanualshub.com/

⚠ CAUTION

Use only the rotor designed for use with the Centri-Max® PLUS centrifugal filter assembly. Any other rotor will not work.

6. Remove and discard the seal from the cover assembly.
7. Install a new seal (4).
8. Apply a thin film of clean engine oil to the seal.
9. Install the cover assembly (2).
10. Tighten the cover assembly nut (1) to 15 lb-ft (20 N•m).
11. Start the engine and check for leaks.

Power Steering Oil Change

Change the power steering fluid and filter once per year (D inspection interval) for vehicles operating in line haul operations, and twice per year (C and D inspection intervals) for chassis operating in short haul operations. Use the same type and grade engine oil as being used in the engine. Refer to "COOLANT CAPACITIES" on page 283.

⚠ CAUTION

To avoid dirt from entering the steering system after the lines have been disconnected, clean around all fittings and both hose connections at the power steering gear. Also clean around the reservoir cover.

Run the vehicle until the engine reaches normal operating temperature, then shut off the engine.

Disconnect the pressure and return lines at the steering gear and allow the power steering reservoir and hoses to drain into a suitable container.

https://truckmanualshub.com/

Jack up the front end of the vehicle so the wheels can be steered manually. Steer several times from left to right steering stops to pump the remaining fluid out of the system.

Replace the steering system filter. If the filter is a replaceable element type, install a new element. If the filter is a reusable type, wash the filter in solvent and reinstall. Before reinstalling the element, clean the inside of the reservoir with a clean cloth. Reconnect the pressure and return lines, then refill the reservoir with the recommended oil.

To purge the system of air, steer several times from left to right steering stops.

⚠ CAUTION

Make sure the reservoir does not run dry during the purging operation as air may be drawn into the system.

Lower the chassis to the ground. Start the engine and steer the wheels several times from left to right steering stops. Check the reservoir fluid level and add oil if necessary.

https://truckmanualshub.com/

Geared Components

Add oil or drain and refill while units are hot. Fill to level of filler plug hole. **DO NOT** overfill. See "LUBRICANT SPECIFICATIONS" on page 265.

When the oil level in any geared unit (transmission, carrier, etc.) is checked, oil must either be seen or felt to be level with the filler plug hole. If oil can only be felt by reaching the finger down into the unit, the oil level is insufficient.

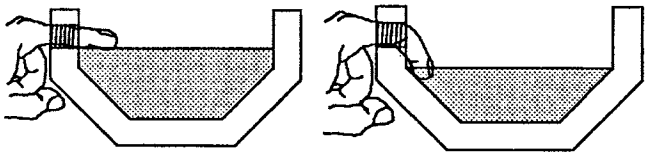

Figure 36 — Oil Level Check

WARNING

Take care not to burn hands when checking oil level on hot geared units.

https://truckmanualshub.com/

Transmissions

Remove and clean the magnetic drain plug and the magnetic oil filter plug (if equipped). Also clean the trough located inside the area from where the magnetic filter plug was removed. After the oil has drained, reinstall the plugs. Remove the fill plug and fill the transmission with enough of the recommended lubricant (see "LUBRICANT SPECIFICATIONS" on page 265) to bring the level to the bottom of the filler plug hole. Reinstall the filler plug.

Remove the breather(s). Clean with a suitable, nonflammable solvent; check for obstructions, and reinstall.

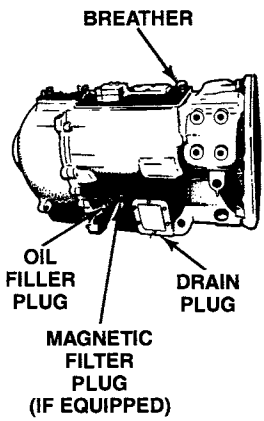

Figure 37 — Fill Plug, Drain Plug, Magnetic Filter Plug and Breather Locations

NOTE

DO NOT overtighten the filler plug when reinstalling. Finger tighten the plug first, then tighten an additional 3/4 to 1 turn (not to exceed 55 lb-ft) with a wrench.

https://truckmanualshub.com/

Range Shift Valve Filter (Range Shifted Transmissions)

At each C and D inspection interval, remove and clean or replace the range shift valve filter as follows:

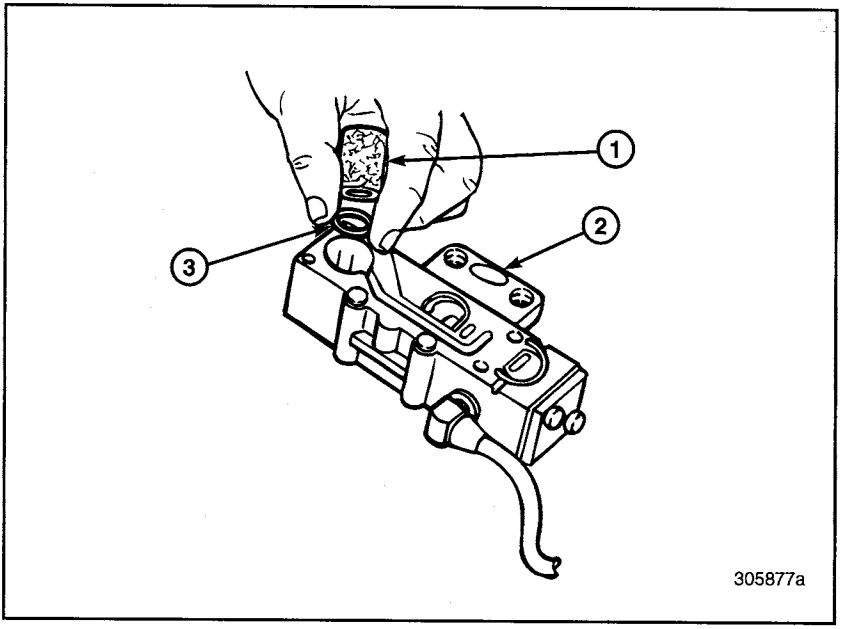

Figure 38 — Range Shift Valve Cover Spring and Filter

1. Filter 2. Valve Housing	3. Filter O-Ring

1. Remove the four top cover screws from the valve.
2. Separate the cover from the valve housing.
3. Remove the filter and filter o-ring.
4. Clean (or replace if necessary) the filter with a suitable, non-flammable solvent, then dry the filter with clean, dry compressed air.

https://truckmanualshub.com/

5. Apply Mobile Grease No. 28 sparingly to the filter o-ring.

NOTE

Do not over-lubricate the o-ring, as this may result in filter restriction. Make sure that the o-ring is only lightly lubricated.

6. Install the o-ring and the filter into the filter bore of the housing. Set the filter on top of the o-ring and make sure the o-ring is properly seated.
7. Apply Mobile Grease No. 28 sparingly to the top cover seal, then install the seal into the groove in the top cover, making sure all portions of the seal are properly located. (If the top cover seal is damaged in any way, it must be replaced.)
8. Install the top cover and the four cover screws. Tighten the screws to 30–40 lb-in (3.4–4.5 N•m).

Eaton® Fuller® Transmissions

Effective with Eaton® Fuller® transmission production beginning in April 1998, a new transmission oil fill plug with an O-ring seal was phased into production. This new plug is used on transmission models RT/RTL/RTLO type 7 and 9 speed models, and also on the FR transmission model series.

This new plug requires a 1/2-inch internal square drive tool rather than the 1-inch external square that was required for oil fill plugs used previously. With the addition of the O-ring seal, thread sealant is no longer required when reinstalling the plug. When the oil fill plug is reinstalled, retorque the new plug to 35–50 lb-ft (47.5–67.8 N•m).

https://truckmanualshub.com/

Transfer Case

With the transfer case at operating temperature, remove the magnetic drain plug and drain the oil. Clean and reinstall the plug. Remove the breather, clean with a suitable, nonflammable solvent, check for obstructions, and reinstall. Remove the filler plug and fill the transfer case with enough of the recommended oil to bring the level to the bottom of the filler plug hole. Reinstall the filler plug.

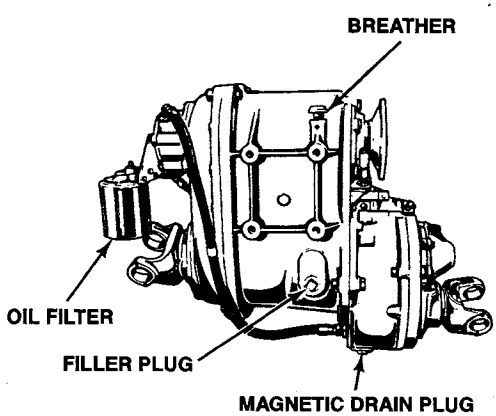

TRANSFER CASE

300151a

Figure 39 — Transfer Case

NOTE

On transfer cases equipped with an optional PTO, change the oil filter when the oil is changed. The transfer case shown in the illustration above is equipped with an optional PTO. Transfer cases that are not equipped with a PTO do not have an oil filter, and have a shorter hose that runs from the main shaft cover to the countershaft cover.

https://truckmanualshub.com/

Rear Engine Power Take-Off (REPTO)

The REPTO unit is lubricated by oil from the engine. Scheduled engine oil changes take care of any periodic service requirements.

When draining engine oil from the engine sump, also remove the REPTO magnetic drain plug which is located as shown in the following illustration. Drain oil into an approved catch container.

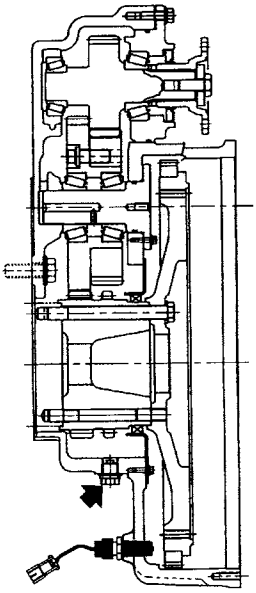

Figure 40 — REPTO Drain Plug Location

Clean and reinstall the magnetic oil drain plugs for the REPTO housing and engine oil pan.

Fill engine sump to the required level with specified fresh engine oil, plus additional oil required for the REPTO unit (approximately one quart).

https://truckmanualshub.com/

Flywheel PTO

With the unit at operating temperature, remove the magnetic drain plug and drain the oil. After all the oil has drained, clean and reinstall the plug. Remove the breather, clean in a suitable, nonflammable solvent, check for obstructions, blow dry with compressed air, and reinstall. Remove the filler plug and fill the flywheel PTO with enough of the recommended oil to bring the level to the bottom of the filler plug hole.

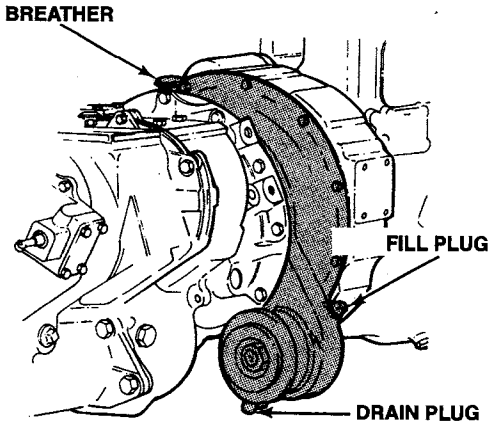

FLYWHEEL PTO MOUNTED AT 4:30 POSITION

300152a

Figure 41 — Flywheel PTO

NOTE

Drain and fill plug locations will depend upon flywheel PTO mounting position.

https://truckmanualshub.com/

Linkages

At each oil change interval, put 2 drops of engine oil on the moveable connections of the accelerator linkage, and the linkages for the transmission, auxiliary transmission and transfer case.

Rear Axles

Add oil or drain and refill while axles are hot. Fill to the level of the filler plug hole. **DO NOT** overfill. See "LUBRICANT SPECIFICATIONS" on page 265.

Rear axles with front mounted carriers — With the axle at operating temperature, remove the magnetic drain plug and drain the oil from the axle housing. Clean and reinstall the plug. Remove the filler plug and fill the axle housing with enough of the recommended oil to bring the level to the bottom of the filler plug hole. Reinstall the plug.

Rear axles with top mounted carriers — With the axle(s) at operating temperature, remove the magnetic drain plugs from the interaxle power divider on the front carrier (if so equipped), the carrier bevel gear compartment(s), and the axle housing(s), and allow the oil to drain. Clean and reinstall the plugs. Refer to "Magnetic Strips and Oil Troughs" on page 148 for information concerning the magnetic strips and oil trough cleaning procedures. Remove the filler plug from the interaxle power divider (if equipped) and add one pint (1.5 pints for CRD200 carriers) of the recommended oil. Reinstall the filler plug. Remove the filler plugs from the bevel gear compartment(s) and fill with the recommended oil until level with the bottom of the filler plug hole. Reinstall the filler plug(s). Remove the filler plugs from the axle housing(s) and fill with enough of the recommended oil until level with the bottom of the filler plug hole. Reinstall the filler plug(s). If the axle is equipped with an elbow fitting in the axle housing fill plug hole, the easiest method of filling the housing is by removing the breather fitting from the right-hand side of the carrier and the fill plug from the elbow fitting. Fill the housing through the breather hole until the oil runs out the elbow fitting. Reinstall the fill plug and the breather fitting.

https://truckmanualshub.com/

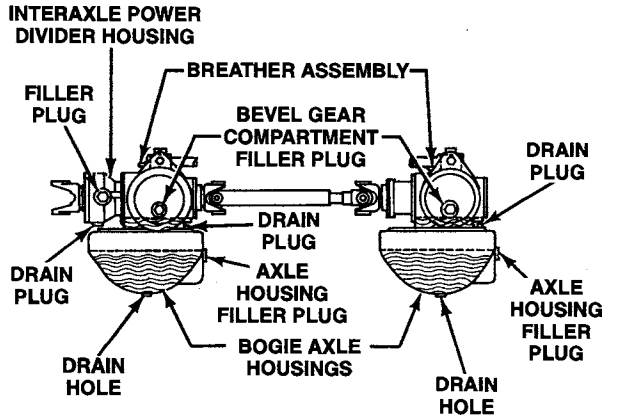

FILLER AND DRAIN PLUG LOCATIONS

400163a

Figure 42 — Filler and Drain Plug Locations

When checking oil level in rear axles having top-mounted carriers, check after the vehicle has been operated, the oil is hot and the chassis is parked on level ground. Check the oil level by removing the fill/level plugs from the axle housings and the bevel gear compartments. The level is correct when oil runs out of the fill plug hole in the axle housing, and slightly below the fill plug hole in the bevel gear compartment. On axle housings with an elbow fitting in the axle housing fill plug hole, oil level must be to the top of the elbow fitting. If the level in the axle housing is low, add oil to the axle housing and the bevel gear compartment until level with the bottom of the fill plug holes. DO NOT add oil if the level in the axle housing is sufficient. Reinstall the plugs.

https://truckmanualshub.com/

Magnetic Strips and Oil Troughs

An oil trough with magnetic strips is attached to the inside of the bevel gear compartment cover. The outside of the cover contains the notice "Internal Magnetic Strips and Oil Trough Require Periodic Cleaning." Clean the oil trough and magnetic strips each time the oil is changed or when the cover is removed.

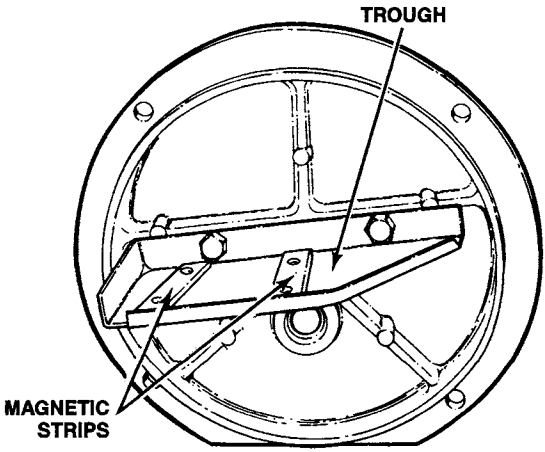

MAGNETIC STRIPS AND OIL TROUGH

400164a

Figure 43 — Magnetic Strips and Oil Trough

https://truckmanualshub.com/

Carrier Housing Breathers

Remove the carrier housing breather(s) each time the rear axle(s) oil is changed. Clean the breather(s) in a suitable, nonflammable solvent and check for obstructions. Blow dry with compressed air, then reinstall.

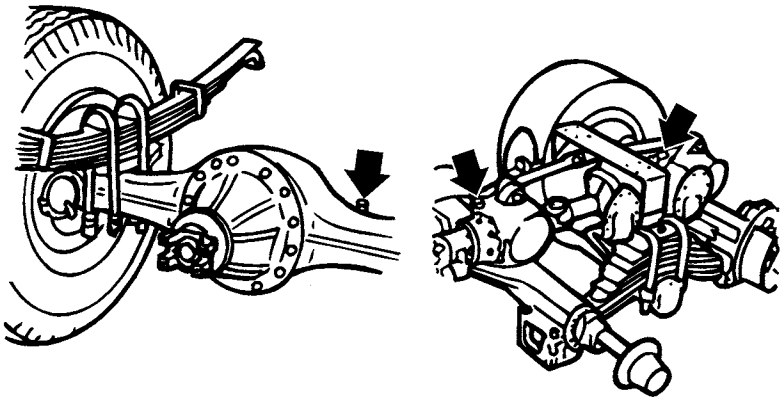

CARRIER HOUSING BREATHER (SINGLE REAR AXLE)

CARRIER HOUSING BREATHERS (BOGIE — ONE BREATHER EACH CARRIER)

400386a

Figure 44 — Carrier Housing Breathers

https://truckmanualshub.com/

SR70 and SR80 Tandem Axles

AXLE HOUSINGS

With the axles at operating temperature, remove the drain plugs from both axle housing assemblies and from the adaptor gear housing on the front carrier, and drain the oil. Clean and reinstall the drain plugs. Remove the fill plug from the interaxle power divider on the front carrier and add .5 pint (.25 liter) of recommended gear oil. Reinstall the fill plug. Remove the fill plug from the front axle housing, and the level plug from the adaptor gear housing. Add oil to the axle housing until level with the bottom of the fill plug hole, and oil begins to flow out of the level plug hole in the adaptor gear housing.

NOTE

Depending upon angle of inclination, it may be necessary to add oil to the adaptor housing until level with the plug hole.

Install the fill plug in the axle housing. Check the oil level in the adaptor gear housing and add oil until level with the plug hole, if necessary, before installing the level plug. Remove the fill/level plug from the rear axle housing, and add recommended gear oil until level with the fill plug hole. Reinstall the plug.

https://truckmanualshub.com/

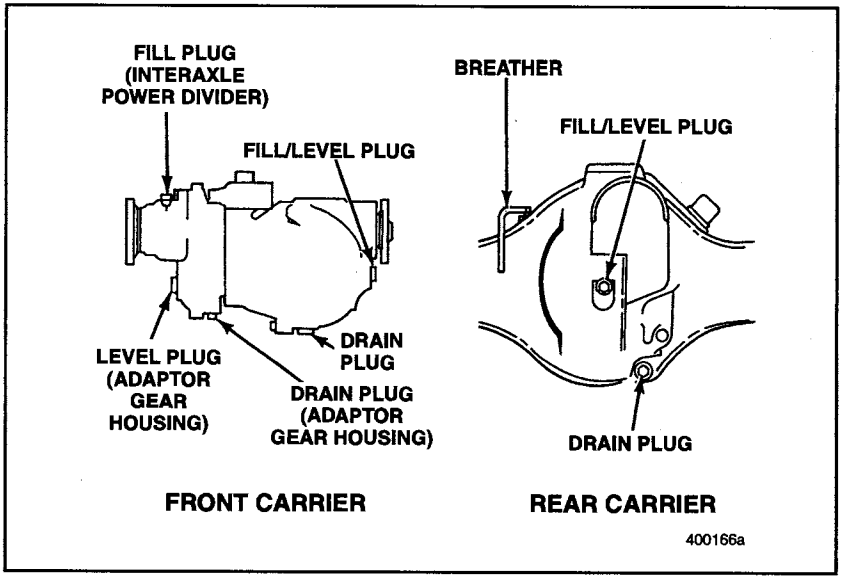

Figure 45 — Axle Housings

BREATHER

Remove the carrier housing breathers from each axle assembly, clean with a suitable, nonflammable solvent, and check for obstructions. Blow dry with compressed air, then reinstall.

https://truckmanualshub.com/

SR70 and SR80 Tandem Axles

HUB REDUCTION ASSEMBLIES

NOTE

Depending upon axle configuration, hub assemblies may have either a single drain/fill plug, or a separate drain and a separate fill plug.

Rotate wheels until the drain plugs (or drain/fill plugs) are in the 6 o'clock position. Remove the plugs and allow the oil to drain completely. Reinstall the drain plugs and remove the fill plugs (or rotate wheels until the drain/fill plug holes are in the 3 o'clock position). Add 4.75 pints (2.25 liters) of the recommended gear oil to each hub reduction assembly. (Any surplus oil will drain into the axle housing.) Reinstall the plugs.

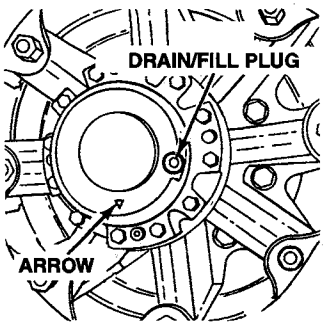

HUB ASSEMBLY WITH SINGLE DRAIN/FILL PLUG (SHOWN IN FILL POSITION)

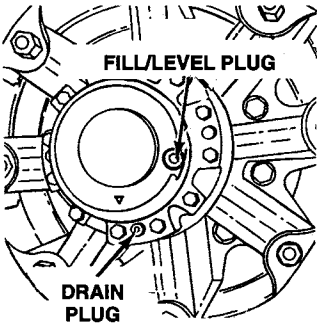

HUB ASSEMBLY WITH SEPARATE DRAIN AND SEPARATE FILL/LEVEL PLUGS

400167a

Figure 46 — Hub Assembly

https://truckmanualshub.com/

CARRIERS

Carrier Capscrews

At each C and D inspection interval, check and adjust the torque of the capscrews that secure the top-mounted carrier to the axle housing. On certain carrier assemblies, two of the capscrews are located inside the bevel gear compartment where they are not visible.

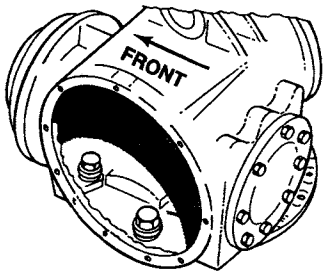

Figure 47 — Carrier Capscrews

The following carrier assemblies have capscrews located inside the bevel gear compartment:

CRD(L)92(1), CRDLP92(1), CRDPC92(1), CRD(L)93(1), CRD112, CRDPC112(1), CRD113(1), CRDP95(1), CRD96(1), CRD200

To gain access to these "hidden" capscrews, drain the bevel gear compartment, and remove the cover. After checking the torque (refer to table on page 154), reinstall the cover and fill the bevel gear compartment with enough of the recommended oil to bring the level to the bottom of the filler plug hole. (See "LUBRICANTS AND CAPACITIES" on page 285.)

https://truckmanualshub.com/

CAPSCREW TORQUE SPECIFICATIONS

Carrier	Torque Lb-ft (N•m)
92/93 Series	132–148 (179–201)
112/113 Series	132–148 (179–201)
95/96 Series	476–528 (645–716)
200 Series	132–148 (179–201)

https://truckmanualshub.com/

WHEEL BEARINGS

Wheel Bearing Lubrication

The wheel bearings on standard MACK front non-driving axles may be either oil-lubricated, grease-lubricated or semi-fluid grease lubricated.

OIL-LUBRICATED FRONT WHEEL BEARINGS

Front axles having oil-lubricated wheel bearings are identified by the transparent plastic hubcap which is inscribed with a mark to indicate the proper oil level. The cap in the center of transparent window can be removed when it becomes necessary to add oil. Check the oil level regularly, at the daily pre-trip inspection. Add the recommended oil (refer to "LUBRICANT SPECIFICATIONS" on page 265) when necessary. Oil-lubricated front wheel bearings must be removed, cleaned and inspected at each D inspection interval.

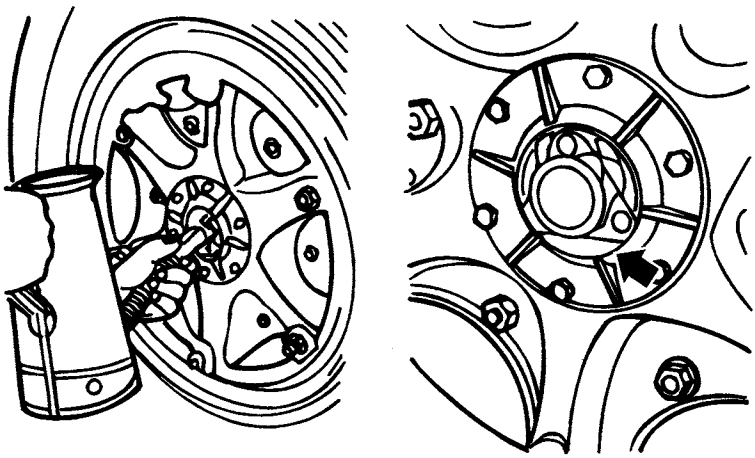

Figure 48 — Front Axle Hub

https://truckmanualshub.com/

GREASE-LUBRICATED FRONT WHEEL BEARINGS

The hubcap on front axles having grease-lubricated front wheel bearings may be either a metal cap or a transparent window. Grease-lubricated wheel bearings must be removed, cleaned and repacked with grease at each D inspection interval.

SEMI-FLUID GREASE-LUBRICATED FRONT WHEEL BEARINGS

Front axles with semi-fluid grease-lubricated wheel bearings also have a hubcap with a transparent window and a vent cap in the center. The center vent cap is not to be removed to add oil to the hub assembly. Semi-fluid grease-lubricated wheel bearings must be removed, cleaned and re-lubricated at each D inspection interval.

Front Driving Axles

Wheel bearings on front driving axles may be oil or grease lubricated. Consult the specific axle manufacturer's service publications for lubrication recommendations, specifications, and procedures.

Rear Wheel Bearings

Rear wheel bearings are lubricated by oil from the carrier and require no periodic inspection of lubricant level at the wheel bearings. Rear wheel bearings must be removed, cleaned and inspected at each D inspection interval.

https://truckmanualshub.com/

KINGPIN LUBRICATION

Kingpin Upper Bearing Lubrication

Lubricate the upper kingpin bearing with the vehicle on the ground. Apply MG-C grease to the upper bearing grease fitting until grease purges from the joint between the upper steering knuckle and the upper portion of the axle eyelet.

Kingpin Lower Bushing Lubrication

Lubricate the kingpin lower bushing with the front of the vehicle raised off the ground and supported on jack stands of adequate capacity to support the weight of the vehicle. Apply MG-C grease to the lower bushing grease fitting until grease purges from the joint between the lower steering knuckle and the lower portion of the axle eyelet.

https://truckmanualshub.com/

LUBRICATION CHART

MACK CHASSIS
PREVENTIVE MAINTENANCE SCHEDULE
LUBRICATION CHART

ACTION TAKEN	KEY	ITEM
✔	A	ENGINE CRANKCASE
✔	B	POWER STEERING RESERVOIR
✔	C	FRONT WHEEL BEARINGS
✔	D	**FRONT DRIVE AXLE**
	E	FLYWHEEL PTO
	F	TRANSMISSION
	G	TRANSFER CASE
	H	REAR AXLE
		FRONT DRIVE AXLE
	I	SLIDING SPLINES
	I	UNIVERSALS
	J,K	KING PINS*
	J,K	UNIVERSALS (CARDANS)*
	L	ACCELERATOR HINGE PIN
	L	BRAKE TREADLE HINGE PIN
	L	BRAKE VALVE PLUNGER
	M	SHIFT LINKAGE
	N	CAB TILT RESERVOIR
	O	SPRING PINS*
	O	SHACKLES*
	O	DRAG LINK
	O	STEERING UNIVERSALS
	Q	SLIP YOKE
	O	PURGE FITTING
	P	STEERING GEAR
	Q	FRONT SLACK ADJUSTER*
	Q	FRONT BRAKE CAMSHAFT*
	Q	STEERING KNUCKLE PINS*
	Q	CROSS STEERING TUBE SOCKETS*
	R	CLUTCH RELEASE SHAFT*
	R	CLUTCH RELEASE BEARING
	S	PROP SHAFT UNIVERSALS
	S	PROP SHAFT SLIDING SPLINE†
	T	REAR BRAKE CAMSHAFT*
	T	REAR SLACK ADJUSTERS*
	T	SPRING PINS*
	U	TORQUE ROD BALL STUDS
	U	SPRING TRUNNION*

* Indicates lubrication on both sides of vehicle.
† Do not lubricate sliding splines on Spicer life™ driveshafts — Do not disturb bellows.

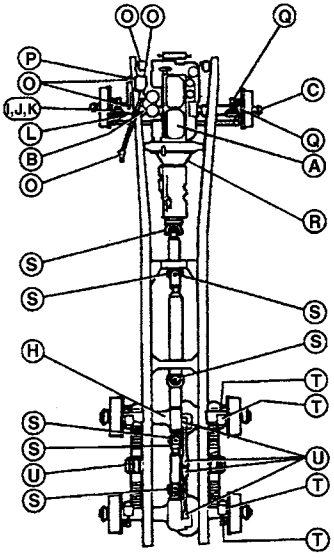

NOTE
Clean all fittings with non-flammable solvent and wipe clean with a rag before applying grease gun.

NOTE
For lubricant specifications, refer to LUBRICANTS AND SPECIFICATIONS section of this manual.

ACTION TAKEN CODES	
✔	Check Level. Add Lubricant if Necessary
	Lubricate Fitting
	Lubricate Surfaces

000089a

Figure 49 — Mack Chassis Lubrication Chart

https://truckmanualshub.com/

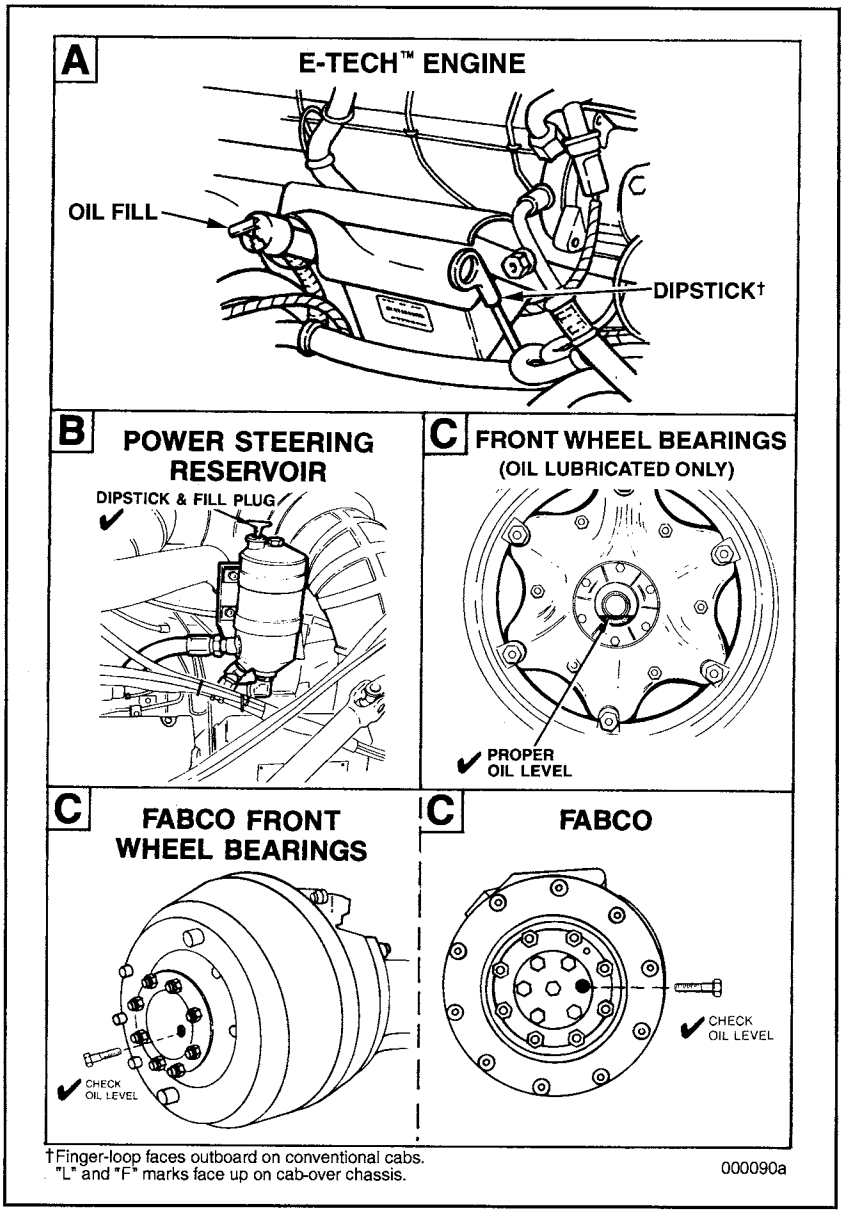

†Finger-loop faces outboard on conventional cabs.
"L" and "F" marks face up on cab-over chassis.

000090a

Figure 50 — A–C Key References

https://truckmanualshub.com/

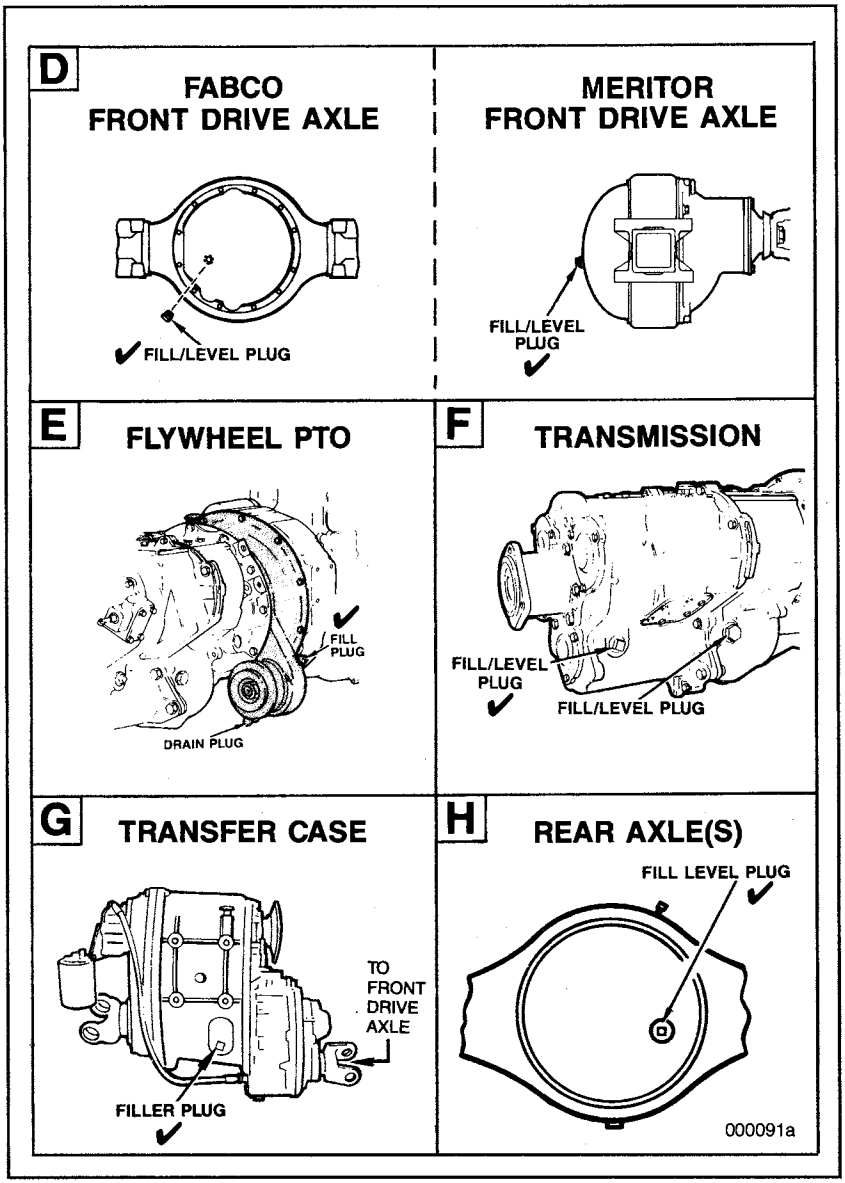

Figure 51 — D–H Key References

https://truckmanualshub.com/

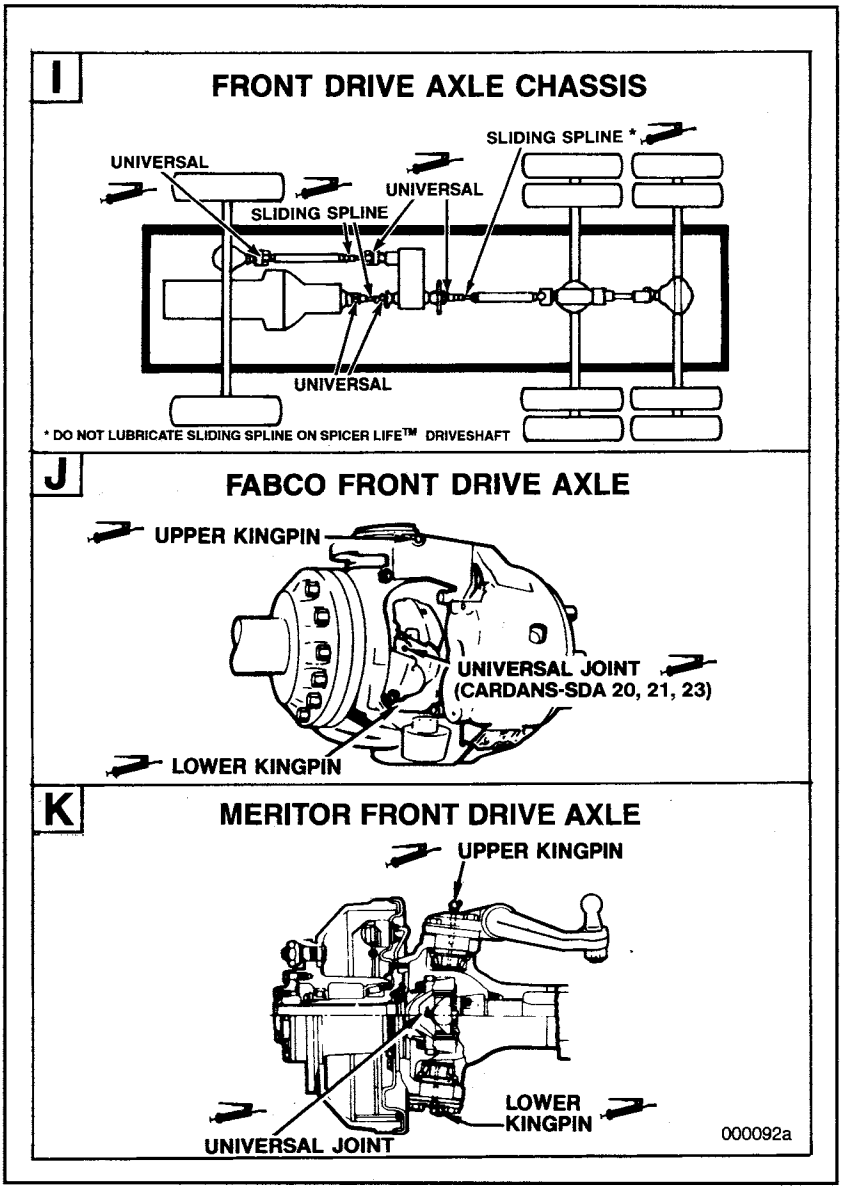

Figure 52 — I–K Key References

https://truckmanualshub.com/

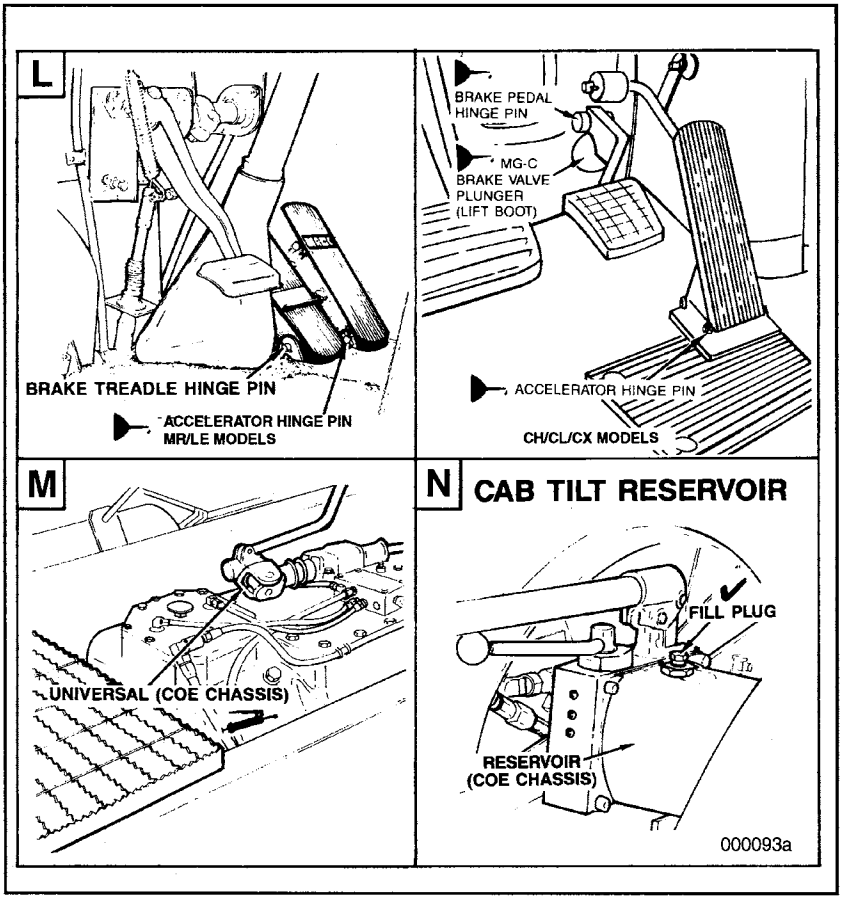

Figure 53 — L–P Key References

https://truckmanualshub.com/

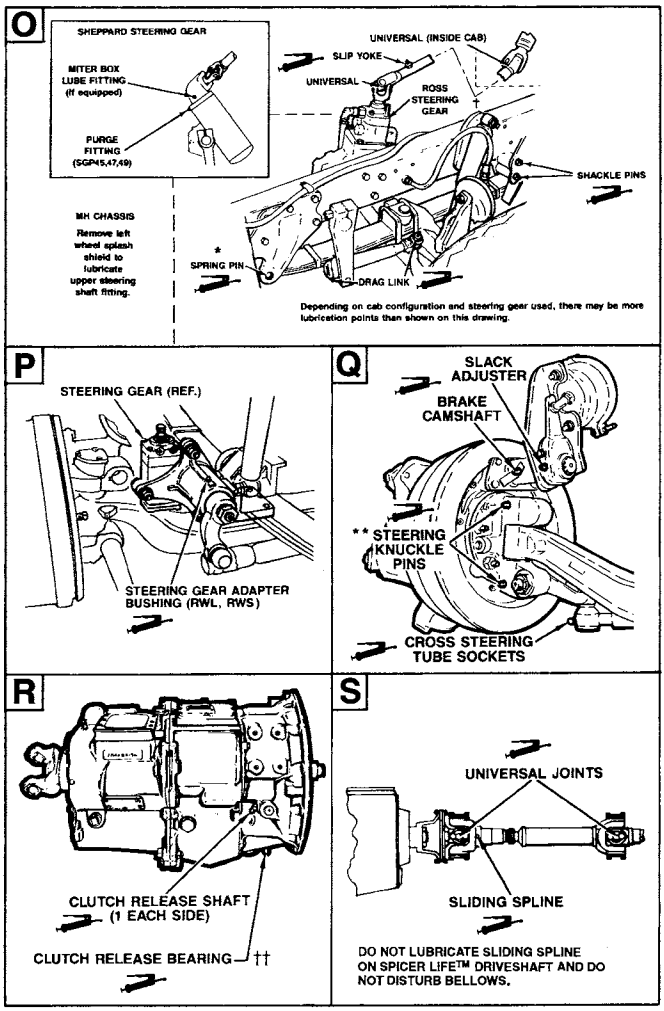

* CH/CL front axles with taperleaf springs (10,000 lb. and 12,000 lb. rating) require no lubrication at the spring pin or shackle pins due to elastomeric bushings.

** Lubricate upper knuckle pin bearings with vehicle on ground, lower knuckle pin bushing with vehicle raised.

† On Ross TAS steering gears, apply MGC to the fitting on the trunnion side of the steering gear near the output shaft. Use a hand type grease gun only.

†† Remove inspection cover to access release bearing grease fitting.

000094a

Figure 54 — O–S Key References

https://truckmanualshub.com/

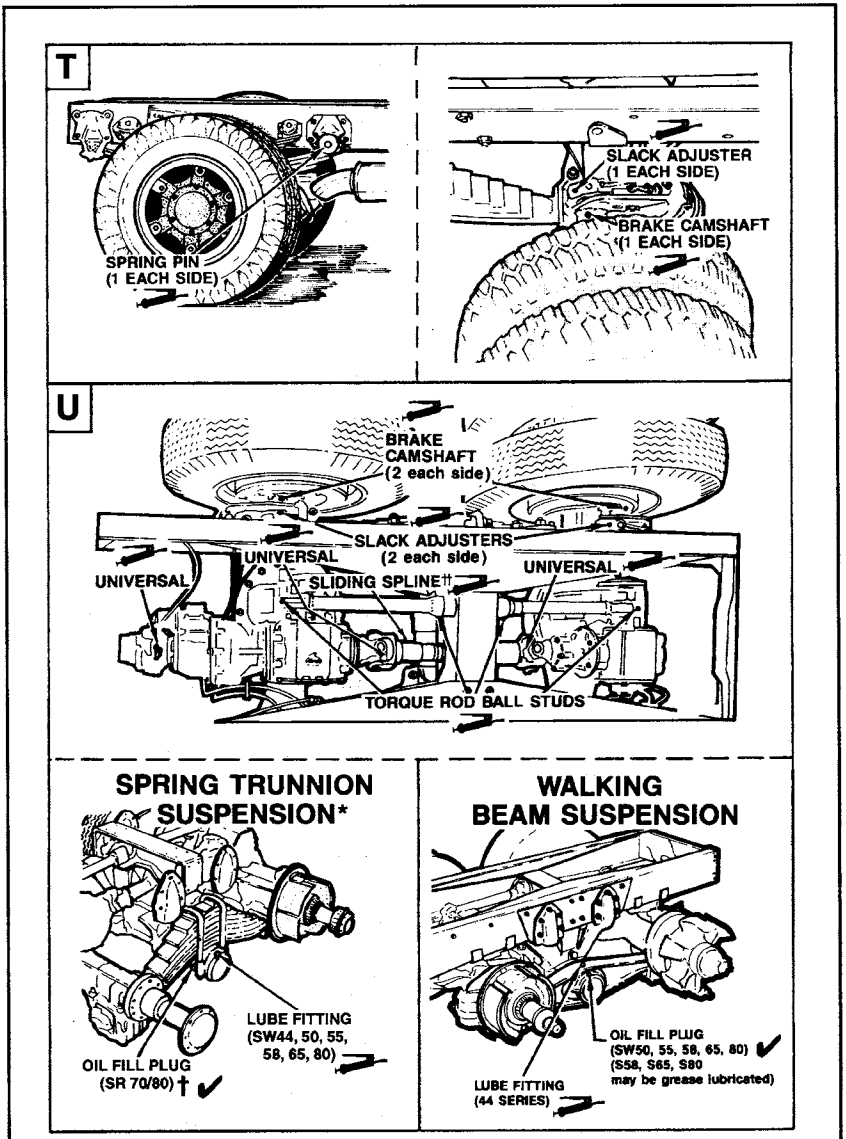

* When greasing trunnion, raise chassis to ensure grease fully penetrates cavity.
†Use HD or EP oil in SR70/80 spring trunnion.
††Do not lubricate sliding spline on Spicer Life™ driveshafts. Do not disturb bellows.

000095a

Figure 55 — T–U Key References

https://truckmanualshub.com/

SPRING CLIP (U-BOLT) TORQUE

WARNING

Proper spring clip torque must be maintained for safe operation of the vehicle. Loose or improperly torqued spring clips may adversely affect the driver's steering control of the vehicle.

NOTE

Always use an accurately calibrated torque wrench to torque the spring clips.

Mack Suspensions (Bogies)

Spring clips must be retorqued during the first 3,000 miles/5000 km or 3–4 months (whichever comes first). After the initial break-in period, retorque the spring clips at every C and D inspection interval.

If there is a "T" stamped on the outboard side of the frame directly above the trunnion, the bogies have been load cycled and retorqued during production, and require no retorquing at the end of the initial break-in period. Retorque these spring clips at every C and D inspection interval.

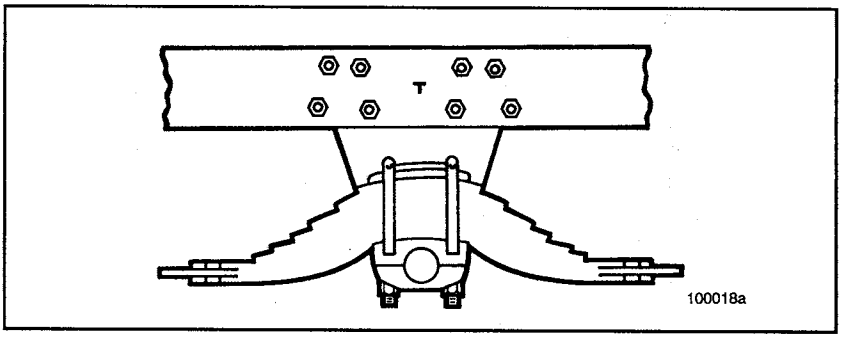

Figure 56 — Frame "T" Stamp Location

https://truckmanualshub.com/

ST34 and ST38 suspensions do not require retorquing at the end of the initial break-in period. Retorque these spring clips at every C and D inspection.

Vendor Suspensions (Bogies)

Hendrickson	Retorque spring clips at C and D inspection intervals per vendor specifications.
NeWay	Retorque all fasteners in the suspension and the frame brackets at first 3,000 miles/5 000 km and thereafter at C and D inspection intervals per vendor specifications.
Reyco	Retorque spring clips and equalizer nuts at first 1,000 miles/1 600 km per vendor specifications. At B, C, and D inspection intervals, retorque spring clips, equalizer nuts, torque arm bolts (at hangers and axle seats), and torque arm tube clamp nuts per vendor specifications.

https://truckmanualshub.com/

Front (Steering) Axle and Single Rear Axle

Retorque the spring clips on the front (steering) axle and the single rear axle at the first 3,000 miles/5 000 km, and thereafter at every C and D inspection interval.

⚠ CAUTION

After any repair operation that involved the removal and reinstallation of a spring, the spring clips must be retorqued after a minimum of one day and a maximum of one week or 3,000 miles/5 000 km of service.

SPRING CLIP NUT TORQUE CHART (FRONT & REAR AXLES)

Spring Clip Diameter Inches [mm]	Spring Clip Nut Torque Lb-ft (N•m)
0.625 (5/8) [15.9]	200–225 (271–305)
0.750 (3/4) [19.0]	320–340 (434–461)
0.875 (7/8) [22.1] with flat top	400–450 (542–610)
0.875 (7/8) [22.1] with circular top	500–550 (678–746)
1.000 (1) [25.4]	800–880 (1085–1193)
1.125 (1-1/8) [28.6]	1050–1150 (1423–1558)
1.250 (1-1/4) [31.8]	1400–1500 (1897–2033)

https://truckmanualshub.com/

Spring Clip (U-Bolt) Torque Procedure

When tightening spring clip nuts on either the front or rear springs, the spring clip threads must first be lubricated with a mixture of synthetic white lead and SAE 30 engine oil in a proportion of one pound (0.5 kg) of lead to 1/8 pint (0.01 liter) of oil. As an alternative, NEVER-SEEZE compound may be used. Lubricant must also be applied to the special washers, if so equipped, to remove the frictional drag on the nuts. Use the following recommended tightening sequence to torque the spring clips. Torque requirements are the same for either type of lubricant.

1. Tighten all spring clips until they are snug.
2. Tighten nuts, using the sequence shown below, to approximately one third of the recommended torque. Refer to table on page 167 for proper torque requirements.
3. Repeat tightening the nuts, using the same sequence, gradually increasing the torque through a second, third, and fourth stage until the final recommended torque is achieved.

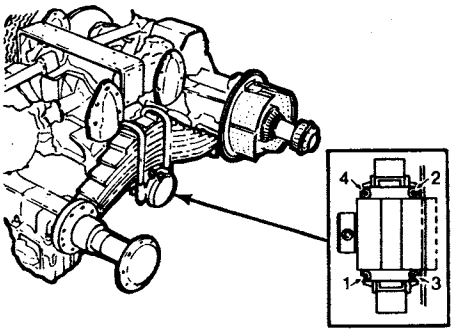

RECOMMENDED TIGHTENING SEQUENCE OF SPRING CLIP (U-BOLT) NUTS

100019a

Figure 57 — Recommended Spring Clip Nut Tightening Sequence

https://truckmanualshub.com/

MACK AIR SUSPENSION

Torque Requirements

At the end of the initial break-in period (1000 miles [1610 km]), and thereafter at each B, C and D inspection interval, retorque the U-bolt locknuts. Current production U-bolt locknuts are phosphate/oil coated, black in color, and should be torqued to a value of 400–450 lb-ft (540–610 N•m).

NOTE

Some AL-401LH suspensions (with Eaton or Meritor axles) use 3/4-inch-diameter U-bolts. Torque these U-bolts to 260–320 lb-ft (353–434 N•m).

At the end of the initial break-in period (1,000 miles [1 610 km]), and thereafter at each B, C and D inspection interval, retorque the main support member locknuts:

- **AL Suspensions** — Support member to air spring lower mounting bracket — 260–320 lb-ft (353–434 N•m)
- **ALII and AL401LH Suspensions** — Support member to Cross Channel Section — 260–320 lb-ft (353–434 N•m)

https://truckmanualshub.com/

At each D inspection interval, check the torque of the following fasteners (refer to the Master Manual section 14-101, *MACK Air Suspension*, for locations):

SUSPENSION TORQUE SPECIFICATIONS

Fastener	Recommended Torque Lb-ft (N•m)
Air Spring to Frame Bracket — inboard (AL only)	50–70 (70–95)
Air Spring to Frame Bracket — outboard (AL & ALII)	20–30 (30–40)
Air Spring to Lower Mounting Bracket (or Cross Channel Section)	20–30 (30–40)
Longitudinal Torque Rod Bar Pin	150–205 (200–280)
Transverse Torque Rod: (AL & ALII Frame End — Straddle Mount)	175–200 (250–275) w/M16 Fasteners 275–300 (375–400) with 5/8-18 Fasteners
Transverse Torque Rod: (ALII Axle Bracket End — Straddle Mount)	150–205 (203–278) with M16 Fasteners 275–300 (375–400) with 5/8-18 Fasteners
Transverse Torque Rod: (AL Axle Bracket End — Taper Ball Socket)	400–450 (543–610)
Frame Bracket Rebound Roller Bolt	50–70 (70–95)
Shock Absorber (both ends) AL	50–70 (70–95)
Shock Absorber (both ends) ALII	90–110 (120–150)
Shock Absorber (AL-401LH upper nut)	90–110 (120–150)
Shock Absorber (AL-401LH lower stud nut)	50–70 (70–95)

https://truckmanualshub.com/

Air Suspension Control Switch

The air suspension control switch located on the dashboard is used to exhaust the air from the air suspension air bags when coupling and uncoupling a trailer, or when raising and lowering a dump body. The air bags must be reinflated before the vehicle is operated.

⚠ CAUTION

On trucks equipped with a dump body, always exhaust the air from the air bags before raising the body to prevent damaging the bags and to improve chassis stability while dumping a load. Reinflate the air bags after lowering the dump body.

⚠ CAUTION

Do NOT operate a vehicle with air exhausted from the air suspension air bags, as damage to the chassis driveline will result. Always reinflate the air bags after coupling or uncoupling a trailer, or after lowering a dump body.

Ride Height

MACK air suspensions function best when the ride height is properly adjusted. Check ride height and adjust, if necessary, at each D inspection interval.

NOTE

Driveline universal joint operating angles are affected by variations in ride height. Failure to maintain the proper ride height setting is likely to lead to driveline vibration, and subsequent drivetrain durability problems.

https://truckmanualshub.com/

Ride height is measured from the bottom of the frame rail to the bottom of the main support member. This dimension must be 4.25 ± 0.125 inch (108 ± 3 mm) as shown in the illustration below.

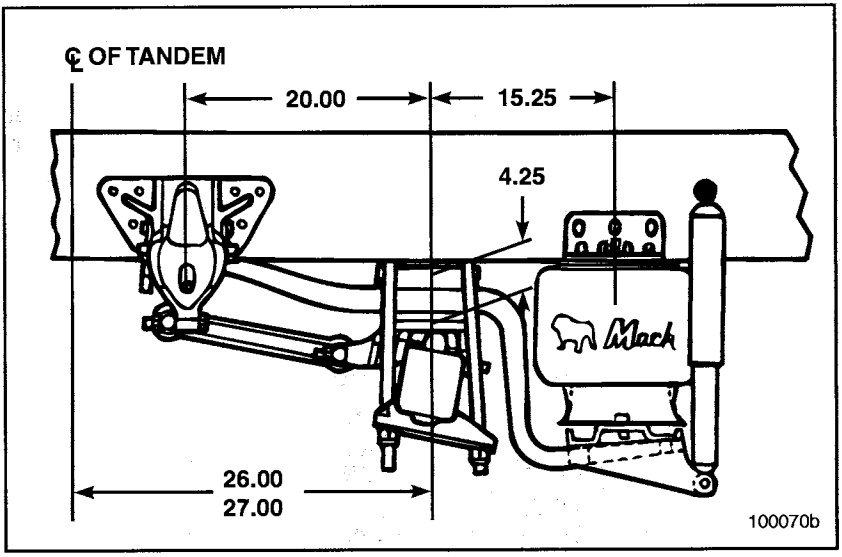

Figure 58 — Ride Height

This dimension is the most important measurement when adjusting ride height. A gauge is available from Hendrickson Suspension (Hendrickson part No. 45745-050) to facilitate checking this dimension.

Ride height must be measured on the axle to which the height control valve linkage is attached. On tandem axle assemblies, frame slope may cause the ride height to vary from the 4.25-inch (108 mm) dimension on the axle which does not have a height control valve. Ride height should be set when the vehicle is unloaded and parked on a level surface. Prior to checking or setting ride height, drive the vehicle forward and backward a few feet several times, and bring the vehicle to a stop without using the brakes. Chock the wheels to prevent the vehicle from moving, and do not set the parking brakes. With the air system fully pressurized, use the air suspension control inside the cab to exhaust, then reinflate the air suspension. Wait until airflow to the suspension has stopped, then check ride height.

Changes to ride height are made by adjusting the height-control valve linkage. The following different height-control valve and linkage configurations are used on MACK chassis.

https://truckmanualshub.com/

- Height-control valve linkage with rubber rod ends.
- Height-control valve linkage with threaded rod ends.
- Height-control valve with adjustable arm.

Ride height adjustment is different for each valve/linkage configuration. Adjustment procedures are outlined in the following text.

On chassis equipped with height-control valve linkage having rubber rod ends, loosen the hose clamp at the bottom rod end, then slide the rod end up or down on the linkage rod to achieve the specified ride height. Retighten the hose clamp when the adjustment is complete.

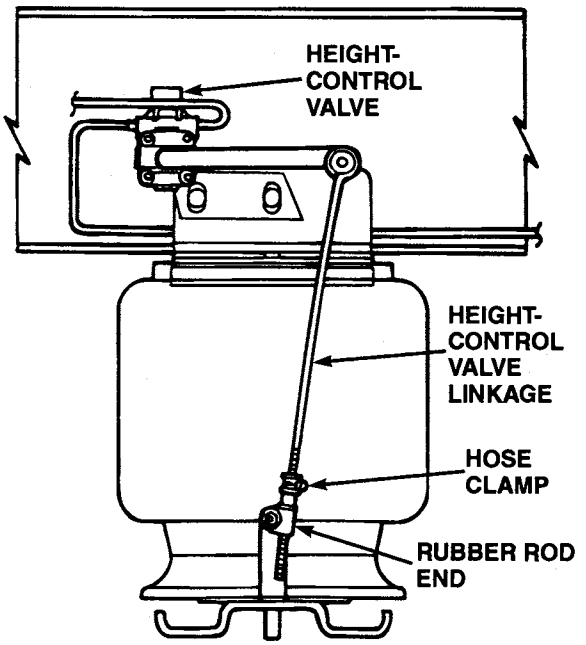

Figure 59 — Leveling Valve and Linkage

https://truckmanualshub.com/

On chassis equipped with a height-control valve linkage having threaded rod ends, disconnect the linkage from the bracket on the cross channel. Loosen the jam nut, then turn the rod end to achieve the specified ride height. Reattach the linkage to the bracket on the cross channel and torque all linkage fasteners (jam nut and attachment hardware) to 100–150 lb-in (11–12 N•m).

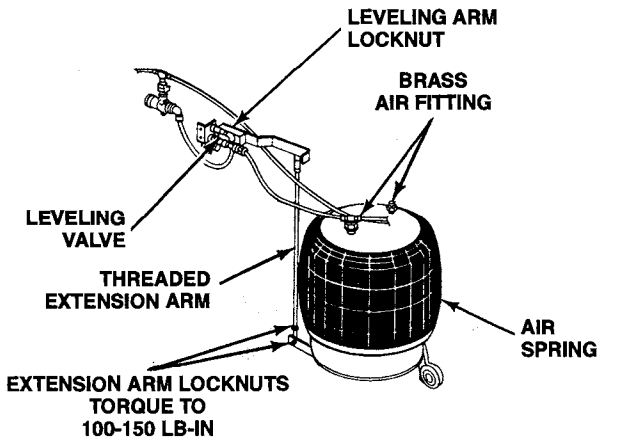

LEVELING VALVE AND LINKAGE

100021a

Figure 60 — Height Control Valve and Linkage

https://truckmanualshub.com/

On chassis equipped with a height-control valve that has an adjustable arm, the valve has a stud that passes through an elongated hole in the arm. The arm is secured with a locknut. To adjust ride height on these chassis, loosen the control arm locknut and reposition the arm to achieve the specified ride height. Retorque the arm locknut to 100–150 lb-in (11–12 N•m).

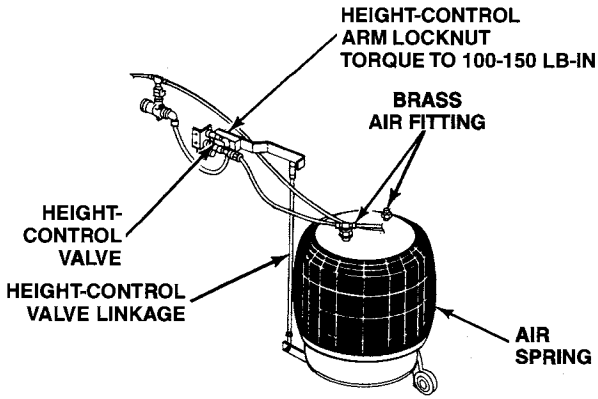

HEIGHT-CONTROL VALVE WITH ADJUSTABLE ARM

100550a

Figure 61 — Height Control Valve with Adjustable Arm

https://truckmanualshub.com/

In addition to the adjustable height-control valve linkages, the height-control valve on most chassis is adjustable by moving the entire valve assembly so that ride height can be fine tuned. On these chassis, one hole in the valve mounting bracket is elongated to allow for adjustment. To fine tune ride height, loosen the locknuts on the valve mounting studs slightly, then rotate the entire valve assembly to achieve the specified ride height. Retorque the valve mounting locknuts to 50–100 lb-in (5.4–10.8 N•m).

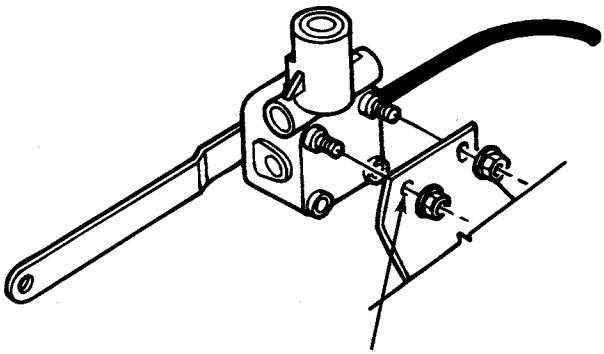

ADJUSTABLE HEIGHT-CONTROL VALVE

100551a

Figure 62 — Adjustable Height Control Valve

After ride height adjustments are complete, exhaust and reinflate the suspension. Wait until airflow to the suspension has stopped, then recheck the ride height.

https://truckmanualshub.com/

LITEFLEX® FIBERGLASS LEAF SPRINGS

Liteflex® Spring Introduction

The Liteflex fiberglass composite leaf springs manufactured by Delphi Chassis Systems offer a low-weight, high-reliability alternative to steel leaf springs for heavy truck suspensions. Liteflex springs are available for the 12,000-lb. rated steer axle suspension on the CH model, as well as for the Reyco 102W tandem drive axle suspension, rated at 34,000 lbs. The springs can be recognized easily, since they are single leaf design. A label which identifies the Liteflex® springs can also be found on both the left- and right-side frame rails, adjacent to the suspension.

Liteflex® Spring Construction

The Liteflex spring consists of glass fibers, impregnated with epoxy, then filament wound around a mold. The mold is closed under pressure and the spring cured at high temperature. The glass fibers run along the length of the spring and are continuous from end to end.

The center clamp area of the Liteflex springs consists of rubber pads bonded to the fiberglass flex member. The rubber pads are in turn bonded to a metal overclamp with an inverted "U"-shaped cross section, and to a flat metal base plate. U-bolts are used to clamp the Liteflex spring to the axle, as with steel leaf springs. U-bolt nut torque values are the same as those specified for steel springs. As the U-bolts are tightened, the overclamp and base plate limit the amount of crush on the rubber pads.

Liteflex springs for the CH model steer axle suspension have aluminum eyes fastened to the front and rear of the fiberglass flex member. Two Huck bolts are used to fasten each eye to the flex member. Elastomeric bushings are pressed into the eyes.

Liteflex springs for the Reyco 102W tandem drive axle suspension have steel slipper plates fastened to the front and rear of the fiberglass flex member. These plates provide a wear surface where the spring contacts the frame hanger brackets and center equalizer. Each plate is fastened to the flex member using two Huck bolts.

https://truckmanualshub.com/

Liteflex® Spring Operation and Maintenance

Liteflex springs are strong and durable when loaded as designed on the vehicle. However, they can be damaged easily by contact with hard and/or sharp objects, such as chains, jacks, tools, a concrete floor, or storage racks with sharp edges. Any scratch or scrape on the spring surface, deep enough to expose the white glass fibers, may produce broken fibers and splintering.

⚠ CAUTION

- *Never wrap a chain around a Liteflex spring for any reason.*
- *Never jack against the Liteflex spring.*
- *Protect the Liteflex spring from being damaged by hard and/or sharp objects.*

Springs can be damaged by engine degreasers, wheel cleaners, and aluminum cleaners which contain phosphoric or hydrofluoric acids. These chemicals attack the glass fibers and the epoxy/glass bonds in the spring, resulting in rapid splintering and breakage.

⚠ CAUTION

Do not expose a Liteflex spring to cleaners and/or degreasers containing acids.

Springs can be damaged by exposure to high temperatures. Heat shields are sometimes installed on exhaust system components to protect the spring from heat.

⚠ CAUTION

Make sure that exhaust system heat shields are in place, prior to operating the vehicle.

https://truckmanualshub.com/

Liteflex® Spring Daily Inspection

As with steel springs, the Liteflex springs should be inspected daily during the walk-around pre-trip inspection. The inspection should include the following items:

CH MODEL STEER AXLE WITH LIFEFLEX SPRINGS

- SPRING EYES: Check for any cracks in the aluminum spring eye. If any cracks are found, the vehicle should not be driven until the spring is replaced.
- HUCK BOLTS: Check for any Huck bolt fastener loose or missing from the spring. If a problem is found, the vehicle should not be driven until the spring is replaced. Do not attempt to service the faulty Huck bolt by installing a new Huck bolt or threaded fastener.
- SPLINTERING: Small isolated splinters have no effect on the function of the spring and should be left alone, or, if desired, clipped off with a pair of wire cutters.
- CRACKING: Check the spring for cracks. Cracks will run from front to back. If a crack is visible on the side of the spring, at mid-thickness, the vehicle should not be driven until the spring is replaced. These cracks usually start at the center of the spring, near the U-bolts.
- DELAMINATION: Delamination is a separation of the surface of the spring in layers. Inspect the top and bottom surfaces of the spring for delamination. If delamination has extended to more than half the width of the leaf, then the vehicle should not be driven until the spring is replaced. Also, if delamination has reached a depth of half the leaf thickness or more, then the vehicle should not be driven until the spring is replaced.
- HEAT SHIELD: Make sure that all factory-installed heat shields are in place.
- SPRING MOUNTING AND CLAMPING: As with a steel spring suspension, the spring pins, bushings, shackles, and spring brackets should be inspected for signs of looseness or wear. Also, the U-bolts and clamped joint at the center of the spring should be inspected for looseness or shifting. Out-of-service requirements for these components are the same as for a steel spring.

https://truckmanualshub.com/

REYCO 102W TANDEM AXLE SUSPENSION WITH LITEFLEX SPRINGS

- SPRING SLIPPER PLATES: Check for cracked, missing, or worn slipper plates. The plates are considered defective if they are worn to less than half their original thickness, or if they are cracked. If plates are defective or missing, the vehicle should not be driven until the spring is replaced.
- HUCK BOLTS: Check for any Huck bolt fastener loose or missing from the spring. If a problem is found, the vehicle should not be driven until the spring is replaced. Do not attempt to service the faulty Huck bolt by installing a new Huck bolt or threaded fastener.
- SPLINTERING: Small isolated splinters have no effect on the function of the spring and should be left alone, or, if desired, clipped off with a pair of wire cutters.
- CRACKING: Check the spring for cracks. Cracks will run from front to back. If a crack is visible on both sides of the spring and extends for more than 3/4 of the length of the spring, then the vehicle should not be driven until the spring is replaced. If a crack is visible on the top and bottom of the spring and extends for more than 3/4 of the length of the spring, then the vehicle should not be driven until the spring is replaced. If a crack is visible on either side *and* the top or bottom of the spring, then the vehicle should not be driven until the spring is replaced.
- HEAT SHIELDS: Make sure that all factory-installed heat shields are in place.
- SPRING MOUNTING AND CLAMPING: As with a steel spring suspension, the torque rods, bushings, equalizer, and spring brackets should be inspected for signs of looseness or wear. Also, the U-bolts and clamped joint at the center of the spring should be inspected for looseness or shifting. Out-of-service requirements for these components are the same as for a steel spring.

https://truckmanualshub.com/

As a crack or delamination develops in a Liteflex spring, the spring gradually begins to sag. The driver may notice the vehicle beginning to lean to one side, or the steering may begin to pull to one side. The driver may notice a change in the way the vehicle responds to bumps in the road. If these conditions are noticed, the springs and other chassis components should be inspected as outlined above.

TOWING A VEHICLE WITH LITEFLEX® SPRINGS

Liteflex springs can be easily damaged by contact with hard and/or sharp objects, such as chains, jacks, or tools. When towing a vehicle with Liteflex springs, do not attach chains or other parts of a towing rig directly to the Liteflex springs. Make sure that the chains do not rub against Liteflex springs.

https://truckmanualshub.com/

AXLE ALIGNMENT

NOTE

Jack up the front end and shake the wheels horizontally. Wheel bearing end play must be from 0.001 to 0.005 inch (.025 to .13 mm). Check all steering linkage components for excessive looseness. These steps must be taken so as not to introduce errors into geometry readings when checking toe-in, camber and caster. Also check for proper tire pressure.

Check axle alignment at first A inspection interval, thereafter at each C and D inspection for front axles and each D inspection for rear axles.

TOE SPECIFICATIONS*

MACK non-driving front axles: FAW 12, 14.3, FA(W) 18, 20 and FA23	1/16" ± 1/32" (.06" ± .03") or .07° ± .035° or 1.5 mm/m ± .75 mm/m
Meritor or Eaton non-driving front axles	1/16" ± 1/32" (.06" ± .03") or 0°4' ± 0° ± 2' (0°2' to 0°6') or .07° ± .03° (.03° to .10°) or 1.5 mm/m ± .75 mm/m
Meritor or Marmon-Herrington front driving axles	1/16" ± 1/16" (.06" ± .06") or 0°4' ± 0°4' (0° to 0°8') or .07° ± .07° (0° to .14°) or 1.5 mm/m ± 1.5 mm/m
Note: Toe-out ** FABCO Front Driving Axles (SDA1800, 2100, 2300)	1/16" ± 1/16" (.06" ± .06") or 0°4' ± 0°4' (0° to 0°8') or .07° ± .07° (0° to .14°) or 1.5 mm/m ± 1.5 mm/m

* Set toe toward zero side of specification on vehicles equipped with steel belted radial tires or vehicles with lightly loaded front axles.

** HUNTER and JOSAM alignment equipment measurements indicating toe-out will be expressed as a negative number, i.e., –.07° for HUNTER, - 1.5 mm/m for JOSAM.

https://truckmanualshub.com/

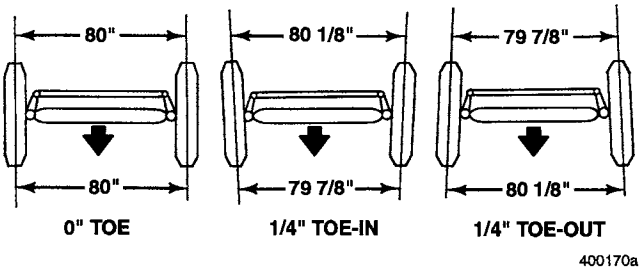

Figure 63 — Toe Measurements

https://truckmanualshub.com/

CAMBER SPECIFICATIONS

VEHICLES BUILT AFTER JANUARY 1, 1995 MACK non-driving front axles:	
FAW 12, 14.3 FA(W) 16, 18, 20 FA23	0° ± 7/16° (0° ± .43°) 1/4° ± 7/16° (.25° ± .43°) 3/4° ± 7/16° (.75° ± .43°)
VEHICLES BUILT PRIOR TO JANUARY 1, 1995	
MACK non-driving front axles (except FA23) MACK FA23 non-driving front axle	0° to 0°30' (0° to .5°) 0°30' to 1° (.5° to 1°)
Eaton non-driving front axles: EFA-12F4 and EFA-20F4 Axles Left side Right side E1200i Axles Left side Right side	7/16° ± 7/16° (.43° ± .43°) –1/16° ± 7/16° (–.06° ± .43°) 3/16° ± 7/16° (.19° ± .43°) –1/16° ± 7/16° (–.06° ± .43°)
Meritor non-driving front axles	–0°41' to 0°11' (–.69° to .19°)
Driving front axles: Meritor FABCO (SDA1800, 2100, 2300) Marmon-Herrington (MT23)	0° to 0°30' (0° to .5°) 0°15' to 0°45' (.25° to .75°) 0°24' to 0°36' (.4° to .6°)

All measurements must be taken with the vehicle in the unloaded condition.

Specifications for vehicles built prior to 1993 may be different. See previously published information, or alignment equipment manufacturer's charts for specifications on older vehicles.

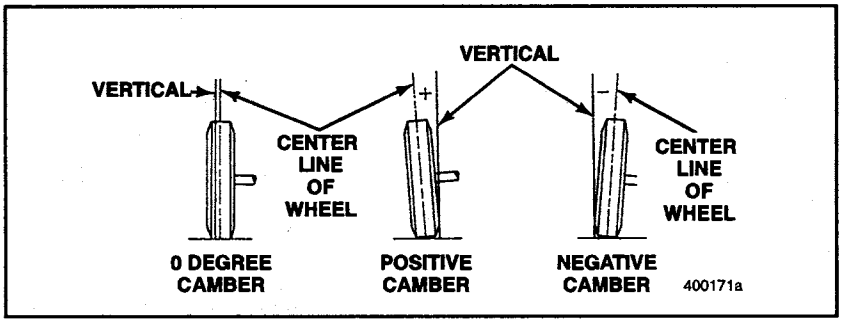

Figure 64 — Camber Angles

https://truckmanualshub.com/

CASTER SPECIFICATIONS

Single non-driving front axle — Power Steering (except CH)	4° to 6°
Single non-driving front axle — Power Steering (CH chassis)	1° to 3° Prior to 12/9/96 3° to 5° After 12/9/96
Single non-driving front axle — Manual Steering	
All except Meritor	1° to 3°
Meritor axles (except on CH chassis)	0° to 2°
Meritor axles (CH chassis)	1° to 3°
Single front driving axle — All	3°30' to 5°30' (3.5° to 5.5°)
Marmon-Herrington (MT23) after January 1, 1995	2°30' to 4°30' (2.5° to 4.5°)
Two front axles	
Front drive axles	3°30' to 5°30' (3.5° to 5.5°)
Non-driving front front axle	4° to 6°
Non-driving rear front axle	4°30' to 6°30' (4.5° to 6.5°)

All measurements must be taken with the vehicle in the unloaded condition, and the steering axle and drive axle(s) on a level surface.

RH and LH caster readings must not vary more than 0°30' (.5°).

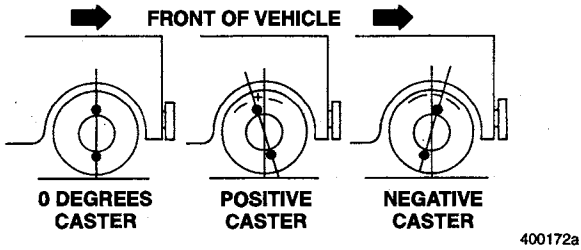

Figure 65 — Caster Angles

https://truckmanualshub.com/

Rear Drive Axle Alignment Specifications

THRUST

Adjustable Suspensions	0" ± 1/8" (0" ± .125") 0° ± .08° 0 mm/m ± 1.4 mm/m
Non-adjustable	0" ± 1/4" (0" ± .25") 0° ± .16° 0 mm/m ± 2.8 mm/m

Specifications are for Thrust Angles on Rear Drive Axles

SCRUB (Parallelism)

Adjustable Suspensions	0° ± 1/8" (0" ± .125") 0° ± .08° 0 mm/m ± 1.4 mm/m
Non-adjustable Suspensions	0" ± 1/4" (0" ± .25") 0° ± .16° 0 mm/m ± 2.8 mm/m

Specifications are for Scrub (Parallelism) on Rear Drive Axles

https://truckmanualshub.com/

WHEEL TORQUE PROCEDURES

Spoke Wheels

Tighten the wheel nuts in the sequence shown below. When replacing tire and rim assemblies, tighten lightly the first time and hold runout to under 1/8 inch (3.2 mm). Tighten nuts a quarter turn at a time, in sequence, to the torques listed below and recheck.

It is recommended that final nut tightening be done with a torque wrench. If an air impact wrench is used, periodic checks should be made with a torque wrench to ensure the accuracy and condition of the air wrench. The torque of the air impact wrench also depends upon the air line pressure from which it is operated.

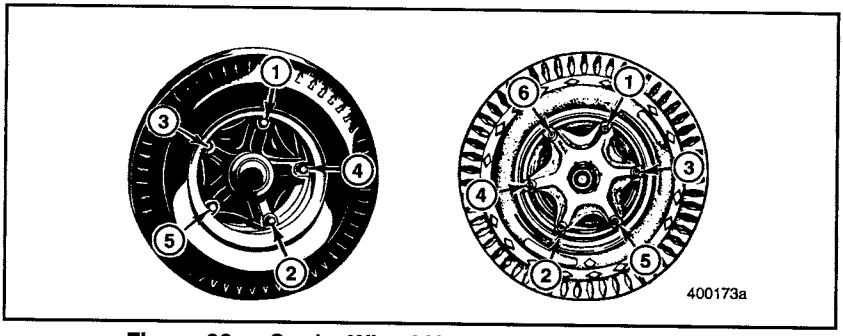

Figure 66 — Spoke Wheel Nut Tightening Sequence

https://truckmanualshub.com/

SPOKE WHEEL TORQUE SPECIFICATIONS

Description	Stud Nut Size	TORQUE (threads must be dry) Lb-ft (N•m)
Front Wheel Clamp Stud Nuts	5/8"-11 UNC	122–135 (165–183)
Front Wheel Clamp Stud Nuts (except FA18 and FA20 Series Axles)	3/4"-10 UNC	175–225 (237–305)
Front Wheel Clamp Stud Nuts (FA[W]18 and FA[W]20 Series Axles)	3/4"-10 UNC	240–260 (325–353)
Rear Wheel Clamp Stud Nuts	3/4"-10 UNC	175–225 (237–305)

See following note.

NOTE

Before installation of the wheel assemblies, thoroughly clean the brake drum, hub and rim assembly surfaces (particularly in the case of hub piloted wheels). After any procedure that requires the removal and reinstallation of the wheel assemblies, retorque the wheel nuts during the first 50–100 miles (80–161 km) of use.

https://truckmanualshub.com/

Disc Wheels (Stud Located Ball Seat)

Single Disc Wheels (Stud Located Ball Seat) — Tighten the wheel nuts in the sequence shown below to the specified torque value given in table on page 194.

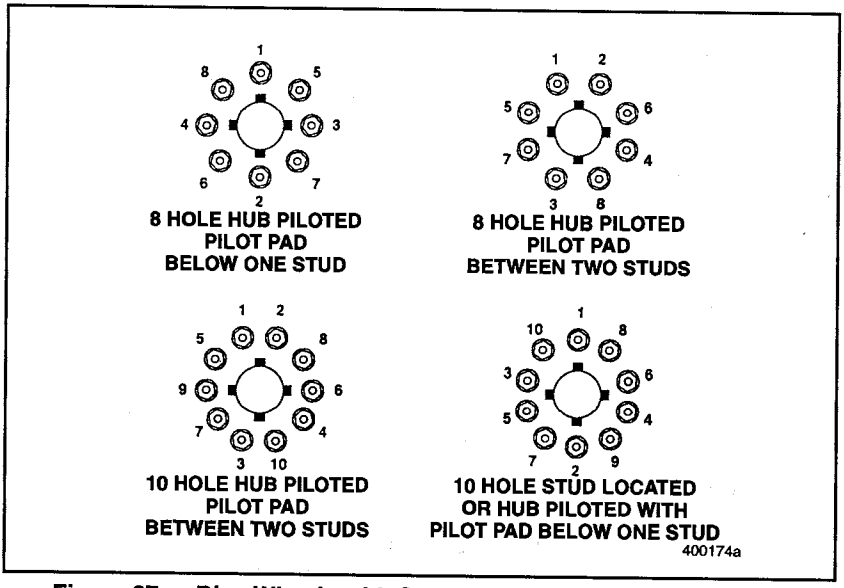

Figure 67 — Disc Wheels with Stud Located Ball Seat Tightening Sequence

Dual Disc Wheels (Stud Located Ball Seat) — Loosen outer wheel nuts first, then tighten the inner nuts in sequence shown (Figure 68) to the specified torque value given in table on page 194. After inner nuts are tightened, tighten outer wheel nuts, in sequence, to the specified torque value.

When installing wheels, tighten wheel nuts lightly first, then tighten a quarter turn at a time, in sequence, to the specified torque and recheck. When installing dual wheels, install the inner wheel first. Use the above procedure to tighten the inner wheel nuts. After the inner wheels have been installed, use the same procedure to install the outer wheels.

https://truckmanualshub.com/

Disc Wheels (Hub Piloted)

Single and Dual Disc Wheels — Mounting faces of the hub, flange mounting surfaces of the wheels and mounting surfaces of the flange nuts should be clean and free of any foreign material or excess paint. The hub pilot pads should also be free of paint. To prevent corrosion, anti-sieze compound may be applied to the hub pilot pads. Primer and paint thickness on critical mounting surfaces of each wheel should not total more than 0.003-inch maximum. The hub and drum critical mounting surfaces should not be painted.

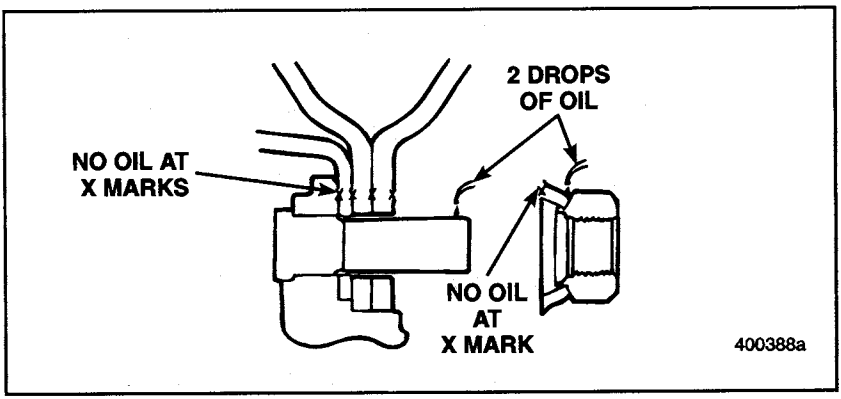

Figure 68 — Flanged Nut Installation

When installing flanged nuts, apply two drops of oil on the leading threads of each stud, and if the flange nuts have been used before, apply two drops of oil to the junction of the nut and flange of each flange nut. DO NOT get oil between the flange and the wheel.

https://truckmanualshub.com/

To install hub piloted wheels:

1. Locate one of the hub pilot pads at the 12 o'clock position.

NOTE

Before mounting the wheels, be sure the drum is properly positioned on the raised step of the pilot pad.

2. With the wheel(s) square to the hub, mount the wheel(s) as far back on the pilot pad as possible. Be careful not to scrape the stud threads when installing the wheel(s). Install the flange nuts and hand tighten.
3. Starting at the top stud position, partially torque the nuts in the sequence as shown in the illustration Figure 68.
4. Using the same sequence, torque the flange nuts to the final torque as given in table on page 194.

⚠ CAUTION

DO NOT use cone locknuts on stud located wheels, or ball-seat type nuts on hub piloted wheels. Sufficient contact surface between the nut and wheel will not be obtained, which may result in wheel loss.

Retorquing Hub Piloted Wheels

Hub piloted wheels must be retorqued during the first 50–100 miles following any procedure that requires the removal and reinstallation of the wheel assemblies. Always retorque the flange nuts when the components are at ambient temperature.

https://truckmanualshub.com/

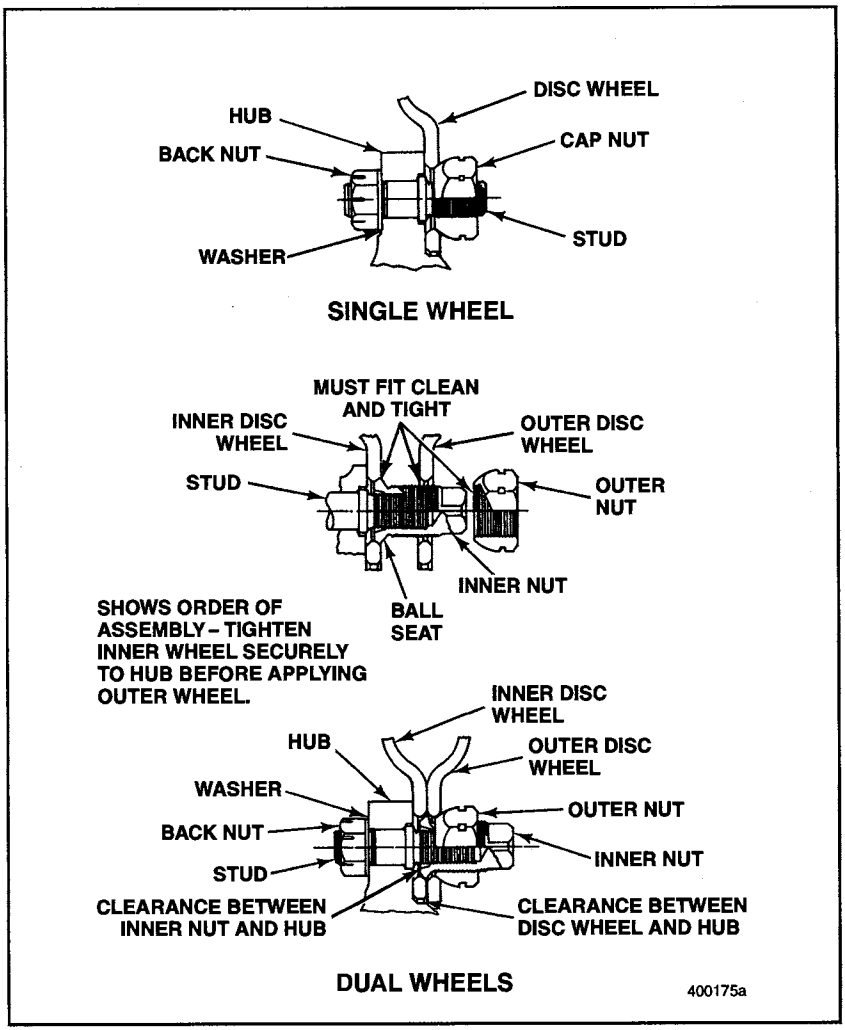

Figure 69 — Disc Wheel Assembly — Stud Located Ball Seat

https://truckmanualshub.com/

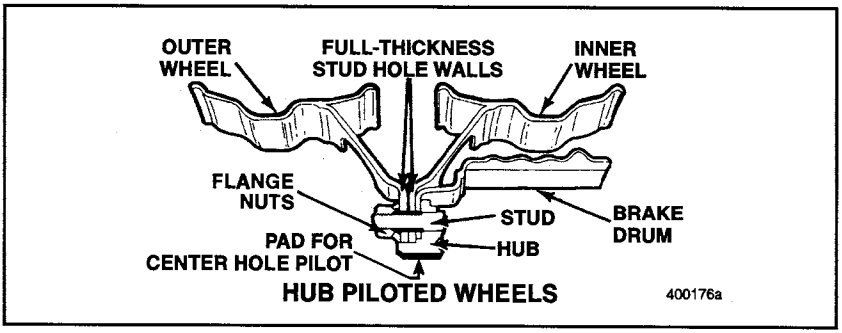

Figure 70 — Hub Piloted Wheels

It is recommended that final nut tightening be done with a torque wrench. If an air impact wrench is used, periodic checks should be made with a torque wrench to ensure the accuracy and condition of the air wrench. The torque of the air impact wrench also depends upon the air line pressure from which it is operated.

https://truckmanualshub.com/

HUB PILOTED WHEEL TORQUE SPECIFICATIONS

Description	Stud Nut Size and Type	Torque (threads must be dry) Lb-ft (N•m)
Cap Nuts – Single (front) or inner and outer (rear) with shoulder or head-type studs	3/4"-16 UNF shoulder 1-1/8"-16 UNF shoulder (3/4" backnut) 1-1/8"-16 UNF shoulder (7/8" or 1" backnut) 1-1/8"-16 UNF head 15/16"-12 UNF shoulder or head 1-5/16"-12 UNF shoulder or head	450–500 (610–678) 450–500 (610–678) 650–750 (881–1017) 450–500 (610–678) 750–900 (1017–1220) 750–900 (1017–1220)
Backnut (inner end of wheel stud: shoulder-type studs with threads on both ends)	3/4"-16 UNF 7/8"-14 UNF 1"-14 UNF	175–200 (237–271) 175–250 (237–339) 175–300 (237–407)
Flange nuts for hub piloted wheels	M22 x 1.5 (metric threads)	450–500 (610–678)†

† If the wheels have been removed, apply a small amount of oil to the lead threads of the stud and between the nut body and flange of the cone locknut when reinstalling. Avoid getting oil on the face of the nut, wheels, or tires.

Chain Clearance Spacers

Some chassis may be equipped with rear axle chain clearance spacers to provide additional clearance between the dual rear wheels and rear suspension components if tire chains are to be used. The spacer shown in the illustration below is used on chassis that are equipped with disc wheels. This type of spacer bolts to the hub assembly, and, depending upon rear wheel size and configuration, one or two spacers may be used. On chassis equipped with spoke wheels, different configuration chain clearance spacers are used. These spacers slide over, but are not bolted to, the hub assembly.

On those chassis having chain spacers bolted to the hub assembly, mounting nut torque should be checked at each A, B, C and D inspection interval. Wheel removal is necessary when mounting nut torque is checked. Also, if the chassis uses two spacers, it is necessary to remove the outer spacer to check the inner spacer nut torque.

https://truckmanualshub.com/

Using the tightening sequence illustrated below, torque the chain spacer mounting nuts to a value of 450–500 lb-ft (610–678 N•m).

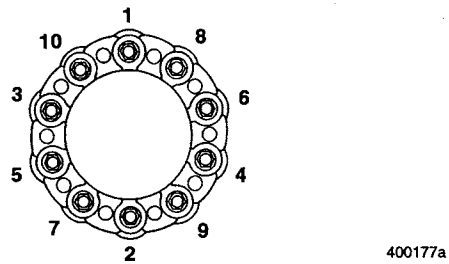

Figure 71 — Wheel Nut Tightening Sequence with Chain Clearance Spacers

NOTE

After any procedure that requires the removal and reinstallation of the wheel assemblies, retorque the wheel nuts during the first 50–100 miles (80–161 km) of use.

It is recommended that final nut tightening be done with a torque wrench. If an air impact wrench is used, periodic checks should be made with a torque wrench to ensure the accuracy and condition of the air wrench. The torque of the air impact wrench also depends upon the air line pressure from which it is operated.

https://truckmanualshub.com/

TIRE INFORMATION

Tire Inspection

Inspect tires daily, and look for bulges, cuts, penetrations, uneven wear and/or oil contamination. If any damage is found, the tire must be thoroughly inspected by a qualified tire inspector and repaired or replaced immediately, at his discretion.

If uneven tire wear is found, a thorough inspection of the chassis, inspecting those items that influence tire wear, should be performed. Chassis inspection and alignment must be performed by a qualified technician.

Factors That Influence Tire Wear

The following factors will influence tire wear, affecting both wear rate and uneven tire wear:

- Tire Pressure and Loading
- Kingpin Play
- Toe Adjustment
- Axle Alignment
- Tire Selection and Matching
- Turning Angle
- Wheel Balance
- Shock Absorbers
- Wheel Runout, Radial and Lateral
- Vocation (How the Chassis Is Used)
- Tire Condition/Damage
- Spring Pin Play
- Oil Contamination
- Torque Rod Play
- Tire Mounting

https://truckmanualshub.com/

- Fifth Wheel Setting
- Tie Rod End Play
- Wheel Bearing Play
- Lack of Lubrication on Fifth Wheel Top Plate

Oil Contamination of Tires

Oil contamination will soften rubber and eventually destroy the tire. Ensure that oil leakage does not occur by inspecting the following areas regularly:

- Engine oil seals
- Transmission oil seals
- Axle hub seals
- Drive axle seals
- Oil filters and oil lines

Tire Selection

Select the proper tire for the vehicle vocation and axle position. Tire selection should be matched to the manufacturer's application guidelines. Consult a qualified tire specialist for proper tire selection.

The overall ratio of an axle is affected by the number of revolutions the tires make in a mile, and will change if tire size, make, ply type and tread design are changed. Particularly on all-wheel-drive vehicles using the MACK TC(S) 15/25 transfer case, overall ratio match between the front and rear axles must be maintained or damage to the front drive axle, driveline or transfer case may result. Unless replacement tires are identical to the originals, consult your MACK distributor or service facility to select replacements that will maintain ratio match within acceptable limits.

https://truckmanualshub.com/

Tire Inflation

Proper tire inflation pressures ensure maximum mileage and overall tire performance. Consult the specific tire manufacturer's books for correct inflation pressures per load, or refer to the vehicle safety certification label.

WARNING

Never operate a vehicle with underinflated (or overloaded) tires, as this condition will cause excessive heat build-up which can result in sudden tire destruction, property damage and personal injury.

Tire Rotation

Radial tires should be rotated only when necessary. If the tires are wearing evenly, there is no need to rotate. If irregular wear becomes apparent, or if wear rate on the tires is perceptively different (from axle to axle or left side to right side of vehicle), then the tires should be rotated in such a manner as to alleviate the condition.

NOTE

Some tires have tread that is uni-directional; consult manufacturer product information. Other than these specific tires, there is no restriction on criss-cross rotation or reversing direction.

https://truckmanualshub.com/

Tire Wear and Driving Habits

All tires will wear out faster when subject to high speeds, as well as hard cornering, rapid starts, sudden stops, frequent turning at high turning angles, and frequent driving on surfaces which are in poor condition. Surfaces with holes and rocks or other objects can damage tires and cause axle misalignment.

Tire Loading

Consult the tire manufacturer's data book for complete information on the allowable loads for your tires. Load capacity may vary with inflation pressure, and the speed at which the tire will be used. Tires which are loaded beyond their maximum allowable loads will build up excessive heat that will result in rapid wear and/or sudden tire destruction.

⚠ CAUTION

For additional tire information (i.e., high-speed limits, inflation pressures, etc.), consult the product information available through the specific tire manufacturer.

https://truckmanualshub.com/

TIRE SERVICING

⚠ DANGER

Safety precautions must be taken when handling truck tires. Particularly when servicing multi-piece wheel rims, proper safety precautions must be observed. Failure to comply with the following procedures may result in serious injury or death.

When removing tire and wheel assemblies or rim and wheel assemblies from the vehicle, set the spring brakes and chock the wheels which are not being removed. Use a heavy-duty jack to raise the vehicle.

Instruct all tire and rim handling personnel on how to mount tires safely.

Completely deflate the tires by removing the valve core before disassembling the tire from the rim.

Use proper tools to mount and demount the tires.

Use approved rust-retarding compounds to keep rims clean and free from rust and corrosion.

Use the correct size rim for the specified tire.

Avoid rim damage when changing the tires.

Examine the inside of the tire before mounting. Dry thoroughly if any moisture is found.

Use proper tubes and flaps with radial tires.

Use the correct tire lubricant sparingly, especially in radial tire application, to minimize the possibility of fluid entering the tire.

Install the side or lock ring splits directly opposite (180 degrees) the valve stem slot.

https://truckmanualshub.com/

⚠ DANGER

Failure to follow proper safety precautions when servicing multi-piece wheel rims may result in serious injury or death.

DO NOT over-inflate the tires.

DO NOT overload the rims.

DO NOT remove the tire from the rim before completely deflating.

DO NOT attempt to correct seating of the side and lock rings by hammering while the tire is inflated. DEFLATE THE TIRE FIRST.

DO NOT use corroded, damaged or distorted rims, rings or trim parts.

DO NOT fail to identify different makes of similar clamps; paint each make a different color.

DO NOT use petroleum oil or grease on tire beads or rims. They will ruin the tires.

DO NOT use mismatched side and lock rings.

DO NOT inflate the tires before all side and lock rings are in place.

DO NOT inflate the tire unless it is placed in a safety cage or a portable lock ring guard.

https://truckmanualshub.com/

AIR BRAKE SYSTEM

Dual Circuit Brake System Function Test

The following Dual Circuit Brake System Function Test should be performed at each C and D inspection interval, or after any air system service procedures that involve disconnecting and reconnecting air lines where incorrect reconnection, such as the treadle valve, is a possibility.

1. Block the wheels to prevent the vehicle from moving.
2. Start the engine and build air system pressure to governor cut-out.
3. Stop the engine.
4. Completely drain one air reservoir.
5. Release the parking brakes.
6. Apply and hold the treadle valve.
7. Have an assistant check for proper results by observing the movement of the slack adjusters as indicated below:

   TRUCK:

   - The brakes on the rear drive axle(s) should always apply as indicated by movement of the slack adjuster.
   - The low-air warning buzzer and warning lamp should activate for at least two of the tests.

   TRACTOR:

   - The brakes on either the steering axle or the rear drive axle(s) should always apply as indicated by movement of the slack adjuster.
   - The low-air warning buzzer and warning lamp should activate for at least two of the tests.
8. Repeat the above procedures for the remaining air reservoirs (do not include air reservoirs for air starter if so equipped).

https://truckmanualshub.com/

Long Stroke Chambers

Prior to 1/27/97, type 24 long stroke brake chambers were standard equipment on 34,000 to 44,000 lbs. rear axle suspensions, with type 30 brake chambers as an available option. After 1/27/97, type 30 brake chambers became the standard chamber on 34,000 to 44,000 lbs. rear axle suspensions.

The long stroke concept provides increased stroke to reduce adjustment frequency, improved service chamber power, increased spring force for parking, and the use of smaller chambers while still developing adequate braking force.

There is a difference in diaphragm configuration between the long stroke and standard chambers. The diaphragm used in the long stroke chamber has a depth of 1.53 inches (38.8 mm) while the standard diaphragm has a depth of 1.25 inches (31.8 mm). Stroke length is 2.50 inches (63.5 mm) for long stroke chambers and 2.25 inches (57.2 mm) for the standard stroke chambers.

The standard stroke diaphragm must not be installed in the long stroke chamber. To prevent confusion and/or mismatch of parts, both the diaphragm and housing(s) are identified by prominent markings.

https://truckmanualshub.com/

Long Stroke Identification

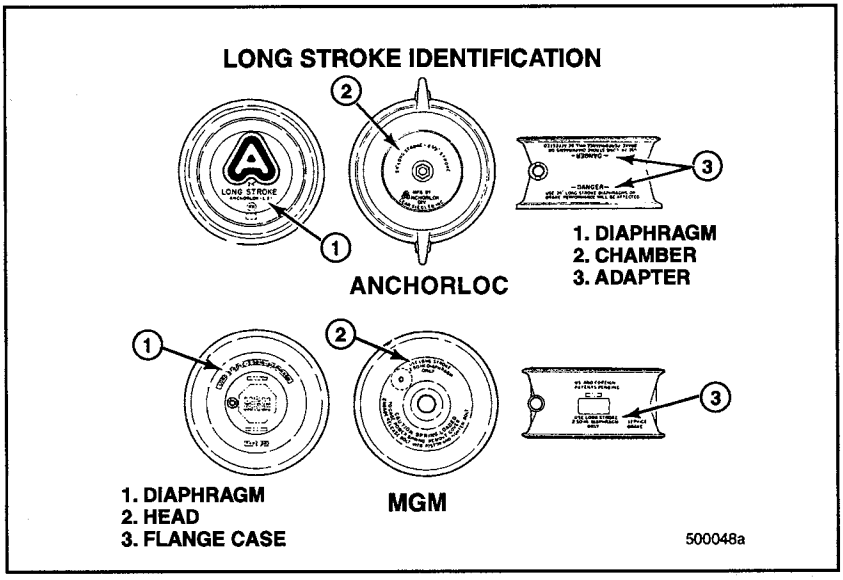

Figure 72 — Long Stroke Identification

https://truckmanualshub.com/

BRAKE ADJUSTMENT

Cam Brake Adjustment

PROCEDURE FOR CHECKING PUSH ROD TRAVEL

1. With the brakes released, measure the distance between the flat surface of the brake chamber to the center of the push rod clevis pin. (If the chassis is equipped with Haldex automatic slack adjusters, measure to the far side of the clevis pin hole.)

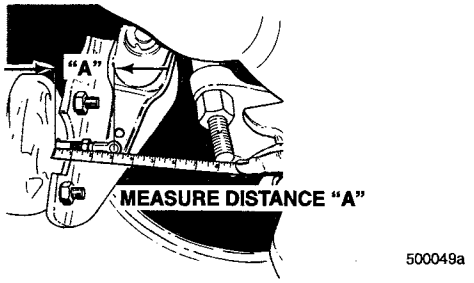

Figure 73 — Brakes Released Measurement

2. Make and hold a full brake treadle application.
3. With the brakes applied, again measure the distance between the flat surface of the brake chamber to the center of the push rod clevis pin (far end of the clevis pin hole for Haldex automatic slack adjusters).

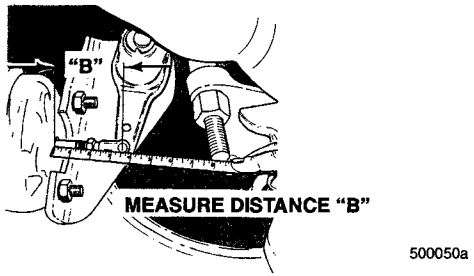

Figure 74 — Brakes Applied Measurement

https://truckmanualshub.com/

4. Subtract the measurement made with the brakes released from the measurement made with the brakes applied. The difference is the stroke.
5. Compare the stroke measurement with the maximum stroke shown in the last column of the chart below.

PUSH ROD TRAVEL SPECIFICATIONS

Chamber Size	Effective Diaphragm Area (Sq. In.)	Overall Diameter Inches	Maximum Applied Stroke Inches (mm)
9 ...	9	5-1/4	1-3/8 (34.9)
12 ...	12	5-11/16	1-3/8 (34.9)
16 ...	16	6-3/8	1-3/4 (44.4)
20 ...	20	6-13/16	1-3/4 (44.4)
24 ...	24	7-1/4	1-3/4 (44.4)
24L ...	24	7-1/4	2 (50.8)
30 ...	30	8-1/8	2 (50.8)
36 ...	36	9	2-1/4 (57.1)

⚠ DANGER

Proper brake adjustment must be maintained for the safe operation of your truck.

https://truckmanualshub.com/

⚠ DANGER

Raise the axle to be adjusted and support on safety stands.

- ***Support front axle under the axle housing or center of axle.***
- ***Support rear axle under the lower spring trunnion.***

Chock the wheels that remain on the ground.

Release the parking brake while adjusting the brakes.

MANUAL SLACK ADJUSTERS

Adjust the brakes whenever the push rod-applied stroke exceeds the maximum allowable stroke as given in the table on page 206.

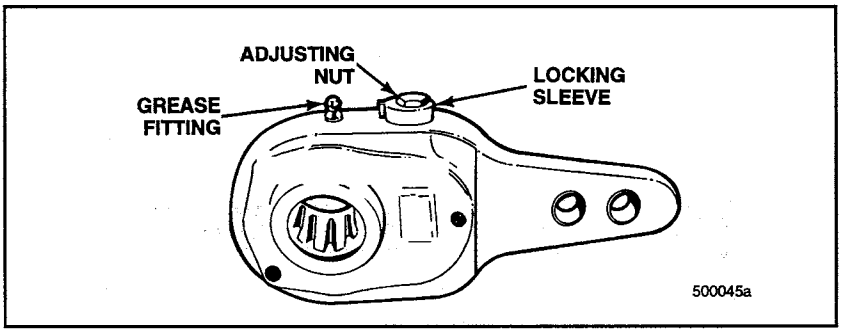

Figure 75 — Manual Slack Adjuster

Position the wrench over the adjusting screw and depress the adjusting lock sleeve BEFORE attempting to turn the adjusting screw. With the brake chamber push rod in the released position, turn the adjusting screw, while rotating the wheel, until the brake linings are against the brake drum. Back off the adjusting screw until the wheel rotates freely. When the adjustment is complete, be sure the locking sleeve is returned to its locked position by allowing the sleeve to engage the hex head of the adjusting screw.

https://truckmanualshub.com/

NOTE

Be sure all wheels are on the ground when the brakes are applied.

After proper adjustment, apply the brakes. The slack adjuster arm and brake chamber push rod should form an angle of 90 degrees. The brake chamber push rod should also form a 90-degree angle with the flat mounting surface of the brake chamber. All slack adjusters on the vehicle must be at the same angle.

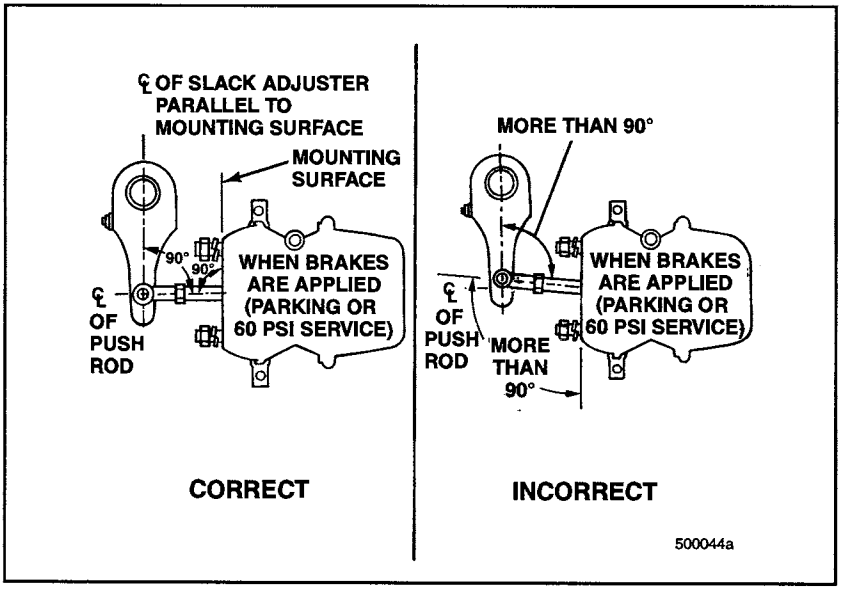

Figure 76 — Proper Slack Adjustment

https://truckmanualshub.com/

AUTOMATIC SLACK ADJUSTERS

Automatic slack adjusters are designed to automatically maintain proper brake chamber stroke and compensate for brake lining wear during normal use. The only time automatic slack adjusters will need adjustment is during initial installation, removal or to back off the brake shoes during brake work such as brake shoe relining, brake drum reconditioning, etc. DO NOT rely on automatic slack adjusters to take up excessive initial clearance. For procedures to adjust automatic slack adjusters, refer to the Air and Brake System Service Manual, 16-104.

⚠ CAUTION

Before attempting to turn the manual adjusting nut on Meritor automatic slack adjusters, the pawl must first be removed or damage to the pawl teeth may result.

Wedge Brake Adjustment

MANUAL ADJUSTERS:

1. Raise the wheels off the ground.
2. Remove the dust covers from the adjusting slots (two on each brake).
3. Using an adjusting spoon, turn the star wheel until a heavy drag is felt while rotating the brake drum. (The adjusters have right-hand threads.)
4. Back off the adjuster until a light drag is felt while rotating the drum.
5. Repeat the procedure for the second brake shoe.
6. Reinstall the dust covers, and repeat the procedure for the remaining wheels.

AUTOMATIC ADJUSTERS:

Automatic adjusters are designed to compensate for brake lining wear during normal use and should require no additional adjustments except after initial installation, brake relining, or drum reconditioning. Do not rely on automatic adjusters to take up excessive initial clearance after brake work. Refer to the Air and Brake System Service Manual, 16-104 for procedures to adjust automatic adjusters.

https://truckmanualshub.com/

CLUTCH ADJUSTMENT

Spicer Easy Pedal 14- and 15-1/2 Inch Angle Spring Clutches

MANUAL ADJUSTMENT WITH KWIK-ADJUST™ COMPONENT

In order for the clutch to release properly, the clutch release bearing must travel 1/2 to 9/16 inch (12.7–14.3 mm), and there must be 1/8 inch (3.2 mm) of clearance between the clutch release yoke and the release bearing wear pads.

Through normal use the friction surfaces of the clutch wear, causing an increase in release bearing travel. As bearing travel increases, the clearance between the release yoke and wear pads decreases, which becomes evident as a decrease in clutch free pedal in the cab. When a decrease in free pedal is noticed, adjustment of the clutch release bearing travel is necessary to maintain proper clutch release operation. An improperly adjusted clutch will slip and eventually burn out.

https://truckmanualshub.com/

When clutch free pedal decreases to 1/2 inch (12.7 mm), the following adjustment procedure must be used to ensure proper clutch adjustment:

1. Measure release bearing travel. Release bearing travel is the distance between the rear face of the clutch release bearing and the clutch brake. There should be 1/2 to 9/16 inch (12.7–14.3 mm) of release bearing travel.

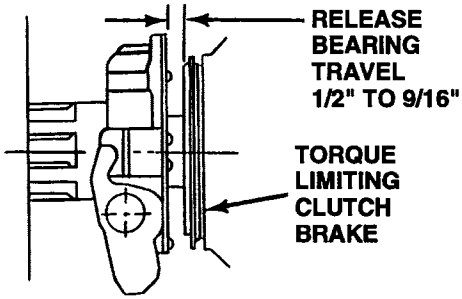

Figure 77 — Release Bearing Travel

If travel is not within specification, adjust as follows:

A. Insert a 5/8 inch socket or box wrench through the inspection hole, over the hex headed bolt on the Kwik-Adjust™ component.

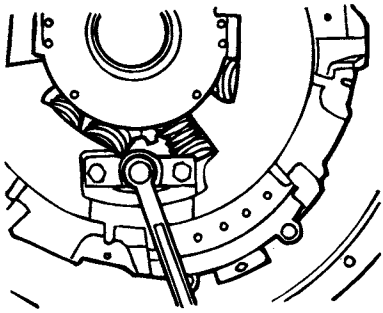

Figure 78 — Release Bearing Adjustment

https://truckmanualshub.com/

B. Depress and turn the bolt in the direction of the arrow embossed on the clutch to adjust for wear.

NOTE

The clutch must be released before attempting to turn the adjusting nut.

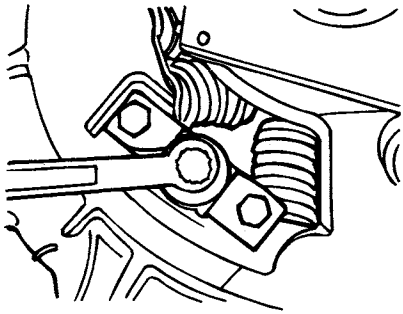

Figure 79 — Adjusting Release Bearing Travel

- Clockwise moves the release bearing toward the transmission (decreases clutch travel).
- Counterclockwise moves the release bearing toward the engine (increases release bearing travel).

C. The Kwik-Adjust™ will re-engage at each third turn and a flat of the hex headed bolt will align with the flat edge of the bracket.

NOTE

The Kwik-Adjust™ component on some chassis may utilize a square headed bolt requiring a 3/4-inch, 12-point wrench or socket for clutch adjustment, and re-engages at every 1/4 turn.

https://truckmanualshub.com/

2. After the 1/2-inch (12.7 mm) of release bearing travel has been set, check if there is sufficient clutch pedal free travel. There should be 1-3/4 ± 1/4 inch (44.5 ± 6.4 mm) of clutch pedal free travel to ensure the proper 1/8-inch (3.2 mm) of clearance between the clutch release yoke and the release bearing wear pads.

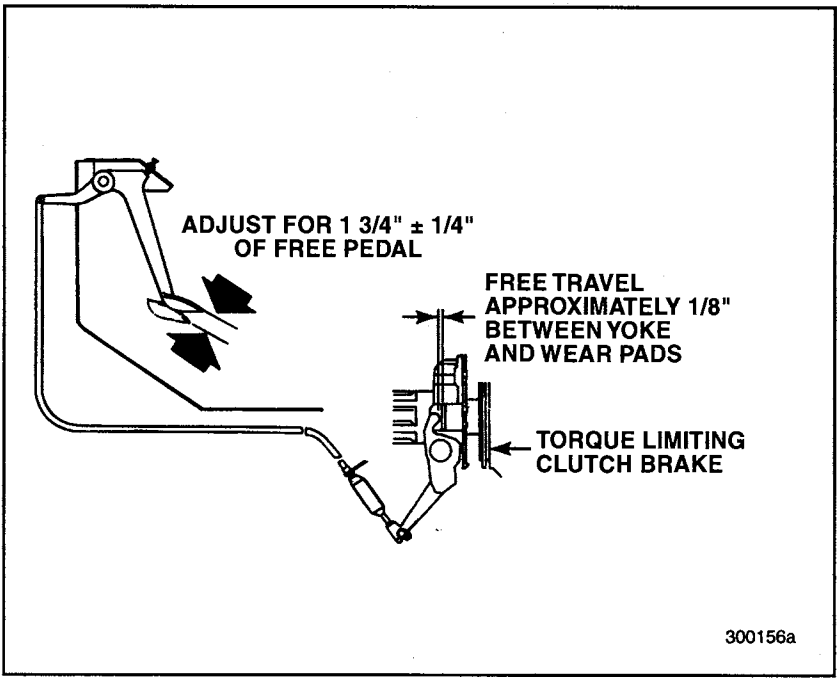

Figure 80 — Clutch Pedal Free Travel

https://truckmanualshub.com/

If free pedal is not within specifications, adjust as follows:

NOTE

Adjustments to the external linkage are seldom necessary and should only be made to compensate for wear in the linkage assembly or release mechanism. NEVER attempt to adjust the external linkage to compensate for wear of the clutch friction surfaces. Release bearing travel must be set BEFORE adjusting free pedal.

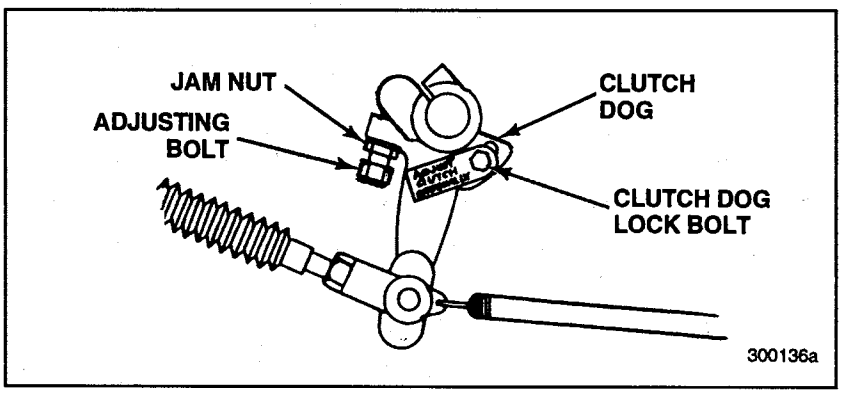

Figure 81 — Free Travel Adjustment

A. Loosen the clutch dog lock bolt.

B. Loosen the jam nut on the clutch dog adjusting bolt.

C. Turn the adjusting bolt counterclockwise to increase clutch pedal free travel or clockwise to decrease free travel.

D. When free travel has been adjusted, tighten the adjusting bolt jam nut and the clutch dog lock bolt, then recheck free pedal.

https://truckmanualshub.com/

3. After the release bearing travel and the clutch pedal free travel have been properly adjusted, check and verify that clutch brake squeeze can be felt within the last 1/2 to 1 inch (12.7–25.4 mm) of clutch pedal travel.

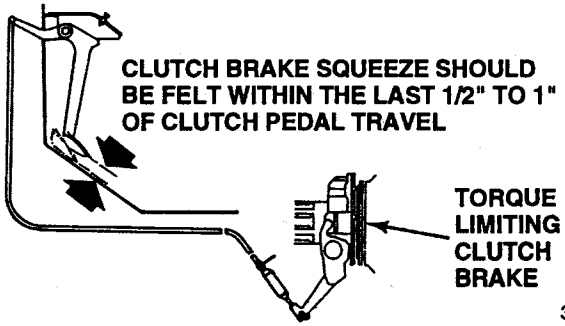

Figure 82 — Clutch Brake Squeeze — Spicer Easy Pedal

Check the position at which clutch brake squeeze occurs as follows:

A. Insert a 0.010-inch feeler gauge between the rear face of the clutch release bearing and the clutch brake.

B. Fully depress the clutch pedal.

C. Slowly release the clutch pedal, and stop releasing as soon as the feeler gauge can be pulled from between the release bearing and the clutch brake.

D. Measure to see if the pedal is within the last 1/2 to 1 inch of travel.

NOTE

In most instances brake squeeze will occur within specifications after the release bearing travel and clutch free pedal have been properly set. Some models, however, have adjustable pedal stops which may be adjusted if clutch brake specifications cannot be met.

https://truckmanualshub.com/

Spicer Solo 15-1/2" Clutch

INSTALLATION PROCEDURE:

Install the Solo clutch on the flywheel the same way as the current Spicer Easy-pedal clutch. (Solo clutch is completely interchangeable with the Easy-pedal clutch.) Mount the Solo clutch on the flywheel with eight (8) 7/16" × 2-1/4" Grade 5 or better bolts with lock washers and tighten to 40–50 lb-ft.

Remove the four (4) yellow-colored shipping bolts in a crisscross pattern. This will release the pressure plate and hold the driven disc in proper position. Remove the aligning tool. (Do not be concerned if the release bearing housing touches the clutch cover.) Save these four yellow shipping bolts in case you have to remove this clutch for some reason.

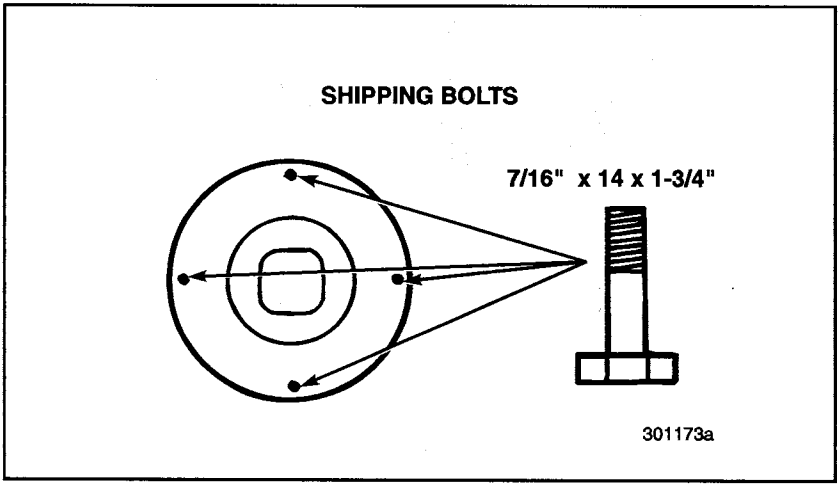

Figure 83 — Shipping Bolts

https://truckmanualshub.com/

Make sure the four (4) positive separator pins in the intermediate plate have been set with a 1/4" diameter punch flush against the flywheel (reference Spicer wall chart "Form No. 1279-SCD").

Install the transmission the same way as with the Easy-pedal clutch. **Important: DO NOT** use the cross shaft release lever to pull the transmission into its final position. Doing so may cause the Solo to "over-adjust," thus preventing you from properly setting up the clutch. (Refer to "ADJUSTMENT PROCEDURE:" on page 218.)

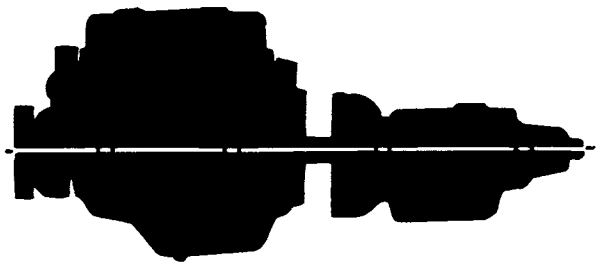

Figure 84 — Transmission Installation

https://truckmanualshub.com/

ADJUSTMENT PROCEDURE:

Adjustment of the Solo clutch is accomplished by stroking the MACK linkage cross shaft release lever (clutch dog lever arm) five (5) times. Use a pipe over the cross shaft release lever or wrench on the cross shaft release lever to rotate it until the release bearing comes to a complete stop and "squeezes" the clutch brake, repeat this procedure a minimum of 5 times. This "release bearing to clutch brake contact" will ensure that: 1) The Solo has adjusted fully to its new environment and 2) The linkage is capable of pulling the bearing far enough to obtain "clutch brake squeeze," clutch brake should be felt within the last 1/2" to 1" of clutch pedal travel.

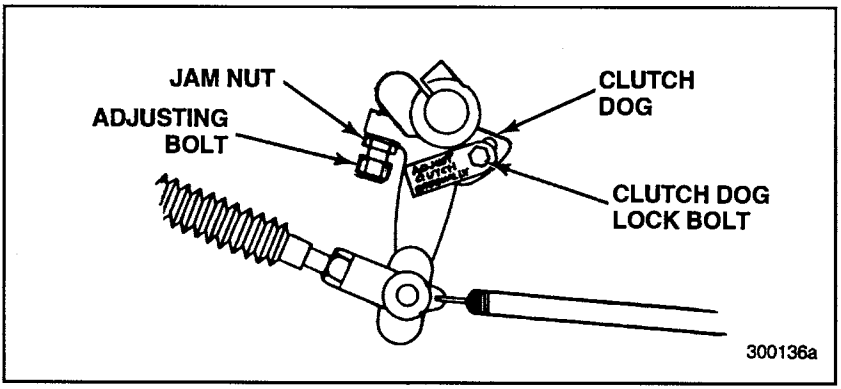

Figure 85 — Clutch Linkage

https://truckmanualshub.com/

The MACK external linkage can now be connected and set for proper travel. Hook up the cable and set the clutch dog to achieve proper clutch brake in the cab. The clutch brake squeeze should be felt within the last 1/2" to 1" of clutch pedal travel.

Check the position at which clutch brake squeeze occurs as follows:

A. Insert a 0.010" feeler gauge between the rear face of the clutch release bearing and the clutch brake.

B. Fully depress the clutch pedal.

C. Slowly release the clutch pedal, and stop releasing the pedal as soon as the feeler gauge can be pulled from between the release bearing and clutch brake.

D. Measure to see if the pedal is within the last 1/2" to 1" of travel.

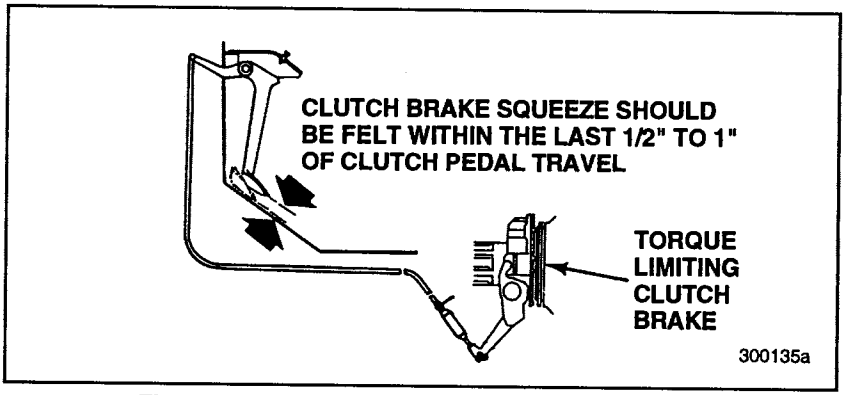

Figure 86 — Clutch Brake Squeeze — Spicer Solo

https://truckmanualshub.com/

NOTE

Clutch Release Bearing Lubrication:

The clutch release bearing (both Eaton Easy-Pedal and Solo™ clutches) must be lubricated at each chassis lubrication interval as follows:

- Line Haul 1 — 25,000 miles (40 000 km)
- Line Haul 2 — 15,000 miles (24 000 km) or 700 hours, whichever occurs first.
- Short Haul — Every 300 hours

To ensure proper lubrication:

- Check that the lube tube assembly (if equipped) is intact.
- Apply grease to fitting until grease can be seen coming from the back of the release bearing.
- It is recommended that grease be purged from the release bearing during lubrication of the bearing.

Recommended lubricant is NLGI No. 2EP grease.

Bearing Pads:

Apply a small amount of recommended grease between the release bearing pads and the clutch release fork when lubricating the clutch release bearing.

Lube Tube (If Equipped):

- Lube tubes should be pre-lubed before installation. This is to remove air from lube tube system to ensure lubricant is delivered to the release bearing during initial installation.

https://truckmanualshub.com/

CYLINDER HEAD RETORQUE PROCEDURES

Any procedure involving the removal and reinstallation of the cylinder heads requires that the cylinder head capscrews be retorqued after performing an acceptable engine run-in procedure (such as dynamometer tests, road test, etc.) in which normal operating temperature was achieved. No further retorque is required.

NOTE

To ensure proper joint clamp loading during cylinder head reinstallation, make sure the capscrews (and the corresponding tapped holes in the cylinder block) are thoroughly cleaned, and the underside of the capscrew heads, threads and washers are well oiled. Follow the proper cylinder head installation and capscrew torque procedures as outlined in the specific overhaul manual for the engine being serviced.

After performing a proper engine run-in in which normal operating temperature was reached, retorque the cylinder head capscrews using the tightening sequence shown in the illustrations below. Retorque one capscrew at a time by backing off until loose, then, using an accurately calibrated torque wrench, retightening to the value listed in the chart below. Repeat this procedure for each remaining capscrew making sure the proper tightening sequence is followed.

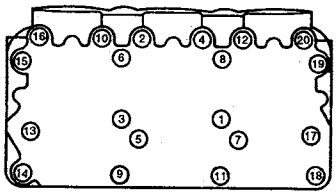

EXHAUST MANIFOLD SIDE

E-TECH™ CAPSCREW TIGHTENING SEQUENCE

200093a

Figure 87 — Capscrew Tightening Sequence

CAPSCREW TORQUE VALUE

E-Tech™ — 205 lb-ft (278 N•m)

https://truckmanualshub.com/

VALVE ADJUSTMENT

Valve Adjustment, E-Tech™ Engine

NOTE

All MACK engines require valve lash adjustments be made with the engine cold (coolant temperature less than 100°F [38°C]), not running (static) and with the piston at top dead center on the compression stroke (inlet and exhaust valves closed). Always refer to the engine ID plate for proper valve lash adjustment specifications, and for the slave piston lash adjustment for Jake Brake equipped engines. Refer to page 302 in this book for an illustration of the engine ID plate. Jake Brake slave piston lash adjustments are outlined at the end of this valve adjustment section.

VALVE ADJUSTMENT SPECIFICATIONS

Engine	Cold Static	
	Inlet	Exhaust
E-Tech™ Engine	0.016 in. (0.406 mm)	0.024 in. (0.610 mm)

https://truckmanualshub.com/

Valve adjustments are made in two stages. The yoke is adjusted first, then the valve lash. Valves must be adjusted in firing order sequence with the piston at the top of its compression stroke. The flywheel on the E-Tech™ engine is marked in 120-degree increments to indicate engine position at which the valves must be adjusted. Access to the valve adjustment markings on the flywheel is gained by removing the cover from the bottom of the flywheel housing. Special tool J 38587, which engages the flywheel through an access hole provided in the flywheel housing, is recommended to rotate the engine.

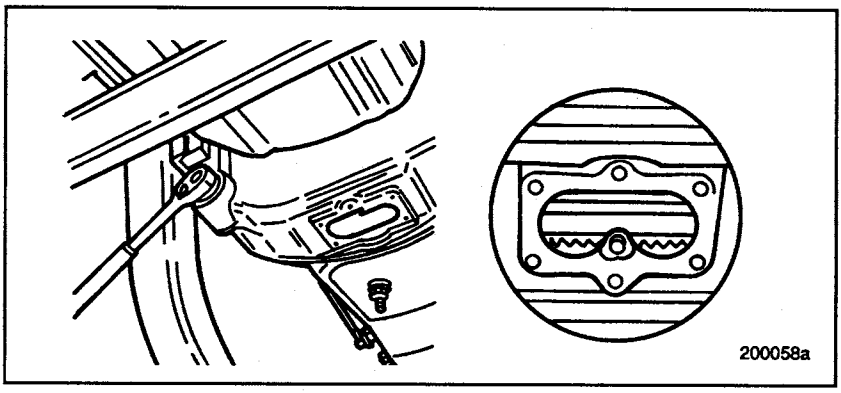

Figure 88 — Flywheel Timing Indicator

Valve Yoke Adjustment

When adjusting valve yokes, the rocker arm adjusting screw must first be loosened and backed out several turns.

On engines equipped with a Jake Brake, the valve yokes are adjusted in the same manner as a non-Jake Brake equipped engine. The exhaust valve yoke on an E-Tech™ engine equipped with a Jake Brake contains a hollow adjusting screw through which an actuator pin passes. This type of adjusting screw is adjusted with an 8-mm wrench rather than a screwdriver.

https://truckmanualshub.com/

The valve yokes and rockers used on Jake brake equipped engines have metric thread with the Spiralock™ thread form. This special thread form has a wedge ramp that provides a locking effect. The adjusting screw is free-spinning until the locknut is tightened. When the locknut is tightened, the crests of the adjusting screw are pulled tightly against the wedge ramp of the yoke or rocker. Because of this, the adjusting screw may remain locked when the locknut is loosened. To loosen the adjusting screw, turn it in a clockwise direction after loosening the locknut. Additional force on the wrench or screwdriver may be required to loosen the locked adjusting screw.

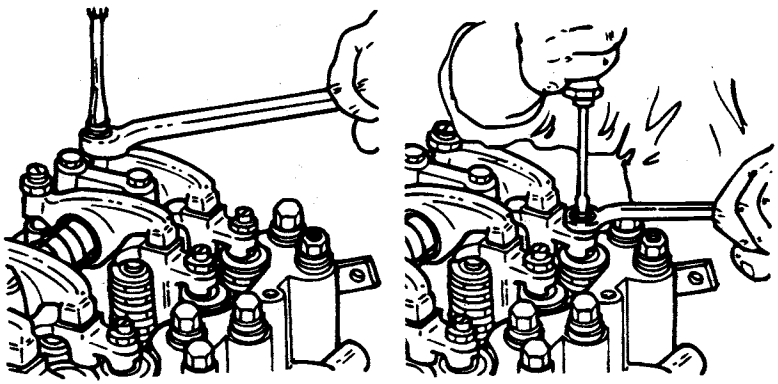

1. LOOSEN THE ROCKER ARM ADJUSTING SCREW LOCKNUT AND BACK THE ADJUSTING SCREW OUT SEVERAL TURNS.
2. LOOSEN THE YOKE ADJUSTING SCREW LOCKNUT.

201051a

Figure 89 — Valve Yoke Adjustment

https://truckmanualshub.com/

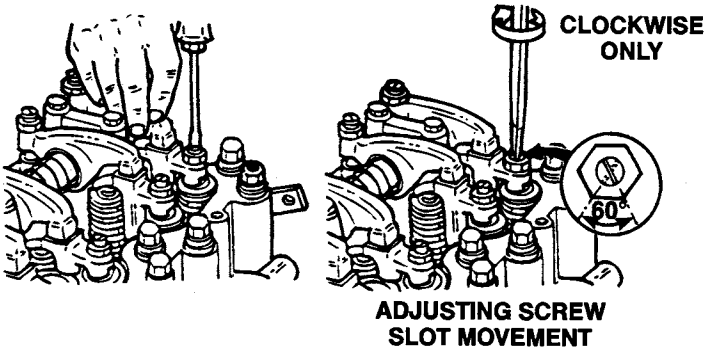

3. EXERT MODERATE FORCE ON THE YOKE BY PRESSING ON ROCKER ARM SLIPPER END. TURN THE YOKE ADJUSTING SCREW DOWN UNTIL IT SOLIDLY CONTACTS THE OUTBOARD VALVE STEM TIP. (A LIGHT DRAG SHOULD BE FELT ON THE ADJUSTING SCREW.)
4. TURN THE ADJUSTING SCREW AN ADDITIONAL 1/6 TURN (60°) CLOCKWISE. A 1/6 TURN IS EQUAL TO ONE FLAT ON THE ADJUSTING SCREW LOCKNUT.

201052a

Figure 90 — Valve Yoke Adjustment

https://truckmanualshub.com/

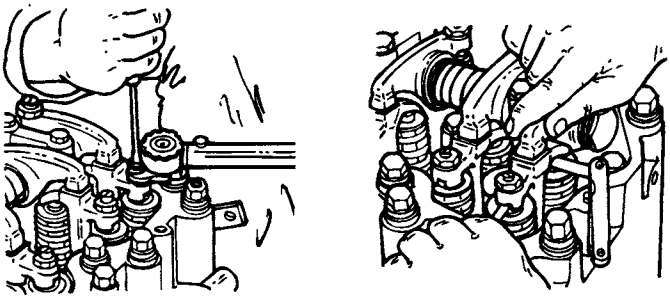

5. HOLDING THE YOKE ADJUSTING SCREW IN THIS POSITION, TIGHTEN THE ADJUSTING SCREW LOCKNUT TO A VALUE OF 33 LB-FT (44 N•m).

6. CHECK THE VALVE YOKE ADJUSTMENT BY INSERTING A 0.010 INCH (.25 MM) THICKNESS GAUGE BETWEEN THE INBOARD AND OUTBOARD VALVE STEM TIPS AND THE YOKE, AND EXERTING A MODERATE FORCE IN THE ROCKER ARM SLIPPER END. AN EQUAL "DRAG" SHOULD BE FELT ON BOTH THICKNESS GAUGES. IF NOT, READJUST THE YOKE ADJUSTING SCREW.

201053a

Figure 91 — Valve Yoke Adjustment

https://truckmanualshub.com/

Inlet/Exhaust Valve Lash Adjustment

NOTE

Inlet and exhaust valve lash is adjusted in the same manner for both non-Jake Brake and Jake Brake equipped engines. A spherical locknut is used on the exhaust valve rocker arm, and an open-end wrench is used to turn the adjusting screw. To avoid spherical nut breakage, be sure to use the proper size wrench (20 mm) and tighten the nut to 40 lb-ft (54 N•m).

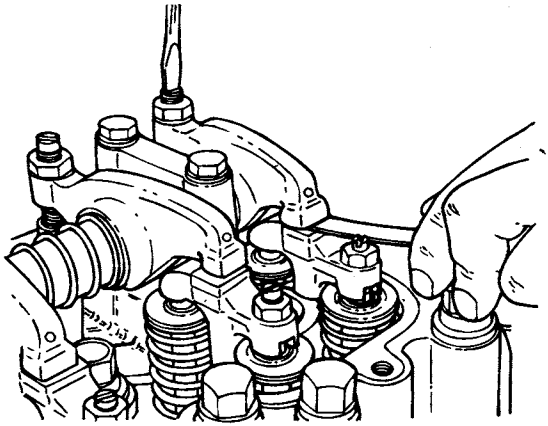

1. **PLACE THE APPROPRIATE THICKNESS GAUGE BETWEEN THE ROCKER ARM AND THE YOKE.**
2. **TURN THE ADJUSTING SCREW UNTIL A LIGHT "DRAG" IS FELT ON THE THICKNESS GAUGE.**

201054a

Figure 92 — Valve Lash Adjustment

https://truckmanualshub.com/

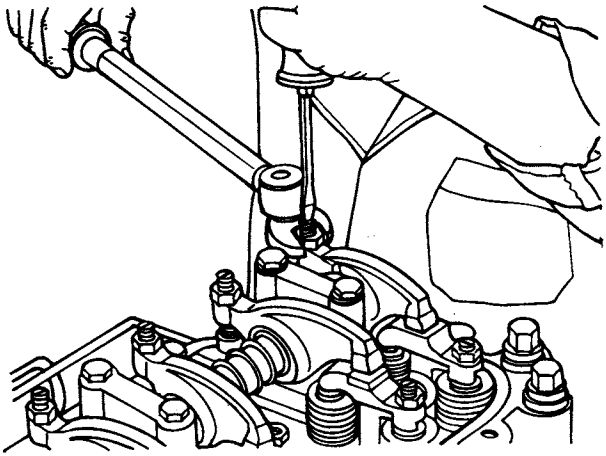

3. AFTER MAKING THE ADJUSTMENT, HOLD THE ADJUSTMENT SCREW AND TIGHTEN THE ADJUSTING SCREW LOCKNUT TO A VALUE OF 40 LB-FT (54 N•m) RECHECK THE ADJUSTMENT.

201055a

Figure 93 — Valve Lash Adjustment

https://truckmanualshub.com/

J-Tech™ Slave Piston Lash Adjustment

On E-Tech™ engines, slave piston lash is set to 0.015 inch (0.381 mm), and is measured with a standard thickness gauge.

NOTE

Slave piston lash must be adjusted whenever the valves are adjusted, or after removal and reinstallation of the Jake housing assemblies.

⚠ CAUTION

Make slave piston lash adjustment carefully. After the slave piston screw locknut is properly tightened, recheck and readjust as necessary.

⚠ CAUTION

Verify that the slave piston adjusting screws are fully retracted and that all the spherical jam nuts are turned down snug against the rocker arms before rotating the engine crankshaft for valve lash adjustment. Rotating the engine crankshaft with the spherical jam nuts loose, or the slave piston adjusting screws not fully retracted, could damage the brake master pistons.

https://truckmanualshub.com/

Adjust slave piston lash along with inlet and exhaust valve lash adjustments in firing order sequence. Adjust slave piston lash as follows:

1. Loosen the slave piston adjusting screw locknut.
2. Loosen the slave piston adjusting screw until the slave piston is fully retracted into its bore (no drag on the screw).
3. Insert a 0.015 inch (0.381 mm) thickness gauge between the actuator pin in the yoke adjusting screw and the slave piston stem. Turn the adjusting screw until a light drag is felt on the thickness gauge.

NOTE

It may be necessary to back the adjusting screw off slightly to remove the thickness gauge. Be sure to return the adjusting screw to the proper position before tightening the locknut.

4. Hold the slave piston adjusting screw and tighten the locknut to 25 lb-ft (34 N•m).

https://truckmanualshub.com/

ENGINE BRAKE MAINTENANCE

J-Tech™ Engine Brake Maintenance

The J-Tech engine brake requires very little maintenance. The engine brake is, however, sensitive to engine oil condition, contamination and viscosity. Use only MACK recommended engine oil, and change the oil and filters at the intervals recommended in this manual.

To keep the engine brake operating at peak performance, a tune-up kit is available from your MACK dealer. This kit should be installed every 5 years, 500,000 miles (805 000 km) or 15,000 hours, whichever occurs first, or at a major in-chassis engine overhaul.

Severe operating conditions, such as high levels of dust or unusually frequent engine brake usage, may require more frequent preventive maintenance intervals. Additionally, if an engine failure has occurred and the engine oil is contaminated with debris, coolant or fuel, the engine brake must be inspected for damage.

Refer to the following for a listing and an illustration of the components included in the tune-up kit.

https://truckmanualshub.com/

J-TECH ENGINE BRAKE KITS

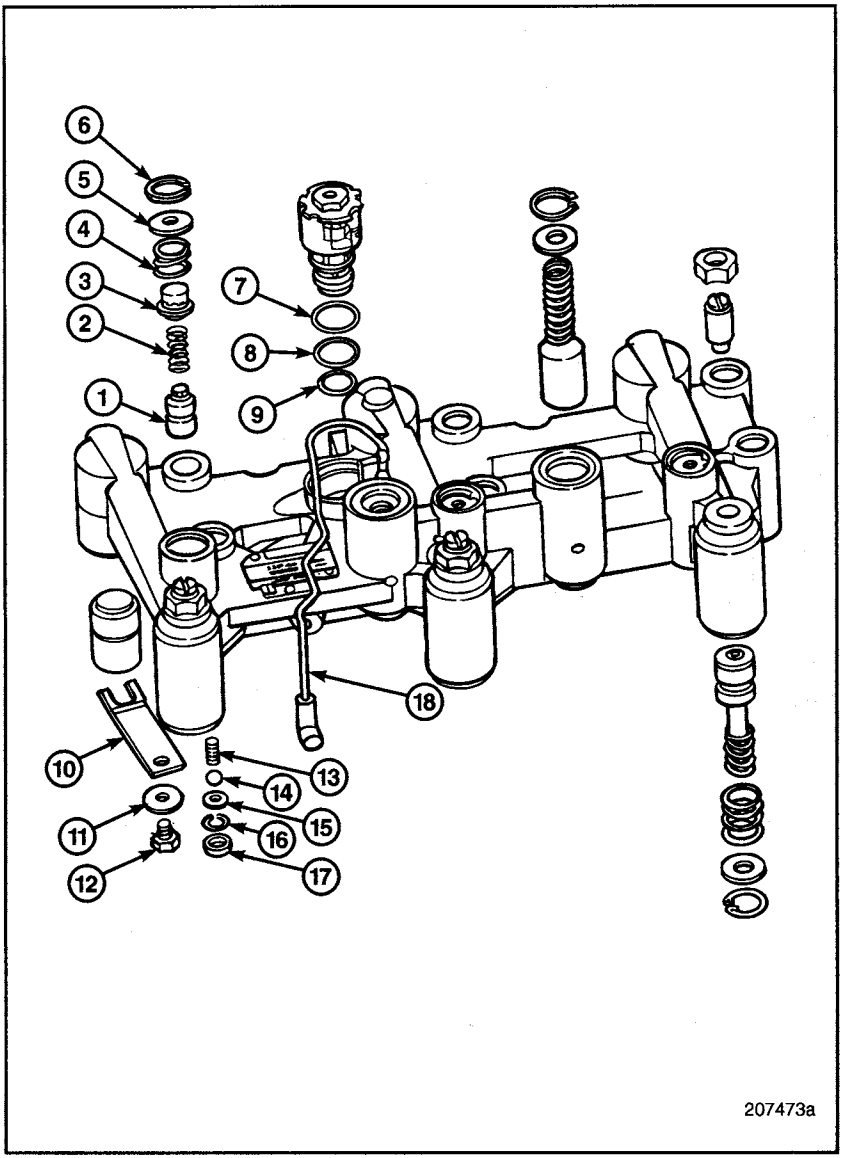

Figure 94 — J-Tech Engine Brake Tune-Up Kit

https://truckmanualshub.com/

- The tune-up kit includes the following components:
  1. Valve, control
  2. Spring, inner, control valve
  3. Collar, control valve
  4. Spring, outer, control valve
  5. Washer, control valve retaining
  6. Snap ring, control valve retaining
  7. Seal ring, upper
  8. Seal ring, middle
  9. Seal ring, lower
  10. Spring, flat
  11. Washer, flat
  12. Capscrew
  13. Spring, check valve stop
  14. Ball, check valve
  15. Ring retainer, check valve
  16. Retainer spring, check valve
  17. Seal ring
  18. Harness, solenoid

NOTE

Troubleshooting information for the J-Tech™ engine brake can be found on pages 250 through 254.

https://truckmanualshub.com/

ENGINE DIAGNOSTIC CHART

The following troubleshooting guide provides a systematic approach to diagnosing problems which may develop with a diesel engine. The guide lists the probable causes in the order they are most likely to occur. Check the causes in the order they are given.

NOTE

Some vehicles may be equipped with the V-MAC® electronic engine control system. The V-MAC system monitors engine function and is capable of displaying a diagnostic blink code when an active fault is detected. Explanations of the diagnostic blink codes can be found in the applicable V-MAC Operator's Guide supplied with each V-MAC equipped vehicle:

- V-MAC® III (TS799)

Also, extensive diagnostic and service procedures can be found in the applicable V-MAC Service Manual:

- V-MAC® III (8-211)

NOTE

When operating in cold weather, fuel waxing can cause many problems similar to engine symptoms. Be sure to check for fuel congealing before proceeding to troubleshoot a problem.

https://truckmanualshub.com/

ENGINE DIAGNOSTIC CHART

ENGINE WILL NOT CRANK	
POSSIBLE CAUSE	**CORRECTION**
1. Batteries have low output.	1. Check the batteries. Charge or replace as required.
2. Loose or corroded battery connections.	2. Clean and tighten battery connections.
3. Broken or corroded wires.	3. Check following voltage at connections: Switch to starter. Battery to starter. Replace as required
4. Faulty starter, or starter solenoid.	4. Check operation of starter and solenoid. Repair as required.
5. Faulty key switch.	5. Replace key switch.
6. Internal seizure.	6. Bar the engine over one complete revolution. If the engine cannot be turned, internal damage is indicated. Disassemble engine and repair as required.

https://truckmanualshub.com/

ENGINE CRANKS — WILL NOT START	
POSSIBLE CAUSE	**CORRECTION**
1. Slow cranking speed.	1. Check corrections listed under "Engine will not crank."
2. Emergency shut-off valve closed or partially closed.	2. Check emergency shut-off system. Make necessary repairs.
3. No fuel to engine.	3. Check for fuel in the fuel tank. Also check for plugged fuel tank connections, restricted or kinked fuel suction lines, fuel transfer pump failure, or clogged fuel filters.
4. Governor throttle shaft linkage binding/improper setting of accelerator linkage.	4. Check throttle shaft and accelerator linkage. Repair as necessary.
5. Defective fuel transfer pump.	5. Check transfer pump for minimum output pressure. Change fuel filters if low. Look for air leaks and recheck pressure. If still below minimum, replace transfer pump.
6. Poor quality fuel or water in fuel.	6. Drain fuel from tank. Replace fuel filters and fill fuel tank with MACK specified diesel fuel.
7. Incorrect engine oil viscosity.	7. Drain oil. Replace oil filters and fill crankcase with recommended grade oil.
8. Low compression.	8. Check cylinder compression. If low, refer to LOW COMPRESSION section on page 249.
9. If equipped with engine brake, solenoid valve stuck in "ON" position.	9. Ensure that electrical current to the engine brake units is off. If the solenoid valve remains "ON" (cap down) with current off, replace solenoid valve.

https://truckmanualshub.com/

ENGINE MISFIRES

POSSIBLE CAUSE	CORRECTION
1. Poor quality fuel, or water or dirt in the fuel.	1. Drain fuel from tanks. Replace fuel filters and fill tank with MACK specified diesel fuel.
2. Air in fuel system.	2. Check fuel system for air leaks. Repair as necessary. (Air generally gets into the fuel system on the suction side of the fuel pump.)
3. Broken or leaking high-pressure fuel lines.	3. Check for fuel leaks. Repair as necessary.
4. Restrictions in fuel lines or drain lines.	4. Check for proper fuel flow. If no flow, replace lines.
5. Low fuel supply pressure.	5. Check to be sure there is fuel in the fuel tank. Check for sharp bends or kinks in the fuel line between the fuel tank and the fuel transfer pump. Also check for clogged suction pipe (in the fuel tank) or a plugged fuel suction hose. Check for air in the fuel system, and check the fuel pressure. If the pressure is lower than specified, replace the fuel filters. If still low, replace the transfer pump.
6. Improper valve lash adjustment.	6. Check adjustment. Correct as necessary.
7. Defective fuel injection nozzles or electronic unit pumps.	7. Run engine at speed which gives maximum misfiring or rough running. Cut the fuel flow to each cylinder, one at a time, by loosening the fuel line nut on the injection pump. If the rpm of the engine does not change when the fuel is cut to a cylinder, it is an indication that the cylinder is not firing. Remove the injection nozzle and check. Repair or replace as necessary. If nozzle is OK, check cylinder for low compression. If no fuel is present when line is loosened, pump may be defective. Repair or replace as required.

(Continued on next page)

https://truckmanualshub.com/

ENGINE MISFIRES (CONTINUED)	
POSSIBLE CAUSE	**CORRECTION**
8. Cylinder head gasket leakage.	8. Check for visible signs of leakage, coolant in the oil, or traces of oil in the coolant. Use a compression tester to check each cylinder. Replace cylinder head gasket if necessary.
9. Worn camshaft lobe.	9. With valve lash properly adjusted, check the rocker arm movement. If not within specifications, replace worn parts.
10. Engine brake slave piston adjustment too tight, if equipped with J-Tech™ engine brake.	10. Readjust slave piston clearance to specifications.

https://truckmanualshub.com/

ENGINE STALLS AT LOW SPEEDS	
POSSIBLE CAUSE	**CORRECTION**
1. Idle speed set too low.	1. Check idle setting. Adjust as necessary.
2. Fuel tank vent clogged or partially clogged.	2. Check fuel tank vents. Repair as necessary.
3. Low fuel supply.	3. Check for sufficient fuel in the fuel tank. Check for fuel leaks. Check for kinks for sharp bends in the fuel lines. Check fuel pressure; it must be within specifications. If not, replace fuel filters. If still low, repair or replace transfer pump.
4. Injection pump overflow valve leaking, or stuck opened or closed.	4. Repair or replace valve.
5. Defective fuel injection nozzle.	5. Isolate defective nozzle and replace. Refer to item 7 in "ENGINE MISFIRES" on page 237.
6. Defective fuel injection pump.	6. Remove, repair, and reinstall pump.
7. High parasitic load.	7. Check for excessive loading due to engaged auxiliary attachments.

https://truckmanualshub.com/

ERRATIC ENGINE SPEED	
POSSIBLE CAUSE	**CORRECTION**
1. Air leaks in fuel suction line.	1. Check for air leaks. Repair as necessary.
2. Throttle linkage loose or out of adjustment.	2. Check throttle linkage. Repair or adjust as necessary.
3. Injection pump governor failure.	3. Remove injection pump. Check for damaged or broken springs or other components. Check for free travel of the fuel rack. Make sure the correct governor springs are installed. Repair or replace damaged parts as necessary. Recalibrate the injection pump and reinstall.

LOW POWER

NOTE

When diagnosing low power complaints, it is possible for the trouble to be traced to chassis components other than the engine. Make sure the chassis rolls freely when the brakes are released.

POSSIBLE CAUSE	CORRECTION
1. Restrictions in the air intake system such as a clogged air filter(s).	1. Check the air pressure in the air intake manifold. Replace the air filter and make necessary repairs to the air system.
2. Poor quality fuel.	2. Drain fuel tank(s), clean system and replace fuel filters. Fill tank with MACK specified diesel fuel. Bleed system.
3. Damage or restrictions in the accelerator/shut-off cable linkage.	3. Check linkage and adjust to achieve full travel. Replace if damaged or bent.

https://truckmanualshub.com/

LOW POWER (CONTINUED)

POSSIBLE CAUSE	CORRECTION
4. Low fuel pressure.	4. Check fuel supply lines for kinks or restrictions. Check for air in system. Check fuel pressure. If low, replace fuel filters. If still low, replace or repair fuel transfer pump. Also check for sticking, binding or defective fuel overflow valve. Repair or replace.
5. Improper valve lash adjustment.	5. Adjust valve lash to specified clearance.
6. Incorrect fuel injection timing.	6. Adjust fuel injection pump timing.
7. Plugged fuel tank vents.	7. Clean the fuel tank vents.
8. Fuel injection nozzle failure.	8. Isolate defective nozzle. Repair or replace.
9. Carbon or other friction causing deposits in turbocharger.	9. Inspect turbocharger. Clean, repair, or replace as required.
10. Internal fuel injection pump wear which prevents full rack travel.	10. Remove injection pump. Perform necessary repairs, recalibrate, and reinstall.
11. High altitude operation.	11. Engines lose horsepower with increases in altitude. The percentage of power loss is governed by the altitude at which the engine is operated. Make necessary adjustments.
12. Low boost pressure.	12. Check for restrictions in the air intake system.
13. Exhaust restriction.	13. Check for restrictions in the exhaust system.
14. Low compression.	14. Check items listed for low compression.
15. Restrictions in cooler.	15. Perform restriction pressure test. Clean any restrictions.
16. Restrictions in cooler inlet or outlet tubes.	16. Disconnect tubing and clean restrictions.
17. Leaking charge air cooler.	17. Repair or replace leaking cooler.
18. If equipped with J-Tech™ engine brake, slave piston adjustment too tight.	18. Readjust slave piston clearance to specifications.

https://truckmanualshub.com/

ENGINE WILL NOT ACHIEVE NO-LOAD GOVERNED RPM	
POSSIBLE CAUSE	**CORRECTION**
1. Air in fuel system.	1. Check system for air leaks and correct as required. Air will generally enter the fuel system on the suction side of the fuel transfer pump.
2. Restricted fuel lines or stuck overflow valve.	2. Check flow in fuel lines. Check overflow valve for defects, improper setting, sticking, or defective spring.
3. High idle adjustment set too high.	3. Check high idle adjustments. Adjust as required.

EXCESSIVE ENGINE VIBRATION	
POSSIBLE CAUSE	**CORRECTION**
1. Loose vibration damper hub nut bolt.	1. Check condition of mounting. Make necessary repairs and retorque.
2. Defective or damaged vibration damper.	2. Replace part.
3. Fan blade not balanced.	3. Loosen or remove fan belts. Run the engine for a short period of time at the rpm where the vibration was most noticeable. If the vibration disappears, replace the fan assembly.
4. Engine supports loose, worn, or defective.	4. Tighten all mounting bolts, or replace components as required.
5. Engine misfiring or running rough.	5. Check items listed under "ENGINE MISFIRES" on page 237.

https://truckmanualshub.com/

EXCESSIVE BLACK OR GRAY SMOKE	
POSSIBLE CAUSE	**CORRECTION**
1. Insufficient air for combustion.	1. Check air cleaner for restrictions. Check inlet manifold pressure, and inspect the turbocharger for proper operation. Repair or replace as required.
2. Excessive exhaust back pressure.	2. Check for faulty exhaust piping or restrictions in the muffler. Repair or replace as required.
3. Improper grade of fuel.	3. Drain fuel from tank(s). Replace fuel filters and fill tank(s) with MACK specified diesel fuel.
4. Faulty fuel injection nozzle.	4. Isolate faulty nozzle and replace. Refer to item 7 in "ENGINE MISFIRES" on page 237.

EXCESSIVE BLUE OR WHITE SMOKE	
POSSIBLE CAUSE	**CORRECTION**
1. Engine lubricating oil level too high.	1. Drain excess lubricating oil. If the oil is contaminated with either fuel or coolant, completely drain the oil pan. Change the oil filters. Locate the source of the leak and correct. Fill with MACK specified engine oil. Check the oil level with the dipstick. DO NOT overfill.
2. Turbocharger oil seal failure.	2. Check for oil in the inlet manifold. Repair turbocharger as required.
3. Worn piston rings.	3. Check cylinder walls for scuffing. Clean or replace sleeves as required. Install new piston rings.
4. Engine misfiring or running rough.	4. Check items as outlined in "ENGINE MISFIRES" on page 237.

https://truckmanualshub.com/

EXCESSIVE FUEL CONSUMPTION	
POSSIBLE CAUSE	**CORRECTION**
1. Restrictions in the air induction system.	1. Inspect system. Remove restrictions and replace defective parts as required.
2. External fuel system leakage.	2. Check external piping on fuel system for signs of fuel leakage. Repair as required.
3. Defective injection nozzle assembly.	3. Isolate defective nozzle assembly. Repair or replace as required.
4. Internal engine wear.	4. Overhaul engine.

EXCESSIVE OIL CONSUMPTION	
POSSIBLE CAUSE	**CORRECTION**
1. External oil leaks.	1. Check engine for visible signs of oil leakage. Look for loose or stripped oil drain plugs, broken gaskets (cylinder head cover, etc.) and front and rear oil seal leakage.
2. Clogged crankcase breather pipe.	2. Remove obstructions.
3. Excessive exhaust back pressure.	3. Check exhaust pressure. Repair as required.
4. Worn valve guides.	4. Replace valve guides.
5. Air compressor passing oil.	5. Repair or replace air compressor.
6. Turbocharger sealing rings failure.	6. Check for oil in the inlet manifold. Repair turborcharger as required.
7. Internal engine wear.	7. Overhaul engine.

https://truckmanualshub.com/

ENGINE OVERHEATS	
POSSIBLE CAUSE	**CORRECTION**
1. Coolant level low.	1. Locate cause. Look for leaking gaskets or loose or leaking hoses. Repair, replace, or tighten as required. Replenish coolant.
2. Loose or worn fan belts.	2. Adjust belt tension or replace belts as required.
3. Restricted airflow through radiator.	3. Remove any restrictions from the outer surface of the radiator.
4. Defective radiator pressure cap.	4. Test pressure of the radiator cap, replace cap if required.
5. Defective coolant thermostat or temperature gauge.	5. Check opening temperature of thermostat. Check for correct installation. Check temperature gauge. Replace if defective.
6. Fan improperly positioned or viscous drive fan not operating properly.	6. Check operation of fan. Repair as required.
7. Shutters not opening properly (for chassis equipped with shutters).	7. Check shutter operation. Repair as required.
8. Combustion gases in coolant.	8. Determine point where gases are entering the cooling system. Repair or replace parts as required.
9. Plugged oil cooler.	9. Remove/replace oil cooler.
10. Defective water pump.	10. Remove, repair, reinstall water pump as required.

https://truckmanualshub.com/

HIGH EXHAUST TEMPERATURE	
POSSIBLE CAUSE	**CORRECTION**
1. Operating chassis in wrong gear ratio for load, grade, and/or altitude.	1. Instruct operator on correct gear selection for load and grade conditions.
2. Restrictions in the air induction system.	2. Inspect air induction system. Remove restrictions and/or replace defective parts.
3. Air leaks in the air induction system.	3. Check pressure in the air intake manifold. Look for leaking piping, and/or loose clamps. Make necessary repairs.
4. Leaks in the exhaust system (before the turbocharger).	4. Check exhaust system for leaks. Make necessary repairs.
5. Fuel injection pump to engine timing.	5. Check fuel injection pump to engine timing. Adjust as required.
6. Restrictions in the exhaust system.	6. Inspect system. Make necessary repairs.
7. Improper valve lash adjustment.	7. Adjust valve lash setting to specified clearance.
8. Defective fuel injection nozzle assembly.	8. Isolate defective nozzle assembly. Remove, repair and/or replace, and reinstall.
High Pyrometer — Normal Boost	
10. Loose ducting.	10. Repair loose connections.
11. Core fin obstructions.	11. Clean core fins.
High Pyrometer — Low Boost	
12. Blockage in ducting between the air cleaner and the turbocharger.	12. Check for blockage and repair.
13. Dirty turbocharger.	13. Remove turbocharger and clean.
14. Leaks in the pressurized side of the air induction system.	14. Check for leaks. Repair as required.
15. Charge air cooler core leak or inlet manifold leak.	15. Check for damage. Repair or replace as necessary.
16. Charge air cooler leakage.	16. Pressure test charge air cooler. Remove and replace if test results are unsatisfactory.

https://truckmanualshub.com/

LOW ENGINE OIL PRESSURE	
POSSIBLE CAUSE	**CORRECTION**
1. Oil level insufficient. Oil leaking from oil line, gasket, etc.	1. Check engine oil level. Add oil if necessary. Check for oil leaks. Repair as required.
2. Incorrect oil viscosity.	2. Drain oil, change oil filters, and fill with the proper grade oil meeting MACK specifications.
3. Defective oil pressure gauge.	3. Check the operation of the oil pressure gauge. If defective, replace.
4. Clogged oil filter(s).	4. Replace oil filters. Clean or replace oil cooler. Drain oil and refill with oil meeting MACK specifications.
5. Engine oil diluted with diesel fuel.	5. Check fuel system for leaks. Make necessary repairs. Drain diluted oil, change oil filters, and refill with oil meeting MACK specifications.
6. Defective oil pump relief valve.	6. Remove oil pressure relief valve and check condition of seat. Check that relief valve spring is not sticking, and check for proper spring tension. Check cap. Check assembly parts. Using the incorrect parts will result in incorrect oil pressure. Make any necessary repairs or install a new relief valve.
7. Oil pump gears not meshing properly.	7. Check mounting arrangement. If the engine has been rebuilt, check that the gear ratio of the oil pump drive and driven gears are correct. Incorrect gear combinations will result in immediate gear failure and possible engine damage. Check for correct oil pad gasket.
8. Excessive clearance between crankshaft and bearings.	8. Overhaul the engine. Replace any worn/defective parts.

https://truckmanualshub.com/

ENGINE OIL PRESSURE DROPS SUDDENLY	
POSSIBLE CAUSE	**CORRECTION**
1. If equipped with J-Tech™ engine brake, upper solenoid valve seal missing or damaged.	1. Remove solenoid valve and replace upper seal ring.

OIL IN THE COOLING SYSTEM	
POSSIBLE CAUSE	**CORRECTION**
1. Defective oil cooler.	1. Replace oil cooler as required.
2. Blown head gasket.	2. Replace head gasket.
3. Defective water pump oil seal(s). (E9 engines only.)	3. Remove water pump. Disassemble, repair and/or replace defective parts.

COOLANT IN ENGINE OIL	
POSSIBLE CAUSE	**CORRECTION**
1. Cylinder sleeve seat leakage.	1. Repair sleeve seat seal.

https://truckmanualshub.com/

LOW COMPRESSION	
POSSIBLE CAUSE	**CORRECTION**
1. Improper valve lash adjustment.	1. Adjust valve lash to specified clearance.
2. Blown head gasket.	2. Replace head gasket.
3. Broken or weak valve springs.	3. Check and replace defective parts.
4. Burned valves, seats, or parts.	4. Remove, recondition, and reinstall heads.
5. Piston rings stuck, worn, broken or improperly seated.	5. Overhaul engine.
6. Camshaft or valve lifters worn.	6. Replace camshaft and/or valve lifters. Overhaul engine if required.

https://truckmanualshub.com/

J-TECH™ ENGINE BRAKE TROUBLESHOOTING

ENGINE BRAKE DOES NOT OPERATE	
POSSIBLE CAUSE	**CORRECTION**
1. Blown fuse/circuit breaker or defective wiring.	1. Check fuse/circuit breaker. Replace as necessary. Replace any broken, brittle or chafed wires. Check solenoid tab for signs of shorting. Replace as necessary.
2. On/Off switch, clutch switch, or multi-position switch out of adjustment or defective.	2. Check switch adjustment as necessary. Check for voltage at each switch. Check for defective switch by checking continuity of each switch. Adjust or replace switch as necessary.
3. Incorrect electrical power source.	3. Check for proper supply voltage. It is recommended that a keyed (key switch ON) power source be used. Make sure that source voltage does not have an additional switch, i.e. light switch, in line.
4. Low engine oil pressure.	4. Determine oil pressure at engine brakes (solenoid valve and control valve). Refer to the *E-Tech™Engine Overhaul Manual*, 5-106 for information.
5. Slave piston lash improperly adjusted.	5. Check slave lash adjustment. Refer to "VALVE ADJUSTMENT" on page 222, or the *E-Tech Engine Overhaul Manual*, 5-106 for slave lash adjustment.

https://truckmanualshub.com/

ENGINE BRAKE DOES NOT OPERATE AT LOW ENGINE RPM	
POSSIBLE CAUSE	**CORRECTION**
1. Inlet check valve leaking.	1. Remove and inspect check valve. The check ball should be clean, smooth and round with no nicks or scratches. The ball seat should be smooth and free of debris. The spring should hold the ball against the seat with light pressure. Clean or replace components as necessary.

ENGINE BRAKE ACTIVATES WITH SWITCHES TURNED OFF	
POSSIBLE CAUSE	**CORRECTION**
1. Solenoid valve seal center ring damaged.	1. Remove solenoid and replace all three sealing rings.
2. Engine brake improperly wired.	2. Verify wiring according to wiring diagrams.

ENGINE BRAKE SLOW TO OPERATE OR WEAK IN EFFECT	
POSSIBLE CAUSE	**CORRECTION**
1. Engine oil cold and thick.	1. Allow engine to reach normal operating temperature before operating engine brake.
2. Improper slave piston adjustment or slave piston sticking in bore.	2. Verify slave piston adjustment. Ensure that the slave piston responds smoothly to the reset screw by loosening the jam nut and turning the screw through its full travel for full slave piston motion. Make sure the piston travels the full range without binding or sticking. Refer to the *E-Tech™ Engine Overhaul Manual*, 5-106, for additional information.

https://truckmanualshub.com/

ENGINE BRAKE SLOW TO OPERATE OR WEAK IN EFFECT (CONTINUED)	
POSSIBLE CAUSE	**CORRECTION**
3. Reset screw not sealing properly.	3. Remove reset screw and check for debris on the plunger or surface of the slave piston. Make sure that the plunger moves freely with light pressure. Tip of plunger should be smooth and free of nicks or scratches. Replace reset screw if necessary.
4. Lower solenoid seal damaged allowing oil to exit the housing.	4. Remove solenoid valve and replace all seal rings.
5. Solenoid screen clogged stopping supply of oil to brake.	5. Remove solenoid valve and clean or replace screen.
6. Master piston not moving in bore.	6. Inspect master piston and bore for scoring or burrs. If any are present, clean surface with crocus cloth. If unable to remove burrs, replace piston or housing. Inspect engine oil for signs of contaminants. If any are present, replace oil and filters, and correct cause of contamination.
7. Control valves binding in housing bores.	7. Remove control valve. If body is scored, replace the control valve. Check for contaminants in the engine oil. Clean the housing and control valve. If binding continues, replace housing.
8. Defective control valve.	8. Remove control valve. Make sure check ball is seated in bore and can be moved off seat. Make sure there is spring pressure against the ball. Flush in solvent. Replace if necessary.
9. Switch operation sluggish.	9. Check dashboard switches, clutch switch or other control switches. Readjust or replace as required. Check clutch return springs for proper operation. Check all controls for correct operation and replace as required.
10. Solenoid valve operation erratic.	10. Check solenoid valve specifications as given in the *E-Tech™ Engine Overhaul Manual*, 5-106. Disconnect solenoid leads to and provide 12 volts directly to the solenoid. Verify that the solenoid cap depresses when 12 volts is applied. Replace solenoid valve as required.

https://truckmanualshub.com/

OIL PRESSURE DROPPING BELOW MINIMUM REQUIRED FOR ENGINE BRAKE OPERATION	
POSSIBLE CAUSE	**CORRECTION**
1. Upper solenoid seal ring damaged.	1. Remove solenoid and inspect seal ring. Replace all seal rings.
2. Damaged oil supply seals under housings.	2. Remove housings and replace seals.
3. Aeration of lubrication oil.	3. Check for aeration of engine oil. Activate, then deactivate the engine brake and observe escape oil coming from the control valve cover. If oil has bubbles or is foamy, air is present in the system. Aeration can be caused by an overfilled or underfilled crankcase, or a crack or other leak in the oil suction tube. Refer to the *E-Tech™Engine Overhaul Manual*, 5-106, for additional information.
4. Worn rocker arm bores or shaft journals.	4. Inspect rocker arm bores and shaft journals. Repair as required.
5. Low engine oil pressure.	5. Refer to causes and corrections under "LOW ENGINE OIL PRESSURE" on page 247.

https://truckmanualshub.com/

ONE OR MORE CYLINDERS FAIL TO STOP BRAKING OR ENGINE STALLS	
POSSIBLE CAUSE	**CORRECTION**
1. Control valve inner spring broken.	1. Replace inner spring.
2. One or more control valves stuck in "on" or up position.	2. Check control valves for binding. Remove, clean or replace as necessary. Inspect engine oil for contamination.
3. Solenoid valve sticking in "on" position.	3. If solenoid cap remains down with no electrical current supplied, replace the solenoid valve.
4. Solenoid center seal ring damaged (allows oil to enter brake with solenoid valve closed).	4. Remove solenoid and replace all seal rings.
5. Solenoid valve exhaust plugged.	5. Remove any restrictions at the exhaust (bottom) of solenoid valve.
6. Clutch switch stuck in "on" position or out of adjustment.	6. Check for proper operation of clutch switch. Readjust or replace as necessary.

https://truckmanualshub.com/

BRAKE DIAGNOSTIC CHART

The following troubleshooting chart summarizes some common dual braking system problems, probable causes, and corrections. Use this chart as a guide to service the dual brake system.

CONDITION	LOW AIR PRESSURE WARNING RED LIGHT DOES NOT GO OUT AFTER STARTUP.
POSSIBLE CAUSE	**CORRECTION**
1. Loss of one section of the dual system.	1. Observe dual pressure gauge to determine which section is out. Vehicle can be moved with EXTREME care.
2. Loss of complete air brake system.	2. Vehicle cannot be moved. Spring brakes will automatically be set. Look for a malfunction in the main air supply system.
CONDITION	**LOW AIR PRESSURE WARNING RED LIGHT COMES ON WHILE DRIVING VEHICLE.**
POSSIBLE CAUSE	**CORRECTION**
1. Loss of one section of the dual system.	1. Observe dual pressure gauge to establish which section is out. Vehicle can be operated with EXTREME care to the nearest safe parking area.
2. Loss of complete air brake system.	2. Spring brakes will automatically apply. Vehicle cannot be moved. Look for a malfunction in the main air supply system.
3. Governor leaking.	3. Check for leakage. Repair or replace governor.
4. Compressor discharge valves leaking.	4. Repair compressor.

https://truckmanualshub.com/

BRAKE DIAGNOSTIC CHART

CONDITION	AIR PRESSURE DROPS QUICKLY WITH ENGINE STOPPED AND BRAKES FULLY APPLIED.
POSSIBLE CAUSE	**CORRECTION**
1. Treadle valve leaking.	1. Perform leakage test and make necessary repairs.
2. Brake chamber leakage.	2. Repair or replace brake chamber.
3. Hose, tubing, or fittings leaking.	3. Check all plumbing and make necessary repairs.

https://truckmanualshub.com/

BRAKE DIAGNOSTIC CHART

CONDITION	AIR PRESSURE DROPS QUICKLY WITH ENGINE STOPPED AND BRAKES RELEASED.
POSSIBLE CAUSE	**CORRECTION**
1. Treadle valve leaking.	1. Perform leakage test and make necessary repairs.
2. Hoses, tubing, or fittings leaking.	2. Check all plumbing and make necessary repairs.
3. Parking brake chamber leaking.	3. Replace diaphragm.
CONDITION	**AIR PRESSURE WILL NOT RISE TO NORMAL**
POSSIBLE CAUSE	**CORRECTION**
1. Reservoir drain cock opened.	1. Check drain cock. Close if opened.
2. Excessive air leakage from system components.	2. Perform air leakage test, and make necessary repairs.
3. Governor out of adjustment.	3. Check governor setting. Make adjustment if necessary.
4. Defective air pressure gauge.	4. Replace air pressure gauge.
5. Faulty compressor.	5. Repair or replace.
CONDITION	**AIR PRESSURE RISES TO NORMAL SLOWLY**
POSSIBLE CAUSE	**CORRECTION**
1. Engine speed too low.	1. Check speed and make adjustment.
2. Excessive air leakage from system components.	2. Perform air leakage test and make necessary repairs.
3. Faulty air compressor.	3. Repair or replace.

https://truckmanualshub.com/

BRAKE DIAGNOSTIC CHART

CONDITION	AIR PRESSURE RISES ABOVE NORMAL
POSSIBLE CAUSE	**CORRECTION**
1. Defective air gauge.	1. Disconnect gauge and install master gauge. Observe air pressure.
2. Governor out of adjustment.	2. Adjust or replace governor.
3. Restriction in line between governor and compressor unloading mechanism.	3. Check line for kinks or other restrictions. Replace as required.

https://truckmanualshub.com/

BRAKE DIAGNOSTIC CHART

CONDITION	INSUFFICIENT BRAKES
POSSIBLE CAUSE	**CORRECTION**
1. Low air pressure in the brake system, excessive leaks or delivery pressure below normal.	1. Check system pressure. Make necessary repairs.
2. Brake adjustment, lubrication or relining necessary.	2. Check condition of brakes. Make necessary repairs.
3. Mechanical failure of brake wheel component.	3. Check brake wheel components. Make necessary repairs.
4. Restriction in brake air line.	4. Check brake piping for kinks or other restrictions. Repair as required.
CONDITION	**BRAKES APPLY TOO SLOWLY**
POSSIBLE CAUSE	**CORRECTION**
1. Brake adjustment or lubrication necessary.	1. Check brakes and make necessary repairs.
2. Check causes under "Air Pressure Drops Quickly with Engine Stopped and Brakes Fully Applied."	2. Follow corrections as outlined for possible causes.
3. Restriction in tubing or hoses.	3. Check brake piping for kinks or other restrictions.
CONDITION	**BRAKES RELEASE TOO SLOWLY**
POSSIBLE CAUSE	**CORRECTION**
1. Treadle valve not returning to full released position.	1. Check for accumulated dirt, gravel, etc., around treadle valve pedal. Clean and lubricate treadle roller and hinge pin, or repair or replace treadle valve.
2. Brake adjustment or lubrication necessary.	2. Check brakes. Correct as necessary.
3. Restrictions in tubing or hoses.	3. Check brake piping for kinks or other restrictions. Repair as required.
4. Exhaust port of brake valve, quick release valve or relay valve clogged or restricted.	4. Check valves for proper operation. Repair as necessary.

https://truckmanualshub.com/

BRAKE DIAGNOSTIC CHART

CONDITION	BRAKES DO NOT RELEASE
POSSIBLE CAUSE	**CORRECTION**
1. Broken or weak return springs.	1. Replace faulty springs.
2. Treadle valve not fully released.	2. Repair or replace valve. Clean under pedal and check for seized hinge pin.
3. Restrictions in tubing or hoses.	3. Check brake piping for kinks or other restrictions. Repair as necessary. Check that hand control is not partially applied.
4. Parking brake chamber leaking.	4. Repair or replace.
CONDITION	**BRAKES GRAB**
POSSIBLE CAUSE	**CORRECTION**
1. Grease or oil on brake lining.	1. Replace brake lining.
2. Brake drum out of round.	2. Check brake drum for concentricity. If out of round, machine within allowable limitations.
3. Defective brake valve.	3. Repair or replace brake valve.
4. Brake linkage binding.	4. Check brake linkage for freedom of movement.
CONDITION	**UNEVEN BRAKES**
POSSIBLE CAUSE	**CORRECTION**
1. Brake adjustment, lubrication or relining needed.	1. Adjust, lubricate or reline brakes as necessary.
2. Grease or oil on brake linings.	2. Replace brake lining.
3. Brake shoe or chamber release springs broken.	3. Replace springs.
4. Brake drum out of round.	4. Check brake drum concentricity. If out of round, machine within allowable limitations.
5. Brake chamber diaphragm leaking.	5. Repair or replace brake chamber.

https://truckmanualshub.com/

BRAKE DIAGNOSTIC CHART

CONDITION	BRAKES DO NOT APPLY
POSSIBLE CAUSE	**CORRECTION**
1. Restricted or broken tubing or hoses.	1. Check system. Locate problem area. Repair or replace parts.
2. Faulty treadle valve.	2. Repair or replace.

https://truckmanualshub.com/

https://truckmanualshub.com/

SPECIFICATIONS AND CAPACITIES

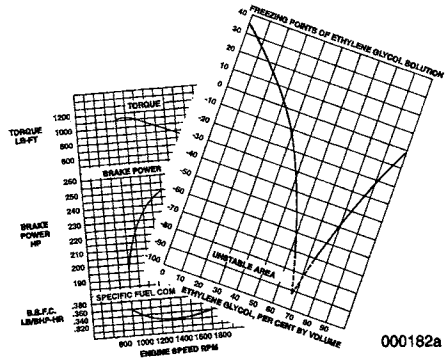

NOTE

Components used on certain contract engineered vehicles may require lubricants other than those specified in this manual. Refer to the operator's manual supplied with these vehicles for a listing of specified lubricants.

https://truckmanualshub.com/

SPECIFICATIONS AND CAPACITIES

TABLE OF CONTENTS

LUBRICANT SPECIFICATIONS 265
DIESEL FUEL 274
ANITFREEZE SPECIFICATIONS 281
COOLANT CAPACITIES 283
LUBRICANTS AND CAPACITIES 285
1998 MACK ENGINE LINE-UP 299
CONVERSION CHART 303
MAINTENANCE RECORD 311
SERVICE LITERATURE 312

https://truckmanualshub.com/

LUBRICANT SPECIFICATIONS

Lubrication of vital engine parts and chassis components, such as oil lubricated wheel bearings, can best be accomplished by using the highest quality, recommended type and SAE grade lubricants.

To obtain the proper performance level lubricants, show these specifications to your oil supplier. Purchase from a reputable distributor who will assume the responsibility of recommending the proper lubricants for the vehicle. Service components in accordance with MACK recommendations. DO NOT mix brands or types of lubricants.

Engine Oils for MACK Diesel Engines

EO-M PLUS

EO-M PLUS specification diesel engine oil is mandatory when using the **Line Haul 1 — Extended Service** and **Short Haul — Severe Service** intervals. EO-M PLUS diesel engine oils exceed API performance category CH-4, and have demonstrated high performance capabilities in laboratory and field tests. To satisfy the requirements of EO-M PLUS, an oil must pass the MACK T-8E test which is a 300-hour test that measures the ability of an oil to resist soot-related oil thickening, and the T9 test which is a 500-hour test that determines cylinder wear and bearing corrosion protection. EO-M PLUS specification oil also must exceed other industry standard tests which determine soot-related wear of the valve train and resistance to oxidation at higher temperatures.

Use the SAE grade oil as indicated in the table below for seasonal temperature changes.

Oil Specification	Ambient Temperature in Degrees °F (°C)	SAE Viscosity Grade	
EO-M PLUS	Above 0° (–18°)	15W40	5W40**
	Consistently 0° (–18°) or below*	10W30	5W40**

*At extremely low temperatures, use an engine block heater to keep the engine warm during extended shutdown or layovers.

**Synthetic Oil

EO-M and EO-L PLUS oil specifications are approved for those applications that do not require EO-M PLUS diesel engine oils.

https://truckmanualshub.com/

Gear Oils

GO-J and GO-J PLUS specification oils are compounded gear oils (mineral or synthetic base) for use in all MACK components which require gear oil as a lubricant. These two classes of oils have different drain intervals, with GO-J used for standard drain intervals and GO-J PLUS used for extended drain intervals. For an explanation of vehicle usage, and an outline of oil change interval mileage/time requirements, refer to "PREVENTIVE MAINTENANCE PROGRAM" on page 10.

NOTE

GO-J and GO-J PLUS gear oils are mandatory for use in all MACK components which require gear oil as a lubricant.

General Requirements

Both GO-J and GO-J PLUS gear oils must be blended from well-refined virgin base stock (or synthetic oil) and properly compounded with load-carrying and lubricity additives. These oils must be stable, must not contain any abrasive or corrosive ingredients and must be approved as MACK Specification GO-J or GO-J PLUS.

https://truckmanualshub.com/

GEAR OILS FOR MACK COMPONENTS

Geared Component	Recommended SAE Grade GO-J and GO-J PLUS*	
	Mineral	Synthetic
Carriers	90, 140, 80W90 80W140, 85W140	75W90, 75W140 80W140
Flywheel PTO	90, 140, 80W90 80W140, 85W140	75W90, 75W140 80W140
Transfer Case	90, 140, 80W90 80W140, 85W140	75W90, 75W14, 80W140
Oil Lubricated Wheel Bearings	90, 140, 80W90 80W140, 85W140	75W90, 75W140 80W140

*GO-J PLUS is required for MACK geared component extended service drain interval.

GEAR OILS FOR MACK TRANSMISSIONS

Model	Ambient Temperature F° (C°)	Recommended SAE Grade GO-J and GO-J PLUS*	
		Mineral	Synthetic
All MACK Transmissions	All Temperature Operations	90, 140, 80W90 80W140, 85W140	75W90, 75W-140 80W140

*GO-J PLUS or TO-A PLUS is required for MACK transmission extended service drain interval.

⚠ CAUTION

Maximum safe operating oil temperature for MACK transmissions is 250°F (121°C) for mineral-based oil, and 300°F (148°C) for synthetic-based oil.

https://truckmanualshub.com/

Transmission Oil

TO-A PLUS specification transmission oil is an SAE 50 synthetic oil intended for use in all MACK transmissions being used in the Extended Drain Interval Program. For an explanation of vehicle usage, and an explanation of oil change interval time/mileage requirements, refer to "PREVENTIVE MAINTENANCE PROGRAM" on page 10. TO-A PLUS is a transmission fluid only.

⚠ CAUTION

TO-A PLUS specification oil is intended for use as a transmission lubricant only. DO NOT use TO-A PLUS in transfer cases, carriers, or any other component that specified GO-J or GO-J PLUS gear oil.

General Requirements

This oil must be an SAE 50 synthetic oil, must be stable, must not contain any abrasive or corrosive ingredients and must be approved as MACK Specification TO-A PLUS. Water content must be less than 600 ppm when measured by the Karl Fischer method.

TRANSMISSION FLUID FOR MACK TRANSMISSIONS

Model	Ambient Temperature F° (C°)	Recommended SAE Grade TO-A PLUS*
		Synthetic
All MACK Transmissions	All Temperature Operations	SAE 50

* TO-A PLUS or GO-J PLUS is required for MACK transmission extended service drain interval.

Greases

Grease must be high quality, and free of water, acid, or other contents which are harmful to the unit.

https://truckmanualshub.com/

MG-C (CHASSIS LUBE)

General Requirements

This grease shall be composed of oils and such additives as are required to provide the specified properties. This shall be an "EP" grease.

Specific Requirements

NLGI Grade	2
Appearance	Smooth
Worked Penetration:	
60 Strokes, mm/10, D217*	265–295
Dropping point °F (°C), Min., D566* or D2265*	348°F (175°C)
Rust Protection, Rating, Max., D1743*	Pass
Water Washout, 80°C, %Max., D1264*	10
Oil Separation, Mass %, Max., D1742*	10
High Temperature Life, Hrs., Min., D3527*	40
EP Performance:	
Load Wear Index, Kgf, Min., D2596*	30
Weld Point, Kgf, Min., D2596*	200
Timken OK Load, Lbs. (Kg.), Min., D2509*	45 (20)
Four Ball Wear Scar, mm, Max., D2266*	0.6
Water, Mass %, Max., D95*	0.20
Elastomer Compatibility:	Cr NBR-L
VolumeΔ, %, D4289*	0 to 30 /–5 to –30
Shore A HardnessΔ, Pts. D4289*	0 to –10 /2 to –15

https://truckmanualshub.com/

Base Oil Properties

Viscosity, 40°C, cSt. Min., D445*	145
Pour Point, °F (°C), Max., D97*	5°F (–15°C)
Flash Point, °F (°C), Min., D92*	400°F (205°C)
Viscosity Index, Min., D2270*	85

Molybdenum Disulfide (When Present)

Concentration, %, Min., X-ray Florescent Spectrograph	1.0
Particle Size, Microns, Max., Fisher Subseive	2.0

Workmanship and Compatibility

50/50 Mass Mixed with Bulldog Grease, Heated for 16 hrs. @ 150°C:	
Penetration, mm/10	220–340
Four Ball Wear Scar, mm, Max.	0.6

*ASTM test method.

There is a trend toward the use of multi-purpose grease. Some of the ingredients used in multi-purpose greases are considered fillers or abrasives by the roller bearing manufacturers. The use of these multi-purpose greases may void warranties.

https://truckmanualshub.com/

ANDEROL 776 (EXTREME PRESSURE GREASE)

This grease is a tacky, synthetic diester-based grease containing molybdenum disulfide, and is formulated to have excellent load carrying ability and low friction.

Specific Requirements

Optimum Operating Range, °F (°C) –40° to 300° (–40° to 149°)	
NLGI Number	1
Worked Penetration, D217*	310
Worked Stability, 100,000 strokes, D217*	350
Dropping Point °F (°C), D566*	365° (185°)
Oil Separation, 30 hours @ 212°F (100°C), % FTMS 791, No. 321.2	1
Evaporation, 22 hours @ 210°F (99°C), % D972*	1
Humidity Cabinet, hours, min., ASTM D1748	100
Four Ball Wear, 1200 rpm, 167°F (75°C), 40 KG, hr., mm., D2266*	0.4
Four Ball EP, Weld-Point, KG, ASTM D2783	180

* ASTM test procedure.

BG-A (CLUTCH RELEASE BEARING GREASE)

High temperature grease made for ball and roller bearings. This grease must be NLGI grade 1 or 2, have a minimum melting point of 350°F (178°C), and be stable and non-fibrous.

https://truckmanualshub.com/

RG-A (BRAKE)

An extreme pressure lubricant which has high resistance to corrosion and water leakage, superior adhesive-cohesive properties and low cold shear at sub-zero temperatures. For use in Meritor-Standard Stopmaster brakes, it must comply with their specification 1779-W-283. Shell Darina No. 1, Sun Sunnaplex No. 1, and Texaco Thermatex EP-1 are approved equivalents.

WG-A (WHEEL BEARING GREASE)

WG-A grease must be composed of only soaps and oils, and must be free of fillers and abrasives. This grease must be non-corrosive to bearing parts in service or storage, and it will show no oil separation in service or storage. Also, WG-A must be a smooth, texture-type grease and have a dropping point in excess of 250°F (121°C) when tested in accordance with ASTM method D217–52T.

Moisture content should not be greater than 0.5%. The oil should have a viscosity of 75 to 100 seconds at 210°F (99°C), near 0°F (–31°C) cold test, and it should be a refined product. For normal applications, this grease should have an ASTM penetration at 77°F (25°C) (ASTM method D217–52T) not heavier than 265 when applied to the bearings.

WG-A grease shall not work softer than 310 penetration with 60 strokes in the grease worker or in service. With 5000 strokes in the grease worker, WG-A shall not be softer than 340 penetration. The worked grease (5000 strokes) shall not thicken to an ASTM penetration heavier than 250 when heated to 220°F (105°C) for a test period of 16 hours, and shall not show excessive oil separation after this test.

https://truckmanualshub.com/

Fluids

Fluids must be high quality and free from water, acid, or other contents which are harmful to the unit.

BF-B (BRAKE FLUID)

Use heavy-duty type hydraulic brake fluid meeting the specifications of FMVSS116, type DOT 3, 4, or 5.

CF-A (CAB TILT)

Use fluid meeting military specification MIL-H-5606E.

DIESEL FUEL

Effective October 1,1993, the Environmental Protection Agency (EPA) mandated that all diesel fuel sold for highway use be less then 500 Parts Per Million (PPM) sulfur content. Use of fuel oil additives to compensate for the .05% low sulfur is **NOT** recommended by Mack Trucks, Inc. Always use a good quality fuel meeting the specifications as given in table on page 275.

https://truckmanualshub.com/

DIESEL FUEL

DF-A (Diesel Fuel Grades #1D and #2D)

The selection of the proper fuel oil is essential for good economy, performance and engine life. Use diesel fuel oils meeting the specifications as given below. Grade #2D diesel fuel is to be used for most climatic conditions, while grade #1D is intended for use during cold weather operations. Blends of grades 1 and 2 may be used to suit the various climatic conditions which may be encountered.

https://truckmanualshub.com/

FUEL GRADES #1D AND #2D REQUIREMENTS

Property	Requirements		ASTM Method
	#2D	#1D	
Viscosity, cSt @ 104°F (40°C)	2.2–3.0	1.3–2.4	D4445
API Gravity @60°F (15°C)	34–36	42–38	D287
Volatility IBP,min. 50% 90% max.	 320°F min. (160°C) 475°F to 550°F (246°C to 288°C) 640°F (338°C)	 320°F (160°C) 430°F to 460°F (221°C to 238°C) 500°F to 550°F (260°C to 288°C)	D86
Cetane Number	40 min.	40 min.	D613 or D4737
Total Sulfur	.05% max.	.05% max.	D129
Pour Point	–10°F (–23°C) during winter months	–20°F (–29°C) max.	D97
Corrosion — Copper Strip @ 212°F (100°C)	No. 36	ASTM 1-max.	D130
Conradson Carbon on 10% Residium	.35% max.	.25% max.	D4530
Ash Content	.01% max.	.01% max.	D482
Water and Sediment	.05% max.	.05% max.	D1796
Flash Point, min.	125°F (52°C)	125°F (52°C)	D93
Rust Prevention	Light Rusting Max.	Light Rusting Max.	D665A

https://truckmanualshub.com/

The products furnished under this specification may be either cracked residuals, blends, or straight run distillates, provided they come within the scope of the specifications as listed on "FUEL GRADES #1D AND #2D REQUIREMENTS" on page 275. Straight-run distillates however, are preferred to recycled or cracked fuels.

HANDLING AND STORING FUEL

Correct handling and storage of diesel fuel during cold and/or inclement winter weather is a key to satisfactory truck performance and reliability.

Observe the following hints and suggestions:

- Storage tanks for diesel fuel should permit periodic removal of sludge and water accumulations. This should be performed on a regular basis at approximately ten-day intervals.
- Fuel should be stored only in clean, non-contaminated tanks situated in a cool, dry location.

⚠ CAUTION

Never store diesel fuel in a galvanized container. The fuel will dissolve the zinc in the galvanized coating. This zinc will then remain in solution in the fuel until it is run through the engine where it will be deposited in the pump and/or injectors causing serious damage.

- When parking vehicle overnight, or longer, fill its fuel tank(s) to prevent build-up of internal condensation.
- Remove accumulations of snow, ice, oil, or other debris from area of filler cap before removing cap from vehicle fuel tank. Also remove snow-ice accumulations at tank vent.

https://truckmanualshub.com/

DIESEL FUEL AND WINTER OPERATION

For winter operation, certain fuel properties become more critical. These properties include:

- Cetane Number — A measure of the ignition value, or the time required to heat, vaporize, and ignite the fuel. The higher this rating number, the faster the fuel will burn.
- Pour Point — A temperature-related point at which fuel will no longer flow through system lines and cannot be pumped.
- Cloud Point — A temperature-related point at which fuel may continue to flow through system lines but filter restriction (plugging) can occur due to crystallizing of the heavier parafinic components of the fuel (also referred to as *jelling* or *waxing* in the fuel).
- Impurities — Water and sediment are of particular importance. Water contamination can cause fuel line freeze-up, injection pump and nozzle damage, as well as component corrosion.

For winter operation with temperatures below 32°F (0°C), a blend of #1D and #2D diesel fuels may be used. Because #1D diesel fuel has lower cloud point, pour point, and Btu(kj) rating than #2D diesel fuel, blending the two fuels can help achieve better fuel flow in low temperatures.

NOTE

Be aware that using #1D fuel may result in decreased power and fuel efficiency. Some experts also suggest that kerosine (#1D fuel) has little or no lubricity, and should therefore be combined with a lubricity additive when using a 100% concentration.

https://truckmanualshub.com/

The following chart contains mixing proportions for #1D and #2D diesel fuels in cold temperatures.

Recommended Fuel Mixing Proportions		
Ambient Air Temperature	**#2D Diesel Fuel**	**#1D Fuel (Kerosene)**
Above 32°F (0°C)	100%	0%
32 to 14°F (0 to –10°C)	90%	10%
14 to –4°F (–10 to –20°C)	70%	30%
Below –4°F (–20°C)	50%	50%

NOTE

When operating in cold weather, fuel waxing can cause many problems similar to engine troubleshooting symptoms. Be sure to check for fuel congealing before proceeding to troubleshooting remedies outlined under "ENGINE DIAGNOSTIC CHART" on page 234.

DIESEL FUEL ADDITIVES

NOTE

Adding isopropyl alcohol to reduce water contamination and freezing is NOT recommended.

⚠ CAUTION

Never blend gasoline with diesel fuel. This can cause an explosive mixture resulting in component destruction and engine/fuel system damage.

https://truckmanualshub.com/

Cetane Improvers

MACK currently approves the use of cetane improvers and certain pour-point depressants to improve the combustibility and flow characteristics of the fuel *only if these additives are contained in the fuel as delivered* and not added by the customer.

NOTE

- Be aware that the minimum Cetane rating is now 40 instead of 45, but higher ratings may still be necessary for operation in high altitudes or extreme cold weather.
- Also note that some experts say Cetane improvers may cause *gum-up* problems.

Cetane improvers have the following benefits:

- easier cold weather starting
- smoother engine operation
- reduced diesel *knock*
- faster engine warm-up
- lower emissions
- reduced misfirings and white smoke cleanup time

https://truckmanualshub.com/

FUEL WARMERS

The use of thermostatically controlled fuel warmers which will maintain fuel temperatures above the gel point and below the flash point of the fuel.

NOTE

The only fuel warmers approved for use on MACK engines are those which use the coolant to regulate the temperature of the fuel. Exhaust gas fuel warmers are not satisfactory, nor are they approved for use.

ENGINE BLOCK HEATER

The combination of a fuel warmer, one which uses the engine coolant as the heating medium, and a block heater will alleviate winter starting and operating problems associated with fuel waxing.

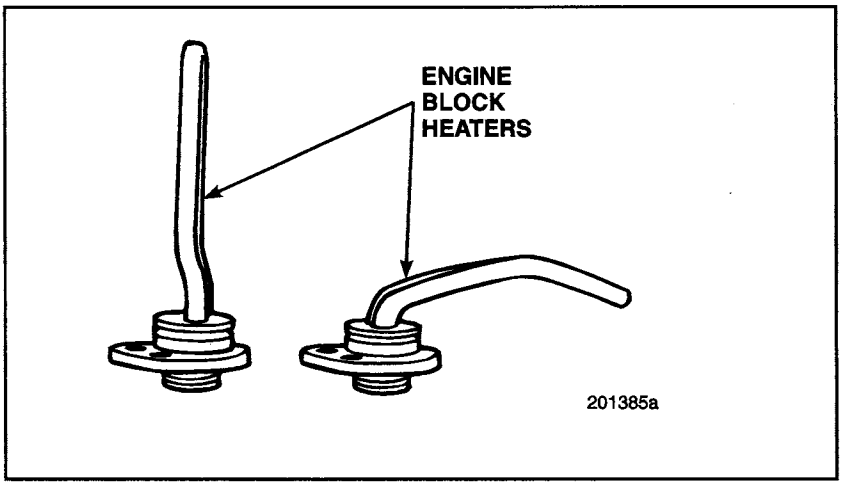

Figure 95 — Engine Block Heaters

https://truckmanualshub.com/

ANITFREEZE SPECIFICATIONS

Ethylene glycol or propylene glycol based antifreezes are required in MACK Class 8 trucks. All ethylene glycol and propylene glycol coolants must be low silicate antifreezes which meet ASTM D4985 test criteria. These antifreezes are sometimes referred to as heavy-duty diesel coolants. Passenger car coolants do NOT meet this specification.

Be sure to maintain the required level of antifreeze protection for anticipated winter temperatures in your area of operation. Mack Trucks, Inc. recommends an antifreeze mix in the range between 40% to 60%, depending upon climatic conditions in which the vehicle will be operated.

⚠ CAUTION

Do not exceed a 60% solution of ethylene glycol or propylene glycol to water. A higher percentage will not increase protection. Concentrations over 60% adversely affect freeze protection and heat transfer rates.

https://truckmanualshub.com/

Additional guidelines for maintaining correct antifreeze protection include the following:

- Do not use antifreeze containing anti-leak additives in trucks equipped with coolant filters or conditioners. Also, do not use soluble oil type antifreeze in any MACK cooling system.
- Always mix the water/antifreeze solution before adding it to the cooling system.
- After adding coolant, run the engine until a minimum normal operating temperature is reached. Check the coolant level and add coolant as needed.
- Concentration of antifreeze in the cooling system must be checked with a refractometer prior to traveling or operating in areas where subfreezing temperatures may be encountered.
- Under normal operating conditions, including seasonal fluctuations of most temperate climates, coolant must be drained and replaced with new antifreeze solution every 24 months, 200,000 miles (320 000 km), whichever occurs first. For more severe conditions of extended or extreme cold weather operation, coolant should be renewed on a yearly basis or 100,000 miles (161 000 km), whichever occurs first.

https://truckmanualshub.com/

COOLANT CAPACITIES

⚠ CAUTION

Capacities may vary due to hoses and size of radiator, as well as accessory cooling equipment. After running the engine until normal operating temperature is reached, check the coolant level and add coolant as needed.

Use the capacities listed below in conjunction with the antifreeze protection charts under tables on page 284 to determine the amount of antifreeze needed to protect your vehicle.

HIGHWAY CHASSIS CAPACITIES

Model	Engine	Coolant Capacity Quarts (Liters)
CX600 Series	E-Tech™ Engines	33 (31)
CH600 Series	E-Tech™ Engines	33 (31)
CL700 Series	E-Tech™ Engines	38 (36)
LE600 Series	E-Tech™ Engines Cummins ISC Engines*	38 (36) 31.5 (30)
MR600 Series	E-Tech™ Engines	40 (38)
RD600 Series	E-Tech™ Engines	41 (39)
RB600 Series	E-Tech™ Engines	43 (41)
RD800 Series	E-Tech™ Engines	43 (41)
DM600 Series	E-Tech™ Engines	38 (36)
DMM6006 Series	E-Tech™ Engines	46 (44)

*Texaco Extended Life coolant is currently not approved for use in Cummins ISC engine.

https://truckmanualshub.com/

Use the following antifreeze protection charts to determine the percentage of antifreeze needed to achieve specific protection levels for various coolant systems.

ETHYLENE GLYCOL PROTECTION CHART

Ethylene Glycol	Ambient Air Temperature
40%	–12°F (–24°C)
50%	–34°F (–37°C)
60%	–62°F (–52°C)

PROPYLENE GLYCOL PROTECTION CHART

Propylene Glycol	Ambient Air Temperature
40%	–6°F (–21°C)
50%	–27°F (–33°C)
60%	–56°F (–49°C)

https://truckmanualshub.com/

LUBRICANTS AND CAPACITIES

NOTE

Components used on certain contract engineered vehicles may require lubricants other than those specified in this manual. Refer to the operator's manual supplied with these vehicles for a listing of specified lubricants.

Mack Engines

(See table on page 265 for recommended SAE Grades)

MACK ENGINES

Engine	Lubricant	System Capacity Quarts (Liters)
E-Tech™	EO-M PLUS/EO-M**	33.5 (31.7)*

* Add 1 qt. for chassis equipped with MACK Rear Engine Power Take-Off (REPTO).

** EO-M PLUS required for Line Haul 1 — Extended Service Interval and Short Haul — Severe Service Interval

https://truckmanualshub.com/

Cummins Engines

CUMMINS ENGINES

Model	Lubricant	System Capacity Quarts (Liters)
ISC Series	Heavy-Duty Engine Oil SAE Grade 15W40 Meeting API Classification CG4/SF or CF-4/SF	20 (19.9)

Transfer Case

(See table on page 267 for recommended SAE grades)

TRANSFER CASE

Transfer Case	Lubricant	Capacity — Pints (Liters)
TC15 Series TC25 Series	GO-J/GO-J PLUS** GO-J/GO-J PLUS**	20 (9.5) 20 (9.5)
Flywheel Power Take-Off*	GO-J/GO-J PLUS**	5 (2.4)

* For Rear Engine Power Take-Off (REPTO) refer to *MACK Engines* above.

** GO-J PLUS required for MACK geared component extended service drain intervals.

https://truckmanualshub.com/

MACK TRANSMISSIONS

(See table on page 267 and table on page 268 for recommended SAE grades)

Transmission	Lubricant	Capacity — Pints (Liters)
T2050	GO-J, GO-J PLUS, TO-A PLUS**	20 (9.5)*
T2060A	GO-J, GO-J PLUS, TO-A PLUS**	20 (9.5)*
T2060	GO-J, GO-J PLUS, TO-A PLUS**	24 (11.4)*
T2070A (Long Compound)	GO-J, GO-J PLUS, TO-A PLUS**	30 (14.2)*
T2070(B)(D)	GO-J, GO-J PLUS, TO-A PLUS**	30 (14.2)*
T2070(C)(F)	GO-J, GO-J PLUS, TO-A PLUS**	24 (11.4)*
T2110C	GO-J, GO-J PLUS, TO-A PLUS**	24 (11.4)*
T2080(B)(D)	GO-J, GO-J PLUS, TO-A PLUS**	30 (14.2)*
T2090(B)	GO-J, GO-J PLUS, TO-A PLUS**	24 (11.4)*
T2100	GO-J, GO-J PLUS, TO-A PLUS**	24 (11.4)*
T2130(B)/T2180(B)	GO-J, GO-J PLUS, TO-A PLUS**	30 (14.2)
T2110B	GO-J, GO-J PLUS, TO-A PLUS**	30 (14.2)

* Exact amount depends on inclination of transmission. Also, if equipped with a transmission oil cooler or RMPTO, specified oil capacity may vary. Fill to level of filler opening. DO NOT overfill.

** GO-J PLUS and TO-A PLUS required for extended drain interval. TO-A PLUS is a transmission lubricant only, and not to be used in other geared components.

https://truckmanualshub.com/

ALLISON TRANSMISSIONS*

ALLISON TRANSMISSION LUBRICANTS AND CAPACITIES

Transmission	Lubricant	Capacity — Quarts (Liters) Initial Fill**	Capacity — Quarts (Liters) Refill†
HT740, 750, 754 (4-1/2" deep pan) (6" or 7" deep pan) (8-1/2" deep pan)	Dexron® III for on-highway applications or Allison specification C-4 for severe service and off-highway applications or Castrol® TRANSYND® (synthetic) lubricant	36 (34) 39 (36) 43 (41)	30 (29) 33 (31) 37 (35)
MD3060/3560P		29 (27)	23 (22)
HD4060P/4560P/B Standard oil pan Shallow oil pan		51 (48) 43 (41)	45 (43) 37 (35)

Grade (SAE)	Minimum Ambient Temp. F° (C°)
0W-20	–22 (–30)
10W	–4 (–20)
15W-40	5 (–15)
30	32 (0)
40	50 (10)

Temperatures below those listed require pre-heat.

* All capacities are for the transmission alone and do not include external piping such as for filters, coolers, etc.

** Initial fill capacity is the amount of lubricant needed to fill a totally dry transmission such as after an overhaul.

† Refill capacity is the amount of lubricant needed to fill a unit that has been drained for the purpose of changing the transmission fluid.

https://truckmanualshub.com/

Eaton® Fuller® Manual Transmissions

Transmission	Lubricant		Capacity Pints (Liters)†
TX-14607	SAE 50 Synthetic Transmission Fluid		37 (17)
RT-14908LL			29 (14)
RT-16908LL	Grade	Ambient Temp.	28 (13)
RT-11609 Series	(SAE)	°F (°C)	27 (12)
RT-11709 Series	50	All Temperatures	27 (12)
RT-12609 Series			27 (12)
RT-13609 Series			27 (12)
RT-13709 Series	Heavy-Duty Engine Oil		27 (12)
RT-14609 Series	Meeting Specification		27 (12)
	MIL-L-2104 D		
RT-14709 Series	or		27 (12)
RT-14909 MLL	Caterpillar TO-4		28 (13)
RT-16709 Series			27 (12)
FR-11210 Series	Grade	Ambient Temp.	23.5 (11.1)
RTLO-11610B	(SAE)	°F (°C)	28 (13)
FR-12210 Series	50	Above 10° (–12°)	23.5 (11.1)
RTLO-12610B	40	Above 10° (–12°)	28 (13)
FR-13210 Series	30	Below 10° (–12°)	23.5 (11.1)
RTLO-13610B			28 (13)
	API MT-1 Gear Oil		
FR-14210 Series	Meeting Specification		23.5 (11.1)
RTLO-14610B	MIL-PRF-2105E		28 (13)
	Grade	Ambient Temp.	
FR-15210 Series	(SAE)	°F (°C)	23.5 (11.1)
RTLO-15610B			28 (13)
	80W90	Above 10° (–12°)	
FR-16210 Series	75W	Below 10° (–12°)	23.5 (11.1)
RT-14710 Series			26 (12)
RTLO-16610B			28 (13)
RTLO-14713A			28 (13)
RTLO-14913A			28 (13)
RTLO-16713A			28 (13)
RTLO-16913A			28 (13)
RT-14915 Series			28 (13)
RT-16915 Series			28 (13)
RT-14718 Series			28 (13)
RTLO-14718B			28 (13)
RTLO-14918B			28 (13)
RTLO-16718B			28 (13)
RTLO-16918B			28 (13)

† Capacities listed are approximate. Exact amount depends upon degree of engine and transmission inclination. Always fill transmission to level of filler plug hole. DO NOT overfill. Capacity of transmissions equipped with PTOs or oil coolers will be greater than capacities listed.

https://truckmanualshub.com/

EATON® FULLER® AUTOMATIC TRANSMISSIONS

Super 10 Top 2

Model	Lubricant*	Capacity Pints (Liters)†
RTLO-13610B-T2	SAE 50 Synthetic Transmission Fluid	31 (14.6)
RTLO-14610B-T2		31 (14.6)
RTLO-15610B-T2	Grade (SAE) — Ambient Temp. °F (°C)	31 (14.6)
RTLO-16610B-T2		31 (14.6)
	50 — All Temperatures	
	Heavy-Duty Engine Oil Meeting Specification MIL-L-2104 D or Caterpillar TO-4	
	Grade (SAE) — Ambient Temp. °F (°C)	
	50 — Above 10° (−12°)	
	40 — Above 10° (−12°)	
	30 — Below 10° (−12°)	
	API MT-1 Gear Oil Meeting Specification MIL-PRF-2105E	
	Grade (SAE) — Ambient Temp. °F (°C)	
	80W90 — Above 10° (−12°)	
	75W — Below 10° (−12°)	

† Capacities listed are approximate. Exact amount depends upon degree of engine and transmission inclination. Always fill transmission to level of filler plug hole. DO NOT overfill. Capacity of transmissions equipped with PTOs or oil coolers will be greater than capacities listed.

* Do not use multi-viscosity or EP (Extreme Pressure) GL-5 gear oils. **DO NOT MIX OILS IN THE TRANSMISSION.**

https://truckmanualshub.com/

Autoshift

Model	Lubricant*	Capacity Pints (Liters)†
RTAO-14710B-AS	SAE 50 Synthetic Transmission Fluid	26 (12)
RTAO-16710B-AS		26 (12)
RTAO-14710C-AS		26 (12)
RTAO-16710C-AS		26 (12)
	Grade (SAE) — Ambient Temp. °F (°C) 50 — All Temperatures	
	Heavy-Duty Engine Oil Meeting Specification MIL-L-2104 D or Caterpillar TO-4	
	Grade (SAE) — Ambient Temp. °F (°C) 50 — Above 10° (−12°) 40 — Above 10° (−12°) 30 — Below 10° (−12°)	
	API MT-1 Gear Oil Meeting Specification MIL-PRF-2105E	
	Grade (SAE) — Ambient Temp. °F (°C) 80W90 — Above 10° (−12°) 75W — Below 10° (−12°)	

† Capacities listed are approximate. Exact amount depends upon degree of engine and transmission inclination. Always fill transmission to level of filler plug hole. DO NOT overfill. Capacity of transmissions equipped with PTOs or oil coolers will be greater than capacities listed.

* Do not use multi-viscosity or EP (Extreme Pressure) GL-5 gear oils. **DO NOT MIX OILS IN THE TRANSMISSION.**

https://truckmanualshub.com/

Meritor Transmissions

Model	Lubricant*	Capacity Pints (Liters)†
MO-13G9B-M13 MO-14G9B-M14 MO-15G9B-M15 MO-14G10A-M14 MO-13G10A-M13 M-14G10A-M14 MO-16G10A-M16 M-15G10A-M15	Full-Synthetic Oil Meeting Meritor Specification O-81** Temperature — SAE Grade Above –40°F (–40°C) — SAE 50 Petroleum Oil with Rust and Oxidation Inhibitor Meeting API Specification GL-1 Temperature — SAE Grade Above 10°F (–12°C) — 90 Above –15°F (–26°C) — 80 Heavy-Duty Engine Oil Meeting Specification MIL-L-2104D, E, or F or API CD, CE, SF, SG or SH	20.5 (9.7) 20.5 (9.7) 20.5 (9.7) 20.5 (9.7) 20.5 (9.7) 20.5 (9.7) 20.5 (9.7) 20.5 (9.7)

† Capacities listed above are approximate, always fill transmission to the bottom of the plug hole. On chassis equipped with an oil pump and/or cooler, operate the engine for five minutes after initially filling the transmission, then recheck the oil level.

* Do not use multi-viscosity or EP (Extreme Pressure) GL-5 gear oils. **DO NOT MIX OILS IN THE TRANSMISSION.**

** Refer to Meritor Bulletin TP-90114, "Lubricant Specifications" for full-synthetic oil specifications.

Meritor Transmission Oil Level Check/Change Intervals

Oil Level Check: 10,000 miles (16 000 km)
Approved Petroleum Oil Change: 50,000 miles (80 000 km)
Approved Synthetic Oil Change: 250,000 miles (400 000 km)

https://truckmanualshub.com/

Spicer Transmissions

SPICER TRANSMISSION LUBRICANTS AND CAPACITIES

Model	Lubricant	Capacity Pints (Liters)
LPSO125-10S	Heavy-Duty Engine Oil Meeting Specification MIL-L-2104D or E or API-CD, CE, SF or SG or Caterpillar TO-4	18 (8.5)
LPSO140-10S		18 (8.5)
LPSO150-10S		18 (8.5)
PSO125-10S		18 (8.5)
PSO125-10V		18 (8.5)
PSO140-10S		18 (8.5)
PSO145-10V		18 (8.5)
PSO150-10S		18 (8.5)
PSO165-10S		18 (8.5)
	Grade (SAE) / Ambient Temp °F (°C)	
	30 or 40 / Above 0° (–18°)	
	30 / Below 0° (–18°)	
	Automotive Gear Oil API MT-1	
	Grade (SAE) / Ambient Temp °F (°C)	
	80W90 / Above 0° (–18°)	
	75W / Below 0° (–18°)	
	Synthetic Transmission Oil Meeting Spicer Specification MS-961-T	
	Grade (SAE) / Ambient Temp °F (°C)	
	50 / All	

EP Gear Oils are not recommended when operating temperatures exceed 230°F (110°C)

Do not mix engine, transmission or gear oils

Synthetic SAE 50 transmission oil required for vehicles equipped with engines having horsepower ratings of 399 and greater

https://truckmanualshub.com/

SPICER TRANSMISSION OIL CHANGE INTERVAL

Oil Type	On-Highway	Off-Highway
Mineral Based	1 year or 100,000 miles	Every 1000 hours
Semi-synthetic	2 years or 250,000 miles	
Synthetic	5 years or 500,000 miles	

Auxiliary Transmissions

Transmission	Lubricant	Capacity Pints (Liters)
SPICER ATO-1000-4C/D APO-1000-4C AMO-1000-4C	Heavy-Duty Engine Oil Meeting Specification MIL-L-2104D or MIL-L-46152B, or API SF or CD Ambient Temperature °F (°C) — Grade SAE Above 0° (–18°) — 30, 40, 50 Below 0° (–18°) — 30	14 (6.6) 14 (6.6) 14 (6.6)
FULLER AT1202A	Heavy-Duty Engine Oil Meeting Specification MIL-L-2105D or API SF or CD Ambient Temperature °F (°C) — Grade SAE Above 10° (–12°) — 40, 50 Below 10° (–12°) — 30	11 (5)

https://truckmanualshub.com/

Front Driving Axle

FRONT DRIVING AXLE LUBRICANTS AND CAPACITIES

Front Axle	Lubricant	Capacity Pints (Liters)
MERITOR RF21-160	GL-5	28 (13.3)
FABCO SDA2100 SDA2300	GO-J	30 (14.2) 34 (16.1)
MARMON-HERRINGTON MT23 Housing Hub Ends	GO-J	17 (8.0) 1.7 (0.8)

Steering System

STEERING SYSTEM LUBRICANTS AND CAPACITIES

Steering System	Lubricant	Capacity Pints (Liters)
Power Steering Reservoir Capacity	EO-M PLUS*	4 (1.9) Single Gear 8 (3.8) Dual Gear

* Viscosity of steering gear lubricant should be the same as used in the engine.

https://truckmanualshub.com/

Rear Axles

(See "LUBRICANT SPECIFICATIONS" on page 265 for MACK recommended SAE grades)

REAR AXLE LUBRICANTS AND CAPACITIES

Rear Axle	Carrier	Lubricant	Capacity Pints (Liters)
MACK			
RA23	CRD93 (1) A	GO-J/GO-J PLUS*	28 (13.2)
RA23	CRD203 (1)		34.5 (16.3)
RA30	CRD201 (1)	GO-J/GO-J PLUS*	34.5 (16.3)
		GO-J/GO-J PLUS*	
Meritor			
RS-21-145	Q100	GL-5	29 (13.7)
RS-23-160	R160	GL-5	35 (16.6)
RS-23-186	R180	GL-5	44 (20.8)
Eaton			
23105S	23105	GO-J	48 (22.5)
Spicer			
S230-S	S230-S	GO-J	48.8 (23.1)

*GO-J PLUS required for MACK geared component extended service drain interval.

https://truckmanualshub.com/

Tandem Axles

(See table on page 267 for MACK recommended SAE grades)

TANDEM AXLE LUBRICANTS AND CAPACITIES

Bogie Number	Carrier	Lubricant	Capacity† Pints (Liters)
MACK			
S(-)(-)34	CRD(LP)(PC) 92 (1)/ CRD(L)93(1) CRD(P)202(1)/CRD 203(1)	GO-J/GO-J PLUS* GO-J/GO-J PLUS*	69 (32.6) 70.5 (33.3)
S(-)(-)38	CRD(LP) (PC)92(1)/ CRD(L)93(1) CRD(P)202(1)/CRD 203(1) CRDP200/CRD201	GO-J/GO-J PLUS* GO-J/GO-J PLUS* GO-J/GO-J PLUS*	69 (32.6) 70.5 (33.3) 70.5 (33.3)
S(-)(-)440	CRDPC92(1)/ CRD93(1) CRDP202(1)/ CRD203(1)	GO-J/GO-J PLUS* GO-J/GO-J PLUS*	69 (32.6) 70.5 (33.3)
S(-)462	CRDPC92(1)/ CRD93(1) CRDP202(1)/ CRD203(1)	GO-J/GO-J PLUS* GO-J/GO-J PLUS*	69 (32.6) 70.5 (33.3)
S(-)501	CRDPC112/CRD113 CRDP200/CRD201	GO-J/GO-J PLUS* GO-J/GO-J PLUS*	69 (32.6) 70.5 (33.3)
S(-)52	CRDPC112/CRD113 CRDP200/CRD201	GO-J/GO-J PLUS* GO-J/GO-J PLUS*	69 (32.6) 70.5 (33.3)
S(-)582	CRDPC112(1)/ CRD113(1) CRDP200/CRD201	GO-J/GO-J PLUS* GO-J/GO-J PLUS*	69 (32.6) 70.5 (33.3)
S(-)65 With Elbow Fitting	CRD(P)95/CRD96 CRD(P)95/CRD96	GO-J/GO-J PLUS* GO-J/GO-J PLUS*	74 (35) 82 (39)
SR70 & SR80 Housings Hub reduc- tion ends	P1532/PMA1532	GO-J/GO-J PLUS* GO-J/GO-J PLUS*	65.9 (31.2) 19 (9)

https://truckmanualshub.com/

Bogie Number	Carrier	Lubricant	Capacity† Pints (Liters)
Eaton			
DS405(P)	DS405(P)	GO-J	62 (29.3)
DS462P & DS463P	DS462P & DS463P	GO-J	85 (40.2)
Meritor			
RT40-145	RT40-145	GL-5	70.2 (33.2)
RT46-160	RT46-160	GL-5	73.5 (34.8)
RT46-164EH	RT46-164	GL-5	73.5 (34.8)
SPRC-1927	Housings	GL-5	74 (35)
	Hub reduction ends		22 (10.4)
Spicer			
S400	S400	GO-J	54.8 (26)

† Capacities listed above are the total oil capacities of the tandem axle assembly which includes each axle assembly, carrier and the interaxle power divider on the front carrier. Proper oil level is best determined by checking oil level in reference to the filler plug holes.

* GO-J PLUS required for MACK geared component extended service drain intervals.

https://truckmanualshub.com/

1998 MACK ENGINE LINE-UP

Mack E-Tech™ V-MAC® III Engine Models

Engine Model	Operating Range	Rated Power	Peak Power	Peak Torque	Torque Rise	Cruise RPM	High Idle / Idle
EM7–275	1020–1750 rpm	275 HP (205 kW) @ 1750 rpm	285 HP (213 kW) @ 1500 rpm	1305 lb-ft (1769 N•m) @ 1020 rpm	58%	1500 rpm	1800/2100 rpm
							500–750 rpm
E7–300	1200–1800 rpm	300 HP (224 kW) @ 1800 rpm	300 HP (224 kW) @ 1500–1800 rpm	1160 lb-ft (1573 N•m) @ 1200 rpm	33%	1600 rpm	1850/2100 rpm
							500–750 rpm
E7–300(A) Auto Trans.	1200–1950 rpm	300 HP (224 kW) @ 1950 rpm	310 HP (231 kW) @ 1600 rpm	1160 lb-ft (1573 N•m) @ 1200 rpm	44%	1600 rpm	2000/2100 rpm
							500–750 rpm
EM7–300	1020–1750 rpm	300 HP (224 kW) @ 1750 rpm	310 HP (231 kW) @ 1500 rpm	1425 lb-ft (1932 N•m) @ 1020 rpm	58%	1500 rpm	1800/2100 rpm
							500–750 rpm
E7–310/ 330	1100–1800 rpm	310 HP (231 kW) @ 1800 rpm	330 HP (246 kW) @ 1500 rpm	1360 lb-ft (1844 N•m) @ 11001200 rpm	50%	1500 rpm	1850/2100 rpm
							500–750 rpm
E7–330/ 350	1100–1800 rpm	330 HP (246 kW) @ 1800 rpm	350 HP (261 kW) @ 1500 rpm	1460 lb-ft (1980 N•m) @ 1100–1200 rpm	52%	1500 rpm	1850/2100 rpm
							500–750 rpm
E7–350	1200–1800 rpm	350 HP (261 kW) @ 1800 rpm	350 HP (261 kW) @ 1500–1800 rpm	1360 lb-ft (1844 N•m) @ 1200 rpm	33%	1600 rpm	1850/2100 rpm
							500–750
E7–355/ 380	1100–1800 rpm	355 HP (265 kW) @ 1800 rpm	380 HP (283 kW) @ 1500 rpm	1560 lb-ft (2115 N•m) @ 1100–1200 rpm	50%	1500 rpm	1850/2100 rpm
							500–750 rpm

https://truckmanualshub.com/

1998 MACK ENGINE LINE-UP

Engine Model	Operating Range	Rated Power	Peak Power	Peak Torque	Torque Rise	Cruise RPM	High Idle / Idle
E7–400	1200–1800 rpm	400 HP (298 kW) @ 1800 rpm	400 HP (298 kW) @ 1600–1800 rpm	1460 lb-ft (1980 N•m) @ 1200 rpm	25%	1600 rpm	High Idle: 1850/2100 rpm Idle: 500–750 rpm
E7–427	1200–1800 rpm	427 HP (319 kW) @ 1800 rpm	427 HP (319 kW) @ 1600–1800 rpm	1560 lb-ft (2115 N•m) @ 1200 rpm	25%	1600 rpm	High Idle: 1850/2100 rpm Idle: 500–750 rpm
E7–460	1200–1850 rpm	460 HP (343 kW) @ 1850 rpm	487HP (363 kW) @ 1600–1700 rpm	1660 lb-ft (2251 N•m) @ 1200 rpm	25%	1600 rpm	High Idle: 1850/2100 rpm Idle: 500–750 rpm
E7–460XT	1200–1850 rpm	460 HP (343 kW) @ 1850 rpm	487HP (363 kW) @ 1600–1700 rpm	1760 lb-ft (2386 N•m) @ 1200 rpm	30%	1600 rpm	High Idle: 1850/2100 rpm Idle: 500–750 rpm

NOTE

On all E-Tech™ engines, no-load full-throttle (high idle) is adjustable, using the V-MAC® Service Support Software, from the rated speed plus 50 rpm to 2100 rpm, with 2100 rpm being the default setting. Also, low idle is adjustable from 500 to 750 (with 650 being the default setting).

https://truckmanualshub.com/

E-Tech™ Series Engines

Bore and Stroke: 4.875" × 6.5" (123.8 mm × 152.4 mm)

Firing order: 1-5-3-6-2-4

Displacement: 728 cu. in. (12 litres)

Thermostat: 180°F (82°C)

Radiator Cap: 10-lb. pressure cap

Oil Change Capacity:

32 qt (30 litres) — with oil filter change

28 qt (27 litres) — without oil filter change

NOTE

Some residual oil remains in the system (oil cooler, lines, etc.) when the oil is drained.

https://truckmanualshub.com/

Engine Information Plate

In compliance with the emissions standards requirements, an exhaust emission control information plate is affixed to all MACK diesel engines. This plate gives basic engine identification information, valve clearances and Jake brake slave piston clearance. This plate is located on the forward cylinder head cover in most applications. On MR and LE model chassis, however, the plate is located on the rear cylinder head cover.

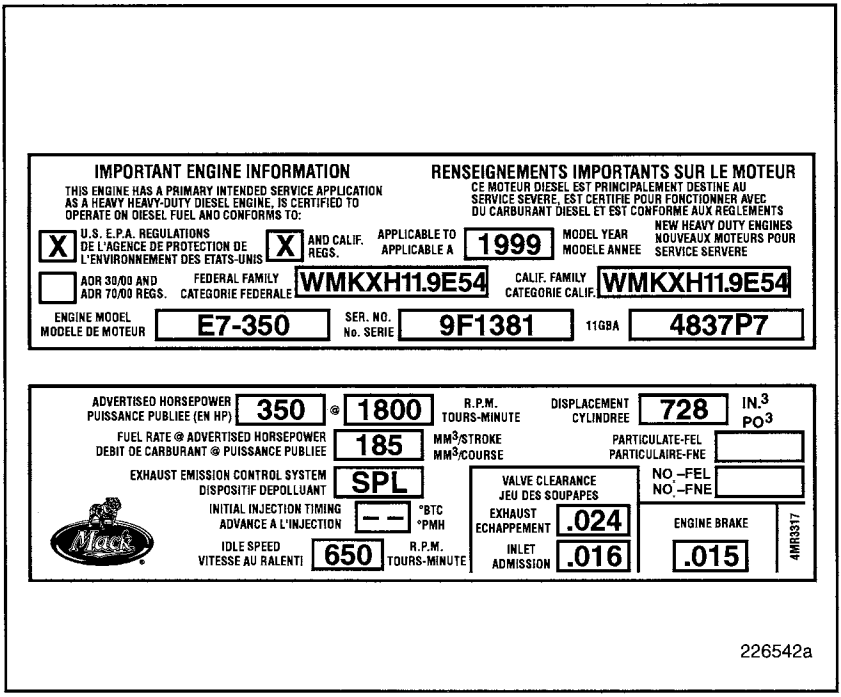

Figure 96 — Engine Information Plate

https://truckmanualshub.com/

CONVERSION CHART

CONVERSION CHART

1 inch	=	25.4 millimeters
1 mile	=	1.61 kilometers
1 pint (U.S. liquid)	=	.473 liter
1 quart (U.S. liquid)	=	.946 liter
1 gallon (U.S. liquid)	=	.83267 Imperial gallon
1 cubic inch	=	.01639 liter
1 pound-foot	=	1.3558 Newton meters
1 horsepower	=	.746 kilowatt
1 pound/square inch	=	6.895 kilopascals
degrees Fahrenheit	=	(1.8 x degrees Celsius) + 32
1 millimeter	=	.03937 inches
1 kilometer	=	.6214 miles
1 liter	=	2.1134 pints (U.S. liquid)
1 liter	=	1.0567 quarts (U.S. liquid)
1 Imperial gallon	=	1.2009 gallons (U.S. liquid)
1 liter	=	61.024 cubic inches (U.S. liquid)
1 Newton meter	=	.7376 pound-foot
1 kilowatt	=	1.34 horsepower
1 kilopascal	=	.145 pound/square inch
degrees Celsius	=	.556 x (degrees Fahrenheit –32)

https://truckmanualshub.com/

A

Advisory Labels v
Air Brake System 202
Air Cleaner Maintenance 102
Air Conditioner Maintenance 100
Air Suspension Control Switch 171
Allison Transmissions 288
Anitfreeze Specifications 281
At the end of first 3000 miles (5000 km) or before 4000 miles (6500 km) or 3 to 4 months (whichever comes first) 4
At the first A inspection interval 4
Autoshift 291
Auxiliary Transmissions 294
Axle Alignment 50, 182

B

Batteries 117
Battery Condition 118
Battery Warmer 118
Brake Adjustment 205
Brake Diagnostic Chart 255

C

Cam Brake Adjustment 205
Carrier Capscrews 153
Carrier Housing Breathers 149
Carriers 153
Caster Specifications 185
Centri-Max® PLUS Oil Filter 136
Chain Clearance Spacers 194
Charging 120
Chassis Inspection 35
Clutch Adjustment 210
CMCAC 108
Cold Weather Accessories 94
Cold Weather Operation 93
Conversion Chart 303
Coolant Capacities 283

https://truckmanualshub.com/

Coolant Conditioning 87
Coolant Test Strips 88
Cooling System 86
Cooling System Corrosion 91
Crankcase Breather Filter 116
Cummins Engines 286
Cylinder Head Retorque Procedures 221

D

Daily Inspection 6
DF-A (Diesel Fuel Grades #1D and #2D) 274
Diesel Fuel 273, 274
Disc Wheels (Hub Piloted) 190
Disc Wheels (Stud Located Ball Seat) 189
Driver's Daily Inspection 6
Dual Circuit Brake System Function Test 202
During first 3000 Miles (5000 km) 4

E

Eaton® Fuller® Automatic Transmissions 290
Eaton® Fuller® Manual Transmissions 289
Eaton® Fuller® Transmissions 142
Electrical System 117
Engine Brake Maintenance 231
Engine Diagnostic Chart 234
Engine Information Plate 302
Engine Oil, Oil Filter and Fuel Filter Change Intervals 125
Engine Oils for MACK Diesel Engines 265
E-Tech™ Series Engines 301

F

Factors That Influence Tire Wear 196
Fan Belts 75
Fastener Grades 69
Fastener Sizes and Types 67
Fastener Sizes, Types and Grades 67
Fluids 273
Flywheel PTO 145
Front (Steering) Axle and Single Rear Axle 167

https://truckmanualshub.com/

Front Driving Axle 295
Fuel Filters 110
Fuel Injector Nozzle Maintenance 115
Fuel System 110
Fuel Warmers 280
Fuel/Water Separator 113

G

Gear Oil Change and Chassis Lubrication Interval 128
Gear Oils 266
Geared Components 139
Greases 268

H

Heavy-Duty Banded V-Belts 77

I

Inch Thread vs. Metric Thread Fastener Combinations
Contributing to Assembly Weakness 73
Inch Thread vs. Metric Thread Fastener Combinations
Contributing to Thread Stripping 71
Incompatible Metric vs. Metric Fastener Systems 71
Inlet/Exhaust Valve Lash Adjustment 227
Introduction iii

J

J-Tech™ Engine Brake Maintenance 231
J-Tech™ Engine Brake Troubleshooting 250
J-Tech™ Slave Piston Lash Adjustment 229

K

Kingpin Lower Bushing Lubrication 157
Kingpin Lubrication 157
Kingpin Upper Bearing Lubrication 157

https://truckmanualshub.com/

L

Line Haul 1 Operating Conditions (Extended Service Interval) 14
Line Haul 2 Operating Conditions (Regular Service Interval) 17
Linkages 146
Liteflex® Fiberglass Leaf Springs 177
Liteflex® Spring Construction 177
Liteflex® Spring Daily Inspection 179
Liteflex® Spring Introduction 177
Liteflex® Spring Operation and Maintenance 178
Load Test 122
Long Stroke Chambers 203
Long Stroke Identification 204
Lubricant Change Intervals 124
Lubricant Change Procedures 133
Lubricant Specifications 265
Lubricants and Capacities 285
Lubrication Chart 158

M

Mack Air Suspension 169
Mack Engines 285
Mack E-Tech™ V-MAC® III Engine Models 299
Mack Preventive Maintenance and Lubrication Program 10
Mack Suspensions (Bogies) 165
Mack Transmissions 287
Magnetic Strips and Oil Troughs 148
Maintenance Record 311
Meritor Transmissions 292

N

1998 Mack Engine Line-Up 299
Noise Emission Control 26
Noise Emission Control Systems 27
Noise Emission Information 26

https://truckmanualshub.com/

O

Off-Season Maintenance 101
Oil and Filter Change — E-Tech™ 133
Oil Contamination of Tires 197

P

Periodic Inspections 100
Poly V-Belts 78
Power Steering Oil Change 137
Preventive Maintenance Inspection Instructions 25
Preventive Maintenance Program 10
Preventive Maintenance Schedule — Line Haul 1 15
Preventive Maintenance Schedule — Line Haul 2 18
Preventive Maintenance Schedule — Short Haul 21

R

Radiator Pressure Cap 86
Range Shift Valve Filter (Range Shifted Transmissions) 141
Rear Axles 146, 296
Rear Drive Axle Alignment Specifications 186
Rear Engine Power Take-Off (REPTO) 144
Retorquing Hub Piloted Wheels 191
Ride Height 171
Road Test 29

https://truckmanualshub.com/

S

Safety Information iv
Safety Precautions for Viscous Fans 91
Service Literature 312
Short Haul Operating Conditions (Severe Service Interval) 20
Specific Maintenance 65
Specifications and Capacities 263
Spicer Easy Pedal 14- and 15-1/2 Inch Angle Spring Clutches . . . 210
Spicer Solo 15-1/2" Clutch 216
Spicer Transmissions 293
Spoke Wheels 187
Spring Clip (U-Bolt) Torque 165
Spring Clip (U-Bolt) Torque Procedure 168
SR70 and SR80 Tandem Axles 150, 152
Steering System 295
Super 10 Top 2 290
Supplemental Coolant Additive Packets 88

T

Tampering with Noise Control Systems is Prohibited 27
Tandem Axles 297
Thermostat 86
Tire Inflation 198
Tire Information 196
Tire Inspection 196
Tire Loading 199
Tire Rotation 198
Tire Selection 197
Tire Servicing 200
Tire Wear and Driving Habits 199
Torque Requirements 169
Transfer Case 143, 286
Transmission Oil 268
Transmissions 140
Turbochargers 106

https://truckmanualshub.com/

V

Valve Adjustment 222
Valve Adjustment, E-Tech™ Engine 222
Valve Yoke Adjustment 223
V-Belts 75
Vehicle Break-in 4
Vehicle Identification Number (VIN) and Model Year Designation . . 28
Vendor Suspensions (Bogies) 166

W

Wedge Brake Adjustment 209
Wheel Bearing Lubrication 155
Wheel Bearings 155
Wheel Torque Procedures 187

https://truckmanualshub.com/

MAINTENANCE RECORD

SERVICE PERFORMED	DATE	MILEAGE	SERVICED BY

https://truckmanualshub.com/

SERVICE LITERATURE

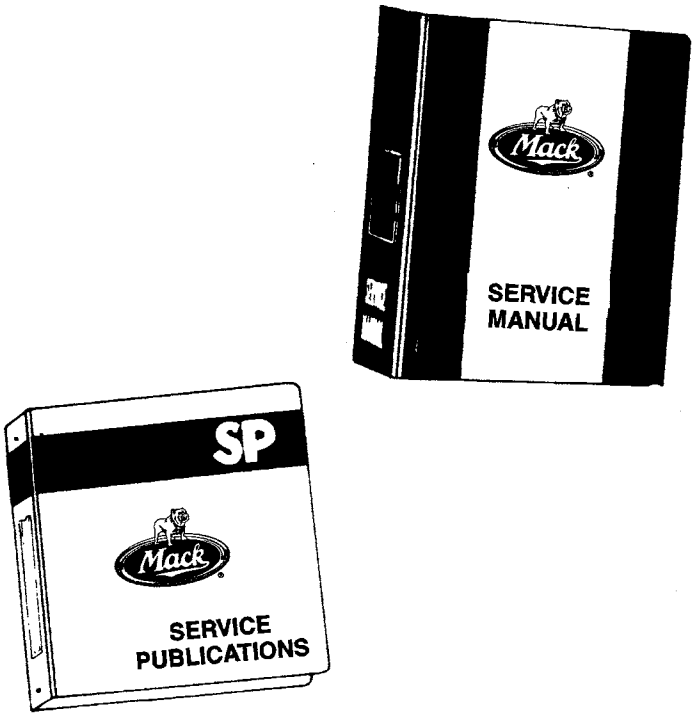

BULLDOG SERVICE PROTECTION!

000098a

Figure 97 — Bulldog Service Protection

https://truckmanualshub.com/

SERVICE LITERATURE

If you would like to know more about servicing your new MACK Truck, several options are available. We offer three different types of literature which are described on the following pages. Decide which type fits your needs and order from your local dealer or distributor.

TS576 – "MACK COMPONENTS SERVICE MANUAL"

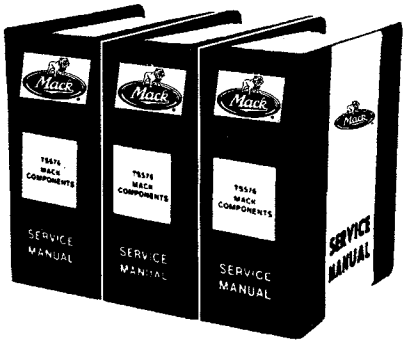

As the name implies, this manual contains information necessary to work on Mack truck components. If your chassis contains a number of non-Mack assemblies (e.g., Fuller transmissions, Eaton Rear, etc.), you'll need the TS473.

000099a

Figure 98 — TS576 — Mack Components Service Manual

https://truckmanualshub.com/

T473 – "CUSTOM HIGHWAY TRUCK SERVICE MANUAL"

This collated service manual is ordered when a Mack contains a number of vendor components not covered in the Mack Components Service Manual. A complete chassis number and GSO number must appear on the BR313 when ordering a custom manual.

000100a

Figure 99 — T473 — Custom Highway Truck Service Manual