https://truckmanualshub.com/

Engineering Release Notice (ERN)	Location	Change Description	A = Added D = Deleted	W = Was	Document Release Status **RELEASED**	
D-16194-85		SEE DCN			Date	Modification Count

WIRING DIAGRAM INDEX, 12V

NAME	DESCRIPTION	Page	NAME	DESCRIPTION	Page
AA-O	POWER DISTRIBUTION 1/2	2	GD	LIGHTING-FORWARD/SIGNAL (CXU,GU7,GU8)	30
AB-O	POWER DISTRIBUTION 2/2	3	GF	LIGHTING – TAIL/PERIMITER	31
AC-O	KEY SW., START & CHARGING	4	GG	TRAILER LIGHTING CONTROL	32
AD	GROUNDING	5	GH-O	INTERIOR LIGHTING	33
AE	BATTERY CONFIGURATION	6	GI	SNOWPLOW PREP CONNECTOR	34
AJ-O	POWER DISTRIBUTION	7	GL	LIGHTING – BEACON LAMPS	35
BA	VEHICLE ECU 1/4	8	GP-O	WIPER/WASHER	36
BB	VEHICLE ECU 2/4	9	GQ	HORN WIRING/SPOTLIGHT	37
BC	VEHICLE ECU 3/4 – DCL CONNECTOR	10	HA	CLIMATE CONTROL	38
BD	VEHICLE ECU 4/4	11	HC	HEATED SEATS, HEATED WINDSHIELD, AUX FAN 1/2	39
BE	INSTRUMENT CLUSTER 1/3	12	HG	HEATED SEATS, HEATED WINDSHIELD, AUX FAN 2/2	40
BF	INSTRUMENT CLUSTER 2/3	13	IA	RH & LH MOTORIZED WINDOWS	41
BG	INSTRUMENT CLUSTER 3/3	14	IC	MIRROR CONTROL 1/2	42
BH-O	ALLISON BODY BUILDER INTERFACE	15	ID	RH ONLY MOTORIZED WINDOW & DOOR CNTR.	43
BJ	BODY BUILDER CIRCUITS - OPTIONAL	16	IE	RH & LH DOOR CONTROL	44
BK	BODY BUILDER CIRCUITS – 2010 BODYLINK	17	KB	AUDIO SYSTEM - NONPROGRAMMABLE	45
BM	TELEMATICS GATEWAY (TGW)	18	KC	POWER OUTLET CONNECTIONS	46
CA	ENGINE INTERFACE MP 11	19	NA-O	IGNITION & BATTERY SW.& SPARE CONNECTION	47
CB-O	DPF REGENERATION SYSTEM	20	NB	JUNCTION POSTS	48
CC	ENGINE HEATER	21	NC	ADDITIONAL IGN. & BATTERY SWITCHES 1/3	49
CD	UREA DOSING SYSTEM	22	NE	ADDITIONAL IGN. & BATTERY SWITCHES 2/3	50
DC	TRANSMISSION CNTR:4 GENERATION 1/2	23	NF	ADDITIONAL IGN. & BATTERY SWITCHES 3/3	51
DD	TRANSMISSION CNTR: 4 GENERATION 2/2	24	XA-O	DATA LINK / DIAGNOSTICS 1/2	52
ED	ABS8 BENDIX W/ESP	25	XB	DATA LINK / DIAGNOSTICS 2/2	53
FA	AIR DRYER/HEATER DRAIN	26			
FB	CHASSIS SOLENOIDS	27			
FC-O	WORKBRAKE SOL, FUEL PRIMER PUMP, HOURMETER	28			
GA-O	LIGHTING CONTROL	29			

The copying, distribution and utilization of this document as well as the communication of its contents to others without expressed authorization is prohibited. Offenders will be held liable for payment of damages. All rights reserved in the event of the grant of a patent, utility model or ornamental design registration.

Document Title
WIRING DIAGRAM
GU - NYC SANITATION
12V

Document Type
TECHNICAL REGULATION

Owner Domain:Document Prefix

MACK

Mack Trucks, Inc.

Document No	Issue Index	Volume No	Page No
22448341	03	01	1(53)

EDM-W 2000-04-01

https://truckmanualshub.com/

WIRING DIAGRAM : AA–O

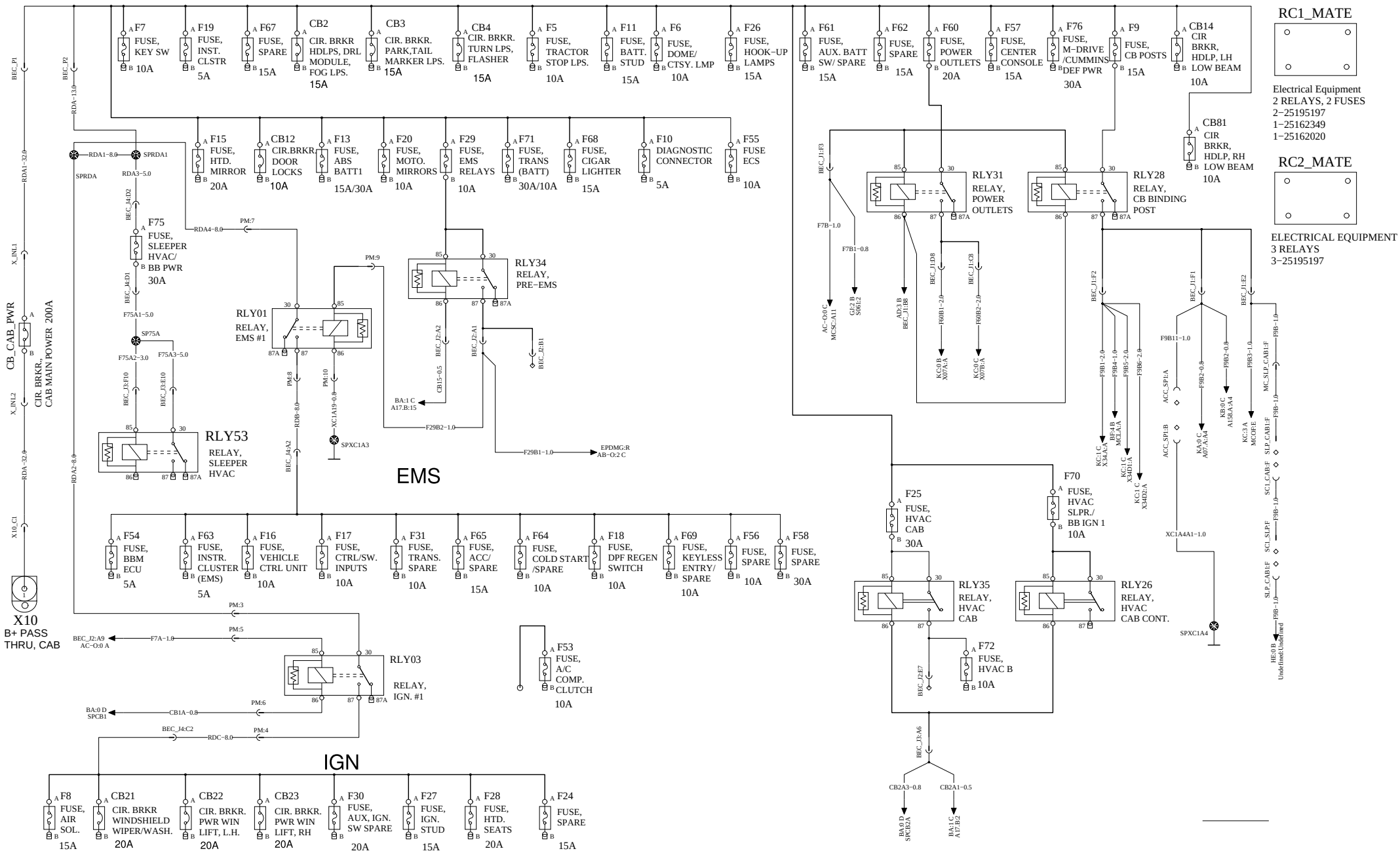

VOLVO Group Trucks Technology	Document title: WIRE DIAGRAM-CONVENTIONAL, 12V MACK, 2013BP Document type: PRODUCT SCHEMATIC	Document No: 22448341	Issue: 03	Volume: 1 (1)	Page: 2 (53)

https://truckmanualshub.com/

WIRING DIAGRAM : AB−O

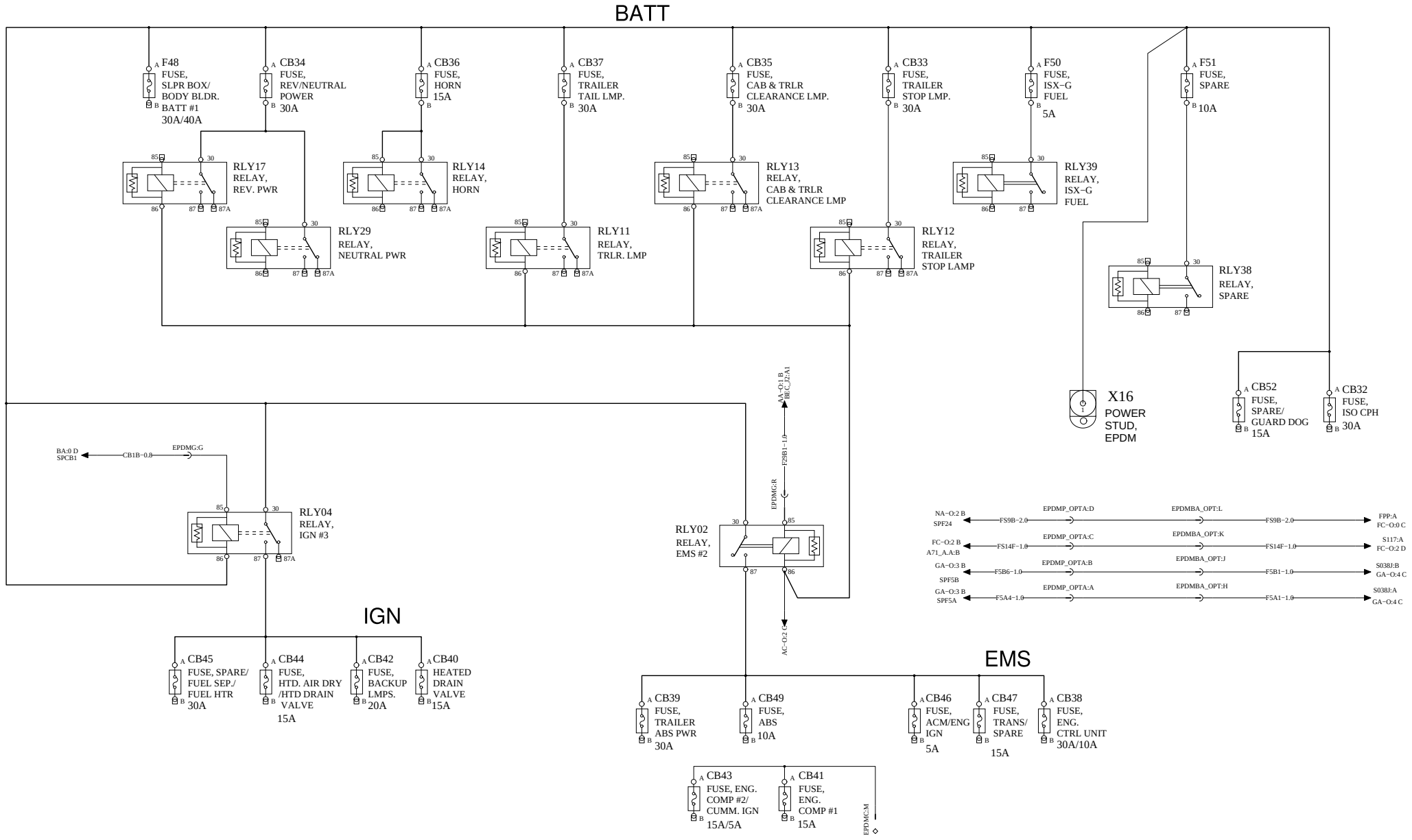

VOLVO Group Trucks Technology	Document title: WIRE DIAGRAM-CONVENTIONAL, 12V MACK, 2013BP	Document No	Issue	Volume	Page
	Document type: PRODUCT SCHEMATIC	22448341	03	1 (1)	3 (53)

KEY SW. , START & CHARGING

https://truckmanualshub.com/

WIRING DIAGRAM : AC-O

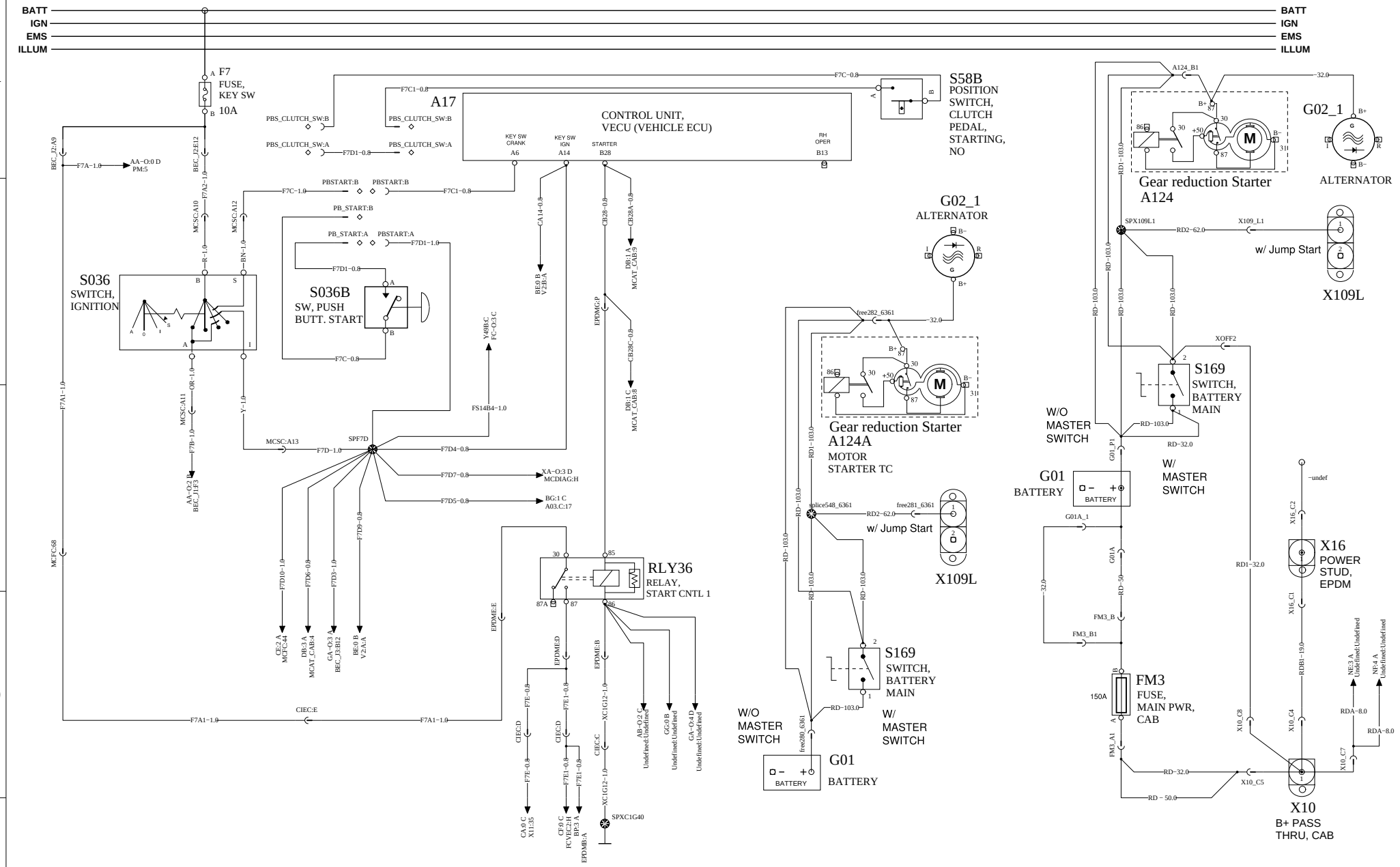

VOLVO Group Trucks Technology	Document title WIRE DIAGRAM-CONVENTIONAL, 12V MACK, 2013BP Document type PRODUCT SCHEMATIC	Document No 22448341	Issue 03	Volume 1 (1)	Page 4 (53)

https://truckmanualshub.com/

WIRING DIAGRAM : AD

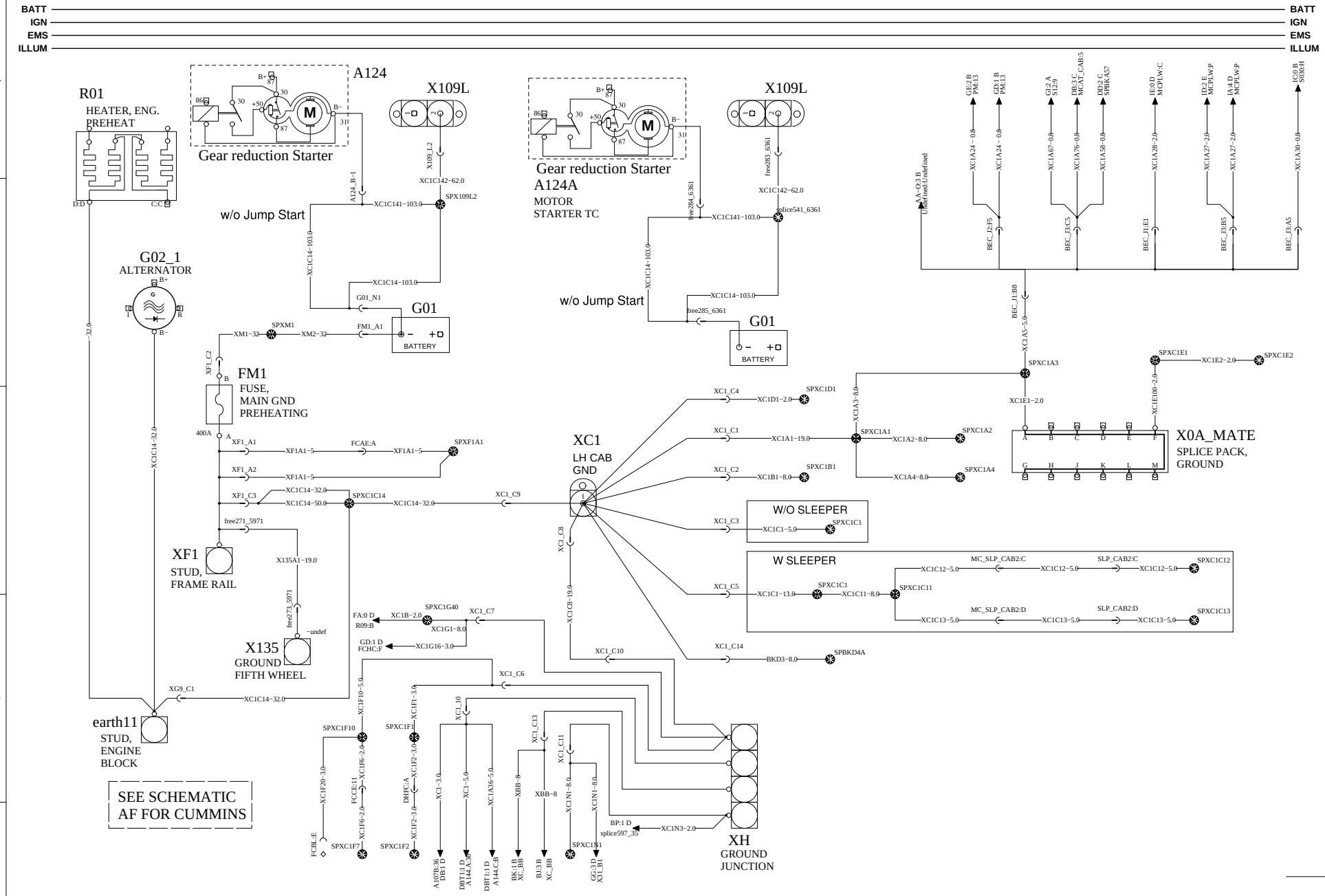

Document title	Document No	Issue	Volume	Page
WIRE DIAGRAM-CONVENTIONAL, 12V MACK, 2013BP	22448341	03	1 (1)	5 (53)
Document type: PRODUCT SCHEMATIC				

VOLVO Group Trucks Technology

https://truckmanualshub.com/

BATTERY CONFIGURATION

WIRING DIAGRAM: AE

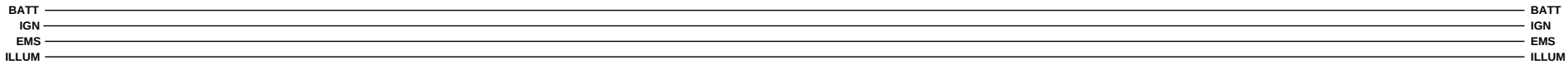

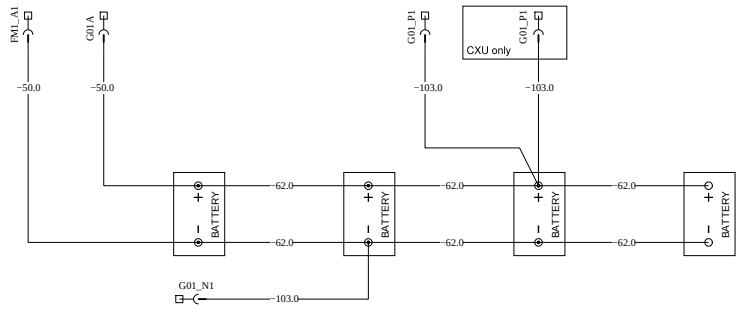

4 Battery Box

VOLVO Group Trucks Technology	Document title WIRE DIAGRAM-CONVENTIONAL, 12V MACK, 2013BP Document type PRODUCT SCHEMATIC	Document No 22448341	Issue 03	Volume 1 (1)	Page 6 (53)

BATT
IGN
EMS
ILLUM

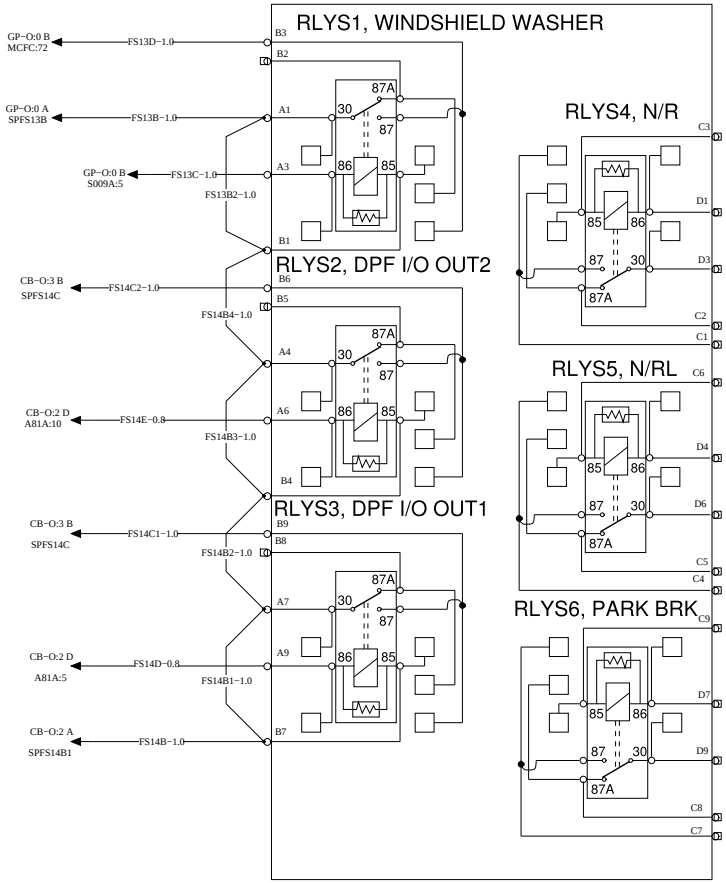

A01_B

6 RELAY CENTER 1, NYC SPECIAL

VEHICLE ECU 1/4

https://truckmanualshub.com/

WIRING DIAGRAM: BA

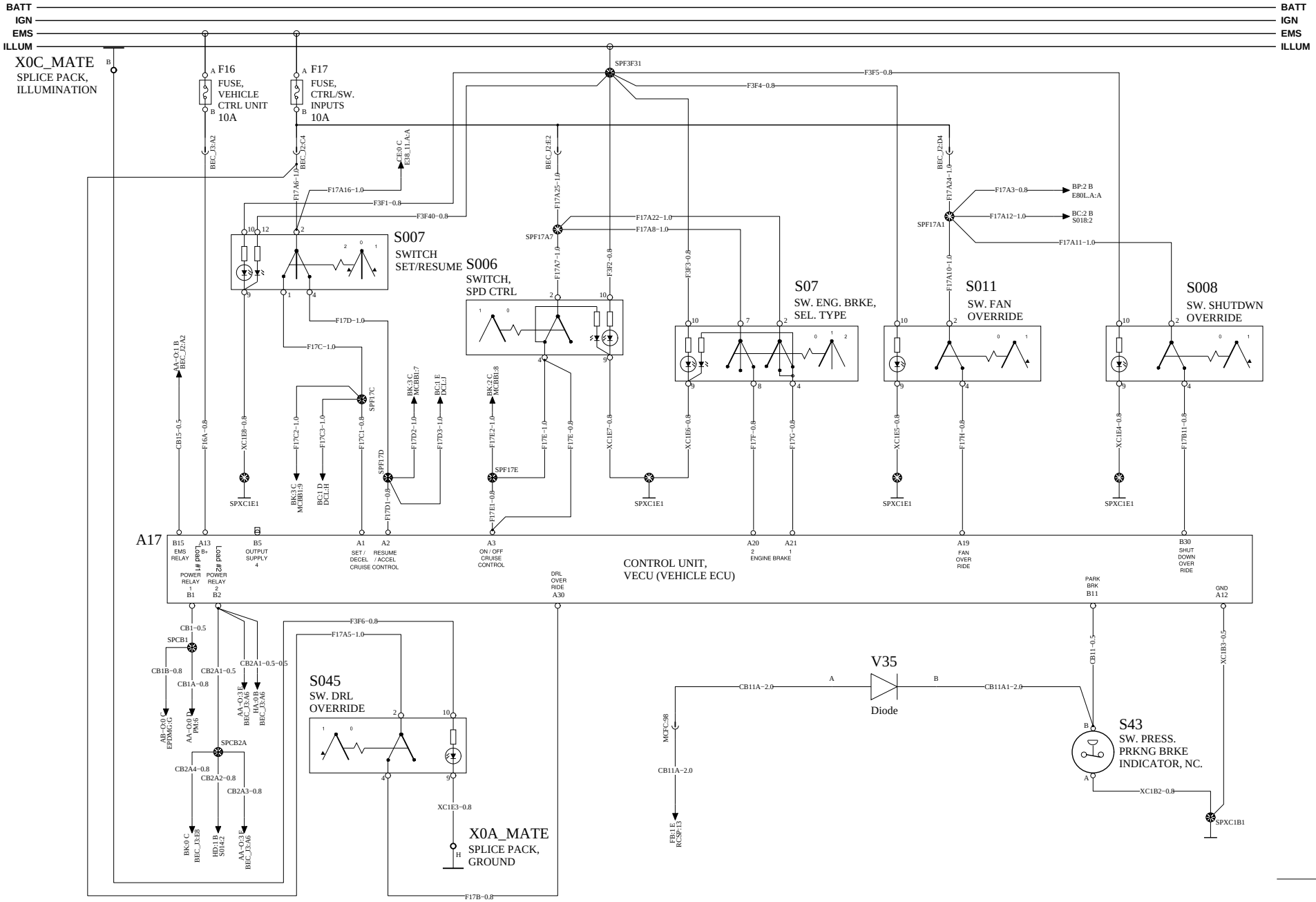

VOLVO Group Trucks Technology	Document title: WIRE DIAGRAM-CONVENTIONAL, 12V MACK, 2013BP Document type: PRODUCT SCHEMATIC	Document No: 22448341	Issue: 03	Volume: 1 (1)	Page: 8 (53)

https://truckmanualshub.com/

WIRING DIAGRAM : BB

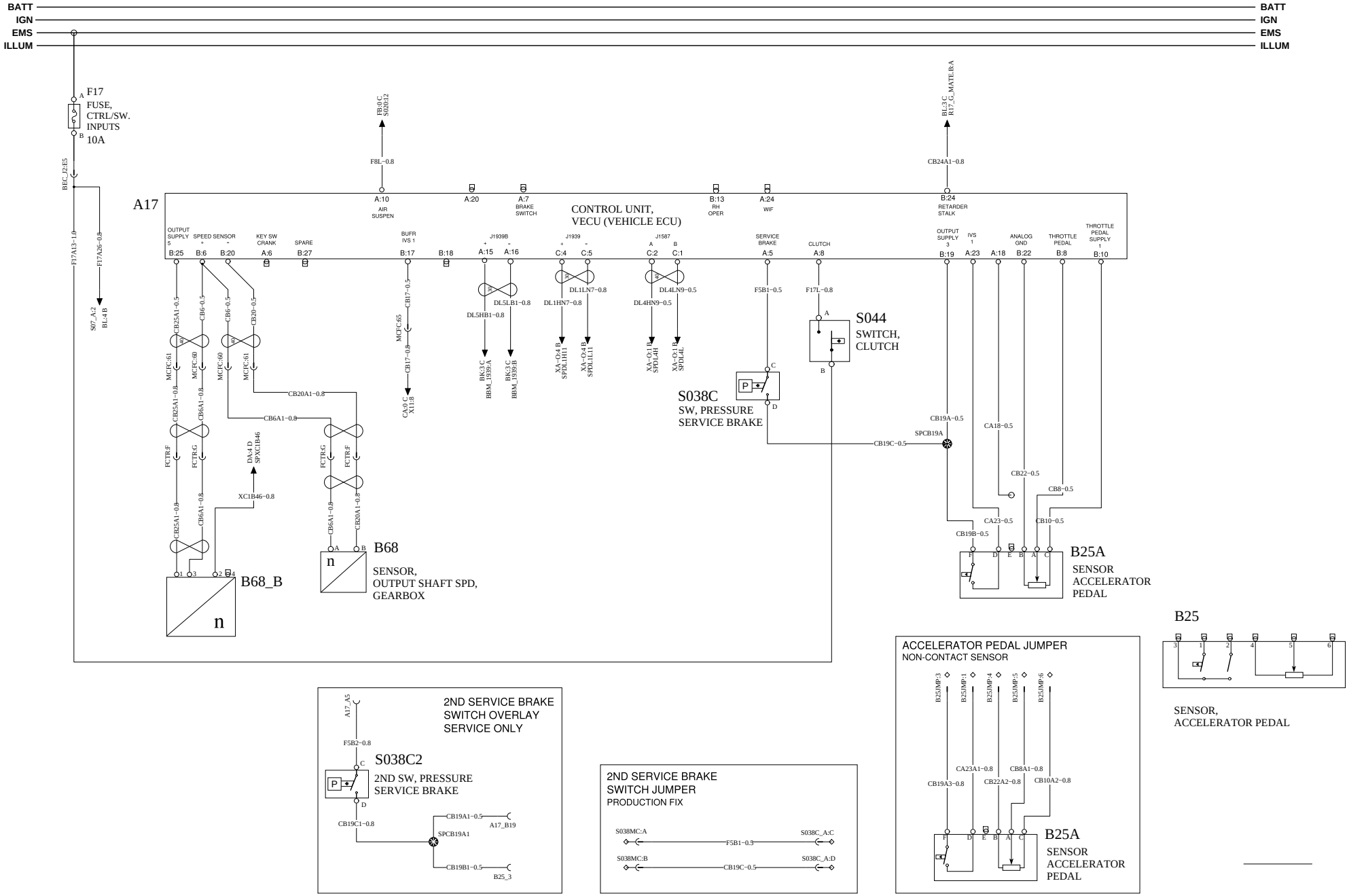

VOLVO Group Trucks Technology	Document title: WIRE DIAGRAM-CONVENTIONAL, 12V MACK, 2013BP Document type: PRODUCT SCHEMATIC	Document No: 22448341	Issue: 03	Volume: 1 (1)	Page: 9 (53)

https://truckmanualshub.com/

WIRING DIAGRAM : BC

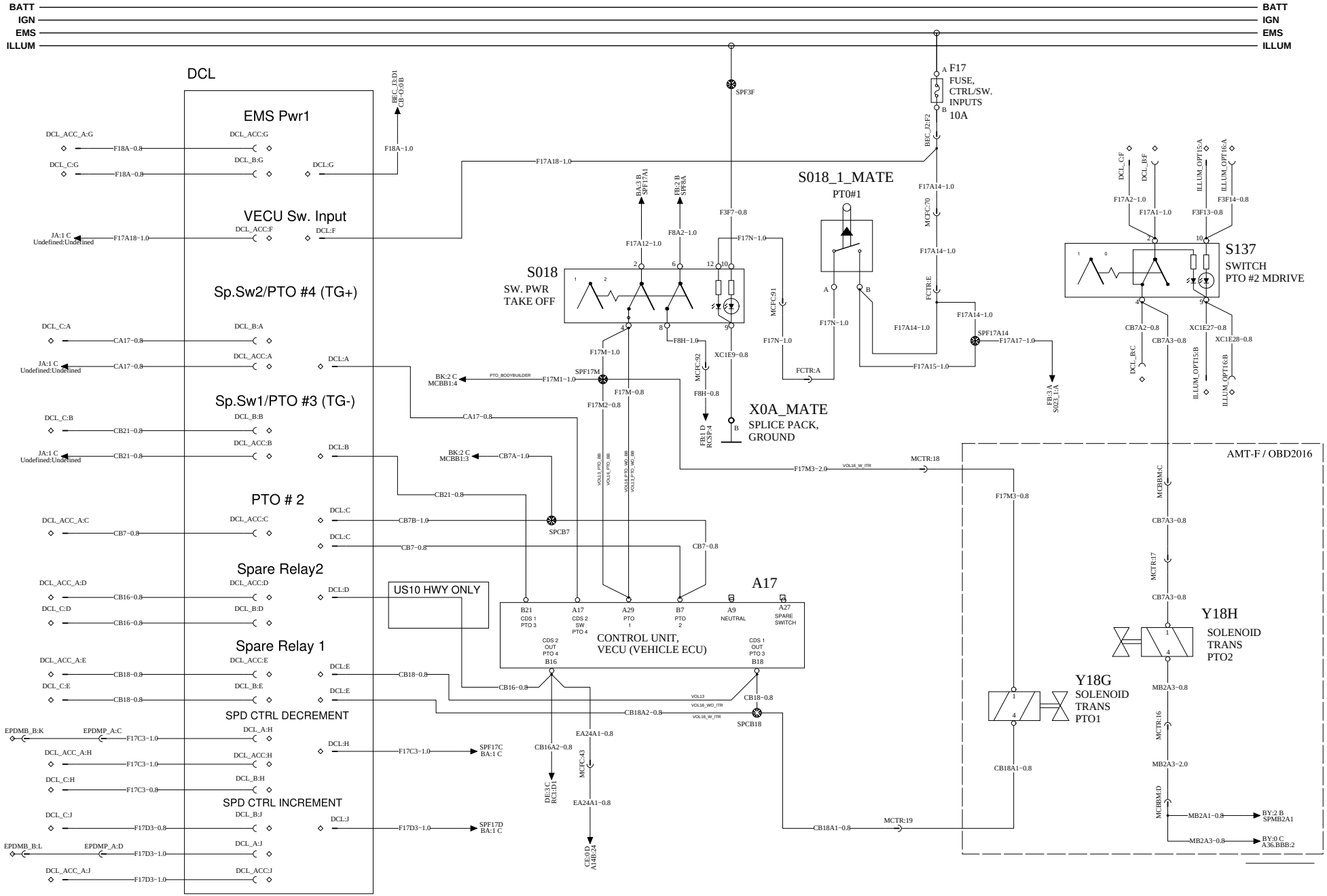

https://truckmanualshub.com/

WIRING DIAGRAM : BD

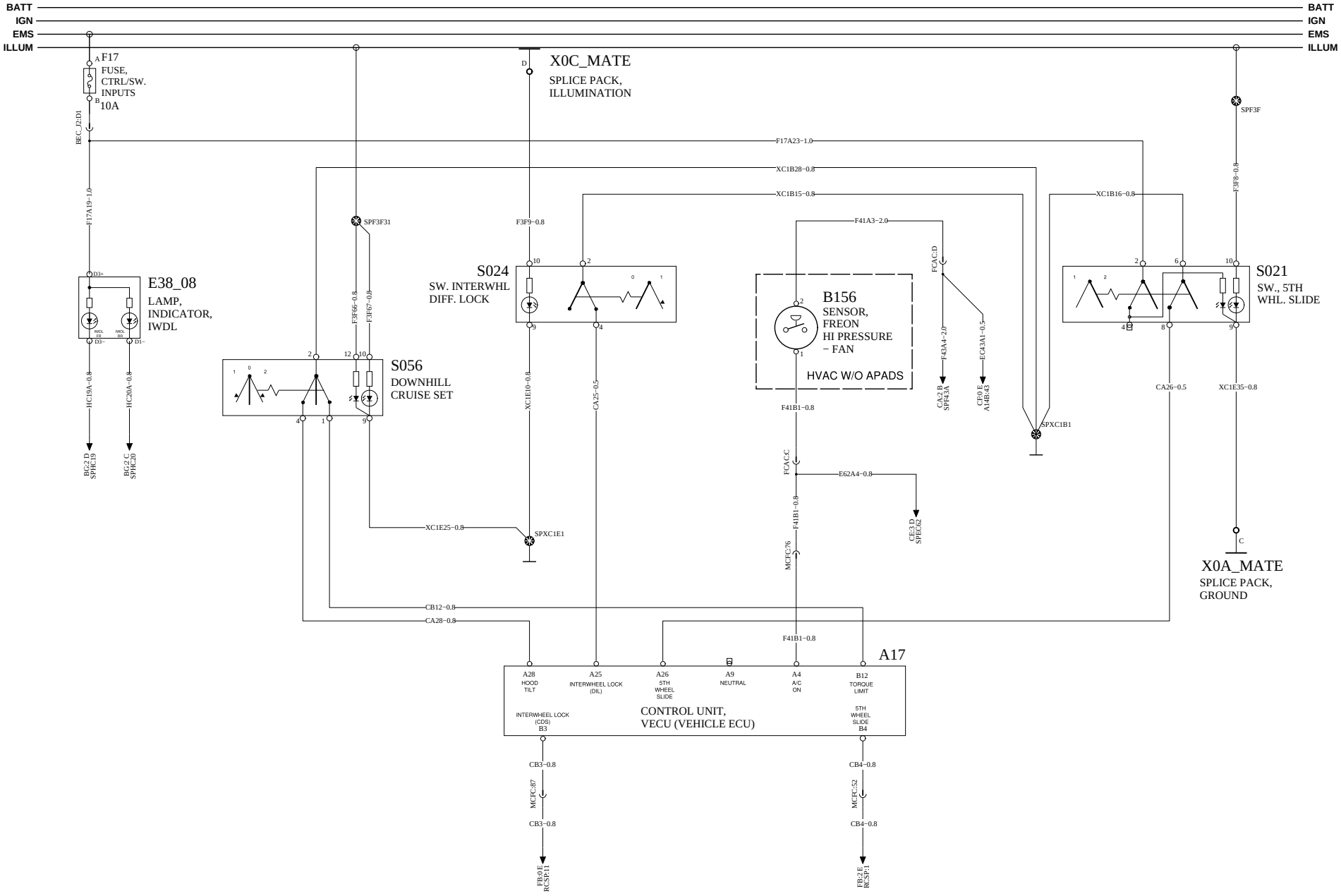

VOLVO Group Trucks Technology	Document title: WIRE DIAGRAM-CONVENTIONAL, 12V MACK, 2013BP	Document No	Issue	Volume	Page
	Document type: PRODUCT SCHEMATIC	22448341	03	1 (1)	11 (53)

INSTRUMENT CLUSTER 1/3

https://truckmanualshub.com/

WIRING DIAGRAM : BE

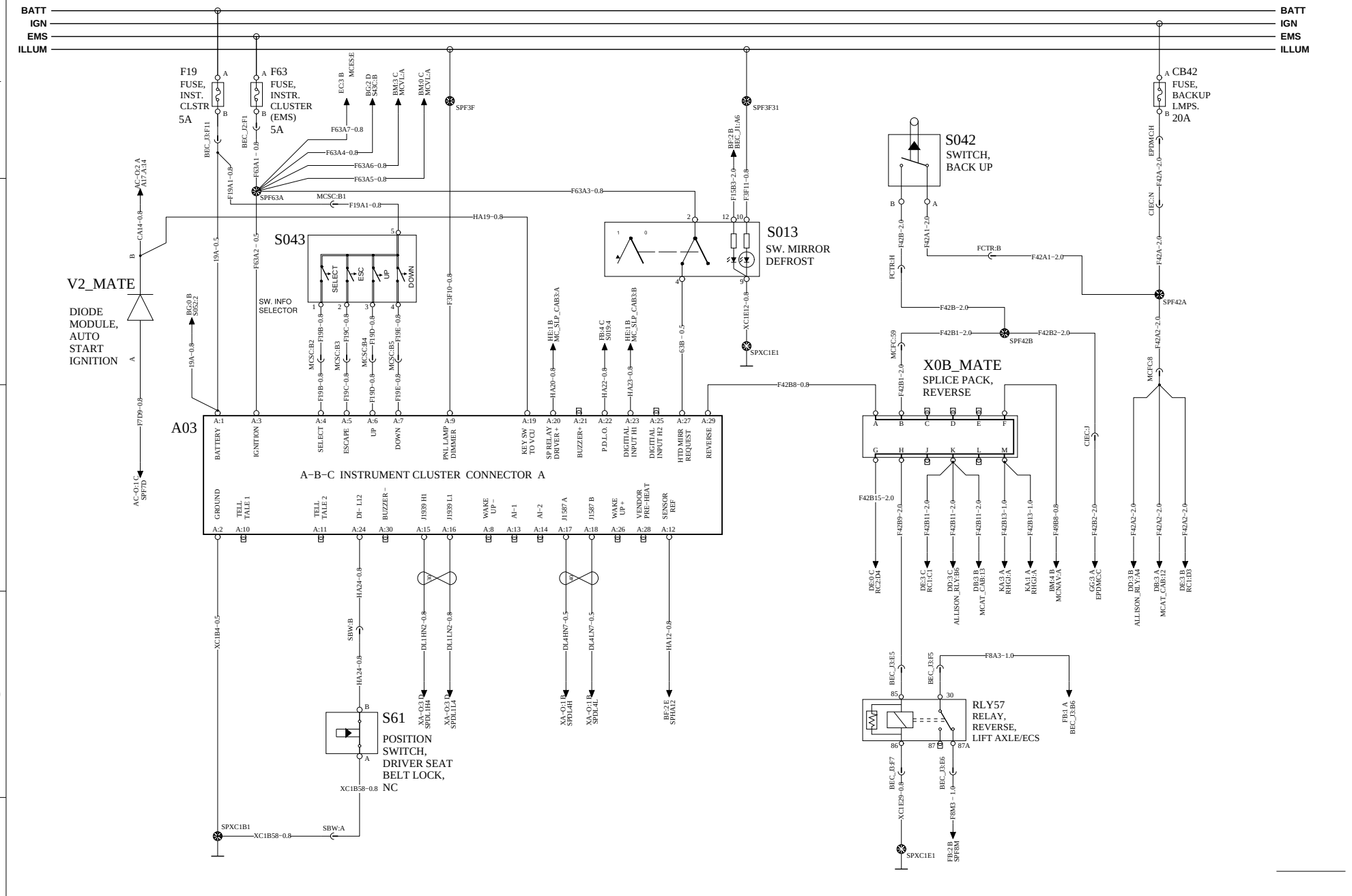

VOLVO Group Trucks Technology	Document title WIRE DIAGRAM-CONVENTIONAL, 12V MACK, 2013BP Document type PRODUCT SCHEMATIC	Document No 22448341	Issue 03	Volume 1 (1)	Page 12 (53)

https://truckmanualshub.com/

WIRING DIAGRAM : BF

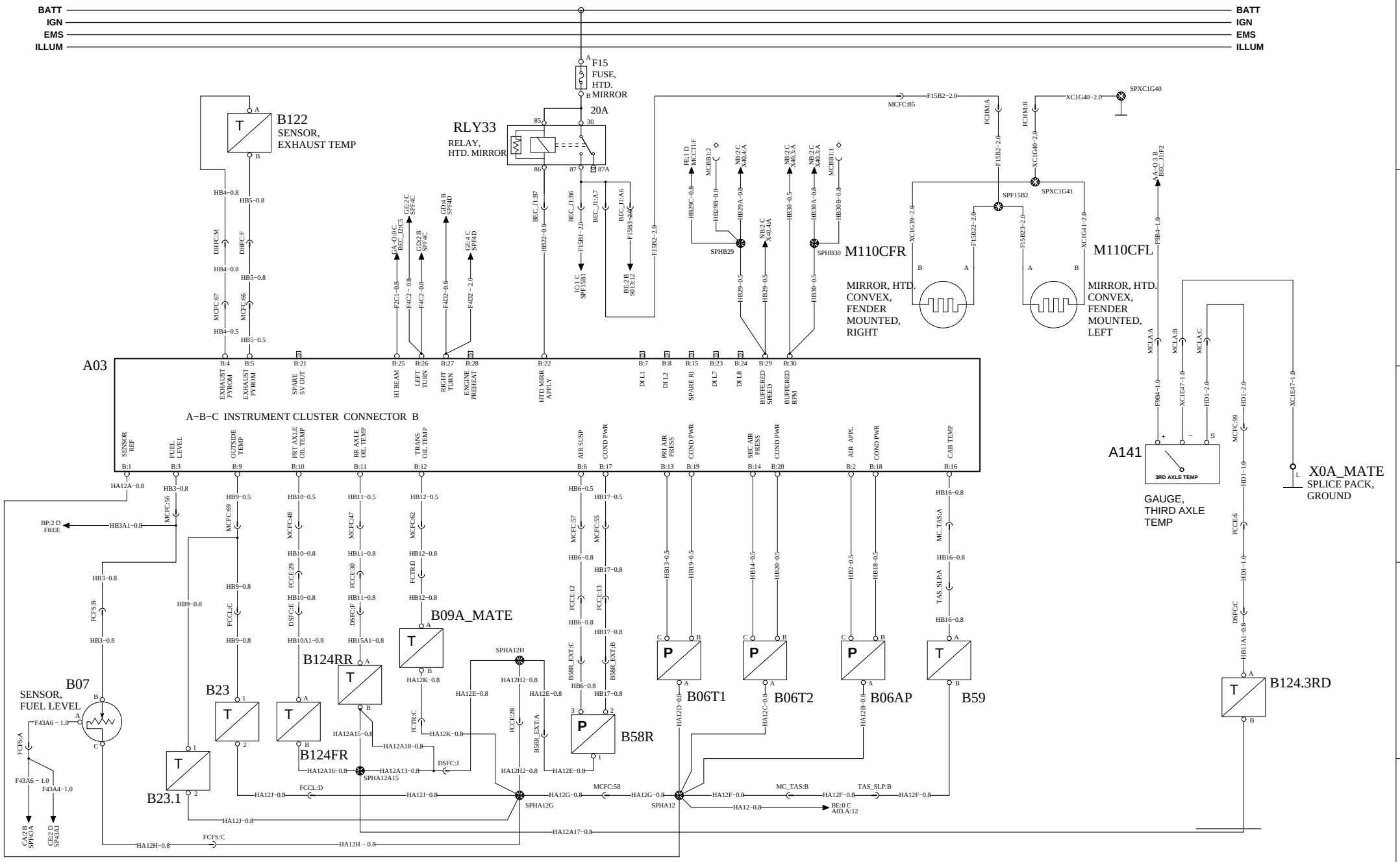

Document title	Document No	Issue	Volume	Page
WIRE DIAGRAM-CONVENTIONAL, 12V MACK, 2013BP	22448341	03	1 (1)	13 (53)
Document type: PRODUCT SCHEMATIC				

VOLVO Group Trucks Technology

https://truckmanualshub.com/

WIRING DIAGRAM : BG

INSTRUMENT CLUSTER 3/3

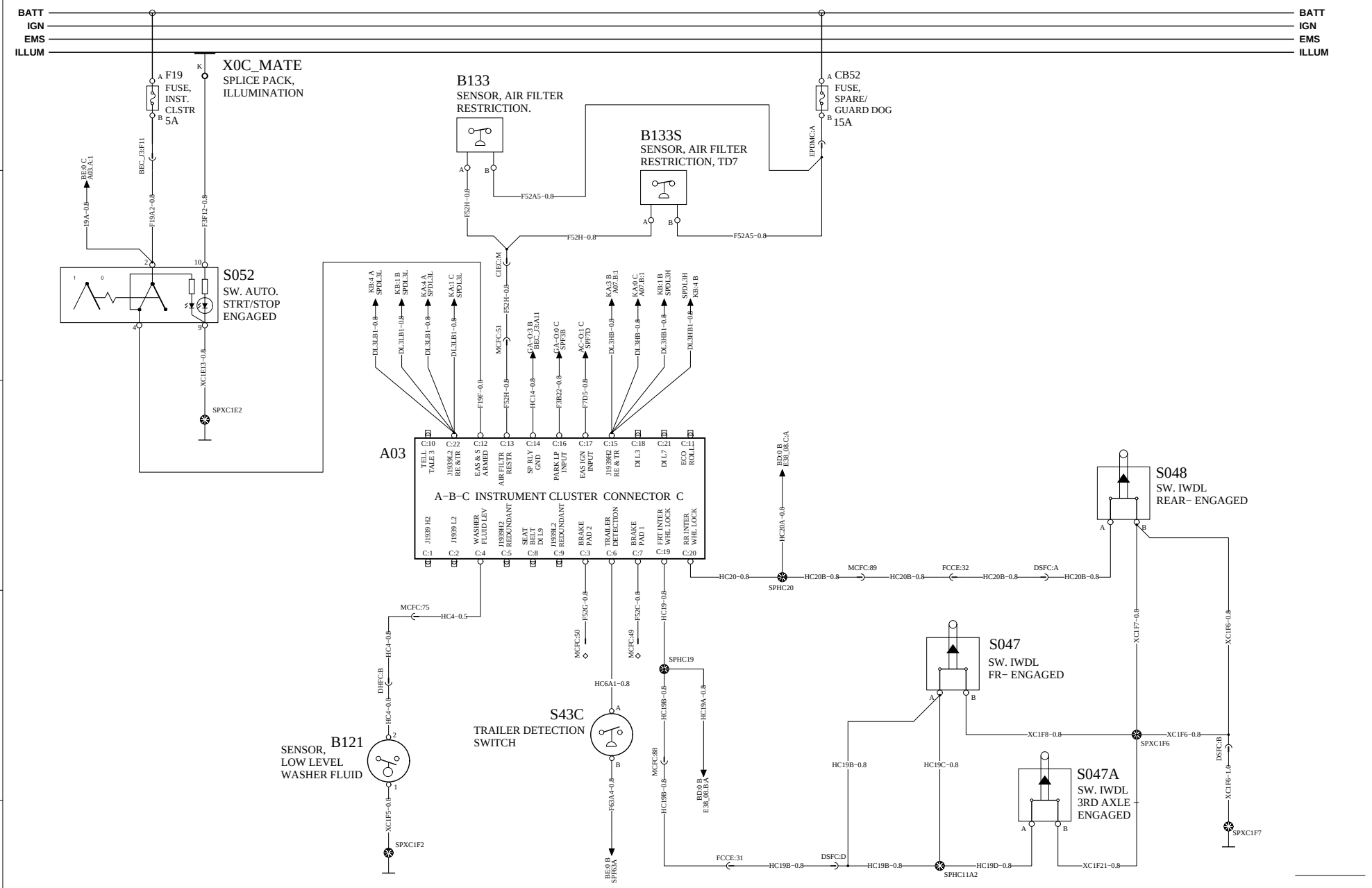

VOLVO Group Trucks Technology	Document title WIRE DIAGRAM-CONVENTIONAL, 12V MACK, 2013BP Document type PRODUCT SCHEMATIC	Document No 22448341	Issue 03	Volume 1 (1)	Page 14 (53)

https://truckmanualshub.com/

WIRING DIAGRAM : BH-O

BATT
IGN
EMS
ILLUM

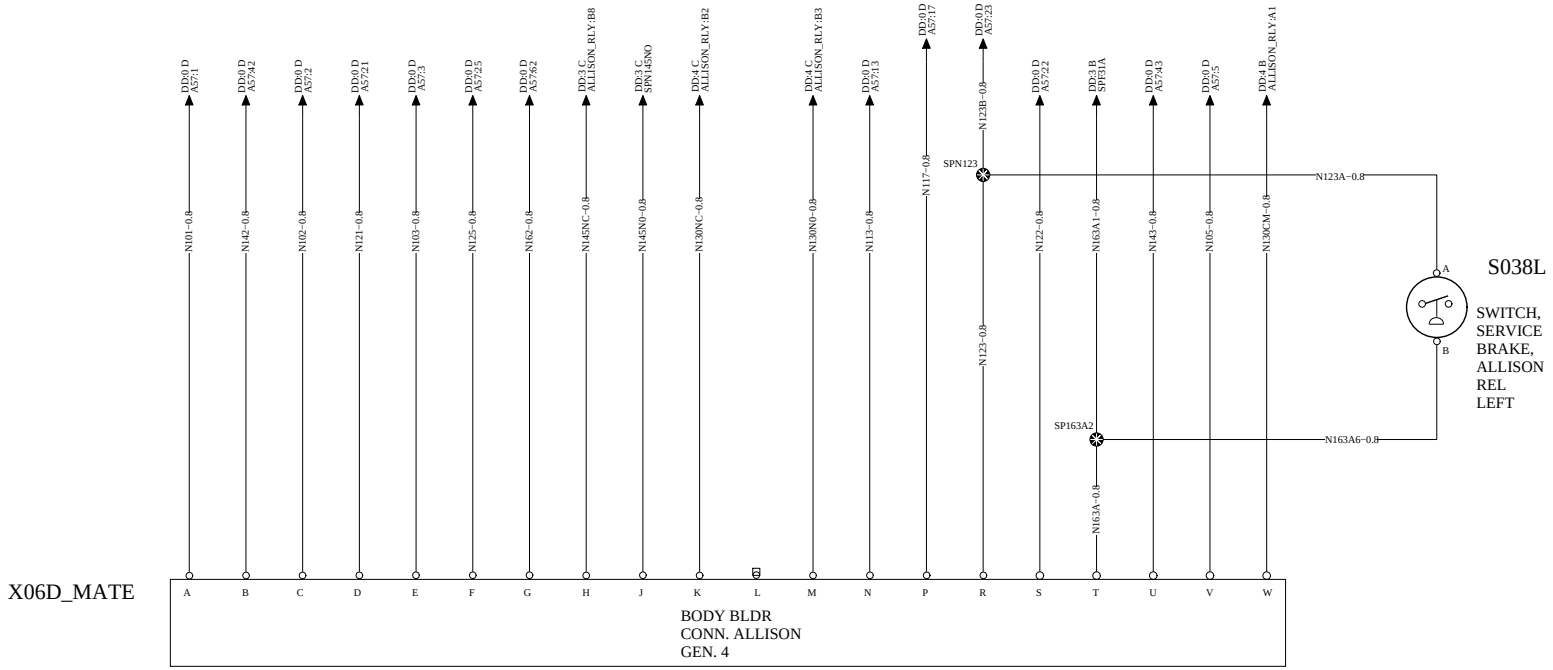

VOLVO Group Trucks Technology	Document title: WIRE DIAGRAM-CONVENTIONAL, 12V MACK, 2013BP	Document No	Issue	Volume	Page
	Document type: PRODUCT SCHEMATIC	22448341	03	1 (1)	15 (53)

https://truckmanualshub.com/

WIRING DIAGRAM : BJ

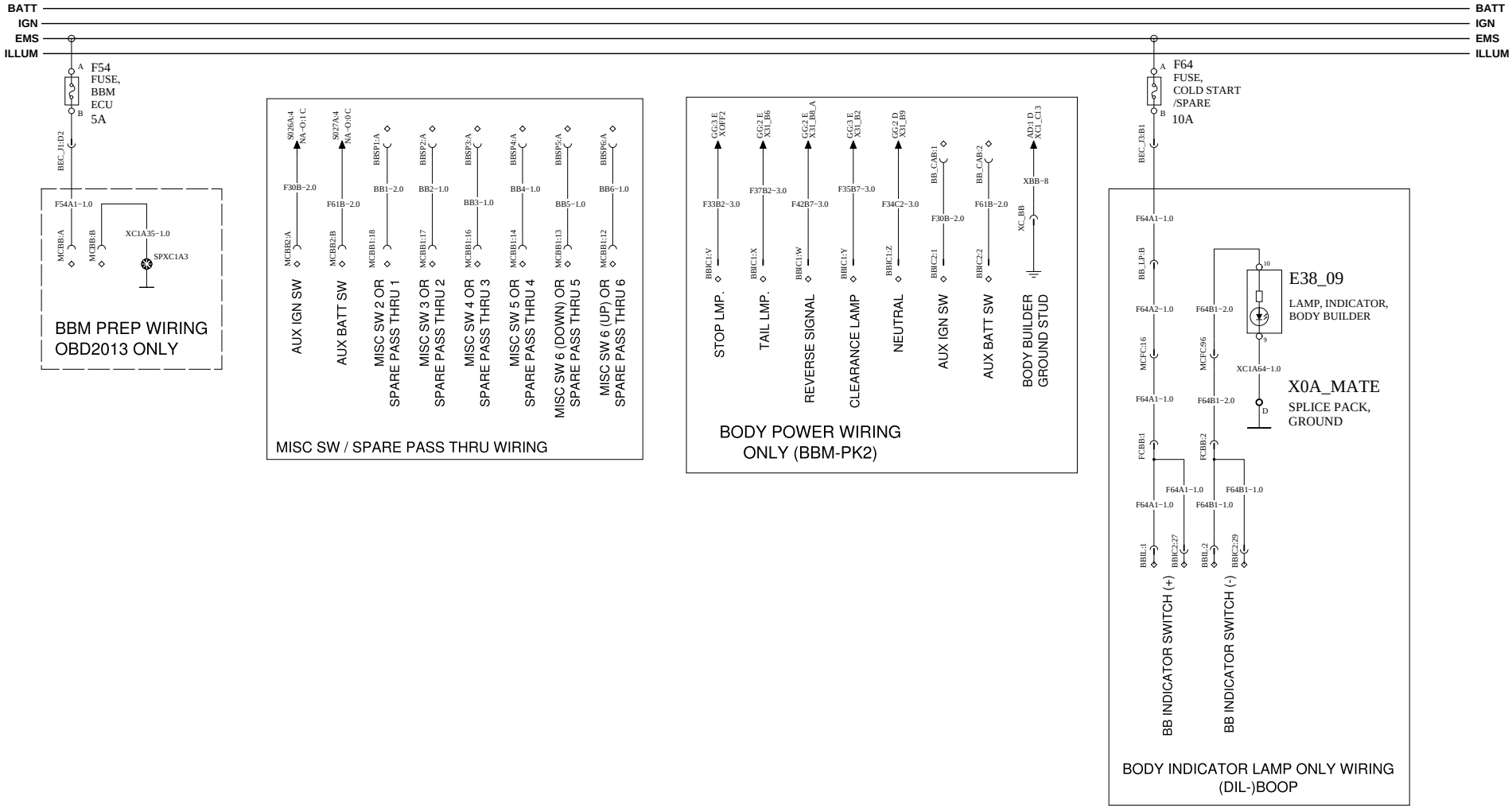

VOLVO Group Trucks Technology	Document title WIRE DIAGRAM-CONVENTIONAL, 12V MACK, 2013BP Document type PRODUCT SCHEMATIC	Document No 22448341	Issue 03	Volume 1 (1)	Page 16 (53)

https://truckmanualshub.com/

WIRING DIAGRAM : BK

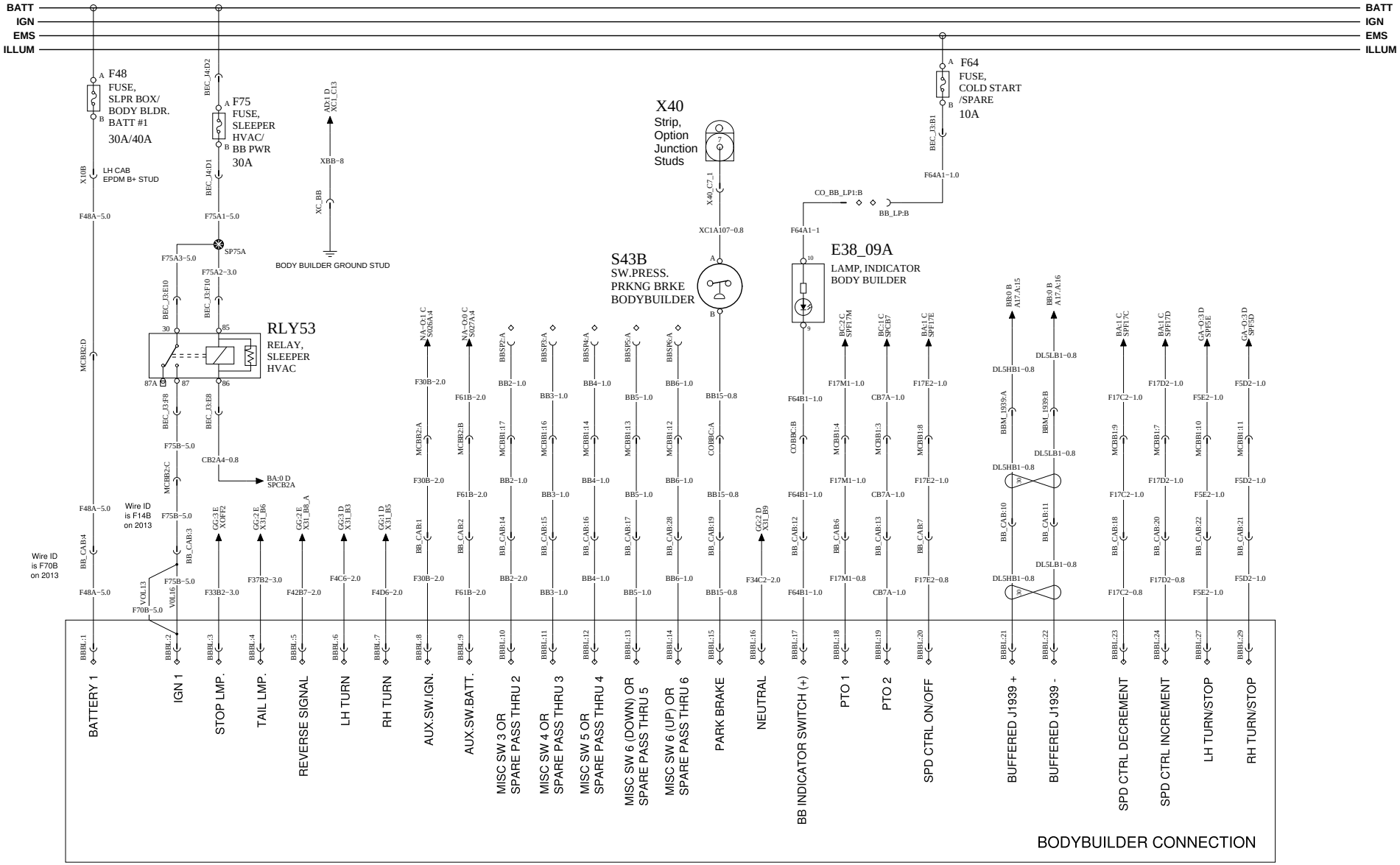

VOLVO Group Trucks Technology	Document title: WIRE DIAGRAM-CONVENTIONAL, 12V MACK, 2013BP	Document No	Issue	Volume	Page
	Document type: PRODUCT SCHEMATIC	22448341	03	1 (1)	17 (53)

https://truckmanualshub.com/

WIRING DIAGRAM : BM

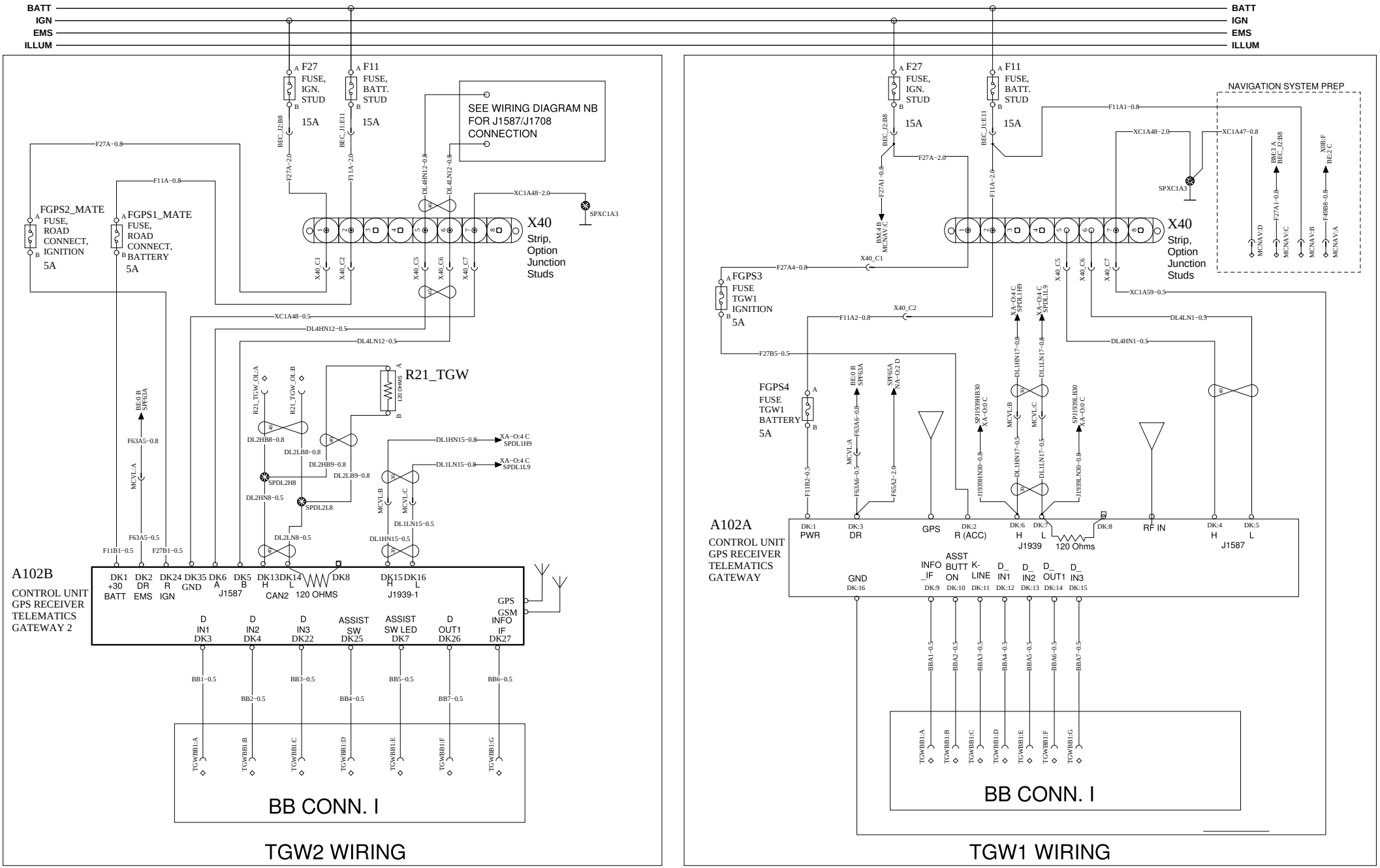

VOLVO Group Trucks Technology	Document title: WIRE DIAGRAM-CONVENTIONAL, 12V MACK, 2013BP Document type: PRODUCT SCHEMATIC	Document No: 22448341	Issue: 03	Volume: 1 (1)	Page: 18 (53)

ENGINE INTERFACE MP11

https://truckmanualshub.com/

WIRING DIAGRAM : CA

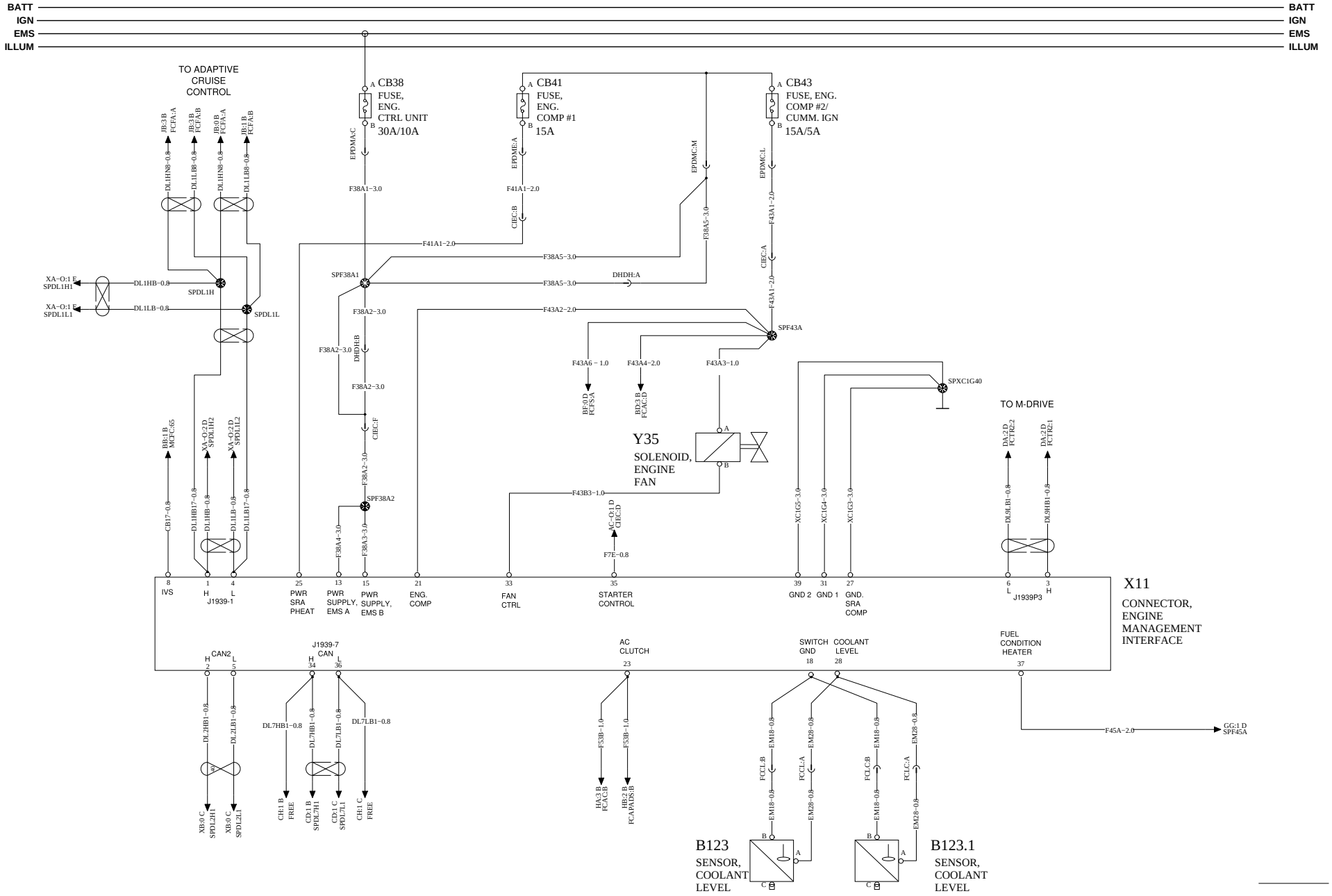

VOLVO Group Trucks Technology	Document title: WIRE DIAGRAM-CONVENTIONAL, 12V MACK, 2013BP	Document No	Issue	Volume	Page
	Document type: PRODUCT SCHEMATIC	22448341	03	1 (1)	19 (53)

https://truckmanualshub.com/

WIRING DIAGRAM : CB-O

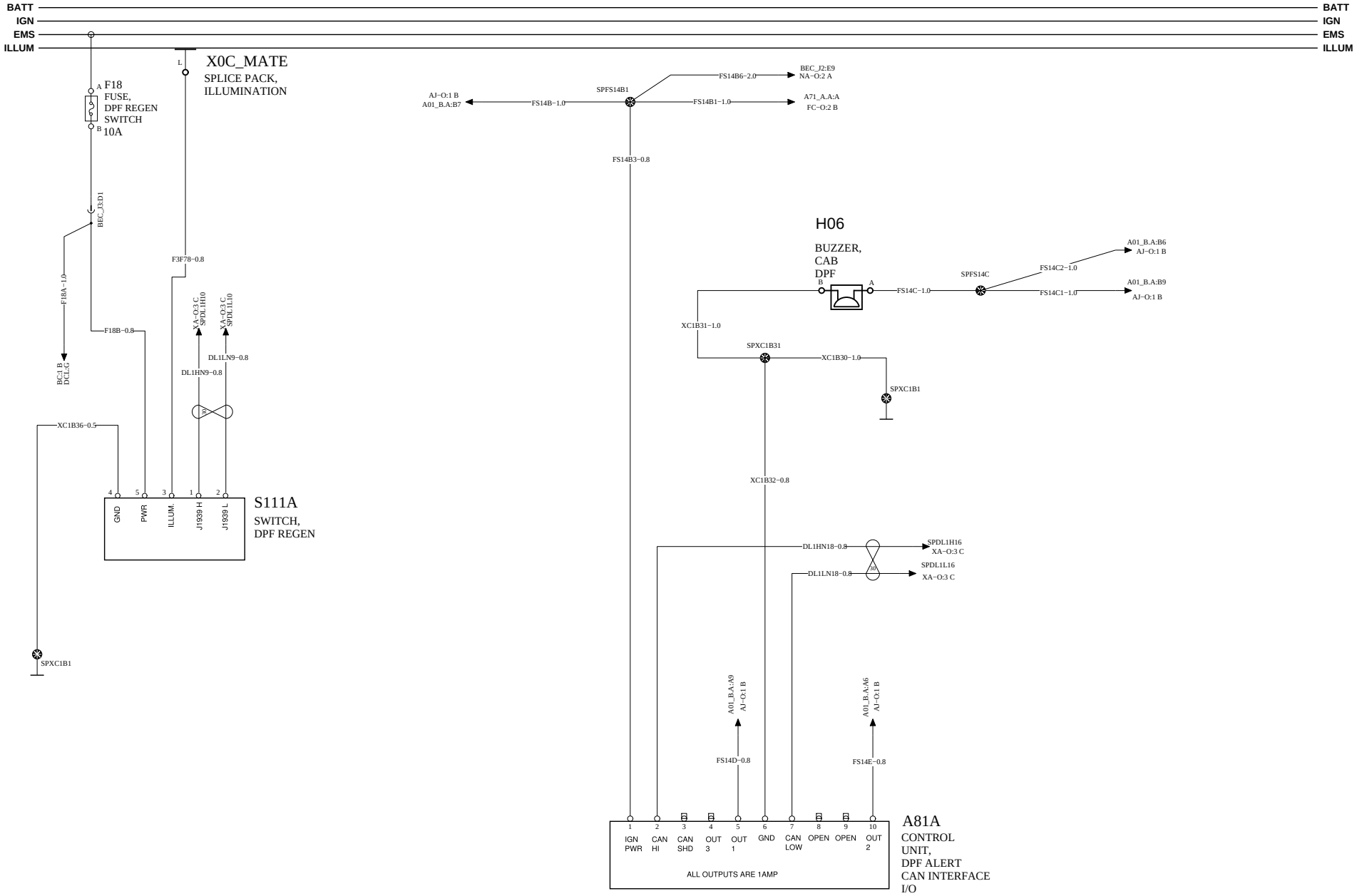

VOLVO Group Trucks Technology	Document title: WIRE DIAGRAM-CONVENTIONAL, 12V MACK, 2013BP	Document No	Issue	Volume	Page
	Document type: PRODUCT SCHEMATIC	22448341	03	1 (1)	20 (53)

https://truckmanualshub.com/

WIRING DIAGRAM : CC

BATT
IGN
EMS
ILLUM

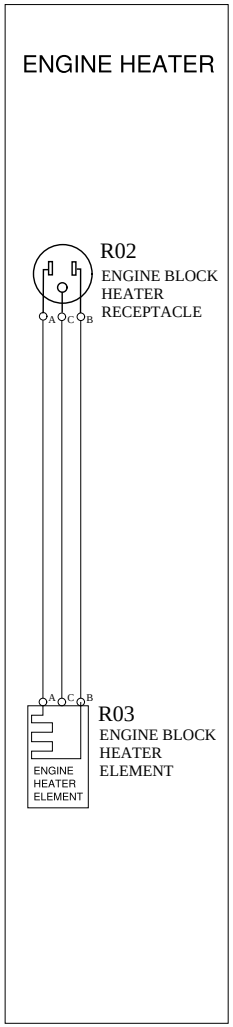

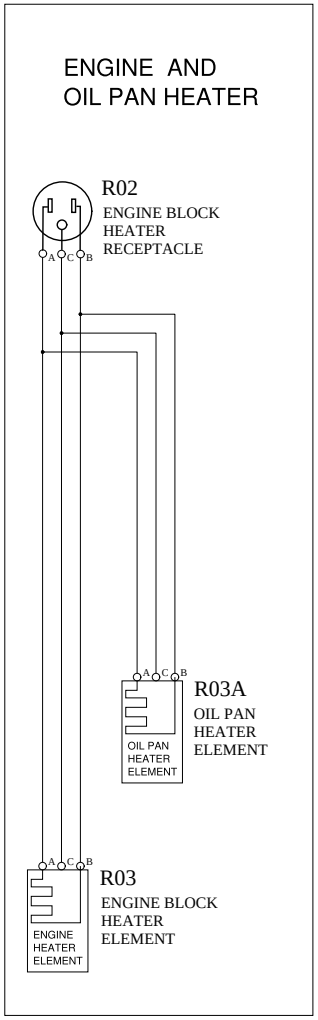

https://truckmanualshub.com/

WIRING DIAGRAM : CD

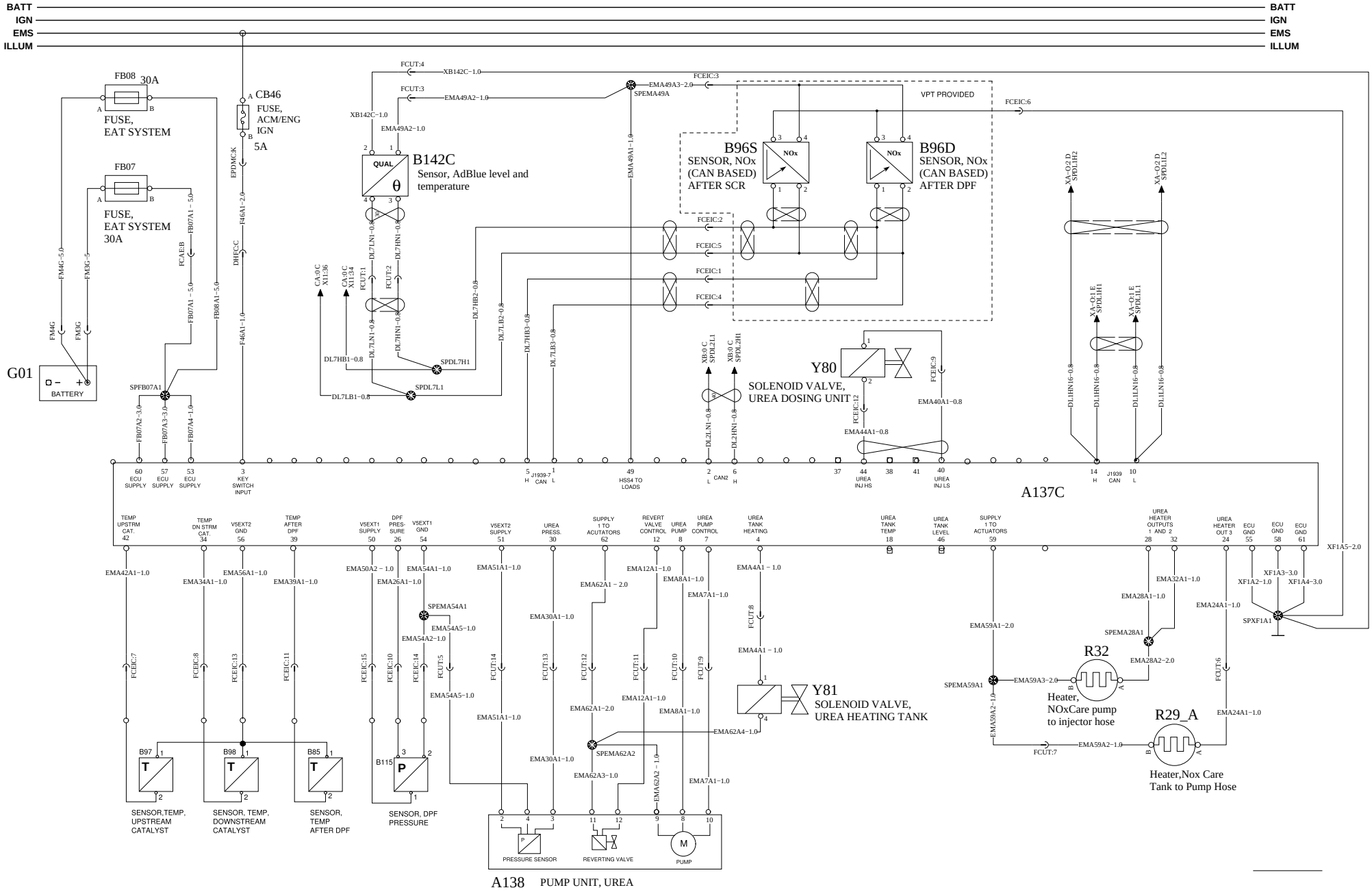

VOLVO Group Trucks Technology	Document title: WIRE DIAGRAM-CONVENTIONAL, 12V MACK, 2013BP Document type: PRODUCT SCHEMATIC	Document No: 22448341	Issue: 03	Volume: 1 (1)	Page: 22 (53)

https://truckmanualshub.com/

WIRING DIAGRAM : DC

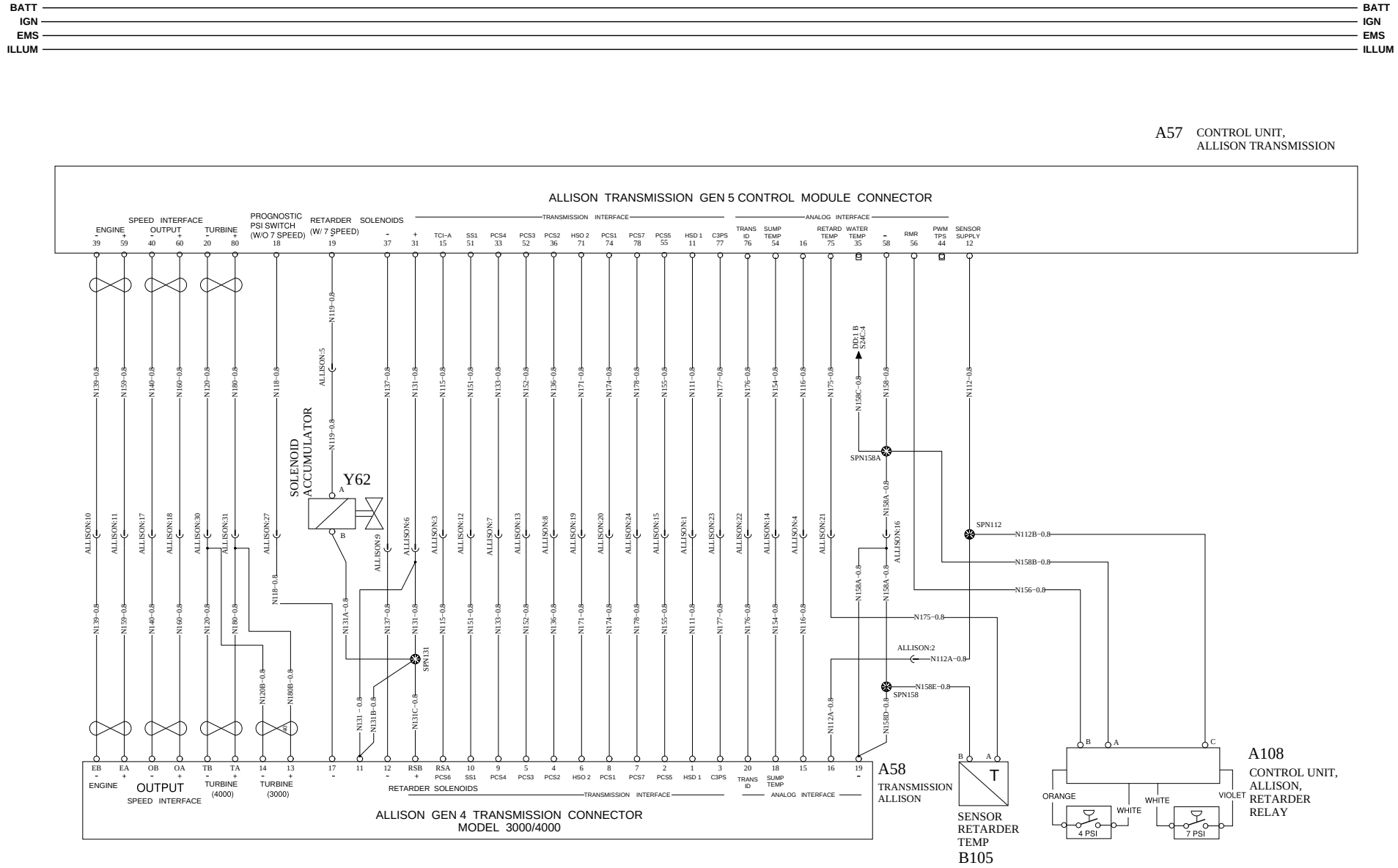

VOLVO Group Trucks Technology	Document title: WIRE DIAGRAM-CONVENTIONAL, 12V MACK, 2013BP	Document No	Issue	Volume	Page
	Document type: PRODUCT SCHEMATIC	22448341	03	1 (1)	23 (53)

https://truckmanualshub.com/

WIRING DIAGRAM : DD

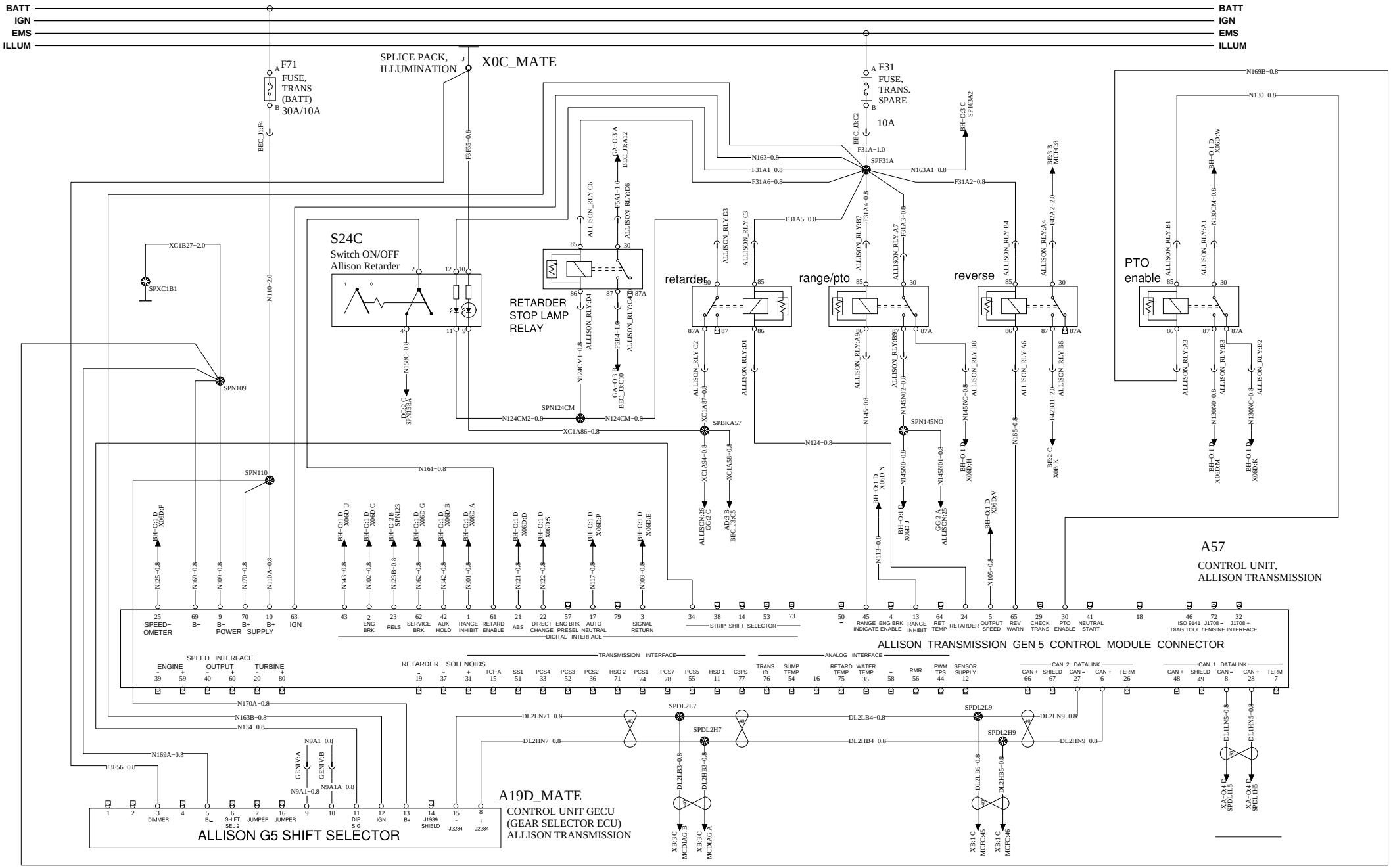

VOLVO Group Trucks Technology	Document title: WIRE DIAGRAM-CONVENTIONAL, 12V MACK, 2013BP	Document No: 22448341	Issue: 03	Volume: 1 (1)
	Document type: PRODUCT SCHEMATIC			Page: 24 (53)

ABS8 BENDIX W/ESP

https://truckmanualshub.com/

WIRING DIAGRAM : ED

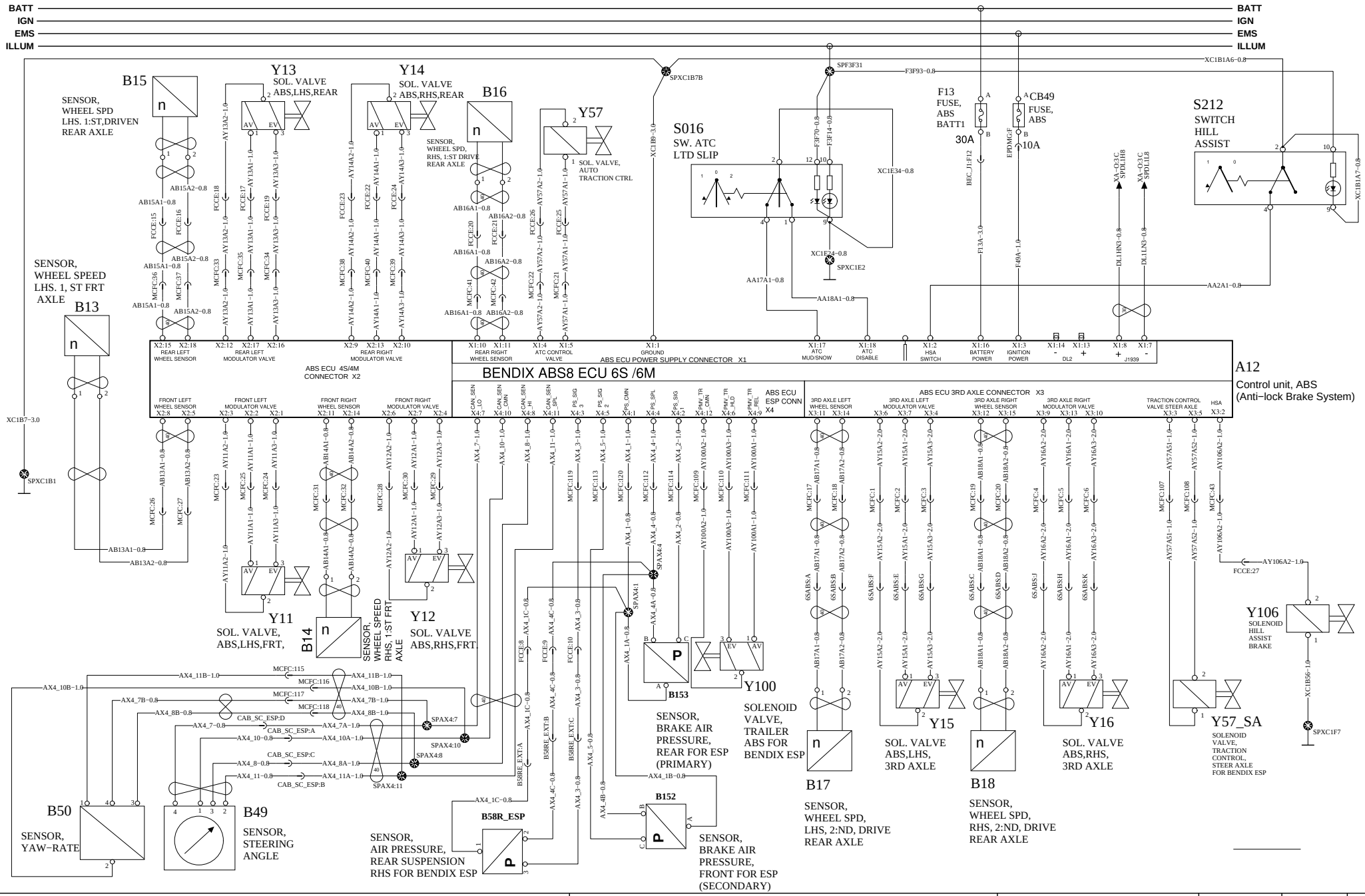

VOLVO Group Trucks Technology	Document title: WIRING DIAGRAM Document type: PRODUCT SCHEMATIC	Document No: 22448341	Issue: 03	Volume: 1 (1)	Page: 25 (53)

https://truckmanualshub.com/

WIRING DIAGRAM : FA

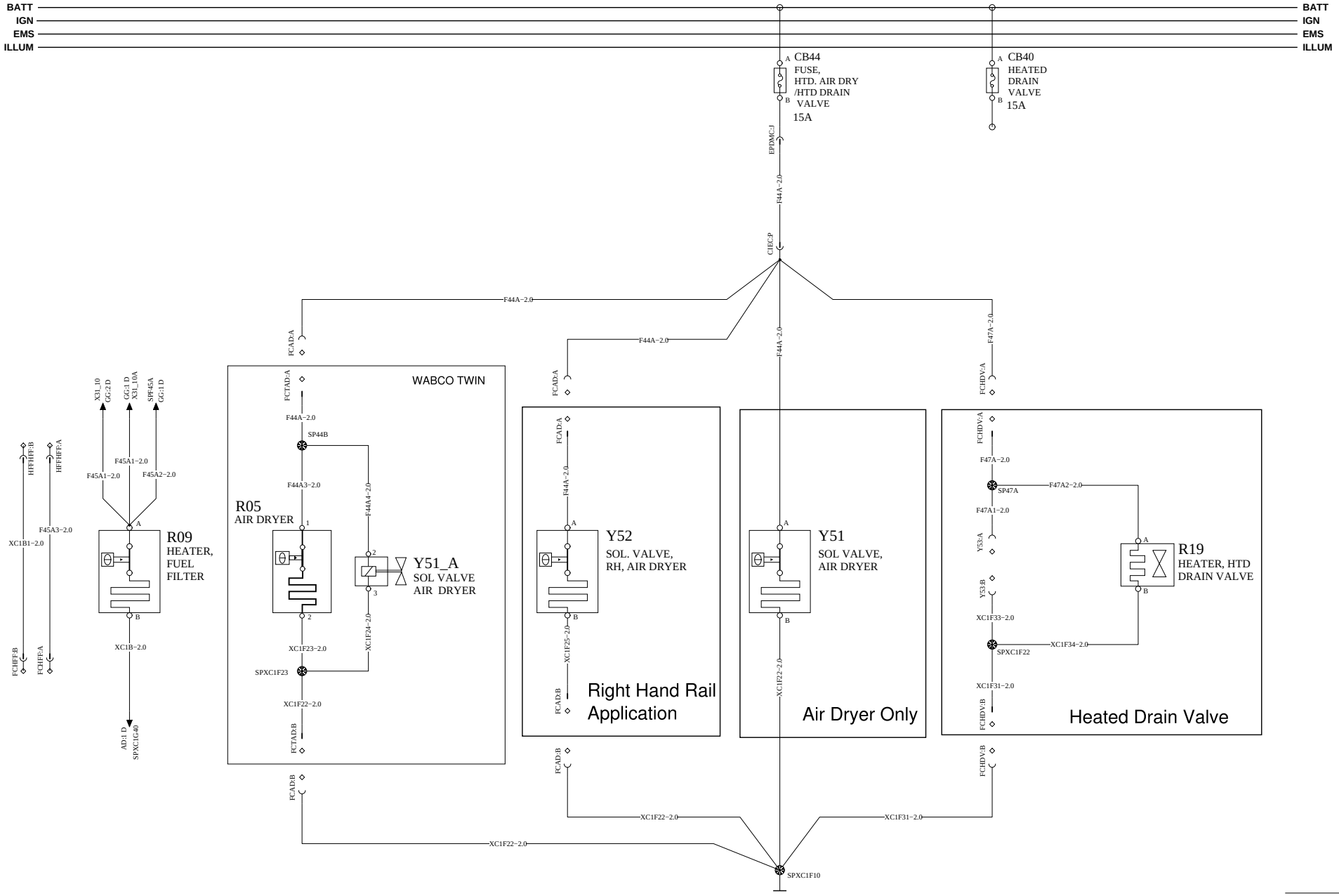

VOLVO Group Trucks Technology	Document title WIRE DIAGRAM-CONVENTIONAL, 12V MACK, 2013BP Document type PRODUCT SCHEMATIC	Document No 22448341	Issue 03	Volume 1 (1)	Page 26 (53)

CHASSIS SOLENOIDS

https://truckmanualshub.com/

WIRING DIAGRAM : FB

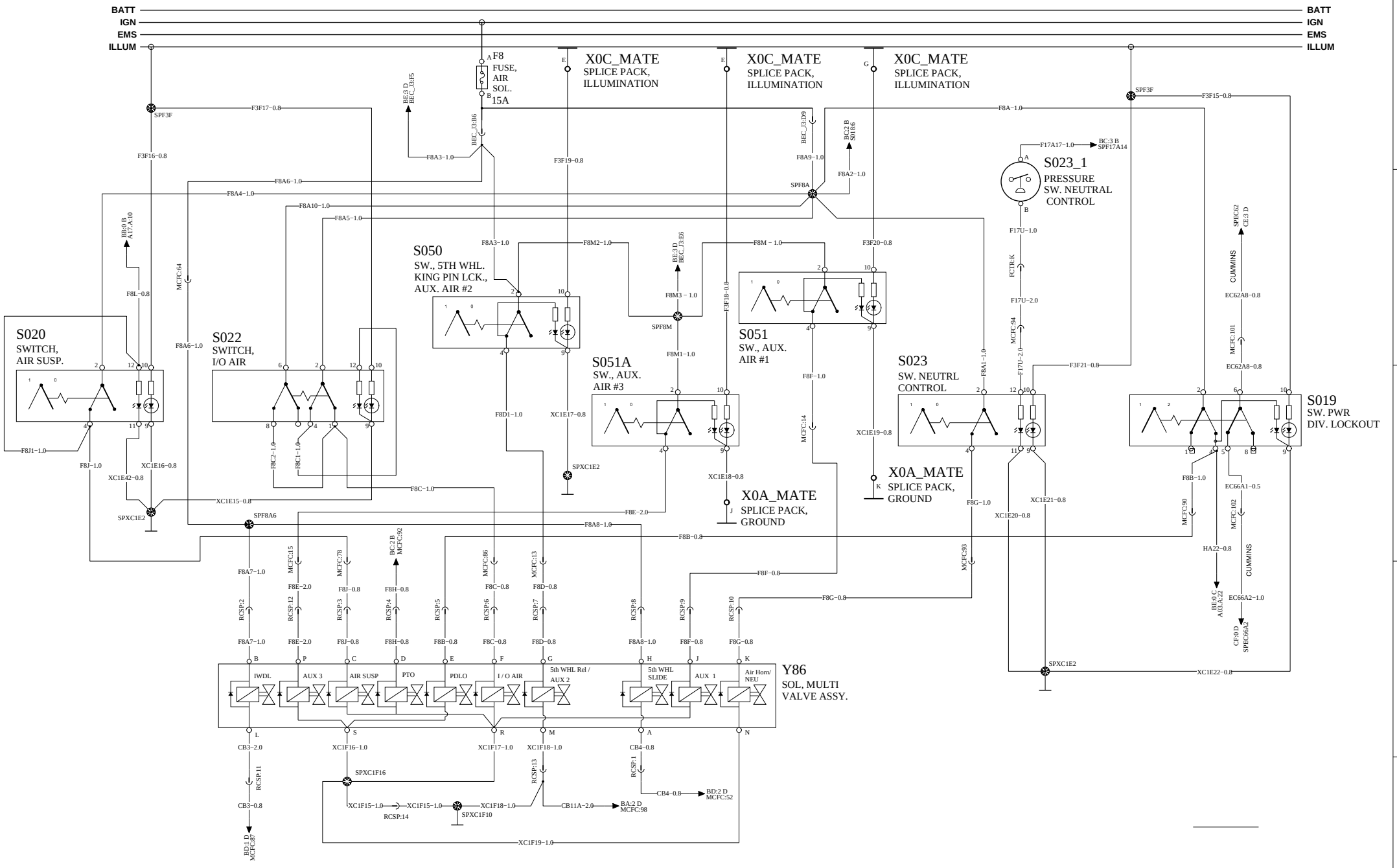

VOLVO Group Trucks Technology	Document title: WIRE DIAGRAM-CONVENTIONAL, 12V MACK, 2013BP	Document No	Issue	Volume	Page
	Document type: PRODUCT SCHEMATIC	22448341	03	1 (1)	27 (53)

https://truckmanualshub.com/

WORKBRAKE SOL, FUEL PRIMER PUMP, HOURMETER

WIRING DIAGRAM

FC−O

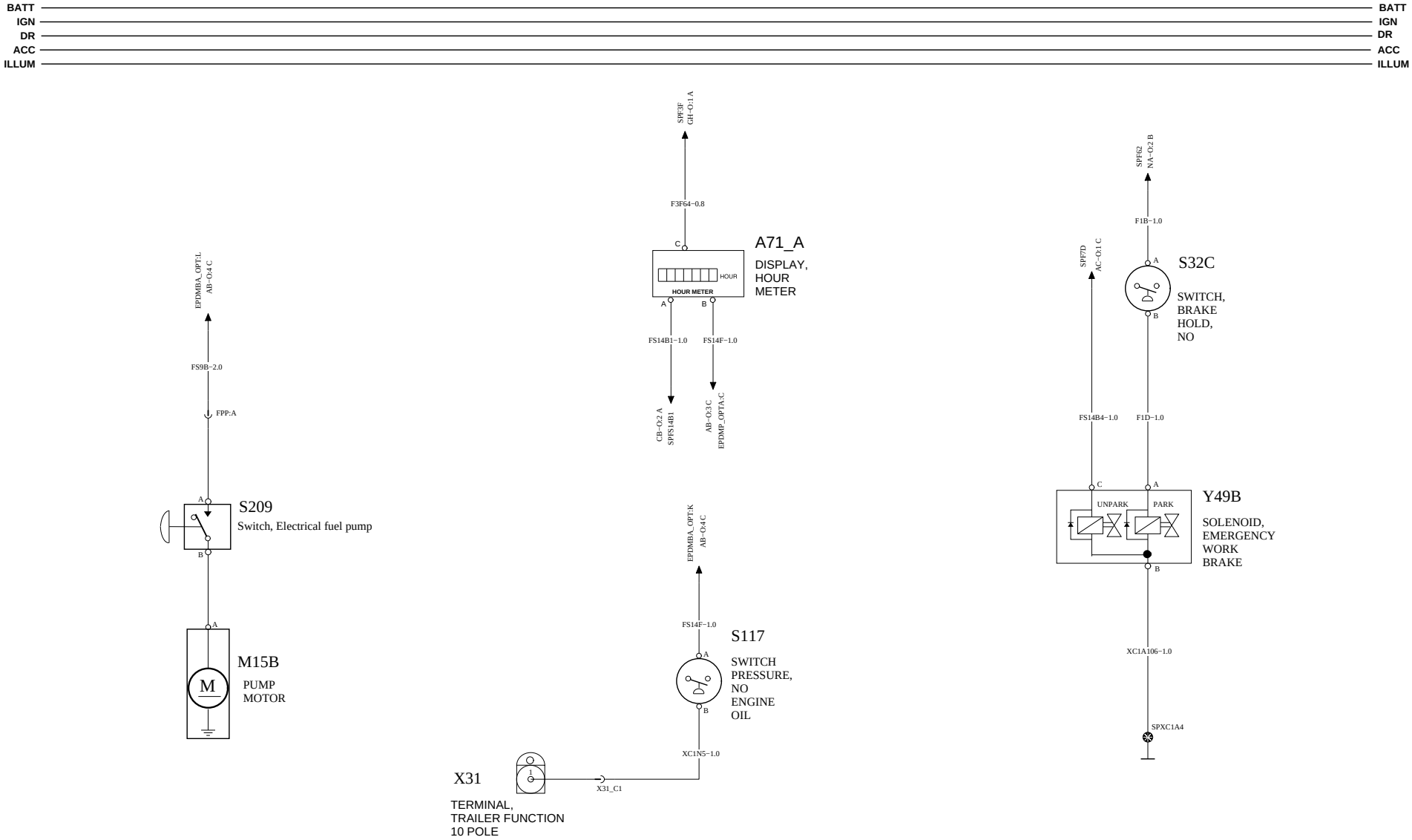

VOLVO Group Trucks Technology	Document title WIRING DIAGRAM Document type PRODUCT SCHEMATIC	Document No 22448341	Issue 03	Volume 1 (1)	Page 28 (53)

LIGHTING CONTROL

https://truckmanualshub.com/

WIRING DIAGRAM : GA-O

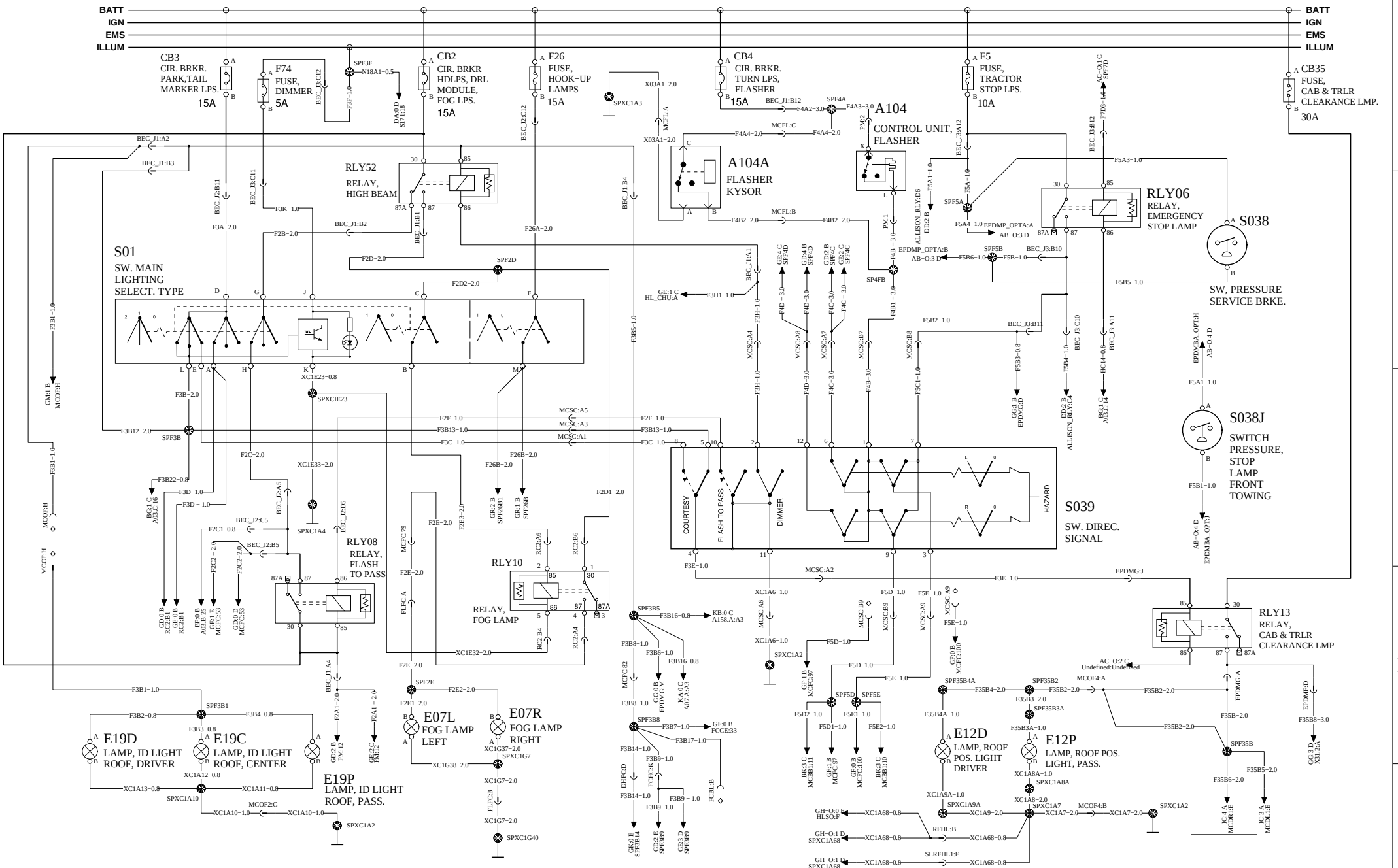

VOLVO Group Trucks Technology	Document title WIRE DIAGRAM-CONVENTIONAL, 12V MACK, 2013BP Document type PRODUCT SCHEMATIC	Document No 22448341	Issue 03	Volume 1 (1)	Page 29 (53)

LIGHTING− FORWARD/SIGNAL (CXU, GU7 & GU8)

https://truckmanualshub.com/

WIRING DIAGRAM : GD

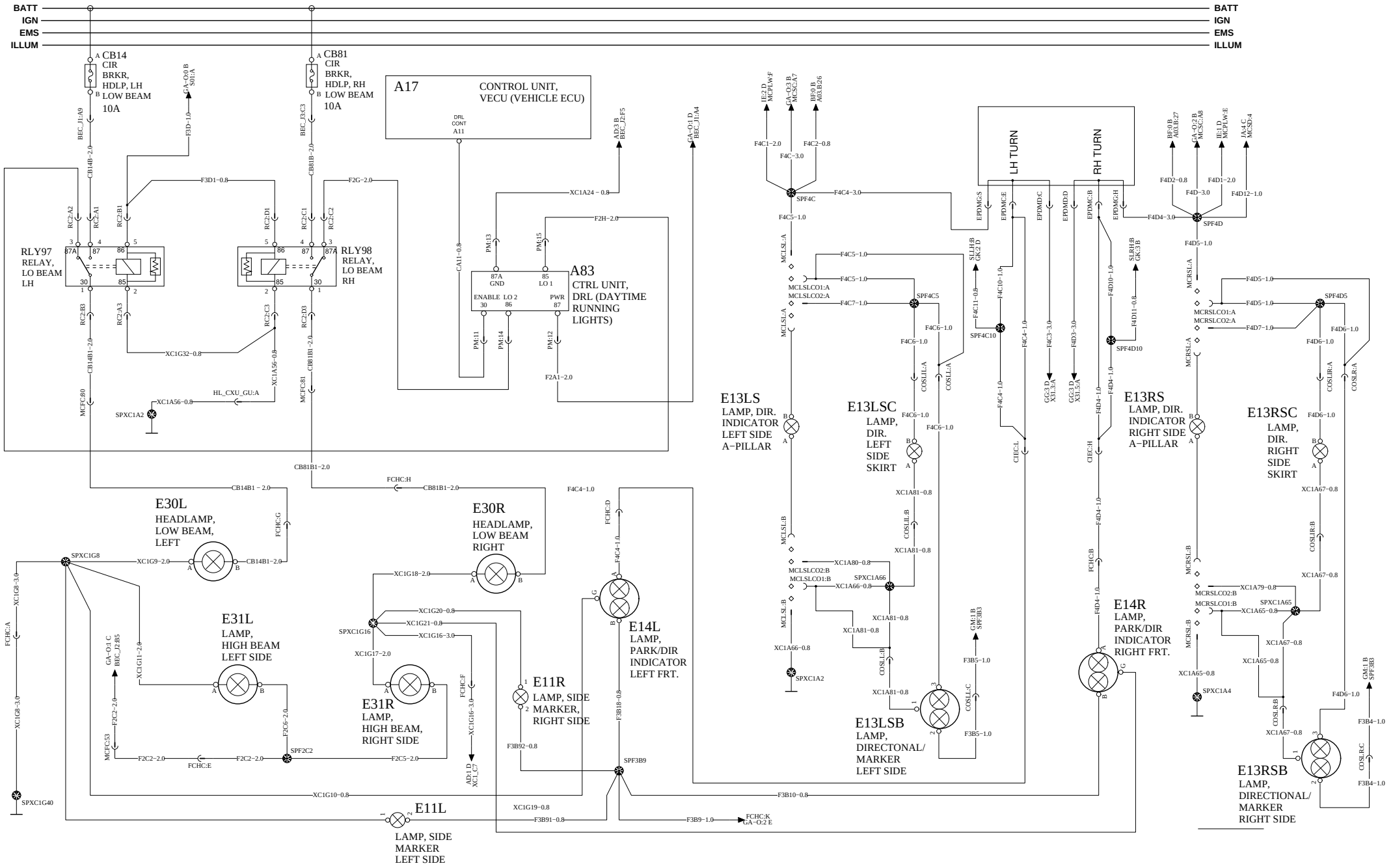

VOLVO Group Trucks Technology	Document title WIRE DIAGRAM-CONVENTIONAL, 12V MACK, 2013BP Document type PRODUCT SCHEMATIC	Document No 22448341	Issue 03	Volume 1 (1)	Page 30 (53)

https://truckmanualshub.com/

WIRING DIAGRAM : GF

BATT
IGN
EMS
ILLUM

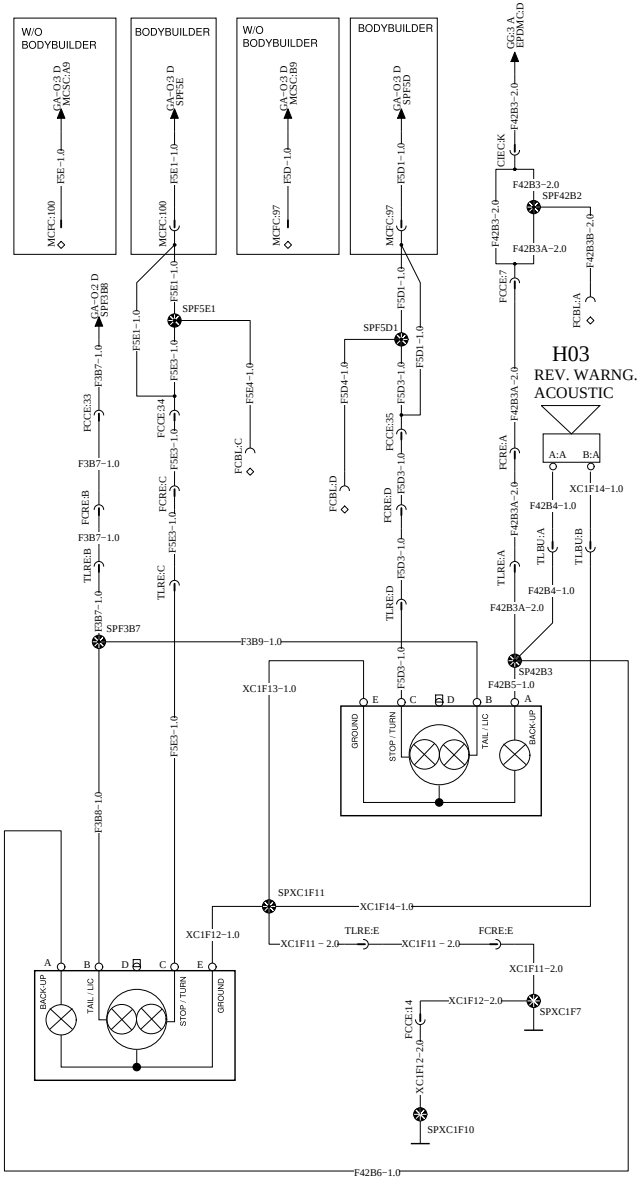

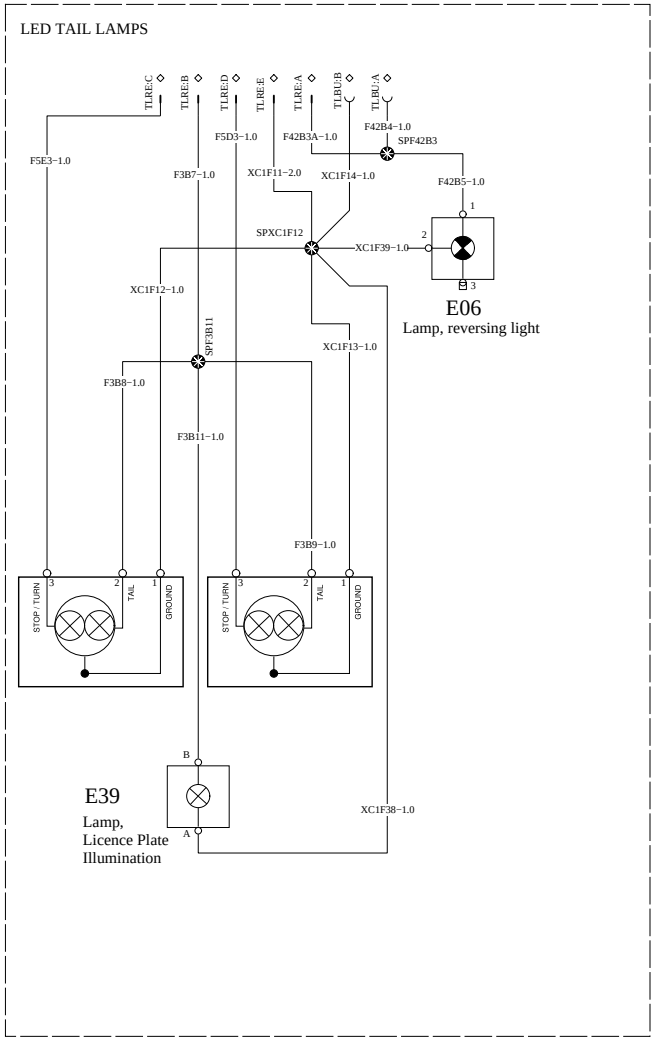

VOLVO Group Trucks Technology	Document title WIRE DIAGRAM-CONVENTIONAL, 12V MACK, 2013BP Document type PRODUCT SCHEMATIC	Document No 22448341	Issue 03	Volume 1 (1)	Page 31 (53)

TRAILER LIGHTING CONTROL

https://truckmanualshub.com/

WIRING DIAGRAM : GG

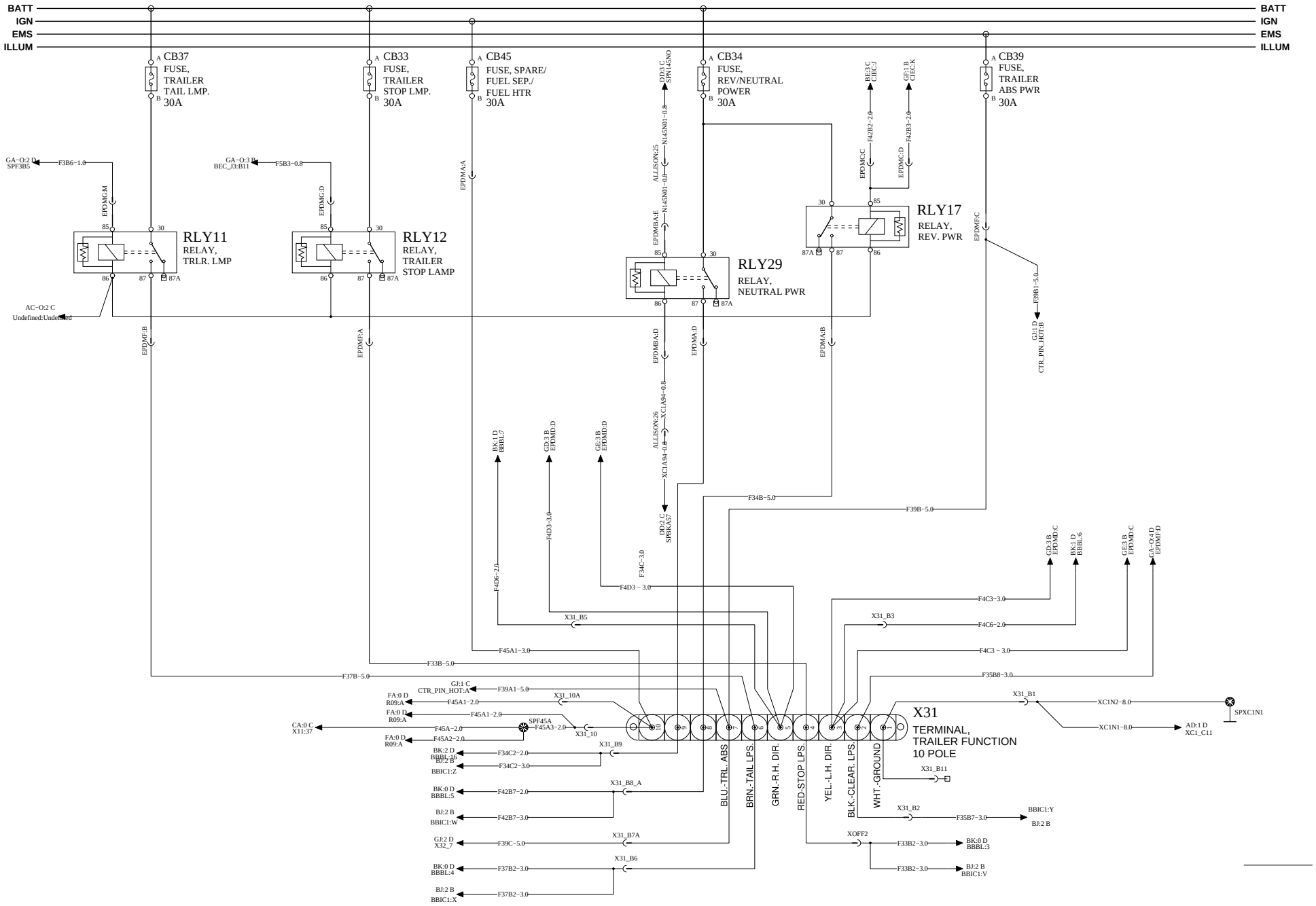

Document title	Document No	Issue	Volume	Page
WIRE DIAGRAM-CONVENTIONAL, 12V MACK, 2013BP	22448341	03	1 (1)	32 (53)
Document type: PRODUCT SCHEMATIC				

VOLVO Group Trucks Technology

INTERIOR LIGHTING

https://truckmanualshub.com/

WIRING DIAGRAM : GH−O

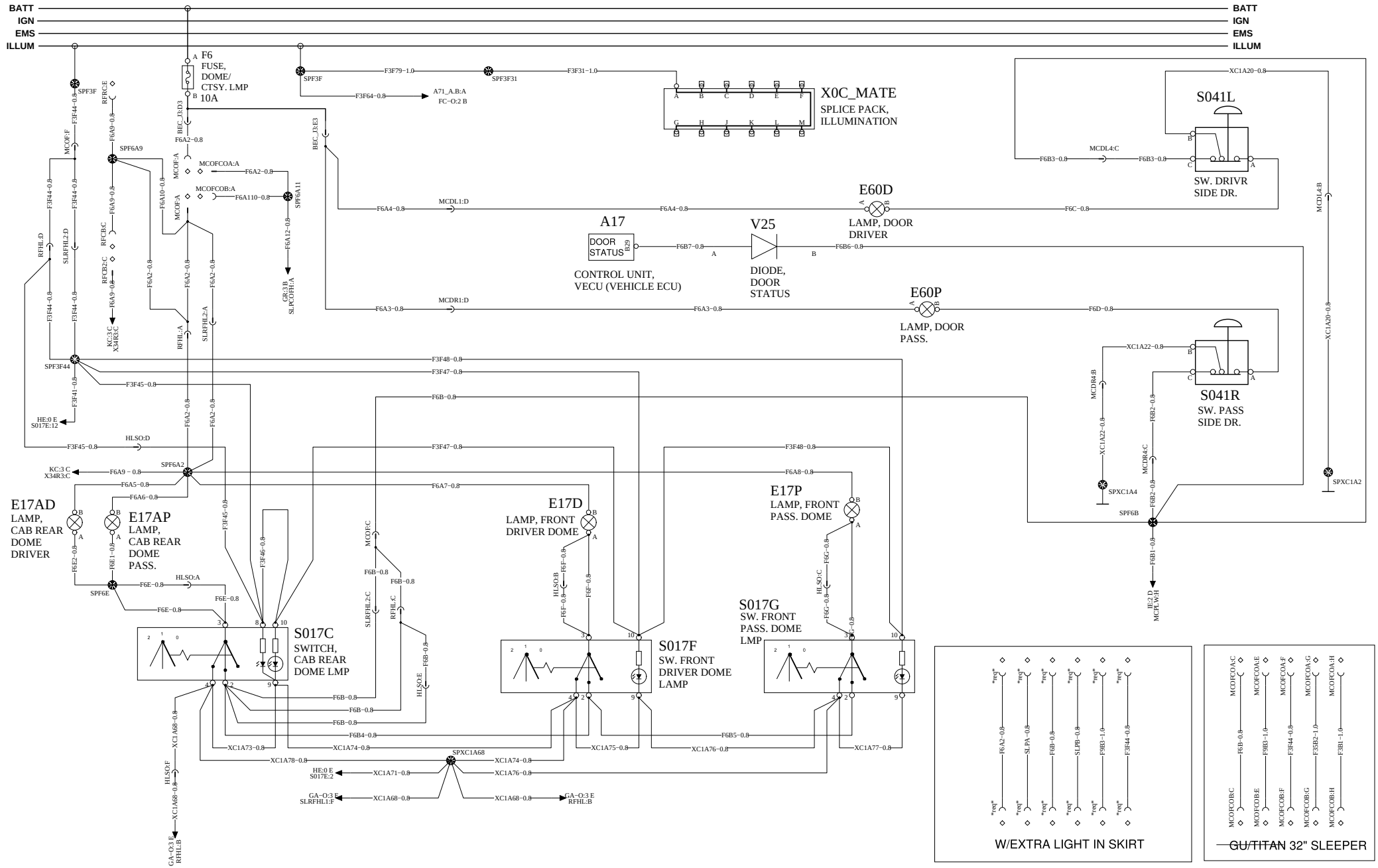

VOLVO Group Trucks Technology	Document title WIRE DIAGRAM-CONVENTIONAL, 12V MACK, 2013BP Document type PRODUCT SCHEMATIC	Document No 22448341	Issue 03	Volume 1 (1)	Page 33 (53)

SNOW PLOW PREP CONNECTOR

https://truckmanualshub.com/

WIRING DIAGRAM : GI

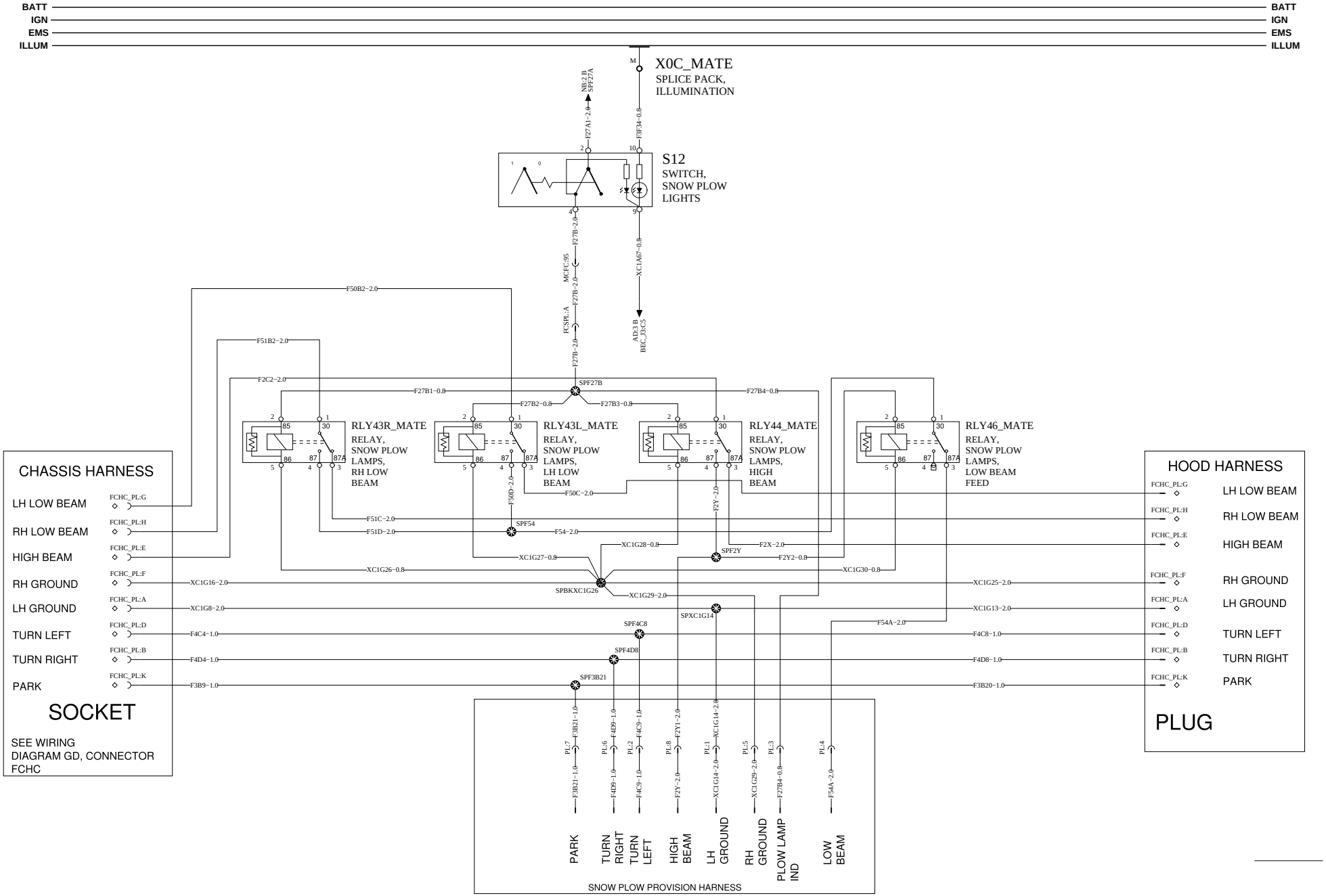

VOLVO Group Trucks Technology	Document title: WIRE DIAGRAM-CONVENTIONAL, 12V MACK, 2013BP	Document No	Issue	Volume	Page
	Document type: PRODUCT SCHEMATIC	22448341	03	1 (1)	34 (53)

https://truckmanualshub.com/

WIRING DIAGRAM : GL

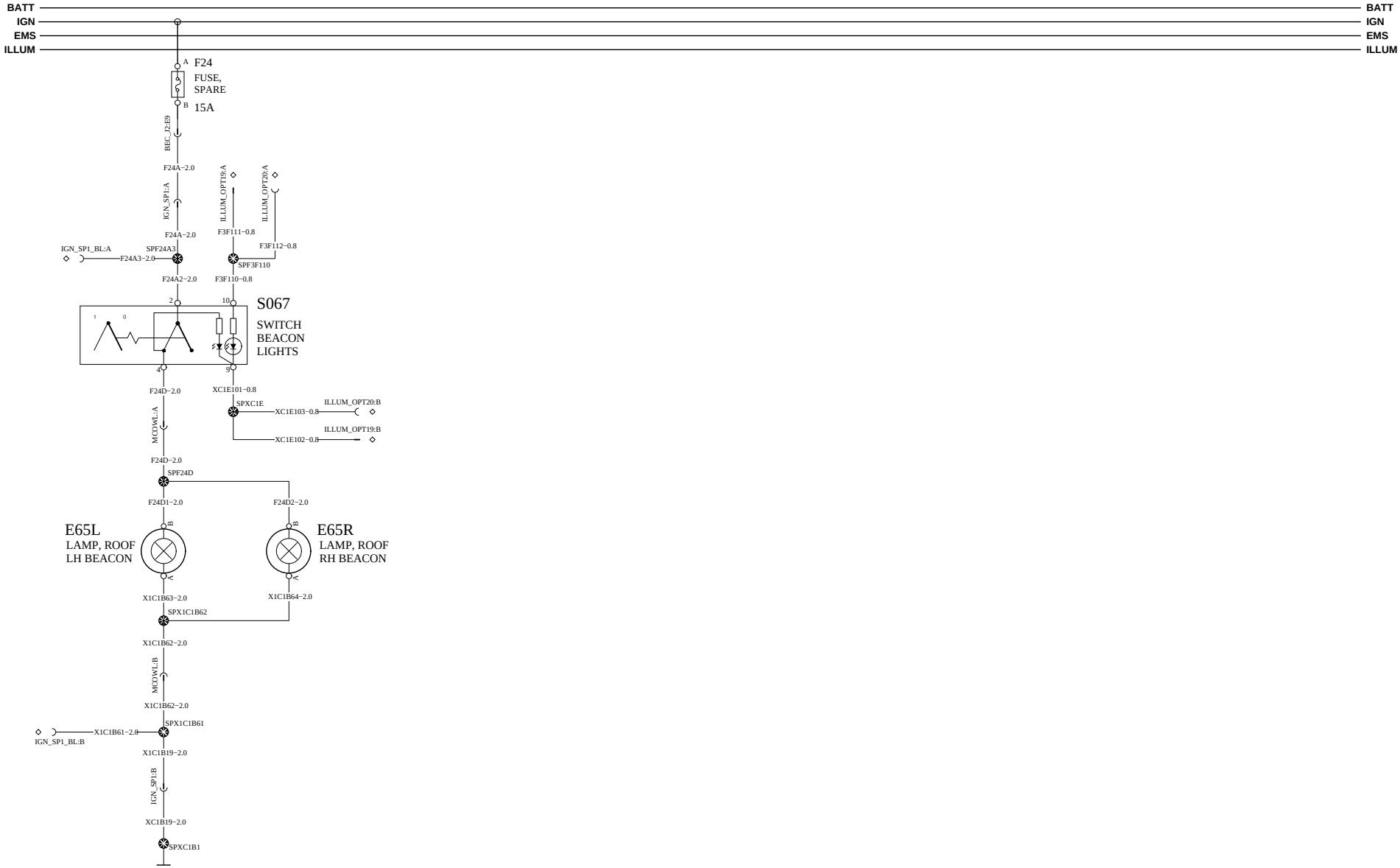

WIPER/WASHER

https://truckmanualshub.com/

WIRING DIAGRAM : GP

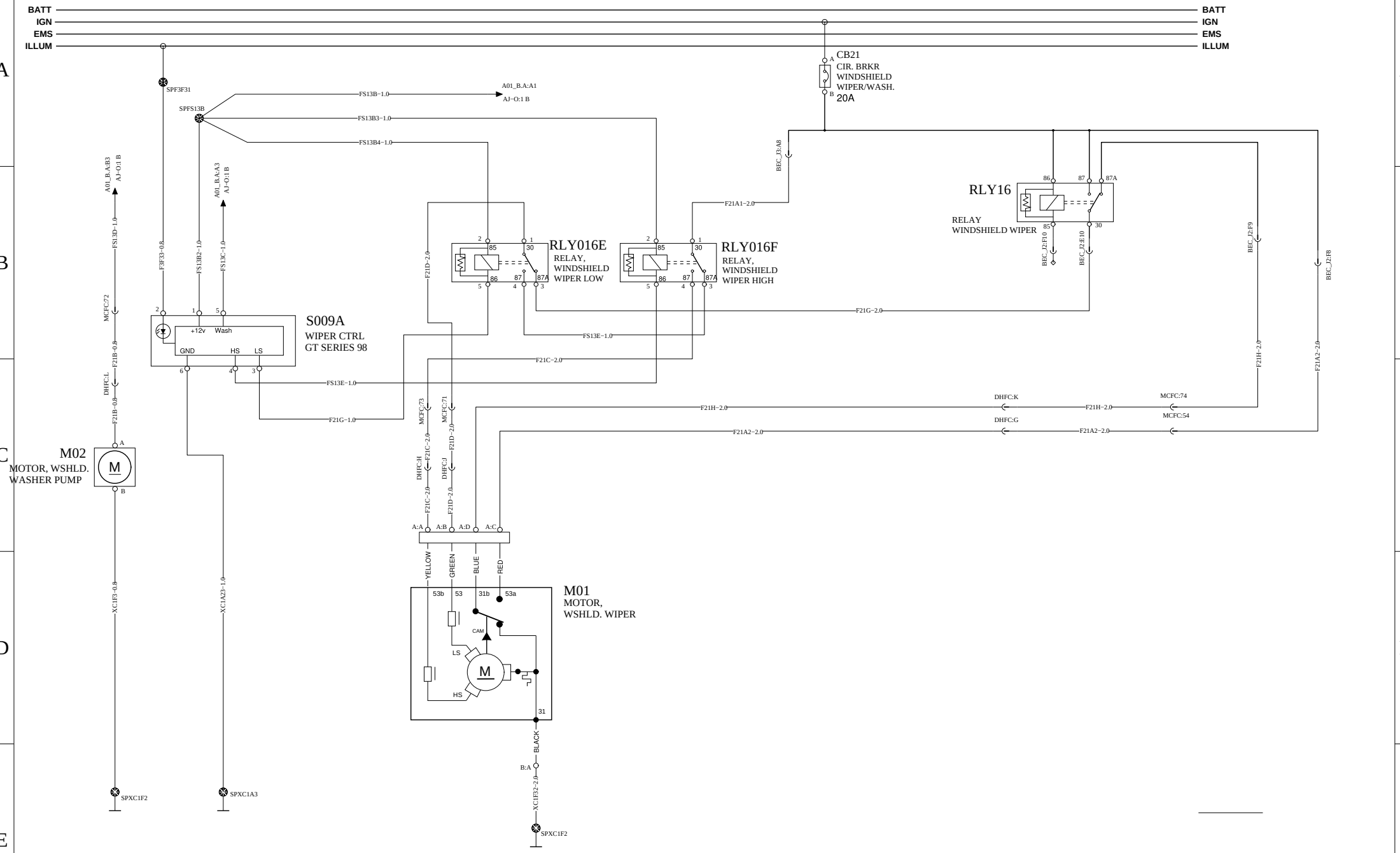

VOLVO Group Trucks Technology	Document title: WIRE DIAGRAM-CONVENTIONAL, 12V MACK, 2013BP Document type: PRODUCT SCHEMATIC	Document No: 22448341	Issue: 03	Volume: 1 (1)	Page: 36 (53)

https://truckmanualshub.com/

WIRING DIAGRAM : GQ

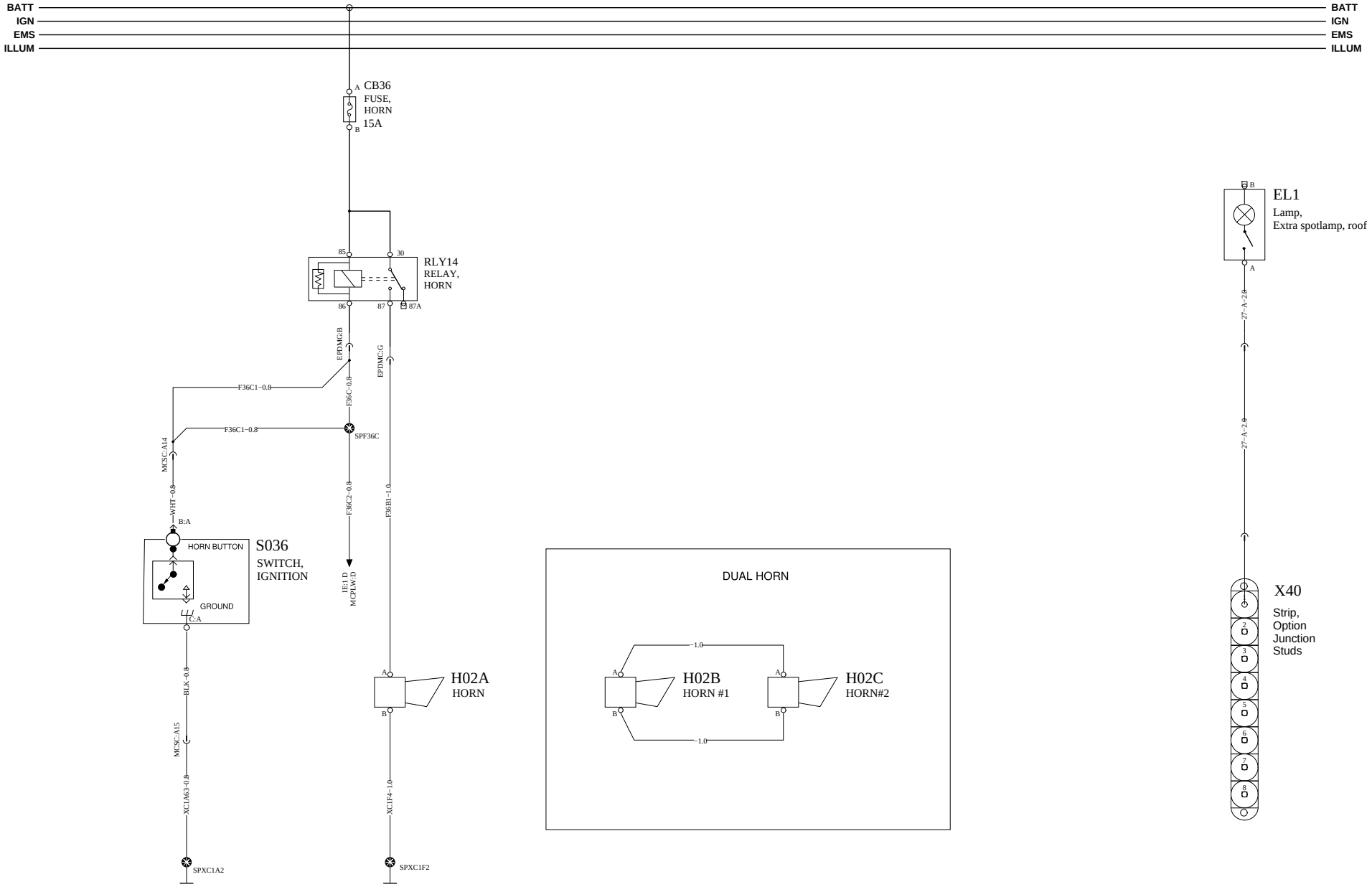

CLIMATE CONTROL

https://truckmanualshub.com/

WIRING DIAGRAM : HA

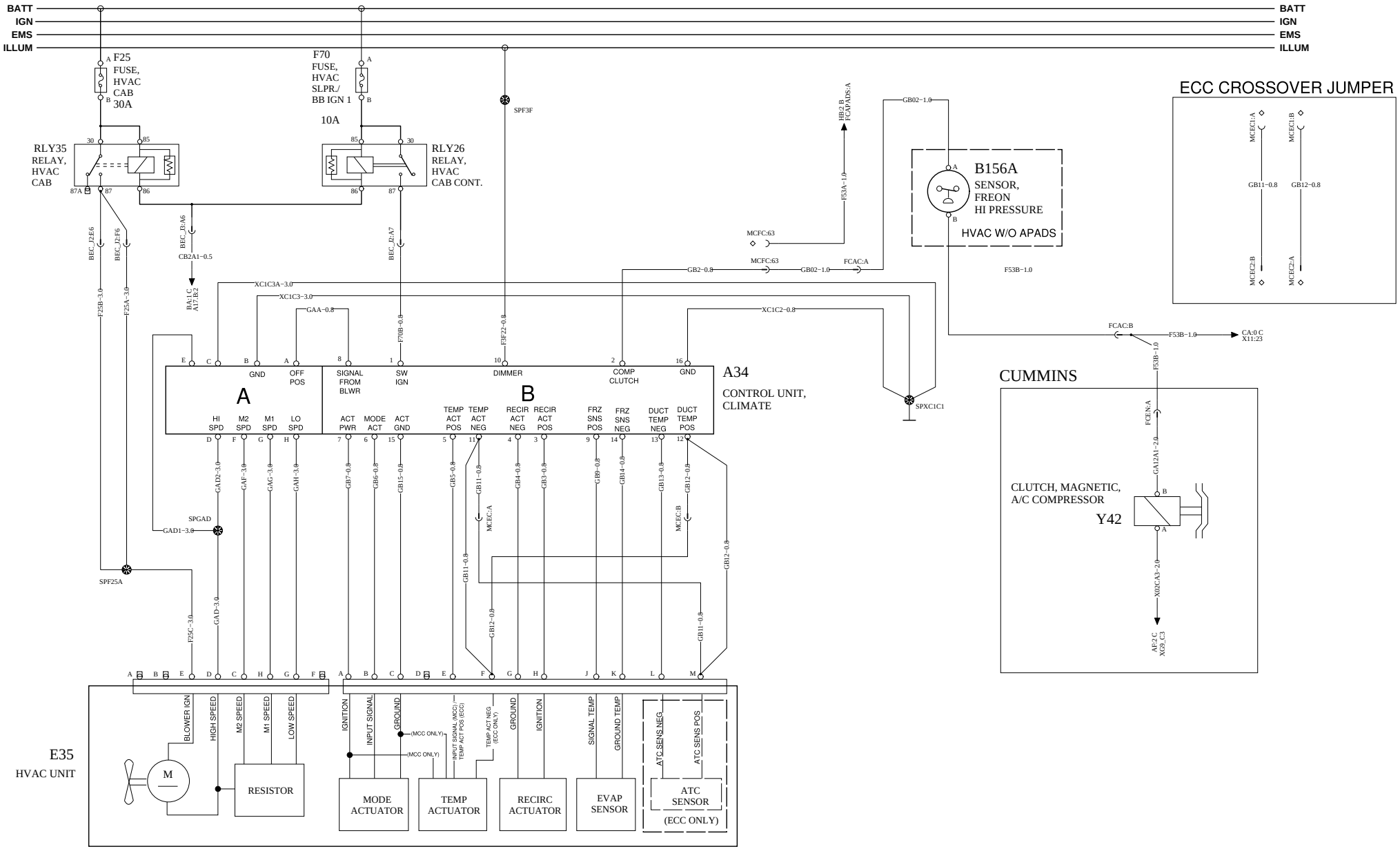

VOLVO Group Trucks Technology	Document title WIRE DIAGRAM-CONVENTIONAL, 12V MACK, 2013BP Document type PRODUCT SCHEMATIC	Document No 22448341	Issue 03	Volume 1 (1)	Page 38 (53)

https://truckmanualshub.com/

WIRING DIAGRAM : HC

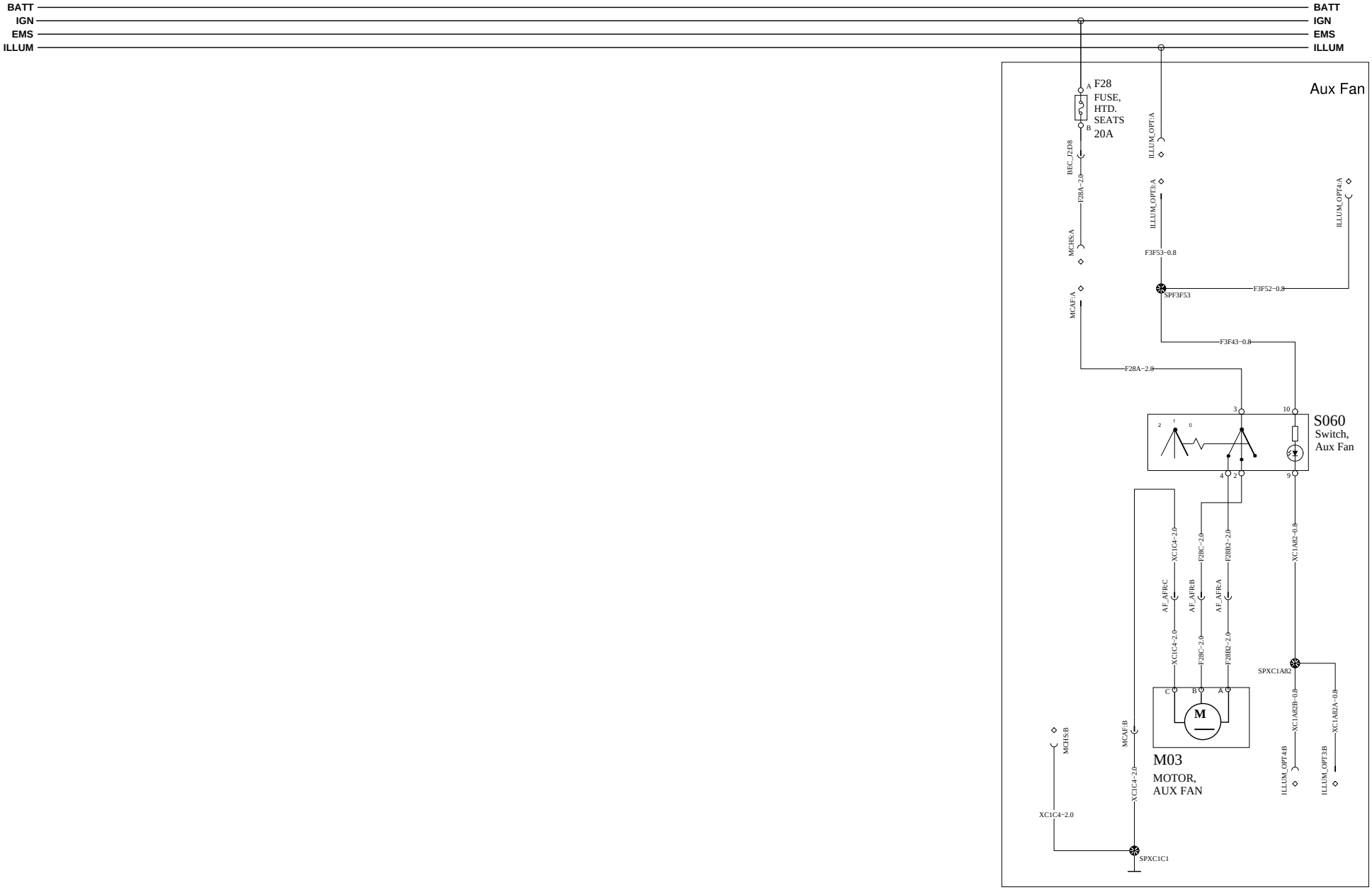

VOLVO Group Trucks Technology	Document title WIRE DIAGRAM-CONVENTIONAL, 12V MACK, 2013BP Document type PRODUCT SCHEMATIC	Document No 22448341	Issue 03	Volume 1 (1)	Page 39 (53)

https://truckmanualshub.com/

BATT
IGN
EMS
ILLUM

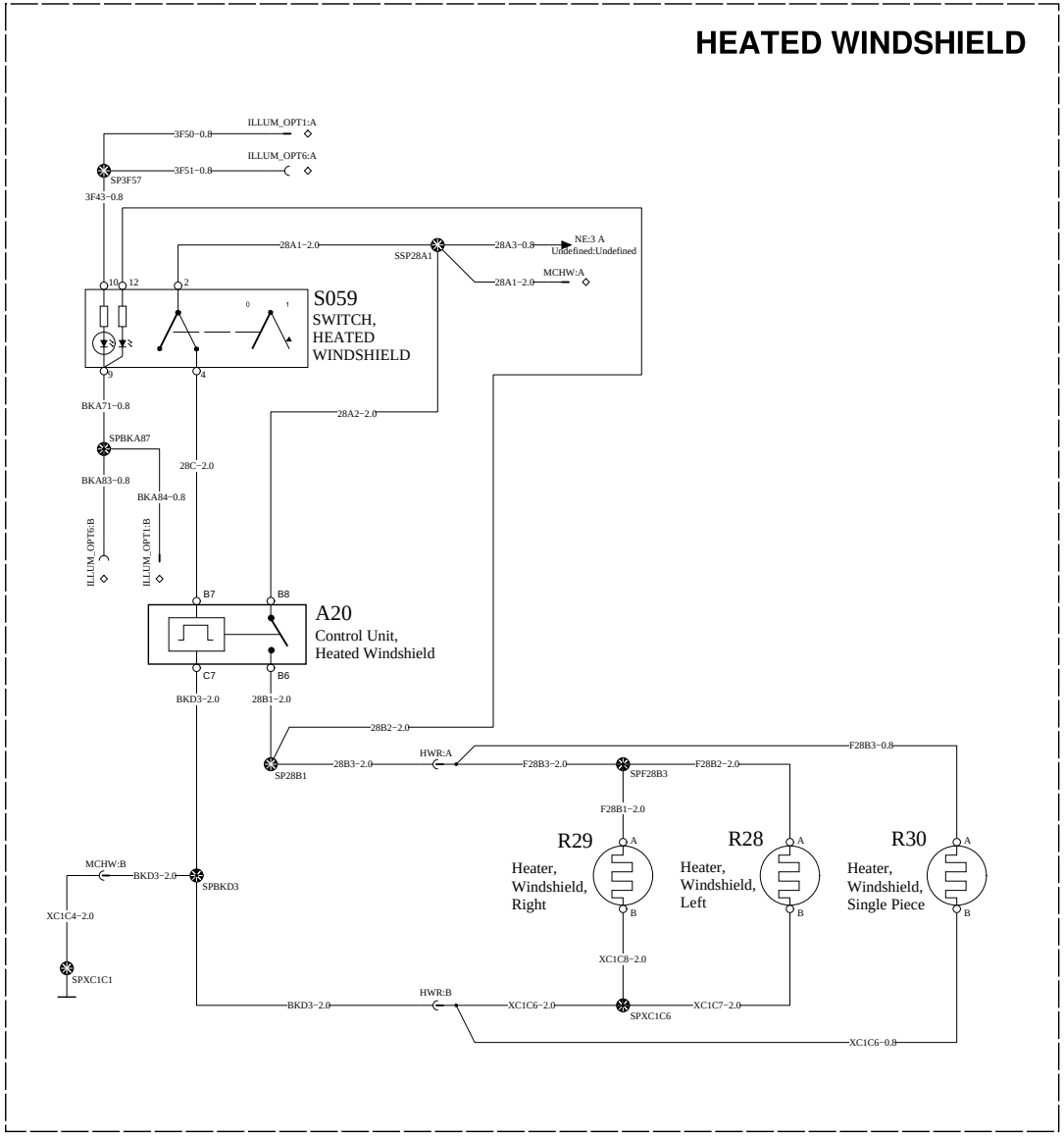

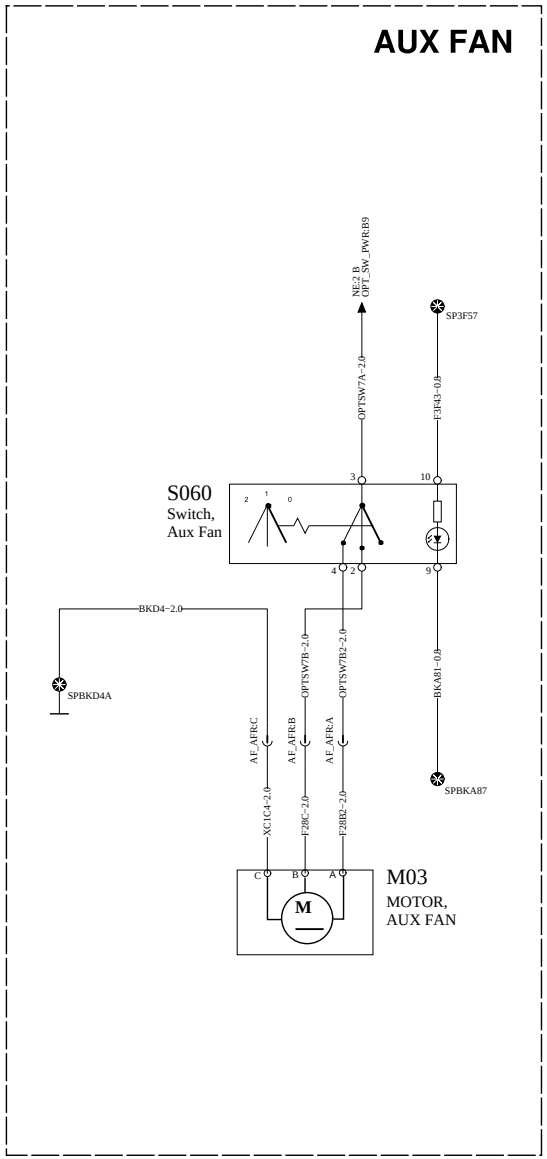

RH & LH MOTORIZED WINDOWS

https://truckmanualshub.com/

WIRING DIAGRAM : IA

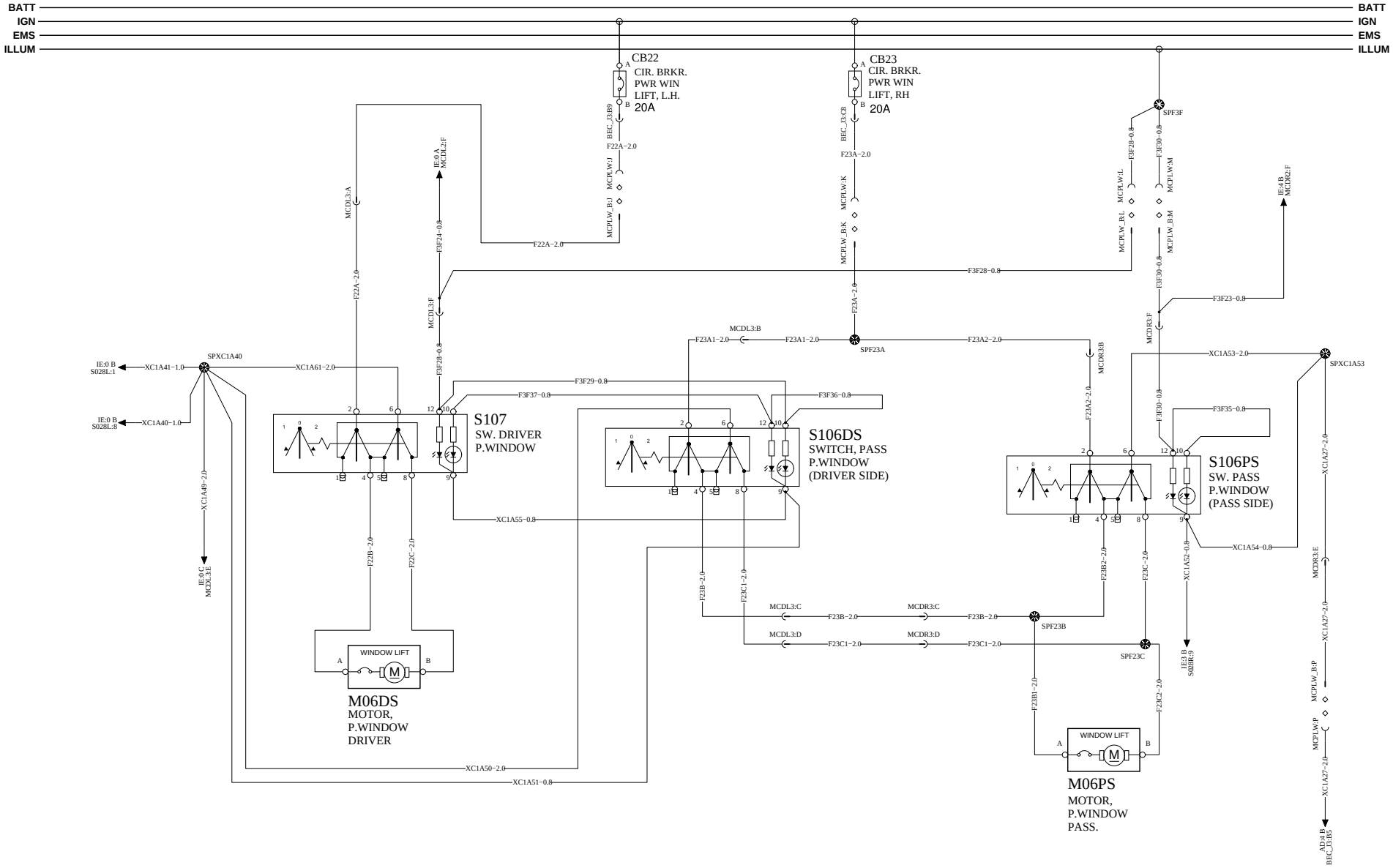

VOLVO Group Trucks Technology	Document title WIRE DIAGRAM-CONVENTIONAL, 12V MACK, 2013BP Document type PRODUCT SCHEMATIC	Document No 22448341	Issue 03	Volume 1 (1)	Page 41 (53)

https://truckmanualshub.com/

WIRING DIAGRAM : IC

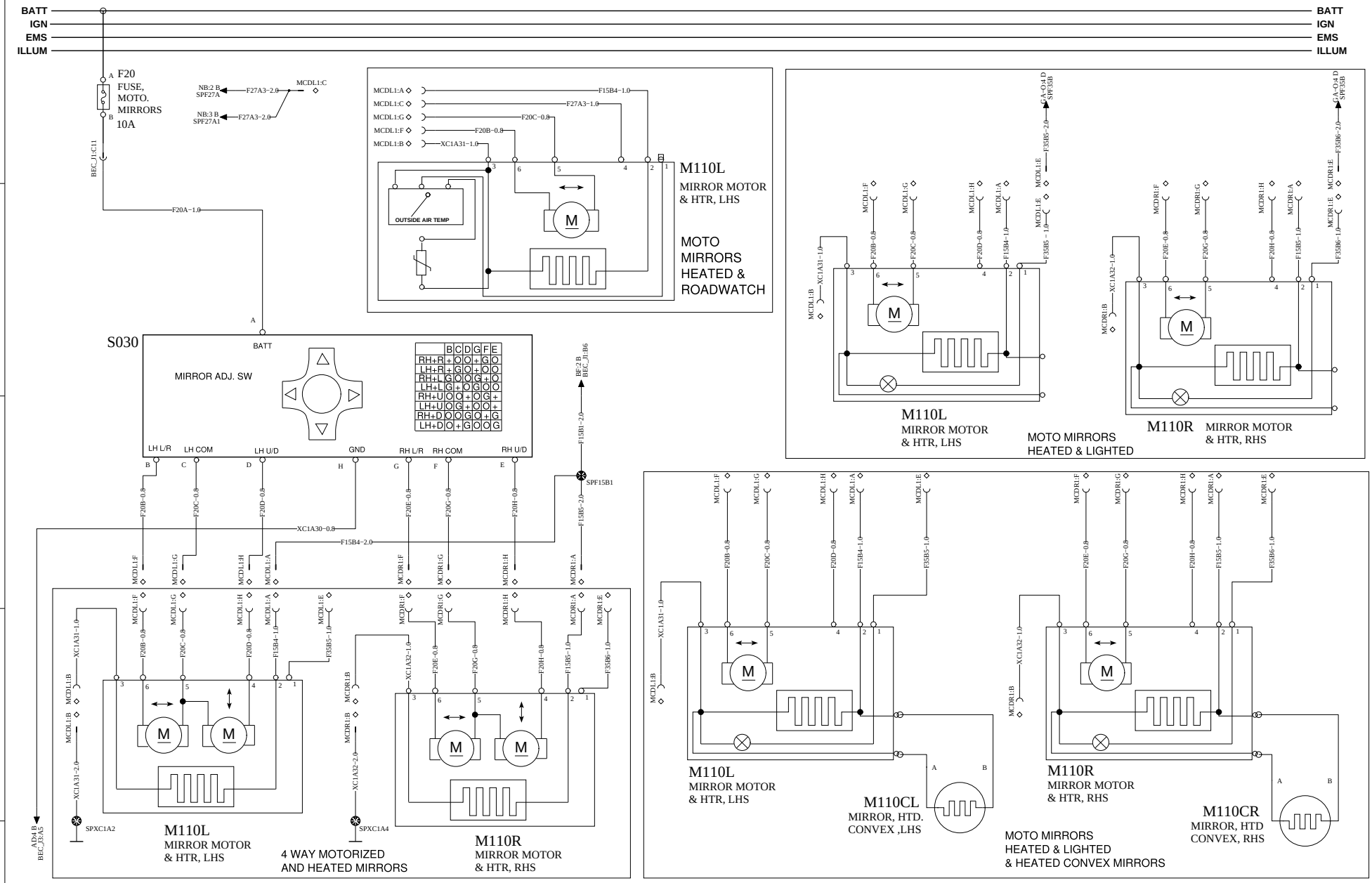

RH ONLY MOTORIZED WINDOWS & DOOR CONTROL

https://truckmanualshub.com/

WIRING DIAGRAM

: ID

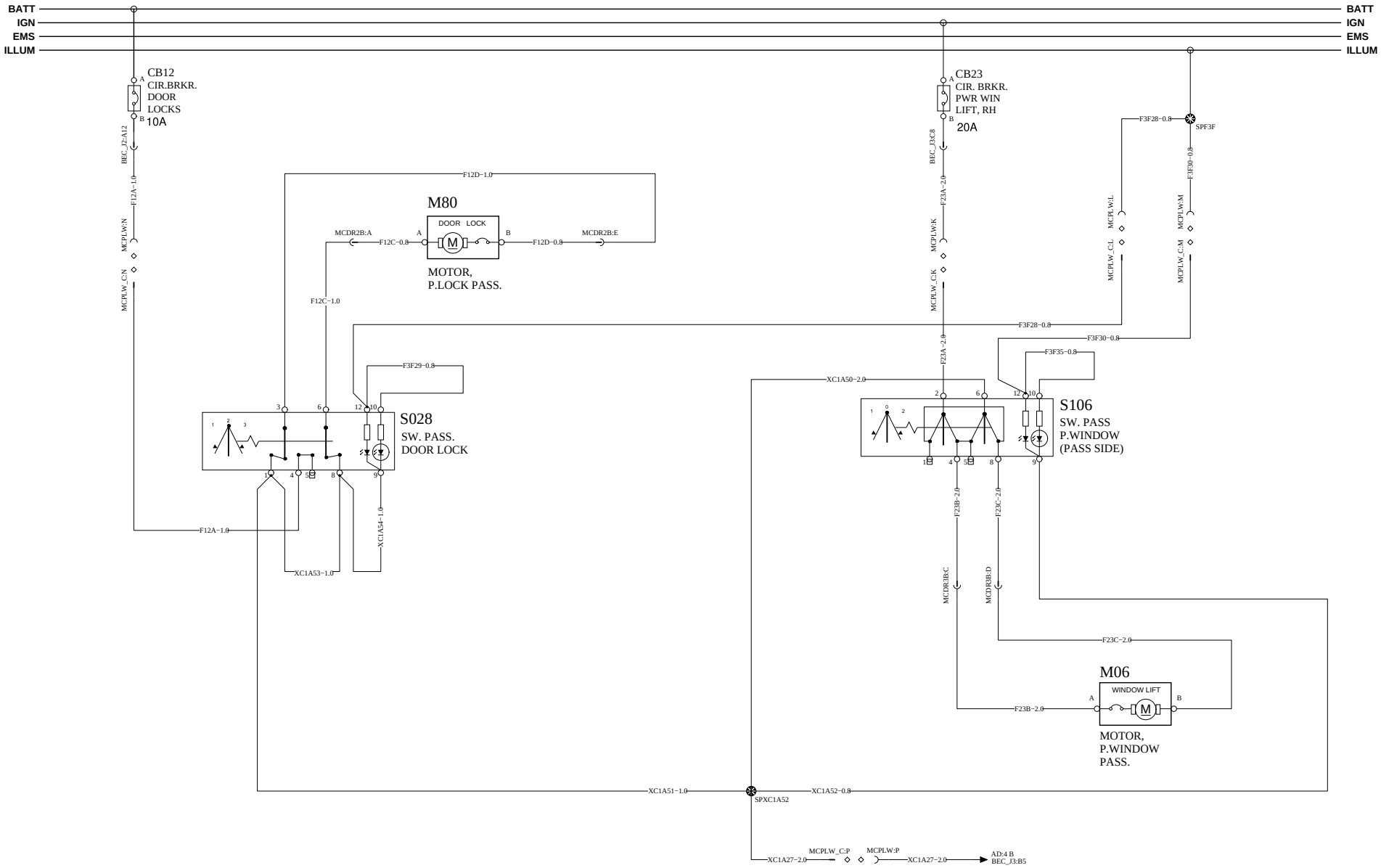

VOLVO Group Trucks Technology	Document title WIRE DIAGRAM-CONVENTIONAL, 12V MACK, 2013BP Document type PRODUCT SCHEMATIC	Document No 22448341	Issue 03	Volume 1 (1)	Page 43 (53)

RH & LH DOOR CONTROL

https://truckmanualshub.com/

WIRING DIAGRAM

: IE

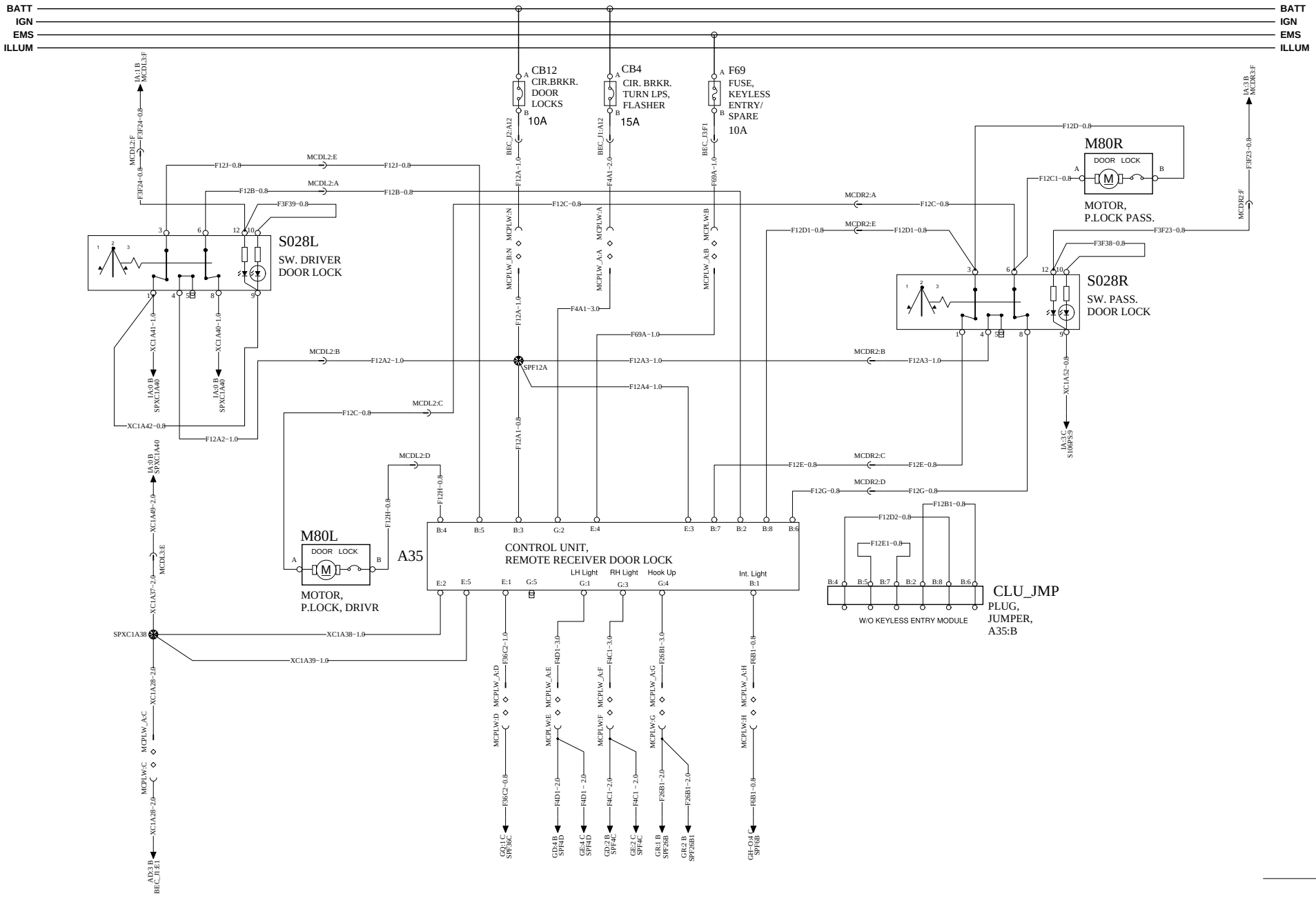

VOLVO Group Trucks Technology	Document title WIRE DIAGRAM-CONVENTIONAL, 12V MACK, 2013BP Document type PRODUCT SCHEMATIC	Document No 22448341	Issue 03	Volume 1 (1)	Page 44 (53)

https://truckmanualshub.com/

WIRING DIAGRAM : KB

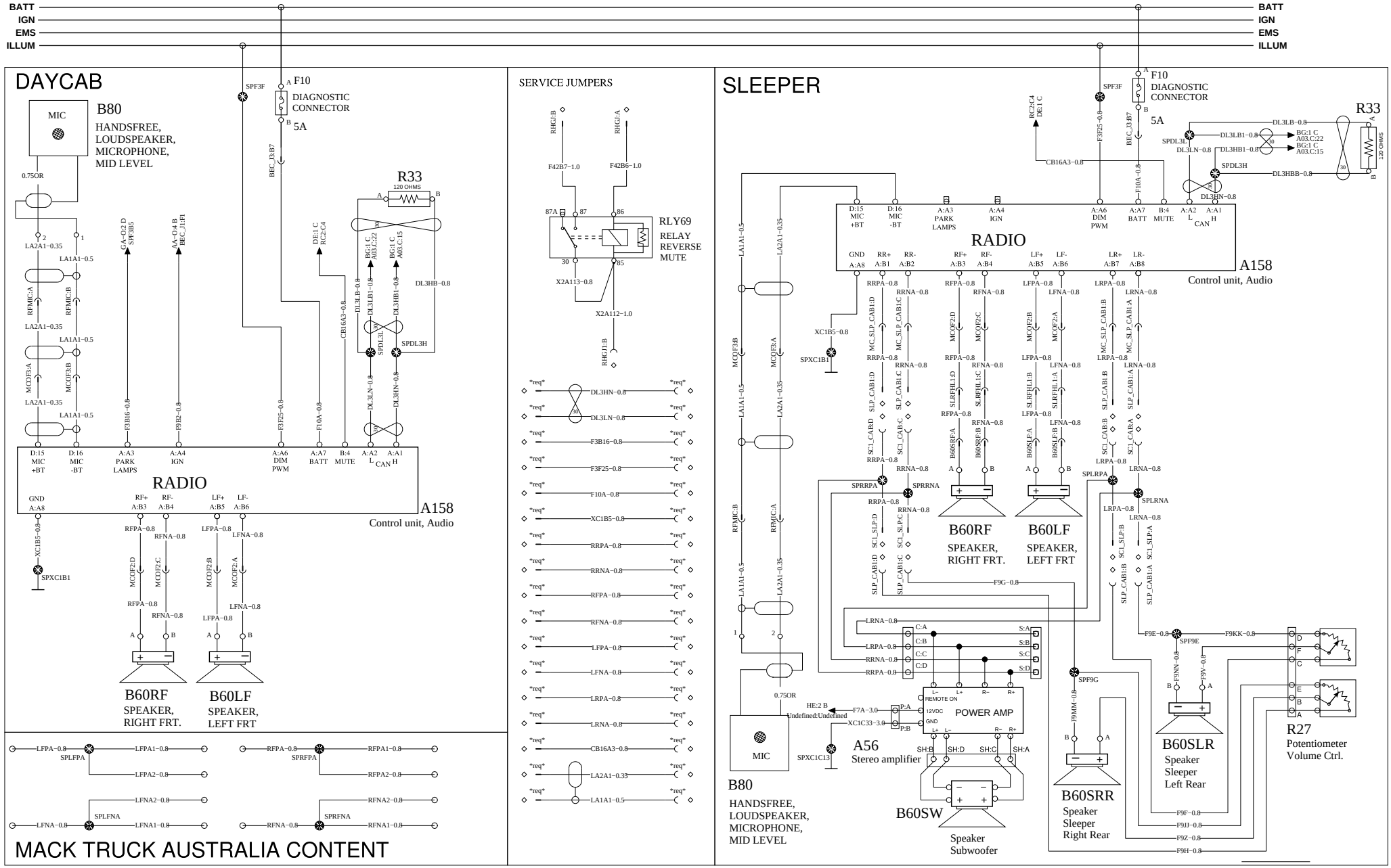

VOLVO Group Trucks Technology	Document title: WIRING DIAGRAM	Document No: 22448341	Issue: 03	Volume: 1 (1)	Page: 45 (53)
	Document type: PRODUCT SCHEMATIC				

POWER OUTLET CONNECTIONS

https://truckmanualshub.com/

WIRING DIAGRAM : KC

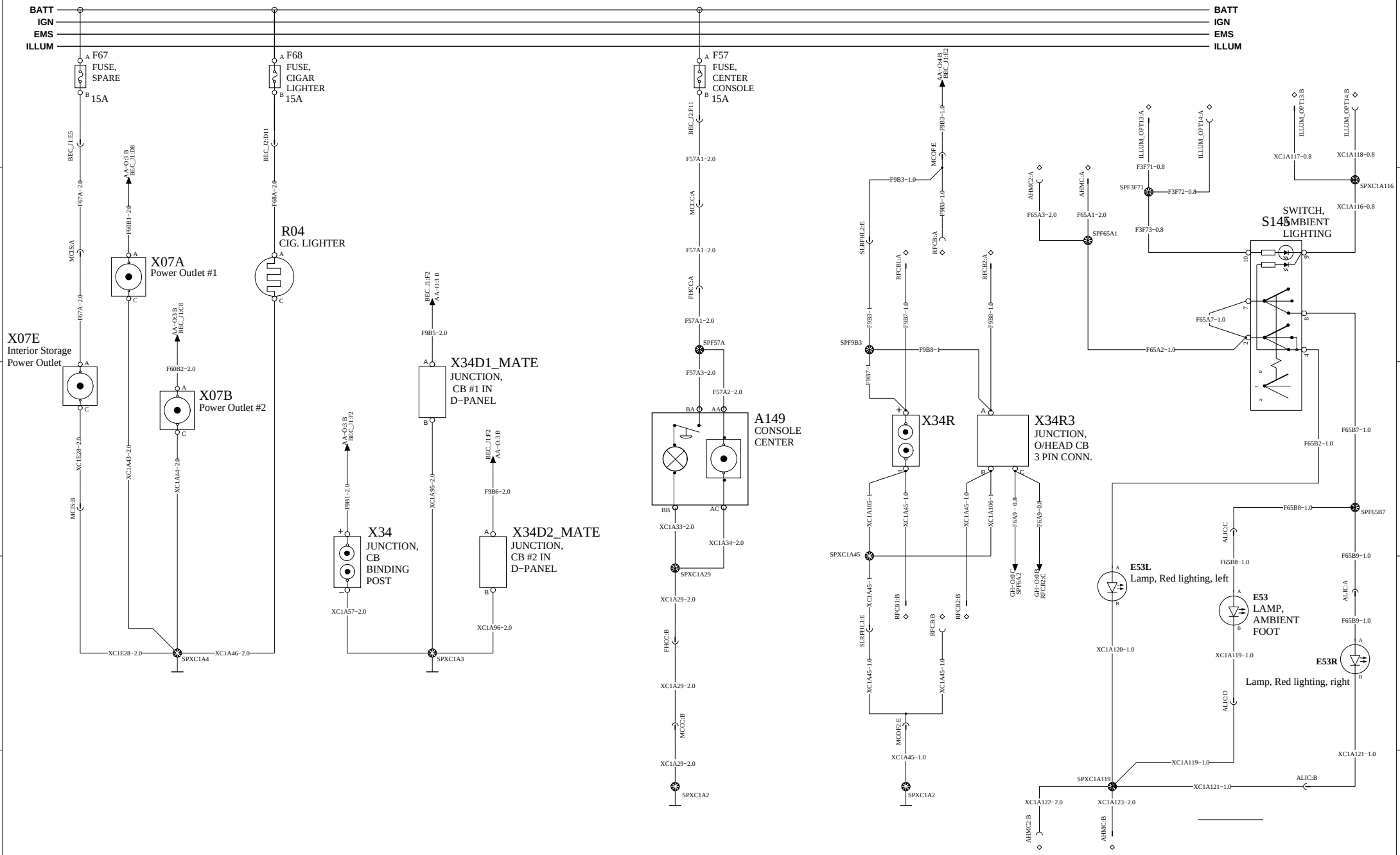

VOLVO Group Trucks Technology	Document title WIRE DIAGRAM-CONVENTIONAL, 12V MACK, 2013BP Document type PRODUCT SCHEMATIC	Document No 22448341	Issue 03	Volume 1 (1)	Page 46 (53)

https://truckmanualshub.com/

WIRING DIAGRAM : NA-O

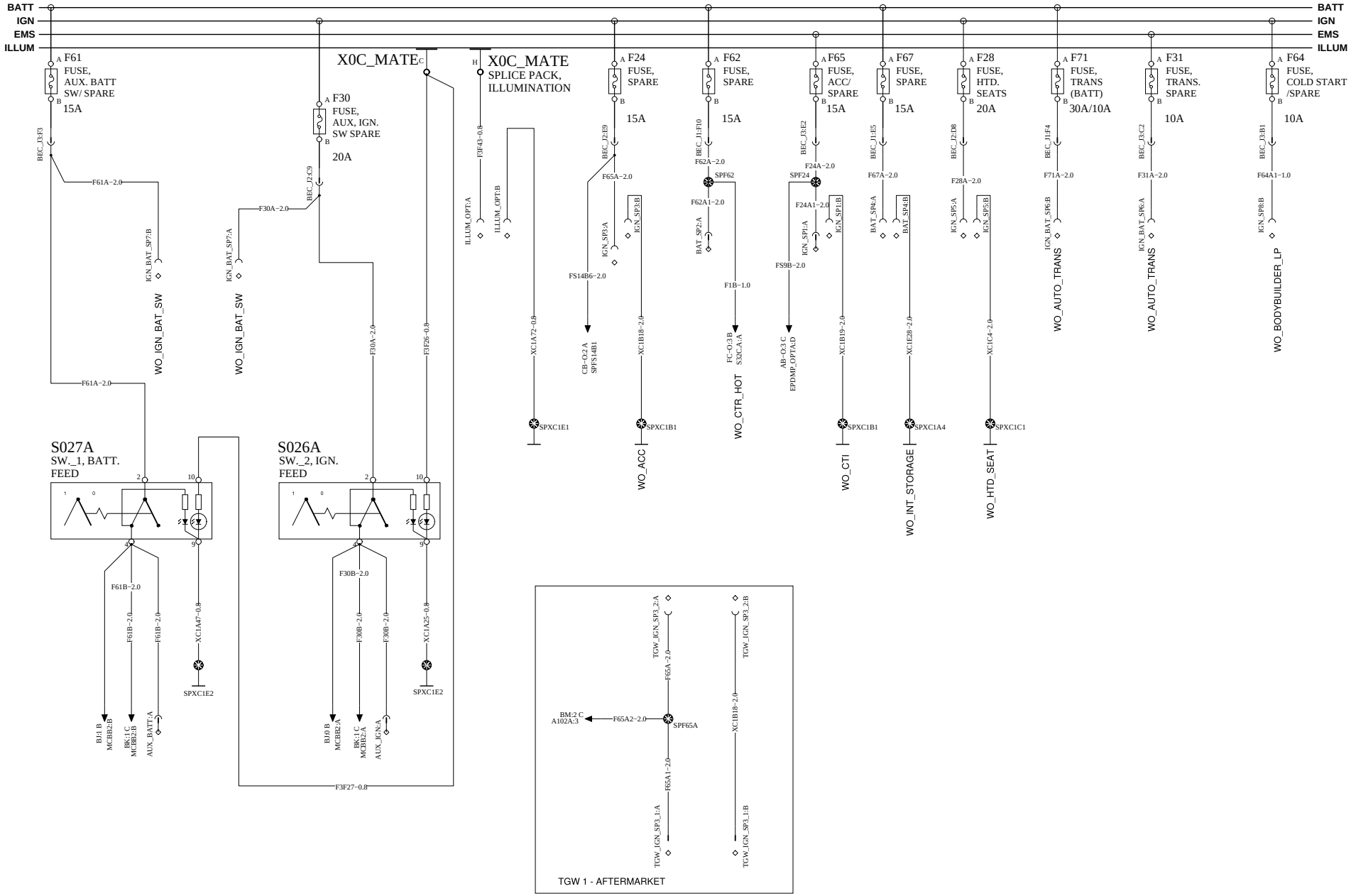

Document title	Document No	Issue	Volume	Page
WIRE DIAGRAM-CONVENTIONAL, 12V MACK, 2013BP	22448341	03	1 (1)	47 (53)
Document type: PRODUCT SCHEMATIC				

VOLVO Group Trucks Technology

https://truckmanualshub.com/

WIRING DIAGRAM : NB

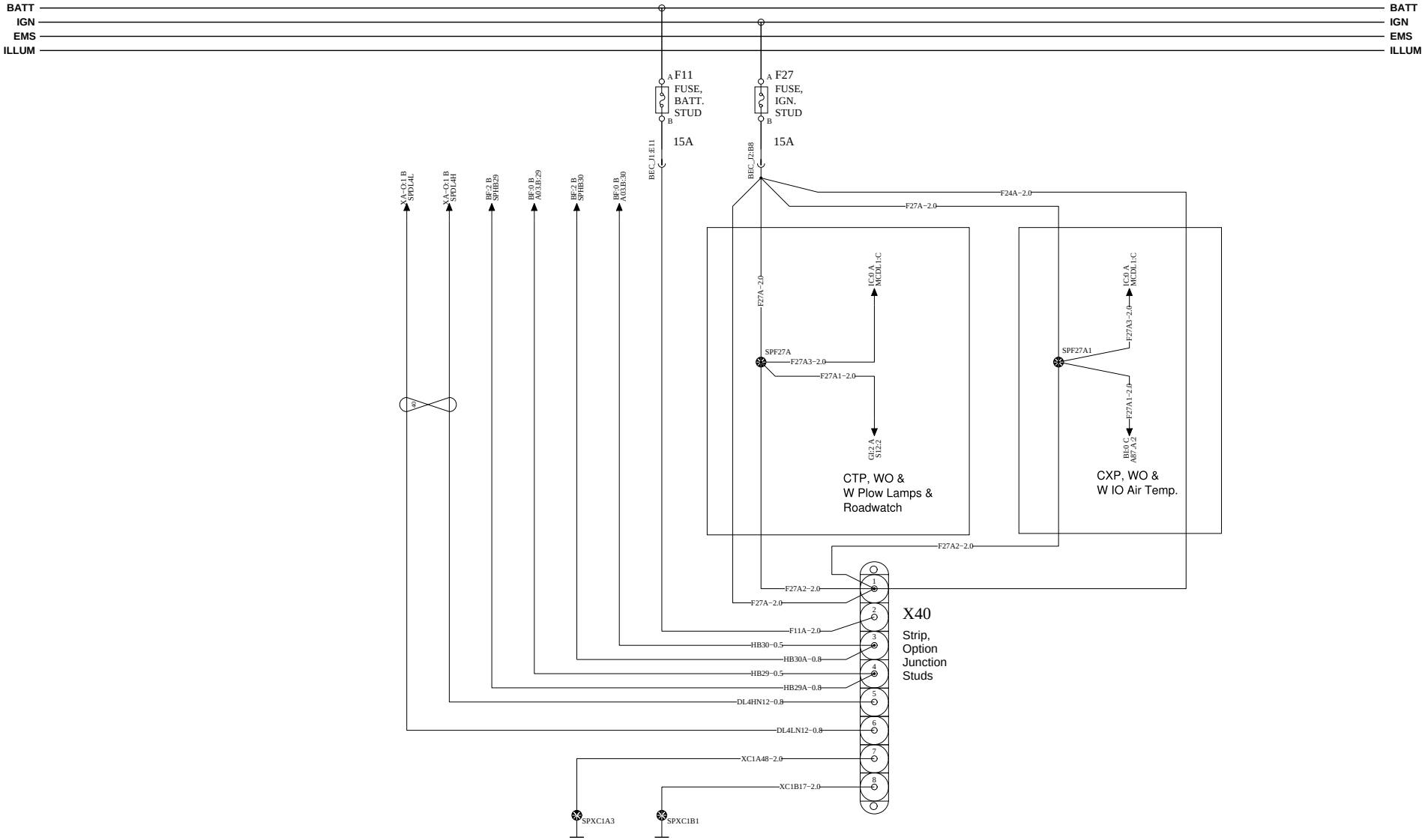

VOLVO Group Trucks Technology	Document title WIRE DIAGRAM-CONVENTIONAL, 12V MACK, 2013BP Document type PRODUCT SCHEMATIC	Document No 22448341	Issue 03	Volume 1 (1)	Page 48 (53)

ADDITIONAL IGNITION & BATTERY SWITCHES 1/3

https://truckmanualshub.com/

WIRING DIAGRAM : NC

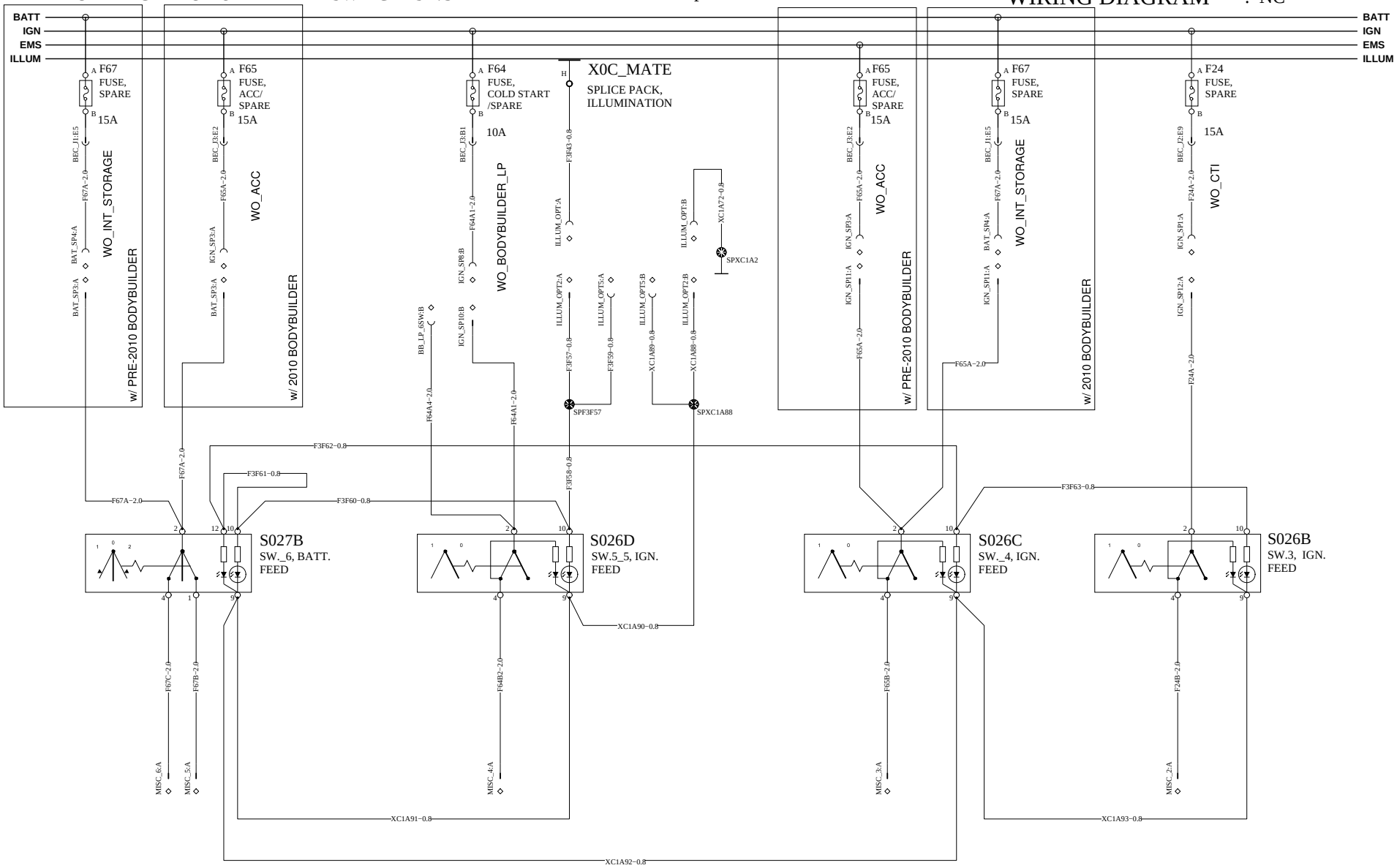

VOLVO Group Trucks Technology	Document title WIRE DIAGRAM-CONVENTIONAL, 12V MACK, 2013BP Document type PRODUCT SCHEMATIC	Document No 22448341	Issue 03	Volume 1 (1)	Page 49 (53)

https://truckmanualshub.com/

WIRING DIAGRAM : NE

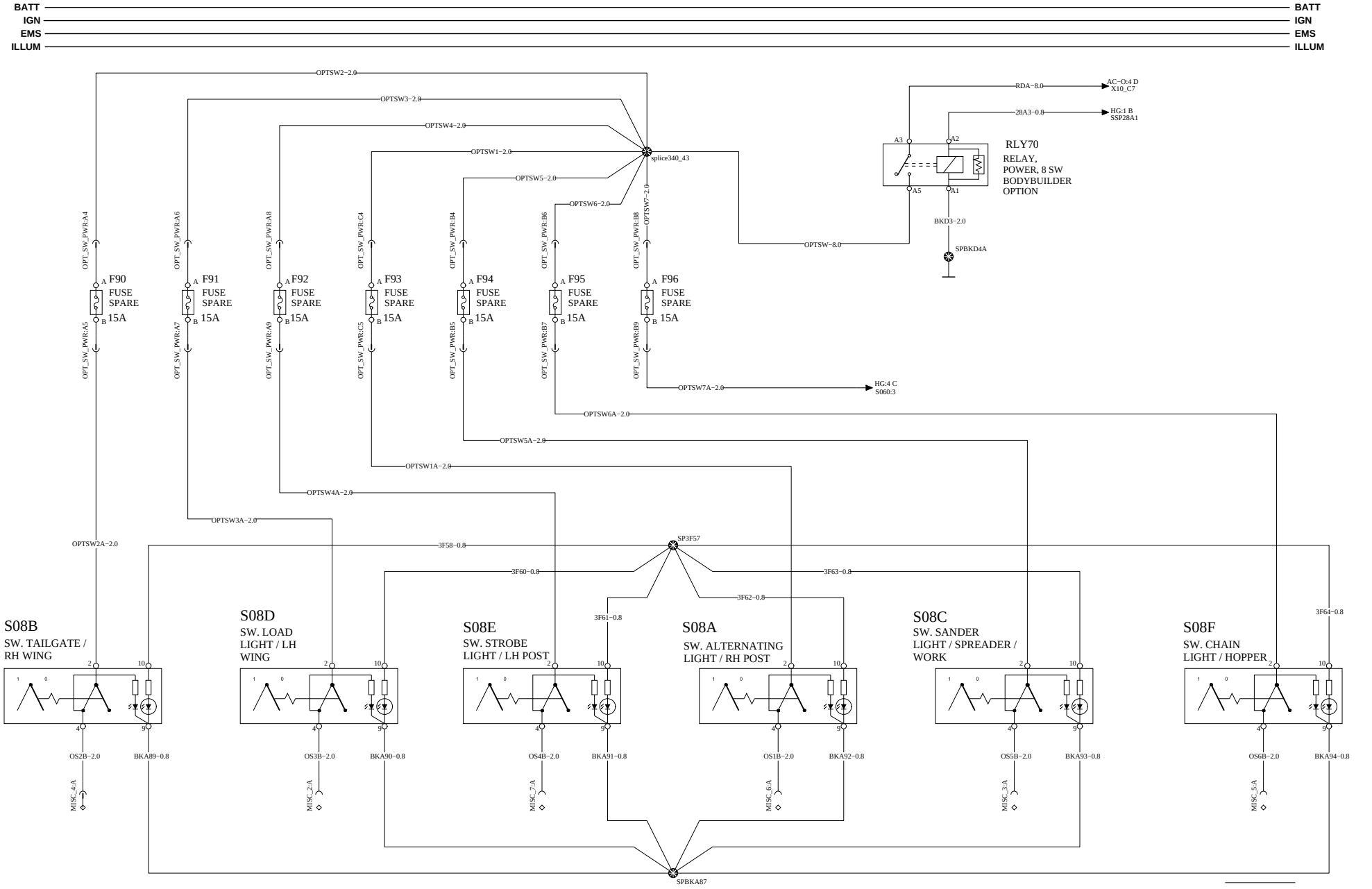

VOLVO Group Trucks Technology	Document title: WIRE DIAGRAM-CONVENTIONAL, 12V MACK, 2013BP Document type: PRODUCT SCHEMATIC	Document No: 22448341	Issue: 03	Volume: 1 (1)	Page: 50 (53)

https://truckmanualshub.com/

WIRING DIAGRAM : NF

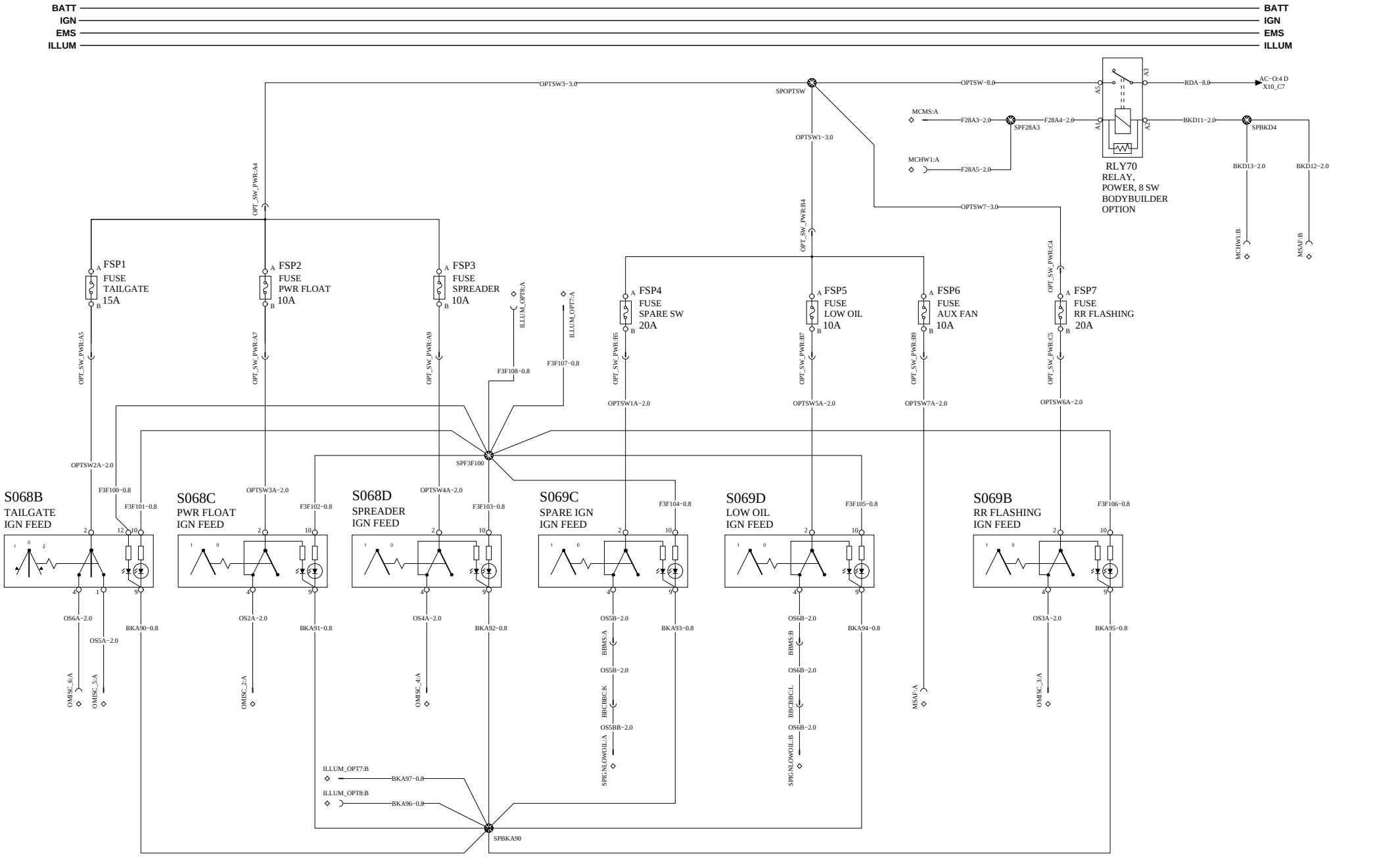

VOLVO Group Trucks Technology	Document title WIRE DIAGRAM-CONVENTIONAL, 12V MACK, 2013BP Document type PRODUCT SCHEMATIC	Document No 22448341	Issue 03	Volume 1 (1)	Page 51 (53)

https://truckmanualshub.com/

WIRING DIAGRAM : XA-O

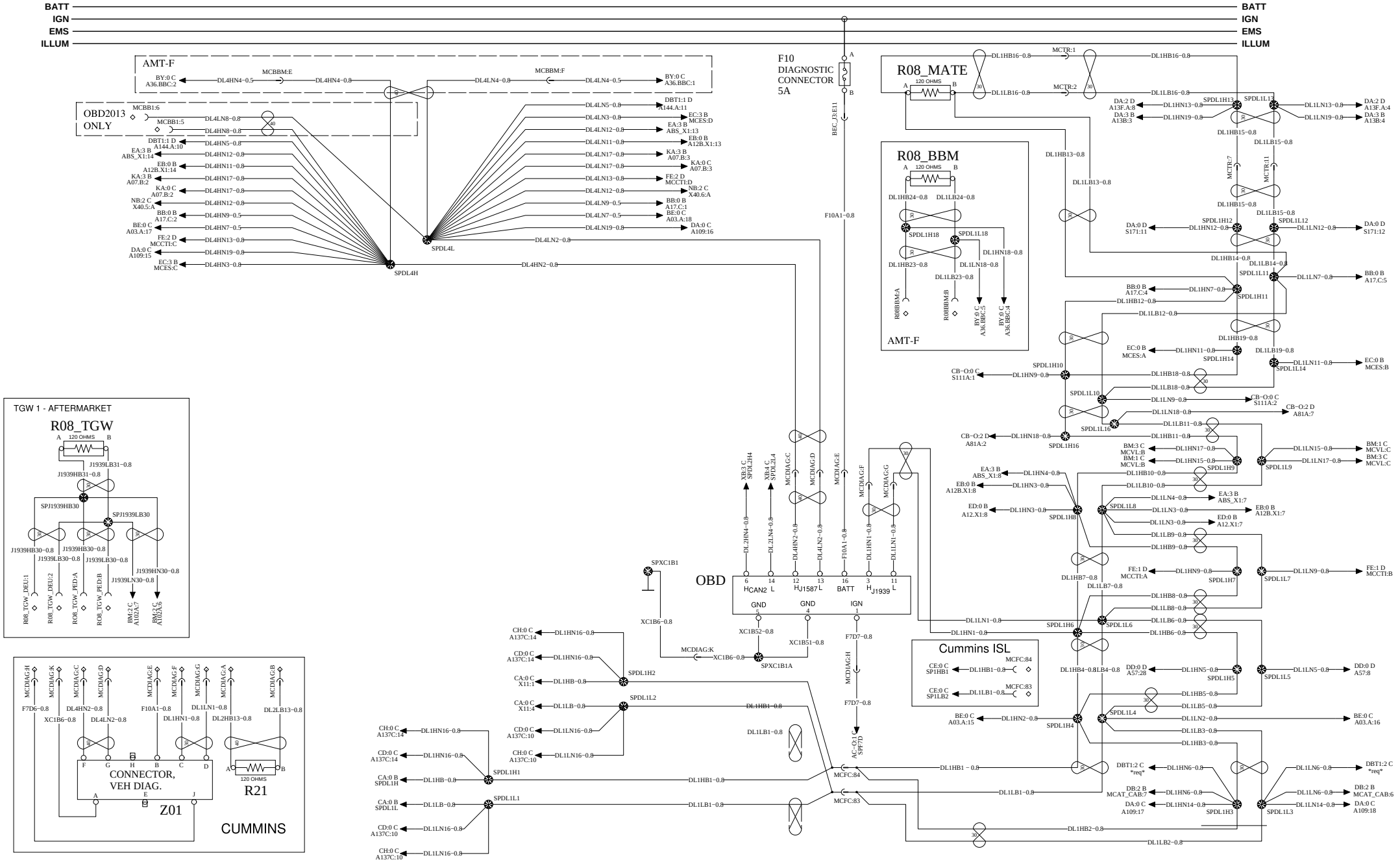

Document title	Document No	Issue	Volume	Page
WIRE DIAGRAM-CONVENTIONAL, 12V MACK, 2013BP	22448341	03	1 (1)	52 (53)
Document type: PRODUCT SCHEMATIC				

VOLVO Group Trucks Technology

https://truckmanualshub.com/

WIRING DIAGRAM : XB

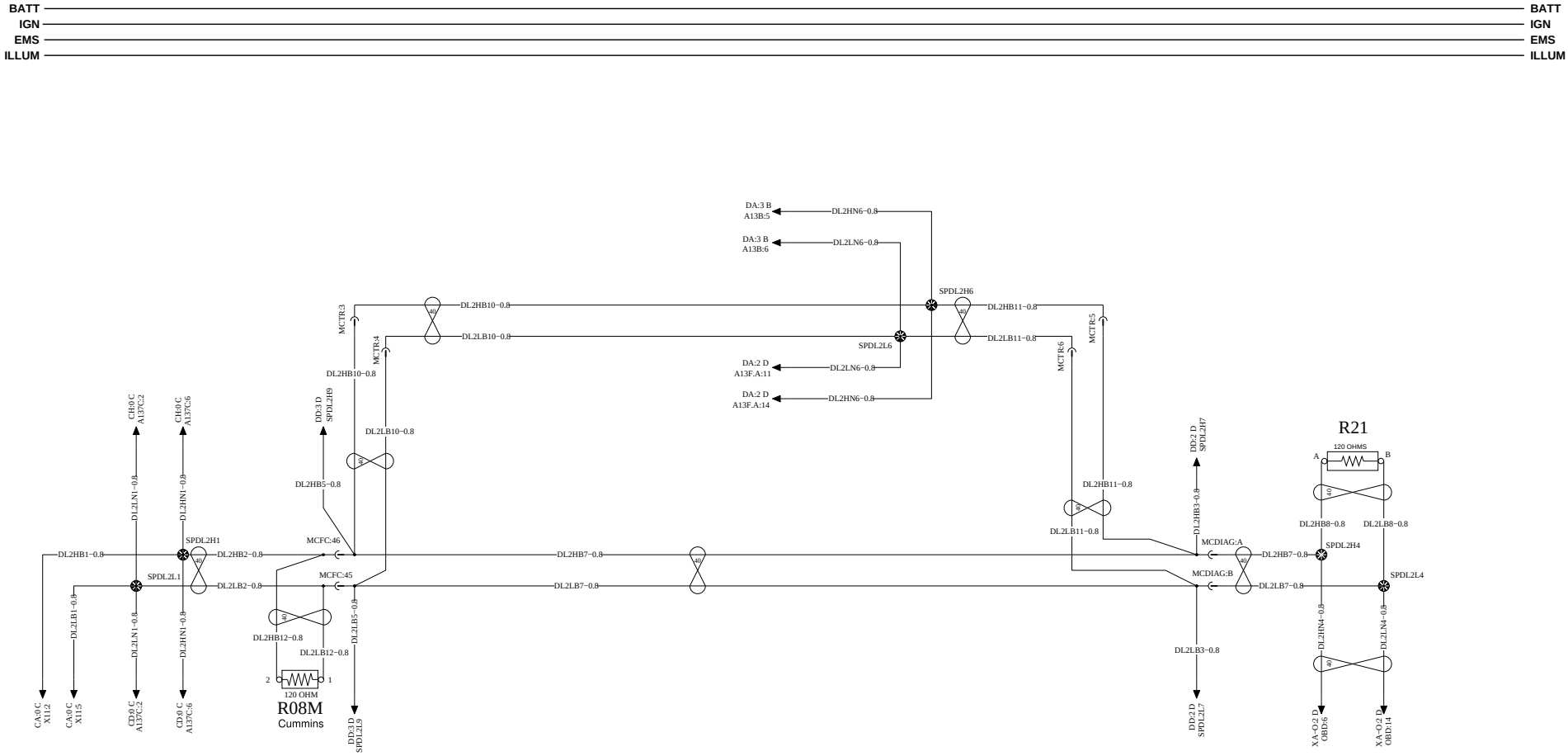

VOLVO Group Trucks Technology	Document title WIRING DIAGRAM-CONVENTIONAL, 12V MACK, 2013BP Document type PRODUCT SCHEMATIC	Document No 22448341	Issue 03	Volume 1 (1)	Page 53 (53)