https://truckmanualshub.com/

Engineering Release Notice (ERN)	Location	Change Description A = Added D = Deleted W = Was	Document Release Status RELEASED	
		SEE DCN	Date	Modification Count

WIRING DIAGRAM INDEX 12V

NAME	DESCRIPTION	PAGE		NAME	DESCRIPTION	PAGE
AA	POWER DISTRIBUTION 1/2	4		DD	TRANSMISSION CNTR:4 GEN 2/4	27
AB	POWER DISTRIBUTION 2/2	5		DE	TRANSMISSION CNTR:4 GEN 3/4	28
AC	KEY SW., START & CHARGING	6		DF	TRANSMISSION CNTR: 4 GEN – 35 PIN – 4/4	29
AD	GROUNDING	7		EA	ABS MERITOR	30
BA	VEHICLE ECU 1/5	8		EB	ABS BENDIX	31
BB	VEHICLE ECU 2/5	9		FA	AIR DRYER/HEATED DRAIN	32
BC	VEHICLE ECU 4/5 – DCL CONNECTOR	10		FB	CHASSIS SOLENOIDS	33
BD	VEHICLE ECU 5/5	11		FC	MUNCIE PUMP, BEACON LAMPS	34
BE	INSTRUMENT CLUSTER ¼	12		FD	PARKER PTO	35
BF	INSTRUMENT CLUSTER ¾	13		GA	LIGHTING CONTROL	36
BG	INSTRUMENT CLUSTER 4/4	14		GD	LIGHTING - FORWARD/SIGNAL	37
BH	ALLISON BODY BUILDER INTERFACE	15		GF	LIGHTING - TAIL LAMP	38
BM	REFUSE AND CONSTRUCTION	16		GG	TRAILER LIGHTING CONTROL	39
BP	BODY BUILDER REFUSE SPECIAL	17		GH	INTERIOR LIGHTING	40
BQ	VEHICLE ECU 3/5 - RHS	18		GP	WIPER/WASHER	41
BS	INSTRUMENT CLUSTER 2/4 - RHS	19		GQ	HORN WIRING	42
CA	ENGINE INTERFACE MP7	20		HA	CLIMATE CONTROL	43
CB	DPF CONTROL SYSTEM	21		IC	MIRROR CONTROL 1/2	44
CC	ENGINE HEATER	22		ID	MIRROR CONTROL 2/2	45
CD	AUXILIARY COOLING FANS	23		KA	AUDIO & VISUAL SYSTEMS	46
CE	ENGINE INTERFACE CUMMINS ISL-G	24		KC	POWER OUTLET CONNECTIONS	47
CF	UREA DOSING SYSTEM	25		NA	SPARE CONNECTORS AND FEEDS	48
DC	TRANSMISSION CNTR:4 GEN – 31 PIN - 1/4	26		NB	JUNCTION POSTS	49
				XA	DATA LINK/ DIAGNOSTICS	50

Volume	Content	pages
1	Wiring diagram	50
2	Bill of material	41

The copying, distribution and utilization of this document as well as the communication of its contents to others without expressed authorization is prohibited. Offenders will be held liable for payment of damages. All rights reserved in the event of the grant of a patent, utility model or ornamental design registration.

Document Title
WIRE DIAGRAM
LEU 2013BP
SCHEMATIC

VOLVO

Group Trucks Technology

Document Type
PRODUCT SCHEMATIC

Owner Domain:Document Prefix

Document No	Issue Index	Volume No	Page No
21668222	04	1 (2)	1(50)

EDM-W 2000-04-01

CONNECTOR ABBREVIATION LIST

Shell:Cavity	Harnesses: Where Used		Shell:Cavity	Harnesses: Where Used	
6SABS	FRONT_CHASSIS	REAR_CHASSIS_EXTENSION	FCSH	FRONT_CHASSIS	STANCHION_HARNESS
A36_3_CHASSIS.A	BODY_BUILDER_CHASSIS	BODY_BUILDER_CHASSIS	FCSP	{AIR SOLENOID PACK}	REAR_CHASSIS_EXTENSION
A36_3_CHASSIS.C	BODY_BUILDER_CHASSIS	BODY_BUILDER_CHASSIS	FCUT	UREA_TANK	UREA_TANK_EXTENSION
A58.A.A	AUTOTRANS_TRANS	AUTOTRANS_TRANS	FCUTEXT	FRONT_CHASSIS	UREA_TANK_EXTENSION
A58.A.E	AUTOTRANS_TRANS	AUTOTRANS_TRANS	FRC1	MAIN_CAB	
A58.A.O	AUTOTRANS_TRANS	AUTOTRANS_TRANS	FRC2	MAIN_CAB	
A58.A.RS	AUTOTRANS_TRANS	AUTOTRANS_TRANS	FRC3	MAIN_CAB	
A58.A.T	AUTOTRANS_TRANS	AUTOTRANS_TRANS	H02DHJ	FRONT_CHASSIS	DUAL_HORN_JUMPER
A58.O	AUTOTRANS_TRANS	AUTOTRANS_TRANS	HOOKUP_LP	MAIN_CAB	XXX
ABS_OPTION	MAIN_CAB	XXX	ILLUM_OPT	MAIN_CAB	
ABS_X1	MAIN_CAB	ABS_JUMPER	ILLUM_OPT2	MAIN_CAB	CAMERA_SWITCH
ABS_X2	MAIN_CAB	ABS_JUMPER	ILLUM_OPT3	MAIN_CAB	CAMERA_SWITCH
AC	ROOF_AC_CAB	ROOF_AC_ROOF	ILLUM_OPT4	MAIN_CAB	DRL_OVERRIDE_SWITCH
AC1	ROOF_AC_CAB	ROOF_AC_CHASSIS	ILLUM_OPT5	MAIN_CAB	DRL_OVERRIDE_SWITCH
ALLISON	AUTOTRANS_TRANS	AUTOTRANS_ABS_CAB	ILLUM_OPT6	MAIN_CAB	PARKER_PTO_OVERLAY
ATTR	AUTOTRANS_TRANS	AUTOTRANS_ABS_CAB	ILLUM_OPT7	MAIN_CAB	PARKER_PTO_OVERLAY
BB_CAB1_AB	BB_CAB_B		IMS	FRONT_CHASSIS	STARTER_IMS_TERMINAL
BB_CAB1_BC	BB_CAB_B	BB_CAB_C	LHCS	FRONT_CHASSIS	CNG_LH_STANTION
BB_CAB2_AB	BB_CAB_A	BB_CAB_B	LHSP	FRONT_CHASSIS	CNG_LH_STANTION
BB_CAB2_BC	BB_CAB_B	BB_CAB_C	MC_SOL_SW	MAIN_CAB	SOLENOID_SW
BB_CUMMINS	MAIN_CAB	BB_CAB_A	MCAATS	FRONT_CHASSIS	AIR_TEMP_SENSOR
BB_PK_BK	MAIN_CAB	BB_PARK_BK	MCAF	MAIN_CAB	AUX_FAN
BB3_A	BB_CAB_A		MCAF2	MAIN_CAB	AUX_FAN
BB3_B	BB_CAB_A		MCAT_A	MAIN_CAB	AUTOTRANS_ABS_CAB
BB3_DCL	BB_CAB_A		MCAT_B	MAIN_CAB	AUTOTRANS_ABS_CAB
BB3_X06D	BB_CAB_A		MCAT_C	MAIN_CAB	AUTOTRANS_ABS_CAB
BBCP	BB_CAB_A	BB_CLEAN_POWER_CHASSIS	MCAT_D	MAIN_CAB	AUTOTRANS_ABS_CAB
BBDCL	BB_CAB_A		MCAT_E	MAIN_CAB	AUTOTRANS_ABS_CAB
BBIC1	BODY_BUILDER_CHASSIS		MCDLR	MAIN_CAB	TELMA_CAB
BBMCFC1	BB_CAB_C	BODY_BUILDER_CHASSIS	MCDO	MAIN_CAB	DRL_OVERRIDE_SWITCH
BBMCFC2	BB_CAB_C	BODY_BUILDER_CHASSIS	MCFC	MAIN_CAB	FRONT_CHASSIS
BBMCO	MAIN_CAB	BB_CAB_A	MCFCAF	MAIN_CAB	FRONT_CHASSIS
BBSP1	BB_CAB_A		MCFG	MAIN_CAB	FUEL_GAUGE_JUMPER
BBSP2	BB_CAB_A		MCMSO	MAIN_CAB	MIRROR_SWITCH_OVERLAY
BBSP3	BB_CAB_A		MCPM	MAIN_CAB	PWR_MIRROR_CAB
BBSP4	BB_CAB_A		MCRF1	MAIN_CAB	ROOF
BBSP5	BB_CAB_A		MCRF2	MAIN_CAB	ROOF
BBSP6	BB_CAB_A		MCRF3	MAIN_CAB	ROOF
BLA_BBC	BB_CAB_A	BB_CAB_B	MCRF4	MAIN_CAB	ROOF

https://truckmanualshub.com/

Shell:Cavity	Harnesses: Where Used		Shell:Cavity	Harnesses: Where Used	
BLA_BLB	BB_CAB_A	BB_CAB_B	MCTL	TAIL_LAMP	REAR_CHASSIS_EXTENSION
BLB_BLC	BB_CAB_B	BB_CAB_C	MCWB1	MAIN_CAB	WASHER_BOTTLE
BP_CAB_AB	BODYPWR_CAB_A	BODYPWR_CAB_B	MCWB2	MAIN_CAB	WASHER_BOTTLE
BP_CAB_BC	BODYPWR_CAB_B	BODYPWR_CAB_C	MCWL_A	WORKLAMP_CAB	
BPMCFC	BODYPWR_CAB_C	BODYPOWER_FRONTCHASSIS	MCWL_B	WORKLAMP_CAB	
BWFC	FRONT_CHASSIS	BRAKE_WEAR_FRONT	NYC_BODY	MAIN_CAB	XXX
BWRC	FRONT_CHASSIS	BRAKE_WEAR_REAR	PB_START	PBSTART_HARNESS	
CBBFCBB	BB_CAB_C	BODY_BUILDER_CHASSIS	PLOW_LMP	FRONT_CHASSIS	
CDPF	FRONT_CHASSIS	CNG_RH_STANTION	PPCO	AUTOTRANS_ABS_CAB	PARKER_PTO_OVERLAY
CLN_PWR	FRONT_CHASSIS	CLEAN_POWER	RC1	MAIN_CAB	
CPBBFC	FRONT_CHASSIS	BB_CLEAN_POWER_CHASSIS	RC2	MAIN_CAB	
CPBBMC	MAIN_CAB	BB_CAB_A	RC3	MAIN_CAB	XXX
DRL_OR_BB_DCL	BB_CAB_A	DRL_OVERRIDE_SWITCH	RC4	MAIN_CAB	
DRL_OR_DCL	MAIN_CAB	DRL_OVERRIDE_SWITCH	RC5	AUX_FAN	
DRL_OR_DCL2	MAIN_CAB	DRL_OVERRIDE_SWITCH	RC6	MAIN_CAB	XXX
DSFC	DS_HARNESS	REAR_CHASSIS_EXTENSION	RHGJ	ROOF	GLAD_JUMPER
DSFRT	DS_HARNESS	DS_HARNESS_EXT_MERITOR	RHGJ1	ROOF	GLAD_JUMPER
DSRR	DS_HARNESS	DS_HARNESS_EXT_MERITOR	SP_BAT1	MAIN_CAB	
EOPS	FRONT_CHASSIS	ENG_OIL_PRESSURE	SP_FUSE	MAIN_CAB	
FCAD	FRONT_CHASSIS	AIR_DRYER_EXT	SP_FUSE_BB3	BB_CAB_A	
FCAR	AIR_RESTRICTION	CNG_LH_STANTION	SP_IGN1	MAIN_CAB	AUX_FAN
FCBL	FRONT_CHASSIS	BODYPOWER_FRONTCHASSIS	SP_IGN2	MAIN_CAB	BB_CAB_A
FCCE	FRONT_CHASSIS	REAR_CHASSIS_EXTENSION	SP_IGN3	MAIN_CAB	
FCCP	FRONT_CHASSIS	CLN_PWR_ACM	SP_RLY	MAIN_CAB	BB_CAB_A
FCEFS	FRONT_CHASSIS	ENGINE_FAN_HARNESS	SP_RLY_BB3	BB_CAB_A	
FCEIC	FRONT_CHASSIS		TLBU	TAIL_LAMP	BACKUP_ALARM
FCFS	FRONT_CHASSIS	FUEL_SENDER_EXT	TRPTO	PTO	AUTOTRANS_TRANS
FCLA	LIFT_AXLE	FRONT_CHASSIS	WL	MAIN_CAB	WORKLAMP_ROOF

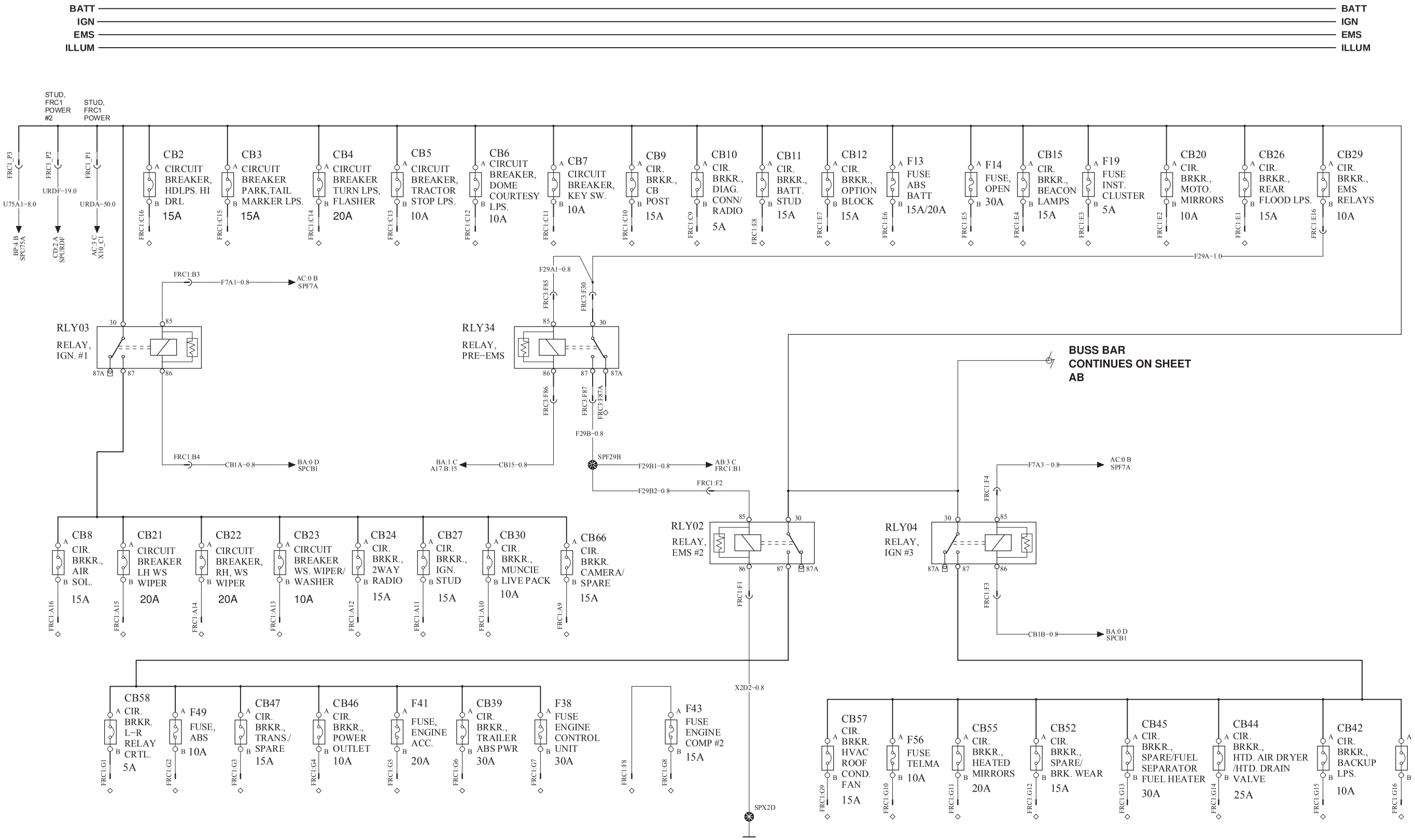

VOLVO Group Trucks Technology	Document title: WIRING DIAGRAM - TYPE OL Document type: PRODUCT SCHEMATIC	Document No: 21668222	Issue: 04	Volume: 1 (2)	Page: 4 (50)

https://truckmanualshub.com/

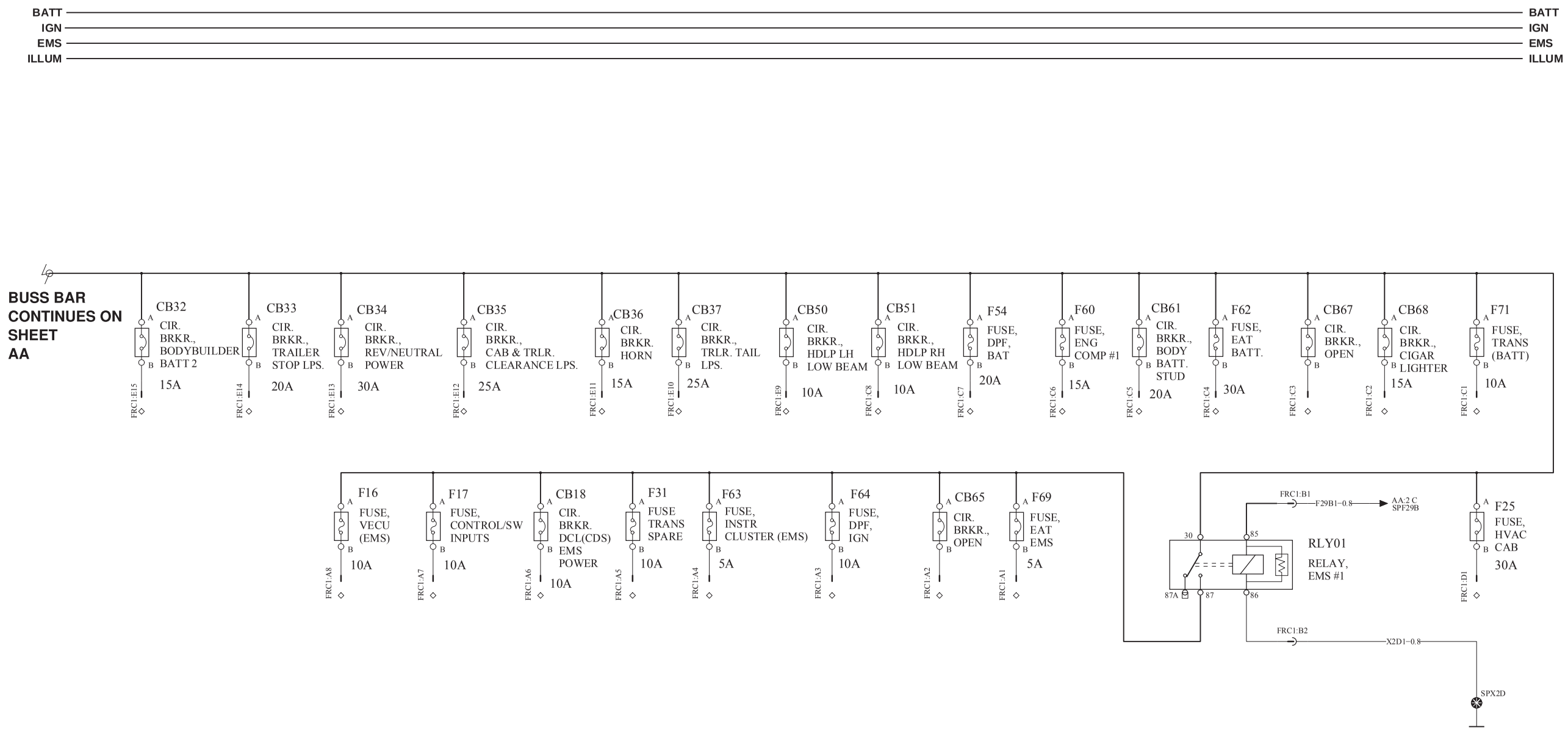

VOLVO Group Trucks Technology	Document title: WIRING DIAGRAM - TYPE OL Document type: PRODUCT SCHEMATIC	Document No: 21668222	Issue: 04	Volume: 1 (2)	Page: 5 (50)

https://truckmanualshub.com/

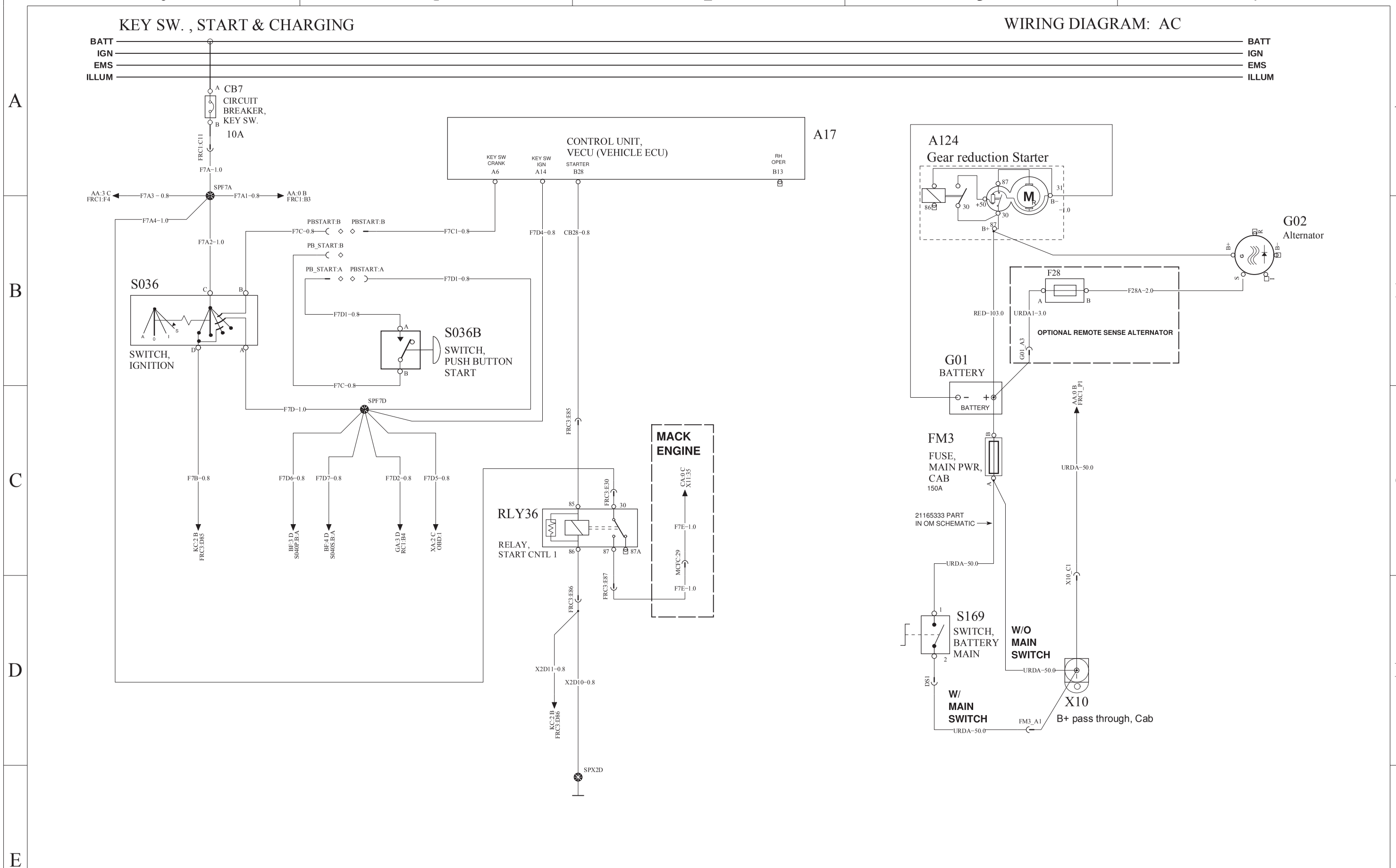

VOLVO Group Trucks Technology	Document title: WIRING DIAGRAM - TYPE OL Document type: PRODUCT SCHEMATIC	Document No: 21668222	Issue: 04	Volume: 1 (2)	Page: 6 (50)

https://trucksmanualshub.com/

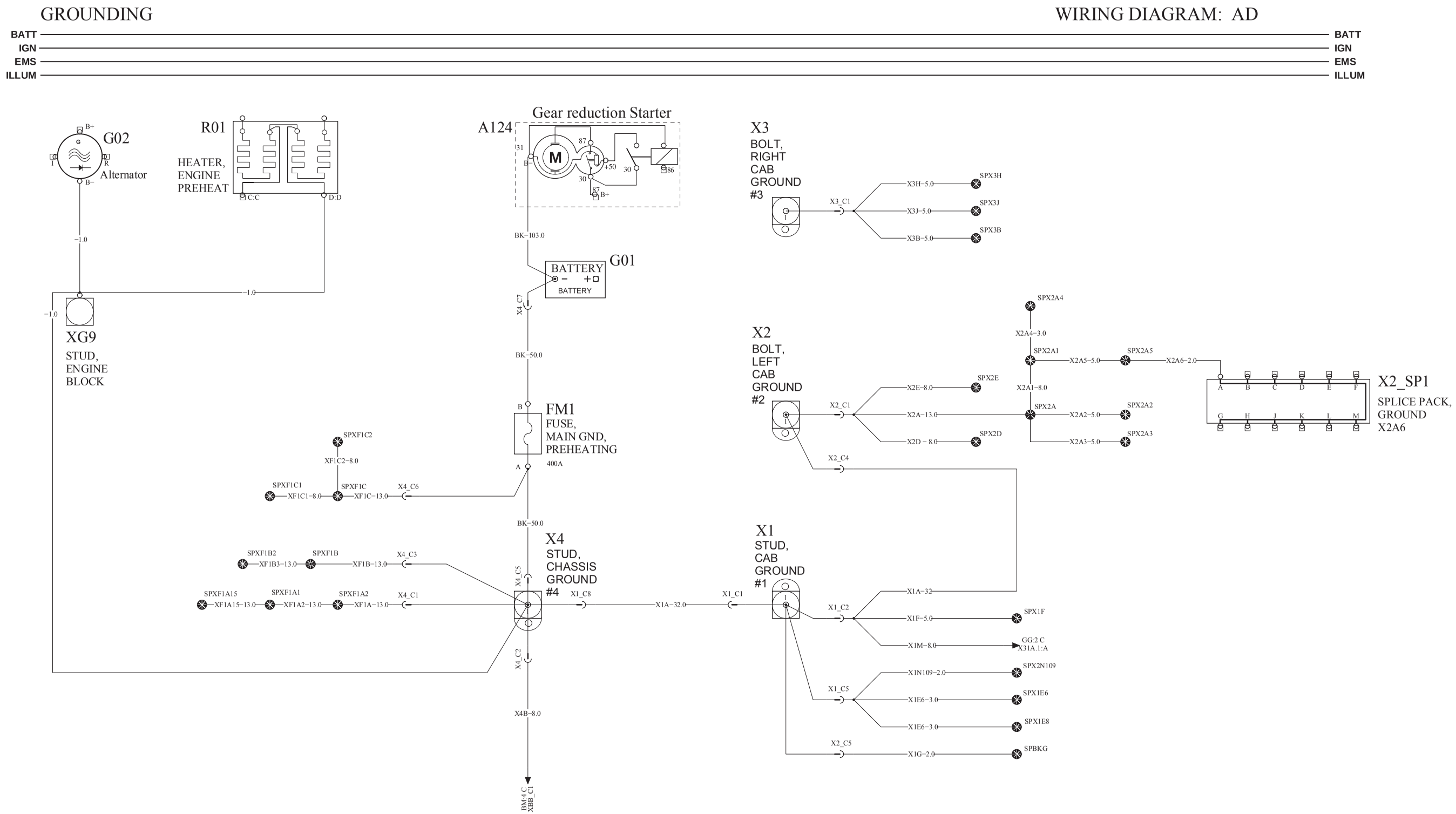

VOLVO Group Trucks Technology	Document title: WIRING DIAGRAM - TYPE OL Document type: PRODUCT SCHEMATIC	Document No: 21668222	Issue: 04	Volume: 1 (2)	Page: 7 (50)

https://truckmanualshub.com/

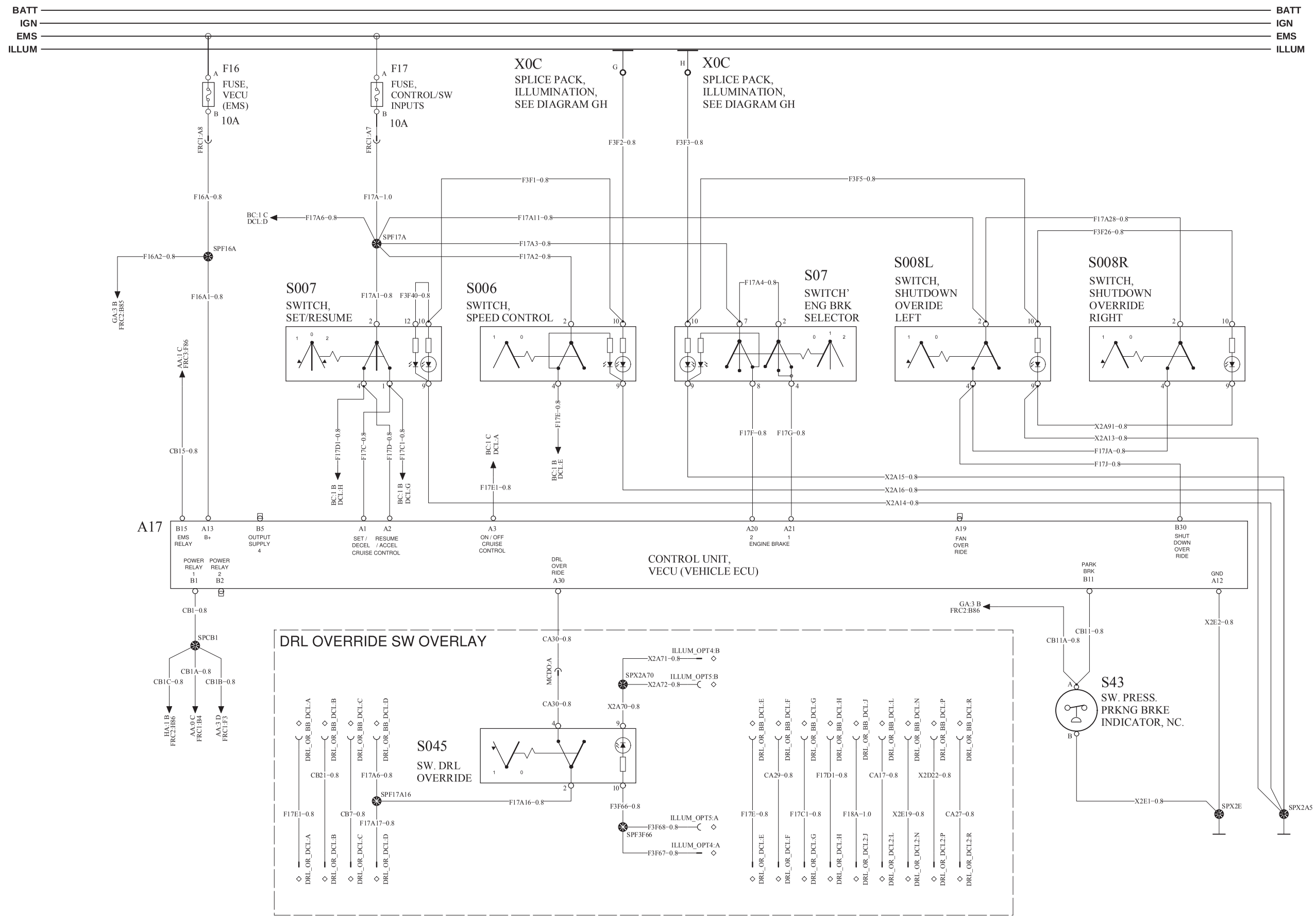

Document title	Document No	Issue	Volume	Page
WIRING DIAGRAM - TYPE OL	21668222	04	1 (2)	8 (50)
Document type: PRODUCT SCHEMATIC				

VOLVO Group Trucks Technology

https://truckmanualshub.com/

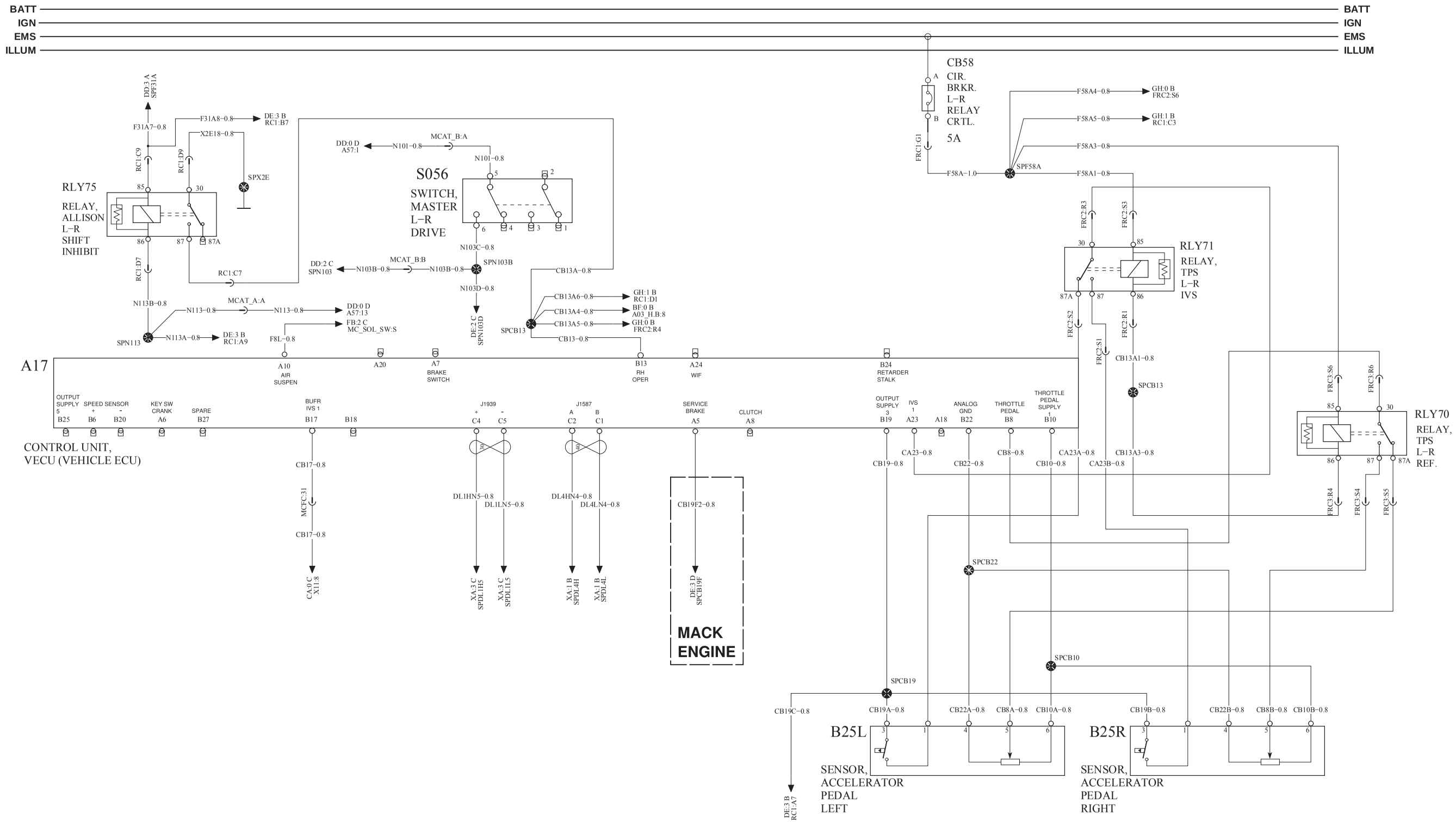

VOLVO Group Trucks Technology	Document title: WIRING DIAGRAM - TYPE OL Document type: PRODUCT SCHEMATIC	Document No: 21668222	Issue: 04	Volume: 1 (2)	Page: 9 (50)

https://truckmanualshub.com/

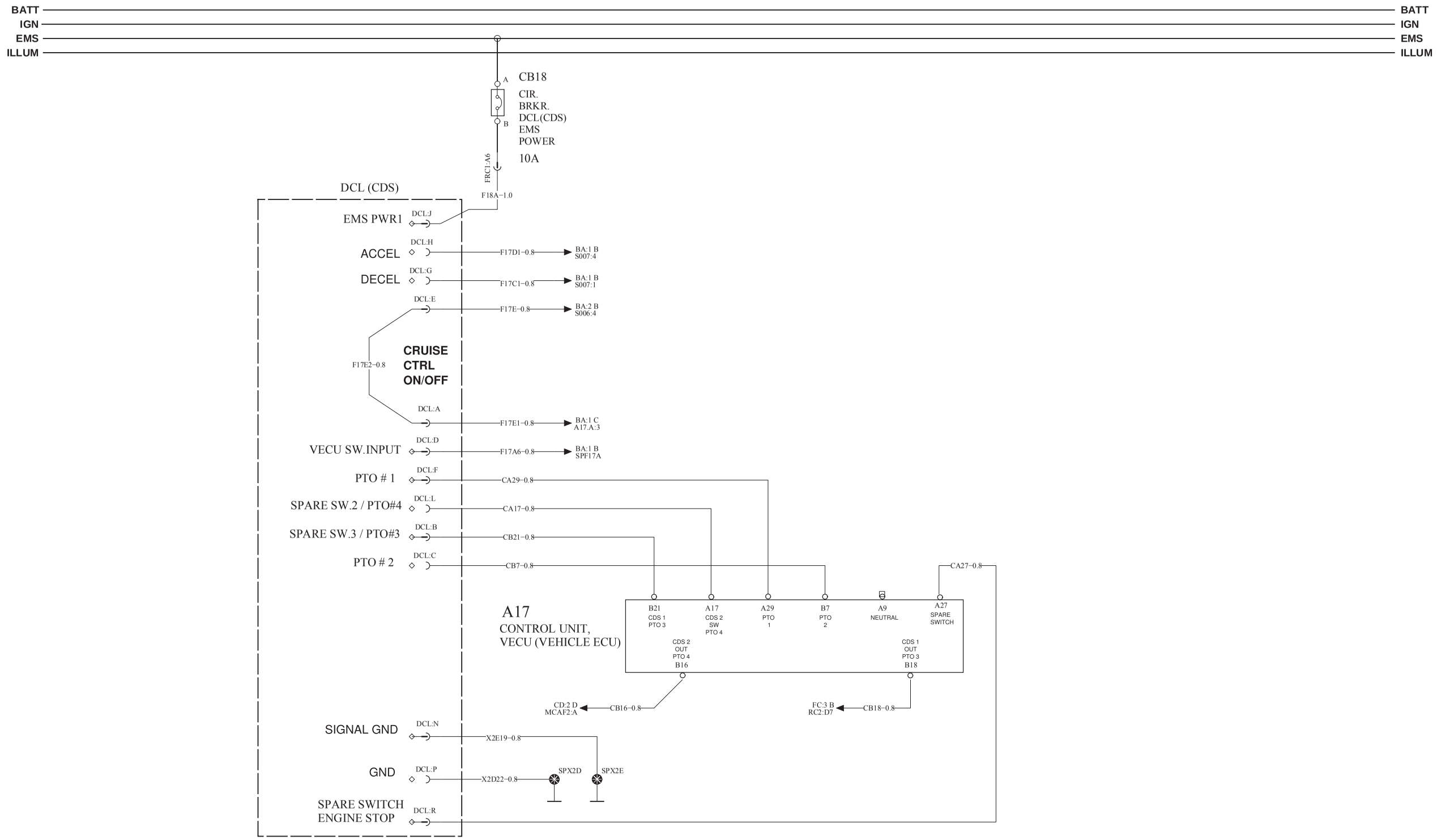

VOLVO Group Trucks Technology	Document title: WIRING DIAGRAM - TYPE OL Document type: PRODUCT SCHEMATIC	Document No: 21668222	Issue: 04	Volume: 1 (2)	Page: 10 (50)

https://truckmanualshub.com/

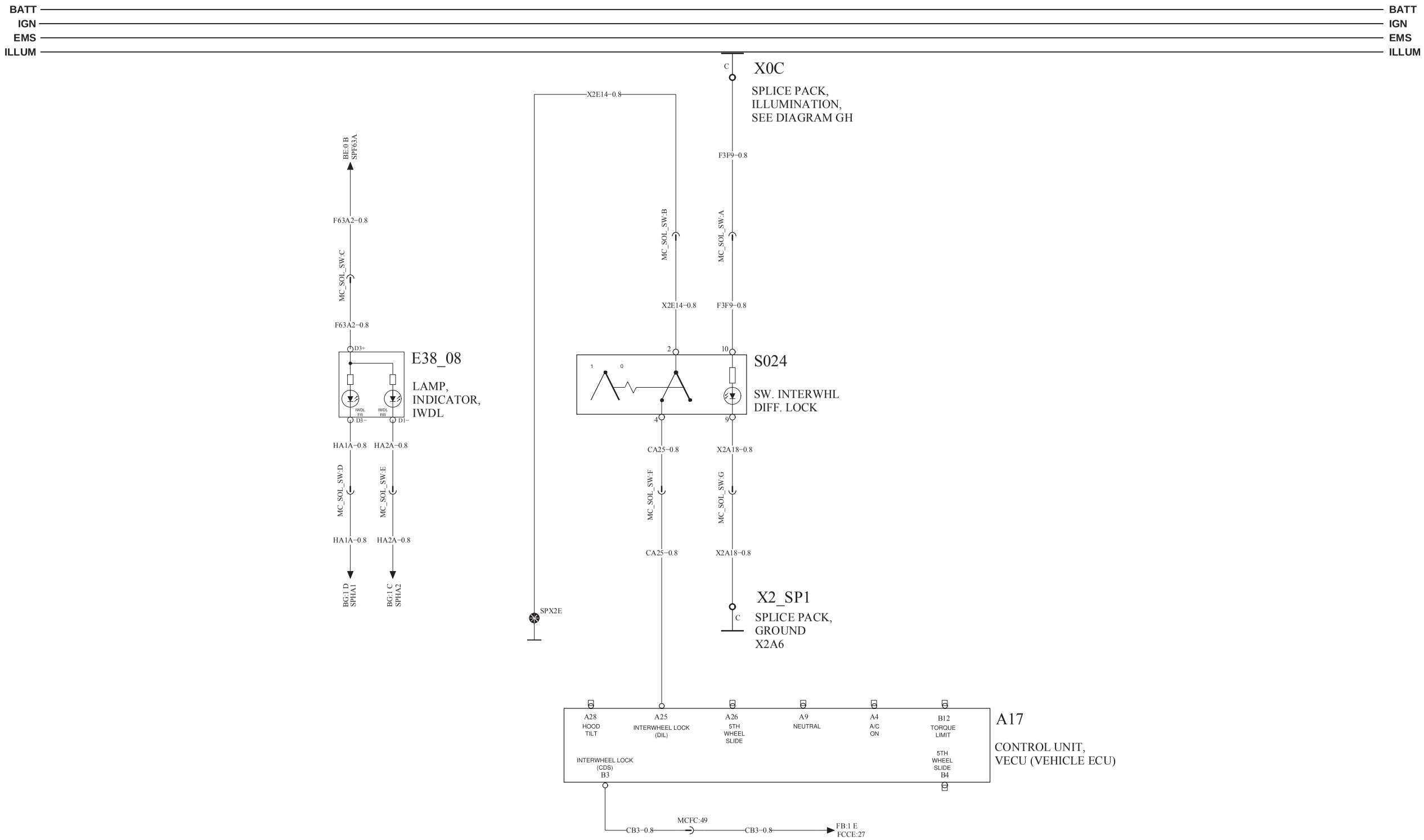

https://truckmanualshub.com/

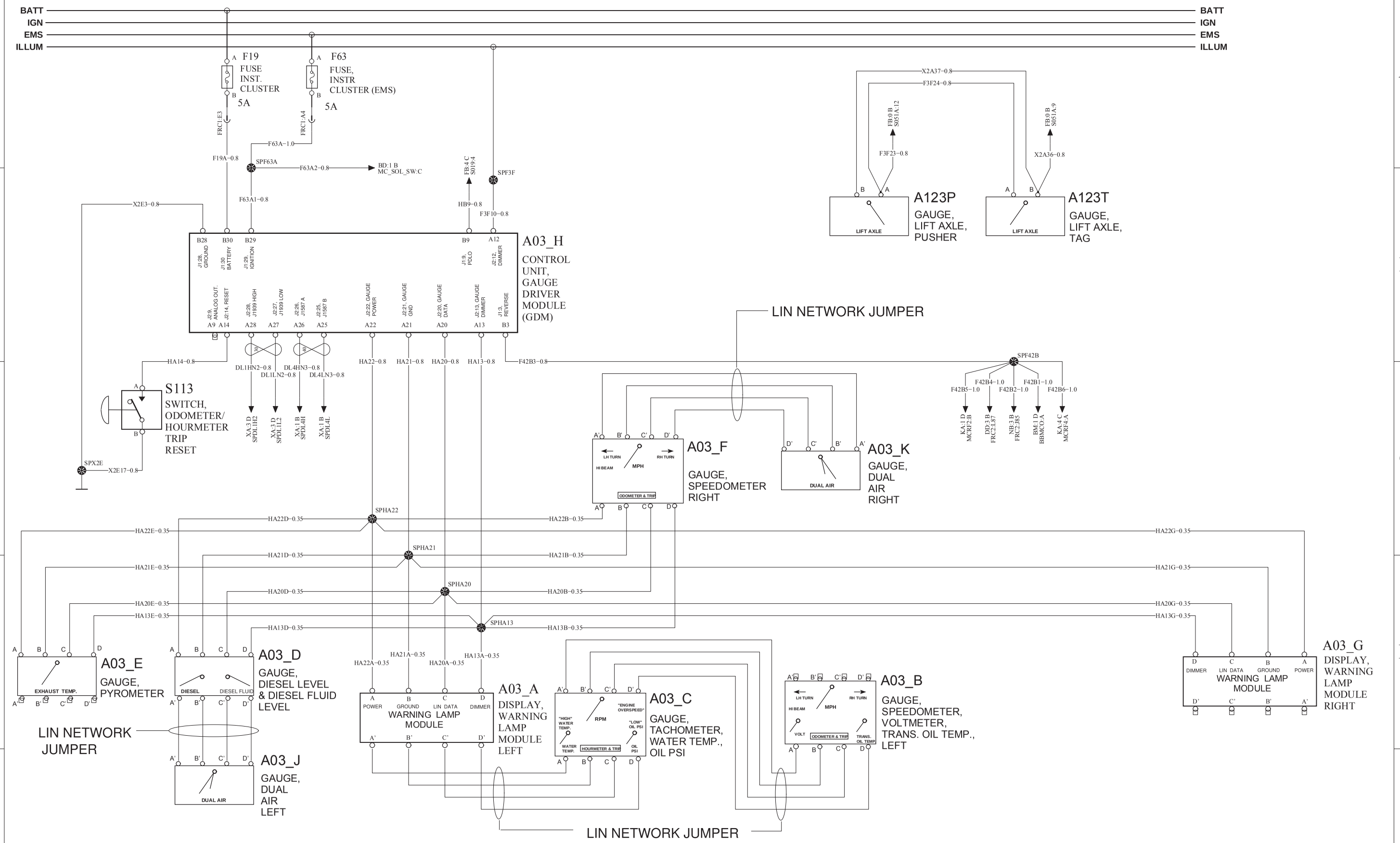

VOLVO Group Trucks Technology	Document title WIRING DIAGRAM - TYPE OL Document type PRODUCT SCHEMATIC	Document No 21668222	Issue 04	Volume 1 (2)	Page 12 (50)

https://trucksmanualshub.com/

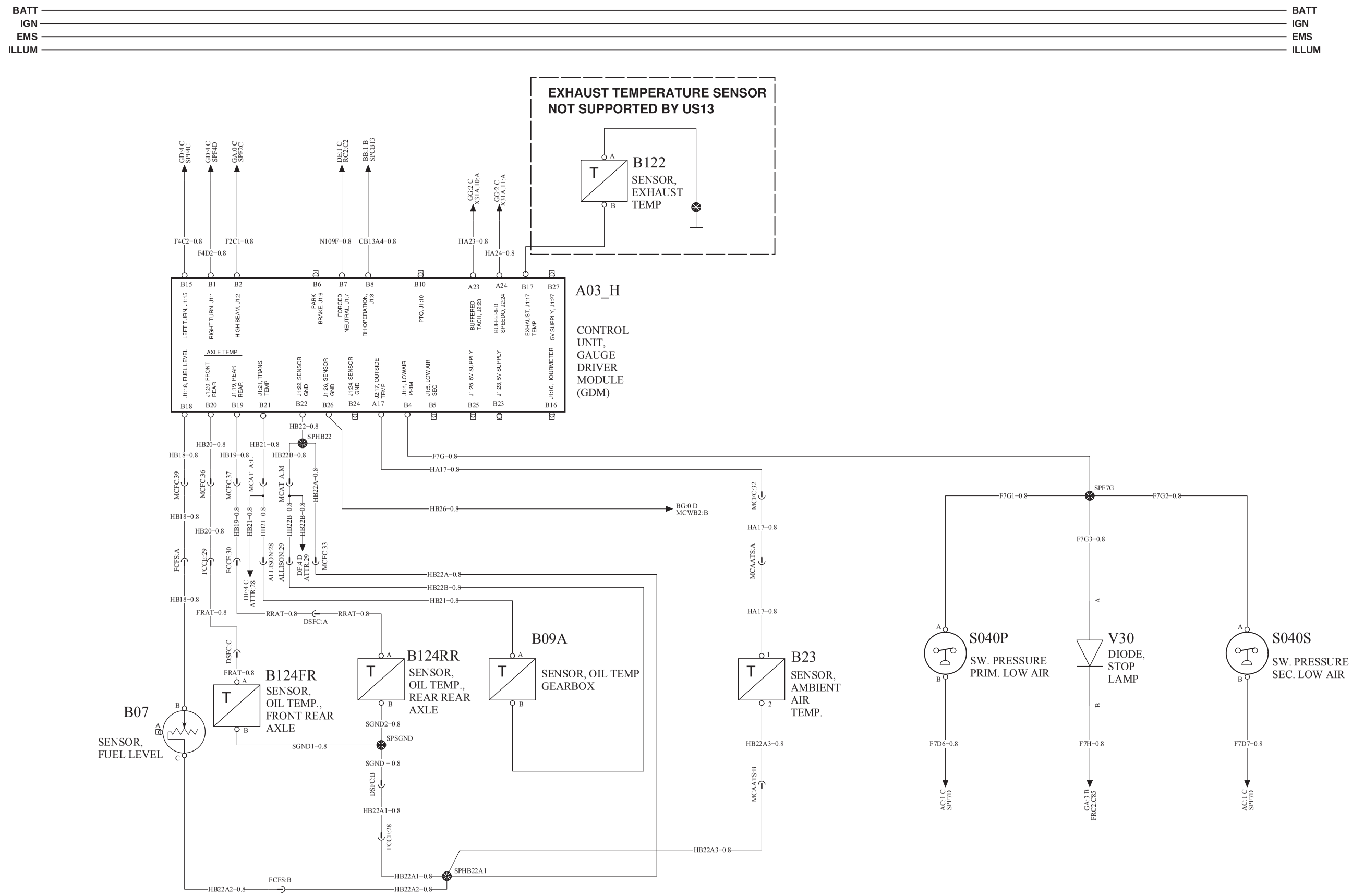

VOLVO Group Trucks Technology	Document title: WIRING DIAGRAM - TYPE OL Document type: PRODUCT SCHEMATIC	Document No: 21668222	Issue: 04	Volume: 1 (2)	Page: 13 (50)

https://truckmanualshub.com/

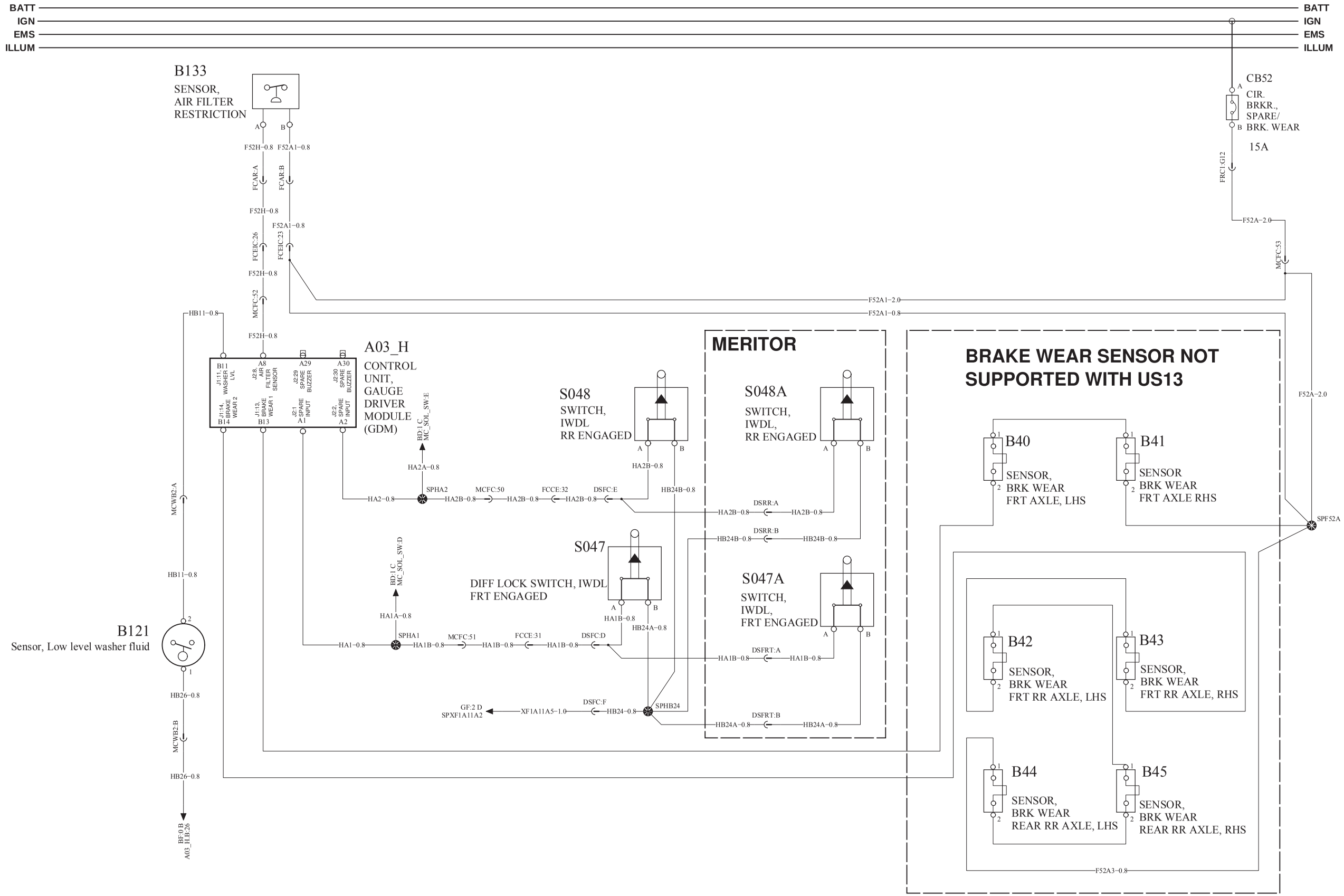

VOLVO Group Trucks Technology	Document title: WIRING DIAGRAM - TYPE OL Document type: PRODUCT SCHEMATIC	Document No: 21668222	Issue: 04	Volume: 1 (2)	Page: 14 (50)

https://trucksmanualshub.com/

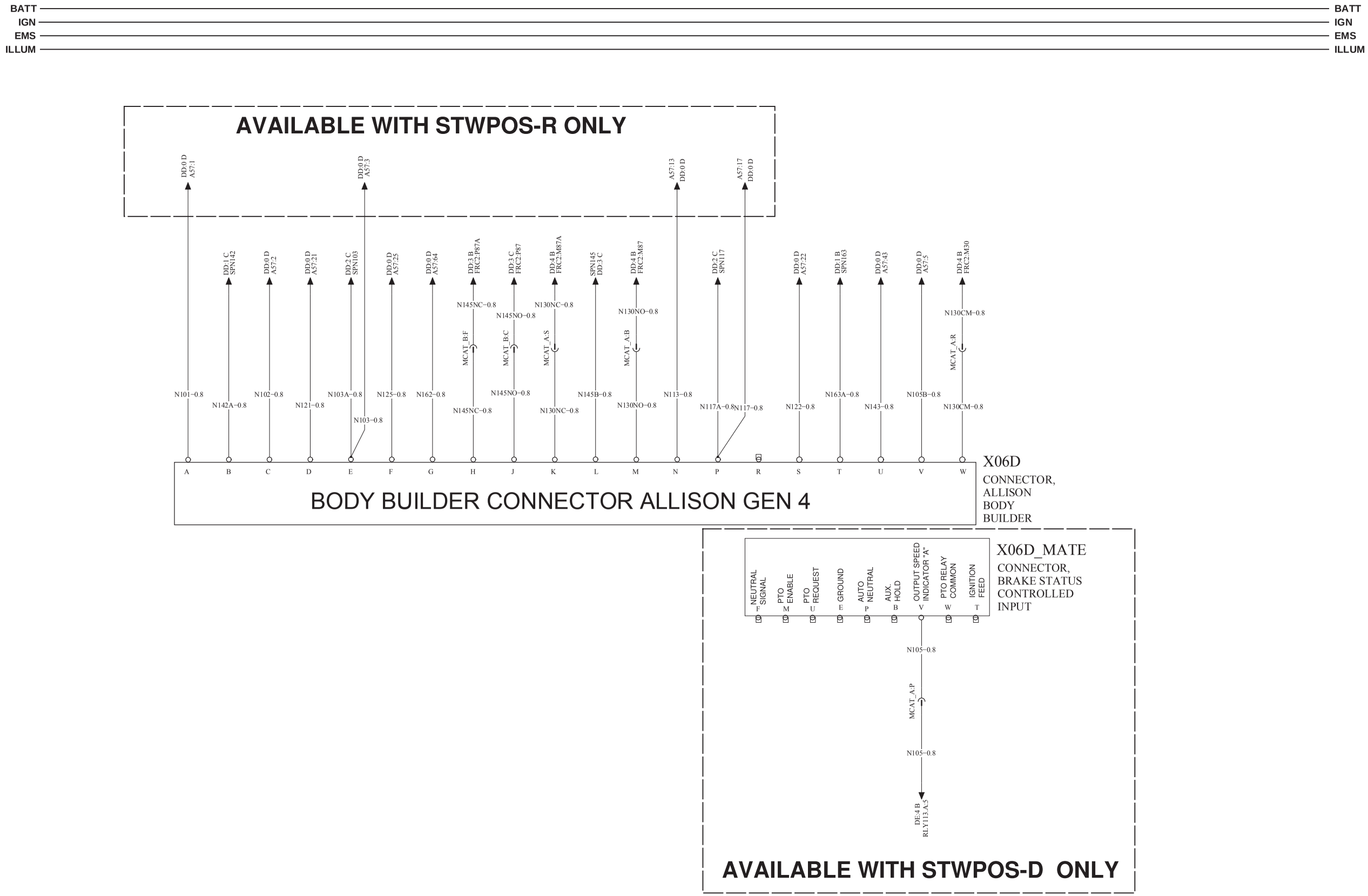

https://trucksmanualshub.com/

BATT
IGN
EMS
ILLUM

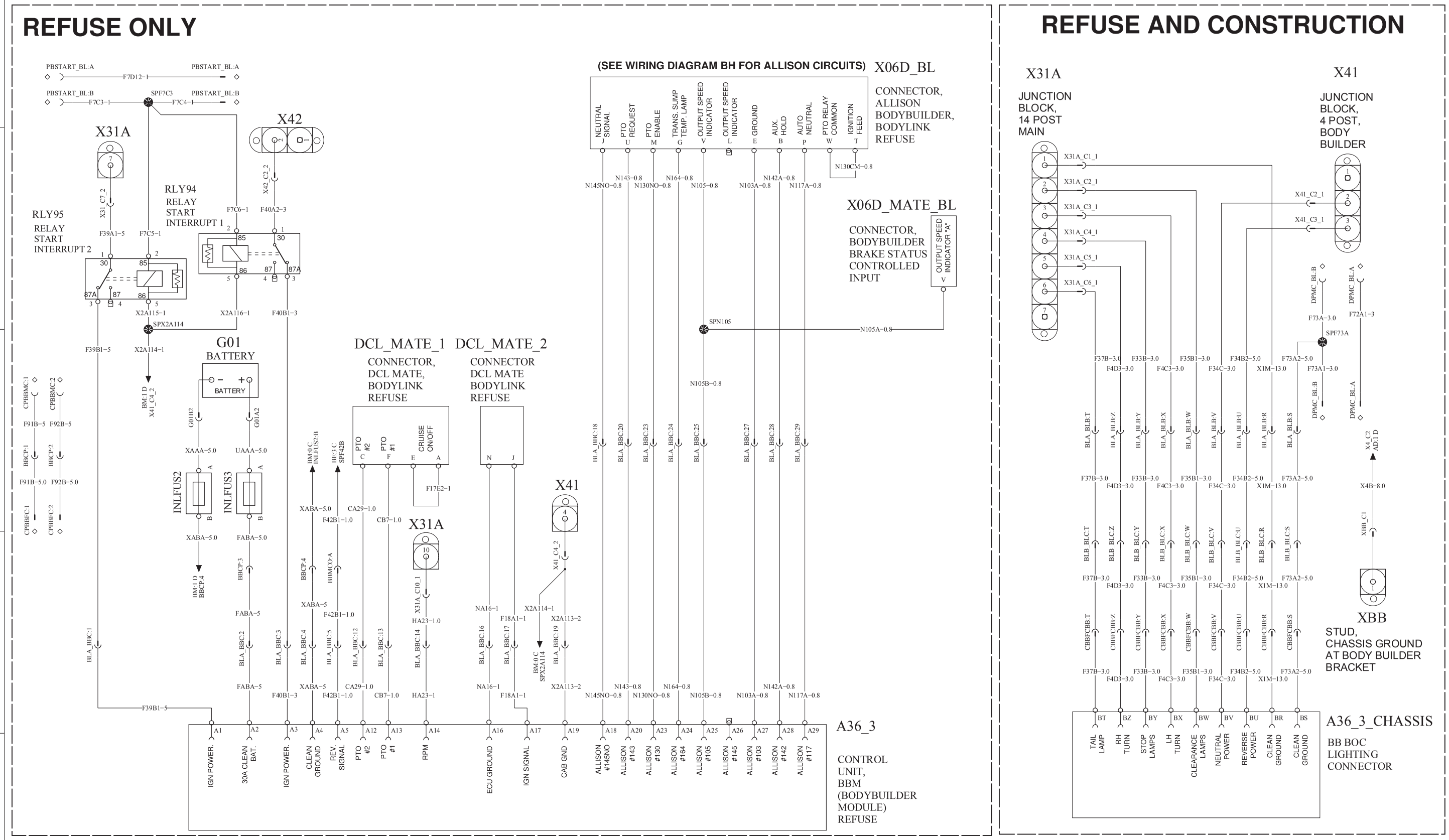

VOLVO Group Trucks Technology	Document title: WIRING DIAGRAM - TYPE OL Document type: PRODUCT SCHEMATIC	Document No: 21668222	Issue: 04	Volume: 1 (2)	Page: 16 (50)

https://trucksmanualshub.com/

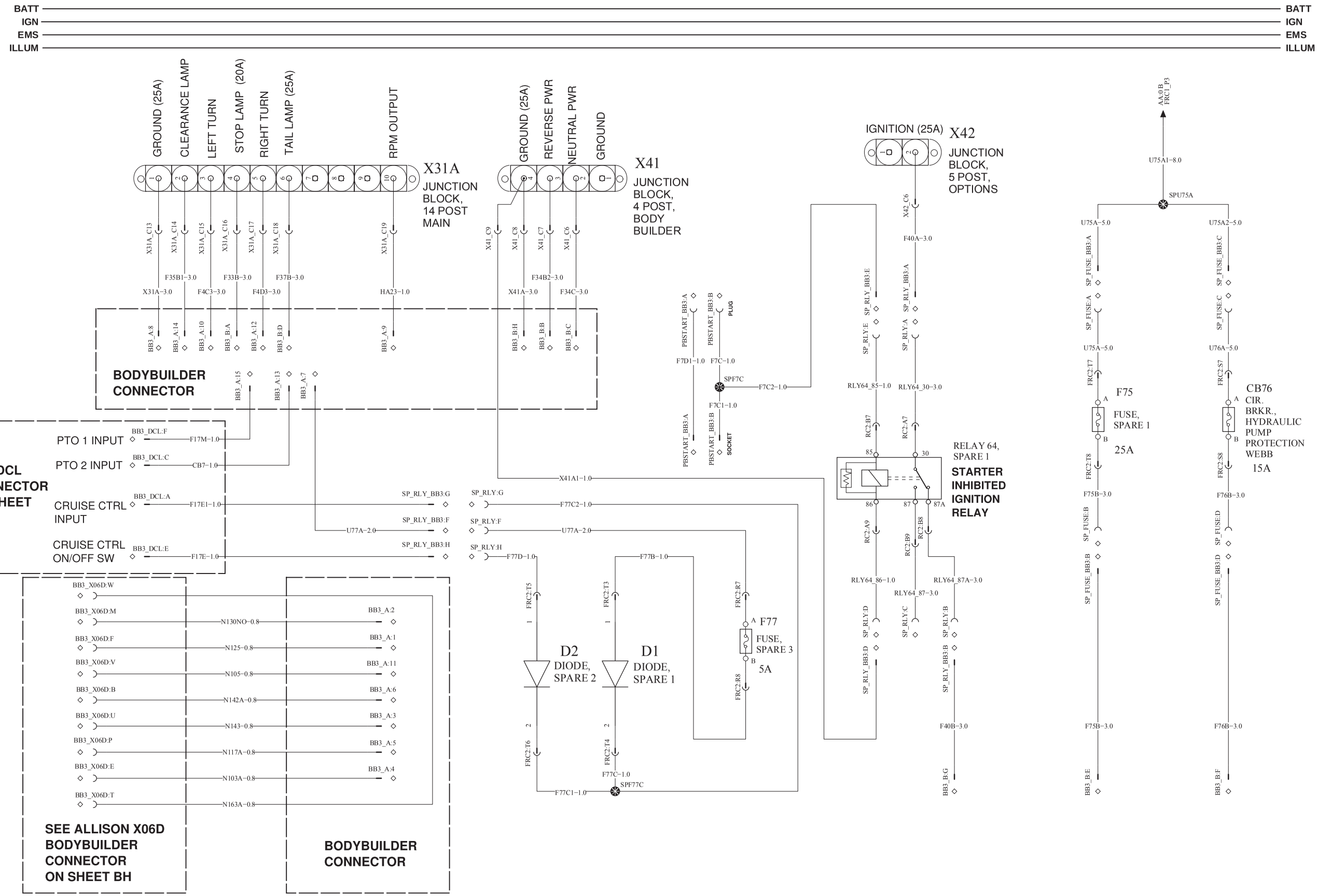

VOLVO Group Trucks Technology	Document title: WIRING DIAGRAM - TYPE OL Document type: PRODUCT SCHEMATIC	Document No: 21668222	Issue: 04	Volume: 1 (2)	Page: 17 (50)

https://trucksmanualshub.com/

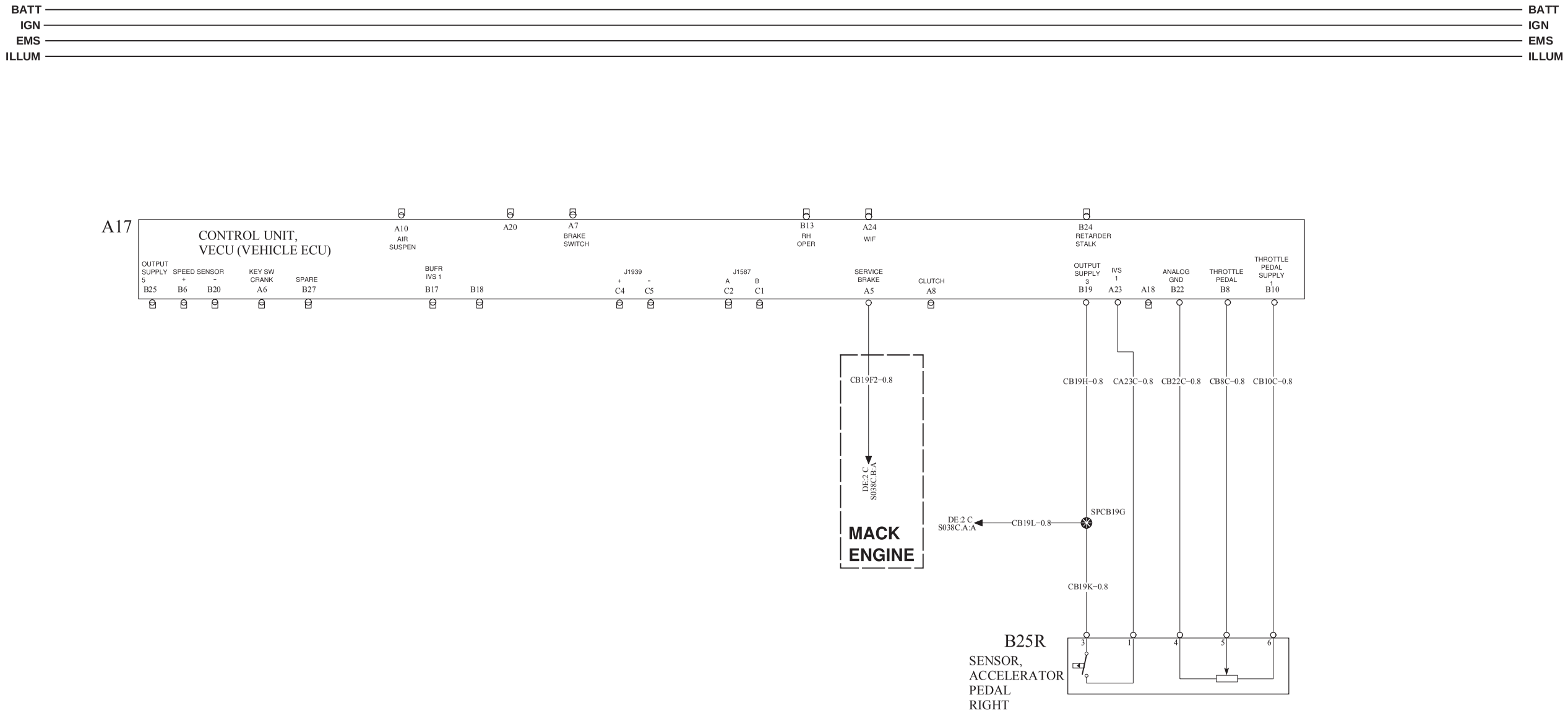

https://trucksmanualshub.com/

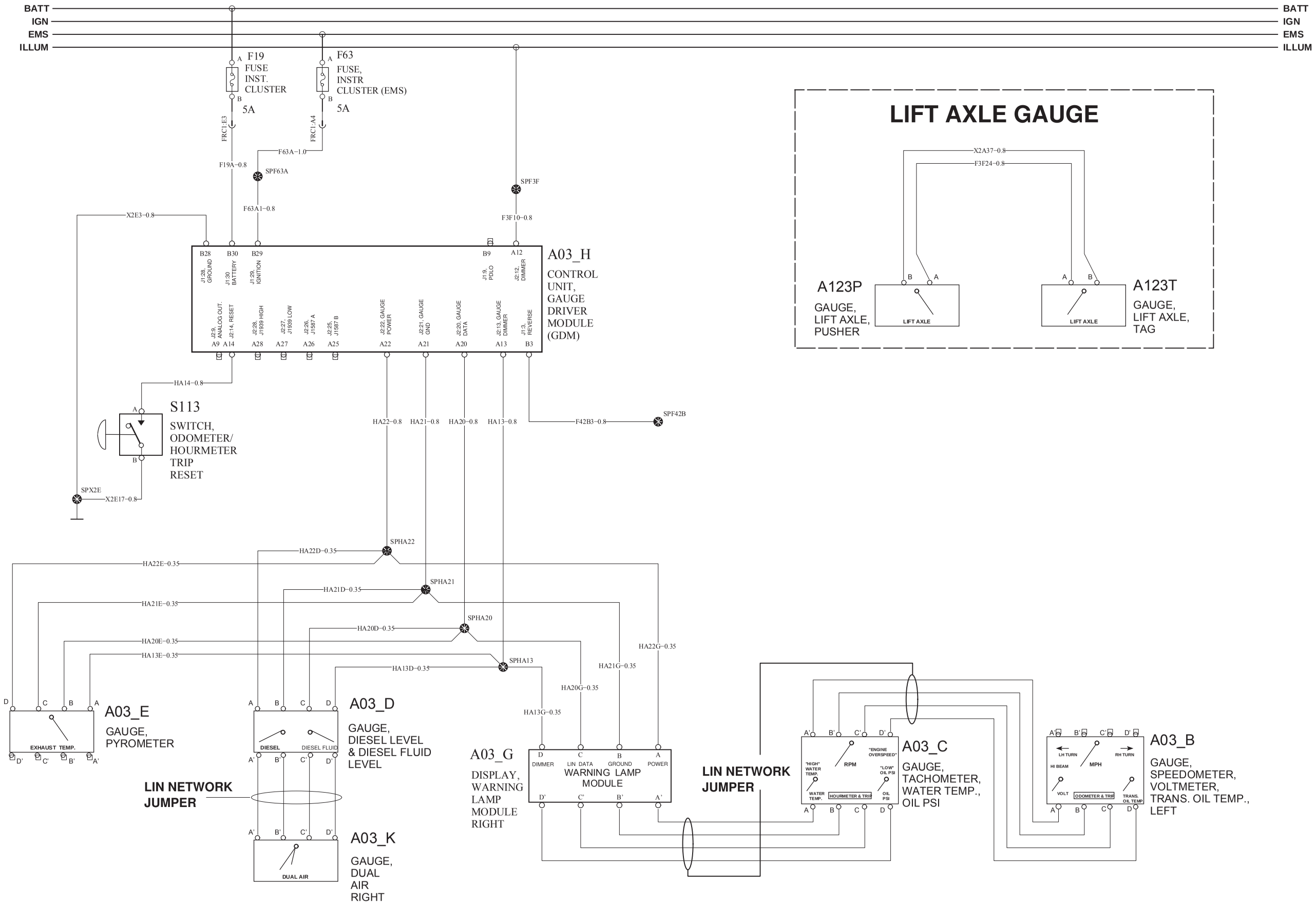

VOLVO Group Trucks Technology	Document title: WIRING DIAGRAM - TYPE OL Document type: PRODUCT SCHEMATIC	Document No: 21668222	Issue: 04	Volume: 1 (2)	Page: 19 (50)

https://truckmanualshub.com/

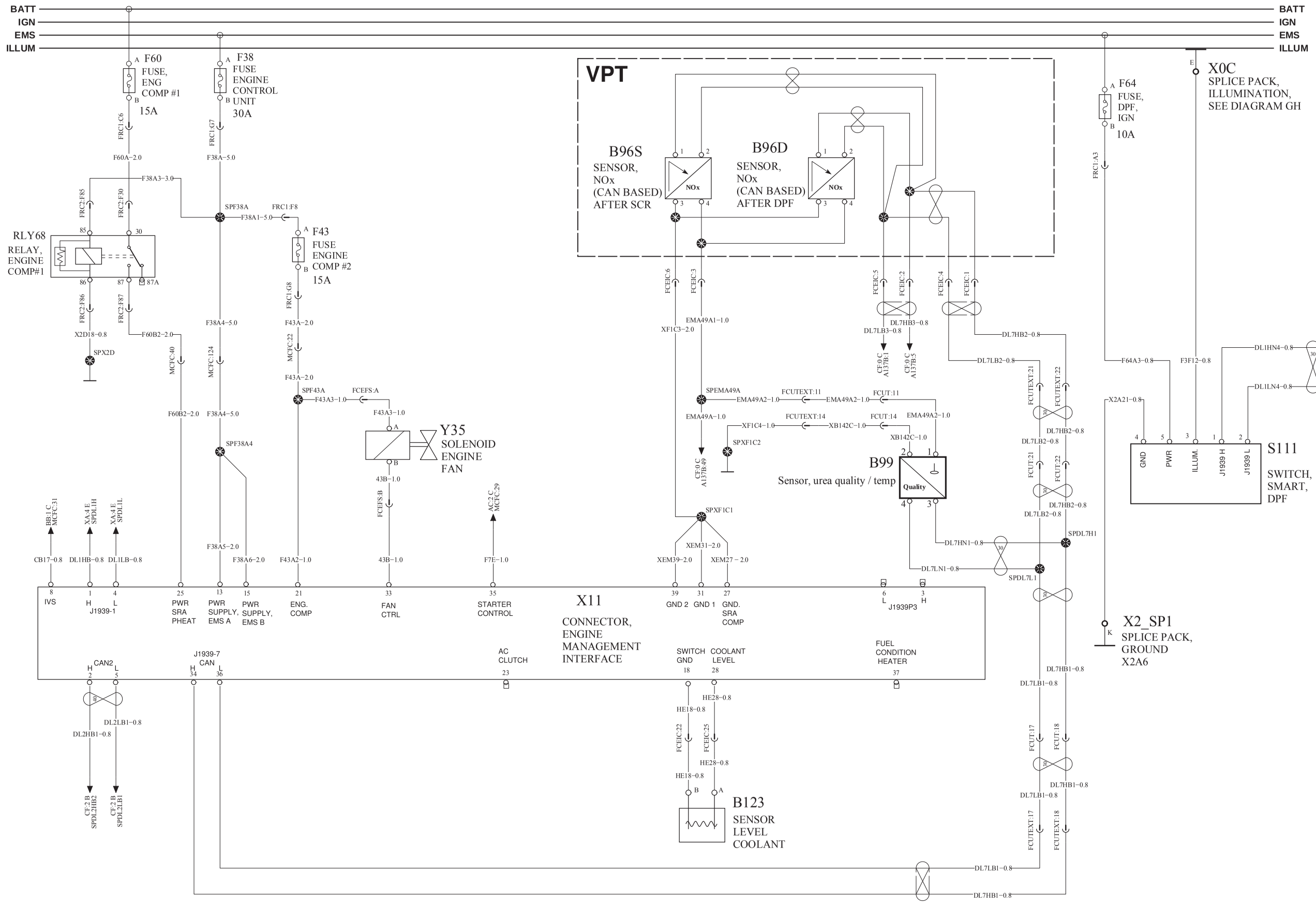

VOLVO Group Trucks Technology	Document title: WIRING DIAGRAM - TYPE OL Document type: PRODUCT SCHEMATIC	Document No: 21668222	Issue: 04	Volume: 1 (2)	Page: 20 (50)

https://truckmanualshub.com/

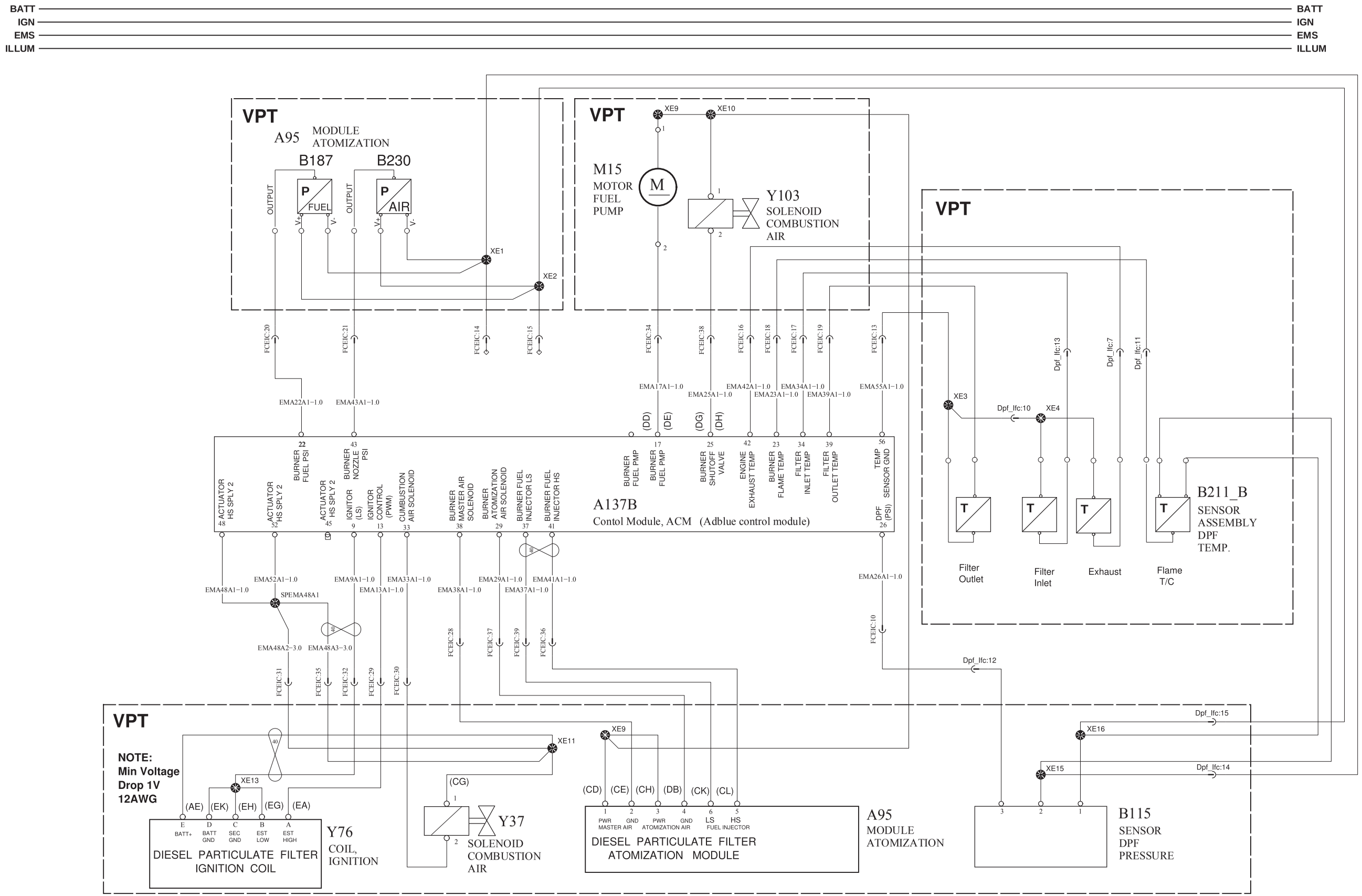

VOLVO Group Trucks Technology	Document title WIRING DIAGRAM - TYPE OL Document type PRODUCT SCHEMATIC	Document No 21668222	Issue 04	Volume 1 (2)	Page 21 (50)

https://truckmanualshub.com/

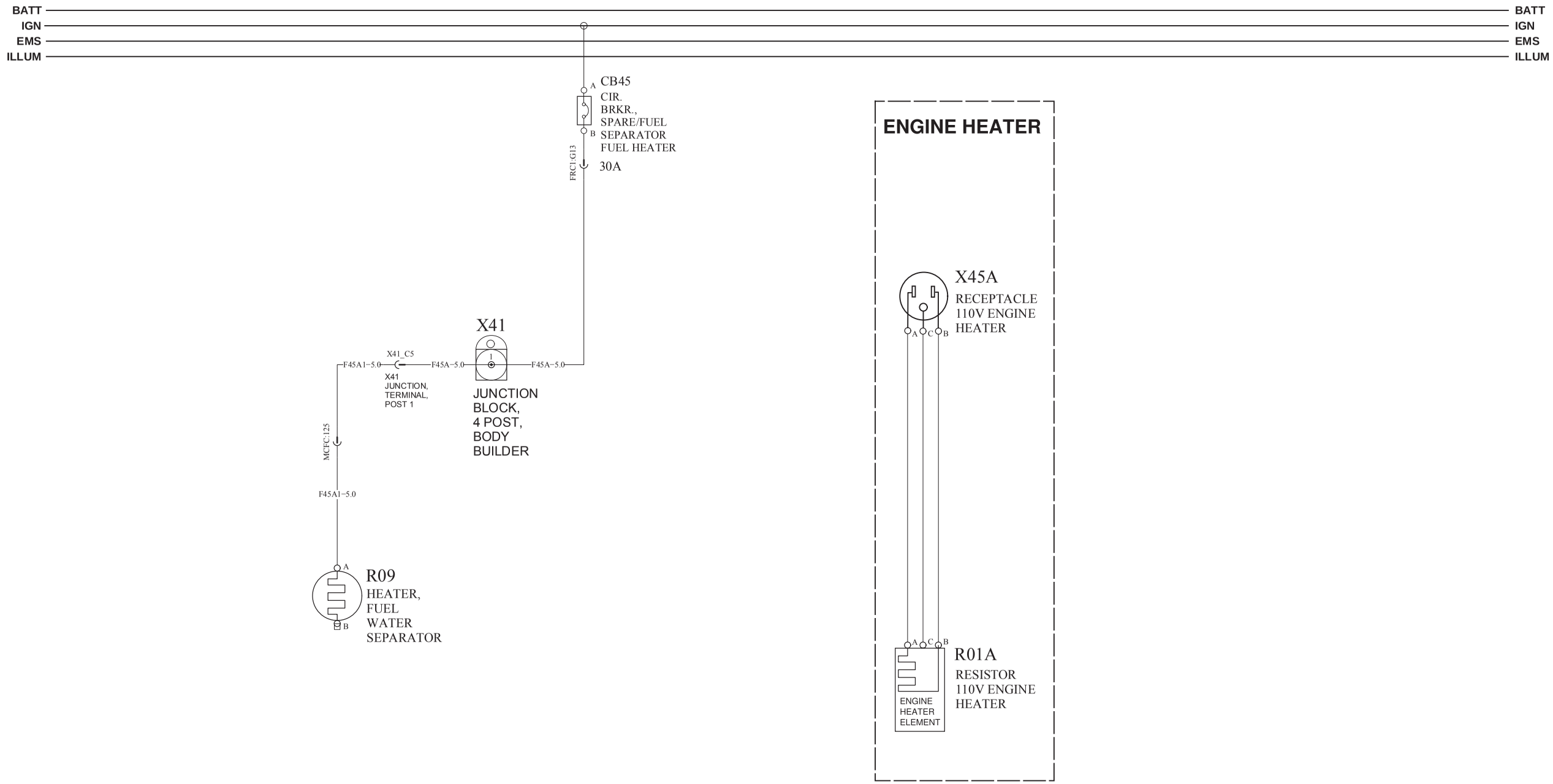

https://trucksmanualshub.com/

BATT
IGN
EMS
ILLUM

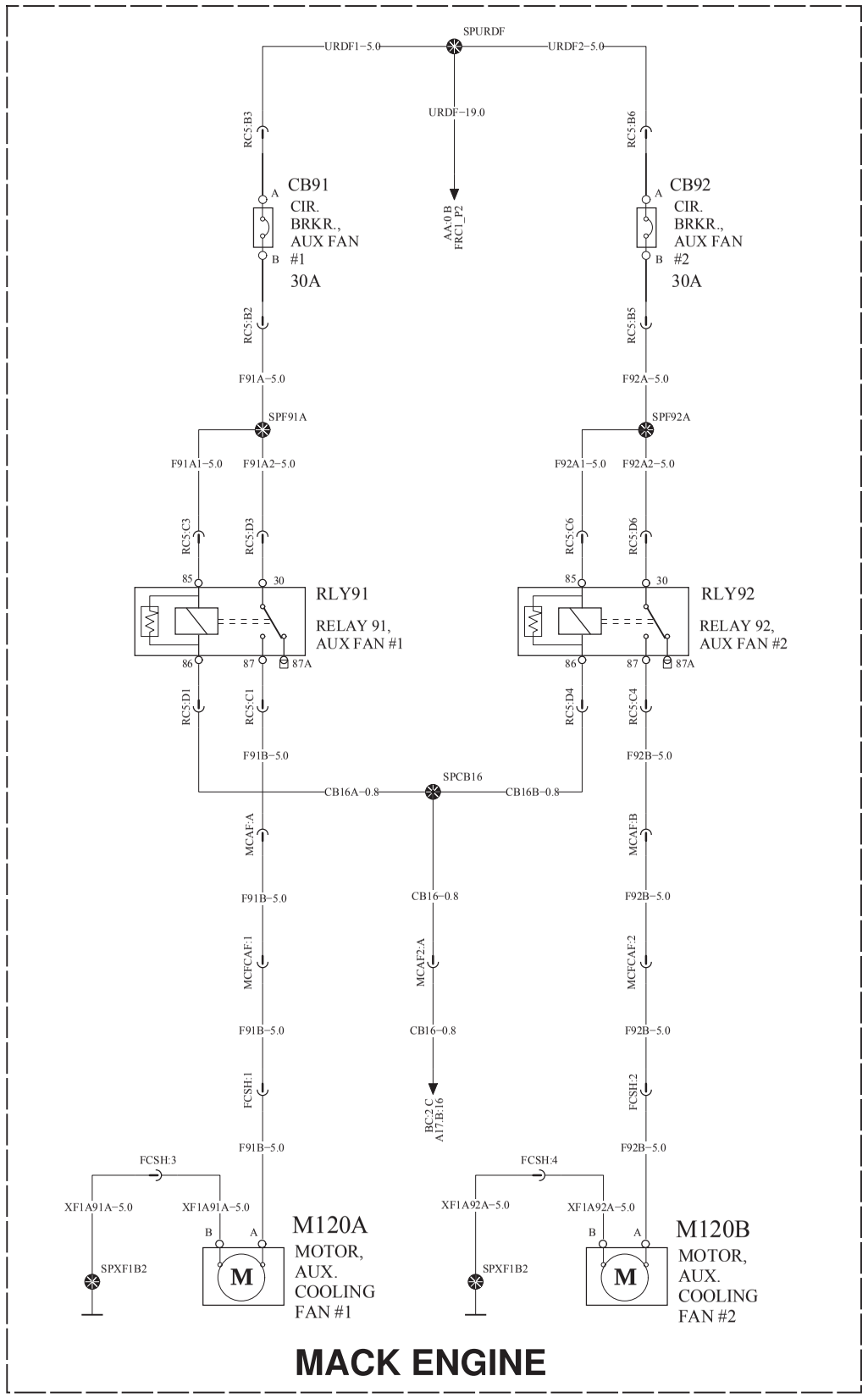

VOLVO Group Trucks Technology	Document title: WIRING DIAGRAM - TYPE OL Document type: PRODUCT SCHEMATIC	Document No: 21668222	Issue: 04	Volume: 1 (2)	Page: 23 (50)

https://truckmanualshub.com/

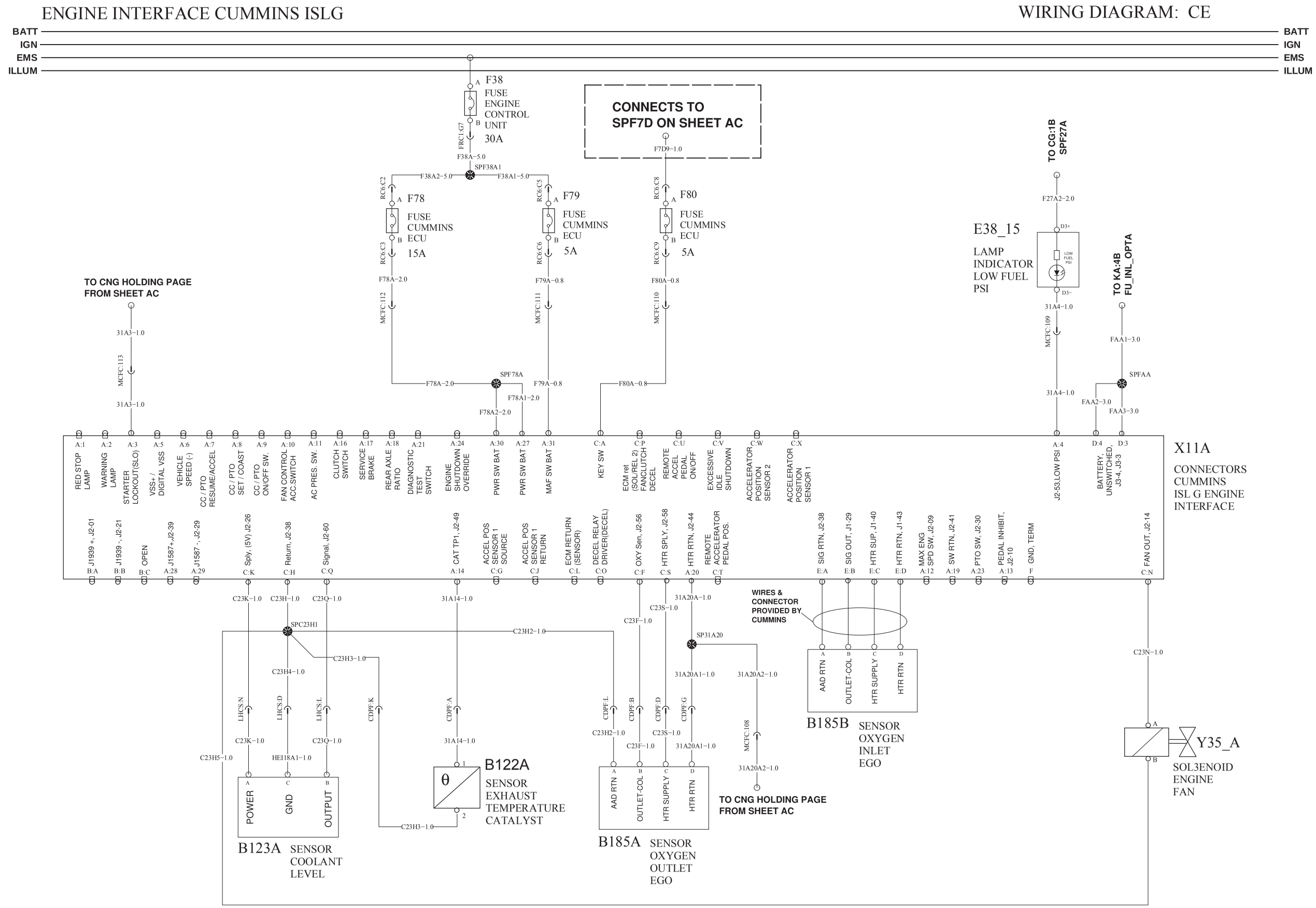

VOLVO Group Trucks Technology	Document title: WIRING DIAGRAM - TYPE OL Document type: PRODUCT SCHEMATIC	Document No: 21668222	Issue: 04	Volume: 1 (2)	Page: 24 (50)

https://trucksmanualshub.com/

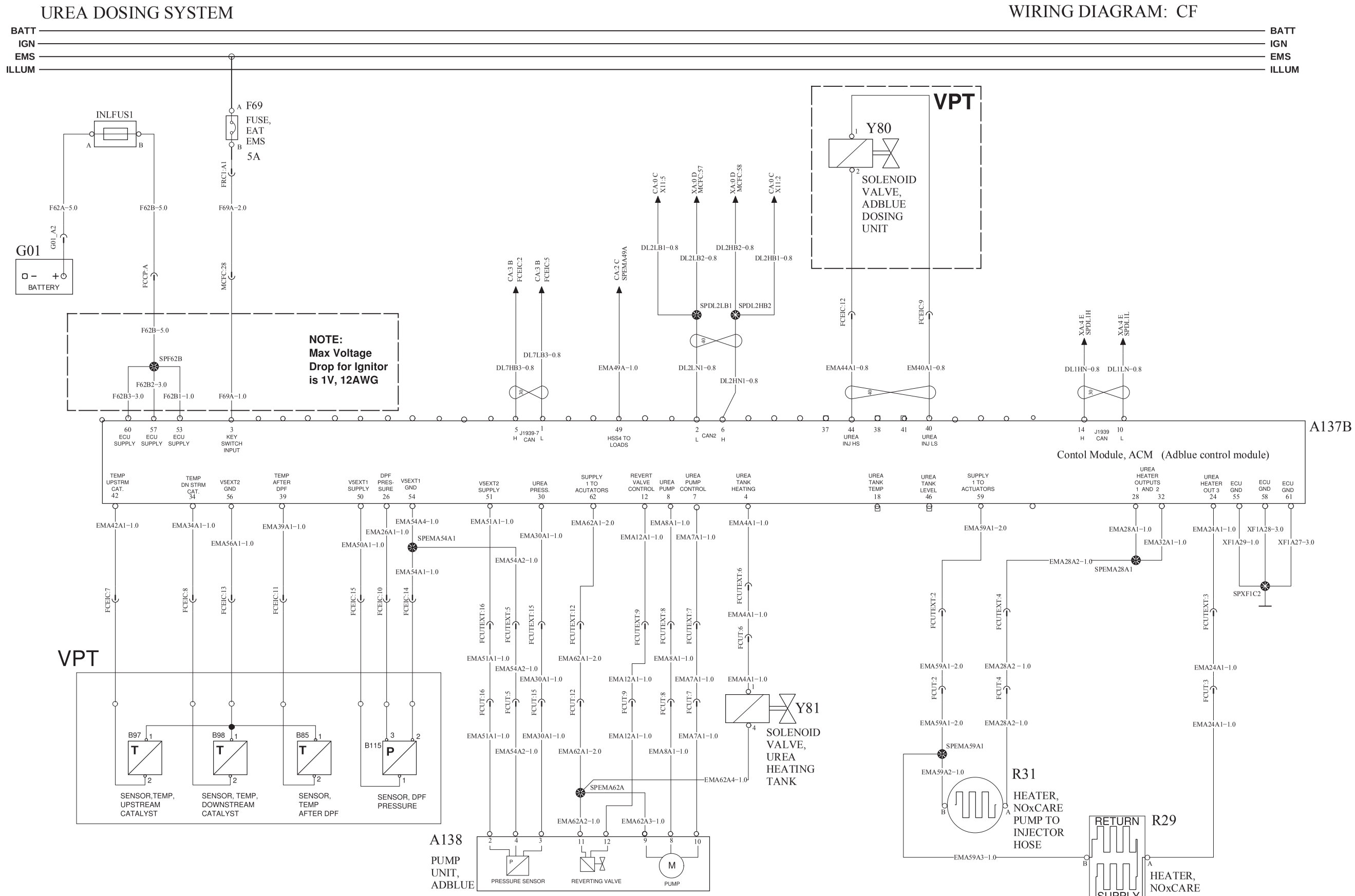

VOLVO Group Trucks Technology	Document title: WIRING DIAGRAM - TYPE OL Document type: PRODUCT SCHEMATIC	Document No: 21668222	Issue: 04	Volume: 1 (2)	Page: 25 (50)

https://truckmanualshub.com/

TRANSMISSION CONTROL 4 th GENERATION 31 PIN1/4

WIRING DIAGRAM: DC

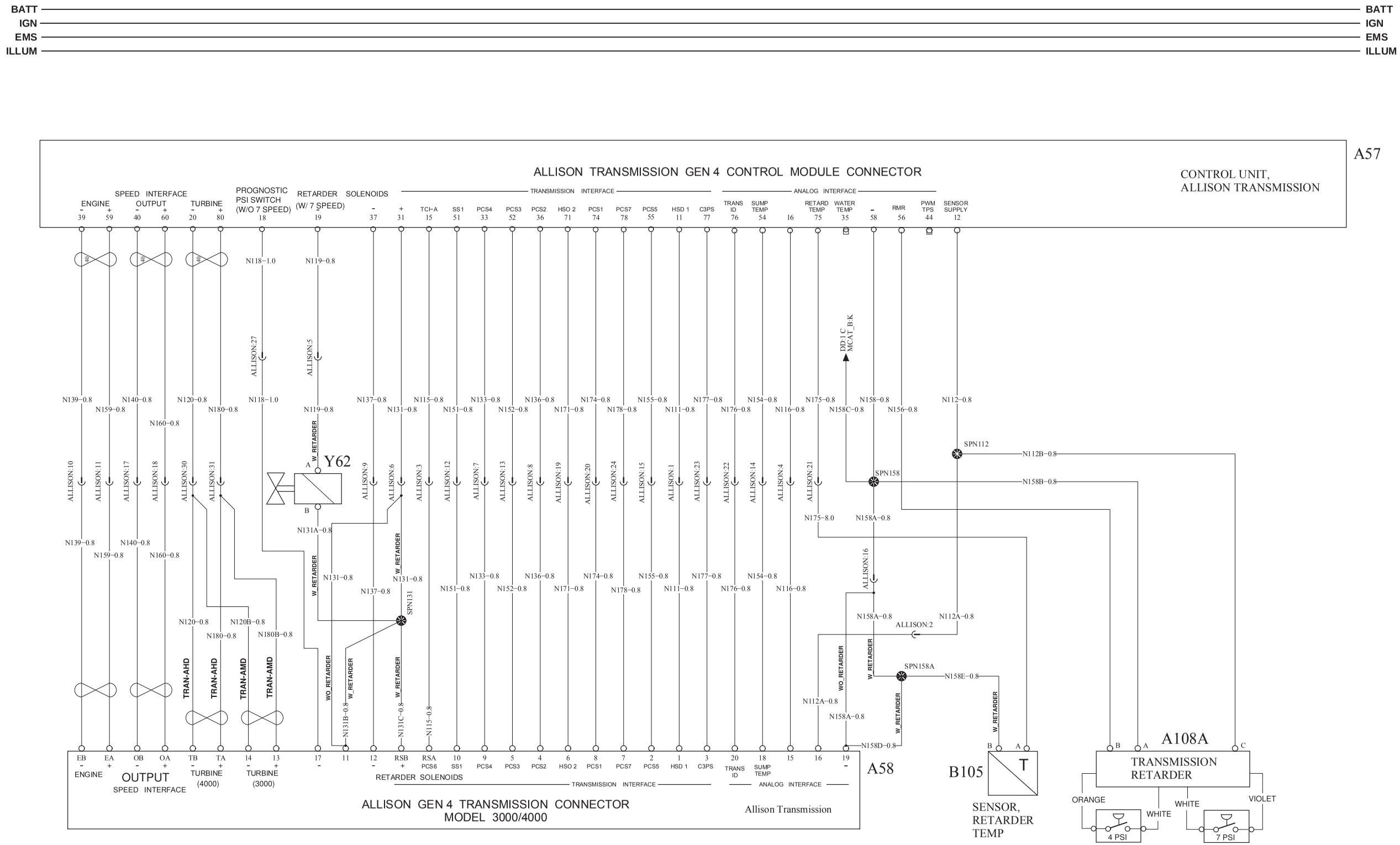

VOLVO Group Trucks Technology	Document title: WIRING DIAGRAM - TYPE OL Document type: PRODUCT SCHEMATIC	Document No: 21668222	Issue: 04	Volume: 1 (2)	Page: 26 (50)

https://truckmanualshub.com/

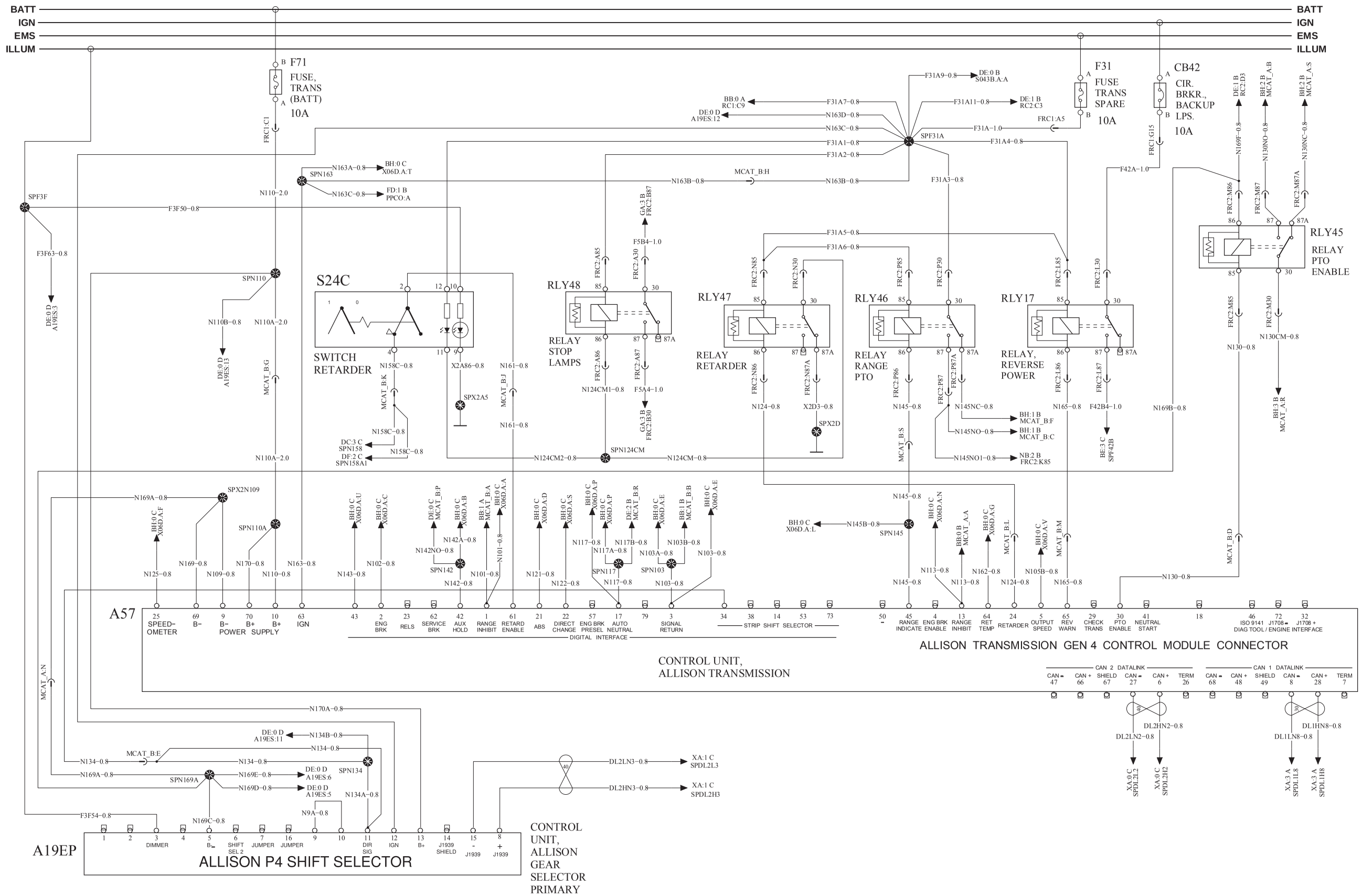

VOLVO Group Trucks Technology	Document title: WIRING DIAGRAM - TYPE OL Document type: PRODUCT SCHEMATIC	Document No 21668222	Issue 04	Volume 1 (2)	Page 27 (50)

https://truckmanualshub.com/

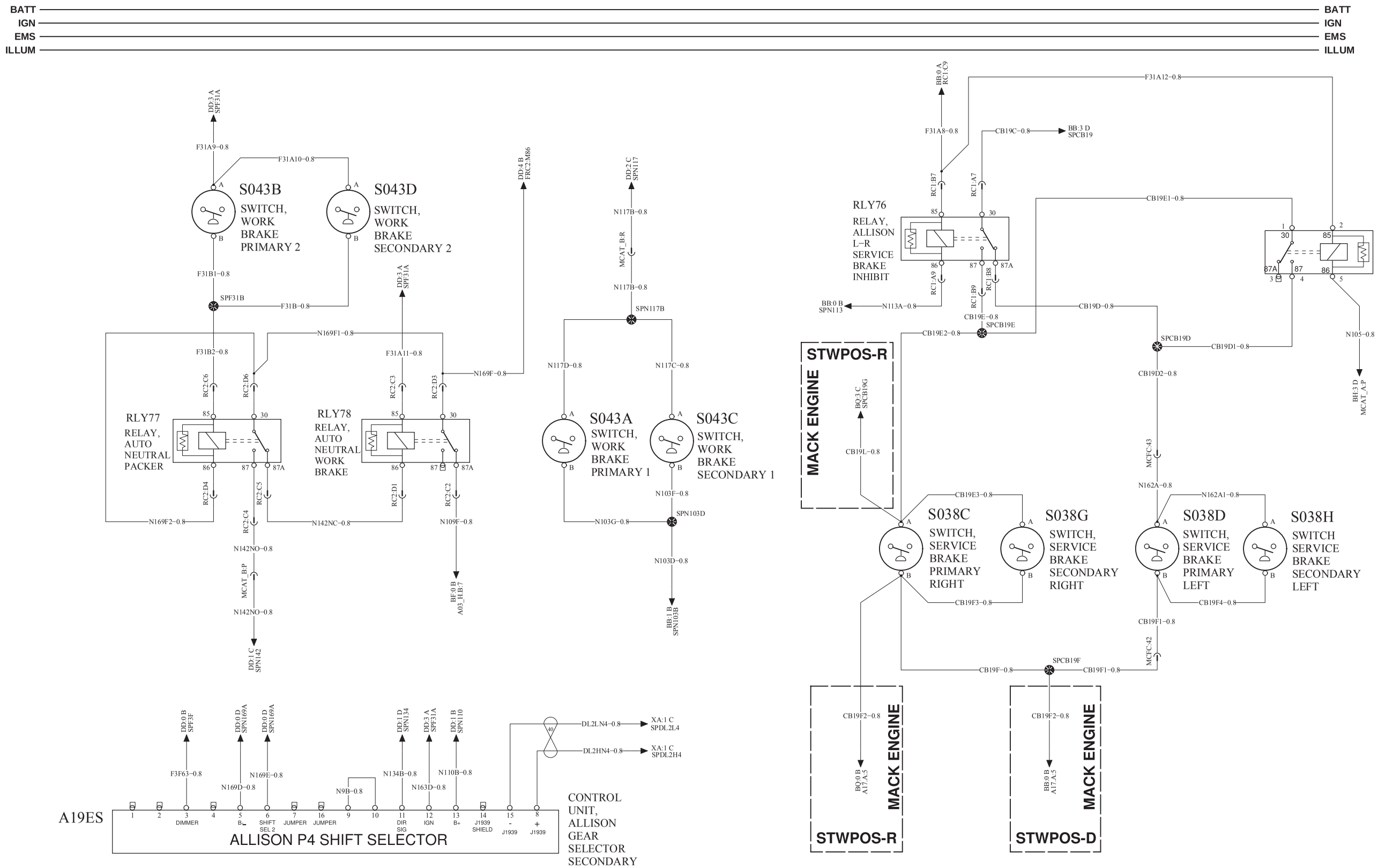

VOLVO Group Trucks Technology	Document title: WIRING DIAGRAM - TYPE OL Document type: PRODUCT SCHEMATIC	Document No: 21668222	Issue: 04	Volume: 1 (2)	Page: 28 (50)

https://truckmanualshub.com/

TRANSMISSION CONTROL 4 th GENERATION 35 PIN 4/4

WIRING DIAGRAM: DF

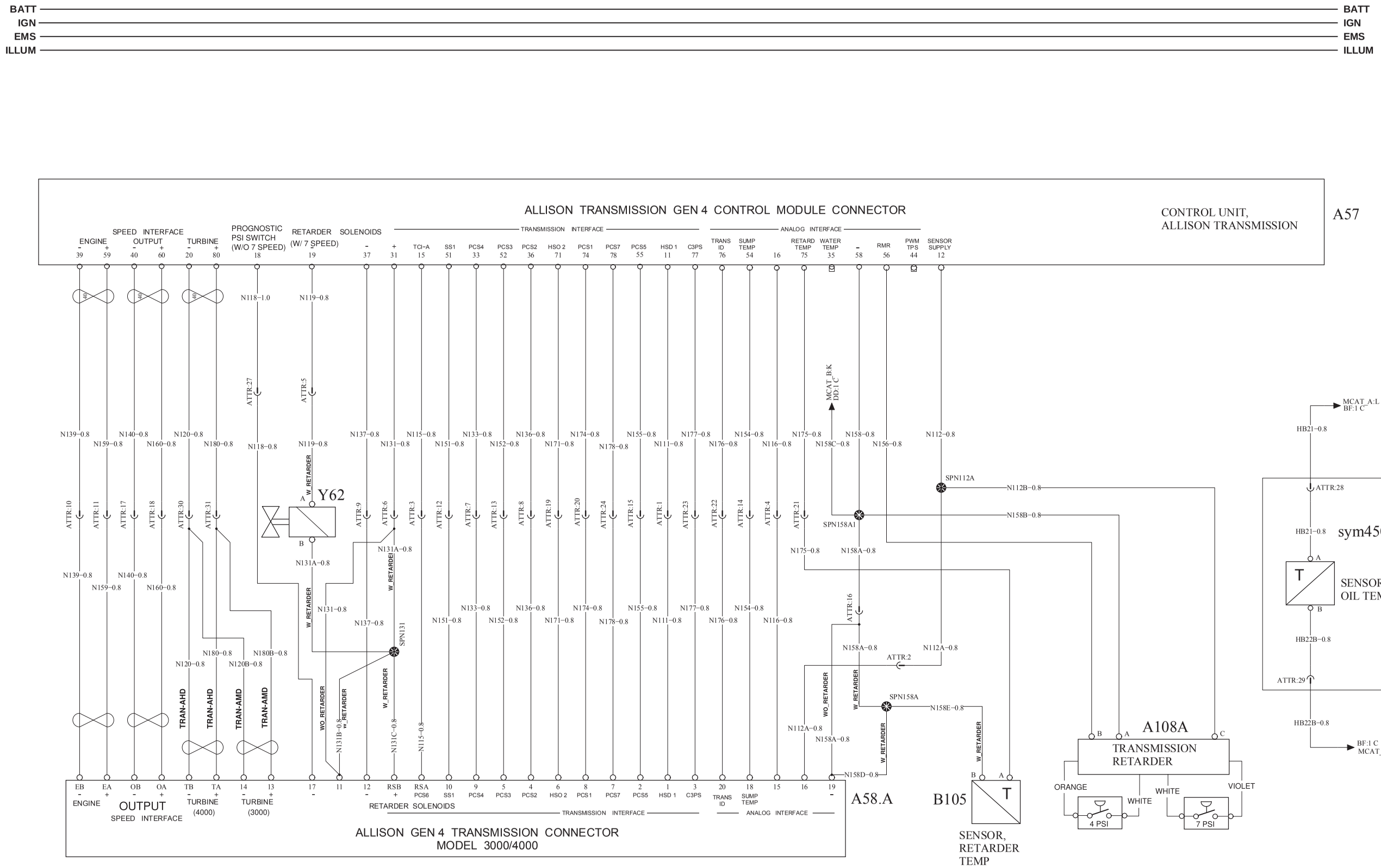

VOLVO Group Trucks Technology	Document title: WIRING DIAGRAM - TYPE OL Document type: PRODUCT SCHEMATIC	Document No: 21668222	Issue: 04	Volume: 1 (2)	Page: 29 (50)

https://truckmanualshub.com/

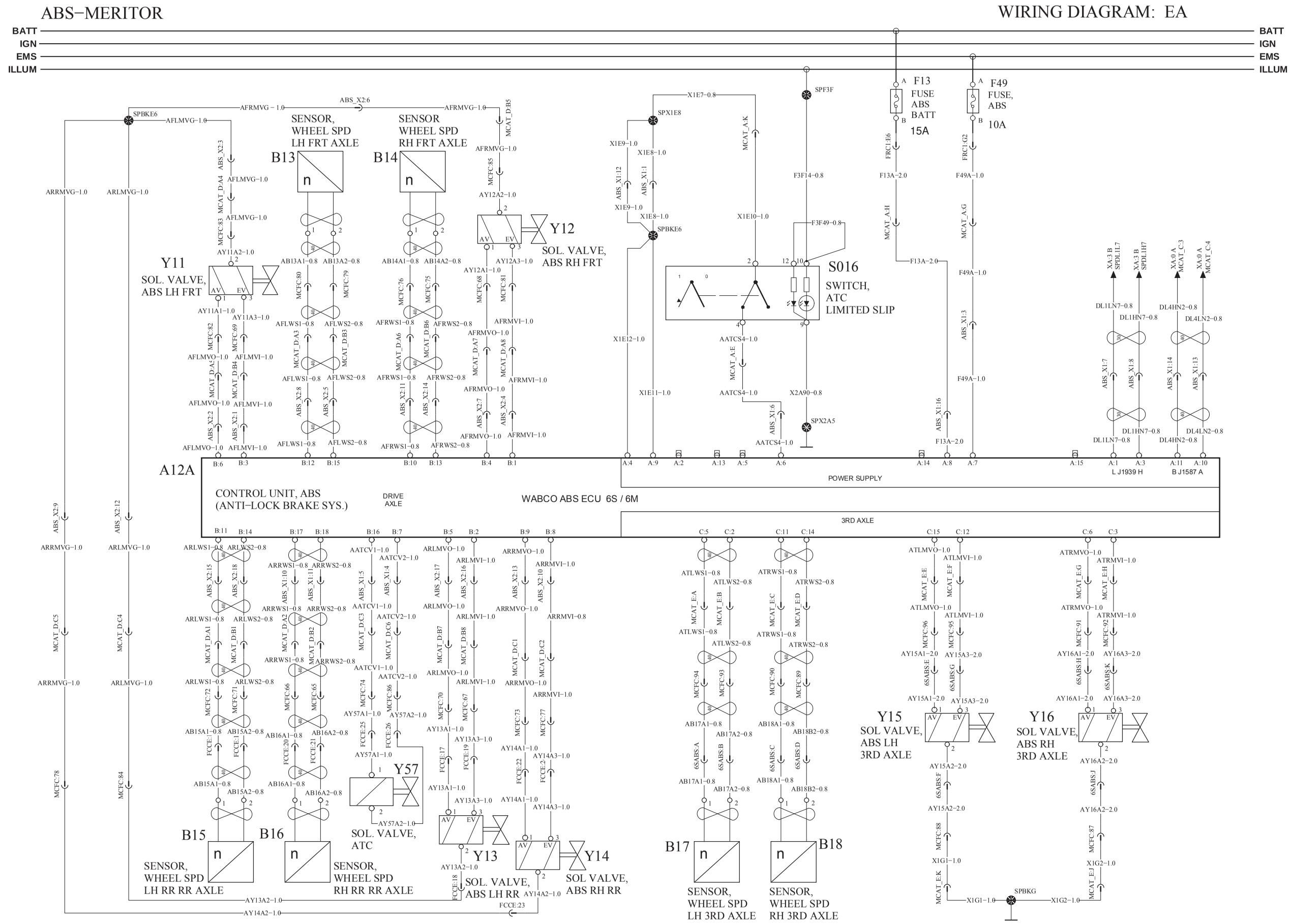

VOLVO Group Trucks Technology	Document title: WIRING DIAGRAM - TYPE OL Document type: PRODUCT SCHEMATIC	Document No: 21668222	Issue: 04	Volume: 1 (2)	Page: 30 (50)

https://truckmanualshub.com/

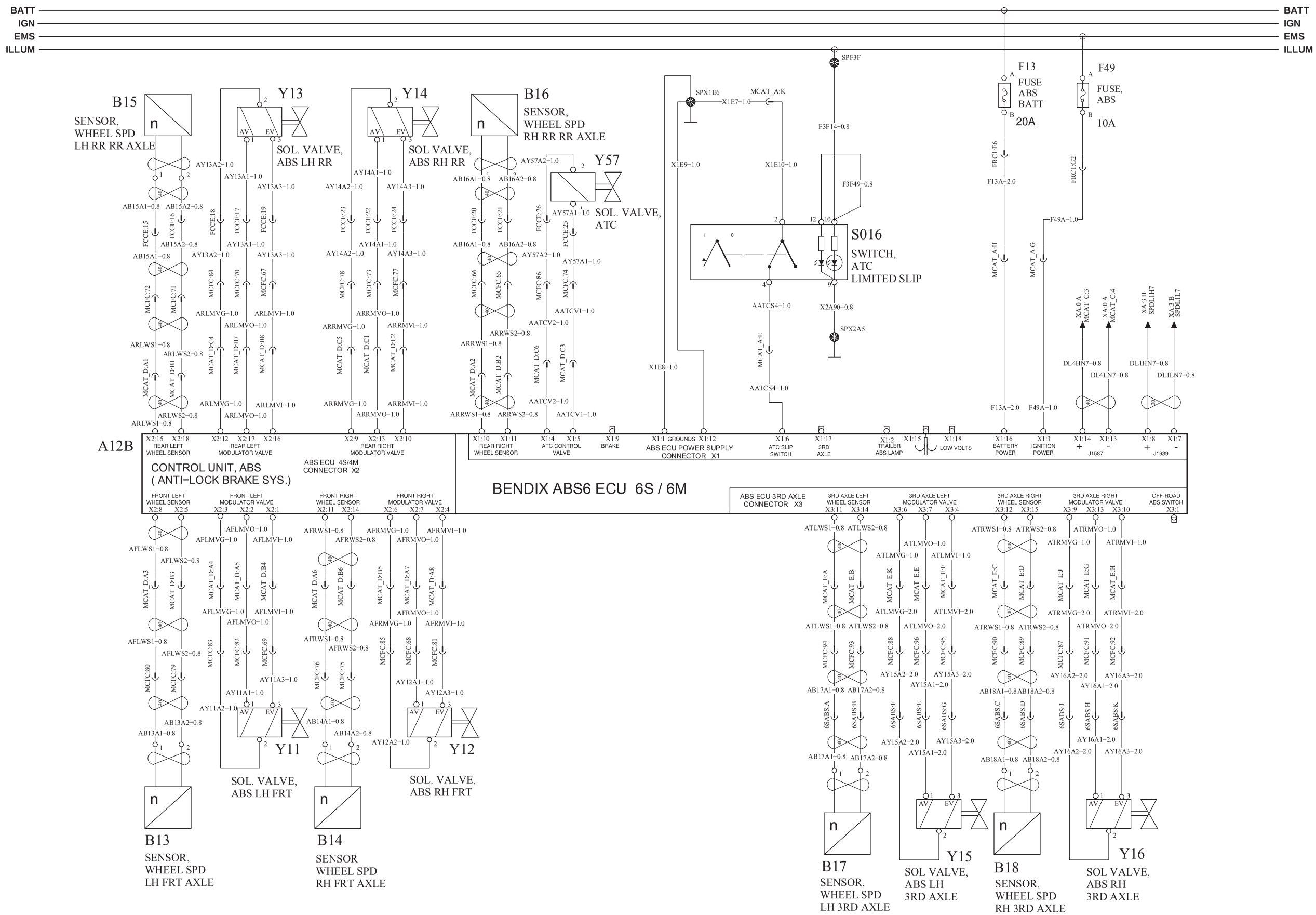

VOLVO Group Trucks Technology	Document title: WIRING DIAGRAM - TYPE OL Document type: PRODUCT SCHEMATIC	Document No: 21668222	Issue: 04	Volume: 1 (2)	Page: 31 (50)

https://truckmanualshub.com/

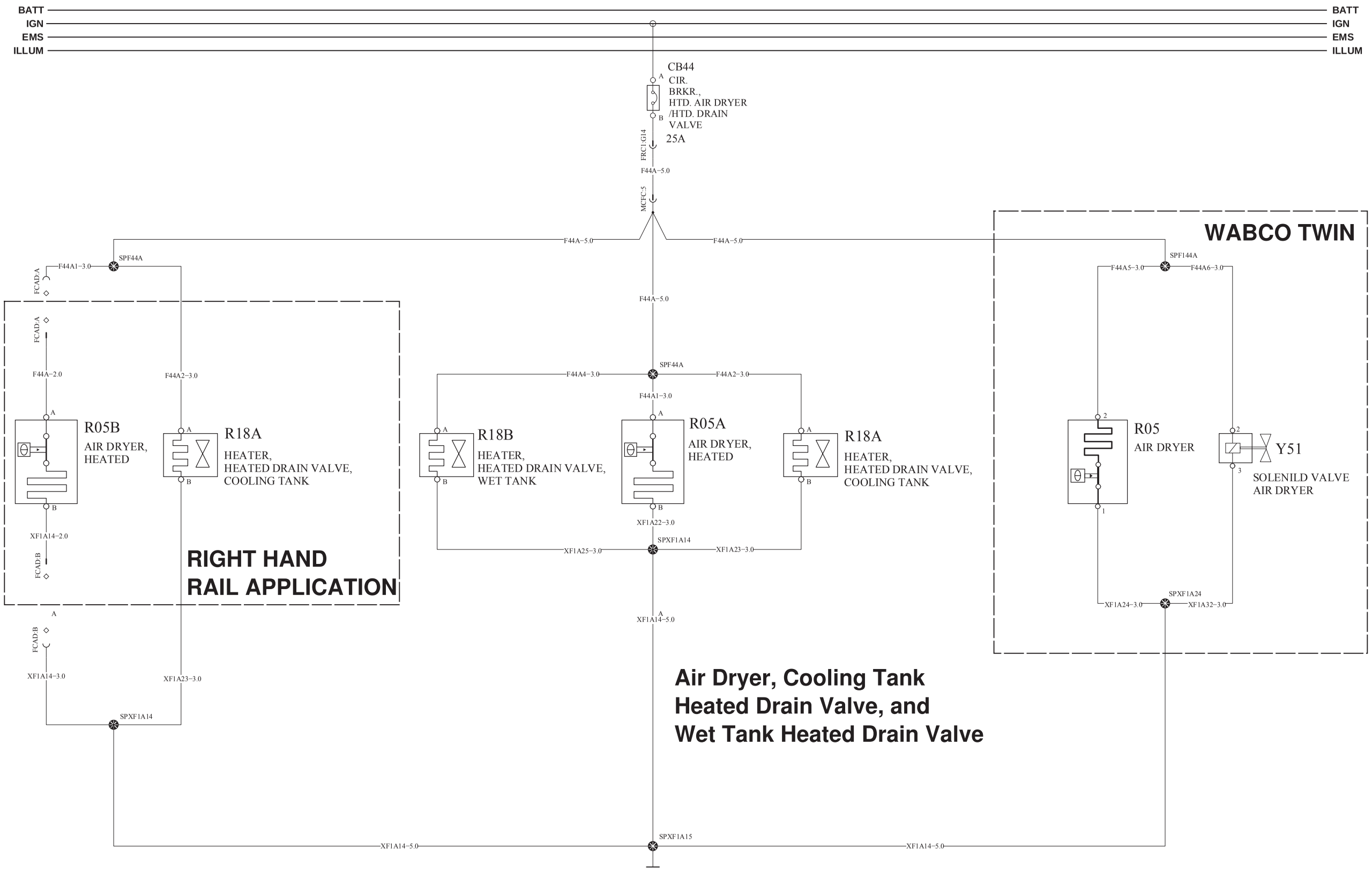

VOLVO Group Trucks Technology	Document title WIRING DIAGRAM - TYPE OL Document type PRODUCT SCHEMATIC	Document No 21668222	Issue 04	Volume 1 (2)	Page 32 (50)

https://trucksmanualshub.com/

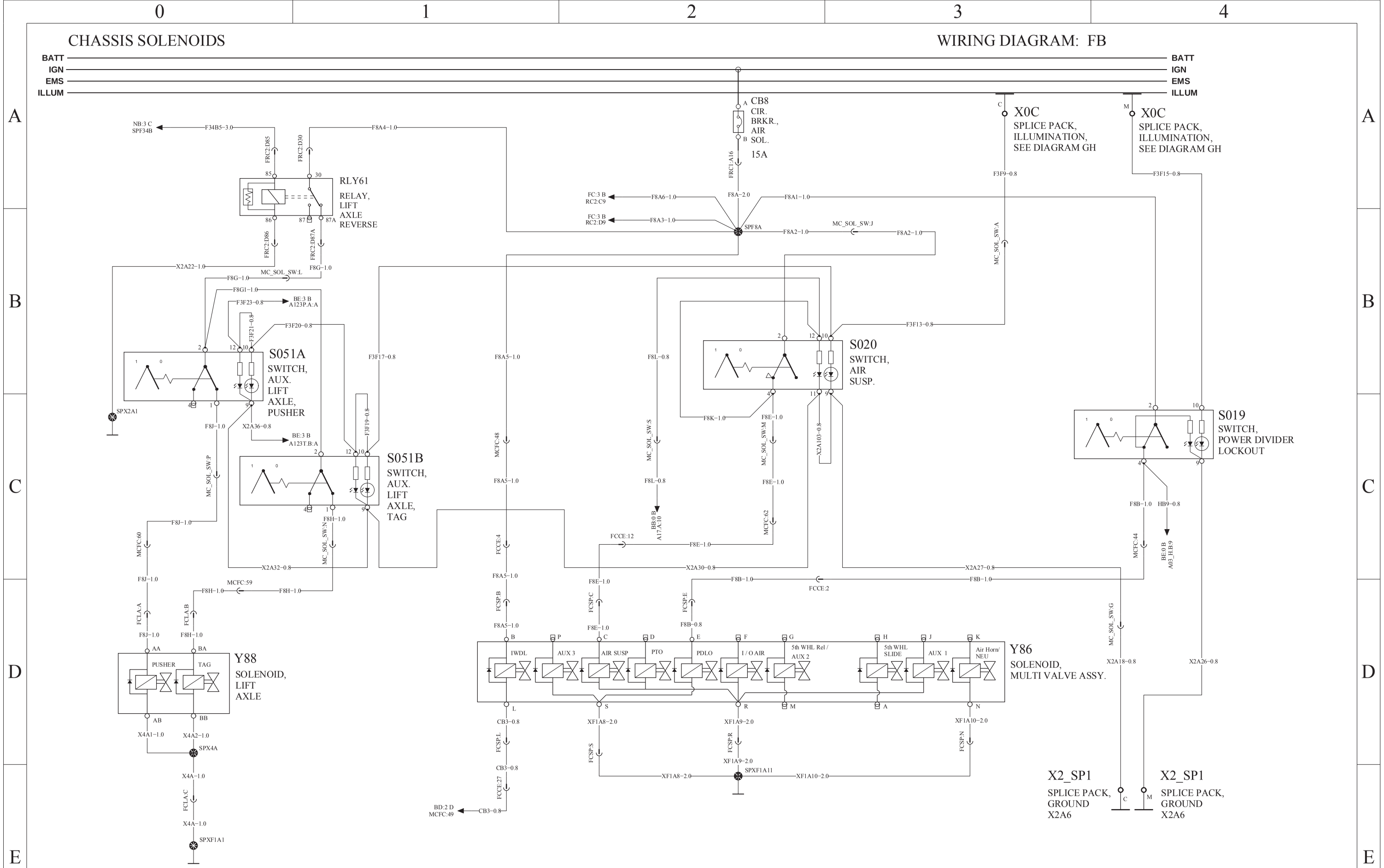

VOLVO Group Trucks Technology	Document title: WIRING DIAGRAM - TYPE OL Document type: PRODUCT SCHEMATIC	Document No: 21668222	Issue: 04	Volume: 1 (2)	Page: 33 (50)

https://trucksmanualshub.com/

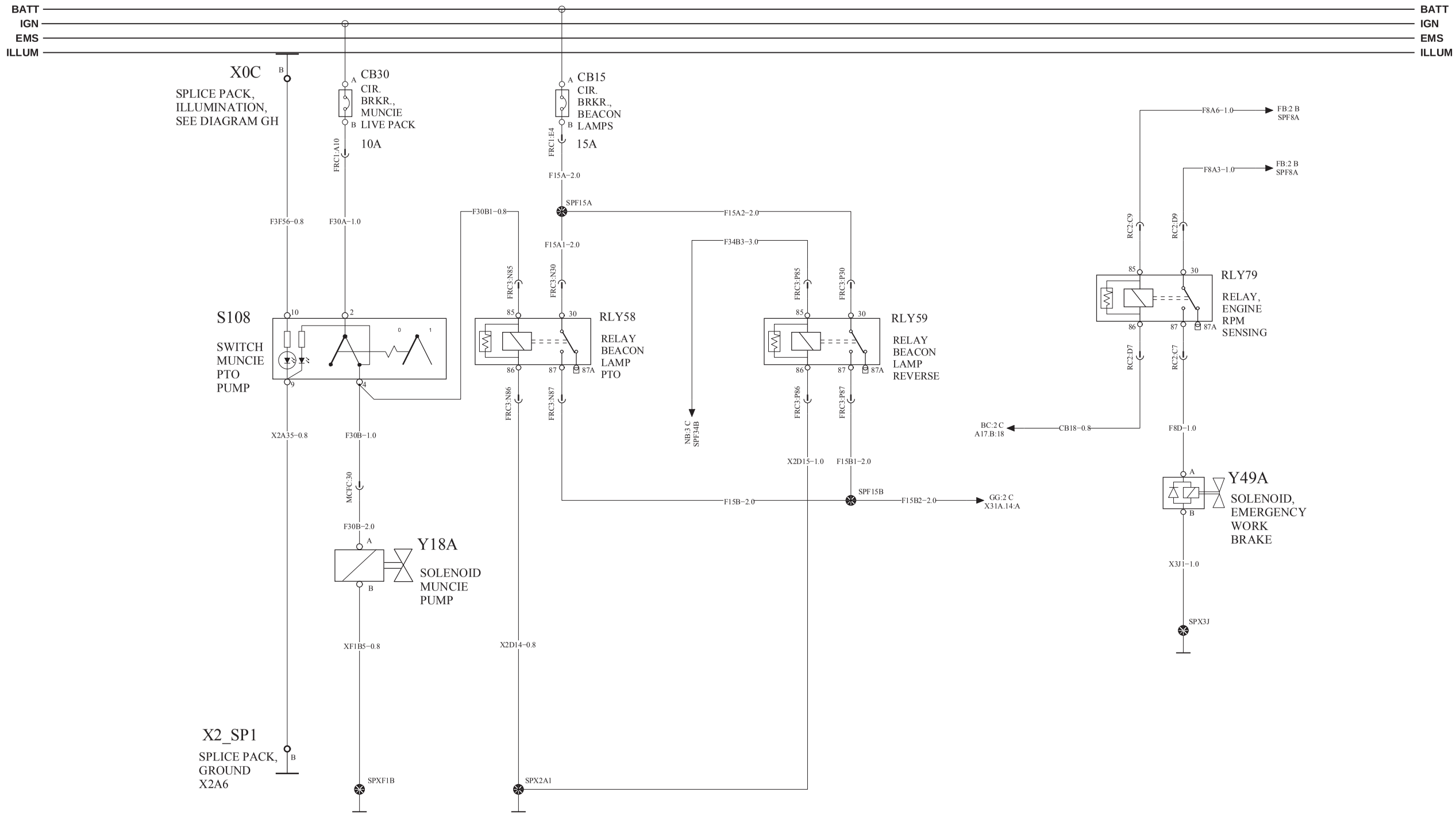

VOLVO Group Trucks Technology	Document title: WIRING DIAGRAM - TYPE OL Document type: PRODUCT SCHEMATIC	Document No: 21668222	Issue: 04	Volume: 1 (2)	Page: 34 (50)

https://truckmanualshub.com/

PARKER PTO

WIRING DIAGRAM: FD

BATT
IGN
EMS
ILLUM

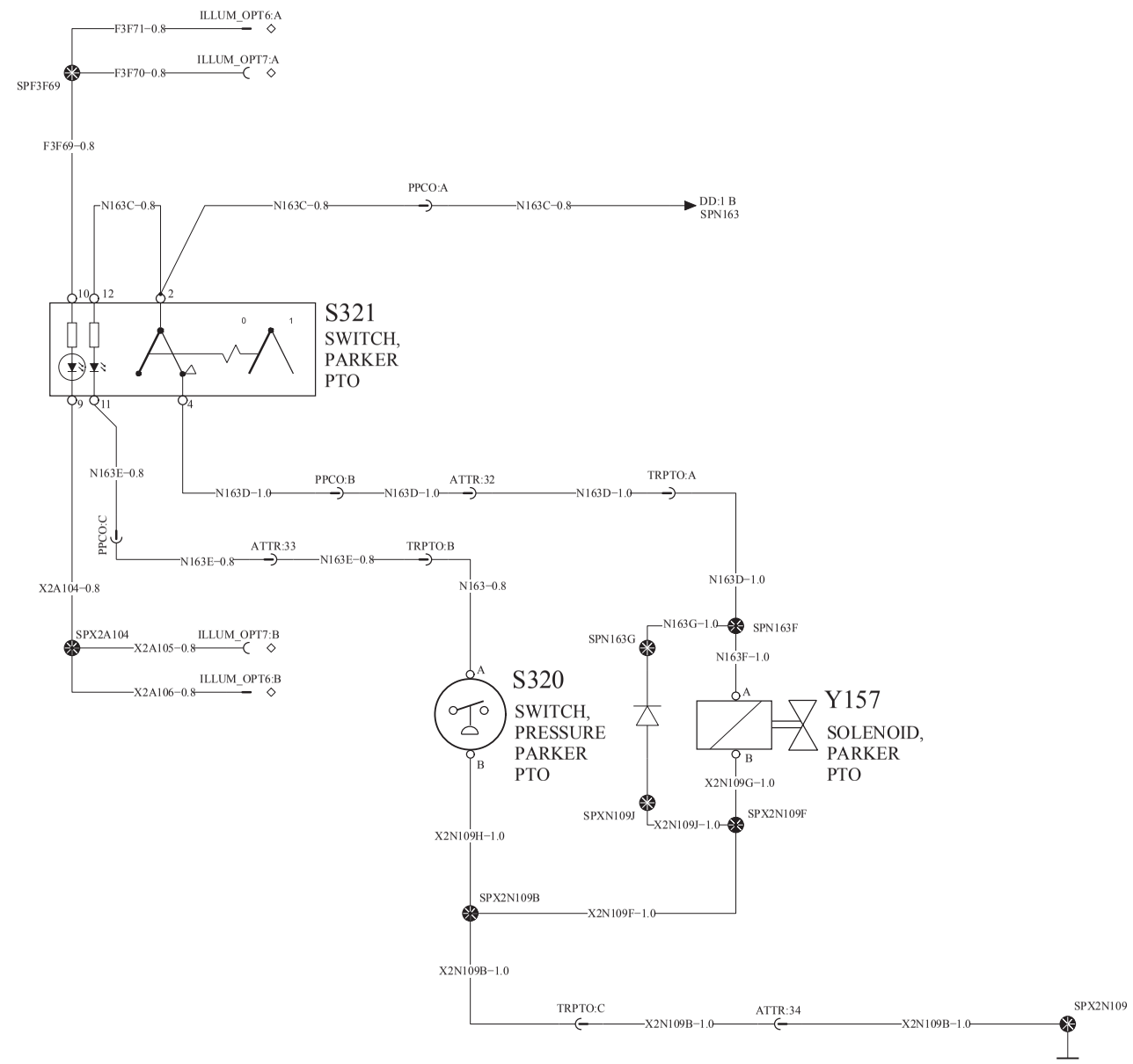

VOLVO Group Trucks Technology	Document title: WIRING DIAGRAM - TYPE OL Document type: PRODUCT SCHEMATIC	Document No: 21668222	Issue: 04	Volume: 1(2)	Page: 35 (50)

https://trucksmanualshub.com/

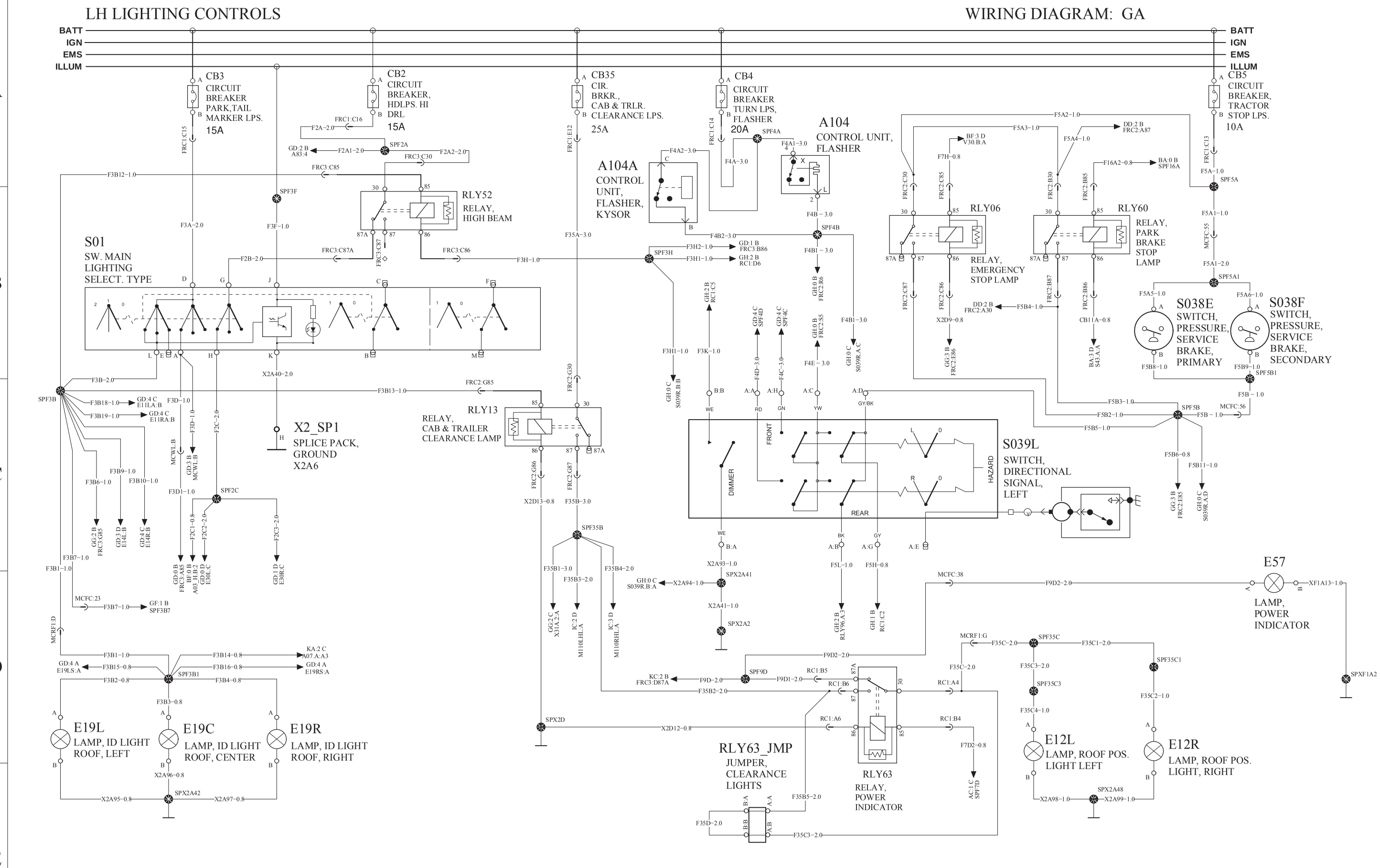

VOLVO Group Trucks Technology	Document title: WIRING DIAGRAM - TYPE OL	Document No	Issue	Volume	Page
	Document type: PRODUCT SCHEMATIC	21668222	04	1 (2)	36 (50)

https://truckmanualshub.com/

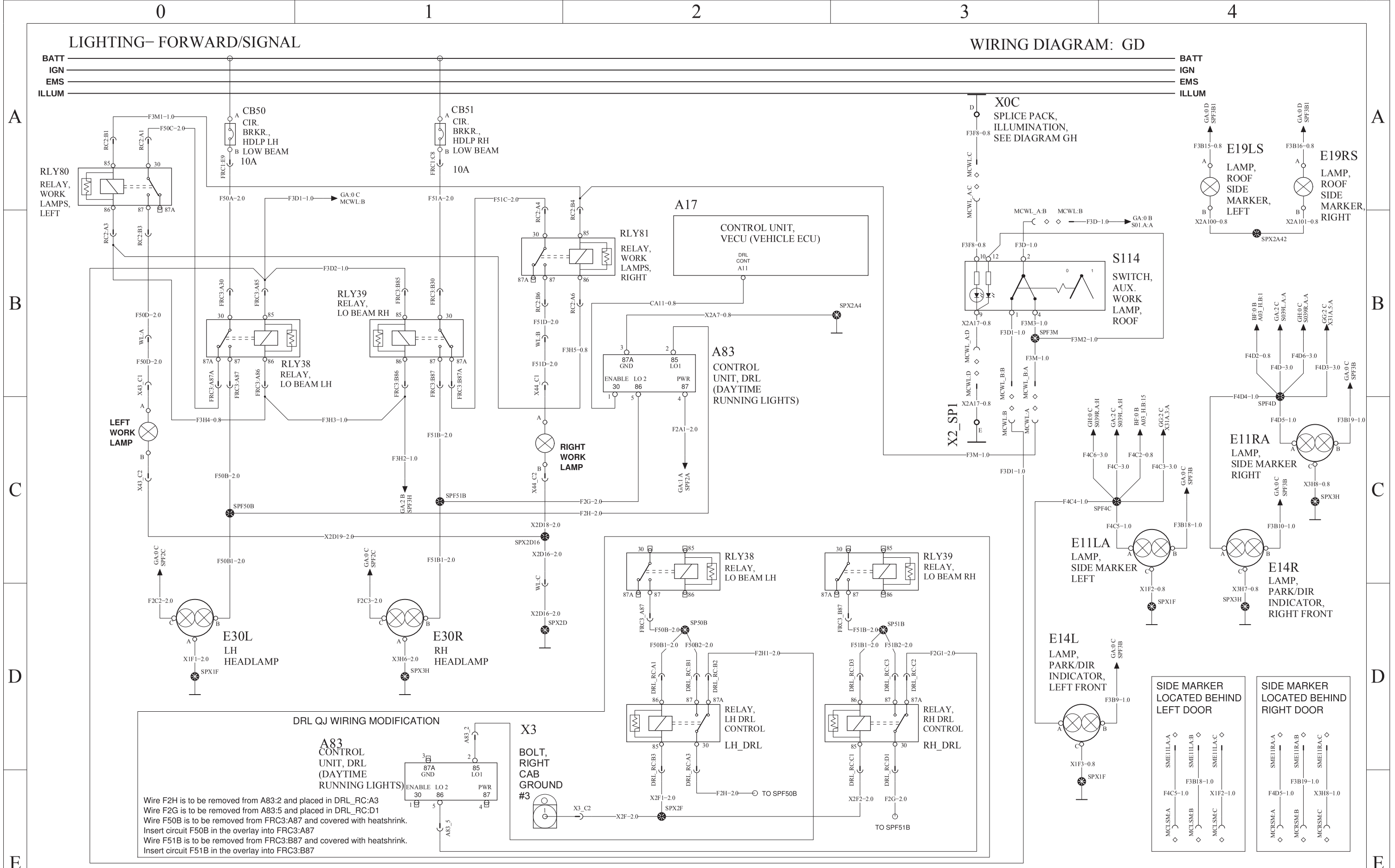

VOLVO Group Trucks Technology	Document title: WIRING DIAGRAM - TYPE OL Document type: PRODUCT SCHEMATIC	Document No: 21668222	Issue: 04	Volume: 1 (2)	Page: 37 (50)

https://trucksmanualshub.com/

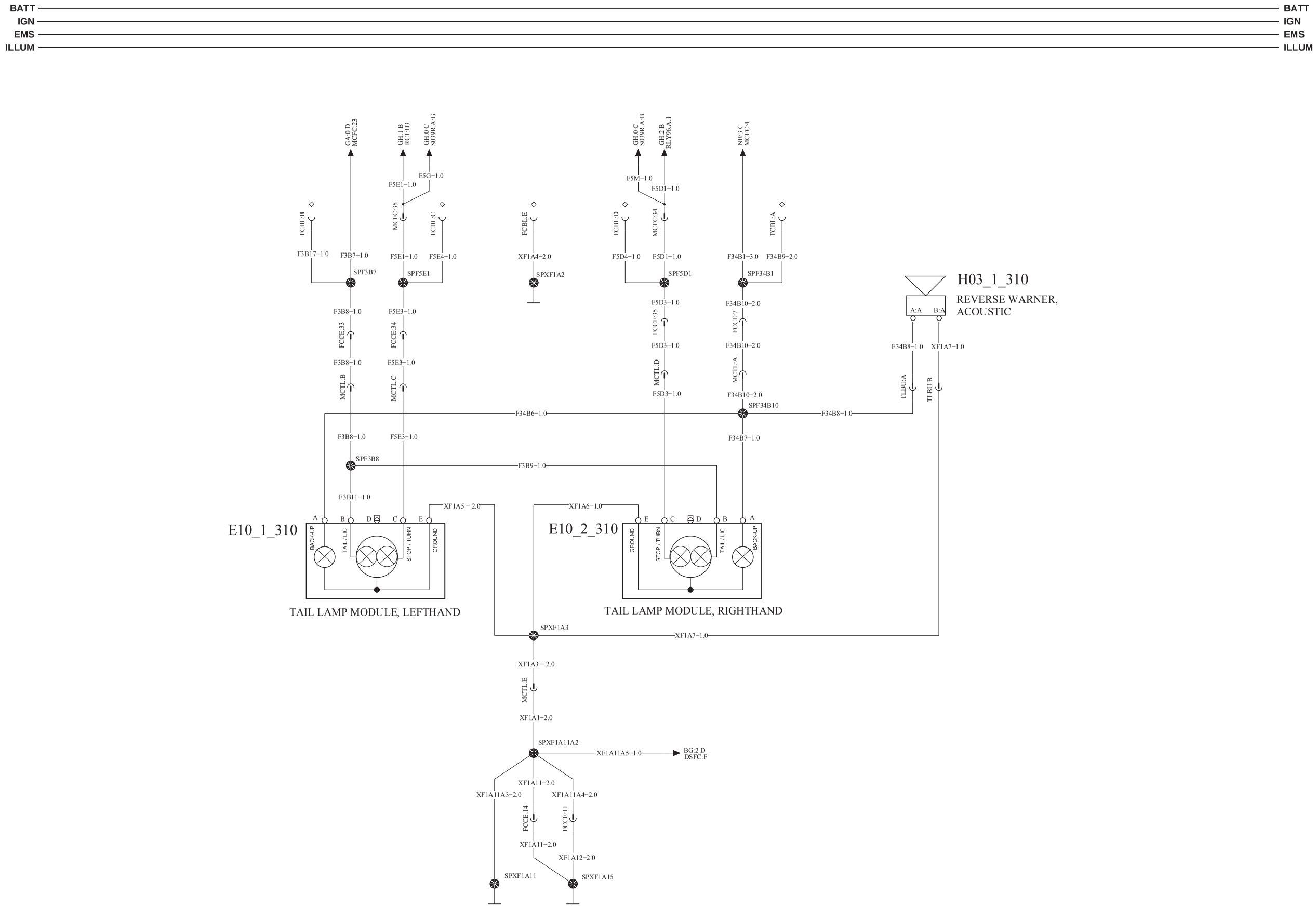

VOLVO Group Trucks Technology	Document title WIRING DIAGRAM - TYPE OL Document type PRODUCT SCHEMATIC	Document No 21668222	Issue 04	Volume 1 (2)	Page 38 (50)

https://truckmanualshub.com/

TRAILER LIGHTING CONTROL

WIRING DIAGRAM: GG

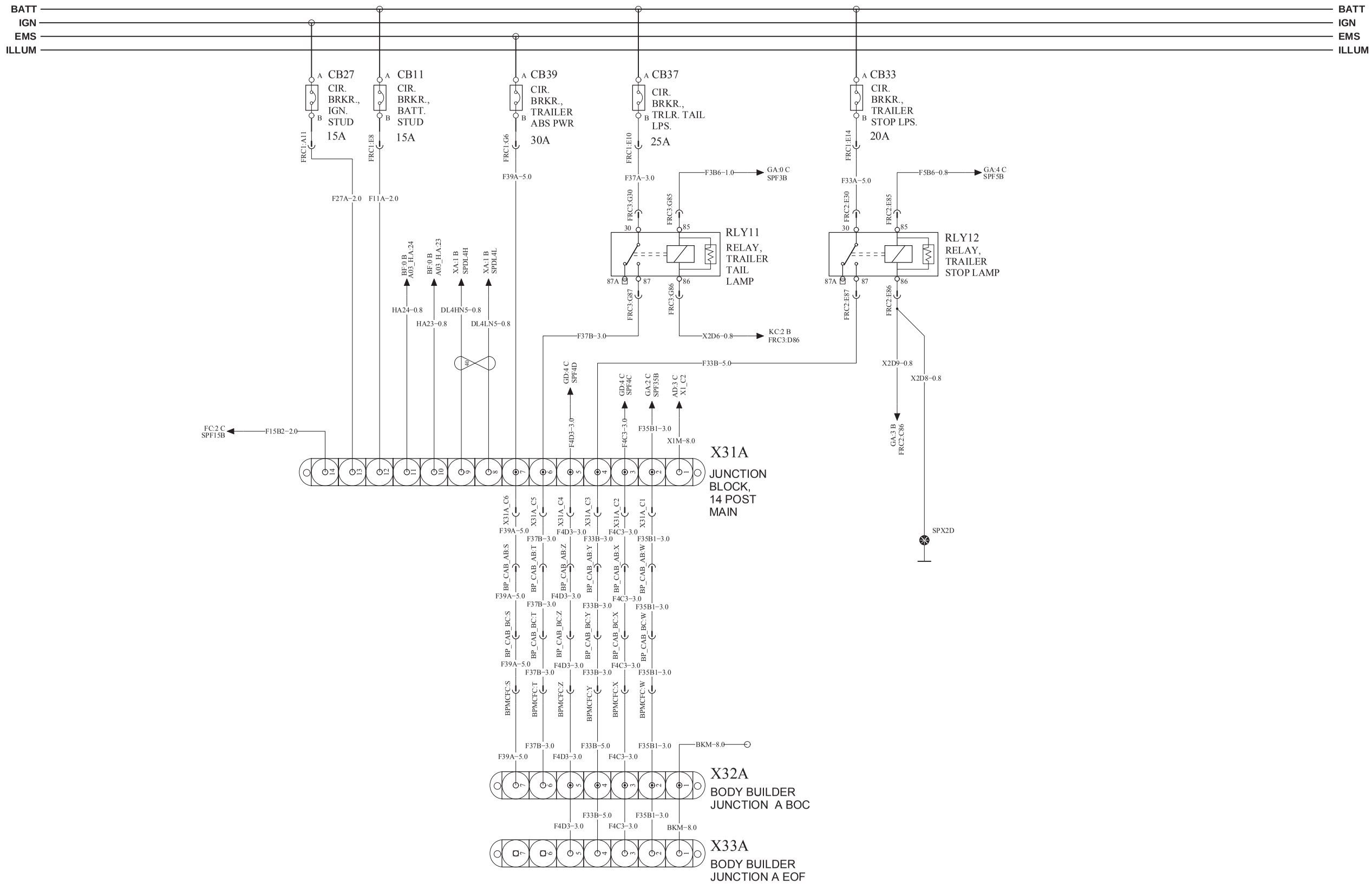

VOLVO Group Trucks Technology	Document title: WIRING DIAGRAM - TYPE OL	Document No	Issue	Volume	Page
	Document type: PRODUCT SCHEMATIC	21668222	04	1 (2)	39 (50)

https://trucksmanualshub.com/

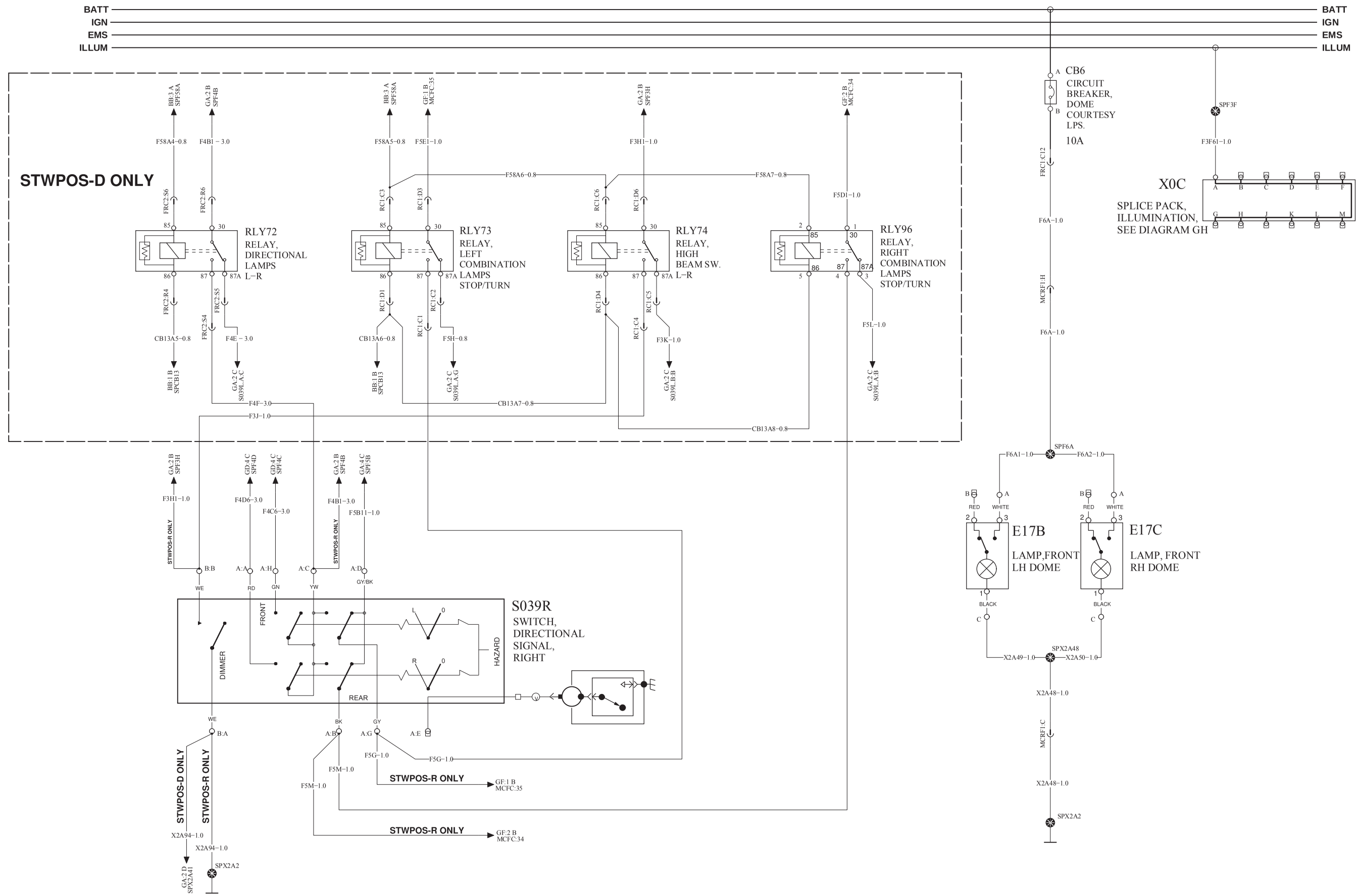

VOLVO Group Trucks Technology	Document title: WIRING DIAGRAM - TYPE OL Document type: PRODUCT SCHEMATIC	Document No: 21668222	Issue: 04	Volume: 1 (2)	Page: 40 (50)

https://trucksmanualshub.com/

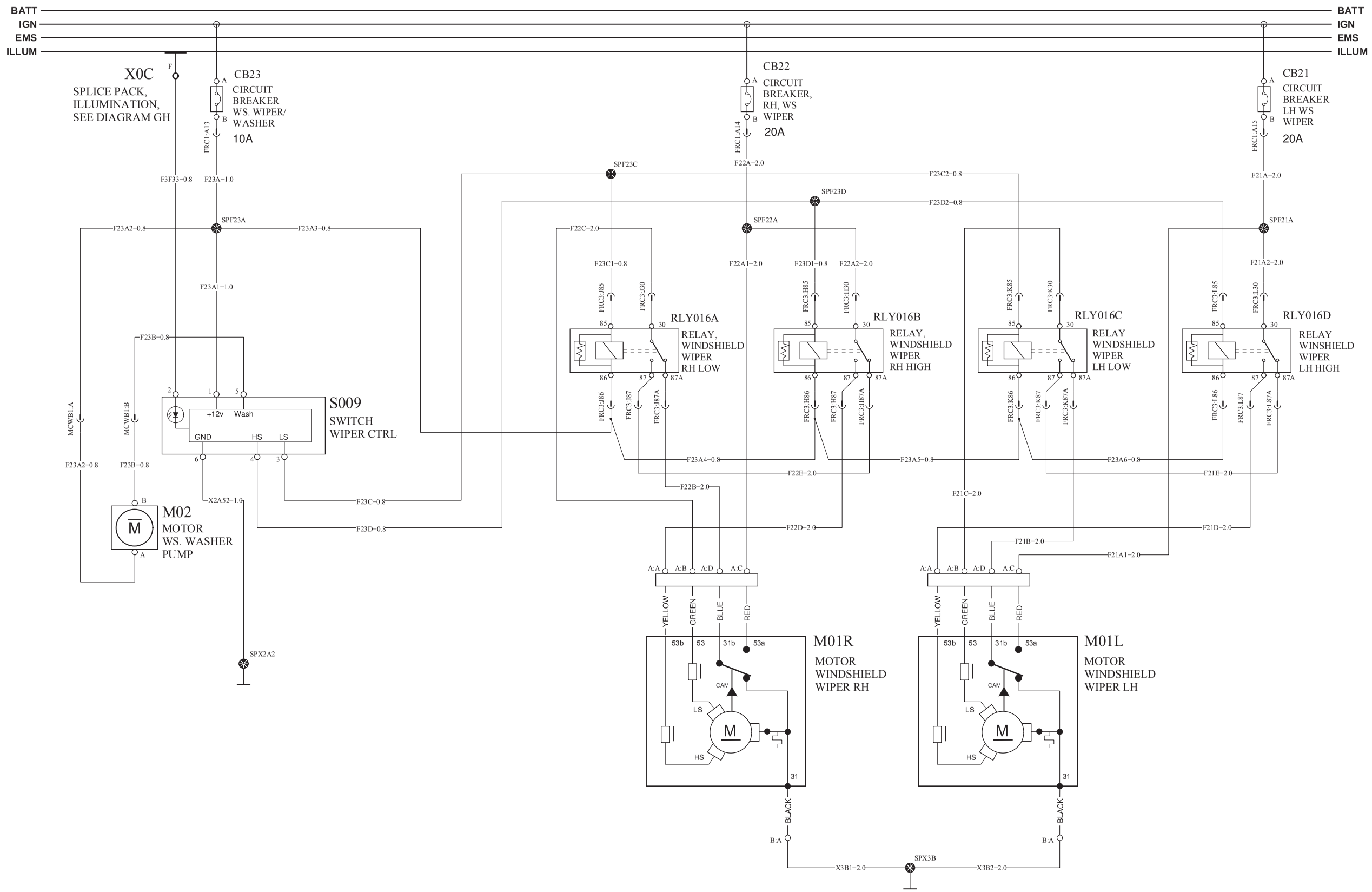

VOLVO Group Trucks Technology	Document title: WIRING DIAGRAM - TYPE OL Document type: PRODUCT SCHEMATIC	Document No: 21668222	Issue: 04	Volume: 1 (2)	Page: 41 (50)

https://truckmanualshub.com/

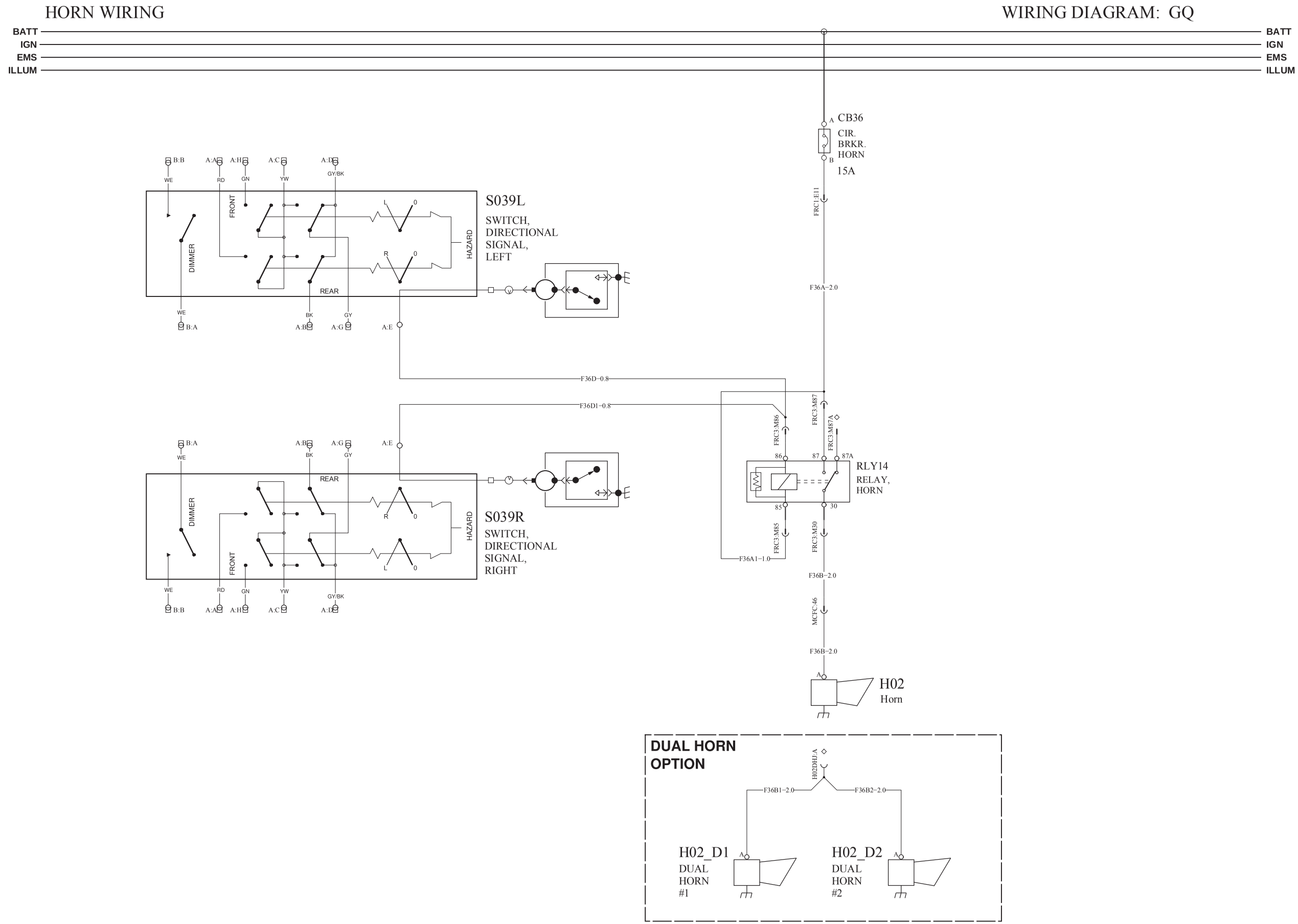

VOLVO Group Trucks Technology	Document title: WIRING DIAGRAM - TYPE OL Document type: PRODUCT SCHEMATIC	Document No: 21668222	Issue: 04	Volume: 1 (2)	Page: 42 (50)

https://truckmanualshub.com/

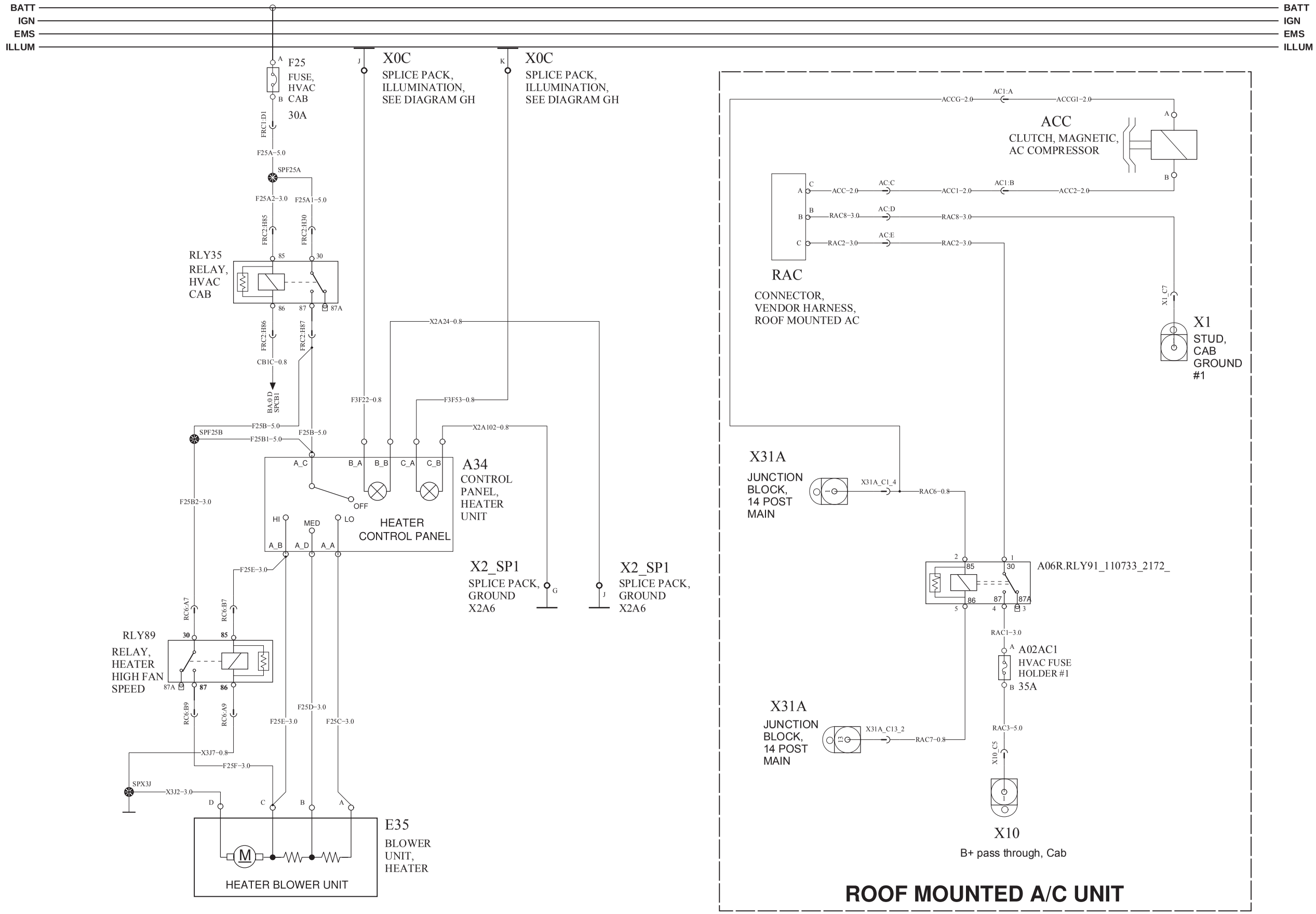

VOLVO Group Trucks Technology	Document title: WIRING DIAGRAM - TYPE OL Document type: PRODUCT SCHEMATIC	Document No: 21668222	Issue: 04	Volume: 1 (2)	Page: 43 (50)

https://trucksmanualshub.com/

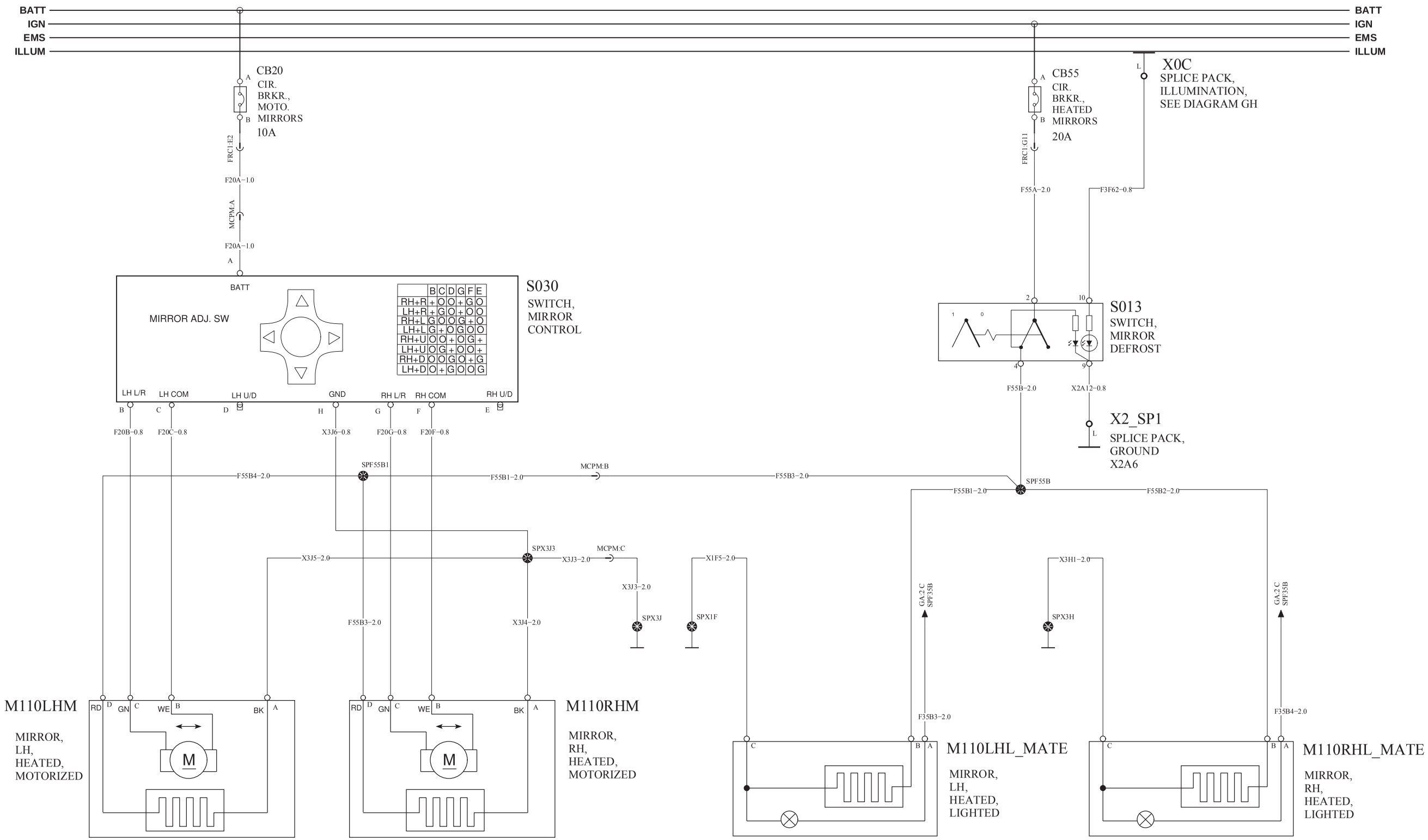

HEATED & MOTORIZED MIRRORS

HEATED & LIGHTED MIRRORS

VOLVO Group Trucks Technology	Document title: WIRING DIAGRAM - TYPE OL Document type: PRODUCT SCHEMATIC	Document No	Issue	Volume	Page
		21668222	04	1 (2)	44 (50)

https://trucksmanualshub.com/

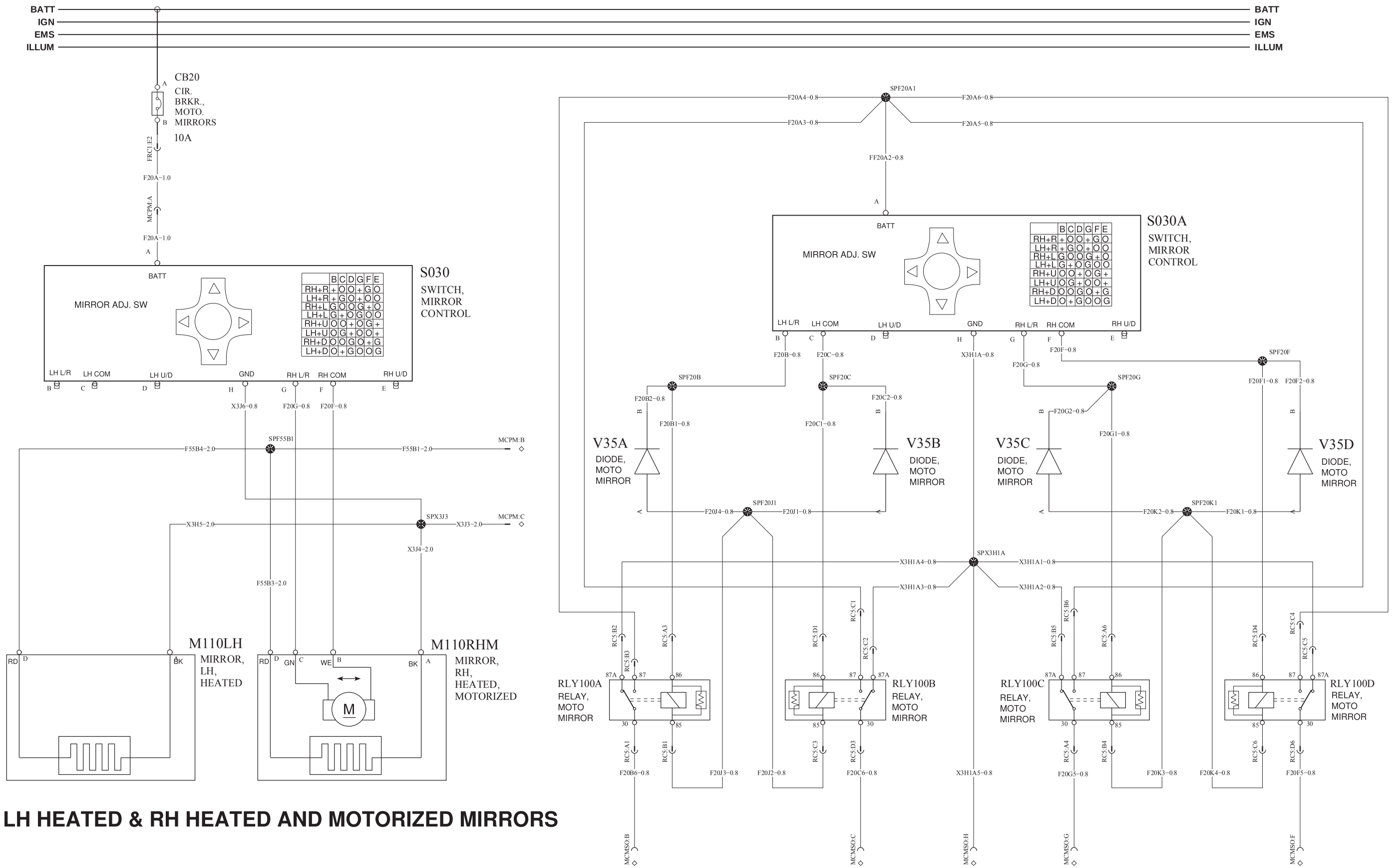

LH HEATED & RH HEATED AND MOTORIZED MIRRORS

https://trucksmanualshub.com/

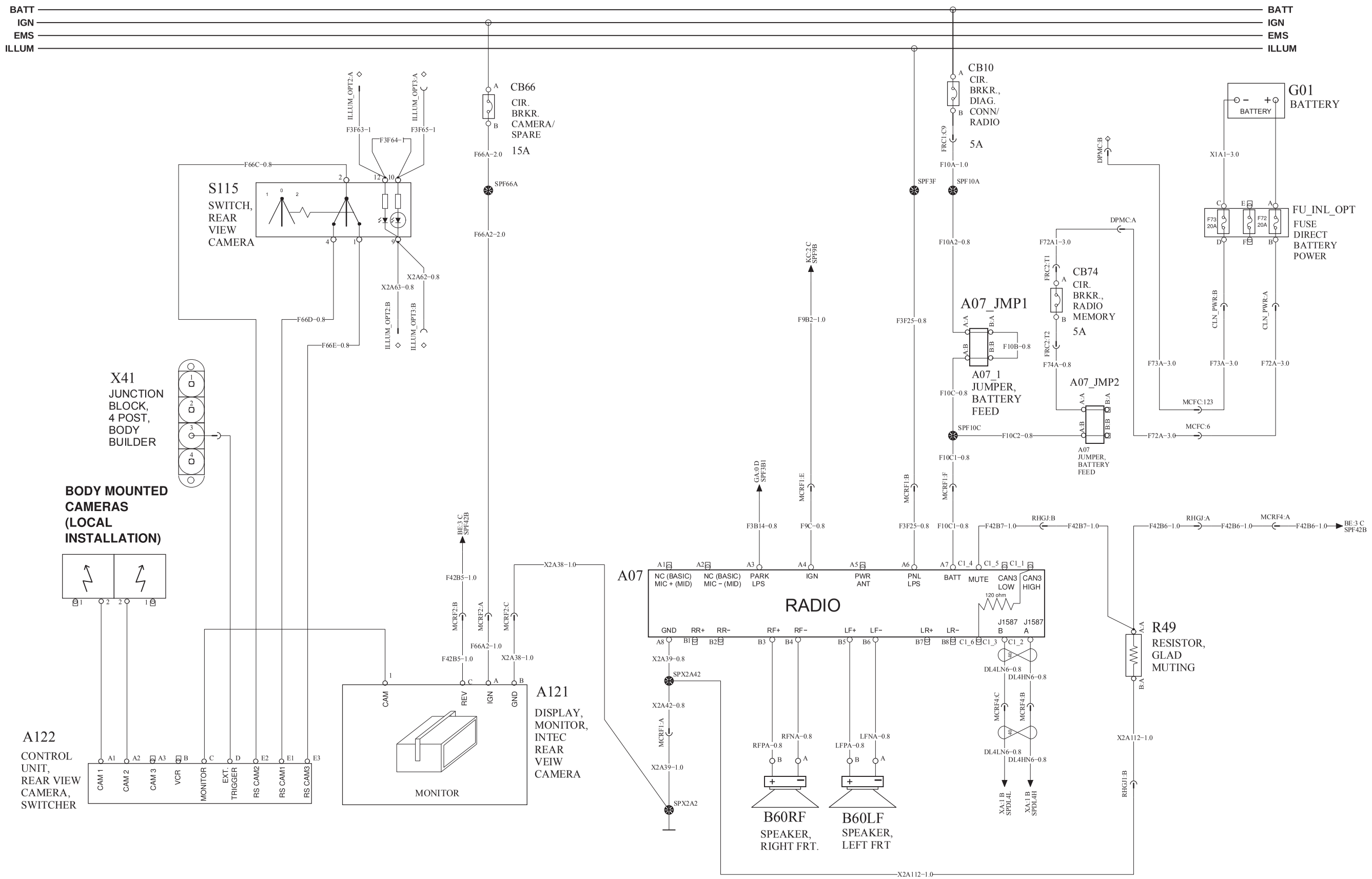

VOLVO Group Trucks Technology	Document title: WIRING DIAGRAM - TYPE OL Document type: PRODUCT SCHEMATIC	Document No: 21668222	Issue: 04	Volume: 1 (2)	Page: 46 (50)

https://trucksmanualshub.com/

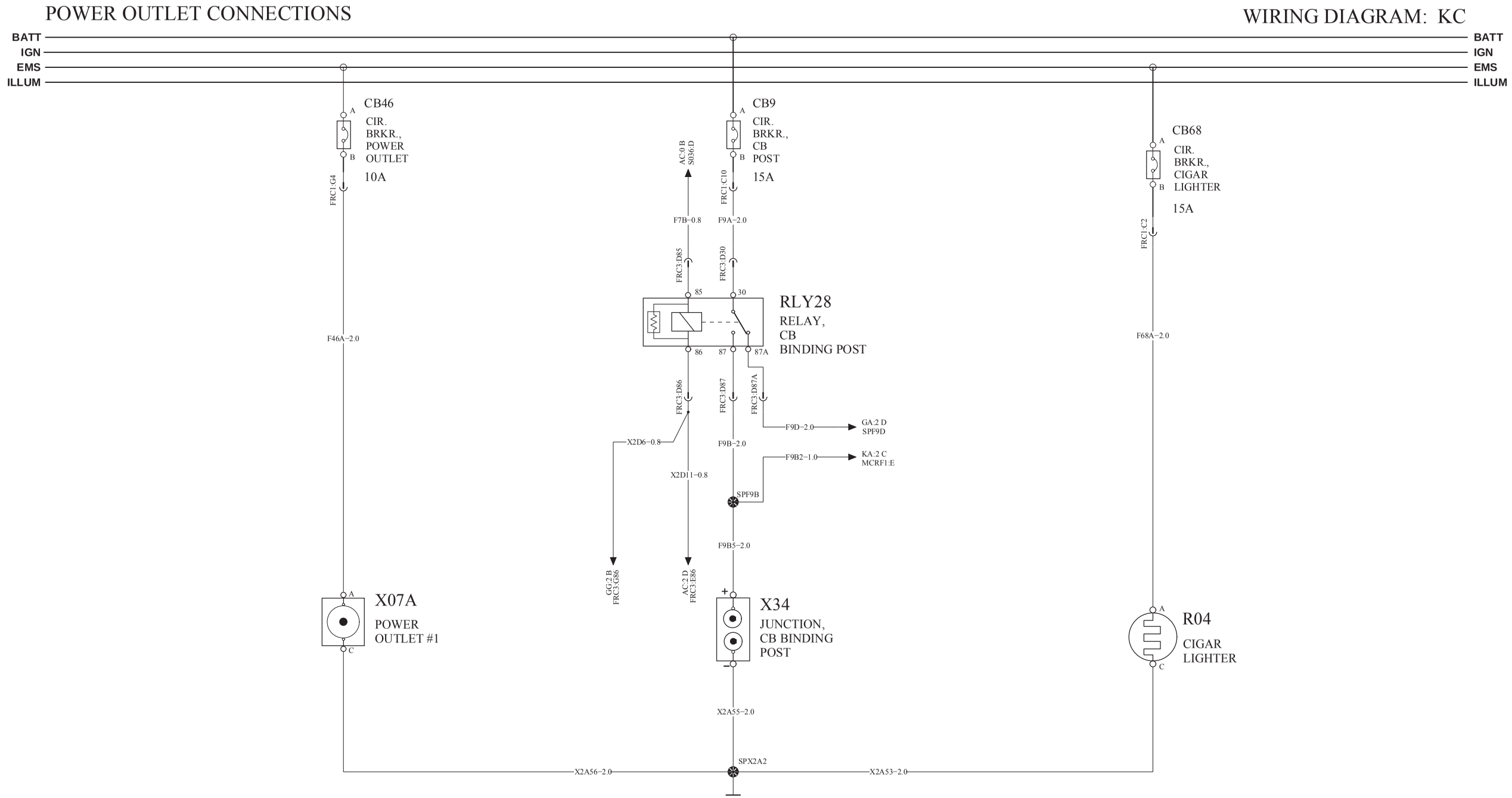

VOLVO Group Trucks Technology	Document title: WIRING DIAGRAM - TYPE OL Document type: PRODUCT SCHEMATIC	Document No: 21668222	Issue: 04	Volume: 1 (2)	Page: 47 (50)

https://truckmanualshub.com/

SPARE CONNECTORS & FEEDS

WIRING DIAGRAM: NA

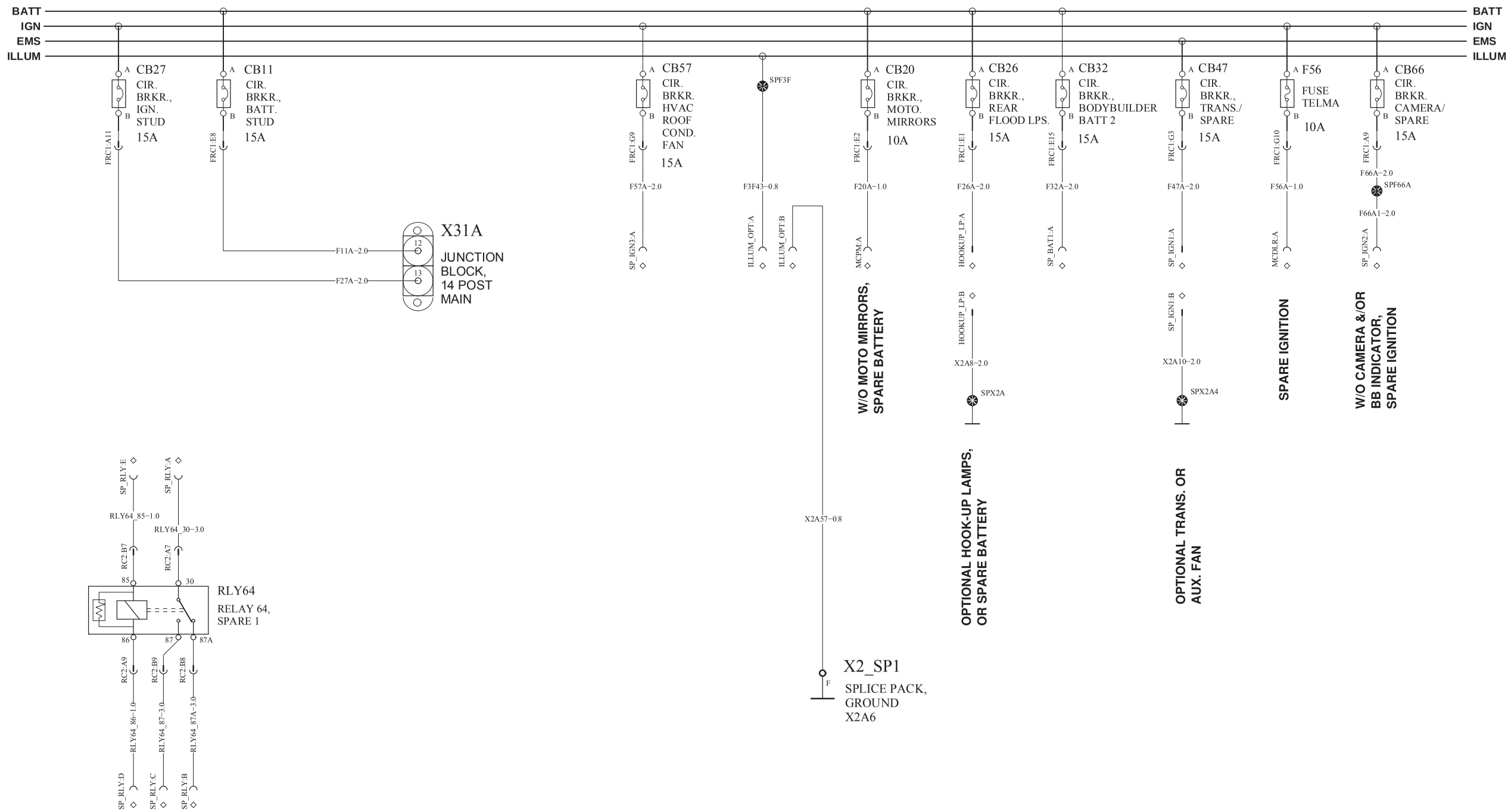

VOLVO Group Trucks Technology	Document title: WIRING DIAGRAM - TYPE OL Document type: PRODUCT SCHEMATIC	Document No: 21668222	Issue: 04	Volume: 1 (2)	Page: 48 (50)

https://truckmanualshub.com/

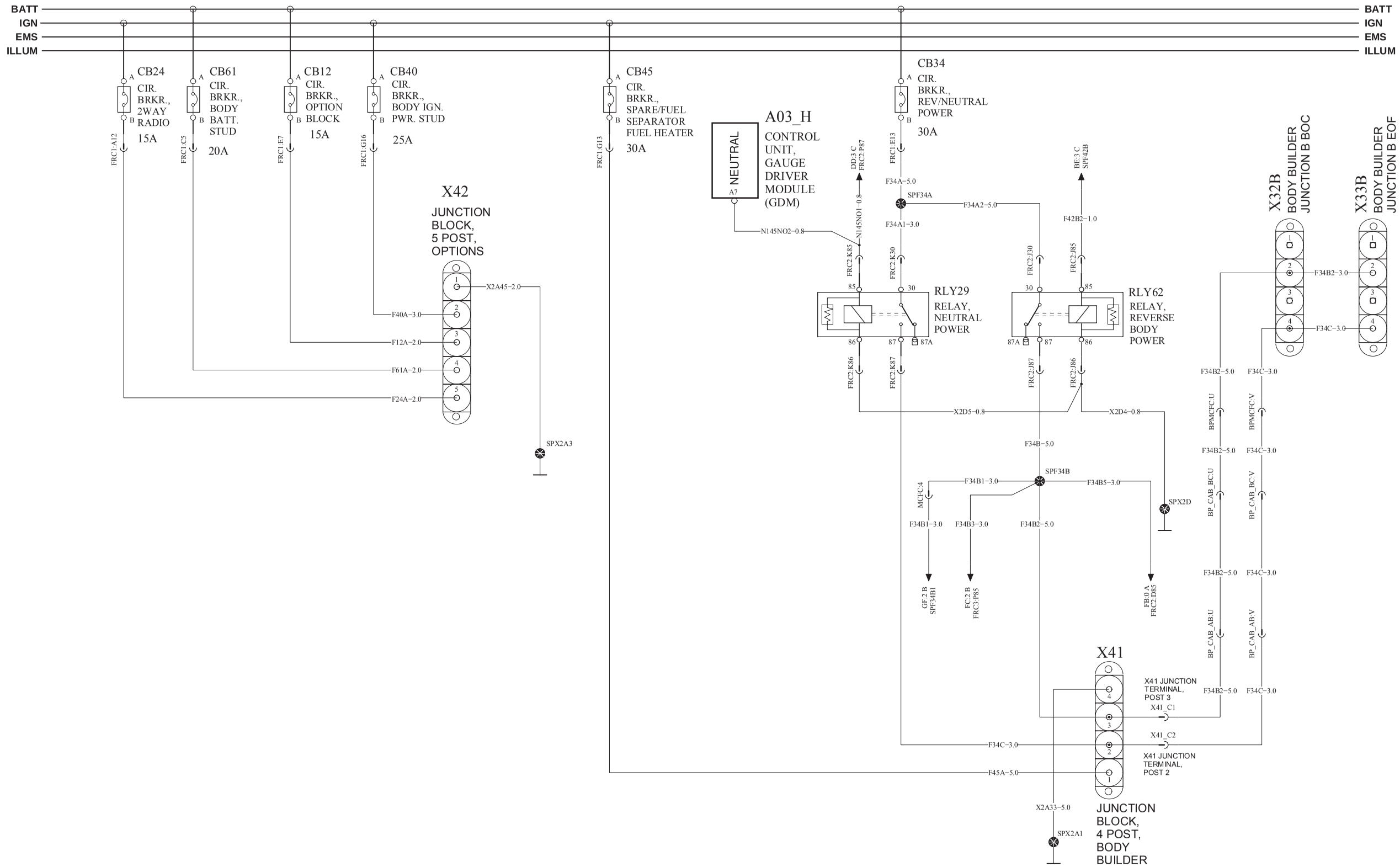

VOLVO Group Trucks Technology	Document title WIRING DIAGRAM - TYPE OL Document type PRODUCT SCHEMATIC	Document No 21668222	Issue 04	Volume 1 (2)	Page 49 (50)

https://trucksmanualshub.com/

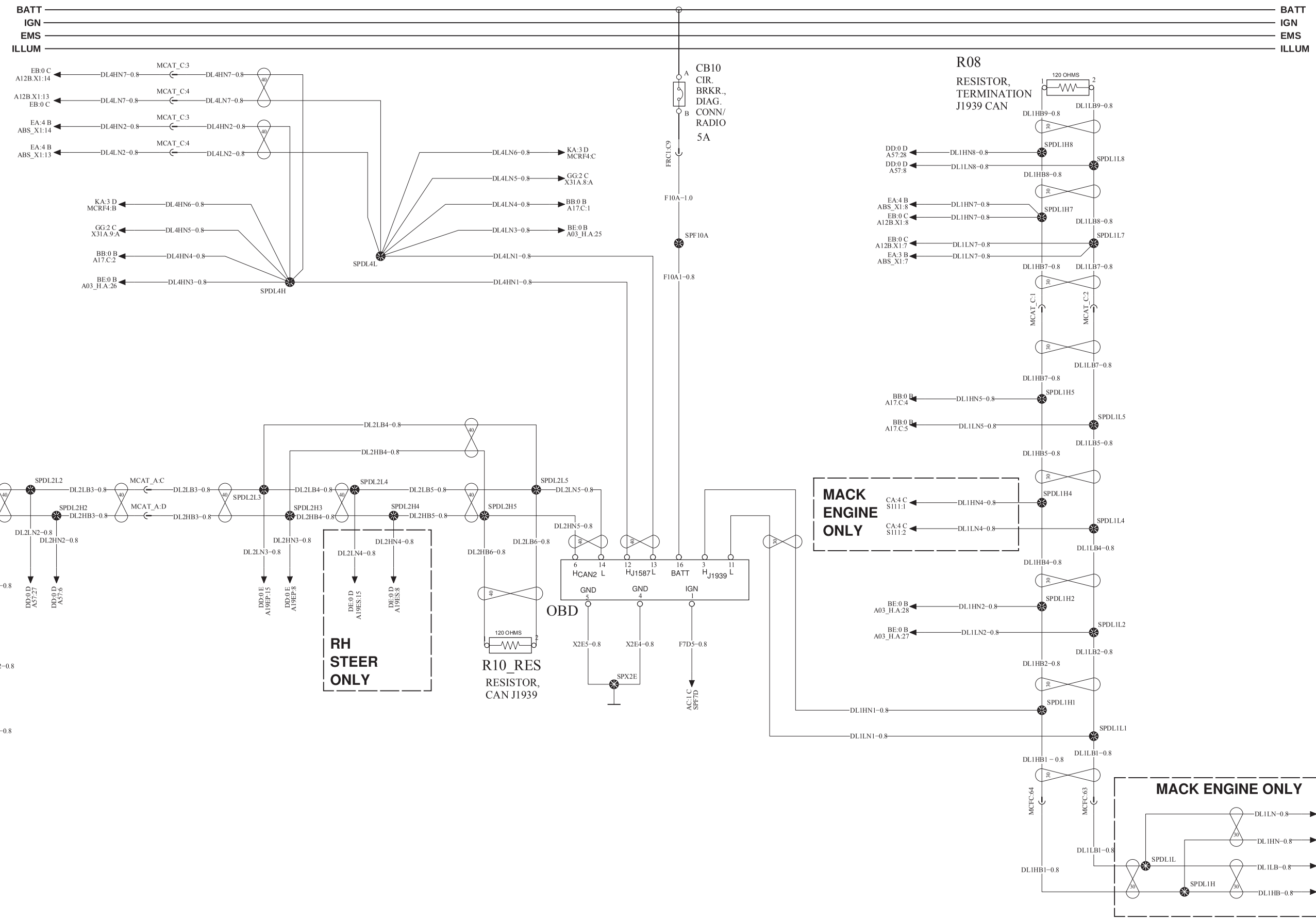

VOLVO Group Trucks Technology	Document title: WIRING DIAGRAM - TYPE OL Document type: PRODUCT SCHEMATIC	Document No: 21668222	Issue: 04	Volume: 1 (2)	Page: 50 (50)

https://truckmanualshub.com/