Engineering Release Notice (ERN)	Location	Change Description A = Added W = Was D = Deleted	Document Release Status	
D-16001-55		See DCN	RELEASED Date	Modification Count

https://truckmanuals10.com/

WIRING DIAGRAM INDEX

NAME	DESCRIPTION	PAGE
AA	POWER DISTRIBUTION 1/2	3
AB	POWER DISTRIBUTION 2/2	4
AC	KEY SW., START & CHARGING	5
AD	GROUNDING	6
BA	VEHICLE ECU 1/4	7
BB	VEHICLE ECU 2/4	8
BC	VEHICLE ECU 3/4 - DCL CONNECTOR	9
BD	VEHICLE ECU 4/4	10
BE	INSTRUMENT CLUSTER 1/3	11
BF	INSTRUMENT CLUSTER 2/3	12
BG	INSTRUMENT CLUSTER 3/3	13
BH	ALLISON BODY BUILDER INTERFACE	14
BJ	BODY LINK II CONSTRUCTION BODYBUILDER CI	15
BK	CONCRETE DUAL TRANSMISSION PTO BODYBUILD	16
BL	CONCRETE SINGLE DRIVESHAFT PTO BODYBUILD	17
BM	BODY LINK II REFUSE BODYBUILDER CIRCUITS	18
BN	CONCRETE DUAL DRIVESHAFT PTO PACKAGE 1/2	19
BO	CONCRETE DUAL DRIVESHAFT PTO PACKAGE 2/2	20
CA	ENGINE INTERFACE MP7 & MP8	21
CB	DPF CONTROL SYSTEM (MP7)	22
CC	ENGINE HEATER	23
CD	AUXILLARY COOLING FANS	24
CE	ENGINE INTERFACE CUMMINS ISL G	25
CF	UREA DOSING SYSTEM	26
CG	GAS FUEL SYSTEM	27
CH	METHANE DETECTION SYSTEM	28

NAME	DESCRIPTION	PAGE
DC	TRANSMISSION CONTROL 5TH GENERATION 1/3	29
DD	TRANSMISSION CONTROL 5TH GENERATION 2/3	30
EA	ABS - MERITOR	31
EB	ABS - BENDIX 6	32
ED	ABS - BENDIX 8	33
FA	AIR DRYER/HEATED DRAIN	34
FB	CHASSIS SOLENOIDS	35
FC	MUNCIE PUMP & BEACON lAMPS	36
FD	PARKER PTO	37
GA	LIGHTING CONTROL	38
GD	LIGHTING - FORWARD/SIGNAL	39
GF	LIGHTING - TAIL LAMP	40
GG	LIGHTING - TRAILER CONTROL	41
GH	LIGHTING - INTERIOR	42
GP	WIPER/WASHER	43
GQ	HORN WIRING	44
HA	CLIMATE CONTROL	45
IC	MIRROR CONTROL 1/2	46
ID	MIRROR CONTROL 2/2	47
KA	VISUAL SYSTEMS	48
KB	AUDIO SYSTEMS	49
KC	POWER OUTLET CONNECTIONS	50
NA	SPARE CONNECTORS & FEEDS	51
NB	JUNCTION POSTS	52
XA	DATA LINK/DIAGNOSTICS	53

The copying, distribution and utilization of this document as well as the communication of its contents to others without expressed authorization is prohibited. Offenders will be held liable for payment of damages. All rights reserved in the event of the grant of a patent, utility model or ornamental design registration.

Document title

WIRING DIAGRAM − TYPE OM W/CNG ENG

VOLVO

Group Trucks Technlogy

The legal owner of this document is as stated under "Design Location" in KOLA and in the associated "Part Version Report"

Document type

PRODUCT SCHEMATICS

Document No	Issue	Volume	Sheet No
22437784	02	1 (2)	1 (53)

GROUNDING

https://truckmanualshub.com/

WIRING DIAGRAM: AD

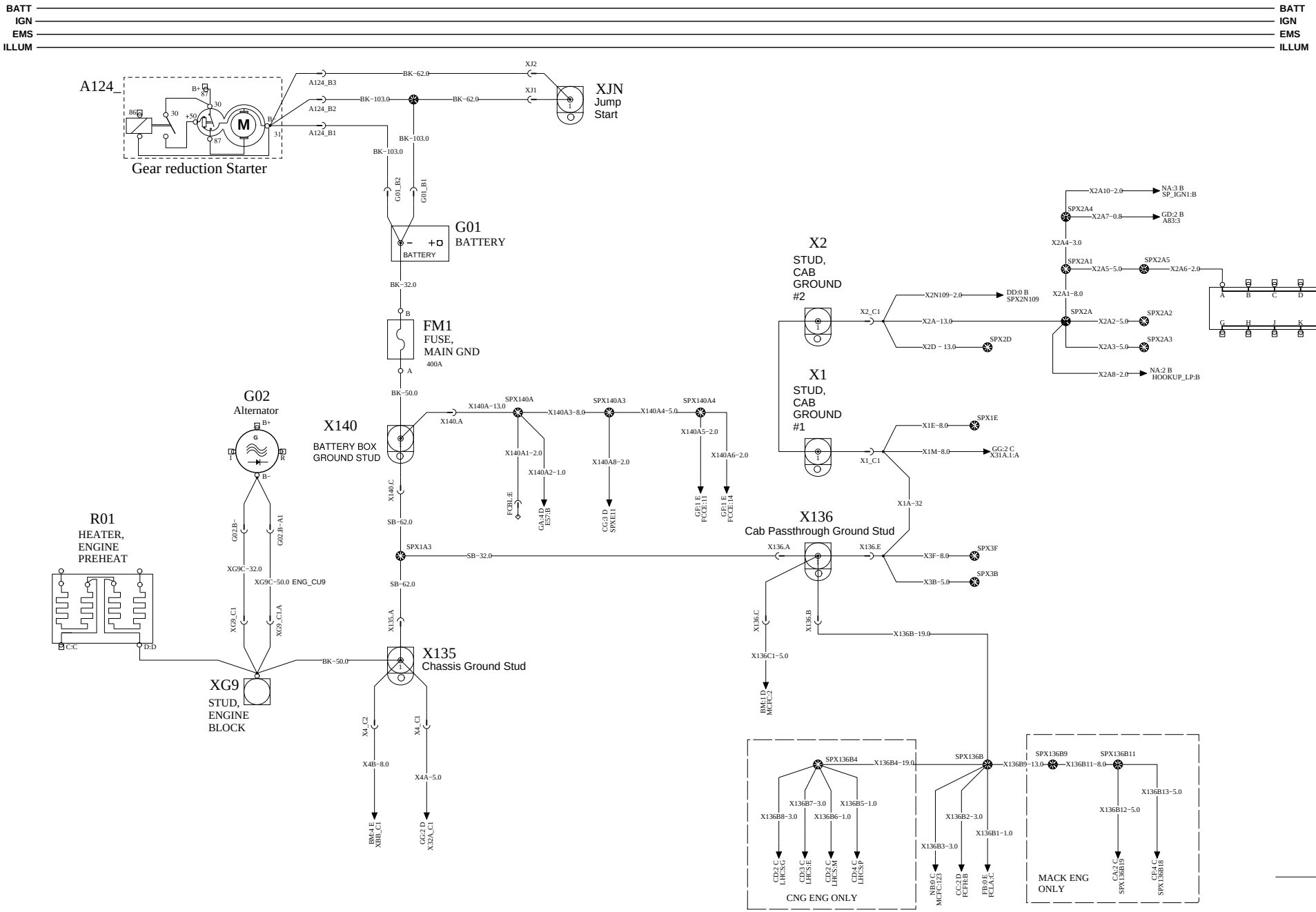

VOLVO Group Trucks Technology	Document title WIRING DIAGRAM - TYPE OM W/CNG ENG Document type PRODUCT SCHEMATIC	Document No 22437784	Issue 02	Volume 1 (2)	Page 6 (53)

POWER DISTRIBUTION 1/2

https://truckmanualshub.com/

WIRING DIAGRAM: AA

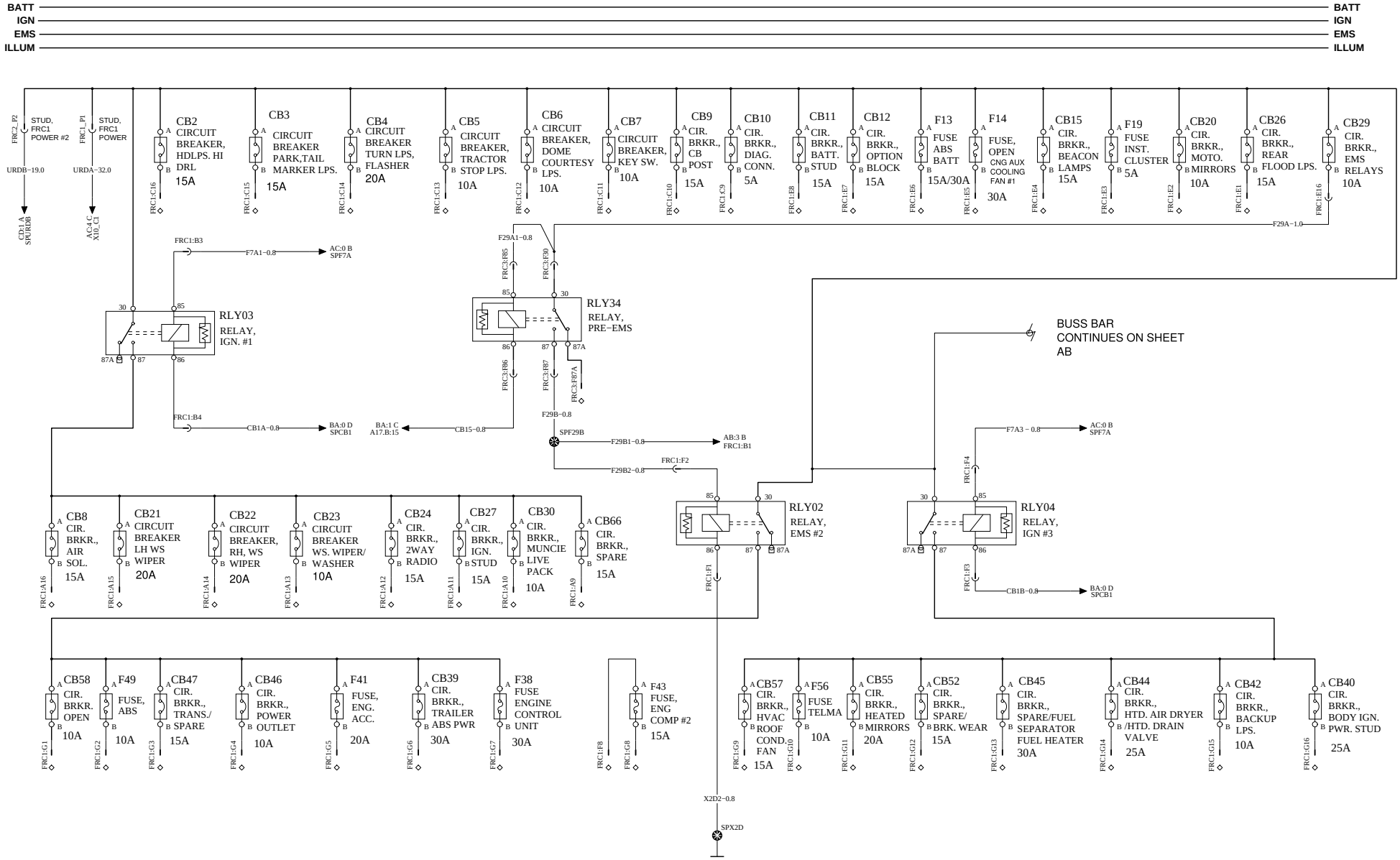

VOLVO Group Trucks Technology	Document title: WIRING DIAGRAM - TYPE OM W/CNG ENG Document type: PRODUCT SCHEMATIC	Document No: 22437784	Issue: 02	Volume: 1 (2)	Page: 3 (53)

https://truckmanualshub.com/

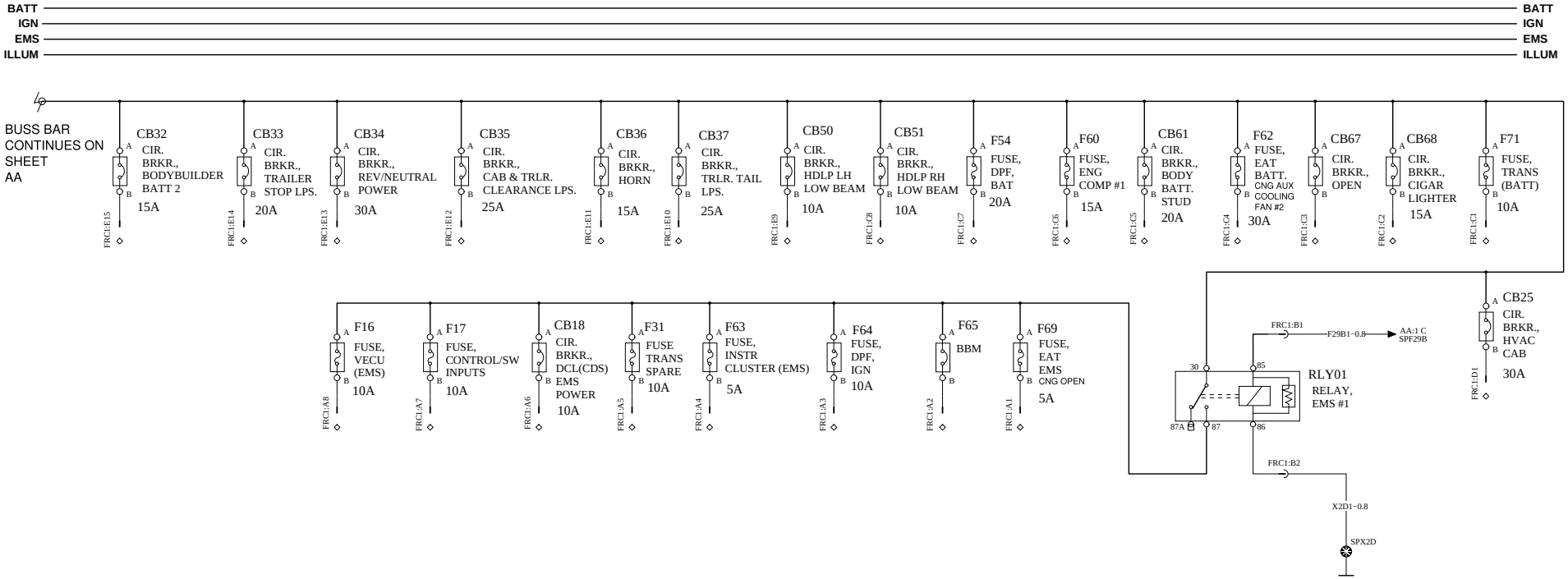

VOLVO Group Trucks Technology	Document title: WIRING DIAGRAM - TYPE OM W/CNG ENG Document type: PRODUCT SCHEMATIC	Document No: 22437784	Issue: 02	Volume: 1 (2)	Page: 4 (53)

KEY SW., START & CHARGING

https://truckmanualshub.com/

WIRING DIAGRAM: AC

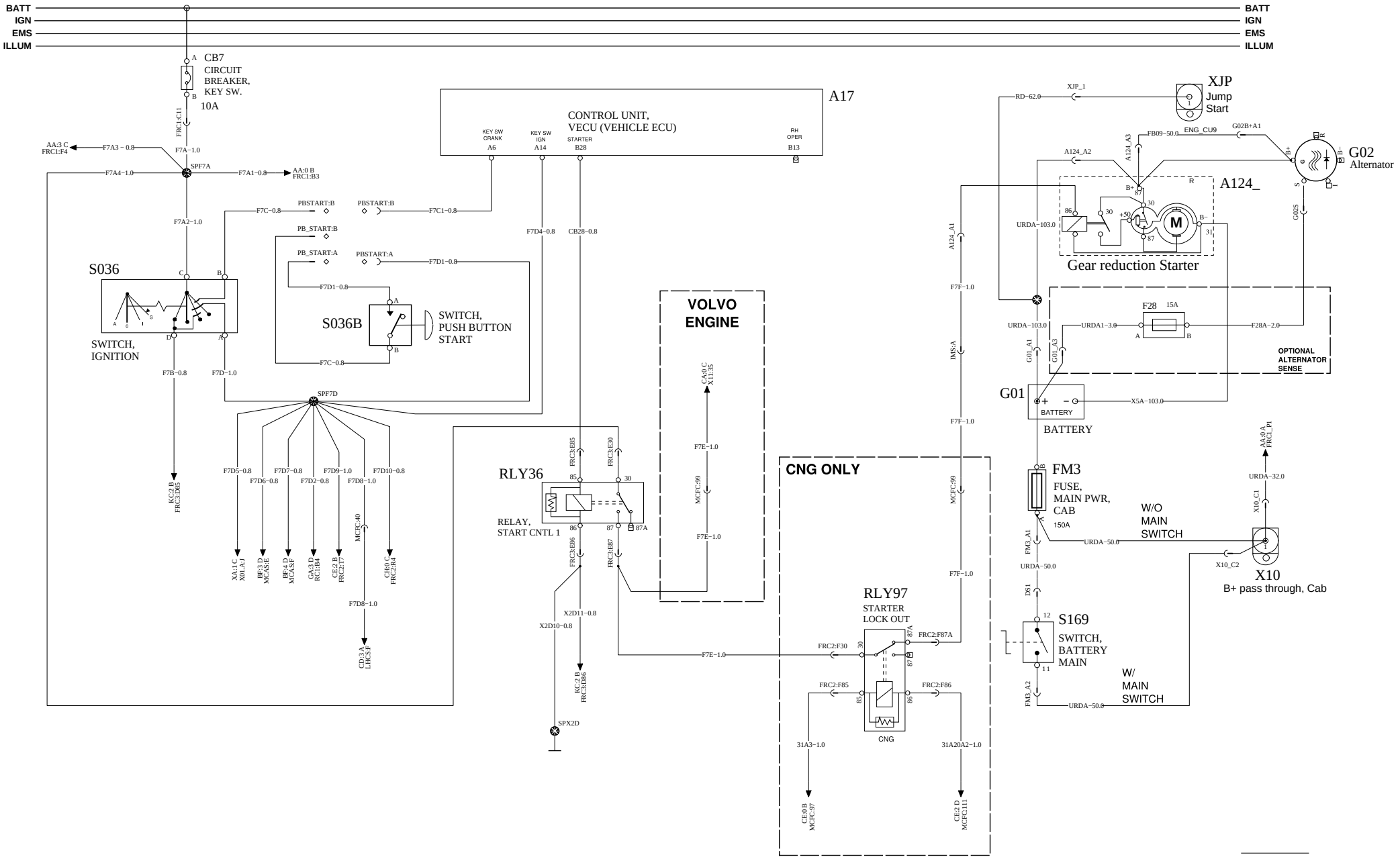

VOLVO Group Trucks Technology	Document title WIRING DIAGRAM - TYPE OM W/CNG ENG Document type PRODUCT SCHEMATIC	Document No 22437784	Issue 02	Volume 1 (2)	Page 5 (53)

GROUNDING

https://truckmanualshub.com/

WIRING DIAGRAM: AD

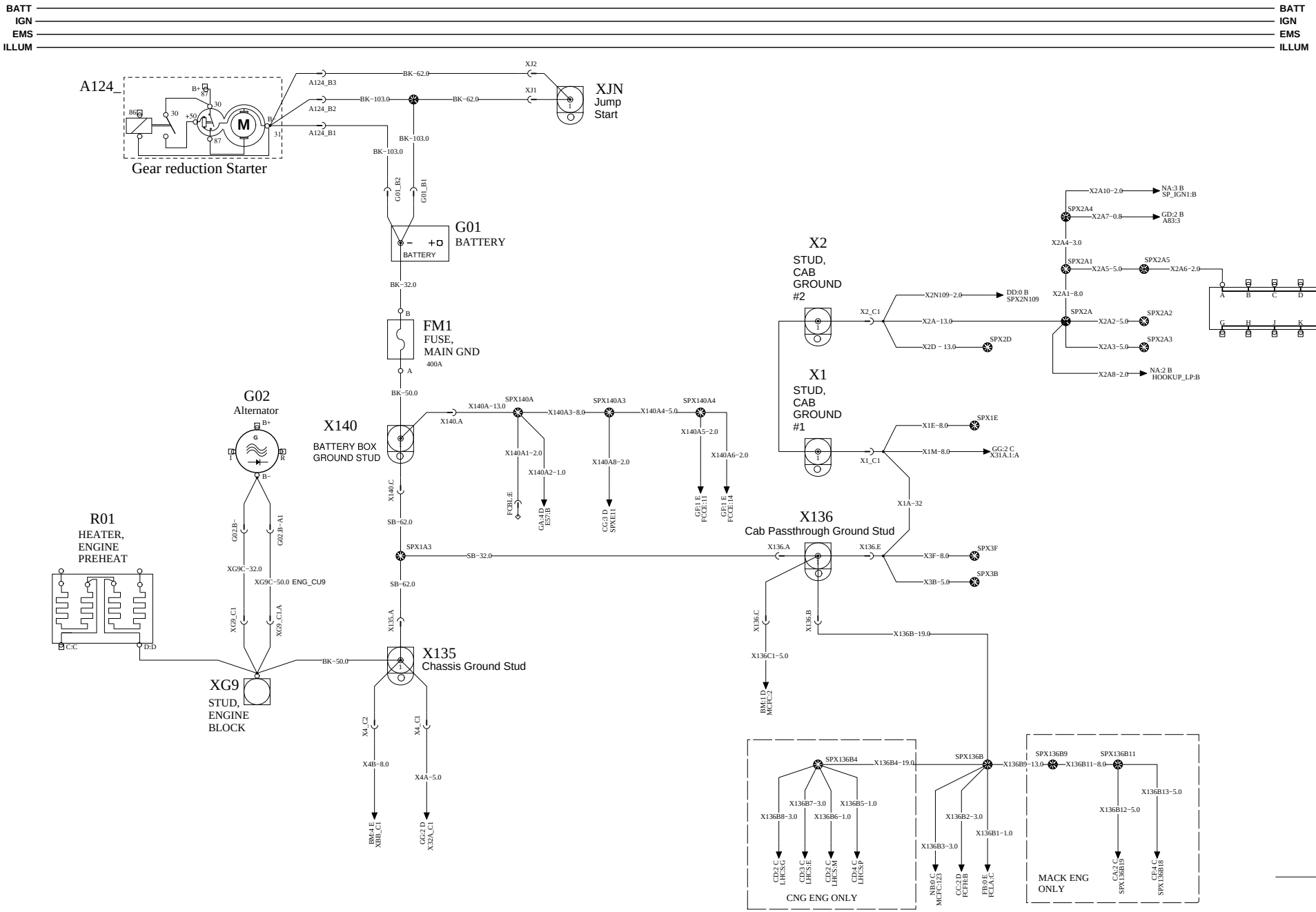

VOLVO Group Trucks Technology	Document title WIRING DIAGRAM - TYPE OM W/CNG ENG Document type PRODUCT SCHEMATIC	Document No 22437784	Issue 02	Volume 1 (2)	Page 6 (53)

VEHICLE ECU 1/4

https://truckmanualshub.com/

WIRING DIAGRAM: BA

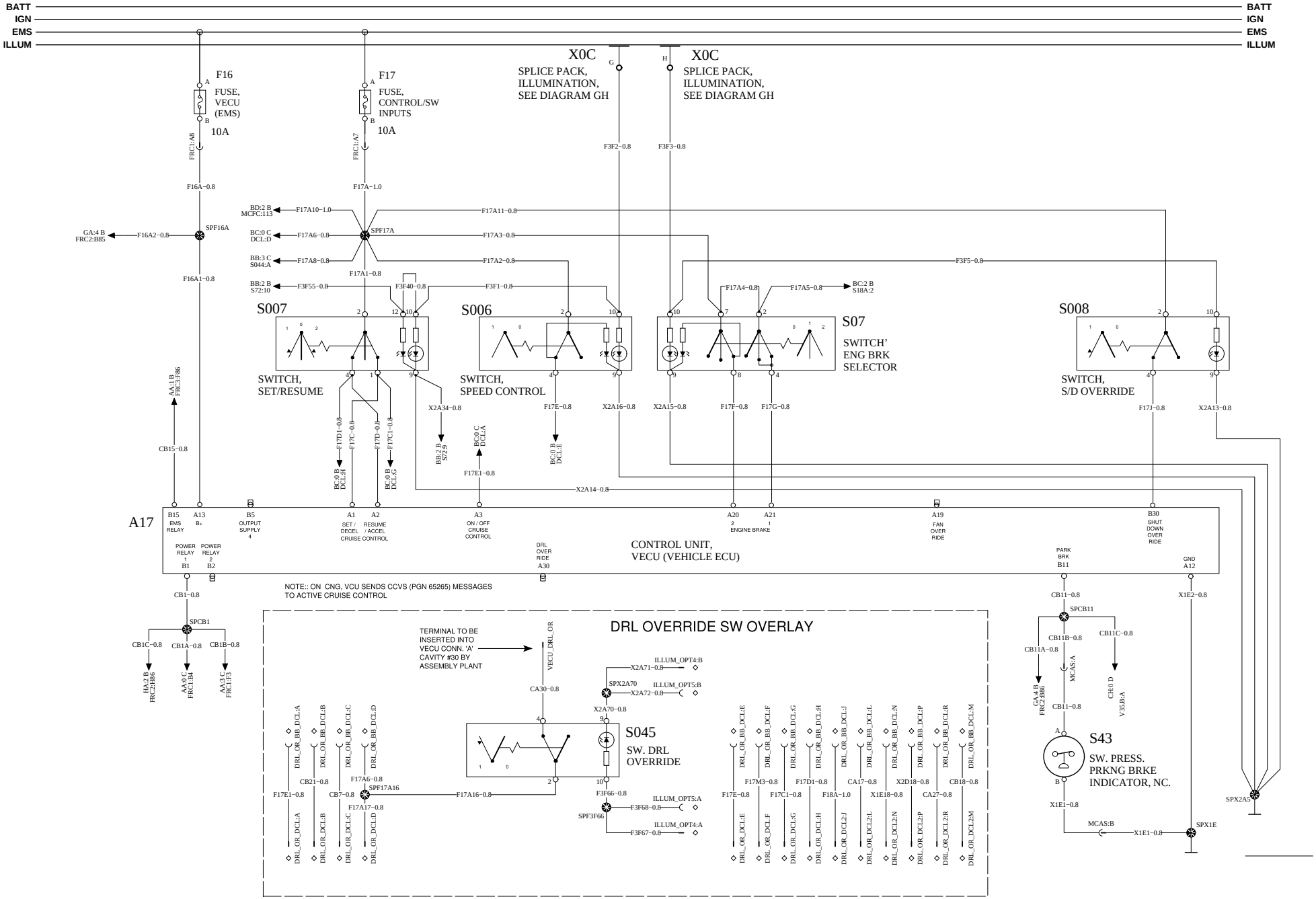

VOLVO Group Trucks Technology	Document title: WIRING DIAGRAM - TYPE OM W/CNG ENG	Document No	Issue	Volume	Page
	Document type: PRODUCT SCHEMATIC	22437784	02	1 (2)	7 (53)

https://truckmanualshub.com/

WIRING DIAGRAM: BB

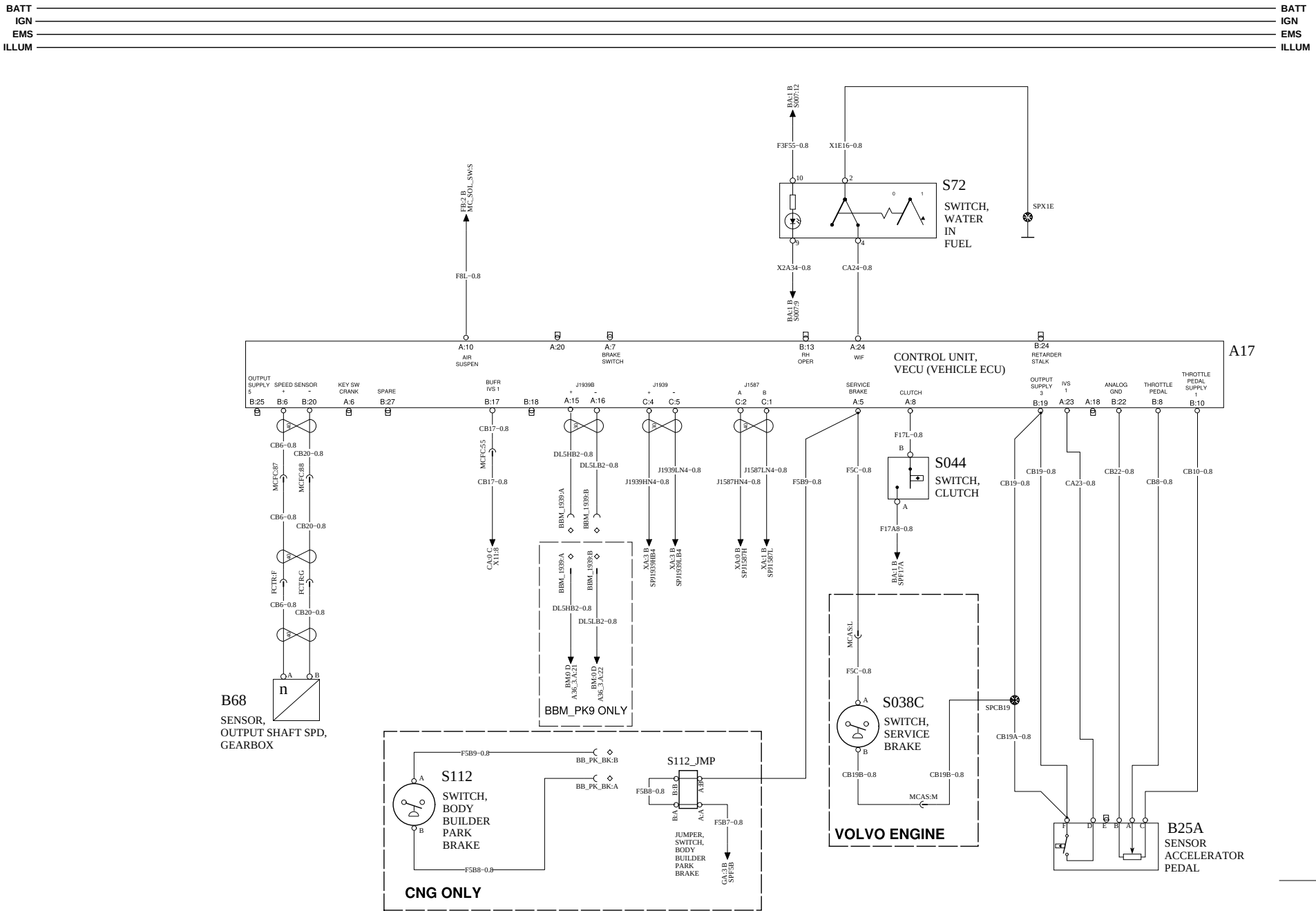

VOLVO Group Trucks Technology	Document title: WIRING DIAGRAM - TYPE OM W/CNG ENG	Document No	Issue	Volume	Page
	Document type: PRODUCT SCHEMATIC	22437784	02	1 (2)	8 (53)

VEHICLE ECU 3/4 − DCL CONNECTOR

https://truckmanualshub.com/

WIRING DIAGRAM: BC

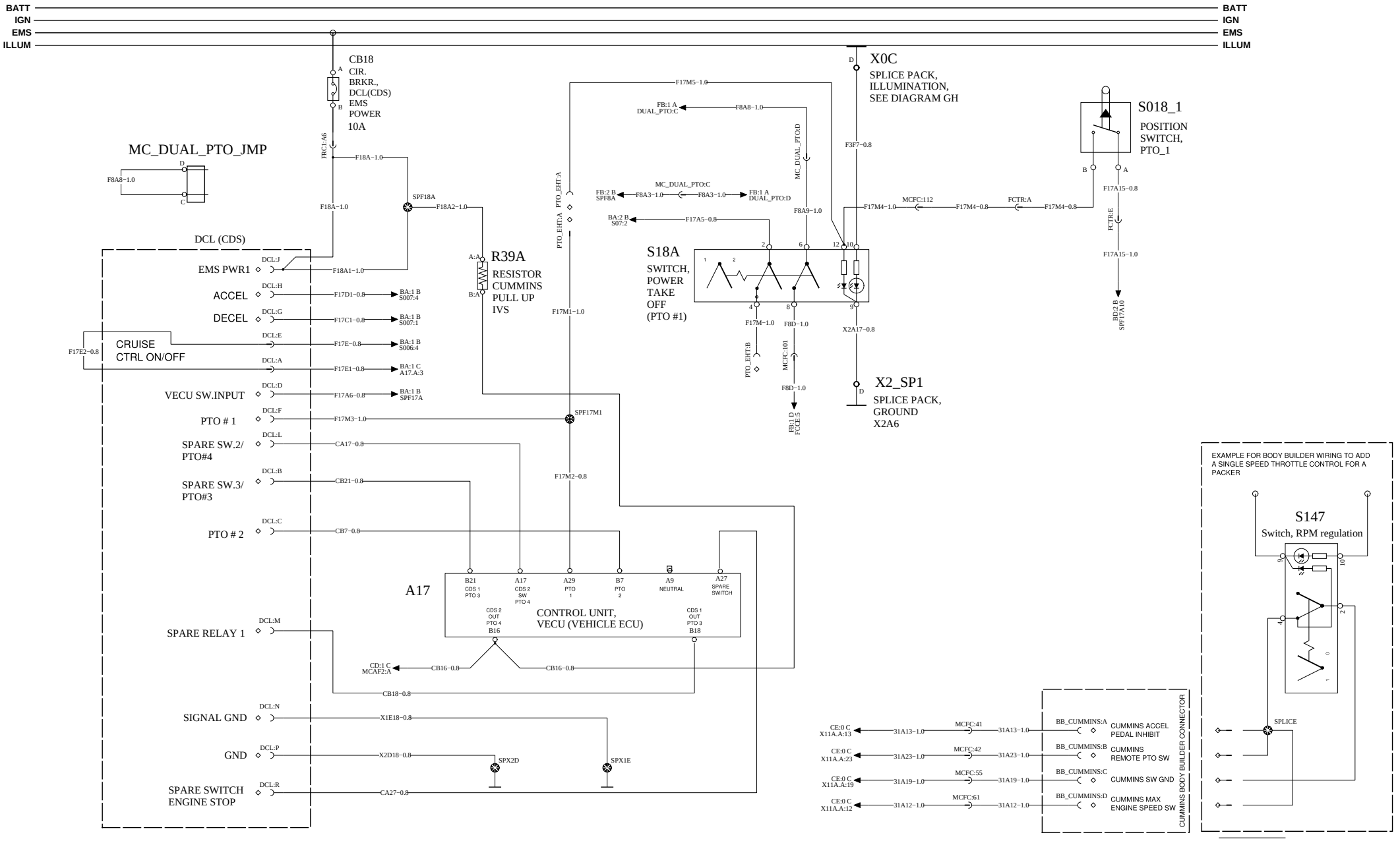

VOLVO Group Trucks Technology	Document title WIRING DIAGRAM - TYPE OM W/CNG ENG Document type PRODUCT SCHEMATIC	Document No 22437784	Issue 02	Volume 1 (2)	Page 9 (53)

https://truckmanualshub.com/

WIRING DIAGRAM: BD

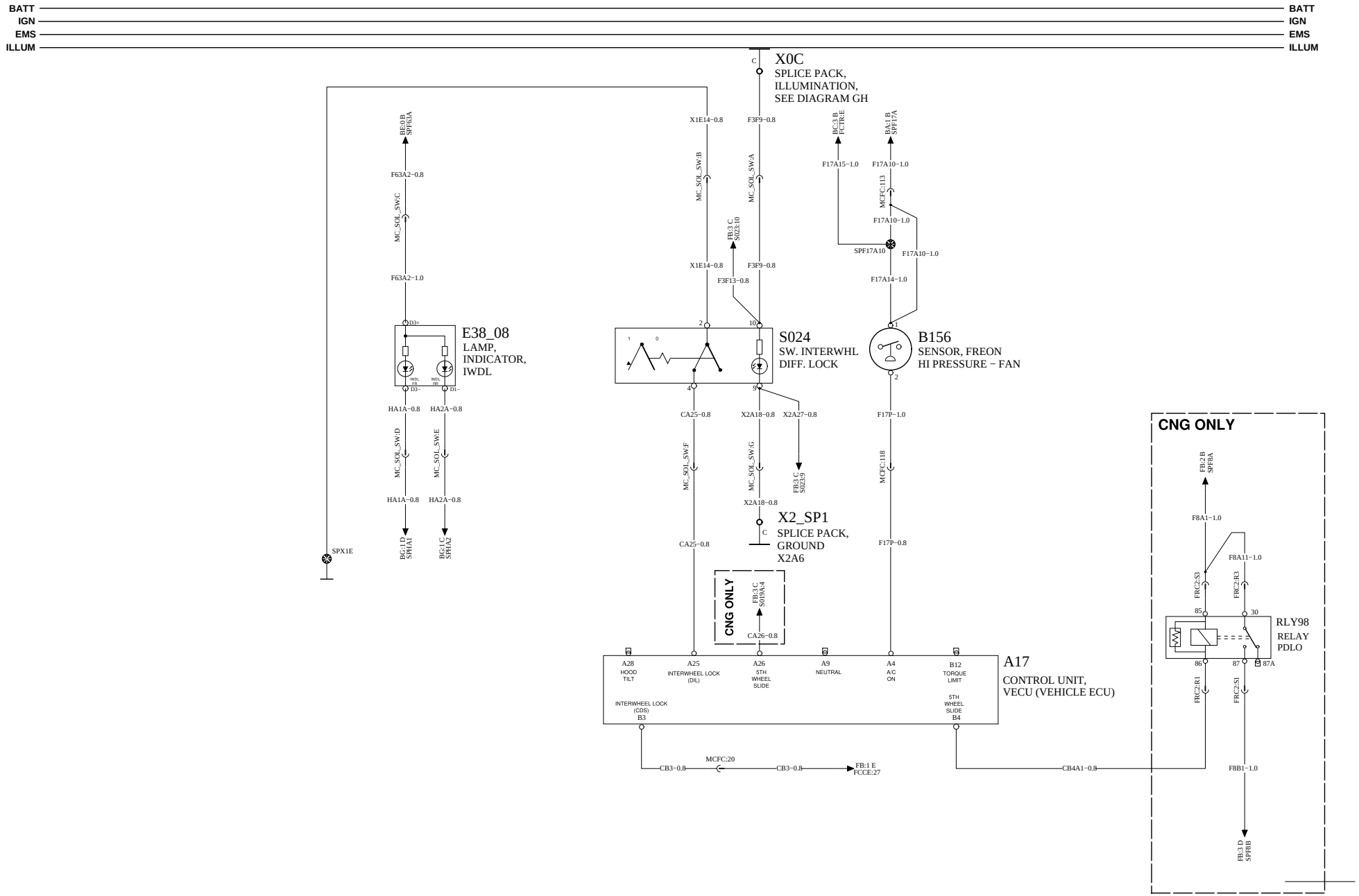

VOLVO Group Trucks Technology	Document title WIRING DIAGRAM - TYPE OM W/CNG ENG Document type PRODUCT SCHEMATIC	Document No 22437784	Issue 02	Volume 1 (2)	Page 10 (53)

INSTRUMENT CLUSTER 1/3

https://truckmanualshub.com/

WIRING DIAGRAM: BE

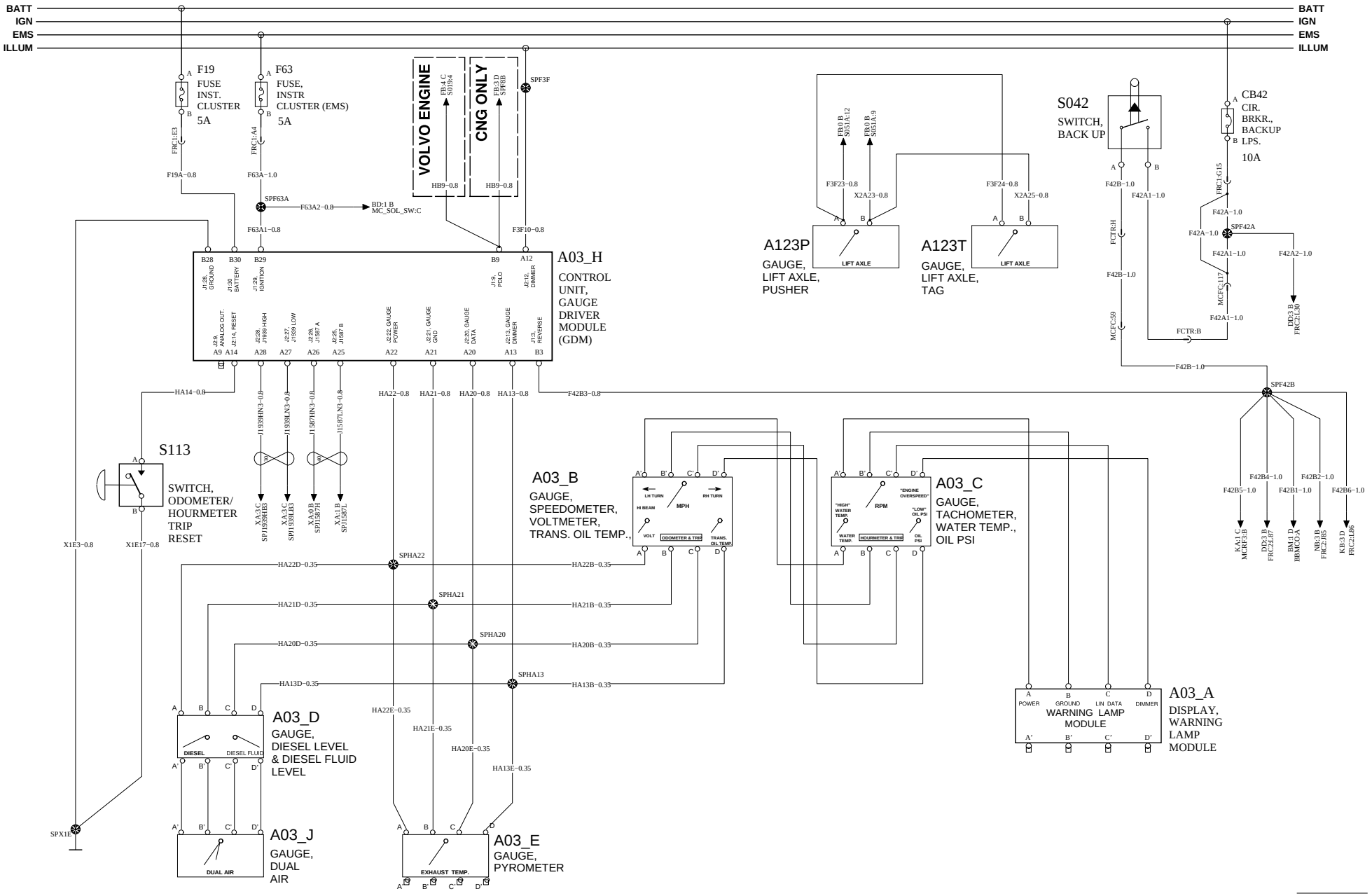

VOLVO Group Trucks Technology	Document title WIRING DIAGRAM - TYPE OM W/CNG ENG Document type PRODUCT SCHEMATIC	Document No 22437784	Issue 02	Volume 1 (2)	Page 11 (53)

https://truckmanualshub.com/

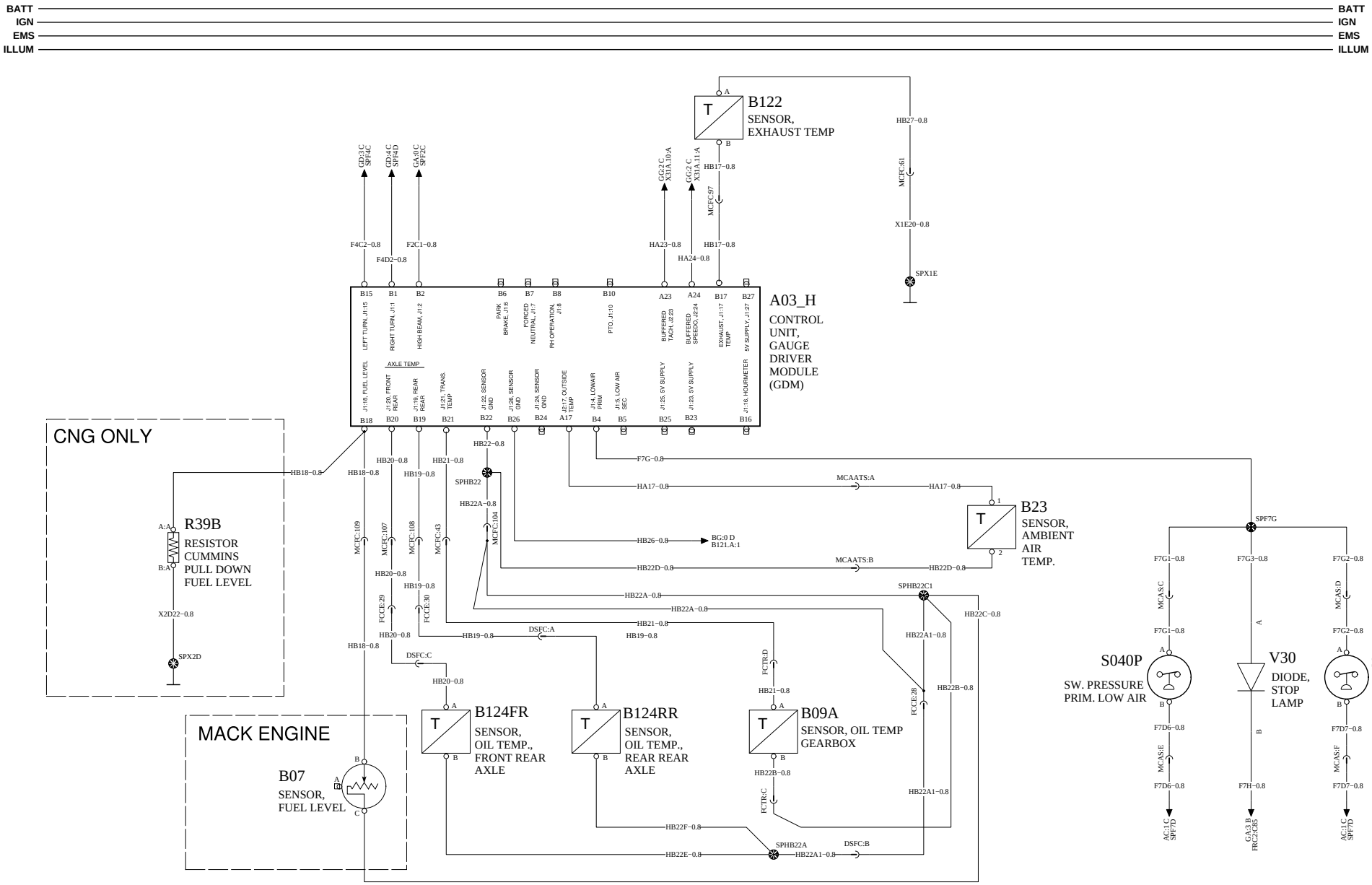

VOLVO Group Trucks Technology	Document title: WIRING DIAGRAM - TYPE OM W/CNG ENG Document type: PRODUCT SCHEMATIC	Document No: 22437784	Issue: 02	Volume: 1 (2)	Page: 12 (53)

https://truckmanualshub.com/

WIRING DIAGRAM: BG

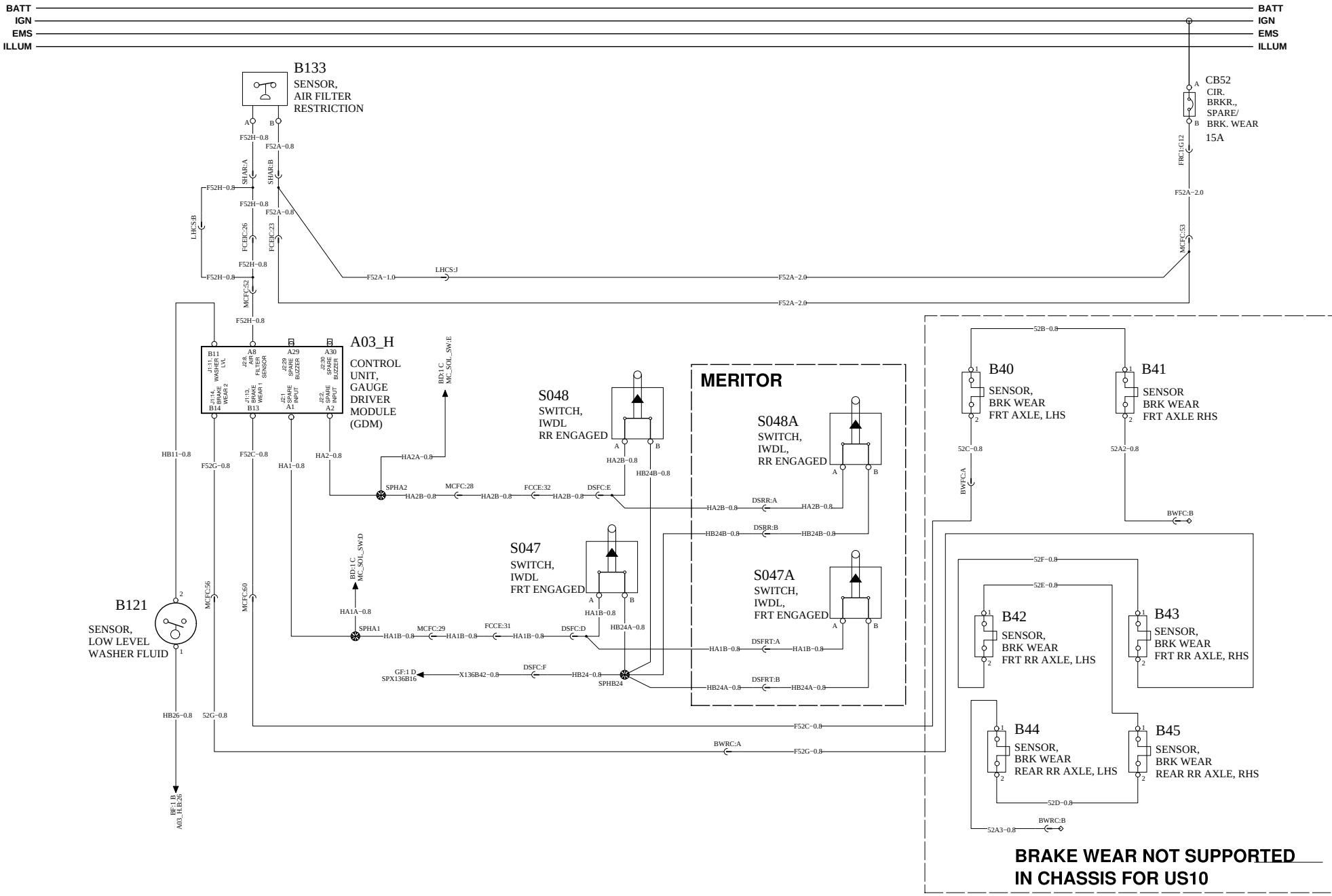

VOLVO Group Trucks Technology	Document title WIRING DIAGRAM - TYPE OM W/CNG ENG Document type PRODUCT SCHEMATIC	Document No 22437784	Issue 02	Volume 1 (2)	Page 13 (53)

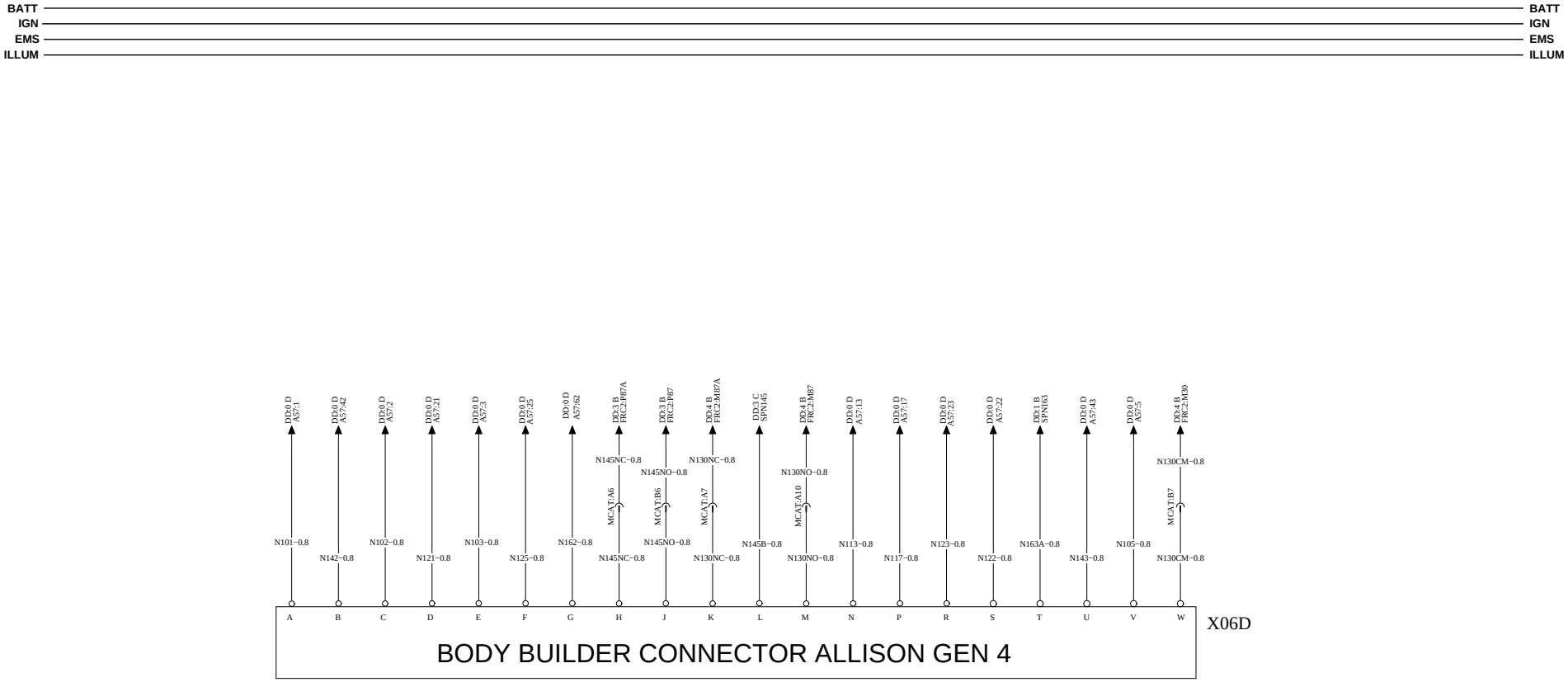
BATT
IGN
EMS
ILLUM
DD:0 D A57:1
DD:0 D A57:42
DD:0 D A57:2
DD:0 D A57:21
DD:0 D A57:3
DD:0 D A57:25
DD:0 D A57:62
DD:3 B FRC2:P87A
DD:3 B FRC2:P87
DD:4 B FRC2:M87A
DD:3 C SPN145
DD:4 B FRC2:M87
DD:0 D A57:13
DD:0 D A57:17
DD:0 D A57:23
DD:0 D A57:22
DD:1 B SPN163
DD:0 D A57:43
DD:0 D A57:5
DD:4 B FRC2:M30
N101−0.8
N142−0.8
N102−0.8
N121−0.8
N103−0.8
N125−0.8
N162−0.8
N145NC−0.8
N145NO−0.8
N145NC−0.8
N145NO−0.8
N130NC−0.8
N130NC−0.8
N145B−0.8
N130NO−0.8
N130NO−0.8
N113−0.8
N117−0.8
N123−0.8
N122−0.8
N163A−0.8
N143−0.8
N105−0.8
N130CM−0.8
N130CM−0.8
MCAT:A6
MCAT:B6
MCAT:A7
MCAT:A10
MCAT:B7
A B C D E F G H J K L M N P R S T U V W
X06D
BODY BUILDER CONNECTOR ALLISON GEN 4

BATT
IGN
EMS
ILLUM

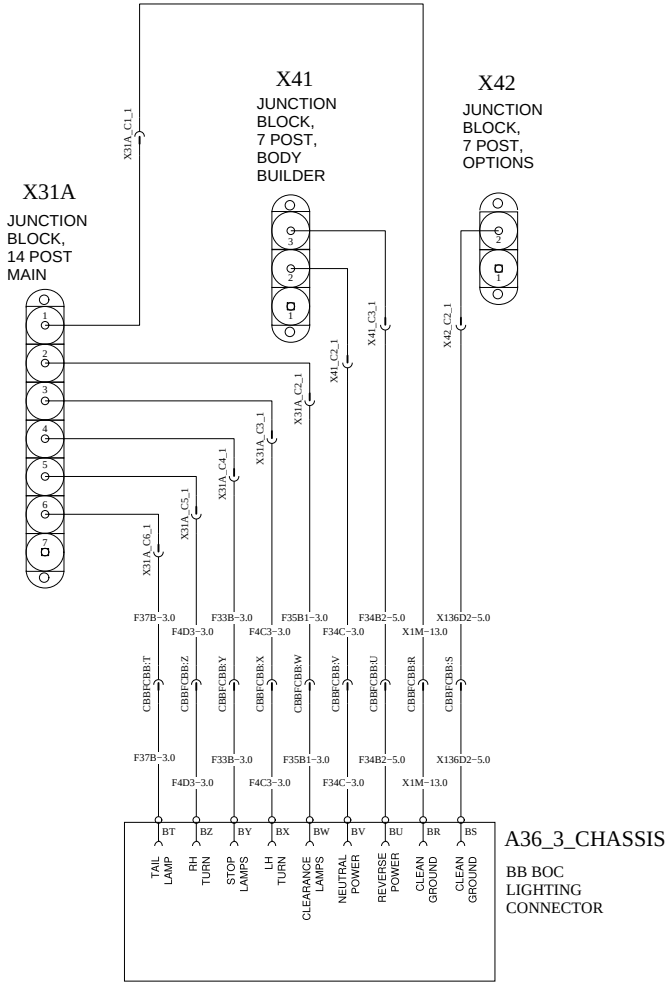

VOLVO Group Trucks Technology	Document title: WIRING DIAGRAM - TYPE OM W/CNG ENG	Document No	Issue	Volume	Page
	Document type: PRODUCT SCHEMATIC	22437784	02	1 (2)	15 (53)

CONCRETE DUAL TRANSMISSION PTO BODYBUILDER PACKAGE

https://truckmanualshub.com/

WIRING DIAGRAM: BK

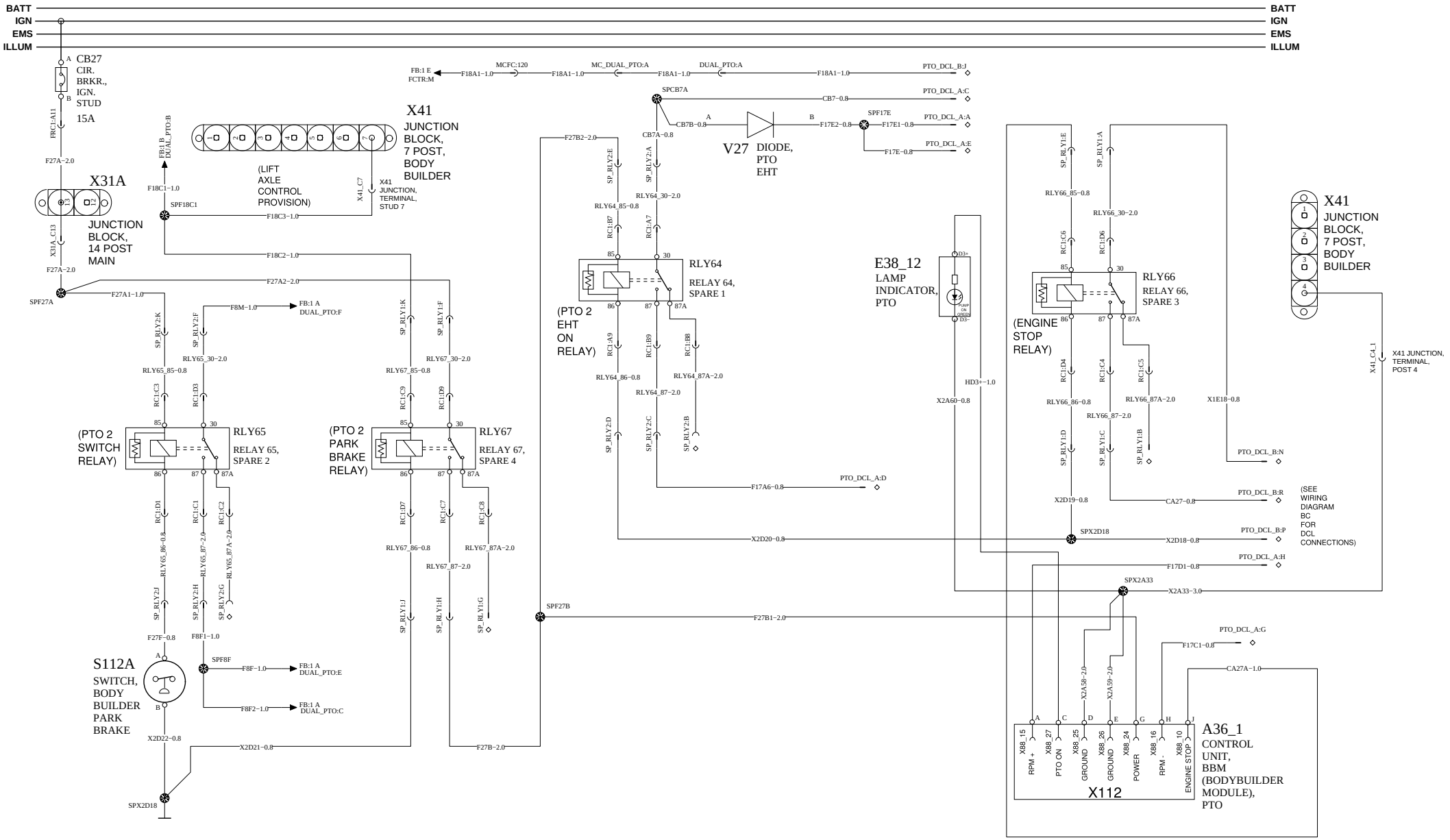

VOLVO Group Trucks Technology	Document title WIRING DIAGRAM - TYPE OM W/CNG ENG Document type PRODUCT SCHEMATIC	Document No 22437784	Issue 02	Volume 1 (2)	Page 16 (53)

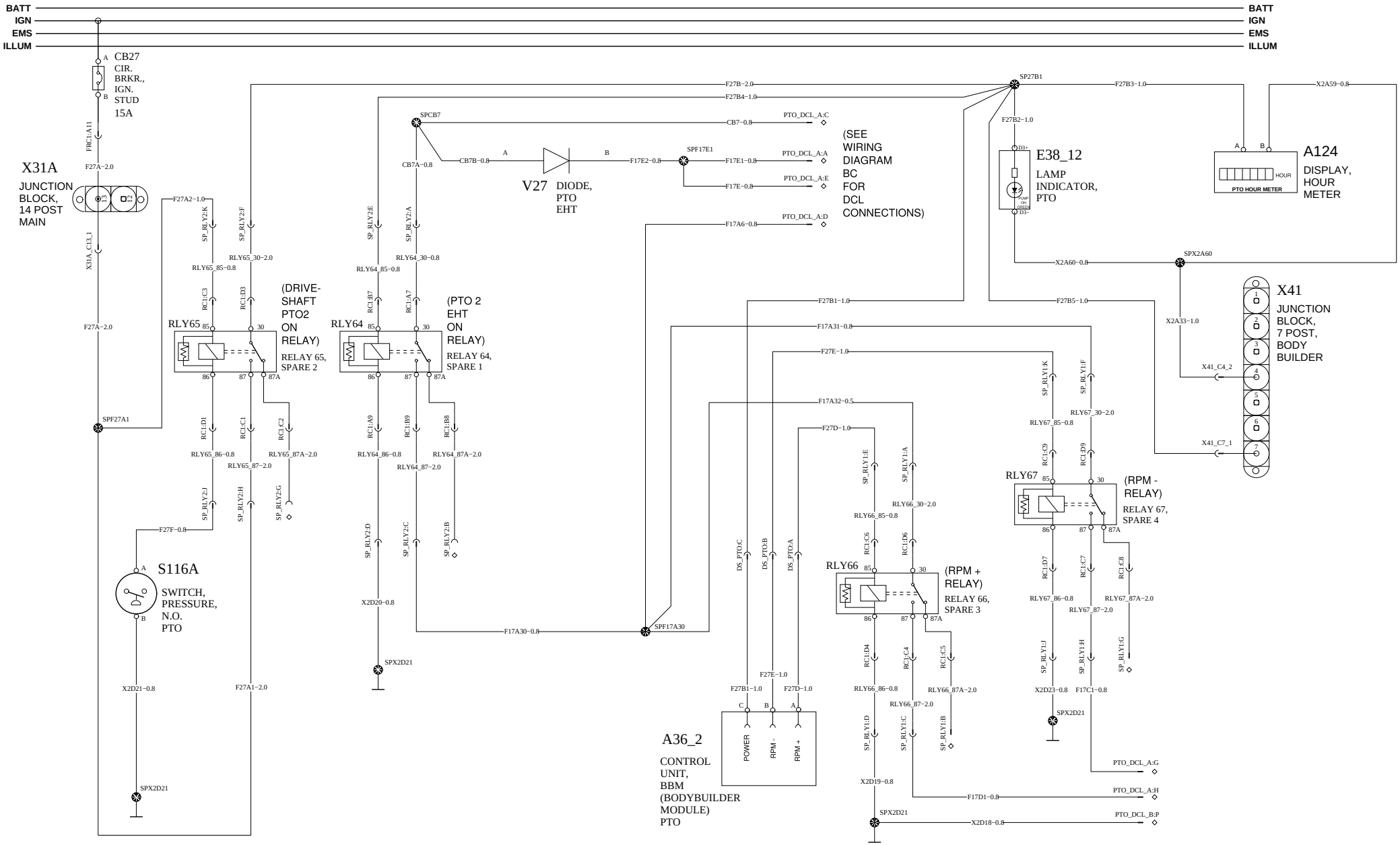

VOLVO Group Trucks Technology	Document title: WIRING DIAGRAM - TYPE OM W/CNG ENG Document type: PRODUCT SCHEMATIC	Document No: 22437784	Issue: 02	Volume: 1 (2)	Page: 17 (53)

https://truckmanualshub.com/

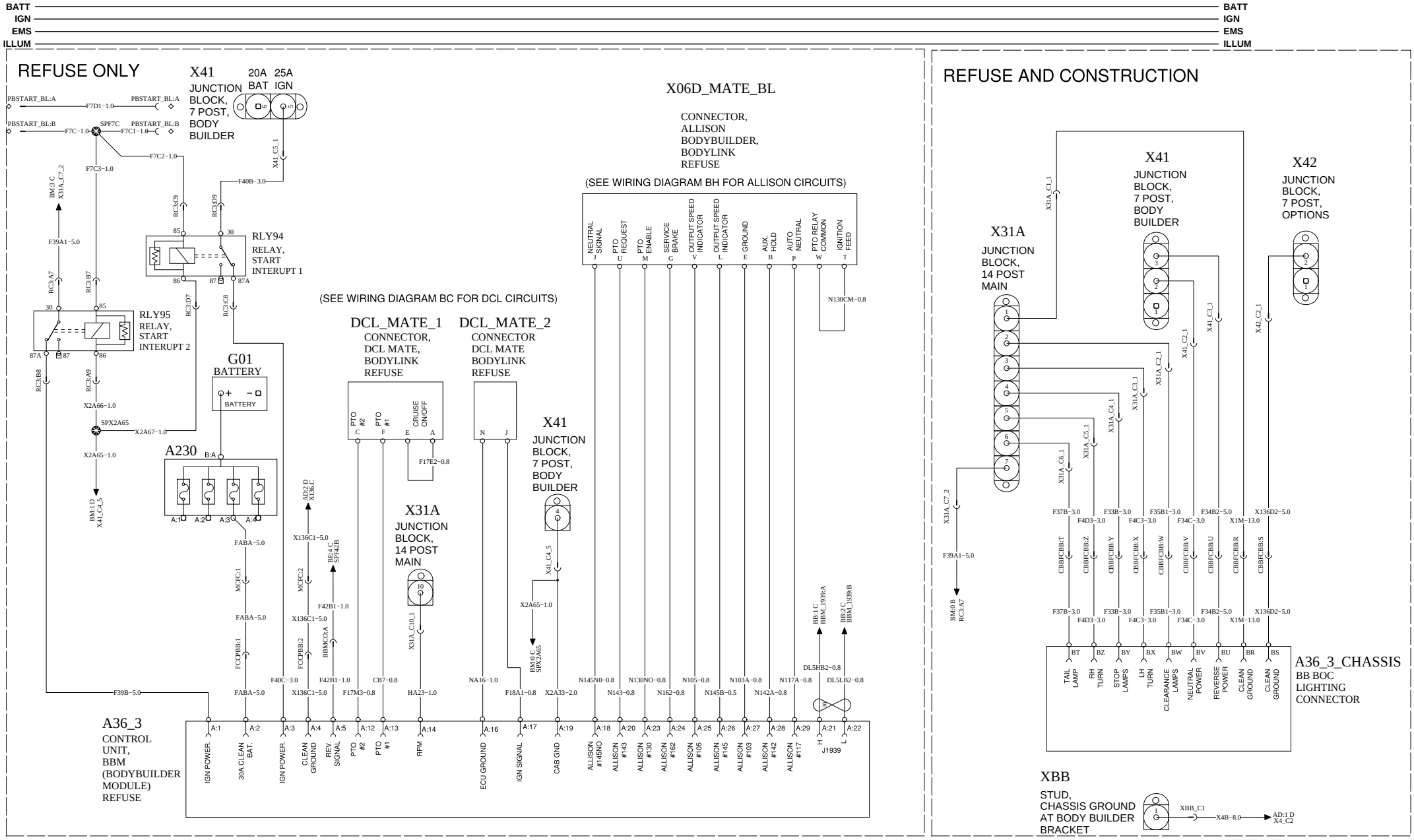

VOLVO Group Trucks Technology	Document title: WIRING DIAGRAM - TYPE OM W/CNG ENG	Document No	Issue	Volume	Page
	Document type: PRODUCT SCHEMATIC	22437784	02	1 (2)	18 (53)

CONCRETE DUAL DRIVESHAFT PTO PACKAGE 1/2

https://truckmanualshub.com/

WIRING DIAGRAM: BN

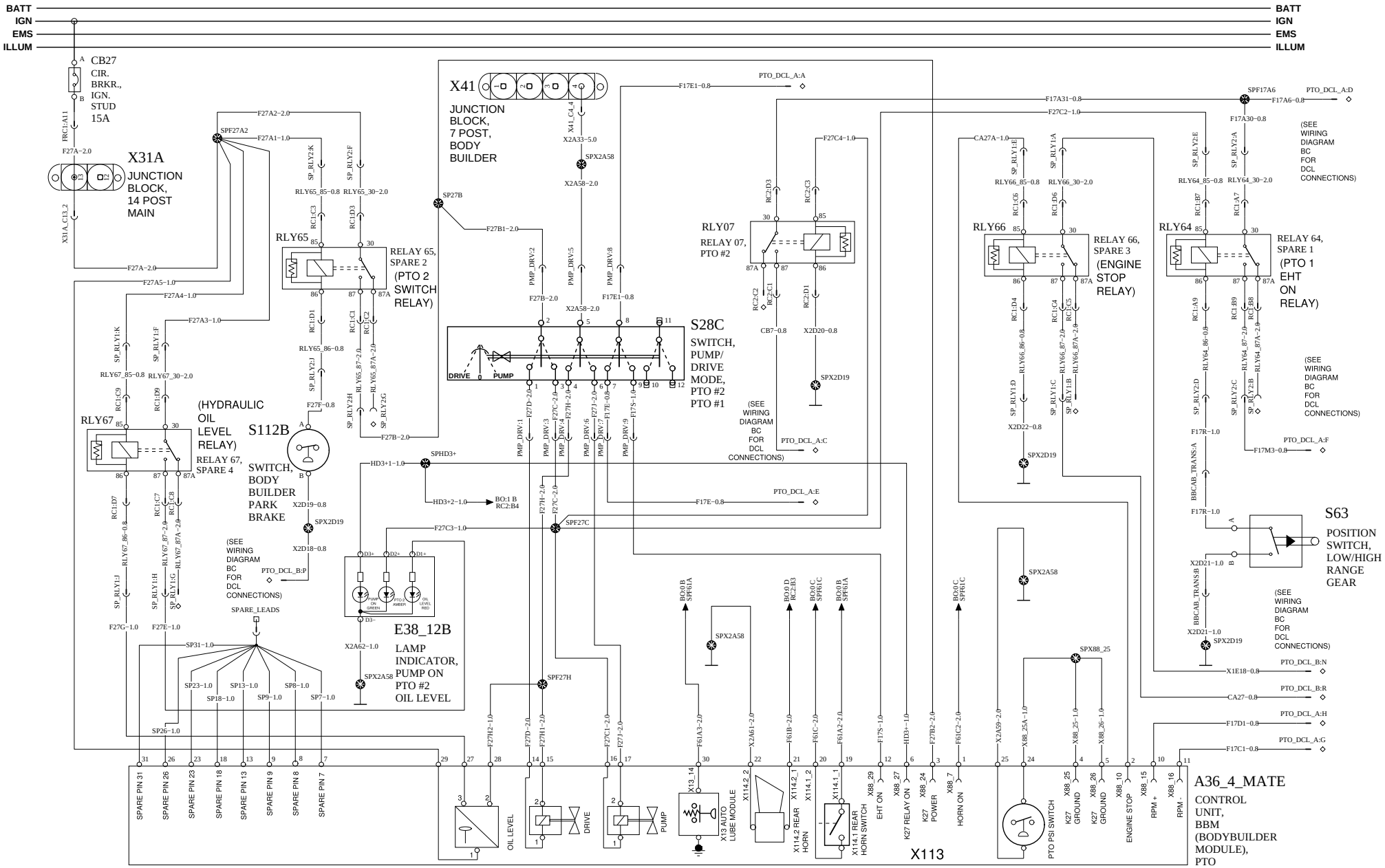

Document title	Document No	Issue	Volume	Page
WIRING DIAGRAM - TYPE OM W/CNG ENG	22437784	02	1 (2)	19 (53)
Document type: PRODUCT SCHEMATIC				

VOLVO Group Trucks Technology

CONCRETE DUAL DRIVESHAFT PTO PACKAGE 2/2

https://truckmanualshub.com/

WIRING DIAGRAM: BO

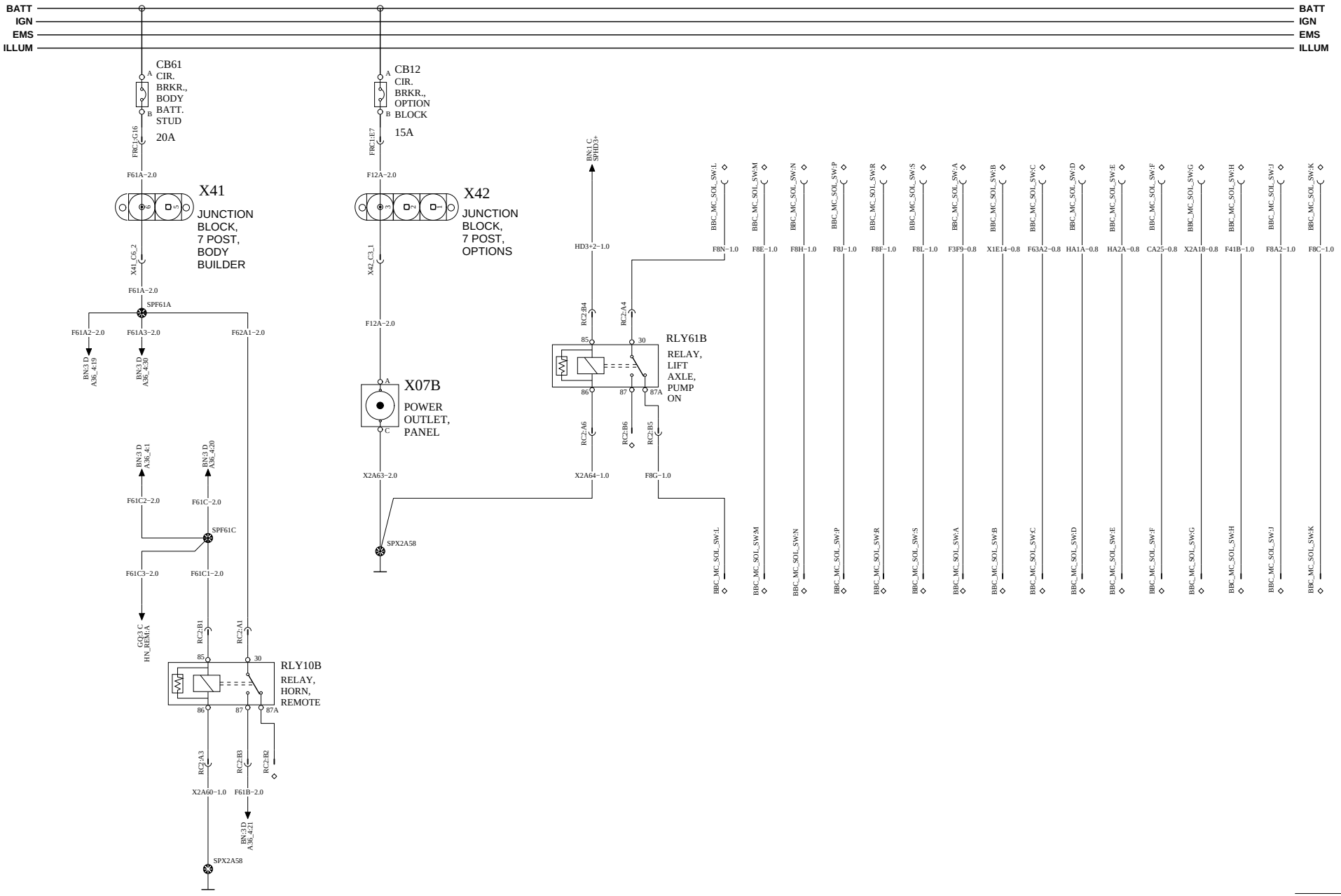

VOLVO Group Trucks Technology	Document title WIRING DIAGRAM - TYPE OM W/CNG ENG	Document No	Issue	Volume	Page
	Document type PRODUCT SCHEMATIC	22437784	02	1 (2)	20 (53)

ENGINE INTERFACE MP7 & MP8

https://truckmanualshub.com/

WIRING DIAGRAM: CA

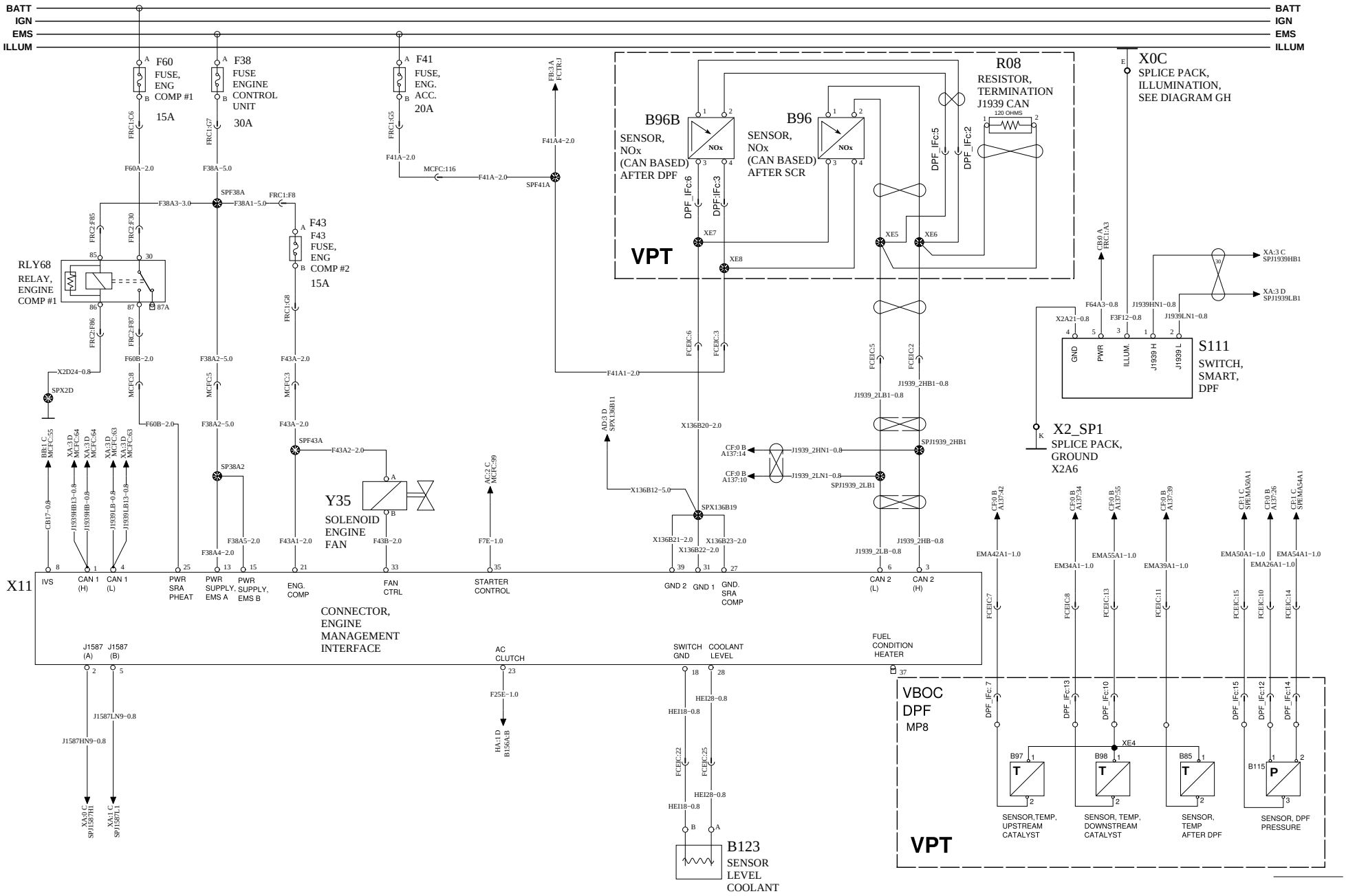

VOLVO Group Trucks Technology	Document title: WIRING DIAGRAM - TYPE OM W/CNG ENG Document type: PRODUCT SCHEMATIC	Document No: 22437784	Issue: 02	Volume: 1 (2)	Page: 21 (53)

DPF CONTROL SYSTEM (MP7)

https://truckmanualshub.com/

WIRING DIAGRAM: CB

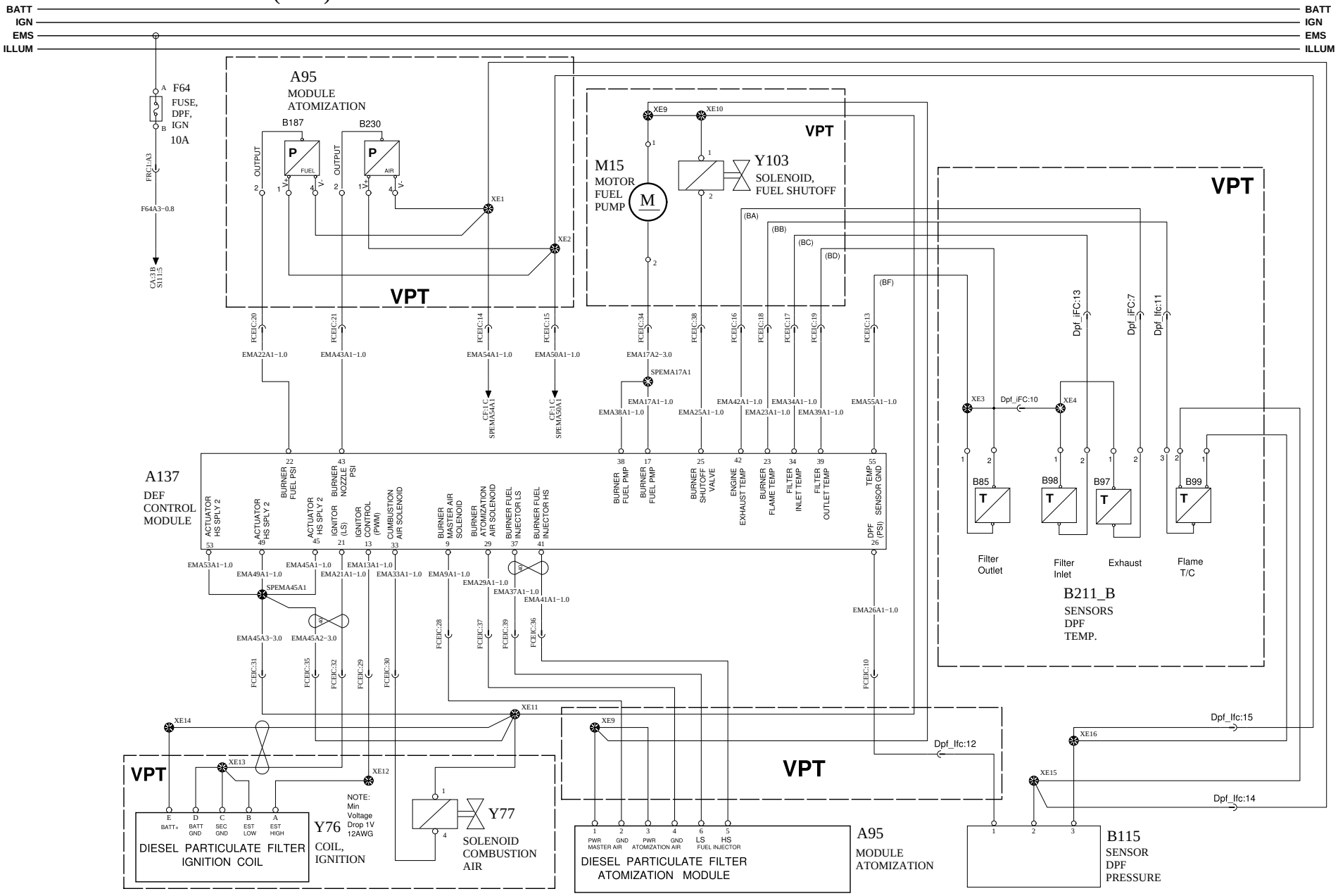

VOLVO Group Trucks Technology	Document title: WIRING DIAGRAM - TYPE OM W/CNG ENG Document type: PRODUCT SCHEMATIC	Document No: 22437784	Issue: 02	Volume: 1 (2)	Page: 22 (53)

https://truckmanualshub.com/

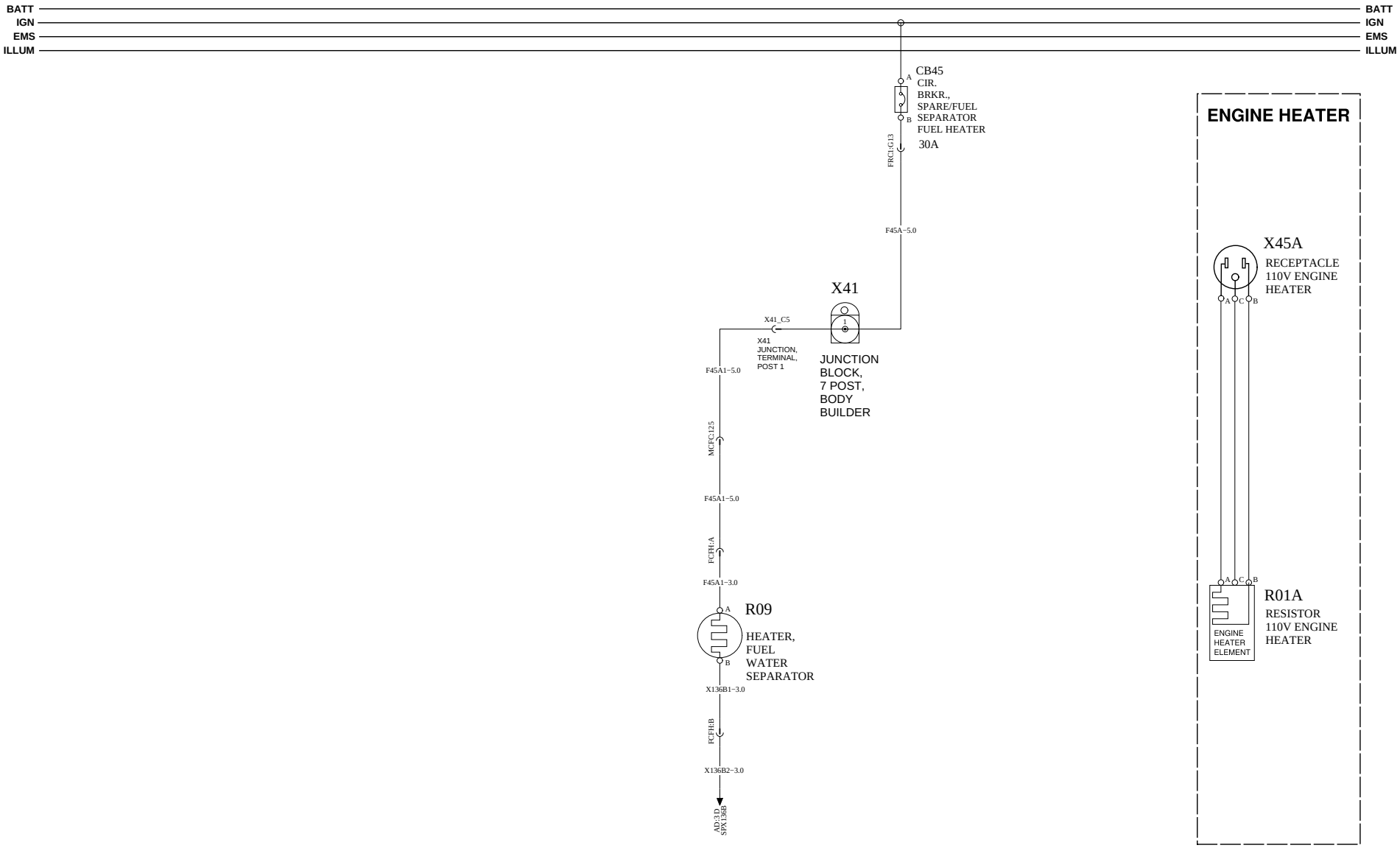

AUXILLARY COOLING FANS

https://truckmanualshub.com/

WIRING DIAGRAM: CD

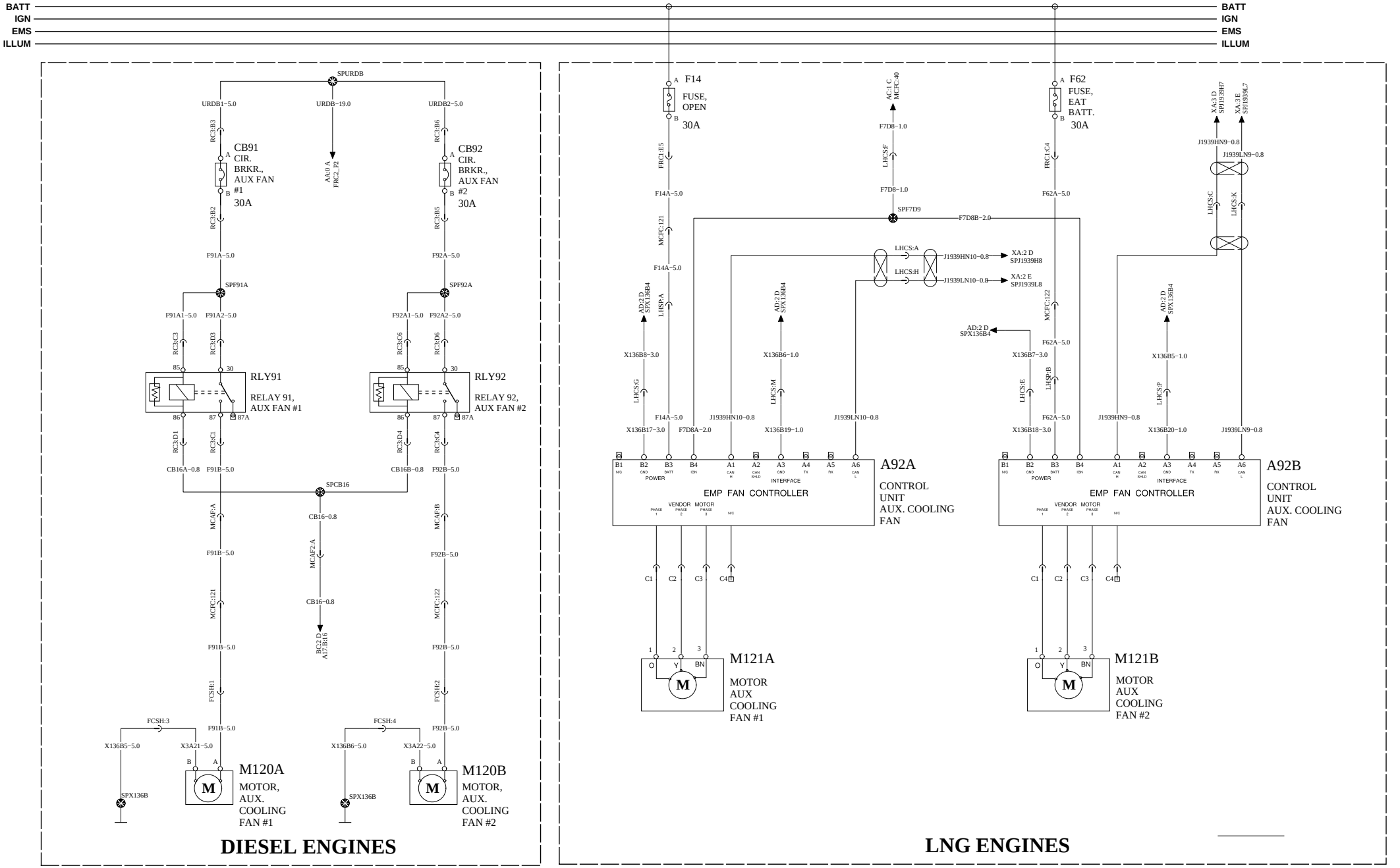

VOLVO Group Trucks Technology	Document title: WIRING DIAGRAM - TYPE OM W/CNG ENG Document type: PRODUCT SCHEMATIC	Document No: 22437784	Issue: 02	Volume: 1 (2)	Page: 24 (53)

ENGINE INTERFACE CUMMINS ISL G

https://truckmanualshub.com/

WIRING DIAGRAM: CE

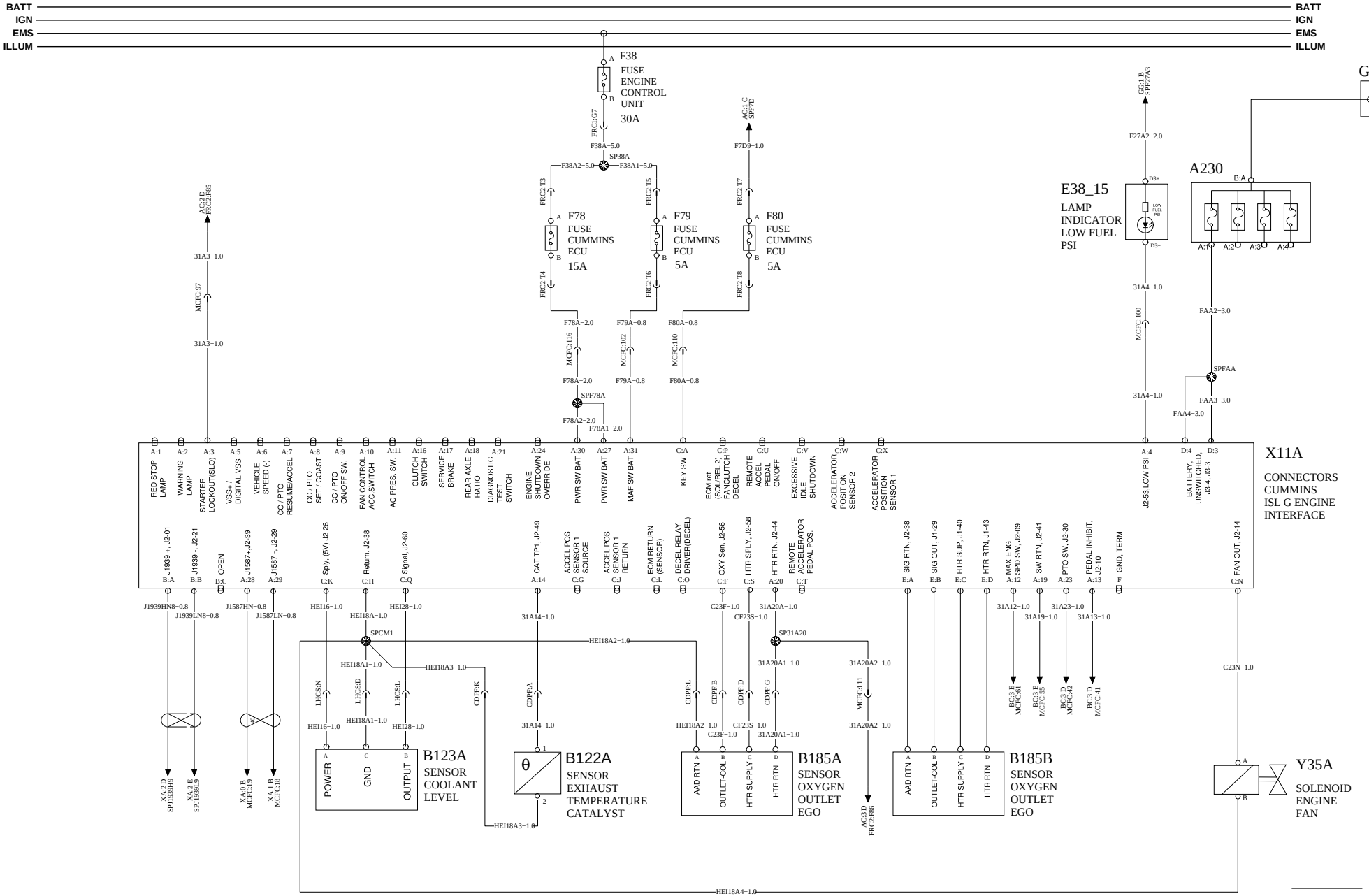

VOLVO Group Trucks Technology	Document title WIRING DIAGRAM - TYPE OM W/CNG ENG Document type PRODUCT SCHEMATIC	Document No 22437784	Issue 02	Volume 1 (2)	Page 25 (53)

UREA DOSING SYSTEM

https://truckmanualshub.com/

WIRING DIAGRAM: CF

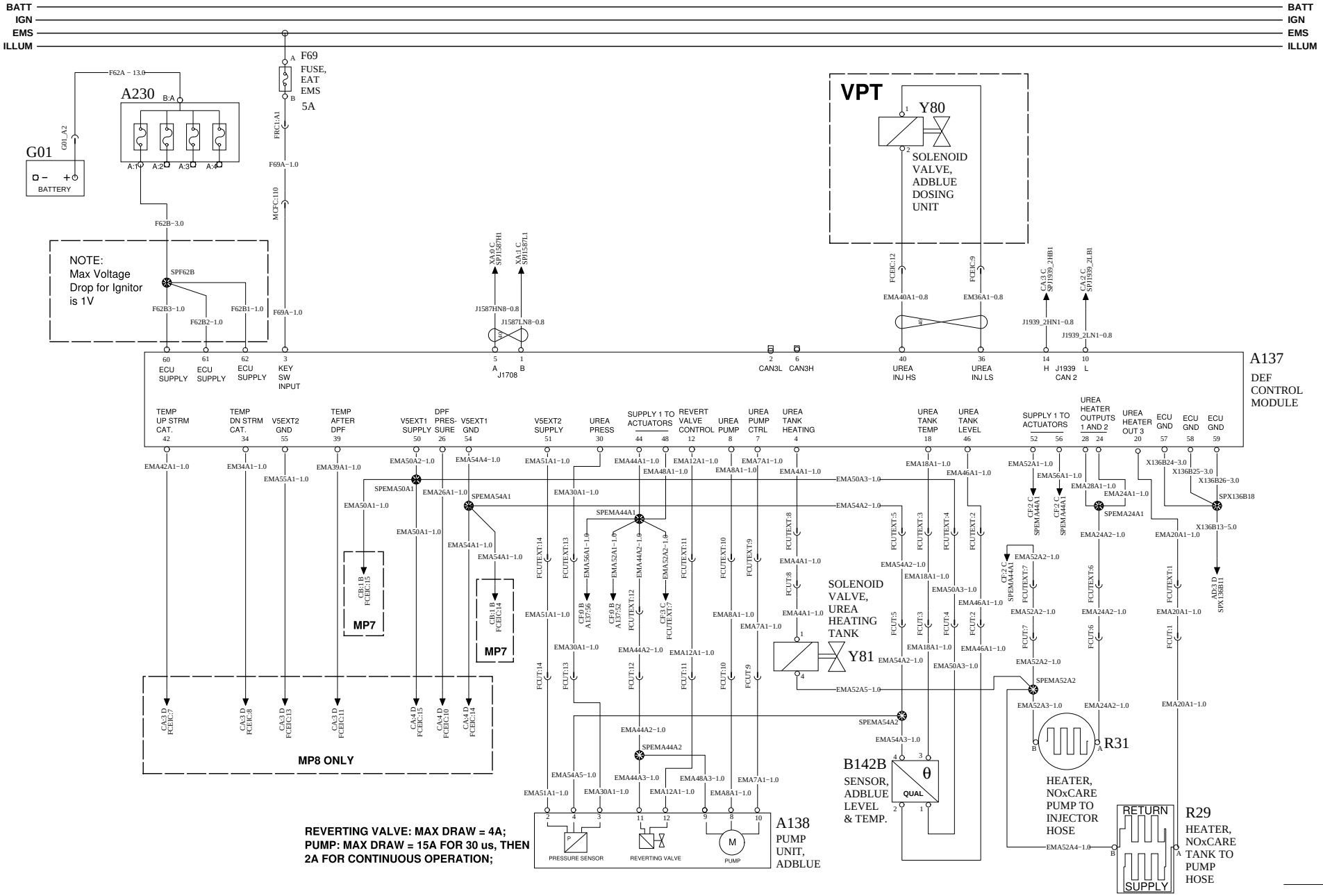

VOLVO Group Trucks Technology	Document title: WIRING DIAGRAM - TYPE OM W/CNG ENG	Document No	Issue	Volume	Page
	Document type: PRODUCT SCHEMATIC	22437784	02	1 (2)	26 (53)

https://truckmanualshub.com/

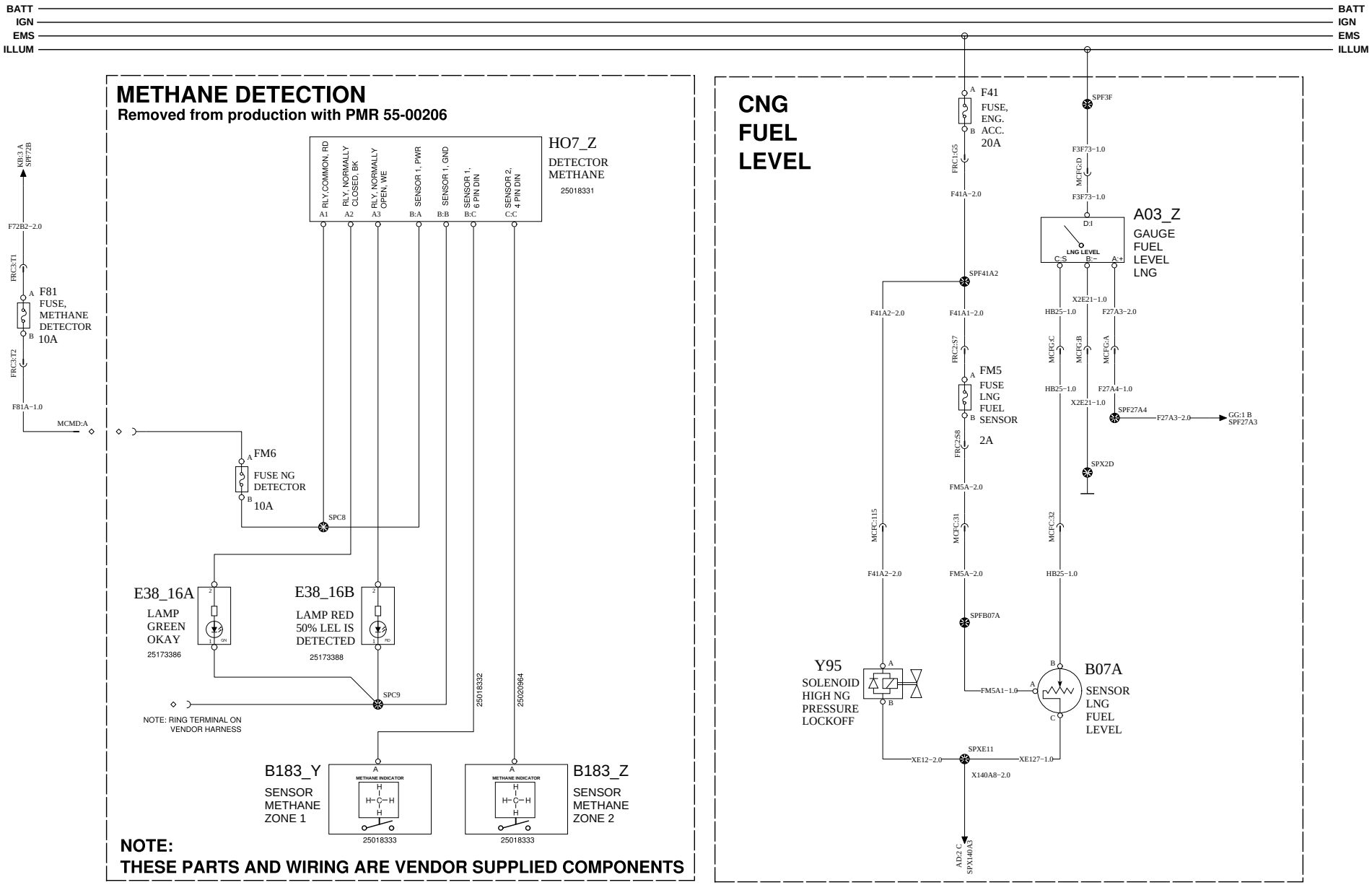

VOLVO Group Trucks Technology	Document title: WIRING DIAGRAM - TYPE OM W/CNG ENG Document type: PRODUCT SCHEMATIC	Document No: 22437784	Issue: 02	Volume: 1 (2)	Page: 27 (53)

METHANE DETECTION SYSTEM

https://truckmanualshub.com/

WIRING DIAGRAM : CH

BATT
IGN
EMS
ILLUM

Added to production with PMR 55-00206

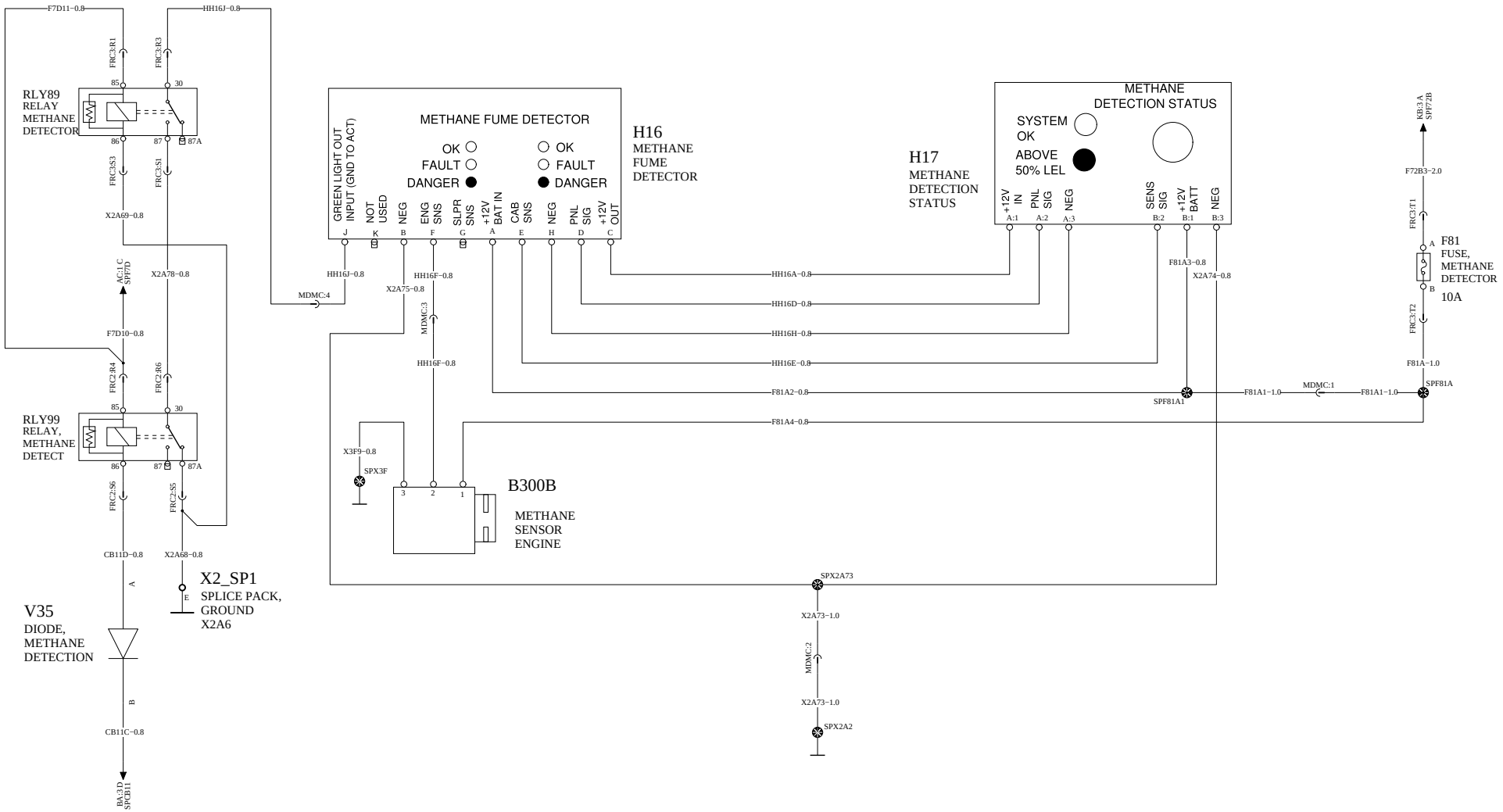

VOLVO Group Trucks Technology	Document title WIRING DIAGRAM - TYPE OM W/CNG ENG	Document No	Issue	Volume	Page
	Document type PRODUCT SCHEMATIC	22437784	02	1 (2)	28 (53)

https://truckmanualshub.com/

WIRING DIAGRAM: DC

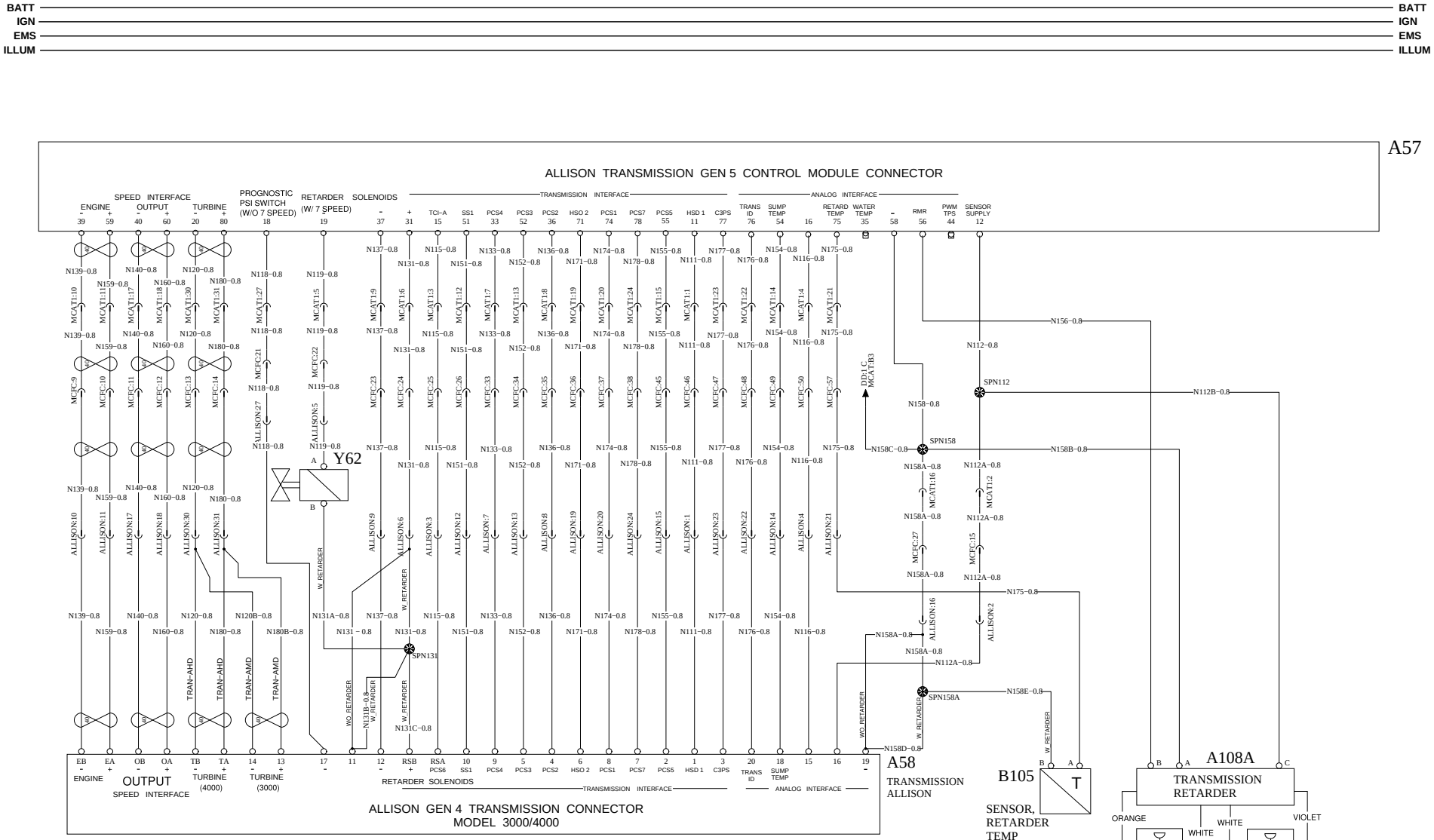

VOLVO Group Trucks Technology	Document title: WIRING DIAGRAM - TYPE OM W/CNG ENG	Document No	Issue	Volume	Page
	Document type: PRODUCT SCHEMATIC	22437784	02	1 (2)	29 (53)

https://truckmanualshub.com/

WIRING DIAGRAM: DD

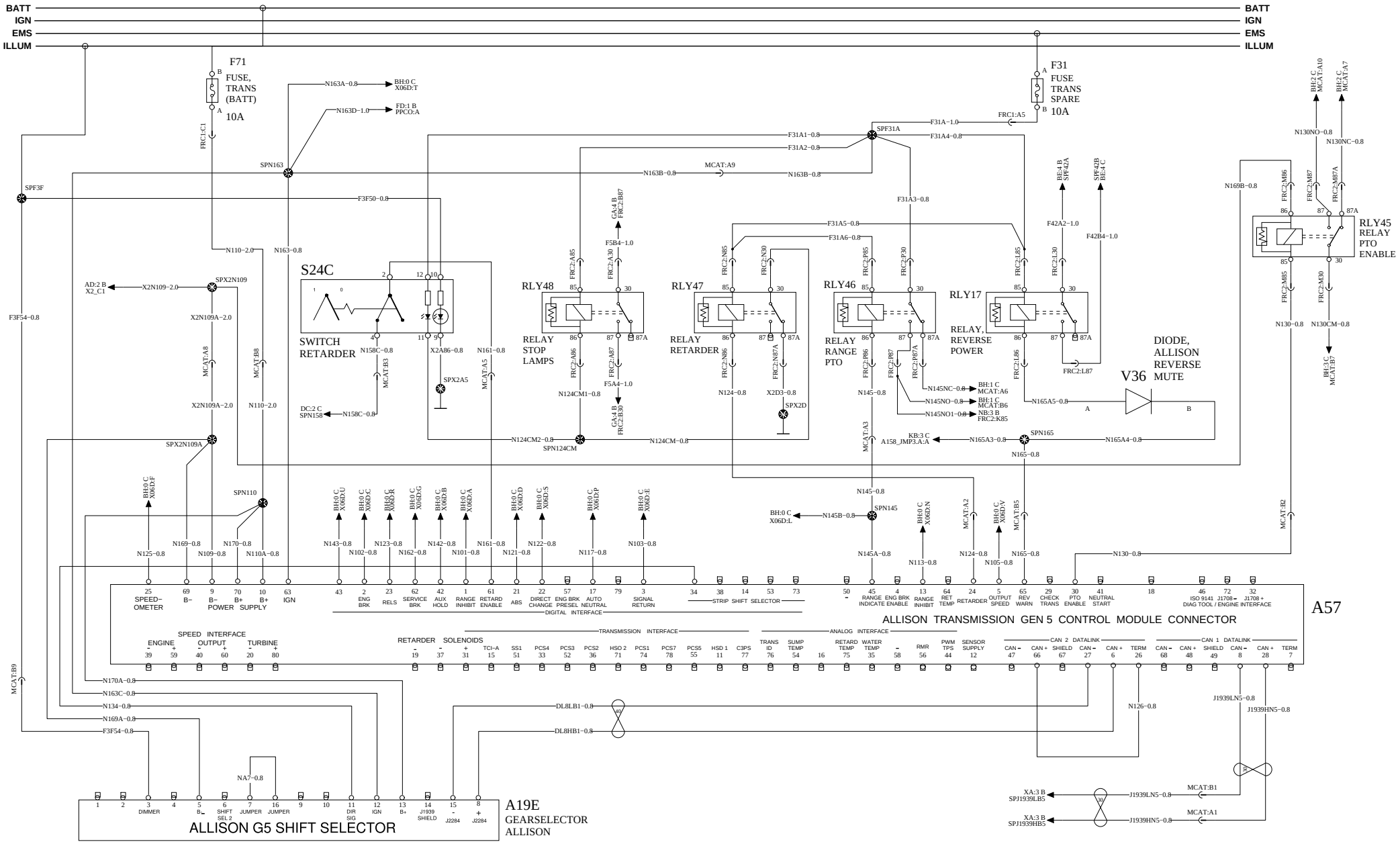

Document title	Document No	Issue	Volume	Page
WIRING DIAGRAM - TYPE OM W/CNG ENG	22437784	02	1 (2)	30 (53)
Document type: PRODUCT SCHEMATIC				

VOLVO Group Trucks Technology

ABS − MERITOR

https://truckmanualshub.com/

WIRING DIAGRAM: EA

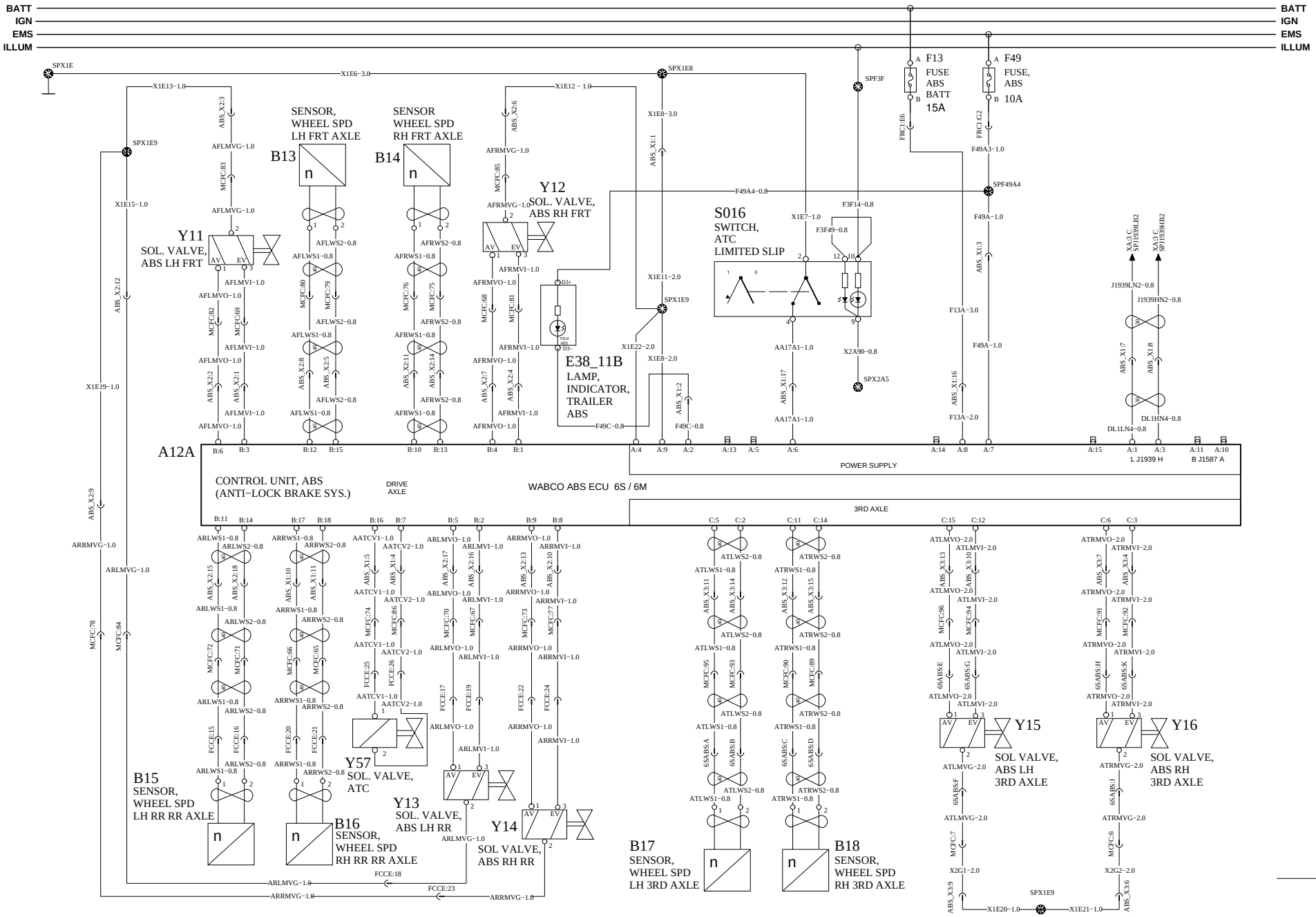

VOLVO Group Trucks Technology	Document title WIRING DIAGRAM - TYPE OM W/CNG ENG Document type PRODUCT SCHEMATIC	Document No 22437784	Issue 02	Volume 1 (2)	Page 31 (53)

ABS − BENDIX 6

https://truckmanualshub.com/

WIRING DIAGRAM: EB

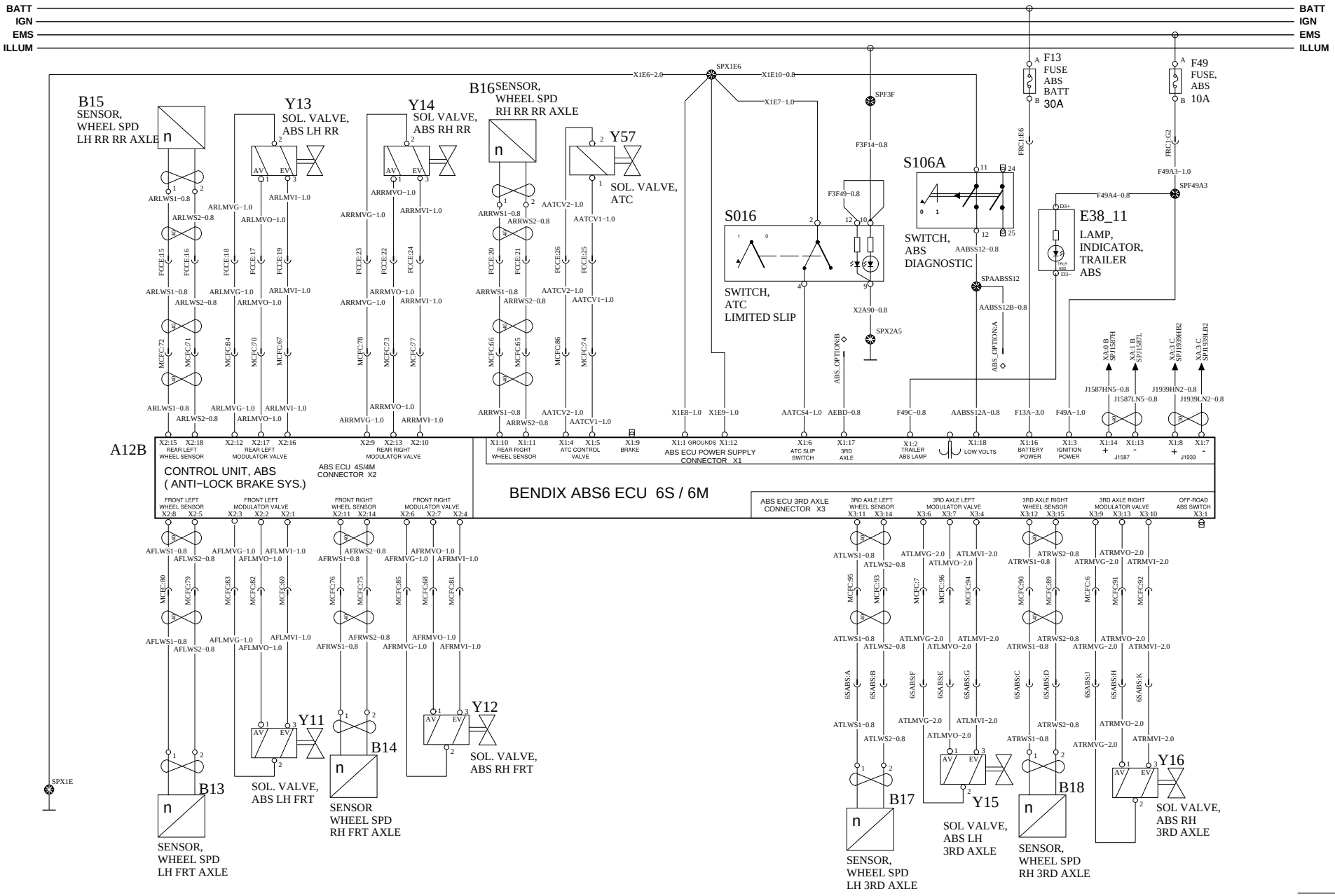

VOLVO Group Trucks Technology	Document title: WIRING DIAGRAM - TYPE OM W/CNG ENG Document type: PRODUCT SCHEMATIC	Document No: 22437784	Issue: 02	Volume: 1 (2)	Page: 32 (53)

https://truckmanualshub.com/

WIRING DIAGRAM: ED

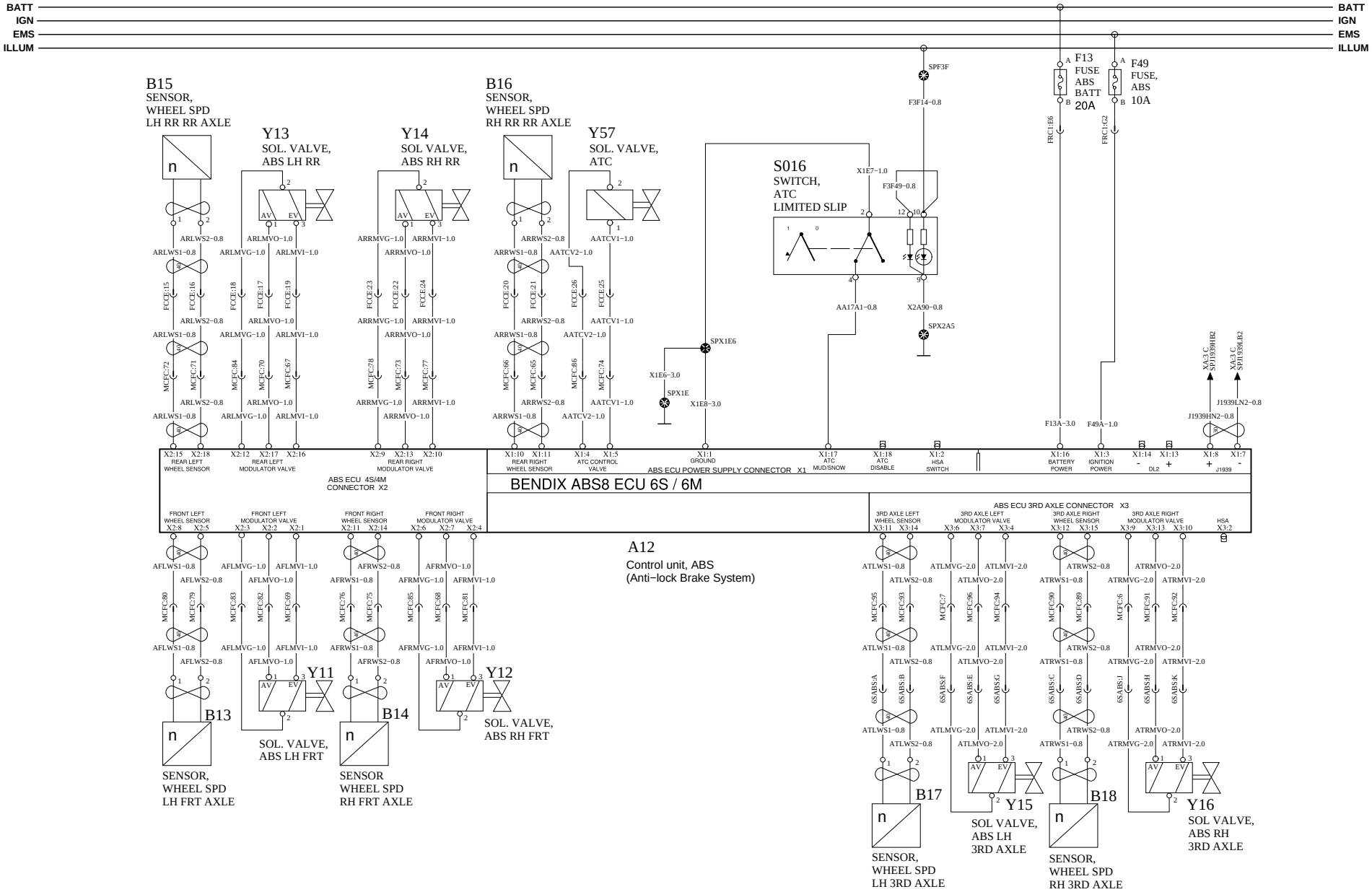

VOLVO Group Trucks Technology	Document title WIRING DIAGRAM - TYPE OM W/CNG ENG Document type PRODUCT SCHEMATIC	Document No 22437784	Issue 02	Volume 1 (2)	Page 33 (53)

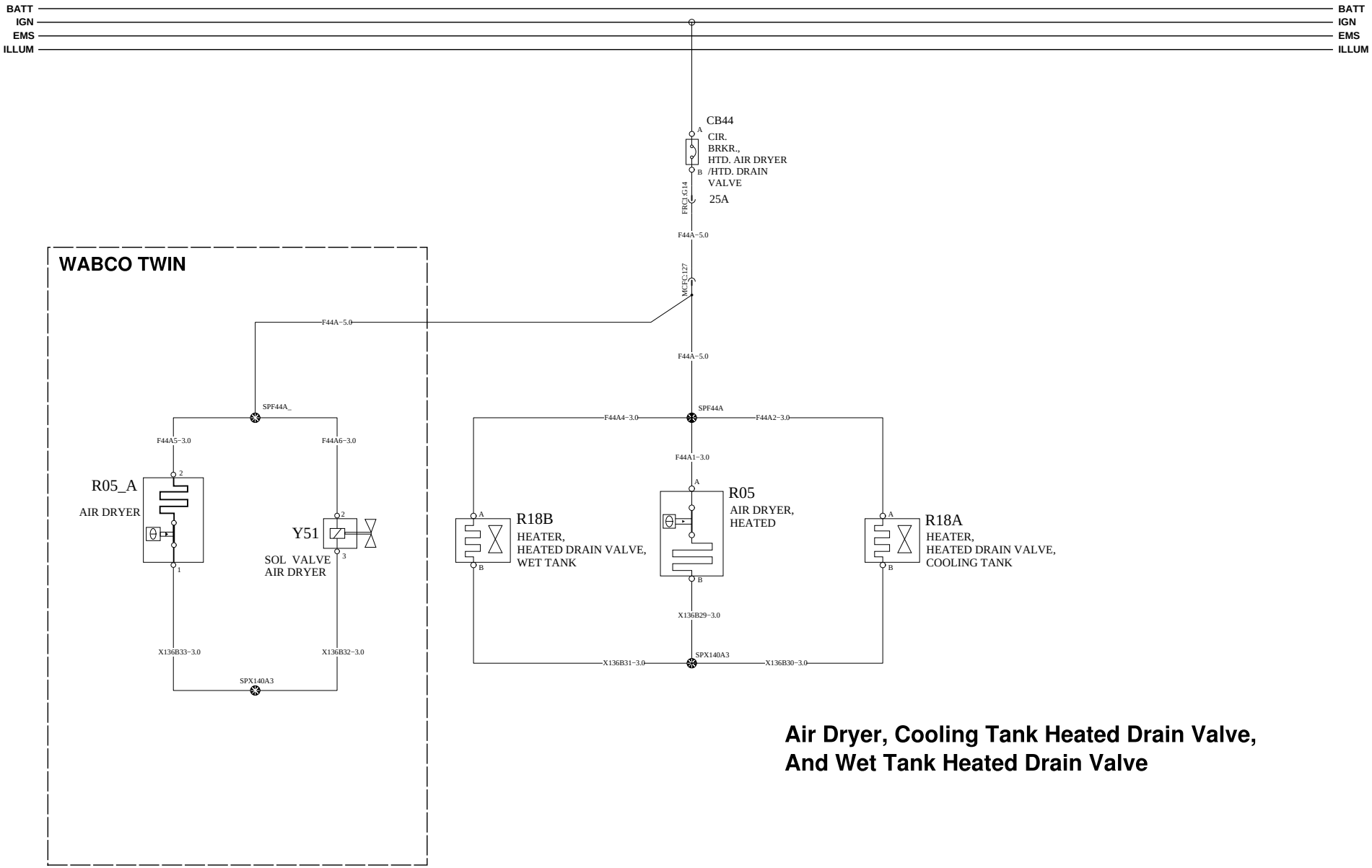

Air Dryer, Cooling Tank Heated Drain Valve,
And Wet Tank Heated Drain Valve

CHASSIS SOLENOIDS

https://truckmanualshub.com/

WIRING DIAGRAM: FB

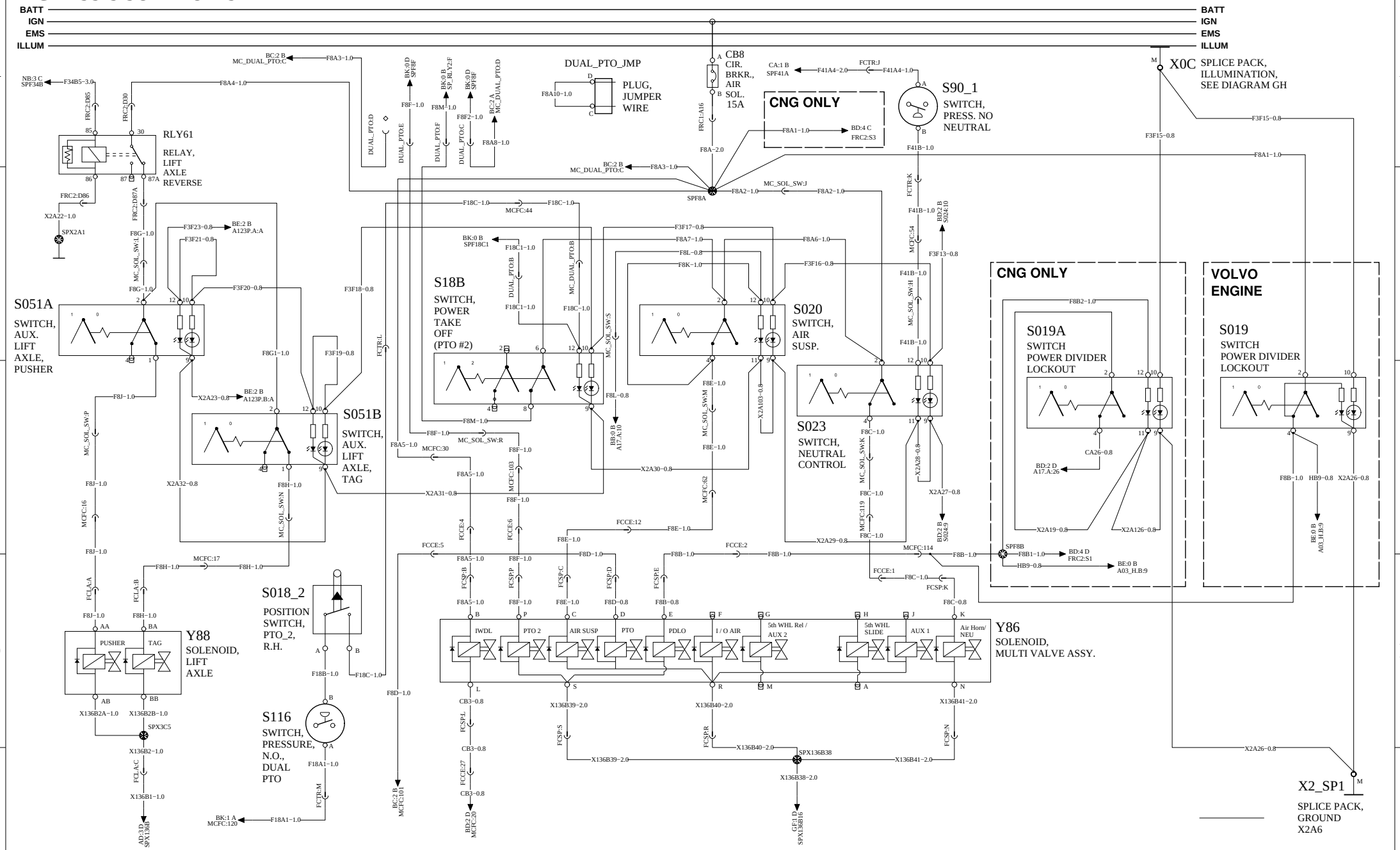

VOLVO Group Trucks Technology	Document title WIRING DIAGRAM - TYPE OM W/CNG ENG Document type PRODUCT SCHEMATIC	Document No 22437784	Issue 02	Volume 1 (2)	Page 35 (53)

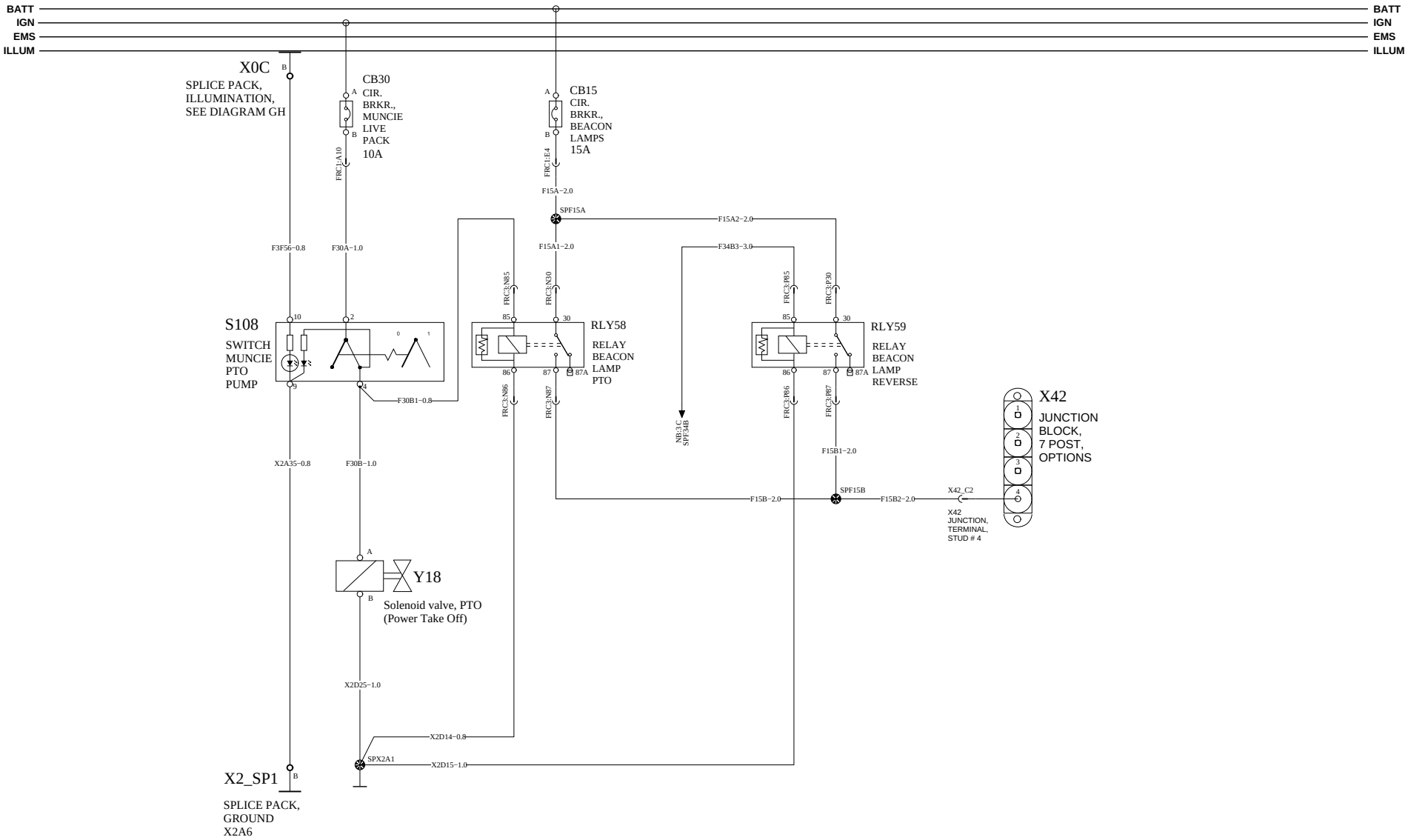

VOLVO Group Trucks Technology	Document title: WIRING DIAGRAM - TYPE OM W/CNG ENG Document type: PRODUCT SCHEMATIC	Document No: 22437784	Issue: 02	Volume: 1 (2)	Page: 36 (53)

PARKER PTO

https://truckmanualshub.com/

WIRING DIAGRAM: FD

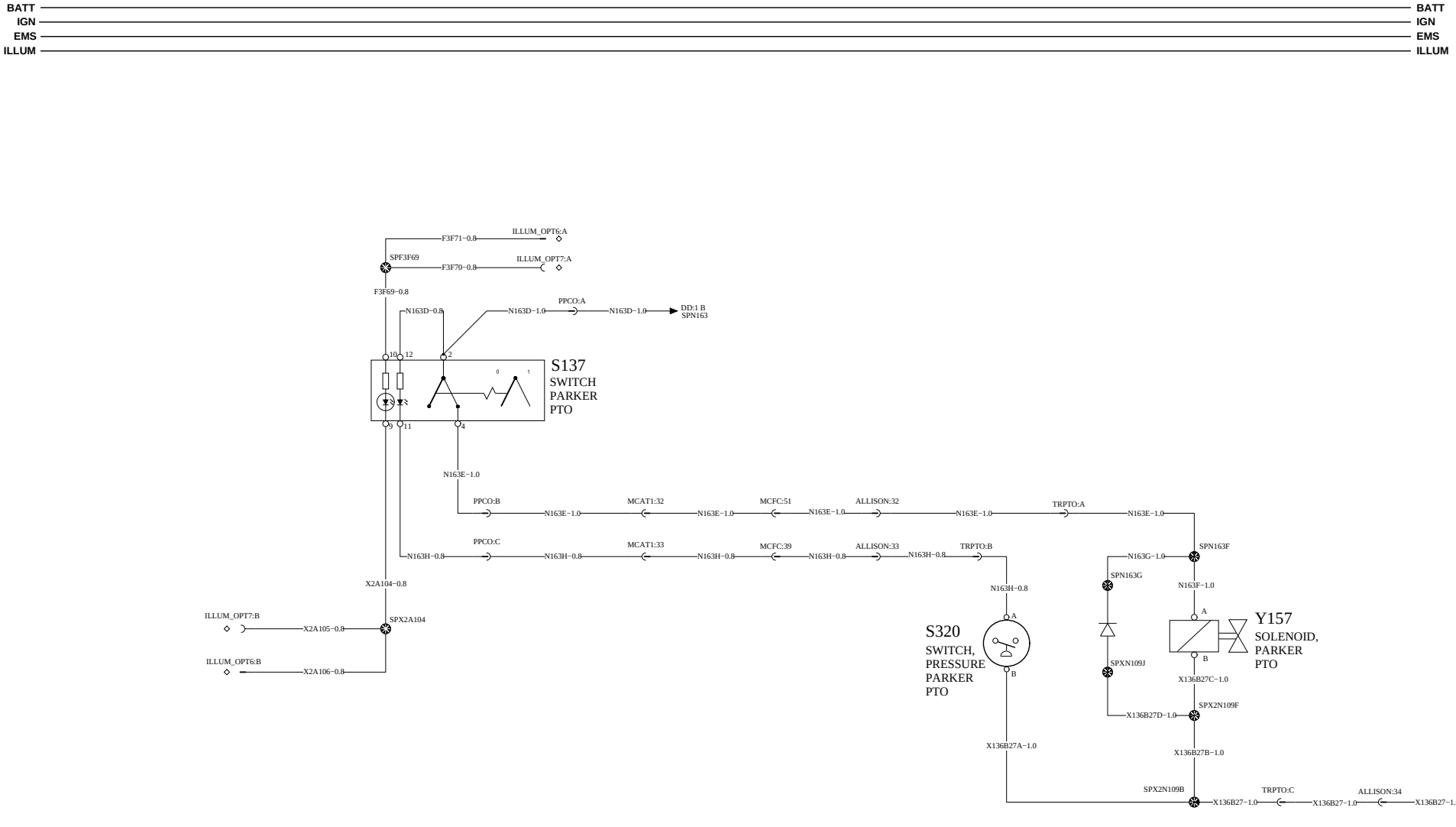

VOLVO Group Trucks Technology	Document title WIRING DIAGRAM - TYPE OM W/CNG ENG Document type PRODUCT SCHEMATIC	Document No 22437784	Issue 02	Volume 1 (2)	Page 37 (53)

https://truckmanualshub.com/

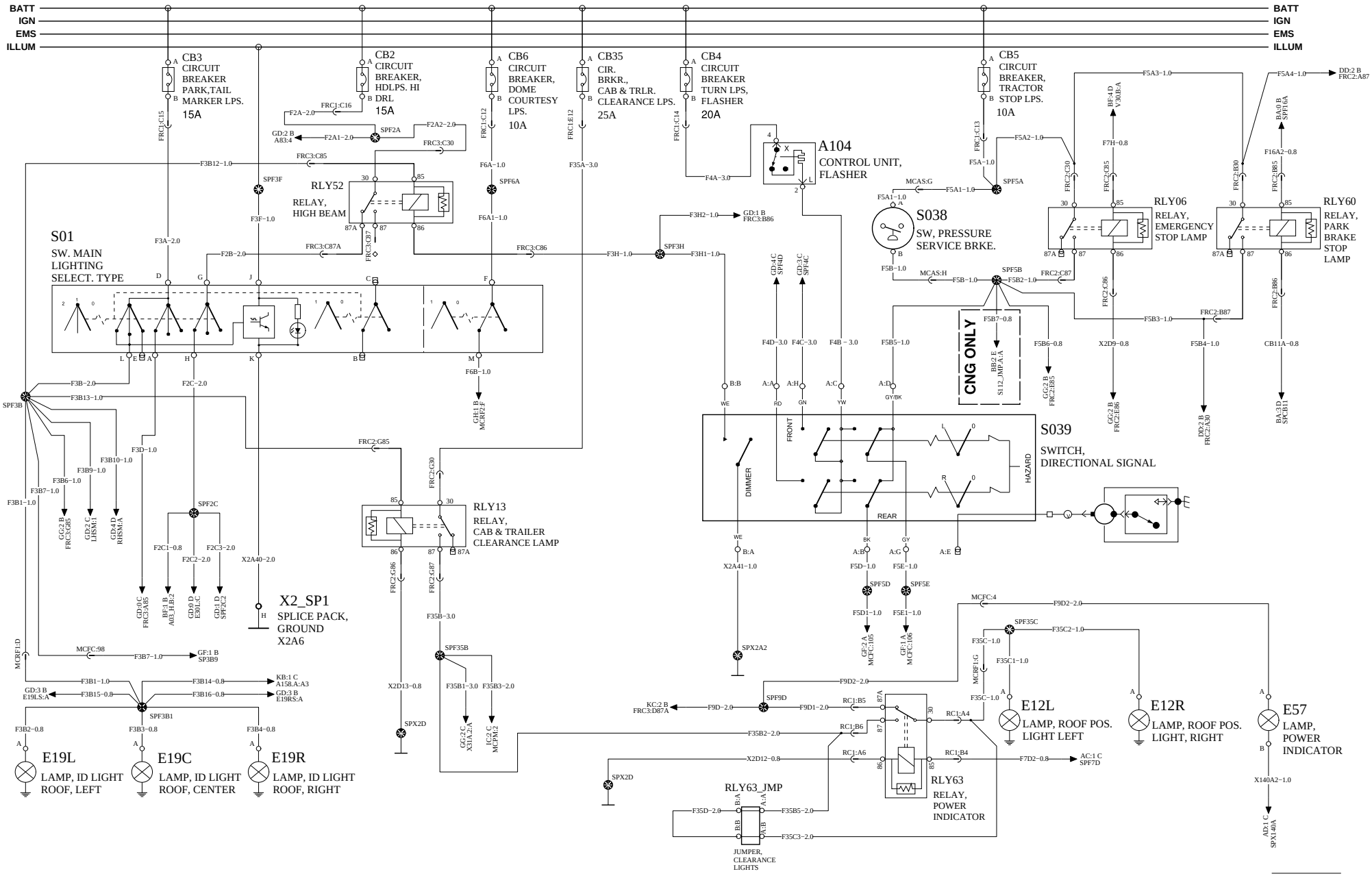

VOLVO Group Trucks Technology	Document title: WIRING DIAGRAM - TYPE OM W/CNG ENG	Document No	Issue	Volume	Page
	Document type: PRODUCT SCHEMATIC	22437784	02	1 (2)	38 (53)

https://truckmanualshub.com/

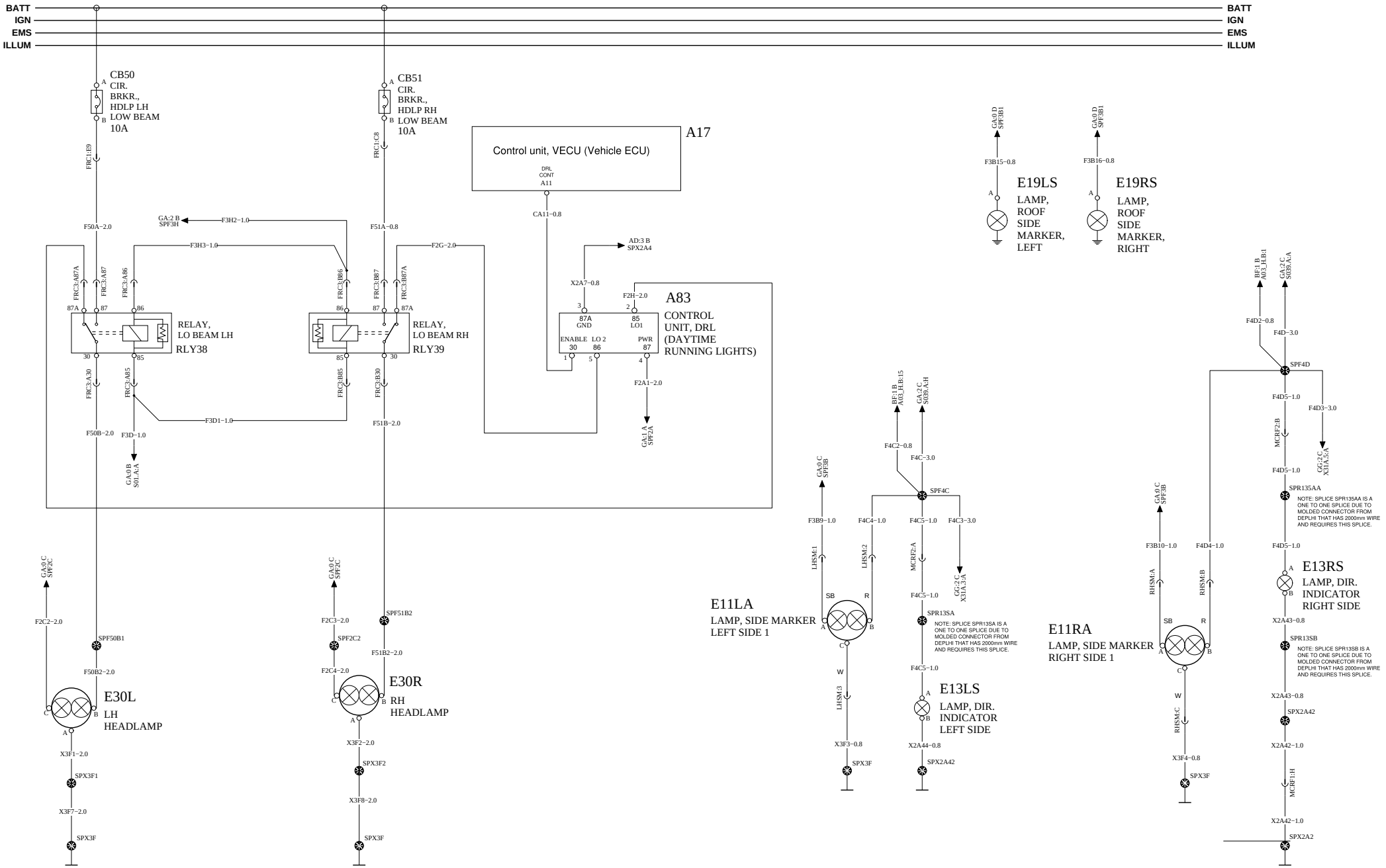

VOLVO Group Trucks Technology	Document title WIRING DIAGRAM - TYPE OM W/CNG ENG Document type PRODUCT SCHEMATIC	Document No 22437784	Issue 02	Volume 1 (2)	Page 39 (53)

https://truckmanualshub.com/

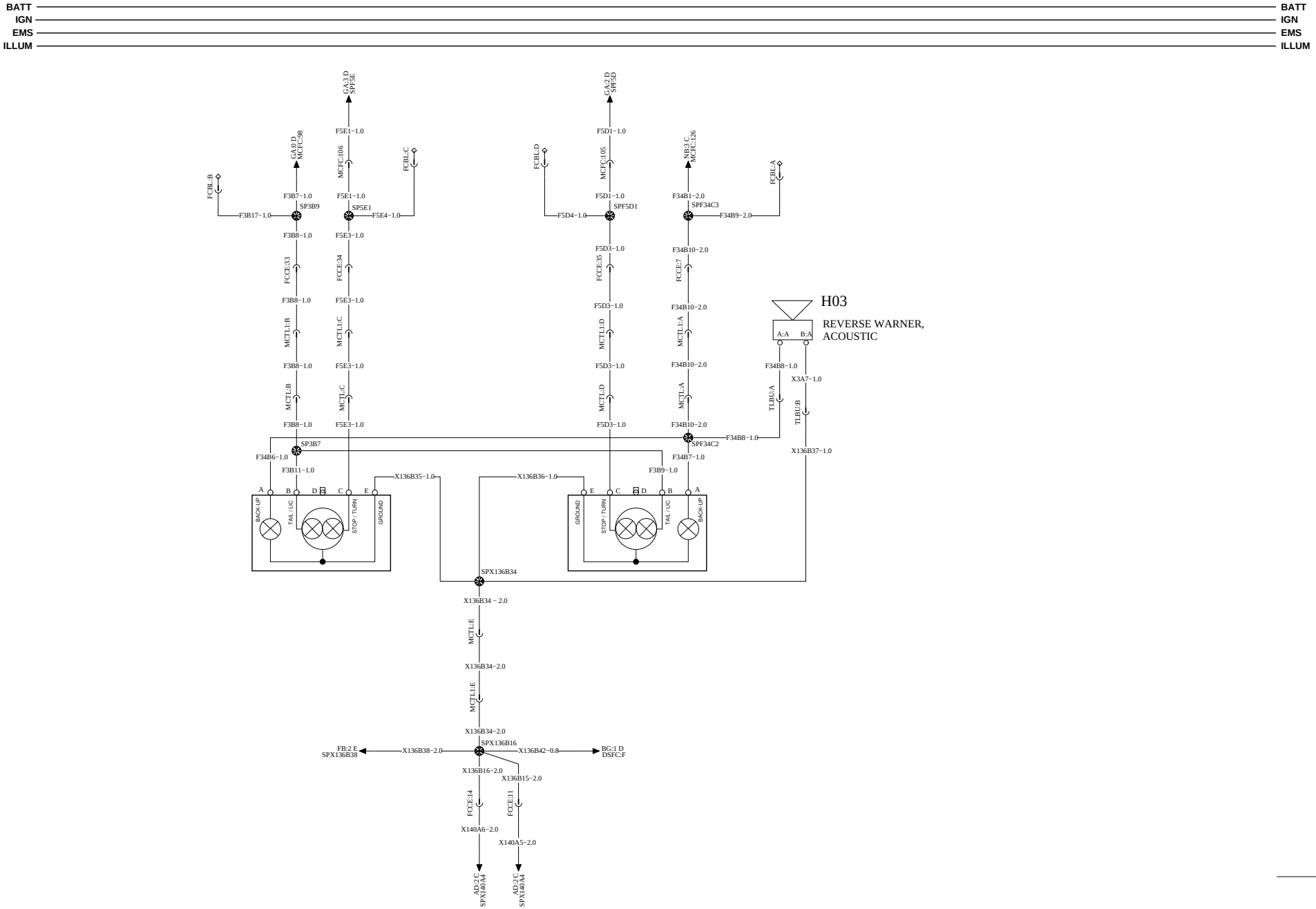

VOLVO Group Trucks Technology	Document title WIRING DIAGRAM - TYPE OM W/CNG ENG Document type PRODUCT SCHEMATIC	Document No 22437784	Issue 02	Volume 1 (2)	Page 40 (53)

LIGHTING − TRAILER CONTROL

https://truckmanualshub.com/

WIRING DIAGRAM: GG

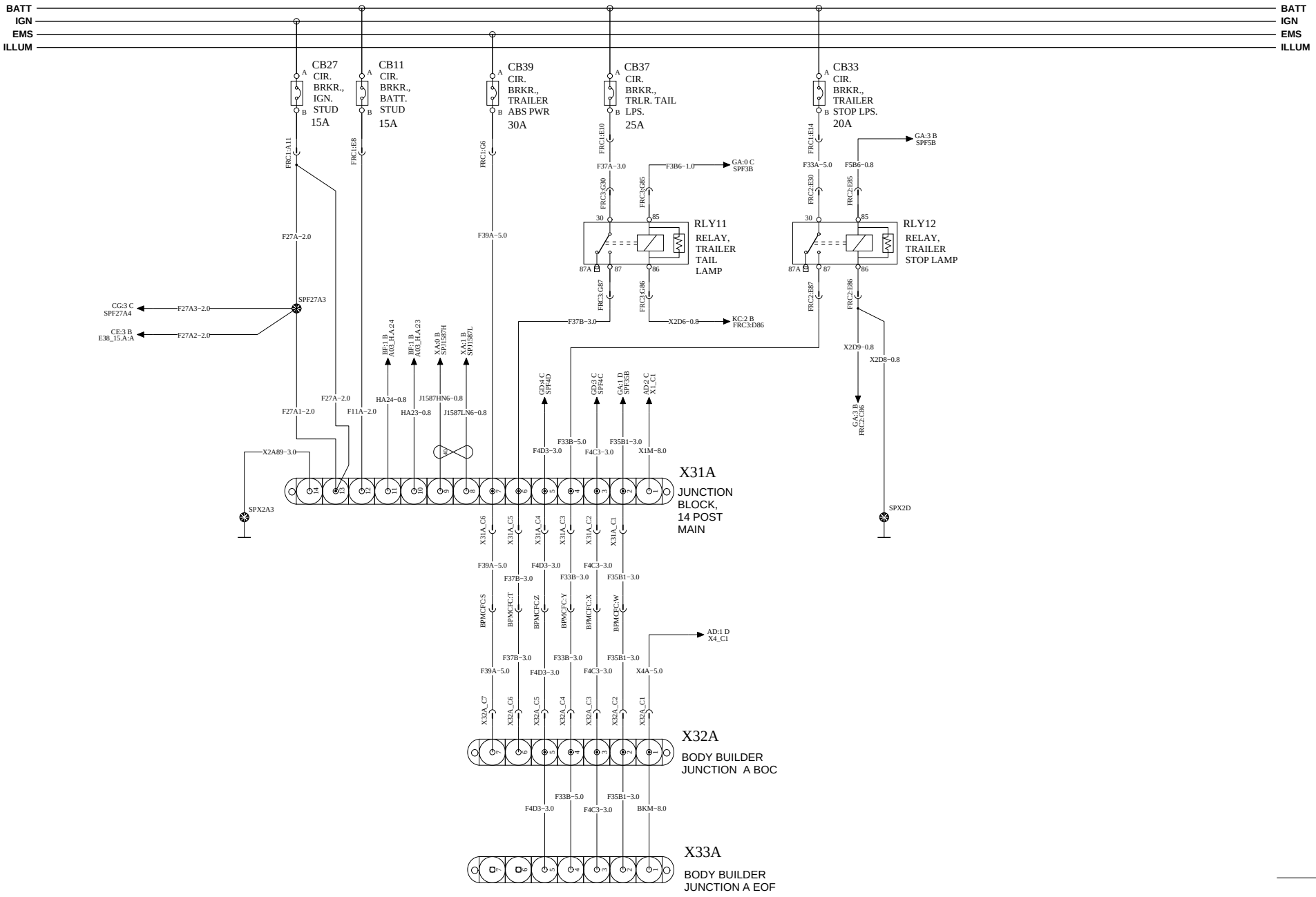

https://truckmanualshub.com/

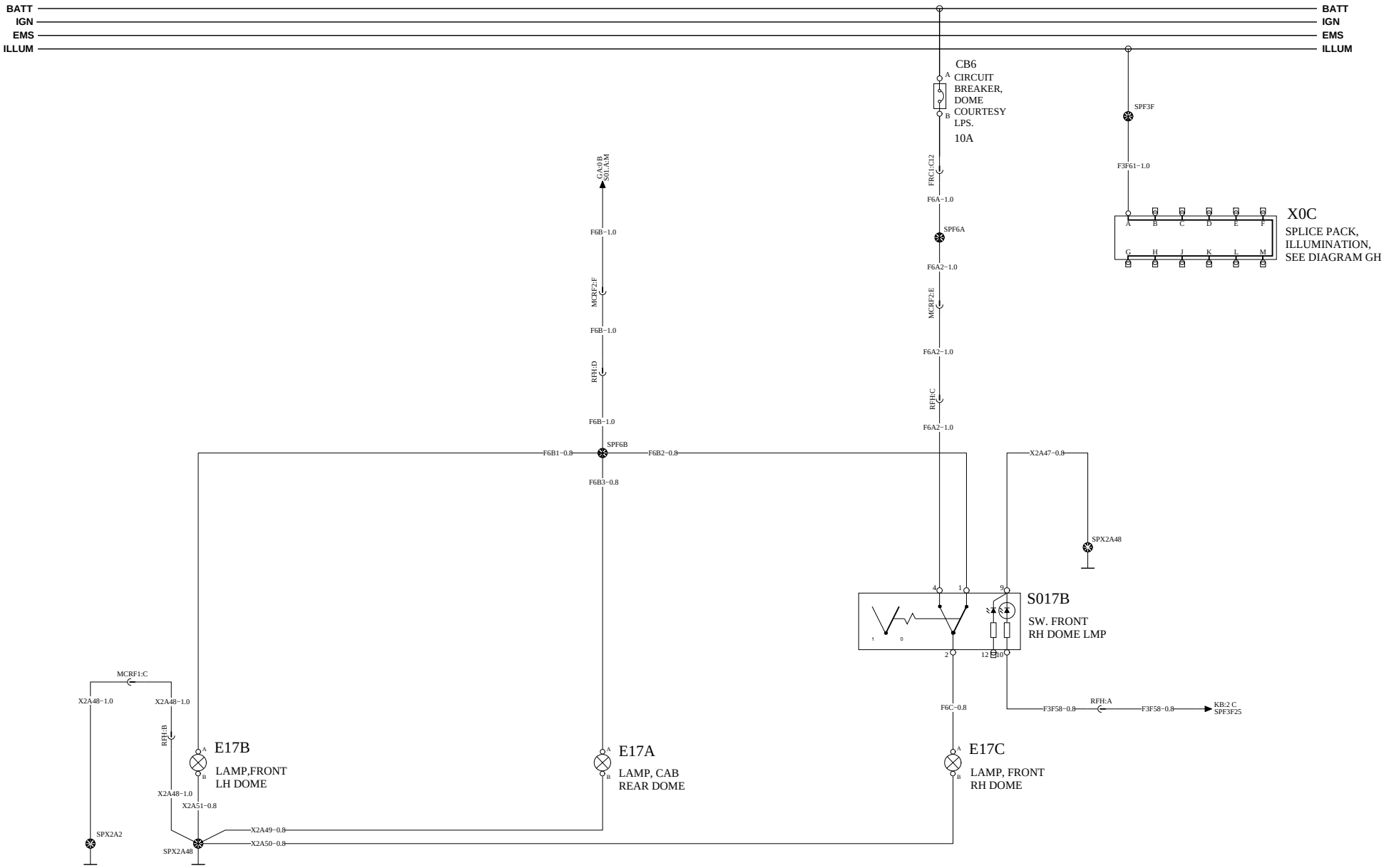

VOLVO Group Trucks Technology	Document title WIRING DIAGRAM - TYPE OM W/CNG ENG Document type PRODUCT SCHEMATIC	Document No 22437784	Issue 02	Volume 1 (2)	Page 42 (53)

WIPER/WASHER

https://truckmanualshub.com/

WIRING DIAGRAM: GP

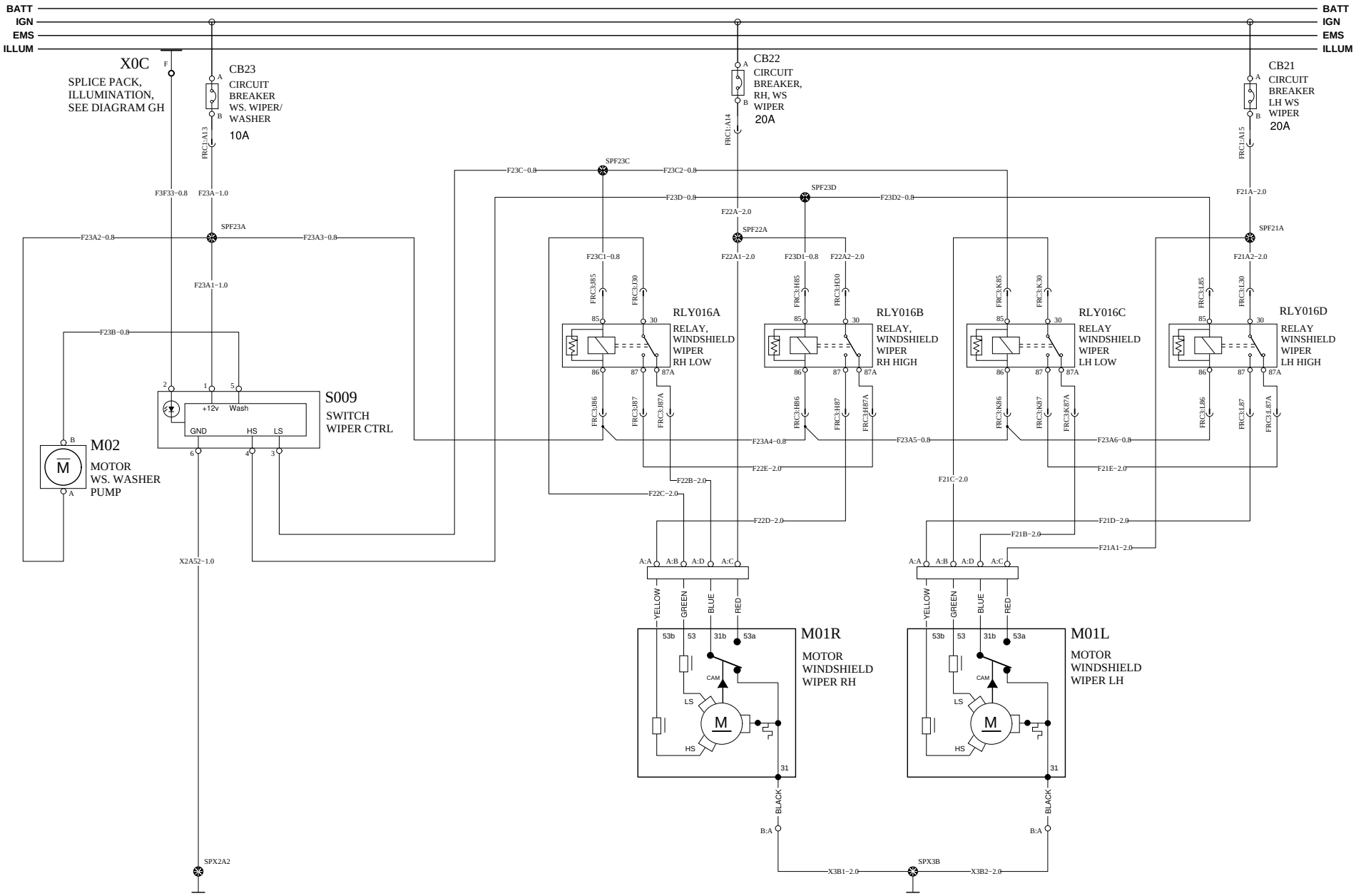

VOLVO Group Trucks Technology	Document title: WIRING DIAGRAM - TYPE OM W/CNG ENG Document type: PRODUCT SCHEMATIC	Document No: 22437784	Issue: 02	Volume: 1 (2)	Page: 43 (53)

HORN WIRING

https://truckmanualshub.com/

WIRING DIAGRAM: GQ

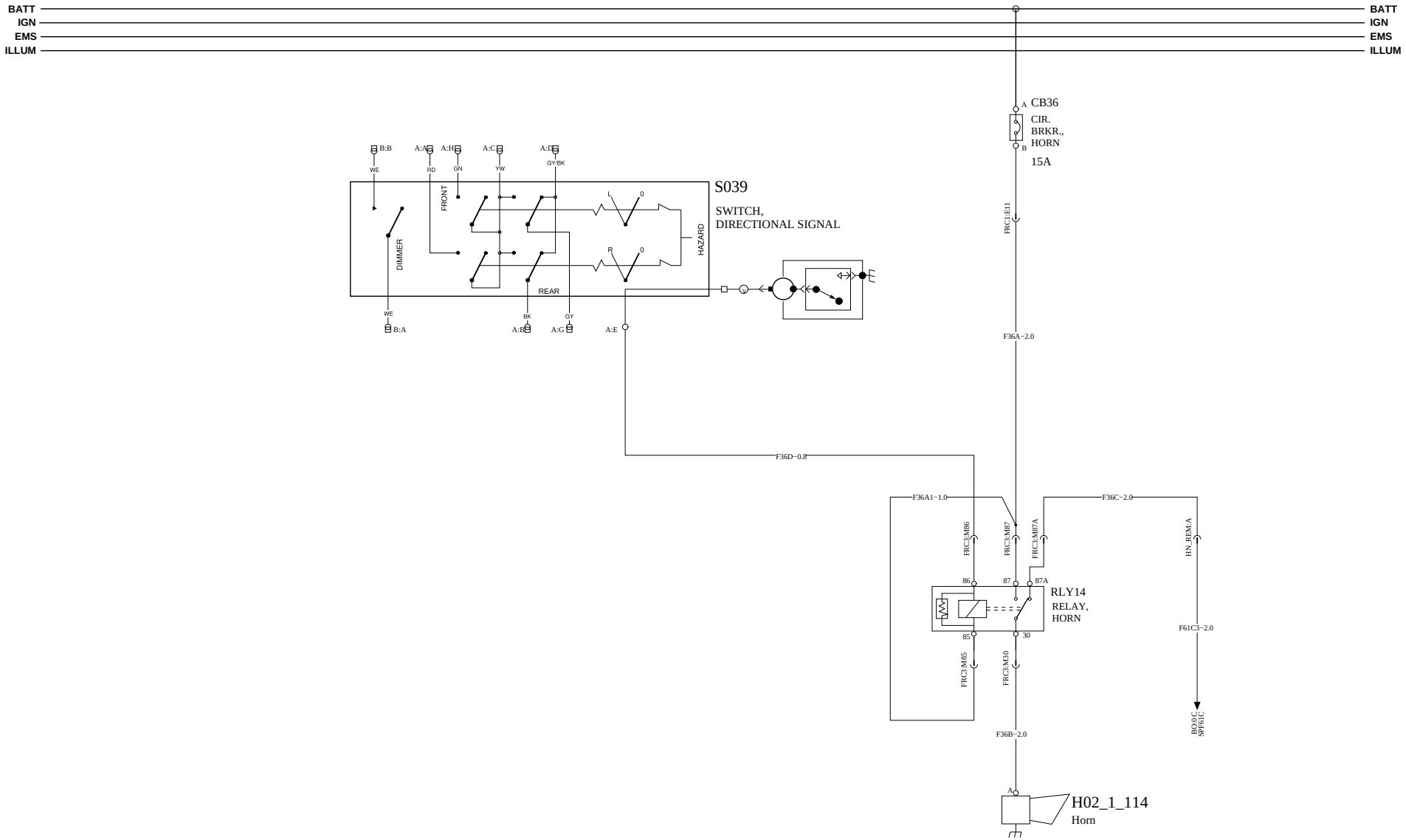

VOLVO Group Trucks Technology	Document title WIRING DIAGRAM - TYPE OM W/CNG ENG Document type PRODUCT SCHEMATIC	Document No 22437784	Issue 02	Volume 1 (2)	Page 44 (53)

https://truckmanualshub.com/

WIRING DIAGRAM: HA

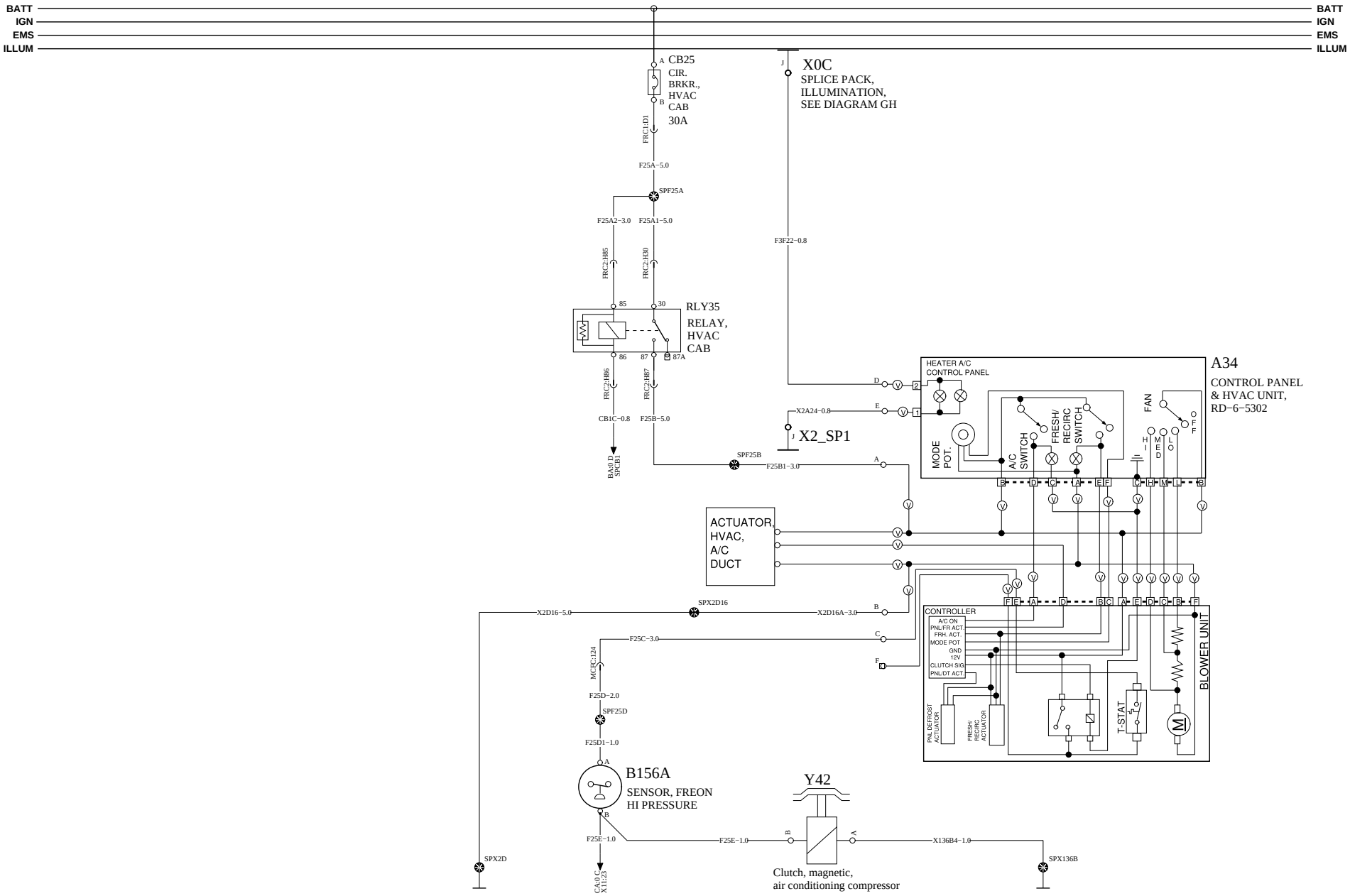

VOLVO Group Trucks Technology	Document title WIRING DIAGRAM - TYPE OM W/CNG ENG Document type PRODUCT SCHEMATIC	Document No 22437784	Issue 02	Volume 1 (2)	Page 45 (53)

https://truckmanualshub.com/

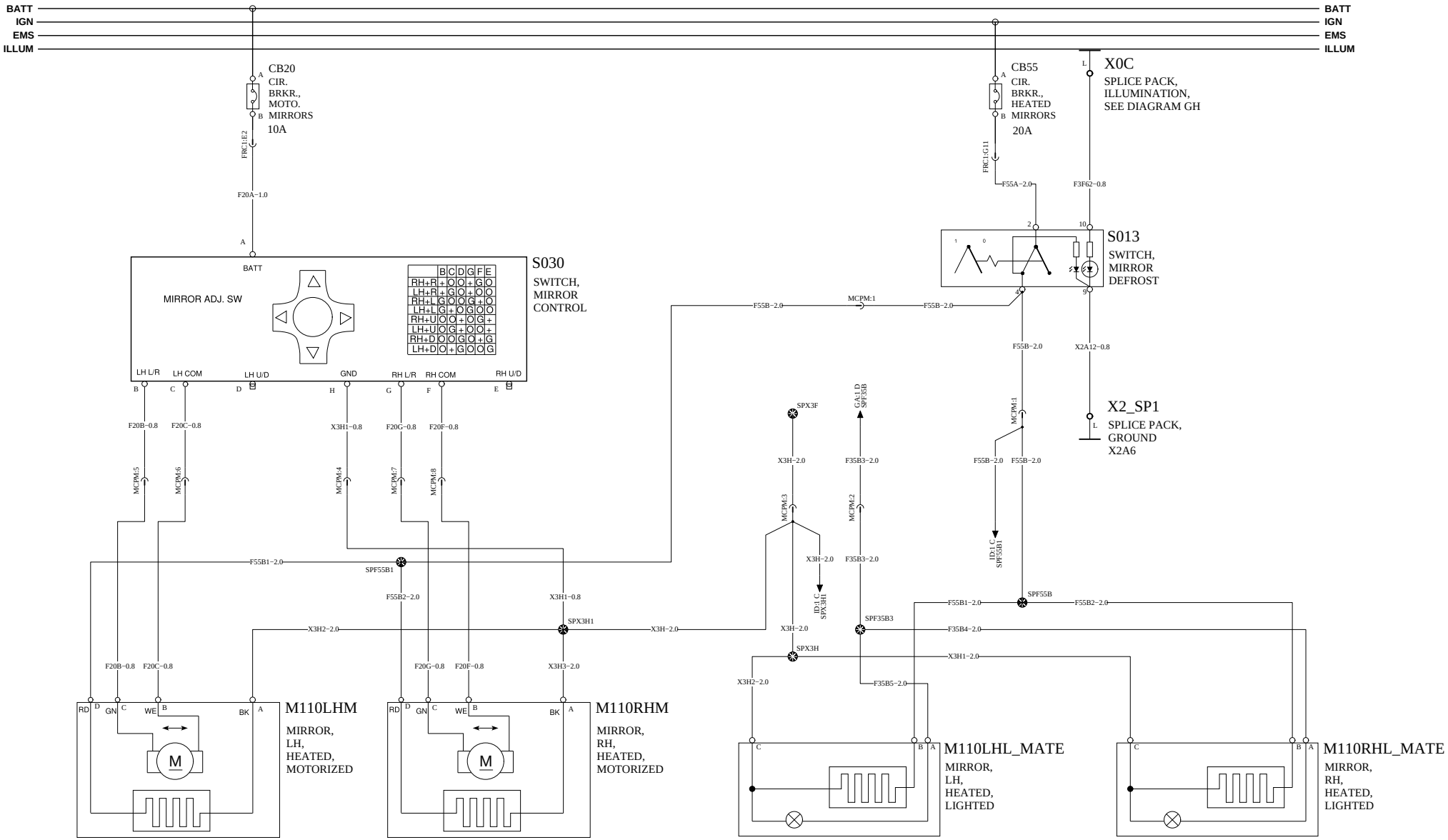

HEATED & MOTORIZED MIRRORS

HEATED & LIGHTED MIRRORS

https://truckmanualshub.com/

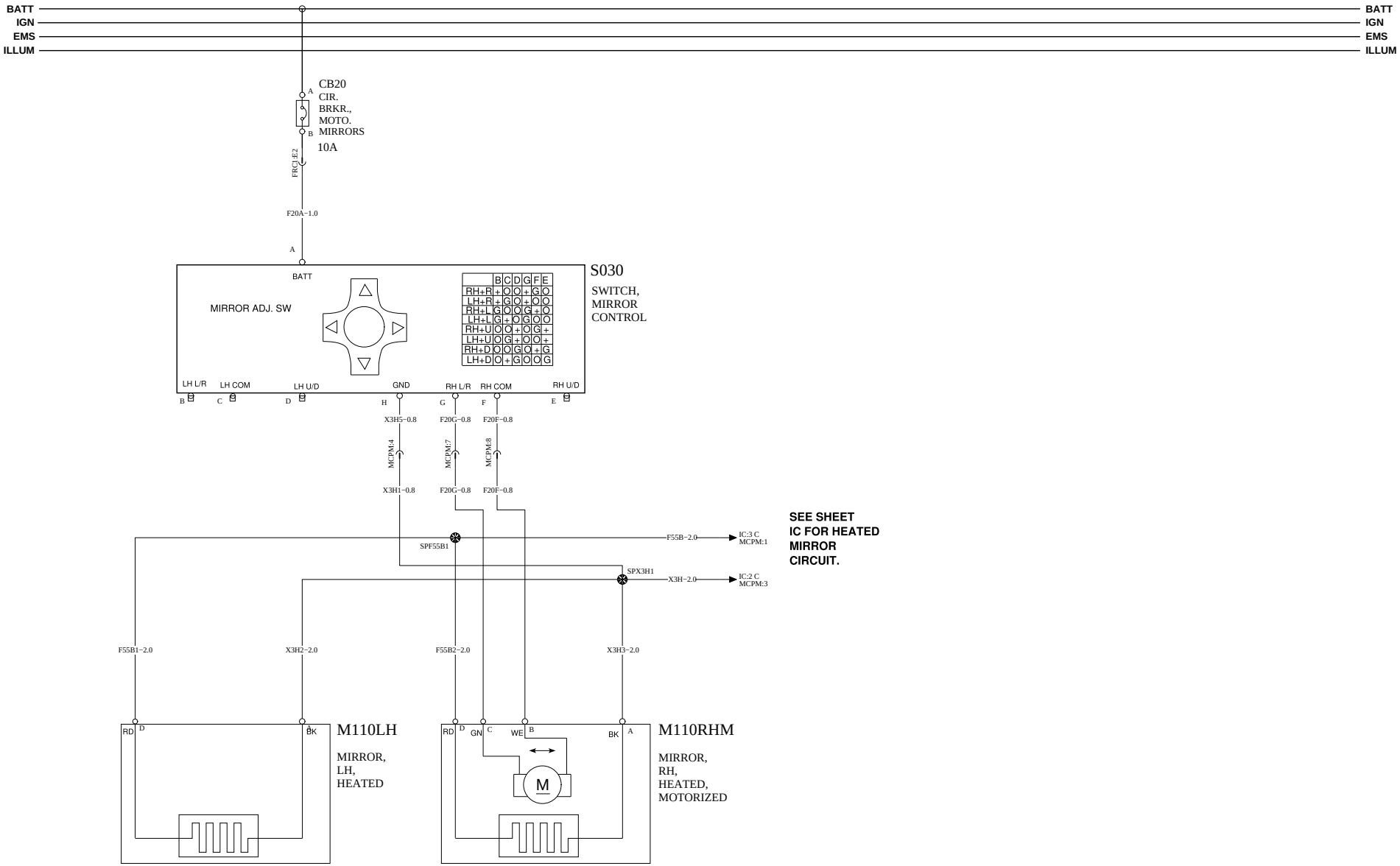

LH HEATED & RH HEATED AND MOTORIZED MIRRORS

https://truckmanualshub.com/

WIRING DIAGRAM: KA

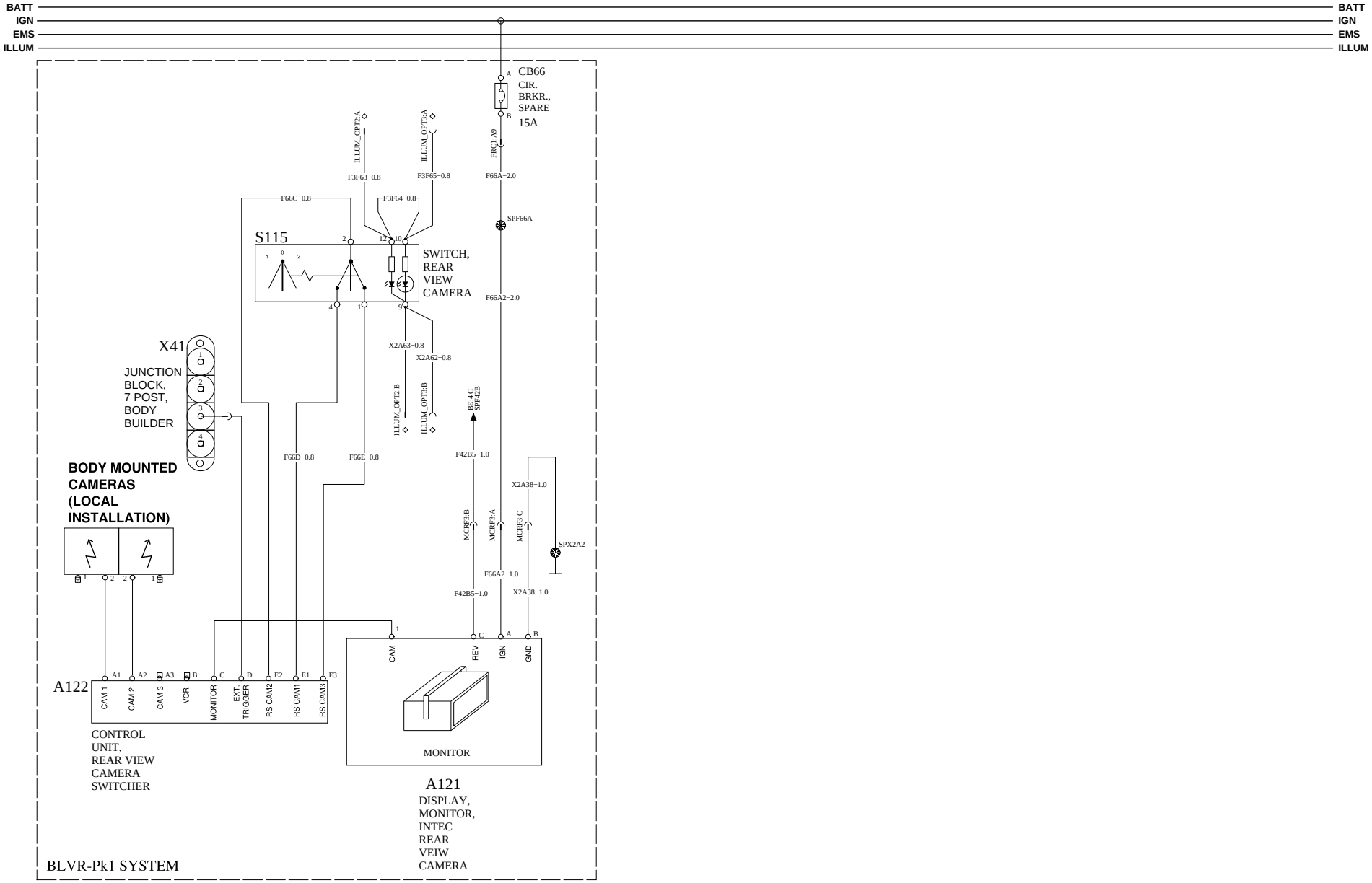

https://truckmanualshub.com/

WIRING DIAGRAM: KB

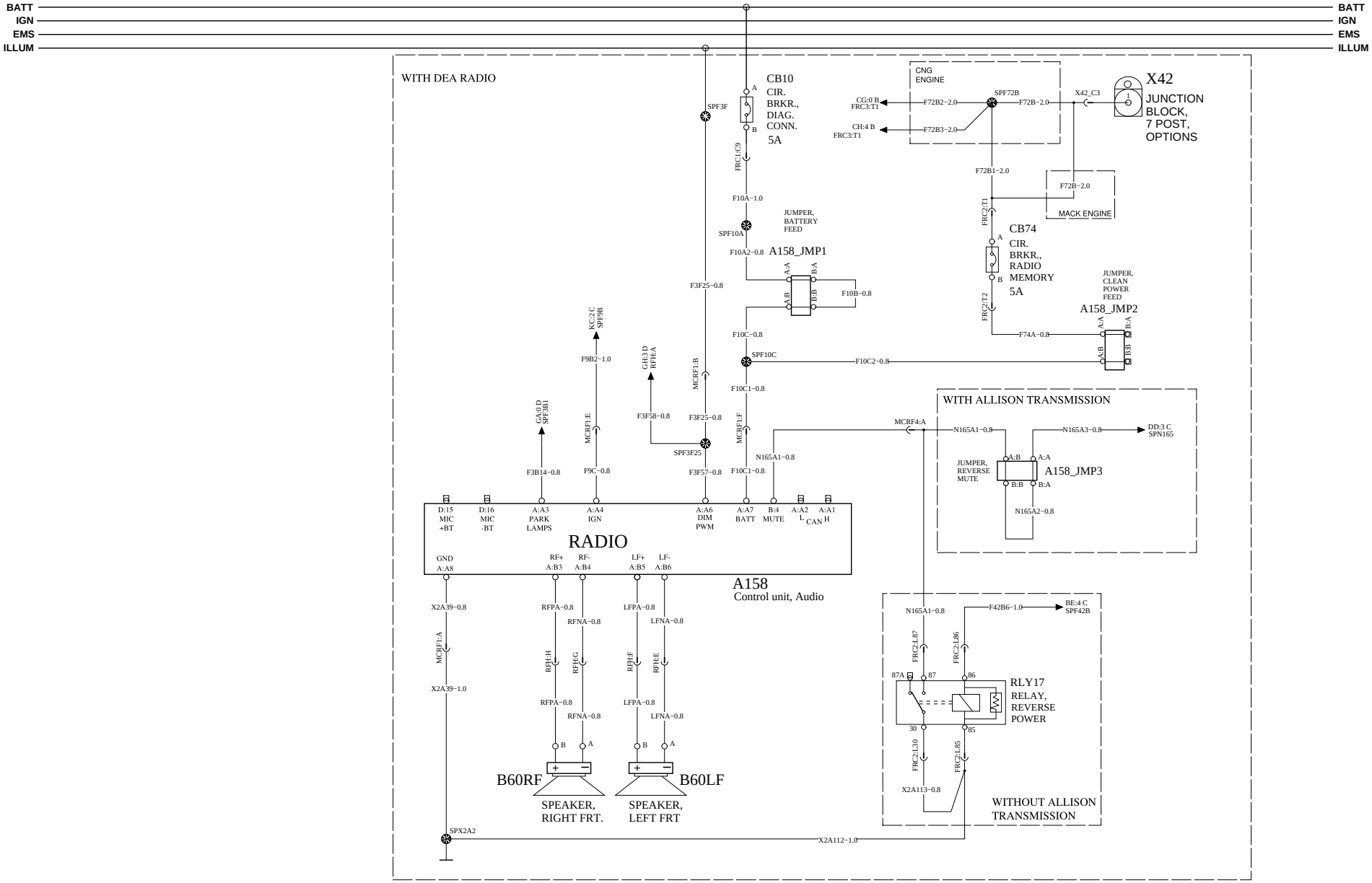

VOLVO Group Trucks Technology	Document title WIRING DIAGRAM - TYPE OM W/CNG ENG	Document No	Issue	Volume	Page
	Document type PRODUCT SCHEMATIC	22437784	02	1 (2)	49 (53)

POWER OUTLET CONNECTIONS

https://truckmanualshub.com/

WIRING DIAGRAM: KC

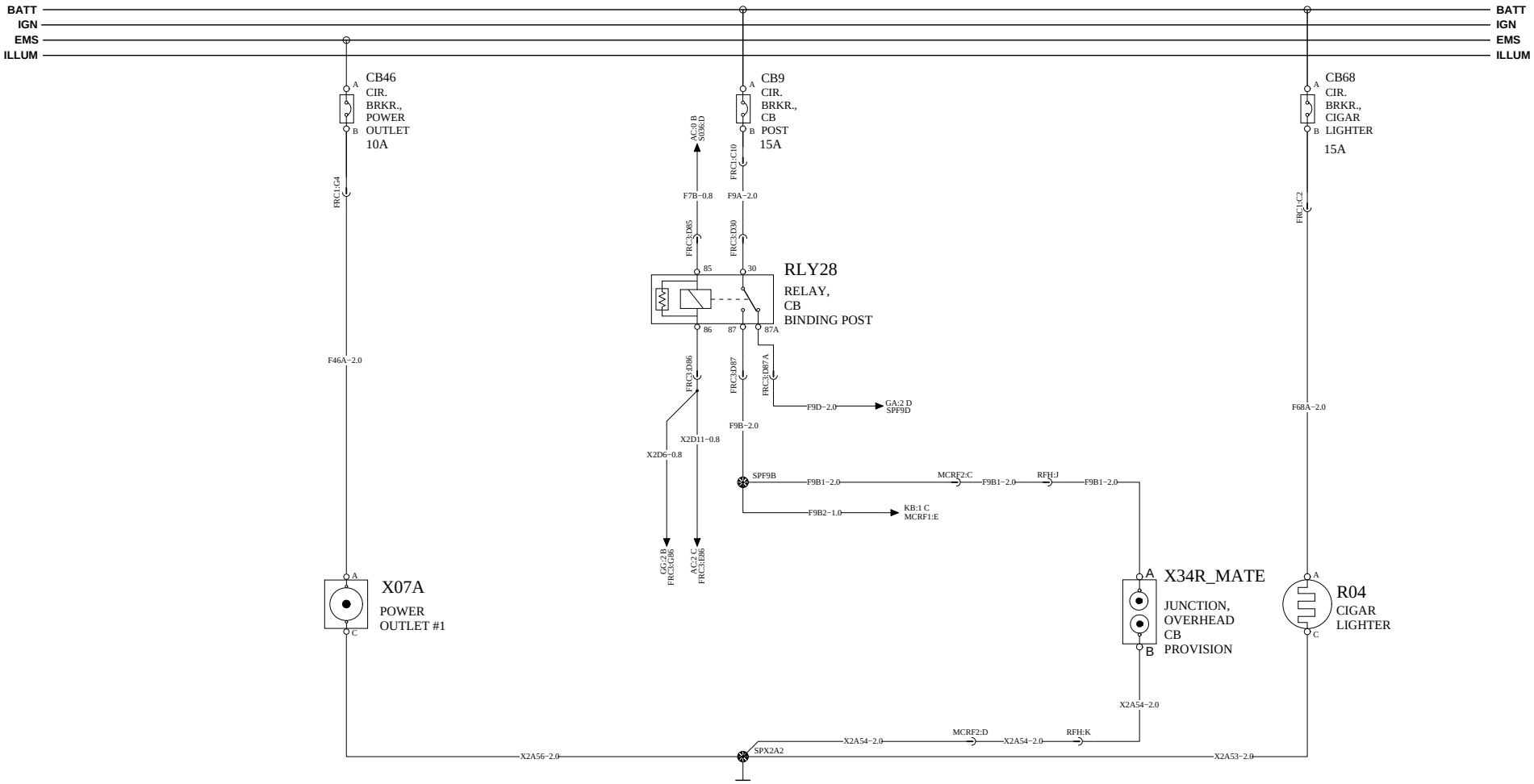

VOLVO Group Trucks Technology	Document title WIRING DIAGRAM - TYPE OM W/CNG ENG Document type PRODUCT SCHEMATIC	Document No 22437784	Issue 02	Volume 1 (2)	Page 50 (53)

SPARE CONNECTORS & FEEDS

https://truckmanualshub.com/

WIRING DIAGRAM: NA

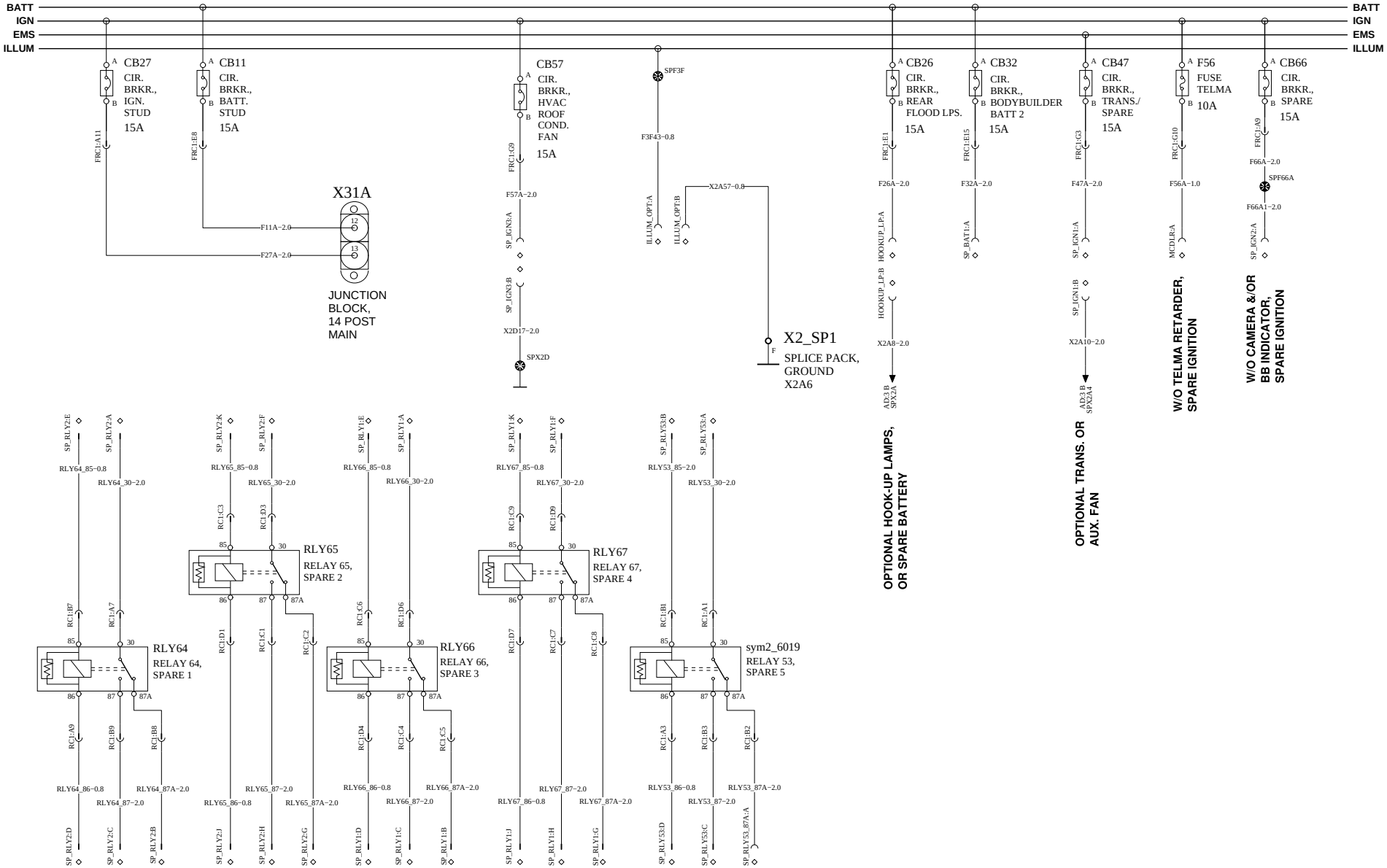

VOLVO Group Trucks Technology	Document title WIRING DIAGRAM - TYPE OM W/CNG ENG	Document No	Issue	Volume	Page
	Document type PRODUCT SCHEMATIC	22437784	02	1 (2)	51 (53)

https://truckmanualshub.com/

WIRING DIAGRAM: NB

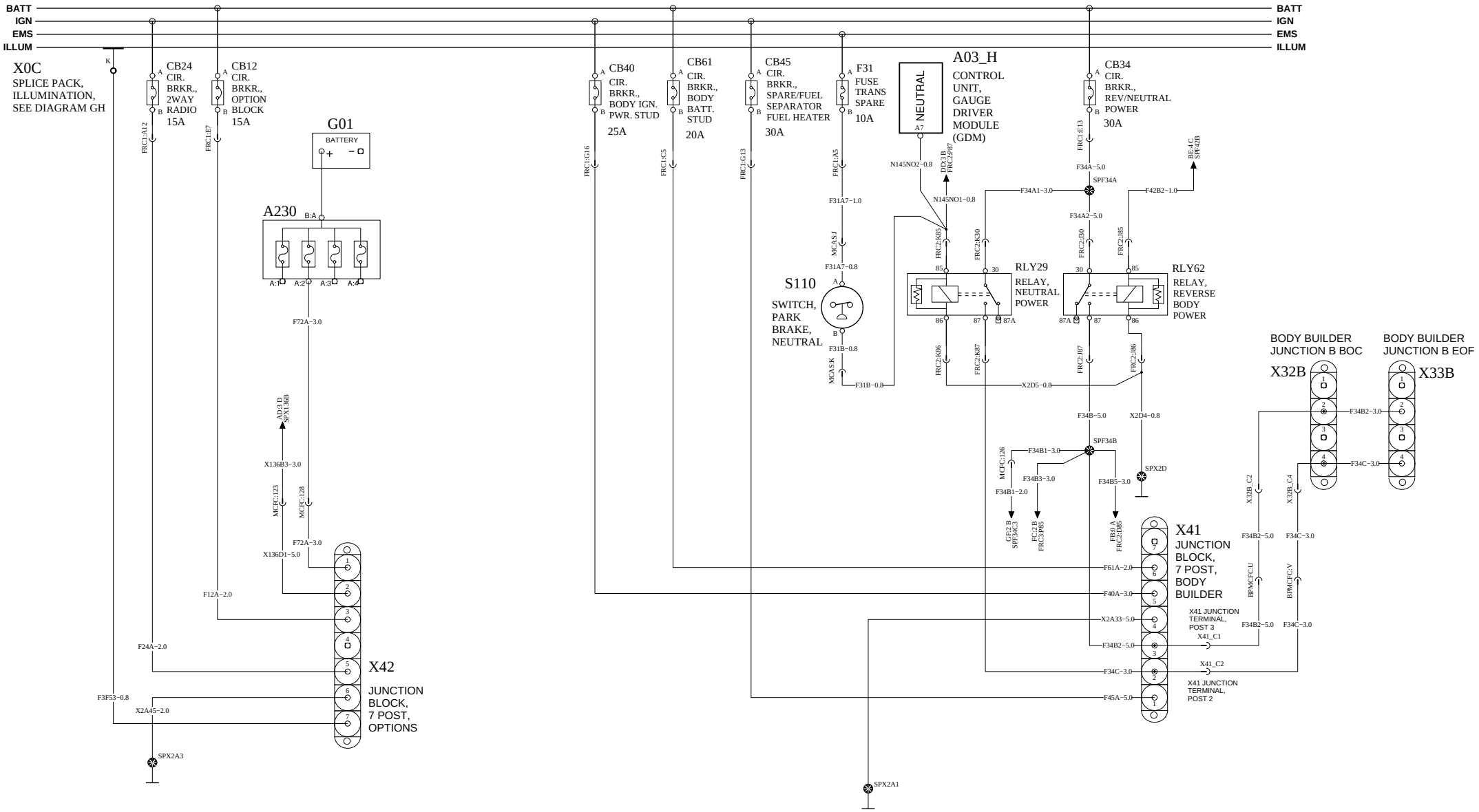

VOLVO Group Trucks Technology	Document title: WIRING DIAGRAM - TYPE OM W/CNG ENG	Document No	Issue	Volume	Page
	Document type: PRODUCT SCHEMATIC	22437784	02	1 (2)	52 (53)

https://truckmanualshub.com/

WIRING DIAGRAM: XA

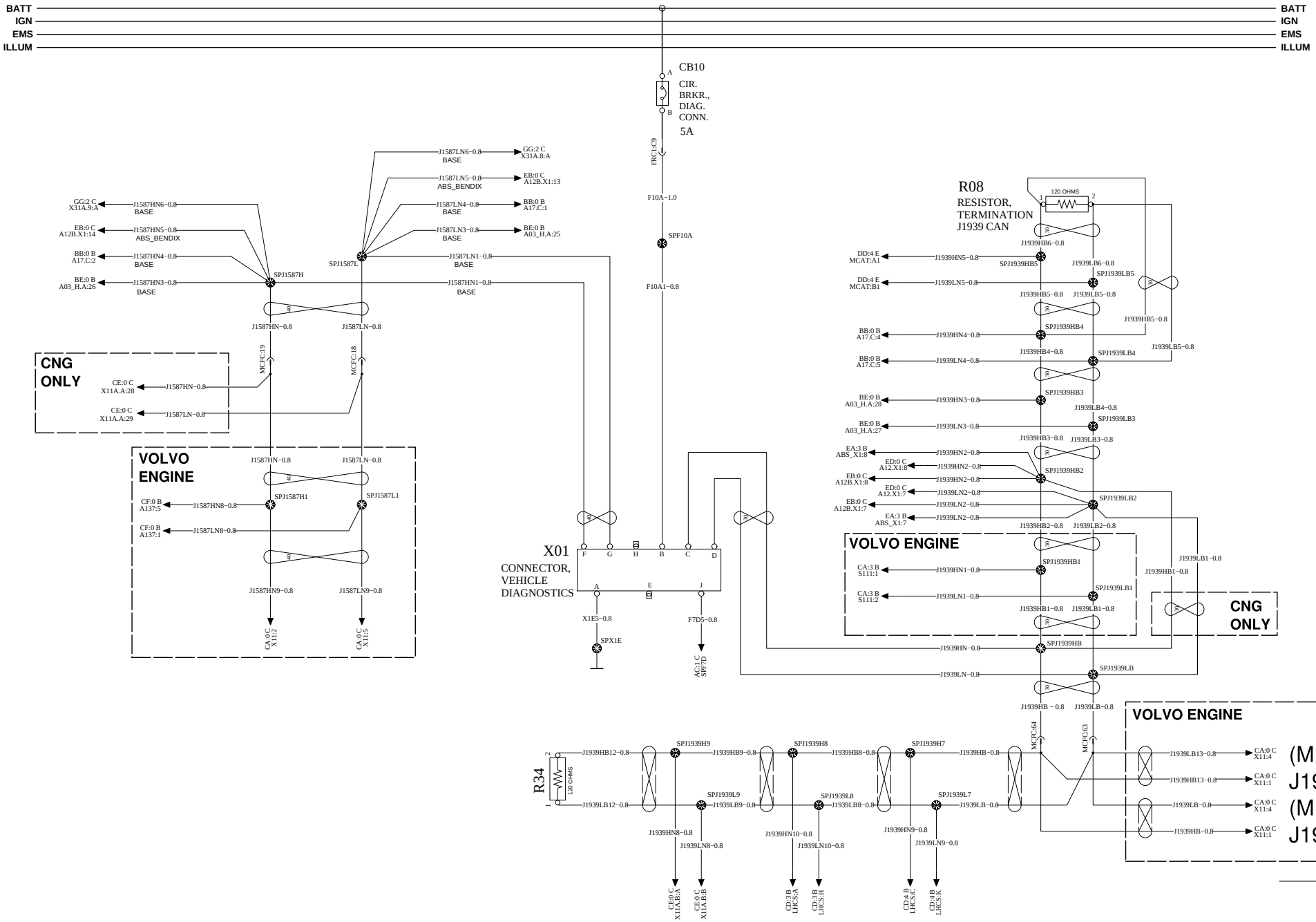

VOLVO Group Trucks Technology	Document title: WIRING DIAGRAM - TYPE OM W/CNG ENG	Document No	Issue	Volume	Page
	Document type: PRODUCT SCHEMATIC	22437784	02	1 (2)	53 (53)

https://truckmanualshub.com/

BILL OF MATERIALS INDEX (VOL 2)

NAME	PAGE
GROUNDS	2
FUSES AND CIRCUIT BREAKERS	3

NAME	PAGE
RELAYS	5
COMPONENTS	6

NAME	PAGE
INLINES	10
SPLICES	16

NAME	PAGE
SHELLS	18
REFERENCES	21

https://truckmanualshub.com/

GROUNDS

NAME	PAGE
SPX1A3	AD 1 C
SPX1E	AD 3 C
SPX1E	BA 4 E
SPX1E	BB 3 B
SPX1E	BC 2 E
SPX1E	BD 1 C
SPX1E	BE 0 E
SPX1E	BF 2 B
SPX1E	EA 0 A
SPX1E	EB 0 D
SPX1E	ED 2 C
SPX1E	XA 2 D
SPX1E6	EB 2 A
SPX1E6	ED 2 B
SPX1E8	EA 2 A
SPX1E9	EA 2 B
SPX2A	AD 3 B
SPX2A1	AD 3 B
SPX2A1	FB 0 B
SPX2A1	FC 1 D

NAME	PAGE
SPX2A1	NB 2 D
SPX2A2	AD 3 B
SPX2A2	CH 2 D
SPX2A2	GA 2 D
SPX2A2	GD 4 E
SPX2A2	GH 0 E
SPX2A2	GP 0 E
SPX2A2	KA 1 C
SPX2A2	KB 1 E
SPX2A2	KC 2 D
SPX2A3	AD 3 B
SPX2A3	GG 0 C
SPX2A3	NB 0 D
SPX2A4	AD 3 B
SPX2A5	AD 3 B
SPX2A5	BA 4 E
SPX2A5	DD 1 C
SPX2A5	EA 2 C
SPX2A5	EB 2 B
SPX2A5	ED 2 B

NAME	PAGE
SPX2A33	BK 3 D
SPX2A42	GD 3 E
SPX2A48	GH 3 C
SPX2A58	BN 1 A
SPX2A58	BO 0 E
SPX2A60	BL 4 B
SPX2A65	BM 0 C
SPX2A70	BA 2 D
SPX2A73	CH 2 D
SPX2A104	FD 1 C
SPX2D	AA 2 E
SPX2D	AB 3 C
SPX2D	AC 1 D
SPX2D	AD 3 B
SPX2D	BC 1 E
SPX2D	BF 0 D
SPX2D	CA 0 C
SPX2D	CG 3 C
SPX2D	DD 2 C
SPX2D	GA 1 D

NAME	PAGE
SPX2D	GG 2 C
SPX2D	HA 1 E
SPX2D	NA 1 B
SPX2D	NB 3 C
SPX2D16	HA 2 D
SPX2D18	BK 3 C
SPX2D19	BN 1 C
SPX2D21	BL 0 E
SPX2N109	DD 0 B
SPX2N109A	DD 0 C
SPX2N109B	FD 3 D
SPX2N109F	FD 3 D
SPX3B	AD 3 C
SPX3B	GP 2 E
SPX3C5	FB 0 D
SPX3F	AD 3 C
SPX3F	CH 1 C
SPX3F	GD 1 E
SPX3F	IC 2 C
SPX3F1	GD 0 E

NAME	PAGE
SPX3F2	GD 1 E
SPX3H	IC 2 D
SPX3H1	IC 1 D
SPX3H1	ID 1 C
SPX88_25	BN 3 D
SPX136B	AD 3 D
SPX136B	CD 1 E
SPX136B	FD 4 D
SPX136B	HA 3 E
SPX136B4	AD 2 D
SPX136B9	AD 3 D
SPX136B11	AD 3 D
SPX136B16	GF 1 D
SPX136B18	CF 4 C
SPX136B19	CA 2 C
SPX136B34	GF 1 C
SPX136B38	FB 2 E
SPX140A	AD 1 C
SPX140A3	AD 2 C
SPX140A3	FA 2 D

NAME	PAGE
SPX140A4	AD 2 C
SPXE11	CG 3 D
SPXN109J	FD 3 D
X0C	BA 2 A
X0C	BC 3 A
X0C	BD 2 A
X0C	CA 4 A
X0C	FB 4 A
X0C	FC 1 A
X0C	GH 3 B
X0C	GP 1 A
X0C	HA 2 A
X0C	IC 3 A
X0C	NB 0 A
X01	XA 1 C
X06D	BH 0 C
X06D_MATE_BL	BM 2 B
X07A	KC 1 C
X07B	BO 1 C
X45A	CC 3 B

https://truckmanualshub.com/

FUSES AND CIRCUIT BREAKERS

FUSE	DESCRIPTION	PAGE
CB2 (15A)	CIRCUIT BREAKER, HDLPS. HI DRL	AA 0 A
CB2 (15A)	CIRCUIT BREAKER, HDLPS. HI DRL	GA 1 A
CB3 (15A)	CIRCUIT BREAKER PARK,TAIL MARKER LPS.	AA 1 A
CB3 (15A)	CIRCUIT BREAKER PARK,TAIL MARKER LPS.	GA 0 A
CB4 (20A)	CIRCUIT BREAKER TURN LPS, FLASHER	AA 1 A
CB4 (20A)	CIRCUIT BREAKER TURN LPS, FLASHER	GA 2 A
CB5 (10A)	CIRCUIT BREAKER, TRACTOR STOP LPS.	AA 1 A
CB5 (10A)	CIRCUIT BREAKER, TRACTOR STOP LPS.	GA 3 A
CB6 (10A)	CIRCUIT BREAKER, DOME COURTESY LPS.	AA 1 A
CB6 (10A)	CIRCUIT BREAKER, DOME COURTESY LPS.	GA 1 A
CB6 (10A)	CIRCUIT BREAKER, DOME COURTESY LPS.	GH 3 A
CB7 (10A)	CIRCUIT BREAKER, KEY SW.	AA 2 A
CB7 (10A)	CIRCUIT BREAKER, KEY SW.	AC 0 A
CB8 (15A)	CIR. BRKR., AIR SOL.	AA 0 C
CB8 (15A)	CIR. BRKR., AIR SOL.	FB 2 A
CB9 (15A)	CIR. BRKR., CB POST	AA 2 A
CB9 (15A)	CIR. BRKR., CB POST	KC 2 A
CB10 (5A)	CIR. BRKR., DIAG. CONN.	AA 2 A
CB10 (5A)	CIR. BRKR., DIAG. CONN.	KB 2 A
CB10 (5A)	CIR. BRKR., DIAG. CONN.	XA 2 A
CB11 (15A)	CIR. BRKR., BATT. STUD	AA 2 A
CB11 (15A)	CIR. BRKR., BATT. STUD	GG 1 A
CB11 (15A)	CIR. BRKR., BATT. STUD	NA 0 A
CB12 (15A)	CIR. BRKR., OPTION BLOCK	AA 2 A
CB12 (15A)	CIR. BRKR., OPTION BLOCK	BO 1 A
CB12 (15A)	CIR. BRKR., OPTION BLOCK	NB 0 A
CB15 (15A)	CIR. BRKR., BEACON LAMPS	AA 3 A
CB15 (15A)	CIR. BRKR., BEACON LAMPS	FC 1 A
CB18 (10A)	CIR. BRKR., DCL(CDS) EMS POWER	AB 1 B
CB18 (10A)	CIR. BRKR., DCL(CDS) EMS POWER	BC 1 A
CB20 (10A)	CIR. BRKR., MOTO. MIRRORS	AA 3 A
CB20 (10A)	CIR. BRKR., MOTO. MIRRORS	IC 0 A
CB20 (10A)	CIR. BRKR., MOTO. MIRRORS	ID 0 A
CB21 (20A)	CIRCUIT BREAKER LH WS WIPER	AA 0 C
CB21 (20A)	CIRCUIT BREAKER LH WS WIPER	GP 4 A
CB22 (20A)	CIRCUIT BREAKER, RH, WS WIPER	AA 0 C
CB22 (20A)	CIRCUIT BREAKER, RH, WS WIPER	GP 2 A
CB23 (10A)	CIRCUIT BREAKER WS. WIPER/ WASHER	AA 1 C
CB23 (10A)	CIRCUIT BREAKER WS. WIPER/ WASHER	GP 0 A
CB24 (15A)	CIR. BRKR., 2WAY RADIO	AA 1 C
CB24 (15A)	CIR. BRKR., 2WAY RADIO	NB 0 A
CB25 (30A)	CIR. BRKR., HVAC CAB	AB 4 B
CB25 (30A)	CIR. BRKR., HVAC CAB	HA 2 A
CB26 (15A)	CIR. BRKR., REAR FLOOD LPS.	AA 4 A
CB26 (15A)	CIR. BRKR., REAR FLOOD LPS.	NA 2 A
CB27 (15A)	CIR. BRKR., IGN. STUD	AA 1 C
CB27 (15A)	CIR. BRKR., IGN. STUD	BK 0 A
CB27 (15A)	CIR. BRKR., IGN. STUD	BL 0 A
CB27 (15A)	CIR. BRKR., IGN. STUD	BN 0 A
CB27 (15A)	CIR. BRKR., IGN. STUD	GG 1 A

FUSE	DESCRIPTION	PAGE
CB27 (15A)	CIR. BRKR., IGN. STUD	NA 0 A
CB29 (10A)	CIR. BRKR., EMS RELAYS	AA 4 A
CB30 (10A)	CIR. BRKR., MUNCIE LIVE PACK	AA 1 C
CB30 (10A)	CIR. BRKR., MUNCIE LIVE PACK	FC 1 A
CB32 (15A)	CIR. BRKR., BODYBUILDER BATT 2	AB 0 A
CB32 (15A)	CIR. BRKR., BODYBUILDER BATT 2	NA 3 A
CB33 (20A)	CIR. BRKR., TRAILER STOP LPS.	AB 0 A
CB33 (20A)	CIR. BRKR., TRAILER STOP LPS.	GG 2 A
CB34 (30A)	CIR. BRKR., REV/NEUTRAL POWER	AB 0 A
CB34 (30A)	CIR. BRKR., REV/NEUTRAL POWER	NB 3 A
CB35 (25A)	CIR. BRKR., CAB & TRLR. CLEARANCE LPS.	AB 1 A
CB35 (25A)	CIR. BRKR., CAB & TRLR. CLEARANCE LPS.	GA 1 A
CB36 (15A)	CIR. BRKR., HORN	AB 1 A
CB36 (15A)	CIR. BRKR., HORN	GQ 3 A
CB37 (25A)	CIR. BRKR., TRLR. TAIL LPS.	AB 1 A
CB37 (25A)	CIR. BRKR., TRLR. TAIL LPS.	GG 2 A
CB39 (30A)	CIR. BRKR., TRAILER ABS PWR	AA 1 D
CB39 (30A)	CIR. BRKR., TRAILER ABS PWR	GG 1 A
CB40 (25A)	CIR. BRKR., BODY IGN. PWR. STUD	AA 4 D
CB40 (25A)	CIR. BRKR., BODY IGN. PWR. STUD	NB 2 A
CB42 (10A)	CIR. BRKR., BACKUP LPS.	AA 4 D
CB42 (10A)	CIR. BRKR., BACKUP LPS.	BE 4 A
CB44 (25A)	CIR. BRKR., HTD. AIR DRYER /HTD. DRAIN VA	AA 3 D
CB44 (25A)	CIR. BRKR., HTD. AIR DRYER /HTD. DRAIN VA	FA 2 A
CB45 (30A)	CIR. BRKR., SPARE/FUEL SEPARATOR FUEL HEA	AA 3 D
CB45 (30A)	CIR. BRKR., SPARE/FUEL SEPARATOR FUEL HEA	CC 2 A
CB45 (30A)	CIR. BRKR., SPARE/FUEL SEPARATOR FUEL HEA	NB 2 A
CB46 (10A)	CIR. BRKR., POWER OUTLET	AA 0 D
CB46 (10A)	CIR. BRKR., POWER OUTLET	KC 1 A
CB47 (15A)	CIR. BRKR., TRANS./ SPARE	AA 0 D
CB47 (15A)	CIR. BRKR., TRANS./ SPARE	NA 3 A
CB50 (10A)	CIR. BRKR., HDLP LH LOW BEAM	AB 2 A
CB50 (10A)	CIR. BRKR., HDLP LH LOW BEAM	GD 0 A
CB51 (10A)	CIR. BRKR., HDLP RH LOW BEAM	AB 2 A
CB51 (10A)	CIR. BRKR., HDLP RH LOW BEAM	GD 1 A
CB52 (15A)	CIR. BRKR., SPARE/ BRK. WEAR	AA 3 D
CB52 (15A)	CIR. BRKR., SPARE/ BRK. WEAR	BG 4 A
CB55 (20A)	CIR. BRKR., HEATED MIRRORS	AA 2 D
CB55 (20A)	CIR. BRKR., HEATED MIRRORS	IC 3 A
CB57 (15A)	CIR. BRKR., HVAC ROOF COND. FAN	AA 2 D
CB57 (15A)	CIR. BRKR., HVAC ROOF COND. FAN	NA 1 A
CB58 (10A)	CIR. BRKR. OPEN	AA 0 D
CB61 (20A)	CIR. BRKR., BODY BATT. STUD	AB 3 A
CB61 (20A)	CIR. BRKR., BODY BATT. STUD	BO 0 A
CB61 (20A)	CIR. BRKR., BODY BATT. STUD	NB 2 A
CB66 (15A)	CIR. BRKR., SPARE	AA 2 C
CB66 (15A)	CIR. BRKR., SPARE	KA 1 A
CB66 (15A)	CIR. BRKR., SPARE	NA 4 A
CB68 (15A)	CIR. BRKR., CIGAR LIGHTER	AB 3 A
CB68 (15A)	CIR. BRKR., CIGAR LIGHTER	KC 3 A

https://truckmanualshub.com/

FUSES AND CIRCUIT BREAKERS

FUSE	DESCRIPTION	PAGE
CB74 (5A)	CIR. BRKR., RADIO MEMORY	KB 3 B
CB91 (30A)	CIR. BRKR., AUX FAN #1	CD 0 B
CB92 (30A)	CIR. BRKR., AUX FAN #2	CD 1 B
F13 (15A/30A)	FUSE ABS BATT	AA 3 A
F13 (15A/30A)	FUSE ABS BATT	EA 3 A
F13 (15A/30A)	FUSE ABS BATT	EB 3 A
F13 (15A/30A)	FUSE ABS BATT	ED 3 A
F14 (30A)	FUSE, OPEN	AA 3 A
F14 (30A)	FUSE, OPEN	CD 2 A
F16 (10A)	FUSE, VECU (EMS)	AB 0 B
F16 (10A)	FUSE, VECU (EMS)	BA 0 A
F17 (10A)	FUSE, CONTROL/SW INPUTS	AB 1 B
F17 (10A)	FUSE, CONTROL/SW INPUTS	BA 1 A
F19 (5A)	FUSE INST. CLUSTER	AA 3 A
F19 (5A)	FUSE INST. CLUSTER	BE 0 A
F31 (10A)	FUSE TRANS SPARE	AB 1 B
F31 (10A)	FUSE TRANS SPARE	DD 3 A
F31 (10A)	FUSE TRANS SPARE	NB 2 A
F38 (30A)	FUSE ENGINE CONTROL UNIT	AA 1 D
F38 (30A)	FUSE ENGINE CONTROL UNIT	CA 0 A
F38 (30A)	FUSE ENGINE CONTROL UNIT	CE 2 A
F41 (20A)	FUSE, ENG. ACC.	AA 1 D
F41 (20A)	FUSE, ENG. ACC.	CA 1 A
F41 (20A)	FUSE, ENG. ACC.	CG 3 A
F43 (15A)	F43 FUSE, ENG COMP #2	AA 2 D
F43 (15A)	F43 FUSE, ENG COMP #2	CA 1 B
F49 (10A)	FUSE, ABS	AA 0 D

FUSE	DESCRIPTION	PAGE
F49 (10A)	FUSE, ABS	EA 3 A
F49 (10A)	FUSE, ABS	EB 3 A
F49 (10A)	FUSE, ABS	ED 3 A
F54 (20A)	FUSE, DPF, BAT	AB 2 A
F56 (10A)	FUSE TELMA	AA 2 D
F56 (10A)	FUSE TELMA	NA 3 A
F60 (15A)	FUSE, ENG COMP #1	AB 3 A
F60 (15A)	FUSE, ENG COMP #1	CA 0 A
F62 (30A)	FUSE, EAT BATT.	AB 3 A
F62 (30A)	FUSE, EAT BATT.	CD 3 A
F63 (5A)	FUSE, INSTR CLUSTER (EMS)	AB 2 B
F63 (5A)	FUSE, INSTR CLUSTER (EMS)	BE 0 A
F64 (10A)	FUSE, DPF, IGN	AB 2 B
F64 (10A)	FUSE, DPF, IGN	CB 0 A
F65 (5A)	BBM	AB 2 B
F69 (5A)	FUSE, EAT EMS	AB 2 B
F69 (5A)	FUSE, EAT EMS	CF 0 A
F71 (10A)	FUSE, TRANS (BATT)	AB 4 A
F71 (10A)	FUSE, TRANS (BATT)	DD 0 A
F78 (15A)	FUSE CUMMINS ECU	CE 1 B
F79 (5A)	FUSE CUMMINS ECU	CE 2 B
F80 (5A)	FUSE CUMMINS ECU	CE 2 B
F81 (10A)	FUSE, METHANE DETECTOR	CG 0 B
F81 (10A)	FUSE, METHANE DETECTOR	CH 4 C
FM3 (150A)	FUSE, MAIN PWR, CAB	AC 3 C
FM5 (2A)	FUSE LNG FUEL SENSOR	CG 3 C
FM6 (10A)	FUSE NG DETECTOR	CG 0 C

https://truckmanualshub.com/

RELAYS

RELAY	DESCRIPTION	PAGE
RLY01	RELAY, EMS #1	AB 3 B
RLY02	RELAY, EMS #2	AA 2 C
RLY03	RELAY, IGN. #1	AA 0 B
RLY04	RELAY, IGN #3	AA 3 C
RLY06	RELAY, EMERGENCY STOP LAMP	GA 3 B
RLY07	RELAY 07, PTO #2	BN 2 B
RLY10B	RELAY, HORN, REMOTE	BO 0 D
RLY11	RELAY, TRAILER TAIL LAMP	GG 2 B
RLY12	RELAY, TRAILER STOP LAMP	GG 2 B
RLY13	RELAY, CAB & TRAILER CLEARANCE LAMP	GA 1 C
RLY14	RELAY, HORN	GQ 3 D
RLY016A	RELAY, WINDSHIELD WIPER RH LOW	GP 1 B
RLY016B	RELAY, WINDSHIELD WIPER RH HIGH	GP 2 B
RLY016C	RELAY WINDSHIELD WIPER LH LOW	GP 3 B
RLY016D	RELAY WINSHIELD WIPER LH HIGH	GP 3 B
RLY17	RELAY, REVERSE POWER	DD 3 B
RLY17	RELAY, REVERSE POWER	KB 3 D
RLY28	RELAY, CB BINDING POST	KC 2 B
RLY29	RELAY, NEUTRAL POWER	NB 3 B
RLY34	RELAY, PRE-EMS	AA 1 B
RLY35	RELAY, HVAC CAB	HA 2 B
RLY36	RELAY, START CNTL 1	AC 2 C
RLY38	RELAY, LO BEAM LH	GD 0 B
RLY39	RELAY, LO BEAM RH	GD 1 B
RLY45	RELAY PTO ENABLE	DD 4 B
RLY46	RELAY RANGE PTO	DD 3 B
RLY47	RELAY RETARDER	DD 2 B
RLY48	RELAY STOP LAMPS	DD 2 B
RLY52	RELAY, HIGH BEAM	GA 1 B
RLY58	RELAY BEACON LAMP PTO	FC 1 B
RLY59	RELAY BEACON LAMP REVERSE	FC 2 B

RELAY	DESCRIPTION	PAGE
RLY60	RELAY, PARK BRAKE STOP LAMP	GA 4 B
RLY61	RELAY, LIFT AXLE REVERSE	FB 0 A
RLY61B	RELAY, LIFT AXLE, PUMP ON	BO 1 B
RLY62	RELAY, REVERSE BODY POWER	NB 3 B
RLY63	RELAY, POWER INDICATOR	GA 3 D
RLY63_JMP	JUMPER, CLEARANCE LIGHTS	GA 2 E
RLY64	RELAY 64, SPARE 1	BK 2 B
RLY64	RELAY 64, SPARE 1	BL 1 B
RLY64	RELAY 64, SPARE 1	BN 4 B
RLY64	RELAY 64, SPARE 1	NA 0 D
RLY65	RELAY 65, SPARE 2	BK 0 C
RLY65	RELAY 65, SPARE 2	BL 0 B
RLY65	RELAY 65, SPARE 2	BN 1 B
RLY65	RELAY 65, SPARE 2	NA 0 C
RLY66	RELAY 66, SPARE 3	BK 3 B
RLY66	RELAY 66, SPARE 3	BL 3 C
RLY66	RELAY 66, SPARE 3	BN 3 B
RLY66	RELAY 66, SPARE 3	NA 1 D
RLY67	RELAY 67, SPARE 4	BK 1 C
RLY67	RELAY 67, SPARE 4	BL 3 C
RLY67	RELAY 67, SPARE 4	BN 0 C
RLY67	RELAY 67, SPARE 4	NA 1 C
RLY68	RELAY, ENGINE COMP #1	CA 0 B
RLY89	RELAY METHANE DETECTOR	CH 0 B
RLY91	RELAY 91, AUX FAN #1	CD 0 C
RLY92	RELAY 92, AUX FAN #2	CD 1 C
RLY94	RELAY, START INTERUPT 1	BM 0 B
RLY95	RELAY, START INTERUPT 2	BM 0 B
RLY97	STARTER LOCK OUT	AC 2 D
RLY98	RELAY PDLO	BD 4 D
RLY99	RELAY, METHANE DETECT	CH 0 C

https://truckmanualshub.com/

COMPONENTS

COMPONENT	DESCRIPTION	PAGE
A03_A	DISPLAY, WARNING LAMP MODULE	BE 3 D
A03_B	GAUGE, SPEEDOMETER, VOLTMETER, TRANS. OIL	BE 2 C
A03_C	GAUGE, TACHOMETER, WATER TEMP., OIL PSI	BE 2 C
A03_D	GAUGE, DIESEL LEVEL & DIESEL FLUID LEVEL	BE 0 D
A03_E	GAUGE, PYROMETER	BE 1 E
A03_H	CONTROL UNIT, GAUGE DRIVER MODULE (GDM)	BE 0 B
A03_H	CONTROL UNIT, GAUGE DRIVER MODULE (GDM)	BF 1 B
A03_H	CONTROL UNIT, GAUGE DRIVER MODULE (GDM)	BG 0 B
A03_H	CONTROL UNIT, GAUGE DRIVER MODULE (GDM)	NB 3 A
A03_J	GAUGE, DUAL AIR	BE 0 E
A03_Z	GAUGE FUEL LEVEL LNG	CG 3 B
A12	Control unit, ABS (Anti-lock Brake System	ED 0 C
A12A	CONTROL UNIT, ABS (ANTI-LOCK BRAKE SYS.)	EA 0 C
A12B	CONTROL UNIT, ABS (ANTI-LOCK BRAKE SYS.	EB 0 C
A17	CONTROL UNIT, VECU (VEHICLE ECU)	AC 2 A
A17	CONTROL UNIT, VECU (VEHICLE ECU)	BA 1 C
A17	CONTROL UNIT, VECU (VEHICLE ECU)	BB 0 B
A17	CONTROL UNIT, VECU (VEHICLE ECU)	BC 2 D
A17	CONTROL UNIT, VECU (VEHICLE ECU)	BD 2 D
A17	CONTROL UNIT, VECU (VEHICLE ECU)	GD 2 A
A19E	GEARSELECTOR ALLISON	DD 0 E
A34	CONTROL PANEL & HVAC UNIT, RD-6-5302	HA 2 C
A36_1	CONTROL UNIT, BBM (BODYBUILDER MODULE), P	BK 3 D
A36_2	CONTROL UNIT, BBM (BODYBUILDER MODULE) PT	BL 2 D
A36_3	CONTROL UNIT, BBM (BODYBUILDER MODULE) RE	BM 0 D
A36_3_CHASSIS	BB BOC LIGHTING CONNECTOR	BJ 1 D
A36_3_CHASSIS	BB BOC LIGHTING CONNECTOR	BM 3 D
A36_4_MATE	CONTROL UNIT, BBM (BODYBUILDER MODULE), P	BN 3 D
A57	CONTROL UNIT, ALLISON TRANSMISSION	DC 0 A
A57	CONTROL UNIT, ALLISON TRANSMISSION	DD 0 D
A58	TRANSMISSION ALLISON	DC 0 D
A83	CONTROL UNIT, DRL (DAYTIME RUNNING LIGHT	GD 2 B
A92A	CONTROL UNIT AUX. COOLING FAN	CD 2 C
A92B	CONTROL UNIT AUX. COOLING FAN	CD 3 C
A95	MODULE ATOMIZATION	CB 1 E
A104	CONTROL UNIT, FLASHER	GA 2 A
A108A	TRANSMISSION RETARDER	DC 3 D
A121	DISPLAY, MONITOR, INTEC REAR VEIW CAMERA	KA 1 D
A122	CONTROL UNIT, REAR VIEW CAMERA SWITCHER	KA 0 D
A123P	GAUGE, LIFT AXLE, PUSHER	BE 2 B
A123T	GAUGE, LIFT AXLE, TAG	BE 3 B
A124	DISPLAY, HOUR METER	BL 4 A
A124_	COMPONENT GROUP, STARTER MOTOR, M04 & K65	AC 3 B
A124_	COMPONENT GROUP, STARTER MOTOR, M04 & K65	AD 0 A
A137	DEF CONTROL MODULE	CB 0 C
A137	DEF CONTROL MODULE	CF 0 B
A138	PUMP UNIT, ADBLUE	CF 1 E
A158	Control unit, Audio	KB 1 C
A158_JMP1	JUMPER, BATTERY FEED	KB 2 B
A158_JMP2	JUMPER, CLEAN POWER FEED	KB 3 B

COMPONENT	DESCRIPTION	PAGE
A158_JMP3	JUMPER, REVERSE MUTE	KB 3 C
B07	SENSOR, FUEL LEVEL	BF 1 D
B07A	SENSOR LNG FUEL LEVEL	CG 3 D
B09A	SENSOR, OIL TEMP GEARBOX	BF 2 D
B13	SENSOR, WHEEL SPD LH FRT AXLE	EA 1 B
B13	SENSOR, WHEEL SPD LH FRT AXLE	EB 0 D
B13	SENSOR, WHEEL SPD LH FRT AXLE	ED 0 D
B14	SENSOR WHEEL SPD RH FRT AXLE	EA 1 B
B14	SENSOR WHEEL SPD RH FRT AXLE	EB 1 D
B14	SENSOR WHEEL SPD RH FRT AXLE	ED 1 D
B15	SENSOR, WHEEL SPD LH RR RR AXLE	EA 0 D
B15	SENSOR, WHEEL SPD LH RR RR AXLE	EB 0 B
B15	SENSOR, WHEEL SPD LH RR RR AXLE	ED 0 B
B16	SENSOR, WHEEL SPD RH RR RR AXLE	EA 1 D
B16	SENSOR, WHEEL SPD RH RR RR AXLE	EB 1 B
B16	SENSOR, WHEEL SPD RH RR RR AXLE	ED 1 B
B17	SENSOR, WHEEL SPD LH 3RD AXLE	EA 2 E
B17	SENSOR, WHEEL SPD LH 3RD AXLE	EB 2 D
B17	SENSOR, WHEEL SPD LH 3RD AXLE	ED 2 D
B18	SENSOR, WHEEL SPD RH 3RD AXLE	EA 2 E
B18	SENSOR, WHEEL SPD RH 3RD AXLE	EB 3 D
B18	SENSOR, WHEEL SPD RH 3RD AXLE	ED 3 D
B23	SENSOR, AMBIENT AIR TEMP.	BF 3 C
B25A	SENSOR ACCELERATOR PEDAL	BB 3 E
B40	SENSOR, BRK WEAR FRT AXLE, LHS	BG 3 B
B41	SENSOR BRK WEAR FRT AXLE RHS	BG 3 B
B42	SENSOR, BRK WEAR FRT RR AXLE, LHS	BG 3 D
B43	SENSOR, BRK WEAR FRT RR AXLE, RHS	BG 3 D
B44	SENSOR, BRK WEAR REAR RR AXLE, LHS	BG 3 D
B45	SENSOR, BRK WEAR REAR RR AXLE, RHS	BG 3 D
B60LF	SPEAKER, LEFT FRT	KB 2 D
B60RF	SPEAKER, RIGHT FRT.	KB 1 D
B68	SENSOR, OUTPUT SHAFT SPD, GEARBOX	BB 0 D
B96	SENSOR, NOx (CAN BASED) AFTER SCR	CA 2 A
B96B	SENSOR, NOx (CAN BASED) AFTER DPF	CA 2 A
B105	SENSOR, RETARDER TEMP	DC 3 D
B115	SENSOR DPF PRESSURE	CB 3 E
B121	SENSOR, LOW LEVEL WASHER FLUID	BG 0 D
B122	SENSOR, EXHAUST TEMP	BF 2 A
B122A	SENSOR EXHAUST TEMPERATURE CATALYST	CE 1 D
B123	SENSOR LEVEL COOLANT	CA 2 E
B123A	SENSOR COOLANT LEVEL	CE 1 D
B124FR	SENSOR, OIL TEMP., FRONT REAR AXLE	BF 1 D
B124RR	SENSOR, OIL TEMP., REAR REAR AXLE	BF 1 D
B133	SENSOR, AIR FILTER RESTRICTION	BG 0 A
B142B	SENSOR, ADBLUE LEVEL & TEMP.	CF 3 D
B156	SENSOR, FREON HI PRESSURE - FAN	BD 2 B
B156A	SENSOR, FREON HI PRESSURE	HA 1 D
B183_Y	SENSOR METHANE ZONE 1	CG 1 D
B183_Z	SENSOR METHANE ZONE 2	CG 1 D

https://truckmanualshub.com/

COMPONENTS

COMPONENT	DESCRIPTION	PAGE
B185A	SENSOR OXYGEN OUTLET EGO	CE 2 D
B185B	SENSOR OXYGEN OUTLET EGO	CE 3 D
B211_B	SENSORS DPF TEMP.	CB 3 C
B300B	METHANE SENSOR ENGINE	CH 1 C
DCL_MATE_1	CONNECTOR, DCL MATE, BODYLINK REFUSE	BM 1 C
DCL_MATE_2	CONNECTOR DCL MATE BODYLINK REFUSE	BM 1 C
DUAL_PTO_JMP	PLUG, JUMPER WIRE	FB 2 A
E11LA	LAMP, SIDE MARKER LEFT SIDE 1	GD 2 D
E11RA	LAMP, SIDE MARKER RIGHT SIDE 1	GD 4 D
E12L	LAMP, ROOF POS. LIGHT LEFT	GA 3 D
E12R	LAMP, ROOF POS. LIGHT, RIGHT	GA 3 D
E13LS	LAMP, DIR. INDICATOR LEFT SIDE	GD 3 D
E13RS	LAMP, DIR. INDICATOR RIGHT SIDE	GD 4 D
E17A	LAMP, CAB REAR DOME	GH 1 D
E17B	LAMP,FRONT LH DOME	GH 0 D
E17C	LAMP, FRONT RH DOME	GH 3 D
E19C	LAMP, ID LIGHT ROOF, CENTER	GA 0 D
E19L	LAMP, ID LIGHT ROOF, LEFT	GA 0 D
E19LS	LAMP, ROOF SIDE MARKER, LEFT	GD 3 B
E19R	LAMP, ID LIGHT ROOF, RIGHT	GA 0 D
E19RS	LAMP, ROOF SIDE MARKER, RIGHT	GD 3 B
E27L	TAIL LAMP MODULE, LEFTHAND	GF 0 C
E27R	TAIL LAMP MODULE, RIGHTHAND	GF 2 C
E30L	LH HEADLAMP	GD 0 D
E30R	RH HEADLAMP	GD 1 D
E38_08	LAMP, INDICATOR, IWDL	BD 1 B
E38_11	LAMP, INDICATOR, TRAILER ABS	EB 3 B
E38_11B	LAMP, INDICATOR, TRAILER ABS	EA 1 B
E38_12	LAMP INDICATOR, PTO	BK 3 B
E38_12	LAMP INDICATOR, PTO	BL 3 A
E38_12B	LAMP INDICATOR, PUMP ON PTO #2 OIL LEVEL	BN 1 C
E38_15	LAMP INDICATOR LOW FUEL PSI	CE 3 B
E38_16A	LAMP GREEN OKAY	CG 0 C
E38_16B	LAMP RED 50% LEL IS DETECTED	CG 1 C
E57	LAMP, POWER INDICATOR	GA 4 D
FM1	FUSE, MAIN GND	AD 1 B
G01	BATTERY	AC 3 C
G01	BATTERY	AD 1 B
G01	BATTERY	BM 0 C
G01	BATTERY	CE 4 A
G01	BATTERY	CF 0 B
G01	BATTERY	NB 1 A
G02	Alternator	AC 4 A
G02	Alternator	AD 0 C
H02_1_114	Horn	GQ 3 D
H03	REVERSE WARNER, ACOUSTIC	GF 2 B
H16	METHANE FUME DETECTOR	CH 1 B
H17	METHANE DETECTION STATUS	CH 3 B
HO7_Z	DETECTOR METHANE	CG 1 B
M01L	MOTOR WINDSHIELD WIPER LH	GP 3 C

COMPONENT	DESCRIPTION	PAGE
M01R	MOTOR WINDSHIELD WIPER RH	GP 2 C
M02	MOTOR WS. WASHER PUMP	GP 0 C
M15	MOTOR FUEL PUMP	CB 2 A
M110LH	MIRROR, LH, HEATED	ID 0 D
M110LHL_MATE	MIRROR, LH, HEATED, LIGHTED	IC 2 D
M110LHM	MIRROR, LH, HEATED, MOTORIZED	IC 0 D
M110RHL_MATE	MIRROR, RH, HEATED, LIGHTED	IC 3 D
M110RHM	MIRROR, RH, HEATED, MOTORIZED	IC 1 D
M110RHM	MIRROR, RH, HEATED, MOTORIZED	ID 1 D
M120A	MOTOR, AUX. COOLING FAN #1	CD 0 E
M120B	MOTOR, AUX. COOLING FAN #2	CD 1 E
M121A	MOTOR AUX COOLING FAN #1	CD 2 D
M121B	MOTOR AUX COOLING FAN #2	CD 3 D
MC_DUAL_PTO_JMP	PLUG, JUMPER WIRE	BC 0 B
R01	HEATER, ENGINE PREHEAT	AD 0 C
R01A	RESISTOR 110V ENGINE HEATER	CC 3 C
R04	CIGAR LIGHTER	KC 3 C
R05	AIR DRYER, HEATED	FA 2 C
R05_A	AIR DRYER	FA 0 C
R08	RESISTOR, TERMINATION J1939 CAN	CA 3 A
R08	RESISTOR, TERMINATION J1939 CAN	XA 3 B
R09	HEATER, FUEL WATER SEPARATOR	CC 2 C
R18A	HEATER, HEATED DRAIN VALVE, COOLING TANK	FA 2 C
R18B	HEATER, HEATED DRAIN VALVE, WET TANK	FA 1 C
R29	HEATER, NOxCARE TANK TO PUMP HOSE	CF 3 E
R31	HEATER, NOxCARE PUMP TO INJECTOR HOSE	CF 3 D
R34	Termination resistor	XA 1 E
R39A	RESISTOR CUMMINS PULL UP IVS	BC 1 B
R39B	RESISTOR CUMMINS PULL DOWN FUEL LEVEL	BF 0 C
S01	SW. MAIN LIGHTING SELECT. TYPE	GA 0 B
S006	SWITCH, SPEED CONTROL	BA 1 B
S07	SWITCH' ENG BRK SELECTOR	BA 2 B
S007	SWITCH, SET/RESUME	BA 1 B
S008	SWITCH, S/D OVERRIDE	BA 4 B
S009	SWITCH WIPER CTRL	GP 0 B
S013	SWITCH, MIRROR DEFROST	IC 3 B
S016	SWITCH, ATC LIMITED SLIP	EA 2 B
S016	SWITCH, ATC LIMITED SLIP	EB 2 B
S016	SWITCH, ATC LIMITED SLIP	ED 2 B
S017B	SW. FRONT RH DOME LMP	GH 3 D
S018_1	POSITION SWITCH, PTO_1	BC 3 B
S018_2	POSITION SWITCH, PTO_2, R.H.	FB 1 D
S18A	SWITCH, POWER TAKE OFF (PTO #1)	BC 2 B
S18B	SWITCH, POWER TAKE OFF (PTO #2)	FB 1 B
S019	SWITCH POWER DIVIDER LOCKOUT	FB 4 C
S019A	SWITCH POWER DIVIDER LOCKOUT	FB 3 C
S020	SWITCH, AIR SUSP.	FB 2 B
S023	SWITCH, NEUTRAL CONTROL	FB 3 C
S024	SW. INTERWHL DIFF. LOCK	BD 2 B
S24C	SWITCH RETARDER	DD 1 B

https://truckmanualshub.com/

COMPONENTS

COMPONENT	DESCRIPTION	PAGE
S28C	SWITCH, PUMP/ DRIVE MODE, PTO #2 PTO #1	BN 1 B
S030	SWITCH, MIRROR CONTROL	IC 0 B
S030	SWITCH, MIRROR CONTROL	ID 0 B
S036	SWITCH, IGNITION	AC 0 B
S036B	SWITCH, PUSH BUTTON START	AC 1 B
S038	SW, PRESSURE SERVICE BRKE.	GA 3 B
S038C	SWITCH, SERVICE BRAKE	BB 2 D
S039	SWITCH, DIRECTIONAL SIGNAL	GA 2 C
S039	SWITCH, DIRECTIONAL SIGNAL	GQ 1 A
S040P	SW. PRESSURE PRIM. LOW AIR	BF 3 D
S040S	SW. PRESSURE SEC. LOW AIR	BF 4 D
S042	SWITCH, BACK UP	BE 3 A
S43	SW. PRESS. PRKNG BRKE INDICATOR, NC.	BA 3 D
S044	SWITCH, CLUTCH	BB 3 C
S045	SW. DRL OVERRIDE	BA 1 E
S047	SWITCH, IWDL FRT ENGAGED	BG 2 D
S047A	SWITCH, IWDL, FRT ENGAGED	BG 2 D
S048	SWITCH, IWDL RR ENGAGED	BG 2 C
S048A	SWITCH, IWDL, RR ENGAGED	BG 2 C
S051A	SWITCH, AUX. LIFT AXLE, PUSHER	FB 0 B
S051B	SWITCH, AUX. LIFT AXLE, TAG	FB 0 C
S63	POSITION SWITCH, LOW/HIGH RANGE GEAR	BN 4 C
S72	SWITCH, WATER IN FUEL	BB 2 B
S90_1	SWITCH, PRESS. NO NEUTRAL	FB 3 A
S106A	SWITCH, ABS DIAGNOSTIC	EB 3 A
S108	SWITCH MUNCIE PTO PUMP	FC 1 B
S110	SWITCH, PARK BRAKE, NEUTRAL	NB 2 B
S111	SWITCH, SMART, DPF	CA 3 B
S112	SWITCH, BODY BUILDER PARK BRAKE	BB 1 D
S112_JMP	JUMPER, SWITCH, BODY BUILDER PARK BRAKE	BB 2 E
S112A	SWITCH, BODY BUILDER PARK BRAKE	BK 0 D
S112B	SWITCH, BODY BUILDER PARK BRAKE	BN 1 C
S113	SWITCH, ODOMETER/ HOURMETER TRIP RESET	BE 0 C
S115	SWITCH, REAR VIEW CAMERA	KA 1 B
S116	SWITCH, PRESSURE, N.O., DUAL PTO	FB 1 E
S116A	SWITCH, PRESSURE, N.O. PTO	BL 0 C
S137	SWITCH PARKER PTO	FD 1 B
S147	Switch, RPM regulation	BC 4 D
S169	SWITCH, BATTERY MAIN	AC 3 D
S320	SWITCH, PRESSURE PARKER PTO	FD 3 C
V27	DIODE, PTO EHT	BK 2 A
V27	DIODE, PTO EHT	BL 1 A
V30	DIODE, STOP LAMP	BF 4 D
V35	DIODE, METHANE DETECTION	CH 0 D
V36	DIODE, ALLISON REVERSE MUTE	DD 3 C
X1	STUD, CAB GROUND #1	AD 2 C
X2	STUD, CAB GROUND #2	AD 2 B
X2_SP1	SPLICE PACK, GROUND X2A6	AD 4 B
X2_SP1	SPLICE PACK, GROUND X2A6	BC 2 C
X2_SP1	SPLICE PACK, GROUND X2A6	BD 2 C

COMPONENT	DESCRIPTION	PAGE
X2_SP1	SPLICE PACK, GROUND X2A6	CA 3 B
X2_SP1	SPLICE PACK, GROUND X2A6	CH 0 D
X2_SP1	SPLICE PACK, GROUND X2A6	FB 4 D
X2_SP1	SPLICE PACK, GROUND X2A6	FC 0 D
X2_SP1	SPLICE PACK, GROUND X2A6	GA 0 C
X2_SP1	SPLICE PACK, GROUND X2A6	HA 2 B
X2_SP1	SPLICE PACK, GROUND X2A6	IC 3 B
X2_SP1	SPLICE PACK, GROUND X2A6	NA 2 B
X10	B+ pass through, Cab	AC 4 C
X11	CONNECTOR, ENGINE MANAGEMENT INTERFACE	CA 0 C
X11A	CONNECTORS CUMMINS ISL G ENGINE INTERFACE	CE 0 C
X31A	JUNCTION BLOCK, 14 POST MAIN	BJ 1 B
X31A	JUNCTION BLOCK, 14 POST MAIN	BK 1 B
X31A	JUNCTION BLOCK, 14 POST MAIN	BL 1 B
X31A	JUNCTION BLOCK, 14 POST MAIN	BM 1 D
X31A	JUNCTION BLOCK, 14 POST MAIN	BN 1 B
X31A	JUNCTION BLOCK, 14 POST MAIN	GG 2 C
X32A	BODY BUILDER JUNCTION A BOC	GG 2 D
X32B	BODY BUILDER JUNCTION B BOC	NB 4 C
X33A	BODY BUILDER JUNCTION A EOF	GG 2 E
X33B	BODY BUILDER JUNCTION B EOF	NB 4 C
X34R_MATE	JUNCTION, OVERHEAD CB PROVISION	KC 3 C
X41	JUNCTION BLOCK, 7 POST, BODY BUILDER	BJ 2 B
X41	JUNCTION BLOCK, 7 POST, BODY BUILDER	BK 4 B
X41	JUNCTION BLOCK, 7 POST, BODY BUILDER	BL 4 B
X41	JUNCTION BLOCK, 7 POST, BODY BUILDER	BM 1 A
X41	JUNCTION BLOCK, 7 POST, BODY BUILDER	BN 1 A
X41	JUNCTION BLOCK, 7 POST, BODY BUILDER	BO 0 B
X41	JUNCTION BLOCK, 7 POST, BODY BUILDER	CC 2 B
X41	JUNCTION BLOCK, 7 POST, BODY BUILDER	KA 0 B
X41	JUNCTION BLOCK, 7 POST, BODY BUILDER	NB 3 D
X42	JUNCTION BLOCK, 7 POST, OPTIONS	BJ 2 B
X42	JUNCTION BLOCK, 7 POST, OPTIONS	BM 4 B
X42	JUNCTION BLOCK, 7 POST, OPTIONS	BO 1 B
X42	JUNCTION BLOCK, 7 POST, OPTIONS	FC 3 C
X42	JUNCTION BLOCK, 7 POST, OPTIONS	KB 3 A
X42	JUNCTION BLOCK, 7 POST, OPTIONS	NB 1 C
X135	Chassis Ground Stud	AD 1 D
X136	Cab Passthrough Ground Stud	AD 2 C
X140	Battery Box Ground Stud	AD 1 C
XBB	STUD, CHASSIS GROUND AT BODY BUILDER BRAC	BM 4 E
XJN	Jump Start	AD 1 A
XJP	Jump Start	AC 4 A
Y11	SOL. VALVE, ABS LH FRT	EA 0 B
Y11	SOL. VALVE, ABS LH FRT	EB 0 D
Y11	SOL. VALVE, ABS LH FRT	ED 0 D
Y12	SOL. VALVE, ABS RH FRT	EA 1 B
Y12	SOL. VALVE, ABS RH FRT	EB 1 D
Y12	SOL. VALVE, ABS RH FRT	ED 1 D
Y13	SOL. VALVE, ABS LH RR	EA 1 D

https://truckmanualshub.com/

COMPONENTS

COMPONENT	DESCRIPTION	PAGE
Y13	SOL. VALVE, ABS LH RR	EB 0 B
Y13	SOL. VALVE, ABS LH RR	ED 0 B
Y14	SOL VALVE, ABS RH RR	EA 1 E
Y14	SOL VALVE, ABS RH RR	EB 1 B
Y14	SOL VALVE, ABS RH RR	ED 1 B
Y15	SOL VALVE, ABS LH 3RD AXLE	EA 3 D
Y15	SOL VALVE, ABS LH 3RD AXLE	EB 3 D
Y15	SOL VALVE, ABS LH 3RD AXLE	ED 3 D
Y16	SOL VALVE, ABS RH 3RD AXLE	EA 3 D
Y16	SOL VALVE, ABS RH 3RD AXLE	EB 3 D
Y16	SOL VALVE, ABS RH 3RD AXLE	ED 3 D
Y18	Solenoid valve, PTO (Power Take Off)	FC 1 C
Y35	SOLENOID ENGINE FAN	CA 1 C
Y35A	SOLENOID ENGINE FAN	CE 4 D
Y42	Clutch, magnetic, air conditioning compr	HA 2 E

COMPONENT	DESCRIPTION	PAGE
Y51	SOL VALVE AIR DRYER	FA 1 C
Y57	SOL. VALVE, ATC	EA 1 D
Y57	SOL. VALVE, ATC	EB 1 B
Y57	SOL. VALVE, ATC	ED 1 B
Y62	SOLENOID ACCUMULATOR	DC 1 C
Y76	COIL, IGNITION	CB 0 D
Y77	SOLENOID COMBUSTION AIR	CB 1 D
Y80	SOLENOID VALVE, ADBLUE DOSING UNIT	CF 3 A
Y81	SOLENOID VALVE, UREA HEATING TANK	CF 2 D
Y86	SOLENOID, MULTI VALVE ASSY.	FB 1 D
Y88	SOLENOID, LIFT AXLE	FB 0 D
Y95	SOLENOID HIGH NG PRESSURE LOCKOFF	CG 2 D
Y103	SOLENOID, FUEL SHUTOFF	CB 2 A
Y157	SOLENOID, PARKER PTO	FD 3 C

https://truckmanualshub.com/

INLINES

INLINE	PAGE
6SABS:A	EA 2 D
6SABS:A	EB 2 D
6SABS:A	ED 2 D
6SABS:B	EA 2 D
6SABS:B	EB 2 D
6SABS:B	ED 2 D
6SABS:C	EA 2 D
6SABS:C	EB 3 D
6SABS:C	ED 3 D
6SABS:D	EA 2 D
6SABS:D	EB 3 D
6SABS:D	ED 3 D
6SABS:E	EA 3 D
6SABS:E	EB 3 D
6SABS:E	ED 3 D
6SABS:F	EA 3 D
6SABS:F	EB 3 D
6SABS:F	ED 3 D
6SABS:G	EA 3 D
6SABS:G	EB 3 D
6SABS:G	ED 3 D
6SABS:H	EA 3 D
6SABS:H	EB 3 D
6SABS:H	ED 3 D
6SABS:J	EA 3 D
6SABS:J	EB 3 D
6SABS:J	ED 3 D
6SABS:K	EA 3 D
6SABS:K	EB 3 D
6SABS:K	ED 3 D
ABS_OPTION:A	EB 3 B
ABS_OPTION:B	EB 2 B
ABS_X1:1	EA 2 A
ABS_X1:2	EA 2 C
ABS_X1:3	EA 3 B
ABS_X1:4	EA 1 C
ABS_X1:5	EA 1 C
ABS_X1:7	EA 3 B
ABS_X1:8	EA 3 B
ABS_X1:10	EA 1 C
ABS_X1:11	EA 1 C
ABS_X1:16	EA 3 C
ABS_X1:17	EA 2 C
ABS_X2:1	EA 0 C
ABS_X2:2	EA 0 C
ABS_X2:3	EA 0 A
ABS_X2:4	EA 1 C
ABS_X2:5	EA 1 B
ABS_X2:6	EA 1 A
ABS_X2:7	EA 1 C

INLINE	PAGE
ABS_X2:8	EA 1 B
ABS_X2:9	EA 0 C
ABS_X2:10	EA 1 C
ABS_X2:11	EA 1 B
ABS_X2:12	EA 0 B
ABS_X2:13	EA 1 C
ABS_X2:14	EA 1 B
ABS_X2:15	EA 0 C
ABS_X2:16	EA 1 C
ABS_X2:17	EA 1 C
ABS_X2:18	EA 0 C
ABS_X3:4	EA 3 C
ABS_X3:6	EA 3 E
ABS_X3:7	EA 3 C
ABS_X3:9	EA 3 E
ABS_X3:10	EA 3 C
ABS_X3:11	EA 2 D
ABS_X3:12	EA 2 D
ABS_X3:13	EA 3 C
ABS_X3:14	EA 2 D
ABS_X3:15	EA 2 D
ALLISON:1	DC 2 C
ALLISON:2	DC 3 C
ALLISON:3	DC 1 C
ALLISON:4	DC 2 C
ALLISON:5	DC 1 C
ALLISON:6	DC 1 C
ALLISON:7	DC 1 C
ALLISON:8	DC 1 C
ALLISON:9	DC 1 C
ALLISON:10	DC 0 C
ALLISON:11	DC 0 C
ALLISON:12	DC 1 C
ALLISON:13	DC 1 C
ALLISON:14	DC 2 C
ALLISON:15	DC 2 C
ALLISON:16	DC 2 C
ALLISON:17	DC 0 C
ALLISON:18	DC 0 C
ALLISON:19	DC 1 C
ALLISON:20	DC 1 C
ALLISON:21	DC 2 C
ALLISON:22	DC 2 C
ALLISON:23	DC 2 C
ALLISON:24	DC 1 C
ALLISON:27	DC 0 C
ALLISON:30	DC 0 C
ALLISON:31	DC 0 C
ALLISON:32	FD 2 C
ALLISON:33	FD 2 C

INLINE	PAGE
ALLISON:34	FD 4 D
BB_CUMMINS:A	BC 3 D
BB_CUMMINS:B	BC 3 D
BB_CUMMINS:C	BC 3 E
BB_CUMMINS:D	BC 3 E
BB_PK_BK:A	BB 2 D
BB_PK_BK:B	BB 2 D
BBC_MC_SOL_SW:A	BO 3 B
BBC_MC_SOL_SW:A	BO 3 C
BBC_MC_SOL_SW:B	BO 3 B
BBC_MC_SOL_SW:B	BO 3 C
BBC_MC_SOL_SW:C	BO 3 B
BBC_MC_SOL_SW:C	BO 3 C
BBC_MC_SOL_SW:D	BO 3 B
BBC_MC_SOL_SW:D	BO 3 C
BBC_MC_SOL_SW:E	BO 3 B
BBC_MC_SOL_SW:E	BO 3 C
BBC_MC_SOL_SW:F	BO 3 B
BBC_MC_SOL_SW:F	BO 3 C
BBC_MC_SOL_SW:G	BO 3 B
BBC_MC_SOL_SW:G	BO 3 C
BBC_MC_SOL_SW:H	BO 4 B
BBC_MC_SOL_SW:H	BO 4 C
BBC_MC_SOL_SW:J	BO 4 B
BBC_MC_SOL_SW:J	BO 4 C
BBC_MC_SOL_SW:K	BO 4 B
BBC_MC_SOL_SW:K	BO 4 C
BBC_MC_SOL_SW:L	BO 2 B
BBC_MC_SOL_SW:L	BO 2 C
BBC_MC_SOL_SW:M	BO 2 B
BBC_MC_SOL_SW:M	BO 2 C
BBC_MC_SOL_SW:N	BO 2 B
BBC_MC_SOL_SW:N	BO 2 C
BBC_MC_SOL_SW:P	BO 2 B
BBC_MC_SOL_SW:P	BO 2 C
BBC_MC_SOL_SW:R	BO 2 B
BBC_MC_SOL_SW:R	BO 2 C
BBC_MC_SOL_SW:S	BO 3 B
BBC_MC_SOL_SW:S	BO 3 C
BBCAB_TRANS:A	BN 4 C
BBCAB_TRANS:B	BN 4 D
BBM_1939:A	BB 1 C
BBM_1939:A	BB 1 C
BBM_1939:B	BB 2 C
BBM_1939:B	BB 2 C
BBMCO:A	BM 1 D
BPMCFC:S	GG 1 D
BPMCFC:T	GG 1 D
BPMCFC:U	NB 4 C
BPMCFC:V	NB 4 C

INLINE	PAGE
BPMCFC:W	GG 2 D
BPMCFC:X	GG 2 D
BPMCFC:Y	GG 1 D
BPMCFC:Z	GG 1 D
BWFC:A	BG 3 C
BWFC:B	BG 4 C
BWRC:A	BG 2 D
BWRC:B	BG 3 E
CBBFCBB:R	BJ 2 D
CBBFCBB:R	BM 4 C
CBBFCBB:S	BJ 2 D
CBBFCBB:S	BM 4 C
CBBFCBB:T	BJ 1 D
CBBFCBB:T	BM 3 C
CBBFCBB:U	BJ 2 D
CBBFCBB:U	BM 4 C
CBBFCBB:V	BJ 2 D
CBBFCBB:V	BM 4 C
CBBFCBB:W	BJ 2 D
CBBFCBB:W	BM 4 C
CBBFCBB:X	BJ 2 D
CBBFCBB:X	BM 4 C
CBBFCBB:Y	BJ 1 D
CBBFCBB:Y	BM 3 C
CBBFCBB:Z	BJ 1 D
CBBFCBB:Z	BM 3 C
CDPF:A	CE 1 D
CDPF:B	CE 2 D
CDPF:D	CE 2 D
CDPF:G	CE 2 D
CDPF:K	CE 1 D
CDPF:L	CE 2 D
DCL:A	BC 0 C
DCL:B	BC 0 C
DCL:C	BC 0 C
DCL:D	BC 0 C
DCL:E	BC 0 B
DCL:F	BC 0 C
DCL:G	BC 0 B
DCL:H	BC 0 B
DCL:J	BC 0 B
DCL:L	BC 0 C
DCL:M	BC 0 D
DCL:N	BC 0 D
DCL:P	BC 0 D
DCL:R	BC 0 E
DRL_OR_BB_DCL:A	BA 1 D
DRL_OR_BB_DCL:B	BA 1 D
DRL_OR_BB_DCL:C	BA 1 D
DRL_OR_BB_DCL:D	BA 1 D

INLINE	PAGE
DRL_OR_BB_DCL:E	BA 2 D
DRL_OR_BB_DCL:F	BA 2 D
DRL_OR_BB_DCL:G	BA 2 D
DRL_OR_BB_DCL:H	BA 2 D
DRL_OR_BB_DCL:J	BA 2 D
DRL_OR_BB_DCL:L	BA 2 D
DRL_OR_BB_DCL:M	BA 3 D
DRL_OR_BB_DCL:N	BA 3 D
DRL_OR_BB_DCL:P	BA 3 D
DRL_OR_BB_DCL:R	BA 3 D
DRL_OR_DCL2:J	BA 2 E
DRL_OR_DCL2:L	BA 2 E
DRL_OR_DCL2:M	BA 3 E
DRL_OR_DCL2:N	BA 3 E
DRL_OR_DCL2:P	BA 3 E
DRL_OR_DCL2:R	BA 3 E
DRL_OR_DCL:A	BA 1 E
DRL_OR_DCL:B	BA 1 E
DRL_OR_DCL:C	BA 1 E
DRL_OR_DCL:D	BA 1 E
DRL_OR_DCL:E	BA 2 E
DRL_OR_DCL:F	BA 2 E
DRL_OR_DCL:G	BA 2 E
DRL_OR_DCL:H	BA 2 E
DS_PTO:A	BL 2 C
DS_PTO:B	BL 2 C
DS_PTO:C	BL 2 C
DSFC:A	BF 1 D
DSFC:B	BF 2 E
DSFC:C	BF 1 D
DSFC:D	BG 1 D
DSFC:E	BG 2 C
DSFC:F	BG 1 D
DSFRT:A	BG 2 D
DSFRT:B	BG 2 D
DSRR:A	BG 2 C
DSRR:B	BG 2 C
DUAL_PTO:A	BK 2 A
DUAL_PTO:B	FB 1 B
DUAL_PTO:C	FB 1 A
DUAL_PTO:D	FB 1 A
DUAL_PTO:E	FB 1 A
DUAL_PTO:F	FB 1 A
FCBL:A	GF 2 B
FCBL:B	GF 0 B
FCBL:C	GF 1 A
FCBL:D	GF 1 A
FCBL:E	AD 1 C
FCCE:1	FB 3 D
FCCE:2	FB 2 D

https://truckmanualshub.com/

INLINES

INLINE	PAGE
FCCE:4	FB 1 C
FCCE:5	FB 1 D
FCCE:6	FB 1 C
FCCE:7	GF 2 B
FCCE:11	GF 1 E
FCCE:12	FB 2 C
FCCE:14	GF 1 E
FCCE:15	EA 0 D
FCCE:15	EB 0 B
FCCE:15	ED 0 B
FCCE:16	EA 0 D
FCCE:16	EB 0 B
FCCE:16	ED 0 B
FCCE:17	EA 1 D
FCCE:17	EB 0 B
FCCE:17	ED 0 B
FCCE:18	EA 1 E
FCCE:18	EB 0 B
FCCE:18	ED 0 B
FCCE:19	EA 1 D
FCCE:19	EB 0 B
FCCE:19	ED 0 B
FCCE:20	EA 1 D
FCCE:20	EB 1 B
FCCE:20	ED 1 B
FCCE:21	EA 1 D
FCCE:21	EB 1 B
FCCE:21	ED 1 B
FCCE:22	EA 1 D
FCCE:22	EB 1 B
FCCE:22	ED 1 B
FCCE:23	EA 1 E
FCCE:23	EB 1 B
FCCE:23	ED 1 B
FCCE:24	EA 1 D
FCCE:24	EB 1 B
FCCE:24	ED 1 B
FCCE:25	EA 1 D
FCCE:25	EB 1 B
FCCE:25	ED 1 B
FCCE:26	EA 1 D
FCCE:26	EB 1 B
FCCE:26	ED 1 B
FCCE:27	FB 1 E
FCCE:28	BF 2 D
FCCE:29	BF 1 C
FCCE:30	BF 1 C
FCCE:31	BG 1 D
FCCE:32	BG 1 C
FCCE:33	GF 1 B

INLINE	PAGE
FCCE:34	GF 1 B
FCCE:35	GF 2 B
FCCPBB:1	BM 0 D
FCCPBB:2	BM 1 D
FCEIC:2	CA 3 B
FCEIC:3	CA 2 B
FCEIC:5	CA 2 B
FCEIC:6	CA 2 B
FCEIC:7	CA 3 D
FCEIC:8	CA 3 D
FCEIC:9	CF 3 B
FCEIC:10	CA 4 D
FCEIC:10	CB 2 D
FCEIC:11	CA 3 D
FCEIC:12	CF 3 B
FCEIC:13	CA 3 D
FCEIC:13	CB 2 B
FCEIC:14	CA 4 D
FCEIC:14	CB 1 B
FCEIC:15	CA 4 D
FCEIC:15	CB 1 B
FCEIC:16	CB 2 B
FCEIC:17	CB 2 B
FCEIC:18	CB 2 B
FCEIC:19	CB 2 B
FCEIC:20	CB 0 B
FCEIC:21	CB 1 B
FCEIC:22	CA 2 D
FCEIC:23	BG 0 B
FCEIC:25	CA 2 D
FCEIC:26	BG 0 B
FCEIC:28	CB 1 D
FCEIC:29	CB 1 D
FCEIC:30	CB 1 D
FCEIC:31	CB 0 D
FCEIC:32	CB 1 D
FCEIC:34	CB 2 B
FCEIC:35	CB 1 D
FCEIC:36	CB 1 D
FCEIC:37	CB 1 D
FCEIC:38	CB 2 B
FCEIC:39	CB 1 D
FCFH:A	CC 2 C
FCFH:B	CC 2 D
FCLA:A	FB 0 D
FCLA:B	FB 0 D
FCLA:C	FB 0 E
FCSH:1	CD 0 D
FCSH:2	CD 1 D
FCSH:3	CD 0 D

INLINE	PAGE
FCSH:4	CD 1 D
FCSP:B	FB 1 D
FCSP:C	FB 2 D
FCSP:D	FB 2 D
FCSP:E	FB 2 D
FCSP:K	FB 3 D
FCSP:L	FB 1 D
FCSP:N	FB 3 D
FCSP:P	FB 1 D
FCSP:R	FB 2 D
FCSP:S	FB 2 D
FCTR:A	BC 3 B
FCTR:B	BE 3 B
FCTR:C	BF 2 D
FCTR:D	BF 2 D
FCTR:E	BC 3 B
FCTR:F	BB 0 C
FCTR:G	BB 1 C
FCTR:H	BE 3 B
FCTR:J	FB 3 A
FCTR:K	FB 3 B
FCTR:L	FB 1 B
FCTR:M	FB 1 E
FCUT:1	CF 3 D
FCUT:2	CF 3 D
FCUT:3	CF 3 D
FCUT:4	CF 3 D
FCUT:5	CF 3 D
FCUT:6	CF 3 D
FCUT:7	CF 3 D
FCUT:8	CF 2 C
FCUT:9	CF 2 D
FCUT:10	CF 2 D
FCUT:11	CF 2 D
FCUT:12	CF 2 D
FCUT:13	CF 1 D
FCUT:14	CF 1 D
FCUTEXT:1	CF 3 C
FCUTEXT:2	CF 3 C
FCUTEXT:3	CF 3 C
FCUTEXT:4	CF 3 C
FCUTEXT:5	CF 3 C
FCUTEXT:6	CF 3 C
FCUTEXT:7	CF 3 C
FCUTEXT:8	CF 2 C
FCUTEXT:9	CF 2 C
FCUTEXT:10	CF 2 C
FCUTEXT:11	CF 2 C
FCUTEXT:12	CF 2 D
FCUTEXT:13	CF 1 C

INLINE	PAGE
FCUTEXT:14	CF 1 C
FRC1:A1	AB 2 B
FRC1:A1	CF 0 A
FRC1:A2	AB 2 B
FRC1:A3	AB 2 B
FRC1:A3	CB 0 A
FRC1:A4	AB 2 B
FRC1:A4	BE 0 A
FRC1:A5	AB 1 B
FRC1:A5	DD 3 A
FRC1:A5	NB 2 A
FRC1:A6	AB 1 B
FRC1:A6	BC 1 A
FRC1:A7	AB 1 B
FRC1:A7	BA 1 A
FRC1:A8	AB 0 B
FRC1:A8	BA 0 A
FRC1:A9	AA 2 C
FRC1:A9	KA 1 A
FRC1:A9	NA 4 A
FRC1:A10	AA 1 C
FRC1:A10	FC 1 A
FRC1:A11	AA 1 C
FRC1:A11	BK 0 A
FRC1:A11	BL 0 A
FRC1:A11	BN 0 A
FRC1:A11	GG 1 A
FRC1:A11	NA 0 A
FRC1:A12	AA 1 C
FRC1:A12	NB 0 A
FRC1:A13	AA 1 C
FRC1:A13	GP 0 A
FRC1:A14	AA 0 C
FRC1:A14	GP 2 A
FRC1:A15	AA 0 C
FRC1:A15	GP 4 A
FRC1:A16	AA 0 C
FRC1:A16	FB 2 A
FRC1:B1	AB 3 B
FRC1:B2	AB 3 C
FRC1:B3	AA 0 B
FRC1:B4	AA 0 C
FRC1:C1	AB 4 B
FRC1:C1	DD 0 A
FRC1:C2	AB 3 B
FRC1:C2	KC 3 B
FRC1:C3	AB 3 B
FRC1:C4	AB 3 B
FRC1:C4	CD 3 A
FRC1:C5	AB 3 B

INLINE	PAGE
FRC1:C5	NB 2 A
FRC1:C6	AB 3 B
FRC1:C6	CA 0 A
FRC1:C7	AB 2 B
FRC1:C8	AB 2 B
FRC1:C8	GD 1 A
FRC1:C9	AA 2 B
FRC1:C9	KB 2 A
FRC1:C9	XA 2 A
FRC1:C10	AA 2 B
FRC1:C10	KC 2 A
FRC1:C11	AA 2 B
FRC1:C11	AC 0 A
FRC1:C12	AA 1 B
FRC1:C12	GA 1 A
FRC1:C12	GH 3 A
FRC1:C13	AA 1 B
FRC1:C13	GA 3 A
FRC1:C14	AA 1 B
FRC1:C14	GA 2 A
FRC1:C15	AA 1 B
FRC1:C15	GA 0 A
FRC1:C16	AA 0 B
FRC1:C16	GA 1 A
FRC1:D1	AB 4 B
FRC1:D1	HA 2 A
FRC1:E1	AA 4 B
FRC1:E1	NA 2 A
FRC1:E2	AA 3 B
FRC1:E2	IC 0 A
FRC1:E2	ID 0 A
FRC1:E3	AA 3 B
FRC1:E3	BE 0 A
FRC1:E4	AA 3 B
FRC1:E4	FC 1 A
FRC1:E5	AA 3 B
FRC1:E5	CD 2 A
FRC1:E6	AA 3 B
FRC1:E6	EA 3 A
FRC1:E6	EB 3 A
FRC1:E6	ED 3 A
FRC1:E7	AA 2 B
FRC1:E7	BO 1 A
FRC1:E7	NB 0 A
FRC1:E8	AA 2 B
FRC1:E8	GG 1 A
FRC1:E8	NA 0 A
FRC1:E9	AB 2 B
FRC1:E9	GD 0 A
FRC1:E10	AB 1 B

https://truckmanualshub.com/

INLINES

INLINE	PAGE
FRC1:E10	GG 2 A
FRC1:E11	AB 1 B
FRC1:E11	GQ 3 B
FRC1:E12	AB 1 B
FRC1:E12	GA 1 A
FRC1:E13	AB 0 B
FRC1:E13	NB 3 A
FRC1:E14	AB 0 B
FRC1:E14	GG 2 A
FRC1:E15	AB 0 B
FRC1:E15	NA 3 A
FRC1:E16	AA 4 B
FRC1:F1	AA 2 C
FRC1:F2	AA 2 C
FRC1:F3	AA 3 C
FRC1:F4	AA 3 C
FRC1:F8	AA 2 D
FRC1:F8	CA 0 B
FRC1:G1	AA 0 D
FRC1:G2	AA 0 D
FRC1:G2	EA 3 A
FRC1:G2	EB 3 A
FRC1:G2	ED 3 A
FRC1:G3	AA 0 D
FRC1:G3	NA 3 A
FRC1:G4	AA 0 D
FRC1:G4	KC 1 A
FRC1:G5	AA 1 D
FRC1:G5	CA 1 A
FRC1:G5	CG 3 A
FRC1:G6	AA 1 D
FRC1:G6	GG 1 A
FRC1:G7	AA 1 D
FRC1:G7	CA 0 A
FRC1:G7	CE 2 A
FRC1:G8	AA 2 D
FRC1:G8	CA 1 B
FRC1:G9	AA 2 D
FRC1:G9	NA 1 A
FRC1:G10	AA 2 D
FRC1:G10	NA 3 A
FRC1:G11	AA 2 D
FRC1:G11	IC 3 A
FRC1:G12	AA 3 D
FRC1:G12	BG 4 A
FRC1:G13	AA 3 D
FRC1:G13	CC 2 A
FRC1:G13	NB 2 A
FRC1:G14	AA 3 D
FRC1:G14	FA 2 B

INLINE	PAGE
FRC1:G15	AA 4 D
FRC1:G15	BE 4 B
FRC1:G16	AA 4 D
FRC1:G16	BO 0 A
FRC1:G16	NB 2 A
FRC2:A30	DD 2 B
FRC2:A85	DD 2 B
FRC2:A86	DD 2 B
FRC2:A87	DD 2 B
FRC2:B30	GA 4 B
FRC2:B85	GA 4 B
FRC2:B86	GA 4 B
FRC2:B87	GA 4 B
FRC2:C30	GA 3 B
FRC2:C85	GA 3 B
FRC2:C86	GA 3 B
FRC2:C87	GA 3 B
FRC2:D30	FB 0 A
FRC2:D85	FB 0 A
FRC2:D86	FB 0 B
FRC2:D87A	FB 0 B
FRC2:E30	GG 2 B
FRC2:E85	GG 2 B
FRC2:E86	GG 2 B
FRC2:E87	GG 2 B
FRC2:F30	AC 2 D
FRC2:F30	CA 0 B
FRC2:F85	AC 2 D
FRC2:F85	CA 0 B
FRC2:F86	AC 3 D
FRC2:F86	CA 0 B
FRC2:F87	CA 0 B
FRC2:F87A	AC 3 D
FRC2:G30	GA 1 C
FRC2:G85	GA 1 C
FRC2:G86	GA 1 C
FRC2:G87	GA 1 C
FRC2:H30	HA 2 B
FRC2:H85	HA 2 B
FRC2:H86	HA 2 B
FRC2:H87	HA 2 B
FRC2:J30	NB 3 B
FRC2:J85	NB 3 B
FRC2:J86	NB 3 B
FRC2:J87	NB 3 B
FRC2:K30	NB 3 B
FRC2:K85	NB 3 B
FRC2:K86	NB 3 B
FRC2:K87	NB 3 B
FRC2:L30	DD 3 B

INLINE	PAGE
FRC2:L30	KB 2 D
FRC2:L85	DD 3 B
FRC2:L85	KB 3 D
FRC2:L86	DD 3 B
FRC2:L86	KB 3 D
FRC2:L87	DD 3 B
FRC2:L87	KB 2 D
FRC2:M30	DD 4 B
FRC2:M85	DD 4 B
FRC2:M86	DD 4 B
FRC2:M87	DD 4 B
FRC2:M87A	DD 4 B
FRC2:N30	DD 2 B
FRC2:N85	DD 2 B
FRC2:N86	DD 2 B
FRC2:N87A	DD 2 B
FRC2:P30	DD 3 B
FRC2:P85	DD 3 B
FRC2:P86	DD 3 B
FRC2:P87	DD 3 B
FRC2:P87A	DD 3 B
FRC2:R1	BD 4 D
FRC2:R3	BD 4 C
FRC2:R4	CH 0 C
FRC2:R6	CH 0 C
FRC2:S1	BD 4 D
FRC2:S3	BD 4 C
FRC2:S5	CH 0 C
FRC2:S6	CH 0 C
FRC2:S7	CG 3 B
FRC2:S8	CG 3 C
FRC2:T1	KB 3 B
FRC2:T2	KB 3 B
FRC2:T3	CE 1 B
FRC2:T4	CE 1 B
FRC2:T5	CE 2 B
FRC2:T6	CE 2 B
FRC2:T7	CE 2 B
FRC2:T8	CE 2 B
FRC3:A30	GD 0 C
FRC3:A85	GD 0 C
FRC3:A86	GD 0 B
FRC3:A87	GD 0 B
FRC3:A87A	GD 0 B
FRC3:B30	GD 1 C
FRC3:B85	GD 1 C
FRC3:B86	GD 1 B
FRC3:B87	GD 1 B
FRC3:B87A	GD 1 B
FRC3:C30	GA 1 A

INLINE	PAGE
FRC3:C85	GA 1 A
FRC3:C86	GA 1 B
FRC3:C87	GA 1 B
FRC3:C87A	GA 1 B
FRC3:D30	KC 2 B
FRC3:D85	KC 2 B
FRC3:D86	KC 2 B
FRC3:D87	KC 2 B
FRC3:D87A	KC 2 B
FRC3:E30	AC 2 C
FRC3:E85	AC 2 C
FRC3:E86	AC 2 C
FRC3:E87	AC 2 C
FRC3:F30	AA 1 B
FRC3:F85	AA 1 B
FRC3:F86	AA 1 B
FRC3:F87	AA 1 B
FRC3:F87A	AA 2 B
FRC3:G30	GG 2 B
FRC3:G85	GG 2 B
FRC3:G86	GG 2 B
FRC3:G87	GG 2 B
FRC3:H30	GP 2 B
FRC3:H85	GP 2 B
FRC3:H86	GP 2 C
FRC3:H87	GP 2 C
FRC3:H87A	GP 2 C
FRC3:J30	GP 2 B
FRC3:J85	GP 1 B
FRC3:J86	GP 1 C
FRC3:J87	GP 2 C
FRC3:J87A	GP 2 C
FRC3:K30	GP 3 B
FRC3:K85	GP 3 B
FRC3:K86	GP 3 C
FRC3:K87	GP 3 C
FRC3:K87A	GP 3 C
FRC3:L30	GP 4 B
FRC3:L85	GP 3 B
FRC3:L86	GP 3 C
FRC3:L87	GP 4 C
FRC3:L87A	GP 4 C
FRC3:M30	GQ 3 D
FRC3:M85	GQ 3 D
FRC3:M86	GQ 3 C
FRC3:M87	GQ 3 C
FRC3:M87A	GQ 3 C
FRC3:N30	FC 1 B
FRC3:N85	FC 1 B
FRC3:N86	FC 1 B

INLINE	PAGE
FRC3:N87	FC 1 B
FRC3:P30	FC 2 B
FRC3:P85	FC 2 B
FRC3:P86	FC 2 B
FRC3:P87	FC 2 B
FRC3:R1	CH 0 B
FRC3:R3	CH 0 B
FRC3:S1	CH 0 B
FRC3:S3	CH 0 B
FRC3:T1	CG 0 B
FRC3:T1	CH 4 B
FRC3:T2	CG 0 B
FRC3:T2	CH 4 C
HN_REM:A	GQ 3 C
HOOKUP_LP:A	NA 2 B
HOOKUP_LP:B	NA 2 B
ILLUM_OPT2:A	KA 1 A
ILLUM_OPT2:B	KA 1 C
ILLUM_OPT3:A	KA 1 A
ILLUM_OPT3:B	KA 1 C
ILLUM_OPT4:A	BA 2 E
ILLUM_OPT4:B	BA 2 D
ILLUM_OPT5:A	BA 2 E
ILLUM_OPT5:B	BA 2 D
ILLUM_OPT6:A	FD 1 B
ILLUM_OPT6:B	FD 0 D
ILLUM_OPT7:A	FD 1 B
ILLUM_OPT7:B	FD 0 C
ILLUM_OPT:A	NA 2 B
ILLUM_OPT:B	NA 2 B
IMS:A	AC 3 B
LHCS:A	CD 3 B
LHCS:B	BG 0 B
LHCS:C	CD 4 B
LHCS:D	CE 1 D
LHCS:E	CD 3 C
LHCS:F	CD 3 A
LHCS:G	CD 2 C
LHCS:H	CD 3 B
LHCS:J	BG 1 B
LHCS:K	CD 4 B
LHCS:L	CE 1 D
LHCS:M	CD 2 C
LHCS:N	CE 1 D
LHCS:P	CD 4 C
LHSM:1	GD 2 C
LHSM:2	GD 3 C
LHSM:3	GD 2 D
LHSP:A	CD 2 B
LHSP:B	CD 3 C

https://truckmanualshub.com/

INLINES

INLINE	PAGE
MC_DUAL_PTO:A	BK 2 A
MC_DUAL_PTO:B	FB 2 B
MC_DUAL_PTO:C	BC 2 B
MC_DUAL_PTO:D	BC 2 A
MC_SOL_SW:A	BD 2 B
MC_SOL_SW:B	BD 2 B
MC_SOL_SW:C	BD 1 B
MC_SOL_SW:D	BD 1 C
MC_SOL_SW:E	BD 1 C
MC_SOL_SW:F	BD 2 C
MC_SOL_SW:G	BD 2 C
MC_SOL_SW:H	FB 3 B
MC_SOL_SW:J	FB 2 B
MC_SOL_SW:K	FB 3 C
MC_SOL_SW:L	FB 0 B
MC_SOL_SW:M	FB 2 C
MC_SOL_SW:N	FB 1 C
MC_SOL_SW:P	FB 0 C
MC_SOL_SW:R	FB 1 C
MC_SOL_SW:S	FB 2 B
MCAATS:A	BF 2 C
MCAATS:B	BF 2 C
MCAF2:A	CD 1 C
MCAF:A	CD 0 C
MCAF:B	CD 1 C
MCAS:A	BA 3 D
MCAS:B	BA 3 E
MCAS:C	BF 3 C
MCAS:D	BF 4 C
MCAS:E	BF 3 D
MCAS:F	BF 4 D
MCAS:G	GA 3 B
MCAS:H	GA 3 B
MCAS:J	NB 2 B
MCAS:K	NB 2 B
MCAS:L	BB 2 D
MCAS:M	BB 3 E
MCAT1:1	DC 2 B
MCAT1:2	DC 3 C
MCAT1:3	DC 1 B
MCAT1:4	DC 2 B
MCAT1:5	DC 1 B
MCAT1:6	DC 1 B
MCAT1:7	DC 1 B
MCAT1:8	DC 1 B
MCAT1:9	DC 1 B
MCAT1:10	DC 0 B
MCAT1:11	DC 0 B
MCAT1:12	DC 1 B
MCAT1:13	DC 1 B

INLINE	PAGE
MCAT1:14	DC 2 B
MCAT1:15	DC 2 B
MCAT1:16	DC 2 C
MCAT1:17	DC 0 B
MCAT1:18	DC 0 B
MCAT1:19	DC 1 B
MCAT1:20	DC 1 B
MCAT1:21	DC 2 B
MCAT1:22	DC 2 B
MCAT1:23	DC 2 B
MCAT1:24	DC 1 B
MCAT1:27	DC 0 B
MCAT1:30	DC 0 B
MCAT1:31	DC 0 B
MCAT1:32	FD 1 C
MCAT1:33	FD 1 C
MCAT:A1	DD 4 E
MCAT:A2	DD 3 C
MCAT:A3	DD 3 C
MCAT:A5	DD 1 C
MCAT:A6	BH 1 C
MCAT:A7	BH 2 C
MCAT:A8	DD 0 B
MCAT:A9	DD 2 B
MCAT:A10	BH 2 C
MCAT:B1	DD 4 E
MCAT:B2	DD 4 C
MCAT:B3	DD 1 C
MCAT:B5	DD 3 C
MCAT:B6	BH 1 C
MCAT:B7	BH 3 C
MCAT:B8	DD 0 B
MCAT:B9	DD 0 D
MCDLR:A	NA 3 B
MCFC:1	BM 0 D
MCFC:2	BM 1 D
MCFC:3	CA 1 C
MCFC:4	GA 3 D
MCFC:5	CA 0 C
MCFC:6	EA 3 E
MCFC:6	EB 3 C
MCFC:6	ED 3 C
MCFC:7	EA 3 E
MCFC:7	EB 3 C
MCFC:7	ED 3 C
MCFC:8	CA 0 C
MCFC:9	DC 0 B
MCFC:10	DC 0 B
MCFC:11	DC 0 B
MCFC:12	DC 0 B

INLINE	PAGE
MCFC:13	DC 0 B
MCFC:14	DC 0 B
MCFC:15	DC 3 C
MCFC:16	FB 0 C
MCFC:17	FB 0 D
MCFC:18	XA 1 B
MCFC:19	XA 0 B
MCFC:20	BD 2 D
MCFC:21	DC 0 B
MCFC:22	DC 1 B
MCFC:23	DC 1 B
MCFC:24	DC 1 B
MCFC:25	DC 1 B
MCFC:26	DC 1 B
MCFC:27	DC 2 C
MCFC:28	BG 1 C
MCFC:29	BG 1 D
MCFC:30	FB 1 C
MCFC:31	CG 3 C
MCFC:32	CG 3 C
MCFC:33	DC 1 B
MCFC:34	DC 1 B
MCFC:35	DC 1 B
MCFC:36	DC 1 B
MCFC:37	DC 1 B
MCFC:38	DC 1 B
MCFC:39	FD 2 C
MCFC:40	AC 1 C
MCFC:41	BC 3 D
MCFC:42	BC 3 D
MCFC:43	BF 1 C
MCFC:44	FB 1 B
MCFC:45	DC 2 B
MCFC:46	DC 2 B
MCFC:47	DC 2 B
MCFC:48	DC 2 B
MCFC:49	DC 2 B
MCFC:50	DC 2 B
MCFC:51	FD 2 C
MCFC:52	BG 0 B
MCFC:53	BG 4 B
MCFC:54	FB 3 B
MCFC:55	BB 1 C
MCFC:55	BC 3 E
MCFC:56	BG 0 D
MCFC:57	DC 2 B
MCFC:59	BE 3 B
MCFC:60	BG 0 D
MCFC:61	BC 3 E
MCFC:61	BF 2 A

INLINE	PAGE
MCFC:62	FB 2 C
MCFC:63	XA 3 D
MCFC:64	XA 3 D
MCFC:65	EA 1 D
MCFC:65	EB 1 B
MCFC:65	ED 1 B
MCFC:66	EA 1 D
MCFC:66	EB 1 B
MCFC:66	ED 1 B
MCFC:67	EA 1 D
MCFC:67	EB 0 B
MCFC:67	ED 0 B
MCFC:68	EA 1 B
MCFC:68	EB 1 C
MCFC:68	ED 1 C
MCFC:69	EA 0 B
MCFC:69	EB 0 C
MCFC:69	ED 0 C
MCFC:70	EA 1 D
MCFC:70	EB 0 B
MCFC:70	ED 0 B
MCFC:71	EA 0 D
MCFC:71	EB 0 B
MCFC:71	ED 0 B
MCFC:72	EA 0 D
MCFC:72	EB 0 B
MCFC:72	ED 0 B
MCFC:73	EA 1 D
MCFC:73	EB 1 B
MCFC:73	ED 1 B
MCFC:74	EA 1 D
MCFC:74	EB 1 B
MCFC:74	ED 1 B
MCFC:75	EA 1 B
MCFC:75	EB 1 C
MCFC:75	ED 1 C
MCFC:76	EA 1 B
MCFC:76	EB 1 C
MCFC:76	ED 1 C
MCFC:77	EA 1 D
MCFC:77	EB 1 B
MCFC:77	ED 1 B
MCFC:78	EA 0 D
MCFC:78	EB 1 B
MCFC:78	ED 1 B
MCFC:79	EA 1 B
MCFC:79	EB 0 C
MCFC:79	ED 0 C
MCFC:80	EA 1 B
MCFC:80	EB 0 C

INLINE	PAGE
MCFC:80	ED 0 C
MCFC:81	EA 1 B
MCFC:81	EB 1 C
MCFC:81	ED 1 C
MCFC:82	EA 0 B
MCFC:82	EB 0 C
MCFC:82	ED 0 C
MCFC:83	EA 0 B
MCFC:83	EB 0 C
MCFC:83	ED 0 C
MCFC:84	EA 0 D
MCFC:84	EB 0 B
MCFC:84	ED 0 B
MCFC:85	EA 1 B
MCFC:85	EB 1 C
MCFC:85	ED 1 C
MCFC:86	EA 1 D
MCFC:86	EB 1 B
MCFC:86	ED 1 B
MCFC:87	BB 0 C
MCFC:88	BB 1 C
MCFC:89	EA 2 D
MCFC:89	EB 3 C
MCFC:89	ED 3 C
MCFC:90	EA 2 D
MCFC:90	EB 3 C
MCFC:90	ED 3 C
MCFC:91	EA 3 D
MCFC:91	EB 3 C
MCFC:91	ED 3 C
MCFC:92	EA 3 D
MCFC:92	EB 3 C
MCFC:92	ED 3 C
MCFC:93	EA 2 D
MCFC:93	EB 2 C
MCFC:93	ED 2 C
MCFC:94	EA 3 D
MCFC:94	EB 3 C
MCFC:94	ED 3 C
MCFC:95	EA 2 D
MCFC:95	EB 2 C
MCFC:95	ED 2 C
MCFC:96	EA 3 D
MCFC:96	EB 3 C
MCFC:96	ED 3 C
MCFC:97	BF 2 B
MCFC:97	CE 0 B
MCFC:98	GA 0 D
MCFC:99	AC 2 C
MCFC:99	AC 3 C

https://truckmanualshub.com/

INLINES

INLINE	PAGE
MCFC:100	CE 3 B
MCFC:101	BC 2 B
MCFC:102	CE 2 B
MCFC:103	FB 1 C
MCFC:104	BF 1 C
MCFC:105	GF 2 A
MCFC:106	GF 1 A
MCFC:107	BF 1 C
MCFC:108	BF 1 C
MCFC:109	BF 1 C
MCFC:110	CE 2 B
MCFC:110	CF 0 B
MCFC:111	CE 2 D
MCFC:112	BC 3 B
MCFC:113	BD 2 B
MCFC:114	FB 3 D
MCFC:115	CG 2 C
MCFC:116	CA 1 B
MCFC:116	CE 1 B
MCFC:117	BE 4 B
MCFC:118	BD 2 C
MCFC:119	FB 3 C
MCFC:120	BK 1 A
MCFC:121	CD 0 D
MCFC:121	CD 2 B
MCFC:122	CD 1 D
MCFC:122	CD 3 B
MCFC:123	NB 0 C
MCFC:124	HA 1 D
MCFC:125	CC 2 C
MCFC:126	NB 3 C
MCFC:127	FA 2 B
MCFC:128	NB 1 C
MCFG:A	CG 3 B
MCFG:B	CG 3 B
MCFG:C	CG 3 B
MCFG:D	CG 3 A
MCMD:A	CG 0 C
MCMD:A	CG 0 C
MCPM:1	IC 3 C
MCPM:1	IC 2 B
MCPM:2	IC 2 C
MCPM:3	IC 2 C
MCPM:4	IC 1 C
MCPM:4	ID 1 C
MCPM:5	IC 0 C
MCPM:6	IC 0 C
MCPM:7	IC 1 C
MCPM:7	ID 1 C
MCPM:8	IC 1 C

INLINE	PAGE
MCPM:8	ID 1 C
MCRF1:A	KB 1 D
MCRF1:B	KB 2 B
MCRF1:C	GH 0 D
MCRF1:D	GA 0 D
MCRF1:E	KB 1 C
MCRF1:F	KB 2 C
MCRF1:G	GA 3 D
MCRF1:H	GD 4 E
MCRF2:A	GD 3 C
MCRF2:B	GD 4 C
MCRF2:C	KC 2 C
MCRF2:D	KC 2 D
MCRF2:E	GH 3 B
MCRF2:F	GH 1 B
MCRF3:A	KA 1 C
MCRF3:B	KA 1 C
MCRF3:C	KA 1 C
MCRF4:A	KB 2 C
MCTL1:A	GF 2 B
MCTL1:B	GF 1 B
MCTL1:C	GF 1 B
MCTL1:D	GF 2 B
MCTL1:E	GF 1 D
MCTL:A	GF 2 C
MCTL:B	GF 1 C
MCTL:C	GF 1 C
MCTL:D	GF 2 C
MCTL:E	GF 1 D
MDMC:1	CH 3 C
MDMC:2	CH 2 D
MDMC:3	CH 1 C
MDMC:4	CH 0 C
PB_START:A	AC 1 B
PB_START:B	AC 1 B
PBSTART:A	AC 1 B
PBSTART:B	AC 1 B
PBSTART:B	AC 1 B
PBSTART_BL:A	BM 0 A
PBSTART_BL:A	BM 0 A
PBSTART_BL:B	BM 0 A
PBSTART_BL:B	BM 0 A
PMP_DRV:1	BN 1 C
PMP_DRV:2	BN 1 B
PMP_DRV:3	BN 1 C
PMP_DRV:4	BN 1 C
PMP_DRV:5	BN 1 B
PMP_DRV:6	BN 2 C
PMP_DRV:7	BN 2 C
PMP_DRV:8	BN 2 B

INLINE	PAGE
PMP_DRV:9	BN 2 C
PPCO:A	FD 1 B
PPCO:B	FD 1 C
PPCO:C	FD 1 C
PTO_DCL_A:A	BK 3 A
PTO_DCL_A:A	BL 2 A
PTO_DCL_A:A	BN 2 A
PTO_DCL_A:C	BK 3 A
PTO_DCL_A:C	BL 2 A
PTO_DCL_A:C	BN 2 C
PTO_DCL_A:D	BK 2 C
PTO_DCL_A:D	BL 2 B
PTO_DCL_A:D	BN 4 A
PTO_DCL_A:E	BK 3 A
PTO_DCL_A:E	BL 2 B
PTO_DCL_A:E	BN 2 C
PTO_DCL_A:F	BN 4 C
PTO_DCL_A:G	BK 4 D
PTO_DCL_A:G	BL 3 D
PTO_DCL_A:G	BN 4 D
PTO_DCL_A:H	BK 4 C
PTO_DCL_A:H	BL 3 E
PTO_DCL_A:H	BN 4 D
PTO_DCL_B:J	BK 3 A
PTO_DCL_B:N	BK 4 C
PTO_DCL_B:N	BN 4 D
PTO_DCL_B:P	BK 4 C
PTO_DCL_B:P	BL 3 E
PTO_DCL_B:P	BN 0 C
PTO_DCL_B:R	BK 4 C
PTO_DCL_B:R	BN 4 D
PTO_EHT:A	BC 2 B
PTO_EHT:A	BC 2 B
PTO_EHT:B	BC 2 B
RC1:A1	NA 2 C
RC1:A3	NA 2 D
RC1:A4	GA 3 D
RC1:A6	GA 2 D
RC1:A7	BK 2 B
RC1:A7	BL 1 B
RC1:A7	BN 4 B
RC1:A7	NA 0 C
RC1:A9	BK 2 B
RC1:A9	BL 1 C
RC1:A9	BN 4 B
RC1:A9	NA 0 D
RC1:B1	NA 2 C
RC1:B2	NA 2 D
RC1:B3	NA 2 D
RC1:B4	GA 3 D

INLINE	PAGE
RC1:B5	GA 2 D
RC1:B6	GA 2 D
RC1:B7	BK 2 B
RC1:B7	BL 1 B
RC1:B7	BN 4 B
RC1:B7	NA 0 C
RC1:B8	BK 2 B
RC1:B8	BL 1 C
RC1:B8	BN 4 B
RC1:B8	NA 0 D
RC1:B9	BK 2 B
RC1:B9	BL 1 C
RC1:B9	BN 4 B
RC1:B9	NA 0 D
RC1:C1	BK 0 C
RC1:C1	BL 0 C
RC1:C1	BN 1 B
RC1:C1	NA 0 D
RC1:C2	BK 0 C
RC1:C2	BL 1 C
RC1:C2	BN 1 B
RC1:C2	NA 1 D
RC1:C3	BK 0 C
RC1:C3	BL 0 B
RC1:C3	BN 1 B
RC1:C3	NA 0 C
RC1:C4	BK 3 B
RC1:C4	BL 3 D
RC1:C4	BN 3 B
RC1:C4	NA 1 D
RC1:C5	BK 3 B
RC1:C5	BL 3 D
RC1:C5	BN 3 B
RC1:C5	NA 1 D
RC1:C6	BK 3 B
RC1:C6	BL 3 C
RC1:C6	BN 3 B
RC1:C6	NA 1 C
RC1:C7	BK 1 C
RC1:C7	BL 3 C
RC1:C7	BN 0 C
RC1:C7	NA 1 D
RC1:C8	BK 1 C
RC1:C8	BL 3 C
RC1:C8	BN 0 C
RC1:C8	NA 1 D
RC1:C9	BK 1 C
RC1:C9	BL 3 C
RC1:C9	BN 0 C
RC1:C9	NA 1 C

INLINE	PAGE
RC1:D1	BK 0 C
RC1:D1	BL 0 C
RC1:D1	BN 1 B
RC1:D1	NA 0 D
RC1:D3	BK 0 C
RC1:D3	BL 0 B
RC1:D3	BN 1 B
RC1:D3	NA 0 C
RC1:D4	BK 3 B
RC1:D4	BL 3 D
RC1:D4	BN 3 B
RC1:D4	NA 1 D
RC1:D6	BK 3 B
RC1:D6	BL 3 C
RC1:D6	BN 3 B
RC1:D6	NA 1 C
RC1:D7	BK 1 C
RC1:D7	BL 3 C
RC1:D7	BN 0 C
RC1:D7	NA 1 D
RC1:D9	BK 1 C
RC1:D9	BL 3 C
RC1:D9	BN 0 C
RC1:D9	NA 1 C
RC2:A1	BO 0 D
RC2:A3	BO 0 D
RC2:A4	BO 2 B
RC2:A6	BO 1 C
RC2:B1	BO 0 D
RC2:B2	BO 0 D
RC2:B3	BO 0 D
RC2:B4	BO 1 B
RC2:B5	BO 2 C
RC2:B6	BO 2 C
RC2:C1	BN 2 B
RC2:C2	BN 2 B
RC2:C3	BN 2 B
RC2:D1	BN 2 B
RC2:D3	BN 2 B
RC3:A7	BM 0 B
RC3:A9	BM 0 C
RC3:B2	CD 0 B
RC3:B3	CD 0 A
RC3:B5	CD 1 B
RC3:B6	CD 1 A
RC3:B7	BM 0 B
RC3:B8	BM 0 C
RC3:C1	CD 0 C
RC3:C3	CD 0 B
RC3:C4	CD 1 C

https://truckmanualshub.com/

INLINES

INLINE	PAGE
RC3:C6	CD 1 B
RC3:C8	BM 0 B
RC3:C9	BM 0 B
RC3:D1	CD 0 C
RC3:D3	CD 0 B
RC3:D4	CD 1 C
RC3:D6	CD 1 B
RC3:D7	BM 0 B
RC3:D9	BM 0 B
RFH:A	GH 3 D
RFH:B	GH 0 D
RFH:C	GH 3 C
RFH:D	GH 1 B
RFH:E	KB 2 D
RFH:F	KB 2 D
RFH:G	KB 1 D
RFH:H	KB 1 D
RFH:J	KC 3 C
RFH:K	KC 3 D
RHSM:A	GD 4 D
RHSM:B	GD 4 D
RHSM:C	GD 4 D
SHAR:A	BG 0 B
SHAR:B	BG 0 B

INLINE	PAGE
SP_BAT1:A	NA 3 B
SP_IGN1:A	NA 3 B
SP_IGN1:B	NA 3 B
SP_IGN2:A	NA 4 B
SP_IGN3:A	NA 1 B
SP_IGN3:B	NA 1 B
SP_RLY1:A	BK 3 A
SP_RLY1:A	BL 3 C
SP_RLY1:A	BN 3 A
SP_RLY1:A	NA 1 C
SP_RLY1:B	BK 3 C
SP_RLY1:B	BL 3 D
SP_RLY1:B	BN 3 C
SP_RLY1:B	NA 1 E
SP_RLY1:C	BK 3 C
SP_RLY1:C	BL 3 D
SP_RLY1:C	BN 3 C
SP_RLY1:C	NA 1 E
SP_RLY1:D	BK 3 C
SP_RLY1:D	BL 3 D
SP_RLY1:D	BN 3 C
SP_RLY1:D	NA 1 E
SP_RLY1:E	BK 3 A
SP_RLY1:E	BL 3 C

INLINE	PAGE
SP_RLY1:E	BN 3 A
SP_RLY1:E	NA 1 C
SP_RLY1:F	BK 1 B
SP_RLY1:F	BL 3 C
SP_RLY1:F	BN 0 B
SP_RLY1:F	NA 1 C
SP_RLY1:G	BK 1 D
SP_RLY1:G	BL 3 D
SP_RLY1:G	BN 0 D
SP_RLY1:G	NA 1 E
SP_RLY1:H	BK 1 D
SP_RLY1:H	BL 3 D
SP_RLY1:H	BN 0 D
SP_RLY1:H	NA 1 E
SP_RLY1:J	BK 1 D
SP_RLY1:J	BL 3 D
SP_RLY1:J	BN 0 D
SP_RLY1:J	NA 1 E
SP_RLY1:K	BK 1 B
SP_RLY1:K	BL 3 C
SP_RLY1:K	BN 0 B
SP_RLY1:K	NA 1 C
SP_RLY2:A	BK 2 A
SP_RLY2:A	BL 1 B

INLINE	PAGE
SP_RLY2:A	BN 4 A
SP_RLY2:A	NA 0 C
SP_RLY2:B	BK 2 C
SP_RLY2:B	BL 1 C
SP_RLY2:B	BN 4 C
SP_RLY2:B	NA 0 E
SP_RLY2:C	BK 2 C
SP_RLY2:C	BL 1 C
SP_RLY2:C	BN 4 C
SP_RLY2:C	NA 0 E
SP_RLY2:D	BK 2 C
SP_RLY2:D	BL 1 C
SP_RLY2:D	BN 4 C
SP_RLY2:D	NA 0 E
SP_RLY2:E	BK 2 A
SP_RLY2:E	BL 1 B
SP_RLY2:E	BN 4 A
SP_RLY2:E	NA 0 C
SP_RLY2:F	BK 0 B
SP_RLY2:F	BL 0 B
SP_RLY2:F	BN 1 A
SP_RLY2:F	NA 0 C
SP_RLY2:G	BK 0 D
SP_RLY2:G	BL 1 C

INLINE	PAGE
SP_RLY2:G	BN 1 C
SP_RLY2:G	NA 1 E
SP_RLY2:H	BK 0 D
SP_RLY2:H	BL 0 C
SP_RLY2:H	BN 1 C
SP_RLY2:H	NA 0 E
SP_RLY2:J	BK 0 D
SP_RLY2:J	BL 0 C
SP_RLY2:J	BN 1 B
SP_RLY2:J	NA 0 E
SP_RLY2:K	BK 0 B
SP_RLY2:K	BL 0 B
SP_RLY2:K	BN 1 A
SP_RLY2:K	NA 0 C
SP_RLY53:A	NA 2 C
SP_RLY53:B	NA 2 C
SP_RLY53:C	NA 2 E
SP_RLY53:D	NA 2 E
SP_RLY53_87A:A	NA 2 E
TLBU:A	GF 2 C
TLBU:B	GF 2 C
TRPTO:A	FD 3 C
TRPTO:B	FD 2 C
TRPTO:C	FD 3 D

https://truckmanualshub.com/

SPLICES

SPLICE	PAGE
SP3B7 (S)	GF 1 C
SP3B9 (S)	GF 1 B
SP5E1 (S)	GF 1 B
SP27B (S*)	BN 1 B
SP27B1 (S)	BL 3 A
SP31A20 (S)	CE 2 D
SP38A (T)	CE 2 A
SP38A2 (S)	CA 0 C
SPAABSS12 (T)	EB 3 B
SPC8 ( )	CG 1 C
SPC9 ( )	CG 1 D
SPCB1 (T)	BA 0 D
SPCB7 (S)	BL 1 A
SPCB7A (S)	BK 2 A
SPCB11 (T)	BA 3 D
SPCB16 (T)	CD 1 C
SPCB19 (T)	BB 3 D
SPCM1 (S)	CE 1 D
SPEMA17A1 (S)	CB 2 B
SPEMA24A1 (S)	CF 3 C
SPEMA44A1 (S)	CF 2 C
SPEMA44A2 (S)	CF 2 D
SPEMA45A1 (S)	CB 0 C
SPEMA50A1 (S)	CF 1 C
SPEMA52A2 (S)	CF 3 D
SPEMA54A1 (S)	CF 1 C
SPEMA54A2 (S)	CF 3 D
SPF2A (T)	GA 1 A
SPF2C (T)	GA 0 C
SPF2C2 (S)	GD 1 D
SPF3B (T)	GA 0 C
SPF3B1 (S)	GA 0 D
SPF3F (T)	BE 1 A
SPF3F (T)	CG 3 A
SPF3F (T)	DD 0 B
SPF3F (T)	EA 2 A
SPF3F (T)	EB 2 A
SPF3F (T)	ED 2 A
SPF3F (T)	GA 0 B
SPF3F (T)	GH 3 A
SPF3F (T)	KB 2 A
SPF3F (T)	NA 2 A
SPF3F25 (S)	KB 2 C
SPF3F66 (T)	BA 2 E
SPF3F69 (T)	FD 1 B
SPF3H (T)	GA 2 B
SPF4C (T)	GD 3 C
SPF4D (T)	GD 4 C
SPF5A (T)	GA 3 B
SPF5B (T)	GA 3 B

SPLICE	PAGE
SPF5D (T)	GA 2 D
SPF5D1 (S)	GF 2 B
SPF5E (T)	GA 3 D
SPF6A (T)	GA 1 B
SPF6A (T)	GH 3 B
SPF6B (S)	GH 1 C
SPF7A (T)	AC 0 B
SPF7C (T)	BM 0 A
SPF7D (T)	AC 1 C
SPF7D9 (S)	CD 3 B
SPF7G (T)	BF 4 C
SPF8A (T)	FB 2 B
SPF8B (T)	FB 3 D
SPF8F (S)	BK 0 D
SPF9B (T)	KC 2 C
SPF9D (S)	GA 2 D
SPF10A (T)	KB 2 B
SPF10A (T)	XA 2 B
SPF10C (T)	KB 2 B
SPF15A (T)	FC 1 B
SPF15B (T)	FC 2 C
SPF16A (T)	BA 0 B
SPF17A (T)	BA 1 B
SPF17A6 (S)	BN 4 A
SPF17A10 (S)	BD 2 B
SPF17A16 (T)	BA 1 E
SPF17A30 (S)	BL 2 D
SPF17E (S)	BK 2 A
SPF17E1 (S)	BL 2 A
SPF17M1 (T)	BC 2 C
SPF18A (T)	BC 1 B
SPF18C1 (S)	BK 0 B
SPF21A (T)	GP 4 B
SPF22A (T)	GP 2 B
SPF23A (T)	GP 0 B
SPF23C (T)	GP 1 A
SPF23D (T)	GP 2 B
SPF25A (T)	HA 2 B
SPF25B (T)	HA 2 C
SPF25D (S)	HA 1 D
SPF27A (S)	BK 0 B
SPF27A1 (S)	BL 0 C
SPF27A2 (S)	BN 0 A
SPF27A3 (T)	GG 1 B
SPF27A4 (T)	CG 3 C
SPF27B (S)	BK 1 D
SPF27C (S)	BN 1 C
SPF27H (S)	BN 1 D
SPF29B (T)	AA 1 C
SPF31A (T)	DD 3 A

SPLICE	PAGE
SPF34A (T)	NB 3 B
SPF34B (T)	NB 3 C
SPF34C2 ( )	GF 2 C
SPF34C3 (S)	GF 2 B
SPF35B (T)	GA 1 D
SPF35B3 (S)	IC 2 D
SPF35C (S)	GA 3 D
SPF38A (T)	CA 0 B
SPF41A (S)	CA 1 B
SPF41A2 (T)	CG 3 B
SPF42A (S)	BE 4 B
SPF42B (S)	BE 4 C
SPF43A (S)	CA 1 C
SPF44A (S)	FA 2 C
SPF44A_ ( )	FA 0 C
SPF49A3 (T)	EB 3 B
SPF49A4 (S)	EA 3 B
SPF50B1 (T)	GD 0 D
SPF51B2 (S)	GD 1 D
SPF55B (S)	IC 3 C
SPF55B1 (S)	IC 1 C
SPF55B1 (S)	ID 1 C
SPF61A (S)	BO 0 B
SPF61C (S)	BO 0 C
SPF62B (S)	CF 0 B
SPF63A (T)	BE 0 B
SPF66A (T)	KA 1 B
SPF66A (T)	NA 4 B
SPF72B (T)	KB 3 A
SPF78A (S)	CE 1 C
SPF81A (T)	CH 4 C
SPF81A1 (T)	CH 3 C
SPF91A (T)	CD 0 B
SPF92A (T)	CD 1 B
SPFAA (S)	CE 4 B
SPFB07A (S)	CG 3 D
SPHA1 (T)	BG 1 D
SPHA2 (T)	BG 1 C
SPHA13 (T)	BE 1 D
SPHA20 (T)	BE 1 D
SPHA21 (T)	BE 1 D
SPHA22 (T)	BE 1 C
SPHB22 (S)	BF 1 C
SPHB22A (S)	BF 2 E
SPHB22C1 (S)	BF 2 C
SPHB24 ( )	BG 2 D
SPHD3+ (S)	BN 1 C
SPJ1587H (S)	XA 0 B
SPJ1587H1 (S)	XA 0 C
SPJ1587L (S)	XA 1 B

SPLICE	PAGE
SPJ1587L1 (S)	XA 1 C
SPJ1939_2HB1 (S)	CA 3 C
SPJ1939_2LB1 (S)	CA 2 C
SPJ1939H7 (S)	XA 3 D
SPJ1939H8 (S)	XA 2 D
SPJ1939H9 (S)	XA 2 D
SPJ1939HB (S)	XA 3 D
SPJ1939HB1 (S)	XA 3 C
SPJ1939HB2 (S)	XA 3 C
SPJ1939HB3 (S)	XA 3 C
SPJ1939HB4 (S)	XA 3 B
SPJ1939HB5 (S)	XA 3 B
SPJ1939L7 (S)	XA 3 E
SPJ1939L8 (S)	XA 2 E
SPJ1939L9 (S)	XA 2 E
SPJ1939LB (S)	XA 3 D
SPJ1939LB1 (S)	XA 3 D
SPJ1939LB2 (S)	XA 3 C
SPJ1939LB3 (S)	XA 3 C
SPJ1939LB4 (S)	XA 3 B
SPJ1939LB5 (S)	XA 3 B
SPLICE ( )	BC 4 D
SPN110 (T)	DD 0 C
SPN112 (T)	DC 3 B
SPN124CM (T)	DD 2 C
SPN131 (S)	DC 1 D
SPN145 (T)	DD 3 C
SPN158 (T)	DC 2 C
SPN158A (S)	DC 2 D
SPN163 (T)	DD 1 B
SPN163F (S)	FD 3 C
SPN163G (S)	FD 3 C
SPN165 (T)	DD 3 C
SPR13SA (S)	GD 3 D
SPR13SB (S)	GD 4 D
SPR135AA (S)	GD 4 C
SPURDB (T)	CD 1 A
SPX1A3 (S)	AD 1 C
SPX1E (T)	AD 3 C
SPX1E (T)	BA 4 E
SPX1E (T)	BB 3 B
SPX1E (T)	BC 2 E
SPX1E (T)	BD 1 C
SPX1E (T)	BE 0 E
SPX1E (T)	BF 2 B
SPX1E (T)	EA 0 A
SPX1E (T)	EB 0 D
SPX1E (T)	ED 2 C
SPX1E (T)	XA 2 D
SPX1E6 (T)	EB 2 A

SPLICE	PAGE
SPX1E6 (T)	ED 2 B
SPX1E8 (S)	EA 2 A
SPX1E9 (T)	EA 2 B
SPX2A (T)	AD 3 B
SPX2A1 (T)	AD 3 B
SPX2A1 (T)	FB 0 B
SPX2A1 (T)	FC 1 D
SPX2A1 (T)	NB 2 D
SPX2A2 (T)	AD 3 B
SPX2A2 (T)	CH 2 D
SPX2A2 (T)	GA 2 D
SPX2A2 (T)	GD 4 E
SPX2A2 (T)	GH 0 E
SPX2A2 (T)	GP 0 E
SPX2A2 (T)	KA 1 C
SPX2A2 (T)	KB 1 E
SPX2A2 (T)	KC 2 D
SPX2A3 (T)	AD 3 B
SPX2A3 (T)	GG 0 C
SPX2A3 (T)	NB 0 D
SPX2A4 (T)	AD 3 B
SPX2A5 (T)	AD 3 B
SPX2A5 (T)	BA 4 E
SPX2A5 (T)	DD 1 C
SPX2A5 (T)	EA 2 C
SPX2A5 (T)	EB 2 B
SPX2A5 (T)	ED 2 B
SPX2A33 (S)	BK 3 D
SPX2A42 (S)	GD 3 E
SPX2A48 (S)	GH 3 C
SPX2A58 (S)	BN 1 A
SPX2A58 (S)	BO 0 E
SPX2A60 (S)	BL 4 B
SPX2A65 (T)	BM 0 C
SPX2A70 (T)	BA 2 D
SPX2A73 (T)	CH 2 D
SPX2A104 (T)	FD 1 C
SPX2D (T)	AA 2 E
SPX2D (T)	AB 3 C
SPX2D (T)	AC 1 D
SPX2D (T)	AD 3 B
SPX2D (T)	BC 1 E
SPX2D (T)	BF 0 D
SPX2D (T)	CA 0 C
SPX2D (T)	CG 3 C
SPX2D (T)	DD 2 C
SPX2D (T)	GA 1 D
SPX2D (T)	GG 2 C
SPX2D (T)	HA 1 E
SPX2D (T)	NA 1 B

https://truckmanualshub.com/

SPLICES

SPLICE	PAGE
SPX2D (T)	NB 3 C
SPX2D16 (T)	HA 2 D
SPX2D18 (S)	BK 3 C
SPX2D19 (S)	BN 1 C
SPX2D21 (S)	BL 0 E
SPX2N109 (T)	DD 0 B
SPX2N109A (T)	DD 0 C
SPX2N109B ( )	FD 3 D
SPX2N109F (S)	FD 3 D
SPX3B (S)	AD 3 C
SPX3B (S)	GP 2 E
SPX3C5 ( )	FB 0 D

SPLICE	PAGE
SPX3F (S)	AD 3 C
SPX3F (S)	CH 1 C
SPX3F (S)	GD 1 E
SPX3F (S)	IC 2 C
SPX3F1 (T)	GD 0 E
SPX3F2 (S)	GD 1 E
SPX3H (S)	IC 2 D
SPX3H1 (S)	IC 1 D
SPX3H1 (S)	ID 1 C
SPX88_25 (S)	BN 3 D
SPX136B (S)	AD 3 D
SPX136B (S)	CD 1 E

SPLICE	PAGE
SPX136B (S)	FD 4 D
SPX136B (S)	HA 3 E
SPX136B4 (S)	AD 2 D
SPX136B9 (S)	AD 3 D
SPX136B11 (S)	AD 3 D
SPX136B16 (S)	GF 1 D
SPX136B18 (S)	CF 4 C
SPX136B19 (S)	CA 2 C
SPX136B34 ( )	GF 1 C
SPX136B38 (S)	FB 2 E
SPX140A (S)	AD 1 C
SPX140A3 (S)	AD 2 C

SPLICE	PAGE
SPX140A3 (S)	FA 2 D
SPX140A4 (S)	AD 2 C
SPXE11 (S)	CG 3 D
SPXN109J (S)	FD 3 D
XE1 ( )	CB 1 B
XE2 ( )	CB 1 B
XE3 ( )	CB 3 C
XE4 ( )	CB 3 C
XE5 ( )	CA 2 B
XE6 ( )	CA 3 B
XE7 ( )	CA 2 B
XE8 ( )	CA 2 B

SPLICE	PAGE
XE9 ( )	CB 1 D
XE10 ( )	CB 2 A
XE11 ( )	CB 1 D
XE12 ( )	CB 1 D
XE13 ( )	CB 0 D
XE14 ( )	CB 0 D
XE15 ( )	CB 3 D
XE16 ( )	CB 3 D

https://truckmanualshub.com/

SHELLS

REF	PAGE
A03_A	BE 3 D
A03_B	BE 2 C
A03_C	BE 2 C
A03_D	BE 0 D
A03_E	BE 1 E
A03_H	BE 0 B
A03_H	BF 1 B
A03_H	BG 0 B
A03_H	NB 3 A
A03_J	BE 0 E
A03_Z	CG 3 B
A12	ED 0 C
A12A	EA 0 C
A12B	EB 0 C
A17	AC 2 A
A17	BA 1 C
A17	BB 0 B
A17	BC 2 D
A17	BD 2 D
A17	GD 2 A
A19E	DD 0 E
A34	HA 2 C
A36_1	BK 3 D
A36_2	BL 2 D
A36_3	BM 0 D
A36_3_CHASSIS	BJ 1 D
A36_3_CHASSIS	BM 3 D
A36_4_MATE	BN 3 D
A57	DC 0 A
A57	DD 0 D
A58	DC 0 D
A83	GD 2 B
A92A	CD 2 C
A92B	CD 3 C
A95	CB 1 E
A104	GA 2 A
A108A	DC 3 D
A121	KA 1 D
A122	KA 0 D
A123P	BE 2 B
A123T	BE 3 B
A124	BL 4 A
A137	CB 0 C
A137	CF 0 B
A138	CF 1 E
A158	KB 1 C
A158_JMP1	KB 2 B
A158_JMP2	KB 3 B
A158_JMP3	KB 3 C
A230	BM 0 C

REF	PAGE
A230	CE 3 A
A230	CF 0 A
A230	NB 0 A
B07	BF 1 D
B07A	CG 3 D
B09A	BF 2 D
B13	EA 1 B
B13	EB 0 D
B13	ED 0 D
B14	EA 1 B
B14	EB 1 D
B14	ED 1 D
B15	EA 0 D
B15	EB 0 B
B15	ED 0 B
B16	EA 1 D
B16	EB 1 B
B16	ED 1 B
B17	EA 2 E
B17	EB 2 D
B17	ED 2 D
B18	EA 2 E
B18	EB 3 D
B18	ED 3 D
B23	BF 3 C
B25A	BB 3 E
B40	BG 3 B
B41	BG 3 B
B42	BG 3 D
B43	BG 3 D
B44	BG 3 D
B45	BG 3 D
B60LF	KB 2 D
B60RF	KB 1 D
B68	BB 0 D
B96	CA 2 A
B96B	CA 2 A
B105	DC 3 D
B115	CB 3 E
B121	BG 0 D
B122	BF 2 A
B122A	CE 1 D
B123	CA 2 E
B123A	CE 1 D
B124FR	BF 1 D
B124RR	BF 1 D
B133	BG 0 A
B142B	CF 3 D
B156	BD 2 B
B156A	HA 1 D

REF	PAGE
B183_Y	CG 1 D
B183_Z	CG 1 D
B185A	CE 2 D
B185B	CE 3 D
B211_B	CB 3 C
B300B	CH 1 C
CB2	AA 0 A
CB2	GA 1 A
CB3	AA 1 A
CB3	GA 0 A
CB4	AA 1 A
CB4	GA 2 A
CB5	AA 1 A
CB5	GA 3 A
CB6	AA 1 A
CB6	GA 1 A
CB6	GH 3 A
CB7	AA 2 A
CB7	AC 0 A
CB8	AA 0 C
CB8	FB 2 A
CB9	AA 2 A
CB9	KC 2 A
CB10	AA 2 A
CB10	KB 2 A
CB10	XA 2 A
CB11	AA 2 A
CB11	GG 1 A
CB11	NA 0 A
CB12	AA 2 A
CB12	BO 1 A
CB12	NB 0 A
CB15	AA 3 A
CB15	FC 1 A
CB18	AB 1 B
CB18	BC 1 A
CB20	AA 3 A
CB20	IC 0 A
CB20	ID 0 A
CB21	AA 0 C
CB21	GP 4 A
CB22	AA 0 C
CB22	GP 2 A
CB23	AA 1 C
CB23	GP 0 A
CB24	AA 1 C
CB24	NB 0 A
CB25	AB 4 B
CB25	HA 2 A
CB26	AA 4 A

REF	PAGE
CB26	NA 2 A
CB27	AA 1 C
CB27	BK 0 A
CB27	BL 0 A
CB27	BN 0 A
CB27	GG 1 A
CB27	NA 0 A
CB29	AA 4 A
CB30	AA 1 C
CB30	FC 1 A
CB32	AB 0 A
CB32	NA 3 A
CB33	AB 0 A
CB33	GG 2 A
CB34	AB 0 A
CB34	NB 3 A
CB35	AB 1 A
CB35	GA 1 A
CB36	AB 1 A
CB36	GQ 3 A
CB37	AB 1 A
CB37	GG 2 A
CB39	AA 1 D
CB39	GG 1 A
CB40	AA 4 D
CB40	NB 2 A
CB42	AA 4 D
CB42	BE 4 A
CB44	AA 3 D
CB44	FA 2 A
CB45	AA 3 D
CB45	CC 2 A
CB45	NB 2 A
CB46	AA 0 D
CB46	KC 1 A
CB47	AA 0 D
CB47	NA 3 A
CB50	AB 2 A
CB50	GD 0 A
CB51	AB 2 A
CB51	GD 1 A
CB52	AA 3 D
CB52	BG 4 A
CB55	AA 2 D
CB55	IC 3 A
CB57	AA 2 D
CB57	NA 1 A
CB58	AA 0 D
CB61	AB 3 A
CB61	BO 0 A

REF	PAGE
CB61	NB 2 A
CB66	AA 2 C
CB66	KA 1 A
CB66	NA 4 A
CB67	AB 3 A
CB68	AB 3 A
CB68	KC 3 A
CB74	KB 3 B
CB91	CD 0 B
CB92	CD 1 B
DCL_MATE_1	BM 1 C
DCL_MATE_2	BM 1 C
DUAL_PTO_JMP	FB 2 A
E11LA	GD 2 D
E11RA	GD 4 D
E12L	GA 3 D
E12R	GA 3 D
E13LS	GD 3 D
E13RS	GD 4 D
E17A	GH 1 D
E17B	GH 0 D
E17C	GH 3 D
E19C	GA 0 D
E19L	GA 0 D
E19LS	GD 3 B
E19R	GA 0 D
E19RS	GD 3 B
E27L	GF 0 C
E27R	GF 2 C
E30L	GD 0 D
E30R	GD 1 D
E38_08	BD 1 B
E38_11	EB 3 B
E38_11B	EA 1 B
E38_12	BK 3 B
E38_12	BL 3 A
E38_12B	BN 1 C
E38_15	CE 3 B
E38_16A	CG 0 C
E38_16B	CG 1 C
E57	GA 4 D
F13	AA 3 A
F13	EA 3 A
F13	EB 3 A
F13	ED 3 A
F14	AA 3 A
F14	CD 2 A
F16	AB 0 B
F16	BA 0 A
F17	AB 1 B

https://truckmanualshub.com/

SHELLS

REF	PAGE
F17	BA 1 A
F19	AA 3 A
F19	BE 0 A
F28	AC 3 B
F31	AB 1 B
F31	DD 3 A
F31	NB 2 A
F38	AA 1 D
F38	CA 0 A
F38	CE 2 A
F41	AA 1 D
F41	CA 1 A
F41	CG 3 A
F43	AA 2 D
F43	CA 1 B
F49	AA 0 D
F49	EA 3 A
F49	EB 3 A
F49	ED 3 A
F54	AB 2 A
F56	AA 2 D
F56	NA 3 A
F60	AB 3 A
F60	CA 0 A
F62	AB 3 A
F62	CD 3 A
F63	AB 2 B
F63	BE 0 A
F64	AB 2 B
F64	CB 0 A
F65	AB 2 B
F69	AB 2 B
F69	CF 0 A
F71	AB 4 A
F71	DD 0 A
F78	CE 1 B
F79	CE 2 B
F80	CE 2 B
F81	CG 0 B
F81	CH 4 C
FM1	AD 1 B
FM3	AC 3 C
FM5	CG 3 C
FM6	CG 0 C
H02_1_114	GQ 3 D
H03	GF 2 B
H16	CH 1 B
H17	CH 3 B
HO7_Z	CG 1 B
M01L	GP 3 C

REF	PAGE
M01R	GP 2 C
M02	GP 0 C
M15	CB 2 A
M110LH	ID 0 D
M110LHL_MATE	IC 2 D
M110LHM	IC 0 D
M110RHL_MATE	IC 3 D
M110RHM	IC 1 D
M110RHM	ID 1 D
M120A	CD 0 E
M120B	CD 1 E
M121A	CD 2 D
M121B	CD 3 D
MC_DUAL_PTO_JMP	BC 0 B
R01	AD 0 C
R01A	CC 3 C
R04	KC 3 C
R05	FA 2 C
R05_A	FA 0 C
R08	CA 3 A
R08	XA 3 B
R09	CC 2 C
R18A	FA 2 C
R18B	FA 1 C
R29	CF 3 E
R31	CF 3 D
R34	XA 1 E
R39A	BC 1 B
R39B	BF 0 C
RLY01	AB 3 B
RLY02	AA 2 C
RLY03	AA 0 B
RLY04	AA 3 C
RLY06	GA 3 B
RLY07	BN 2 B
RLY10B	BO 0 D
RLY11	GG 2 B
RLY12	GG 2 B
RLY13	GA 1 C
RLY14	GQ 3 D
RLY016A	GP 1 B
RLY016B	GP 2 B
RLY016C	GP 3 B
RLY016D	GP 3 B
RLY17	DD 3 B
RLY17	KB 3 D
RLY28	KC 2 B
RLY29	NB 3 B
RLY34	AA 1 B
RLY35	HA 2 B

REF	PAGE
RLY36	AC 2 C
RLY38	GD 0 B
RLY39	GD 1 B
RLY45	DD 4 B
RLY46	DD 3 B
RLY47	DD 2 B
RLY48	DD 2 B
RLY52	GA 1 B
RLY58	FC 1 B
RLY59	FC 2 B
RLY60	GA 4 B
RLY61	FB 0 A
RLY61B	BO 1 B
RLY62	NB 3 B
RLY63	GA 3 D
RLY63_JMP	GA 2 E
RLY64	BK 2 B
RLY64	BL 1 B
RLY64	BN 4 B
RLY64	NA 0 D
RLY65	BK 0 C
RLY65	BL 0 B
RLY65	BN 1 B
RLY65	NA 0 C
RLY66	BK 3 B
RLY66	BL 3 C
RLY66	BN 3 B
RLY66	NA 1 D
RLY67	BK 1 C
RLY67	BL 3 C
RLY67	BN 0 C
RLY67	NA 1 C
RLY68	CA 0 B
RLY89	CH 0 B
RLY91	CD 0 C
RLY92	CD 1 C
RLY94	BM 0 B
RLY95	BM 0 B
RLY97	AC 2 D
RLY98	BD 4 D
RLY99	CH 0 C
S01	GA 0 B
S006	BA 1 B
S07	BA 2 B
S007	BA 1 B
S008	BA 4 B
S009	GP 0 B
S013	IC 3 B
S016	EA 2 B
S016	EB 2 B

REF	PAGE
S016	ED 2 B
S017B	GH 3 D
S018_1	BC 3 B
S018_2	FB 1 D
S18A	BC 2 B
S18B	FB 1 B
S019	FB 4 C
S019A	FB 3 C
S020	FB 2 B
S023	FB 3 C
S024	BD 2 B
S24C	DD 1 B
S28C	BN 1 B
S030	IC 0 B
S030	ID 0 B
S036	AC 0 B
S036B	AC 1 B
S038	GA 3 B
S038C	BB 2 D
S039	GA 2 C
S039	GQ 1 A
S040P	BF 3 D
S040S	BF 4 D
S042	BE 3 A
S43	BA 3 D
S044	BB 3 C
S045	BA 1 E
S047	BG 2 D
S047A	BG 2 D
S048	BG 2 C
S048A	BG 2 C
S051A	FB 0 B
S051B	FB 0 C
S63	BN 4 C
S72	BB 2 B
S90_1	FB 3 A
S106A	EB 3 A
S108	FC 1 B
S110	NB 2 B
S111	CA 3 B
S112	BB 1 D
S112_JMP	BB 2 E
S112A	BK 0 D
S112B	BN 1 C
S113	BE 0 C
S115	KA 1 B
S116	FB 1 E
S116A	BL 0 C
S137	FD 1 B
S147	BC 4 D

REF	PAGE
S169	AC 3 D
S320	FD 3 C
sym2_6019	NA 2 D
sym317_242	KA 0 C
sym403_378	KA 0 C
V27	BK 2 A
V27	BL 1 A
V30	BF 4 D
V35	CH 0 D
V36	DD 3 C
X0C	BA 2 A
X0C	BC 3 A
X0C	BD 2 A
X0C	CA 4 A
X0C	FB 4 A
X0C	FC 1 A
X0C	GH 3 B
X0C	GP 1 A
X0C	HA 2 A
X0C	IC 3 A
X0C	NB 0 A
X01	XA 1 C
X2_SP1	AD 4 B
X2_SP1	BC 2 C
X2_SP1	BD 2 C
X2_SP1	CA 3 B
X2_SP1	CH 0 D
X2_SP1	FB 4 D
X2_SP1	FC 0 D
X2_SP1	GA 0 C
X2_SP1	HA 2 B
X2_SP1	IC 3 B
X2_SP1	NA 2 B
X06D	BH 0 C
X06D_MATE_BL	BM 2 B
X07A	KC 1 C
X07B	BO 1 C
X10	AC 4 C
X11	CA 0 C
X11A	CE 0 C
X34R_MATE	KC 3 C
X45A	CC 3 B
X135	AD 1 D
X136	AD 2 C
XJN	AD 1 A
XJP	AC 4 A
Y11	EA 0 B
Y11	EB 0 D
Y11	ED 0 D
Y12	EA 1 B

https://truckmanualshub.com/

SHELLS

REF	PAGE
Y12	EB 1 D
Y12	ED 1 D
Y13	EA 1 D
Y13	EB 0 B
Y13	ED 0 B
Y14	EA 1 E
Y14	EB 1 B

REF	PAGE
Y14	ED 1 B
Y15	EA 3 D
Y15	EB 3 D
Y15	ED 3 D
Y16	EA 3 D
Y16	EB 3 D
Y16	ED 3 D

REF	PAGE
Y18	FC 1 C
Y35	CA 1 C
Y35A	CE 4 D
Y42	HA 2 E
Y51	FA 1 C
Y57	EA 1 D
Y57	EB 1 B

REF	PAGE
Y57	ED 1 B
Y62	DC 1 C
Y76	CB 0 D
Y77	CB 1 D
Y80	CF 3 A
Y81	CF 2 D
Y86	FB 1 D

REF	PAGE
Y88	FB 0 D
Y95	CG 2 D
Y103	CB 2 A
Y157	FD 3 C

https://truckmanualshub.com/

REFERENCES

REF	DESCRIPTION	PAGE
6SABS:A		EA 2 D
6SABS:A		EB 2 D
6SABS:A		ED 2 D
6SABS:B		EA 2 D
6SABS:B		EB 2 D
6SABS:B		ED 2 D
6SABS:C		EA 2 D
6SABS:C		EB 3 D
6SABS:C		ED 3 D
6SABS:D		EA 2 D
6SABS:D		EB 3 D
6SABS:D		ED 3 D
6SABS:E		EA 3 D
6SABS:E		EB 3 D
6SABS:E		ED 3 D
6SABS:F		EA 3 D
6SABS:F		EB 3 D
6SABS:F		ED 3 D
6SABS:G		EA 3 D
6SABS:G		EB 3 D
6SABS:G		ED 3 D
6SABS:H		EA 3 D
6SABS:H		EB 3 D
6SABS:H		ED 3 D
6SABS:J		EA 3 D
6SABS:J		EB 3 D
6SABS:J		ED 3 D
6SABS:K		EA 3 D
6SABS:K		EB 3 D
6SABS:K		ED 3 D
A03_A	DISPLAY, WARNING LAMP MODULE	BE 3 D
A03_B	GAUGE, SPEEDOMETER, VOLTMETER, TRANS. OIL	BE 2 C
A03_C	GAUGE, TACHOMETER, WATER TEMP., OIL PSI	BE 2 C
A03_D	GAUGE, DIESEL LEVEL & DIESEL FLUID LEVEL	BE 0 D
A03_E	GAUGE, PYROMETER	BE 1 E
A03_H	CONTROL UNIT, GAUGE DRIVER MODULE (GDM)	BE 0 B
A03_H	CONTROL UNIT, GAUGE DRIVER MODULE (GDM)	BF 1 B
A03_H	CONTROL UNIT, GAUGE DRIVER MODULE (GDM)	BG 0 B
A03_H	CONTROL UNIT, GAUGE DRIVER MODULE (GDM)	NB 3 A
A03_J	GAUGE, DUAL AIR	BE 0 E
A03_Z	GAUGE FUEL LEVEL LNG	CG 3 B
A12	Control unit, ABS (Anti-lock Brake System	ED 0 C
A12A	CONTROL UNIT, ABS (ANTI-LOCK BRAKE SYS.)	EA 0 C
A12B	CONTROL UNIT, ABS (ANTI-LOCK BRAKE SYS.	EB 0 C
A17	CONTROL UNIT, VECU (VEHICLE ECU)	AC 2 A
A17	CONTROL UNIT, VECU (VEHICLE ECU)	BA 1 C
A17	CONTROL UNIT, VECU (VEHICLE ECU)	BB 0 B
A17	CONTROL UNIT, VECU (VEHICLE ECU)	BC 2 D
A17	CONTROL UNIT, VECU (VEHICLE ECU)	BD 2 D
A17	CONTROL UNIT, VECU (VEHICLE ECU)	GD 2 A

REF	DESCRIPTION	PAGE
A19E	GEARSELECTOR ALLISON	DD 0 E
A34	CONTROL PANEL & HVAC UNIT, RD-6-5302	HA 2 C
A36_1	CONTROL UNIT, BBM (BODYBUILDER MODULE), P	BK 3 D
A36_2	CONTROL UNIT, BBM (BODYBUILDER MODULE) PT	BL 2 D
A36_3	CONTROL UNIT, BBM (BODYBUILDER MODULE) RE	BM 0 D
A36_3_CHASSIS	BB BOC LIGHTING CONNECTOR	BJ 1 D
A36_3_CHASSIS	BB BOC LIGHTING CONNECTOR	BM 3 D
A36_4_MATE	CONTROL UNIT, BBM (BODYBUILDER MODULE), P	BN 3 D
A57	CONTROL UNIT, ALLISON TRANSMISSION	DC 0 A
A57	CONTROL UNIT, ALLISON TRANSMISSION	DD 0 D
A58	TRANSMISSION ALLISON	DC 0 D
A83	CONTROL UNIT, DRL (DAYTIME RUNNING LIGHT	GD 2 B
A92A	CONTROL UNIT AUX. COOLING FAN	CD 2 C
A92B	CONTROL UNIT AUX. COOLING FAN	CD 3 C
A95	MODULE ATOMIZATION	CB 1 E
A104	CONTROL UNIT, FLASHER	GA 2 A
A108A	TRANSMISSION RETARDER	DC 3 D
A121	DISPLAY, MONITOR, INTEC REAR VEIW CAMERA	KA 1 D
A122	CONTROL UNIT, REAR VIEW CAMERA SWITCHER	KA 0 D
A123P	GAUGE, LIFT AXLE, PUSHER	BE 2 B
A123T	GAUGE, LIFT AXLE, TAG	BE 3 B
A124	DISPLAY, HOUR METER	BL 4 A
A124_	COMPONENT GROUP, STARTER MOTOR, M04 & K65	AC 3 B
A124_	COMPONENT GROUP, STARTER MOTOR, M04 & K65	AD 0 A
A124_A1		AC 3 B
A124_A2		AC 3 A
A124_A3		AC 3 A
A124_B1		AD 1 A
A124_B2		AD 1 A
A124_B3		AD 1 A
A137	DEF CONTROL MODULE	CB 0 C
A137	DEF CONTROL MODULE	CF 0 B
A138	PUMP UNIT, ADBLUE	CF 1 E
A158	Control unit, Audio	KB 1 C
A158_JMP1	JUMPER, BATTERY FEED	KB 2 B
A158_JMP2	JUMPER, CLEAN POWER FEED	KB 3 B
A158_JMP3	JUMPER, REVERSE MUTE	KB 3 C
A230		BM 0 C
A230		CE 3 A
A230		CF 0 A
A230		NB 0 A
ABS_OPTION:A		EB 3 B
ABS_OPTION:B		EB 2 B
ABS_X1:1		EA 2 A
ABS_X1:2		EA 2 C
ABS_X1:3		EA 3 B
ABS_X1:4		EA 1 C
ABS_X1:5		EA 1 C
ABS_X1:7		EA 3 B
ABS_X1:8		EA 3 B

https://truckmanualshub.com/

REFERENCES

REF	DESCRIPTION	PAGE
ABS_X1:10		EA 1 C
ABS_X1:11		EA 1 C
ABS_X1:16		EA 3 C
ABS_X1:17		EA 2 C
ABS_X2:1		EA 0 C
ABS_X2:2		EA 0 C
ABS_X2:3		EA 0 A
ABS_X2:4		EA 1 C
ABS_X2:5		EA 1 B
ABS_X2:6		EA 1 A
ABS_X2:7		EA 1 C
ABS_X2:8		EA 1 B
ABS_X2:9		EA 0 C
ABS_X2:10		EA 1 C
ABS_X2:11		EA 1 B
ABS_X2:12		EA 0 B
ABS_X2:13		EA 1 C
ABS_X2:14		EA 1 B
ABS_X2:15		EA 0 C
ABS_X2:16		EA 1 C
ABS_X2:17		EA 1 C
ABS_X2:18		EA 0 C
ABS_X3:4		EA 3 C
ABS_X3:6		EA 3 E
ABS_X3:7		EA 3 C
ABS_X3:9		EA 3 E
ABS_X3:10		EA 3 C
ABS_X3:11		EA 2 D
ABS_X3:12		EA 2 D
ABS_X3:13		EA 3 C
ABS_X3:14		EA 2 D
ABS_X3:15		EA 2 D
ALLISON:1		DC 2 C
ALLISON:2		DC 3 C
ALLISON:3		DC 1 C
ALLISON:4		DC 2 C
ALLISON:5		DC 1 C
ALLISON:6		DC 1 C
ALLISON:7		DC 1 C
ALLISON:8		DC 1 C
ALLISON:9		DC 1 C
ALLISON:10		DC 0 C
ALLISON:11		DC 0 C
ALLISON:12		DC 1 C
ALLISON:13		DC 1 C
ALLISON:14		DC 2 C
ALLISON:15		DC 2 C
ALLISON:16		DC 2 C
ALLISON:17		DC 0 C
ALLISON:18		DC 0 C

REF	DESCRIPTION	PAGE
ALLISON:19		DC 1 C
ALLISON:20		DC 1 C
ALLISON:21		DC 2 C
ALLISON:22		DC 2 C
ALLISON:23		DC 2 C
ALLISON:24		DC 1 C
ALLISON:27		DC 0 C
ALLISON:30		DC 0 C
ALLISON:31		DC 0 C
ALLISON:32		FD 2 C
ALLISON:33		FD 2 C
ALLISON:34		FD 4 D
B07	SENSOR, FUEL LEVEL	BF 1 D
B07A	SENSOR LNG FUEL LEVEL	CG 3 D
B09A	SENSOR, OIL TEMP GEARBOX	BF 2 D
B13	SENSOR, WHEEL SPD LH FRT AXLE	EA 1 B
B13	SENSOR, WHEEL SPD LH FRT AXLE	EB 0 D
B13	SENSOR, WHEEL SPD LH FRT AXLE	ED 0 D
B14	SENSOR WHEEL SPD RH FRT AXLE	EA 1 B
B14	SENSOR WHEEL SPD RH FRT AXLE	EB 1 D
B14	SENSOR WHEEL SPD RH FRT AXLE	ED 1 D
B15	SENSOR, WHEEL SPD LH RR RR AXLE	EA 0 D
B15	SENSOR, WHEEL SPD LH RR RR AXLE	EB 0 B
B15	SENSOR, WHEEL SPD LH RR RR AXLE	ED 0 B
B16	SENSOR, WHEEL SPD RH RR RR AXLE	EA 1 D
B16	SENSOR, WHEEL SPD RH RR RR AXLE	EB 1 B
B16	SENSOR, WHEEL SPD RH RR RR AXLE	ED 1 B
B17	SENSOR, WHEEL SPD LH 3RD AXLE	EA 2 E
B17	SENSOR, WHEEL SPD LH 3RD AXLE	EB 2 D
B17	SENSOR, WHEEL SPD LH 3RD AXLE	ED 2 D
B18	SENSOR, WHEEL SPD RH 3RD AXLE	EA 2 E
B18	SENSOR, WHEEL SPD RH 3RD AXLE	EB 3 D
B18	SENSOR, WHEEL SPD RH 3RD AXLE	ED 3 D
B23	SENSOR, AMBIENT AIR TEMP.	BF 3 C
B25A	SENSOR ACCELERATOR PEDAL	BB 3 E
B40	SENSOR, BRK WEAR FRT AXLE, LHS	BG 3 B
B41	SENSOR BRK WEAR FRT AXLE RHS	BG 3 B
B42	SENSOR, BRK WEAR FRT RR AXLE, LHS	BG 3 D
B43	SENSOR, BRK WEAR FRT RR AXLE, RHS	BG 3 D
B44	SENSOR, BRK WEAR REAR RR AXLE, LHS	BG 3 D
B45	SENSOR, BRK WEAR REAR RR AXLE, RHS	BG 3 D
B60LF	SPEAKER, LEFT FRT	KB 2 D
B60RF	SPEAKER, RIGHT FRT.	KB 1 D
B68	SENSOR, OUTPUT SHAFT SPD, GEARBOX	BB 0 D
B96	SENSOR, NOx (CAN BASED) AFTER SCR	CA 2 A
B96B	SENSOR, NOx (CAN BASED) AFTER DPF	CA 2 A
B105	SENSOR, RETARDER TEMP	DC 3 D
B115	SENSOR DPF PRESSURE	CB 3 E
B121	SENSOR, LOW LEVEL WASHER FLUID	BG 0 D
B122	SENSOR, EXHAUST TEMP	BF 2 A

https://truckmanualshub.com/

REFERENCES

REF	DESCRIPTION	PAGE
B122A	SENSOR EXHAUST TEMPERATURE CATALYST	CE 1 D
B123	SENSOR LEVEL COOLANT	CA 2 E
B123A	SENSOR COOLANT LEVEL	CE 1 D
B124FR	SENSOR, OIL TEMP., FRONT REAR AXLE	BF 1 D
B124RR	SENSOR, OIL TEMP., REAR REAR AXLE	BF 1 D
B133	SENSOR, AIR FILTER RESTRICTION	BG 0 A
B142B	SENSOR, ADBLUE LEVEL & TEMP.	CF 3 D
B156	SENSOR, FREON HI PRESSURE - FAN	BD 2 B
B156A	SENSOR, FREON HI PRESSURE	HA 1 D
B183_Y	SENSOR METHANE ZONE 1	CG 1 D
B183_Z	SENSOR METHANE ZONE 2	CG 1 D
B185A	SENSOR OXYGEN OUTLET EGO	CE 2 D
B185B	SENSOR OXYGEN OUTLET EGO	CE 3 D
B211_B	SENSORS DPF TEMP.	CB 3 C
B300B	METHANE SENSOR ENGINE	CH 1 C
BB_CUMMINS:A		BC 3 D
BB_CUMMINS:B		BC 3 D
BB_CUMMINS:C		BC 3 E
BB_CUMMINS:D		BC 3 E
BB_PK_BK:A		BB 2 D
BB_PK_BK:B		BB 2 D
BBC_MC_SOL_SW:A		BO 3 B
BBC_MC_SOL_SW:A		BO 3 C
BBC_MC_SOL_SW:B		BO 3 B
BBC_MC_SOL_SW:B		BO 3 C
BBC_MC_SOL_SW:C		BO 3 B
BBC_MC_SOL_SW:C		BO 3 C
BBC_MC_SOL_SW:D		BO 3 B
BBC_MC_SOL_SW:D		BO 3 C
BBC_MC_SOL_SW:E		BO 3 B
BBC_MC_SOL_SW:E		BO 3 C
BBC_MC_SOL_SW:F		BO 3 B
BBC_MC_SOL_SW:F		BO 3 C
BBC_MC_SOL_SW:G		BO 3 B
BBC_MC_SOL_SW:G		BO 3 C
BBC_MC_SOL_SW:H		BO 4 B
BBC_MC_SOL_SW:H		BO 4 C
BBC_MC_SOL_SW:J		BO 4 B
BBC_MC_SOL_SW:J		BO 4 C
BBC_MC_SOL_SW:K		BO 4 B
BBC_MC_SOL_SW:K		BO 4 C
BBC_MC_SOL_SW:L		BO 2 B
BBC_MC_SOL_SW:L		BO 2 C
BBC_MC_SOL_SW:M		BO 2 B
BBC_MC_SOL_SW:M		BO 2 C
BBC_MC_SOL_SW:N		BO 2 B
BBC_MC_SOL_SW:N		BO 2 C
BBC_MC_SOL_SW:P		BO 2 B
BBC_MC_SOL_SW:P		BO 2 C
BBC_MC_SOL_SW:R		BO 2 B

REF	DESCRIPTION	PAGE
BBC_MC_SOL_SW:R		BO 2 C
BBC_MC_SOL_SW:S		BO 3 B
BBC_MC_SOL_SW:S		BO 3 C
BBCAB_TRANS:A		BN 4 C
BBCAB_TRANS:B		BN 4 D
BBM_1939:A		BB 1 C
BBM_1939:A		BB 1 C
BBM_1939:B		BB 2 C
BBM_1939:B		BB 2 C
BBMCO:A		BM 1 D
BPMCFC:S		GG 1 D
BPMCFC:T		GG 1 D
BPMCFC:U		NB 4 C
BPMCFC:V		NB 4 C
BPMCFC:W		GG 2 D
BPMCFC:X		GG 2 D
BPMCFC:Y		GG 1 D
BPMCFC:Z		GG 1 D
BWFC:A		BG 3 C
BWFC:B		BG 4 C
BWRC:A		BG 2 D
BWRC:B		BG 3 E
CB2	CIRCUIT BREAKER, HDLPS. HI DRL	AA 0 A
CB2	CIRCUIT BREAKER, HDLPS. HI DRL	GA 1 A
CB3	CIRCUIT BREAKER PARK,TAIL MARKER LPS.	AA 1 A
CB3	CIRCUIT BREAKER PARK,TAIL MARKER LPS.	GA 0 A
CB4	CIRCUIT BREAKER TURN LPS, FLASHER	AA 1 A
CB4	CIRCUIT BREAKER TURN LPS, FLASHER	GA 2 A
CB5	CIRCUIT BREAKER, TRACTOR STOP LPS.	AA 1 A
CB5	CIRCUIT BREAKER, TRACTOR STOP LPS.	GA 3 A
CB6	CIRCUIT BREAKER, DOME COURTESY LPS.	AA 1 A
CB6	CIRCUIT BREAKER, DOME COURTESY LPS.	GA 1 A
CB6	CIRCUIT BREAKER, DOME COURTESY LPS.	GH 3 A
CB7	CIRCUIT BREAKER, KEY SW.	AA 2 A
CB7	CIRCUIT BREAKER, KEY SW.	AC 0 A
CB8	CIR. BRKR., AIR SOL.	AA 0 C
CB8	CIR. BRKR., AIR SOL.	FB 2 A
CB9	CIR. BRKR., CB POST	AA 2 A
CB9	CIR. BRKR., CB POST	KC 2 A
CB10	CIR. BRKR., DIAG. CONN.	AA 2 A
CB10	CIR. BRKR., DIAG. CONN.	KB 2 A
CB10	CIR. BRKR., DIAG. CONN.	XA 2 A
CB11	CIR. BRKR., BATT. STUD	AA 2 A
CB11	CIR. BRKR., BATT. STUD	GG 1 A
CB11	CIR. BRKR., BATT. STUD	NA 0 A
CB12	CIR. BRKR., OPTION BLOCK	AA 2 A
CB12	CIR. BRKR., OPTION BLOCK	BO 1 A
CB12	CIR. BRKR., OPTION BLOCK	NB 0 A
CB15	CIR. BRKR., BEACON LAMPS	AA 3 A
CB15	CIR. BRKR., BEACON LAMPS	FC 1 A

https://truckmanualshub.com/

REFERENCES

REF	DESCRIPTION	PAGE
CB18	CIR. BRKR., DCL(CDS) EMS POWER	AB 1 B
CB18	CIR. BRKR., DCL(CDS) EMS POWER	BC 1 A
CB20	CIR. BRKR., MOTO. MIRRORS	AA 3 A
CB20	CIR. BRKR., MOTO. MIRRORS	IC 0 A
CB20	CIR. BRKR., MOTO. MIRRORS	ID 0 A
CB21	CIRCUIT BREAKER LH WS WIPER	AA 0 C
CB21	CIRCUIT BREAKER LH WS WIPER	GP 4 A
CB22	CIRCUIT BREAKER, RH, WS WIPER	AA 0 C
CB22	CIRCUIT BREAKER, RH, WS WIPER	GP 2 A
CB23	CIRCUIT BREAKER WS. WIPER/ WASHER	AA 1 C
CB23	CIRCUIT BREAKER WS. WIPER/ WASHER	GP 0 A
CB24	CIR. BRKR., 2WAY RADIO	AA 1 C
CB24	CIR. BRKR., 2WAY RADIO	NB 0 A
CB25	CIR. BRKR., HVAC CAB	AB 4 B
CB25	CIR. BRKR., HVAC CAB	HA 2 A
CB26	CIR. BRKR., REAR FLOOD LPS.	AA 4 A
CB26	CIR. BRKR., REAR FLOOD LPS.	NA 2 A
CB27	CIR. BRKR., IGN. STUD	AA 1 C
CB27	CIR. BRKR., IGN. STUD	BK 0 A
CB27	CIR. BRKR., IGN. STUD	BL 0 A
CB27	CIR. BRKR., IGN. STUD	BN 0 A
CB27	CIR. BRKR., IGN. STUD	GG 1 A
CB27	CIR. BRKR., IGN. STUD	NA 0 A
CB29	CIR. BRKR., EMS RELAYS	AA 4 A
CB30	CIR. BRKR., MUNCIE LIVE PACK	AA 1 C
CB30	CIR. BRKR., MUNCIE LIVE PACK	FC 1 A
CB32	CIR. BRKR., BODYBUILDER BATT 2	AB 0 A
CB32	CIR. BRKR., BODYBUILDER BATT 2	NA 3 A
CB33	CIR. BRKR., TRAILER STOP LPS.	AB 0 A
CB33	CIR. BRKR., TRAILER STOP LPS.	GG 2 A
CB34	CIR. BRKR., REV/NEUTRAL POWER	AB 0 A
CB34	CIR. BRKR., REV/NEUTRAL POWER	NB 3 A
CB35	CIR. BRKR., CAB & TRLR. CLEARANCE LPS.	AB 1 A
CB35	CIR. BRKR., CAB & TRLR. CLEARANCE LPS.	GA 1 A
CB36	CIR. BRKR., HORN	AB 1 A
CB36	CIR. BRKR., HORN	GQ 3 A
CB37	CIR. BRKR., TRLR. TAIL LPS.	AB 1 A
CB37	CIR. BRKR., TRLR. TAIL LPS.	GG 2 A
CB39	CIR. BRKR., TRAILER ABS PWR	AA 1 D
CB39	CIR. BRKR., TRAILER ABS PWR	GG 1 A
CB40	CIR. BRKR., BODY IGN. PWR. STUD	AA 4 D
CB40	CIR. BRKR., BODY IGN. PWR. STUD	NB 2 A
CB42	CIR. BRKR., BACKUP LPS.	AA 4 D
CB42	CIR. BRKR., BACKUP LPS.	BE 4 A
CB44	CIR. BRKR., HTD. AIR DRYER /HTD. DRAIN VA	AA 3 D
CB44	CIR. BRKR., HTD. AIR DRYER /HTD. DRAIN VA	FA 2 A
CB45	CIR. BRKR., SPARE/FUEL SEPARATOR FUEL HEA	AA 3 D
CB45	CIR. BRKR., SPARE/FUEL SEPARATOR FUEL HEA	CC 2 A
CB45	CIR. BRKR., SPARE/FUEL SEPARATOR FUEL HEA	NB 2 A
CB46	CIR. BRKR., POWER OUTLET	AA 0 D

REF	DESCRIPTION	PAGE
CB46	CIR. BRKR., POWER OUTLET	KC 1 A
CB47	CIR. BRKR., TRANS./ SPARE	AA 0 D
CB47	CIR. BRKR., TRANS./ SPARE	NA 3 A
CB50	CIR. BRKR., HDLP LH LOW BEAM	AB 2 A
CB50	CIR. BRKR., HDLP LH LOW BEAM	GD 0 A
CB51	CIR. BRKR., HDLP RH LOW BEAM	AB 2 A
CB51	CIR. BRKR., HDLP RH LOW BEAM	GD 1 A
CB52	CIR. BRKR., SPARE/ BRK. WEAR	AA 3 D
CB52	CIR. BRKR., SPARE/ BRK. WEAR	BG 4 A
CB55	CIR. BRKR., HEATED MIRRORS	AA 2 D
CB55	CIR. BRKR., HEATED MIRRORS	IC 3 A
CB57	CIR. BRKR., HVAC ROOF COND. FAN	AA 2 D
CB57	CIR. BRKR., HVAC ROOF COND. FAN	NA 1 A
CB58	CIR. BRKR. OPEN	AA 0 D
CB61	CIR. BRKR., BODY BATT. STUD	AB 3 A
CB61	CIR. BRKR., BODY BATT. STUD	BO 0 A
CB61	CIR. BRKR., BODY BATT. STUD	NB 2 A
CB66	CIR. BRKR., SPARE	AA 2 C
CB66	CIR. BRKR., SPARE	KA 1 A
CB66	CIR. BRKR., SPARE	NA 4 A
CB67	CIR. BRKR., OPEN	AB 3 A
CB68	CIR. BRKR., CIGAR LIGHTER	AB 3 A
CB68	CIR. BRKR., CIGAR LIGHTER	KC 3 A
CB74	CIR. BRKR., RADIO MEMORY	KB 3 B
CB91	CIR. BRKR., AUX FAN #1	CD 0 B
CB92	CIR. BRKR., AUX FAN #2	CD 1 B
CBBFCBB:R		BJ 2 D
CBBFCBB:R		BM 4 C
CBBFCBB:S		BJ 2 D
CBBFCBB:S		BM 4 C
CBBFCBB:T		BJ 1 D
CBBFCBB:T		BM 3 C
CBBFCBB:U		BJ 2 D
CBBFCBB:U		BM 4 C
CBBFCBB:V		BJ 2 D
CBBFCBB:V		BM 4 C
CBBFCBB:W		BJ 2 D
CBBFCBB:W		BM 4 C
CBBFCBB:X		BJ 2 D
CBBFCBB:X		BM 4 C
CBBFCBB:Y		BJ 1 D
CBBFCBB:Y		BM 3 C
CBBFCBB:Z		BJ 1 D
CBBFCBB:Z		BM 3 C
CD_20828057_33121 Y_GN_30t_m		CA 2 B
CDPF:A		CE 1 D
CDPF:B		CE 2 D
CDPF:D		CE 2 D
CDPF:G		CE 2 D
CDPF:K		CE 1 D

https://truckmanualshub.com/

REFERENCES

REF	DESCRIPTION	PAGE
CDPF:L		CE 2 D
CE_20828057_33121	Y_GN_30t_m	CA 3 A
CI_20828057_33121	Y_GN_30t_m	CA 2 B
d_vda1_5001		FD 3 C
DCL:A		BC 0 C
DCL:B		BC 0 C
DCL:C		BC 0 C
DCL:D		BC 0 C
DCL:E		BC 0 B
DCL:F		BC 0 C
DCL:G		BC 0 B
DCL:H		BC 0 B
DCL:J		BC 0 B
DCL:L		BC 0 C
DCL:M		BC 0 D
DCL:N		BC 0 D
DCL:P		BC 0 D
DCL:R		BC 0 E
DCL_MATE_1	CONNECTOR, DCL MATE, BODYLINK REFUSE	BM 1 C
DCL_MATE_2	CONNECTOR DCL MATE BODYLINK REFUSE	BM 1 C
DRL_OR_BB_DCL:A		BA 1 D
DRL_OR_BB_DCL:B		BA 1 D
DRL_OR_BB_DCL:C		BA 1 D
DRL_OR_BB_DCL:D		BA 1 D
DRL_OR_BB_DCL:E		BA 2 D
DRL_OR_BB_DCL:F		BA 2 D
DRL_OR_BB_DCL:G		BA 2 D
DRL_OR_BB_DCL:H		BA 2 D
DRL_OR_BB_DCL:J		BA 2 D
DRL_OR_BB_DCL:L		BA 2 D
DRL_OR_BB_DCL:M		BA 3 D
DRL_OR_BB_DCL:N		BA 3 D
DRL_OR_BB_DCL:P		BA 3 D
DRL_OR_BB_DCL:R		BA 3 D
DRL_OR_DCL2:J		BA 2 E
DRL_OR_DCL2:L		BA 2 E
DRL_OR_DCL2:M		BA 3 E
DRL_OR_DCL2:N		BA 3 E
DRL_OR_DCL2:P		BA 3 E
DRL_OR_DCL2:R		BA 3 E
DRL_OR_DCL:A		BA 1 E
DRL_OR_DCL:B		BA 1 E
DRL_OR_DCL:C		BA 1 E
DRL_OR_DCL:D		BA 1 E
DRL_OR_DCL:E		BA 2 E
DRL_OR_DCL:F		BA 2 E
DRL_OR_DCL:G		BA 2 E
DRL_OR_DCL:H		BA 2 E
DS1		AC 3 D
DS_PTO:A		BL 2 C

REF	DESCRIPTION	PAGE
DS_PTO:B		BL 2 C
DS_PTO:C		BL 2 C
DSFC:A		BF 1 D
DSFC:B		BF 2 E
DSFC:C		BF 1 D
DSFC:D		BG 1 D
DSFC:E		BG 2 C
DSFC:F		BG 1 D
DSFRT:A		BG 2 D
DSFRT:B		BG 2 D
DSRR:A		BG 2 C
DSRR:B		BG 2 C
DUAL_PTO:A		BK 2 A
DUAL_PTO:B		FB 1 B
DUAL_PTO:C		FB 1 A
DUAL_PTO:D		FB 1 A
DUAL_PTO:E		FB 1 A
DUAL_PTO:F		FB 1 A
DUAL_PTO_JMP	PLUG, JUMPER WIRE	FB 2 A
E11LA	LAMP, SIDE MARKER LEFT SIDE 1	GD 2 D
E11RA	LAMP, SIDE MARKER RIGHT SIDE 1	GD 4 D
E12L	LAMP, ROOF POS. LIGHT LEFT	GA 3 D
E12R	LAMP, ROOF POS. LIGHT, RIGHT	GA 3 D
E13LS	LAMP, DIR. INDICATOR LEFT SIDE	GD 3 D
E13RS	LAMP, DIR. INDICATOR RIGHT SIDE	GD 4 D
E17A	LAMP, CAB REAR DOME	GH 1 D
E17B	LAMP,FRONT LH DOME	GH 0 D
E17C	LAMP, FRONT RH DOME	GH 3 D
E19C	LAMP, ID LIGHT ROOF, CENTER	GA 0 D
E19L	LAMP, ID LIGHT ROOF, LEFT	GA 0 D
E19LS	LAMP, ROOF SIDE MARKER, LEFT	GD 3 B
E19R	LAMP, ID LIGHT ROOF, RIGHT	GA 0 D
E19RS	LAMP, ROOF SIDE MARKER, RIGHT	GD 3 B
E27L	TAIL LAMP MODULE, LEFTHAND	GF 0 C
E27R	TAIL LAMP MODULE, RIGHTHAND	GF 2 C
E30L	LH HEADLAMP	GD 0 D
E30R	RH HEADLAMP	GD 1 D
E38_08	LAMP, INDICATOR, IWDL	BD 1 B
E38_11	LAMP, INDICATOR, TRAILER ABS	EB 3 B
E38_11B	LAMP, INDICATOR, TRAILER ABS	EA 1 B
E38_12	LAMP INDICATOR, PTO	BK 3 B
E38_12	LAMP INDICATOR, PTO	BL 3 A
E38_12B	LAMP INDICATOR, PUMP ON PTO #2 OIL LEVEL	BN 1 C
E38_15	LAMP INDICATOR LOW FUEL PSI	CE 3 B
E38_16A	LAMP GREEN OKAY	CG 0 C
E38_16B	LAMP RED 50% LEL IS DETECTED	CG 1 C
E57	LAMP, POWER INDICATOR	GA 4 D
F13	FUSE ABS BATT	AA 3 A
F13	FUSE ABS BATT	EA 3 A
F13	FUSE ABS BATT	EB 3 A

https://truckmanualshub.com/

REFERENCES

REF	DESCRIPTION	PAGE
F13	FUSE ABS BATT	ED 3 A
F14	FUSE, OPEN	AA 3 A
F14	FUSE, OPEN	CD 2 A
F16	FUSE, VECU (EMS)	AB 0 B
F16	FUSE, VECU (EMS)	BA 0 A
F17	FUSE, CONTROL/SW INPUTS	AB 1 B
F17	FUSE, CONTROL/SW INPUTS	BA 1 A
F19	FUSE INST. CLUSTER	AA 3 A
F19	FUSE INST. CLUSTER	BE 0 A
F28		AC 3 B
F31	FUSE TRANS SPARE	AB 1 B
F31	FUSE TRANS SPARE	DD 3 A
F31	FUSE TRANS SPARE	NB 2 A
F38	FUSE ENGINE CONTROL UNIT	AA 1 D
F38	FUSE ENGINE CONTROL UNIT	CA 0 A
F38	FUSE ENGINE CONTROL UNIT	CE 2 A
F41	FUSE, ENG. ACC.	AA 1 D
F41	FUSE, ENG. ACC.	CA 1 A
F41	FUSE, ENG. ACC.	CG 3 A
F43	F43 FUSE, ENG COMP #2	AA 2 D
F43	F43 FUSE, ENG COMP #2	CA 1 B
F49	FUSE, ABS	AA 0 D
F49	FUSE, ABS	EA 3 A
F49	FUSE, ABS	EB 3 A
F49	FUSE, ABS	ED 3 A
F54	FUSE, DPF, BAT	AB 2 A
F56	FUSE TELMA	AA 2 D
F56	FUSE TELMA	NA 3 A
F60	FUSE, ENG COMP #1	AB 3 A
F60	FUSE, ENG COMP #1	CA 0 A
F62	FUSE, EAT BATT.	AB 3 A
F62	FUSE, EAT BATT.	CD 3 A
F63	FUSE, INSTR CLUSTER (EMS)	AB 2 B
F63	FUSE, INSTR CLUSTER (EMS)	BE 0 A
F64	FUSE, DPF, IGN	AB 2 B
F64	FUSE, DPF, IGN	CB 0 A
F65	BBM	AB 2 B
F69	FUSE, EAT EMS	AB 2 B
F69	FUSE, EAT EMS	CF 0 A
F71	FUSE, TRANS (BATT)	AB 4 A
F71	FUSE, TRANS (BATT)	DD 0 A
F78	FUSE CUMMINS ECU	CE 1 B
F79	FUSE CUMMINS ECU	CE 2 B
F80	FUSE CUMMINS ECU	CE 2 B
F81	FUSE, METHANE DETECTOR	CG 0 B
F81	FUSE, METHANE DETECTOR	CH 4 C
FCBL:A		GF 2 B
FCBL:B		GF 0 B
FCBL:C		GF 1 A
FCBL:D		GF 1 A

REF	DESCRIPTION	PAGE
FCBL:E		AD 1 C
FCCE:1		FB 3 D
FCCE:2		FB 2 D
FCCE:4		FB 1 C
FCCE:5		FB 1 D
FCCE:6		FB 1 C
FCCE:7		GF 2 B
FCCE:11		GF 1 E
FCCE:12		FB 2 C
FCCE:14		GF 1 E
FCCE:15		EA 0 D
FCCE:15		EB 0 B
FCCE:15		ED 0 B
FCCE:16		EA 0 D
FCCE:16		EB 0 B
FCCE:16		ED 0 B
FCCE:17		EA 1 D
FCCE:17		EB 0 B
FCCE:17		ED 0 B
FCCE:18		EA 1 E
FCCE:18		EB 0 B
FCCE:18		ED 0 B
FCCE:19		EA 1 D
FCCE:19		EB 0 B
FCCE:19		ED 0 B
FCCE:20		EA 1 D
FCCE:20		EB 1 B
FCCE:20		ED 1 B
FCCE:21		EA 1 D
FCCE:21		EB 1 B
FCCE:21		ED 1 B
FCCE:22		EA 1 D
FCCE:22		EB 1 B
FCCE:22		ED 1 B
FCCE:23		EA 1 E
FCCE:23		EB 1 B
FCCE:23		ED 1 B
FCCE:24		EA 1 D
FCCE:24		EB 1 B
FCCE:24		ED 1 B
FCCE:25		EA 1 D
FCCE:25		EB 1 B
FCCE:25		ED 1 B
FCCE:26		EA 1 D
FCCE:26		EB 1 B
FCCE:26		ED 1 B
FCCE:27		FB 1 E
FCCE:28		BF 2 D
FCCE:29		BF 1 C
FCCE:30		BF 1 C

https://truckmanualshub.com/

REFERENCES

REF	DESCRIPTION	PAGE
FCCE:31		BG 1 D
FCCE:32		BG 1 C
FCCE:33		GF 1 B
FCCE:34		GF 1 B
FCCE:35		GF 2 B
FCCPBB:1		BM 0 D
FCCPBB:2		BM 1 D
FCEIC:2		CA 3 B
FCEIC:3		CA 2 B
FCEIC:5		CA 2 B
FCEIC:6		CA 2 B
FCEIC:7		CA 3 D
FCEIC:8		CA 3 D
FCEIC:9		CF 3 B
FCEIC:10		CA 4 D
FCEIC:10		CB 2 D
FCEIC:11		CA 3 D
FCEIC:12		CF 3 B
FCEIC:13		CA 3 D
FCEIC:13		CB 2 B
FCEIC:14		CA 4 D
FCEIC:14		CB 1 B
FCEIC:15		CA 4 D
FCEIC:15		CB 1 B
FCEIC:16		CB 2 B
FCEIC:17		CB 2 B
FCEIC:18		CB 2 B
FCEIC:19		CB 2 B
FCEIC:20		CB 0 B
FCEIC:21		CB 1 B
FCEIC:22		CA 2 D
FCEIC:23		BG 0 B
FCEIC:25		CA 2 D
FCEIC:26		BG 0 B
FCEIC:28		CB 1 D
FCEIC:29		CB 1 D
FCEIC:30		CB 1 D
FCEIC:31		CB 0 D
FCEIC:32		CB 1 D
FCEIC:34		CB 2 B
FCEIC:35		CB 1 D
FCEIC:36		CB 1 D
FCEIC:37		CB 1 D
FCEIC:38		CB 2 B
FCEIC:39		CB 1 D
FCFH:A		CC 2 C
FCFH:B		CC 2 D
FCLA:A		FB 0 D
FCLA:B		FB 0 D
FCLA:C		FB 0 E

REF	DESCRIPTION	PAGE
FCSH:1		CD 0 D
FCSH:2		CD 1 D
FCSH:3		CD 0 D
FCSH:4		CD 1 D
FCSP:B		FB 1 D
FCSP:C		FB 2 D
FCSP:D		FB 2 D
FCSP:E		FB 2 D
FCSP:K		FB 3 D
FCSP:L		FB 1 D
FCSP:N		FB 3 D
FCSP:P		FB 1 D
FCSP:R		FB 2 D
FCSP:S		FB 2 D
FCTR:A		BC 3 B
FCTR:B		BE 3 B
FCTR:C		BF 2 D
FCTR:D		BF 2 D
FCTR:E		BC 3 B
FCTR:F		BB 0 C
FCTR:G		BB 1 C
FCTR:H		BE 3 B
FCTR:J		FB 3 A
FCTR:K		FB 3 B
FCTR:L		FB 1 B
FCTR:M		FB 1 E
FCUT:1		CF 3 D
FCUT:2		CF 3 D
FCUT:3		CF 3 D
FCUT:4		CF 3 D
FCUT:5		CF 3 D
FCUT:6		CF 3 D
FCUT:7		CF 3 D
FCUT:8		CF 2 C
FCUT:9		CF 2 D
FCUT:10		CF 2 D
FCUT:11		CF 2 D
FCUT:12		CF 2 D
FCUT:13		CF 1 D
FCUT:14		CF 1 D
FCUTEXT:1		CF 3 C
FCUTEXT:2		CF 3 C
FCUTEXT:3		CF 3 C
FCUTEXT:4		CF 3 C
FCUTEXT:5		CF 3 C
FCUTEXT:6		CF 3 C
FCUTEXT:7		CF 3 C
FCUTEXT:8		CF 2 C
FCUTEXT:9		CF 2 C
FCUTEXT:10		CF 2 C

https://truckmanualshub.com/

REFERENCES

REF	DESCRIPTION	PAGE
FCUTEXT:11		CF 2 C
FCUTEXT:12		CF 2 D
FCUTEXT:13		CF 1 C
FCUTEXT:14		CF 1 C
FM1	FUSE, MAIN GND	AD 1 B
FM3	FUSE, MAIN PWR, CAB	AC 3 C
FM3_A1		AC 3 C
FM3_A2		AC 3 D
FM5	FUSE LNG FUEL SENSOR	CG 3 C
FM6	FUSE NG DETECTOR	CG 0 C
FRC1:A1		AB 2 B
FRC1:A1		CF 0 A
FRC1:A2		AB 2 B
FRC1:A3		AB 2 B
FRC1:A3		CB 0 A
FRC1:A4		AB 2 B
FRC1:A4		BE 0 A
FRC1:A5		AB 1 B
FRC1:A5		DD 3 A
FRC1:A5		NB 2 A
FRC1:A6		AB 1 B
FRC1:A6		BC 1 A
FRC1:A7		AB 1 B
FRC1:A7		BA 1 A
FRC1:A8		AB 0 B
FRC1:A8		BA 0 A
FRC1:A9		AA 2 C
FRC1:A9		KA 1 A
FRC1:A9		NA 4 A
FRC1:A10		AA 1 C
FRC1:A10		FC 1 A
FRC1:A11		AA 1 C
FRC1:A11		BK 0 A
FRC1:A11		BL 0 A
FRC1:A11		BN 0 A
FRC1:A11		GG 1 A
FRC1:A11		NA 0 A
FRC1:A12		AA 1 C
FRC1:A12		NB 0 A
FRC1:A13		AA 1 C
FRC1:A13		GP 0 A
FRC1:A14		AA 0 C
FRC1:A14		GP 2 A
FRC1:A15		AA 0 C
FRC1:A15		GP 4 A
FRC1:A16		AA 0 C
FRC1:A16		FB 2 A
FRC1:B1		AB 3 B
FRC1:B2		AB 3 C
FRC1:B3		AA 0 B

REF	DESCRIPTION	PAGE
FRC1:B4		AA 0 C
FRC1:C1		AB 4 B
FRC1:C1		DD 0 A
FRC1:C2		AB 3 B
FRC1:C2		KC 3 B
FRC1:C3		AB 3 B
FRC1:C4		AB 3 B
FRC1:C4		CD 3 A
FRC1:C5		AB 3 B
FRC1:C5		NB 2 A
FRC1:C6		AB 3 B
FRC1:C6		CA 0 A
FRC1:C7		AB 2 B
FRC1:C8		AB 2 B
FRC1:C8		GD 1 A
FRC1:C9		AA 2 B
FRC1:C9		KB 2 A
FRC1:C9		XA 2 A
FRC1:C10		AA 2 B
FRC1:C10		KC 2 A
FRC1:C11		AA 2 B
FRC1:C11		AC 0 A
FRC1:C12		AA 1 B
FRC1:C12		GA 1 A
FRC1:C12		GH 3 A
FRC1:C13		AA 1 B
FRC1:C13		GA 3 A
FRC1:C14		AA 1 B
FRC1:C14		GA 2 A
FRC1:C15		AA 1 B
FRC1:C15		GA 0 A
FRC1:C16		AA 0 B
FRC1:C16		GA 1 A
FRC1:D1		AB 4 B
FRC1:D1		HA 2 A
FRC1:E1		AA 4 B
FRC1:E1		NA 2 A
FRC1:E2		AA 3 B
FRC1:E2		IC 0 A
FRC1:E2		ID 0 A
FRC1:E3		AA 3 B
FRC1:E3		BE 0 A
FRC1:E4		AA 3 B
FRC1:E4		FC 1 A
FRC1:E5		AA 3 B
FRC1:E5		CD 2 A
FRC1:E6		AA 3 B
FRC1:E6		EA 3 A
FRC1:E6		EB 3 A
FRC1:E6		ED 3 A

https://truckmanualshub.com/

REFERENCES

REF	DESCRIPTION	PAGE
FRC1:E7		AA 2 B
FRC1:E7		BO 1 A
FRC1:E7		NB 0 A
FRC1:E8		AA 2 B
FRC1:E8		GG 1 A
FRC1:E8		NA 0 A
FRC1:E9		AB 2 B
FRC1:E9		GD 0 A
FRC1:E10		AB 1 B
FRC1:E10		GG 2 A
FRC1:E11		AB 1 B
FRC1:E11		GQ 3 B
FRC1:E12		AB 1 B
FRC1:E12		GA 1 A
FRC1:E13		AB 0 B
FRC1:E13		NB 3 A
FRC1:E14		AB 0 B
FRC1:E14		GG 2 A
FRC1:E15		AB 0 B
FRC1:E15		NA 3 A
FRC1:E16		AA 4 B
FRC1:F1		AA 2 C
FRC1:F2		AA 2 C
FRC1:F3		AA 3 C
FRC1:F4		AA 3 C
FRC1:F8		AA 2 D
FRC1:F8		CA 0 B
FRC1:G1		AA 0 D
FRC1:G2		AA 0 D
FRC1:G2		EA 3 A
FRC1:G2		EB 3 A
FRC1:G2		ED 3 A
FRC1:G3		AA 0 D
FRC1:G3		NA 3 A
FRC1:G4		AA 0 D
FRC1:G4		KC 1 A
FRC1:G5		AA 1 D
FRC1:G5		CA 1 A
FRC1:G5		CG 3 A
FRC1:G6		AA 1 D
FRC1:G6		GG 1 A
FRC1:G7		AA 1 D
FRC1:G7		CA 0 A
FRC1:G7		CE 2 A
FRC1:G8		AA 2 D
FRC1:G8		CA 1 B
FRC1:G9		AA 2 D
FRC1:G9		NA 1 A
FRC1:G10		AA 2 D
FRC1:G10		NA 3 A

REF	DESCRIPTION	PAGE
FRC1:G11		AA 2 D
FRC1:G11		IC 3 A
FRC1:G12		AA 3 D
FRC1:G12		BG 4 A
FRC1:G13		AA 3 D
FRC1:G13		CC 2 A
FRC1:G13		NB 2 A
FRC1:G14		AA 3 D
FRC1:G14		FA 2 B
FRC1:G15		AA 4 D
FRC1:G15		BE 4 B
FRC1:G16		AA 4 D
FRC1:G16		BO 0 A
FRC1:G16		NB 2 A
FRC1_P1	STUD, FRC1 POWER	AA 0 A
FRC2:A30		DD 2 B
FRC2:A85		DD 2 B
FRC2:A86		DD 2 B
FRC2:A87		DD 2 B
FRC2:B30		GA 4 B
FRC2:B85		GA 4 B
FRC2:B86		GA 4 B
FRC2:B87		GA 4 B
FRC2:C30		GA 3 B
FRC2:C85		GA 3 B
FRC2:C86		GA 3 B
FRC2:C87		GA 3 B
FRC2:D30		FB 0 A
FRC2:D85		FB 0 A
FRC2:D86		FB 0 B
FRC2:D87A		FB 0 B
FRC2:E30		GG 2 B
FRC2:E85		GG 2 B
FRC2:E86		GG 2 B
FRC2:E87		GG 2 B
FRC2:F30		AC 2 D
FRC2:F30		CA 0 B
FRC2:F85		AC 2 D
FRC2:F85		CA 0 B
FRC2:F86		AC 3 D
FRC2:F86		CA 0 B
FRC2:F87		CA 0 B
FRC2:F87A		AC 3 D
FRC2:G30		GA 1 C
FRC2:G85		GA 1 C
FRC2:G86		GA 1 C
FRC2:G87		GA 1 C
FRC2:H30		HA 2 B
FRC2:H85		HA 2 B
FRC2:H86		HA 2 B

https://truckmanualshub.com/

REFERENCES

REF	DESCRIPTION	PAGE
FRC2:H87		HA 2 B
FRC2:J30		NB 3 B
FRC2:J85		NB 3 B
FRC2:J86		NB 3 B
FRC2:J87		NB 3 B
FRC2:K30		NB 3 B
FRC2:K85		NB 3 B
FRC2:K86		NB 3 B
FRC2:K87		NB 3 B
FRC2:L30		DD 3 B
FRC2:L30		KB 2 D
FRC2:L85		DD 3 B
FRC2:L85		KB 3 D
FRC2:L86		DD 3 B
FRC2:L86		KB 3 D
FRC2:L87		DD 3 B
FRC2:L87		KB 2 D
FRC2:M30		DD 4 B
FRC2:M85		DD 4 B
FRC2:M86		DD 4 B
FRC2:M87		DD 4 B
FRC2:M87A		DD 4 B
FRC2:N30		DD 2 B
FRC2:N85		DD 2 B
FRC2:N86		DD 2 B
FRC2:N87A		DD 2 B
FRC2:P30		DD 3 B
FRC2:P85		DD 3 B
FRC2:P86		DD 3 B
FRC2:P87		DD 3 B
FRC2:P87A		DD 3 B
FRC2:R1		BD 4 D
FRC2:R3		BD 4 C
FRC2:R4		CH 0 C
FRC2:R6		CH 0 C
FRC2:S1		BD 4 D
FRC2:S3		BD 4 C
FRC2:S5		CH 0 C
FRC2:S6		CH 0 C
FRC2:S7		CG 3 B
FRC2:S8		CG 3 C
FRC2:T1		KB 3 B
FRC2:T2		KB 3 B
FRC2:T3		CE 1 B
FRC2:T4		CE 1 B
FRC2:T5		CE 2 B
FRC2:T6		CE 2 B
FRC2:T7		CE 2 B
FRC2:T8		CE 2 B
FRC2_P2	STUD, FRC1 POWER #2	AA 0 A

REF	DESCRIPTION	PAGE
FRC3:A30		GD 0 C
FRC3:A85		GD 0 C
FRC3:A86		GD 0 B
FRC3:A87		GD 0 B
FRC3:A87A		GD 0 B
FRC3:B30		GD 1 C
FRC3:B85		GD 1 C
FRC3:B86		GD 1 B
FRC3:B87		GD 1 B
FRC3:B87A		GD 1 B
FRC3:C30		GA 1 A
FRC3:C85		GA 1 A
FRC3:C86		GA 1 B
FRC3:C87		GA 1 B
FRC3:C87A		GA 1 B
FRC3:D30		KC 2 B
FRC3:D85		KC 2 B
FRC3:D86		KC 2 B
FRC3:D87		KC 2 B
FRC3:D87A		KC 2 B
FRC3:E30		AC 2 C
FRC3:E85		AC 2 C
FRC3:E86		AC 2 C
FRC3:E87		AC 2 C
FRC3:F30		AA 1 B
FRC3:F85		AA 1 B
FRC3:F86		AA 1 B
FRC3:F87		AA 1 B
FRC3:F87A		AA 2 B
FRC3:G30		GG 2 B
FRC3:G85		GG 2 B
FRC3:G86		GG 2 B
FRC3:G87		GG 2 B
FRC3:H30		GP 2 B
FRC3:H85		GP 2 B
FRC3:H86		GP 2 C
FRC3:H87		GP 2 C
FRC3:H87A		GP 2 C
FRC3:J30		GP 2 B
FRC3:J85		GP 1 B
FRC3:J86		GP 1 C
FRC3:J87		GP 2 C
FRC3:J87A		GP 2 C
FRC3:K30		GP 3 B
FRC3:K85		GP 3 B
FRC3:K86		GP 3 C
FRC3:K87		GP 3 C
FRC3:K87A		GP 3 C
FRC3:L30		GP 4 B
FRC3:L85		GP 3 B

https://truckmanualshub.com/

REFERENCES

REF	DESCRIPTION	PAGE
FRC3:L86		GP 3 C
FRC3:L87		GP 4 C
FRC3:L87A		GP 4 C
FRC3:M30		GQ 3 D
FRC3:M85		GQ 3 D
FRC3:M86		GQ 3 C
FRC3:M87		GQ 3 C
FRC3:M87A		GQ 3 C
FRC3:N30		FC 1 B
FRC3:N85		FC 1 B
FRC3:N86		FC 1 B
FRC3:N87		FC 1 B
FRC3:P30		FC 2 B
FRC3:P85		FC 2 B
FRC3:P86		FC 2 B
FRC3:P87		FC 2 B
FRC3:R1		CH 0 B
FRC3:R3		CH 0 B
FRC3:S1		CH 0 B
FRC3:S3		CH 0 B
FRC3:T1		CG 0 B
FRC3:T1		CH 4 B
FRC3:T2		CG 0 B
FRC3:T2		CH 4 C
G01	BATTERY	AC 3 C
G01	BATTERY	AD 1 B
G01	BATTERY	BM 0 C
G01	BATTERY	CE 4 A
G01	BATTERY	CF 0 B
G01	BATTERY	NB 1 A
G01_A1		AC 3 B
G01_A2		CF 0 A
G01_A3		AC 3 B
G01_B1		AD 1 B
G01_B2		AD 1 B
G02	Alternator	AC 4 A
G02	Alternator	AD 0 C
G02.B-		AD 0 C
G02.B-A1		AD 0 C
G02B+A1		AC 4 A
G02S		AC 4 B
H02_1_114	Horn	GQ 3 D
H03	REVERSE WARNER, ACOUSTIC	GF 2 B
H16	METHANE FUME DETECTOR	CH 1 B
H17	METHANE DETECTION STATUS	CH 3 B
HN_REM:A		GQ 3 C
HO7_Z	DETECTOR METHANE	CG 1 B
HOOKUP_LP:A		NA 2 B
HOOKUP_LP:B		NA 2 B
ILLUM_OPT2:A		KA 1 A

REF	DESCRIPTION	PAGE
ILLUM_OPT2:B		KA 1 C
ILLUM_OPT3:A		KA 1 A
ILLUM_OPT3:B		KA 1 C
ILLUM_OPT4:A		BA 2 E
ILLUM_OPT4:B		BA 2 D
ILLUM_OPT5:A		BA 2 E
ILLUM_OPT5:B		BA 2 D
ILLUM_OPT6:A		FD 1 B
ILLUM_OPT6:B		FD 0 D
ILLUM_OPT7:A		FD 1 B
ILLUM_OPT7:B		FD 0 C
ILLUM_OPT:A		NA 2 B
ILLUM_OPT:B		NA 2 B
IMS:A		AC 3 B
KK_20828057_33121		CA 3 A
LHCS:A		CD 3 B
LHCS:B		BG 0 B
LHCS:C		CD 4 B
LHCS:D		CE 1 D
LHCS:E		CD 3 C
LHCS:F		CD 3 A
LHCS:G		CD 2 C
LHCS:H		CD 3 B
LHCS:J		BG 1 B
LHCS:K		CD 4 B
LHCS:L		CE 1 D
LHCS:M		CD 2 C
LHCS:N		CE 1 D
LHCS:P		CD 4 C
LHSM:1		GD 2 C
LHSM:2		GD 3 C
LHSM:3		GD 2 D
LHSP:A		CD 2 B
LHSP:B		CD 3 C
M01L	MOTOR WINDSHIELD WIPER LH	GP 3 C
M01R	MOTOR WINDSHIELD WIPER RH	GP 2 C
M02	MOTOR WS. WASHER PUMP	GP 0 C
M15	MOTOR FUEL PUMP	CB 2 A
M110LH	MIRROR, LH, HEATED	ID 0 D
M110LHL_MATE	MIRROR, LH, HEATED, LIGHTED	IC 2 D
M110LHM	MIRROR, LH, HEATED, MOTORIZED	IC 0 D
M110RHL_MATE	MIRROR, RH, HEATED, LIGHTED	IC 3 D
M110RHM	MIRROR, RH, HEATED, MOTORIZED	IC 1 D
M110RHM	MIRROR, RH, HEATED, MOTORIZED	ID 1 D
M120A	MOTOR, AUX. COOLING FAN #1	CD 0 E
M120B	MOTOR, AUX. COOLING FAN #2	CD 1 E
M121A	MOTOR AUX COOLING FAN #1	CD 2 D
M121B	MOTOR AUX COOLING FAN #2	CD 3 D
MC_DUAL_PTO:A		BK 2 A
MC_DUAL_PTO:B		FB 2 B

https://truckmanualshub.com/

REFERENCES

REF	DESCRIPTION	PAGE
MC_DUAL_PTO:C		BC 2 B
MC_DUAL_PTO:D		BC 2 A
MC_DUAL_PTO_JMP	PLUG, JUMPER WIRE	BC 0 B
MC_SOL_SW:A		BD 2 B
MC_SOL_SW:B		BD 2 B
MC_SOL_SW:C		BD 1 B
MC_SOL_SW:D		BD 1 C
MC_SOL_SW:E		BD 1 C
MC_SOL_SW:F		BD 2 C
MC_SOL_SW:G		BD 2 C
MC_SOL_SW:H		FB 3 B
MC_SOL_SW:J		FB 2 B
MC_SOL_SW:K		FB 3 C
MC_SOL_SW:L		FB 0 B
MC_SOL_SW:M		FB 2 C
MC_SOL_SW:N		FB 1 C
MC_SOL_SW:P		FB 0 C
MC_SOL_SW:R		FB 1 C
MC_SOL_SW:S		FB 2 B
MCAATS:A		BF 2 C
MCAATS:B		BF 2 C
MCAF2:A		CD 1 C
MCAF:A		CD 0 C
MCAF:B		CD 1 C
MCAS:A		BA 3 D
MCAS:B		BA 3 E
MCAS:C		BF 3 C
MCAS:D		BF 4 C
MCAS:E		BF 3 D
MCAS:F		BF 4 D
MCAS:G		GA 3 B
MCAS:H		GA 3 B
MCAS:J		NB 2 B
MCAS:K		NB 2 B
MCAS:L		BB 2 D
MCAS:M		BB 3 E
MCAT1:1		DC 2 B
MCAT1:2		DC 3 C
MCAT1:3		DC 1 B
MCAT1:4		DC 2 B
MCAT1:5		DC 1 B
MCAT1:6		DC 1 B
MCAT1:7		DC 1 B
MCAT1:8		DC 1 B
MCAT1:9		DC 1 B
MCAT1:10		DC 0 B
MCAT1:11		DC 0 B
MCAT1:12		DC 1 B
MCAT1:13		DC 1 B
MCAT1:14		DC 2 B

REF	DESCRIPTION	PAGE
MCAT1:15		DC 2 B
MCAT1:16		DC 2 C
MCAT1:17		DC 0 B
MCAT1:18		DC 0 B
MCAT1:19		DC 1 B
MCAT1:20		DC 1 B
MCAT1:21		DC 2 B
MCAT1:22		DC 2 B
MCAT1:23		DC 2 B
MCAT1:24		DC 1 B
MCAT1:27		DC 0 B
MCAT1:30		DC 0 B
MCAT1:31		DC 0 B
MCAT1:32		FD 1 C
MCAT1:33		FD 1 C
MCAT:A1		DD 4 E
MCAT:A2		DD 3 C
MCAT:A3		DD 3 C
MCAT:A5		DD 1 C
MCAT:A6		BH 1 C
MCAT:A7		BH 2 C
MCAT:A8		DD 0 B
MCAT:A9		DD 2 B
MCAT:A10		BH 2 C
MCAT:B1		DD 4 E
MCAT:B2		DD 4 C
MCAT:B3		DD 1 C
MCAT:B5		DD 3 C
MCAT:B6		BH 1 C
MCAT:B7		BH 3 C
MCAT:B8		DD 0 B
MCAT:B9		DD 0 D
MCDLR:A		NA 3 B
MCFC:1		BM 0 D
MCFC:2		BM 1 D
MCFC:3		CA 1 C
MCFC:4		GA 3 D
MCFC:5		CA 0 C
MCFC:6		EA 3 E
MCFC:6		EB 3 C
MCFC:6		ED 3 C
MCFC:7		EA 3 E
MCFC:7		EB 3 C
MCFC:7		ED 3 C
MCFC:8		CA 0 C
MCFC:9		DC 0 B
MCFC:10		DC 0 B
MCFC:11		DC 0 B
MCFC:12		DC 0 B
MCFC:13		DC 0 B

https://truckmanualshub.com/

REFERENCES

REF	DESCRIPTION	PAGE
MCFC:14		DC 0 B
MCFC:15		DC 3 C
MCFC:16		FB 0 C
MCFC:17		FB 0 D
MCFC:18		XA 1 B
MCFC:19		XA 0 B
MCFC:20		BD 2 D
MCFC:21		DC 0 B
MCFC:22		DC 1 B
MCFC:23		DC 1 B
MCFC:24		DC 1 B
MCFC:25		DC 1 B
MCFC:26		DC 1 B
MCFC:27		DC 2 C
MCFC:28		BG 1 C
MCFC:29		BG 1 D
MCFC:30		FB 1 C
MCFC:31		CG 3 C
MCFC:32		CG 3 C
MCFC:33		DC 1 B
MCFC:34		DC 1 B
MCFC:35		DC 1 B
MCFC:36		DC 1 B
MCFC:37		DC 1 B
MCFC:38		DC 1 B
MCFC:39		FD 2 C
MCFC:40		AC 1 C
MCFC:41		BC 3 D
MCFC:42		BC 3 D
MCFC:43		BF 1 C
MCFC:44		FB 1 B
MCFC:45		DC 2 B
MCFC:46		DC 2 B
MCFC:47		DC 2 B
MCFC:48		DC 2 B
MCFC:49		DC 2 B
MCFC:50		DC 2 B
MCFC:51		FD 2 C
MCFC:52		BG 0 B
MCFC:53		BG 4 B
MCFC:54		FB 3 B
MCFC:55		BB 1 C
MCFC:55		BC 3 E
MCFC:56		BG 0 D
MCFC:57		DC 2 B
MCFC:59		BE 3 B
MCFC:60		BG 0 D
MCFC:61		BC 3 E
MCFC:61		BF 2 A
MCFC:62		FB 2 C

REF	DESCRIPTION	PAGE
MCFC:63		XA 3 D
MCFC:64		XA 3 D
MCFC:65		EA 1 D
MCFC:65		EB 1 B
MCFC:65		ED 1 B
MCFC:66		EA 1 D
MCFC:66		EB 1 B
MCFC:66		ED 1 B
MCFC:67		EA 1 D
MCFC:67		EB 0 B
MCFC:67		ED 0 B
MCFC:68		EA 1 B
MCFC:68		EB 1 C
MCFC:68		ED 1 C
MCFC:69		EA 0 B
MCFC:69		EB 0 C
MCFC:69		ED 0 C
MCFC:70		EA 1 D
MCFC:70		EB 0 B
MCFC:70		ED 0 B
MCFC:71		EA 0 D
MCFC:71		EB 0 B
MCFC:71		ED 0 B
MCFC:72		EA 0 D
MCFC:72		EB 0 B
MCFC:72		ED 0 B
MCFC:73		EA 1 D
MCFC:73		EB 1 B
MCFC:73		ED 1 B
MCFC:74		EA 1 D
MCFC:74		EB 1 B
MCFC:74		ED 1 B
MCFC:75		EA 1 B
MCFC:75		EB 1 C
MCFC:75		ED 1 C
MCFC:76		EA 1 B
MCFC:76		EB 1 C
MCFC:76		ED 1 C
MCFC:77		EA 1 D
MCFC:77		EB 1 B
MCFC:77		ED 1 B
MCFC:78		EA 0 D
MCFC:78		EB 1 B
MCFC:78		ED 1 B
MCFC:79		EA 1 B
MCFC:79		EB 0 C
MCFC:79		ED 0 C
MCFC:80		EA 1 B
MCFC:80		EB 0 C
MCFC:80		ED 0 C

https://truckmanualshub.com/

REFERENCES

REF	DESCRIPTION	PAGE
MCFC:81		EA 1 B
MCFC:81		EB 1 C
MCFC:81		ED 1 C
MCFC:82		EA 0 B
MCFC:82		EB 0 C
MCFC:82		ED 0 C
MCFC:83		EA 0 B
MCFC:83		EB 0 C
MCFC:83		ED 0 C
MCFC:84		EA 0 D
MCFC:84		EB 0 B
MCFC:84		ED 0 B
MCFC:85		EA 1 B
MCFC:85		EB 1 C
MCFC:85		ED 1 C
MCFC:86		EA 1 D
MCFC:86		EB 1 B
MCFC:86		ED 1 B
MCFC:87		BB 0 C
MCFC:88		BB 1 C
MCFC:89		EA 2 D
MCFC:89		EB 3 C
MCFC:89		ED 3 C
MCFC:90		EA 2 D
MCFC:90		EB 3 C
MCFC:90		ED 3 C
MCFC:91		EA 3 D
MCFC:91		EB 3 C
MCFC:91		ED 3 C
MCFC:92		EA 3 D
MCFC:92		EB 3 C
MCFC:92		ED 3 C
MCFC:93		EA 2 D
MCFC:93		EB 2 C
MCFC:93		ED 2 C
MCFC:94		EA 3 D
MCFC:94		EB 3 C
MCFC:94		ED 3 C
MCFC:95		EA 2 D
MCFC:95		EB 2 C
MCFC:95		ED 2 C
MCFC:96		EA 3 D
MCFC:96		EB 3 C
MCFC:96		ED 3 C
MCFC:97		BF 2 B
MCFC:97		CE 0 B
MCFC:98		GA 0 D
MCFC:99		AC 2 C
MCFC:99		AC 3 C
MCFC:100		CE 3 B

REF	DESCRIPTION	PAGE
MCFC:101		BC 2 B
MCFC:102		CE 2 B
MCFC:103		FB 1 C
MCFC:104		BF 1 C
MCFC:105		GF 2 A
MCFC:106		GF 1 A
MCFC:107		BF 1 C
MCFC:108		BF 1 C
MCFC:109		BF 1 C
MCFC:110		CE 2 B
MCFC:110		CF 0 B
MCFC:111		CE 2 D
MCFC:112		BC 3 B
MCFC:113		BD 2 B
MCFC:114		FB 3 D
MCFC:115		CG 2 C
MCFC:116		CA 1 B
MCFC:116		CE 1 B
MCFC:117		BE 4 B
MCFC:118		BD 2 C
MCFC:119		FB 3 C
MCFC:120		BK 1 A
MCFC:121		CD 0 D
MCFC:121		CD 2 B
MCFC:122		CD 1 D
MCFC:122		CD 3 B
MCFC:123		NB 0 C
MCFC:124		HA 1 D
MCFC:125		CC 2 C
MCFC:126		NB 3 C
MCFC:127		FA 2 B
MCFC:128		NB 1 C
MCFG:A		CG 3 B
MCFG:B		CG 3 B
MCFG:C		CG 3 B
MCFG:D		CG 3 A
MCMD:A		CG 0 C
MCMD:A		CG 0 C
MCPM:1		IC 3 C
MCPM:1		IC 2 B
MCPM:2		IC 2 C
MCPM:3		IC 2 C
MCPM:4		IC 1 C
MCPM:4		ID 1 C
MCPM:5		IC 0 C
MCPM:6		IC 0 C
MCPM:7		IC 1 C
MCPM:7		ID 1 C
MCPM:8		IC 1 C
MCPM:8		ID 1 C

https://truckmanualshub.com/

REFERENCES

REF	DESCRIPTION	PAGE
MCRF1:A		KB 1 D
MCRF1:B		KB 2 B
MCRF1:C		GH 0 D
MCRF1:D		GA 0 D
MCRF1:E		KB 1 C
MCRF1:F		KB 2 C
MCRF1:G		GA 3 D
MCRF1:H		GD 4 E
MCRF2:A		GD 3 C
MCRF2:B		GD 4 C
MCRF2:C		KC 2 C
MCRF2:D		KC 2 D
MCRF2:E		GH 3 B
MCRF2:F		GH 1 B
MCRF3:A		KA 1 C
MCRF3:B		KA 1 C
MCRF3:C		KA 1 C
MCRF4:A		KB 2 C
MCTL1:A		GF 2 B
MCTL1:B		GF 1 B
MCTL1:C		GF 1 B
MCTL1:D		GF 2 B
MCTL1:E		GF 1 D
MCTL:A		GF 2 C
MCTL:B		GF 1 C
MCTL:C		GF 1 C
MCTL:D		GF 2 C
MCTL:E		GF 1 D
MDMC:1		CH 3 C
MDMC:2		CH 2 D
MDMC:3		CH 1 C
MDMC:4		CH 0 C
MSTC-1_2646	GXL_0.8_2	XA 2 D
MSTC-1_3248	GXL_0.8_2	CA 2 C
MSTC-2_3248	GXL_0.8_2	CA 2 C
MSTC-3_2646	GXL_0.8_2	XA 2 D
MSTC-3_3248	GXL_0.8_2	CA 2 C
MSTC-4_2646	GXL_0.8_2	XA 2 D
MSTC-5_2646	GXL_0.8_2	XA 3 D
MSTC-5_3248	GXL_0.8_2	CD 4 B
MSTC-6_2646	GXL_0.8_2	XA 3 D
MSTC-6_3248	GXL_0.8_2	CD 3 B
MSTC-7_2646	GXL_0.8_2	XA 3 E
MSTC-8_2646	GXL_0.8_2	CD 3 B
MSTC-9_2646	GXL_0.8_2	CD 4 B
MSTC-10_2646	GXL_0.8_2	CE 0 D
PB_START:A		AC 1 B
PB_START:B		AC 1 B
PBSTART:A		AC 1 B
PBSTART:B		AC 1 B

REF	DESCRIPTION	PAGE
PBSTART:B		AC 1 B
PBSTART_BL:A		BM 0 A
PBSTART_BL:A		BM 0 A
PBSTART_BL:B		BM 0 A
PBSTART_BL:B		BM 0 A
PMP_DRV:1		BN 1 C
PMP_DRV:2		BN 1 B
PMP_DRV:3		BN 1 C
PMP_DRV:4		BN 1 C
PMP_DRV:5		BN 1 B
PMP_DRV:6		BN 2 C
PMP_DRV:7		BN 2 C
PMP_DRV:8		BN 2 B
PMP_DRV:9		BN 2 C
PPCO:A		FD 1 B
PPCO:B		FD 1 C
PPCO:C		FD 1 C
PTO_DCL_A:A		BK 3 A
PTO_DCL_A:A		BL 2 A
PTO_DCL_A:A		BN 2 A
PTO_DCL_A:C		BK 3 A
PTO_DCL_A:C		BL 2 A
PTO_DCL_A:C		BN 2 C
PTO_DCL_A:D		BK 2 C
PTO_DCL_A:D		BL 2 B
PTO_DCL_A:D		BN 4 A
PTO_DCL_A:E		BK 3 A
PTO_DCL_A:E		BL 2 B
PTO_DCL_A:E		BN 2 C
PTO_DCL_A:F		BN 4 C
PTO_DCL_A:G		BK 4 D
PTO_DCL_A:G		BL 3 D
PTO_DCL_A:G		BN 4 D
PTO_DCL_A:H		BK 4 C
PTO_DCL_A:H		BL 3 E
PTO_DCL_A:H		BN 4 D
PTO_DCL_B:J		BK 3 A
PTO_DCL_B:N		BK 4 C
PTO_DCL_B:N		BN 4 D
PTO_DCL_B:P		BK 4 C
PTO_DCL_B:P		BL 3 E
PTO_DCL_B:P		BN 0 C
PTO_DCL_B:R		BK 4 C
PTO_DCL_B:R		BN 4 D
PTO_EHT:A		BC 2 B
PTO_EHT:A		BC 2 B
PTO_EHT:B		BC 2 B
R01	HEATER, ENGINE PREHEAT	AD 0 C
R01A	RESISTOR 110V ENGINE HEATER	CC 3 C
R04	CIGAR LIGHTER	KC 3 C

https://truckmanualshub.com/

REFERENCES

REF	DESCRIPTION	PAGE
R05	AIR DRYER, HEATED	FA 2 C
R05_A	AIR DRYER	FA 0 C
R08	RESISTOR, TERMINATION J1939 CAN	CA 3 A
R08	RESISTOR, TERMINATION J1939 CAN	XA 3 B
R09	HEATER, FUEL WATER SEPARATOR	CC 2 C
R18A	HEATER, HEATED DRAIN VALVE, COOLING TANK	FA 2 C
R18B	HEATER, HEATED DRAIN VALVE, WET TANK	FA 1 C
R29	HEATER, NOxCARE TANK TO PUMP HOSE	CF 3 E
R31	HEATER, NOxCARE PUMP TO INJECTOR HOSE	CF 3 D
R34	Termination resistor	XA 1 E
R39A	RESISTOR CUMMINS PULL UP IVS	BC 1 B
R39B	RESISTOR CUMMINS PULL DOWN FUEL LEVEL	BF 0 C
RC1:A1		NA 2 C
RC1:A3		NA 2 D
RC1:A4		GA 3 D
RC1:A6		GA 2 D
RC1:A7		BK 2 B
RC1:A7		BL 1 B
RC1:A7		BN 4 B
RC1:A7		NA 0 C
RC1:A9		BK 2 B
RC1:A9		BL 1 C
RC1:A9		BN 4 B
RC1:A9		NA 0 D
RC1:B1		NA 2 C
RC1:B2		NA 2 D
RC1:B3		NA 2 D
RC1:B4		GA 3 D
RC1:B5		GA 2 D
RC1:B6		GA 2 D
RC1:B7		BK 2 B
RC1:B7		BL 1 B
RC1:B7		BN 4 B
RC1:B7		NA 0 C
RC1:B8		BK 2 B
RC1:B8		BL 1 C
RC1:B8		BN 4 B
RC1:B8		NA 0 D
RC1:B9		BK 2 B
RC1:B9		BL 1 C
RC1:B9		BN 4 B
RC1:B9		NA 0 D
RC1:C1		BK 0 C
RC1:C1		BL 0 C
RC1:C1		BN 1 B
RC1:C1		NA 0 D
RC1:C2		BK 0 C
RC1:C2		BL 1 C
RC1:C2		BN 1 B
RC1:C2		NA 1 D

REF	DESCRIPTION	PAGE
RC1:C3		BK 0 C
RC1:C3		BL 0 B
RC1:C3		BN 1 B
RC1:C3		NA 0 C
RC1:C4		BK 3 B
RC1:C4		BL 3 D
RC1:C4		BN 3 B
RC1:C4		NA 1 D
RC1:C5		BK 3 B
RC1:C5		BL 3 D
RC1:C5		BN 3 B
RC1:C5		NA 1 D
RC1:C6		BK 3 B
RC1:C6		BL 3 C
RC1:C6		BN 3 B
RC1:C6		NA 1 C
RC1:C7		BK 1 C
RC1:C7		BL 3 C
RC1:C7		BN 0 C
RC1:C7		NA 1 D
RC1:C8		BK 1 C
RC1:C8		BL 3 C
RC1:C8		BN 0 C
RC1:C8		NA 1 D
RC1:C9		BK 1 C
RC1:C9		BL 3 C
RC1:C9		BN 0 C
RC1:C9		NA 1 C
RC1:D1		BK 0 C
RC1:D1		BL 0 C
RC1:D1		BN 1 B
RC1:D1		NA 0 D
RC1:D3		BK 0 C
RC1:D3		BL 0 B
RC1:D3		BN 1 B
RC1:D3		NA 0 C
RC1:D4		BK 3 B
RC1:D4		BL 3 D
RC1:D4		BN 3 B
RC1:D4		NA 1 D
RC1:D6		BK 3 B
RC1:D6		BL 3 C
RC1:D6		BN 3 B
RC1:D6		NA 1 C
RC1:D7		BK 1 C
RC1:D7		BL 3 C
RC1:D7		BN 0 C
RC1:D7		NA 1 D
RC1:D9		BK 1 C
RC1:D9		BL 3 C

https://truckmanualshub.com/

REFERENCES

REF	DESCRIPTION	PAGE
RC1:D9		BN 0 C
RC1:D9		NA 1 C
RC2:A1		BO 0 D
RC2:A3		BO 0 D
RC2:A4		BO 2 B
RC2:A6		BO 1 C
RC2:B1		BO 0 D
RC2:B2		BO 0 D
RC2:B3		BO 0 D
RC2:B4		BO 1 B
RC2:B5		BO 2 C
RC2:B6		BO 2 C
RC2:C1		BN 2 B
RC2:C2		BN 2 B
RC2:C3		BN 2 B
RC2:D1		BN 2 B
RC2:D3		BN 2 B
RC3:A7		BM 0 B
RC3:A9		BM 0 C
RC3:B2		CD 0 B
RC3:B3		CD 0 A
RC3:B5		CD 1 B
RC3:B6		CD 1 A
RC3:B7		BM 0 B
RC3:B8		BM 0 C
RC3:C1		CD 0 C
RC3:C3		CD 0 B
RC3:C4		CD 1 C
RC3:C6		CD 1 B
RC3:C8		BM 0 B
RC3:C9		BM 0 B
RC3:D1		CD 0 C
RC3:D3		CD 0 B
RC3:D4		CD 1 C
RC3:D6		CD 1 B
RC3:D7		BM 0 B
RC3:D9		BM 0 B
RFH:A		GH 3 D
RFH:B		GH 0 D
RFH:C		GH 3 C
RFH:D		GH 1 B
RFH:E		KB 2 D
RFH:F		KB 2 D
RFH:G		KB 1 D
RFH:H		KB 1 D
RFH:J		KC 3 C
RFH:K		KC 3 D
RHSM:A		GD 4 D
RHSM:B		GD 4 D
RHSM:C		GD 4 D

REF	DESCRIPTION	PAGE
RLY01	RELAY, EMS #1	AB 3 B
RLY02	RELAY, EMS #2	AA 2 C
RLY03	RELAY, IGN. #1	AA 0 B
RLY04	RELAY, IGN #3	AA 3 C
RLY06	RELAY, EMERGENCY STOP LAMP	GA 3 B
RLY07	RELAY 07, PTO #2	BN 2 B
RLY10B	RELAY, HORN, REMOTE	BO 0 D
RLY11	RELAY, TRAILER TAIL LAMP	GG 2 B
RLY12	RELAY, TRAILER STOP LAMP	GG 2 B
RLY13	RELAY, CAB & TRAILER CLEARANCE LAMP	GA 1 C
RLY14	RELAY, HORN	GQ 3 D
RLY016A	RELAY, WINDSHIELD WIPER RH LOW	GP 1 B
RLY016B	RELAY, WINDSHIELD WIPER RH HIGH	GP 2 B
RLY016C	RELAY WINDSHIELD WIPER LH LOW	GP 3 B
RLY016D	RELAY WINSHIELD WIPER LH HIGH	GP 3 B
RLY17	RELAY, REVERSE POWER	DD 3 B
RLY17	RELAY, REVERSE POWER	KB 3 D
RLY28	RELAY, CB BINDING POST	KC 2 B
RLY29	RELAY, NEUTRAL POWER	NB 3 B
RLY34	RELAY, PRE-EMS	AA 1 B
RLY35	RELAY, HVAC CAB	HA 2 B
RLY36	RELAY, START CNTL 1	AC 2 C
RLY38	RELAY, LO BEAM LH	GD 0 B
RLY39	RELAY, LO BEAM RH	GD 1 B
RLY45	RELAY PTO ENABLE	DD 4 B
RLY46	RELAY RANGE PTO	DD 3 B
RLY47	RELAY RETARDER	DD 2 B
RLY48	RELAY STOP LAMPS	DD 2 B
RLY52	RELAY, HIGH BEAM	GA 1 B
RLY58	RELAY BEACON LAMP PTO	FC 1 B
RLY59	RELAY BEACON LAMP REVERSE	FC 2 B
RLY60	RELAY, PARK BRAKE STOP LAMP	GA 4 B
RLY61	RELAY, LIFT AXLE REVERSE	FB 0 A
RLY61B	RELAY, LIFT AXLE, PUMP ON	BO 1 B
RLY62	RELAY, REVERSE BODY POWER	NB 3 B
RLY63	RELAY, POWER INDICATOR	GA 3 D
RLY63_JMP	JUMPER, CLEARANCE LIGHTS	GA 2 E
RLY64	RELAY 64, SPARE 1	BK 2 B
RLY64	RELAY 64, SPARE 1	BL 1 B
RLY64	RELAY 64, SPARE 1	BN 4 B
RLY64	RELAY 64, SPARE 1	NA 0 D
RLY65	RELAY 65, SPARE 2	BK 0 C
RLY65	RELAY 65, SPARE 2	BL 0 B
RLY65	RELAY 65, SPARE 2	BN 1 B
RLY65	RELAY 65, SPARE 2	NA 0 C
RLY66	RELAY 66, SPARE 3	BK 3 B
RLY66	RELAY 66, SPARE 3	BL 3 C
RLY66	RELAY 66, SPARE 3	BN 3 B
RLY66	RELAY 66, SPARE 3	NA 1 D
RLY67	RELAY 67, SPARE 4	BK 1 C

https://truckmanualshub.com/

REFERENCES

REF	DESCRIPTION	PAGE
RLY67	RELAY 67, SPARE 4	BL 3 C
RLY67	RELAY 67, SPARE 4	BN 0 C
RLY67	RELAY 67, SPARE 4	NA 1 C
RLY68	RELAY, ENGINE COMP #1	CA 0 B
RLY89	RELAY METHANE DETECTOR	CH 0 B
RLY91	RELAY 91, AUX FAN #1	CD 0 C
RLY92	RELAY 92, AUX FAN #2	CD 1 C
RLY94	RELAY, START INTERUPT 1	BM 0 B
RLY95	RELAY, START INTERUPT 2	BM 0 B
RLY97	STARTER LOCK OUT	AC 2 D
RLY98	RELAY PDLO	BD 4 D
RLY99	RELAY, METHANE DETECT	CH 0 C
S01	SW. MAIN LIGHTING SELECT. TYPE	GA 0 B
S006	SWITCH, SPEED CONTROL	BA 1 B
S07	SWITCH' ENG BRK SELECTOR	BA 2 B
S007	SWITCH, SET/RESUME	BA 1 B
S008	SWITCH, S/D OVERRIDE	BA 4 B
S009	SWITCH WIPER CTRL	GP 0 B
S013	SWITCH, MIRROR DEFROST	IC 3 B
S016	SWITCH, ATC LIMITED SLIP	EA 2 B
S016	SWITCH, ATC LIMITED SLIP	EB 2 B
S016	SWITCH, ATC LIMITED SLIP	ED 2 B
S017B	SW. FRONT RH DOME LMP	GH 3 D
S018_1	POSITION SWITCH, PTO_1	BC 3 B
S018_2	POSITION SWITCH, PTO_2, R.H.	FB 1 D
S18A	SWITCH, POWER TAKE OFF (PTO #1)	BC 2 B
S18B	SWITCH, POWER TAKE OFF (PTO #2)	FB 1 B
S019	SWITCH POWER DIVIDER LOCKOUT	FB 4 C
S019A	SWITCH POWER DIVIDER LOCKOUT	FB 3 C
S020	SWITCH, AIR SUSP.	FB 2 B
S023	SWITCH, NEUTRAL CONTROL	FB 3 C
S024	SW. INTERWHL DIFF. LOCK	BD 2 B
S24C	SWITCH RETARDER	DD 1 B
S28C	SWITCH, PUMP/ DRIVE MODE, PTO #2 PTO #1	BN 1 B
S030	SWITCH, MIRROR CONTROL	IC 0 B
S030	SWITCH, MIRROR CONTROL	ID 0 B
S036	SWITCH, IGNITION	AC 0 B
S036B	SWITCH, PUSH BUTTON START	AC 1 B
S038	SW, PRESSURE SERVICE BRKE.	GA 3 B
S038C	SWITCH, SERVICE BRAKE	BB 2 D
S039	SWITCH, DIRECTIONAL SIGNAL	GA 2 C
S039	SWITCH, DIRECTIONAL SIGNAL	GQ 1 A
S040P	SW. PRESSURE PRIM. LOW AIR	BF 3 D
S040S	SW. PRESSURE SEC. LOW AIR	BF 4 D
S042	SWITCH, BACK UP	BE 3 A
S43	SW. PRESS. PRKNG BRKE INDICATOR, NC.	BA 3 D
S044	SWITCH, CLUTCH	BB 3 C
S045	SW. DRL OVERRIDE	BA 1 E
S047	SWITCH, IWDL FRT ENGAGED	BG 2 D
S047A	SWITCH, IWDL, FRT ENGAGED	BG 2 D

REF	DESCRIPTION	PAGE
S048	SWITCH, IWDL RR ENGAGED	BG 2 C
S048A	SWITCH, IWDL, RR ENGAGED	BG 2 C
S051A	SWITCH, AUX. LIFT AXLE, PUSHER	FB 0 B
S051B	SWITCH, AUX. LIFT AXLE, TAG	FB 0 C
S63	POSITION SWITCH, LOW/HIGH RANGE GEAR	BN 4 C
S72	SWITCH, WATER IN FUEL	BB 2 B
S90_1	SWITCH, PRESS. NO NEUTRAL	FB 3 A
S106A	SWITCH, ABS DIAGNOSTIC	EB 3 A
S108	SWITCH MUNCIE PTO PUMP	FC 1 B
S110	SWITCH, PARK BRAKE, NEUTRAL	NB 2 B
S111	SWITCH, SMART, DPF	CA 3 B
S112	SWITCH, BODY BUILDER PARK BRAKE	BB 1 D
S112_JMP	JUMPER, SWITCH, BODY BUILDER PARK BRAKE	BB 2 E
S112A	SWITCH, BODY BUILDER PARK BRAKE	BK 0 D
S112B	SWITCH, BODY BUILDER PARK BRAKE	BN 1 C
S113	SWITCH, ODOMETER/ HOURMETER TRIP RESET	BE 0 C
S115	SWITCH, REAR VIEW CAMERA	KA 1 B
S116	SWITCH, PRESSURE, N.O., DUAL PTO	FB 1 E
S116A	SWITCH, PRESSURE, N.O. PTO	BL 0 C
S137	SWITCH PARKER PTO	FD 1 B
S147	Switch, RPM regulation	BC 4 D
S169	SWITCH, BATTERY MAIN	AC 3 D
S320	SWITCH, PRESSURE PARKER PTO	FD 3 C
SHAR:A		BG 0 B
SHAR:B		BG 0 B
SP3B7	S	GF 1 C
SP3B9	S	GF 1 B
SP5E1	S	GF 1 B
SP27B	S*	BN 1 B
SP27B1	S	BL 3 A
SP31A20	S	CE 2 D
SP38A	T	CE 2 A
SP38A2	S	CA 0 C
SP_BAT1:A		NA 3 B
SP_IGN1:A		NA 3 B
SP_IGN1:B		NA 3 B
SP_IGN2:A		NA 4 B
SP_IGN3:A		NA 1 B
SP_IGN3:B		NA 1 B
SP_RLY1:A		BK 3 A
SP_RLY1:A		BL 3 C
SP_RLY1:A		BN 3 A
SP_RLY1:A		NA 1 C
SP_RLY1:B		BK 3 C
SP_RLY1:B		BL 3 D
SP_RLY1:B		BN 3 C
SP_RLY1:B		NA 1 E
SP_RLY1:C		BK 3 C
SP_RLY1:C		BL 3 D
SP_RLY1:C		BN 3 C

https://truckmanualshub.com/

REFERENCES

REF	DESCRIPTION	PAGE
SP_RLY1:C		NA 1 E
SP_RLY1:D		BK 3 C
SP_RLY1:D		BL 3 D
SP_RLY1:D		BN 3 C
SP_RLY1:D		NA 1 E
SP_RLY1:E		BK 3 A
SP_RLY1:E		BL 3 C
SP_RLY1:E		BN 3 A
SP_RLY1:E		NA 1 C
SP_RLY1:F		BK 1 B
SP_RLY1:F		BL 3 C
SP_RLY1:F		BN 0 B
SP_RLY1:F		NA 1 C
SP_RLY1:G		BK 1 D
SP_RLY1:G		BL 3 D
SP_RLY1:G		BN 0 D
SP_RLY1:G		NA 1 E
SP_RLY1:H		BK 1 D
SP_RLY1:H		BL 3 D
SP_RLY1:H		BN 0 D
SP_RLY1:H		NA 1 E
SP_RLY1:J		BK 1 D
SP_RLY1:J		BL 3 D
SP_RLY1:J		BN 0 D
SP_RLY1:J		NA 1 E
SP_RLY1:K		BK 1 B
SP_RLY1:K		BL 3 C
SP_RLY1:K		BN 0 B
SP_RLY1:K		NA 1 C
SP_RLY2:A		BK 2 A
SP_RLY2:A		BL 1 B
SP_RLY2:A		BN 4 A
SP_RLY2:A		NA 0 C
SP_RLY2:B		BK 2 C
SP_RLY2:B		BL 1 C
SP_RLY2:B		BN 4 C
SP_RLY2:B		NA 0 E
SP_RLY2:C		BK 2 C
SP_RLY2:C		BL 1 C
SP_RLY2:C		BN 4 C
SP_RLY2:C		NA 0 E
SP_RLY2:D		BK 2 C
SP_RLY2:D		BL 1 C
SP_RLY2:D		BN 4 C
SP_RLY2:D		NA 0 E
SP_RLY2:E		BK 2 A
SP_RLY2:E		BL 1 B
SP_RLY2:E		BN 4 A
SP_RLY2:E		NA 0 C
SP_RLY2:F		BK 0 B

REF	DESCRIPTION	PAGE
SP_RLY2:F		BL 0 B
SP_RLY2:F		BN 1 A
SP_RLY2:F		NA 0 C
SP_RLY2:G		BK 0 D
SP_RLY2:G		BL 1 C
SP_RLY2:G		BN 1 C
SP_RLY2:G		NA 1 E
SP_RLY2:H		BK 0 D
SP_RLY2:H		BL 0 C
SP_RLY2:H		BN 1 C
SP_RLY2:H		NA 0 E
SP_RLY2:J		BK 0 D
SP_RLY2:J		BL 0 C
SP_RLY2:J		BN 1 B
SP_RLY2:J		NA 0 E
SP_RLY2:K		BK 0 B
SP_RLY2:K		BL 0 B
SP_RLY2:K		BN 1 A
SP_RLY2:K		NA 0 C
SP_RLY53:A		NA 2 C
SP_RLY53:B		NA 2 C
SP_RLY53:C		NA 2 E
SP_RLY53:D		NA 2 E
SP_RLY53_87A:A		NA 2 E
SPAABSS12	T	EB 3 B
SPARE_LEADS	SPARE LEADS, BLUNT CUT	BN 0 D
SPC8		CG 1 C
SPC9		CG 1 D
SPCB1	T	BA 0 D
SPCB7	S	BL 1 A
SPCB7A	S	BK 2 A
SPCB11	T	BA 3 D
SPCB16	T	CD 1 C
SPCB19	T	BB 3 D
SPCM1	S	CE 1 D
SPEMA17A1	S	CB 2 B
SPEMA24A1	S	CF 3 C
SPEMA44A1	S	CF 2 C
SPEMA44A2	S	CF 2 D
SPEMA45A1	S	CB 0 C
SPEMA50A1	S	CF 1 C
SPEMA52A2	S	CF 3 D
SPEMA54A1	S	CF 1 C
SPEMA54A2	S	CF 3 D
SPF2A	T	GA 1 A
SPF2C	T	GA 0 C
SPF2C2	S	GD 1 D
SPF3B	T	GA 0 C
SPF3B1	S	GA 0 D
SPF3F	T	BE 1 A

https://truckmanualshub.com/

REFERENCES

REF	DESCRIPTION	PAGE
SPF3F	T	CG 3 A
SPF3F	T	DD 0 B
SPF3F	T	EA 2 A
SPF3F	T	EB 2 A
SPF3F	T	ED 2 A
SPF3F	T	GA 0 B
SPF3F	T	GH 3 A
SPF3F	T	KB 2 A
SPF3F	T	NA 2 A
SPF3F25	S	KB 2 C
SPF3F66	T	BA 2 E
SPF3F69	T	FD 1 B
SPF3H	T	GA 2 B
SPF4C	T	GD 3 C
SPF4D	T	GD 4 C
SPF5A	T	GA 3 B
SPF5B	T	GA 3 B
SPF5D	T	GA 2 D
SPF5D1	S	GF 2 B
SPF5E	T	GA 3 D
SPF6A	T	GA 1 B
SPF6A	T	GH 3 B
SPF6B	S	GH 1 C
SPF7A	T	AC 0 B
SPF7C	T	BM 0 A
SPF7D	T	AC 1 C
SPF7D9	S	CD 3 B
SPF7G	T	BF 4 C
SPF8A	T	FB 2 B
SPF8B	T	FB 3 D
SPF8F	S	BK 0 D
SPF9B	T	KC 2 C
SPF9D	S	GA 2 D
SPF10A	T	KB 2 B
SPF10A	T	XA 2 B
SPF10C	T	KB 2 B
SPF15A	T	FC 1 B
SPF15B	T	FC 2 C
SPF16A	T	BA 0 B
SPF17A	T	BA 1 B
SPF17A6	S	BN 4 A
SPF17A10	S	BD 2 B
SPF17A16	T	BA 1 E
SPF17A30	S	BL 2 D
SPF17E	S	BK 2 A
SPF17E1	S	BL 2 A
SPF17M1	T	BC 2 C
SPF18A	T	BC 1 B
SPF18C1	S	BK 0 B
SPF21A	T	GP 4 B

REF	DESCRIPTION	PAGE
SPF22A	T	GP 2 B
SPF23A	T	GP 0 B
SPF23C	T	GP 1 A
SPF23D	T	GP 2 B
SPF25A	T	HA 2 B
SPF25B	T	HA 2 C
SPF25D	S	HA 1 D
SPF27A	S	BK 0 B
SPF27A1	S	BL 0 C
SPF27A2	S	BN 0 A
SPF27A3	T	GG 1 B
SPF27A4	T	CG 3 C
SPF27B	S	BK 1 D
SPF27C	S	BN 1 C
SPF27H	S	BN 1 D
SPF29B	T	AA 1 C
SPF31A	T	DD 3 A
SPF34A	T	NB 3 B
SPF34B	T	NB 3 C
SPF34C2		GF 2 C
SPF34C3	S	GF 2 B
SPF35B	T	GA 1 D
SPF35B3	S	IC 2 D
SPF35C	S	GA 3 D
SPF38A	T	CA 0 B
SPF41A	S	CA 1 B
SPF41A2	T	CG 3 B
SPF42A	S	BE 4 B
SPF42B	S	BE 4 C
SPF43A	S	CA 1 C
SPF44A	S	FA 2 C
SPF44A_		FA 0 C
SPF49A3	T	EB 3 B
SPF49A4	S	EA 3 B
SPF50B1	T	GD 0 D
SPF51B2	S	GD 1 D
SPF55B	S	IC 3 C
SPF55B1	S	IC 1 C
SPF55B1	S	ID 1 C
SPF61A	S	BO 0 B
SPF61C	S	BO 0 C
SPF62B	S	CF 0 B
SPF63A	T	BE 0 B
SPF66A	T	KA 1 B
SPF66A	T	NA 4 B
SPF72B	T	KB 3 A
SPF78A	S	CE 1 C
SPF81A	T	CH 4 C
SPF81A1	T	CH 3 C
SPF91A	T	CD 0 B

https://truckmanualshub.com/

REFERENCES

REF	DESCRIPTION	PAGE
SPF92A	T	CD 1 B
SPFAA	S	CE 4 B
SPFB07A	S	CG 3 D
SPHA1	T	BG 1 D
SPHA2	T	BG 1 C
SPHA13	T	BE 1 D
SPHA20	T	BE 1 D
SPHA21	T	BE 1 D
SPHA22	T	BE 1 C
SPHB22	S	BF 1 C
SPHB22A	S	BF 2 E
SPHB22C1	S	BF 2 C
SPHB24		BG 2 D
SPHD3+	S	BN 1 C
SPJ1587H	S	XA 0 B
SPJ1587H1	S	XA 0 C
SPJ1587L	S	XA 1 B
SPJ1587L1	S	XA 1 C
SPJ1939_2HB1	S	CA 3 C
SPJ1939_2LB1	S	CA 2 C
SPJ1939H7	S	XA 3 D
SPJ1939H8	S	XA 2 D
SPJ1939H9	S	XA 2 D
SPJ1939HB	S	XA 3 D
SPJ1939HB1	S	XA 3 C
SPJ1939HB2	S	XA 3 C
SPJ1939HB3	S	XA 3 C
SPJ1939HB4	S	XA 3 B
SPJ1939HB5	S	XA 3 B
SPJ1939L7	S	XA 3 E
SPJ1939L8	S	XA 2 E
SPJ1939L9	S	XA 2 E
SPJ1939LB	S	XA 3 D
SPJ1939LB1	S	XA 3 D
SPJ1939LB2	S	XA 3 C
SPJ1939LB3	S	XA 3 C
SPJ1939LB4	S	XA 3 B
SPJ1939LB5	S	XA 3 B
SPLICE		BC 4 D
splice273_3318		AD 1 A
splice274_3318		AC 3 B
splice281_35		CB 2 A
SPN110	T	DD 0 C
SPN112	T	DC 3 B
SPN124CM	T	DD 2 C
SPN131	S	DC 1 D
SPN145	T	DD 3 C
SPN158	T	DC 2 C
SPN158A	S	DC 2 D
SPN163	T	DD 1 B

REF	DESCRIPTION	PAGE
SPN163F	S	FD 3 C
SPN163G	S	FD 3 C
SPN165	T	DD 3 C
SPR13SA	S	GD 3 D
SPR13SB	S	GD 4 D
SPR135AA	S	GD 4 C
SPURDB	T	CD 1 A
SPX1A3	S	AD 1 C
SPX1E	T	AD 3 C
SPX1E	T	BA 4 E
SPX1E	T	BB 3 B
SPX1E	T	BC 2 E
SPX1E	T	BD 1 C
SPX1E	T	BE 0 E
SPX1E	T	BF 2 B
SPX1E	T	EA 0 A
SPX1E	T	EB 0 D
SPX1E	T	ED 2 C
SPX1E	T	XA 2 D
SPX1E6	T	EB 2 A
SPX1E6	T	ED 2 B
SPX1E8	S	EA 2 A
SPX1E9	T	EA 2 B
SPX2A	T	AD 3 B
SPX2A1	T	AD 3 B
SPX2A1	T	FB 0 B
SPX2A1	T	FC 1 D
SPX2A1	T	NB 2 D
SPX2A2	T	AD 3 B
SPX2A2	T	CH 2 D
SPX2A2	T	GA 2 D
SPX2A2	T	GD 4 E
SPX2A2	T	GH 0 E
SPX2A2	T	GP 0 E
SPX2A2	T	KA 1 C
SPX2A2	T	KB 1 E
SPX2A2	T	KC 2 D
SPX2A3	T	AD 3 B
SPX2A3	T	GG 0 C
SPX2A3	T	NB 0 D
SPX2A4	T	AD 3 B
SPX2A5	T	AD 3 B
SPX2A5	T	BA 4 E
SPX2A5	T	DD 1 C
SPX2A5	T	EA 2 C
SPX2A5	T	EB 2 B
SPX2A5	T	ED 2 B
SPX2A33	S	BK 3 D
SPX2A42	S	GD 3 E
SPX2A48	S	GH 3 C

https://truckmanualshub.com/

REFERENCES

REF	DESCRIPTION	PAGE
SPX2A58	S	BN 1 A
SPX2A58	S	BO 0 E
SPX2A60	S	BL 4 B
SPX2A65	T	BM 0 C
SPX2A70	T	BA 2 D
SPX2A73	T	CH 2 D
SPX2A104	T	FD 1 C
SPX2D	T	AA 2 E
SPX2D	T	AB 3 C
SPX2D	T	AC 1 D
SPX2D	T	AD 3 B
SPX2D	T	BC 1 E
SPX2D	T	BF 0 D
SPX2D	T	CA 0 C
SPX2D	T	CG 3 C
SPX2D	T	DD 2 C
SPX2D	T	GA 1 D
SPX2D	T	GG 2 C
SPX2D	T	HA 1 E
SPX2D	T	NA 1 B
SPX2D	T	NB 3 C
SPX2D16	T	HA 2 D
SPX2D18	S	BK 3 C
SPX2D19	S	BN 1 C
SPX2D21	S	BL 0 E
SPX2N109	T	DD 0 B
SPX2N109A	T	DD 0 C
SPX2N109B		FD 3 D
SPX2N109F	S	FD 3 D
SPX3B	S	AD 3 C
SPX3B	S	GP 2 E
SPX3C5		FB 0 D
SPX3F	S	AD 3 C
SPX3F	S	CH 1 C
SPX3F	S	GD 1 E
SPX3F	S	IC 2 C
SPX3F1	T	GD 0 E
SPX3F2	S	GD 1 E
SPX3H	S	IC 2 D
SPX3H1	S	IC 1 D
SPX3H1	S	ID 1 C
SPX88_25	S	BN 3 D
SPX136B	S	AD 3 D
SPX136B	S	CD 1 E
SPX136B	S	FD 4 D
SPX136B	S	HA 3 E
SPX136B4	S	AD 2 D
SPX136B9	S	AD 3 D
SPX136B11	S	AD 3 D
SPX136B16	S	GF 1 D

REF	DESCRIPTION	PAGE
SPX136B18	S	CF 4 C
SPX136B19	S	CA 2 C
SPX136B34		GF 1 C
SPX136B38	S	FB 2 E
SPX140A	S	AD 1 C
SPX140A3	S	AD 2 C
SPX140A3	S	FA 2 D
SPX140A4	S	AD 2 C
SPXE11	S	CG 3 D
SPXN109J	S	FD 3 D
T30_1_6019	J1939	BB 1 C
T30_1_6943	J1939	ED 3 C
T30_2_1966	J1939	XA 3 B
T30_2_2646	J1939	XA 3 B
T30_3_1966	J1939	XA 3 B
T30_3_2646	J1939	XA 3 D
T30_3_6019		BM 2 D
T30_5_1966	J1939	DD 4 D
T30_6_1966	J1939	DD 3 E
T30_7_1966	J1939	XA 3 B
T30_8_1966	J1939	XA 3 C
T30_9_1966	J1939	XA 3 C
T30_10_1966	J1939	XA 3 D
T30_11_1966	J1939	XA 3 D
T30_16_1966	J1939	XA 2 C
T30_17_1966	J1939	BB 2 C
T30_18_1966	J1939	BE 0 C
T30_19_1966	J1939	EA 3 B
T30_20_1966	J1939	EA 3 C
T30_21_1966	J1939	EB 3 C
T30_22_1966	J1939	CA 4 B
TC40-1_2507		EA 1 D
TC40-1_2646		DC 0 B
TC40-1_2907		CE 0 D
TC40-1_3988		BB 0 C
TC40-1_5675		DC 0 C
TC40-1_5795		DD 2 D
TC40-1_5804		EA 2 D
TC40-1_5886		EA 2 C
TC40-1_6943		ED 0 B
TC40-1_7084		ED 2 D
TC40-2_2507		EA 2 D
TC40-2_2646		DC 0 B
TC40-2_3988		BB 0 C
TC40-2_5675		DC 0 C
TC40-2_5795		DC 0 D
TC40-2_5804		EA 2 D
TC40-2_5886		EA 2 C
TC40-2_6943		ED 3 D
TC40-2_7084		ED 3 D

https://truckmanualshub.com/

REFERENCES

REF	DESCRIPTION	PAGE
TC40-3_1966		XA 1 C
TC40-3_2507		EA 2 D
TC40-3_2646		DC 0 B
TC40-3_3988		BB 0 D
TC40-3_5675		DC 0 C
TC40-3_5795		DC 0 D
TC40-3_5804		EB 0 B
TC40-3_6943		ED 0 C
TC40-4_1966		XA 0 B
TC40-4_2507		EA 1 B
TC40-4_5795		DC 0 D
TC40-4_5804		EB 1 B
TC40-4_6943		ED 3 C
TC40-5_1966		XA 0 C
TC40-5_2507		EA 1 B
TC40-5_5795		DC 0 D
TC40-5_6943		ED 1 B
TC40-6_1966		XA 0 C
TC40-6_2507		CB 1 C
TC40-6_5795		DC 0 B
TC40-6_6943		ED 2 D
TC40-7_1966		BB 2 C
TC40-7_2507		CF 1 B
TC40-7_5795		DC 0 B
TC40-7_6943		ED 2 C
TC40-8_1966		BE 1 C
TC40-8_2507		CF 3 B
TC40-8_5795		DC 0 B
TC40-8_6943		ED 0 D
TC40-9_2507	twisted cable	CB 1 D
TC40-9_6943		ED 0 C
TC40-10_6943		ED 1 D
TC40-11_1966		EB 3 C
TC40-11_6943		ED 1 C
TC40-12_1966		GG 1 C
TC40-13_6943		ED 1 C
TC40-14_6943		ED 1 B
TC40-15_1966		EA 2 D
TC40-15_6943		ED 0 B
TC40-18_1966		EA 2 D
TC40-19_1966		EA 0 C
TC40-20_1966		EA 0 D
TC40-21_1966		EA 0 D
TC40-23_1966		EA 1 C
TC40-24_1966		EA 1 B
TC40-26_1966		EA 1 C
TC40-27_1966		EA 1 D
TC40-28_1966		EA 1 B
TC40-30_1966		EA 1 C
TC40-31_1966		EB 2 C

REF	DESCRIPTION	PAGE
TC40-32_1966		EB 2 D
TC40-34_1966		EB 3 C
TC40-35_1966		EB 3 D
TC40-36_1966		EB 1 C
TC40-37_1966		EB 1 D
TC40-38_1966		EB 0 C
TC40-39_1966		EB 0 D
TC40-40_1966		EB 0 B
TC40-41_1966		EB 0 B
TC40-42_1966		EB 1 B
TC40-43_1966		EB 1 B
TC_1_35		CB 0 D
TLBU:A		GF 2 C
TLBU:B		GF 2 C
TRPTO:A		FD 3 C
TRPTO:B		FD 2 C
TRPTO:C		FD 3 D
V27	DIODE, PTO EHT	BK 2 A
V27	DIODE, PTO EHT	BL 1 A
V30	DIODE, STOP LAMP	BF 4 D
V35	DIODE, METHANE DETECTION	CH 0 D
V36	DIODE, ALLISON REVERSE MUTE	DD 3 C
VECU_DRL_OR	DRL OVERRIDE VECU PIN A30	BA 1 D
X0C	SPLICE PACK, ILLUMINATION, SEE DIAGRAM GH	BA 2 A
X0C	SPLICE PACK, ILLUMINATION, SEE DIAGRAM GH	BC 3 A
X0C	SPLICE PACK, ILLUMINATION, SEE DIAGRAM GH	BD 2 A
X0C	SPLICE PACK, ILLUMINATION, SEE DIAGRAM GH	CA 4 A
X0C	SPLICE PACK, ILLUMINATION, SEE DIAGRAM GH	FB 4 A
X0C	SPLICE PACK, ILLUMINATION, SEE DIAGRAM GH	FC 1 A
X0C	SPLICE PACK, ILLUMINATION, SEE DIAGRAM GH	GH 3 B
X0C	SPLICE PACK, ILLUMINATION, SEE DIAGRAM GH	GP 1 A
X0C	SPLICE PACK, ILLUMINATION, SEE DIAGRAM GH	HA 2 A
X0C	SPLICE PACK, ILLUMINATION, SEE DIAGRAM GH	IC 3 A
X0C	SPLICE PACK, ILLUMINATION, SEE DIAGRAM GH	NB 0 A
X1	STUD, CAB GROUND #1	AD 2 C
X01	CONNECTOR, VEHICLE DIAGNOSTICS	XA 1 C
X1_C1	STUD, CAB GND #1 MAIN	AD 2 C
X2	STUD, CAB GROUND #2	AD 2 B
X2_C1	STUD, CAB GND #2 STANDARD	AD 2 B
X2_SP1	SPLICE PACK, GROUND X2A6	AD 4 B
X2_SP1	SPLICE PACK, GROUND X2A6	BC 2 C
X2_SP1	SPLICE PACK, GROUND X2A6	BD 2 C
X2_SP1	SPLICE PACK, GROUND X2A6	CA 3 B
X2_SP1	SPLICE PACK, GROUND X2A6	CH 0 D
X2_SP1	SPLICE PACK, GROUND X2A6	FB 4 D
X2_SP1	SPLICE PACK, GROUND X2A6	FC 0 D
X2_SP1	SPLICE PACK, GROUND X2A6	GA 0 C
X2_SP1	SPLICE PACK, GROUND X2A6	HA 2 B
X2_SP1	SPLICE PACK, GROUND X2A6	IC 3 B
X2_SP1	SPLICE PACK, GROUND X2A6	NA 2 B

https://truckmanualshub.com/

REFERENCES

REF	DESCRIPTION	PAGE
X4_C1		AD 1 D
X4_C2		AD 1 D
X06D	CONNECTOR, ALLISON BODY BUILDER	BH 0 C
X06D_MATE_BL	CONNECTOR, ALLISON BODYBUILDER, BODYLINK	BM 2 B
X07A	POWER OUTLET #1	KC 1 C
X07B	POWER OUTLET, PANEL	BO 1 C
X10	B+ pass through, Cab	AC 4 C
X10_C1	L.H. CAB B+ STUD	AC 4 C
X10_C2		AC 4 C
X11	CONNECTOR, ENGINE MANAGEMENT INTERFACE	CA 0 C
X11A	CONNECTORS CUMMINS ISL G ENGINE INTERFACE	CE 0 C
X31A	JUNCTION BLOCK, 14 POST MAIN	BJ 1 B
X31A	JUNCTION BLOCK, 14 POST MAIN	BK 1 B
X31A	JUNCTION BLOCK, 14 POST MAIN	BL 1 B
X31A	JUNCTION BLOCK, 14 POST MAIN	BM 1 D
X31A	JUNCTION BLOCK, 14 POST MAIN	BN 1 B
X31A	JUNCTION BLOCK, 14 POST MAIN	GG 2 C
X31A_C1	X31A JUNCTION TERMINAL, POST 2	GG 2 C
X31A_C1_1	X31A JUNCTION, TERMINAL STUD 1	BJ 1 B
X31A_C1_1	X31A JUNCTION, TERMINAL STUD 1	BM 3 B
X31A_C2	X31A JUNCTION TERMINAL, POST 3	GG 2 C
X31A_C2_1	X31A JUNCTION, TERMINAL STUD 2	BJ 2 C
X31A_C2_1	X31A JUNCTION, TERMINAL STUD 2	BM 4 C
X31A_C3	X31A JUNCTION TERMINAL, POST4	GG 1 C
X31A_C3_1	X31A JUNCTION, TERMINAL STUD 3	BJ 2 C
X31A_C3_1	X31A JUNCTION, TERMINAL STUD 3	BM 4 C
X31A_C4	X31A JUNCTION TERMINAL, POST5	GG 1 C
X31A_C4_1	X31A JUNCTION, TERMINAL STUD 4	BJ 1 C
X31A_C4_1	X31A JUNCTION, TERMINAL STUD 4	BM 3 C
X31A_C5	X31A JUNCTION TERMINAL, POST 6	GG 1 C
X31A_C5_1	X31A JUNCTION, TERMINAL STUD 5	BJ 1 C
X31A_C5_1	X31A JUNCTION, TERMINAL STUD 5	BM 3 C
X31A_C6	X31A JUNCTION TERMINAL, POST 7	GG 1 C
X31A_C6_1	X31A JUNCTION, TERMINAL STUD 6	BJ 1 C
X31A_C6_1	X31A JUNCTION, TERMINAL STUD 6	BM 3 C
X31A_C7_2	X31A JUNCTION, TERMINAL STUD 7	BM 3 C
X31A_C10_1	X31A JUNCTION, TERMINAL STUD 10	BM 1 D
X31A_C13	X31A JUNCTION, TERMINAL, POST 13	BK 0 B
X31A_C13_1	X31A JUNCTION, TERMINAL, POST 13	BL 0 B
X31A_C13_2	X31A JUNCTION, TERMINAL POST 13	BN 0 B
X32A	BODY BUILDER JUNCTION A BOC	GG 2 D
X32A_C1		GG 2 D
X32A_C2		GG 2 D
X32A_C3		GG 2 D
X32A_C4		GG 1 D
X32A_C5		GG 1 D
X32A_C6		GG 1 D
X32A_C7		GG 1 D
X32B	BODY BUILDER JUNCTION B BOC	NB 4 C
X32B_C2		NB 4 C

REF	DESCRIPTION	PAGE
X32B_C4		NB 4 C
X33A	BODY BUILDER JUNCTION A EOF	GG 2 E
X33B	BODY BUILDER JUNCTION B EOF	NB 4 C
X34R_MATE	JUNCTION, OVERHEAD CB PROVISION	KC 3 C
X41	JUNCTION BLOCK, 7 POST, BODY BUILDER	BJ 2 B
X41	JUNCTION BLOCK, 7 POST, BODY BUILDER	BK 4 B
X41	JUNCTION BLOCK, 7 POST, BODY BUILDER	BL 4 B
X41	JUNCTION BLOCK, 7 POST, BODY BUILDER	BM 1 A
X41	JUNCTION BLOCK, 7 POST, BODY BUILDER	BN 1 A
X41	JUNCTION BLOCK, 7 POST, BODY BUILDER	BO 0 B
X41	JUNCTION BLOCK, 7 POST, BODY BUILDER	CC 2 B
X41	JUNCTION BLOCK, 7 POST, BODY BUILDER	KA 0 B
X41	JUNCTION BLOCK, 7 POST, BODY BUILDER	NB 3 D
X41_C1	X41 JUNCTION TERMINAL, POST 3	NB 4 D
X41_C2	X41 JUNCTION TERMINAL, POST 2	NB 4 D
X41_C2_1	X41 JUNCTION, TERMINAL STUD 2	BJ 2 C
X41_C2_1	X41 JUNCTION, TERMINAL STUD 2	BM 4 B
X41_C3_1	X41 JUNCTION, TERMINAL STUD 3	BJ 2 B
X41_C3_1	X41 JUNCTION, TERMINAL STUD 3	BM 4 B
X41_C4_1	X41 JUNCTION, TERMINAL, POST 4	BK 4 B
X41_C4_2	7 POST JUNCTION BLOCK	BL 4 C
X41_C4_4	X41 JUNCTION, TERMINAL, STUD 4	BN 1 A
X41_C4_5	X41 JUNCTION, TERMINAL STUD 4	BM 1 D
X41_C5	X41 JUNCTION, TERMINAL, POST 1	CC 2 B
X41_C5_1	X41 JUNCTION, TERMINAL, STUD 5	BM 1 B
X41_C6_2	X41 JUNCTION, TERMINAL STUD 6	BO 0 B
X41_C7	X41 JUNCTION, TERMINAL, STUD 7	BK 1 B
X41_C7_1	X41 JUNCTION, TERMINAL, STUD 7	BL 4 C
X42	JUNCTION BLOCK, 7 POST, OPTIONS	BJ 2 B
X42	JUNCTION BLOCK, 7 POST, OPTIONS	BM 4 B
X42	JUNCTION BLOCK, 7 POST, OPTIONS	BO 1 B
X42	JUNCTION BLOCK, 7 POST, OPTIONS	FC 3 C
X42	JUNCTION BLOCK, 7 POST, OPTIONS	KB 3 A
X42	JUNCTION BLOCK, 7 POST, OPTIONS	NB 1 C
X42_C2	X42 JUNCTION, TERMINAL, STUD # 4	FC 2 C
X42_C2_1	X42 JUNCTION, TERMINAL STUD 2	BJ 2 B
X42_C2_1	X42 JUNCTION, TERMINAL STUD 2	BM 4 B
X42_C3	X42 JUNCTION, TERMINAL, STUD 1 DIRECT BAT	KB 3 A
X42_C3_1	X42 JUNCTION, TERMINAL, STUD #3	BO 1 B
X45A	RECEPTACLE 110V ENGINE HEATER	CC 3 B
X135	Chassis Ground Stud	AD 1 D
X135.A		AD 1 D
X136	Cab Passthrough Ground Stud	AD 2 C
X136.A		AD 2 C
X136.B		AD 2 D
X136.C		AD 2 D
X136.E		AD 2 C
X140	Battery Box Ground Stud	AD 1 C
X140.A		AD 1 C
X140.C		AD 1 C

https://truckmanualshub.com/

REFERENCES

REF	DESCRIPTION	PAGE
XBB	STUD, CHASSIS GROUND AT BODY BUILDER BRAC	BM 4 E
XBB_C1		BM 4 E
XE1		CB 1 B
XE2		CB 1 B
XE3		CB 3 C
XE4		CB 3 C
XE5		CA 2 B
XE6		CA 3 B
XE7		CA 2 B
XE8		CA 2 B
XE9		CB 1 D
XE10		CB 2 A
XE11		CB 1 D
XE12		CB 1 D
XE13		CB 0 D
XE14		CB 0 D
XE15		CB 3 D
XE16		CB 3 D
XG9	STUD, ENGINE BLOCK	AD 0 D
XG9_C1		AD 0 D
XG9_C1.A		AD 0 D
XJ1		AD 1 A
XJ2		AD 1 A
XJN	Jump Start	AD 1 A
XJP	Jump Start	AC 4 A
XJP_1		AC 3 A
Y11	SOL. VALVE, ABS LH FRT	EA 0 B
Y11	SOL. VALVE, ABS LH FRT	EB 0 D
Y11	SOL. VALVE, ABS LH FRT	ED 0 D
Y12	SOL. VALVE, ABS RH FRT	EA 1 B
Y12	SOL. VALVE, ABS RH FRT	EB 1 D

REF	DESCRIPTION	PAGE
Y12	SOL. VALVE, ABS RH FRT	ED 1 D
Y13	SOL. VALVE, ABS LH RR	EA 1 D
Y13	SOL. VALVE, ABS LH RR	EB 0 B
Y13	SOL. VALVE, ABS LH RR	ED 0 B
Y14	SOL VALVE, ABS RH RR	EA 1 E
Y14	SOL VALVE, ABS RH RR	EB 1 B
Y14	SOL VALVE, ABS RH RR	ED 1 B
Y15	SOL VALVE, ABS LH 3RD AXLE	EA 3 D
Y15	SOL VALVE, ABS LH 3RD AXLE	EB 3 D
Y15	SOL VALVE, ABS LH 3RD AXLE	ED 3 D
Y16	SOL VALVE, ABS RH 3RD AXLE	EA 3 D
Y16	SOL VALVE, ABS RH 3RD AXLE	EB 3 D
Y16	SOL VALVE, ABS RH 3RD AXLE	ED 3 D
Y18	Solenoid valve, PTO (Power Take Off)	FC 1 C
Y35	SOLENOID ENGINE FAN	CA 1 C
Y35A	SOLENOID ENGINE FAN	CE 4 D
Y42	Clutch, magnetic, air conditioning compr	HA 2 E
Y51	SOL VALVE AIR DRYER	FA 1 C
Y57	SOL. VALVE, ATC	EA 1 D
Y57	SOL. VALVE, ATC	EB 1 B
Y57	SOL. VALVE, ATC	ED 1 B
Y62	SOLENOID ACCUMULATOR	DC 1 C
Y76	COIL, IGNITION	CB 0 D
Y77	SOLENOID COMBUSTION AIR	CB 1 D
Y80	SOLENOID VALVE, ADBLUE DOSING UNIT	CF 3 A
Y81	SOLENOID VALVE, UREA HEATING TANK	CF 2 D
Y86	SOLENOID, MULTI VALVE ASSY.	FB 1 D
Y88	SOLENOID, LIFT AXLE	FB 0 D
Y95	SOLENOID HIGH NG PRESSURE LOCKOFF	CG 2 D
Y103	SOLENOID, FUEL SHUTOFF	CB 2 A
Y157	SOLENOID, PARKER PTO	FD 3 C