Engineering Release Notice (ERN)	Location	Change Description A = Added W = Was D = Deleted	Document Release Status
D-16512-62		See DCN	RELEASED

Date	Modification Count

https://truckmanualshub.com/

WIRING DIAGRAM INDEX

NAME	DESCRIPTION	PAGE
AA	POWER DISTRIBUTION 1/2	3
AB	POWER DISTRIBUTION 2/2	4
AC	KEY SW., START & CHARNING	5
AD	GROUNDING	6
BA	VEHICLE ECU 1/4	7
BB	VEHICLE ECU 2/4	8
BC	VEHICLE ECU 3/4 - DCL CONNECTOR	9
BD	VEHICLE ECU 4/4	10
BE	INSTURMENT CLUSTER 1/3	11
BF	INSTRUMENT CLUSTER 2/3	12
BG	INSTRUMENT CLUSTER 3/3	13
BH	ALLISON BODY BUILDER INTERFACE	14
BI	TGW2	15
BJ	BODY LINK II CONSTRUCTION BODY BUILDER C	16
BK	CONCRETE DUAL TRANSMISSION PTO BODYBUILD	17
BL	CONCRETE SINGLE DRIVESHAFT PTO BODYBUILD	18
BM	BODY LINK II REFUSE BODYBUILDER CIRCUITS	19
BN	CONCRETE DUAL DRIVESHAFT PTO PACKAGE	20
BO	CONCRETE DUAL DRIVESHAFT PTO PACKAGE 2/2	21
CA	ENGINE INTERFACE MP7 & MP8	22
CC	ENGINE/FUEL HEATER	23
CD	AUXILIARY COOLING FANS	24
CF	UREA DOSING SYSTEM	25
CH	UREA DOSING SYSTEM OBD2013 2/3	26
DC	TRANSMISSION CONTROL 5TH GENERATION 1/2	27

NAME	DESCRIPTION	PAGE
DD	TRANSMISSION CONTROL 5TH GENERATION 2/2	28
EA	ABS MERITOR	29
ED	ABS8 BENDIX	30
FA	AIR DRYER / HEATED DRAIN	31
FB	CHASSIS SOLENOIDS	32
FC	MUNCIE PUMP & BEACON LAMPS	33
FD	PARKER PTO	34
GA	LIGHTING CONTROL	35
GD	LIGHTING - FORWARD / SIGNAL	36
GF	LIGHTING - TAIL LAMP	37
GG	TRAILER LIGHTING CONTROL	38
GH	INTERIOR LIGHTING	39
GP	WIPER / WASHER	40
GQ	HORN WIRING	41
HA	CLIMATE CONTROL	42
IC	MIRROR CONTROL 1/2	43
ID	MIRROR CONTROL 2/2	44
KA	VISUAL SYSTEMS	45
KB	AUDIO SYSTEMS	46
KC	POWER OUTLET CONNECTIONS	47
NA	SPARE CONNECTORS & FEEDS	48
NB	JUNCTION POSTS	49
XA	DIAGNOSTICS / DATALINK 1/3	50
XB	DATALINK 2/3	51
XC	DATALINK 3/3	52

MRU CNG = 22437784 Issue 02
MRU EXPORT = 22437786 Issue 02
MRU Domestic = 22437775 Issue 04

The copying, distribution and utilization of this document as well as the communication of its contents to others without expressed authorization is prohibited. Offenders will be held liable for payment of damages. All rights reserved in the event of the grant of a patent, utility model or ornamental design registration.

Document title
WIRING DIAGRAM − TYPE OM W/OBD 2013 ENG

VOLVO
Group Trucks Technlogy

The legal owner of this document is as stated under "Design Location" in KOLA and in the associated "Part Version Report"

Document type
PRODUCT SCHEMATICS

Document No	Issue	Volume	Sheet No
22437775	04	1 (2)	1 (52)

https://truckmanualshub.com/

ABBREVIATION LIST, 12V

SHELL_CAVITY	HARNESSES	WHERE_USED
6SABS	REAR_CHASSIS_EXTENSION	FRONT_CHASSIS
A57	AUTOTRANS_CAB	AUTOTRANS_CAB
ABS_OPTION	MAIN_CAB	
ABS_X1	MAIN_CAB	ABS_JUMPER
ABS_X2	MAIN_CAB	ABS_JUMPER
ALLISON	AUTOTRANS_TRANS	AUTOTRANS_CAB
ATTR	AUTOTRANS_CAB	AUTOTRANS_TRANS
BBCAB_TRANS	BODY_BUILDER_CAB	BODY_BUILDER_CHASSIS
BBMCO	MAIN_CAB	BODY_BUILDER_CAB
BPMCFC	BODYPOWER_CAB	BODYPOWER_FRONTCHASSIS
BWFC	BRAKE_WEAR_FRONT	FRONT_CHASSIS
BWRC	FRONT_CHASSIS	BRAKE_WEAR_REAR
CBBFCBB	BODY_BUILDER_CHASSIS	BODY_BUILDER_CAB
CDPF	FRONT_CHASSIS	RH_STANTION
CLN_PWR	CLEAN_POWER	FRONT_CHASSIS
DRL_OR_BB	MAIN_CAB	DRL_OVERRIDE_SWITCH
DRL_OR_DCL	BODY_BUILDER_CAB	DRL_OVERRIDE_SWITCH
DRL_OR_DCL2	BODY_BUILDER_CAB	DRL_OVERRIDE_SWITCH
DS_PTO	BODY_BUILDER_CHASSIS_PTO	BODY_BUILDER_CAB
DSFC	DS_HARNESS	REAR_CHASSIS_EXTENSION
DSFRT	DS_HARNESS	DS_HARNESS_EXT_MERITOR
DSRR	DS_HARNESS	DS_HARNESS_EXT_MERITOR
DUAL_PTO	SOLENOID_SW	BODY_BUILDER_CAB
FCATR	AUTOTRANS_TRANS	
FCBL	FRONT_CHASSIS	BODY_BUILDER_CHASSIS
FCCE	FRONT_CHASSIS	REAR_CHASSIS_EXTENSION
FCCP	CLN_PWR_ACM	FRONT_CHASSIS
FCCPBB	CLN_PWR_BB	BODY_BUILDER_CAB
FCEIC	FRONT_CHASSIS	
FCFH	FRONT_CHASSIS	FUEL_HEATER
FCLA	FRONT_CHASSIS	LIFT_AXLE
FCSH	FRONT_CHASSIS	STANTION_HARNESS
FCSP	REAR_CHASSIS_EXTENSION	AIR SOLENOID PACK
FCTR	FRONT_CHASSIS	TRANSMISSION
FCUT	UREA_TANK	UREA_TANK_EXTENSION
FCUTEXT	FRONT_CHASSIS	UREA_TANK_EXTENSION
FRC1	MAIN_CAB	
FRC2	MAIN_CAB	
FRC3	MAIN_CAB	
HN_REM	MAIN_CAB	BODY_BUILDER_CAB
HOOKUP_LP	MAIN_CAB	
ILLUM_OPT	MAIN_CAB	
ILLUM_OPT2	CAMERA_SWITCH	
ILLUM_OPT3	CAMERA_SWITCH	
ILLUM_OPT4	MAIN_CAB	DRL_OVERRIDE_SWITCH
ILLUM_OPT5	MAIN_CAB	DRL_OVERRIDE_SWITCH

SHELL_CAVITY	HARNESSES	WHERE_USED
ILLUM_OPT6	MAIN_CAB	PARKER_PTO_OVERLAY
ILLUM_OPT7	MAIN_CAB	PARKER_PTO_OVERLAY
LHCS	FRONT_CHASSIS	STANTION_HARNESS
MC_DUAL_PTO	MAIN_CAB	SOLENOID_SW
MC_SOL_SW	MAIN_CAB	SOLENOID_SW
MCAATS	MAIN_CAB	AIR_TEMP_SENSOR
MCAF	MAIN_CAB	AUX_FAN
MCAF2	MAIN_CAB	AUX_FAN
MCAS	MAIN_CAB	AIR_SWITCH
MCAT	MAIN_CAB	AUTOTRANS_CAB
MCDO	MAIN_CAB	DRL_OVERRIDE_SWITCH
MCFC	MAIN_CAB	FRONT_CHASSIS
MCFCAF	MAIN_CAB	FRONT_CHASSIS
MCFG	MAIN_CAB	FUEL_GAUGE_JUMPER
MCMSO	MAIN_CAB	MIRROR_SWITCH_OVERLAY
MCPM	MAIN_CAB	PWR_MIRROR_CAB
MCRF1	MAIN_CAB	ROOF
MCRF2	MAIN_CAB	ROOF
MCRF3	MAIN_CAB	ROOF
MCRF4	MAIN_CAB	ROOF
MCTL	TAIL_LAMP	TAIL_LAMP_EXT
MCTL1	REAR_CHASSIS_EXTENSION	TAIL_LAMP_EXT
PB_START	PBSTART_HARNESS	
PMP_DRV	BODY_BUILDER_CAB	SOLENOID_SW
PPCO	PARKER_PTO_OVERLAY	AUTOTRANS_CAB
PTO_DCL_A	BODY_BUILDER_CAB	
PTO_DCL_B	BODY_BUILDER_CAB	
RC1	MAIN_CAB	
RC2	BODY_BUILDER_CAB	
RC3	AUX_FAN	
RC4	MAIN_CAB	BODY_BUILDER_CAB
RC5	MAIN_CAB	MIRROR_SWITCH_OVERLAY
RFH	ROOF	ROOF_HEADLINER
RHGJ	ROOF	GLAD_JUMPER
RHGJ1	ROOF	GLAD_JUMPER
SHAR	STANTION_HARNESS	AIR_FILTER_RESTRICTION
SP_BAT1	MAIN_CAB	
SP_IGN1	MAIN_CAB	
SP_IGN2	MAIN_CAB	BODY_BUILDER_CAB
SP_IGN3	MAIN_CAB	
SP_RLY1	MAIN_CAB	BODY_BUILDER_CAB
SP_RLY2	MAIN_CAB	BODY_BUILDER_CAB
SP_RLY53	MAIN_CAB	
SP_RLY53_87A	MAIN_CAB	
TLBU	TAIL_LAMP	BACKUP_ALARM
TRPTO	AUTOTRANS_TRANS	PTO

POWER DISTRIBUTION 1/2

https://truckmanualshub.com/

WIRING DIAGRAM: AA

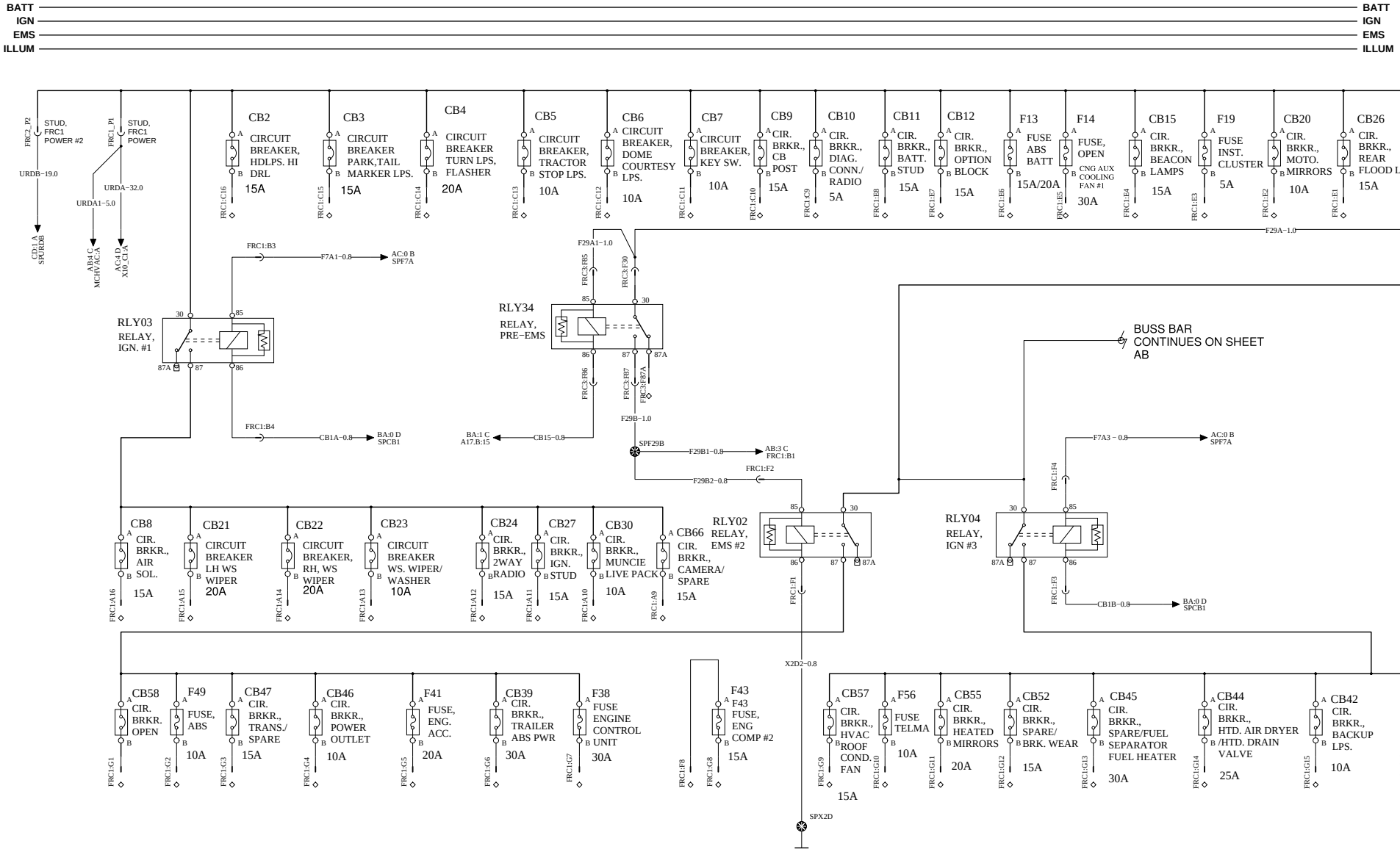

VOLVO Group Trucks Technology	Document title: WIRING DIAGRAM - TYPE OM W/OBD 2013 ENG	Document No: 22437775	Issue: 04	Volume: 1 (2)	Page: 3 (52)
	Document type: PRODUCT SCHEMATIC				

https://truckmanualshub.com/

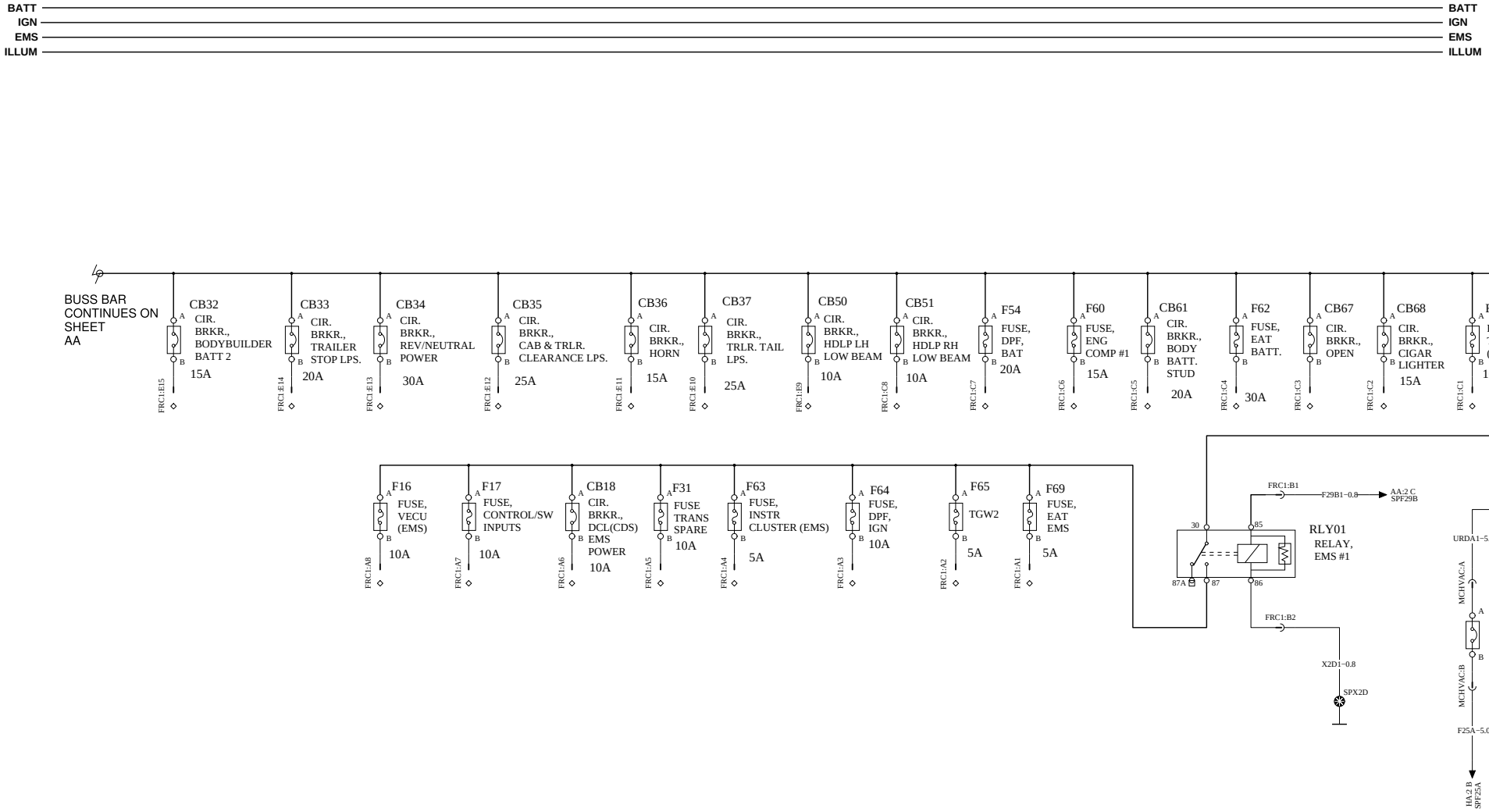

KEY SW., START & CHARNING

https://truckmanualshub.com/

WIRING DIAGRAM: AC

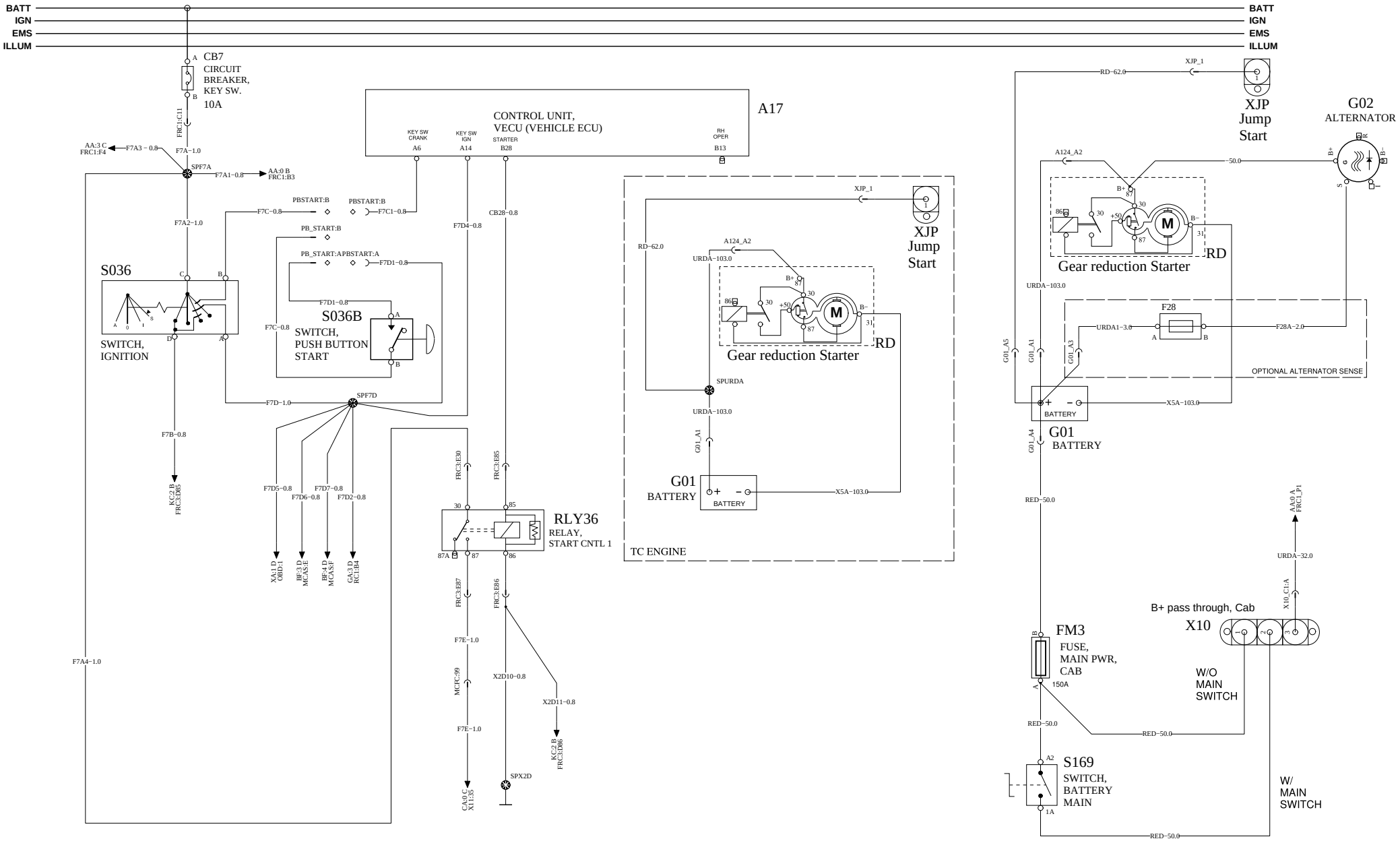

VOLVO Group Trucks Technology	Document title WIRING DIAGRAM - TYPE OM W/OBD 2013 ENG Document type PRODUCT SCHEMATIC	Document No 22437775	Issue 04	Volume 1 (2)	Page 5 (52)

GROUNDING

https://truckmanualshub.com/

WIRING DIAGRM: AD

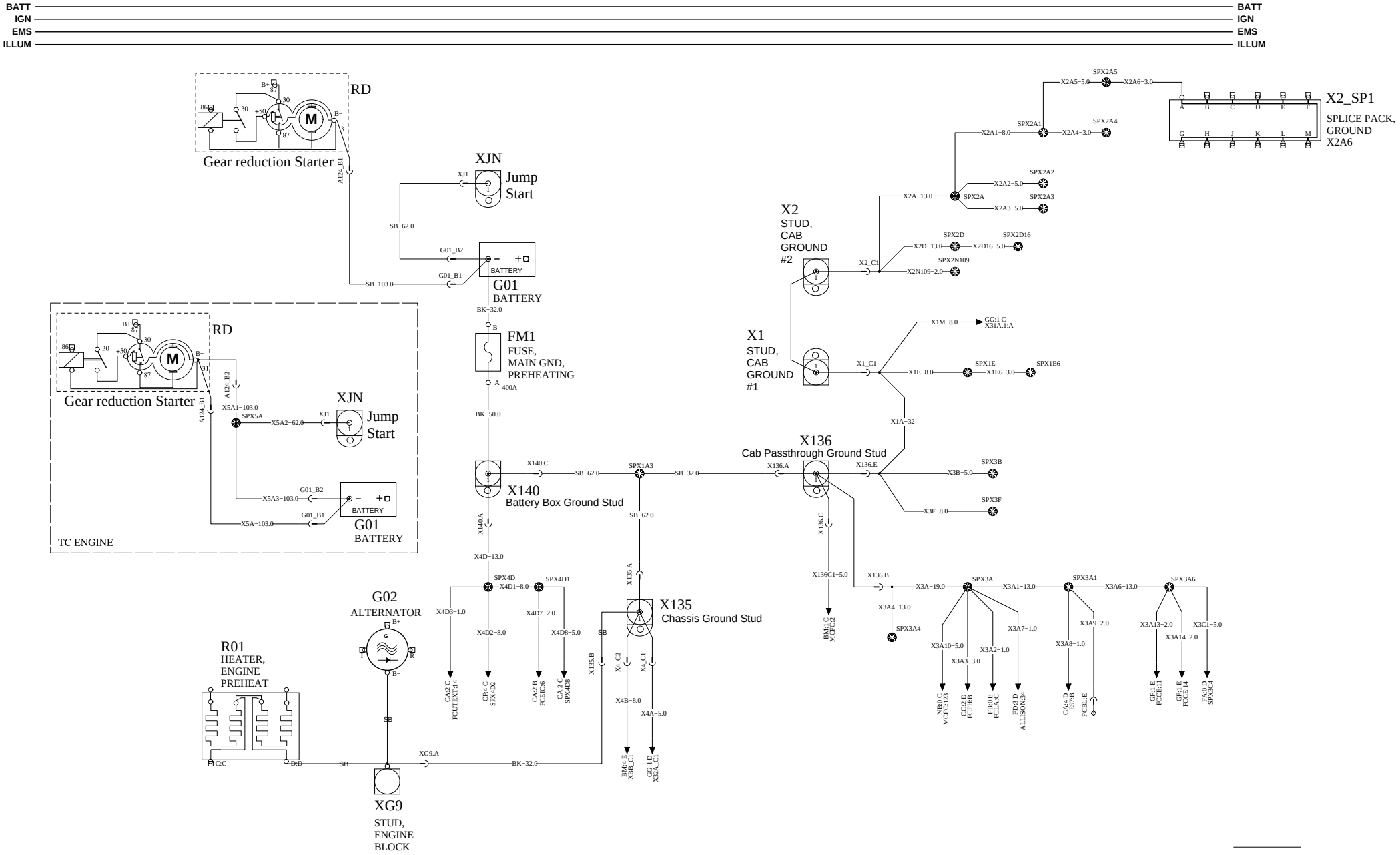

https://truckmanualshub.com/

WIRING DIAGRAM: BA

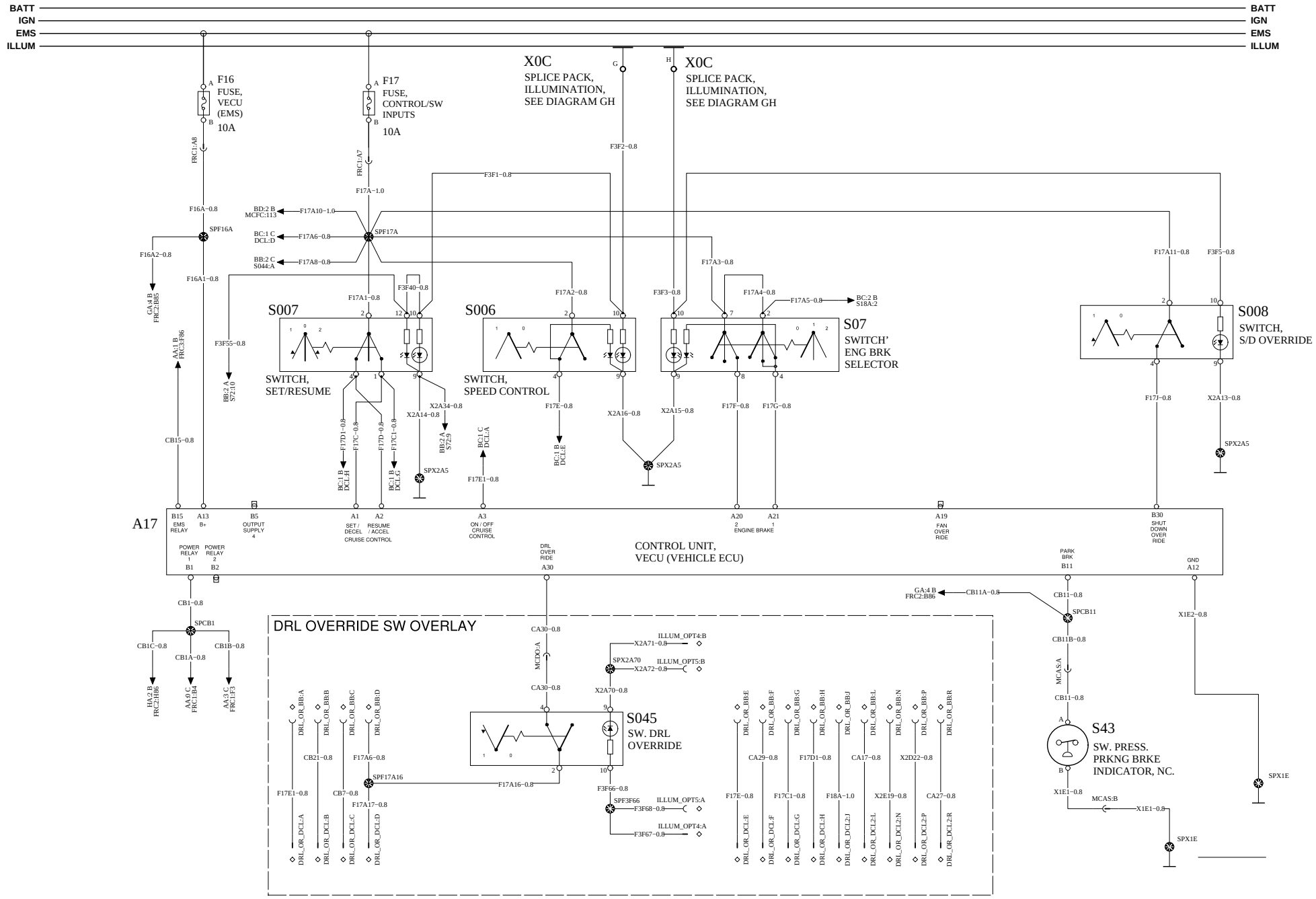

VOLVO Group Trucks Technology	Document title WIRING DIAGRAM - TYPE OM W/OBD 2013 ENG	Document No	Issue	Volume	Page
	Document type PRODUCT SCHEMATIC	22437775	04	1 (2)	7 (52)

https://truckmanualshub.com/

WIRING DIAGRAM: BB

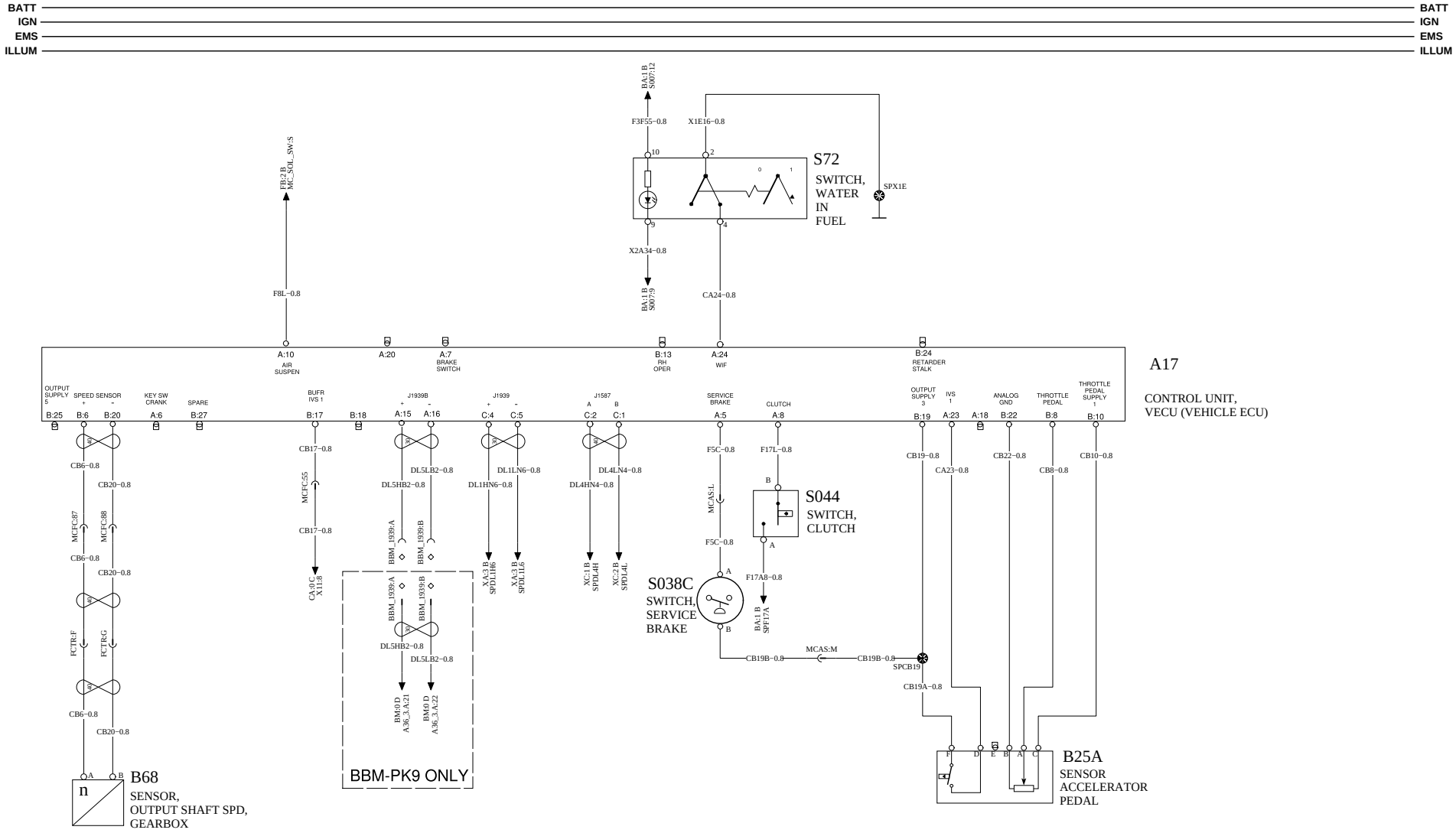

VOLVO Group Trucks Technology	Document title WIRING DIAGRAM - TYPE OM W/OBD 2013 ENG Document type PRODUCT SCHEMATIC	Document No 22437775	Issue 04	Volume 1 (2)	Page 8 (52)

https://truckmanualshub.com/

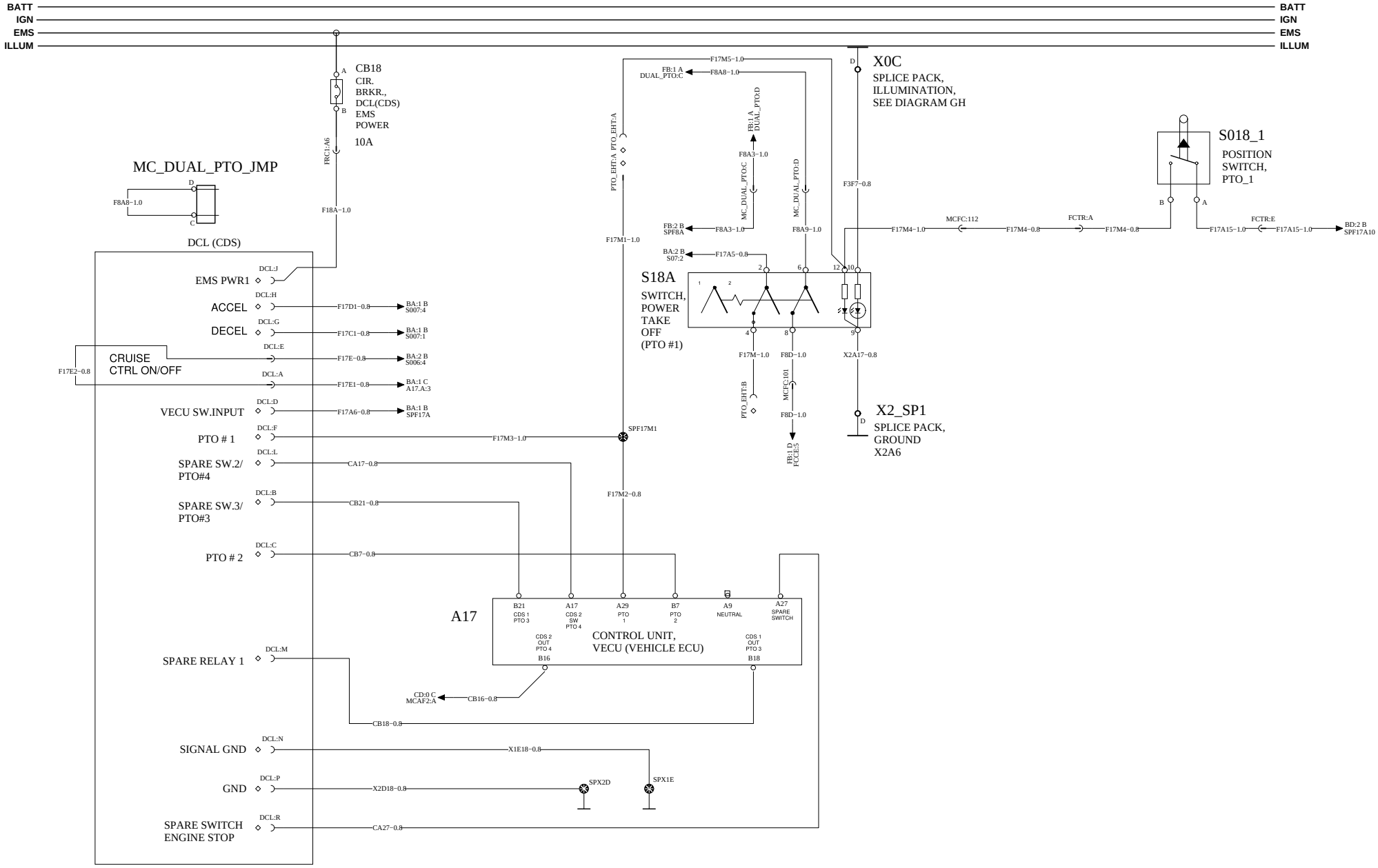

VOLVO Group Trucks Technology	Document title: WIRING DIAGRAM - TYPE OM W/OBD 2013 ENG Document type: PRODUCT SCHEMATIC	Document No: 22437775	Issue: 04	Volume: 1 (2)	Page: 9 (52)

https://truckmanualshub.com/

WIRING DIAGRAM: BD

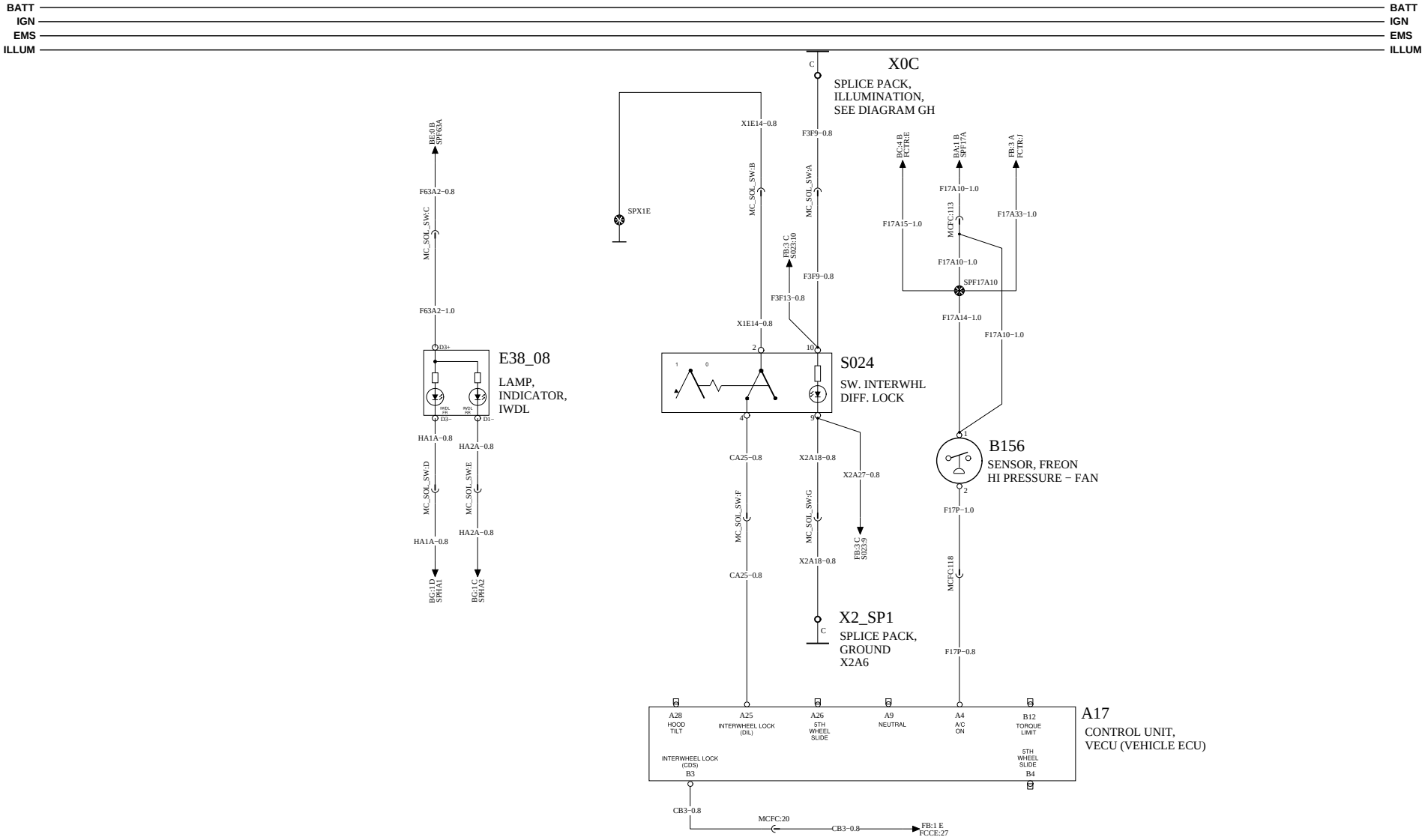

INSTURMENT CLUSTER 1/3

https://truckmanualshub.com/

WIRING DIAGRAM: BE

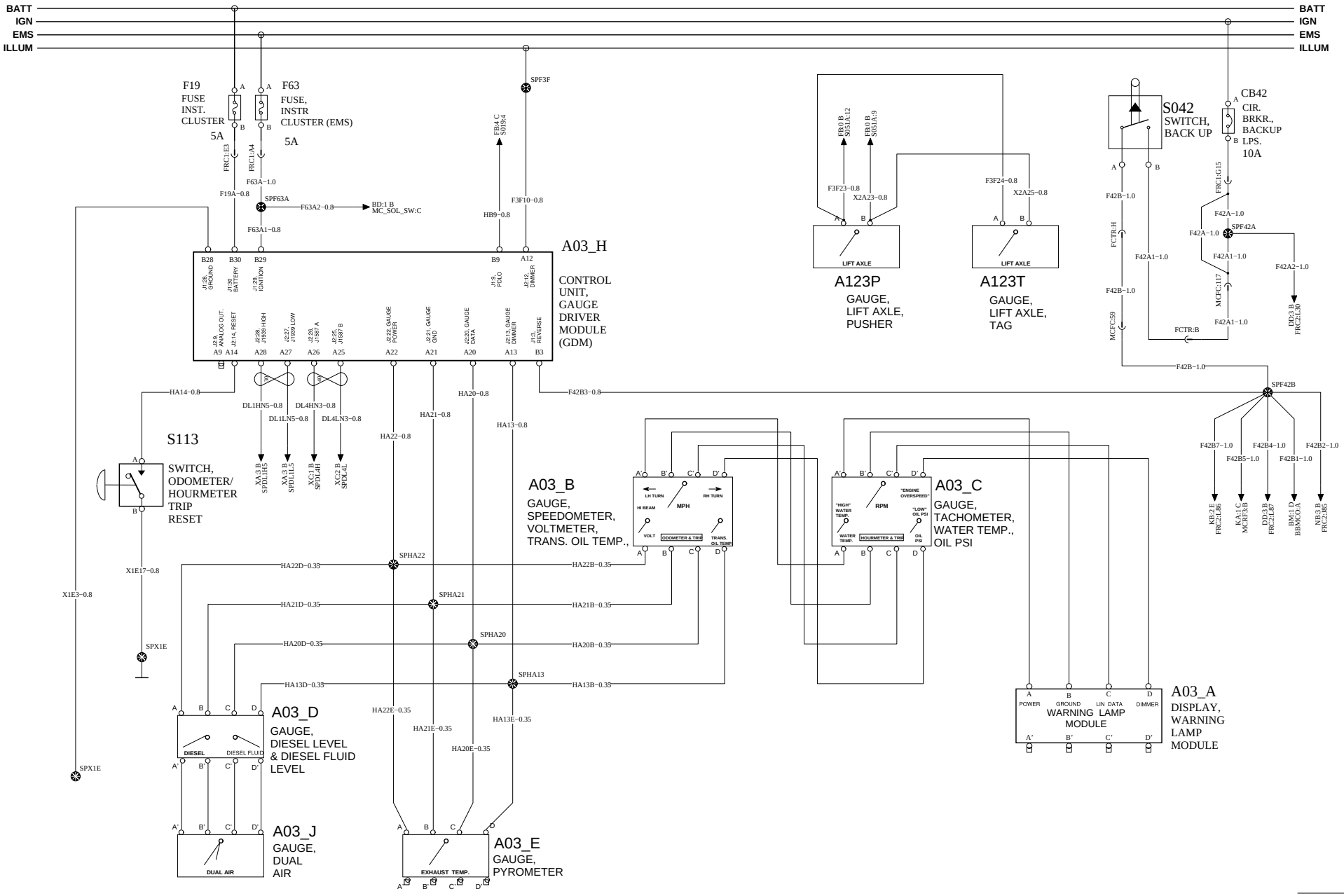

VOLVO Group Trucks Technology	Document title WIRING DIAGRAM - TYPE OM W/OBD 2013 ENG Document type PRODUCT SCHEMATIC	Document No 22437775	Issue 04	Volume 1 (2)	Page 11 (52)

https://truckmanualshub.com/

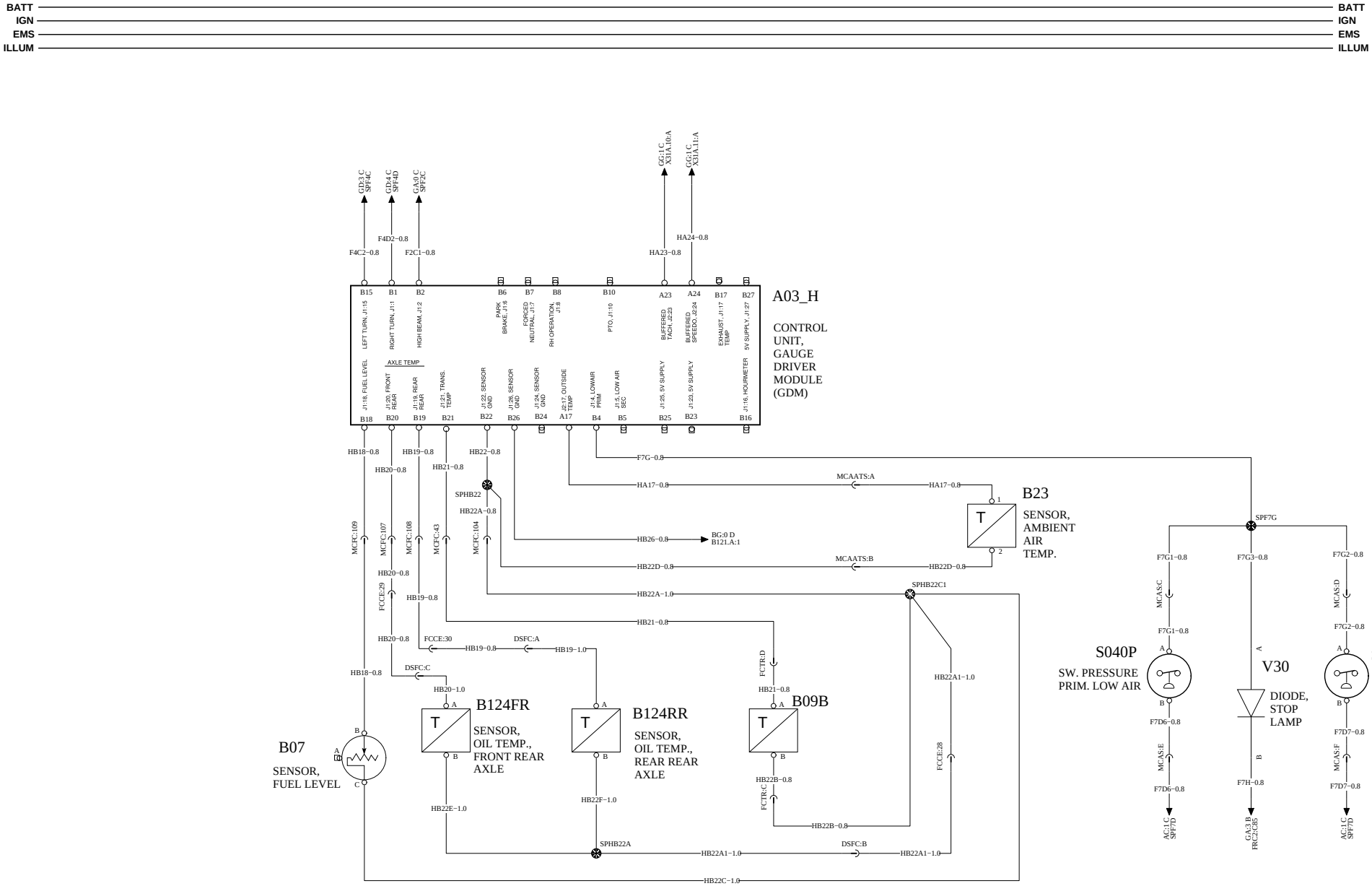

https://truckmanualshub.com/

WIRING DIAGRAM: BG

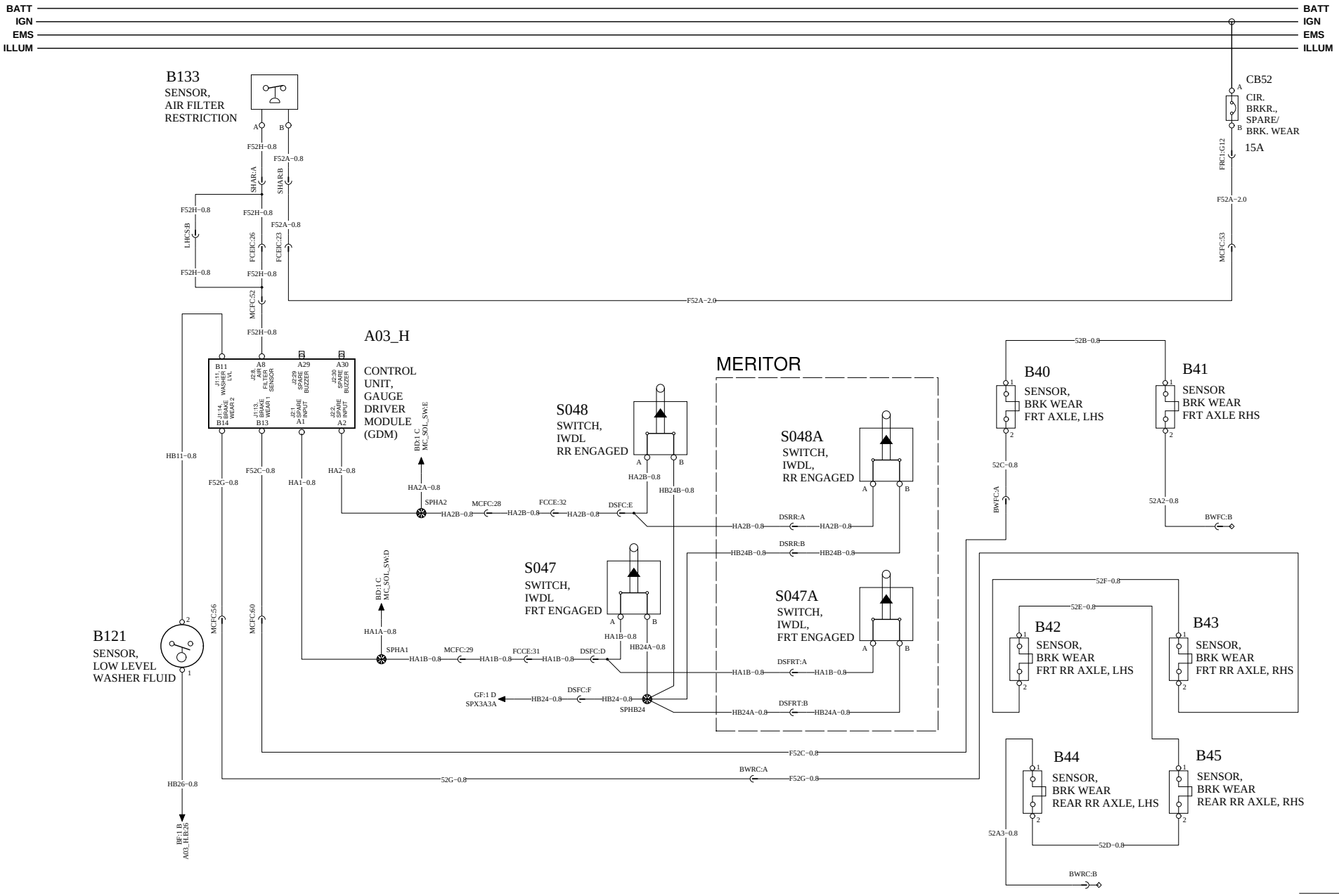

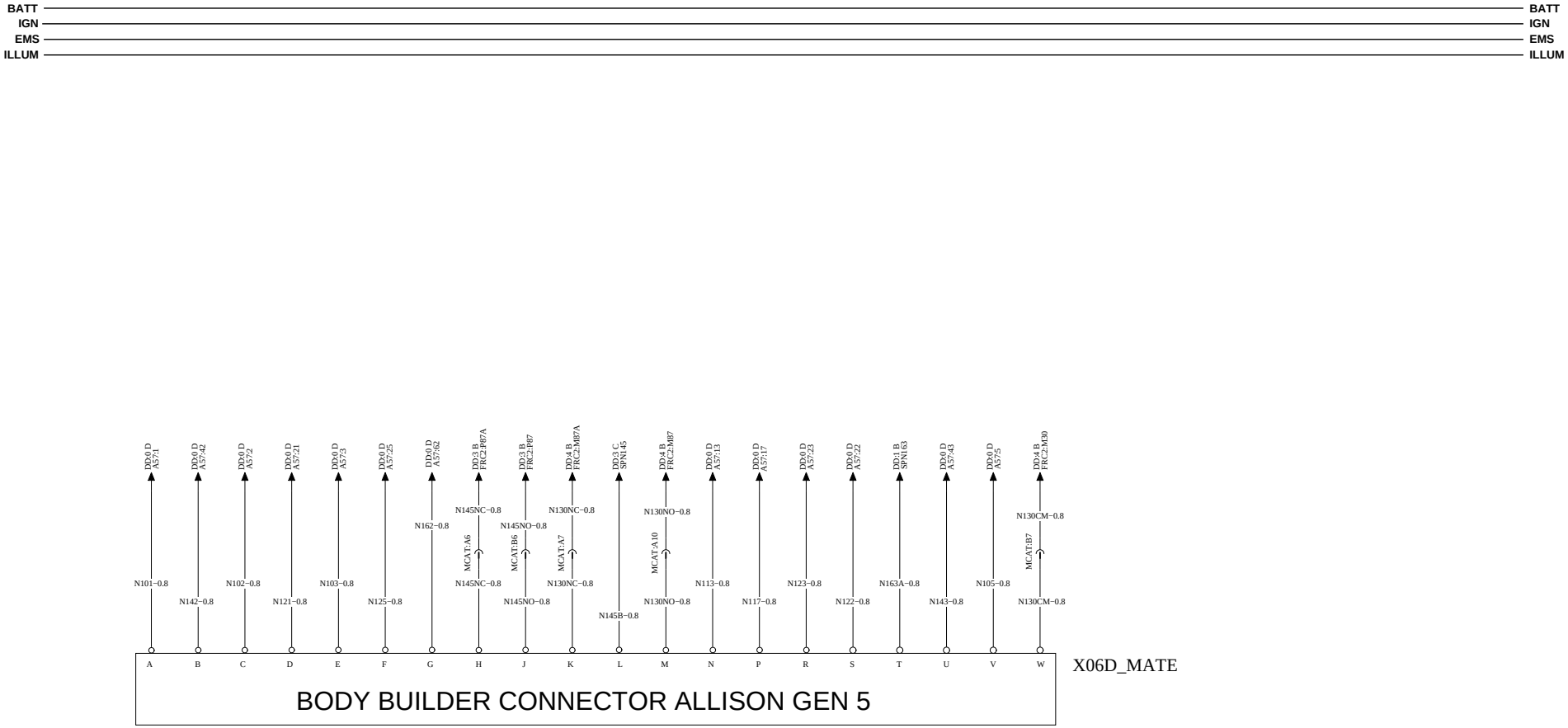
BATT
IGN
EMS
ILLUM
DD:0 D A57:1
DD:0 D A57:42
DD:0 D A57:2
DD:0 D A57:21
DD:0 D A57:3
DD:0 D A57:25
DD:0 D A57:62
DD:3 B FRC2:P87A
DD:3 B FRC2:P87
DD:4 B FRC2:M87A
DD:2 C SPN145
DD:4 B FRC2:M87
DD:0 D A57:13
DD:0 D A57:17
DD:0 D A57:23
DD:0 D A57:22
DD:1 B SPN163
DD:0 D A57:43
DD:0 D A57:5
DD:4 B FRC2:M30
N101−0.8
N142−0.8
N102−0.8
N121−0.8
N103−0.8
N125−0.8
N162−0.8
N145NC−0.8
MCAT:A6
N145NC−0.8
N145NO−0.8
MCAT:B6
N145NO−0.8
N130NC−0.8
MCAT:A7
N130NC−0.8
N145B−0.8
N130NO−0.8
MCAT:A10
N130NO−0.8
N113−0.8
N117−0.8
N123−0.8
N122−0.8
N163A−0.8
N143−0.8
N105−0.8
N130CM−0.8
MCAT:B7
N130CM−0.8
A B C D E F G H J K L M N P R S T U V W
X06D_MATE
BODY BUILDER CONNECTOR ALLISON GEN 5

https://truckmanualshub.com/

WIRING DIAGRAM : BI

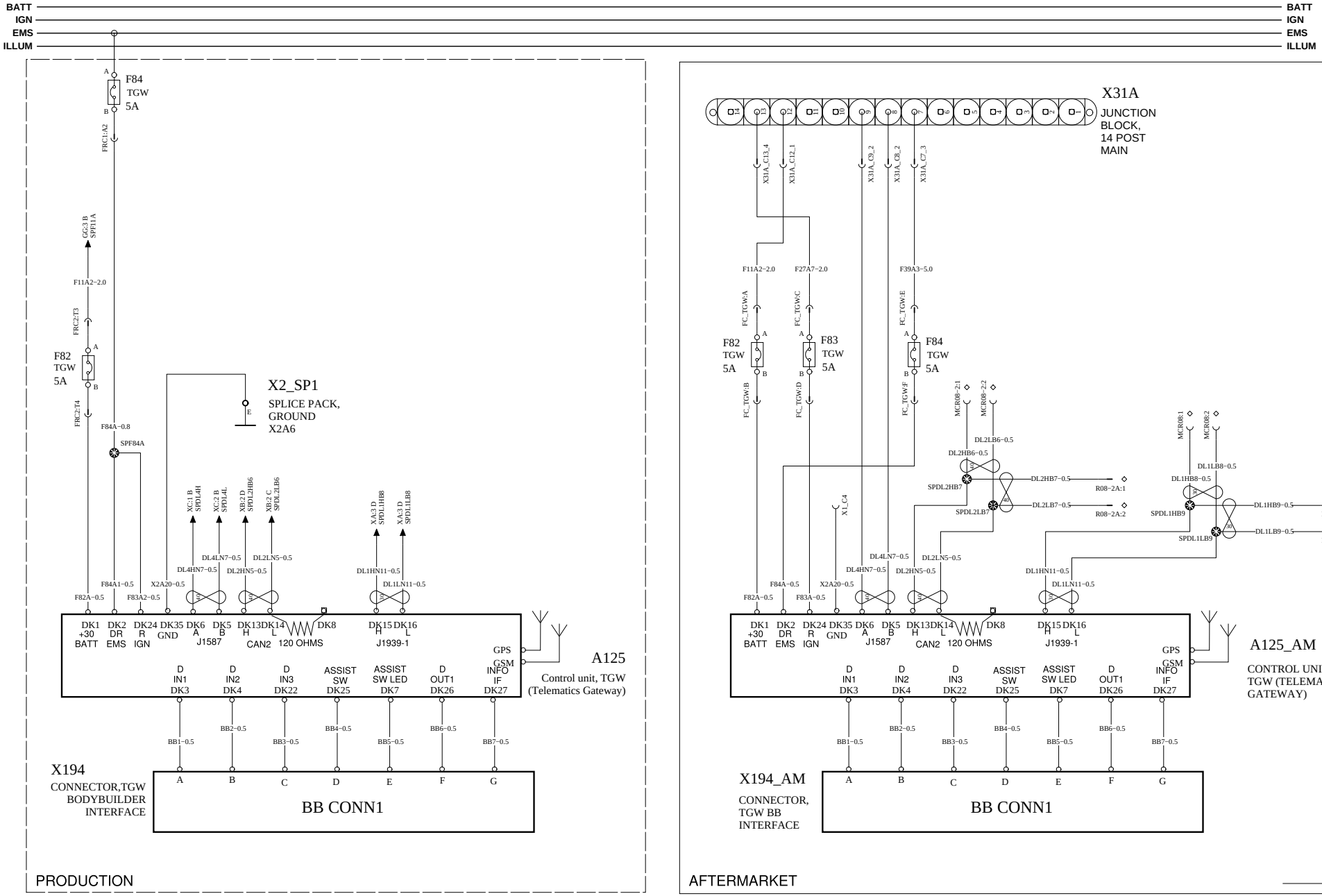

VOLVO Group Trucks Technology	Document title WIRING DIAGRAM - TYPE OM W/OBD 2013 ENG	Document No	Issue	Volume	Page
	Document type PRODUCT SCHEMATIC	22437775	04	1 (2)	15 (52)

https://truckmanualshub.com/

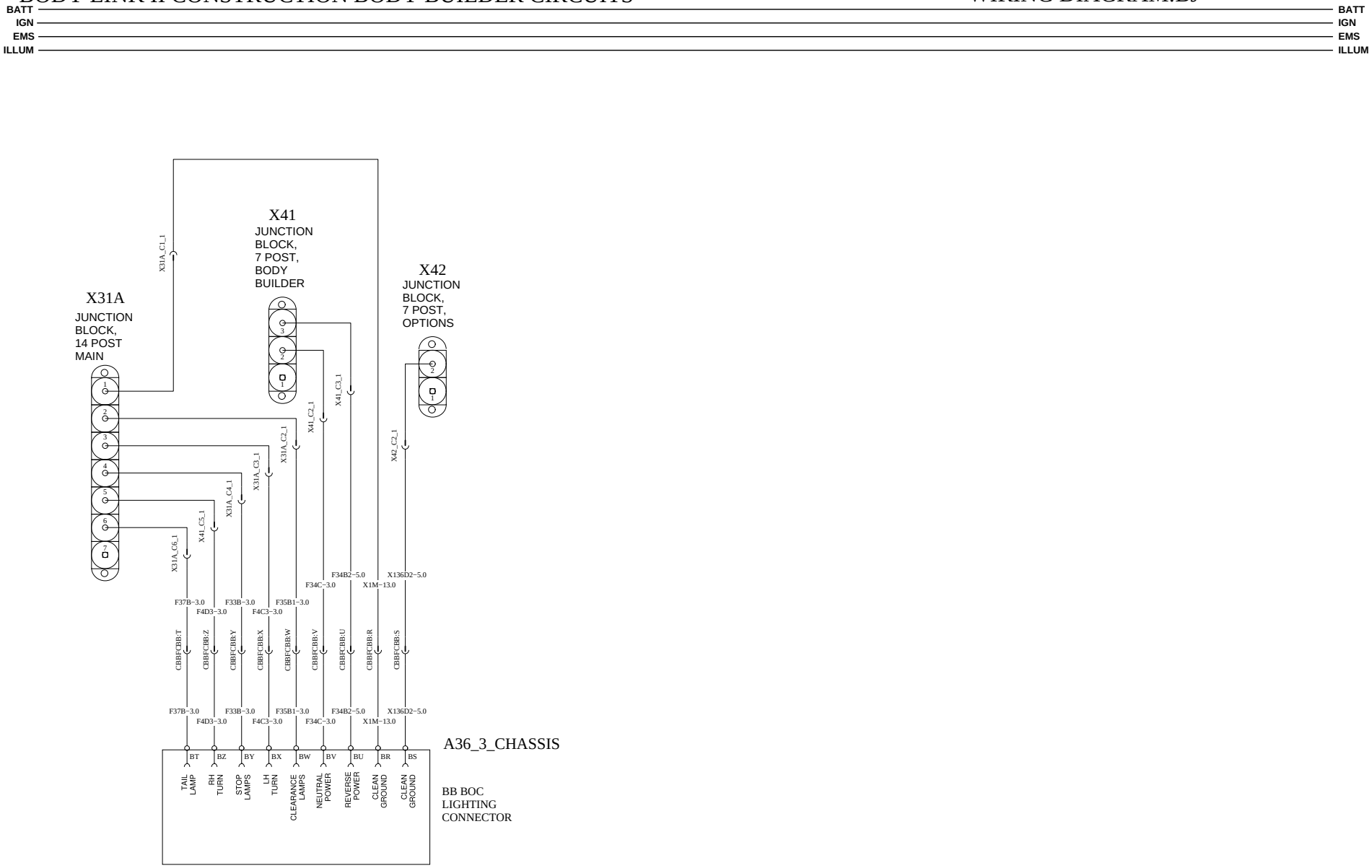

https://truckmanualshub.com/

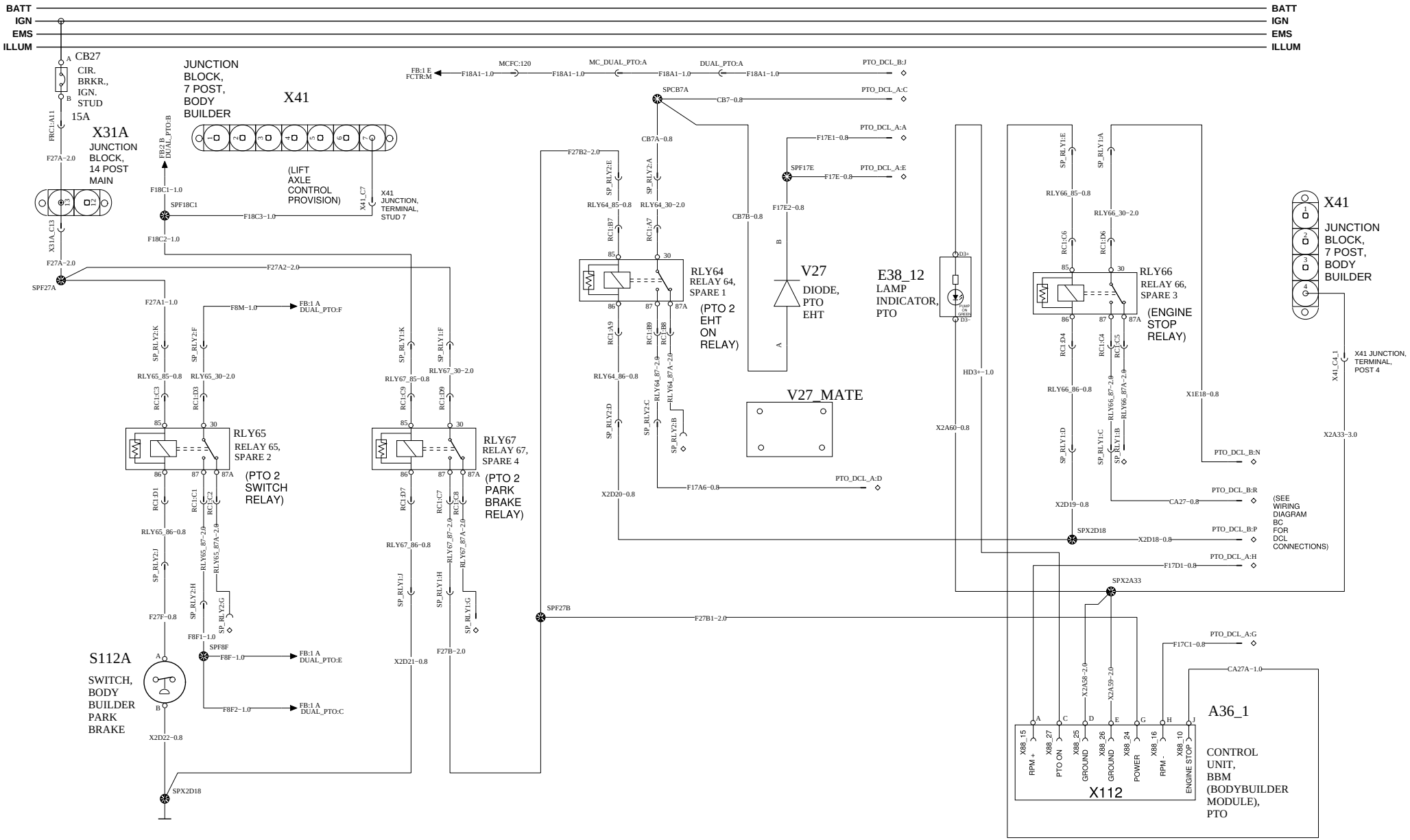

VOLVO Group Trucks Technology	Document title: WIRING DIAGRAM - TYPE OM W/OBD 2013 ENG Document type: PRODUCT SCHEMATIC	Document No: 22437775	Issue: 04	Volume: 1 (2)	Page: 17 (52)

https://truckmanualshub.com/

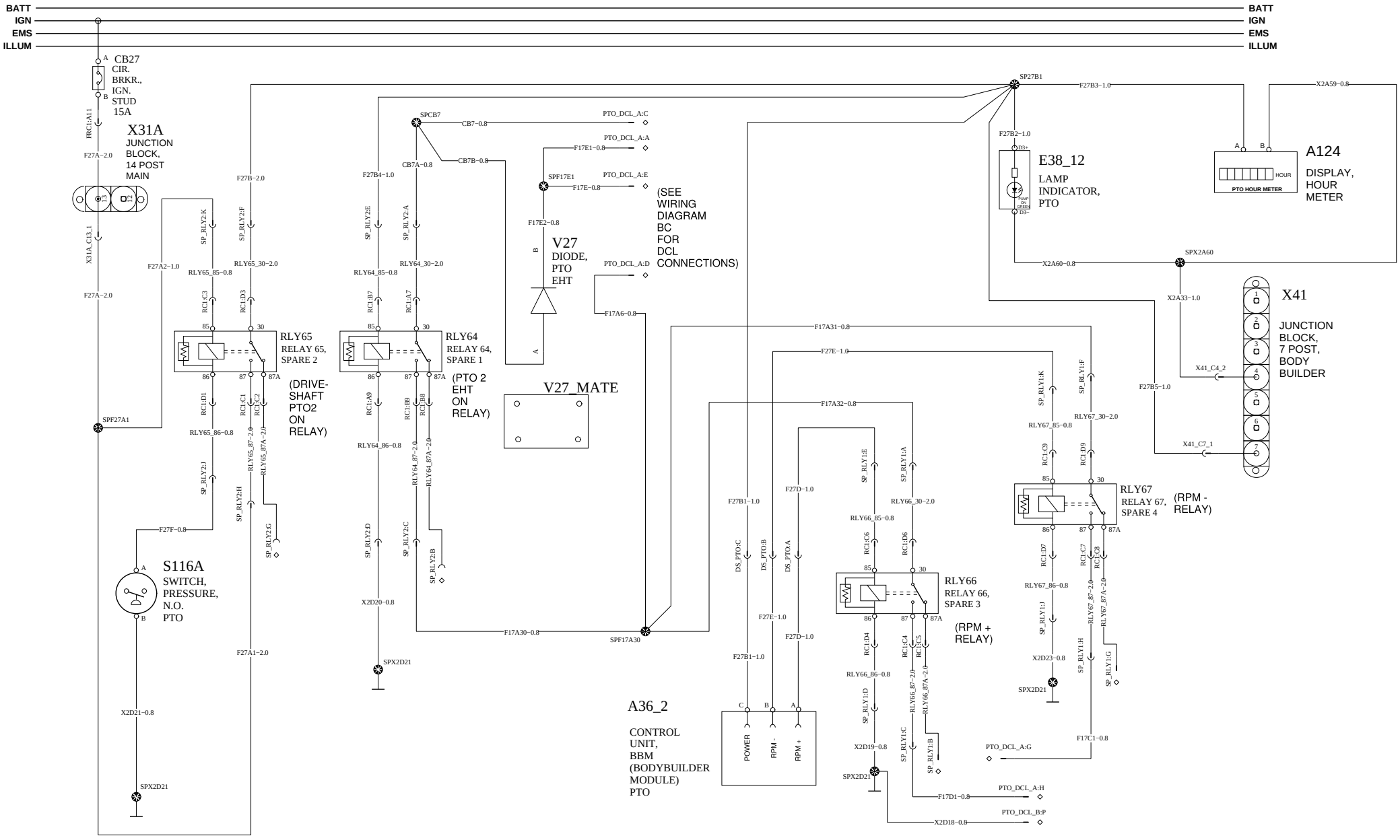

	Document title	Document No	Issue	Volume	Page
VOLVO Group Trucks Technology	WIRING DIAGRAM - TYPE OM W/OBD 2013 ENG	22437775	04	1 (2)	18 (52)
	Document type: PRODUCT SCHEMATIC				

https://truckmanualshub.com/

WIRING DIAGRAM: BM

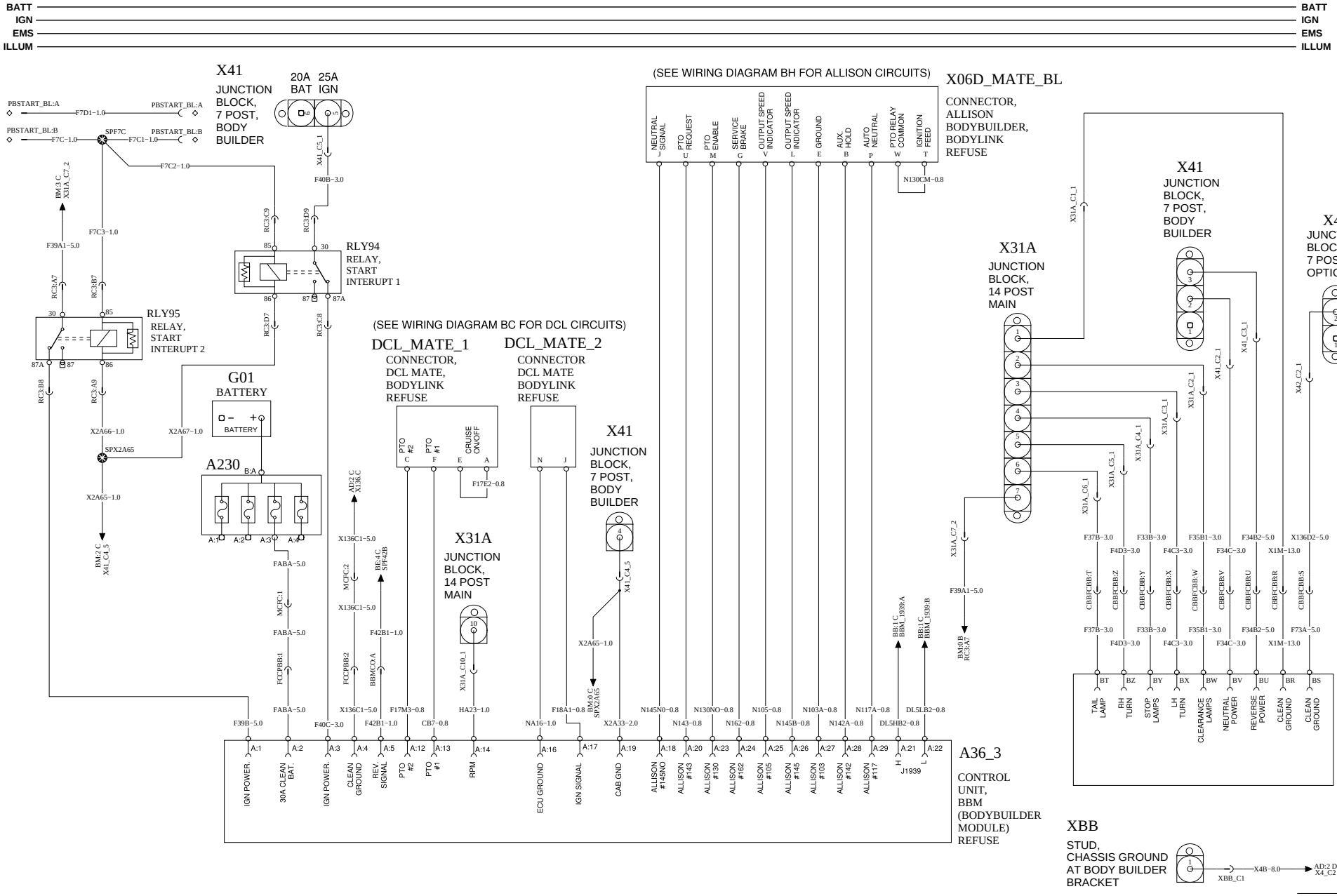

VOLVO Group Trucks Technology	Document title: WIRING DIAGRAM - TYPE OM W/OBD 2013 ENG Document type: PRODUCT SCHEMATIC	Document No: 22437775	Issue: 04	Volume: 1 (2)	Page: 19 (52)

CONCRETE DUAL DRIVESHAFT PTO PACKAGE

https://truckmanualshub.com/

WIRING DIAGRAM: BN

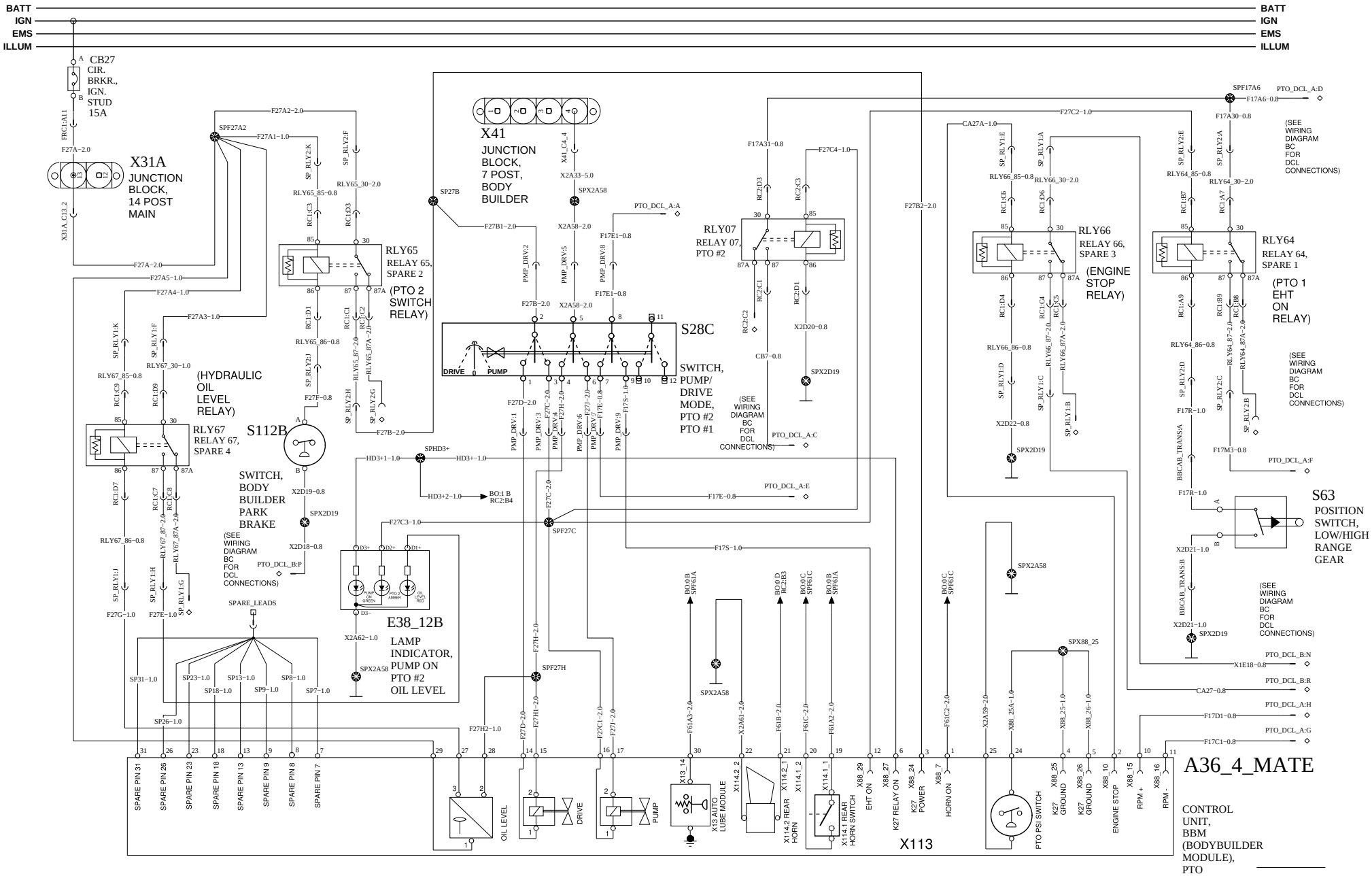

VOLVO Group Trucks Technology	Document title: WIRING DIAGRAM - TYPE OM W/OBD 2013 ENG Document type: PRODUCT SCHEMATIC	Document No: 22437775	Issue: 04	Volume: 1 (2)	Page: 20 (52)

CONCRETE DUAL DRIVESHAFT PTO PACKAGE 2/2

https://truckmanualshub.com/

WIRING DIAGRAM: BO

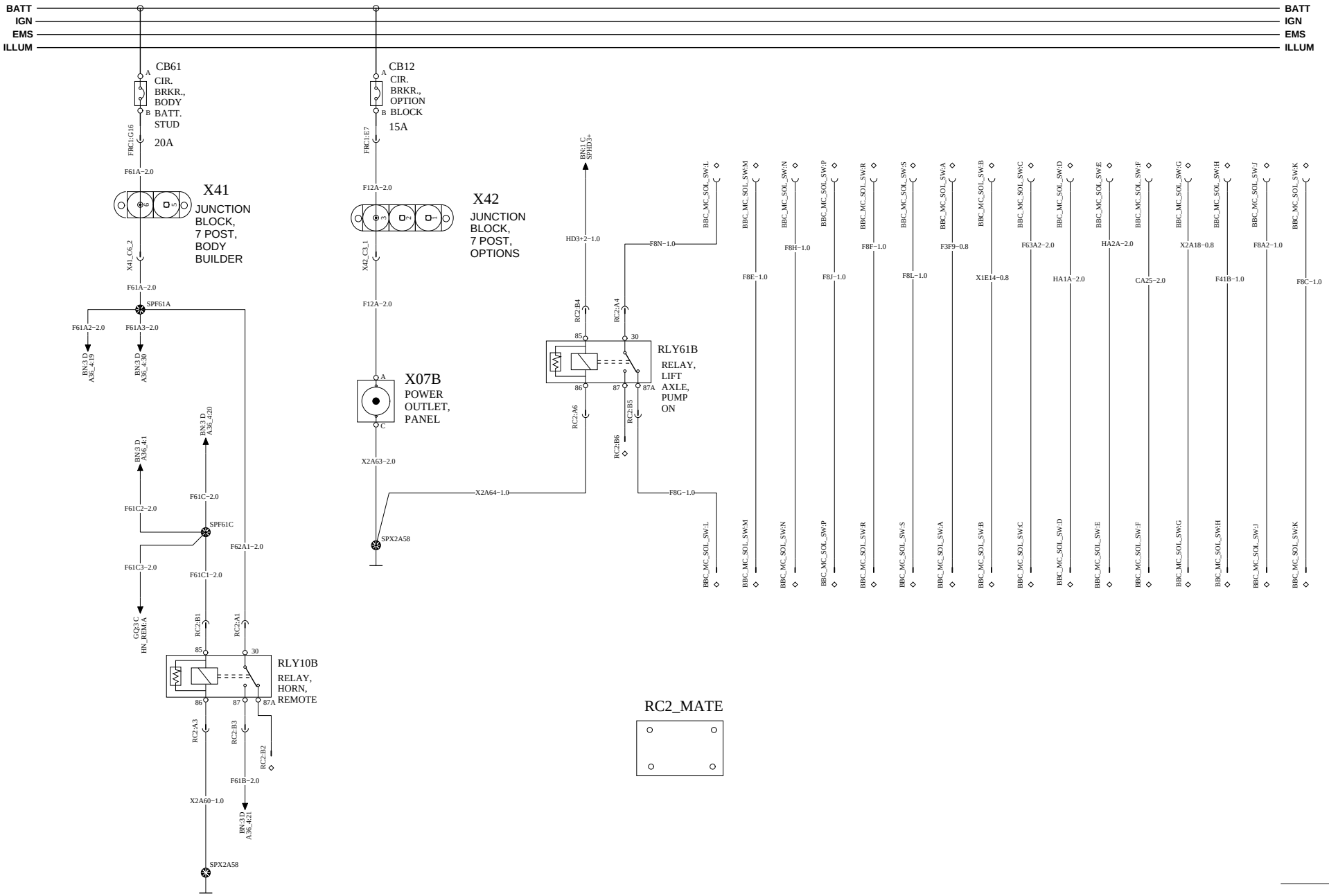

VOLVO Group Trucks Technology	Document title: WIRING DIAGRAM - TYPE OM W/OBD 2013 ENG	Document No	Issue	Volume	Page
	Document type: PRODUCT SCHEMATIC	22437775	04	1 (2)	21 (52)

ENGINE INTERFACE MP7 & MP8

https://truckmanualshub.com/

WIRING DIAGRAM: CA

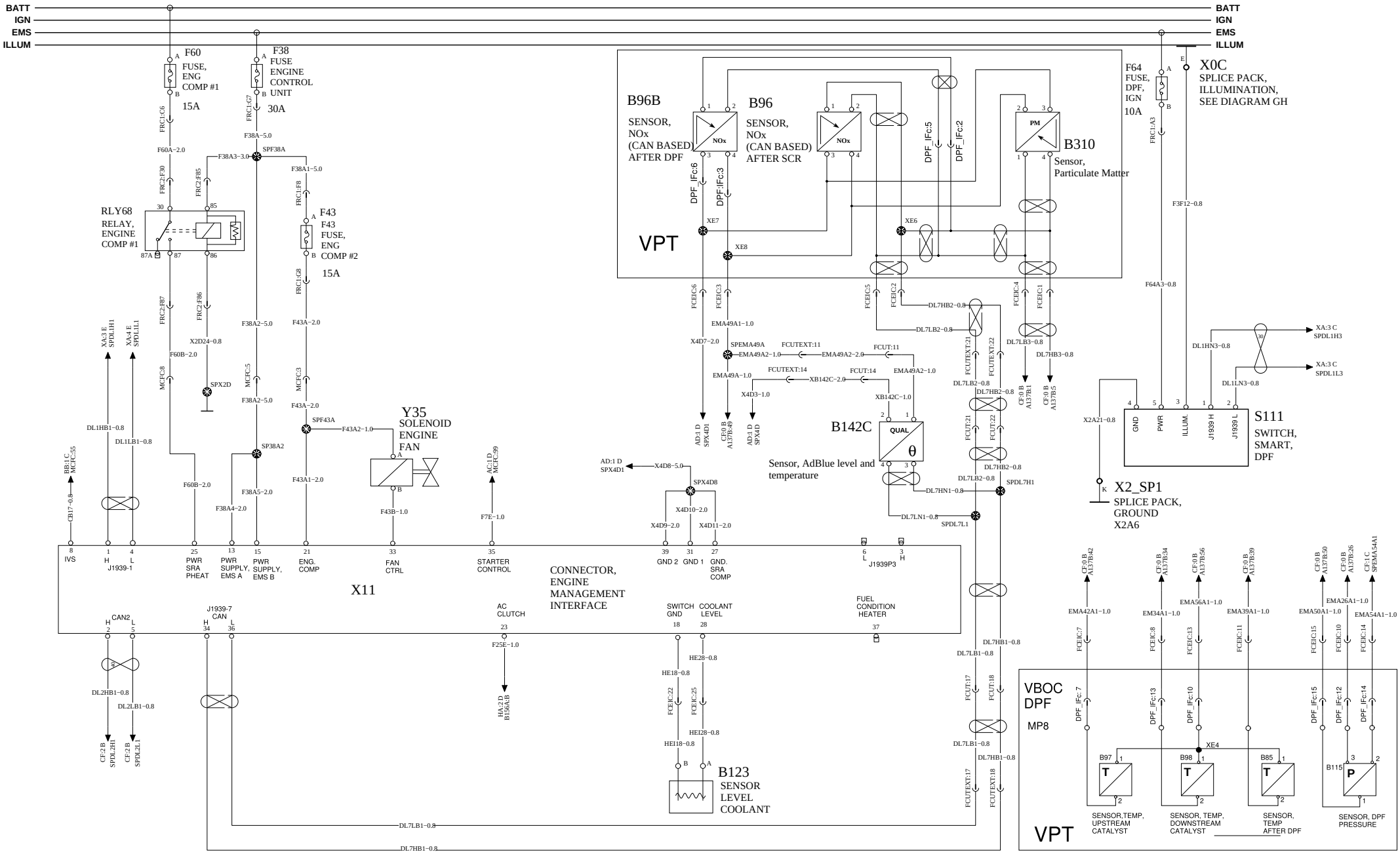

VOLVO Group Trucks Technology	Document title: WIRING DIAGRAM - TYPE OM W/OBD 2013 ENG	Document No	Issue	Volume	Page
	Document type: PRODUCT SCHEMATIC	22437775	04	1 (2)	22 (52)

https://truckmanualshub.com/

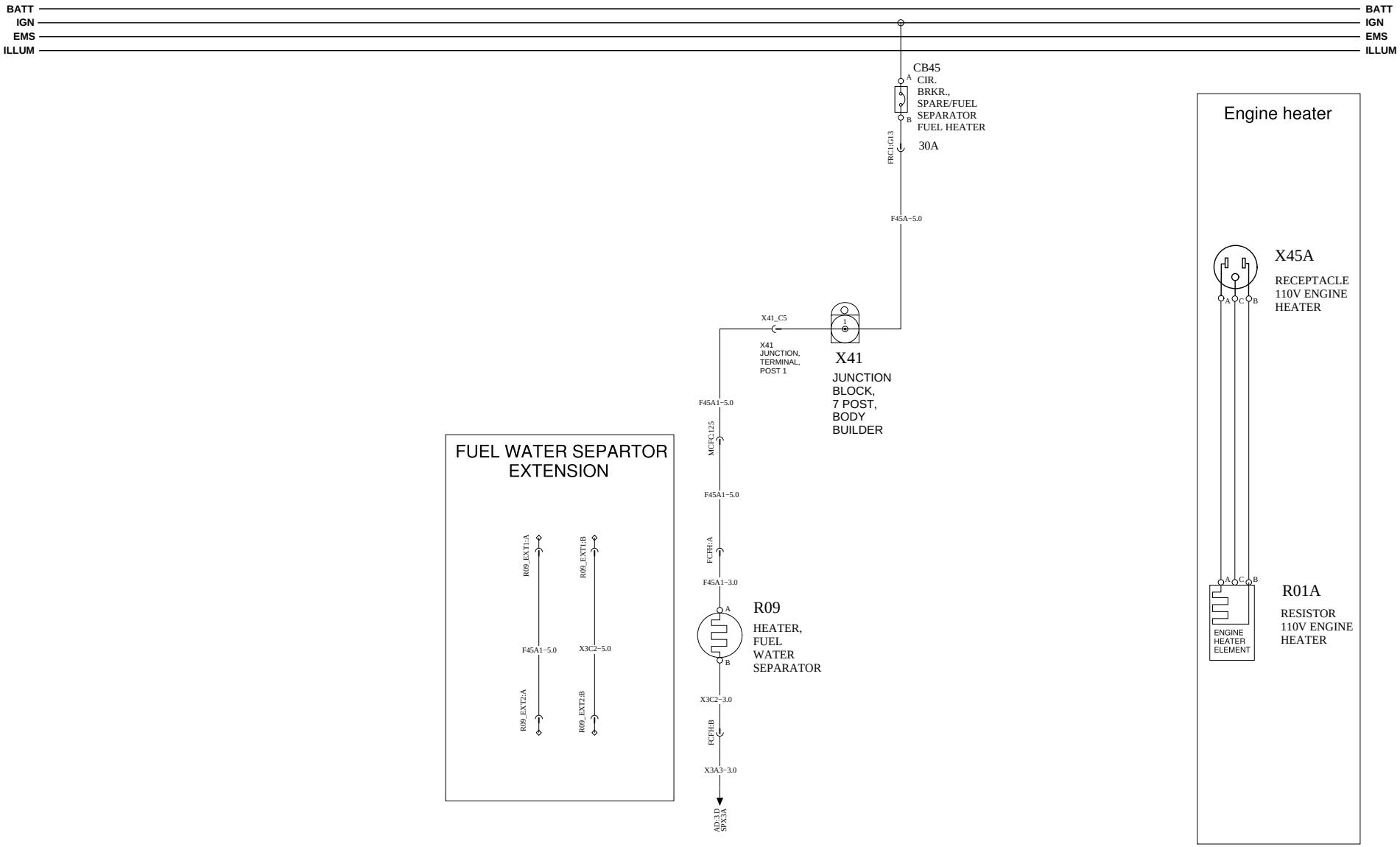

https://truckmanualshub.com/

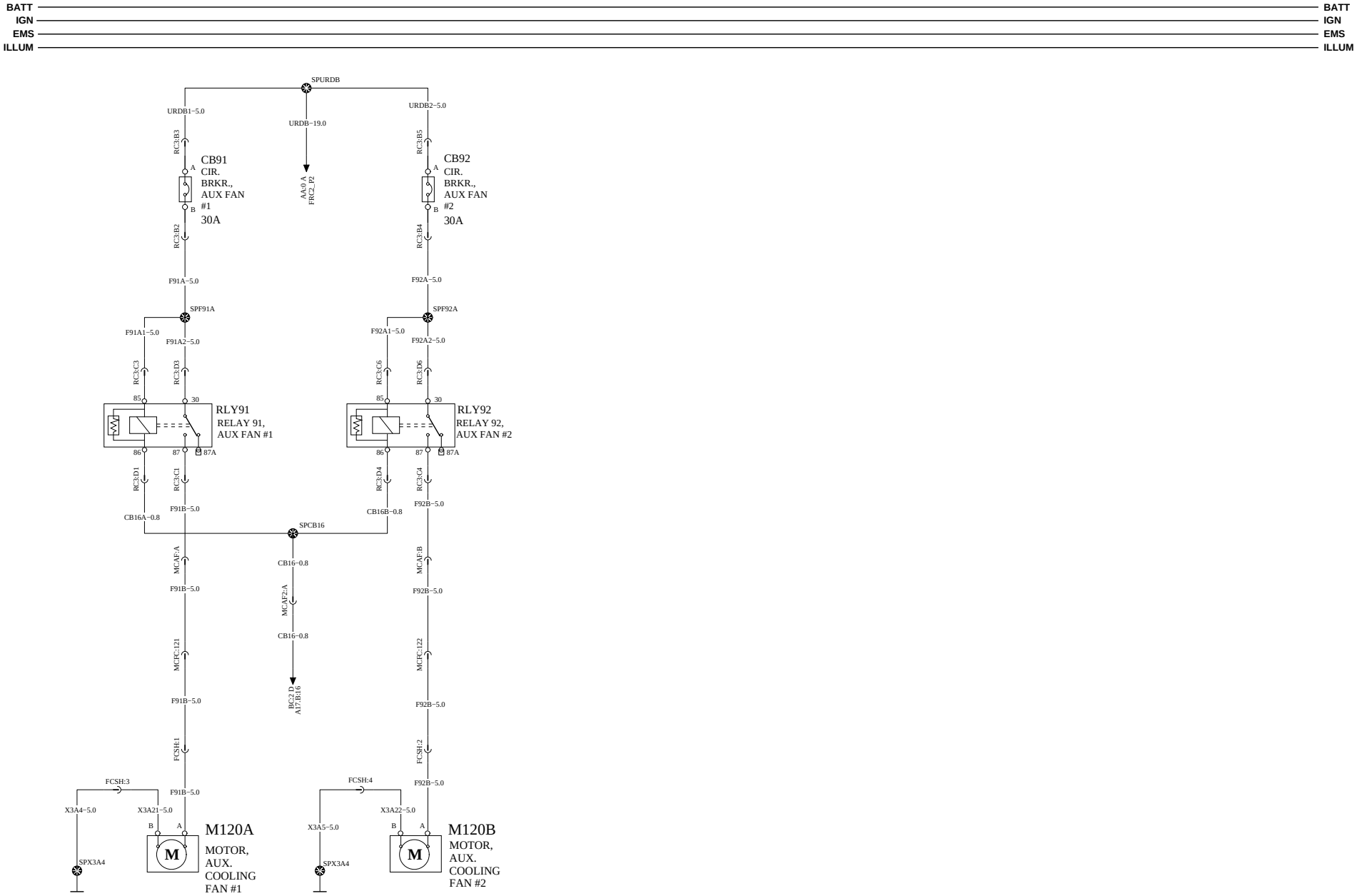

UREA DOSING SYSTEM

https://truckmanualshub.com/

WIRING DIAGRAM: CF

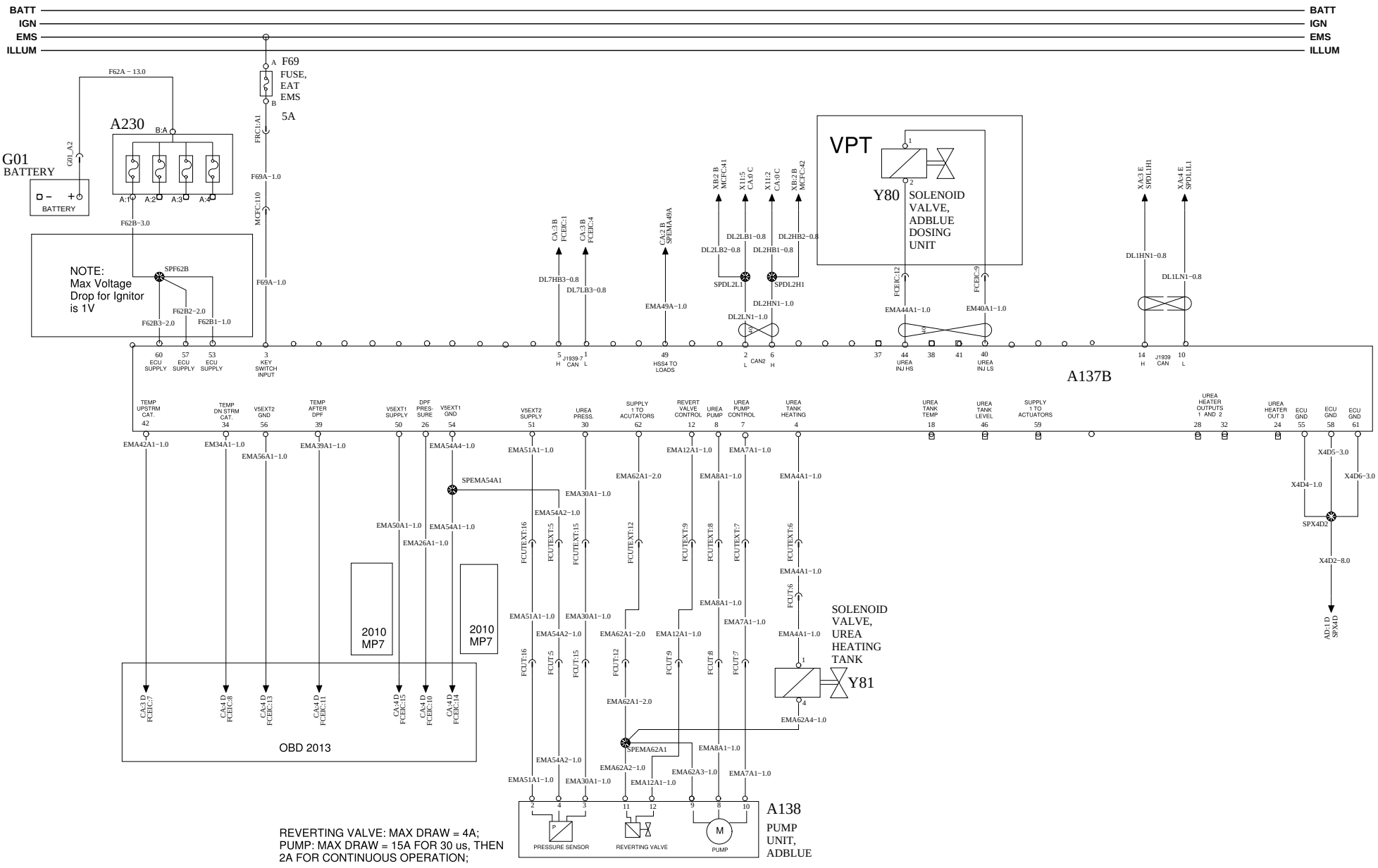

VOLVO Group Trucks Technology	Document title: WIRING DIAGRAM - TYPE OM W/OBD 2013 ENG	Document No	Issue	Volume	Page
	Document type: PRODUCT SCHEMATIC	22437775	04	1 (2)	25 (52)

https://truckmanualshub.com/

WIRING DIAGRAM: CH

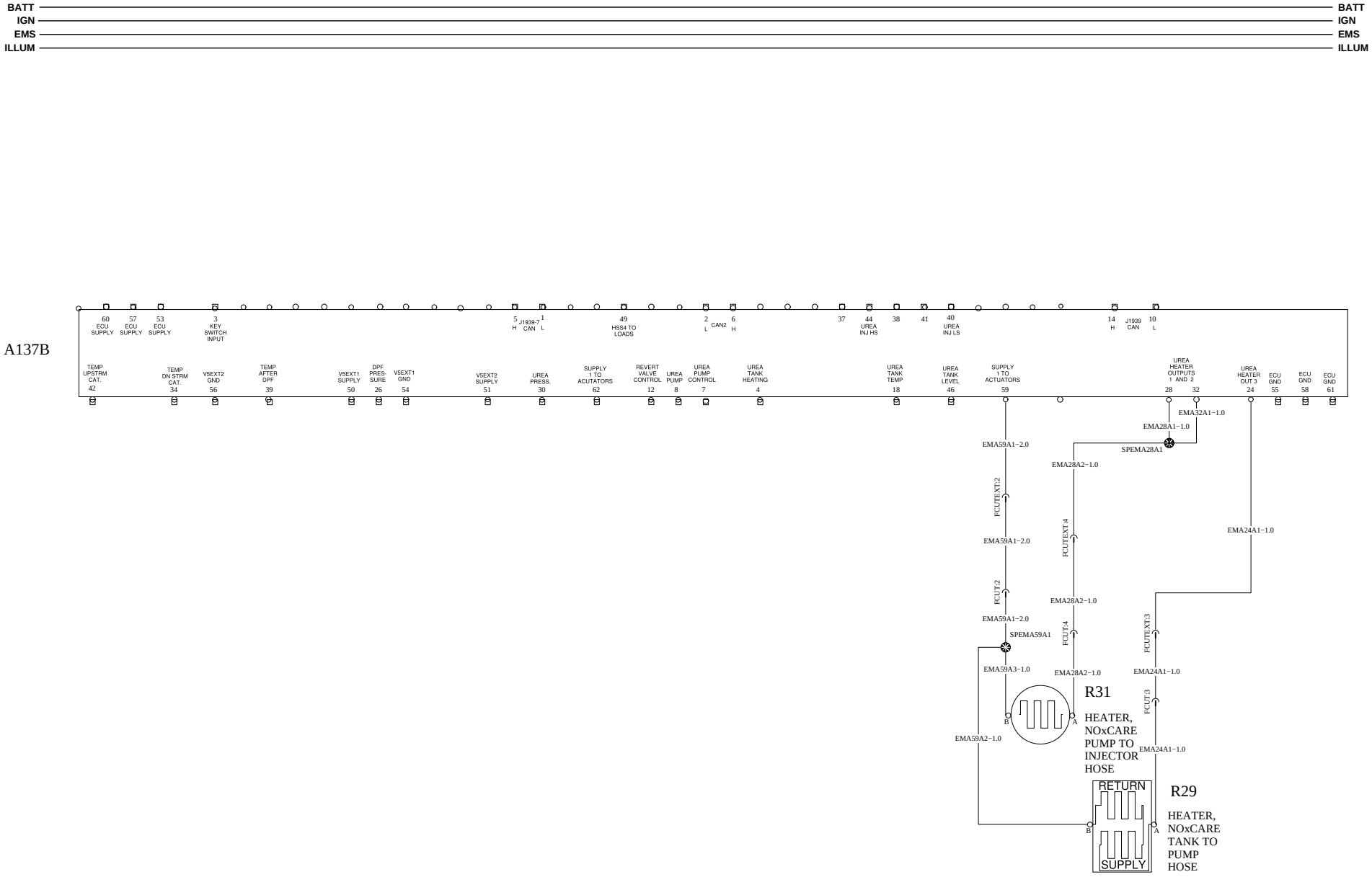

VOLVO Group Trucks Technology	Document title WIRING DIAGRAM - TYPE OM W/OBD 2013 ENG Document type PRODUCT SCHEMATIC	Document No 22437775	Issue 04	Volume 1 (2)	Page 26 (52)

https://truckmanualshub.com/

WIRING DIAGRAM: DC

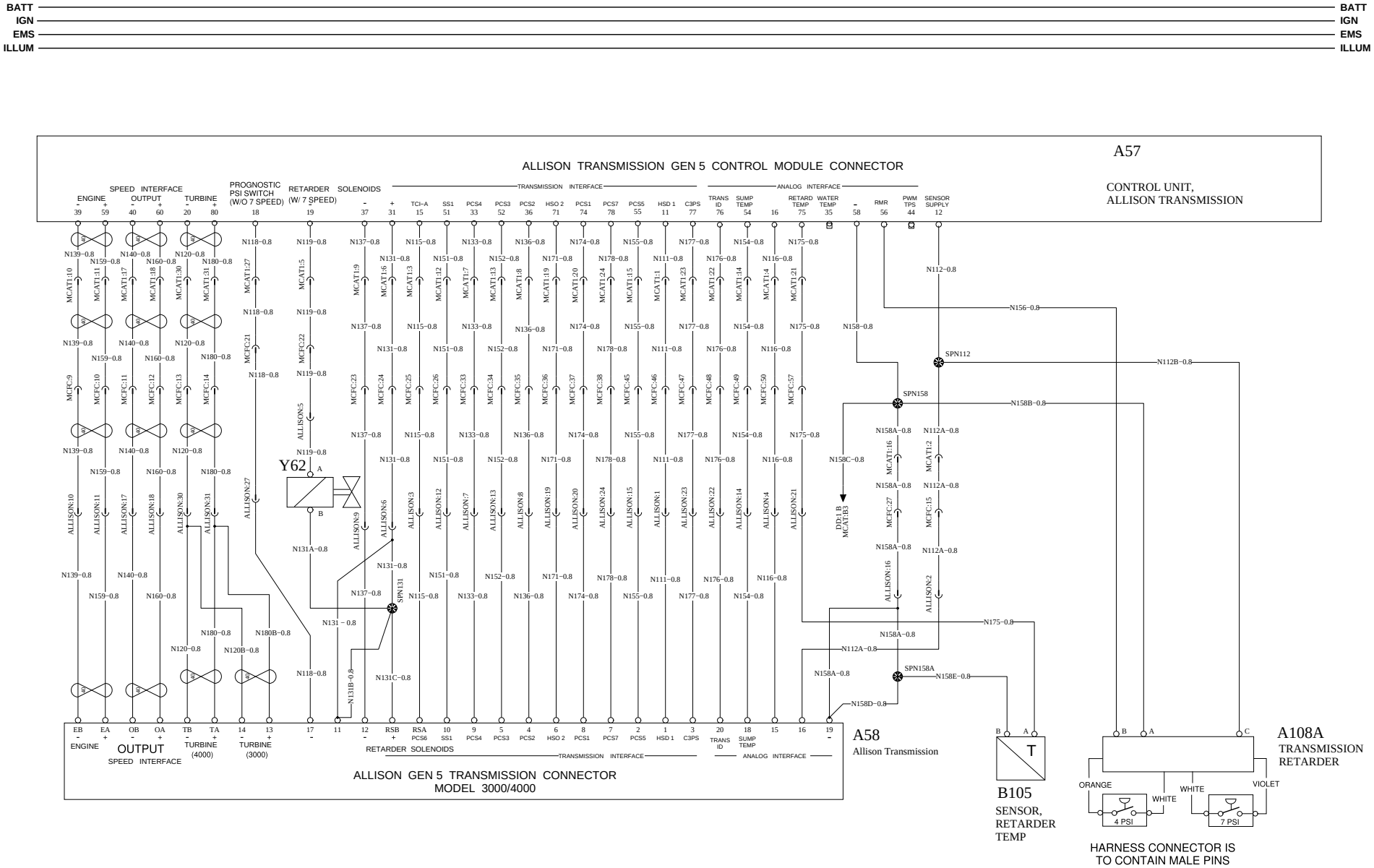

VOLVO Group Trucks Technology	Document title: WIRING DIAGRAM - TYPE OM W/OBD 2013 ENG	Document No	Issue	Volume	Page
	Document type: PRODUCT SCHEMATIC	22437775	04	1 (2)	27 (52)

https://truckmanualshub.com/

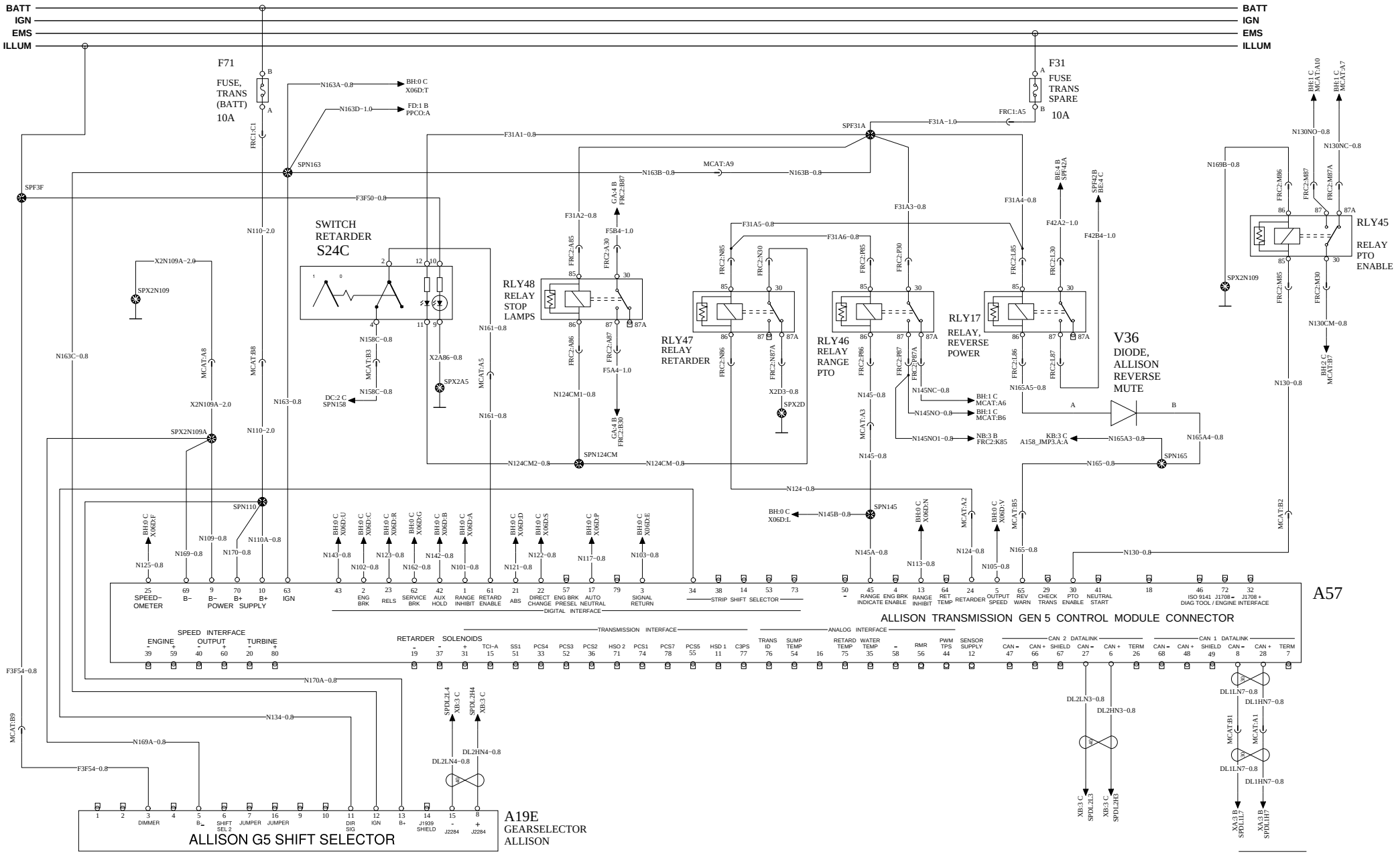

ABS MERITOR

https://truckmanualshub.com/

WIRING DIAGRAM: EA

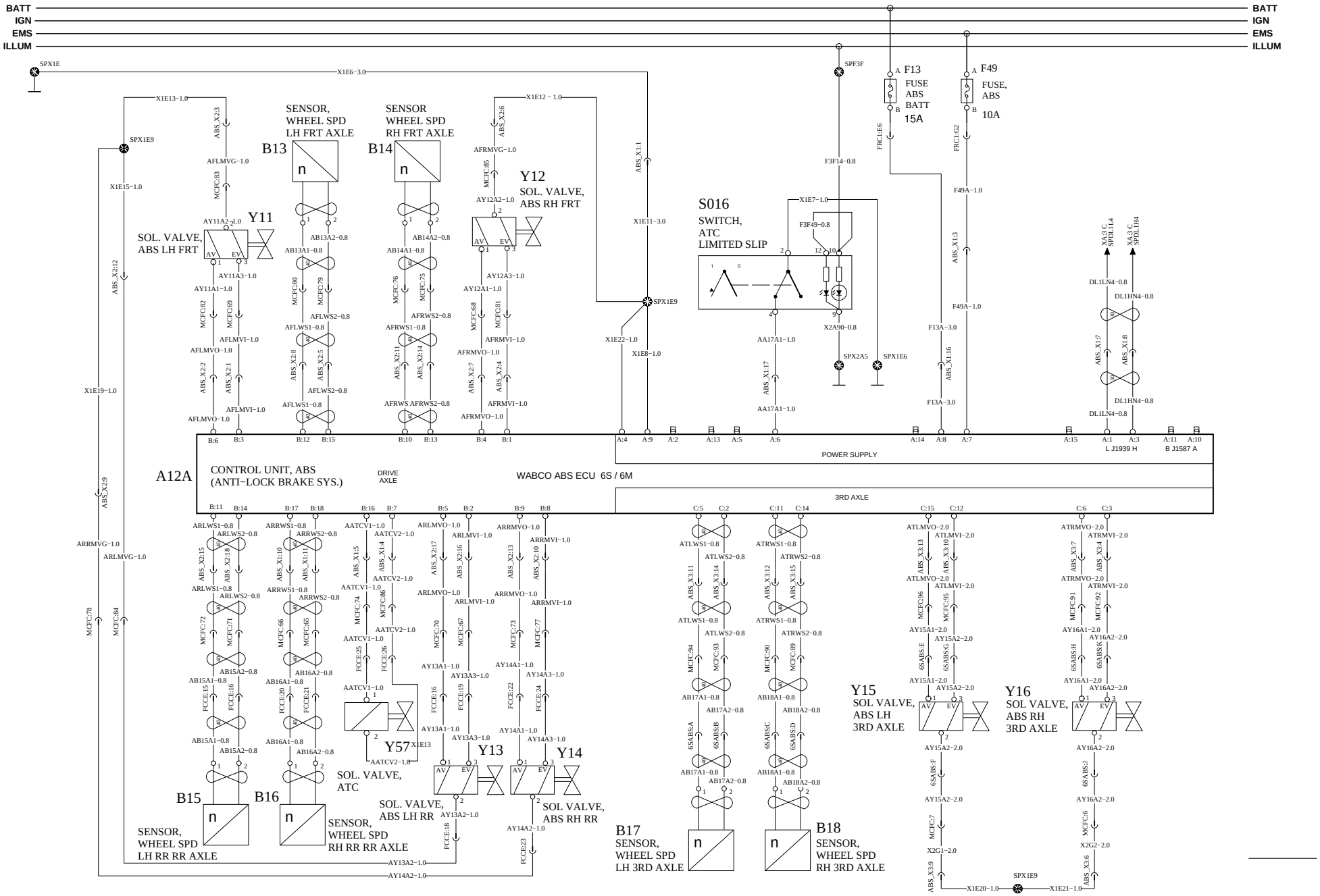

VOLVO Group Trucks Technology	Document title WIRING DIAGRAM - TYPE OM W/OBD 2013 ENG Document type PRODUCT SCHEMATIC	Document No 22437775	Issue 04	Volume 1 (2)	Page 29 (52)

ABS8 BENDIX

https://truckmanualshub.com/

WIRING DIAGRAM: ED

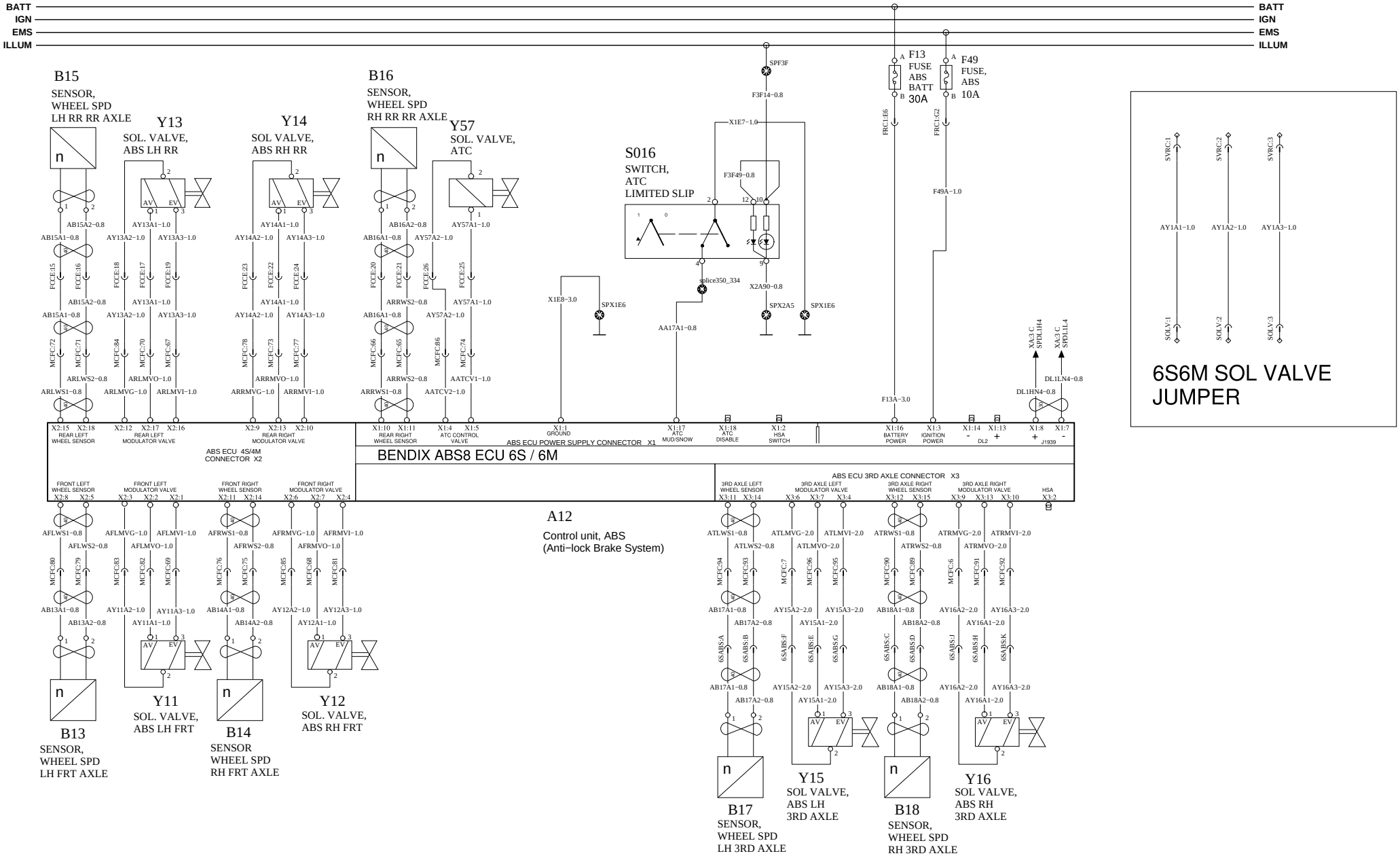

https://truckmanualshub.com/

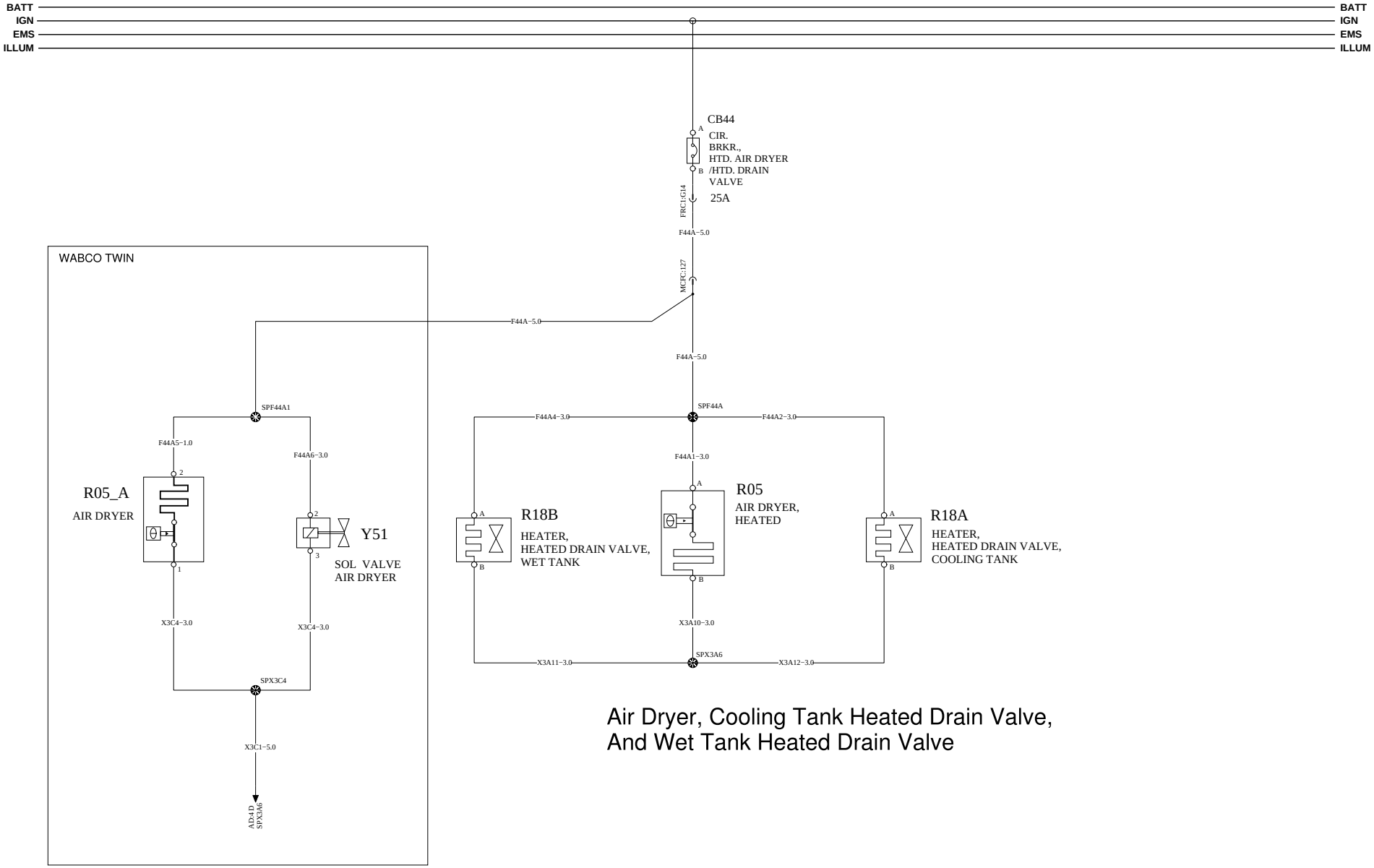

Air Dryer, Cooling Tank Heated Drain Valve,
And Wet Tank Heated Drain Valve

CHASSIS SOLENOIDS

https://truckmanualshub.com/

WIRING DIAGRAM: FB

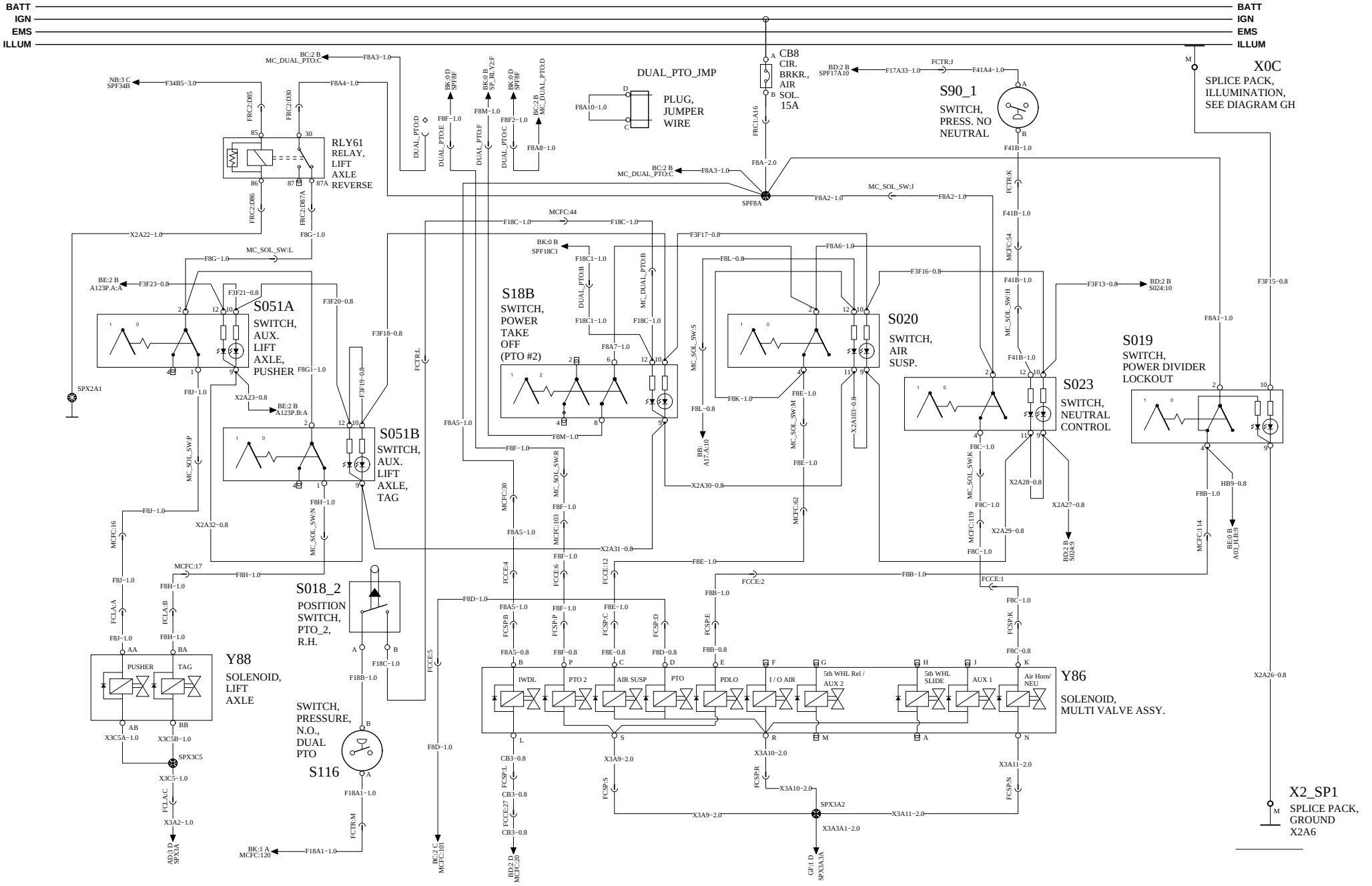

VOLVO Group Trucks Technology	Document title WIRING DIAGRAM - TYPE OM W/OBD 2013 ENG Document type PRODUCT SCHEMATIC	Document No 22437775	Issue 04	Volume 1 (2)	Page 32 (52)

MUNCIE PUMP & BEACON LAMPS

https://truckmanualshub.com/

WIRING DIAGRAM: FC

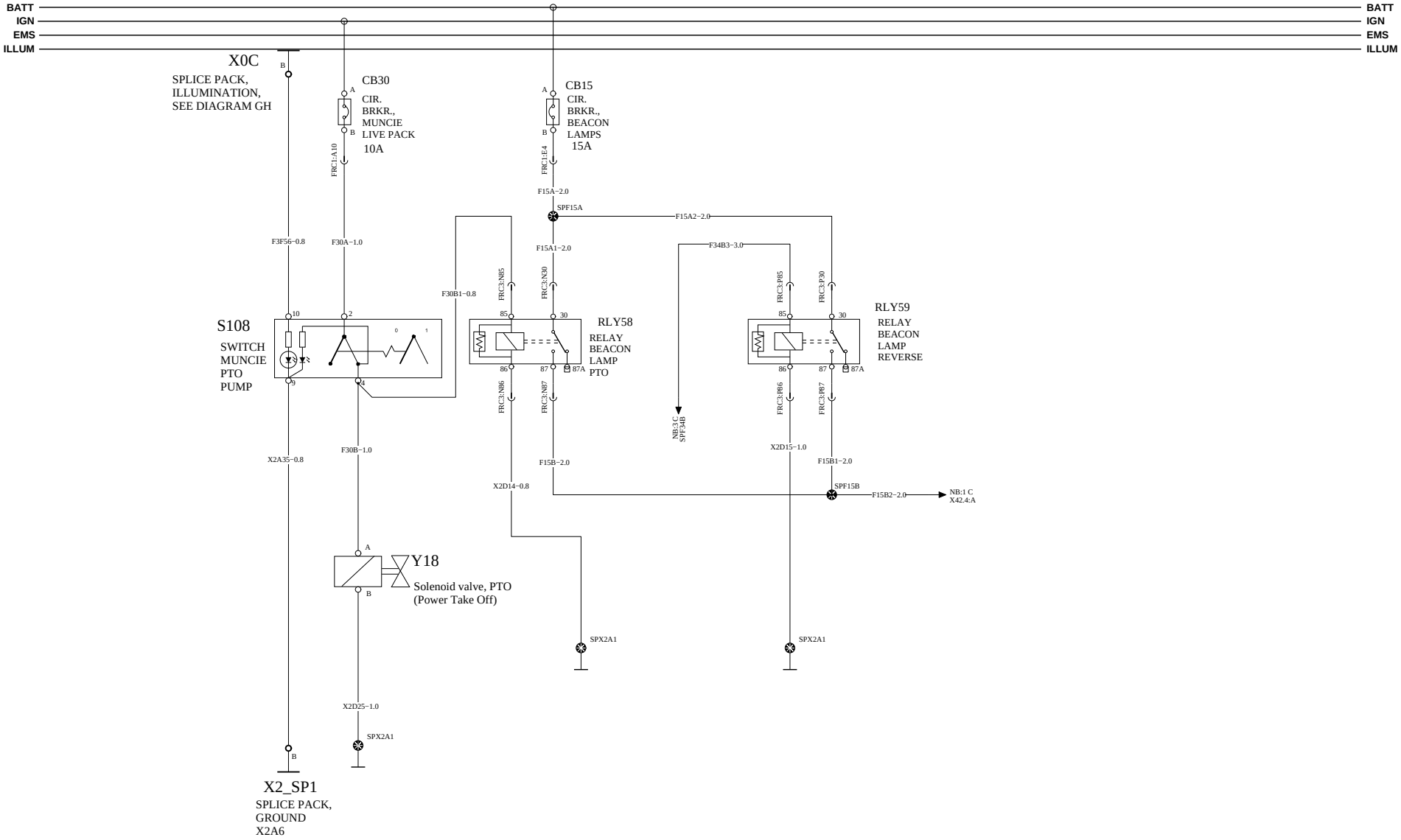

VOLVO Group Trucks Technology	Document title WIRING DIAGRAM - TYPE OM W/OBD 2013 ENG Document type PRODUCT SCHEMATIC	Document No 22437775	Issue 04	Volume 1 (2)	Page 33 (52)

https://truckmanualshub.com/

WIRIING DIAGRAM: FD

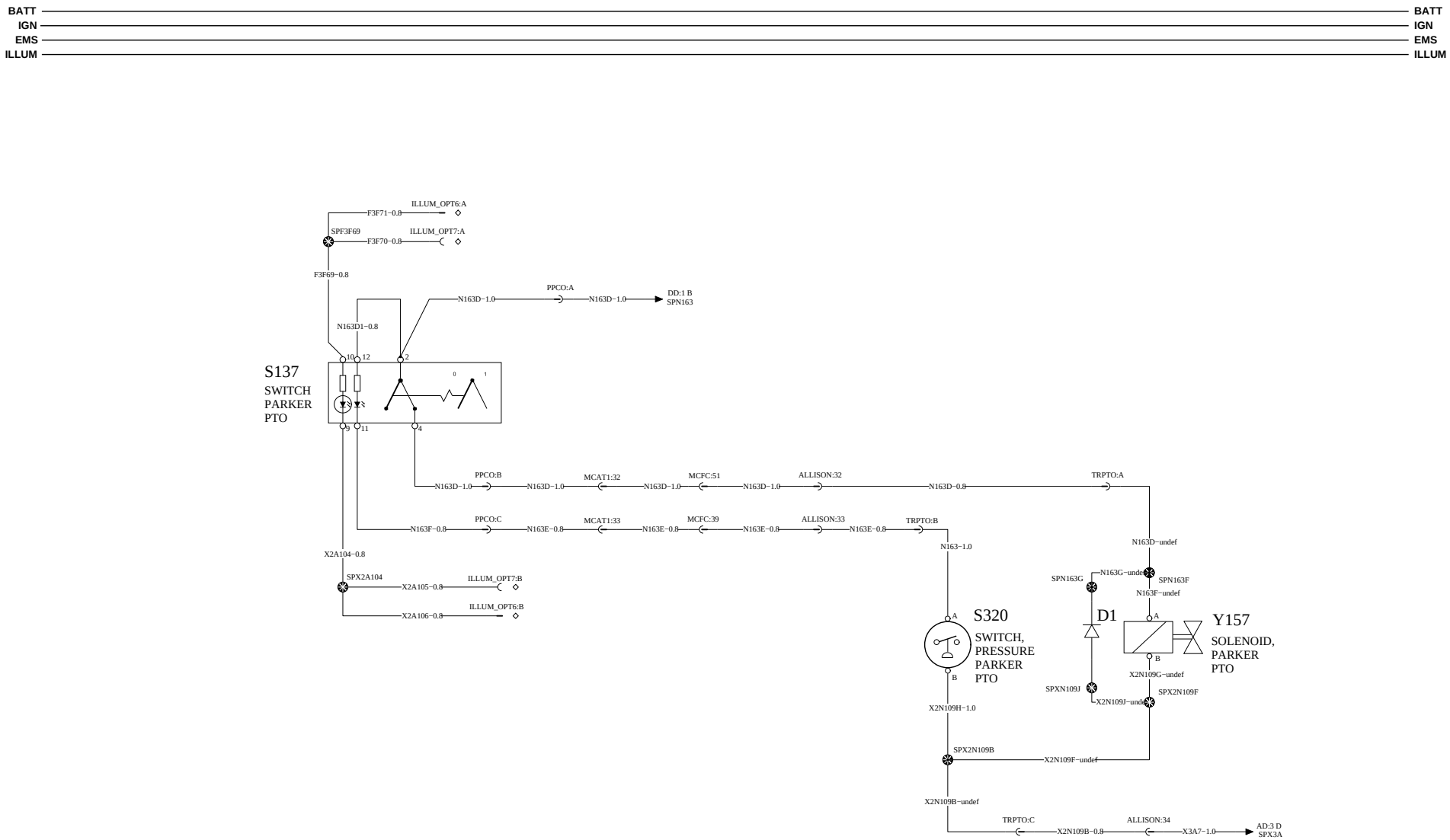

LIGHTING CONTROL

https://truckmanualshub.com/

WIRING DIAGRAM: GA

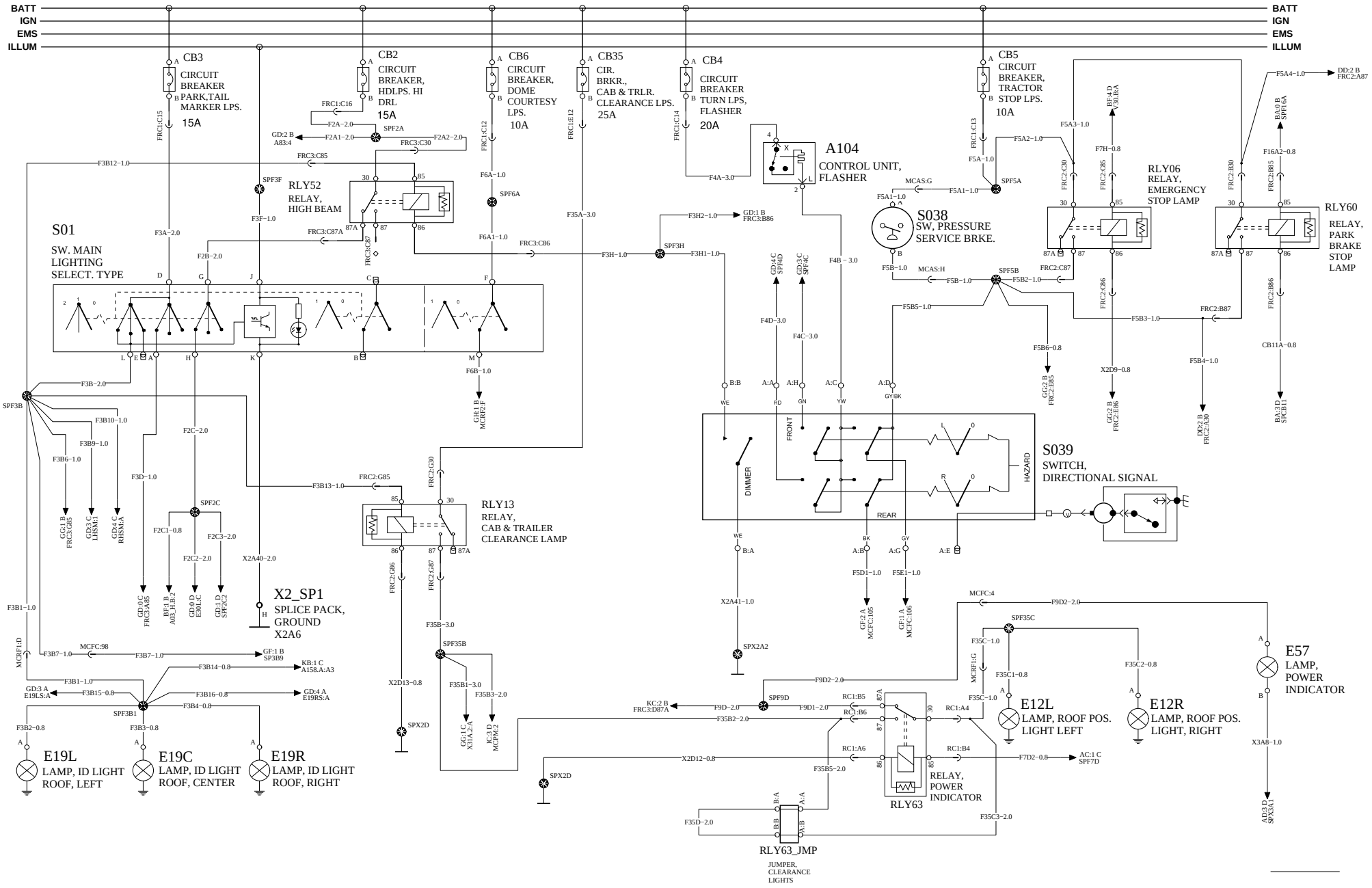

VOLVO Group Trucks Technology	Document title WIRING DIAGRAM - TYPE OM W/OBD 2013 ENG Document type PRODUCT SCHEMATIC	Document No 22437775	Issue 04	Volume 1 (2)	Page 35 (52)

https://truckmanualshub.com/

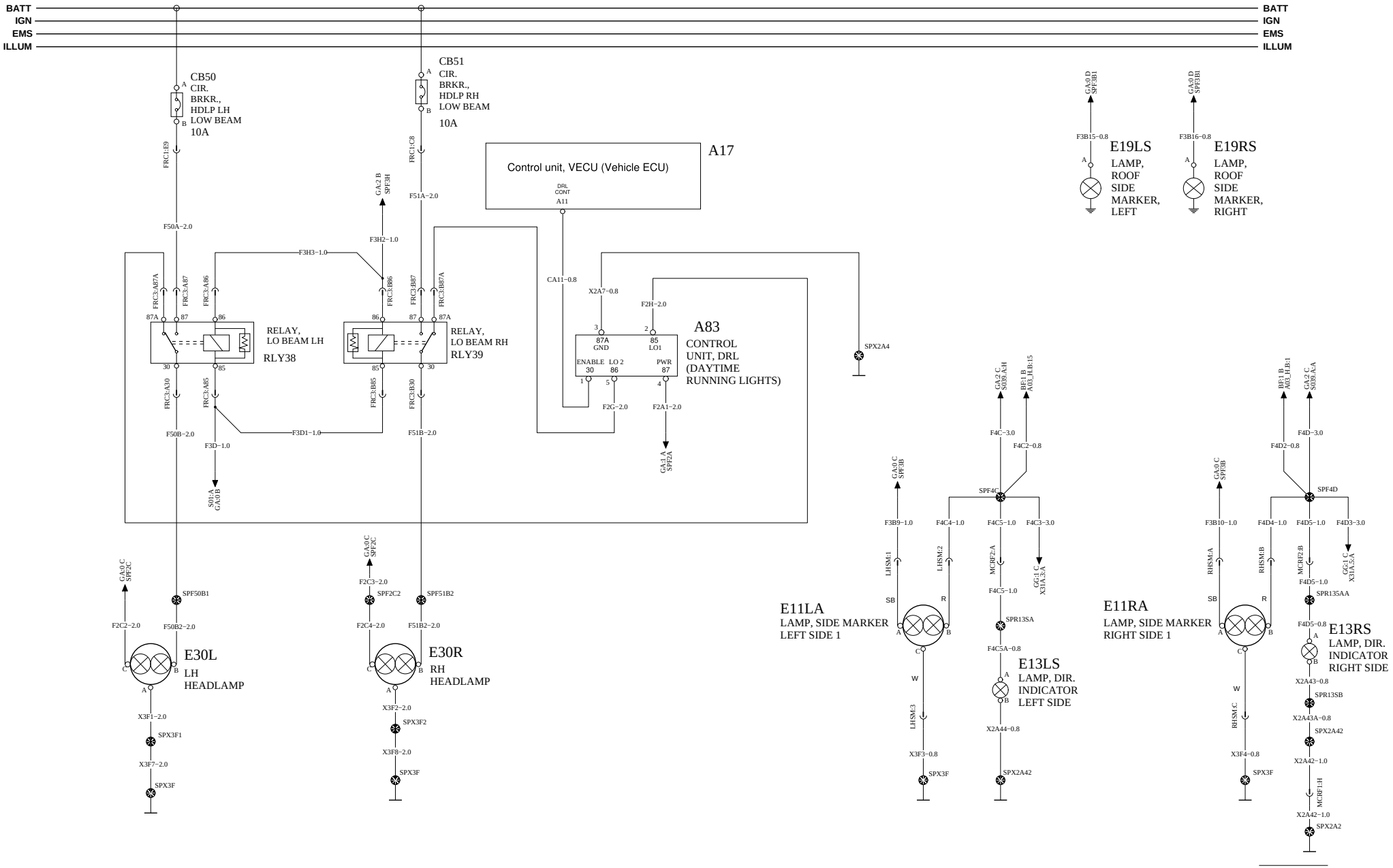

VOLVO Group Trucks Technology	Document title WIRING DIAGRAM - TYPE OM W/OBD 2013 ENG Document type PRODUCT SCHEMATIC	Document No 22437775	Issue 04	Volume 1 (2)	Page 36 (52)

https://truckmanualshub.com/

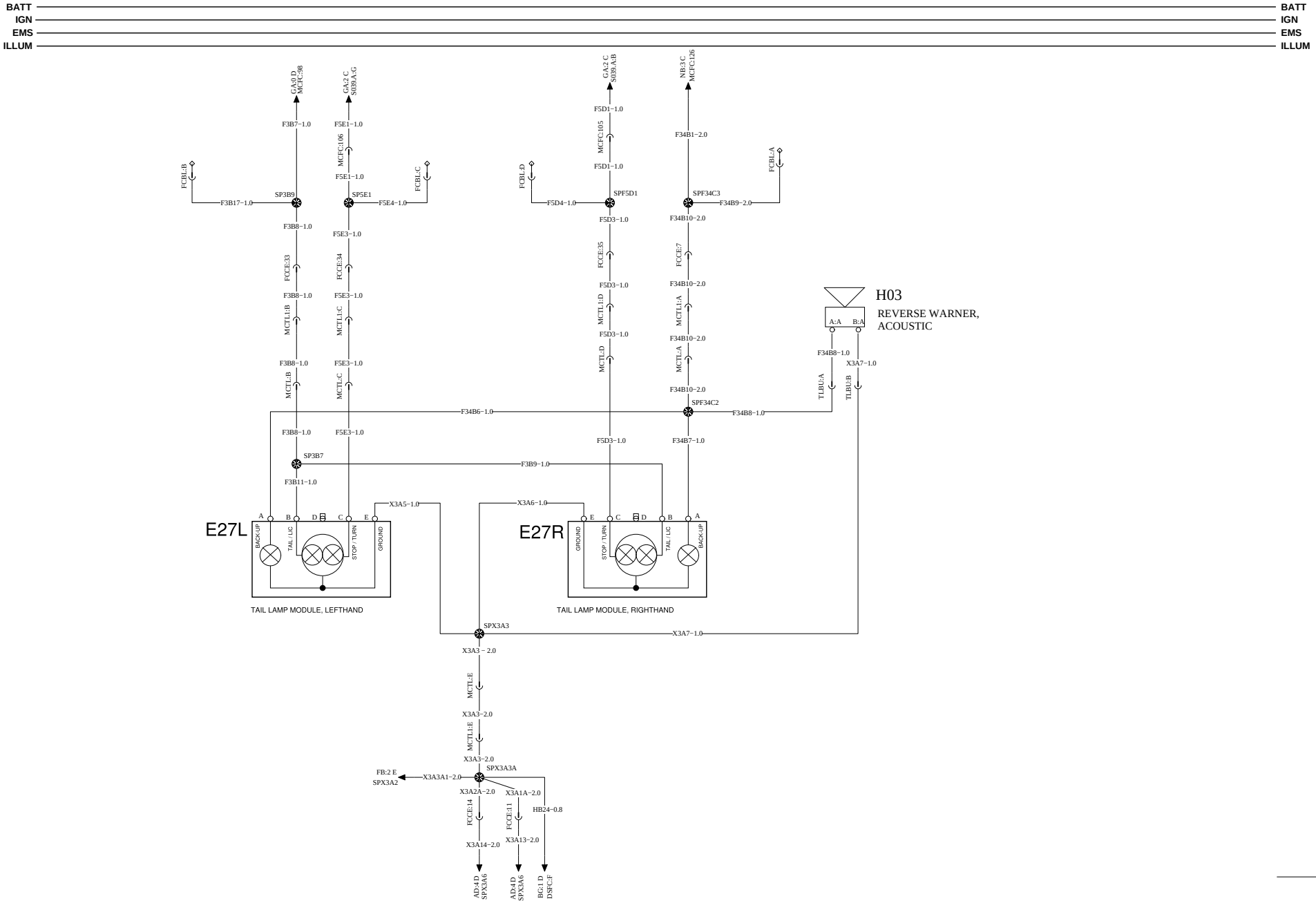

VOLVO Group Trucks Technology	Document title WIRING DIAGRAM - TYPE OM W/OBD 2013 ENG Document type PRODUCT SCHEMATIC	Document No 22437775	Issue 04	Volume 1 (2)	Page 37 (52)

TRAILER LIGHTING CONTROL

https://truckmanualshub.com/

WIRING DIAGRAM: GG

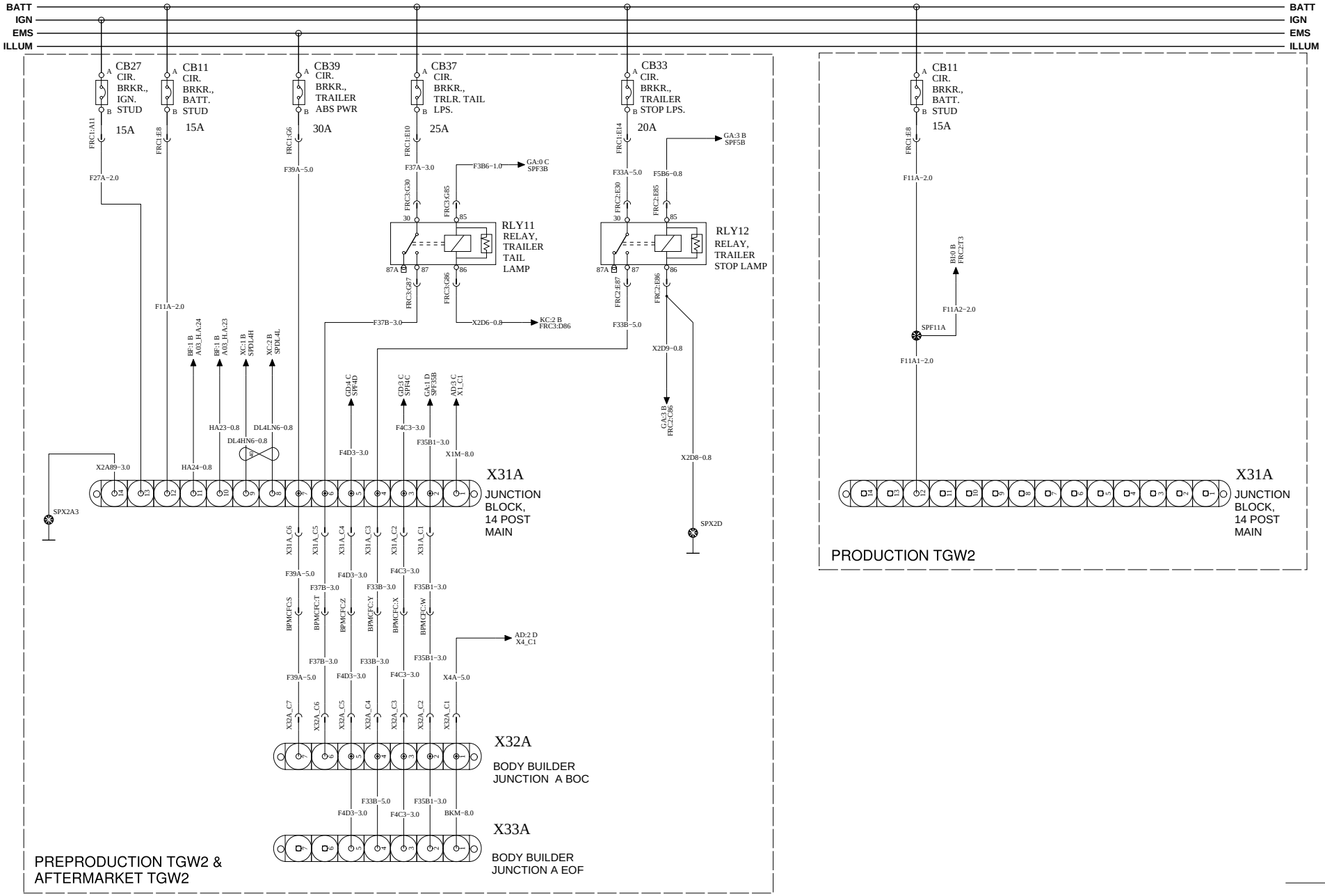

VOLVO Group Trucks Technology	Document title: WIRING DIAGRAM - TYPE OM W/OBD 2013 ENG Document type: PRODUCT SCHEMATIC	Document No: 22437775	Issue: 04	Volume: 1 (2)	Page: 38 (52)

https://truckmanualshub.com/

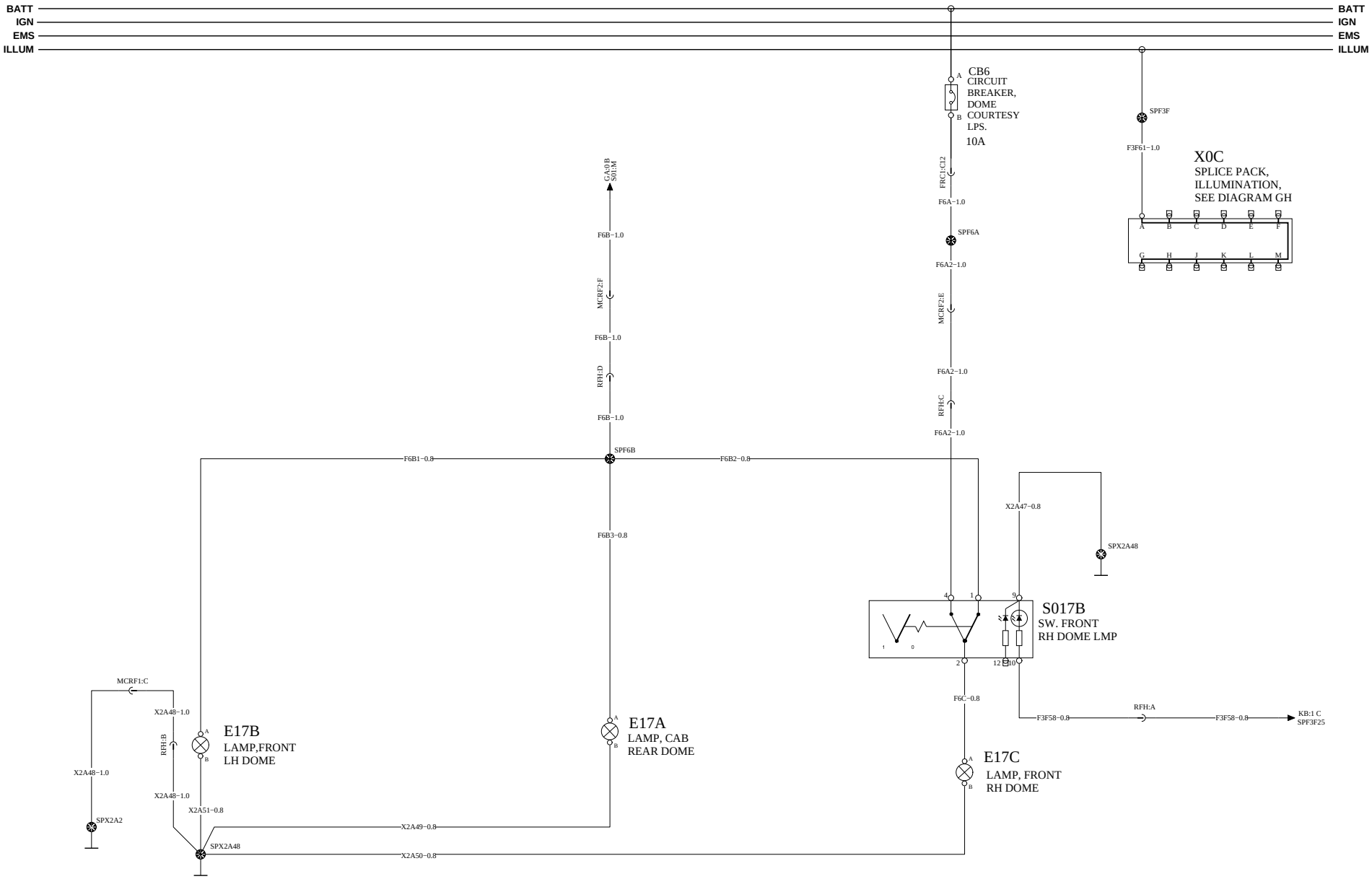

WIPER / WASHER

https://truckmanualshub.com/

WIRING DIAGRAM: GP

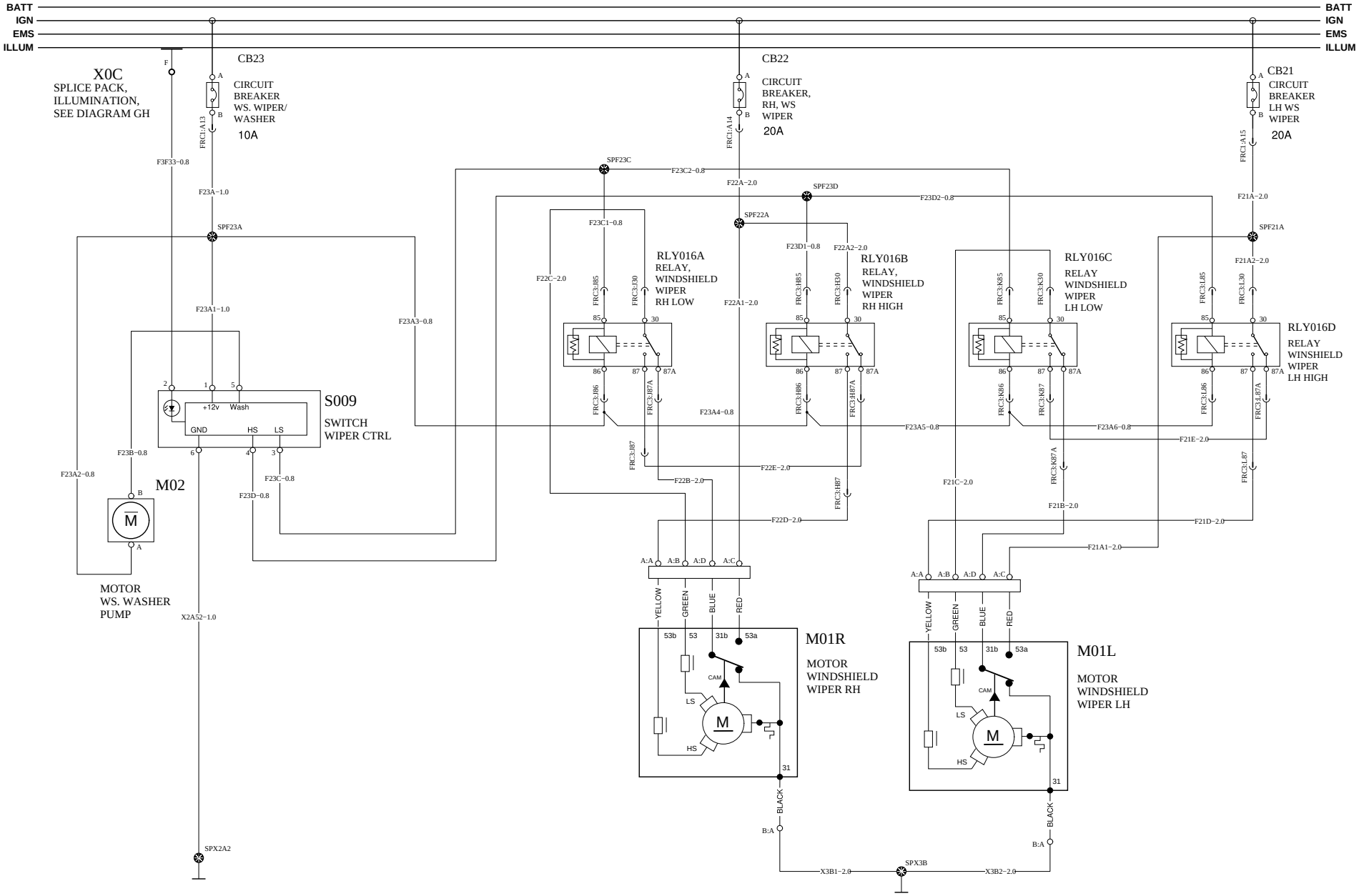

Document title	Document No	Issue	Volume	Page
WIRING DIAGRAM - TYPE OM W/OBD 2013 ENG	22437775	04	1 (2)	40 (52)
Document type: PRODUCT SCHEMATIC				

VOLVO Group Trucks Technology

HORN WIRING

https://truckmanualshub.com/

WIRING DIAGRAM: GQ

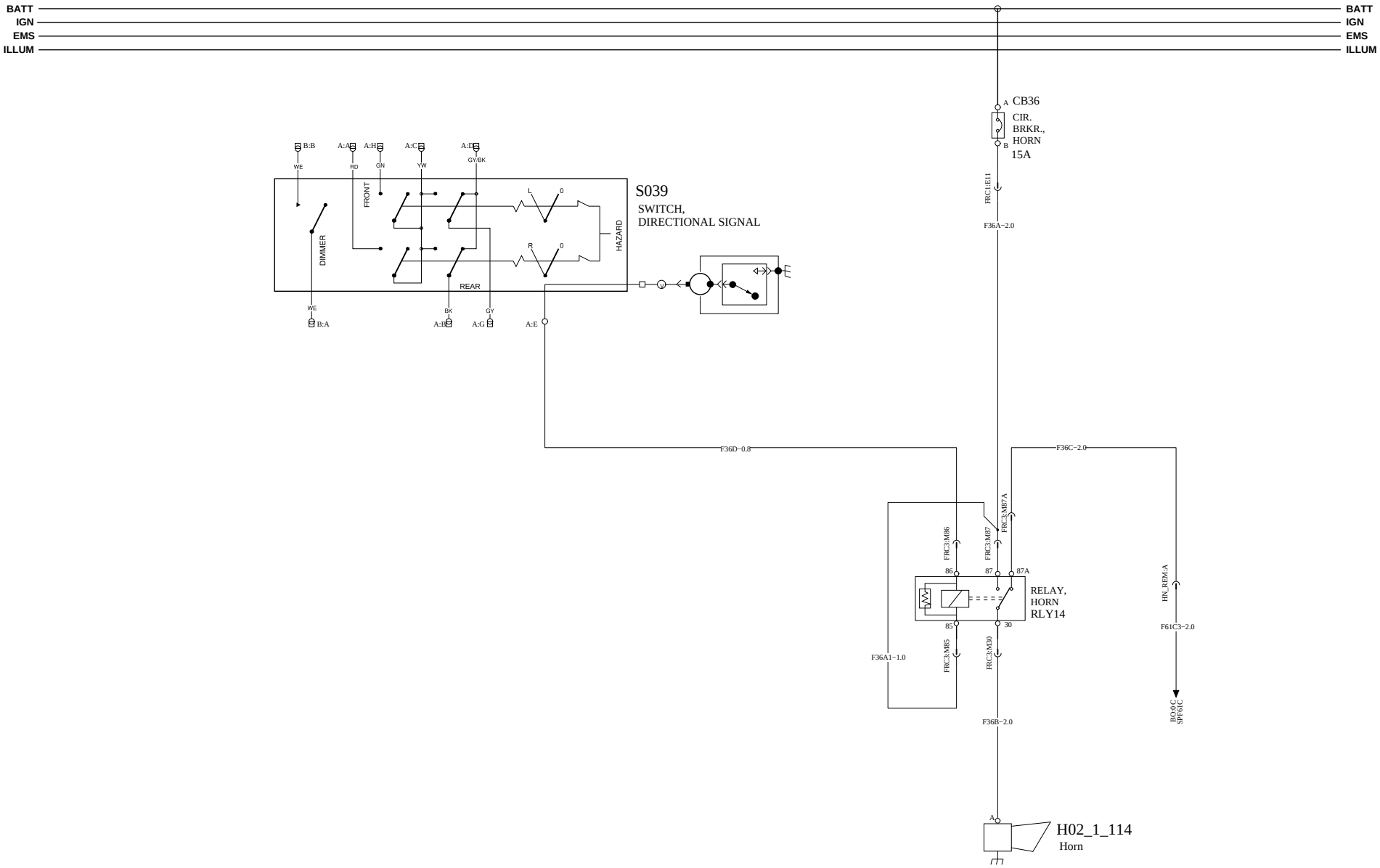

https://truckmanualshub.com/

WIRING DIAGRAM: HA

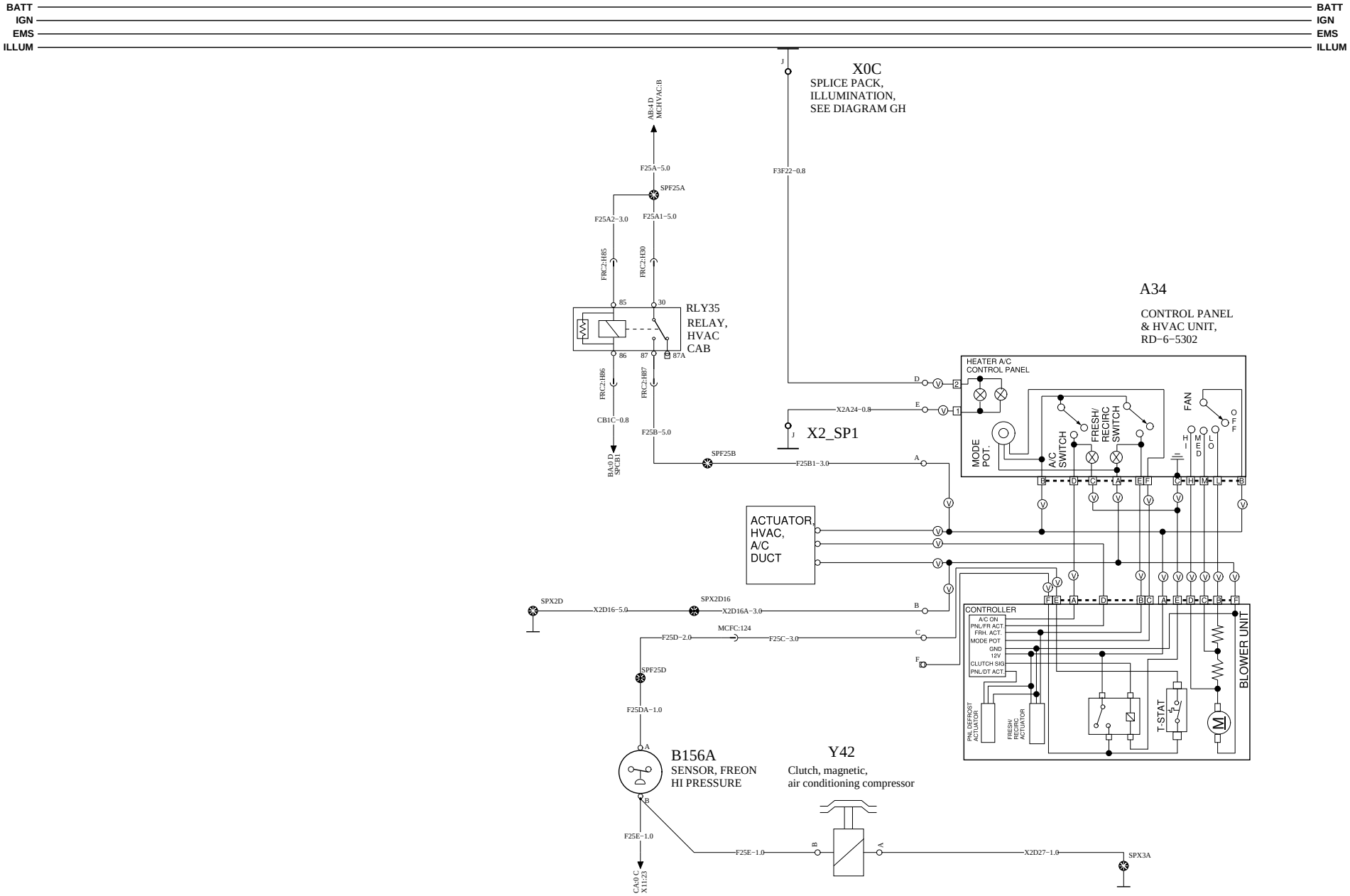

VOLVO Group Trucks Technology	Document title WIRING DIAGRAM - TYPE OM W/OBD 2013 ENG Document type PRODUCT SCHEMATIC	Document No 22437775	Issue 04	Volume 1 (2)	Page 42 (52)

https://truckmanualshub.com/

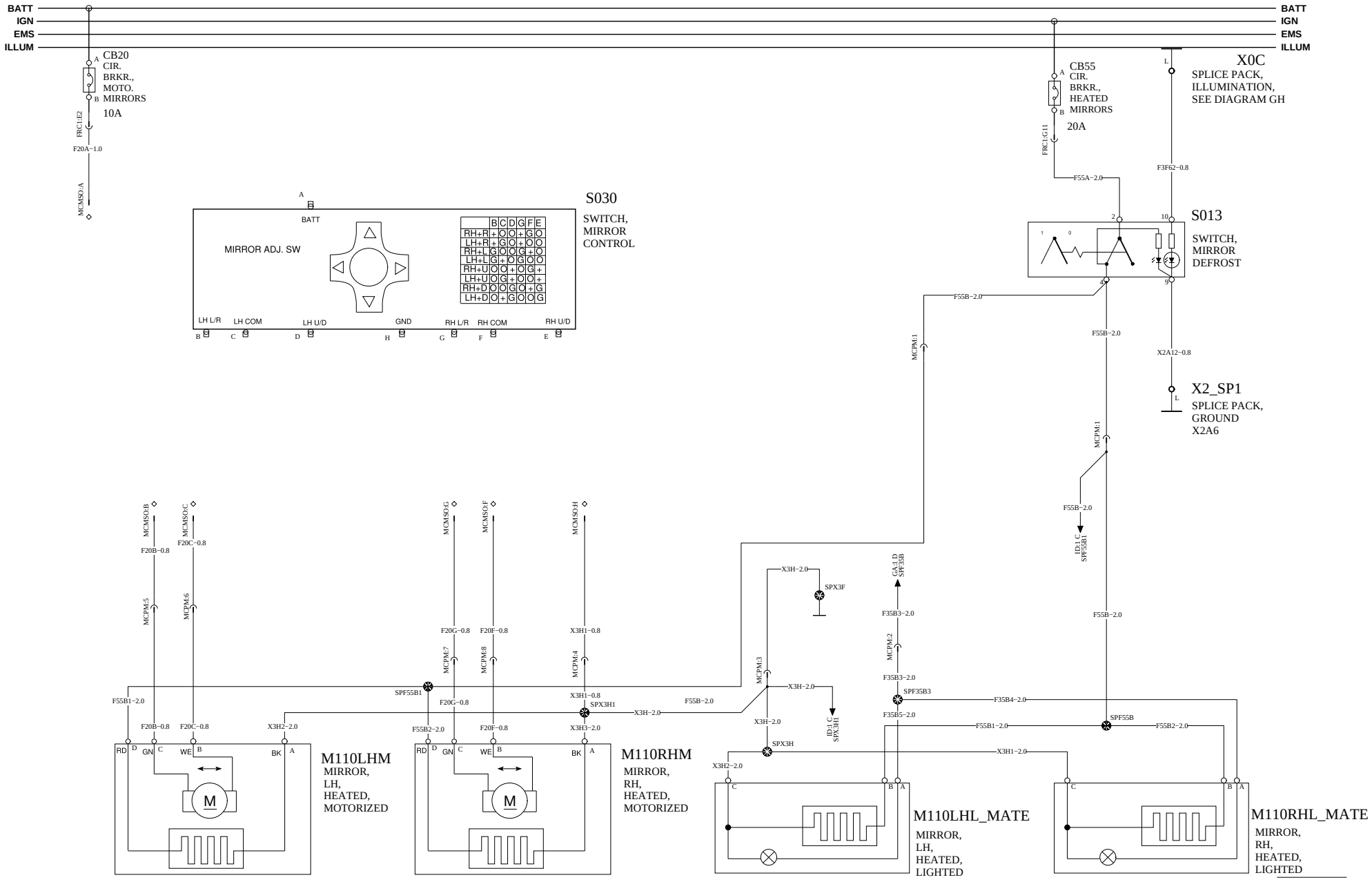

HEATED & MOTORIZED MIRRORS

HEATED & LIGHTED MIRRORS

https://truckmanualshub.com/

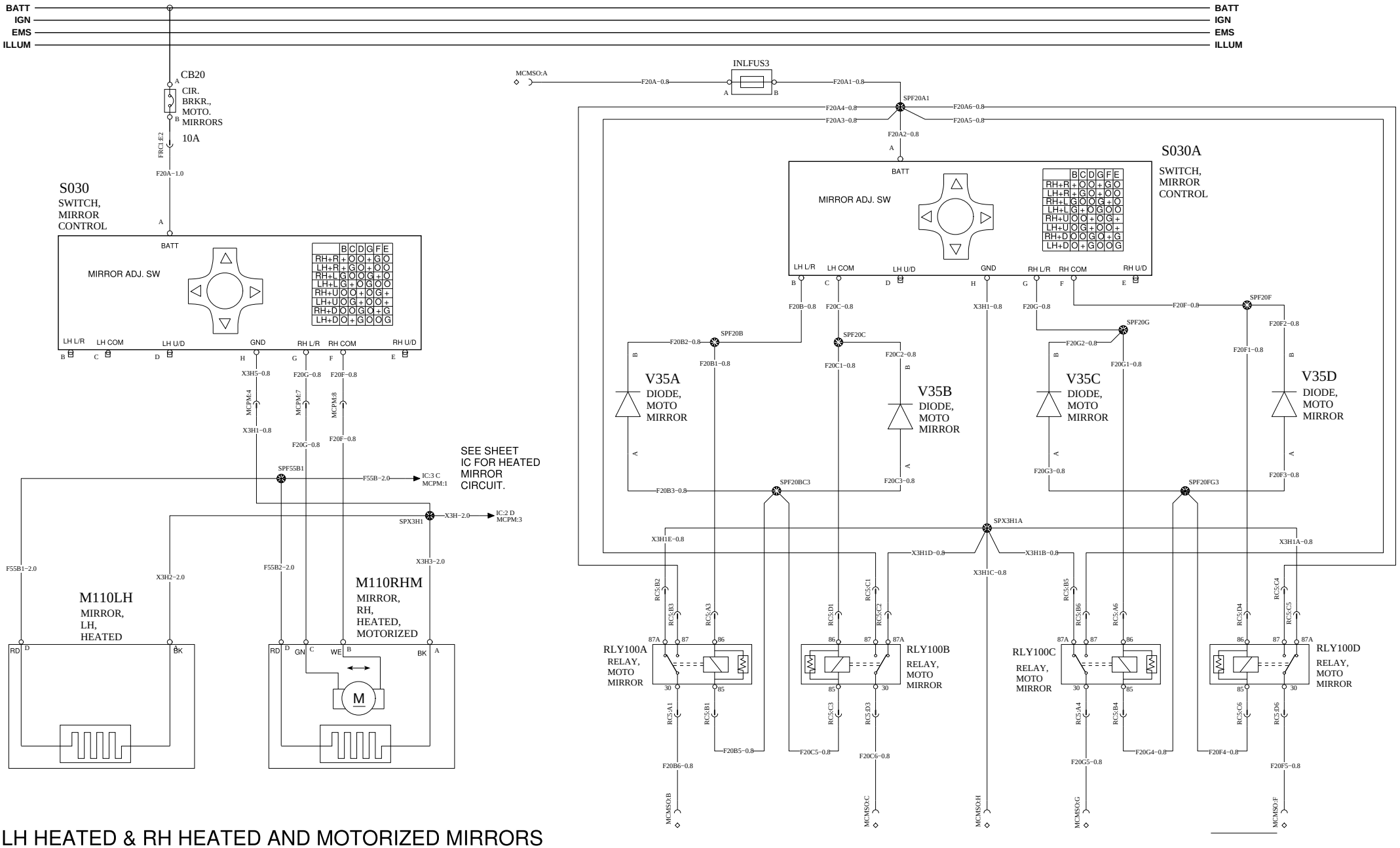

LH HEATED & RH HEATED AND MOTORIZED MIRRORS

https://truckmanualshub.com/

WIRING DIAGRAM: KA

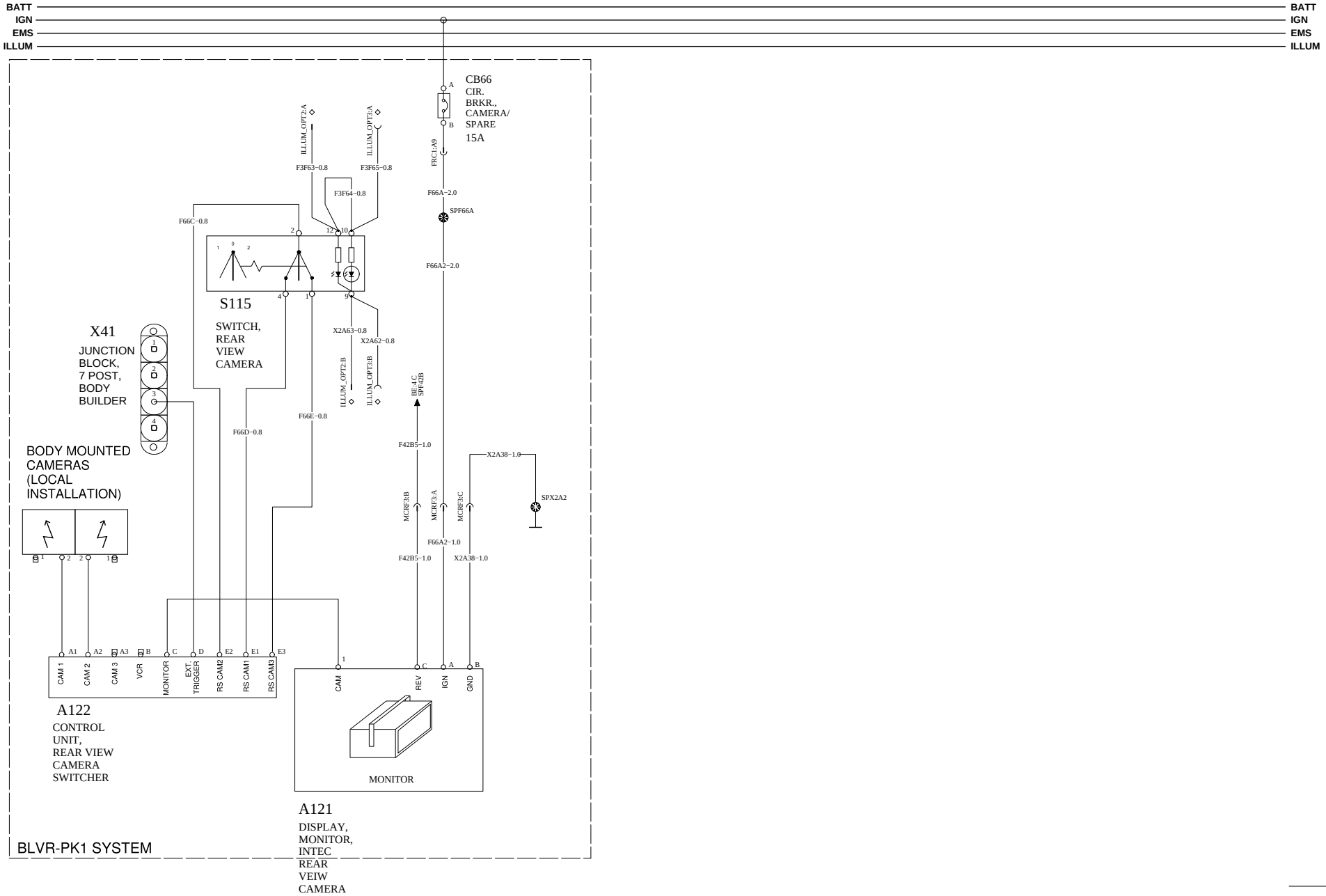

https://truckmanualshub.com/

WIRING DIAGRAM: KB

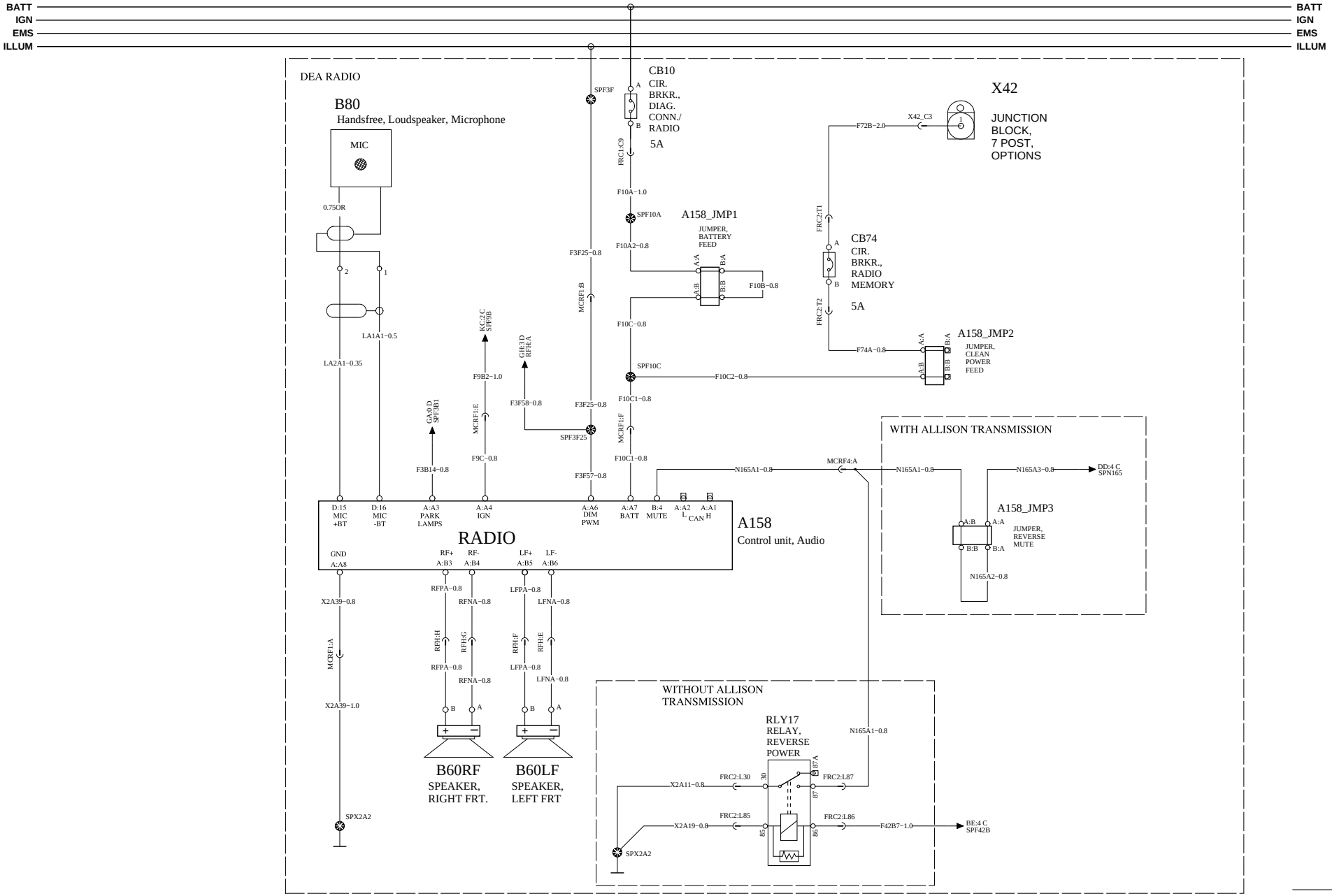

VOLVO Group Trucks Technology	Document title WIRING DIAGRAM - TYPE OM W/OBD 2013 ENG	Document No	Issue	Volume	Page
	Document type PRODUCT SCHEMATIC	22437775	04	1 (2)	46 (52)

https://truckmanualshub.com/

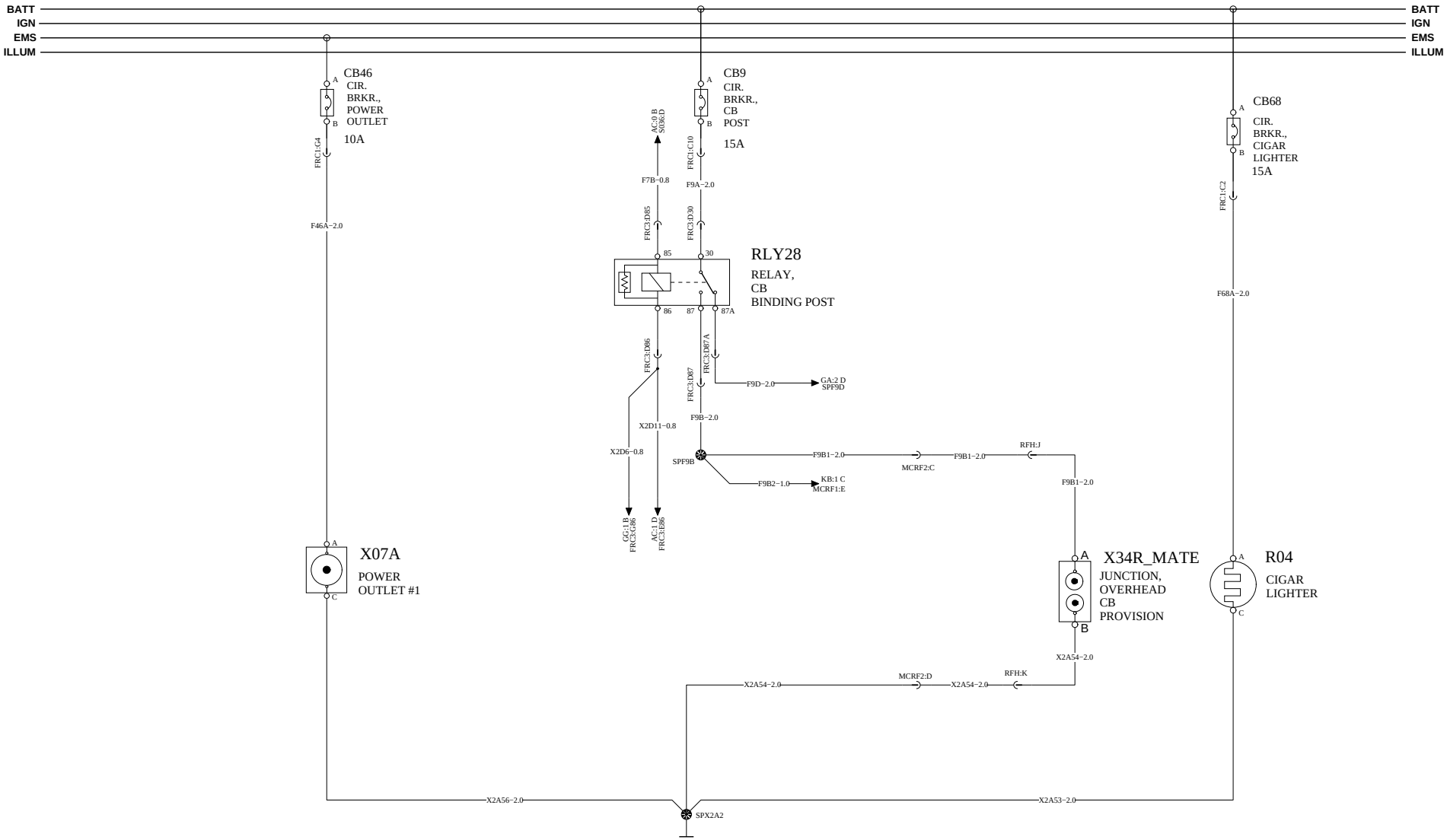

VOLVO Group Trucks Technology	Document title WIRING DIAGRAM - TYPE OM W/OBD 2013 ENG Document type PRODUCT SCHEMATIC	Document No 22437775	Issue 04	Volume 1 (2)	Page 47 (52)

SPARE CONNECTORS & FEEDS

https://truckmanualshub.com/

WIRING DIAGRAM: NA

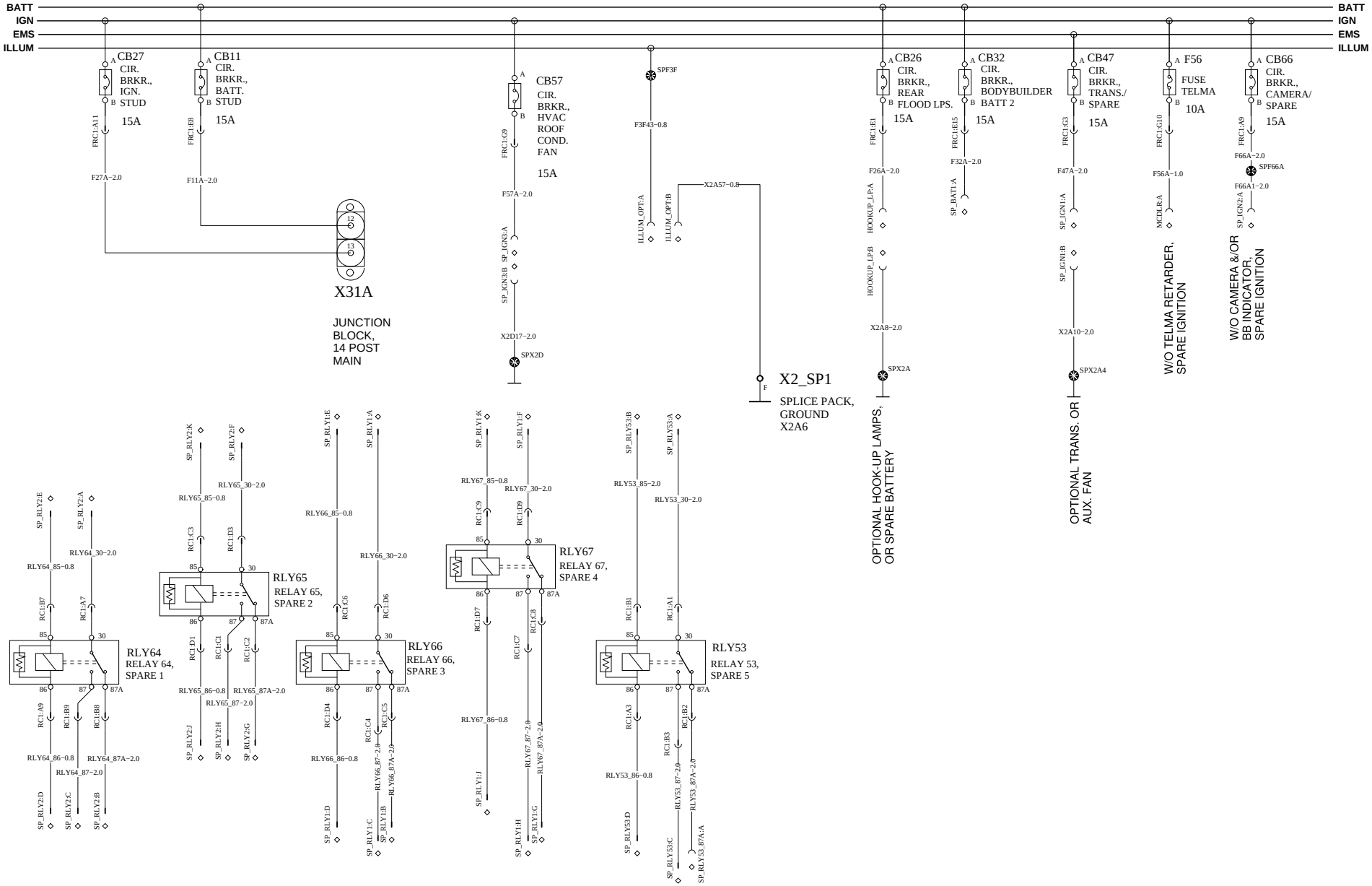

VOLVO Group Trucks Technology	Document title: WIRING DIAGRAM - TYPE OM W/OBD 2013 ENG Document type: PRODUCT SCHEMATIC	Document No: 22437775	Issue: 04	Volume: 1 (2)	Page: 48 (52)

https://truckmanualshub.com/

WIRING DIAGRAM: NB

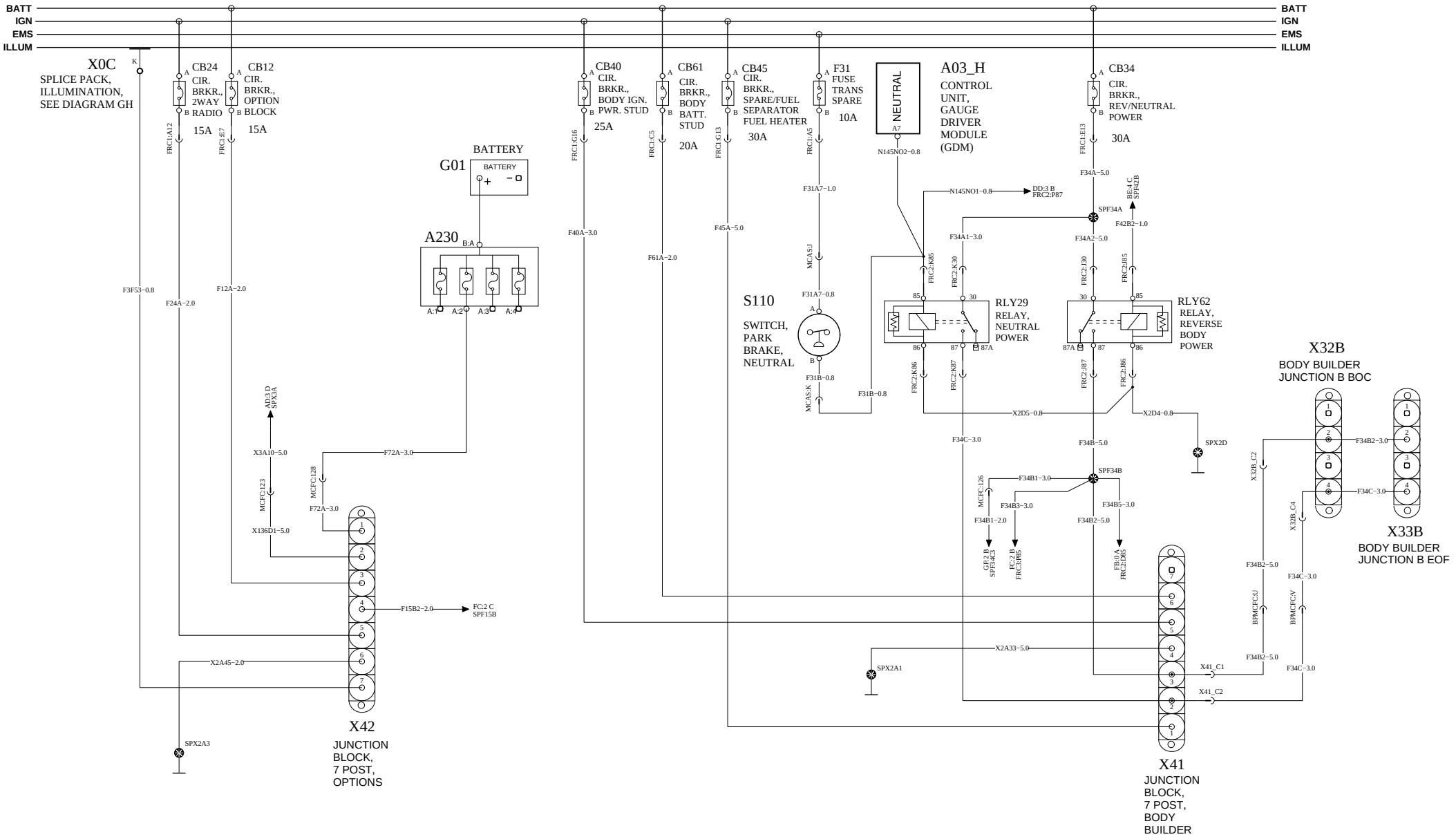

Document title	Document No	Issue	Volume	Page
WIRING DIAGRAM - TYPE OM W/OBD 2013 ENG	22437775	04	1 (2)	49 (52)
Document type: PRODUCT SCHEMATIC				

VOLVO Group Trucks Technology

https://truckmanualshub.com/

WIRING DIAGRAM: XA

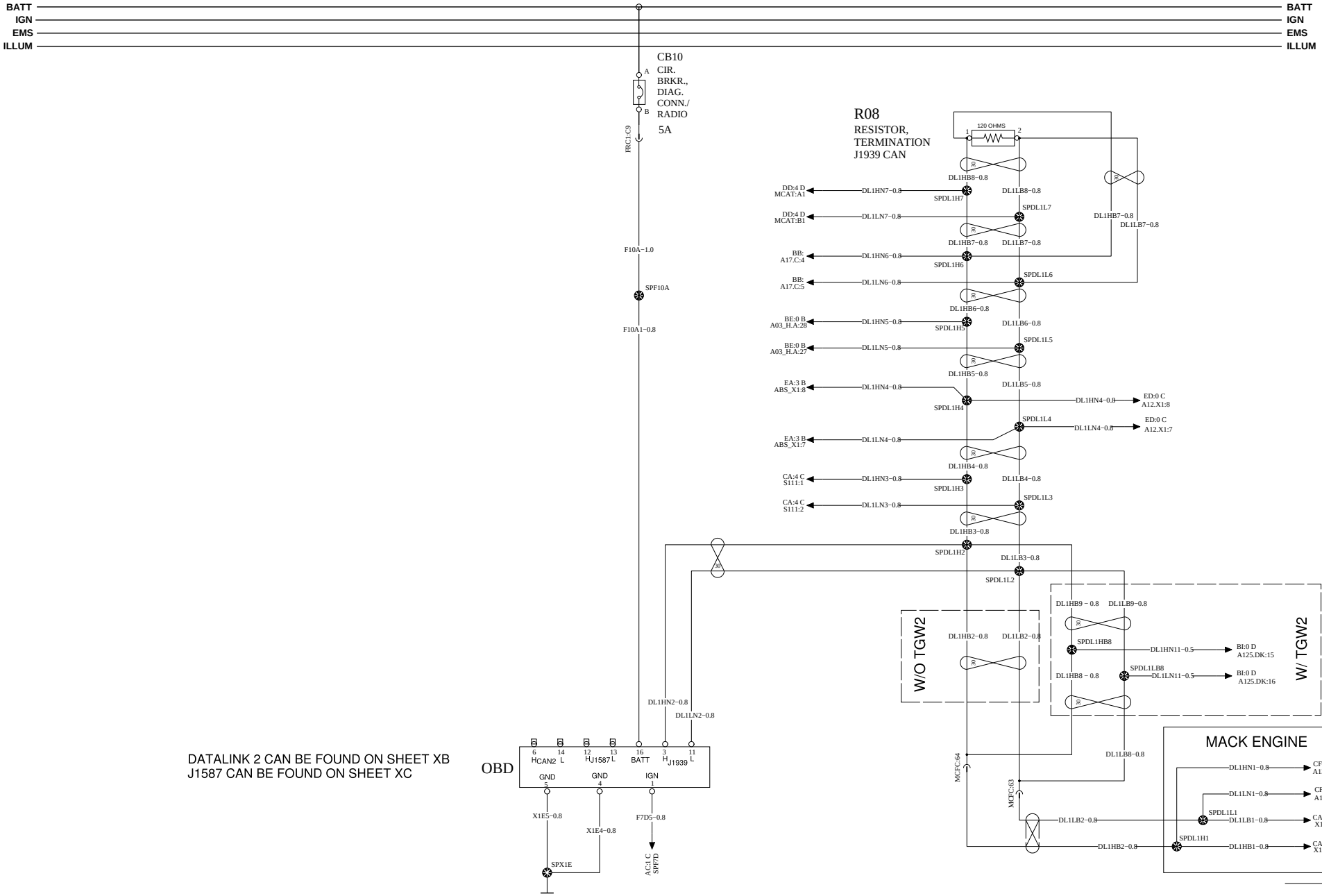

VOLVO Group Trucks Technology	Document title: WIRING DIAGRAM - TYPE OM W/OBD 2013 ENG Document type: PRODUCT SCHEMATIC	Document No: 22437775	Issue: 04	Volume: 1 (2)	Page: 50 (52)

https://truckmanualshub.com/

WIRING DIAGRAM: XB

BATT
IGN
EMS
ILLUM

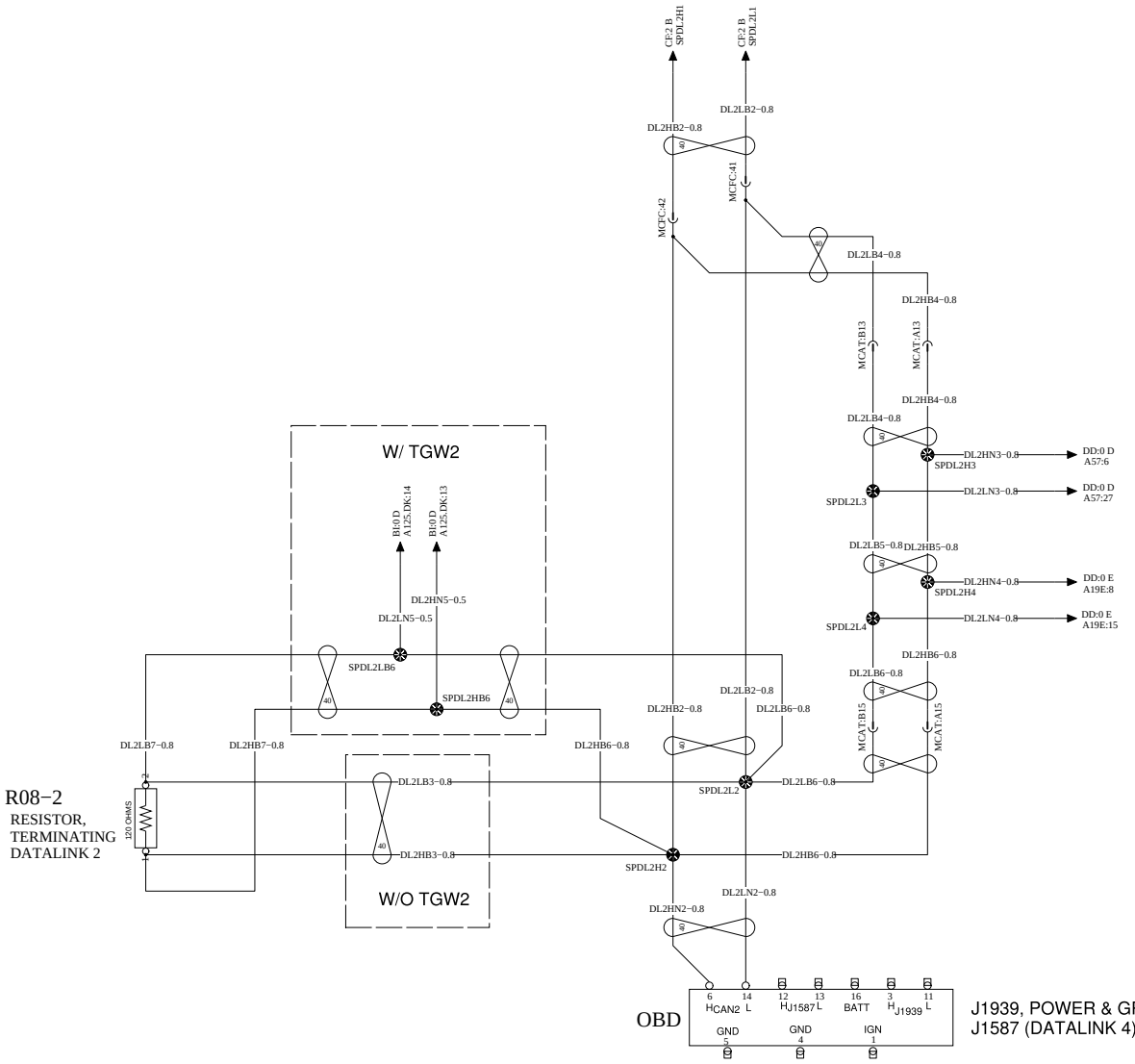

J1939, POWER & GROUND CAN BE FOUND ON SHEET XA
J1587 (DATALINK 4) CAN BE FOUND ON SHEET XC

VOLVO Group Trucks Technology	Document title WIRING DIAGRAM - TYPE OM W/OBD 2013 ENG Document type PRODUCT SCHEMATIC	Document No 22437775	Issue 04	Volume 1 (2)	Page 51 (52)

https://truckmanualshub.com/

WIRING DIAGRAM: XC

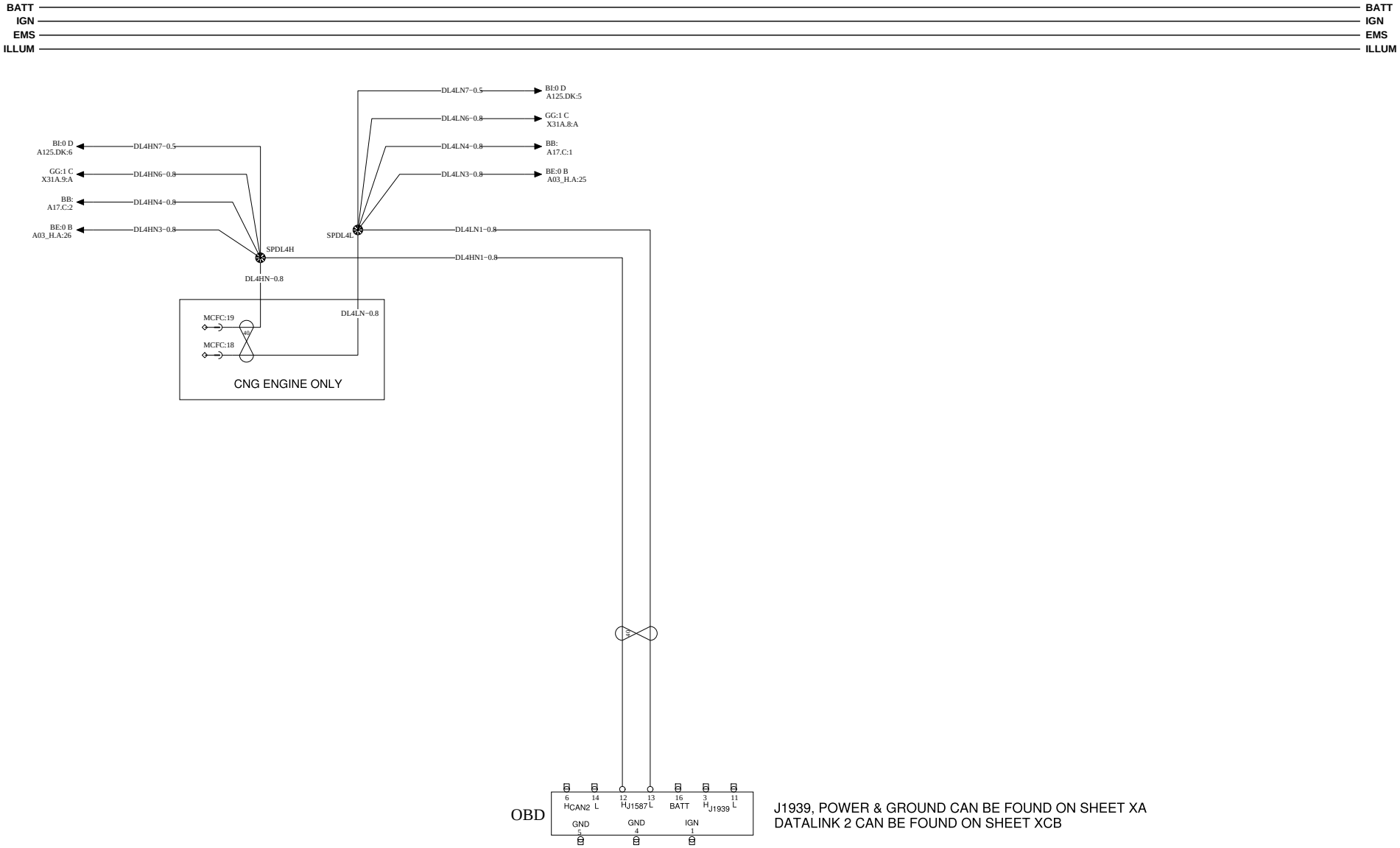

VOLVO Group Trucks Technology	Document title WIRING DIAGRAM - TYPE OM W/OBD 2013 ENG	Document No	Issue	Volume	Page
	Document type PRODUCT SCHEMATIC	22437775	04	1 (2)	52 (52)

https://truckmanualshub.com/

BILL OF MATERIALS INDEX (VOL 2)

NAME	PAGE
GROUNDS	2
FUSES AND CIRCUIT BREAKERS	3

NAME	PAGE
RELAYS	5
COMPONENTS	6

NAME	PAGE
INLINES	9
SPLICES	15

NAME	PAGE
SHELLS	16
REFERENCES	18

https://truckmanualshub.com/

GROUNDS

NAME	PAGE
SPX1A3	AD 2 C
SPX1E	AD 3 C
SPX1E	BA 4 E
SPX1E	BB 2 B
SPX1E	BC 2 D
SPX1E	BD 1 B
SPX1E	BE 0 D
SPX1E	EA 0 A
SPX1E	XA 1 E
SPX1E6	AD 3 C
SPX1E6	EA 3 B
SPX1E6	ED 2 B
SPX1E9	EA 2 B
SPX2A	AD 3 B
SPX2A	NA 2 B
SPX2A1	AD 3 A
SPX2A1	FB 0 C
SPX2A1	FC 1 D
SPX2A1	NB 2 D
SPX2A2	AD 3 B

NAME	PAGE
SPX2A2	GA 2 D
SPX2A2	GD 4 E
SPX2A2	GH 0 D
SPX2A2	GP 0 E
SPX2A2	KA 1 C
SPX2A2	KB 2 E
SPX2A2	KC 2 D
SPX2A3	AD 3 B
SPX2A3	GG 0 C
SPX2A3	NB 0 D
SPX2A4	AD 3 A
SPX2A4	GD 2 B
SPX2A4	NA 3 B
SPX2A5	AD 3 A
SPX2A5	BA 4 C
SPX2A5	DD 1 C
SPX2A5	EA 2 B
SPX2A5	ED 2 B
SPX2A33	BK 3 D
SPX2A42	GD 3 D

NAME	PAGE
SPX2A48	GH 3 C
SPX2A58	BN 1 B
SPX2A58	BO 0 E
SPX2A60	BL 4 B
SPX2A65	BM 0 C
SPX2A70	BA 2 D
SPX2A104	FD 1 C
SPX2D	AA 2 D
SPX2D	AB 4 D
SPX2D	AC 1 E
SPX2D	AD 3 B
SPX2D	BC 2 D
SPX2D	CA 0 C
SPX2D	DD 2 C
SPX2D	GA 1 D
SPX2D	GG 2 C
SPX2D	HA 1 D
SPX2D	NA 1 B
SPX2D	NB 4 C
SPX2D16	AD 3 B

NAME	PAGE
SPX2D16	HA 2 D
SPX2D18	BK 3 C
SPX2D19	BN 1 C
SPX2D21	BL 0 E
SPX2N109	AD 3 B
SPX2N109	DD 0 B
SPX2N109A	DD 0 C
SPX2N109B	FD 2 D
SPX2N109F	FD 3 D
SPX3A	AD 3 D
SPX3A	HA 3 E
SPX3A1	AD 3 D
SPX3A2	FB 2 E
SPX3A3	GF 1 D
SPX3A3A	GF 1 D
SPX3A4	AD 3 D
SPX3A4	CD 1 E
SPX3A6	AD 4 D
SPX3A6	FA 2 D
SPX3B	AD 3 C

NAME	PAGE
SPX3B	GP 2 E
SPX3C4	FA 0 D
SPX3C5	FB 0 D
SPX3F	AD 3 C
SPX3F	GD 1 D
SPX3F	IC 2 D
SPX3F1	GD 0 D
SPX3F2	GD 1 D
SPX3H	IC 2 D
SPX3H1	IC 1 D
SPX3H1	ID 1 C
SPX3H1A	ID 3 C
SPX4D	AD 1 D
SPX4D1	AD 1 D
SPX4D2	CF 4 C
SPX4D8	CA 2 C
SPX5A	AD 0 C
SPX88_25	BN 3 D
SPXN109J	FD 3 D
X0C	BA 2 A

NAME	PAGE
X0C	BC 3 A
X0C	BD 2 A
X0C	CA 4 A
X0C	FB 4 A
X0C	FC 1 A
X0C	GH 3 B
X0C	GP 1 A
X0C	HA 2 A
X0C	IC 4 A
X0C	NB 0 A
X06D_MATE	BH 0 C
X06D_MATE_BL	BM 2 A
X07A	KC 1 C
X07B	BO 1 C
X45A	CC 3 B

https://truckmanualshub.com/

FUSES AND CIRCUIT BREAKERS

FUSE	DESCRIPTION	PAGE
CB2 (15A)	CIRCUIT BREAKER, HDLPS. HI DRL	AA 0 A
CB2 (15A)	CIRCUIT BREAKER, HDLPS. HI DRL	GA 1 A
CB3 (15A)	CIRCUIT BREAKER PARK,TAIL MARKER LPS.	AA 1 A
CB3 (15A)	CIRCUIT BREAKER PARK,TAIL MARKER LPS.	GA 0 A
CB4 (20A)	CIRCUIT BREAKER TURN LPS, FLASHER	AA 1 A
CB4 (20A)	CIRCUIT BREAKER TURN LPS, FLASHER	GA 2 A
CB5 (10A)	CIRCUIT BREAKER, TRACTOR STOP LPS.	AA 1 A
CB5 (10A)	CIRCUIT BREAKER, TRACTOR STOP LPS.	GA 3 A
CB6 (10A)	CIRCUIT BREAKER, DOME COURTESY LPS.	AA 1 A
CB6 (10A)	CIRCUIT BREAKER, DOME COURTESY LPS.	GA 1 A
CB6 (10A)	CIRCUIT BREAKER, DOME COURTESY LPS.	GH 3 A
CB7 (10A)	CIRCUIT BREAKER, KEY SW.	AA 2 A
CB7 (10A)	CIRCUIT BREAKER, KEY SW.	AC 0 A
CB8 (15A)	CIR. BRKR., AIR SOL.	AA 0 C
CB8 (15A)	CIR. BRKR., AIR SOL.	FB 2 A
CB9 (15A)	CIR. BRKR., CB POST	AA 2 A
CB9 (15A)	CIR. BRKR., CB POST	KC 2 A
CB10 (5A)	CIR. BRKR., DIAG. CONN./ RADIO	AA 2 A
CB10 (5A)	CIR. BRKR., DIAG. CONN./ RADIO	KB 2 A
CB10 (5A)	CIR. BRKR., DIAG. CONN./ RADIO	XA 2 A
CB11 (15A)	CIR. BRKR., BATT. STUD	AA 2 A
CB11 (15A)	CIR. BRKR., BATT. STUD	GG 0 A
CB11 (15A)	CIR. BRKR., BATT. STUD	NA 0 A
CB12 (15A)	CIR. BRKR., OPTION BLOCK	AA 2 A
CB12 (15A)	CIR. BRKR., OPTION BLOCK	BO 1 A
CB12 (15A)	CIR. BRKR., OPTION BLOCK	NB 0 A
CB15 (15A)	CIR. BRKR., BEACON LAMPS	AA 3 A
CB15 (15A)	CIR. BRKR., BEACON LAMPS	FC 1 A
CB18 (10A)	CIR. BRKR., DCL(CDS) EMS POWER	AB 1 C
CB18 (10A)	CIR. BRKR., DCL(CDS) EMS POWER	BC 1 A
CB20 (10A)	CIR. BRKR., MOTO. MIRRORS	AA 4 A
CB20 (10A)	CIR. BRKR., MOTO. MIRRORS	IC 0 A
CB20 (10A)	CIR. BRKR., MOTO. MIRRORS	ID 0 A
CB21 (20A)	CIRCUIT BREAKER LH WS WIPER	AA 0 C
CB21 (20A)	CIRCUIT BREAKER LH WS WIPER	GP 4 A
CB22 (20A)	CIRCUIT BREAKER, RH, WS WIPER	AA 0 C
CB22 (20A)	CIRCUIT BREAKER, RH, WS WIPER	GP 2 A
CB23 (10A)	CIRCUIT BREAKER WS. WIPER/ WASHER	AA 1 C
CB23 (10A)	CIRCUIT BREAKER WS. WIPER/ WASHER	GP 0 A
CB24 (15A)	CIR. BRKR., 2WAY RADIO	AA 1 C
CB24 (15A)	CIR. BRKR., 2WAY RADIO	NB 0 A
CB26 (15A)	CIR. BRKR., REAR FLOOD LPS.	AA 4 A
CB26 (15A)	CIR. BRKR., REAR FLOOD LPS.	NA 2 A
CB27 (15A)	CIR. BRKR., IGN. STUD	AA 1 C
CB27 (15A)	CIR. BRKR., IGN. STUD	BK 0 A
CB27 (15A)	CIR. BRKR., IGN. STUD	BL 0 A
CB27 (15A)	CIR. BRKR., IGN. STUD	BN 0 A
CB27 (15A)	CIR. BRKR., IGN. STUD	GG 0 A
CB27 (15A)	CIR. BRKR., IGN. STUD	NA 0 A
CB29 (10A)	CIR. BRKR., EMS RELAYS	AA 4 A

FUSE	DESCRIPTION	PAGE
CB30 (10A)	CIR. BRKR., MUNCIE LIVE PACK	AA 1 C
CB30 (10A)	CIR. BRKR., MUNCIE LIVE PACK	FC 1 A
CB32 (15A)	CIR. BRKR., BODYBUILDER BATT 2	AB 0 B
CB32 (15A)	CIR. BRKR., BODYBUILDER BATT 2	NA 3 A
CB33 (20A)	CIR. BRKR., TRAILER STOP LPS.	AB 0 B
CB33 (20A)	CIR. BRKR., TRAILER STOP LPS.	GG 2 A
CB34 (30A)	CIR. BRKR., REV/NEUTRAL POWER	AB 1 B
CB34 (30A)	CIR. BRKR., REV/NEUTRAL POWER	NB 3 A
CB35 (25A)	CIR. BRKR., CAB & TRLR. CLEARANCE LPS.	AB 1 B
CB35 (25A)	CIR. BRKR., CAB & TRLR. CLEARANCE LPS.	GA 1 A
CB36 (15A)	CIR. BRKR., HORN	AB 1 B
CB36 (15A)	CIR. BRKR., HORN	GQ 3 A
CB37 (25A)	CIR. BRKR., TRLR. TAIL LPS.	AB 2 B
CB37 (25A)	CIR. BRKR., TRLR. TAIL LPS.	GG 1 A
CB39 (30A)	CIR. BRKR., TRAILER ABS PWR	AA 1 D
CB39 (30A)	CIR. BRKR., TRAILER ABS PWR	GG 1 A
CB40 (25A)	CIR. BRKR., BODY IGN. PWR. STUD	AA 4 D
CB40 (25A)	CIR. BRKR., BODY IGN. PWR. STUD	NB 1 A
CB42 (10A)	CIR. BRKR., BACKUP LPS.	AA 4 D
CB42 (10A)	CIR. BRKR., BACKUP LPS.	BE 4 A
CB44 (25A)	CIR. BRKR., HTD. AIR DRYER /HTD. DRAIN VA	AA 3 D
CB44 (25A)	CIR. BRKR., HTD. AIR DRYER /HTD. DRAIN VA	FA 2 A
CB45 (30A)	CIR. BRKR., SPARE/FUEL SEPARATOR FUEL HEA	AA 3 D
CB45 (30A)	CIR. BRKR., SPARE/FUEL SEPARATOR FUEL HEA	CC 2 A
CB45 (30A)	CIR. BRKR., SPARE/FUEL SEPARATOR FUEL HEA	NB 2 A
CB46 (10A)	CIR. BRKR., POWER OUTLET	AA 1 D
CB46 (10A)	CIR. BRKR., POWER OUTLET	KC 1 A
CB47 (15A)	CIR. BRKR., TRANS./ SPARE	AA 0 D
CB47 (15A)	CIR. BRKR., TRANS./ SPARE	NA 3 A
CB50 (10A)	CIR. BRKR., HDLP LH LOW BEAM	AB 2 B
CB50 (10A)	CIR. BRKR., HDLP LH LOW BEAM	GD 0 A
CB51 (10A)	CIR. BRKR., HDLP RH LOW BEAM	AB 2 B
CB51 (10A)	CIR. BRKR., HDLP RH LOW BEAM	GD 1 A
CB52 (15A)	CIR. BRKR., SPARE/ BRK. WEAR	AA 3 D
CB52 (15A)	CIR. BRKR., SPARE/ BRK. WEAR	BG 4 A
CB55 (20A)	CIR. BRKR., HEATED MIRRORS	AA 2 D
CB55 (20A)	CIR. BRKR., HEATED MIRRORS	IC 3 A
CB57 (15A)	CIR. BRKR., HVAC ROOF COND. FAN	AA 2 D
CB57 (15A)	CIR. BRKR., HVAC ROOF COND. FAN	NA 1 A
CB58 (10A)	CIR. BRKR. OPEN	AA 0 D
CB61 (20A)	CIR. BRKR., BODY BATT. STUD	AB 3 B
CB61 (20A)	CIR. BRKR., BODY BATT. STUD	BO 0 A
CB61 (20A)	CIR. BRKR., BODY BATT. STUD	NB 2 A
CB66 (15A)	CIR. BRKR., CAMERA/ SPARE	AA 2 C
CB66 (15A)	CIR. BRKR., CAMERA/ SPARE	KA 1 A
CB66 (15A)	CIR. BRKR., CAMERA/ SPARE	NA 4 A
CB68 (15A)	CIR. BRKR., CIGAR LIGHTER	AB 4 B
CB68 (15A)	CIR. BRKR., CIGAR LIGHTER	KC 3 A
CB74 (5A)	CIR. BRKR., RADIO MEMORY	KB 2 B
CB91 (30A)	CIR. BRKR., AUX FAN #1	CD 0 B

https://truckmanualshub.com/

FUSES AND CIRCUIT BREAKERS

FUSE	DESCRIPTION	PAGE
CB92 (30A)	CIR. BRKR., AUX FAN #2	CD 1 B
F13 (15A/20A)	FUSE ABS BATT	AA 3 A
F13 (15A/20A)	FUSE ABS BATT	EA 3 A
F13 (15A/20A)	FUSE ABS BATT	ED 3 A
F14 (30A)	FUSE, OPEN	AA 3 A
F16 (10A)	FUSE, VECU (EMS)	AB 1 C
F16 (10A)	FUSE, VECU (EMS)	BA 0 A
F17 (10A)	FUSE, CONTROL/SW INPUTS	AB 1 C
F17 (10A)	FUSE, CONTROL/SW INPUTS	BA 1 A
F19 (5A)	FUSE INST. CLUSTER	AA 3 A
F19 (5A)	FUSE INST. CLUSTER	BE 0 A
F25 (30A)	FUSE, HVAC CAB	AB 4 C
F31 (10A)	FUSE TRANS SPARE	AB 2 C
F31 (10A)	FUSE TRANS SPARE	DD 3 A
F31 (10A)	FUSE TRANS SPARE	NB 2 A
F38 (30A)	FUSE ENGINE CONTROL UNIT	AA 1 D
F38 (30A)	FUSE ENGINE CONTROL UNIT	CA 0 A
F41 (20A)	FUSE, ENG. ACC.	AA 1 D
F43 (15A)	F43 FUSE, ENG COMP #2	AA 2 D
F43 (15A)	F43 FUSE, ENG COMP #2	CA 1 B
F49 (10A)	FUSE, ABS	AA 0 D

FUSE	DESCRIPTION	PAGE
F49 (10A)	FUSE, ABS	EA 3 A
F49 (10A)	FUSE, ABS	ED 3 A
F54 (20A)	FUSE, DPF, BAT	AB 2 B
F56 (10A)	FUSE TELMA	AA 2 D
F56 (10A)	FUSE TELMA	NA 3 A
F60 (15A)	FUSE, ENG COMP #1	AB 3 B
F60 (15A)	FUSE, ENG COMP #1	CA 0 A
F62 (30A)	FUSE, EAT BATT.	AB 3 B
F63 (5A)	FUSE, INSTR CLUSTER (EMS)	AB 2 C
F63 (5A)	FUSE, INSTR CLUSTER (EMS)	BE 0 A
F64 (10A)	FUSE, DPF, IGN	AB 2 C
F64 (10A)	FUSE, DPF, IGN	CA 4 A
F65 (5A)	TGW2	AB 2 C
F69 (5A)	FUSE, EAT EMS	AB 3 C
F69 (5A)	FUSE, EAT EMS	CF 0 A
F71 (10A)	FUSE, TRANS (BATT)	AB 4 B
F71 (10A)	FUSE, TRANS (BATT)	DD 0 A
F82 (5A)	TGW	BI 0 C
F83 (5A)	TGW	BI 2 B
F84 (5A)	TGW	BI 0 A
FM3 (150A)	FUSE, MAIN PWR, CAB	AC 3 D

https://truckmanualshub.com/

RELAYS

RELAY	DESCRIPTION	PAGE
RLY01	RELAY, EMS #1	AB 3 C
RLY02	RELAY, EMS #2	AA 2 C
RLY03	RELAY, IGN. #1	AA 0 B
RLY04	RELAY, IGN #3	AA 3 C
RLY06	RELAY, EMERGENCY STOP LAMP	GA 3 B
RLY07	RELAY 07, PTO #2	BN 2 B
RLY10B	RELAY, HORN, REMOTE	BO 0 D
RLY11	RELAY, TRAILER TAIL LAMP	GG 1 B
RLY12	RELAY, TRAILER STOP LAMP	GG 2 B
RLY13	RELAY, CAB & TRAILER CLEARANCE LAMP	GA 1 C
RLY14	RELAY, HORN	GQ 3 D
RLY016A	RELAY, WINDSHIELD WIPER RH LOW	GP 1 B
RLY016B	RELAY, WINDSHIELD WIPER RH HIGH	GP 2 B
RLY016C	RELAY WINDSHIELD WIPER LH LOW	GP 3 B
RLY016D	RELAY WINSHIELD WIPER LH HIGH	GP 3 B
RLY17	RELAY, REVERSE POWER	DD 3 B
RLY17	RELAY, REVERSE POWER	KB 2 E
RLY28	RELAY, CB BINDING POST	KC 2 B
RLY29	RELAY, NEUTRAL POWER	NB 3 B
RLY34	RELAY, PRE-EMS	AA 1 B
RLY35	RELAY, HVAC CAB	HA 2 B
RLY36	RELAY, START CNTL 1	AC 1 C
RLY38	RELAY, LO BEAM LH	GD 0 B
RLY39	RELAY, LO BEAM RH	GD 1 B
RLY45	RELAY PTO ENABLE	DD 4 B
RLY46	RELAY RANGE PTO	DD 3 B
RLY47	RELAY RETARDER	DD 2 B
RLY48	RELAY STOP LAMPS	DD 2 B
RLY52	RELAY, HIGH BEAM	GA 1 B
RLY53	RELAY 53, SPARE 5	NA 2 D
RLY58	RELAY BEACON LAMP PTO	FC 1 B
RLY59	RELAY BEACON LAMP REVERSE	FC 2 B

RELAY	DESCRIPTION	PAGE
RLY60	RELAY, PARK BRAKE STOP LAMP	GA 4 B
RLY61	RELAY, LIFT AXLE REVERSE	FB 0 A
RLY61B	RELAY, LIFT AXLE, PUMP ON	BO 1 B
RLY62	RELAY, REVERSE BODY POWER	NB 3 B
RLY63	RELAY, POWER INDICATOR	GA 3 D
RLY63_JMP	JUMPER, CLEARANCE LIGHTS	GA 2 E
RLY64	RELAY 64, SPARE 1	BK 2 B
RLY64	RELAY 64, SPARE 1	BL 1 B
RLY64	RELAY 64, SPARE 1	BN 4 B
RLY64	RELAY 64, SPARE 1	NA 0 D
RLY65	RELAY 65, SPARE 2	BK 0 C
RLY65	RELAY 65, SPARE 2	BL 0 B
RLY65	RELAY 65, SPARE 2	BN 1 B
RLY65	RELAY 65, SPARE 2	NA 0 C
RLY66	RELAY 66, SPARE 3	BK 3 B
RLY66	RELAY 66, SPARE 3	BL 3 C
RLY66	RELAY 66, SPARE 3	BN 3 B
RLY66	RELAY 66, SPARE 3	NA 1 D
RLY67	RELAY 67, SPARE 4	BK 1 C
RLY67	RELAY 67, SPARE 4	BL 3 C
RLY67	RELAY 67, SPARE 4	BN 0 C
RLY67	RELAY 67, SPARE 4	NA 1 C
RLY68	RELAY, ENGINE COMP #1	CA 0 B
RLY91	RELAY 91, AUX FAN #1	CD 0 C
RLY92	RELAY 92, AUX FAN #2	CD 1 C
RLY94	RELAY, START INTERUPT 1	BM 0 B
RLY95	RELAY, START INTERUPT 2	BM 0 B
RLY100A	RELAY, MOTO MIRROR	ID 2 D
RLY100B	RELAY, MOTO MIRROR	ID 2 D
RLY100C	RELAY, MOTO MIRROR	ID 3 D
RLY100D	RELAY, MOTO MIRROR	ID 4 D

https://truckmanualshub.com/

COMPONENTS

COMPONENT	DESCRIPTION	PAGE
A03_A	DISPLAY, WARNING LAMP MODULE	BE 3 D
A03_B	GAUGE, SPEEDOMETER, VOLTMETER, TRANS. OIL	BE 2 C
A03_C	GAUGE, TACHOMETER, WATER TEMP., OIL PSI	BE 2 C
A03_D	GAUGE, DIESEL LEVEL & DIESEL FLUID LEVEL	BE 0 D
A03_E	GAUGE, PYROMETER	BE 1 E
A03_H	CONTROL UNIT, GAUGE DRIVER MODULE (GDM)	BE 0 B
A03_H	CONTROL UNIT, GAUGE DRIVER MODULE (GDM)	BF 1 B
A03_H	CONTROL UNIT, GAUGE DRIVER MODULE (GDM)	BG 0 B
A03_H	CONTROL UNIT, GAUGE DRIVER MODULE (GDM)	NB 3 A
A03_J	GAUGE, DUAL AIR	BE 0 E
A12	Control unit, ABS (Anti-lock Brake System	ED 0 C
A12A	CONTROL UNIT, ABS (ANTI-LOCK BRAKE SYS.)	EA 0 C
A17	CONTROL UNIT, VECU (VEHICLE ECU)	AC 1 A
A17	CONTROL UNIT, VECU (VEHICLE ECU)	BA 1 C
A17	CONTROL UNIT, VECU (VEHICLE ECU)	BC 2 D
A17	CONTROL UNIT, VECU (VEHICLE ECU)	BD 2 D
A17	CONTROL UNIT, VECU (VEHICLE ECU)	GD 2 A
A19E	GEARSELECTOR ALLISON	DD 0 E
A34	CONTROL PANEL & HVAC UNIT, RD-6-5302	HA 3 C
A36_1	CONTROL UNIT, BBM (BODYBUILDER MODULE), P	BK 3 D
A36_2	CONTROL UNIT, BBM (BODYBUILDER MODULE) PT	BL 2 D
A36_3	CONTROL UNIT, BBM (BODYBUILDER MODULE) RE	BM 0 D
A36_3_CHASSIS	BB BOC LIGHTING CONNECTOR	BJ 0 D
A36_3_CHASSIS	BB BOC LIGHTING CONNECTOR	BM 3 D
A36_4_MATE	CONTROL UNIT, BBM (BODYBUILDER MODULE), P	BN 3 D
A57	CONTROL UNIT, ALLISON TRANSMISSION	DC 0 A
A57	CONTROL UNIT, ALLISON TRANSMISSION	DD 0 D
A58	Allison Transmission	DC 0 D
A83	CONTROL UNIT, DRL (DAYTIME RUNNING LIGHT	GD 2 B
A104	CONTROL UNIT, FLASHER	GA 2 A
A108A	TRANSMISSION RETARDER	DC 3 D
A121	DISPLAY, MONITOR, INTEC REAR VEIW CAMERA	KA 1 D
A122	CONTROL UNIT, REAR VIEW CAMERA SWITCHER	KA 0 D
A123P	GAUGE, LIFT AXLE, PUSHER	BE 2 B
A123T	GAUGE, LIFT AXLE, TAG	BE 3 B
A124	DISPLAY, HOUR METER	BL 4 A
A125	Control unit, TGW (Telematics Gateway)	BI 0 D
A125_AM	CONTROL UNIT, TGW (TELEMATICS GATEWAY)	BI 2 D
A137B	Contol Module, ACM (Adblue control modu	CF 0 B
A137B	Contol Module, ACM (Adblue control modu	CH 0 B
A138	PUMP UNIT, ADBLUE	CF 1 E
A158	Control unit, Audio	KB 1 C
A158_JMP1	JUMPER, BATTERY FEED	KB 2 B
A158_JMP2	JUMPER, CLEAN POWER FEED	KB 3 B
A158_JMP3	JUMPER, REVERSE MUTE	KB 3 C
B07	SENSOR, FUEL LEVEL	BF 1 D
B09B	Sensor, oil temperature, gearbox	BF 2 D
B13	SENSOR, WHEEL SPD LH FRT AXLE	EA 1 B
B13	SENSOR, WHEEL SPD LH FRT AXLE	ED 0 D
B14	SENSOR WHEEL SPD RH FRT AXLE	EA 1 B

COMPONENT	DESCRIPTION	PAGE
B14	SENSOR WHEEL SPD RH FRT AXLE	ED 0 D
B15	SENSOR, WHEEL SPD LH RR RR AXLE	EA 0 D
B15	SENSOR, WHEEL SPD LH RR RR AXLE	ED 0 B
B16	SENSOR, WHEEL SPD RH RR RR AXLE	EA 1 D
B16	SENSOR, WHEEL SPD RH RR RR AXLE	ED 1 B
B17	SENSOR, WHEEL SPD LH 3RD AXLE	EA 2 E
B17	SENSOR, WHEEL SPD LH 3RD AXLE	ED 2 D
B18	SENSOR, WHEEL SPD RH 3RD AXLE	EA 2 E
B18	SENSOR, WHEEL SPD RH 3RD AXLE	ED 3 D
B23	SENSOR, AMBIENT AIR TEMP.	BF 3 C
B25A	SENSOR ACCELERATOR PEDAL	BB 3 D
B40	SENSOR, BRK WEAR FRT AXLE, LHS	BG 3 B
B41	SENSOR BRK WEAR FRT AXLE RHS	BG 3 B
B42	SENSOR, BRK WEAR FRT RR AXLE, LHS	BG 3 D
B43	SENSOR, BRK WEAR FRT RR AXLE, RHS	BG 3 D
B44	SENSOR, BRK WEAR REAR RR AXLE, LHS	BG 3 D
B45	SENSOR, BRK WEAR REAR RR AXLE, RHS	BG 3 D
B60LF	SPEAKER, LEFT FRT	KB 1 D
B60RF	SPEAKER, RIGHT FRT.	KB 1 D
B68	SENSOR, OUTPUT SHAFT SPD, GEARBOX	BB 0 D
B80	Handsfree, Loudspeaker, Microphone	KB 1 B
B96	SENSOR, NOx (CAN BASED) AFTER SCR	CA 2 A
B96B	SENSOR, NOx (CAN BASED) AFTER DPF	CA 2 A
B105	SENSOR, RETARDER TEMP	DC 3 D
B121	SENSOR, LOW LEVEL WASHER FLUID	BG 0 D
B123	SENSOR LEVEL COOLANT	CA 2 E
B124FR	SENSOR, OIL TEMP., FRONT REAR AXLE	BF 1 D
B124RR	SENSOR, OIL TEMP., REAR REAR AXLE	BF 1 D
B133	SENSOR, AIR FILTER RESTRICTION	BG 0 A
B142C	Sensor, AdBlue level and temperature	CA 3 C
B156	SENSOR, FREON HI PRESSURE - FAN	BD 2 C
B156A	SENSOR, FREON HI PRESSURE	HA 2 D
B310	Sensor, Particulate Matter	CA 3 A
DCL_MATE_1	CONNECTOR, DCL MATE, BODYLINK REFUSE	BM 1 C
DCL_MATE_2	CONNECTOR DCL MATE BODYLINK REFUSE	BM 1 C
DUAL_PTO_JMP	PLUG, JUMPER WIRE	FB 2 A
E11LA	LAMP, SIDE MARKER LEFT SIDE 1	GD 3 D
E11RA	LAMP, SIDE MARKER RIGHT SIDE 1	GD 4 D
E12L	LAMP, ROOF POS. LIGHT LEFT	GA 3 D
E12R	LAMP, ROOF POS. LIGHT, RIGHT	GA 3 D
E13LS	LAMP, DIR. INDICATOR LEFT SIDE	GD 3 D
E13RS	LAMP, DIR. INDICATOR RIGHT SIDE	GD 4 D
E17A	LAMP, CAB REAR DOME	GH 1 D
E17B	LAMP,FRONT LH DOME	GH 0 D
E17C	LAMP, FRONT RH DOME	GH 3 D
E19C	LAMP, ID LIGHT ROOF, CENTER	GA 0 D
E19L	LAMP, ID LIGHT ROOF, LEFT	GA 0 D
E19LS	LAMP, ROOF SIDE MARKER, LEFT	GD 3 A
E19R	LAMP, ID LIGHT ROOF, RIGHT	GA 0 D
E19RS	LAMP, ROOF SIDE MARKER, RIGHT	GD 4 A

https://truckmanualshub.com/

COMPONENTS

COMPONENT	DESCRIPTION	PAGE
E27L	TAIL LAMP MODULE, LEFTHAND	GF 0 C
E27R	TAIL LAMP MODULE, RIGHTHAND	GF 2 C
E30L	LH HEADLAMP	GD 0 D
E30R	RH HEADLAMP	GD 1 D
E38_08	LAMP, INDICATOR, IWDL	BD 1 B
E38_12	LAMP INDICATOR, PTO	BK 3 B
E38_12	LAMP INDICATOR, PTO	BL 3 A
E38_12B	LAMP INDICATOR, PUMP ON PTO #2 OIL LEVEL	BN 1 C
E57	LAMP, POWER INDICATOR	GA 4 D
FM1	FUSE, MAIN GND, PREHEATING	AD 1 B
G01	BATTERY	AC 3 C
G01	BATTERY	AD 1 B
G01	BATTERY	BM 0 C
G01	BATTERY	CF 0 B
G01	BATTERY	NB 1 B
G02	ALTERNATOR	AC 4 A
G02	ALTERNATOR	AD 1 D
H02_1_114	Horn	GQ 3 D
H03	REVERSE WARNER, ACOUSTIC	GF 2 B
M01L	MOTOR WINDSHIELD WIPER LH	GP 3 C
M01R	MOTOR WINDSHIELD WIPER RH	GP 2 C
M02	MOTOR WS. WASHER PUMP	GP 0 C
M110LH	MIRROR, LH, HEATED	ID 0 D
M110LHL_MATE	MIRROR, LH, HEATED, LIGHTED	IC 2 D
M110LHM	MIRROR, LH, HEATED, MOTORIZED	IC 0 D
M110RHL_MATE	MIRROR, RH, HEATED, LIGHTED	IC 3 D
M110RHM	MIRROR, RH, HEATED, MOTORIZED	IC 1 D
M110RHM	MIRROR, RH, HEATED, MOTORIZED	ID 1 D
M120A	MOTOR, AUX. COOLING FAN #1	CD 0 E
M120B	MOTOR, AUX. COOLING FAN #2	CD 1 E
MC_DUAL_PTO_JMP	PLUG, JUMPER WIRE	BC 0 B
R01	HEATER, ENGINE PREHEAT	AD 0 D
R01A	RESISTOR 110V ENGINE HEATER	CC 3 C
R04	CIGAR LIGHTER	KC 3 C
R05	AIR DRYER, HEATED	FA 2 C
R05_A	AIR DRYER	FA 0 C
R08	RESISTOR, TERMINATION J1939 CAN	XA 3 A
R08-2	RESISTOR, TERMINATING DATALINK 2	XB 1 D
R09	HEATER, FUEL WATER SEPARATOR	CC 2 C
R18A	HEATER, HEATED DRAIN VALVE, COOLING TANK	FA 2 C
R18B	HEATER, HEATED DRAIN VALVE, WET TANK	FA 1 C
R29	HEATER, NOxCARE TANK TO PUMP HOSE	CH 3 D
R31	HEATER, NOxCARE PUMP TO INJECTOR HOSE	CH 3 D
RC2_MATE	ELECTICAL EQUIPMENT; 3 RELAYS	BO 2 D
S01	SW. MAIN LIGHTING SELECT. TYPE	GA 0 B
S006	SWITCH, SPEED CONTROL	BA 2 B
S07	SWITCH' ENG BRK SELECTOR	BA 2 B
S007	SWITCH, SET/RESUME	BA 1 B
S008	SWITCH, S/D OVERRIDE	BA 4 B
S009	SWITCH WIPER CTRL	GP 0 B

COMPONENT	DESCRIPTION	PAGE
S013	SWITCH, MIRROR DEFROST	IC 3 B
S016	SWITCH, ATC LIMITED SLIP	EA 2 B
S016	SWITCH, ATC LIMITED SLIP	ED 2 B
S017B	SW. FRONT RH DOME LMP	GH 3 D
S018_1	POSITION SWITCH, PTO_1	BC 4 B
S018_2	POSITION SWITCH, PTO_2, R.H.	FB 1 D
S18A	SWITCH, POWER TAKE OFF (PTO #1)	BC 2 B
S18B	SWITCH, POWER TAKE OFF (PTO #2)	FB 2 B
S019	SWITCH, POWER DIVIDER LOCKOUT	FB 4 C
S020	SWITCH, AIR SUSP.	FB 2 B
S023	SWITCH, NEUTRAL CONTROL	FB 3 C
S024	SW. INTERWHL DIFF. LOCK	BD 2 B
S24C	SWITCH RETARDER	DD 1 B
S28C	SWITCH, PUMP/ DRIVE MODE, PTO #2 PTO #1	BN 1 B
S030	SWITCH, MIRROR CONTROL	IC 1 B
S030	SWITCH, MIRROR CONTROL	ID 0 B
S030A	SWITCH, MIRROR CONTROL	ID 3 A
S036	SWITCH, IGNITION	AC 0 B
S036B	SWITCH, PUSH BUTTON START	AC 1 B
S038	SW, PRESSURE SERVICE BRKE.	GA 3 B
S038C	SWITCH, SERVICE BRAKE	BB 2 C
S039	SWITCH, DIRECTIONAL SIGNAL	GA 2 C
S039	SWITCH, DIRECTIONAL SIGNAL	GQ 0 A
S040P	SW. PRESSURE PRIM. LOW AIR	BF 3 D
S040S	SW. PRESSURE SEC. LOW AIR	BF 4 D
S042	SWITCH, BACK UP	BE 3 A
S43	SW. PRESS. PRKNG BRKE INDICATOR, NC.	BA 3 D
S044	SWITCH, CLUTCH	BB 2 C
S045	SW. DRL OVERRIDE	BA 2 D
S047	SWITCH, IWDL FRT ENGAGED	BG 2 D
S047A	SWITCH, IWDL, FRT ENGAGED	BG 2 D
S048	SWITCH, IWDL RR ENGAGED	BG 2 C
S048A	SWITCH, IWDL, RR ENGAGED	BG 2 C
S051A	SWITCH, AUX. LIFT AXLE, PUSHER	FB 0 B
S051B	SWITCH, AUX. LIFT AXLE, TAG	FB 1 C
S63	POSITION SWITCH, LOW/HIGH RANGE GEAR	BN 4 C
S72	SWITCH, WATER IN FUEL	BB 2 A
S90_1	SWITCH, PRESS. NO NEUTRAL	FB 3 A
S108	SWITCH MUNCIE PTO PUMP	FC 1 B
S110	SWITCH, PARK BRAKE, NEUTRAL	NB 2 B
S111	SWITCH, SMART, DPF	CA 4 C
S112A	SWITCH, BODY BUILDER PARK BRAKE	BK 0 D
S112B	SWITCH, BODY BUILDER PARK BRAKE	BN 1 C
S113	SWITCH, ODOMETER/ HOURMETER TRIP RESET	BE 0 C
S115	SWITCH, REAR VIEW CAMERA	KA 1 B
S116	SWITCH, PRESSURE, N.O., DUAL PTO	FB 1 E
S116A	SWITCH, PRESSURE, N.O. PTO	BL 0 C
S137	SWITCH PARKER PTO	FD 1 B
S169	SWITCH, BATTERY MAIN	AC 3 E
S320	SWITCH, PRESSURE PARKER PTO	FD 2 C

https://truckmanualshub.com/

COMPONENTS

COMPONENT	DESCRIPTION	PAGE
V27	DIODE, PTO EHT	BK 2 B
V27	DIODE, PTO EHT	BL 1 B
V27_MATE	DIODE, PTO EHT	BK 2 C
V27_MATE	DIODE, PTO EHT	BL 1 C
V30	DIODE, STOP LAMP	BF 4 D
V35A	DIODE, MOTO MIRROR	ID 2 C
V35B	DIODE, MOTO MIRROR	ID 3 C
V35C	DIODE, MOTO MIRROR	ID 3 C
V35D	DIODE, MOTO MIRROR	ID 4 C
V36	DIODE, ALLISON REVERSE MUTE	DD 3 C
X1	STUD, CAB GROUND #1	AD 2 C
X2	STUD, CAB GROUND #2	AD 2 B
X2_SP1	SPLICE PACK, GROUND X2A6	AD 4 A
X2_SP1	SPLICE PACK, GROUND X2A6	BC 2 C
X2_SP1	SPLICE PACK, GROUND X2A6	BD 2 C
X2_SP1	SPLICE PACK, GROUND X2A6	BI 0 C
X2_SP1	SPLICE PACK, GROUND X2A6	CA 3 C
X2_SP1	SPLICE PACK, GROUND X2A6	FB 3 D
X2_SP1	SPLICE PACK, GROUND X2A6	FC 0 D
X2_SP1	SPLICE PACK, GROUND X2A6	GA 0 C
X2_SP1	SPLICE PACK, GROUND X2A6	HA 2 B
X2_SP1	SPLICE PACK, GROUND X2A6	IC 3 B
X2_SP1	SPLICE PACK, GROUND X2A6	NA 2 B
X10	B+ pass through, Cab	AC 4 D
X11	CONNECTOR, ENGINE MANAGEMENT INTERFACE	CA 0 C
X31A	JUNCTION BLOCK, 14 POST MAIN	BI 3 A
X31A	JUNCTION BLOCK, 14 POST MAIN	BJ 0 B
X31A	JUNCTION BLOCK, 14 POST MAIN	BK 1 B
X31A	JUNCTION BLOCK, 14 POST MAIN	BL 1 B
X31A	JUNCTION BLOCK, 14 POST MAIN	BM 1 D
X31A	JUNCTION BLOCK, 14 POST MAIN	BN 1 B
X31A	JUNCTION BLOCK, 14 POST MAIN	GG 1 C
X32A	BODY BUILDER JUNCTION A BOC	GG 1 D
X32B	BODY BUILDER JUNCTION B BOC	NB 4 C
X33A	BODY BUILDER JUNCTION A EOF	GG 1 E
X33B	BODY BUILDER JUNCTION B EOF	NB 4 C
X34R_MATE	JUNCTION, OVERHEAD CB PROVISION	KC 3 C
X41	JUNCTION BLOCK, 7 POST, BODY BUILDER	BJ 0 B
X41	JUNCTION BLOCK, 7 POST, BODY BUILDER	BK 4 B
X41	JUNCTION BLOCK, 7 POST, BODY BUILDER	BL 4 B
X41	JUNCTION BLOCK, 7 POST, BODY BUILDER	BM 1 A

COMPONENT	DESCRIPTION	PAGE
X41	JUNCTION BLOCK, 7 POST, BODY BUILDER	BN 1 A
X41	JUNCTION BLOCK, 7 POST, BODY BUILDER	BO 0 B
X41	JUNCTION BLOCK, 7 POST, BODY BUILDER	CC 2 B
X41	JUNCTION BLOCK, 7 POST, BODY BUILDER	KA 0 B
X41	JUNCTION BLOCK, 7 POST, BODY BUILDER	NB 3 D
X42	JUNCTION BLOCK, 7 POST, OPTIONS	BJ 1 B
X42	JUNCTION BLOCK, 7 POST, OPTIONS	BM 4 B
X42	JUNCTION BLOCK, 7 POST, OPTIONS	BO 1 B
X42	JUNCTION BLOCK, 7 POST, OPTIONS	KB 3 A
X42	JUNCTION BLOCK, 7 POST, OPTIONS	NB 1 C
X135	Chassis Ground Stud	AD 2 D
X136	Cab Passthrough Ground Stud	AD 2 C
X140	Battery Box Ground Stud	AD 1 C
X194	CONNECTOR,TGW BODYBUILDER INTERFACE	BI 0 D
X194_AM	CONNECTOR, TGW BB INTERFACE	BI 2 D
XBB	STUD, CHASSIS GROUND AT BODY BUILDER BRAC	BM 3 E
Y11	SOL. VALVE, ABS LH FRT	EA 0 B
Y11	SOL. VALVE, ABS LH FRT	ED 0 D
Y12	SOL. VALVE, ABS RH FRT	EA 1 B
Y12	SOL. VALVE, ABS RH FRT	ED 1 D
Y13	SOL. VALVE, ABS LH RR	EA 1 D
Y13	SOL. VALVE, ABS LH RR	ED 0 B
Y14	SOL VALVE, ABS RH RR	EA 1 D
Y14	SOL VALVE, ABS RH RR	ED 0 B
Y15	SOL VALVE, ABS LH 3RD AXLE	EA 3 D
Y15	SOL VALVE, ABS LH 3RD AXLE	ED 2 D
Y16	SOL VALVE, ABS RH 3RD AXLE	EA 3 D
Y16	SOL VALVE, ABS RH 3RD AXLE	ED 3 D
Y18	Solenoid valve, PTO (Power Take Off)	FC 1 C
Y35	SOLENOID ENGINE FAN	CA 1 C
Y42	Clutch, magnetic, air conditioning compr	HA 2 E
Y51	SOL VALVE AIR DRYER	FA 1 C
Y57	SOL. VALVE, ATC	EA 1 D
Y57	SOL. VALVE, ATC	ED 1 B
Y62	SOLENOID ACCUMULATOR	DC 1 C
Y80	SOLENOID VALVE, ADBLUE DOSING UNIT	CF 3 A
Y81	SOLENOID VALVE, UREA HEATING TANK	CF 2 D
Y86	SOLENOID, MULTI VALVE ASSY.	FB 1 D
Y88	SOLENOID, LIFT AXLE	FB 0 D
Y157	SOLENOID, PARKER PTO	FD 3 C

https://truckmanualshub.com/

INLINES

INLINE	PAGE
6SABS:A	EA 2 D
6SABS:A	ED 2 D
6SABS:B	EA 2 D
6SABS:B	ED 2 D
6SABS:C	EA 2 D
6SABS:C	ED 3 D
6SABS:D	EA 2 D
6SABS:D	ED 3 D
6SABS:E	EA 3 D
6SABS:E	ED 2 D
6SABS:F	EA 3 D
6SABS:F	ED 2 D
6SABS:G	EA 3 D
6SABS:G	ED 2 D
6SABS:H	EA 3 D
6SABS:H	ED 3 D
6SABS:J	EA 3 D
6SABS:J	ED 3 D
6SABS:K	EA 3 D
6SABS:K	ED 3 D
ABS_X1:1	EA 2 A
ABS_X1:3	EA 3 B
ABS_X1:4	EA 1 C
ABS_X1:5	EA 1 C
ABS_X1:7	EA 3 B
ABS_X1:8	EA 3 B
ABS_X1:10	EA 1 C
ABS_X1:11	EA 1 C
ABS_X1:16	EA 3 B
ABS_X1:17	EA 2 C
ABS_X2:1	EA 0 C
ABS_X2:2	EA 0 C
ABS_X2:3	EA 0 A
ABS_X2:4	EA 1 C
ABS_X2:5	EA 1 B
ABS_X2:6	EA 1 A
ABS_X2:7	EA 1 C
ABS_X2:8	EA 1 B
ABS_X2:9	EA 0 C
ABS_X2:10	EA 1 C
ABS_X2:11	EA 1 B
ABS_X2:12	EA 0 B
ABS_X2:13	EA 1 C
ABS_X2:14	EA 1 B
ABS_X2:15	EA 0 C
ABS_X2:16	EA 1 C
ABS_X2:17	EA 1 C
ABS_X2:18	EA 0 C
ABS_X3:4	EA 3 C
ABS_X3:6	EA 3 E

INLINE	PAGE
ABS_X3:7	EA 3 C
ABS_X3:9	EA 3 E
ABS_X3:10	EA 3 C
ABS_X3:11	EA 2 D
ABS_X3:12	EA 2 D
ABS_X3:13	EA 3 C
ABS_X3:14	EA 2 D
ABS_X3:15	EA 2 D
ALLISON:1	DC 2 C
ALLISON:2	DC 3 C
ALLISON:3	DC 1 C
ALLISON:4	DC 2 C
ALLISON:5	DC 1 C
ALLISON:6	DC 1 C
ALLISON:7	DC 1 C
ALLISON:8	DC 1 C
ALLISON:9	DC 1 C
ALLISON:10	DC 0 C
ALLISON:11	DC 0 C
ALLISON:12	DC 1 C
ALLISON:13	DC 1 C
ALLISON:14	DC 2 C
ALLISON:15	DC 2 C
ALLISON:16	DC 2 C
ALLISON:17	DC 0 C
ALLISON:18	DC 0 C
ALLISON:19	DC 1 C
ALLISON:20	DC 1 C
ALLISON:21	DC 2 C
ALLISON:22	DC 2 C
ALLISON:23	DC 2 C
ALLISON:24	DC 1 C
ALLISON:27	DC 0 C
ALLISON:30	DC 0 C
ALLISON:31	DC 0 C
ALLISON:32	FD 2 C
ALLISON:33	FD 2 C
ALLISON:34	FD 3 D
BBC_MC_SOL_SW:A	BO 3 B
BBC_MC_SOL_SW:A	BO 3 C
BBC_MC_SOL_SW:B	BO 3 B
BBC_MC_SOL_SW:B	BO 3 C
BBC_MC_SOL_SW:C	BO 3 B
BBC_MC_SOL_SW:C	BO 3 C
BBC_MC_SOL_SW:D	BO 3 B
BBC_MC_SOL_SW:D	BO 3 C
BBC_MC_SOL_SW:E	BO 3 B
BBC_MC_SOL_SW:E	BO 3 C
BBC_MC_SOL_SW:F	BO 3 B
BBC_MC_SOL_SW:F	BO 3 C

INLINE	PAGE
BBC_MC_SOL_SW:G	BO 3 B
BBC_MC_SOL_SW:G	BO 3 C
BBC_MC_SOL_SW:H	BO 4 B
BBC_MC_SOL_SW:H	BO 4 C
BBC_MC_SOL_SW:J	BO 4 B
BBC_MC_SOL_SW:J	BO 4 C
BBC_MC_SOL_SW:K	BO 4 B
BBC_MC_SOL_SW:K	BO 4 C
BBC_MC_SOL_SW:L	BO 2 B
BBC_MC_SOL_SW:L	BO 2 C
BBC_MC_SOL_SW:M	BO 2 B
BBC_MC_SOL_SW:M	BO 2 C
BBC_MC_SOL_SW:N	BO 2 B
BBC_MC_SOL_SW:N	BO 2 C
BBC_MC_SOL_SW:P	BO 2 B
BBC_MC_SOL_SW:P	BO 2 C
BBC_MC_SOL_SW:R	BO 2 B
BBC_MC_SOL_SW:R	BO 2 C
BBC_MC_SOL_SW:S	BO 3 B
BBC_MC_SOL_SW:S	BO 3 C
BBCAB_TRANS:A	BN 4 C
BBCAB_TRANS:B	BN 4 D
BBM_1939:A	BB 1 C
BBM_1939:A	BB 1 C
BBM_1939:B	BB 1 C
BBM_1939:B	BB 1 C
BBMCO:A	BM 1 D
BPMCFC:S	GG 1 D
BPMCFC:T	GG 1 D
BPMCFC:U	NB 4 D
BPMCFC:V	NB 4 D
BPMCFC:W	GG 1 D
BPMCFC:X	GG 1 D
BPMCFC:Y	GG 1 D
BPMCFC:Z	GG 1 D
BWFC:A	BG 3 C
BWFC:B	BG 4 C
BWRC:A	BG 2 D
BWRC:B	BG 3 E
CBBFCBB:R	BJ 1 D
CBBFCBB:R	BM 4 C
CBBFCBB:S	BJ 1 D
CBBFCBB:S	BM 4 C
CBBFCBB:T	BJ 0 D
CBBFCBB:T	BM 3 C
CBBFCBB:U	BJ 1 D
CBBFCBB:U	BM 4 C
CBBFCBB:V	BJ 1 D
CBBFCBB:V	BM 4 C
CBBFCBB:W	BJ 0 D

INLINE	PAGE
CBBFCBB:W	BM 3 C
CBBFCBB:X	BJ 0 D
CBBFCBB:X	BM 3 C
CBBFCBB:Y	BJ 0 D
CBBFCBB:Y	BM 3 C
CBBFCBB:Z	BJ 0 D
CBBFCBB:Z	BM 3 C
DCL:A	BC 1 C
DCL:B	BC 1 C
DCL:C	BC 1 C
DCL:D	BC 1 C
DCL:E	BC 1 B
DCL:F	BC 1 C
DCL:G	BC 1 B
DCL:H	BC 1 B
DCL:J	BC 1 B
DCL:L	BC 1 C
DCL:M	BC 1 D
DCL:N	BC 1 D
DCL:P	BC 1 D
DCL:R	BC 1 E
DRL_OR_BB:A	BA 1 D
DRL_OR_BB:B	BA 1 D
DRL_OR_BB:C	BA 1 D
DRL_OR_BB:D	BA 1 D
DRL_OR_BB:E	BA 2 D
DRL_OR_BB:F	BA 2 D
DRL_OR_BB:G	BA 2 D
DRL_OR_BB:H	BA 2 D
DRL_OR_BB:J	BA 3 D
DRL_OR_BB:L	BA 3 D
DRL_OR_BB:N	BA 3 D
DRL_OR_BB:P	BA 3 D
DRL_OR_BB:R	BA 3 D
DRL_OR_DCL2:J	BA 3 E
DRL_OR_DCL2:L	BA 3 E
DRL_OR_DCL2:N	BA 3 E
DRL_OR_DCL2:P	BA 3 E
DRL_OR_DCL2:R	BA 3 E
DRL_OR_DCL:A	BA 1 E
DRL_OR_DCL:B	BA 1 E
DRL_OR_DCL:C	BA 1 E
DRL_OR_DCL:D	BA 1 E
DRL_OR_DCL:E	BA 2 E
DRL_OR_DCL:F	BA 2 E
DRL_OR_DCL:G	BA 2 E
DRL_OR_DCL:H	BA 2 E
DS_PTO:A	BL 2 C
DS_PTO:B	BL 2 C
DS_PTO:C	BL 2 C

INLINE	PAGE
DSFC:A	BF 1 D
DSFC:B	BF 2 E
DSFC:C	BF 1 D
DSFC:D	BG 1 D
DSFC:E	BG 2 C
DSFC:F	BG 1 D
DSFRT:A	BG 2 D
DSFRT:B	BG 2 D
DSRR:A	BG 2 C
DSRR:B	BG 2 C
DUAL_PTO:A	BK 2 A
DUAL_PTO:B	FB 2 B
DUAL_PTO:C	FB 1 A
DUAL_PTO:D	FB 1 A
DUAL_PTO:E	FB 1 A
DUAL_PTO:F	FB 1 A
FC_TGW:A	BI 2 B
FC_TGW:B	BI 2 C
FC_TGW:C	BI 2 B
FC_TGW:D	BI 2 C
FC_TGW:E	BI 3 B
FC_TGW:F	BI 3 C
FCBL:A	GF 2 A
FCBL:B	GF 0 B
FCBL:C	GF 1 B
FCBL:D	GF 1 B
FCBL:E	AD 3 D
FCCE:1	FB 3 D
FCCE:2	FB 2 D
FCCE:4	FB 1 D
FCCE:5	FB 1 D
FCCE:6	FB 1 D
FCCE:7	GF 2 B
FCCE:11	GF 1 E
FCCE:12	FB 2 D
FCCE:14	GF 1 E
FCCE:15	EA 0 D
FCCE:15	ED 0 B
FCCE:16	EA 0 D
FCCE:16	EA 1 D
FCCE:16	ED 0 B
FCCE:17	ED 0 B
FCCE:18	EA 1 E
FCCE:18	ED 0 B
FCCE:19	EA 1 D
FCCE:19	ED 0 B
FCCE:20	EA 1 D
FCCE:20	ED 1 B
FCCE:21	EA 1 D
FCCE:21	ED 1 B

https://truckmanualshub.com/

INLINES

INLINE	PAGE
FCCE:22	EA 1 D
FCCE:22	ED 0 B
FCCE:23	EA 1 E
FCCE:23	ED 0 B
FCCE:24	EA 1 D
FCCE:24	ED 1 B
FCCE:25	EA 1 D
FCCE:25	ED 1 B
FCCE:26	EA 1 D
FCCE:26	ED 1 B
FCCE:27	FB 1 E
FCCE:28	BF 3 D
FCCE:29	BF 1 C
FCCE:30	BF 1 D
FCCE:31	BG 1 D
FCCE:32	BG 1 C
FCCE:33	GF 1 B
FCCE:34	GF 1 B
FCCE:35	GF 2 B
FCCPBB:1	BM 0 D
FCCPBB:2	BM 1 D
FCEIC:1	CA 3 B
FCEIC:2	CA 3 B
FCEIC:3	CA 2 B
FCEIC:4	CA 3 B
FCEIC:5	CA 3 B
FCEIC:6	CA 2 B
FCEIC:7	CA 3 D
FCEIC:8	CA 4 D
FCEIC:9	CF 3 B
FCEIC:10	CA 4 D
FCEIC:11	CA 4 D
FCEIC:12	CF 3 B
FCEIC:13	CA 4 D
FCEIC:14	CA 4 D
FCEIC:15	CA 4 D
FCEIC:22	CA 2 D
FCEIC:23	BG 0 B
FCEIC:25	CA 2 D
FCEIC:26	BG 0 B
FCFH:A	CC 2 C
FCFH:B	CC 2 D
FCLA:A	FB 0 D
FCLA:B	FB 0 D
FCLA:C	FB 0 E
FCSH:1	CD 0 D
FCSH:2	CD 1 D
FCSH:3	CD 0 D
FCSH:4	CD 1 D
FCSP:B	FB 1 D

INLINE	PAGE
FCSP:C	FB 2 D
FCSP:D	FB 2 D
FCSP:E	FB 2 D
FCSP:K	FB 3 D
FCSP:L	FB 1 E
FCSP:N	FB 3 E
FCSP:P	FB 1 D
FCSP:R	FB 2 E
FCSP:S	FB 2 E
FCTR:A	BC 3 B
FCTR:B	BE 3 B
FCTR:C	BF 2 D
FCTR:D	BF 2 D
FCTR:E	BC 4 B
FCTR:F	BB 0 C
FCTR:G	BB 0 C
FCTR:H	BE 3 B
FCTR:J	FB 3 A
FCTR:K	FB 3 B
FCTR:L	FB 1 B
FCTR:M	FB 1 E
FCUT:2	CH 3 C
FCUT:3	CH 3 D
FCUT:4	CH 3 D
FCUT:5	CF 1 D
FCUT:6	CF 2 D
FCUT:7	CF 2 D
FCUT:8	CF 2 D
FCUT:9	CF 2 D
FCUT:11	CA 3 B
FCUT:12	CF 2 D
FCUT:14	CA 3 C
FCUT:15	CF 1 D
FCUT:16	CF 1 D
FCUT:17	CA 3 D
FCUT:18	CA 3 D
FCUT:21	CA 3 C
FCUT:22	CA 3 C
FCUTEXT:2	CH 3 C
FCUTEXT:3	CH 3 D
FCUTEXT:4	CH 3 C
FCUTEXT:5	CF 1 C
FCUTEXT:6	CF 2 C
FCUTEXT:7	CF 2 C
FCUTEXT:8	CF 2 C
FCUTEXT:9	CF 2 C
FCUTEXT:11	CA 2 B
FCUTEXT:12	CF 2 C
FCUTEXT:14	CA 2 C
FCUTEXT:15	CF 1 C

INLINE	PAGE
FCUTEXT:16	CF 1 C
FCUTEXT:17	CA 3 E
FCUTEXT:18	CA 3 E
FCUTEXT:21	CA 3 B
FCUTEXT:22	CA 3 B
FRC1:A1	AB 3 C
FRC1:A1	CF 0 A
FRC1:A2	AB 2 C
FRC1:A2	BI 0 A
FRC1:A3	AB 2 C
FRC1:A3	CA 4 A
FRC1:A4	AB 2 C
FRC1:A4	BE 0 A
FRC1:A5	AB 2 C
FRC1:A5	DD 3 A
FRC1:A5	NB 2 A
FRC1:A6	AB 1 C
FRC1:A6	BC 1 A
FRC1:A7	AB 1 C
FRC1:A7	BA 1 A
FRC1:A8	AB 1 C
FRC1:A8	BA 0 A
FRC1:A9	AA 2 C
FRC1:A9	KA 1 A
FRC1:A9	NA 4 A
FRC1:A10	AA 1 C
FRC1:A10	FC 1 A
FRC1:A11	AA 1 C
FRC1:A11	BK 0 A
FRC1:A11	BL 0 A
FRC1:A11	BN 0 A
FRC1:A11	GG 0 A
FRC1:A11	NA 0 A
FRC1:A12	AA 1 C
FRC1:A12	NB 0 A
FRC1:A13	AA 1 C
FRC1:A13	GP 0 A
FRC1:A14	AA 0 C
FRC1:A14	GP 2 A
FRC1:A15	AA 0 C
FRC1:A15	GP 4 A
FRC1:A16	AA 0 C
FRC1:A16	FB 2 A
FRC1:B1	AB 3 C
FRC1:B2	AB 3 C
FRC1:B3	AA 0 B
FRC1:B4	AA 0 C
FRC1:C1	AB 4 B
FRC1:C1	DD 0 A
FRC1:C2	AB 4 B

INLINE	PAGE
FRC1:C2	KC 3 B
FRC1:C3	AB 3 B
FRC1:C4	AB 3 B
FRC1:C5	AB 3 B
FRC1:C5	NB 2 A
FRC1:C6	AB 3 B
FRC1:C6	CA 0 A
FRC1:C7	AB 2 B
FRC1:C8	AB 2 B
FRC1:C8	GD 1 A
FRC1:C9	AA 2 B
FRC1:C9	KB 2 A
FRC1:C9	XA 2 A
FRC1:C10	AA 2 B
FRC1:C10	KC 2 A
FRC1:C11	AA 2 B
FRC1:C11	AC 0 A
FRC1:C12	AA 1 B
FRC1:C12	GA 1 A
FRC1:C12	GH 3 A
FRC1:C13	AA 1 B
FRC1:C13	GA 3 A
FRC1:C14	AA 1 B
FRC1:C14	GA 2 A
FRC1:C15	AA 1 B
FRC1:C15	GA 0 A
FRC1:C16	AA 0 B
FRC1:C16	GA 1 A
FRC1:E1	AA 4 B
FRC1:E1	NA 2 A
FRC1:E2	AA 4 B
FRC1:E2	IC 0 A
FRC1:E2	ID 0 A
FRC1:E3	AA 3 B
FRC1:E3	BE 0 A
FRC1:E4	AA 3 B
FRC1:E4	FC 1 A
FRC1:E5	AA 3 B
FRC1:E6	AA 3 B
FRC1:E6	EA 3 A
FRC1:E6	ED 3 A
FRC1:E7	AA 2 B
FRC1:E7	BO 1 A
FRC1:E7	NB 0 A
FRC1:E8	AA 2 B
FRC1:E8	GG 0 A
FRC1:E8	GG 3 A
FRC1:E8	NA 0 A
FRC1:E9	AB 2 B
FRC1:E9	GD 0 A

INLINE	PAGE
FRC1:E10	AB 2 B
FRC1:E10	GG 1 A
FRC1:E11	AB 1 B
FRC1:E11	GQ 3 B
FRC1:E12	AB 1 B
FRC1:E12	GA 1 A
FRC1:E13	AB 1 B
FRC1:E13	NB 3 A
FRC1:E14	AB 0 B
FRC1:E14	GG 2 A
FRC1:E15	AB 0 B
FRC1:E15	NA 3 A
FRC1:E16	AA 4 B
FRC1:F1	AA 2 C
FRC1:F2	AA 2 C
FRC1:F3	AA 3 C
FRC1:F4	AA 3 C
FRC1:F8	AA 2 D
FRC1:F8	CA 1 B
FRC1:G1	AA 0 D
FRC1:G2	AA 0 D
FRC1:G2	EA 3 A
FRC1:G2	ED 3 A
FRC1:G3	AA 0 D
FRC1:G3	NA 3 A
FRC1:G4	AA 1 D
FRC1:G4	KC 1 A
FRC1:G5	AA 1 D
FRC1:G6	AA 1 D
FRC1:G6	GG 1 A
FRC1:G7	AA 1 D
FRC1:G7	CA 0 A
FRC1:G8	AA 2 D
FRC1:G8	CA 1 B
FRC1:G9	AA 2 D
FRC1:G9	NA 1 A
FRC1:G10	AA 2 D
FRC1:G10	NA 3 A
FRC1:G11	AA 2 D
FRC1:G11	IC 3 A
FRC1:G12	AA 3 D
FRC1:G12	BG 4 A
FRC1:G13	AA 3 D
FRC1:G13	CC 2 A
FRC1:G13	NB 2 A
FRC1:G14	AA 3 D
FRC1:G14	FA 2 B
FRC1:G15	AA 4 D
FRC1:G15	BE 4 B
FRC1:G16	AA 4 D

https://truckmanualshub.com/

INLINES

INLINE	PAGE
FRC1:G16	BO 0 A
FRC1:G16	NB 1 A
FRC2:A30	DD 2 B
FRC2:A85	DD 2 B
FRC2:A86	DD 2 B
FRC2:A87	DD 2 B
FRC2:B30	GA 4 B
FRC2:B85	GA 4 B
FRC2:B86	GA 4 B
FRC2:B87	GA 4 B
FRC2:C30	GA 3 B
FRC2:C85	GA 3 B
FRC2:C86	GA 3 B
FRC2:C87	GA 3 B
FRC2:D30	FB 1 A
FRC2:D85	FB 0 A
FRC2:D86	FB 0 B
FRC2:D87A	FB 1 B
FRC2:E30	GG 2 B
FRC2:E85	GG 2 B
FRC2:E86	GG 2 B
FRC2:E87	GG 2 B
FRC2:F30	CA 0 B
FRC2:F85	CA 0 B
FRC2:F86	CA 0 B
FRC2:F87	CA 0 B
FRC2:G30	GA 1 C
FRC2:G85	GA 1 C
FRC2:G86	GA 1 C
FRC2:G87	GA 1 C
FRC2:H30	HA 2 B
FRC2:H85	HA 2 B
FRC2:H86	HA 2 B
FRC2:H87	HA 2 B
FRC2:J30	NB 3 B
FRC2:J85	NB 3 B
FRC2:J86	NB 3 B
FRC2:J87	NB 3 B
FRC2:K30	NB 3 B
FRC2:K85	NB 3 B
FRC2:K86	NB 3 B
FRC2:K87	NB 3 B
FRC2:L30	DD 3 B
FRC2:L30	KB 2 D
FRC2:L85	DD 3 B
FRC2:L85	KB 2 E
FRC2:L86	DD 3 B
FRC2:L86	KB 2 E
FRC2:L87	DD 3 B
FRC2:L87	KB 2 D

INLINE	PAGE
FRC2:M30	DD 4 B
FRC2:M85	DD 4 B
FRC2:M86	DD 4 B
FRC2:M87	DD 4 B
FRC2:M87A	DD 4 B
FRC2:N30	DD 2 B
FRC2:N85	DD 2 B
FRC2:N86	DD 2 B
FRC2:N87A	DD 2 B
FRC2:P30	DD 3 B
FRC2:P85	DD 3 B
FRC2:P86	DD 3 B
FRC2:P87	DD 3 B
FRC2:P87A	DD 3 B
FRC2:T1	KB 2 B
FRC2:T2	KB 2 B
FRC2:T3	BI 0 B
FRC2:T4	BI 0 C
FRC3:A30	GD 0 C
FRC3:A85	GD 0 C
FRC3:A86	GD 0 B
FRC3:A87	GD 0 B
FRC3:A87A	GD 0 B
FRC3:B30	GD 1 C
FRC3:B85	GD 1 C
FRC3:B86	GD 1 B
FRC3:B87	GD 1 B
FRC3:B87A	GD 1 B
FRC3:C30	GA 1 A
FRC3:C85	GA 1 A
FRC3:C86	GA 1 B
FRC3:C87	GA 1 B
FRC3:C87A	GA 1 B
FRC3:D30	KC 2 B
FRC3:D85	KC 2 B
FRC3:D86	KC 2 B
FRC3:D87	KC 2 B
FRC3:D87A	KC 2 B
FRC3:E30	AC 1 C
FRC3:E85	AC 1 C
FRC3:E86	AC 1 D
FRC3:E87	AC 1 D
FRC3:F30	AA 2 B
FRC3:F85	AA 1 B
FRC3:F86	AA 1 B
FRC3:F87	AA 2 B
FRC3:F87A	AA 2 B
FRC3:G30	GG 1 B
FRC3:G85	GG 1 B
FRC3:G86	GG 1 B

INLINE	PAGE
FRC3:G87	GG 1 B
FRC3:H30	GP 2 B
FRC3:H85	GP 2 B
FRC3:H86	GP 2 C
FRC3:H87	GP 2 C
FRC3:H87A	GP 2 C
FRC3:J30	GP 2 B
FRC3:J85	GP 1 B
FRC3:J86	GP 1 C
FRC3:J87	GP 2 C
FRC3:J87A	GP 2 C
FRC3:K30	GP 3 B
FRC3:K85	GP 3 B
FRC3:K86	GP 3 C
FRC3:K87	GP 3 C
FRC3:K87A	GP 3 C
FRC3:L30	GP 4 B
FRC3:L85	GP 3 B
FRC3:L86	GP 3 C
FRC3:L87	GP 4 C
FRC3:L87A	GP 4 C
FRC3:M30	GQ 3 D
FRC3:M85	GQ 3 D
FRC3:M86	GQ 3 C
FRC3:M87	GQ 3 C
FRC3:M87A	GQ 3 C
FRC3:N30	FC 1 B
FRC3:N85	FC 1 B
FRC3:N86	FC 1 B
FRC3:N87	FC 1 B
FRC3:P30	FC 2 B
FRC3:P85	FC 2 B
FRC3:P86	FC 2 B
FRC3:P87	FC 2 B
HN_REM:A	GQ 3 C
HOOKUP_LP:A	NA 2 B
HOOKUP_LP:B	NA 2 B
ILLUM_OPT2:A	KA 1 A
ILLUM_OPT2:B	KA 1 C
ILLUM_OPT3:A	KA 1 A
ILLUM_OPT3:B	KA 1 C
ILLUM_OPT4:A	BA 2 E
ILLUM_OPT4:B	BA 2 D
ILLUM_OPT5:A	BA 2 E
ILLUM_OPT5:B	BA 2 D
ILLUM_OPT6:A	FD 1 B
ILLUM_OPT6:B	FD 1 C
ILLUM_OPT7:A	FD 1 B
ILLUM_OPT7:B	FD 1 C
ILLUM_OPT:A	NA 2 B

INLINE	PAGE
ILLUM_OPT:B	NA 2 B
LHCS:B	BG 0 B
LHSM:1	GD 3 C
LHSM:2	GD 3 C
LHSM:3	GD 3 D
MC_DUAL_PTO:A	BK 2 A
MC_DUAL_PTO:B	FB 2 B
MC_DUAL_PTO:C	BC 2 B
MC_DUAL_PTO:D	BC 2 B
MC_SOL_SW:A	BD 2 B
MC_SOL_SW:B	BD 2 B
MC_SOL_SW:C	BD 1 B
MC_SOL_SW:D	BD 1 C
MC_SOL_SW:E	BD 1 C
MC_SOL_SW:F	BD 2 C
MC_SOL_SW:G	BD 2 C
MC_SOL_SW:H	FB 3 B
MC_SOL_SW:J	FB 3 B
MC_SOL_SW:K	FB 3 C
MC_SOL_SW:L	FB 0 B
MC_SOL_SW:M	FB 2 C
MC_SOL_SW:N	FB 1 C
MC_SOL_SW:P	FB 0 C
MC_SOL_SW:R	FB 1 C
MC_SOL_SW:S	FB 2 B
MCAATS:A	BF 2 C
MCAATS:B	BF 2 C
MCAF2:A	CD 0 C
MCAF:A	CD 0 C
MCAF:B	CD 1 C
MCAS:A	BA 3 D
MCAS:B	BA 3 E
MCAS:C	BF 3 C
MCAS:D	BF 4 C
MCAS:E	BF 3 D
MCAS:F	BF 4 D
MCAS:G	GA 3 B
MCAS:H	GA 3 B
MCAS:J	NB 2 B
MCAS:K	NB 2 C
MCAS:L	BB 2 C
MCAS:M	BB 2 D
MCAT1:1	DC 2 B
MCAT1:2	DC 3 C
MCAT1:3	DC 1 B
MCAT1:4	DC 2 B
MCAT1:5	DC 1 B
MCAT1:6	DC 1 B
MCAT1:7	DC 1 B
MCAT1:8	DC 1 B

INLINE	PAGE
MCAT1:9	DC 1 B
MCAT1:10	DC 0 B
MCAT1:11	DC 0 B
MCAT1:12	DC 1 B
MCAT1:13	DC 1 B
MCAT1:14	DC 2 B
MCAT1:15	DC 2 B
MCAT1:16	DC 2 C
MCAT1:17	DC 0 B
MCAT1:18	DC 0 B
MCAT1:19	DC 1 B
MCAT1:20	DC 1 B
MCAT1:21	DC 2 B
MCAT1:22	DC 2 B
MCAT1:23	DC 2 B
MCAT1:24	DC 1 B
MCAT1:27	DC 0 B
MCAT1:30	DC 0 B
MCAT1:31	DC 0 B
MCAT1:32	FD 1 C
MCAT1:33	FD 1 C
MCAT:A1	DD 4 D
MCAT:A2	DD 3 C
MCAT:A3	DD 3 C
MCAT:A5	DD 1 C
MCAT:A6	BH 1 C
MCAT:A7	BH 1 C
MCAT:A8	DD 0 B
MCAT:A9	DD 2 B
MCAT:A10	BH 1 C
MCAT:A13	XB 3 B
MCAT:A15	XB 3 D
MCAT:B1	DD 4 D
MCAT:B2	DD 4 C
MCAT:B3	DD 1 B
MCAT:B5	DD 3 C
MCAT:B6	BH 1 C
MCAT:B7	BH 2 C
MCAT:B8	DD 0 B
MCAT:B9	DD 0 D
MCAT:B13	XB 3 B
MCAT:B15	XB 3 D
MCDLR:A	NA 3 B
MCDO:A	BA 2 D
MCFC:1	BM 0 D
MCFC:2	BM 1 C
MCFC:3	CA 1 C
MCFC:4	GA 3 D
MCFC:5	CA 0 C
MCFC:6	EA 3 E

https://truckmanualshub.com/

INLINES

INLINE	PAGE
MCFC:6	ED 3 C
MCFC:7	EA 3 E
MCFC:7	ED 2 C
MCFC:8	CA 0 C
MCFC:9	DC 0 B
MCFC:10	DC 0 B
MCFC:11	DC 0 B
MCFC:12	DC 0 B
MCFC:13	DC 0 B
MCFC:14	DC 0 B
MCFC:15	DC 3 C
MCFC:16	FB 0 C
MCFC:17	FB 0 D
MCFC:18	XC 1 B
MCFC:19	XC 1 B
MCFC:20	BD 2 D
MCFC:21	DC 0 B
MCFC:22	DC 1 B
MCFC:23	DC 1 B
MCFC:24	DC 1 B
MCFC:25	DC 1 B
MCFC:26	DC 1 B
MCFC:27	DC 2 C
MCFC:28	BG 1 C
MCFC:29	BG 1 D
MCFC:30	FB 1 C
MCFC:33	DC 1 B
MCFC:34	DC 1 B
MCFC:35	DC 1 B
MCFC:36	DC 1 B
MCFC:37	DC 1 B
MCFC:38	DC 1 B
MCFC:39	FD 2 C
MCFC:41	XB 2 B
MCFC:42	XB 2 B
MCFC:43	BF 1 C
MCFC:44	FB 1 B
MCFC:45	DC 2 B
MCFC:46	DC 2 B
MCFC:47	DC 2 B
MCFC:48	DC 2 B
MCFC:49	DC 2 B
MCFC:50	DC 2 B
MCFC:51	FD 2 C
MCFC:52	BG 0 B
MCFC:53	BG 4 B
MCFC:54	FB 3 B
MCFC:55	BB 1 C
MCFC:56	BG 0 D
MCFC:57	DC 2 B

INLINE	PAGE
MCFC:59	BE 3 B
MCFC:60	BG 0 D
MCFC:62	FB 2 C
MCFC:63	XA 3 D
MCFC:64	XA 3 D
MCFC:65	EA 1 D
MCFC:65	ED 1 B
MCFC:66	EA 1 D
MCFC:66	ED 1 B
MCFC:67	EA 1 D
MCFC:67	ED 0 B
MCFC:68	EA 1 B
MCFC:68	ED 1 C
MCFC:69	EA 0 B
MCFC:69	ED 0 C
MCFC:70	EA 1 D
MCFC:70	ED 0 B
MCFC:71	EA 0 D
MCFC:71	ED 0 B
MCFC:72	EA 0 D
MCFC:72	ED 0 B
MCFC:73	EA 1 D
MCFC:73	ED 0 B
MCFC:74	EA 1 D
MCFC:74	ED 1 B
MCFC:75	EA 1 B
MCFC:75	ED 0 C
MCFC:76	EA 1 B
MCFC:76	ED 0 C
MCFC:77	EA 1 D
MCFC:77	ED 1 B
MCFC:78	EA 0 D
MCFC:78	ED 0 B
MCFC:79	EA 1 B
MCFC:79	ED 0 C
MCFC:80	EA 1 B
MCFC:80	ED 0 C
MCFC:81	EA 1 B
MCFC:81	ED 1 C
MCFC:82	EA 0 B
MCFC:82	ED 0 C
MCFC:83	EA 0 B
MCFC:83	ED 0 C
MCFC:84	EA 0 D
MCFC:84	ED 0 B
MCFC:85	EA 1 B
MCFC:85	ED 1 C
MCFC:86	EA 1 D
MCFC:86	ED 1 B
MCFC:87	BB 0 C

INLINE	PAGE
MCFC:88	BB 0 C
MCFC:89	EA 2 D
MCFC:89	ED 3 C
MCFC:90	EA 2 D
MCFC:90	ED 3 C
MCFC:91	EA 3 D
MCFC:91	ED 3 C
MCFC:92	EA 3 D
MCFC:92	ED 3 C
MCFC:93	EA 2 D
MCFC:93	ED 2 C
MCFC:94	EA 2 D
MCFC:94	ED 2 C
MCFC:95	EA 3 D
MCFC:95	ED 2 C
MCFC:96	EA 3 D
MCFC:96	ED 2 C
MCFC:98	GA 0 D
MCFC:99	AC 1 D
MCFC:101	BC 2 C
MCFC:103	FB 1 C
MCFC:104	BF 1 C
MCFC:105	GF 2 A
MCFC:106	GF 1 A
MCFC:107	BF 1 C
MCFC:108	BF 1 C
MCFC:109	BF 1 C
MCFC:110	CF 0 B
MCFC:112	BC 3 B
MCFC:113	BD 2 B
MCFC:114	FB 4 C
MCFC:117	BE 4 B
MCFC:118	BD 2 C
MCFC:119	FB 3 C
MCFC:120	BK 1 A
MCFC:121	CD 0 D
MCFC:122	CD 1 D
MCFC:123	NB 0 C
MCFC:124	HA 2 D
MCFC:125	CC 2 C
MCFC:126	NB 3 C
MCFC:127	FA 2 B
MCFC:128	NB 1 C
MCHVAC:A	AB 4 C
MCHVAC:B	AB 4 D
MCMSO:A	IC 0 B
MCMSO:A	ID 1 A
MCMSO:B	IC 0 C
MCMSO:B	ID 2 E
MCMSO:C	IC 0 C

INLINE	PAGE
MCMSO:C	ID 3 E
MCMSO:F	IC 1 C
MCMSO:F	ID 4 E
MCMSO:G	IC 1 C
MCMSO:G	ID 3 E
MCMSO:H	IC 1 C
MCMSO:H	ID 3 E
MCPM:1	IC 3 C
MCPM:1	IC 3 B
MCPM:2	IC 3 D
MCPM:3	IC 2 D
MCPM:4	IC 1 D
MCPM:4	ID 0 C
MCPM:5	IC 0 D
MCPM:6	IC 0 D
MCPM:7	IC 1 D
MCPM:7	ID 1 C
MCPM:8	IC 1 D
MCPM:8	ID 1 C
MCR08-2:1	BI 3 C
MCR08-2:2	BI 3 C
MCR08:1	BI 3 C
MCR08:2	BI 4 C
MCRF1:A	KB 1 D
MCRF1:B	KB 1 B
MCRF1:C	GH 0 D
MCRF1:D	GA 0 D
MCRF1:E	KB 1 C
MCRF1:F	KB 2 C
MCRF1:G	GA 3 D
MCRF1:H	GD 4 E
MCRF2:A	GD 3 C
MCRF2:B	GD 4 C
MCRF2:C	KC 2 C
MCRF2:D	KC 2 D
MCRF2:E	GH 3 B
MCRF2:F	GH 1 B
MCRF3:A	KA 1 C
MCRF3:B	KA 1 C
MCRF3:C	KA 1 C
MCRF4:A	KB 2 C
MCTL1:A	GF 2 B
MCTL1:B	GF 1 B
MCTL1:C	GF 1 B
MCTL1:D	GF 2 B
MCTL1:E	GF 1 D
MCTL:A	GF 2 B
MCTL:B	GF 1 C
MCTL:C	GF 1 C
MCTL:D	GF 2 B

INLINE	PAGE
MCTL:E	GF 1 D
PB_START:A	AC 1 B
PB_START:B	AC 1 B
PBSTART:A	AC 1 B
PBSTART:B	AC 1 B
PBSTART:B	AC 1 B
PBSTART_BL:A	BM 0 A
PBSTART_BL:A	BM 0 A
PBSTART_BL:B	BM 0 A
PBSTART_BL:B	BM 0 A
PMP_DRV:1	BN 1 C
PMP_DRV:2	BN 1 B
PMP_DRV:3	BN 1 C
PMP_DRV:4	BN 1 C
PMP_DRV:5	BN 1 B
PMP_DRV:6	BN 2 C
PMP_DRV:7	BN 2 C
PMP_DRV:8	BN 2 B
PMP_DRV:9	BN 2 C
PPCO:A	FD 1 B
PPCO:B	FD 1 C
PPCO:C	FD 1 C
PTO_DCL_A:A	BK 3 A
PTO_DCL_A:A	BL 2 A
PTO_DCL_A:A	BN 2 B
PTO_DCL_A:C	BK 3 A
PTO_DCL_A:C	BL 2 A
PTO_DCL_A:C	BN 2 C
PTO_DCL_A:D	BK 2 C
PTO_DCL_A:D	BL 2 B
PTO_DCL_A:D	BN 4 A
PTO_DCL_A:E	BK 3 B
PTO_DCL_A:E	BL 2 B
PTO_DCL_A:E	BN 2 C
PTO_DCL_A:F	BN 4 C
PTO_DCL_A:G	BK 4 D
PTO_DCL_A:G	BL 3 D
PTO_DCL_A:G	BN 4 D
PTO_DCL_A:H	BK 4 C
PTO_DCL_A:H	BL 3 E
PTO_DCL_A:H	BN 4 D
PTO_DCL_B:J	BK 3 A
PTO_DCL_B:N	BK 4 C
PTO_DCL_B:N	BN 4 D
PTO_DCL_B:P	BK 4 C
PTO_DCL_B:P	BL 3 E
PTO_DCL_B:P	BN 1 C
PTO_DCL_B:R	BK 4 C
PTO_DCL_B:R	BN 4 D
PTO_EHT:A	BC 2 B

https://truckmanualshub.com/

INLINES

INLINE	PAGE
PTO_EHT:A	BC 2 A
PTO_EHT:B	BC 2 C
R08-2A:1	BI 3 C
R08-2A:2	BI 3 C
R08A:1	BI 4 C
R08A:2	BI 4 C
R09_EXT1:A	CC 1 C
R09_EXT1:B	CC 1 C
R09_EXT2:A	CC 1 D
R09_EXT2:B	CC 1 D
RC1:A1	NA 2 C
RC1:A3	NA 2 D
RC1:A4	GA 3 D
RC1:A6	GA 2 D
RC1:A7	BK 2 B
RC1:A7	BL 1 B
RC1:A7	BN 4 B
RC1:A7	NA 0 C
RC1:A9	BK 2 B
RC1:A9	BL 1 C
RC1:A9	BN 4 B
RC1:A9	NA 0 D
RC1:B1	NA 2 C
RC1:B2	NA 2 D
RC1:B3	NA 2 D
RC1:B4	GA 3 D
RC1:B5	GA 2 D
RC1:B6	GA 2 D
RC1:B7	BK 2 B
RC1:B7	BL 1 B
RC1:B7	BN 4 B
RC1:B7	NA 0 C
RC1:B8	BK 2 B
RC1:B8	BL 1 C
RC1:B8	BN 4 B
RC1:B8	NA 0 D
RC1:B9	BK 2 B
RC1:B9	BL 1 C
RC1:B9	BN 4 B
RC1:B9	NA 0 D
RC1:C1	BK 0 C
RC1:C1	BL 0 C
RC1:C1	BN 1 B
RC1:C1	NA 0 D
RC1:C2	BK 0 C
RC1:C2	BL 0 C
RC1:C2	BN 1 B
RC1:C2	NA 0 D
RC1:C3	BK 0 C
RC1:C3	BL 0 B

INLINE	PAGE
RC1:C3	BN 1 B
RC1:C3	NA 0 C
RC1:C4	BK 3 B
RC1:C4	BL 3 D
RC1:C4	BN 3 B
RC1:C4	NA 1 D
RC1:C5	BK 3 B
RC1:C5	BL 3 D
RC1:C5	BN 3 B
RC1:C5	NA 1 D
RC1:C6	BK 3 B
RC1:C6	BL 3 C
RC1:C6	BN 3 B
RC1:C6	NA 1 C
RC1:C7	BK 1 C
RC1:C7	BL 3 C
RC1:C7	BN 0 C
RC1:C7	NA 1 D
RC1:C8	BK 1 C
RC1:C8	BL 3 C
RC1:C8	BN 0 C
RC1:C8	NA 1 D
RC1:C9	BK 1 C
RC1:C9	BL 3 C
RC1:C9	BN 0 C
RC1:C9	NA 1 C
RC1:D1	BK 0 C
RC1:D1	BL 0 C
RC1:D1	BN 1 B
RC1:D1	NA 0 D
RC1:D3	BK 0 C
RC1:D3	BL 0 B
RC1:D3	BN 1 B
RC1:D3	NA 0 C
RC1:D4	BK 3 B
RC1:D4	BL 3 D
RC1:D4	BN 3 B
RC1:D4	NA 1 D
RC1:D6	BK 3 B
RC1:D6	BL 3 C
RC1:D6	BN 3 B
RC1:D6	NA 1 C
RC1:D7	BK 1 C
RC1:D7	BL 3 C
RC1:D7	BN 0 C
RC1:D7	NA 1 D
RC1:D9	BK 1 C
RC1:D9	BL 3 C
RC1:D9	BN 0 C
RC1:D9	NA 1 C

INLINE	PAGE
RC2:A1	BO 0 D
RC2:A3	BO 0 D
RC2:A4	BO 2 B
RC2:A6	BO 1 C
RC2:B1	BO 0 D
RC2:B2	BO 0 D
RC2:B3	BO 0 D
RC2:B4	BO 1 B
RC2:B5	BO 2 C
RC2:B6	BO 2 C
RC2:C1	BN 2 B
RC2:C2	BN 2 B
RC2:C3	BN 2 B
RC2:D1	BN 2 B
RC2:D3	BN 2 B
RC3:A7	BM 0 B
RC3:A9	BM 0 C
RC3:B2	CD 0 B
RC3:B3	CD 0 A
RC3:B4	CD 1 B
RC3:B5	CD 1 A
RC3:B7	BM 0 B
RC3:B8	BM 0 C
RC3:C1	CD 0 C
RC3:C3	CD 0 B
RC3:C4	CD 1 C
RC3:C6	CD 1 B
RC3:C8	BM 1 B
RC3:C9	BM 0 B
RC3:D1	CD 0 C
RC3:D3	CD 0 B
RC3:D4	CD 1 C
RC3:D6	CD 1 B
RC3:D7	BM 0 B
RC3:D9	BM 1 B
RC5:A1	ID 2 D
RC5:A3	ID 2 D
RC5:A4	ID 3 D
RC5:A6	ID 3 D
RC5:B1	ID 2 D
RC5:B2	ID 2 D
RC5:B3	ID 2 D
RC5:B4	ID 3 D
RC5:B5	ID 3 D
RC5:B6	ID 3 D
RC5:C1	ID 3 D
RC5:C2	ID 3 D
RC5:C3	ID 2 D
RC5:C4	ID 4 D
RC5:C5	ID 4 D

INLINE	PAGE
RC5:C6	ID 4 D
RC5:D1	ID 2 D
RC5:D3	ID 3 D
RC5:D4	ID 4 D
RC5:D6	ID 4 D
RFH:A	GH 3 D
RFH:B	GH 0 D
RFH:C	GH 3 C
RFH:D	GH 1 B
RFH:E	KB 1 D
RFH:F	KB 1 D
RFH:G	KB 1 D
RFH:H	KB 1 D
RFH:J	KC 3 C
RFH:K	KC 3 D
RHSM:A	GD 4 C
RHSM:B	GD 4 C
RHSM:C	GD 4 D
SHAR:A	BG 0 B
SHAR:B	BG 0 B
SOLV:1	ED 4 B
SOLV:2	ED 4 B
SOLV:3	ED 4 B
SP_BAT1:A	NA 3 B
SP_IGN1:A	NA 3 B
SP_IGN1:B	NA 3 B
SP_IGN2:A	NA 4 B
SP_IGN3:A	NA 1 B
SP_IGN3:B	NA 1 B
SP_RLY1:A	BK 3 A
SP_RLY1:A	BL 3 C
SP_RLY1:A	BN 3 A
SP_RLY1:A	NA 1 C
SP_RLY1:B	BK 3 C
SP_RLY1:B	BL 3 D
SP_RLY1:B	BN 3 C
SP_RLY1:B	NA 1 D
SP_RLY1:C	BK 3 C
SP_RLY1:C	BL 3 D
SP_RLY1:C	BN 3 C
SP_RLY1:C	NA 1 E
SP_RLY1:D	BK 3 C
SP_RLY1:D	BL 3 D
SP_RLY1:D	BN 3 C
SP_RLY1:D	NA 1 D
SP_RLY1:E	BK 3 A
SP_RLY1:E	BL 3 C
SP_RLY1:E	BN 3 A
SP_RLY1:E	NA 1 C
SP_RLY1:F	BK 1 B

INLINE	PAGE
SP_RLY1:F	BL 3 C
SP_RLY1:F	BN 0 B
SP_RLY1:F	NA 1 C
SP_RLY1:G	BK 1 D
SP_RLY1:G	BL 3 D
SP_RLY1:G	BN 0 D
SP_RLY1:G	NA 1 D
SP_RLY1:H	BK 1 D
SP_RLY1:H	BL 3 D
SP_RLY1:H	BN 0 D
SP_RLY1:H	NA 1 E
SP_RLY1:J	BK 1 D
SP_RLY1:J	BL 3 D
SP_RLY1:J	BN 0 D
SP_RLY1:J	NA 1 D
SP_RLY1:K	BK 1 B
SP_RLY1:K	BL 3 C
SP_RLY1:K	BN 0 B
SP_RLY1:K	NA 1 C
SP_RLY2:A	BK 2 B
SP_RLY2:A	BL 1 B
SP_RLY2:A	BN 4 A
SP_RLY2:A	NA 0 C
SP_RLY2:B	BK 2 C
SP_RLY2:B	BL 1 C
SP_RLY2:B	BN 4 C
SP_RLY2:B	NA 0 D
SP_RLY2:C	BK 2 C
SP_RLY2:C	BL 1 C
SP_RLY2:C	BN 4 C
SP_RLY2:C	NA 0 D
SP_RLY2:D	BK 2 C
SP_RLY2:D	BL 1 C
SP_RLY2:D	BN 4 C
SP_RLY2:D	NA 0 D
SP_RLY2:E	BK 2 B
SP_RLY2:E	BL 1 B
SP_RLY2:E	BN 4 A
SP_RLY2:E	NA 0 C
SP_RLY2:F	BK 0 B
SP_RLY2:F	BL 0 B
SP_RLY2:F	BN 1 A
SP_RLY2:F	NA 0 C
SP_RLY2:G	BK 0 D
SP_RLY2:G	BL 0 C
SP_RLY2:G	BN 1 C
SP_RLY2:G	NA 0 D
SP_RLY2:H	BK 0 D
SP_RLY2:H	BL 0 C
SP_RLY2:H	BN 1 C

https://truckmanualshub.com/

INLINES

INLINE	PAGE
SP_RLY2:H	NA 0 D
SP_RLY2:J	BK 0 C
SP_RLY2:J	BL 0 C
SP_RLY2:J	BN 1 B
SP_RLY2:J	NA 0 D

INLINE	PAGE
SP_RLY2:K	BK 0 B
SP_RLY2:K	BL 0 B
SP_RLY2:K	BN 1 A
SP_RLY2:K	NA 0 C
SP_RLY53:A	NA 2 C

INLINE	PAGE
SP_RLY53:B	NA 2 C
SP_RLY53:C	NA 2 E
SP_RLY53:D	NA 2 E
SP_RLY53_87A:A	NA 2 E
SVRC:1	ED 4 A

INLINE	PAGE
SVRC:2	ED 4 A
SVRC:3	ED 4 A
TLBU:A	GF 2 C
TLBU:B	GF 2 C
TRPTO:A	FD 3 C

INLINE	PAGE
TRPTO:B	FD 2 C
TRPTO:C	FD 3 D
X10_C1:A	AC 4 D

https://truckmanualshub.com/

SPLICES

SPLICE	PAGE
SP3B7 (S)	GF 1 C
SP3B9 (S)	GF 1 B
SP5E1 (S)	GF 1 B
SP27B (S*)	BN 1 B
SP27B1 (S)	BL 3 A
SP38A2 (S)	CA 0 C
SPCB1 (T)	BA 0 D
SPCB7 (S)	BL 1 A
SPCB7A (S)	BK 2 A
SPCB11 (T)	BA 3 D
SPCB16 (T)	CD 0 C
SPCB19 (T)	BB 2 D
SPDL1H1 (S)	XA 3 E
SPDL1H2 (S)	XA 3 C
SPDL1H3 (S)	XA 3 C
SPDL1H4 (S)	XA 3 C
SPDL1H5 (S)	XA 3 B
SPDL1H6 (S)	XA 3 B
SPDL1H7 (S)	XA 3 B
SPDL1HB8 (S)	XA 3 D
SPDL1HB9 (S)	BI 3 C
SPDL1L1 (S)	XA 4 E
SPDL1L2 (S)	XA 3 C
SPDL1L3 (S)	XA 3 C
SPDL1L4 (S)	XA 3 C
SPDL1L5 (S)	XA 3 B
SPDL1L6 (S)	XA 3 B
SPDL1L7 (S)	XA 3 B
SPDL1LB8 (S)	XA 3 D
SPDL1LB9 (S)	BI 4 C
SPDL2H1 (S)	CF 2 B
SPDL2H2 (S)	XB 2 D
SPDL2H3 (S)	XB 3 C
SPDL2H4 (S)	XB 3 C
SPDL2HB6 (S)	XB 2 D
SPDL2HB7 (S)	BI 3 C
SPDL2L1 (S)	CF 2 B
SPDL2L2 (S)	XB 2 D
SPDL2L3 (S)	XB 3 C
SPDL2L4 (S)	XB 3 C
SPDL2LB6 (S)	XB 2 C
SPDL2LB7 (S)	BI 3 C
SPDL4H (S)	XC 1 B
SPDL4L (S)	XC 2 B
SPDL7H1 (S)	CA 3 C
SPDL7L1 (S)	CA 3 C
SPEMA28A1 (S)	CH 3 C

SPLICE	PAGE
SPEMA49A (S)	CA 2 B
SPEMA54A1 (S)	CF 1 C
SPEMA59A1 (S)	CH 3 D
SPEMA62A1 (S)	CF 2 D
SPF2A (T)	GA 1 A
SPF2C (T)	GA 0 C
SPF2C2 (S)	GD 1 D
SPF3B (T)	GA 0 C
SPF3B1 (T)	GA 0 D
SPF3F (T)	BE 1 A
SPF3F (T)	DD 0 B
SPF3F (T)	EA 2 A
SPF3F (T)	ED 2 A
SPF3F (T)	GA 0 B
SPF3F (T)	GH 3 A
SPF3F (T)	KB 1 A
SPF3F (T)	NA 2 A
SPF3F25 (S)	KB 1 C
SPF3F66 (T)	BA 2 E
SPF3F69 (T)	FD 1 B
SPF3H (T)	GA 2 B
SPF4C (T)	GD 3 C
SPF4D (T)	GD 4 C
SPF5A (T)	GA 3 B
SPF5B (T)	GA 3 B
SPF5D1 (S)	GF 2 B
SPF6A (T)	GA 1 B
SPF6A (T)	GH 3 B
SPF6B (S)	GH 1 C
SPF7A (T)	AC 0 B
SPF7C (T)	BM 0 A
SPF7D (T)	AC 1 C
SPF7G (T)	BF 4 C
SPF8A (T)	FB 2 B
SPF8F (S)	BK 0 D
SPF9B (T)	KC 2 C
SPF9D (S)	GA 2 D
SPF10A (T)	KB 2 B
SPF10A (T)	XA 2 B
SPF10C (T)	KB 2 B
SPF11A (T)	GG 3 B
SPF15A (T)	FC 1 B
SPF15B (T)	FC 2 C
SPF16A (T)	BA 0 B
SPF17A (T)	BA 1 B
SPF17A6 (S)	BN 4 A
SPF17A10 (S)	BD 2 B

SPLICE	PAGE
SPF17A16 (S)	BA 1 E
SPF17A30 (S)	BL 2 D
SPF17E (S)	BK 2 B
SPF17E1 (S)	BL 1 B
SPF17M1 (T)	BC 2 C
SPF18C1 (S)	BK 0 B
SPF20A1 ( )	ID 3 A
SPF20B ( )	ID 2 B
SPF20BC3 ( )	ID 2 C
SPF20C ( )	ID 2 B
SPF20F ( )	ID 4 B
SPF20FG3 ( )	ID 4 C
SPF20G ( )	ID 3 B
SPF21A (T)	GP 4 B
SPF22A (T)	GP 2 B
SPF23A (S)	GP 0 B
SPF23C (T)	GP 1 A
SPF23D (T)	GP 2 B
SPF25A (T)	HA 2 B
SPF25B (T)	HA 2 C
SPF25D (S)	HA 2 D
SPF27A (S)	BK 0 B
SPF27A1 (S)	BL 0 C
SPF27A2 (S)	BN 0 A
SPF27B (S)	BK 1 D
SPF27C (S)	BN 1 C
SPF27H (S)	BN 1 D
SPF29B (T)	AA 2 C
SPF31A (T)	DD 3 A
SPF34A (T)	NB 3 B
SPF34B (T)	NB 3 C
SPF34C2 (S)	GF 2 C
SPF34C3 (S)	GF 2 B
SPF35B (T)	GA 1 D
SPF35B3 (S)	IC 3 D
SPF35C (S)	GA 3 D
SPF38A (S)	CA 0 A
SPF42A (S)	BE 4 B
SPF42B (S)	BE 4 C
SPF43A (S)	CA 1 C
SPF44A (S)	FA 2 C
SPF44A1 ( )	FA 0 C
SPF50B1 (S)	GD 0 D
SPF51B2 (S)	GD 1 D
SPF55B (S)	IC 3 D
SPF55B1 (S)	IC 1 D
SPF55B1 (S)	ID 1 C

SPLICE	PAGE
SPF61A (S)	BO 0 B
SPF61C (S)	BO 0 C
SPF62B (S)	CF 0 B
SPF63A (T)	BE 0 B
SPF66A (T)	KA 1 B
SPF66A (T)	NA 4 A
SPF84A (T)	BI 0 C
SPF91A (T)	CD 0 B
SPF92A (T)	CD 1 B
SPHA1 (T)	BG 1 D
SPHA2 (T)	BG 1 C
SPHA13 (T)	BE 1 D
SPHA20 (T)	BE 1 D
SPHA21 (T)	BE 1 D
SPHA22 (T)	BE 1 C
SPHB22 (S)	BF 1 C
SPHB22A (S)	BF 1 E
SPHB22C1 (S)	BF 2 C
SPHB24 (S)	BG 2 D
SPHD3+ (S)	BN 1 C
SPN110 (T)	DD 0 C
SPN112 (T)	DC 3 B
SPN124CM (T)	DD 2 C
SPN131 (S)	DC 1 C
SPN145 (T)	DD 3 C
SPN158 (T)	DC 2 C
SPN158A (S)	DC 2 D
SPN163 (T)	DD 1 B
SPN163F (S)	FD 3 C
SPN163G (S)	FD 3 C
SPN165 (T)	DD 4 C
SPR13SA (T)	GD 3 D
SPR13SB (T)	GD 4 D
SPR135AA (T)	GD 4 D
SPURDA (T)	AC 2 C
SPURDB (T)	CD 1 A
SPX1A3 (S)	AD 2 C
SPX1E (T)	AD 3 C
SPX1E (T)	BA 4 E
SPX1E (T)	BB 2 B
SPX1E (T)	BC 2 D
SPX1E (T)	BD 1 B
SPX1E (T)	BE 0 D
SPX1E (T)	EA 0 A
SPX1E (T)	XA 1 E
SPX1E6 (T)	AD 3 C
SPX1E6 (T)	EA 3 B

SPLICE	PAGE
SPX1E6 (T)	ED 2 B
SPX1E9 (T)	EA 2 B
SPX2A ( )	AD 3 B
SPX2A ( )	NA 2 B
SPX2A1 (S)	AD 3 A
SPX2A1 (S)	FB 0 C
SPX2A1 (S)	FC 1 D
SPX2A1 (S)	NB 2 D
SPX2A2 (S)	AD 3 B
SPX2A2 (S)	GA 2 D
SPX2A2 (S)	GD 4 E
SPX2A2 (S)	GH 0 D
SPX2A2 (S)	GP 0 E
SPX2A2 (S)	KA 1 C
SPX2A2 (S)	KB 2 E
SPX2A2 (S)	KC 2 D
SPX2A3 (S)	AD 3 B
SPX2A3 (S)	GG 0 C
SPX2A3 (S)	NB 0 D
SPX2A4 (S)	AD 3 A
SPX2A4 (S)	GD 2 B
SPX2A4 (S)	NA 3 B
SPX2A5 (T)	AD 3 A
SPX2A5 (T)	BA 4 C
SPX2A5 (T)	DD 1 C
SPX2A5 (T)	EA 2 B
SPX2A5 (T)	ED 2 B
SPX2A33 (S)	BK 3 D
SPX2A42 (T)	GD 3 D
SPX2A48 (S)	GH 3 C
SPX2A58 (S)	BN 1 B
SPX2A58 (S)	BO 0 E
SPX2A60 (S)	BL 4 B
SPX2A65 (T)	BM 0 C
SPX2A70 (T)	BA 2 D
SPX2A104 (T)	FD 1 C
SPX2D (S)	AA 2 D
SPX2D (S)	AB 4 D
SPX2D (S)	AC 1 E
SPX2D (S)	AD 3 B
SPX2D (S)	BC 2 D
SPX2D (S)	CA 0 C
SPX2D (S)	DD 2 C
SPX2D (S)	GA 1 D
SPX2D (S)	GG 2 C
SPX2D (S)	HA 1 D
SPX2D (S)	NA 1 B

SPLICE	PAGE
SPX2D (S)	NB 4 C
SPX2D16 (T)	AD 3 B
SPX2D16 (T)	HA 2 D
SPX2D18 (S)	BK 3 C
SPX2D19 (S)	BN 1 C
SPX2D21 (S)	BL 0 E
SPX2N109 (S)	AD 3 B
SPX2N109 (S)	DD 0 B
SPX2N109A (T)	DD 0 C
SPX2N109B (S)	FD 2 D
SPX2N109F (S)	FD 3 D
SPX3A (S)	AD 3 D
SPX3A (S)	HA 3 E
SPX3A1 (S)	AD 3 D
SPX3A2 (S)	FB 2 E
SPX3A3 (S)	GF 1 D
SPX3A3A (S)	GF 1 D
SPX3A4 (S)	AD 3 D
SPX3A4 (S)	CD 1 E
SPX3A6 (S)	AD 4 D
SPX3A6 (S)	FA 2 D
SPX3B (S)	AD 3 C
SPX3B (S)	GP 2 E
SPX3C4 ( )	FA 0 D
SPX3C5 ( )	FB 0 D
SPX3F (S)	AD 3 C
SPX3F (S)	GD 1 D
SPX3F (S)	IC 2 D
SPX3F1 (S)	GD 0 D
SPX3F2 (S)	GD 1 D
SPX3H (S)	IC 2 D
SPX3H1 (S)	IC 1 D
SPX3H1 (S)	ID 1 C
SPX3H1A ( )	ID 3 C
SPX4D (S)	AD 1 D
SPX4D1 (S)	AD 1 D
SPX4D2 (S)	CF 4 C
SPX4D8 (S)	CA 2 C
SPX5A ( )	AD 0 C
SPX88_25 (S)	BN 3 D
SPXN109J (S)	FD 3 D
XE6 ( )	CA 3 B
XE7 ( )	CA 2 B
XE8 ( )	CA 2 B

https://truckmanualshub.com/

SHELLS

REF	PAGE
A03_A	BE 3 D
A03_B	BE 2 C
A03_C	BE 2 C
A03_D	BE 0 D
A03_E	BE 1 E
A03_H	BE 0 B
A03_H	BF 1 B
A03_H	BG 0 B
A03_H	NB 3 A
A03_J	BE 0 E
A12	ED 0 C
A12A	EA 0 C
A17	AC 1 A
A17	BA 1 C
A17	BC 2 D
A17	BD 2 D
A17	GD 2 A
A19E	DD 0 E
A34	HA 3 C
A36_1	BK 3 D
A36_2	BL 2 D
A36_3	BM 0 D
A36_3_CHASSIS	BJ 0 D
A36_3_CHASSIS	BM 3 D
A36_4_MATE	BN 3 D
A57	DC 0 A
A57	DD 0 D
A58	DC 0 D
A83	GD 2 B
A104	GA 2 A
A108A	DC 3 D
A121	KA 1 D
A122	KA 0 D
A123P	BE 2 B
A123T	BE 3 B
A124	BL 4 A
A125	BI 0 D
A125_AM	BI 2 D
A137B	CF 0 B
A137B	CH 0 B
A138	CF 1 E
A158	KB 1 C
A158_JMP1	KB 2 B
A158_JMP2	KB 3 B
A158_JMP3	KB 3 C
A230	BM 0 C
A230	CF 0 A
A230	NB 1 B
B07	BF 1 D
B09B	BF 2 D

REF	PAGE
B13	EA 1 B
B13	ED 0 D
B14	EA 1 B
B14	ED 0 D
B15	EA 0 D
B15	ED 0 B
B16	EA 1 D
B16	ED 1 B
B17	EA 2 E
B17	ED 2 D
B18	EA 2 E
B18	ED 3 D
B23	BF 3 C
B25A	BB 3 D
B40	BG 3 B
B41	BG 3 B
B42	BG 3 D
B43	BG 3 D
B44	BG 3 D
B45	BG 3 D
B60LF	KB 1 D
B60RF	KB 1 D
B68	BB 0 D
B80	KB 1 B
B96	CA 2 A
B96B	CA 2 A
B105	DC 3 D
B121	BG 0 D
B123	CA 2 E
B124FR	BF 1 D
B124RR	BF 1 D
B133	BG 0 A
B142C	CA 3 C
B156	BD 2 C
B156A	HA 2 D
B310	CA 3 A
CB2	AA 0 A
CB2	GA 1 A
CB3	AA 1 A
CB3	GA 0 A
CB4	AA 1 A
CB4	GA 2 A
CB5	AA 1 A
CB5	GA 3 A
CB6	AA 1 A
CB6	GA 1 A
CB6	GH 3 A
CB7	AA 2 A
CB7	AC 0 A
CB8	AA 0 C

REF	PAGE
CB8	FB 2 A
CB9	AA 2 A
CB9	KC 2 A
CB10	AA 2 A
CB10	KB 2 A
CB10	XA 2 A
CB11	AA 2 A
CB11	GG 0 A
CB11	NA 0 A
CB12	AA 2 A
CB12	BO 1 A
CB12	NB 0 A
CB15	AA 3 A
CB15	FC 1 A
CB18	AB 1 C
CB18	BC 1 A
CB20	AA 4 A
CB20	IC 0 A
CB20	ID 0 A
CB21	AA 0 C
CB21	GP 4 A
CB22	AA 0 C
CB22	GP 2 A
CB23	AA 1 C
CB23	GP 0 A
CB24	AA 1 C
CB24	NB 0 A
CB26	AA 4 A
CB26	NA 2 A
CB27	AA 1 C
CB27	BK 0 A
CB27	BL 0 A
CB27	BN 0 A
CB27	GG 0 A
CB27	NA 0 A
CB29	AA 4 A
CB30	AA 1 C
CB30	FC 1 A
CB32	AB 0 B
CB32	NA 3 A
CB33	AB 0 B
CB33	GG 2 A
CB34	AB 1 B
CB34	NB 3 A
CB35	AB 1 B
CB35	GA 1 A
CB36	AB 1 B
CB36	GQ 3 A
CB37	AB 2 B
CB37	GG 1 A

REF	PAGE
CB39	AA 1 D
CB39	GG 1 A
CB40	AA 4 D
CB40	NB 1 A
CB42	AA 4 D
CB42	BE 4 A
CB44	AA 3 D
CB44	FA 2 A
CB45	AA 3 D
CB45	CC 2 A
CB45	NB 2 A
CB46	AA 1 D
CB46	KC 1 A
CB47	AA 0 D
CB47	NA 3 A
CB50	AB 2 B
CB50	GD 0 A
CB51	AB 2 B
CB51	GD 1 A
CB52	AA 3 D
CB52	BG 4 A
CB55	AA 2 D
CB55	IC 3 A
CB57	AA 2 D
CB57	NA 1 A
CB58	AA 0 D
CB61	AB 3 B
CB61	BO 0 A
CB61	NB 2 A
CB66	AA 2 C
CB66	KA 1 A
CB66	NA 4 A
CB67	AB 3 B
CB68	AB 4 B
CB68	KC 3 A
CB74	KB 2 B
CB91	CD 0 B
CB92	CD 1 B
DCL_MATE_1	BM 1 C
DCL_MATE_2	BM 1 C
DUAL_PTO_JMP	FB 2 A
E11LA	GD 3 D
E11RA	GD 4 D
E12L	GA 3 D
E12R	GA 3 D
E13LS	GD 3 D
E13RS	GD 4 D
E17A	GH 1 D
E17B	GH 0 D
E17C	GH 3 D

REF	PAGE
E19C	GA 0 D
E19L	GA 0 D
E19LS	GD 3 A
E19R	GA 0 D
E19RS	GD 4 A
E27L	GF 0 C
E27R	GF 2 C
E30L	GD 0 D
E30R	GD 1 D
E38_08	BD 1 B
E38_12	BK 3 B
E38_12	BL 3 A
E38_12B	BN 1 C
E57	GA 4 D
F13	AA 3 A
F13	EA 3 A
F13	ED 3 A
F14	AA 3 A
F16	AB 1 C
F16	BA 0 A
F17	AB 1 C
F17	BA 1 A
F19	AA 3 A
F19	BE 0 A
F25	AB 4 C
F28	AC 3 B
F31	AB 2 C
F31	DD 3 A
F31	NB 2 A
F38	AA 1 D
F38	CA 0 A
F41	AA 1 D
F43	AA 2 D
F43	CA 1 B
F49	AA 0 D
F49	EA 3 A
F49	ED 3 A
F54	AB 2 B
F56	AA 2 D
F56	NA 3 A
F60	AB 3 B
F60	CA 0 A
F62	AB 3 B
F63	AB 2 C
F63	BE 0 A
F64	AB 2 C
F64	CA 4 A
F65	AB 2 C
F69	AB 3 C
F69	CF 0 A

https://truckmanualshub.com/

SHELLS

REF	PAGE
F71	AB 4 B
F71	DD 0 A
F82	BI 0 C
F83	BI 2 B
F84	BI 0 A
FM1	AD 1 B
FM3	AC 3 D
H02_1_114	GQ 3 D
H03	GF 2 B
INLFUS3	ID 2 A
M01L	GP 3 C
M01R	GP 2 C
M02	GP 0 C
M110LH	ID 0 D
M110LHL_MATE	IC 2 D
M110LHM	IC 0 D
M110RHL_MATE	IC 3 D
M110RHM	IC 1 D
M110RHM	ID 1 D
M120A	CD 0 E
M120B	CD 1 E
MC_DUAL_PTO_JMP	BC 0 B
OBD	XA 1 D
OBD	XB 2 E
OBD	XC 2 D
R01	AD 0 D
R01A	CC 3 C
R04	KC 3 C
R05	FA 2 C
R05_A	FA 0 C
R08	XA 3 A
R08-2	XB 1 D
R09	CC 2 C
R18A	FA 2 C
R18B	FA 1 C
R29	CH 3 D
R31	CH 3 D
RLY01	AB 3 C
RLY02	AA 2 C
RLY03	AA 0 B
RLY04	AA 3 C
RLY06	GA 3 B
RLY07	BN 2 B
RLY10B	BO 0 D
RLY11	GG 1 B
RLY12	GG 2 B

REF	PAGE
RLY13	GA 1 C
RLY14	GQ 3 D
RLY016A	GP 1 B
RLY016B	GP 2 B
RLY016C	GP 3 B
RLY016D	GP 3 B
RLY17	DD 3 B
RLY17	KB 2 E
RLY28	KC 2 B
RLY29	NB 3 B
RLY34	AA 1 B
RLY35	HA 2 B
RLY36	AC 1 C
RLY38	GD 0 B
RLY39	GD 1 B
RLY45	DD 4 B
RLY46	DD 3 B
RLY47	DD 2 B
RLY48	DD 2 B
RLY52	GA 1 B
RLY53	NA 2 D
RLY58	FC 1 B
RLY59	FC 2 B
RLY60	GA 4 B
RLY61	FB 0 A
RLY61B	BO 1 B
RLY62	NB 3 B
RLY63	GA 3 D
RLY63_JMP	GA 2 E
RLY64	BK 2 B
RLY64	BL 1 B
RLY64	BN 4 B
RLY64	NA 0 D
RLY65	BK 0 C
RLY65	BL 0 B
RLY65	BN 1 B
RLY65	NA 0 C
RLY66	BK 3 B
RLY66	BL 3 C
RLY66	BN 3 B
RLY66	NA 1 D
RLY67	BK 1 C
RLY67	BL 3 C
RLY67	BN 0 C
RLY67	NA 1 C
RLY68	CA 0 B

REF	PAGE
RLY91	CD 0 C
RLY92	CD 1 C
RLY94	BM 0 B
RLY95	BM 0 B
RLY100A	ID 2 D
RLY100B	ID 2 D
RLY100C	ID 3 D
RLY100D	ID 4 D
S01	GA 0 B
S006	BA 2 B
S07	BA 2 B
S007	BA 1 B
S008	BA 4 B
S009	GP 0 B
S013	IC 3 B
S016	EA 2 B
S016	ED 2 B
S017B	GH 3 D
S018_1	BC 4 B
S018_2	FB 1 D
S18A	BC 2 B
S18B	FB 2 B
S019	FB 4 C
S020	FB 2 B
S023	FB 3 C
S024	BD 2 B
S24C	DD 1 B
S28C	BN 1 B
S030	IC 1 B
S030	ID 0 B
S030A	ID 3 A
S036	AC 0 B
S036B	AC 1 B
S038	GA 3 B
S038C	BB 2 C
S039	GA 2 C
S039	GQ 0 A
S040P	BF 3 D
S040S	BF 4 D
S042	BE 3 A
S43	BA 3 D
S044	BB 2 C
S045	BA 2 D
S047	BG 2 D
S047A	BG 2 D
S048	BG 2 C

REF	PAGE
S048A	BG 2 C
S051A	FB 0 B
S051B	FB 1 C
S63	BN 4 C
S72	BB 2 A
S90_1	FB 3 A
S108	FC 1 B
S110	NB 2 B
S111	CA 4 C
S112A	BK 0 D
S112B	BN 1 C
S113	BE 0 C
S115	KA 1 B
S116	FB 1 E
S116A	BL 0 C
S137	FD 1 B
S169	AC 3 E
S320	FD 2 C
sym317_242	KA 0 C
sym403_378	KA 0 C
V27	BK 2 B
V27	BL 1 B
V30	BF 4 D
V35A	ID 2 C
V35B	ID 3 C
V35C	ID 3 C
V35D	ID 4 C
V36	DD 3 C
X0C	BA 2 A
X0C	BC 3 A
X0C	BD 2 A
X0C	CA 4 A
X0C	FB 4 A
X0C	FC 1 A
X0C	GH 3 B
X0C	GP 1 A
X0C	HA 2 A
X0C	IC 4 A
X0C	NB 0 A
X2_SP1	AD 4 A
X2_SP1	BC 2 C
X2_SP1	BD 2 C
X2_SP1	BI 0 C
X2_SP1	CA 3 C
X2_SP1	FB 3 D
X2_SP1	FC 0 D

REF	PAGE
X2_SP1	GA 0 C
X2_SP1	HA 2 B
X2_SP1	IC 3 B
X2_SP1	NA 2 B
X06D_MATE	BH 0 C
X06D_MATE_BL	BM 2 A
X07A	KC 1 C
X07B	BO 1 C
X10	AC 4 D
X11	CA 0 C
X34R_MATE	KC 3 C
X45A	CC 3 B
X135	AD 2 D
X136	AD 2 C
X194	BI 0 D
X194_AM	BI 2 D
XJN	AD 1 B
XJP	AC 4 A
Y11	EA 0 B
Y11	ED 0 D
Y12	EA 1 B
Y12	ED 1 D
Y13	EA 1 D
Y13	ED 0 B
Y14	EA 1 D
Y14	ED 0 B
Y15	EA 3 D
Y15	ED 2 D
Y16	EA 3 D
Y16	ED 3 D
Y18	FC 1 C
Y35	CA 1 C
Y42	HA 2 E
Y51	FA 1 C
Y57	EA 1 D
Y57	ED 1 B
Y62	DC 1 C
Y80	CF 3 A
Y81	CF 2 D
Y86	FB 1 D
Y88	FB 0 D
Y157	FD 3 C

https://truckmanualshub.com/

REFERENCES

REF	DESCRIPTION	PAGE
6SABS:A		EA 2 D
6SABS:A		ED 2 D
6SABS:B		EA 2 D
6SABS:B		ED 2 D
6SABS:C		EA 2 D
6SABS:C		ED 3 D
6SABS:D		EA 2 D
6SABS:D		ED 3 D
6SABS:E		EA 3 D
6SABS:E		ED 2 D
6SABS:F		EA 3 D
6SABS:F		ED 2 D
6SABS:G		EA 3 D
6SABS:G		ED 2 D
6SABS:H		EA 3 D
6SABS:H		ED 3 D
6SABS:J		EA 3 D
6SABS:J		ED 3 D
6SABS:K		EA 3 D
6SABS:K		ED 3 D
A03_A	DISPLAY, WARNING LAMP MODULE	BE 3 D
A03_B	GAUGE, SPEEDOMETER, VOLTMETER, TRANS. OIL	BE 2 C
A03_C	GAUGE, TACHOMETER, WATER TEMP., OIL PSI	BE 2 C
A03_D	GAUGE, DIESEL LEVEL & DIESEL FLUID LEVEL	BE 0 D
A03_E	GAUGE, PYROMETER	BE 1 E
A03_H	CONTROL UNIT, GAUGE DRIVER MODULE (GDM)	BE 0 B
A03_H	CONTROL UNIT, GAUGE DRIVER MODULE (GDM)	BF 1 B
A03_H	CONTROL UNIT, GAUGE DRIVER MODULE (GDM)	BG 0 B
A03_H	CONTROL UNIT, GAUGE DRIVER MODULE (GDM)	NB 3 A
A03_J	GAUGE, DUAL AIR	BE 0 E
A12	Control unit, ABS (Anti-lock Brake System	ED 0 C
A12A	CONTROL UNIT, ABS (ANTI-LOCK BRAKE SYS.)	EA 0 C
A17	CONTROL UNIT, VECU (VEHICLE ECU)	AC 1 A
A17	CONTROL UNIT, VECU (VEHICLE ECU)	BA 1 C
A17	CONTROL UNIT, VECU (VEHICLE ECU)	BC 2 D
A17	CONTROL UNIT, VECU (VEHICLE ECU)	BD 2 D
A17	CONTROL UNIT, VECU (VEHICLE ECU)	GD 2 A
A19E	GEARSELECTOR ALLISON	DD 0 E
A34	CONTROL PANEL & HVAC UNIT, RD-6-5302	HA 3 C
A36_1	CONTROL UNIT, BBM (BODYBUILDER MODULE), P	BK 3 D
A36_2	CONTROL UNIT, BBM (BODYBUILDER MODULE) PT	BL 2 D
A36_3	CONTROL UNIT, BBM (BODYBUILDER MODULE) RE	BM 0 D
A36_3_CHASSIS	BB BOC LIGHTING CONNECTOR	BJ 0 D
A36_3_CHASSIS	BB BOC LIGHTING CONNECTOR	BM 3 D
A36_4_MATE	CONTROL UNIT, BBM (BODYBUILDER MODULE), P	BN 3 D
A57	CONTROL UNIT, ALLISON TRANSMISSION	DC 0 A
A57	CONTROL UNIT, ALLISON TRANSMISSION	DD 0 D
A58	Allison Transmission	DC 0 D
A83	CONTROL UNIT, DRL (DAYTIME RUNNING LIGHT	GD 2 B
A104	CONTROL UNIT, FLASHER	GA 2 A

REF	DESCRIPTION	PAGE
A108A	TRANSMISSION RETARDER	DC 3 D
A121	DISPLAY, MONITOR, INTEC REAR VEIW CAMERA	KA 1 D
A122	CONTROL UNIT, REAR VIEW CAMERA SWITCHER	KA 0 D
A123P	GAUGE, LIFT AXLE, PUSHER	BE 2 B
A123T	GAUGE, LIFT AXLE, TAG	BE 3 B
A124	DISPLAY, HOUR METER	BL 4 A
A124_A2		AC 3 A
A124_B1		AD 1 B
A124_B2		AD 0 C
A125	Control unit, TGW (Telematics Gateway)	BI 0 D
A125_AM	CONTROL UNIT, TGW (TELEMATICS GATEWAY)	BI 2 D
A137B	Contol Module, ACM (Adblue control modu	CF 0 B
A137B	Contol Module, ACM (Adblue control modu	CH 0 B
A138	PUMP UNIT, ADBLUE	CF 1 E
A158	Control unit, Audio	KB 1 C
A158_JMP1	JUMPER, BATTERY FEED	KB 2 B
A158_JMP2	JUMPER, CLEAN POWER FEED	KB 3 B
A158_JMP3	JUMPER, REVERSE MUTE	KB 3 C
A230		BM 0 C
A230		CF 0 A
A230		NB 1 B
ABS_X1:1		EA 2 A
ABS_X1:3		EA 3 B
ABS_X1:4		EA 1 C
ABS_X1:5		EA 1 C
ABS_X1:7		EA 3 B
ABS_X1:8		EA 3 B
ABS_X1:10		EA 1 C
ABS_X1:11		EA 1 C
ABS_X1:16		EA 3 B
ABS_X1:17		EA 2 C
ABS_X2:1		EA 0 C
ABS_X2:2		EA 0 C
ABS_X2:3		EA 0 A
ABS_X2:4		EA 1 C
ABS_X2:5		EA 1 B
ABS_X2:6		EA 1 A
ABS_X2:7		EA 1 C
ABS_X2:8		EA 1 B
ABS_X2:9		EA 0 C
ABS_X2:10		EA 1 C
ABS_X2:11		EA 1 B
ABS_X2:12		EA 0 B
ABS_X2:13		EA 1 C
ABS_X2:14		EA 1 B
ABS_X2:15		EA 0 C
ABS_X2:16		EA 1 C
ABS_X2:17		EA 1 C
ABS_X2:18		EA 0 C
ABS_X3:4		EA 3 C

https://truckmanualshub.com/

REFERENCES

REF	DESCRIPTION	PAGE
ABS_X3:6		EA 3 E
ABS_X3:7		EA 3 C
ABS_X3:9		EA 3 E
ABS_X3:10		EA 3 C
ABS_X3:11		EA 2 D
ABS_X3:12		EA 2 D
ABS_X3:13		EA 3 C
ABS_X3:14		EA 2 D
ABS_X3:15		EA 2 D
ALLISON:1		DC 2 C
ALLISON:2		DC 3 C
ALLISON:3		DC 1 C
ALLISON:4		DC 2 C
ALLISON:5		DC 1 C
ALLISON:6		DC 1 C
ALLISON:7		DC 1 C
ALLISON:8		DC 1 C
ALLISON:9		DC 1 C
ALLISON:10		DC 0 C
ALLISON:11		DC 0 C
ALLISON:12		DC 1 C
ALLISON:13		DC 1 C
ALLISON:14		DC 2 C
ALLISON:15		DC 2 C
ALLISON:16		DC 2 C
ALLISON:17		DC 0 C
ALLISON:18		DC 0 C
ALLISON:19		DC 1 C
ALLISON:20		DC 1 C
ALLISON:21		DC 2 C
ALLISON:22		DC 2 C
ALLISON:23		DC 2 C
ALLISON:24		DC 1 C
ALLISON:27		DC 0 C
ALLISON:30		DC 0 C
ALLISON:31		DC 0 C
ALLISON:32		FD 2 C
ALLISON:33		FD 2 C
ALLISON:34		FD 3 D
B07	SENSOR, FUEL LEVEL	BF 1 D
B09B	Sensor, oil temperature, gearbox	BF 2 D
B13	SENSOR, WHEEL SPD LH FRT AXLE	EA 1 B
B13	SENSOR, WHEEL SPD LH FRT AXLE	ED 0 D
B14	SENSOR WHEEL SPD RH FRT AXLE	EA 1 B
B14	SENSOR WHEEL SPD RH FRT AXLE	ED 0 D
B15	SENSOR, WHEEL SPD LH RR RR AXLE	EA 0 D
B15	SENSOR, WHEEL SPD LH RR RR AXLE	ED 0 B
B16	SENSOR, WHEEL SPD RH RR RR AXLE	EA 1 D
B16	SENSOR, WHEEL SPD RH RR RR AXLE	ED 1 B
B17	SENSOR, WHEEL SPD LH 3RD AXLE	EA 2 E

REF	DESCRIPTION	PAGE
B17	SENSOR, WHEEL SPD LH 3RD AXLE	ED 2 D
B18	SENSOR, WHEEL SPD RH 3RD AXLE	EA 2 E
B18	SENSOR, WHEEL SPD RH 3RD AXLE	ED 3 D
B23	SENSOR, AMBIENT AIR TEMP.	BF 3 C
B25A	SENSOR ACCELERATOR PEDAL	BB 3 D
B40	SENSOR, BRK WEAR FRT AXLE, LHS	BG 3 B
B41	SENSOR BRK WEAR FRT AXLE RHS	BG 3 B
B42	SENSOR, BRK WEAR FRT RR AXLE, LHS	BG 3 D
B43	SENSOR, BRK WEAR FRT RR AXLE, RHS	BG 3 D
B44	SENSOR, BRK WEAR REAR RR AXLE, LHS	BG 3 D
B45	SENSOR, BRK WEAR REAR RR AXLE, RHS	BG 3 D
B60LF	SPEAKER, LEFT FRT	KB 1 D
B60RF	SPEAKER, RIGHT FRT.	KB 1 D
B68	SENSOR, OUTPUT SHAFT SPD, GEARBOX	BB 0 D
B80	Handsfree, Loudspeaker, Microphone	KB 1 B
B96	SENSOR, NOx (CAN BASED) AFTER SCR	CA 2 A
B96B	SENSOR, NOx (CAN BASED) AFTER DPF	CA 2 A
B105	SENSOR, RETARDER TEMP	DC 3 D
B121	SENSOR, LOW LEVEL WASHER FLUID	BG 0 D
B123	SENSOR LEVEL COOLANT	CA 2 E
B124FR	SENSOR, OIL TEMP., FRONT REAR AXLE	BF 1 D
B124RR	SENSOR, OIL TEMP., REAR REAR AXLE	BF 1 D
B133	SENSOR, AIR FILTER RESTRICTION	BG 0 A
B142C	Sensor, AdBlue level and temperature	CA 3 C
B156	SENSOR, FREON HI PRESSURE - FAN	BD 2 C
B156A	SENSOR, FREON HI PRESSURE	HA 2 D
B310	Sensor, Particulate Matter	CA 3 A
BBC_MC_SOL_SW:A		BO 3 B
BBC_MC_SOL_SW:A		BO 3 C
BBC_MC_SOL_SW:B		BO 3 B
BBC_MC_SOL_SW:B		BO 3 C
BBC_MC_SOL_SW:C		BO 3 B
BBC_MC_SOL_SW:C		BO 3 C
BBC_MC_SOL_SW:D		BO 3 B
BBC_MC_SOL_SW:D		BO 3 C
BBC_MC_SOL_SW:E		BO 3 B
BBC_MC_SOL_SW:E		BO 3 C
BBC_MC_SOL_SW:F		BO 3 B
BBC_MC_SOL_SW:F		BO 3 C
BBC_MC_SOL_SW:G		BO 3 B
BBC_MC_SOL_SW:G		BO 3 C
BBC_MC_SOL_SW:H		BO 4 B
BBC_MC_SOL_SW:H		BO 4 C
BBC_MC_SOL_SW:J		BO 4 B
BBC_MC_SOL_SW:J		BO 4 C
BBC_MC_SOL_SW:K		BO 4 B
BBC_MC_SOL_SW:K		BO 4 C
BBC_MC_SOL_SW:L		BO 2 B
BBC_MC_SOL_SW:L		BO 2 C
BBC_MC_SOL_SW:M		BO 2 B

https://truckmanualshub.com/

REFERENCES

REF	DESCRIPTION	PAGE
BBC_MC_SOL_SW:M		BO 2 C
BBC_MC_SOL_SW:N		BO 2 B
BBC_MC_SOL_SW:N		BO 2 C
BBC_MC_SOL_SW:P		BO 2 B
BBC_MC_SOL_SW:P		BO 2 C
BBC_MC_SOL_SW:R		BO 2 B
BBC_MC_SOL_SW:R		BO 2 C
BBC_MC_SOL_SW:S		BO 3 B
BBC_MC_SOL_SW:S		BO 3 C
BBCAB_TRANS:A		BN 4 C
BBCAB_TRANS:B		BN 4 D
BBM_1939:A		BB 1 C
BBM_1939:A		BB 1 C
BBM_1939:B		BB 1 C
BBM_1939:B		BB 1 C
BBMCO:A		BM 1 D
BPMCFC:S		GG 1 D
BPMCFC:T		GG 1 D
BPMCFC:U		NB 4 D
BPMCFC:V		NB 4 D
BPMCFC:W		GG 1 D
BPMCFC:X		GG 1 D
BPMCFC:Y		GG 1 D
BPMCFC:Z		GG 1 D
BWFC:A		BG 3 C
BWFC:B		BG 4 C
BWRC:A		BG 2 D
BWRC:B		BG 3 E
CB2	CIRCUIT BREAKER, HDLPS. HI DRL	AA 0 A
CB2	CIRCUIT BREAKER, HDLPS. HI DRL	GA 1 A
CB3	CIRCUIT BREAKER PARK,TAIL MARKER LPS.	AA 1 A
CB3	CIRCUIT BREAKER PARK,TAIL MARKER LPS.	GA 0 A
CB4	CIRCUIT BREAKER TURN LPS, FLASHER	AA 1 A
CB4	CIRCUIT BREAKER TURN LPS, FLASHER	GA 2 A
CB5	CIRCUIT BREAKER, TRACTOR STOP LPS.	AA 1 A
CB5	CIRCUIT BREAKER, TRACTOR STOP LPS.	GA 3 A
CB6	CIRCUIT BREAKER, DOME COURTESY LPS.	AA 1 A
CB6	CIRCUIT BREAKER, DOME COURTESY LPS.	GA 1 A
CB6	CIRCUIT BREAKER, DOME COURTESY LPS.	GH 3 A
CB7	CIRCUIT BREAKER, KEY SW.	AA 2 A
CB7	CIRCUIT BREAKER, KEY SW.	AC 0 A
CB8	CIR. BRKR., AIR SOL.	AA 0 C
CB8	CIR. BRKR., AIR SOL.	FB 2 A
CB9	CIR. BRKR., CB POST	AA 2 A
CB9	CIR. BRKR., CB POST	KC 2 A
CB10	CIR. BRKR., DIAG. CONN./ RADIO	AA 2 A
CB10	CIR. BRKR., DIAG. CONN./ RADIO	KB 2 A
CB10	CIR. BRKR., DIAG. CONN./ RADIO	XA 2 A
CB11	CIR. BRKR., BATT. STUD	AA 2 A
CB11	CIR. BRKR., BATT. STUD	GG 0 A

REF	DESCRIPTION	PAGE
CB11	CIR. BRKR., BATT. STUD	NA 0 A
CB12	CIR. BRKR., OPTION BLOCK	AA 2 A
CB12	CIR. BRKR., OPTION BLOCK	BO 1 A
CB12	CIR. BRKR., OPTION BLOCK	NB 0 A
CB15	CIR. BRKR., BEACON LAMPS	AA 3 A
CB15	CIR. BRKR., BEACON LAMPS	FC 1 A
CB18	CIR. BRKR., DCL(CDS) EMS POWER	AB 1 C
CB18	CIR. BRKR., DCL(CDS) EMS POWER	BC 1 A
CB20	CIR. BRKR., MOTO. MIRRORS	AA 4 A
CB20	CIR. BRKR., MOTO. MIRRORS	IC 0 A
CB20	CIR. BRKR., MOTO. MIRRORS	ID 0 A
CB21	CIRCUIT BREAKER LH WS WIPER	AA 0 C
CB21	CIRCUIT BREAKER LH WS WIPER	GP 4 A
CB22	CIRCUIT BREAKER, RH, WS WIPER	AA 0 C
CB22	CIRCUIT BREAKER, RH, WS WIPER	GP 2 A
CB23	CIRCUIT BREAKER WS. WIPER/ WASHER	AA 1 C
CB23	CIRCUIT BREAKER WS. WIPER/ WASHER	GP 0 A
CB24	CIR. BRKR., 2WAY RADIO	AA 1 C
CB24	CIR. BRKR., 2WAY RADIO	NB 0 A
CB26	CIR. BRKR., REAR FLOOD LPS.	AA 4 A
CB26	CIR. BRKR., REAR FLOOD LPS.	NA 2 A
CB27	CIR. BRKR., IGN. STUD	AA 1 C
CB27	CIR. BRKR., IGN. STUD	BK 0 A
CB27	CIR. BRKR., IGN. STUD	BL 0 A
CB27	CIR. BRKR., IGN. STUD	BN 0 A
CB27	CIR. BRKR., IGN. STUD	GG 0 A
CB27	CIR. BRKR., IGN. STUD	NA 0 A
CB29	CIR. BRKR., EMS RELAYS	AA 4 A
CB30	CIR. BRKR., MUNCIE LIVE PACK	AA 1 C
CB30	CIR. BRKR., MUNCIE LIVE PACK	FC 1 A
CB32	CIR. BRKR., BODYBUILDER BATT 2	AB 0 B
CB32	CIR. BRKR., BODYBUILDER BATT 2	NA 3 A
CB33	CIR. BRKR., TRAILER STOP LPS.	AB 0 B
CB33	CIR. BRKR., TRAILER STOP LPS.	GG 2 A
CB34	CIR. BRKR., REV/NEUTRAL POWER	AB 1 B
CB34	CIR. BRKR., REV/NEUTRAL POWER	NB 3 A
CB35	CIR. BRKR., CAB & TRLR. CLEARANCE LPS.	AB 1 B
CB35	CIR. BRKR., CAB & TRLR. CLEARANCE LPS.	GA 1 A
CB36	CIR. BRKR., HORN	AB 1 B
CB36	CIR. BRKR., HORN	GQ 3 A
CB37	CIR. BRKR., TRLR. TAIL LPS.	AB 2 B
CB37	CIR. BRKR., TRLR. TAIL LPS.	GG 1 A
CB39	CIR. BRKR., TRAILER ABS PWR	AA 1 D
CB39	CIR. BRKR., TRAILER ABS PWR	GG 1 A
CB40	CIR. BRKR., BODY IGN. PWR. STUD	AA 4 D
CB40	CIR. BRKR., BODY IGN. PWR. STUD	NB 1 A
CB42	CIR. BRKR., BACKUP LPS.	AA 4 D
CB42	CIR. BRKR., BACKUP LPS.	BE 4 A
CB44	CIR. BRKR., HTD. AIR DRYER /HTD. DRAIN VA	AA 3 D
CB44	CIR. BRKR., HTD. AIR DRYER /HTD. DRAIN VA	FA 2 A

https://truckmanualshub.com/

REFERENCES

REF	DESCRIPTION	PAGE
CB45	CIR. BRKR., SPARE/FUEL SEPARATOR FUEL HEA	AA 3 D
CB45	CIR. BRKR., SPARE/FUEL SEPARATOR FUEL HEA	CC 2 A
CB45	CIR. BRKR., SPARE/FUEL SEPARATOR FUEL HEA	NB 2 A
CB46	CIR. BRKR., POWER OUTLET	AA 1 D
CB46	CIR. BRKR., POWER OUTLET	KC 1 A
CB47	CIR. BRKR., TRANS./ SPARE	AA 0 D
CB47	CIR. BRKR., TRANS./ SPARE	NA 3 A
CB50	CIR. BRKR., HDLP LH LOW BEAM	AB 2 B
CB50	CIR. BRKR., HDLP LH LOW BEAM	GD 0 A
CB51	CIR. BRKR., HDLP RH LOW BEAM	AB 2 B
CB51	CIR. BRKR., HDLP RH LOW BEAM	GD 1 A
CB52	CIR. BRKR., SPARE/ BRK. WEAR	AA 3 D
CB52	CIR. BRKR., SPARE/ BRK. WEAR	BG 4 A
CB55	CIR. BRKR., HEATED MIRRORS	AA 2 D
CB55	CIR. BRKR., HEATED MIRRORS	IC 3 A
CB57	CIR. BRKR., HVAC ROOF COND. FAN	AA 2 D
CB57	CIR. BRKR., HVAC ROOF COND. FAN	NA 1 A
CB58	CIR. BRKR. OPEN	AA 0 D
CB61	CIR. BRKR., BODY BATT. STUD	AB 3 B
CB61	CIR. BRKR., BODY BATT. STUD	BO 0 A
CB61	CIR. BRKR., BODY BATT. STUD	NB 2 A
CB66	CIR. BRKR., CAMERA/ SPARE	AA 2 C
CB66	CIR. BRKR., CAMERA/ SPARE	KA 1 A
CB66	CIR. BRKR., CAMERA/ SPARE	NA 4 A
CB67	CIR. BRKR., OPEN	AB 3 B
CB68	CIR. BRKR., CIGAR LIGHTER	AB 4 B
CB68	CIR. BRKR., CIGAR LIGHTER	KC 3 A
CB74	CIR. BRKR., RADIO MEMORY	KB 2 B
CB91	CIR. BRKR., AUX FAN #1	CD 0 B
CB92	CIR. BRKR., AUX FAN #2	CD 1 B
CBBFCBB:R		BJ 1 D
CBBFCBB:R		BM 4 C
CBBFCBB:S		BJ 1 D
CBBFCBB:S		BM 4 C
CBBFCBB:T		BJ 0 D
CBBFCBB:T		BM 3 C
CBBFCBB:U		BJ 1 D
CBBFCBB:U		BM 4 C
CBBFCBB:V		BJ 1 D
CBBFCBB:V		BM 4 C
CBBFCBB:W		BJ 0 D
CBBFCBB:W		BM 3 C
CBBFCBB:X		BJ 0 D
CBBFCBB:X		BM 3 C
CBBFCBB:Y		BJ 0 D
CBBFCBB:Y		BM 3 C
CBBFCBB:Z		BJ 0 D
CBBFCBB:Z		BM 3 C
D1		FD 3 C
DCL:A		BC 1 C

REF	DESCRIPTION	PAGE
DCL:B		BC 1 C
DCL:C		BC 1 C
DCL:D		BC 1 C
DCL:E		BC 1 B
DCL:F		BC 1 C
DCL:G		BC 1 B
DCL:H		BC 1 B
DCL:J		BC 1 B
DCL:L		BC 1 C
DCL:M		BC 1 D
DCL:N		BC 1 D
DCL:P		BC 1 D
DCL:R		BC 1 E
DCL_MATE_1	CONNECTOR, DCL MATE, BODYLINK REFUSE	BM 1 C
DCL_MATE_2	CONNECTOR DCL MATE BODYLINK REFUSE	BM 1 C
DRL_OR_BB:A		BA 1 D
DRL_OR_BB:B		BA 1 D
DRL_OR_BB:C		BA 1 D
DRL_OR_BB:D		BA 1 D
DRL_OR_BB:E		BA 2 D
DRL_OR_BB:F		BA 2 D
DRL_OR_BB:G		BA 2 D
DRL_OR_BB:H		BA 2 D
DRL_OR_BB:J		BA 3 D
DRL_OR_BB:L		BA 3 D
DRL_OR_BB:N		BA 3 D
DRL_OR_BB:P		BA 3 D
DRL_OR_BB:R		BA 3 D
DRL_OR_DCL2:J		BA 3 E
DRL_OR_DCL2:L		BA 3 E
DRL_OR_DCL2:N		BA 3 E
DRL_OR_DCL2:P		BA 3 E
DRL_OR_DCL2:R		BA 3 E
DRL_OR_DCL:A		BA 1 E
DRL_OR_DCL:B		BA 1 E
DRL_OR_DCL:C		BA 1 E
DRL_OR_DCL:D		BA 1 E
DRL_OR_DCL:E		BA 2 E
DRL_OR_DCL:F		BA 2 E
DRL_OR_DCL:G		BA 2 E
DRL_OR_DCL:H		BA 2 E
DS_PTO:A		BL 2 C
DS_PTO:B		BL 2 C
DS_PTO:C		BL 2 C
DSFC:A		BF 1 D
DSFC:B		BF 2 E
DSFC:C		BF 1 D
DSFC:D		BG 1 D
DSFC:E		BG 2 C
DSFC:F		BG 1 D

https://truckmanualshub.com/

REFERENCES

REF	DESCRIPTION	PAGE
DSFRT:A		BG 2 D
DSFRT:B		BG 2 D
DSRR:A		BG 2 C
DSRR:B		BG 2 C
DUAL_PTO:A		BK 2 A
DUAL_PTO:B		FB 2 B
DUAL_PTO:C		FB 1 A
DUAL_PTO:D		FB 1 A
DUAL_PTO:E		FB 1 A
DUAL_PTO:F		FB 1 A
DUAL_PTO_JMP	PLUG, JUMPER WIRE	FB 2 A
E11LA	LAMP, SIDE MARKER LEFT SIDE 1	GD 3 D
E11RA	LAMP, SIDE MARKER RIGHT SIDE 1	GD 4 D
E12L	LAMP, ROOF POS. LIGHT LEFT	GA 3 D
E12R	LAMP, ROOF POS. LIGHT, RIGHT	GA 3 D
E13LS	LAMP, DIR. INDICATOR LEFT SIDE	GD 3 D
E13RS	LAMP, DIR. INDICATOR RIGHT SIDE	GD 4 D
E17A	LAMP, CAB REAR DOME	GH 1 D
E17B	LAMP,FRONT LH DOME	GH 0 D
E17C	LAMP, FRONT RH DOME	GH 3 D
E19C	LAMP, ID LIGHT ROOF, CENTER	GA 0 D
E19L	LAMP, ID LIGHT ROOF, LEFT	GA 0 D
E19LS	LAMP, ROOF SIDE MARKER, LEFT	GD 3 A
E19R	LAMP, ID LIGHT ROOF, RIGHT	GA 0 D
E19RS	LAMP, ROOF SIDE MARKER, RIGHT	GD 4 A
E27L	TAIL LAMP MODULE, LEFTHAND	GF 0 C
E27R	TAIL LAMP MODULE, RIGHTHAND	GF 2 C
E30L	LH HEADLAMP	GD 0 D
E30R	RH HEADLAMP	GD 1 D
E38_08	LAMP, INDICATOR, IWDL	BD 1 B
E38_12	LAMP INDICATOR, PTO	BK 3 B
E38_12	LAMP INDICATOR, PTO	BL 3 A
E38_12B	LAMP INDICATOR, PUMP ON PTO #2 OIL LEVEL	BN 1 C
E57	LAMP, POWER INDICATOR	GA 4 D
F13	FUSE ABS BATT	AA 3 A
F13	FUSE ABS BATT	EA 3 A
F13	FUSE ABS BATT	ED 3 A
F14	FUSE, OPEN	AA 3 A
F16	FUSE, VECU (EMS)	AB 1 C
F16	FUSE, VECU (EMS)	BA 0 A
F17	FUSE, CONTROL/SW INPUTS	AB 1 C
F17	FUSE, CONTROL/SW INPUTS	BA 1 A
F19	FUSE INST. CLUSTER	AA 3 A
F19	FUSE INST. CLUSTER	BE 0 A
F25	FUSE, HVAC CAB	AB 4 C
F28		AC 3 B
F31	FUSE TRANS SPARE	AB 2 C
F31	FUSE TRANS SPARE	DD 3 A
F31	FUSE TRANS SPARE	NB 2 A
F38	FUSE ENGINE CONTROL UNIT	AA 1 D

REF	DESCRIPTION	PAGE
F38	FUSE ENGINE CONTROL UNIT	CA 0 A
F41	FUSE, ENG. ACC.	AA 1 D
F43	F43 FUSE, ENG COMP #2	AA 2 D
F43	F43 FUSE, ENG COMP #2	CA 1 B
F49	FUSE, ABS	AA 0 D
F49	FUSE, ABS	EA 3 A
F49	FUSE, ABS	ED 3 A
F54	FUSE, DPF, BAT	AB 2 B
F56	FUSE TELMA	AA 2 D
F56	FUSE TELMA	NA 3 A
F60	FUSE, ENG COMP #1	AB 3 B
F60	FUSE, ENG COMP #1	CA 0 A
F62	FUSE, EAT BATT.	AB 3 B
F63	FUSE, INSTR CLUSTER (EMS)	AB 2 C
F63	FUSE, INSTR CLUSTER (EMS)	BE 0 A
F64	FUSE, DPF, IGN	AB 2 C
F64	FUSE, DPF, IGN	CA 4 A
F65	TGW2	AB 2 C
F69	FUSE, EAT EMS	AB 3 C
F69	FUSE, EAT EMS	CF 0 A
F71	FUSE, TRANS (BATT)	AB 4 B
F71	FUSE, TRANS (BATT)	DD 0 A
F82	TGW	BI 0 C
F83	TGW	BI 2 B
F84	TGW	BI 0 A
FC_TGW:A		BI 2 B
FC_TGW:B		BI 2 C
FC_TGW:C		BI 2 B
FC_TGW:D		BI 2 C
FC_TGW:E		BI 3 B
FC_TGW:F		BI 3 C
FCBL:A		GF 2 A
FCBL:B		GF 0 B
FCBL:C		GF 1 B
FCBL:D		GF 1 B
FCBL:E		AD 3 D
FCCE:1		FB 3 D
FCCE:2		FB 2 D
FCCE:4		FB 1 D
FCCE:5		FB 1 D
FCCE:6		FB 1 D
FCCE:7		GF 2 B
FCCE:11		GF 1 E
FCCE:12		FB 2 D
FCCE:14		GF 1 E
FCCE:15		EA 0 D
FCCE:15		ED 0 B
FCCE:16		EA 0 D
FCCE:16		EA 1 D
FCCE:16		ED 0 B

https://truckmanualshub.com/

REFERENCES

REF	DESCRIPTION	PAGE
FCCE:17		ED 0 B
FCCE:18		EA 1 E
FCCE:18		ED 0 B
FCCE:19		EA 1 D
FCCE:19		ED 0 B
FCCE:20		EA 1 D
FCCE:20		ED 1 B
FCCE:21		EA 1 D
FCCE:21		ED 1 B
FCCE:22		EA 1 D
FCCE:22		ED 0 B
FCCE:23		EA 1 E
FCCE:23		ED 0 B
FCCE:24		EA 1 D
FCCE:24		ED 1 B
FCCE:25		EA 1 D
FCCE:25		ED 1 B
FCCE:26		EA 1 D
FCCE:26		ED 1 B
FCCE:27		FB 1 E
FCCE:28		BF 3 D
FCCE:29		BF 1 C
FCCE:30		BF 1 D
FCCE:31		BG 1 D
FCCE:32		BG 1 C
FCCE:33		GF 1 B
FCCE:34		GF 1 B
FCCE:35		GF 2 B
FCCPBB:1		BM 0 D
FCCPBB:2		BM 1 D
FCEIC:1		CA 3 B
FCEIC:2		CA 3 B
FCEIC:3		CA 2 B
FCEIC:4		CA 3 B
FCEIC:5		CA 3 B
FCEIC:6		CA 2 B
FCEIC:7		CA 3 D
FCEIC:8		CA 4 D
FCEIC:9		CF 3 B
FCEIC:10		CA 4 D
FCEIC:11		CA 4 D
FCEIC:12		CF 3 B
FCEIC:13		CA 4 D
FCEIC:14		CA 4 D
FCEIC:15		CA 4 D
FCEIC:22		CA 2 D
FCEIC:23		BG 0 B
FCEIC:25		CA 2 D
FCEIC:26		BG 0 B
FCFH:A		CC 2 C

REF	DESCRIPTION	PAGE
FCFH:B		CC 2 D
FCLA:A		FB 0 D
FCLA:B		FB 0 D
FCLA:C		FB 0 E
FCSH:1		CD 0 D
FCSH:2		CD 1 D
FCSH:3		CD 0 D
FCSH:4		CD 1 D
FCSP:B		FB 1 D
FCSP:C		FB 2 D
FCSP:D		FB 2 D
FCSP:E		FB 2 D
FCSP:K		FB 3 D
FCSP:L		FB 1 E
FCSP:N		FB 3 E
FCSP:P		FB 1 D
FCSP:R		FB 2 E
FCSP:S		FB 2 E
FCTR:A		BC 3 B
FCTR:B		BE 3 B
FCTR:C		BF 2 D
FCTR:D		BF 2 D
FCTR:E		BC 4 B
FCTR:F		BB 0 C
FCTR:G		BB 0 C
FCTR:H		BE 3 B
FCTR:J		FB 3 A
FCTR:K		FB 3 B
FCTR:L		FB 1 B
FCTR:M		FB 1 E
FCUT:2		CH 3 C
FCUT:3		CH 3 D
FCUT:4		CH 3 D
FCUT:5		CF 1 D
FCUT:6		CF 2 D
FCUT:7		CF 2 D
FCUT:8		CF 2 D
FCUT:9		CF 2 D
FCUT:11		CA 3 B
FCUT:12		CF 2 D
FCUT:14		CA 3 C
FCUT:15		CF 1 D
FCUT:16		CF 1 D
FCUT:17		CA 3 D
FCUT:18		CA 3 D
FCUT:21		CA 3 C
FCUT:22		CA 3 C
FCUTEXT:2		CH 3 C
FCUTEXT:3		CH 3 D
FCUTEXT:4		CH 3 C

https://truckmanualshub.com/

REFERENCES

REF	DESCRIPTION	PAGE
FCUTEXT:5		CF 1 C
FCUTEXT:6		CF 2 C
FCUTEXT:7		CF 2 C
FCUTEXT:8		CF 2 C
FCUTEXT:9		CF 2 C
FCUTEXT:11		CA 2 B
FCUTEXT:12		CF 2 C
FCUTEXT:14		CA 2 C
FCUTEXT:15		CF 1 C
FCUTEXT:16		CF 1 C
FCUTEXT:17		CA 3 E
FCUTEXT:18		CA 3 E
FCUTEXT:21		CA 3 B
FCUTEXT:22		CA 3 B
FM1	FUSE, MAIN GND, PREHEATING	AD 1 B
FM3	FUSE, MAIN PWR, CAB	AC 3 D
FRC1:A1		AB 3 C
FRC1:A1		CF 0 A
FRC1:A2		AB 2 C
FRC1:A2		BI 0 A
FRC1:A3		AB 2 C
FRC1:A3		CA 4 A
FRC1:A4		AB 2 C
FRC1:A4		BE 0 A
FRC1:A5		AB 2 C
FRC1:A5		DD 3 A
FRC1:A5		NB 2 A
FRC1:A6		AB 1 C
FRC1:A6		BC 1 A
FRC1:A7		AB 1 C
FRC1:A7		BA 1 A
FRC1:A8		AB 1 C
FRC1:A8		BA 0 A
FRC1:A9		AA 2 C
FRC1:A9		KA 1 A
FRC1:A9		NA 4 A
FRC1:A10		AA 1 C
FRC1:A10		FC 1 A
FRC1:A11		AA 1 C
FRC1:A11		BK 0 A
FRC1:A11		BL 0 A
FRC1:A11		BN 0 A
FRC1:A11		GG 0 A
FRC1:A11		NA 0 A
FRC1:A12		AA 1 C
FRC1:A12		NB 0 A
FRC1:A13		AA 1 C
FRC1:A13		GP 0 A
FRC1:A14		AA 0 C
FRC1:A14		GP 2 A

REF	DESCRIPTION	PAGE
FRC1:A15		AA 0 C
FRC1:A15		GP 4 A
FRC1:A16		AA 0 C
FRC1:A16		FB 2 A
FRC1:B1		AB 3 C
FRC1:B2		AB 3 C
FRC1:B3		AA 0 B
FRC1:B4		AA 0 C
FRC1:C1		AB 4 B
FRC1:C1		DD 0 A
FRC1:C2		AB 4 B
FRC1:C2		KC 3 B
FRC1:C3		AB 3 B
FRC1:C4		AB 3 B
FRC1:C5		AB 3 B
FRC1:C5		NB 2 A
FRC1:C6		AB 3 B
FRC1:C6		CA 0 A
FRC1:C7		AB 2 B
FRC1:C8		AB 2 B
FRC1:C8		GD 1 A
FRC1:C9		AA 2 B
FRC1:C9		KB 2 A
FRC1:C9		XA 2 A
FRC1:C10		AA 2 B
FRC1:C10		KC 2 A
FRC1:C11		AA 2 B
FRC1:C11		AC 0 A
FRC1:C12		AA 1 B
FRC1:C12		GA 1 A
FRC1:C12		GH 3 A
FRC1:C13		AA 1 B
FRC1:C13		GA 3 A
FRC1:C14		AA 1 B
FRC1:C14		GA 2 A
FRC1:C15		AA 1 B
FRC1:C15		GA 0 A
FRC1:C16		AA 0 B
FRC1:C16		GA 1 A
FRC1:E1		AA 4 B
FRC1:E1		NA 2 A
FRC1:E2		AA 4 B
FRC1:E2		IC 0 A
FRC1:E2		ID 0 A
FRC1:E3		AA 3 B
FRC1:E3		BE 0 A
FRC1:E4		AA 3 B
FRC1:E4		FC 1 A
FRC1:E5		AA 3 B
FRC1:E6		AA 3 B

https://truckmanualshub.com/

REFERENCES

REF	DESCRIPTION	PAGE
FRC1:E6		EA 3 A
FRC1:E6		ED 3 A
FRC1:E7		AA 2 B
FRC1:E7		BO 1 A
FRC1:E7		NB 0 A
FRC1:E8		AA 2 B
FRC1:E8		GG 0 A
FRC1:E8		GG 3 A
FRC1:E8		NA 0 A
FRC1:E9		AB 2 B
FRC1:E9		GD 0 A
FRC1:E10		AB 2 B
FRC1:E10		GG 1 A
FRC1:E11		AB 1 B
FRC1:E11		GQ 3 B
FRC1:E12		AB 1 B
FRC1:E12		GA 1 A
FRC1:E13		AB 1 B
FRC1:E13		NB 3 A
FRC1:E14		AB 0 B
FRC1:E14		GG 2 A
FRC1:E15		AB 0 B
FRC1:E15		NA 3 A
FRC1:E16		AA 4 B
FRC1:F1		AA 2 C
FRC1:F2		AA 2 C
FRC1:F3		AA 3 C
FRC1:F4		AA 3 C
FRC1:F8		AA 2 D
FRC1:F8		CA 1 B
FRC1:G1		AA 0 D
FRC1:G2		AA 0 D
FRC1:G2		EA 3 A
FRC1:G2		ED 3 A
FRC1:G3		AA 0 D
FRC1:G3		NA 3 A
FRC1:G4		AA 1 D
FRC1:G4		KC 1 A
FRC1:G5		AA 1 D
FRC1:G6		AA 1 D
FRC1:G6		GG 1 A
FRC1:G7		AA 1 D
FRC1:G7		CA 0 A
FRC1:G8		AA 2 D
FRC1:G8		CA 1 B
FRC1:G9		AA 2 D
FRC1:G9		NA 1 A
FRC1:G10		AA 2 D
FRC1:G10		NA 3 A
FRC1:G11		AA 2 D

REF	DESCRIPTION	PAGE
FRC1:G11		IC 3 A
FRC1:G12		AA 3 D
FRC1:G12		BG 4 A
FRC1:G13		AA 3 D
FRC1:G13		CC 2 A
FRC1:G13		NB 2 A
FRC1:G14		AA 3 D
FRC1:G14		FA 2 B
FRC1:G15		AA 4 D
FRC1:G15		BE 4 B
FRC1:G16		AA 4 D
FRC1:G16		BO 0 A
FRC1:G16		NB 1 A
FRC1_P1	STUD, FRC1 POWER	AA 0 A
FRC2:A30		DD 2 B
FRC2:A85		DD 2 B
FRC2:A86		DD 2 B
FRC2:A87		DD 2 B
FRC2:B30		GA 4 B
FRC2:B85		GA 4 B
FRC2:B86		GA 4 B
FRC2:B87		GA 4 B
FRC2:C30		GA 3 B
FRC2:C85		GA 3 B
FRC2:C86		GA 3 B
FRC2:C87		GA 3 B
FRC2:D30		FB 1 A
FRC2:D85		FB 0 A
FRC2:D86		FB 0 B
FRC2:D87A		FB 1 B
FRC2:E30		GG 2 B
FRC2:E85		GG 2 B
FRC2:E86		GG 2 B
FRC2:E87		GG 2 B
FRC2:F30		CA 0 B
FRC2:F85		CA 0 B
FRC2:F86		CA 0 B
FRC2:F87		CA 0 B
FRC2:G30		GA 1 C
FRC2:G85		GA 1 C
FRC2:G86		GA 1 C
FRC2:G87		GA 1 C
FRC2:H30		HA 2 B
FRC2:H85		HA 2 B
FRC2:H86		HA 2 B
FRC2:H87		HA 2 B
FRC2:J30		NB 3 B
FRC2:J85		NB 3 B
FRC2:J86		NB 3 B
FRC2:J87		NB 3 B

https://truckmanualshub.com/

REFERENCES

REF	DESCRIPTION	PAGE
FRC2:K30		NB 3 B
FRC2:K85		NB 3 B
FRC2:K86		NB 3 B
FRC2:K87		NB 3 B
FRC2:L30		DD 3 B
FRC2:L30		KB 2 D
FRC2:L85		DD 3 B
FRC2:L85		KB 2 E
FRC2:L86		DD 3 B
FRC2:L86		KB 2 E
FRC2:L87		DD 3 B
FRC2:L87		KB 2 D
FRC2:M30		DD 4 B
FRC2:M85		DD 4 B
FRC2:M86		DD 4 B
FRC2:M87		DD 4 B
FRC2:M87A		DD 4 B
FRC2:N30		DD 2 B
FRC2:N85		DD 2 B
FRC2:N86		DD 2 B
FRC2:N87A		DD 2 B
FRC2:P30		DD 3 B
FRC2:P85		DD 3 B
FRC2:P86		DD 3 B
FRC2:P87		DD 3 B
FRC2:P87A		DD 3 B
FRC2:T1		KB 2 B
FRC2:T2		KB 2 B
FRC2:T3		BI 0 B
FRC2:T4		BI 0 C
FRC2_P2	STUD, FRC1 POWER #2	AA 0 A
FRC3:A30		GD 0 C
FRC3:A85		GD 0 C
FRC3:A86		GD 0 B
FRC3:A87		GD 0 B
FRC3:A87A		GD 0 B
FRC3:B30		GD 1 C
FRC3:B85		GD 1 C
FRC3:B86		GD 1 B
FRC3:B87		GD 1 B
FRC3:B87A		GD 1 B
FRC3:C30		GA 1 A
FRC3:C85		GA 1 A
FRC3:C86		GA 1 B
FRC3:C87		GA 1 B
FRC3:C87A		GA 1 B
FRC3:D30		KC 2 B
FRC3:D85		KC 2 B
FRC3:D86		KC 2 B
FRC3:D87		KC 2 B

REF	DESCRIPTION	PAGE
FRC3:D87A		KC 2 B
FRC3:E30		AC 1 C
FRC3:E85		AC 1 C
FRC3:E86		AC 1 D
FRC3:E87		AC 1 D
FRC3:F30		AA 2 B
FRC3:F85		AA 1 B
FRC3:F86		AA 1 B
FRC3:F87		AA 2 B
FRC3:F87A		AA 2 B
FRC3:G30		GG 1 B
FRC3:G85		GG 1 B
FRC3:G86		GG 1 B
FRC3:G87		GG 1 B
FRC3:H30		GP 2 B
FRC3:H85		GP 2 B
FRC3:H86		GP 2 C
FRC3:H87		GP 2 C
FRC3:H87A		GP 2 C
FRC3:J30		GP 2 B
FRC3:J85		GP 1 B
FRC3:J86		GP 1 C
FRC3:J87		GP 2 C
FRC3:J87A		GP 2 C
FRC3:K30		GP 3 B
FRC3:K85		GP 3 B
FRC3:K86		GP 3 C
FRC3:K87		GP 3 C
FRC3:K87A		GP 3 C
FRC3:L30		GP 4 B
FRC3:L85		GP 3 B
FRC3:L86		GP 3 C
FRC3:L87		GP 4 C
FRC3:L87A		GP 4 C
FRC3:M30		GQ 3 D
FRC3:M85		GQ 3 D
FRC3:M86		GQ 3 C
FRC3:M87		GQ 3 C
FRC3:M87A		GQ 3 C
FRC3:N30		FC 1 B
FRC3:N85		FC 1 B
FRC3:N86		FC 1 B
FRC3:N87		FC 1 B
FRC3:P30		FC 2 B
FRC3:P85		FC 2 B
FRC3:P86		FC 2 B
FRC3:P87		FC 2 B
G01	BATTERY	AC 3 C
G01	BATTERY	AD 1 B
G01	BATTERY	BM 0 C

https://truckmanualshub.com/

REFERENCES

REF	DESCRIPTION	PAGE
G01	BATTERY	CF 0 B
G01	BATTERY	NB 1 B
G01_A1		AC 3 B
G01_A2		CF 0 A
G01_A3		AC 3 B
G01_A4		AC 3 C
G01_A5		AC 3 B
G01_B1		AD 1 B
G01_B2		AD 1 B
G02	ALTERNATOR	AC 4 A
G02	ALTERNATOR	AD 1 D
H02_1_114	Horn	GQ 3 D
H03	REVERSE WARNER, ACOUSTIC	GF 2 B
HN_REM:A		GQ 3 C
HOOKUP_LP:A		NA 2 B
HOOKUP_LP:B		NA 2 B
ILLUM_OPT2:A		KA 1 A
ILLUM_OPT2:B		KA 1 C
ILLUM_OPT3:A		KA 1 A
ILLUM_OPT3:B		KA 1 C
ILLUM_OPT4:A		BA 2 E
ILLUM_OPT4:B		BA 2 D
ILLUM_OPT5:A		BA 2 E
ILLUM_OPT5:B		BA 2 D
ILLUM_OPT6:A		FD 1 B
ILLUM_OPT6:B		FD 1 C
ILLUM_OPT7:A		FD 1 B
ILLUM_OPT7:B		FD 1 C
ILLUM_OPT:A		NA 2 B
ILLUM_OPT:B		NA 2 B
INLFUS3		ID 2 A
LHCS:B		BG 0 B
LHSM:1		GD 3 C
LHSM:2		GD 3 C
LHSM:3		GD 3 D
M01L	MOTOR WINDSHIELD WIPER LH	GP 3 C
M01R	MOTOR WINDSHIELD WIPER RH	GP 2 C
M02	MOTOR WS. WASHER PUMP	GP 0 C
M110LH	MIRROR, LH, HEATED	ID 0 D
M110LHL_MATE	MIRROR, LH, HEATED, LIGHTED	IC 2 D
M110LHM	MIRROR, LH, HEATED, MOTORIZED	IC 0 D
M110RHL_MATE	MIRROR, RH, HEATED, LIGHTED	IC 3 D
M110RHM	MIRROR, RH, HEATED, MOTORIZED	IC 1 D
M110RHM	MIRROR, RH, HEATED, MOTORIZED	ID 1 D
M120A	MOTOR, AUX. COOLING FAN #1	CD 0 E
M120B	MOTOR, AUX. COOLING FAN #2	CD 1 E
MC_DUAL_PTO:A		BK 2 A
MC_DUAL_PTO:B		FB 2 B
MC_DUAL_PTO:C		BC 2 B
MC_DUAL_PTO:D		BC 2 B

REF	DESCRIPTION	PAGE
MC_DUAL_PTO_JMP	PLUG, JUMPER WIRE	BC 0 B
MC_SOL_SW:A		BD 2 B
MC_SOL_SW:B		BD 2 B
MC_SOL_SW:C		BD 1 B
MC_SOL_SW:D		BD 1 C
MC_SOL_SW:E		BD 1 C
MC_SOL_SW:F		BD 2 C
MC_SOL_SW:G		BD 2 C
MC_SOL_SW:H		FB 3 B
MC_SOL_SW:J		FB 3 B
MC_SOL_SW:K		FB 3 C
MC_SOL_SW:L		FB 0 B
MC_SOL_SW:M		FB 2 C
MC_SOL_SW:N		FB 1 C
MC_SOL_SW:P		FB 0 C
MC_SOL_SW:R		FB 1 C
MC_SOL_SW:S		FB 2 B
MCAATS:A		BF 2 C
MCAATS:B		BF 2 C
MCAF2:A		CD 0 C
MCAF:A		CD 0 C
MCAF:B		CD 1 C
MCAS:A		BA 3 D
MCAS:B		BA 3 E
MCAS:C		BF 3 C
MCAS:D		BF 4 C
MCAS:E		BF 3 D
MCAS:F		BF 4 D
MCAS:G		GA 3 B
MCAS:H		GA 3 B
MCAS:J		NB 2 B
MCAS:K		NB 2 C
MCAS:L		BB 2 C
MCAS:M		BB 2 D
MCAT1:1		DC 2 B
MCAT1:2		DC 3 C
MCAT1:3		DC 1 B
MCAT1:4		DC 2 B
MCAT1:5		DC 1 B
MCAT1:6		DC 1 B
MCAT1:7		DC 1 B
MCAT1:8		DC 1 B
MCAT1:9		DC 1 B
MCAT1:10		DC 0 B
MCAT1:11		DC 0 B
MCAT1:12		DC 1 B
MCAT1:13		DC 1 B
MCAT1:14		DC 2 B
MCAT1:15		DC 2 B
MCAT1:16		DC 2 C

https://truckmanualshub.com/

REFERENCES

REF	DESCRIPTION	PAGE
MCAT1:17		DC 0 B
MCAT1:18		DC 0 B
MCAT1:19		DC 1 B
MCAT1:20		DC 1 B
MCAT1:21		DC 2 B
MCAT1:22		DC 2 B
MCAT1:23		DC 2 B
MCAT1:24		DC 1 B
MCAT1:27		DC 0 B
MCAT1:30		DC 0 B
MCAT1:31		DC 0 B
MCAT1:32		FD 1 C
MCAT1:33		FD 1 C
MCAT:A1		DD 4 D
MCAT:A2		DD 3 C
MCAT:A3		DD 3 C
MCAT:A5		DD 1 C
MCAT:A6		BH 1 C
MCAT:A7		BH 1 C
MCAT:A8		DD 0 B
MCAT:A9		DD 2 B
MCAT:A10		BH 1 C
MCAT:A13		XB 3 B
MCAT:A15		XB 3 D
MCAT:B1		DD 4 D
MCAT:B2		DD 4 C
MCAT:B3		DD 1 B
MCAT:B5		DD 3 C
MCAT:B6		BH 1 C
MCAT:B7		BH 2 C
MCAT:B8		DD 0 B
MCAT:B9		DD 0 D
MCAT:B13		XB 3 B
MCAT:B15		XB 3 D
MCDLR:A		NA 3 B
MCDO:A		BA 2 D
MCFC:1		BM 0 D
MCFC:2		BM 1 C
MCFC:3		CA 1 C
MCFC:4		GA 3 D
MCFC:5		CA 0 C
MCFC:6		EA 3 E
MCFC:6		ED 3 C
MCFC:7		EA 3 E
MCFC:7		ED 2 C
MCFC:8		CA 0 C
MCFC:9		DC 0 B
MCFC:10		DC 0 B
MCFC:11		DC 0 B
MCFC:12		DC 0 B

REF	DESCRIPTION	PAGE
MCFC:13		DC 0 B
MCFC:14		DC 0 B
MCFC:15		DC 3 C
MCFC:16		FB 0 C
MCFC:17		FB 0 D
MCFC:18		XC 1 B
MCFC:19		XC 1 B
MCFC:20		BD 2 D
MCFC:21		DC 0 B
MCFC:22		DC 1 B
MCFC:23		DC 1 B
MCFC:24		DC 1 B
MCFC:25		DC 1 B
MCFC:26		DC 1 B
MCFC:27		DC 2 C
MCFC:28		BG 1 C
MCFC:29		BG 1 D
MCFC:30		FB 1 C
MCFC:33		DC 1 B
MCFC:34		DC 1 B
MCFC:35		DC 1 B
MCFC:36		DC 1 B
MCFC:37		DC 1 B
MCFC:38		DC 1 B
MCFC:39		FD 2 C
MCFC:41		XB 2 B
MCFC:42		XB 2 B
MCFC:43		BF 1 C
MCFC:44		FB 1 B
MCFC:45		DC 2 B
MCFC:46		DC 2 B
MCFC:47		DC 2 B
MCFC:48		DC 2 B
MCFC:49		DC 2 B
MCFC:50		DC 2 B
MCFC:51		FD 2 C
MCFC:52		BG 0 B
MCFC:53		BG 4 B
MCFC:54		FB 3 B
MCFC:55		BB 1 C
MCFC:56		BG 0 D
MCFC:57		DC 2 B
MCFC:59		BE 3 B
MCFC:60		BG 0 D
MCFC:62		FB 2 C
MCFC:63		XA 3 D
MCFC:64		XA 3 D
MCFC:65		EA 1 D
MCFC:65		ED 1 B
MCFC:66		EA 1 D

https://truckmanualshub.com/

REFERENCES

REF	DESCRIPTION	PAGE
MCFC:66		ED 1 B
MCFC:67		EA 1 D
MCFC:67		ED 0 B
MCFC:68		EA 1 B
MCFC:68		ED 1 C
MCFC:69		EA 0 B
MCFC:69		ED 0 C
MCFC:70		EA 1 D
MCFC:70		ED 0 B
MCFC:71		EA 0 D
MCFC:71		ED 0 B
MCFC:72		EA 0 D
MCFC:72		ED 0 B
MCFC:73		EA 1 D
MCFC:73		ED 0 B
MCFC:74		EA 1 D
MCFC:74		ED 1 B
MCFC:75		EA 1 B
MCFC:75		ED 0 C
MCFC:76		EA 1 B
MCFC:76		ED 0 C
MCFC:77		EA 1 D
MCFC:77		ED 1 B
MCFC:78		EA 0 D
MCFC:78		ED 0 B
MCFC:79		EA 1 B
MCFC:79		ED 0 C
MCFC:80		EA 1 B
MCFC:80		ED 0 C
MCFC:81		EA 1 B
MCFC:81		ED 1 C
MCFC:82		EA 0 B
MCFC:82		ED 0 C
MCFC:83		EA 0 B
MCFC:83		ED 0 C
MCFC:84		EA 0 D
MCFC:84		ED 0 B
MCFC:85		EA 1 B
MCFC:85		ED 1 C
MCFC:86		EA 1 D
MCFC:86		ED 1 B
MCFC:87		BB 0 C
MCFC:88		BB 0 C
MCFC:89		EA 2 D
MCFC:89		ED 3 C
MCFC:90		EA 2 D
MCFC:90		ED 3 C
MCFC:91		EA 3 D
MCFC:91		ED 3 C
MCFC:92		EA 3 D

REF	DESCRIPTION	PAGE
MCFC:92		ED 3 C
MCFC:93		EA 2 D
MCFC:93		ED 2 C
MCFC:94		EA 2 D
MCFC:94		ED 2 C
MCFC:95		EA 3 D
MCFC:95		ED 2 C
MCFC:96		EA 3 D
MCFC:96		ED 2 C
MCFC:98		GA 0 D
MCFC:99		AC 1 D
MCFC:101		BC 2 C
MCFC:103		FB 1 C
MCFC:104		BF 1 C
MCFC:105		GF 2 A
MCFC:106		GF 1 A
MCFC:107		BF 1 C
MCFC:108		BF 1 C
MCFC:109		BF 1 C
MCFC:110		CF 0 B
MCFC:112		BC 3 B
MCFC:113		BD 2 B
MCFC:114		FB 4 C
MCFC:117		BE 4 B
MCFC:118		BD 2 C
MCFC:119		FB 3 C
MCFC:120		BK 1 A
MCFC:121		CD 0 D
MCFC:122		CD 1 D
MCFC:123		NB 0 C
MCFC:124		HA 2 D
MCFC:125		CC 2 C
MCFC:126		NB 3 C
MCFC:127		FA 2 B
MCFC:128		NB 1 C
MCHVAC:A		AB 4 C
MCHVAC:B		AB 4 D
MCMSO:A		IC 0 B
MCMSO:A		ID 1 A
MCMSO:B		IC 0 C
MCMSO:B		ID 2 E
MCMSO:C		IC 0 C
MCMSO:C		ID 3 E
MCMSO:F		IC 1 C
MCMSO:F		ID 4 E
MCMSO:G		IC 1 C
MCMSO:G		ID 3 E
MCMSO:H		IC 1 C
MCMSO:H		ID 3 E
MCPM:1		IC 3 C

https://truckmanualshub.com/

REFERENCES

REF	DESCRIPTION	PAGE
MCPM:1		IC 3 B
MCPM:2		IC 3 D
MCPM:3		IC 2 D
MCPM:4		IC 1 D
MCPM:4		ID 0 C
MCPM:5		IC 0 D
MCPM:6		IC 0 D
MCPM:7		IC 1 D
MCPM:7		ID 1 C
MCPM:8		IC 1 D
MCPM:8		ID 1 C
MCR08-2:1		BI 3 C
MCR08-2:2		BI 3 C
MCR08:1		BI 3 C
MCR08:2		BI 4 C
MCRF1:A		KB 1 D
MCRF1:B		KB 1 B
MCRF1:C		GH 0 D
MCRF1:D		GA 0 D
MCRF1:E		KB 1 C
MCRF1:F		KB 2 C
MCRF1:G		GA 3 D
MCRF1:H		GD 4 E
MCRF2:A		GD 3 C
MCRF2:B		GD 4 C
MCRF2:C		KC 2 C
MCRF2:D		KC 2 D
MCRF2:E		GH 3 B
MCRF2:F		GH 1 B
MCRF3:A		KA 1 C
MCRF3:B		KA 1 C
MCRF3:C		KA 1 C
MCRF4:A		KB 2 C
MCTL1:A		GF 2 B
MCTL1:B		GF 1 B
MCTL1:C		GF 1 B
MCTL1:D		GF 2 B
MCTL1:E		GF 1 D
MCTL:A		GF 2 B
MCTL:B		GF 1 C
MCTL:C		GF 1 C
MCTL:D		GF 2 B
MCTL:E		GF 1 D
MSTC-1_1480	GXL_0.8_2	CA 3 B
MSTC-1_6196	GXL_0.8_2	XA 2 E
MSTC-2_1480	GXL_0.8_2	CA 3 B
MSTC-3_1480	GXL_0.8_2	CA 3 B
MSTC-4_1480	GXL_0.8_2	CA 3 B
MSTC-5_1480	GXL_0.8_2	CA 3 B
MSTC-7_3477	GXL_0.8_2	CF 3 B

REF	DESCRIPTION	PAGE
MSTC-8_3477	GXL_0.8_2	XA 3 E
MSTC-13_3477	GXL_0.8_2	CA 0 C
MSTC-14_3477	GXL_0.8_2	CA 3 B
MSTC-15_3477	GXL_0.8_2	CA 3 B
MSTC-16_3477	GXL_0.8_2	CA 0 D
MSTC-17_3477	GXL_0.8_2	CA 3 C
MSTC-18_3477	GXL_0.8_2	CA 3 C
MSTC-19_3477	GXL_0.8_2	CA 3 C
MSTC-20_3477	GXL_0.8_2	CA 3 D
MSTC-21_3477	GXL_0.8_2	CA 3 D
MSTC-22_3477	GXL_0.8_2	CA 3 A
MSTC-23_3477	GXL_0.8_2	CA 3 A
OBD		XA 1 D
OBD		XB 2 E
OBD		XC 2 D
PB_START:A		AC 1 B
PB_START:B		AC 1 B
PBSTART:A		AC 1 B
PBSTART:B		AC 1 B
PBSTART:B		AC 1 B
PBSTART_BL:A		BM 0 A
PBSTART_BL:A		BM 0 A
PBSTART_BL:B		BM 0 A
PBSTART_BL:B		BM 0 A
PMP_DRV:1		BN 1 C
PMP_DRV:2		BN 1 B
PMP_DRV:3		BN 1 C
PMP_DRV:4		BN 1 C
PMP_DRV:5		BN 1 B
PMP_DRV:6		BN 2 C
PMP_DRV:7		BN 2 C
PMP_DRV:8		BN 2 B
PMP_DRV:9		BN 2 C
PPCO:A		FD 1 B
PPCO:B		FD 1 C
PPCO:C		FD 1 C
PTO_DCL_A:A		BK 3 A
PTO_DCL_A:A		BL 2 A
PTO_DCL_A:A		BN 2 B
PTO_DCL_A:C		BK 3 A
PTO_DCL_A:C		BL 2 A
PTO_DCL_A:C		BN 2 C
PTO_DCL_A:D		BK 2 C
PTO_DCL_A:D		BL 2 B
PTO_DCL_A:D		BN 4 A
PTO_DCL_A:E		BK 3 B
PTO_DCL_A:E		BL 2 B
PTO_DCL_A:E		BN 2 C
PTO_DCL_A:F		BN 4 C
PTO_DCL_A:G		BK 4 D

https://truckmanualshub.com/

REFERENCES

REF	DESCRIPTION	PAGE
PTO_DCL_A:G		BL 3 D
PTO_DCL_A:G		BN 4 D
PTO_DCL_A:H		BK 4 C
PTO_DCL_A:H		BL 3 E
PTO_DCL_A:H		BN 4 D
PTO_DCL_B:J		BK 3 A
PTO_DCL_B:N		BK 4 C
PTO_DCL_B:N		BN 4 D
PTO_DCL_B:P		BK 4 C
PTO_DCL_B:P		BL 3 E
PTO_DCL_B:P		BN 1 C
PTO_DCL_B:R		BK 4 C
PTO_DCL_B:R		BN 4 D
PTO_EHT:A		BC 2 B
PTO_EHT:A		BC 2 A
PTO_EHT:B		BC 2 C
R01	HEATER, ENGINE PREHEAT	AD 0 D
R01A	RESISTOR 110V ENGINE HEATER	CC 3 C
R04	CIGAR LIGHTER	KC 3 C
R05	AIR DRYER, HEATED	FA 2 C
R05_A	AIR DRYER	FA 0 C
R08	RESISTOR, TERMINATION J1939 CAN	XA 3 A
R08-2	RESISTOR, TERMINATING DATALINK 2	XB 1 D
R08-2A:1		BI 3 C
R08-2A:2		BI 3 C
R08A:1		BI 4 C
R08A:2		BI 4 C
R09	HEATER, FUEL WATER SEPARATOR	CC 2 C
R09_EXT1:A		CC 1 C
R09_EXT1:B		CC 1 C
R09_EXT2:A		CC 1 D
R09_EXT2:B		CC 1 D
R18A	HEATER, HEATED DRAIN VALVE, COOLING TANK	FA 2 C
R18B	HEATER, HEATED DRAIN VALVE, WET TANK	FA 1 C
R29	HEATER, NOxCARE TANK TO PUMP HOSE	CH 3 D
R31	HEATER, NOxCARE PUMP TO INJECTOR HOSE	CH 3 D
RC1:A1		NA 2 C
RC1:A3		NA 2 D
RC1:A4		GA 3 D
RC1:A6		GA 2 D
RC1:A7		BK 2 B
RC1:A7		BL 1 B
RC1:A7		BN 4 B
RC1:A7		NA 0 C
RC1:A9		BK 2 B
RC1:A9		BL 1 C
RC1:A9		BN 4 B
RC1:A9		NA 0 D
RC1:B1		NA 2 C
RC1:B2		NA 2 D

REF	DESCRIPTION	PAGE
RC1:B3		NA 2 D
RC1:B4		GA 3 D
RC1:B5		GA 2 D
RC1:B6		GA 2 D
RC1:B7		BK 2 B
RC1:B7		BL 1 B
RC1:B7		BN 4 B
RC1:B7		NA 0 C
RC1:B8		BK 2 B
RC1:B8		BL 1 C
RC1:B8		BN 4 B
RC1:B8		NA 0 D
RC1:B9		BK 2 B
RC1:B9		BL 1 C
RC1:B9		BN 4 B
RC1:B9		NA 0 D
RC1:C1		BK 0 C
RC1:C1		BL 0 C
RC1:C1		BN 1 B
RC1:C1		NA 0 D
RC1:C2		BK 0 C
RC1:C2		BL 0 C
RC1:C2		BN 1 B
RC1:C2		NA 0 D
RC1:C3		BK 0 C
RC1:C3		BL 0 B
RC1:C3		BN 1 B
RC1:C3		NA 0 C
RC1:C4		BK 3 B
RC1:C4		BL 3 D
RC1:C4		BN 3 B
RC1:C4		NA 1 D
RC1:C5		BK 3 B
RC1:C5		BL 3 D
RC1:C5		BN 3 B
RC1:C5		NA 1 D
RC1:C6		BK 3 B
RC1:C6		BL 3 C
RC1:C6		BN 3 B
RC1:C6		NA 1 C
RC1:C7		BK 1 C
RC1:C7		BL 3 C
RC1:C7		BN 0 C
RC1:C7		NA 1 D
RC1:C8		BK 1 C
RC1:C8		BL 3 C
RC1:C8		BN 0 C
RC1:C8		NA 1 D
RC1:C9		BK 1 C
RC1:C9		BL 3 C

https://truckmanualshub.com/

REFERENCES

REF	DESCRIPTION	PAGE
RC1:C9		BN 0 C
RC1:C9		NA 1 C
RC1:D1		BK 0 C
RC1:D1		BL 0 C
RC1:D1		BN 1 B
RC1:D1		NA 0 D
RC1:D3		BK 0 C
RC1:D3		BL 0 B
RC1:D3		BN 1 B
RC1:D3		NA 0 C
RC1:D4		BK 3 B
RC1:D4		BL 3 D
RC1:D4		BN 3 B
RC1:D4		NA 1 D
RC1:D6		BK 3 B
RC1:D6		BL 3 C
RC1:D6		BN 3 B
RC1:D6		NA 1 C
RC1:D7		BK 1 C
RC1:D7		BL 3 C
RC1:D7		BN 0 C
RC1:D7		NA 1 D
RC1:D9		BK 1 C
RC1:D9		BL 3 C
RC1:D9		BN 0 C
RC1:D9		NA 1 C
RC2:A1		BO 0 D
RC2:A3		BO 0 D
RC2:A4		BO 2 B
RC2:A6		BO 1 C
RC2:B1		BO 0 D
RC2:B2		BO 0 D
RC2:B3		BO 0 D
RC2:B4		BO 1 B
RC2:B5		BO 2 C
RC2:B6		BO 2 C
RC2:C1		BN 2 B
RC2:C2		BN 2 B
RC2:C3		BN 2 B
RC2:D1		BN 2 B
RC2:D3		BN 2 B
RC2_MATE	ELECTICAL EQUIPMENT; 3 RELAYS	BO 2 D
RC3:A7		BM 0 B
RC3:A9		BM 0 C
RC3:B2		CD 0 B
RC3:B3		CD 0 A
RC3:B4		CD 1 B
RC3:B5		CD 1 A
RC3:B7		BM 0 B
RC3:B8		BM 0 C

REF	DESCRIPTION	PAGE
RC3:C1		CD 0 C
RC3:C3		CD 0 B
RC3:C4		CD 1 C
RC3:C6		CD 1 B
RC3:C8		BM 1 B
RC3:C9		BM 0 B
RC3:D1		CD 0 C
RC3:D3		CD 0 B
RC3:D4		CD 1 C
RC3:D6		CD 1 B
RC3:D7		BM 0 B
RC3:D9		BM 1 B
RC5:A1		ID 2 D
RC5:A3		ID 2 D
RC5:A4		ID 3 D
RC5:A6		ID 3 D
RC5:B1		ID 2 D
RC5:B2		ID 2 D
RC5:B3		ID 2 D
RC5:B4		ID 3 D
RC5:B5		ID 3 D
RC5:B6		ID 3 D
RC5:C1		ID 3 D
RC5:C2		ID 3 D
RC5:C3		ID 2 D
RC5:C4		ID 4 D
RC5:C5		ID 4 D
RC5:C6		ID 4 D
RC5:D1		ID 2 D
RC5:D3		ID 3 D
RC5:D4		ID 4 D
RC5:D6		ID 4 D
RD		AC 3 B
RD		AD 0 A
RFH:A		GH 3 D
RFH:B		GH 0 D
RFH:C		GH 3 C
RFH:D		GH 1 B
RFH:E		KB 1 D
RFH:F		KB 1 D
RFH:G		KB 1 D
RFH:H		KB 1 D
RFH:J		KC 3 C
RFH:K		KC 3 D
RHSM:A		GD 4 C
RHSM:B		GD 4 C
RHSM:C		GD 4 D
RLY01	RELAY, EMS #1	AB 3 C
RLY02	RELAY, EMS #2	AA 2 C
RLY03	RELAY, IGN. #1	AA 0 B

https://truckmanualshub.com/

REFERENCES

REF	DESCRIPTION	PAGE
RLY04	RELAY, IGN #3	AA 3 C
RLY06	RELAY, EMERGENCY STOP LAMP	GA 3 B
RLY07	RELAY 07, PTO #2	BN 2 B
RLY10B	RELAY, HORN, REMOTE	BO 0 D
RLY11	RELAY, TRAILER TAIL LAMP	GG 1 B
RLY12	RELAY, TRAILER STOP LAMP	GG 2 B
RLY13	RELAY, CAB & TRAILER CLEARANCE LAMP	GA 1 C
RLY14	RELAY, HORN	GQ 3 D
RLY016A	RELAY, WINDSHIELD WIPER RH LOW	GP 1 B
RLY016B	RELAY, WINDSHIELD WIPER RH HIGH	GP 2 B
RLY016C	RELAY WINDSHIELD WIPER LH LOW	GP 3 B
RLY016D	RELAY WINSHIELD WIPER LH HIGH	GP 3 B
RLY17	RELAY, REVERSE POWER	DD 3 B
RLY17	RELAY, REVERSE POWER	KB 2 E
RLY28	RELAY, CB BINDING POST	KC 2 B
RLY29	RELAY, NEUTRAL POWER	NB 3 B
RLY34	RELAY, PRE-EMS	AA 1 B
RLY35	RELAY, HVAC CAB	HA 2 B
RLY36	RELAY, START CNTL 1	AC 1 C
RLY38	RELAY, LO BEAM LH	GD 0 B
RLY39	RELAY, LO BEAM RH	GD 1 B
RLY45	RELAY PTO ENABLE	DD 4 B
RLY46	RELAY RANGE PTO	DD 3 B
RLY47	RELAY RETARDER	DD 2 B
RLY48	RELAY STOP LAMPS	DD 2 B
RLY52	RELAY, HIGH BEAM	GA 1 B
RLY53	RELAY 53, SPARE 5	NA 2 D
RLY58	RELAY BEACON LAMP PTO	FC 1 B
RLY59	RELAY BEACON LAMP REVERSE	FC 2 B
RLY60	RELAY, PARK BRAKE STOP LAMP	GA 4 B
RLY61	RELAY, LIFT AXLE REVERSE	FB 0 A
RLY61B	RELAY, LIFT AXLE, PUMP ON	BO 1 B
RLY62	RELAY, REVERSE BODY POWER	NB 3 B
RLY63	RELAY, POWER INDICATOR	GA 3 D
RLY63_JMP	JUMPER, CLEARANCE LIGHTS	GA 2 E
RLY64	RELAY 64, SPARE 1	BK 2 B
RLY64	RELAY 64, SPARE 1	BL 1 B
RLY64	RELAY 64, SPARE 1	BN 4 B
RLY64	RELAY 64, SPARE 1	NA 0 D
RLY65	RELAY 65, SPARE 2	BK 0 C
RLY65	RELAY 65, SPARE 2	BL 0 B
RLY65	RELAY 65, SPARE 2	BN 1 B
RLY65	RELAY 65, SPARE 2	NA 0 C
RLY66	RELAY 66, SPARE 3	BK 3 B
RLY66	RELAY 66, SPARE 3	BL 3 C
RLY66	RELAY 66, SPARE 3	BN 3 B
RLY66	RELAY 66, SPARE 3	NA 1 D
RLY67	RELAY 67, SPARE 4	BK 1 C
RLY67	RELAY 67, SPARE 4	BL 3 C
RLY67	RELAY 67, SPARE 4	BN 0 C

REF	DESCRIPTION	PAGE
RLY67	RELAY 67, SPARE 4	NA 1 C
RLY68	RELAY, ENGINE COMP #1	CA 0 B
RLY91	RELAY 91, AUX FAN #1	CD 0 C
RLY92	RELAY 92, AUX FAN #2	CD 1 C
RLY94	RELAY, START INTERUPT 1	BM 0 B
RLY95	RELAY, START INTERUPT 2	BM 0 B
RLY100A	RELAY, MOTO MIRROR	ID 2 D
RLY100B	RELAY, MOTO MIRROR	ID 2 D
RLY100C	RELAY, MOTO MIRROR	ID 3 D
RLY100D	RELAY, MOTO MIRROR	ID 4 D
S01	SW. MAIN LIGHTING SELECT. TYPE	GA 0 B
S006	SWITCH, SPEED CONTROL	BA 2 B
S07	SWITCH' ENG BRK SELECTOR	BA 2 B
S007	SWITCH, SET/RESUME	BA 1 B
S008	SWITCH, S/D OVERRIDE	BA 4 B
S009	SWITCH WIPER CTRL	GP 0 B
S013	SWITCH, MIRROR DEFROST	IC 3 B
S016	SWITCH, ATC LIMITED SLIP	EA 2 B
S016	SWITCH, ATC LIMITED SLIP	ED 2 B
S017B	SW. FRONT RH DOME LMP	GH 3 D
S018_1	POSITION SWITCH, PTO_1	BC 4 B
S018_2	POSITION SWITCH, PTO_2, R.H.	FB 1 D
S18A	SWITCH, POWER TAKE OFF (PTO #1)	BC 2 B
S18B	SWITCH, POWER TAKE OFF (PTO #2)	FB 2 B
S019	SWITCH, POWER DIVIDER LOCKOUT	FB 4 C
S020	SWITCH, AIR SUSP.	FB 2 B
S023	SWITCH, NEUTRAL CONTROL	FB 3 C
S024	SW. INTERWHL DIFF. LOCK	BD 2 B
S24C	SWITCH RETARDER	DD 1 B
S28C	SWITCH, PUMP/ DRIVE MODE, PTO #2 PTO #1	BN 1 B
S030	SWITCH, MIRROR CONTROL	IC 1 B
S030	SWITCH, MIRROR CONTROL	ID 0 B
S030A	SWITCH, MIRROR CONTROL	ID 3 A
S036	SWITCH, IGNITION	AC 0 B
S036B	SWITCH, PUSH BUTTON START	AC 1 B
S038	SW, PRESSURE SERVICE BRKE.	GA 3 B
S038C	SWITCH, SERVICE BRAKE	BB 2 C
S039	SWITCH, DIRECTIONAL SIGNAL	GA 2 C
S039	SWITCH, DIRECTIONAL SIGNAL	GQ 0 A
S040P	SW. PRESSURE PRIM. LOW AIR	BF 3 D
S040S	SW. PRESSURE SEC. LOW AIR	BF 4 D
S042	SWITCH, BACK UP	BE 3 A
S43	SW. PRESS. PRKNG BRKE INDICATOR, NC.	BA 3 D
S044	SWITCH, CLUTCH	BB 2 C
S045	SW. DRL OVERRIDE	BA 2 D
S047	SWITCH, IWDL FRT ENGAGED	BG 2 D
S047A	SWITCH, IWDL, FRT ENGAGED	BG 2 D
S048	SWITCH, IWDL RR ENGAGED	BG 2 C
S048A	SWITCH, IWDL, RR ENGAGED	BG 2 C
S051A	SWITCH, AUX. LIFT AXLE, PUSHER	FB 0 B

https://truckmanualshub.com/

REFERENCES

REF	DESCRIPTION	PAGE
S051B	SWITCH, AUX. LIFT AXLE, TAG	FB 1 C
S63	POSITION SWITCH, LOW/HIGH RANGE GEAR	BN 4 C
S72	SWITCH, WATER IN FUEL	BB 2 A
S90_1	SWITCH, PRESS. NO NEUTRAL	FB 3 A
S108	SWITCH MUNCIE PTO PUMP	FC 1 B
S110	SWITCH, PARK BRAKE, NEUTRAL	NB 2 B
S111	SWITCH, SMART, DPF	CA 4 C
S112A	SWITCH, BODY BUILDER PARK BRAKE	BK 0 D
S112B	SWITCH, BODY BUILDER PARK BRAKE	BN 1 C
S113	SWITCH, ODOMETER/ HOURMETER TRIP RESET	BE 0 C
S115	SWITCH, REAR VIEW CAMERA	KA 1 B
S116	SWITCH, PRESSURE, N.O., DUAL PTO	FB 1 E
S116A	SWITCH, PRESSURE, N.O. PTO	BL 0 C
S137	SWITCH PARKER PTO	FD 1 B
S169	SWITCH, BATTERY MAIN	AC 3 E
S320	SWITCH, PRESSURE PARKER PTO	FD 2 C
SC-1_761	MKFK_0.35_1	KB 1 B
SHAR:A		BG 0 B
SHAR:B		BG 0 B
SOLV:1		ED 4 B
SOLV:2		ED 4 B
SOLV:3		ED 4 B
SP3B7	S	GF 1 C
SP3B9	S	GF 1 B
SP5E1	S	GF 1 B
SP27B	S*	BN 1 B
SP27B1	S	BL 3 A
SP38A2	S	CA 0 C
SP_BAT1:A		NA 3 B
SP_IGN1:A		NA 3 B
SP_IGN1:B		NA 3 B
SP_IGN2:A		NA 4 B
SP_IGN3:A		NA 1 B
SP_IGN3:B		NA 1 B
SP_RLY1:A		BK 3 A
SP_RLY1:A		BL 3 C
SP_RLY1:A		BN 3 A
SP_RLY1:A		NA 1 C
SP_RLY1:B		BK 3 C
SP_RLY1:B		BL 3 D
SP_RLY1:B		BN 3 C
SP_RLY1:B		NA 1 D
SP_RLY1:C		BK 3 C
SP_RLY1:C		BL 3 D
SP_RLY1:C		BN 3 C
SP_RLY1:C		NA 1 E
SP_RLY1:D		BK 3 C
SP_RLY1:D		BL 3 D
SP_RLY1:D		BN 3 C
SP_RLY1:D		NA 1 D

REF	DESCRIPTION	PAGE
SP_RLY1:E		BK 3 A
SP_RLY1:E		BL 3 C
SP_RLY1:E		BN 3 A
SP_RLY1:E		NA 1 C
SP_RLY1:F		BK 1 B
SP_RLY1:F		BL 3 C
SP_RLY1:F		BN 0 B
SP_RLY1:F		NA 1 C
SP_RLY1:G		BK 1 D
SP_RLY1:G		BL 3 D
SP_RLY1:G		BN 0 D
SP_RLY1:G		NA 1 D
SP_RLY1:H		BK 1 D
SP_RLY1:H		BL 3 D
SP_RLY1:H		BN 0 D
SP_RLY1:H		NA 1 E
SP_RLY1:J		BK 1 D
SP_RLY1:J		BL 3 D
SP_RLY1:J		BN 0 D
SP_RLY1:J		NA 1 D
SP_RLY1:K		BK 1 B
SP_RLY1:K		BL 3 C
SP_RLY1:K		BN 0 B
SP_RLY1:K		NA 1 C
SP_RLY2:A		BK 2 B
SP_RLY2:A		BL 1 B
SP_RLY2:A		BN 4 A
SP_RLY2:A		NA 0 C
SP_RLY2:B		BK 2 C
SP_RLY2:B		BL 1 C
SP_RLY2:B		BN 4 C
SP_RLY2:B		NA 0 D
SP_RLY2:C		BK 2 C
SP_RLY2:C		BL 1 C
SP_RLY2:C		BN 4 C
SP_RLY2:C		NA 0 D
SP_RLY2:D		BK 2 C
SP_RLY2:D		BL 1 C
SP_RLY2:D		BN 4 C
SP_RLY2:D		NA 0 D
SP_RLY2:E		BK 2 B
SP_RLY2:E		BL 1 B
SP_RLY2:E		BN 4 A
SP_RLY2:E		NA 0 C
SP_RLY2:F		BK 0 B
SP_RLY2:F		BL 0 B
SP_RLY2:F		BN 1 A
SP_RLY2:F		NA 0 C
SP_RLY2:G		BK 0 D
SP_RLY2:G		BL 0 C

https://truckmanualshub.com/

REFERENCES

REF	DESCRIPTION	PAGE
SP_RLY2:G		BN 1 C
SP_RLY2:G		NA 0 D
SP_RLY2:H		BK 0 D
SP_RLY2:H		BL 0 C
SP_RLY2:H		BN 1 C
SP_RLY2:H		NA 0 D
SP_RLY2:J		BK 0 C
SP_RLY2:J		BL 0 C
SP_RLY2:J		BN 1 B
SP_RLY2:J		NA 0 D
SP_RLY2:K		BK 0 B
SP_RLY2:K		BL 0 B
SP_RLY2:K		BN 1 A
SP_RLY2:K		NA 0 C
SP_RLY53:A		NA 2 C
SP_RLY53:B		NA 2 C
SP_RLY53:C		NA 2 E
SP_RLY53:D		NA 2 E
SP_RLY53_87A:A		NA 2 E
SPARE_LEADS	SPARE LEADS, BLUNT CUT	BN 0 D
SPCB1	T	BA 0 D
SPCB7	S	BL 1 A
SPCB7A	S	BK 2 A
SPCB11	T	BA 3 D
SPCB16	T	CD 0 C
SPCB19	T	BB 2 D
SPDL1H1	S	XA 3 E
SPDL1H2	S	XA 3 C
SPDL1H3	S	XA 3 C
SPDL1H4	S	XA 3 C
SPDL1H5	S	XA 3 B
SPDL1H6	S	XA 3 B
SPDL1H7	S	XA 3 B
SPDL1HB8	S	XA 3 D
SPDL1HB9	S	BI 3 C
SPDL1L1	S	XA 4 E
SPDL1L2	S	XA 3 C
SPDL1L3	S	XA 3 C
SPDL1L4	S	XA 3 C
SPDL1L5	S	XA 3 B
SPDL1L6	S	XA 3 B
SPDL1L7	S	XA 3 B
SPDL1LB8	S	XA 3 D
SPDL1LB9	S	BI 4 C
SPDL2H1	S	CF 2 B
SPDL2H2	S	XB 2 D
SPDL2H3	S	XB 3 C
SPDL2H4	S	XB 3 C
SPDL2HB6	S	XB 2 D
SPDL2HB7	S	BI 3 C

REF	DESCRIPTION	PAGE
SPDL2L1	S	CF 2 B
SPDL2L2	S	XB 2 D
SPDL2L3	S	XB 3 C
SPDL2L4	S	XB 3 C
SPDL2LB6	S	XB 2 C
SPDL2LB7	S	BI 3 C
SPDL4H	S	XC 1 B
SPDL4L	S	XC 2 B
SPDL7H1	S	CA 3 C
SPDL7L1	S	CA 3 C
SPEMA28A1	S	CH 3 C
SPEMA49A	S	CA 2 B
SPEMA54A1	S	CF 1 C
SPEMA59A1	S	CH 3 D
SPEMA62A1	S	CF 2 D
SPF2A	T	GA 1 A
SPF2C	T	GA 0 C
SPF2C2	S	GD 1 D
SPF3B	T	GA 0 C
SPF3B1	T	GA 0 D
SPF3F	T	BE 1 A
SPF3F	T	DD 0 B
SPF3F	T	EA 2 A
SPF3F	T	ED 2 A
SPF3F	T	GA 0 B
SPF3F	T	GH 3 A
SPF3F	T	KB 1 A
SPF3F	T	NA 2 A
SPF3F25	S	KB 1 C
SPF3F66	T	BA 2 E
SPF3F69	T	FD 1 B
SPF3H	T	GA 2 B
SPF4C	T	GD 3 C
SPF4D	T	GD 4 C
SPF5A	T	GA 3 B
SPF5B	T	GA 3 B
SPF5D1	S	GF 2 B
SPF6A	T	GA 1 B
SPF6A	T	GH 3 B
SPF6B	S	GH 1 C
SPF7A	T	AC 0 B
SPF7C	T	BM 0 A
SPF7D	T	AC 1 C
SPF7G	T	BF 4 C
SPF8A	T	FB 2 B
SPF8F	S	BK 0 D
SPF9B	T	KC 2 C
SPF9D	S	GA 2 D
SPF10A	T	KB 2 B
SPF10A	T	XA 2 B

https://truckmanualshub.com/

REFERENCES

REF	DESCRIPTION	PAGE
SPF10C	T	KB 2 B
SPF11A	T	GG 3 B
SPF15A	T	FC 1 B
SPF15B	T	FC 2 C
SPF16A	T	BA 0 B
SPF17A	T	BA 1 B
SPF17A6	S	BN 4 A
SPF17A10	S	BD 2 B
SPF17A16	S	BA 1 E
SPF17A30	S	BL 2 D
SPF17E	S	BK 2 B
SPF17E1	S	BL 1 B
SPF17M1	T	BC 2 C
SPF18C1	S	BK 0 B
SPF20A1		ID 3 A
SPF20B		ID 2 B
SPF20BC3		ID 2 C
SPF20C		ID 2 B
SPF20F		ID 4 B
SPF20FG3		ID 4 C
SPF20G		ID 3 B
SPF21A	T	GP 4 B
SPF22A	T	GP 2 B
SPF23A	S	GP 0 B
SPF23C	T	GP 1 A
SPF23D	T	GP 2 B
SPF25A	T	HA 2 B
SPF25B	T	HA 2 C
SPF25D	S	HA 2 D
SPF27A	S	BK 0 B
SPF27A1	S	BL 0 C
SPF27A2	S	BN 0 A
SPF27B	S	BK 1 D
SPF27C	S	BN 1 C
SPF27H	S	BN 1 D
SPF29B	T	AA 2 C
SPF31A	T	DD 3 A
SPF34A	T	NB 3 B
SPF34B	T	NB 3 C
SPF34C2	S	GF 2 C
SPF34C3	S	GF 2 B
SPF35B	T	GA 1 D
SPF35B3	S	IC 3 D
SPF35C	S	GA 3 D
SPF38A	S	CA 0 A
SPF42A	S	BE 4 B
SPF42B	S	BE 4 C
SPF43A	S	CA 1 C
SPF44A	S	FA 2 C
SPF44A1		FA 0 C

REF	DESCRIPTION	PAGE
SPF50B1	S	GD 0 D
SPF51B2	S	GD 1 D
SPF55B	S	IC 3 D
SPF55B1	S	IC 1 D
SPF55B1	S	ID 1 C
SPF61A	S	BO 0 B
SPF61C	S	BO 0 C
SPF62B	S	CF 0 B
SPF63A	T	BE 0 B
SPF66A	T	KA 1 B
SPF66A	T	NA 4 A
SPF84A	T	BI 0 C
SPF91A	T	CD 0 B
SPF92A	T	CD 1 B
SPHA1	T	BG 1 D
SPHA2	T	BG 1 C
SPHA13	T	BE 1 D
SPHA20	T	BE 1 D
SPHA21	T	BE 1 D
SPHA22	T	BE 1 C
SPHB22	S	BF 1 C
SPHB22A	S	BF 1 E
SPHB22C1	S	BF 2 C
SPHB24	S	BG 2 D
SPHD3+	S	BN 1 C
splice350_334		ED 2 B
SPN110	T	DD 0 C
SPN112	T	DC 3 B
SPN124CM	T	DD 2 C
SPN131	S	DC 1 C
SPN145	T	DD 3 C
SPN158	T	DC 2 C
SPN158A	S	DC 2 D
SPN163	T	DD 1 B
SPN163F	S	FD 3 C
SPN163G	S	FD 3 C
SPN165	T	DD 4 C
SPR13SA	T	GD 3 D
SPR13SB	T	GD 4 D
SPR135AA	T	GD 4 D
SPURDA	T	AC 2 C
SPURDB	T	CD 1 A
SPX1A3	S	AD 2 C
SPX1E	T	AD 3 C
SPX1E	T	BA 4 E
SPX1E	T	BB 2 B
SPX1E	T	BC 2 D
SPX1E	T	BD 1 B
SPX1E	T	BE 0 D
SPX1E	T	EA 0 A

https://truckmanualshub.com/

REFERENCES

REF	DESCRIPTION	PAGE
SPX1E	T	XA 1 E
SPX1E6	T	AD 3 C
SPX1E6	T	EA 3 B
SPX1E6	T	ED 2 B
SPX1E9	T	EA 2 B
SPX2A		AD 3 B
SPX2A		NA 2 B
SPX2A1	S	AD 3 A
SPX2A1	S	FB 0 C
SPX2A1	S	FC 1 D
SPX2A1	S	NB 2 D
SPX2A2	S	AD 3 B
SPX2A2	S	GA 2 D
SPX2A2	S	GD 4 E
SPX2A2	S	GH 0 D
SPX2A2	S	GP 0 E
SPX2A2	S	KA 1 C
SPX2A2	S	KB 2 E
SPX2A2	S	KC 2 D
SPX2A3	S	AD 3 B
SPX2A3	S	GG 0 C
SPX2A3	S	NB 0 D
SPX2A4	S	AD 3 A
SPX2A4	S	GD 2 B
SPX2A4	S	NA 3 B
SPX2A5	T	AD 3 A
SPX2A5	T	BA 4 C
SPX2A5	T	DD 1 C
SPX2A5	T	EA 2 B
SPX2A5	T	ED 2 B
SPX2A33	S	BK 3 D
SPX2A42	T	GD 3 D
SPX2A48	S	GH 3 C
SPX2A58	S	BN 1 B
SPX2A58	S	BO 0 E
SPX2A60	S	BL 4 B
SPX2A65	T	BM 0 C
SPX2A70	T	BA 2 D
SPX2A104	T	FD 1 C
SPX2D	S	AA 2 D
SPX2D	S	AB 4 D
SPX2D	S	AC 1 E
SPX2D	S	AD 3 B
SPX2D	S	BC 2 D
SPX2D	S	CA 0 C
SPX2D	S	DD 2 C
SPX2D	S	GA 1 D
SPX2D	S	GG 2 C
SPX2D	S	HA 1 D
SPX2D	S	NA 1 B

REF	DESCRIPTION	PAGE
SPX2D	S	NB 4 C
SPX2D16	T	AD 3 B
SPX2D16	T	HA 2 D
SPX2D18	S	BK 3 C
SPX2D19	S	BN 1 C
SPX2D21	S	BL 0 E
SPX2N109	S	AD 3 B
SPX2N109	S	DD 0 B
SPX2N109A	T	DD 0 C
SPX2N109B	S	FD 2 D
SPX2N109F	S	FD 3 D
SPX3A	S	AD 3 D
SPX3A	S	HA 3 E
SPX3A1	S	AD 3 D
SPX3A2	S	FB 2 E
SPX3A3	S	GF 1 D
SPX3A3A	S	GF 1 D
SPX3A4	S	AD 3 D
SPX3A4	S	CD 1 E
SPX3A6	S	AD 4 D
SPX3A6	S	FA 2 D
SPX3B	S	AD 3 C
SPX3B	S	GP 2 E
SPX3C4		FA 0 D
SPX3C5		FB 0 D
SPX3F	S	AD 3 C
SPX3F	S	GD 1 D
SPX3F	S	IC 2 D
SPX3F1	S	GD 0 D
SPX3F2	S	GD 1 D
SPX3H	S	IC 2 D
SPX3H1	S	IC 1 D
SPX3H1	S	ID 1 C
SPX3H1A		ID 3 C
SPX4D	S	AD 1 D
SPX4D1	S	AD 1 D
SPX4D2	S	CF 4 C
SPX4D8	S	CA 2 C
SPX5A		AD 0 C
SPX88_25	S	BN 3 D
SPXN109J	S	FD 3 D
SVRC:1		ED 4 A
SVRC:2		ED 4 A
SVRC:3		ED 4 A
T30_1_94	J1939	XA 3 D
T30_1_6362	J1939	BB 1 C
T30_2_94	J1939	XA 3 D
T30_2_2245	J1939	XA 3 B
T30_2_6362	J1939	BB 1 C
T30_3_94	twisted_pair	BI 3 D

https://truckmanualshub.com/

REFERENCES

REF	DESCRIPTION	PAGE
T30_3_2245	J1939	XA 3 A
T30_3_6929	J1939	ED 3 C
T30_4_94	twisted_pair	BI 3 C
T30_4_2245	J1939	XA 3 B
T30_5_94	twisted_pair	BI 4 C
T30_5_2245	J1939	XA 3 B
T30_6_2245	J1939	XA 3 B
T30_7_2245	J1939	XA 3 C
T30_10_2245	J1939	DD 4 D
T30_11_2245	J1939	DD 4 D
T30_12_2245	J1939	XA 3 C
T30_20_2941	twisted_pair	BI 1 D
T30_22_2245	J1939	CA 4 B
T30_23_2245	J1939	XA 3 D
T30_27_2245	J1939	BB 1 C
T30_28_2245	J1939	BE 0 B
T30_29_2245	J1939	EA 3 B
T30_30_2245	J1939	EA 3 C
T30_32_2245	J1939	XA 2 C
TC40-1_94		BI 3 C
TC40-1_95	twisted cable	CF 3 B
TC40-1_1352		BI 0 D
TC40-1_2205		EA 0 D
TC40-1_4044		BB 0 C
TC40-1_5677		DC 0 C
TC40-1_5794		DC 0 B
TC40-1_5868		EA 2 C
TC40-1_5975		DC 0 D
TC40-2_94		XB 2 D
TC40-2_2205		EA 1 D
TC40-2_2245		BB 1 C
TC40-2_4044		BB 0 C
TC40-2_5677		DC 0 C
TC40-2_5794		DC 0 B
TC40-2_5868		EA 2 C
TC40-3_94		XB 1 D
TC40-3_2205		EA 2 D
TC40-3_2245		BE 1 B
TC40-3_2941		BI 0 D
TC40-3_4044		BB 0 D
TC40-3_5677		DC 0 C
TC40-3_5794		DC 0 B
TC40-4_94		XB 3 B
TC40-4_2205		EA 2 D
TC40-4_5677		DC 0 B
TC40-4_5794		DC 0 B
TC40-5_94		XB 2 D
TC40-6_94		XB 3 D
TC40-6_3176		DD 3 D
TC40-6_5677		DC 0 B

REF	DESCRIPTION	PAGE
TC40-7_94		XB 2 D
TC40-7_2656		DC 0 D
TC40-7_3176		DD 1 E
TC40-8_94	30 TWISTS PER METER	XC 2 D
TC40-8_2656		DC 0 D
TC40-8_4961		DC 0 D
TC40-9_94		XC 1 B
TC40-10_94		XB 3 D
TC40-10_2245		EA 1 B
TC40-11_94		BI 3 D
TC40-11_2245		EA 1 B
TC40-12_94		XB 2 B
TC40-12_2245		EA 1 C
TC40-12_2656		CA 0 D
TC40-13_94		XB 2 D
TC40-13_2245		EA 1 C
TC40-13_2656	twisted cable	CF 2 B
TC40-14_94		XB 3 C
TC40-14_2245		EA 1 B
TC40-15_94		XB 3 C
TC40-15_2245		EA 1 B
TC40-16_94		BI 2 D
TC40-16_2245		EA 2 D
TC40-17_94		BI 3 C
TC40-17_2245		EA 2 D
TC40-18_2245		EA 2 D
TC40-19_2245		EA 1 C
TC40-20_2245		EA 0 C
TC40-21_2245		EA 1 D
TC40-22_2245		EA 0 D
TC40-23_2245		EA 0 D
TC40-24_2245		EA 1 D
TC40-25_2245		EA 2 D
TC40-25_6929		ED 1 C
TC40-26_6929		ED 3 D
TC40-27_6929		ED 3 D
TC40-28_6929		ED 0 C
TC40-29_6929		ED 3 C
TC40-30_6929		ED 0 C
TC40-32_6929		ED 1 B
TC40-33_6929		ED 0 D
TC40-34_6929		ED 0 B
TC40-35_6929		ED 2 D
TC40-36_6929		ED 0 D
TC40-37_6929		ED 0 B
TC40-38_2245		GG 0 C
TC40-38_6929		ED 1 B
TC40-39_6929		ED 0 C
TC40-40_6929		ED 2 C
TC40-41_6929		ED 2 D

https://truckmanualshub.com/

REFERENCES

REF	DESCRIPTION	PAGE
TLBU:A		GF 2 C
TLBU:B		GF 2 C
TRPTO:A		FD 3 C
TRPTO:B		FD 2 C
TRPTO:C		FD 3 D
V27	DIODE, PTO EHT	BK 2 B
V27	DIODE, PTO EHT	BL 1 B
V27_MATE	DIODE, PTO EHT	BK 2 C
V27_MATE	DIODE, PTO EHT	BL 1 C
V30	DIODE, STOP LAMP	BF 4 D
V35A	DIODE, MOTO MIRROR	ID 2 C
V35B	DIODE, MOTO MIRROR	ID 3 C
V35C	DIODE, MOTO MIRROR	ID 3 C
V35D	DIODE, MOTO MIRROR	ID 4 C
V36	DIODE, ALLISON REVERSE MUTE	DD 3 C
X0C	SPLICE PACK, ILLUMINATION, SEE DIAGRAM GH	BA 2 A
X0C	SPLICE PACK, ILLUMINATION, SEE DIAGRAM GH	BC 3 A
X0C	SPLICE PACK, ILLUMINATION, SEE DIAGRAM GH	BD 2 A
X0C	SPLICE PACK, ILLUMINATION, SEE DIAGRAM GH	CA 4 A
X0C	SPLICE PACK, ILLUMINATION, SEE DIAGRAM GH	FB 4 A
X0C	SPLICE PACK, ILLUMINATION, SEE DIAGRAM GH	FC 1 A
X0C	SPLICE PACK, ILLUMINATION, SEE DIAGRAM GH	GH 3 B
X0C	SPLICE PACK, ILLUMINATION, SEE DIAGRAM GH	GP 1 A
X0C	SPLICE PACK, ILLUMINATION, SEE DIAGRAM GH	HA 2 A
X0C	SPLICE PACK, ILLUMINATION, SEE DIAGRAM GH	IC 4 A
X0C	SPLICE PACK, ILLUMINATION, SEE DIAGRAM GH	NB 0 A
X1	STUD, CAB GROUND #1	AD 2 C
X1_C1	STUD, CAB GND #1 MAIN	AD 3 C
X1_C4	STUD CAB GND #1 TGW	BI 2 C
X2	STUD, CAB GROUND #2	AD 2 B
X2_C1	STUD, CAB GND #2 STANDARD	AD 3 B
X2_SP1	SPLICE PACK, GROUND X2A6	AD 4 A
X2_SP1	SPLICE PACK, GROUND X2A6	BC 2 C
X2_SP1	SPLICE PACK, GROUND X2A6	BD 2 C
X2_SP1	SPLICE PACK, GROUND X2A6	BI 0 C
X2_SP1	SPLICE PACK, GROUND X2A6	CA 3 C
X2_SP1	SPLICE PACK, GROUND X2A6	FB 3 D
X2_SP1	SPLICE PACK, GROUND X2A6	FC 0 D
X2_SP1	SPLICE PACK, GROUND X2A6	GA 0 C
X2_SP1	SPLICE PACK, GROUND X2A6	HA 2 B
X2_SP1	SPLICE PACK, GROUND X2A6	IC 3 B
X2_SP1	SPLICE PACK, GROUND X2A6	NA 2 B
X4_C1		AD 2 D
X4_C2		AD 2 D
X06D_MATE	CONNECTOR, ALLISON BODY BUILDER	BH 0 C
X06D_MATE_BL	CONNECTOR, ALLISON BODYBUILDER, BODYLINK	BM 2 A
X07A	POWER OUTLET #1	KC 1 C
X07B	POWER OUTLET, PANEL	BO 1 C
X10	B+ pass through, Cab	AC 4 D
X10_C1:A		AC 4 D

REF	DESCRIPTION	PAGE
X11	CONNECTOR, ENGINE MANAGEMENT INTERFACE	CA 0 C
X31A	JUNCTION BLOCK, 14 POST MAIN	BI 3 A
X31A	JUNCTION BLOCK, 14 POST MAIN	BJ 0 B
X31A	JUNCTION BLOCK, 14 POST MAIN	BK 1 B
X31A	JUNCTION BLOCK, 14 POST MAIN	BL 1 B
X31A	JUNCTION BLOCK, 14 POST MAIN	BM 1 D
X31A	JUNCTION BLOCK, 14 POST MAIN	BN 1 B
X31A	JUNCTION BLOCK, 14 POST MAIN	GG 1 C
X31A_C1	X31A JUNCTION TERMINAL, POST 2	GG 1 C
X31A_C1_1	X31A JUNCTION, TERMINAL STUD 1	BJ 0 B
X31A_C1_1	X31A JUNCTION, TERMINAL STUD 1	BM 3 B
X31A_C2	X31A JUNCTION TERMINAL, POST 3	GG 1 C
X31A_C2_1	X31A JUNCTION, TERMINAL STUD 2	BJ 0 C
X31A_C2_1	X31A JUNCTION, TERMINAL STUD 2	BM 3 C
X31A_C3	X31A JUNCTION TERMINAL, POST4	GG 1 C
X31A_C3_1	X31A JUNCTION, TERMINAL STUD 3	BJ 0 C
X31A_C3_1	X31A JUNCTION, TERMINAL STUD 3	BM 3 C
X31A_C4	X31A JUNCTION TERMINAL, POST5	GG 1 C
X31A_C4_1	X31A JUNCTION, TERMINAL STUD 4	BJ 0 C
X31A_C4_1	X31A JUNCTION, TERMINAL STUD 4	BM 3 C
X31A_C5	X31A JUNCTION TERMINAL, POST 6	GG 1 C
X31A_C5_1	X31A JUNCTION, TERMINAL STUD 5	BM 3 C
X31A_C6	X31A JUNCTION TERMINAL, POST 7	GG 1 C
X31A_C6_1	X31A JUNCTION, TERMINAL STUD 6	BJ 0 C
X31A_C6_1	X31A JUNCTION, TERMINAL STUD 6	BM 3 C
X31A_C7_2	X31A JUNCTION, TERMINAL STUD 7	BM 3 C
X31A_C7_3	X31A JUNCTION, TERMINAL STUD 7	BI 3 B
X31A_C8_2	X31A JUNCTION, TERMINAL STUD 8	BI 2 B
X31A_C9_2	X31A JUNCTION, TERMINAL STUD 9	BI 2 B
X31A_C10_1	X31A JUNCTION, TERMINAL STUD 10	BM 1 D
X31A_C12_1	X31A JUNCTION, TERMINAL STUD 12	BI 2 B
X31A_C13	X31A JUNCTION, TERMINAL, POST 13	BK 0 B
X31A_C13_1	X31A JUNCTION, TERMINAL, POST 13	BL 0 B
X31A_C13_2	X31A JUNCTION, TERMINAL POST 13	BN 0 B
X31A_C13_4	X31A JUNCTION, TERMINAL STUD 13	BI 2 B
X32A	BODY BUILDER JUNCTION A BOC	GG 1 D
X32A_C1		GG 1 D
X32A_C2		GG 1 D
X32A_C3		GG 1 D
X32A_C4		GG 1 D
X32A_C5		GG 1 D
X32A_C6		GG 1 D
X32A_C7		GG 1 D
X32B	BODY BUILDER JUNCTION B BOC	NB 4 C
X32B_C2		NB 4 C
X32B_C4		NB 4 C
X33A	BODY BUILDER JUNCTION A EOF	GG 1 E
X33B	BODY BUILDER JUNCTION B EOF	NB 4 C
X34R_MATE	JUNCTION, OVERHEAD CB PROVISION	KC 3 C
X41	JUNCTION BLOCK, 7 POST, BODY BUILDER	BJ 0 B

https://truckmanualshub.com/

REFERENCES

REF	DESCRIPTION	PAGE
X41	JUNCTION BLOCK, 7 POST, BODY BUILDER	BK 4 B
X41	JUNCTION BLOCK, 7 POST, BODY BUILDER	BL 4 B
X41	JUNCTION BLOCK, 7 POST, BODY BUILDER	BM 1 A
X41	JUNCTION BLOCK, 7 POST, BODY BUILDER	BN 1 A
X41	JUNCTION BLOCK, 7 POST, BODY BUILDER	BO 0 B
X41	JUNCTION BLOCK, 7 POST, BODY BUILDER	CC 2 B
X41	JUNCTION BLOCK, 7 POST, BODY BUILDER	KA 0 B
X41	JUNCTION BLOCK, 7 POST, BODY BUILDER	NB 3 D
X41_C1	X41 JUNCTION TERMINAL, POST 3	NB 4 D
X41_C2	X41 JUNCTION TERMINAL, POST 2	NB 4 D
X41_C2_1	X41 JUNCTION, TERMINAL STUD 2	BJ 1 C
X41_C2_1	X41 JUNCTION, TERMINAL STUD 2	BM 4 B
X41_C3_1	X41 JUNCTION, TERMINAL STUD 3	BJ 1 C
X41_C3_1	X41 JUNCTION, TERMINAL STUD 3	BM 4 B
X41_C4_1	X41 JUNCTION, TERMINAL, POST 4	BK 4 B
X41_C4_2	7 POST JUNCTION BLOCK	BL 4 C
X41_C4_4	X41 JUNCTION, TERMINAL, STUD 4	BN 1 A
X41_C4_5	X41 JUNCTION, TERMINAL STUD 4	BM 2 C
X41_C5	X41 JUNCTION, TERMINAL, POST 1	CC 2 B
X41_C5_1	X41 JUNCTION, TERMINAL, STUD 5	BJ 0 C
X41_C5_1	X41 JUNCTION, TERMINAL, STUD 5	BM 1 A
X41_C6_2	X41 JUNCTION, TERMINAL STUD 6	BO 0 B
X41_C7	X41 JUNCTION, TERMINAL, STUD 7	BK 1 B
X41_C7_1	X41 JUNCTION, TERMINAL, STUD 7	BL 4 C
X42	JUNCTION BLOCK, 7 POST, OPTIONS	BJ 1 B
X42	JUNCTION BLOCK, 7 POST, OPTIONS	BM 4 B
X42	JUNCTION BLOCK, 7 POST, OPTIONS	BO 1 B
X42	JUNCTION BLOCK, 7 POST, OPTIONS	KB 3 A
X42	JUNCTION BLOCK, 7 POST, OPTIONS	NB 1 C
X42_C2_1	X42 JUNCTION, TERMINAL STUD 2	BJ 1 C
X42_C2_1	X42 JUNCTION, TERMINAL STUD 2	BM 4 C
X42_C3	X42 JUNCTION, TERMINAL, STUD 1 DIRECT BAT	KB 3 A
X42_C3_1	X42 JUNCTION, TERMINAL, STUD #3	BO 1 B
X45A	RECEPTACLE 110V ENGINE HEATER	CC 3 B
X135	Chassis Ground Stud	AD 2 D
X135.A		AD 2 C
X135.B		AD 2 D
X136	Cab Passthrough Ground Stud	AD 2 C
X136.A		AD 2 C
X136.B		AD 3 D
X136.C		AD 2 C

REF	DESCRIPTION	PAGE
X136.E		AD 3 C
X140	Battery Box Ground Stud	AD 1 C
X140.A		AD 1 C
X140.C		AD 1 C
X194	CONNECTOR,TGW BODYBUILDER INTERFACE	BI 0 D
X194_AM	CONNECTOR, TGW BB INTERFACE	BI 2 D
XBB	STUD, CHASSIS GROUND AT BODY BUILDER BRAC	BM 3 E
XBB_C1		BM 4 E
XE6		CA 3 B
XE7		CA 2 B
XE8		CA 2 B
XG9	STUD, ENGINE BLOCK	AD 1 D
XG9.A		AD 1 D
XJ1		AD 1 B
XJN		AD 1 B
XJP		AC 4 A
XJP_1		AC 4 A
Y11	SOL. VALVE, ABS LH FRT	EA 0 B
Y11	SOL. VALVE, ABS LH FRT	ED 0 D
Y12	SOL. VALVE, ABS RH FRT	EA 1 B
Y12	SOL. VALVE, ABS RH FRT	ED 1 D
Y13	SOL. VALVE, ABS LH RR	EA 1 D
Y13	SOL. VALVE, ABS LH RR	ED 0 B
Y14	SOL VALVE, ABS RH RR	EA 1 D
Y14	SOL VALVE, ABS RH RR	ED 0 B
Y15	SOL VALVE, ABS LH 3RD AXLE	EA 3 D
Y15	SOL VALVE, ABS LH 3RD AXLE	ED 2 D
Y16	SOL VALVE, ABS RH 3RD AXLE	EA 3 D
Y16	SOL VALVE, ABS RH 3RD AXLE	ED 3 D
Y18	Solenoid valve, PTO (Power Take Off)	FC 1 C
Y35	SOLENOID ENGINE FAN	CA 1 C
Y42	Clutch, magnetic, air conditioning compr	HA 2 E
Y51	SOL VALVE AIR DRYER	FA 1 C
Y57	SOL. VALVE, ATC	EA 1 D
Y57	SOL. VALVE, ATC	ED 1 B
Y62	SOLENOID ACCUMULATOR	DC 1 C
Y80	SOLENOID VALVE, ADBLUE DOSING UNIT	CF 3 A
Y81	SOLENOID VALVE, UREA HEATING TANK	CF 2 D
Y86	SOLENOID, MULTI VALVE ASSY.	FB 1 D
Y88	SOLENOID, LIFT AXLE	FB 0 D
Y157	SOLENOID, PARKER PTO	FD 3 C