Engineering Release Notice (ERN)	Location	Change Description A = Added W = Was D = Deleted	Document Release Status
D-16650-86		See DCN	RELEASED

https://truckmanualshub.com/

Date	Modification Count

WIRING DIAGRAM INDEX

NAME	DESCRIPTION	PAGE
AA	POWER DISTRIBUTION 1/2	3
AB	POWER DISTRIBUTION 2/2	4
AC	KEY SW. , START & CHARGING	5
AD	GROUNDING	6
AE	BATTERY CONFIGURATION	7
AF	GROUNDING 2/2, CUMMINS	8
AG	STARTING AND CHARGING, CUMMINS	9
AH	EFRC CUMMINS	10
AI	STARTING AND CHARGING, ISX-G WITH IN FRA	11
BA	VEHICLE ECU 1/4	12
BB	VEHICLE ECU 2/4	13
BC	VEHICLE ECU 3/4 - DCL CONNECTOR	14
BD	VEHICLE ECU 4/4	15
BE	INSTRUMENT CLUSTER 1/3	16
BF	INSTRUMENT CLUSTER 2/3	17
BG	INSTRUMENT CLUSTER 3/3	18
BH	ALLISON BODY BULDER INTERFACE	19
BI	INSIDE-OUTSIDE AIR TEMP. GAUGE	20
BJ	BODY BULDER CIRCUITS - OPTIONAL WIRING	21
BK	BODY BUILDER CIRCUITS - 2010 BODYLINK	22
BM	TELEMATICS GATEWAY (TGW)	23
BN	BODY BUILDER CIRCUITS	24
BP	ISX-G FUEL SYSTEM	25
BU	QUALCOMM MCP 100 W/SLEEPER	26
BV	QUALCOMM MCP 110 OR 200 W/SLEEPER	27
BW	QUALCOMM MCP 100 W/DAYCAB	28
BX	QUALCOMM MCP 110 & 200 W/DAYCAB	29
BY	BBM	30
BZ	PEOPLENET PREP	31
CA	ENGINE INTERFACE MP11	32
CB	DPF REGENERATION SYSTEM	33
CC	ENGINE HEATER	34
CD	UREA DOSING SYSTEM 1/2	35
CE	ENGINE CONTROL ISL US13 1/2	36
CF	ENGINE CONTROL ISL US13 2/2	37
CJ	CUMMINS ISX-G	38
CK	ENGINE CONTROL ISL US17 1/2	39
CL	ENGINE CONTROL ISL US17 2/2	40
CM	METHANE & CO DETECTION	41
DA	TRANSMISSION M-DRIVE	42
DB	TRANSMISSION CONTROL: ULTRASHIFT PLUS	43
DC	TRANSMISSION CONTROL 1/2	44
DD	TRANSMISSION CONTROL 2/2	45
DE	TRANSMISSION CONTROLS - M-DRIVE	46
EA	ABS-WABCO	47

NAME	DESCRIPTION	PAGE
EC	SUSPENSION ECU 6X2	48
ED	ABS8 BENDIX W/ESP	49
FA	AIR DRYER/ HEATED DRAIN	50
FB	CHASSIS SOLENOIDS	51
FD	PARKER PTO	52
GA	LIGHTING CONTROL	53
GD	LIGHTING- FORWARD/SIGNAL (CXU,GU7 & GU8)	54
GE	LIGHTING- FORWARD/SIGNAL (CHU ONLY)	55
GF	LIGHTING- TAIL/PERIMETER	56
GG	TRAILER LIGHTING CONTROL	57
GH	INTERIOR LIGTING	58
GI	SNOW PLOW PREP CONNECTOR	59
GJ	TRAILER RECEPTACLE CENTER PIN HOT	60
GK	TITAN LIGHTING OPTIONS	61
GL	LIGHTING - BEACON LAMPS	62
GM	LIGHTING: ROOF W/ OPTIONS	63
GP	WIPER/WASHER	64
GQ	HORN WIRING/SPOTLIGHT	65
GR	LIGHTING - HOOK UP LAMPS	66
HA	CLIMATE CONTROL	67
HB	APADS WIRING	68
HC	HEATED SEATS, HEATED WINDSHIELD, AUX FAN	69
HD	SLEEPER CLIMATE CONTROL	70
HE	SLEEPER FUNCTIONS	71
HF	120V AC SYSTEM/INVERTER	72
HG	HEATED SEATS, HEATED WINDSHIELD, AUX FAN	73
IA	RH & LH MOTORIZED WINDOWS	74
IC	MIRROR CONTROL 1/2	75
ID	RH ONLY MOTORIZED WINDOWS & DOOR CONTROL	76
IE	RH & LH DOOR CONTROL	77
JA	ADAPTIVE CRUISE CONTROL 1/2	78
JB	ADAPTIVE CRUISE CONTROL 2/2	79
JC	BENDIX FUSION	80
KB	AUDIO SYSTEM - NONPROGRAMMABLE	81
KC	POWER OUTLET CONNECTIONS	82
NA	IGNITON & BATTERY SWITCHES & SPARE CONNE	83
NB	JUNCTION POSTS	84
NC	ADDITIONAL IGNITION & BATTERY SWITCHES 1	85
ND	H.D. POWER LIFTGATE	86
NE	ADDITIONAL IGNITION & BATTERY SWITCHES 2	87
NF	ADDITIONAL IGNITION & BATTERY SWITCHES 3	88
XA	DATALINK/DIAGNOSTICS 1/3	89
XB	DATALINK/DIAGNOSTICS 2/3	90
XC	DATA LINK DIAGNOSTIC 3/3	91

The copying, distribution and utilization of this document as well as the communication of its contents to others without expressed authorization is prohibited. Offenders will be held liable for payment of damages. All rights reserved in the event of the grant of a patent, utility model or ornamental design registration.

Document title

WIRE DIAGRAM−CONVENTIONAL, 12V MACK, 2013BP

VOLVO

Group Trucks Technlogy

The legal owner of this document is as stated under "Design Location" in KOLA and in the associated "Part Version Report"

Document type

PRODUCT SCHEMATICS

Document No	Issue	Volume	Sheet No
21628497	09	1 (2)	1 (91)

https://truckmanualshub.com/

ABBREVIATION LIST, 12V

SHELL_CAVITY	HARNESSES	WHERE_USED
6SABS	REAR_CHASSIS_EXTENSION	FRONT_CHASSIS
A57	AUTOTRANS_CAB	AUTOTRANS_CAB
ABS_OPTION	MAIN_CAB	
ABS_X1	MAIN_CAB	ABS_JUMPER
ABS_X2	MAIN_CAB	ABS_JUMPER
ALLISON	AUTOTRANS_TRANS	AUTOTRANS_CAB
ATTR	AUTOTRANS_CAB	AUTOTRANS_TRANS
BBCAB_TRANS	BODY_BUILDER_CAB	BODY_BUILDER_CHASSIS
BBMCO	MAIN_CAB	BODY_BUILDER_CAB
BPMCFC	BODYPOWER_CAB	BODYPOWER_FRONTCHASSIS
BWFC	BRAKE_WEAR_FRONT	FRONT_CHASSIS
BWRC	FRONT_CHASSIS	BRAKE_WEAR_REAR
CBBFCBB	BODY_BUILDER_CHASSIS	BODY_BUILDER_CAB
CDPF	FRONT_CHASSIS	RH_STANTION
CLN_PWR	CLEAN_POWER	FRONT_CHASSIS
DRL_OR_BB	MAIN_CAB	DRL_OVERRIDE_SWITCH
DRL_OR_DCL	BODY_BUILDER_CAB	DRL_OVERRIDE_SWITCH
DRL_OR_DCL2	BODY_BUILDER_CAB	DRL_OVERRIDE_SWITCH
DS_PTO	BODY_BUILDER_CHASSIS_PTO	BODY_BUILDER_CAB
DSFC	DS_HARNESS	REAR_CHASSIS_EXTENSION
DSFRT	DS_HARNESS	DS_HARNESS_EXT_MERITOR
DSRR	DS_HARNESS	DS_HARNESS_EXT_MERITOR
DUAL_PTO	SOLENOID_SW	BODY_BUILDER_CAB
FCATR	AUTOTRANS_TRANS	
FCBL	FRONT_CHASSIS	BODY_BUILDER_CHASSIS
FCCE	FRONT_CHASSIS	REAR_CHASSIS_EXTENSION
FCCP	CLN_PWR_ACM	FRONT_CHASSIS
FCCPBB	CLN_PWR_BB	BODY_BUILDER_CAB
FCEIC	FRONT_CHASSIS	
FCFH	FRONT_CHASSIS	FUEL_HEATER
FCLA	FRONT_CHASSIS	LIFT_AXLE
FCSH	FRONT_CHASSIS	STANTION_HARNESS
FCSP	REAR_CHASSIS_EXTENSION	AIR SOLENOID PACK
FCTR	FRONT_CHASSIS	TRANSMISSION
FCUT	UREA_TANK	UREA_TANK_EXTENSION
FCUTEXT	FRONT_CHASSIS	UREA_TANK_EXTENSION
FRC1	MAIN_CAB	
FRC2	MAIN_CAB	
FRC3	MAIN_CAB	
HN_REM	MAIN_CAB	BODY_BUILDER_CAB
HOOKUP_LP	MAIN_CAB	
ILLUM_OPT	MAIN_CAB	
ILLUM_OPT2	CAMERA_SWITCH	
ILLUM_OPT3	CAMERA_SWITCH	
ILLUM_OPT4	MAIN_CAB	DRL_OVERRIDE_SWITCH
ILLUM_OPT5	MAIN_CAB	DRL_OVERRIDE_SWITCH

SHELL_CAVITY	HARNESSES	WHERE_USED
ILLUM_OPT6	MAIN_CAB	PARKER_PTO_OVERLAY
ILLUM_OPT7	MAIN_CAB	PARKER_PTO_OVERLAY
LHCS	FRONT_CHASSIS	STANTION_HARNESS
MC_DUAL_PTO	MAIN_CAB	SOLENOID_SW
MC_SOL_SW	MAIN_CAB	SOLENOID_SW
MCAATS	MAIN_CAB	AIR_TEMP_SENSOR
MCAF	MAIN_CAB	AUX_FAN
MCAF2	MAIN_CAB	AUX_FAN
MCAS	MAIN_CAB	AIR_SWITCH
MCAT	MAIN_CAB	AUTOTRANS_CAB
MCDO	MAIN_CAB	DRL_OVERRIDE_SWITCH
MCFC	MAIN_CAB	FRONT_CHASSIS
MCFCAF	MAIN_CAB	FRONT_CHASSIS
MCFG	MAIN_CAB	FUEL_GAUGE_JUMPER
MCMSO	MAIN_CAB	MIRROR_SWITCH_OVERLAY
MCPM	MAIN_CAB	PWR_MIRROR_CAB
MCRF1	MAIN_CAB	ROOF
MCRF2	MAIN_CAB	ROOF
MCRF3	MAIN_CAB	ROOF
MCRF4	MAIN_CAB	ROOF
MCTL	TAIL_LAMP	TAIL_LAMP_EXT
MCTL1	REAR_CHASSIS_EXTENSION	TAIL_LAMP_EXT
PB_START	PBSTART_HARNESS	
PMP_DRV	BODY_BUILDER_CAB	SOLENOID_SW
PPCO	PARKER_PTO_OVERLAY	AUTOTRANS_CAB
PTO_DCL_A	BODY_BUILDER_CAB	
PTO_DCL_B	BODY_BUILDER_CAB	
RC1	MAIN_CAB	
RC2	BODY_BUILDER_CAB	
RC3	AUX_FAN	
RC4	MAIN_CAB	BODY_BUILDER_CAB
RC5	MAIN_CAB	MIRROR_SWITCH_OVERLAY
RFH	ROOF	ROOF_HEADLINER
RHGJ	ROOF	GLAD_JUMPER
RHGJ1	ROOF	GLAD_JUMPER
SHAR	STANTION_HARNESS	AIR_FILTER_RESTRICTION
SP_BAT1	MAIN_CAB	
SP_IGN1	MAIN_CAB	
SP_IGN2	MAIN_CAB	BODY_BUILDER_CAB
SP_IGN3	MAIN_CAB	
SP_RLY1	MAIN_CAB	BODY_BUILDER_CAB
SP_RLY2	MAIN_CAB	BODY_BUILDER_CAB
SP_RLY53	MAIN_CAB	
SP_RLY53_87A	MAIN_CAB	
TLBU	TAIL_LAMP	BACKUP_ALARM
TRPTO	AUTOTRANS_TRANS	PTO

https://truckmanualshub.com/

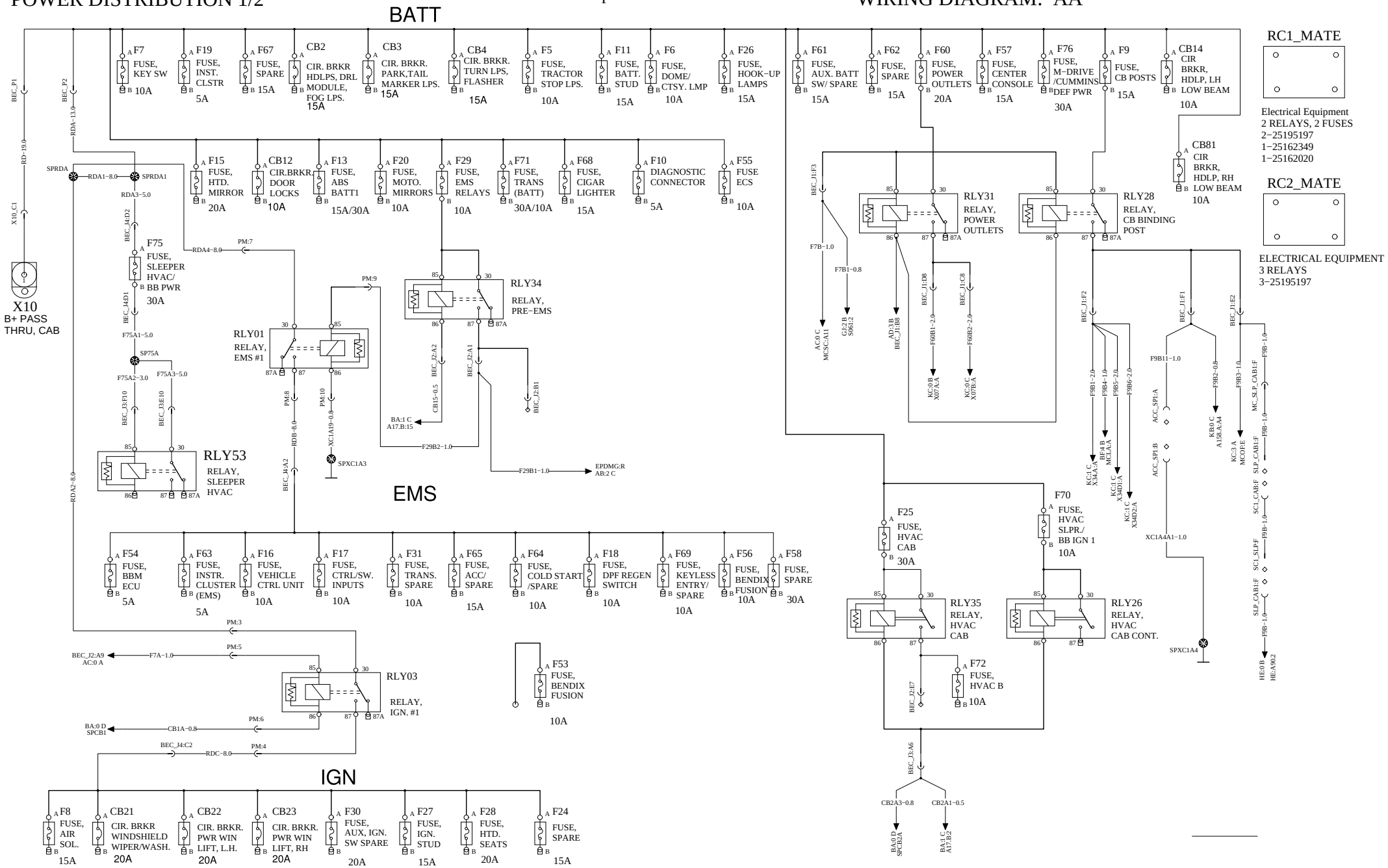

VOLVO Group Trucks Technology	Document title: WIRE DIAGRAM-CONVENTIONAL, 12V MACK, 2013BP Document type: PRODUCT SCHEMATIC	Document No: 21628497	Issue: 09	Volume: 1 (2)	Page: 3 (91)

https://truckmanualshub.com/

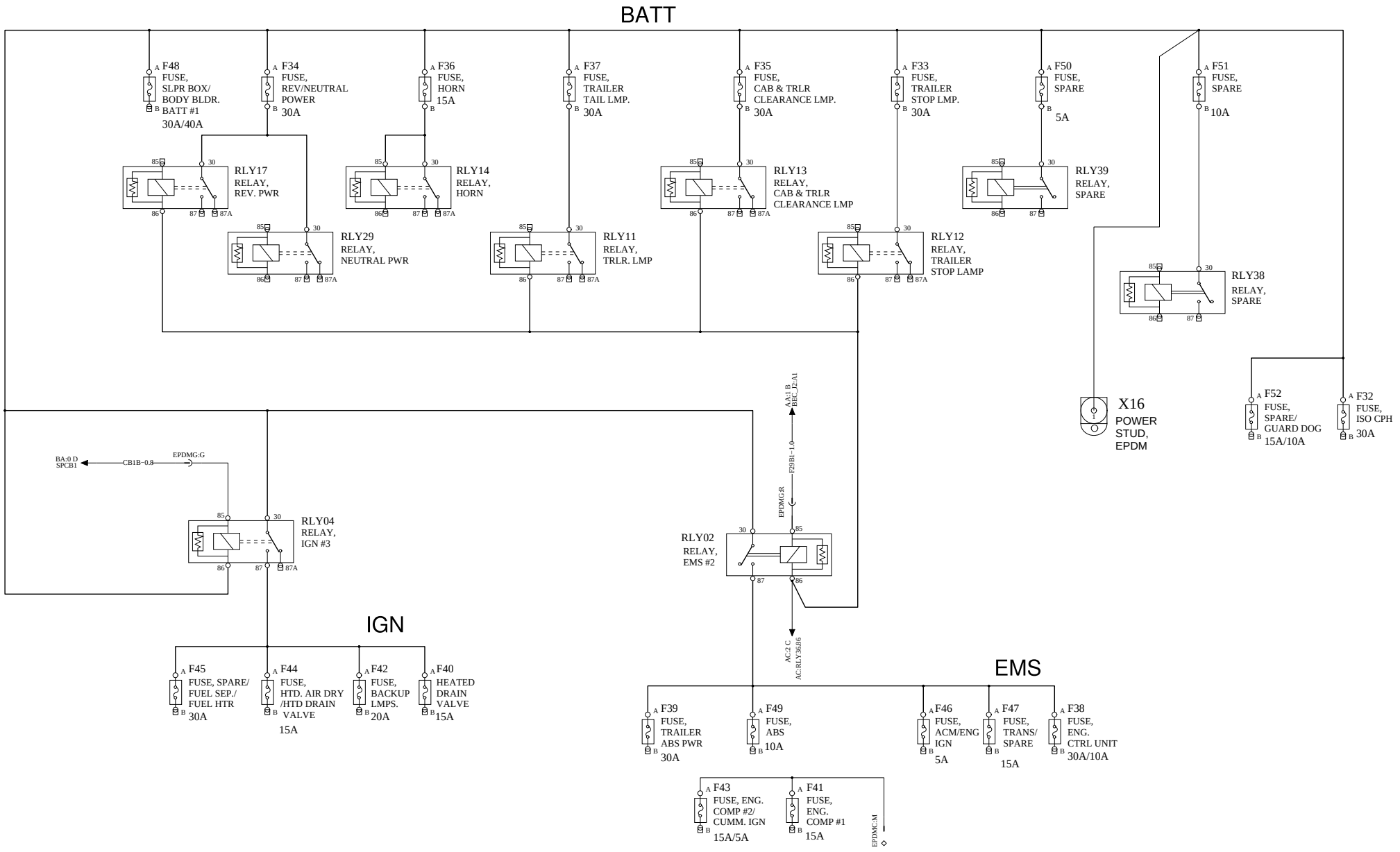

VOLVO Group Trucks Technology	Document title: WIRE DIAGRAM-CONVENTIONAL, 12V MACK, 2013BP	Document No	Issue	Volume	Page
	Document type: PRODUCT SCHEMATIC	21628497	09	1 (2)	4 (91)

KEY SW. , START & CHARGING

https://truckmanualshub.com/

WIRING DIAGRAM: AC

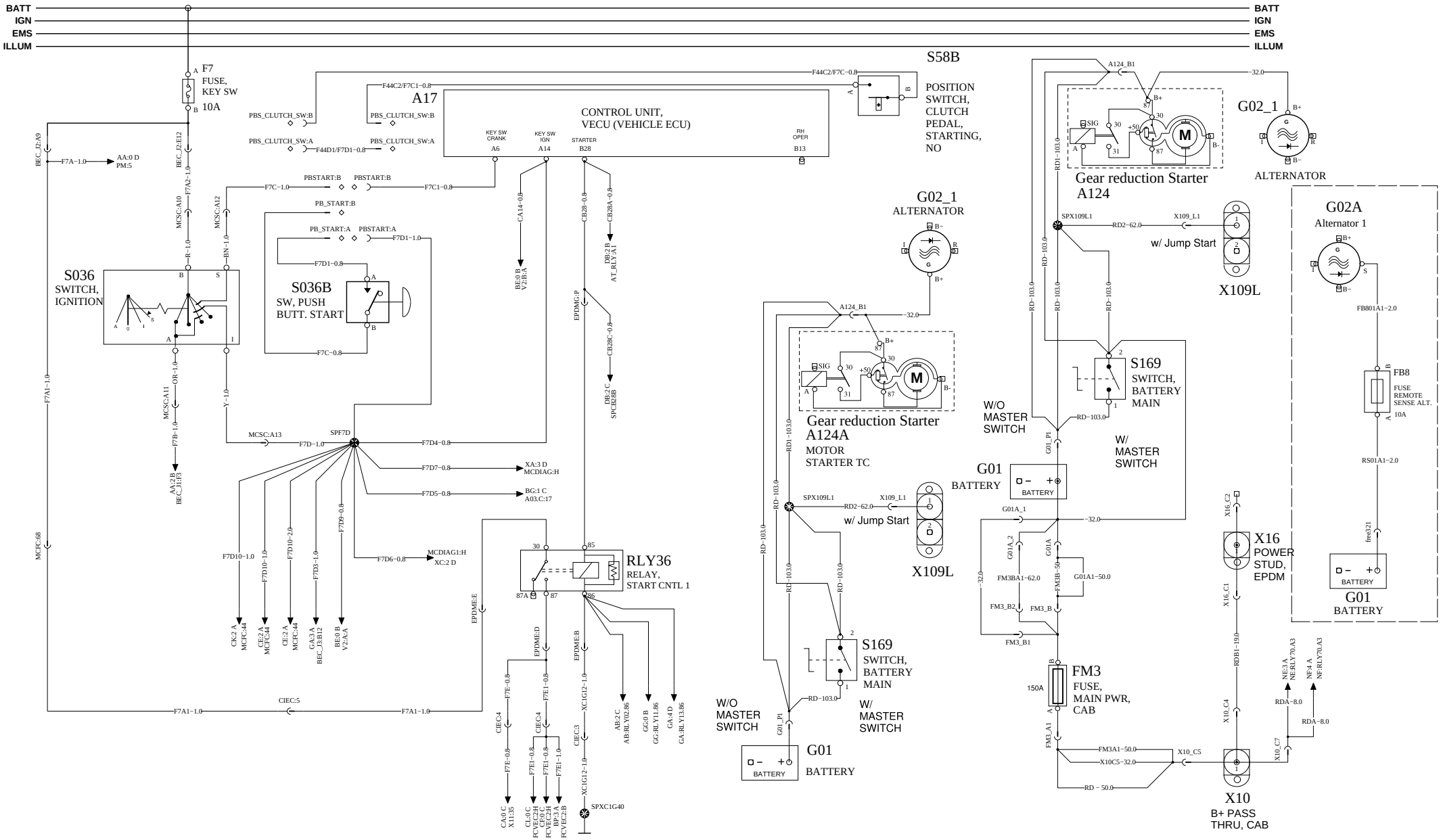

VOLVO Group Trucks Technology	Document title WIRE DIAGRAM-CONVENTIONAL, 12V MACK, 2013BP Document type PRODUCT SCHEMATIC	Document No 21628497	Issue 09	Volume 1 (2)	Page 5 (91)

GROUNDING

https://truckmanualshub.com/

WIRING DIAGRAM : AD

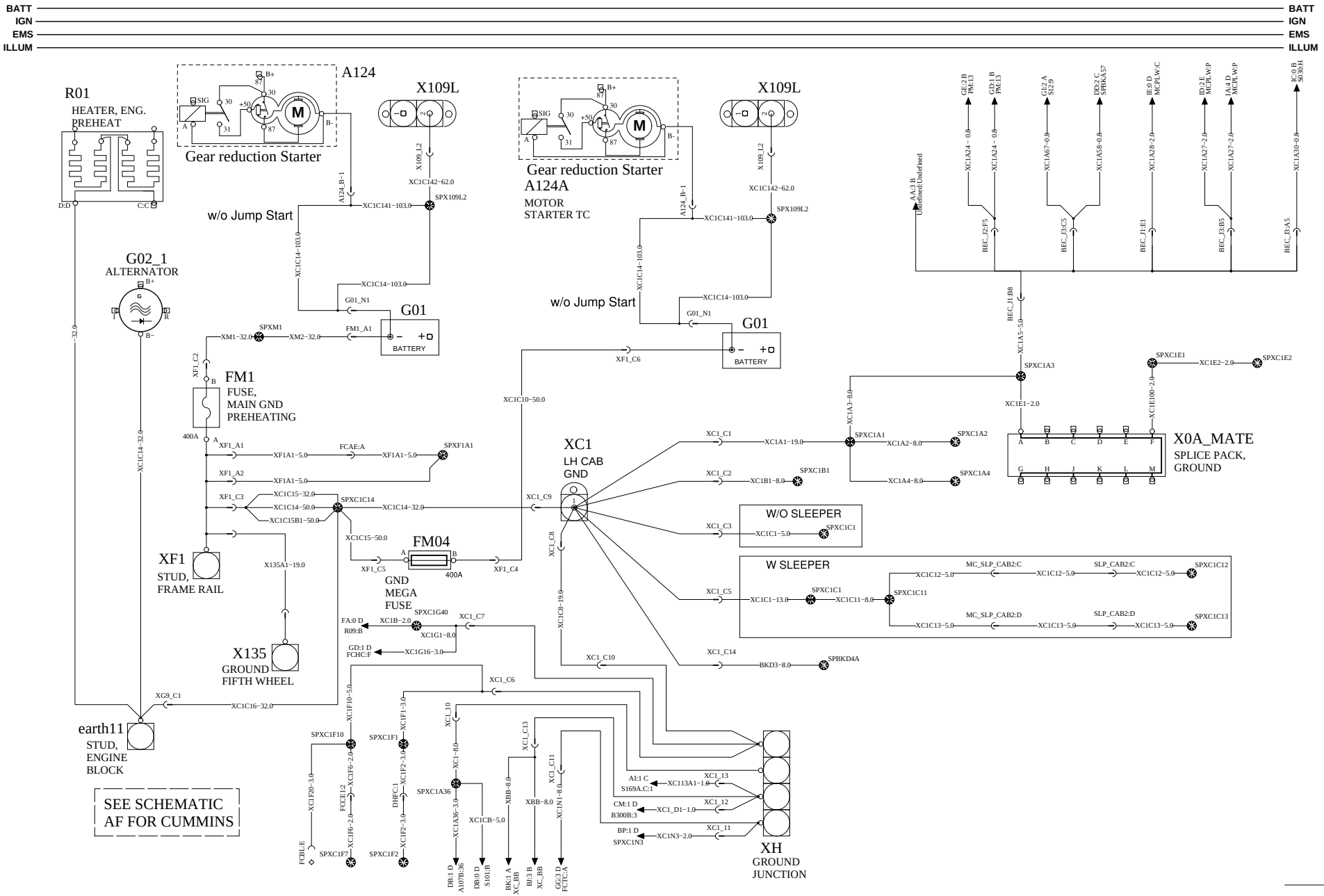

https://truckmanualshub.com/

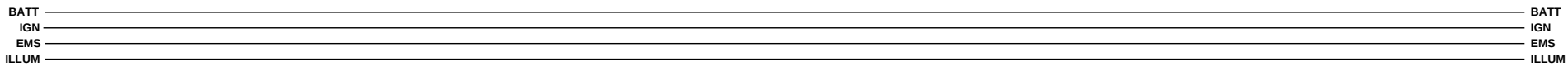

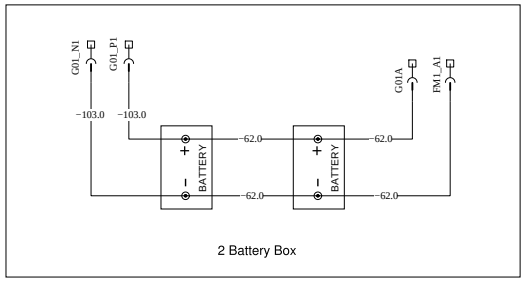

2 Battery Box

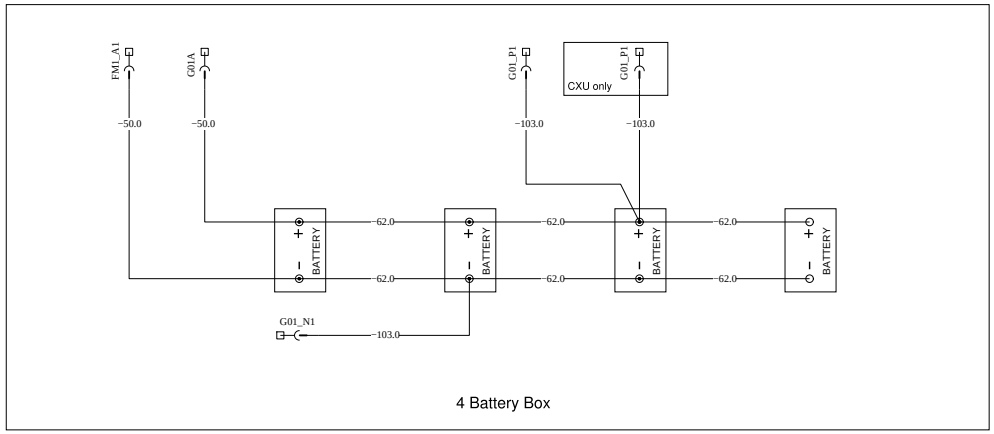

4 Battery Box

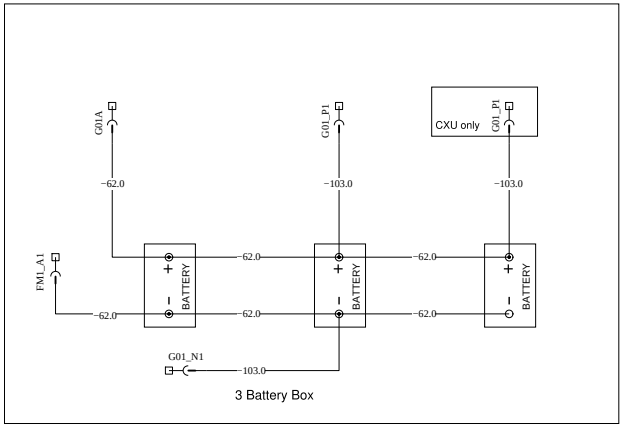

3 Battery Box

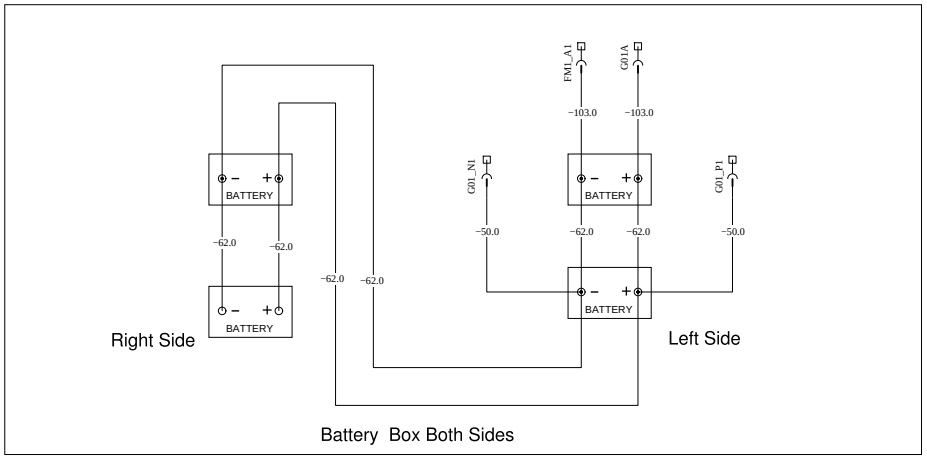

Battery Box Both Sides

https://truckmanualshub.com/

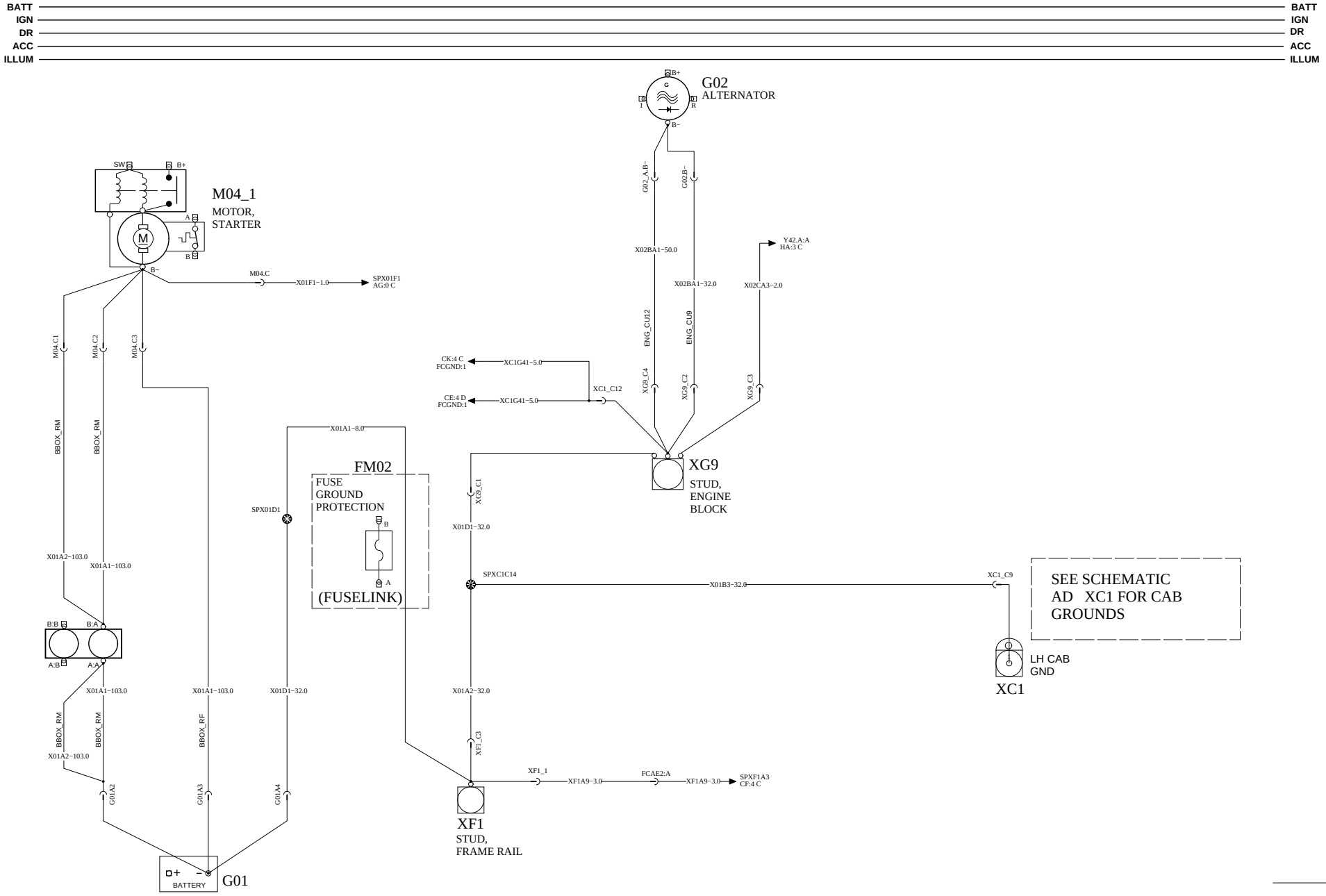

VOLVO Group Trucks Technology	Document title WIRE DIAGRAM-CONVENTIONAL, 12V MACK, 2013BP Document type PRODUCT SCHEMATIC	Document No 21628497	Issue 09	Volume 1 (2)	Page 8 (91)

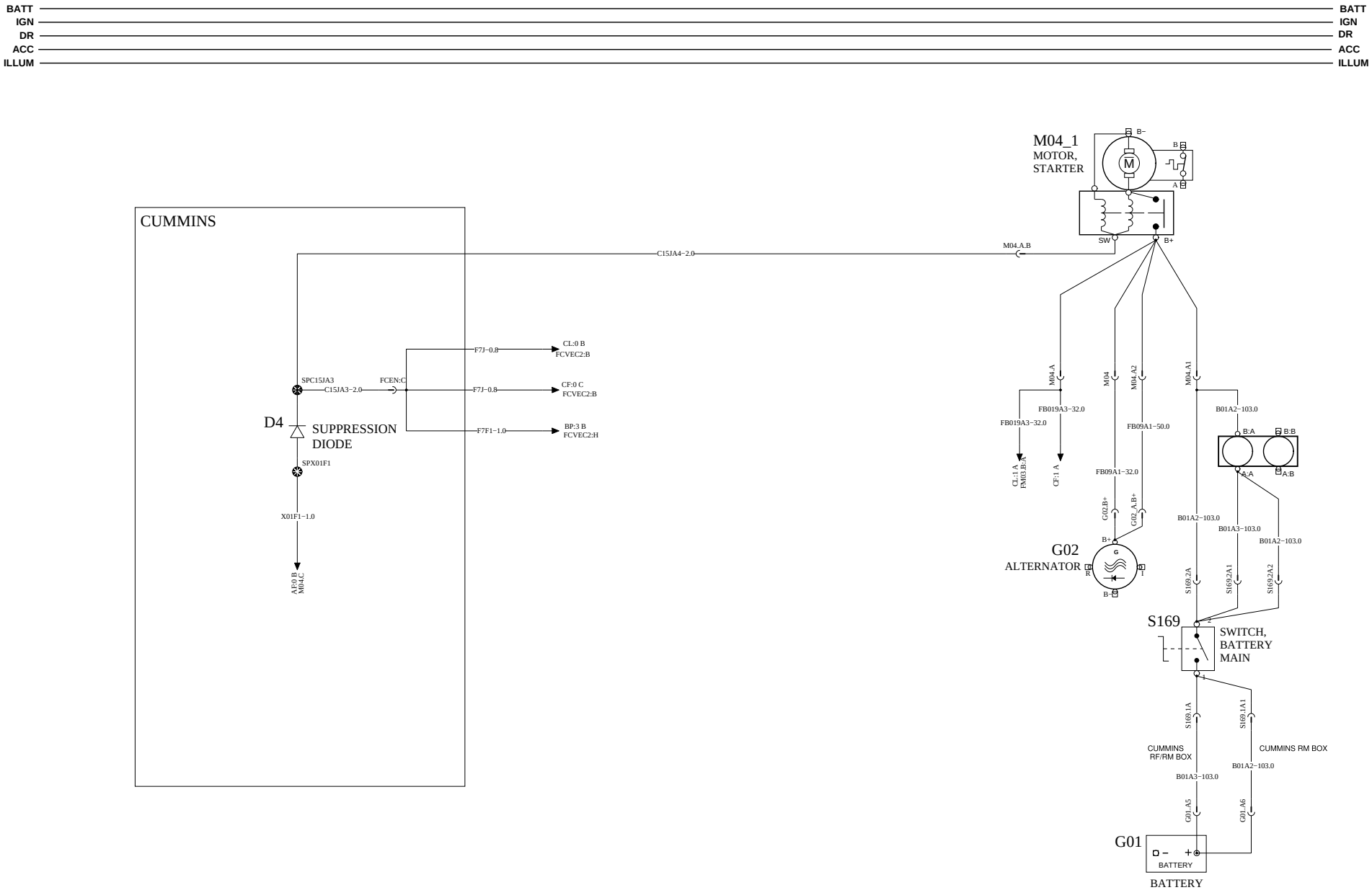
BATT
IGN
DR
ACC
ILLUM
M04_1
MOTOR, STARTER
B−
B:B
A:B
M
SW
B+
M04.A.B
C15JA4−2.0
CUMMINS
SPC15JA3
C15JA3−2.0
FCEN:C
F7J−0.8
CL:0 B
FCVEC2:B
CF:0 C
FCVEC2:B
F7F1−1.0
BP:3 B
FCVEC2:H
D4
SUPPRESSION DIODE
SPX01F1
X01F1−1.0
AF:0 B
M04.C
M04.A
M04
M04.A2
M04.A1
FB019A3−32.0
FB09A1−50.0
B01A2−103.0
B:A
B:B
A:A
A:B
CL:1 A
FM03.B:N
CF:1 A
FB09A1−32.0
G02.B+
G02_A.B+
B01A3−103.0
G02
ALTERNATOR
G
S169.2A
S169.2A1
S169.2A2
S169
SWITCH, BATTERY MAIN
S169.1A
S169.1A1
CUMMINS RF/RM BOX
CUMMINS RM BOX
G01.A5
G01.A6
G01
BATTERY

https://truckmanualshub.com/

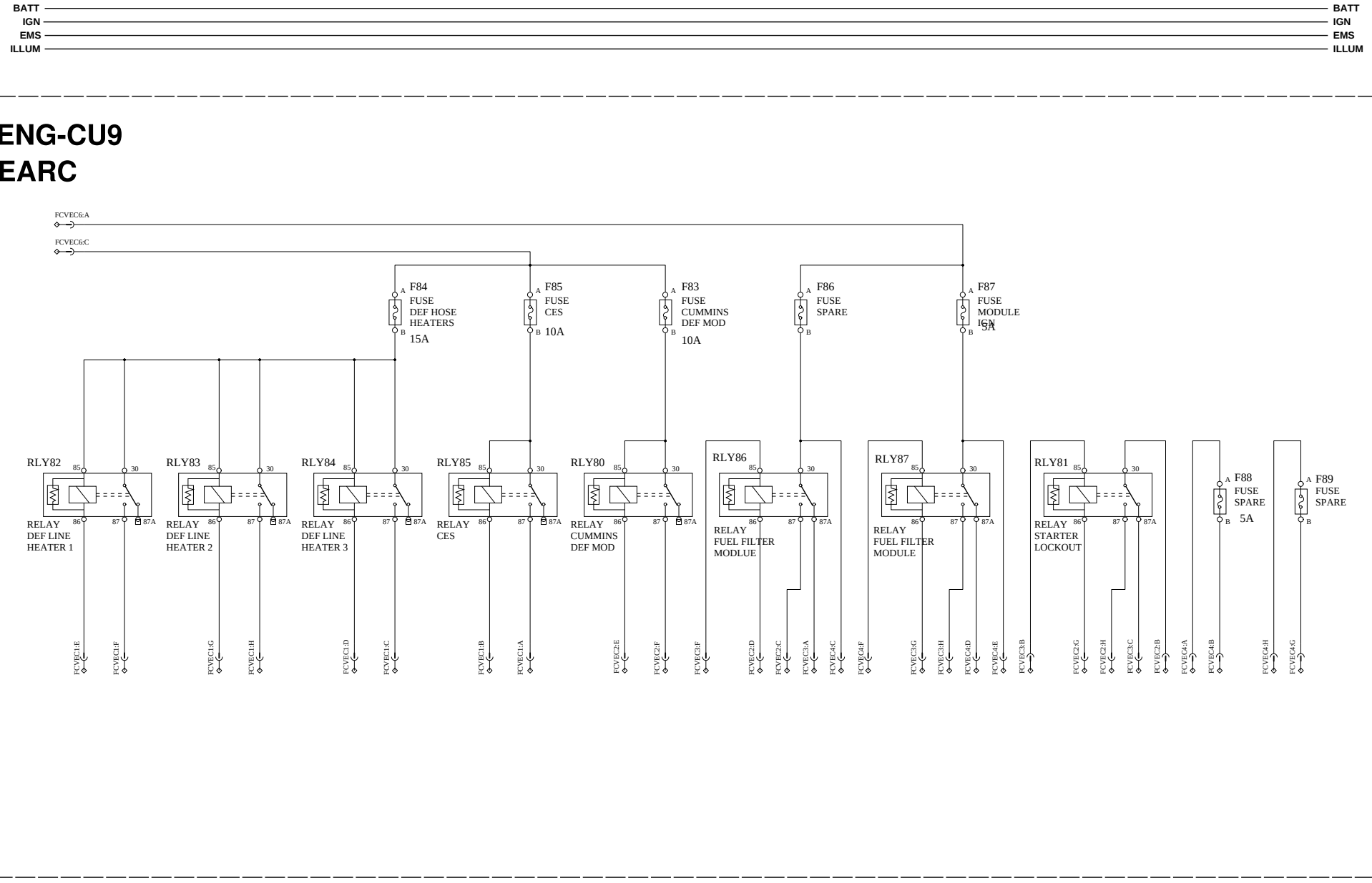

https://truckmanualshub.com/

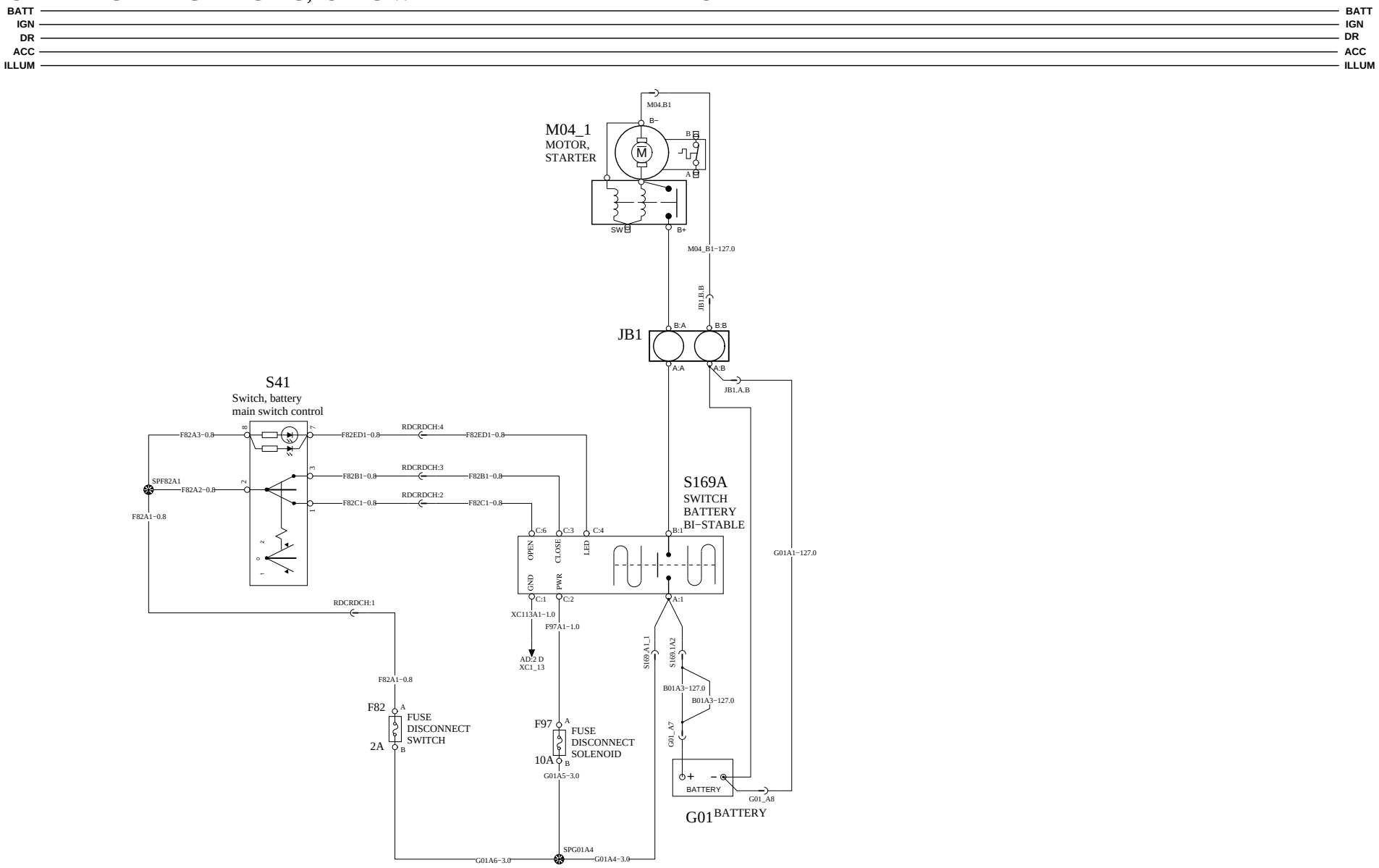

VOLVO Group Trucks Technology	Document title WIRE DIAGRAM-CONVENTIONAL, 12V MACK, 2013BP Document type PRODUCT SCHEMATIC	Document No 21628497	Issue 09	Volume 1 (2)	Page 11 (91)

VEHICLE ECU 1/4

https://truckmanualshub.com/

WIRING DIAGRAM: BA

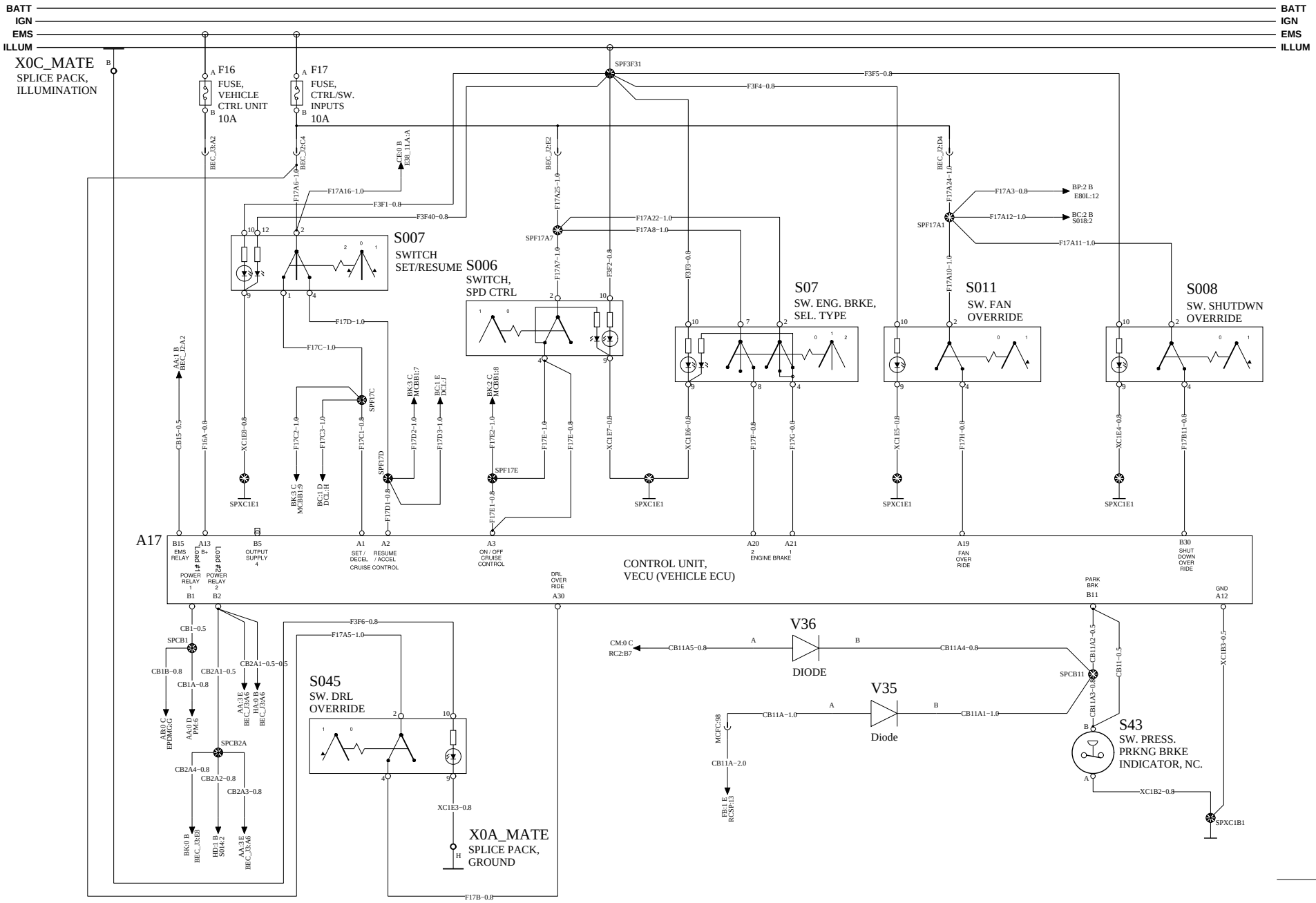

VOLVO Group Trucks Technology	Document title WIRE DIAGRAM-CONVENTIONAL, 12V MACK, 2013BP Document type PRODUCT SCHEMATIC	Document No 21628497	Issue 09	Volume 1 (2)	Page 12 (91)

https://truckmanualshub.com/

WIRING DIAGRAM: BB

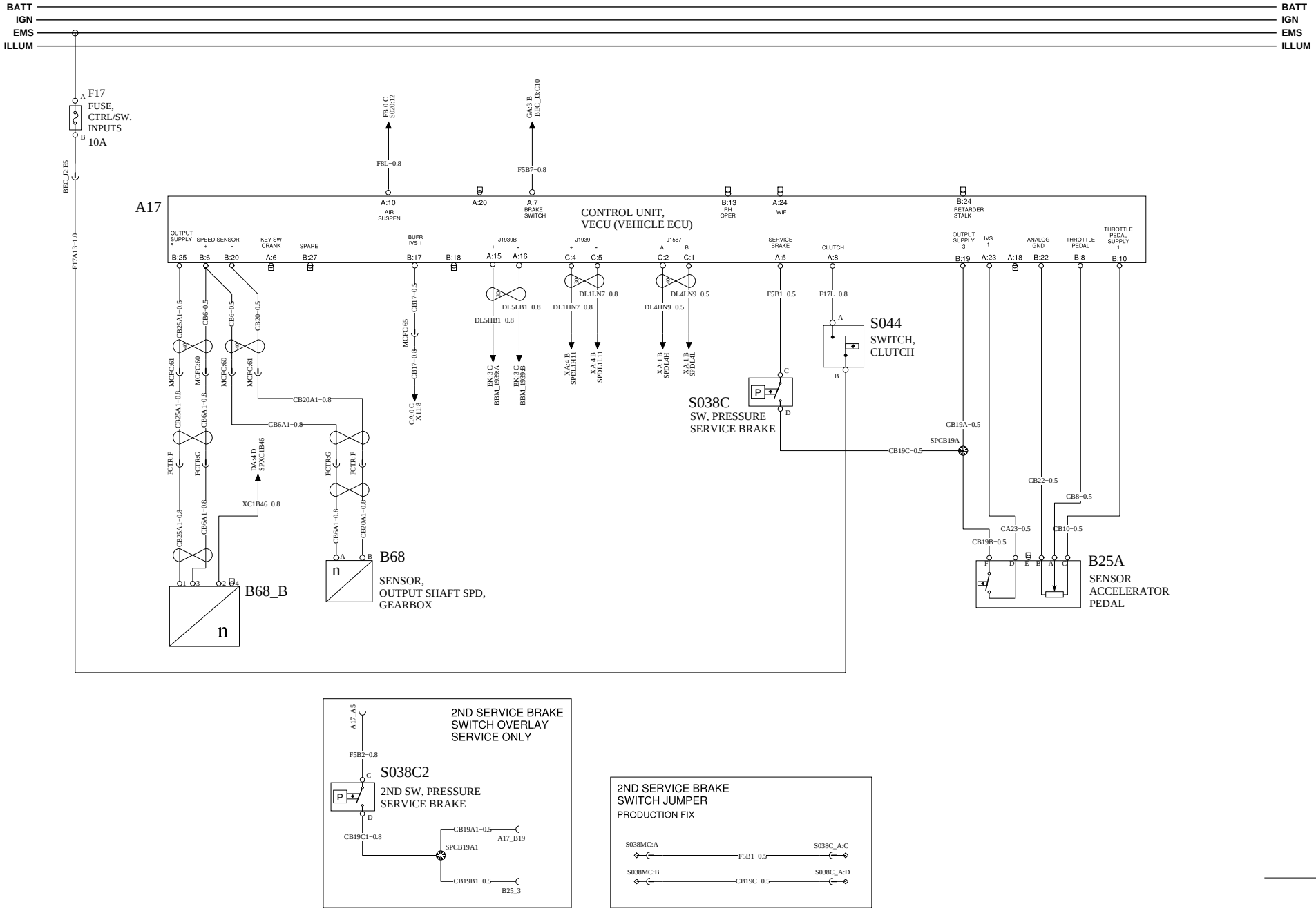

VOLVO Group Trucks Technology	Document title WIRE DIAGRAM-CONVENTIONAL, 12V MACK, 2013BP Document type PRODUCT SCHEMATIC	Document No 21628497	Issue 09	Volume 1 (2)	Page 13 (91)

VEHICLE ECU 3/4 − DCL CONNECTOR

https://truckmanualshub.com/

WIRING DIAGRAM: BC

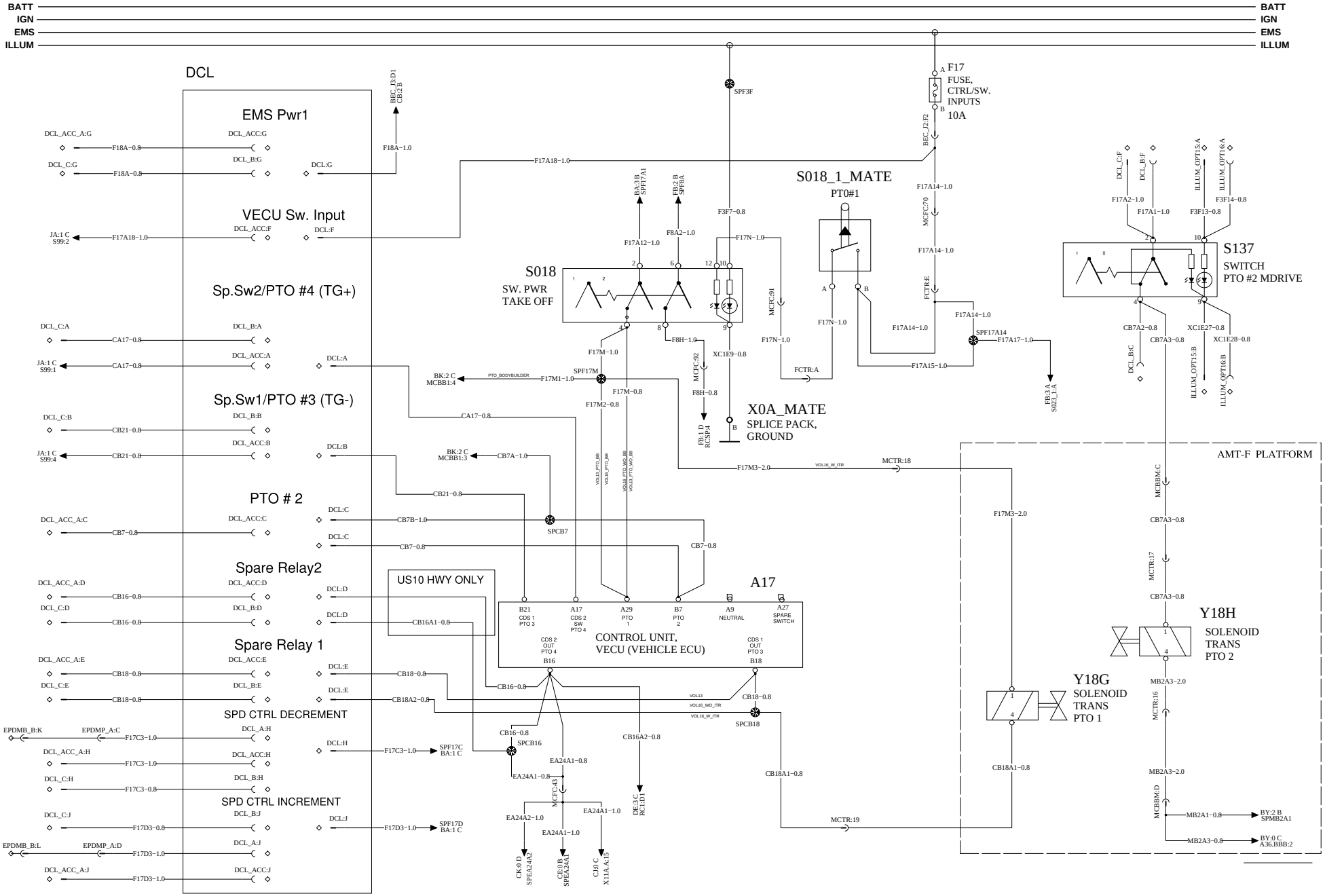

VOLVO Group Trucks Technology	Document title WIRE DIAGRAM-CONVENTIONAL, 12V MACK, 2013BP Document type PRODUCT SCHEMATIC	Document No 21628497	Issue 09	Volume 1 (2)	Page 14 (91)

https://truckmanualshub.com/

WIRING DIAGRAM: BD

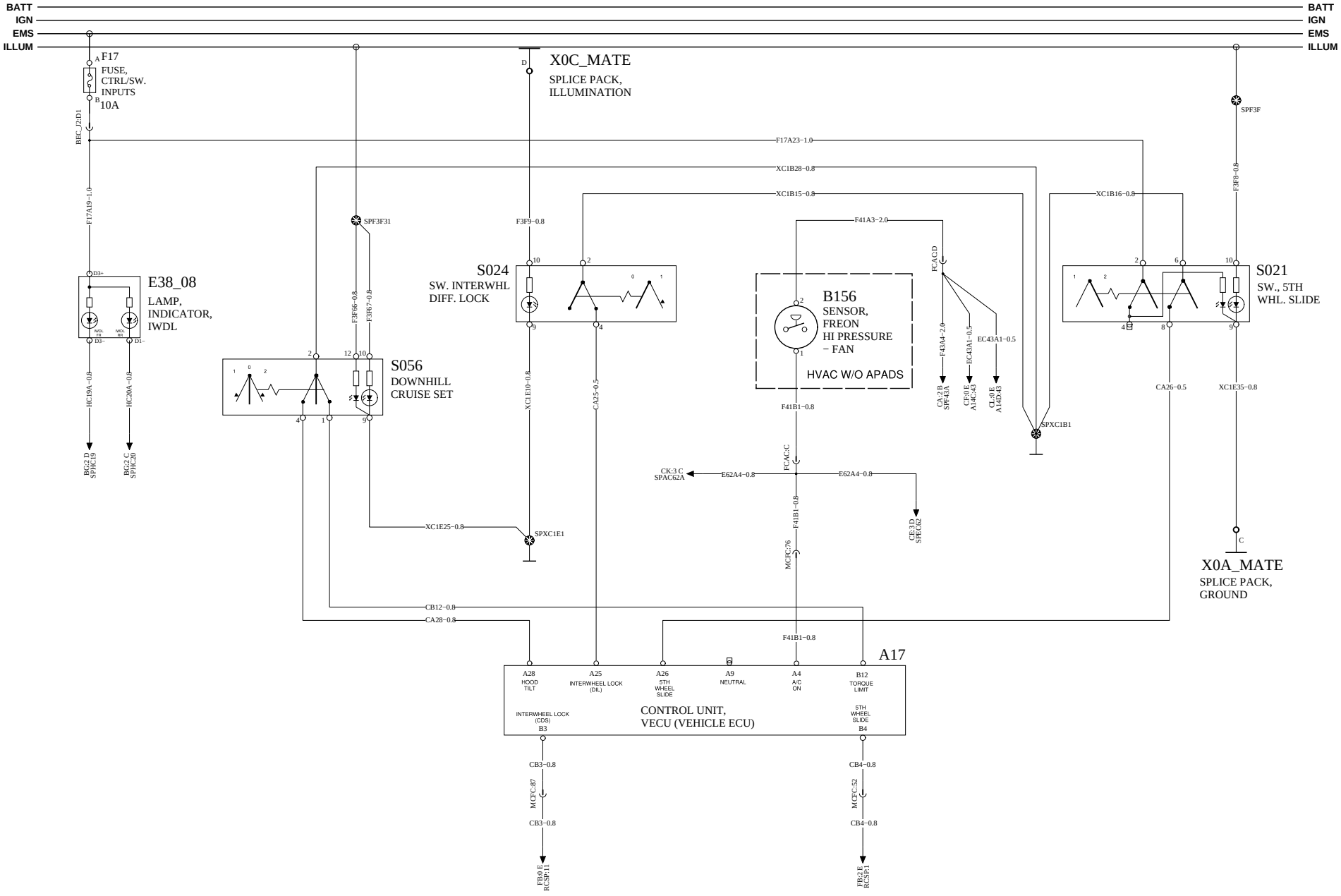

VOLVO Group Trucks Technology	Document title WIRE DIAGRAM-CONVENTIONAL, 12V MACK, 2013BP Document type PRODUCT SCHEMATIC	Document No 21628497	Issue 09	Volume 1 (2)	Page 15 (91)

INSTRUMENT CLUSTER 1/3

https://truckmanualshub.com/

WIRING DIAGRAM: BE

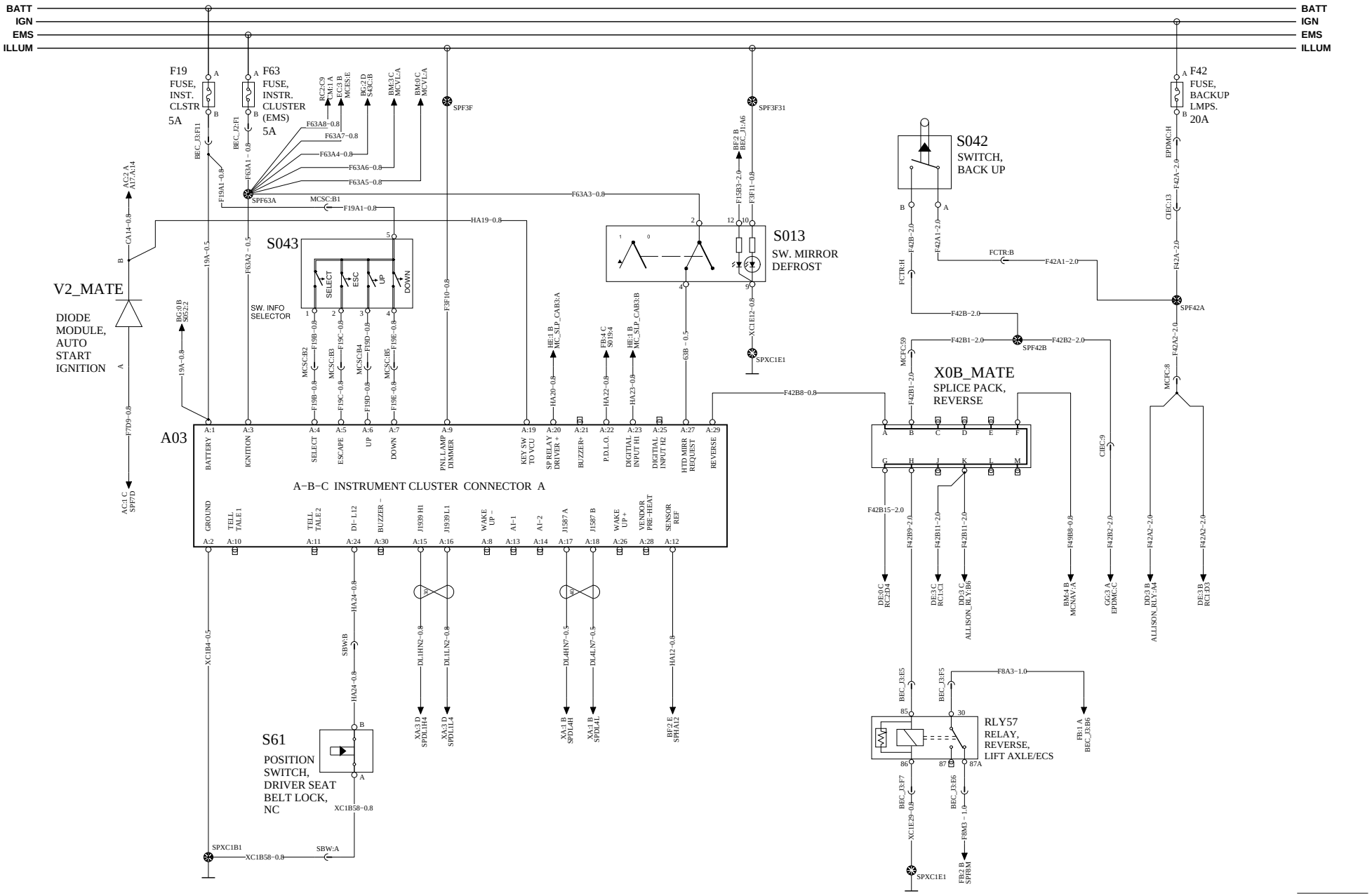

VOLVO Group Trucks Technology	Document title WIRE DIAGRAM-CONVENTIONAL, 12V MACK, 2013BP Document type PRODUCT SCHEMATIC	Document No 21628497	Issue 09	Volume 1 (2)	Page 16 (91)

https://truckmanualshub.com/

WIRING DIAGRAM: BF

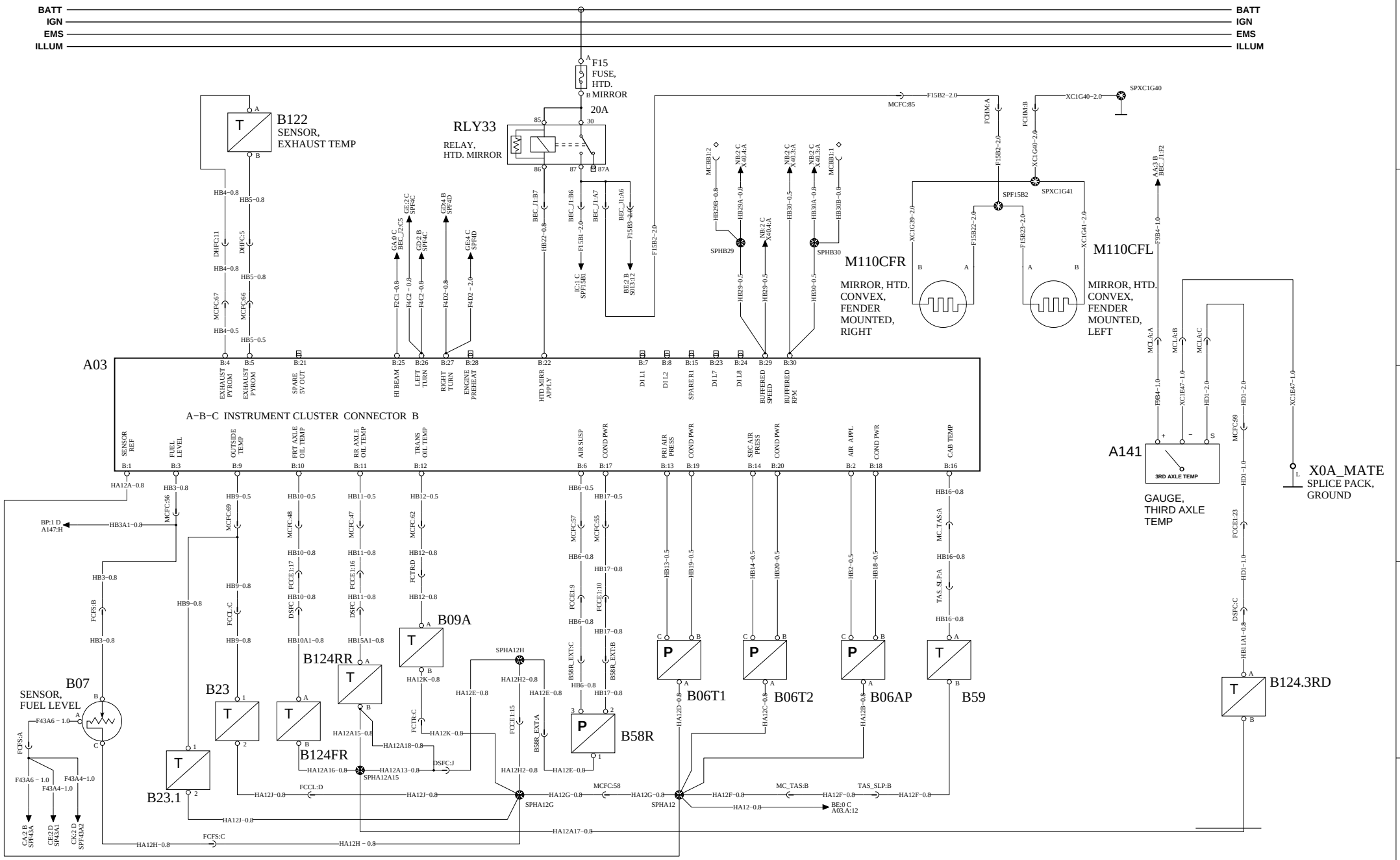

https://truckmanualshub.com/

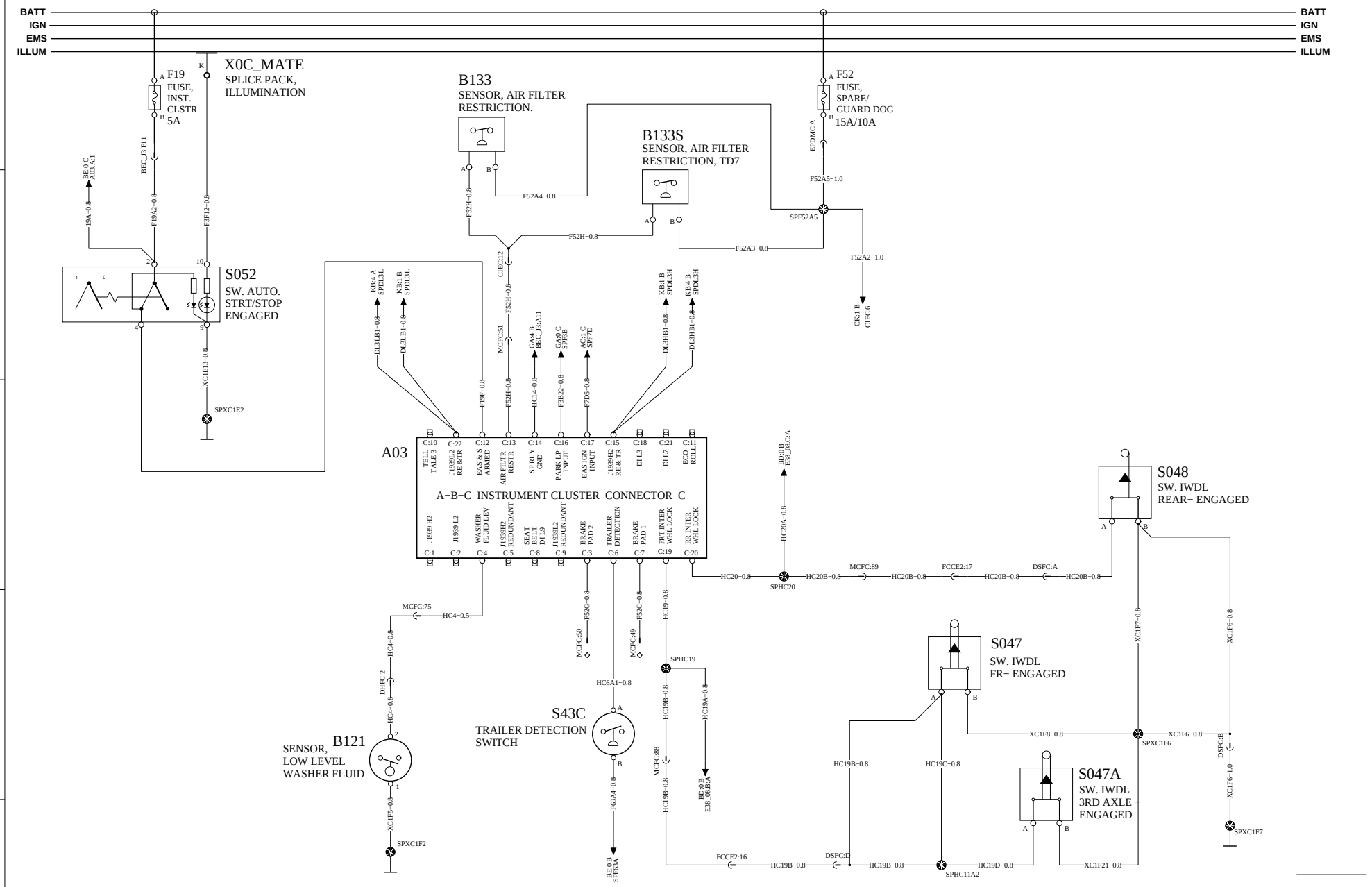

VOLVO Group Trucks Technology	Document title WIRE DIAGRAM-CONVENTIONAL, 12V MACK, 2013BP Document type PRODUCT SCHEMATIC	Document No 21628497	Issue 09	Volume 1 (2)	Page 18 (91)

ALLISON BODY BULDER INTERFACE

https://truckmanualshub.com/

WIRING DIAGRAM: BH

BATT — BATT
IGN — IGN
EMS — EMS
ILLUM — ILLUM

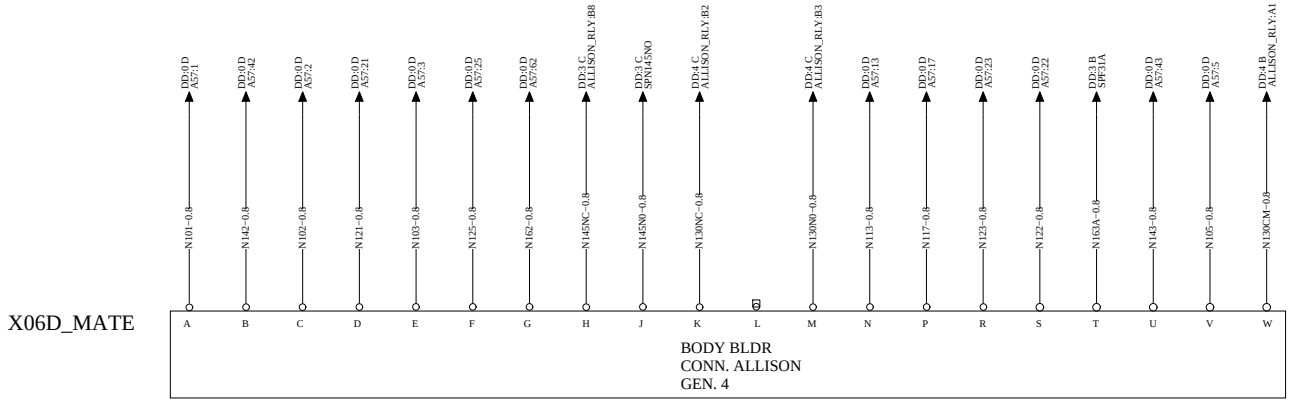

INSIDE−OUTSIDE AIR TEMP. GAUGE

https://truckmanualshub.com/

WIRING DIAGRAM: BI

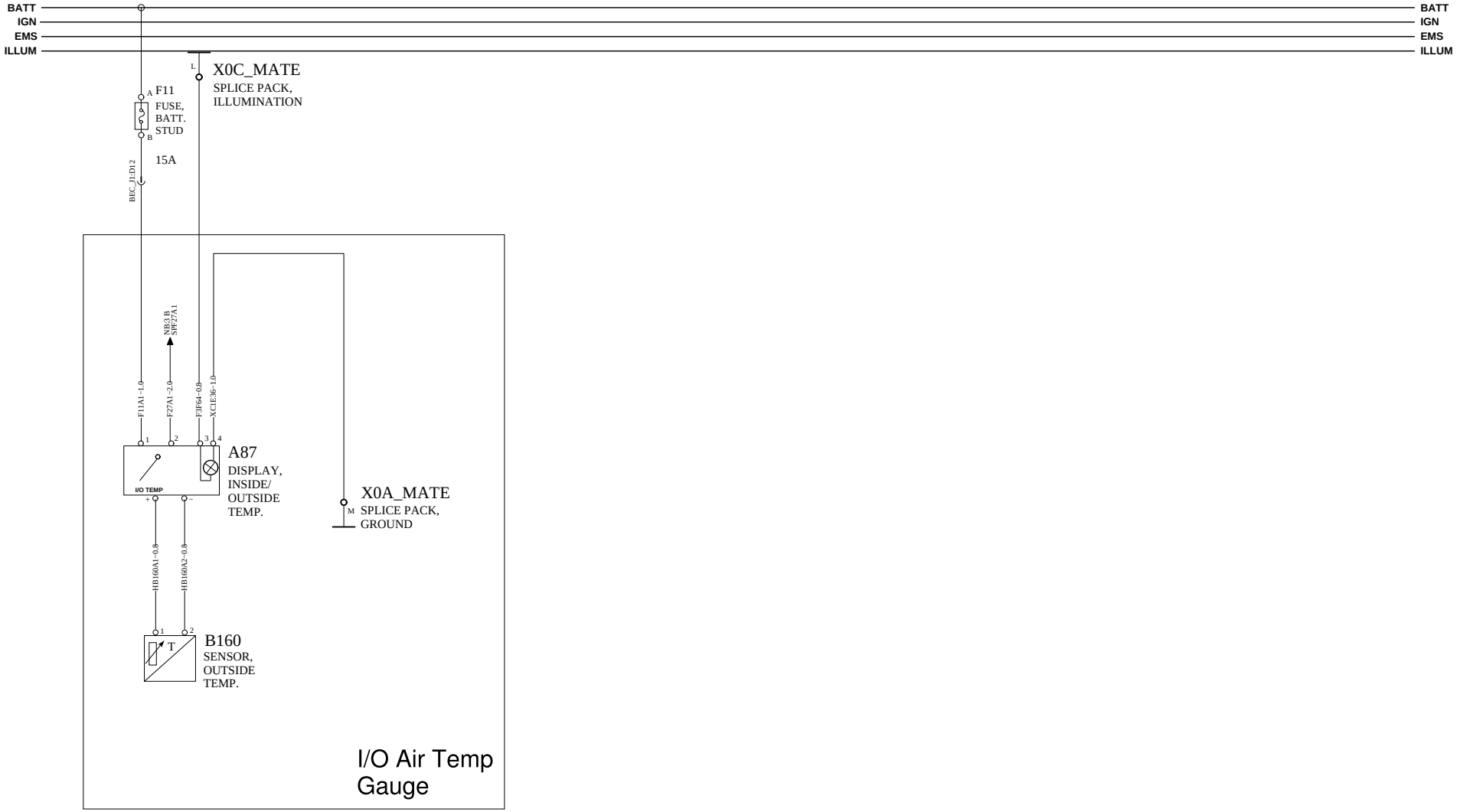

VOLVO Group Trucks Technology	Document title: WIRE DIAGRAM-CONVENTIONAL, 12V MACK, 2013BP Document type: PRODUCT SCHEMATIC	Document No: 21628497	Issue: 09	Volume: 1 (2)	Page: 20 (91)

BODY BULDER CIRCUITS − OPTIONAL WIRING

https://truckmanualshub.com/

WIRING DIAGRAM: BJ

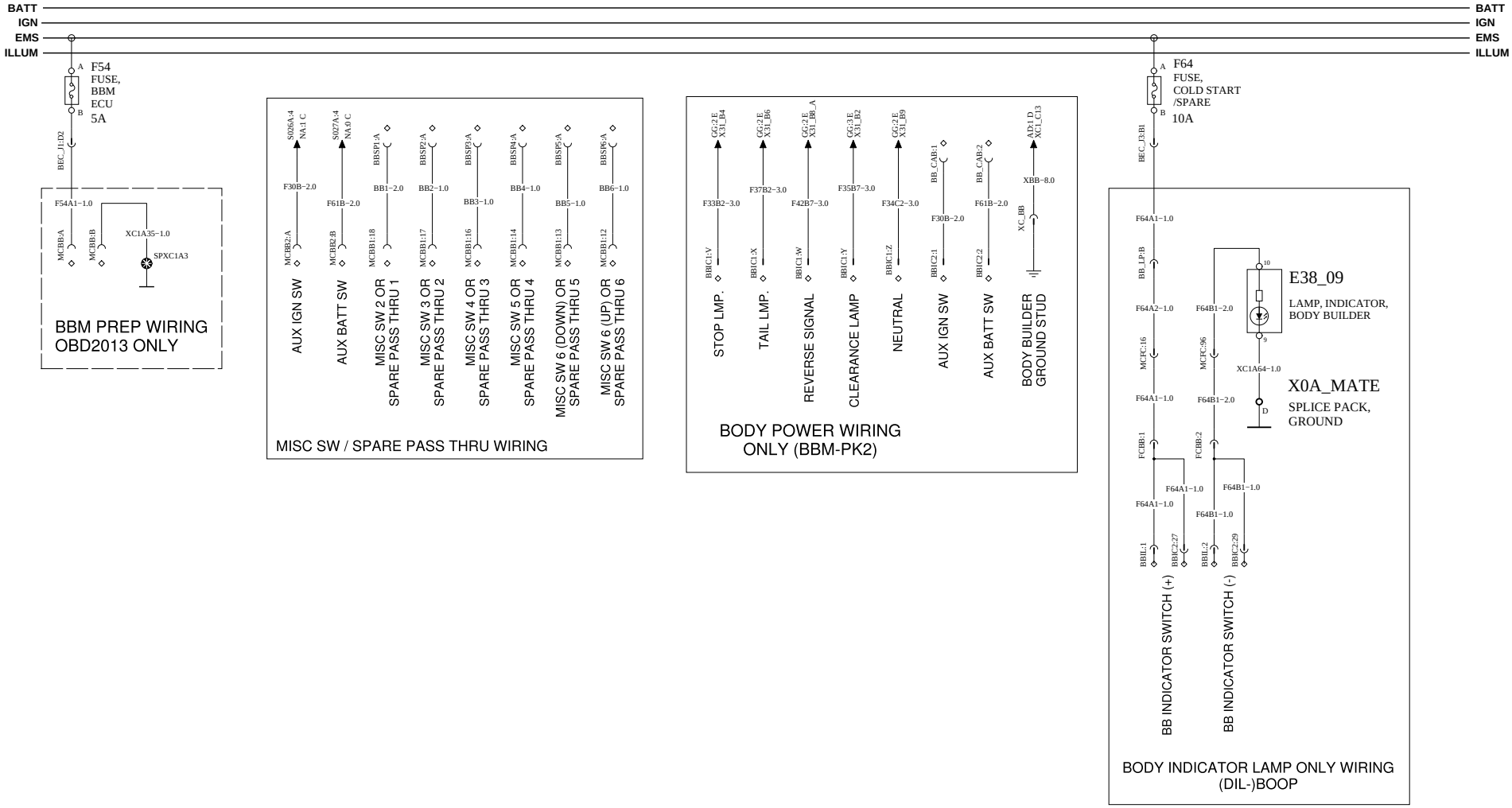

VOLVO Group Trucks Technology	Document title WIRE DIAGRAM-CONVENTIONAL, 12V MACK, 2013BP Document type PRODUCT SCHEMATIC	Document No 21628497	Issue 09	Volume 1 (2)	Page 21 (91)

https://truckmanualshub.com/

WIRING DIAGRAM: BK

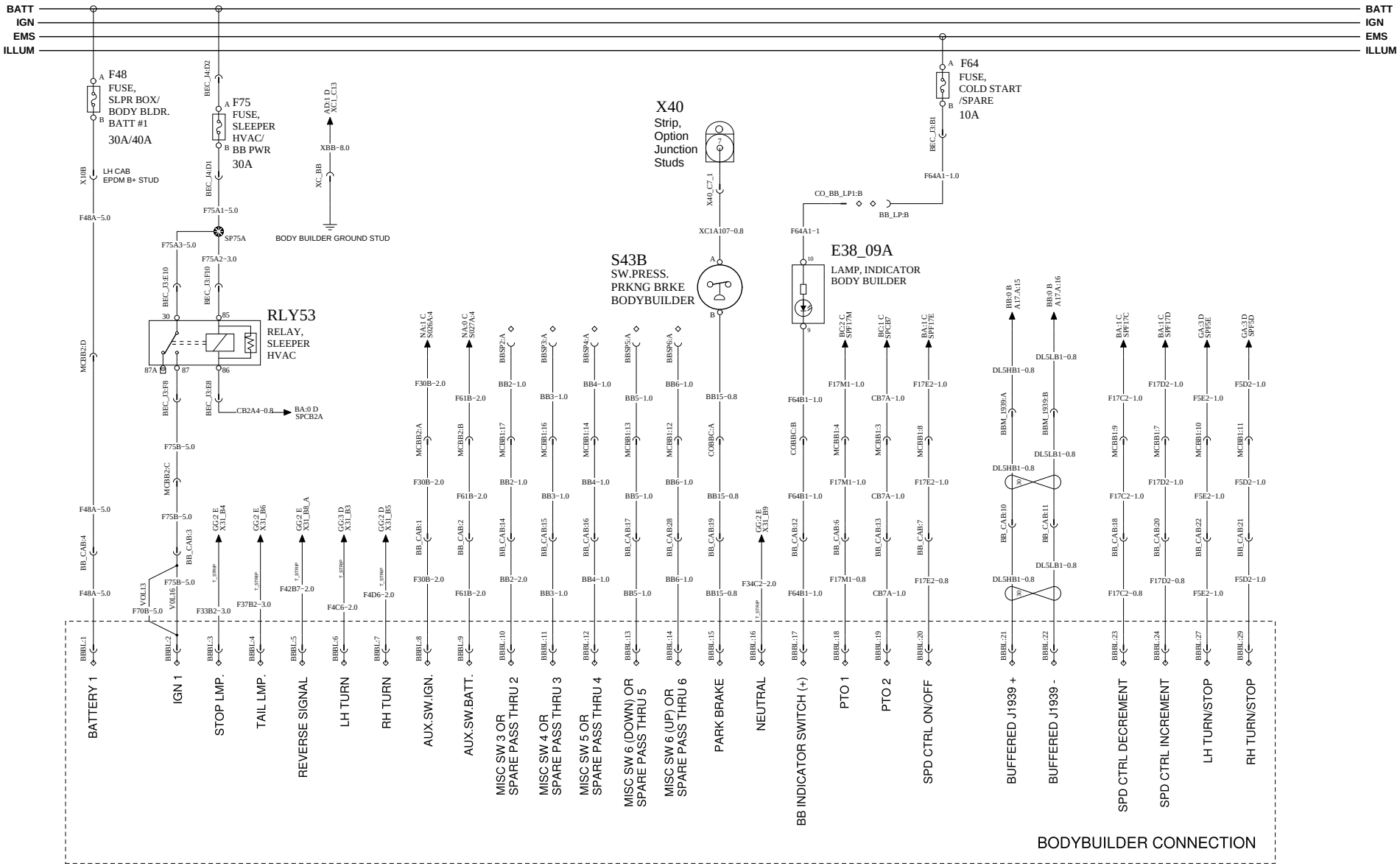

VOLVO Group Trucks Technology	Document title WIRE DIAGRAM-CONVENTIONAL, 12V MACK, 2013BP Document type PRODUCT SCHEMATIC	Document No 21628497	Issue 09	Volume 1 (2)	Page 22 (91)

TELEMATICS GATEWAY (TGW)

https://truckmanualshub.com/

WIRING DIAGRAM: BM

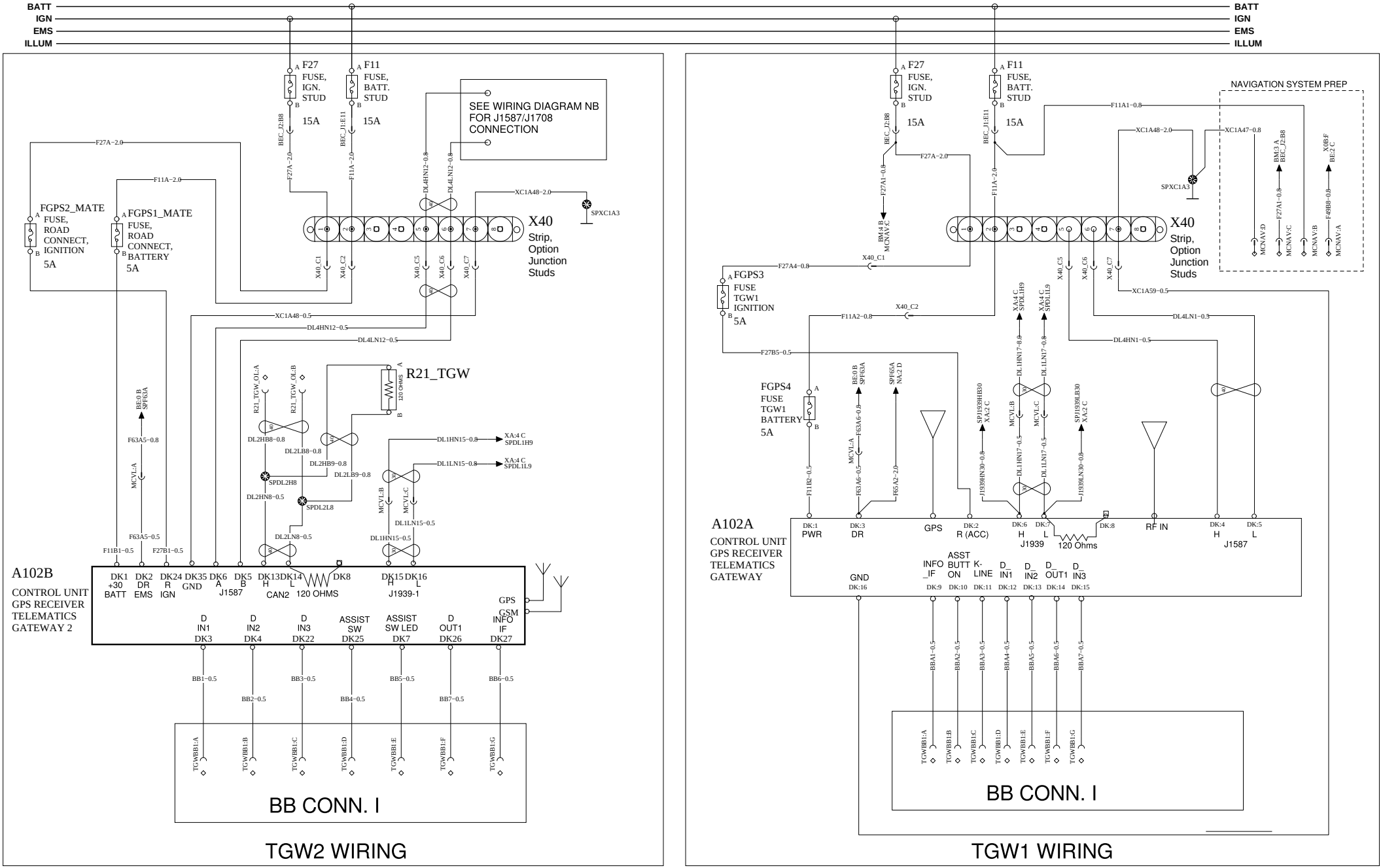

VOLVO Group Trucks Technology	Document title: WIRE DIAGRAM-CONVENTIONAL, 12V MACK, 2013BP Document type: PRODUCT SCHEMATIC	Document No: 21628497	Issue: 09	Volume: 1 (2)	Page: 23 (91)

https://truckmanualshub.com/

WIRING DIAGRAM: BN

BATT
IGN
EMS
ILLUM

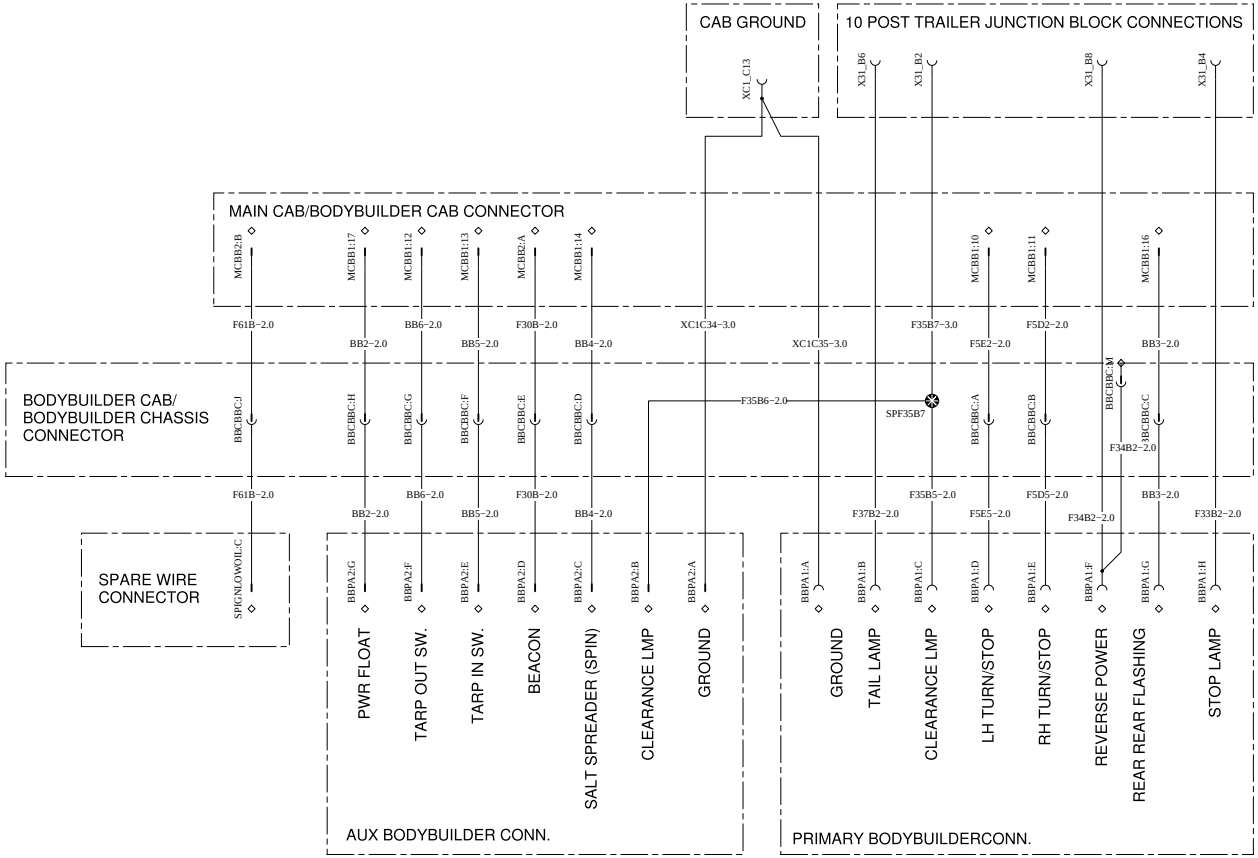

ISX−G FUEL SYSTEM

https://truckmanualshub.com/

WIRING DIAGRAM : BP

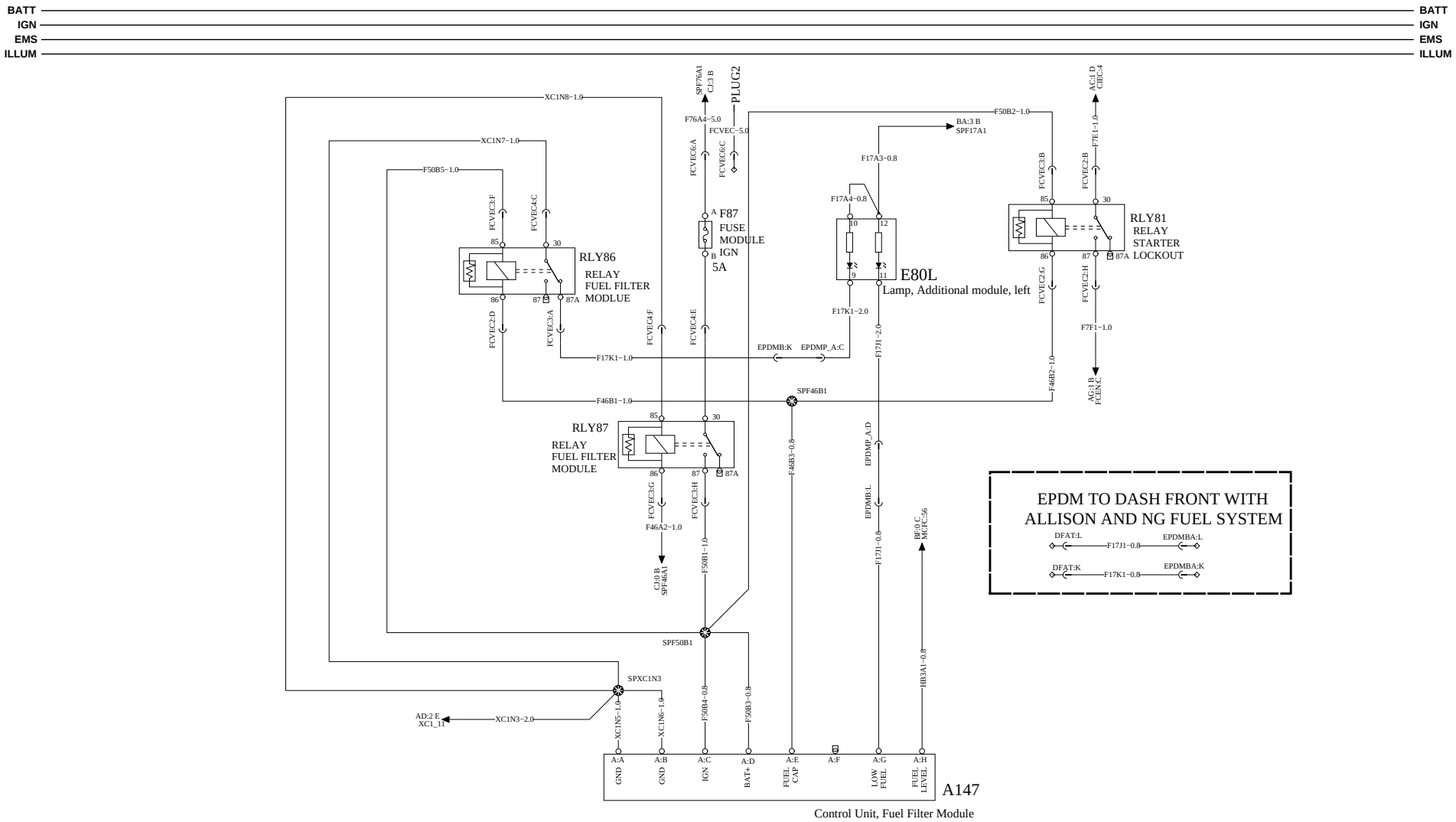

VOLVO Group Trucks Technology	Document title WIRE DIAGRAM-CONVENTIONAL, 12V MACK, 2013BP Document type PRODUCT SCHEMATIC	Document No 21628497	Issue 09	Volume 1 (2)	Page 25 (91)

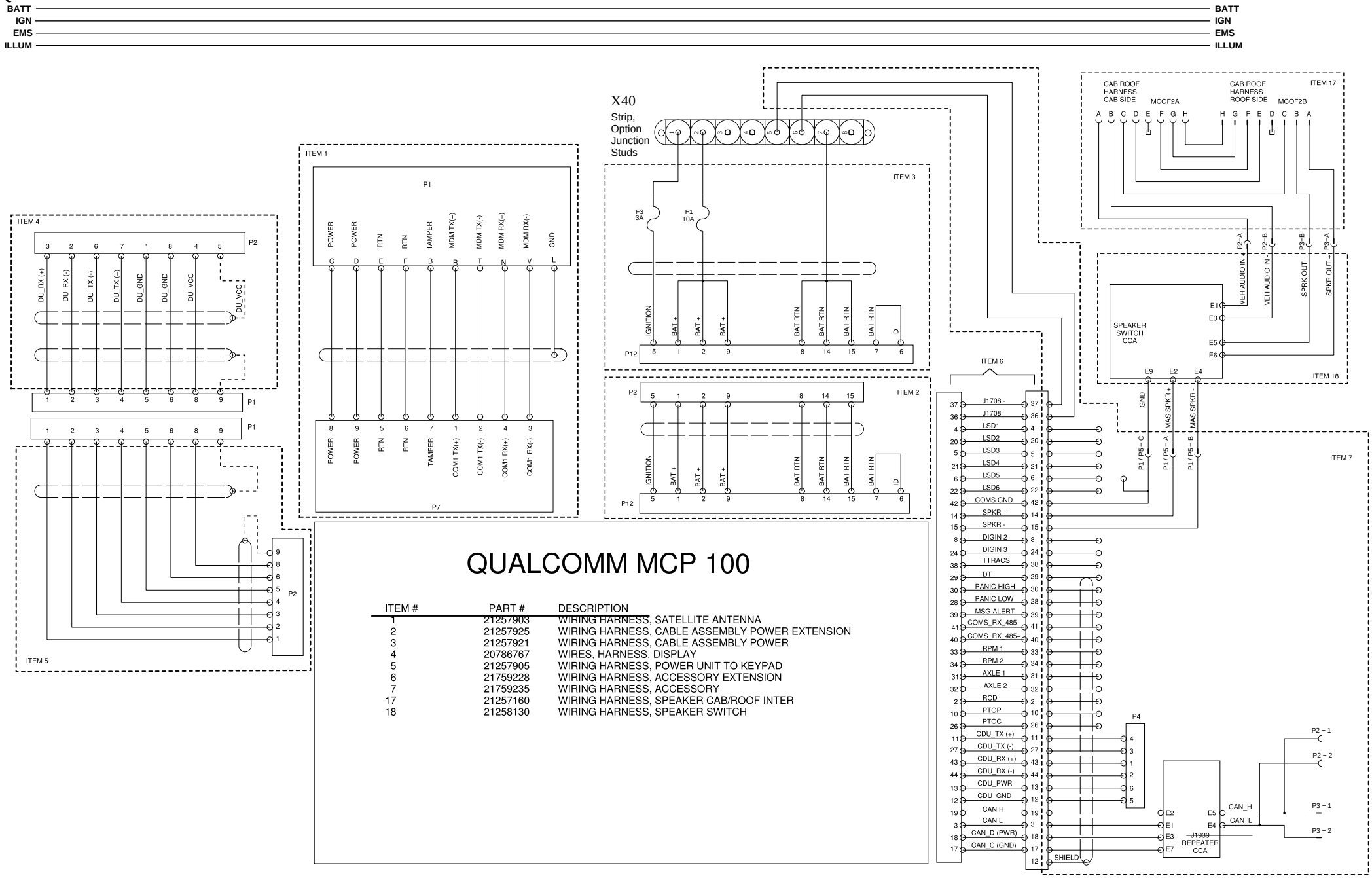

QUALCOMM MCP 100

ITEM #	PART #	DESCRIPTION
1	21257903	WIRING HARNESS, SATELLITE ANTENNA
2	21257925	WIRING HARNESS, CABLE ASSEMBLY POWER EXTENSION
3	21257921	WIRING HARNESS, CABLE ASSEMBLY POWER
4	20786767	WIRES, HARNESS, DISPLAY
5	21257905	WIRING HARNESS, POWER UNIT TO KEYPAD
6	21759228	WIRING HARNESS, ACCESSORY EXTENSION
7	21759235	WIRING HARNESS, ACCESSORY
17	21257160	WIRING HARNESS, SPEAKER CAB/ROOF INTER
18	21258130	WIRING HARNESS, SPEAKER SWITCH

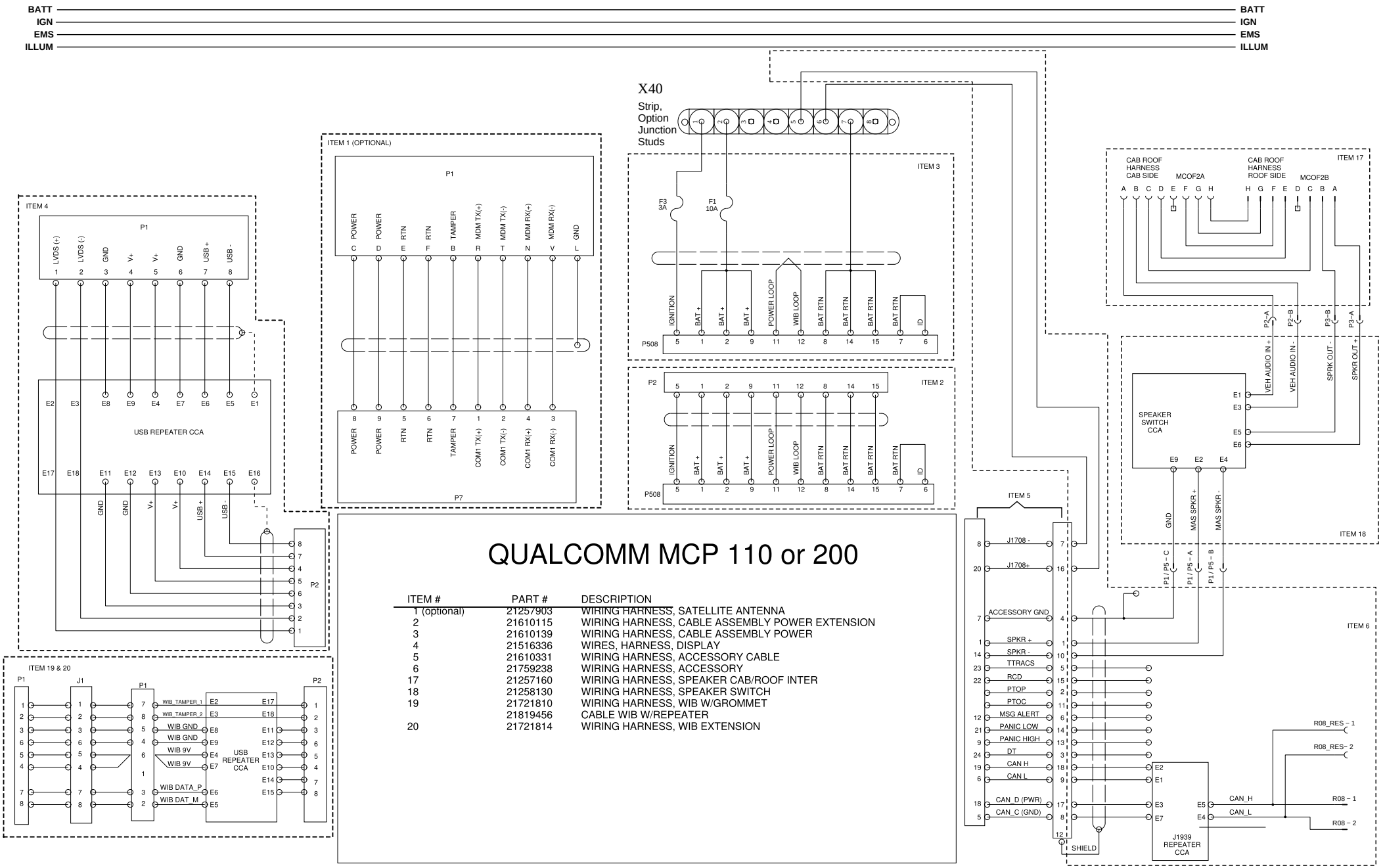

ITEM #	PART #	DESCRIPTION
1 (optional)	21257903	WIRING HARNESS, SATELLITE ANTENNA
2	21610115	WIRING HARNESS, CABLE ASSEMBLY POWER EXTENSION
3	21610139	WIRING HARNESS, CABLE ASSEMBLY POWER
4	21516336	WIRES, HARNESS, DISPLAY
5	21610331	WIRING HARNESS, ACCESSORY CABLE
6	21759238	WIRING HARNESS, ACCESSORY
17	21257160	WIRING HARNESS, SPEAKER CAB/ROOF INTER
18	21258130	WIRING HARNESS, SPEAKER SWITCH
19	21721810	WIRING HARNESS, WIB W/GROMMET
	21819456	CABLE WIB W/REPEATER
20	21721814	WIRING HARNESS, WIB EXTENSION

https://truckmanualshub.com/

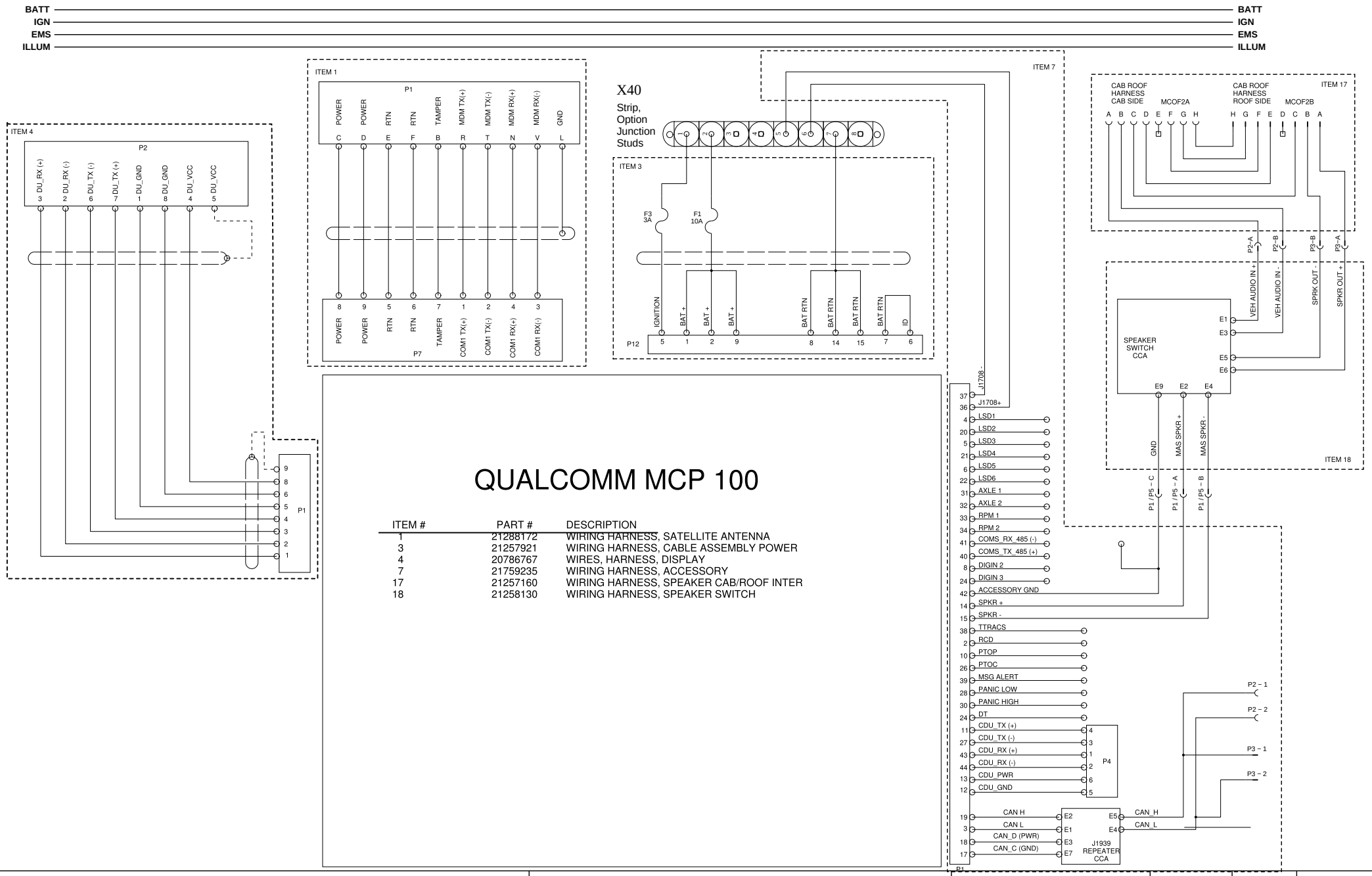

QUALCOMM MCP 100

ITEM #	PART #	DESCRIPTION
1	21288172	WIRING HARNESS, SATELLITE ANTENNA
3	21257921	WIRING HARNESS, CABLE ASSEMBLY POWER
4	20786767	WIRES, HARNESS, DISPLAY
7	21759235	WIRING HARNESS, ACCESSORY
17	21257160	WIRING HARNESS, SPEAKER CAB/ROOF INTER
18	21258130	WIRING HARNESS, SPEAKER SWITCH

QUALCOMM MCP 110 & 200 W/DAYCAB

https://truckmanualshub.com/

WIRING DIAGRAM: BX

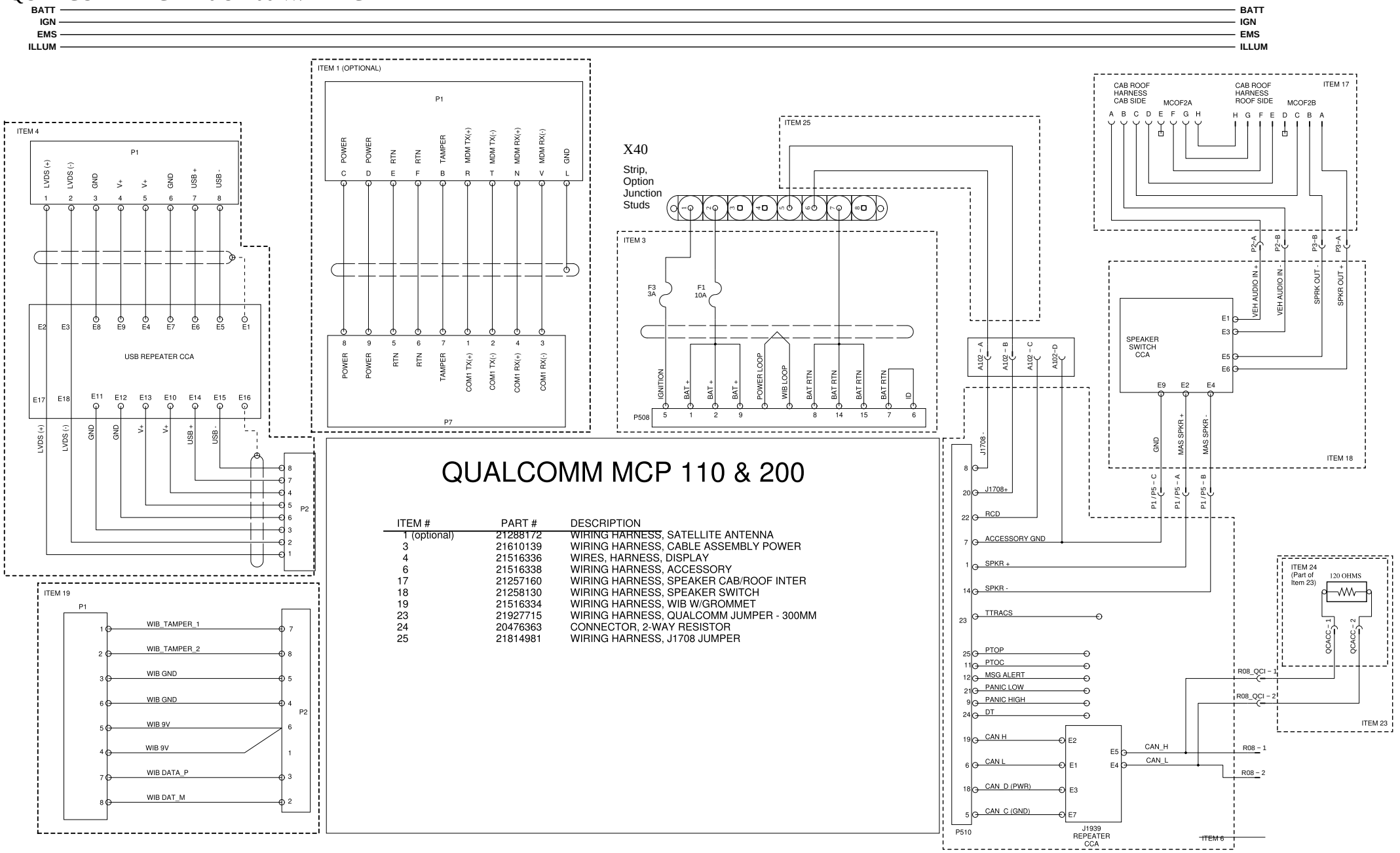

QUALCOMM MCP 110 & 200

ITEM #	PART #	DESCRIPTION
1 (optional)	21288172	WIRING HARNESS, SATELLITE ANTENNA
3	21610139	WIRING HARNESS, CABLE ASSEMBLY POWER
4	21516336	WIRES, HARNESS, DISPLAY
6	21516338	WIRING HARNESS, ACCESSORY
17	21257160	WIRING HARNESS, SPEAKER CAB/ROOF INTER
18	21258130	WIRING HARNESS, SPEAKER SWITCH
19	21516334	WIRING HARNESS, WIB W/GROMMET
23	21927715	WIRING HARNESS, QUALCOMM JUMPER - 300MM
24	20476363	CONNECTOR, 2-WAY RESISTOR
25	21814981	WIRING HARNESS, J1708 JUMPER

BBM

https://truckmanualshub.com/

WIRING DIAGRAM: BY

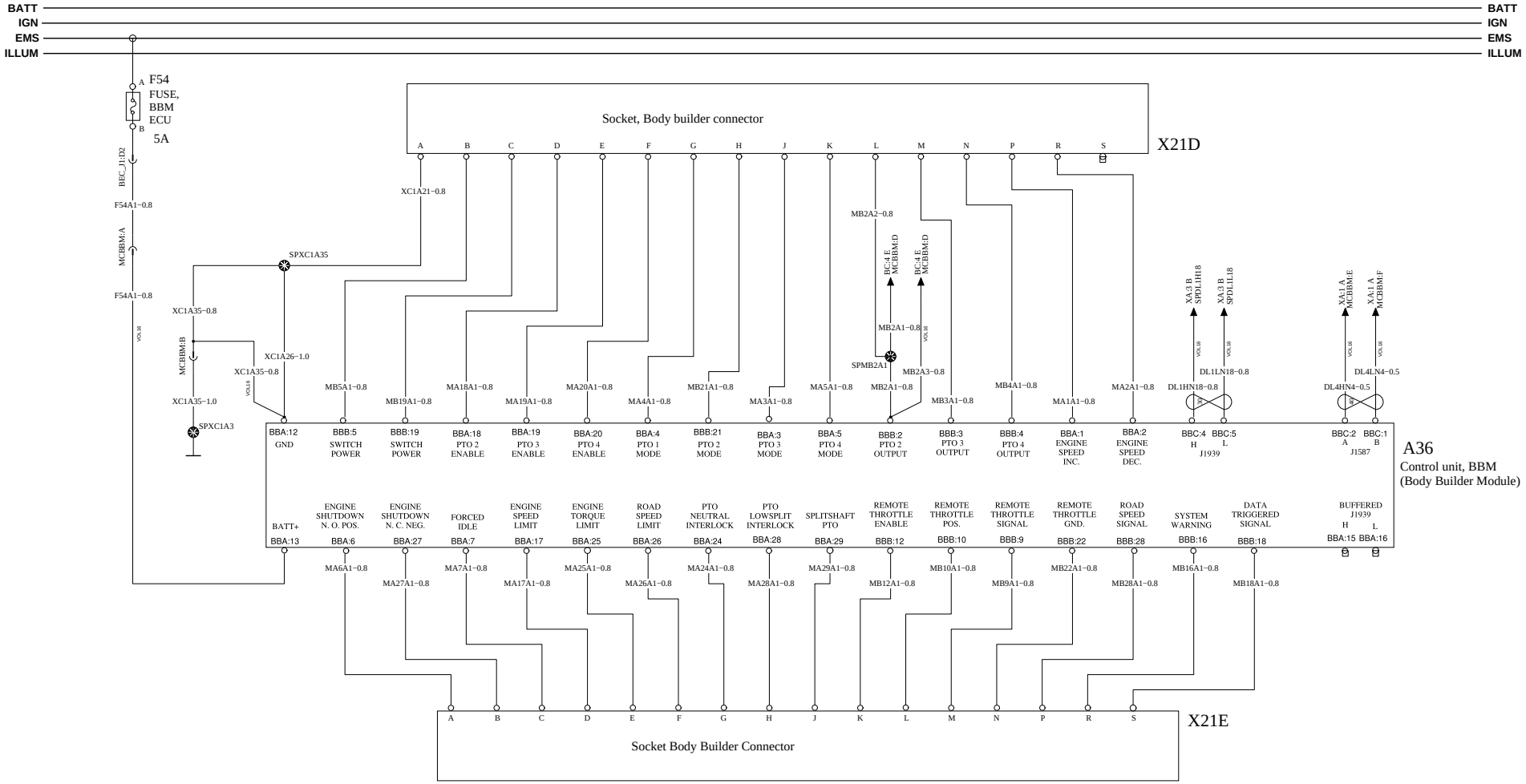

VOLVO Group Trucks Technology	Document title WIRE DIAGRAM-CONVENTIONAL, 12V MACK, 2013BP Document type PRODUCT SCHEMATIC	Document No 21628497	Issue 09	Volume 1 (2)	Page 30 (91)

https://truckmanualshub.com/

WIRING DIAGRAM: BZ

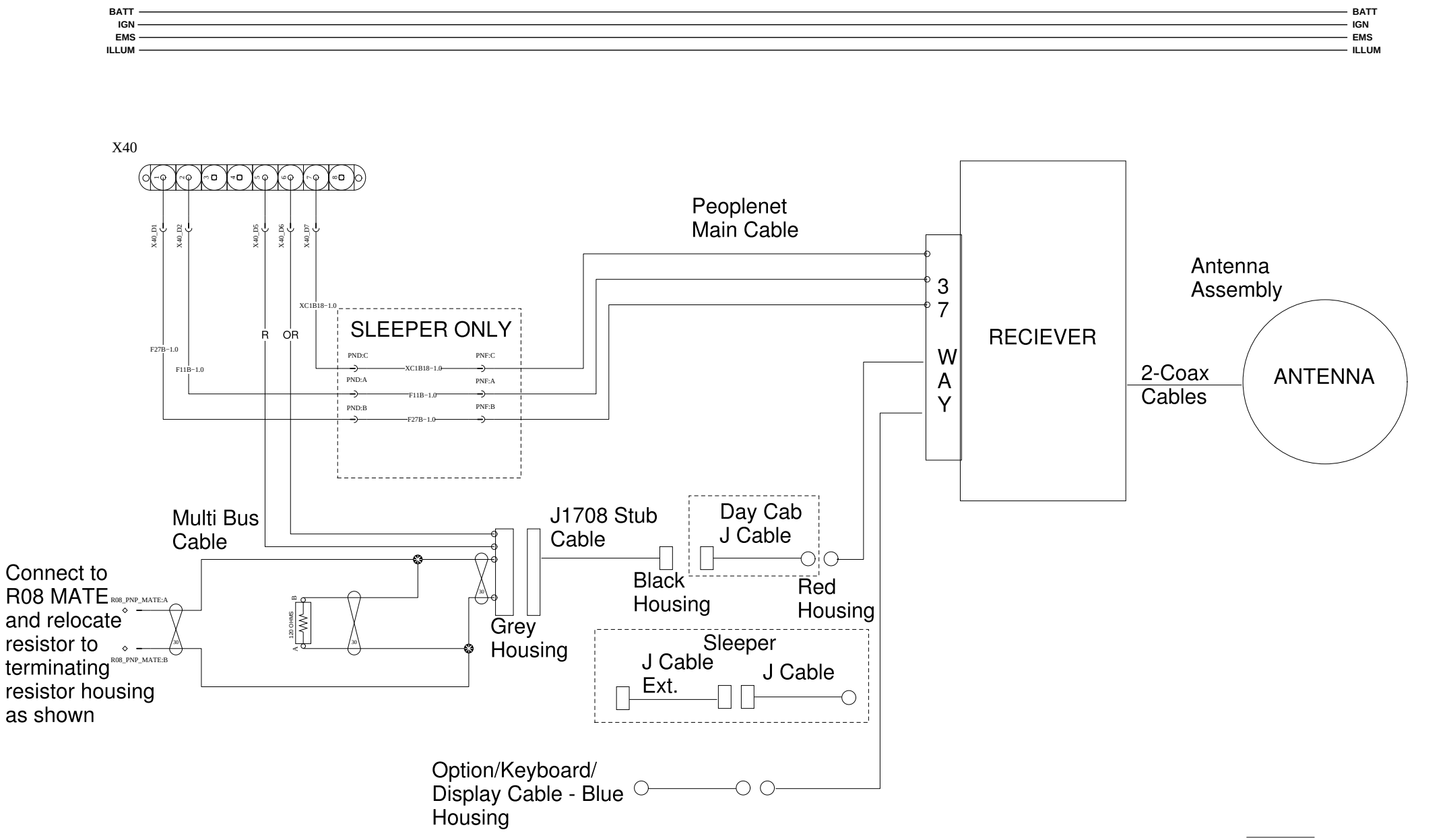

VOLVO Group Trucks Technology	Document title WIRE DIAGRAM-CONVENTIONAL, 12V MACK, 2013BP Document type PRODUCT SCHEMATIC	Document No 21628497	Issue 09	Volume 1 (2)	Page 31 (91)

https://truckmanualshub.com/

WIRING DIAGRAM : CA

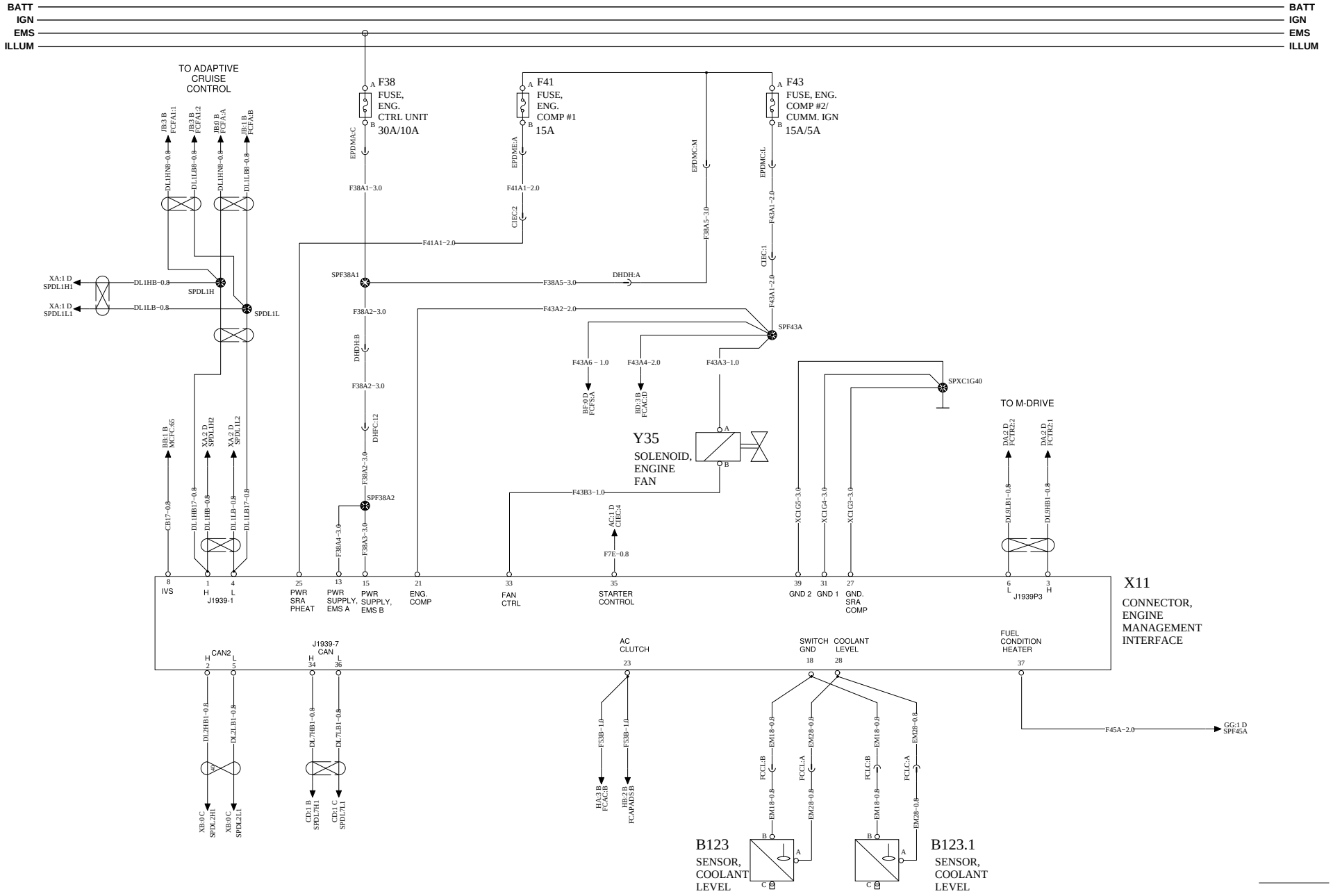

VOLVO Group Trucks Technology	Document title WIRE DIAGRAM-CONVENTIONAL, 12V MACK, 2013BP Document type PRODUCT SCHEMATIC	Document No 21628497	Issue 09	Volume 1 (2)	Page 32 (91)

DPF REGENERATION SYSTEM

https://truckmanualshub.com/

WIRING DIAGRAM: CB

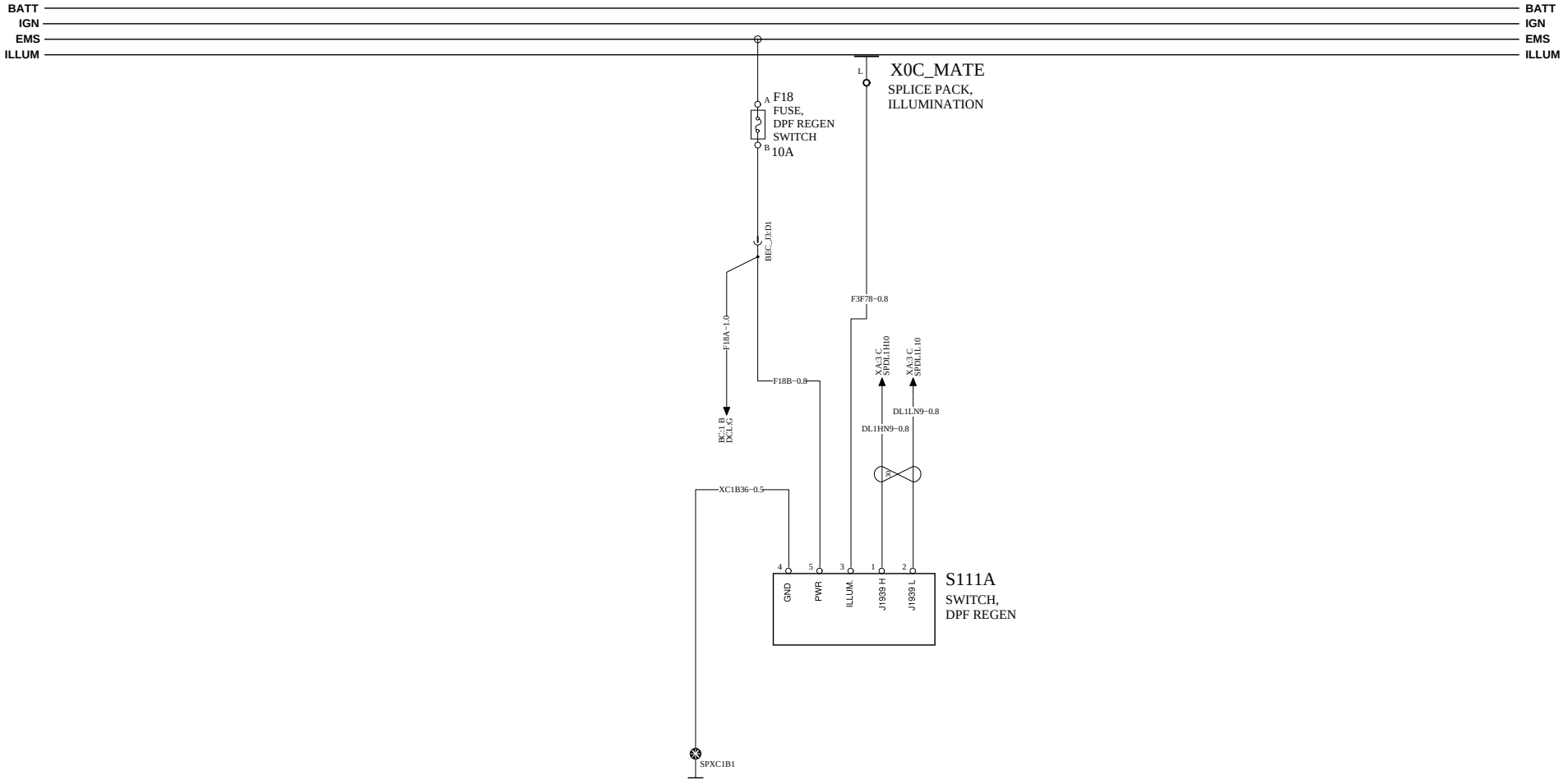

VOLVO Group Trucks Technology	Document title WIRE DIAGRAM-CONVENTIONAL, 12V MACK, 2013BP Document type PRODUCT SCHEMATIC	Document No 21628497	Issue 09	Volume 1 (2)	Page 33 (91)

ENGINE HEATER

https://truckmanualshub.com/

WIRING DIAGRAM: CC

BATT
IGN
EMS
ILLUM

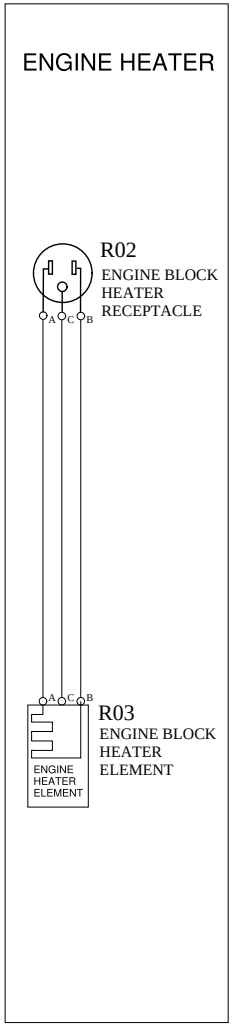

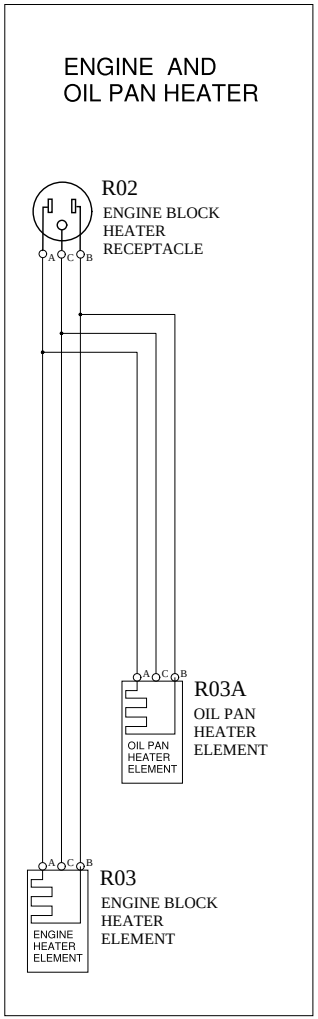

UREA DOSING SYSTEM 1/2

https://truckmanualshub.com/

WIRING DIAGRAM: CD

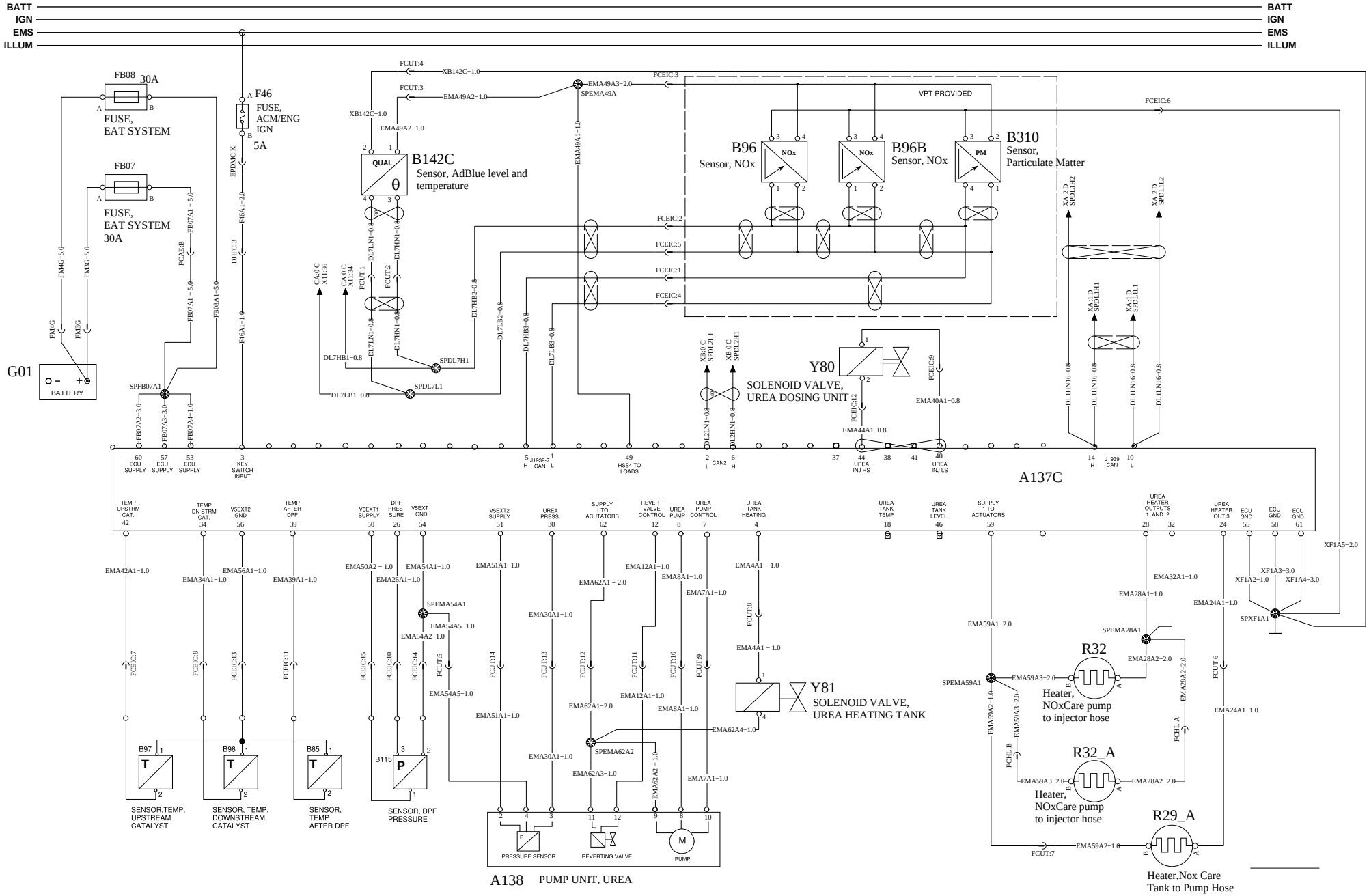

VOLVO Group Trucks Technology	Document title: WIRE DIAGRAM-CONVENTIONAL, 12V MACK, 2013BP	Document No	Issue	Volume	Page
	Document type: PRODUCT SCHEMATIC	21628497	09	1 (2)	35 (91)

ENGINE CONTROL ISL US13 1/2

https://truckmanualshub.com/

WIRING DIAGRAM: CE

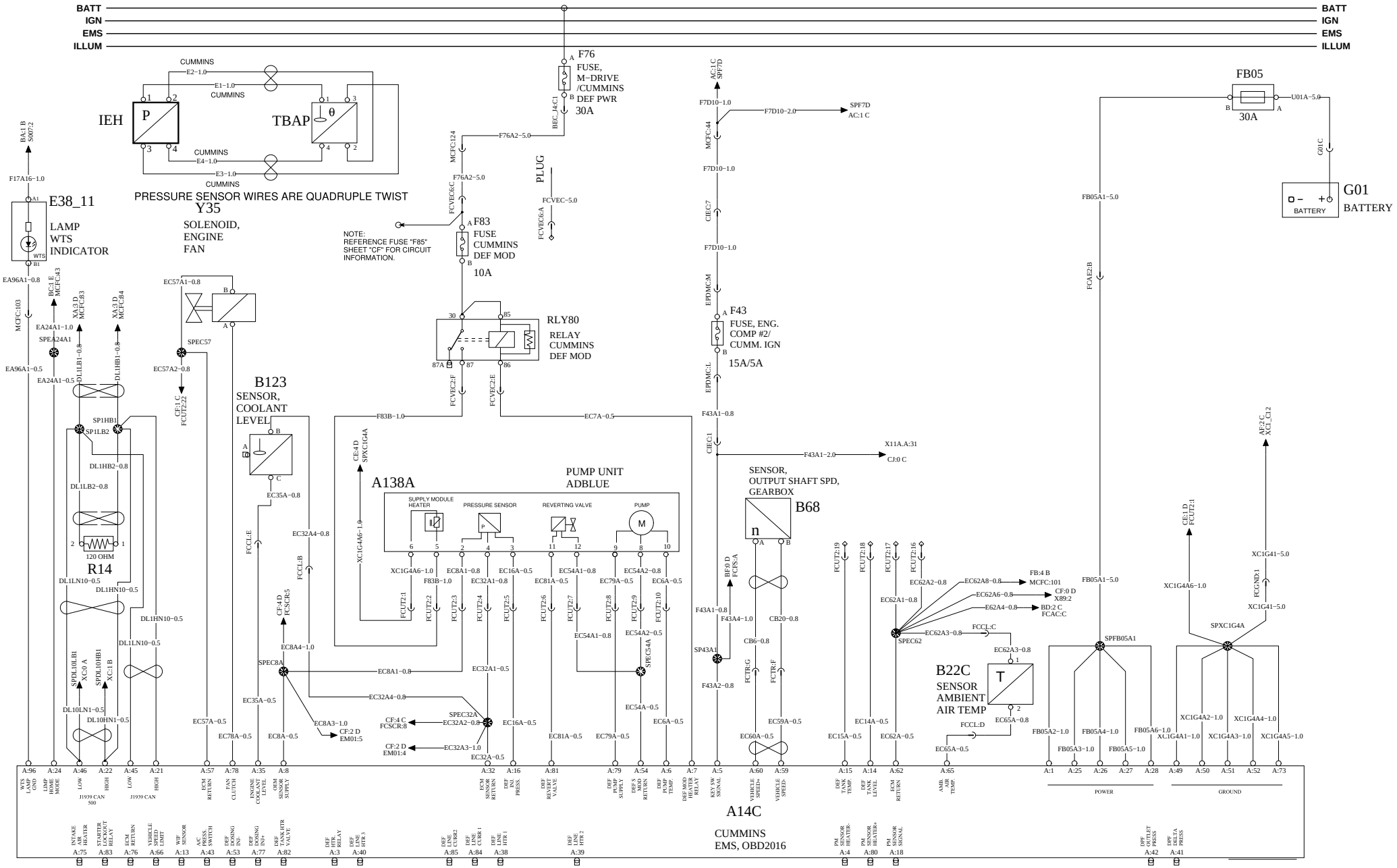

Document title	Document No	Issue	Volume	Page
WIRE DIAGRAM-CONVENTIONAL, 12V MACK, 2013BP	21628497	09	1 (2)	36 (91)
Document type: PRODUCT SCHEMATIC				

VOLVO Group Trucks Technology

https://truckmanualshub.com/

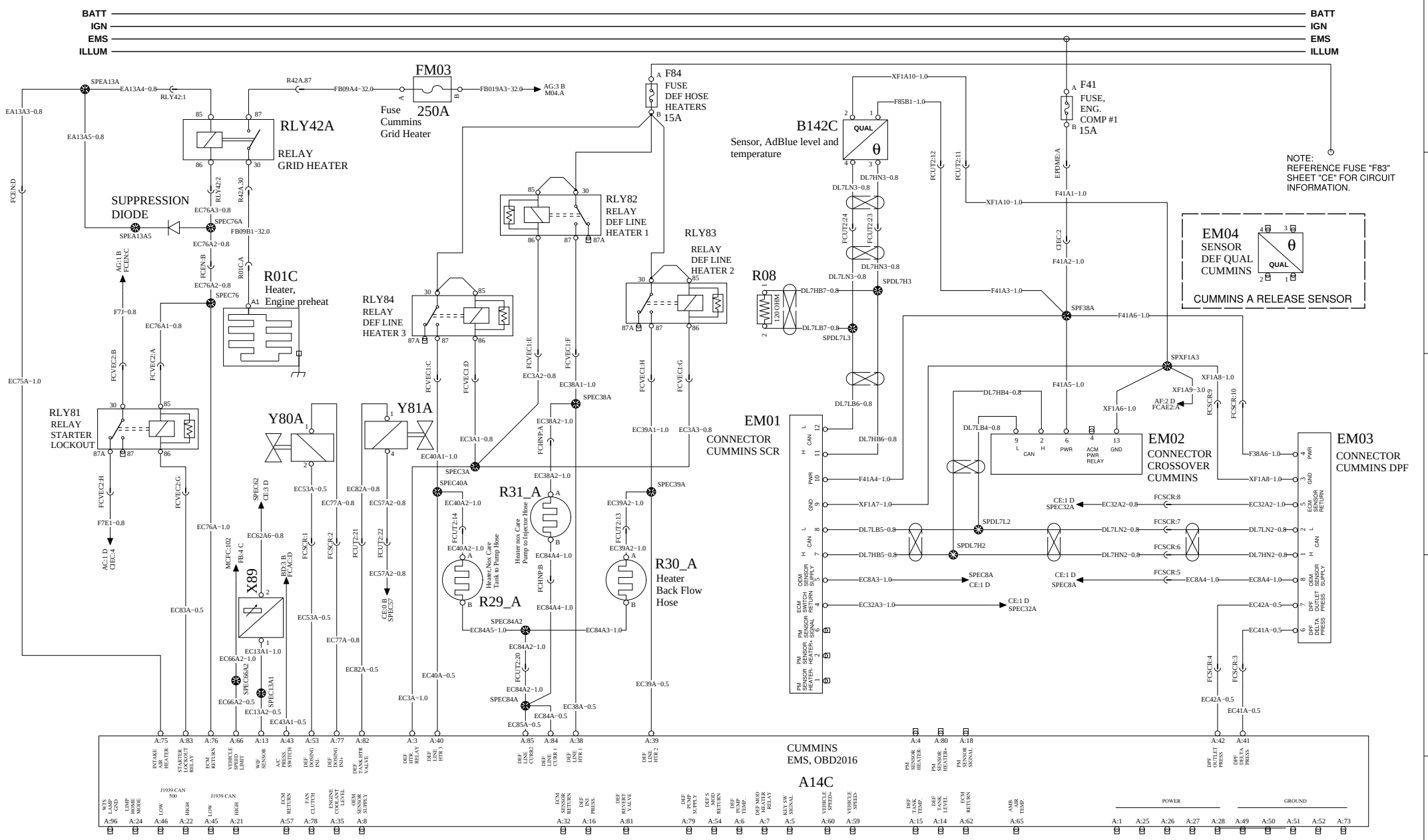

VOLVO Group Trucks Technology	Document title WIRE DIAGRAM-CONVENTIONAL, 12V MACK, 2013BP Document type PRODUCT SCHEMATIC	Document No 21628497	Issue 09	Volume 1 (2)	Page 37 (91)

https://truckmanualshub.com/

WIRING DIAGRAM : CJ

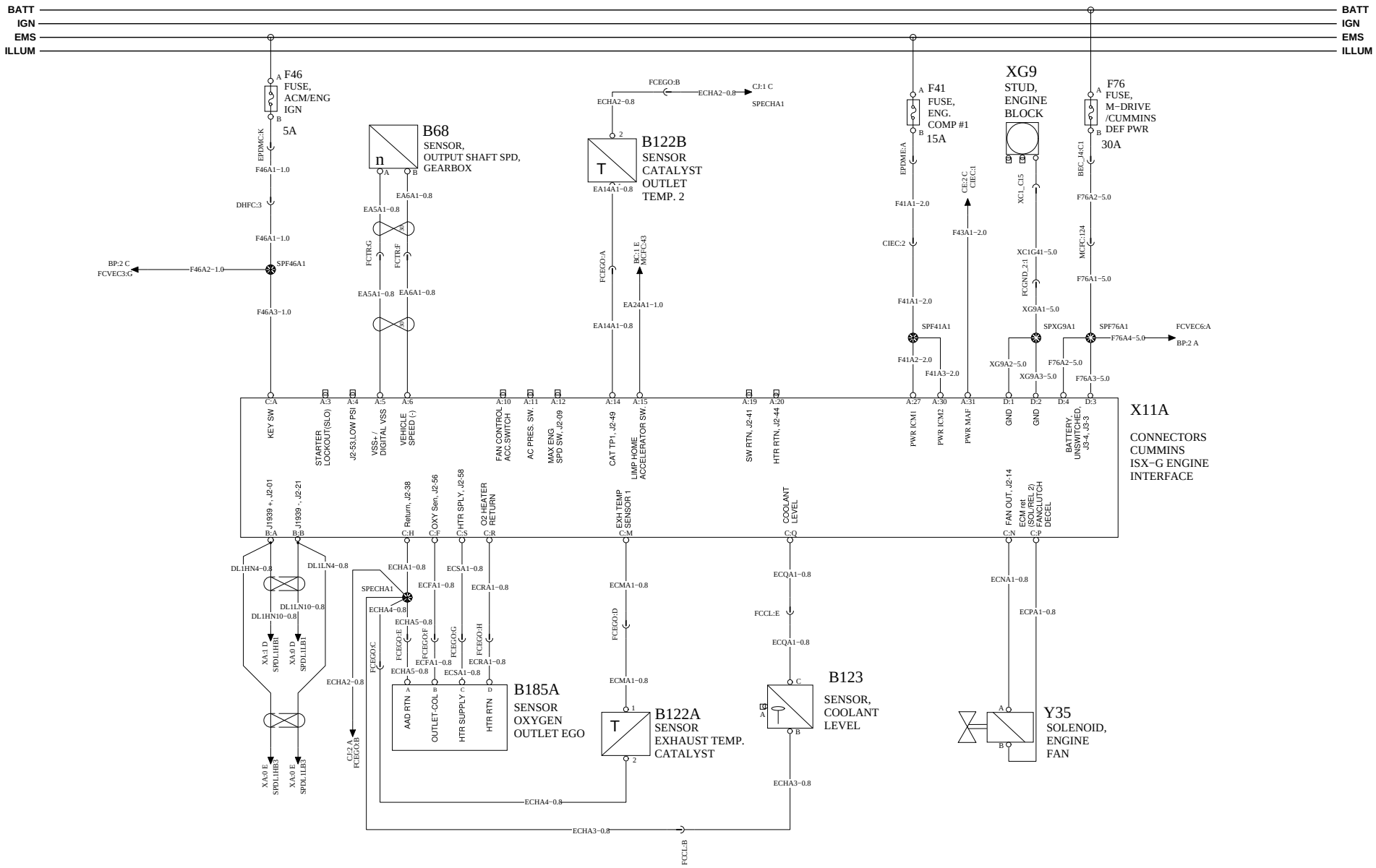

https://truckmanualshub.com/

WIRING DIAGRAM :CK

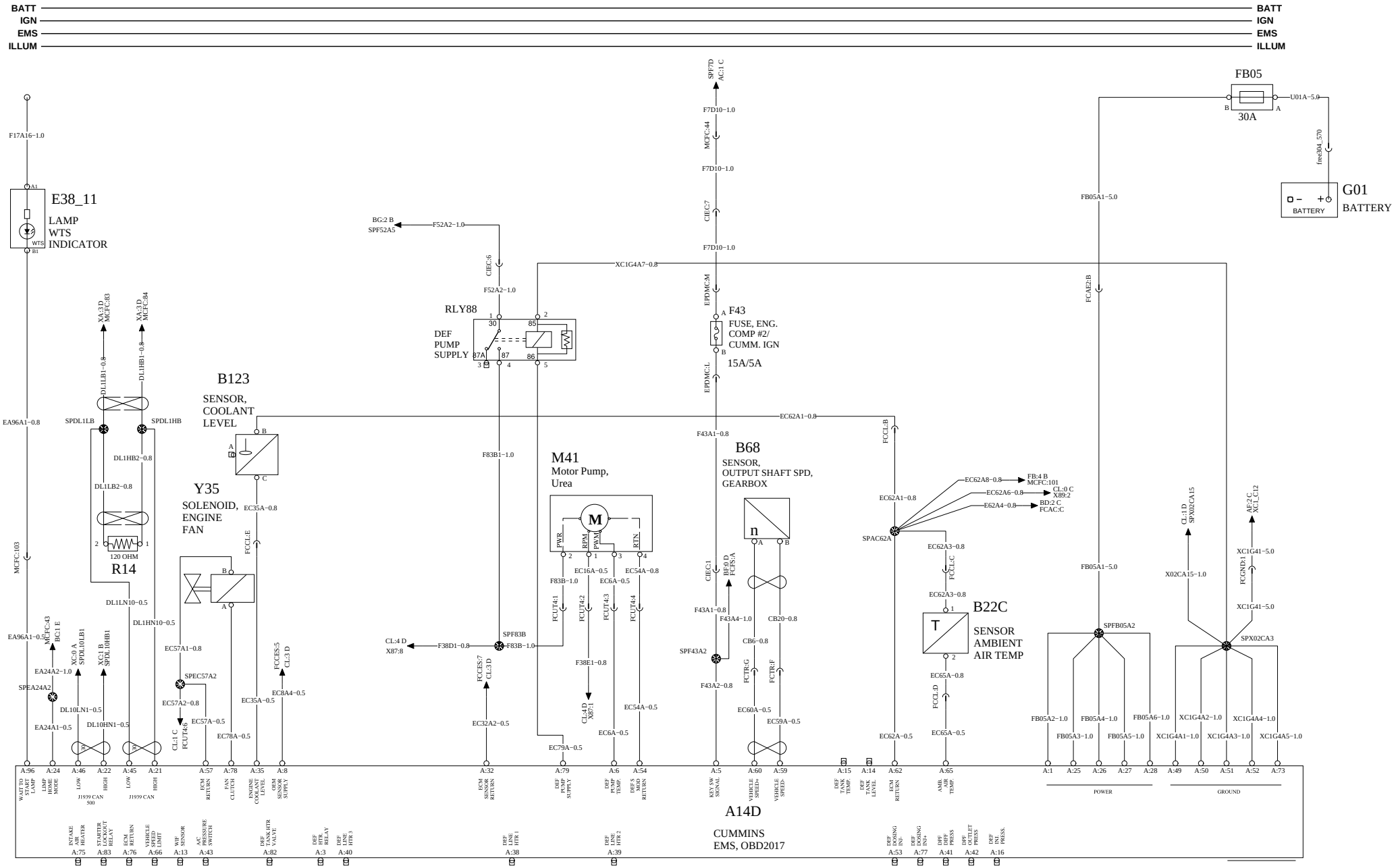

VOLVO Group Trucks Technology	Document title WIRE DIAGRAM-CONVENTIONAL, 12V MACK, 2013BP Document type PRODUCT SCHEMATIC	Document No 21628497	Issue 09	Volume 1 (2)	Page 39 (91)

https://truckmanualshub.com/

WIRING DIAGRAM : CL

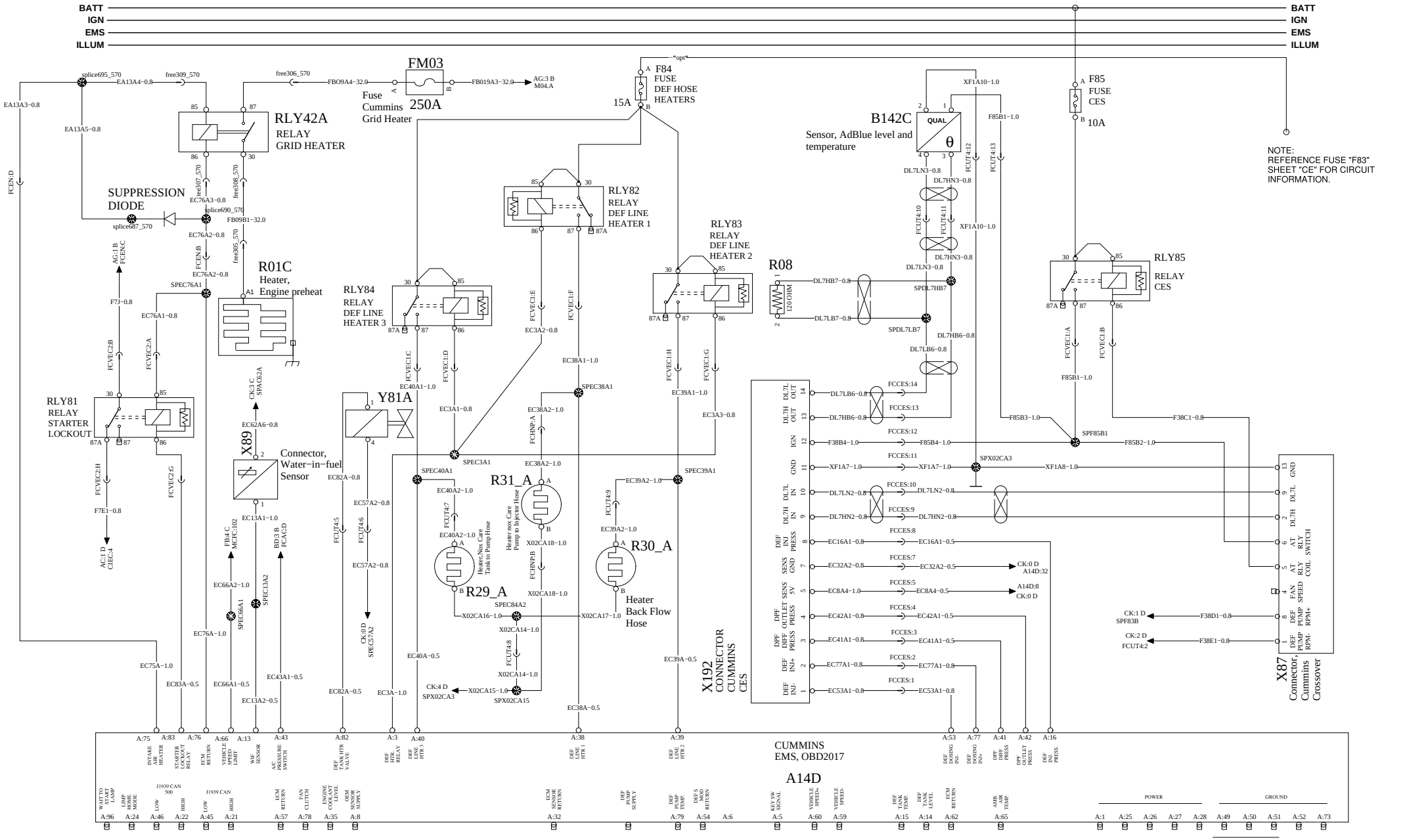

Document title	Document No	Issue	Volume	Page
WIRE DIAGRAM-CONVENTIONAL, 12V MACK, 2013BP	21628497	09	1 (2)	40 (91)
Document type: PRODUCT SCHEMATIC				

VOLVO Group Trucks Technology

METHANE & CO DETECTION

https://truckmanualshub.com/

WIRING DIAGRAM : CM

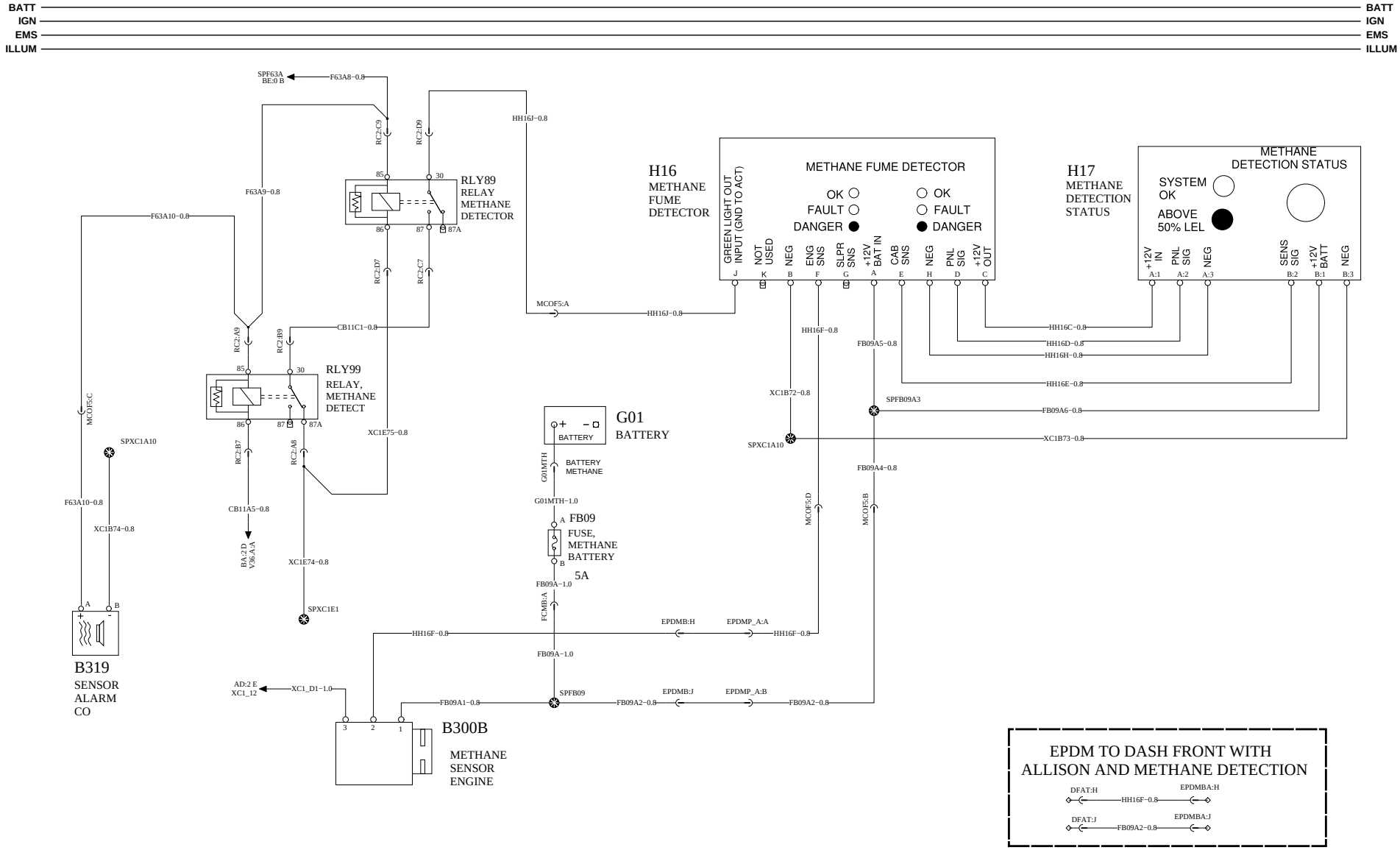

VOLVO Group Trucks Technology	Document title WIRE DIAGRAM-CONVENTIONAL, 12V MACK, 2013BP Document type PRODUCT SCHEMATIC	Document No 21628497	Issue 09	Volume 1 (2)	Page 41 (91)

https://truckmanualshub.com/

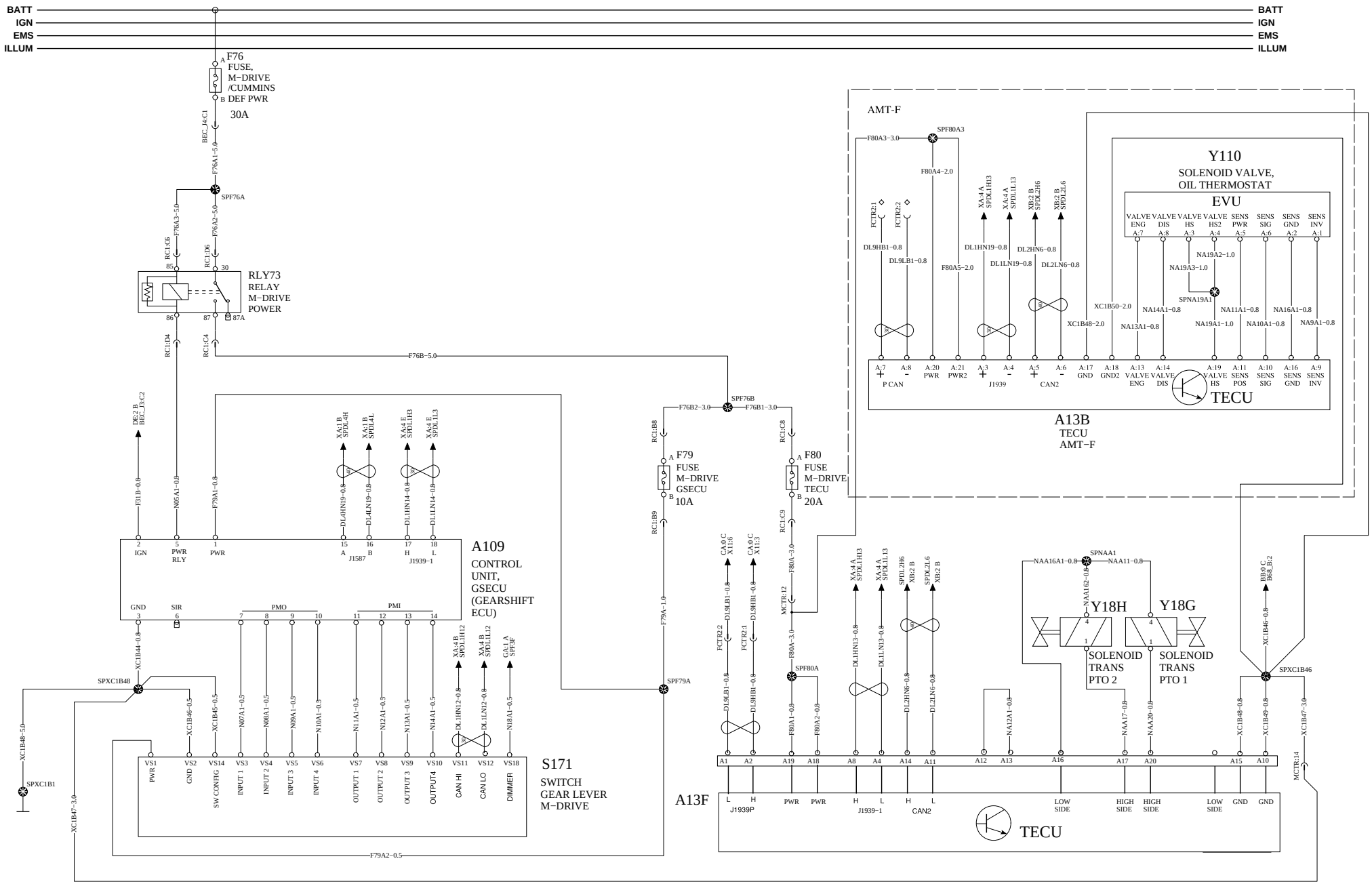

VOLVO Group Trucks Technology	Document title WIRE DIAGRAM-CONVENTIONAL, 12V MACK, 2013BP Document type PRODUCT SCHEMATIC	Document No 21628497	Issue 09	Volume 1 (2)	Page 42 (91)

https://truckmanualshub.com/

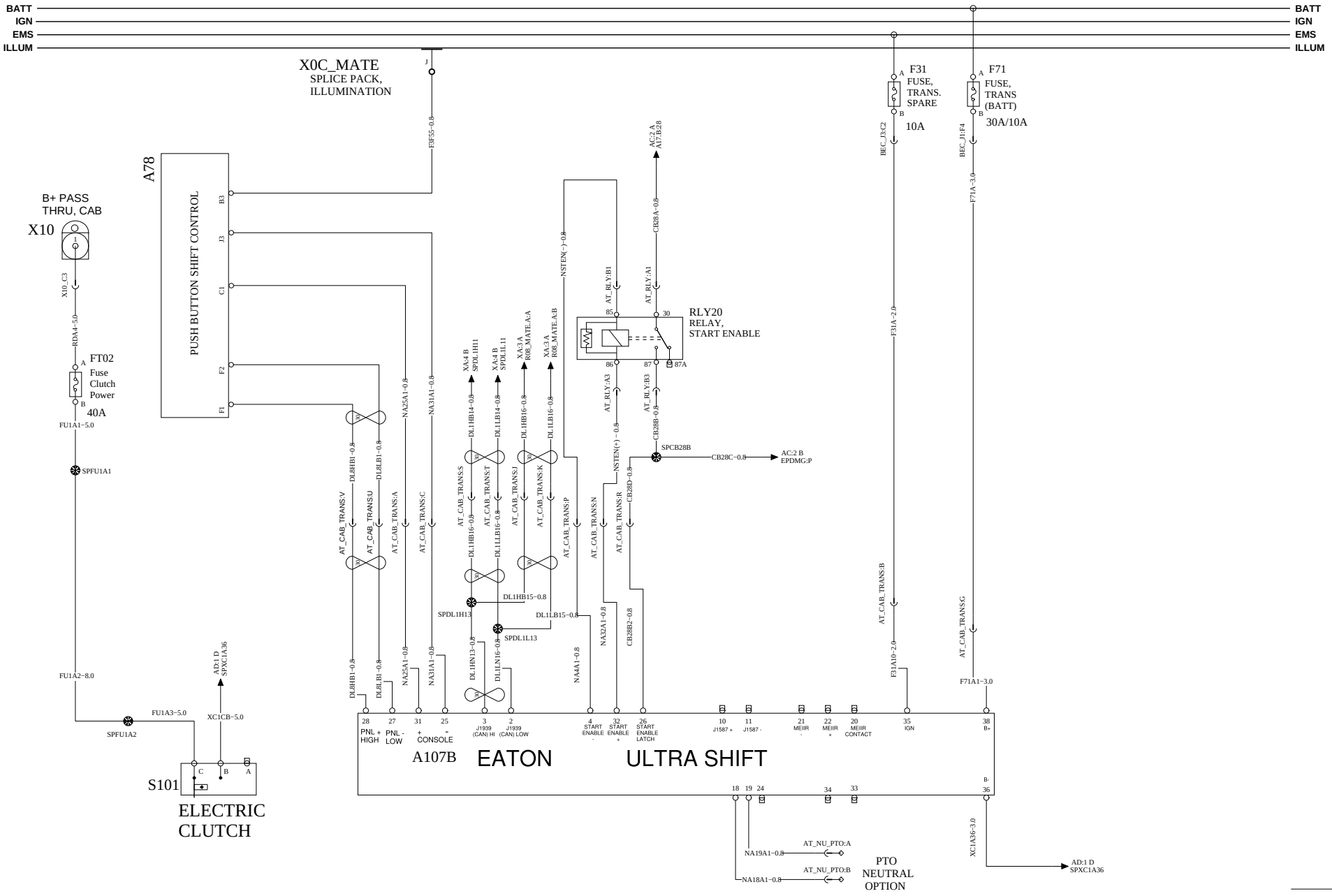

VOLVO Group Trucks Technology	Document title: WIRE DIAGRAM-CONVENTIONAL, 12V MACK, 2013BP Document type: PRODUCT SCHEMATIC	Document No: 21628497	Issue: 09	Volume: 1 (2)	Page: 43 (91)

https://truckmanualshub.com/

WIRING DIAGRAM: DC

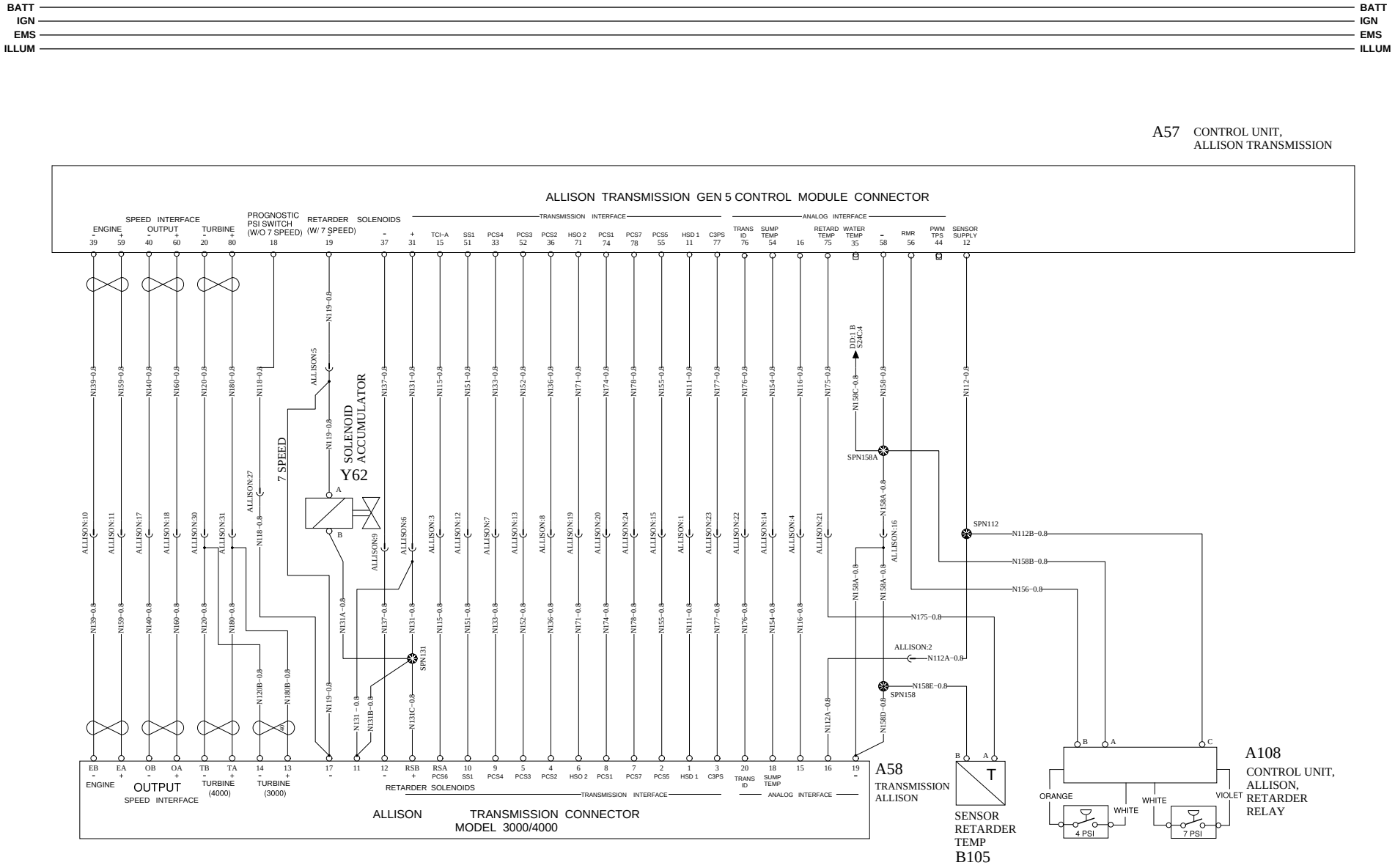

TRANSMISSION CONTROL 2/2

https://truckmanualshub.com/

WIRING DIAGRAM: DD

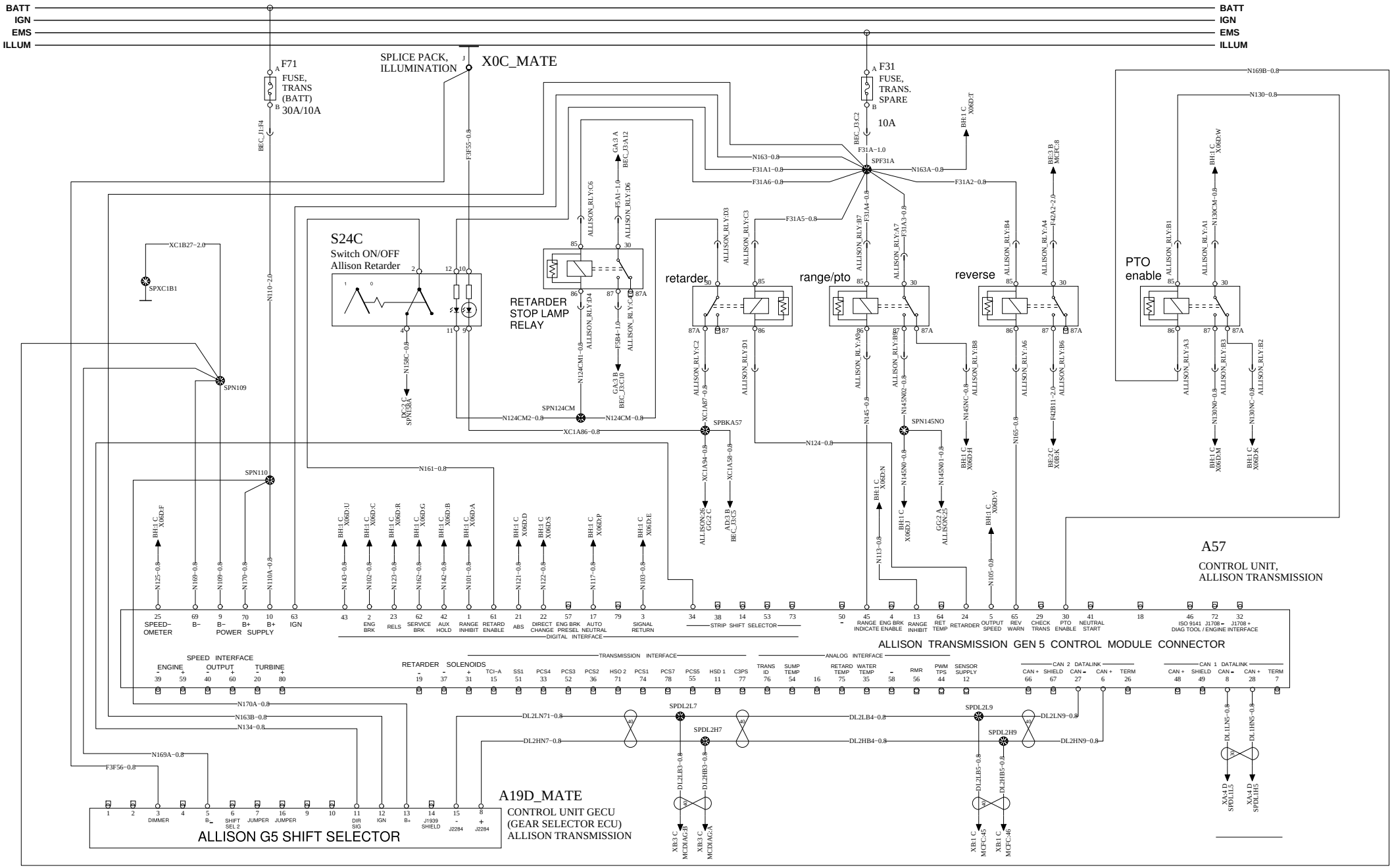

VOLVO Group Trucks Technology	Document title: WIRE DIAGRAM-CONVENTIONAL, 12V MACK, 2013BP	Document No: 21628497	Issue: 09	Volume: 1 (2)	Page: 45 (91)
	Document type: PRODUCT SCHEMATIC				

https://truckmanualshub.com/

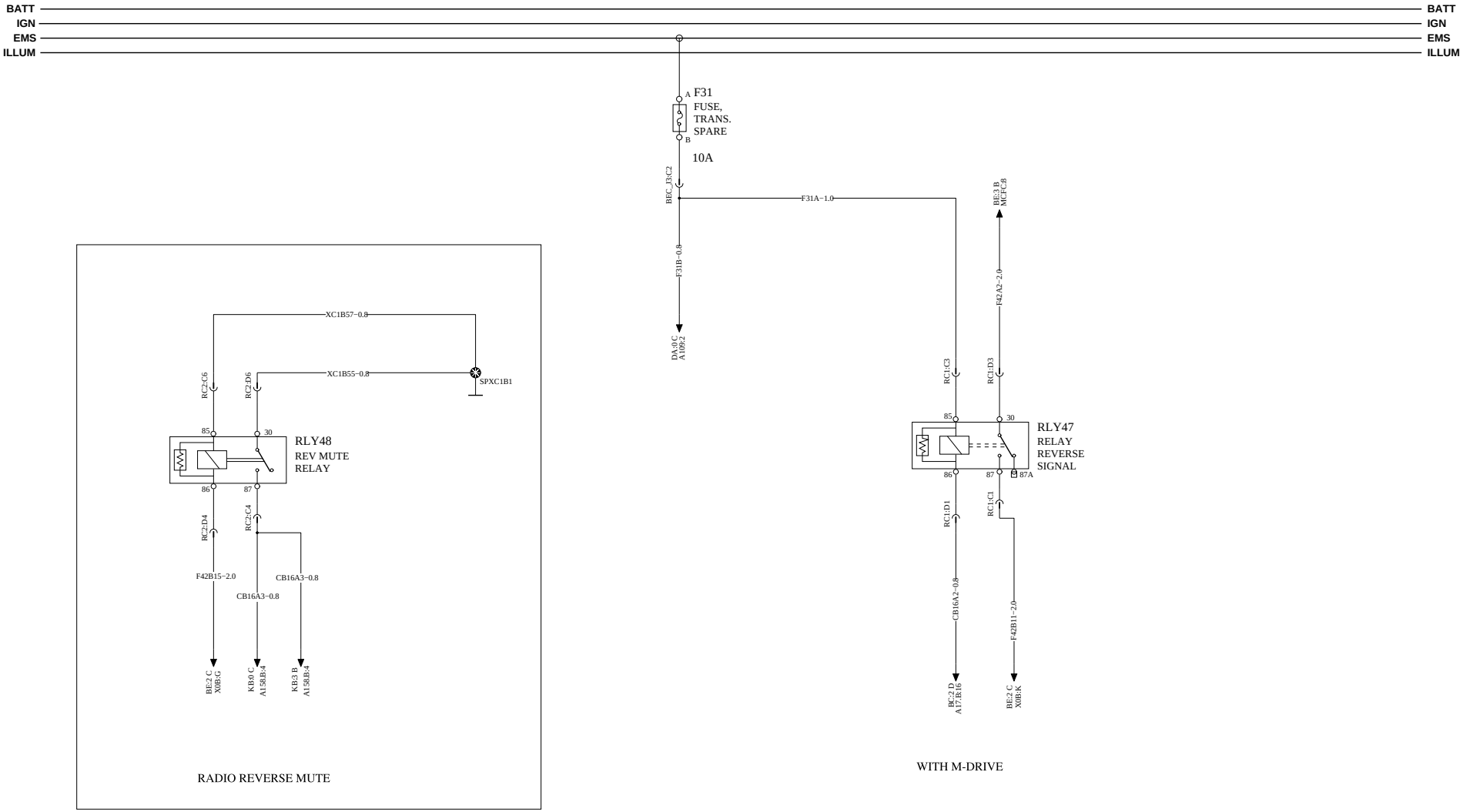

ABS−WABCO

https://truckmanualshub.com/

WIRING DIAGRAM: EA

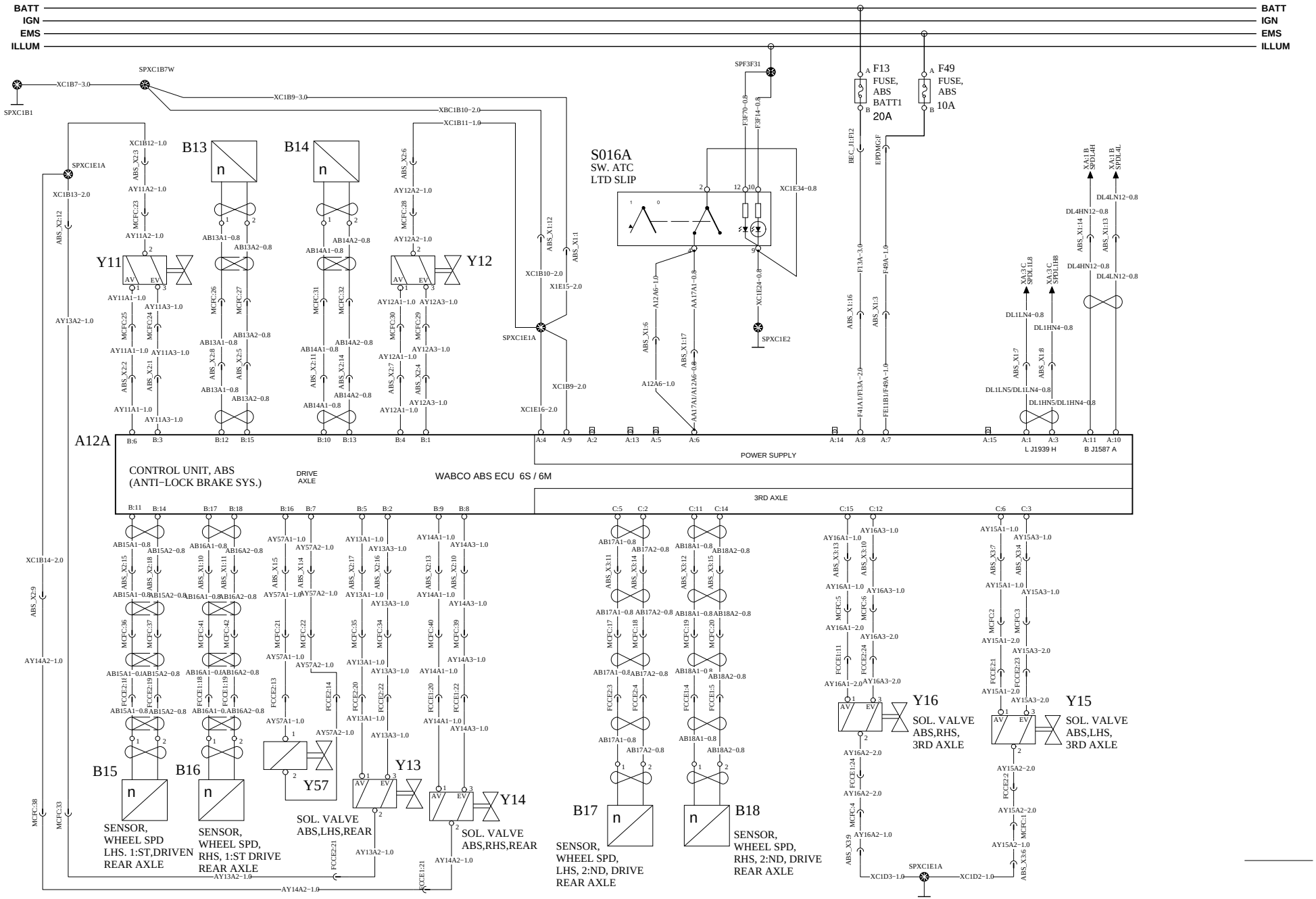

VOLVO Group Trucks Technology	Document title WIRE DIAGRAM-CONVENTIONAL, 12V MACK, 2013BP Document type PRODUCT SCHEMATIC	Document No 21628497	Issue 09	Volume 1 (2)	Page 47 (91)

SUSPENSION ECU 6X2

https://truckmanualshub.com/

WIRING DIAGRAM: EC

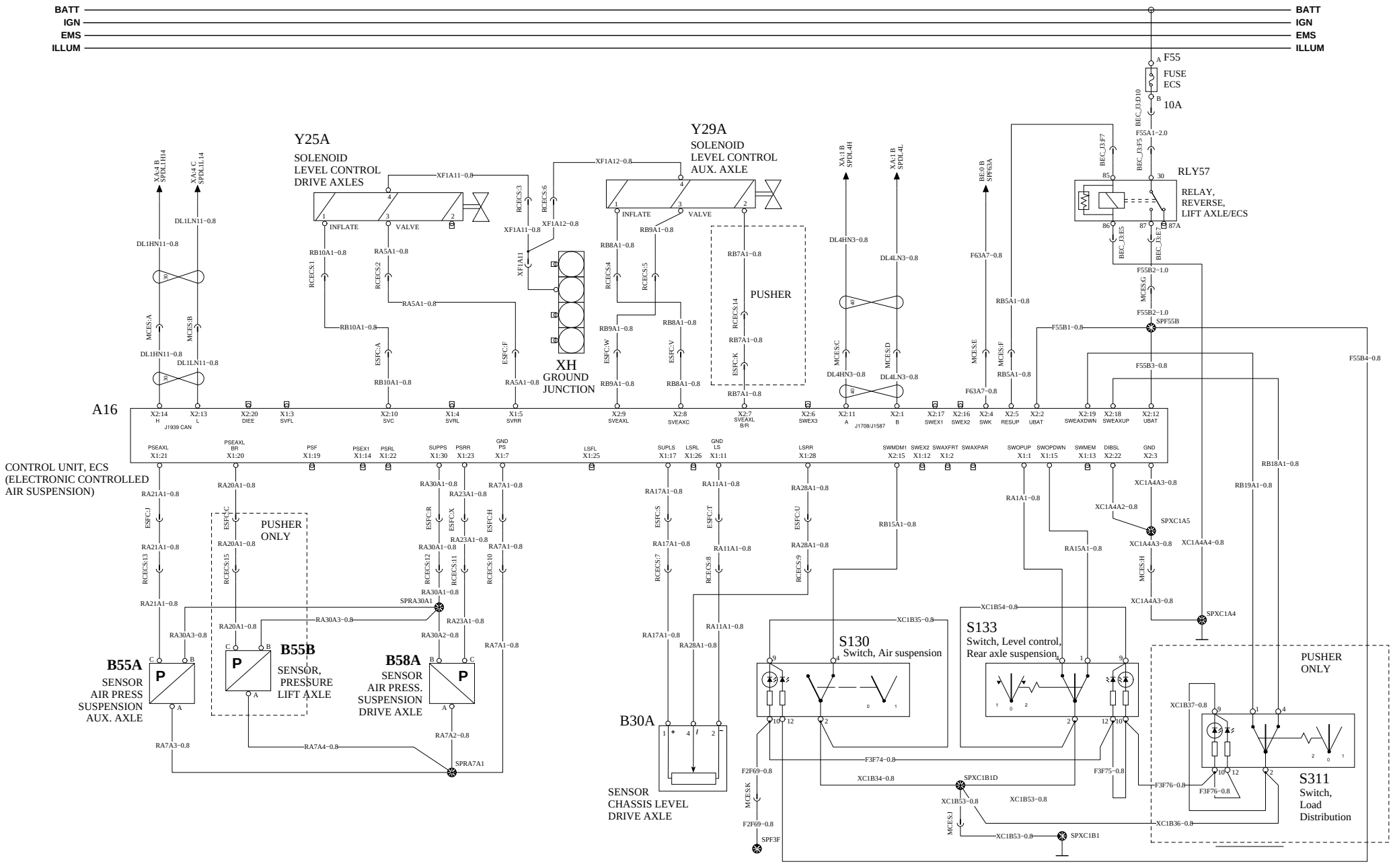

VOLVO Group Trucks Technology	Document title WIRE DIAGRAM-CONVENTIONAL, 12V MACK, 2013BP Document type PRODUCT SCHEMATIC	Document No 21628497	Issue 09	Volume 1 (2)	Page 48 (91)

ABS8 BENDIX W/ESP

https://truckmanualshub.com/

WIRING DIAGRAM: ED

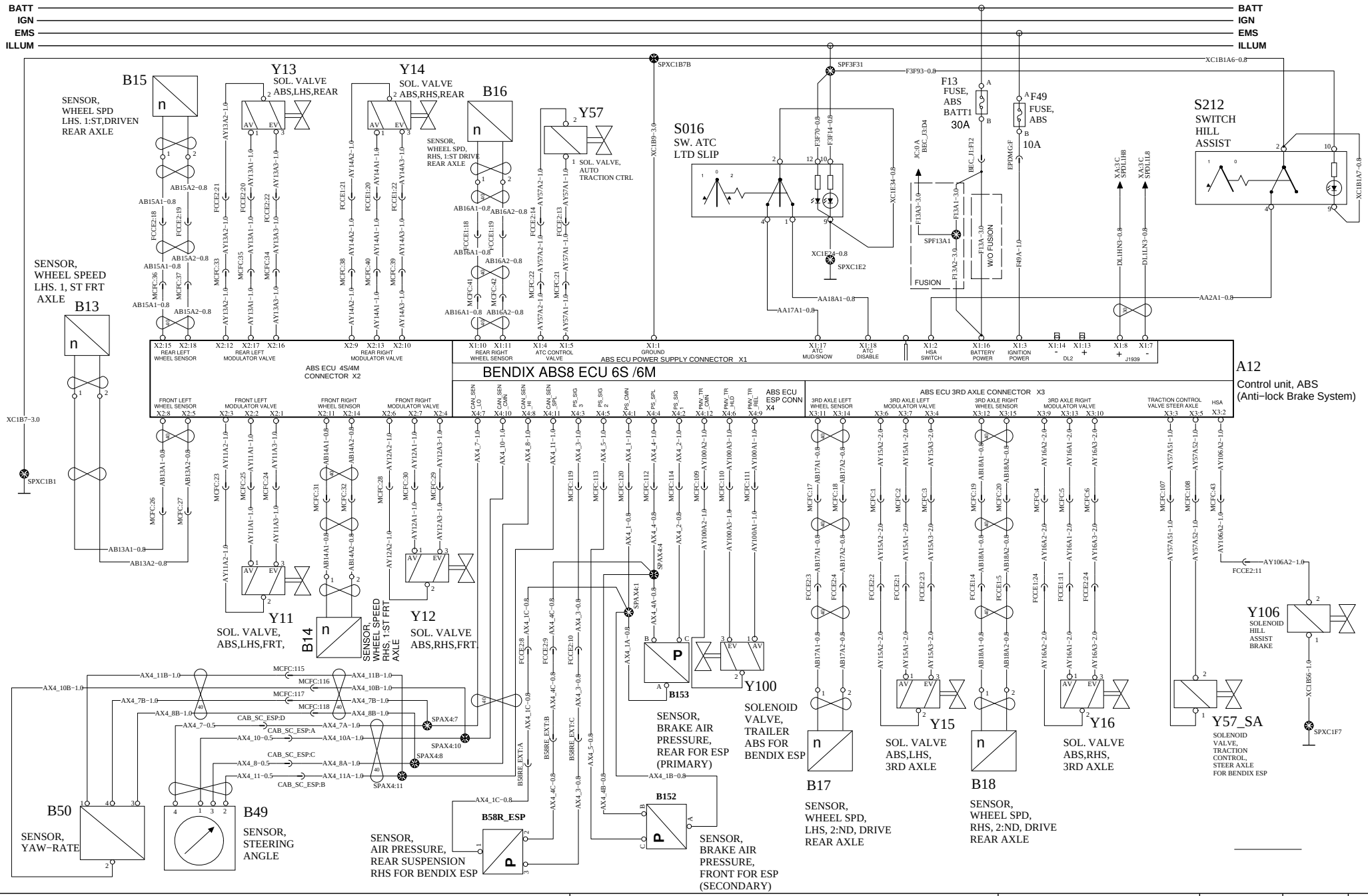

VOLVO Group Trucks Technology	Document title: WIRE DIAGRAM-CONVENTIONAL, 12V MACK, 2013BP	Document No: 21628497	Issue: 09	Volume: 1 (2)	Page: 49 (91)
	Document type: PRODUCT SCHEMATIC			

AIR DRYER/ HEATED DRAIN

https://truckmanualshub.com/

WIRING DIAGRAM: FA

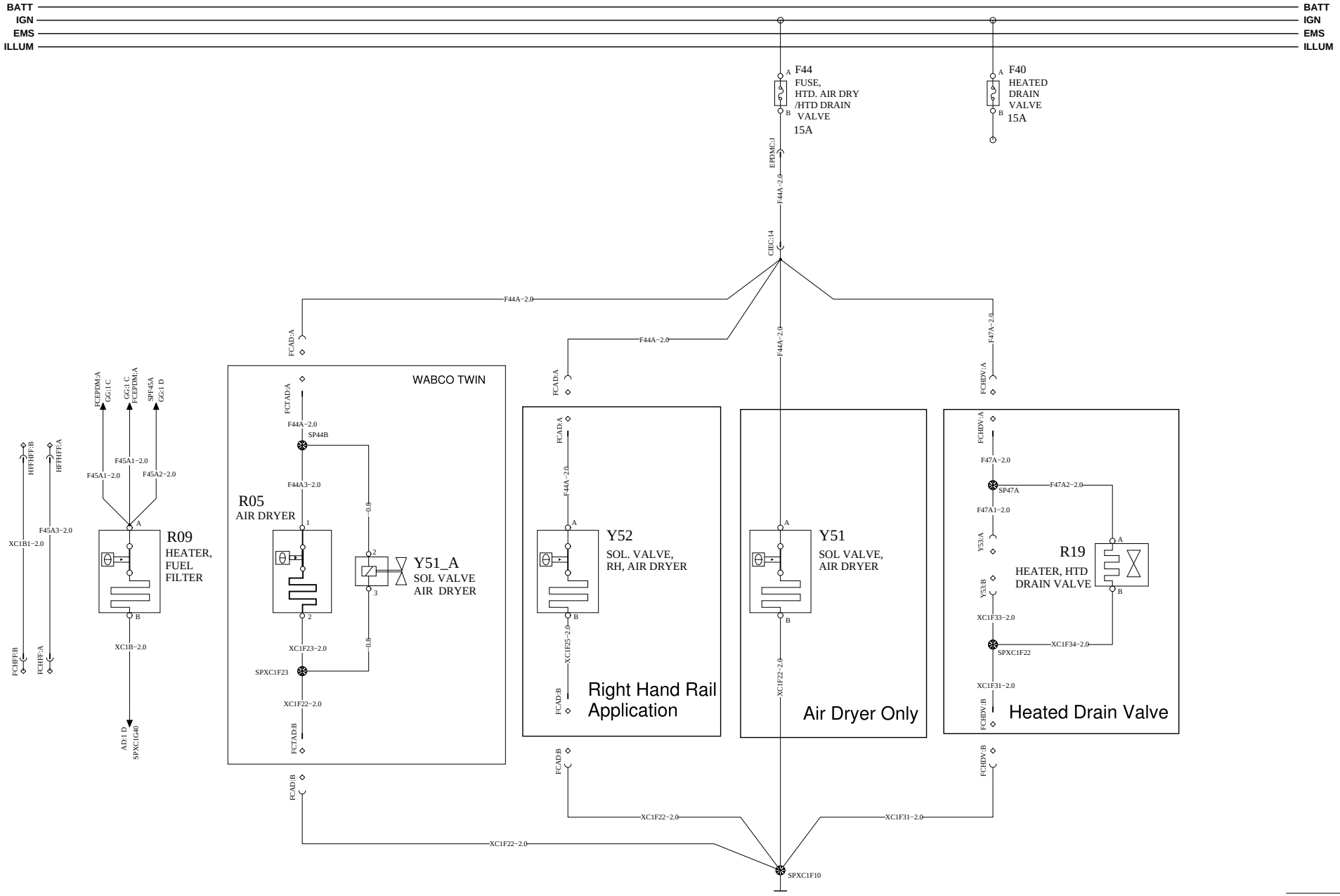

VOLVO Group Trucks Technology	Document title WIRE DIAGRAM-CONVENTIONAL, 12V MACK, 2013BP Document type PRODUCT SCHEMATIC	Document No 21628497	Issue 09	Volume 1 (2)	Page 50 (91)

CHASSIS SOLENOIDS

https://truckmanualshub.com/

WIRING DIAGRAM: FB

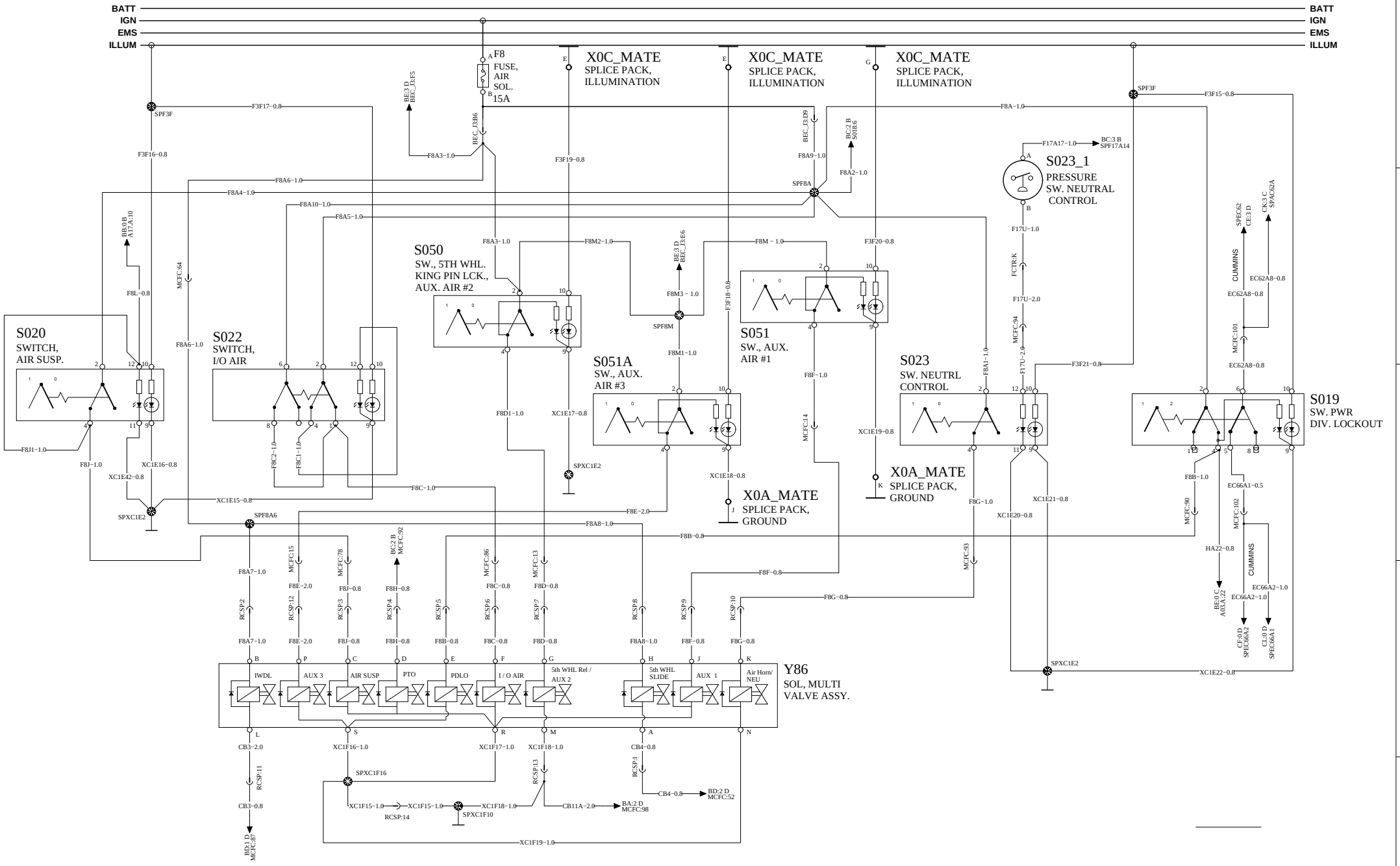

VOLVO Group Trucks Technology	Document title: WIRE DIAGRAM-CONVENTIONAL, 12V MACK, 2013BP Document type: PRODUCT SCHEMATIC	Document No: 21628497	Issue: 09	Volume: 1 (2)	Page: 51 (91)

PARKER PTO

https://truckmanualshub.com/

WIRING DIAGRAM: FD

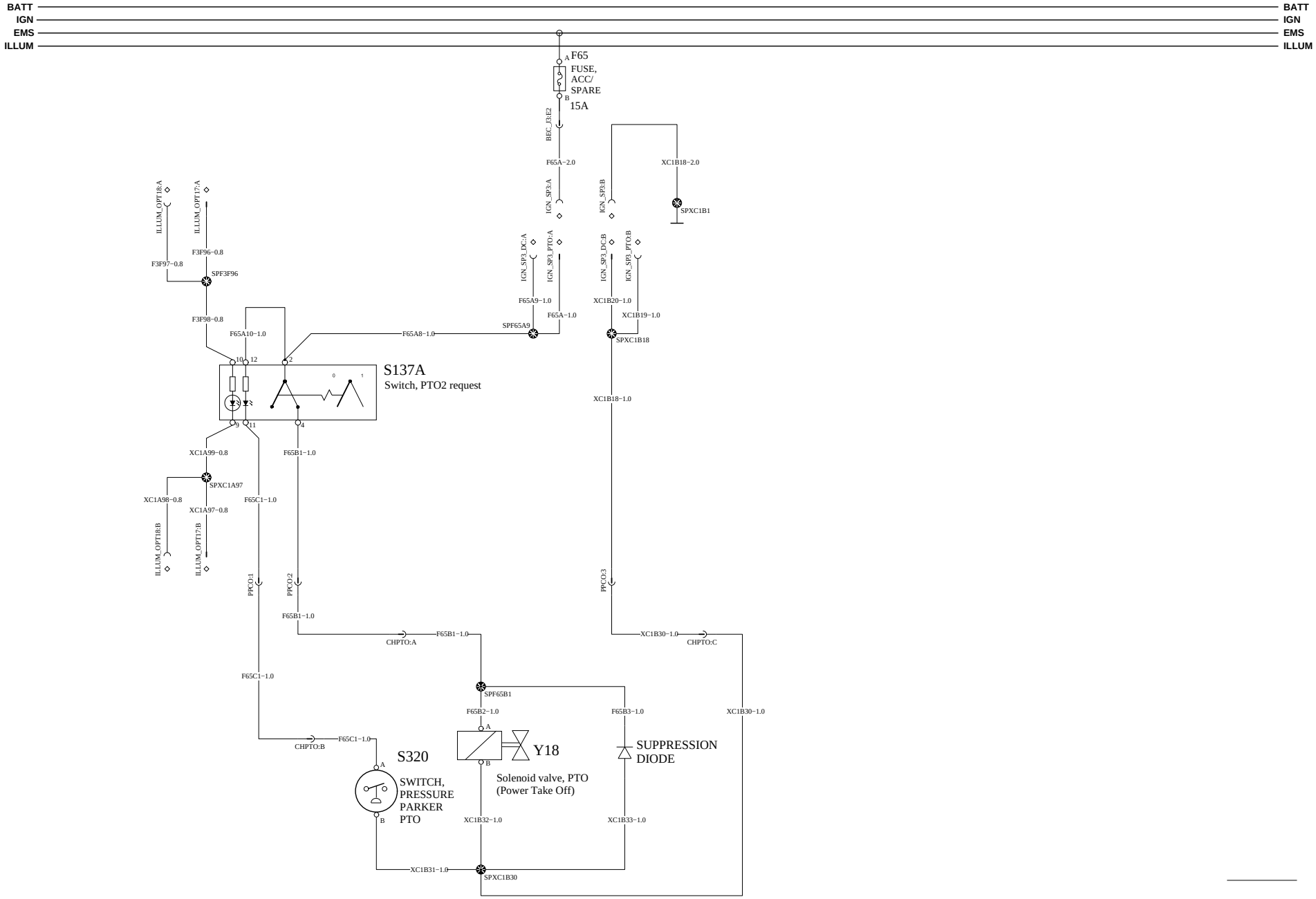

VOLVO Group Trucks Technology	Document title WIRE DIAGRAM-CONVENTIONAL, 12V MACK, 2013BP	Document No	Issue	Volume	Page
	Document type PRODUCT SCHEMATIC	21628497	09	1 (2)	52 (91)

LIGHTING CONTROL

https://truckmanualshub.com/

WIRING DIAGRAM: GA

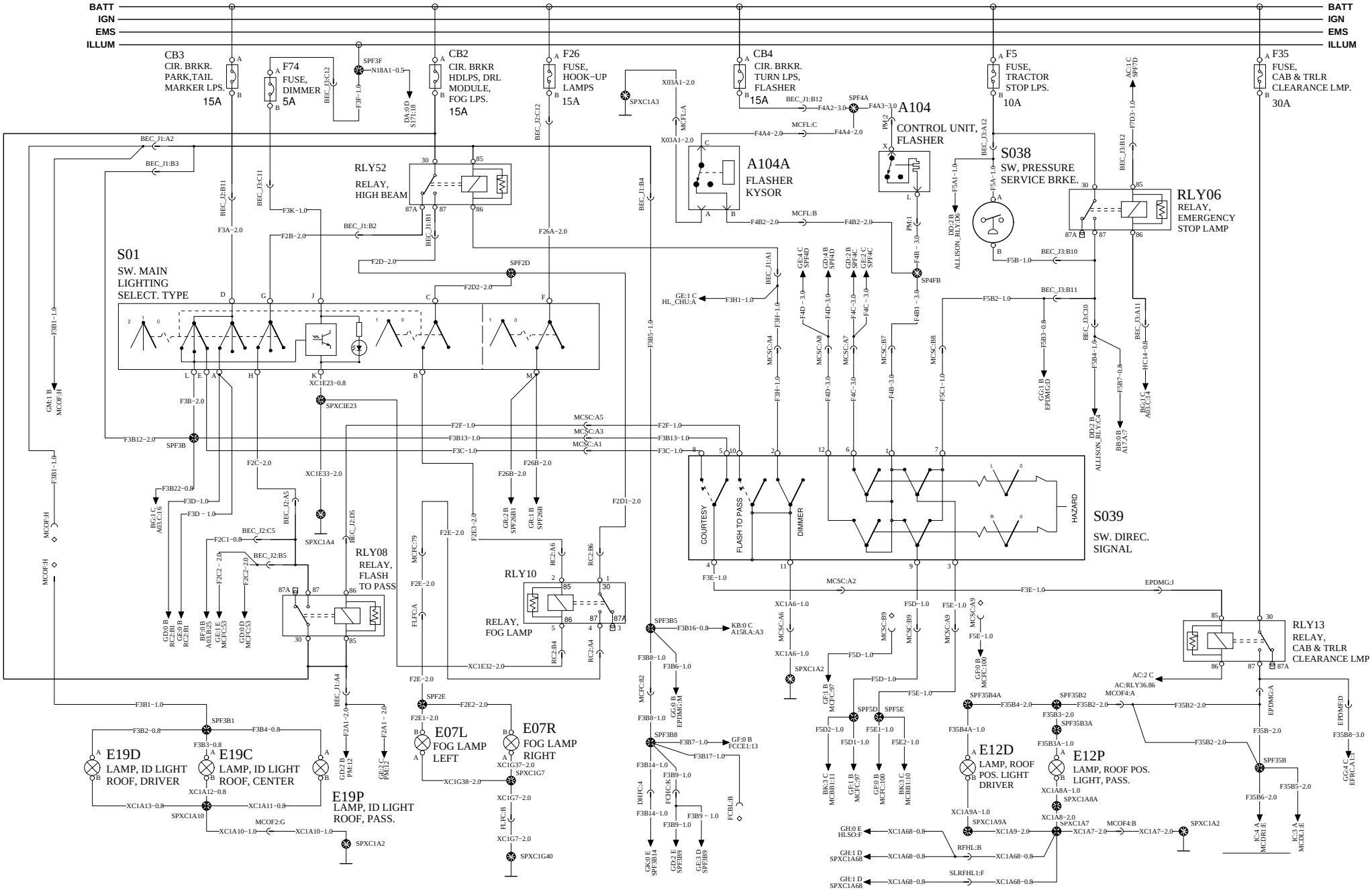

VOLVO Group Trucks Technology	Document title WIRE DIAGRAM-CONVENTIONAL, 12V MACK, 2013BP Document type PRODUCT SCHEMATIC	Document No 21628497	Issue 09	Volume 1 (2)	Page 53 (91)

LIGHTING− FORWARD/SIGNAL (CXU,GU7 & GU8)

https://truckmanualshub.com/

WIRING DIAGRAM: GD

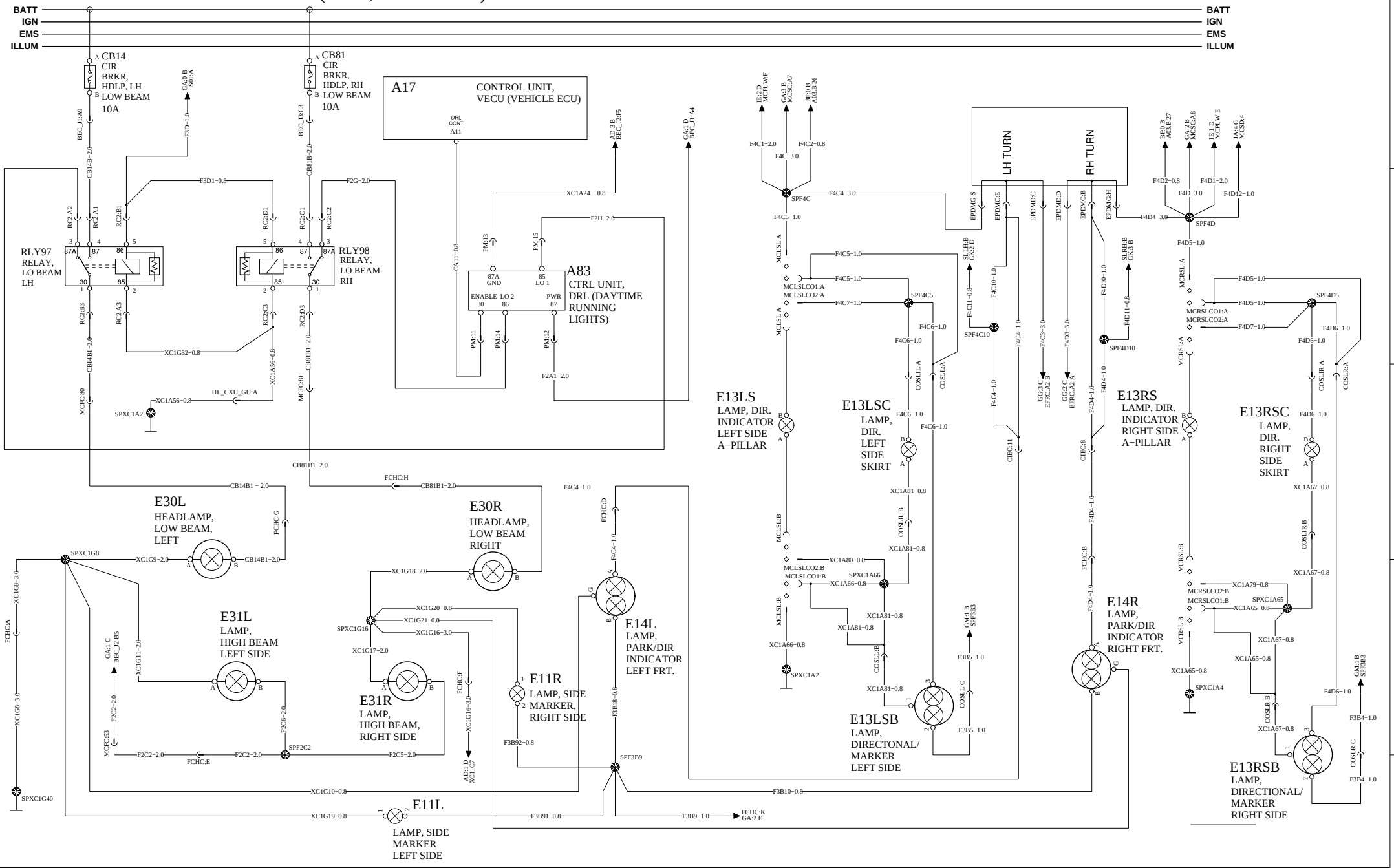

VOLVO Group Trucks Technology	Document title WIRE DIAGRAM-CONVENTIONAL, 12V MACK, 2013BP Document type PRODUCT SCHEMATIC	Document No 21628497	Issue 09	Volume 1 (2)	Page 54 (91)

LIGHTING− FORWARD/SIGNAL (CHU ONLY)

https://truckmanualshub.com/

WIRING DIAGRAM: GE

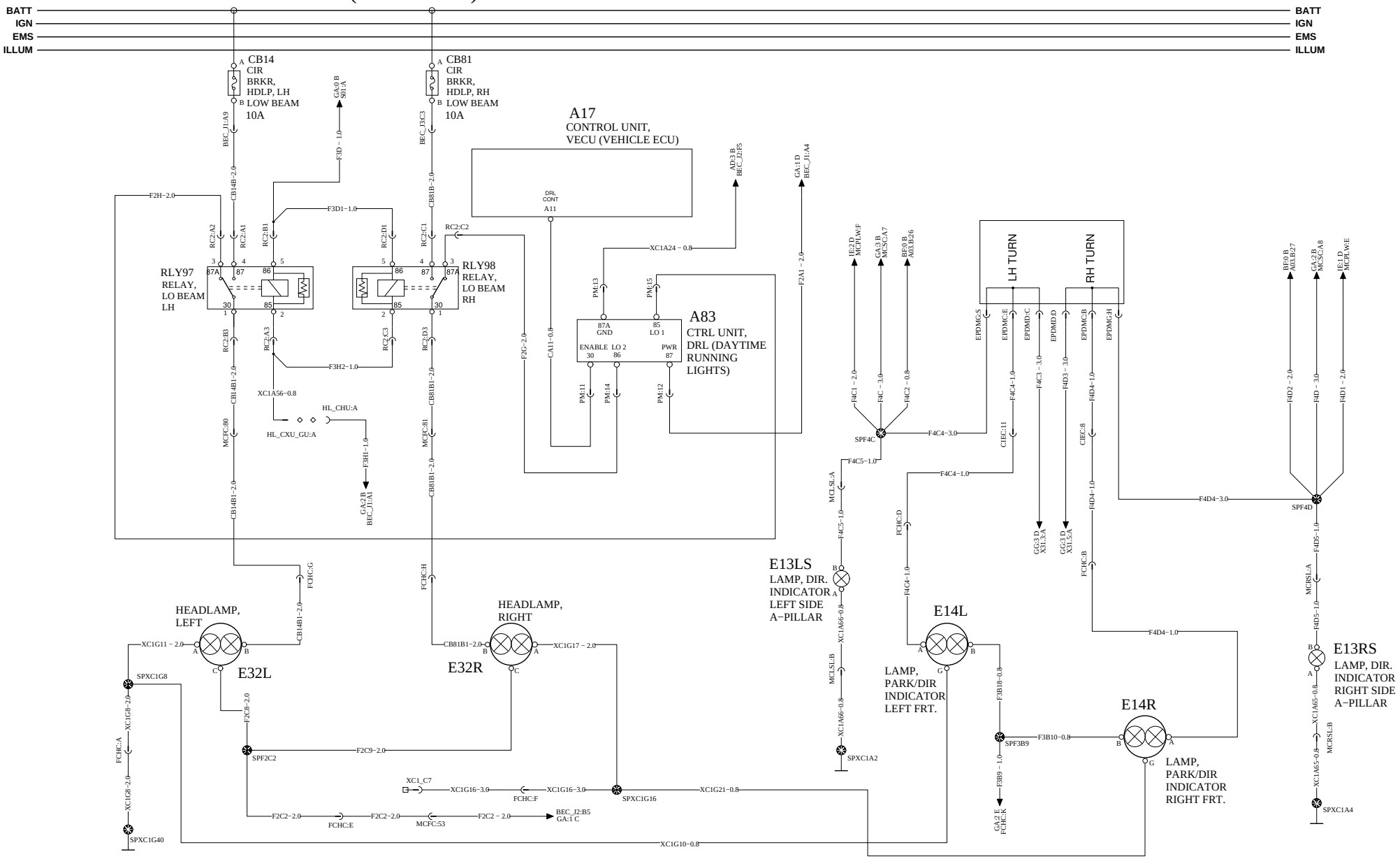

Document title	Document No	Issue	Volume	Page
WIRE DIAGRAM-CONVENTIONAL, 12V MACK, 2013BP	21628497	09	1 (2)	55 (91)
Document type: PRODUCT SCHEMATIC				

VOLVO Group Trucks Technology

https://truckmanualshub.com/

BATT
IGN
EMS
ILLUM

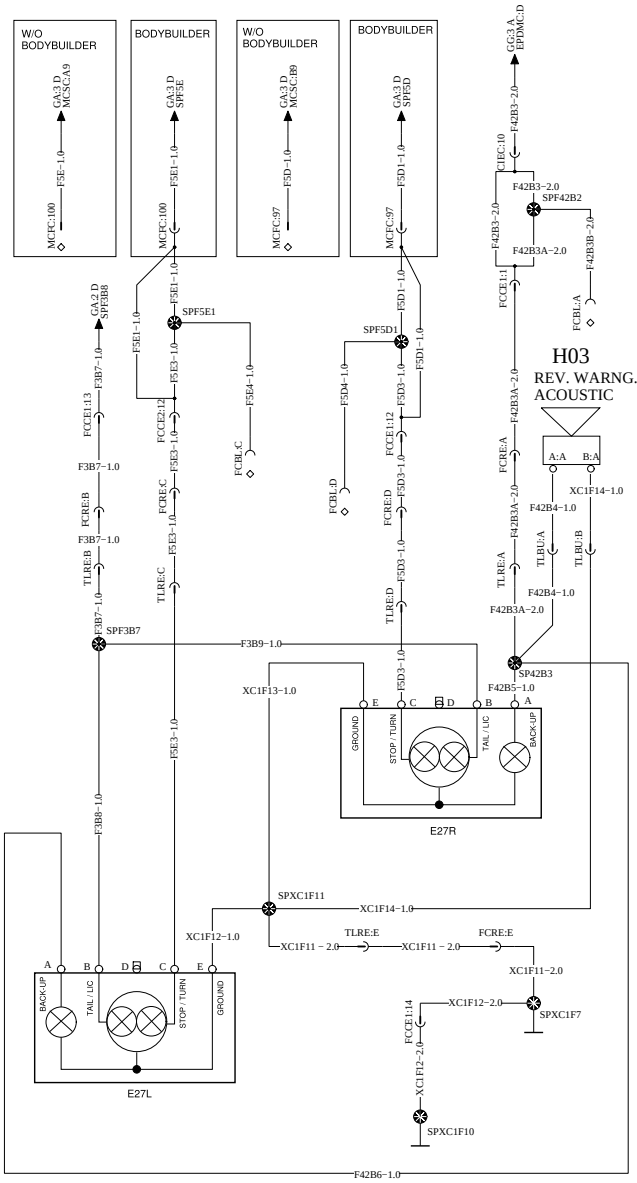

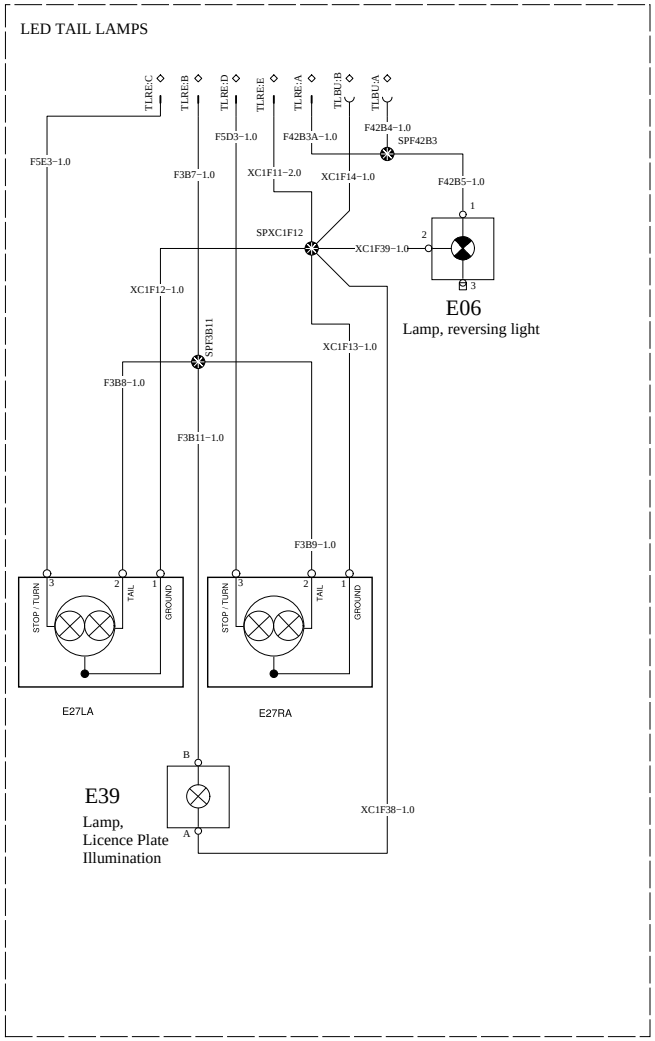

VOLVO Group Trucks Technology	Document title WIRE DIAGRAM-CONVENTIONAL, 12V MACK, 2013BP Document type PRODUCT SCHEMATIC	Document No 21628497	Issue 09	Volume 1 (2)	Page 56 (91)

TRAILER LIGHTING CONTROL

https://truckmanualshub.com/

WIRING DIAGRAM: GG

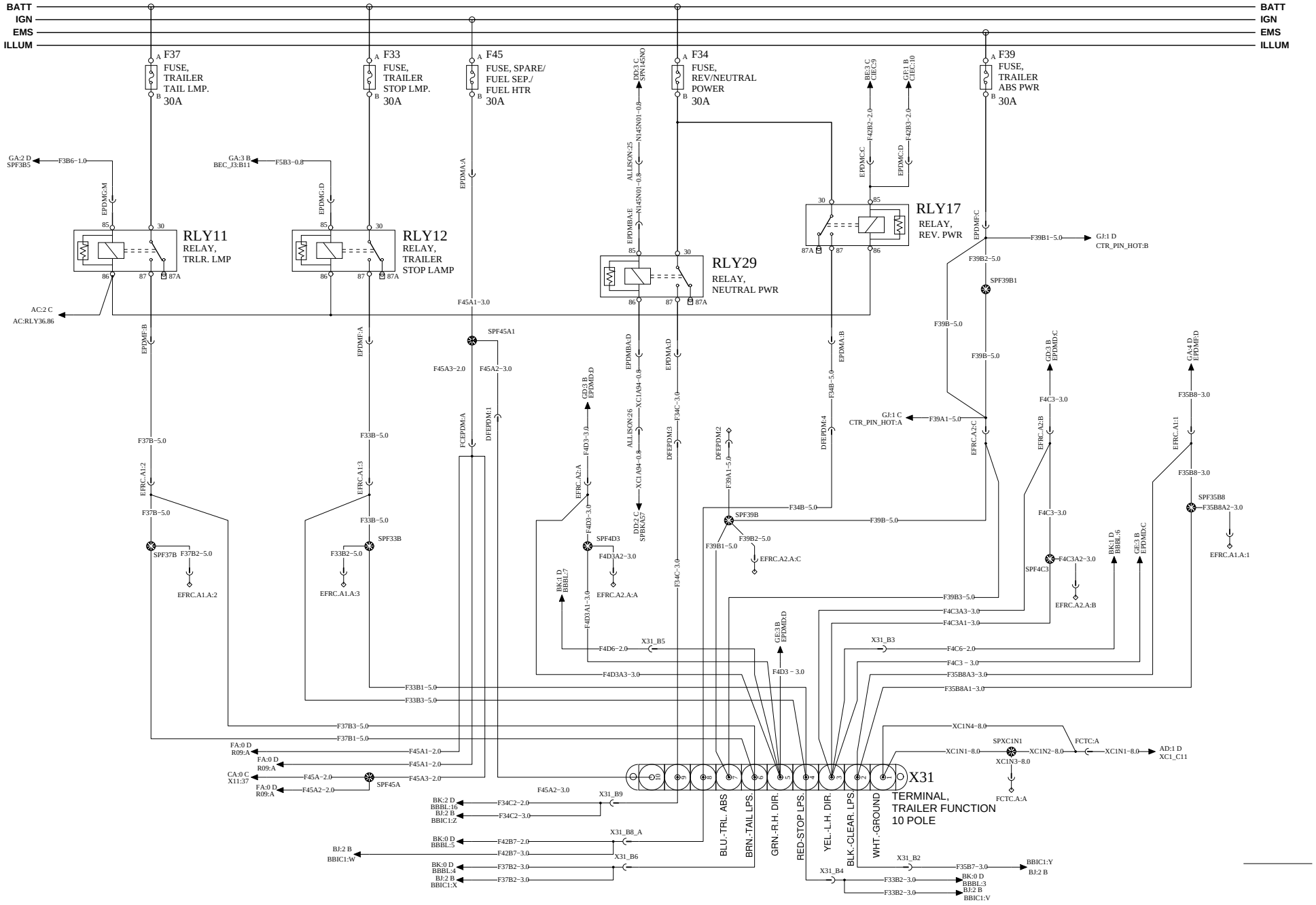

Document title	Document No	Issue	Volume	Page
WIRE DIAGRAM-CONVENTIONAL, 12V MACK, 2013BP	21628497	09	1 (2)	57 (91)
Document type: PRODUCT SCHEMATIC				

VOLVO Group Trucks Technology

INTERIOR LIGTING

https://truckmanualshub.com/

WIRING DIAGRAM:GH

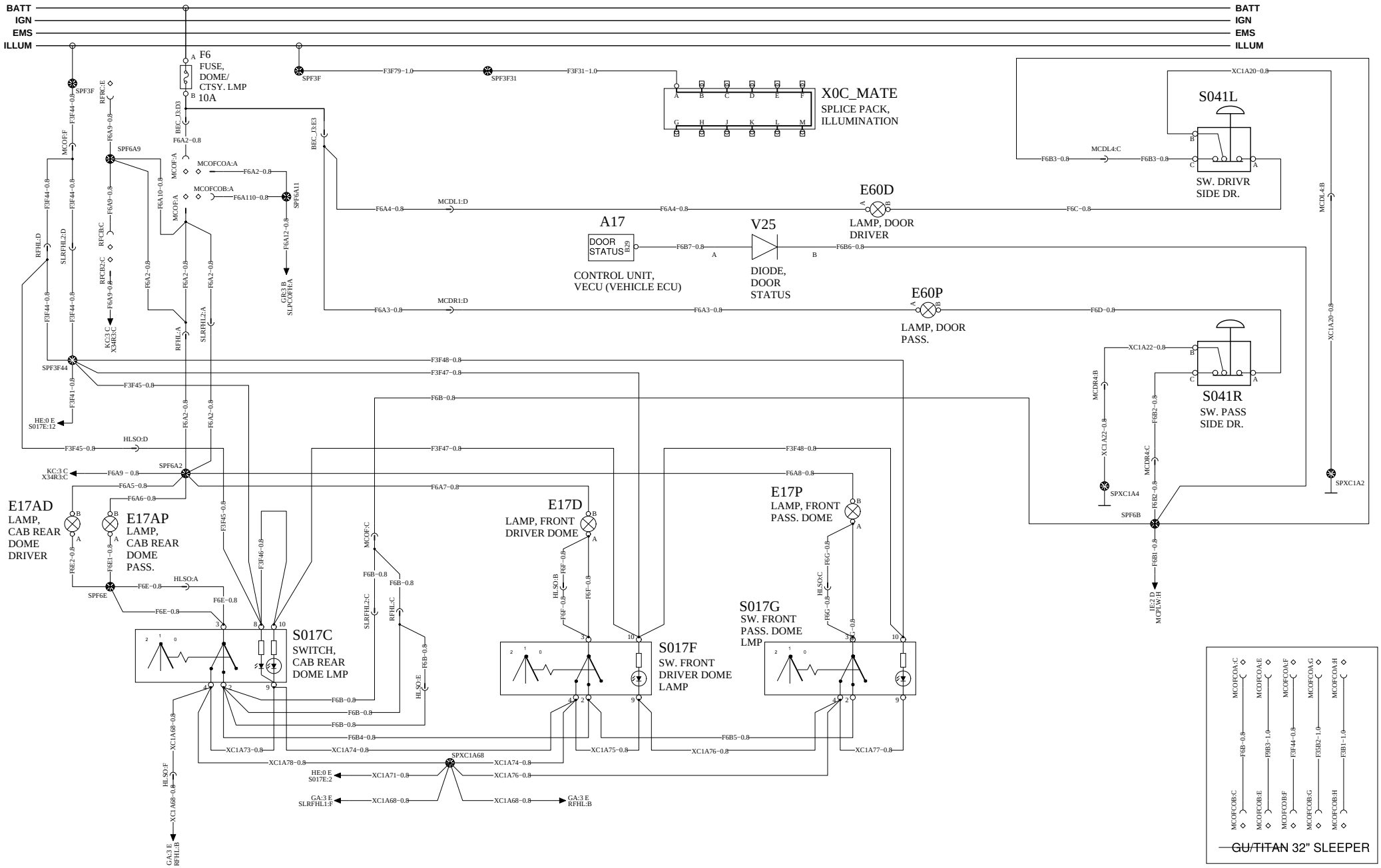

VOLVO Group Trucks Technology	Document title WIRE DIAGRAM-CONVENTIONAL, 12V MACK, 2013BP Document type PRODUCT SCHEMATIC	Document No 21628497	Issue 09	Volume 1 (2)	Page 58 (91)

SNOW PLOW PREP CONNECTOR

https://truckmanualshub.com/

WIRING DIAGRAM: GI

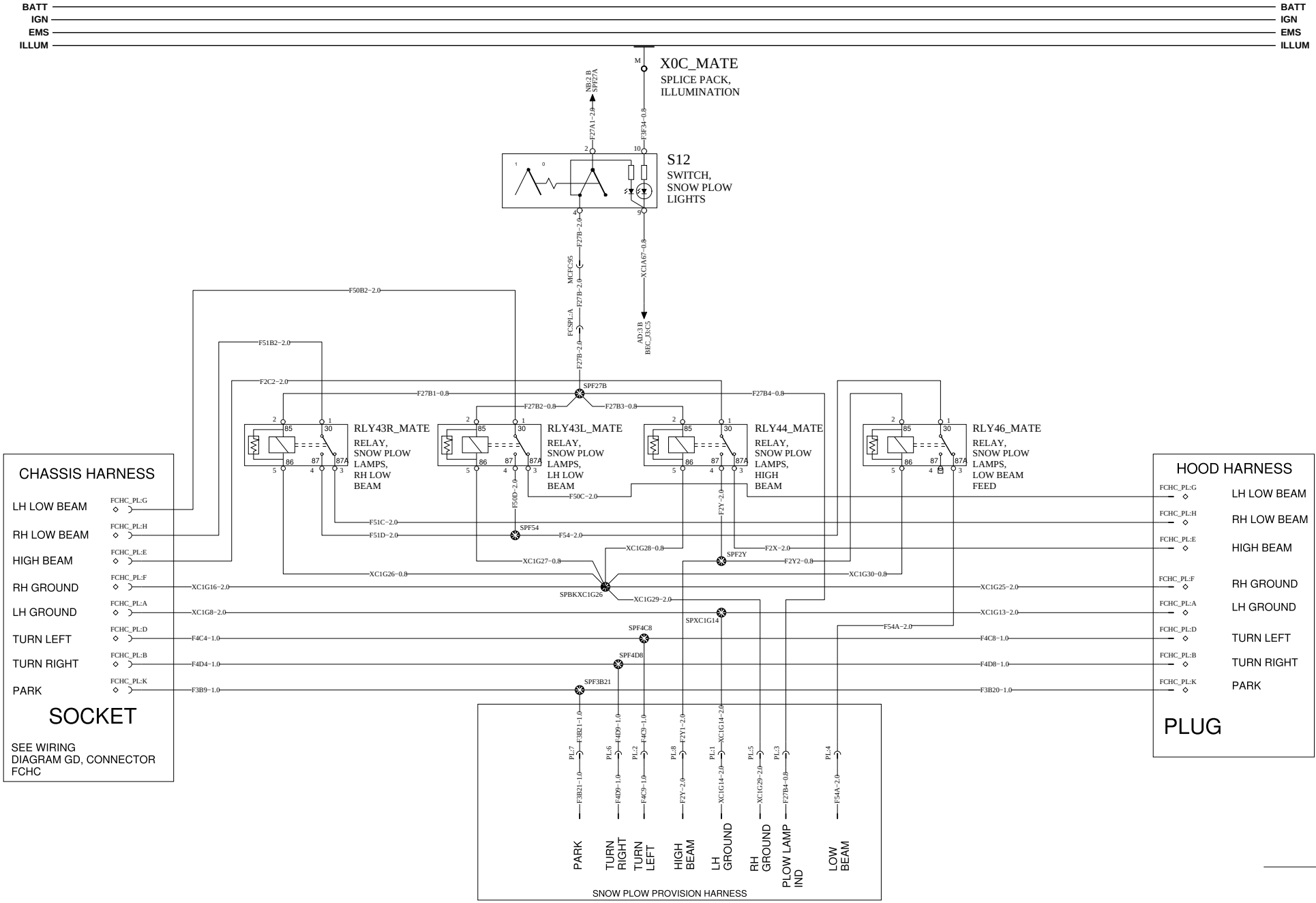

VOLVO Group Trucks Technology	Document title: WIRE DIAGRAM-CONVENTIONAL, 12V MACK, 2013BP	Document No	Issue	Volume	Page
	Document type: PRODUCT SCHEMATIC	21628497	09	1 (2)	59 (91)

TRAILER RECEPTACLE CENTER PIN HOT

https://truckmanualshub.com/

WIRING DIAGRAM: GJ

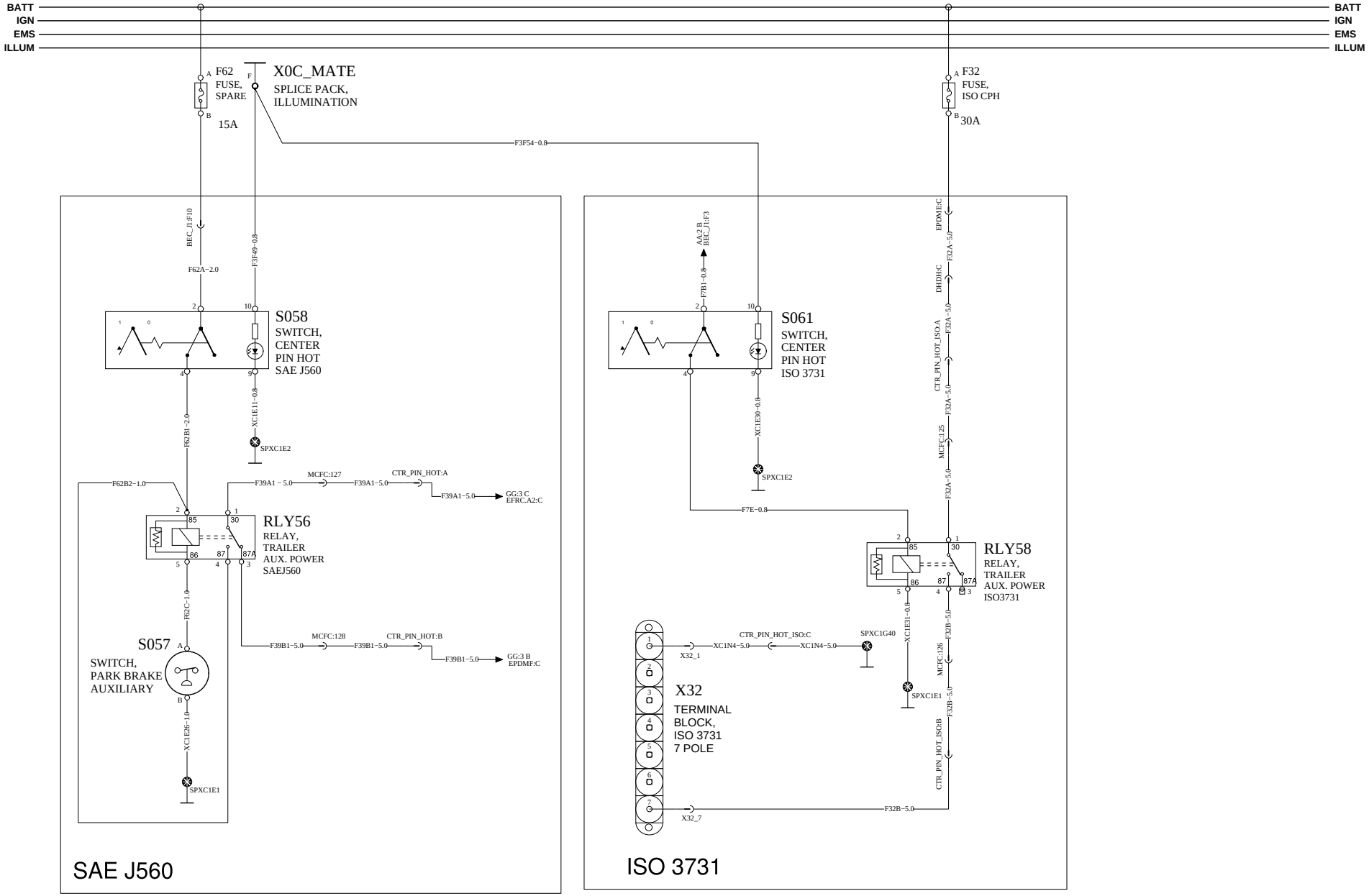

VOLVO Group Trucks Technology	Document title WIRE DIAGRAM-CONVENTIONAL, 12V MACK, 2013BP Document type PRODUCT SCHEMATIC	Document No 21628497	Issue 09	Volume 1 (2)	Page 60 (91)

TITAN LIGHTING OPTIONS

https://truckmanualshub.com/

WIRING DIAGRAM: GK

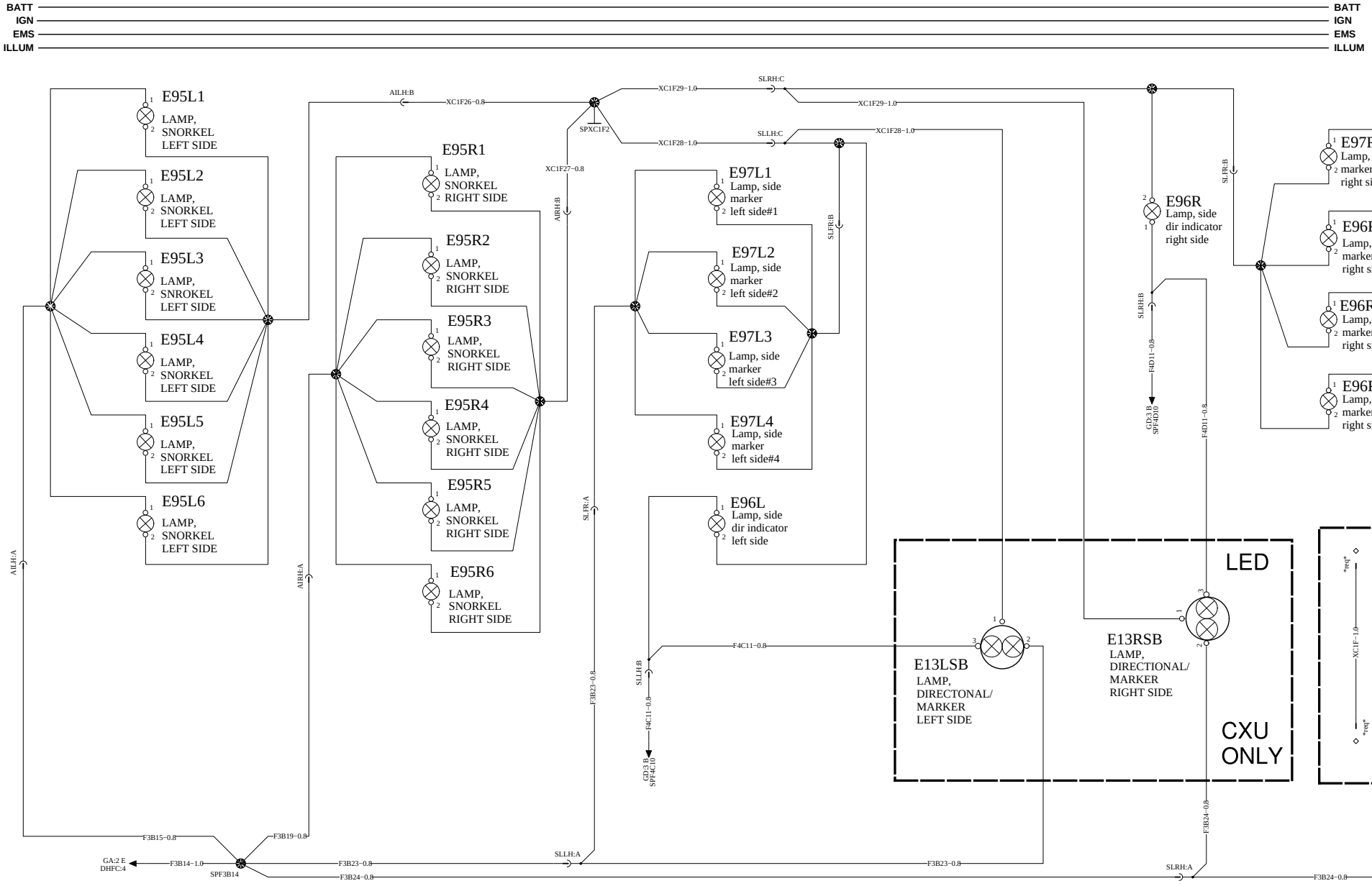

VOLVO Group Trucks Technology	Document title WIRE DIAGRAM-CONVENTIONAL, 12V MACK, 2013BP Document type PRODUCT SCHEMATIC	Document No 21628497	Issue 09	Volume 1 (2)	Page 61 (91)

https://truckmanualshub.com/

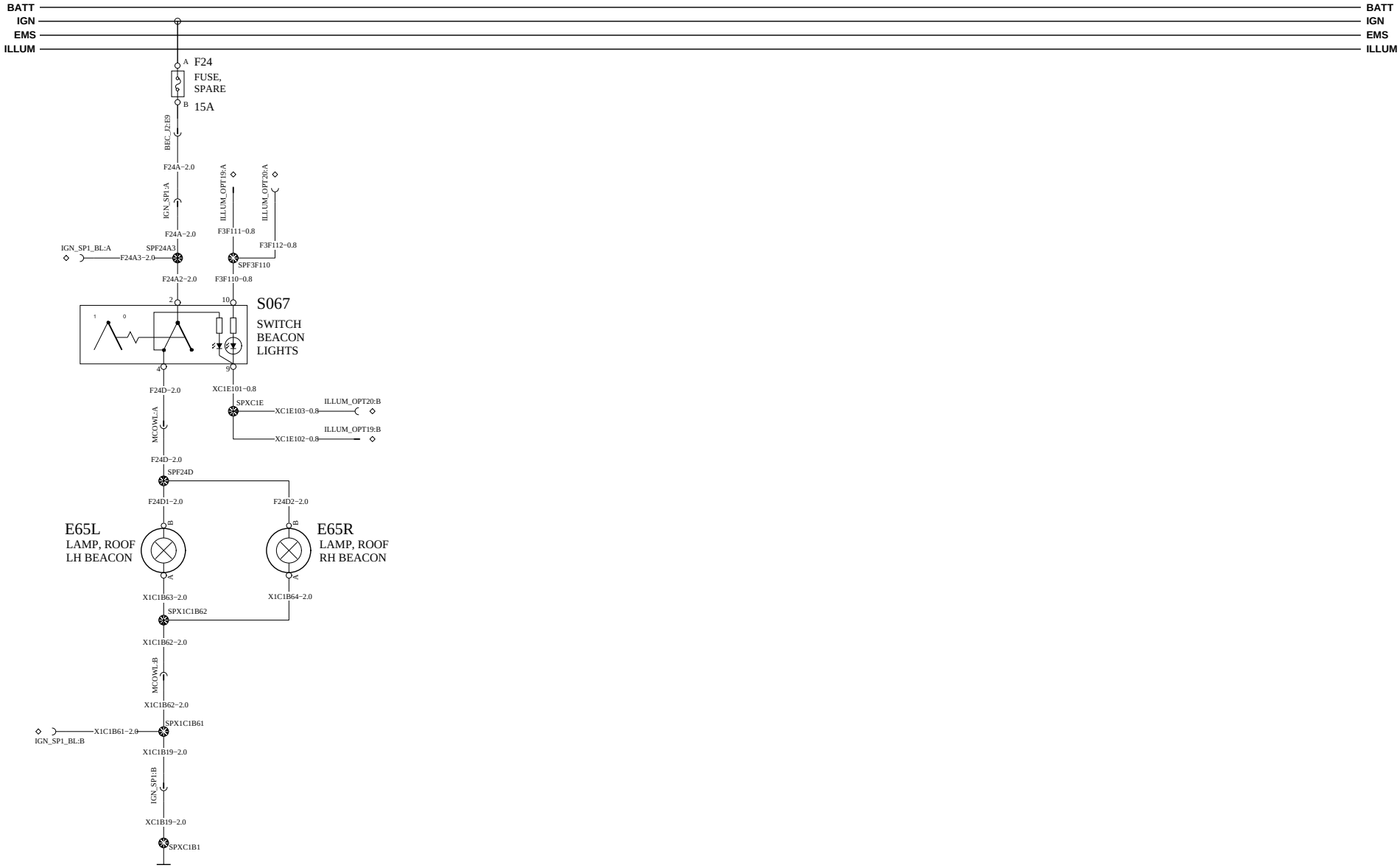

https://truckmanualshub.com/

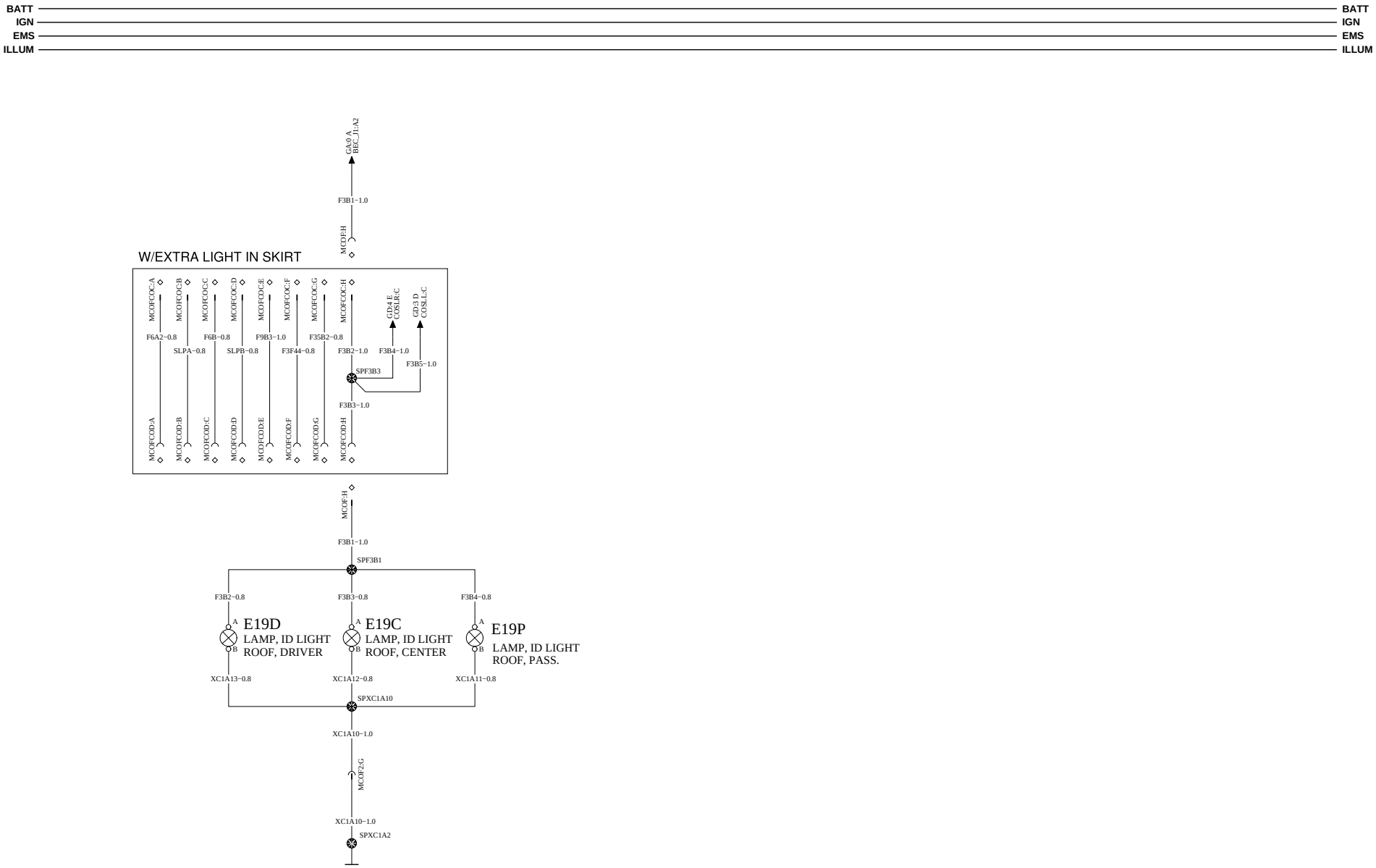

https://truckmanualshub.com/

WIRING DIAGRAM: GP

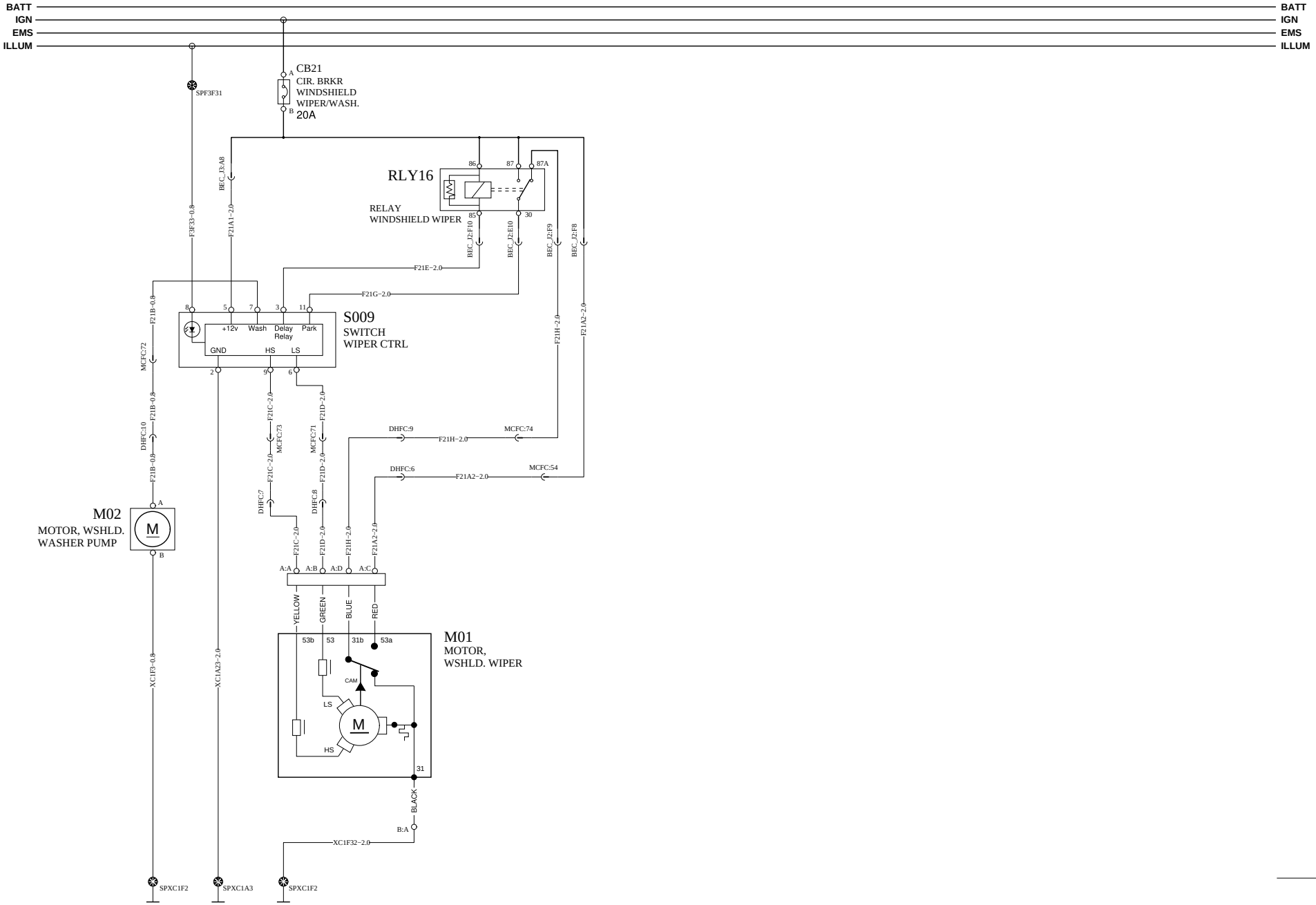

VOLVO Group Trucks Technology	Document title WIRE DIAGRAM-CONVENTIONAL, 12V MACK, 2013BP Document type PRODUCT SCHEMATIC	Document No 21628497	Issue 09	Volume 1 (2)	Page 64 (91)

HORN WIRING/SPOTLIGHT

https://truckmanualshub.com/

WIRING DIAGRAM: GQ

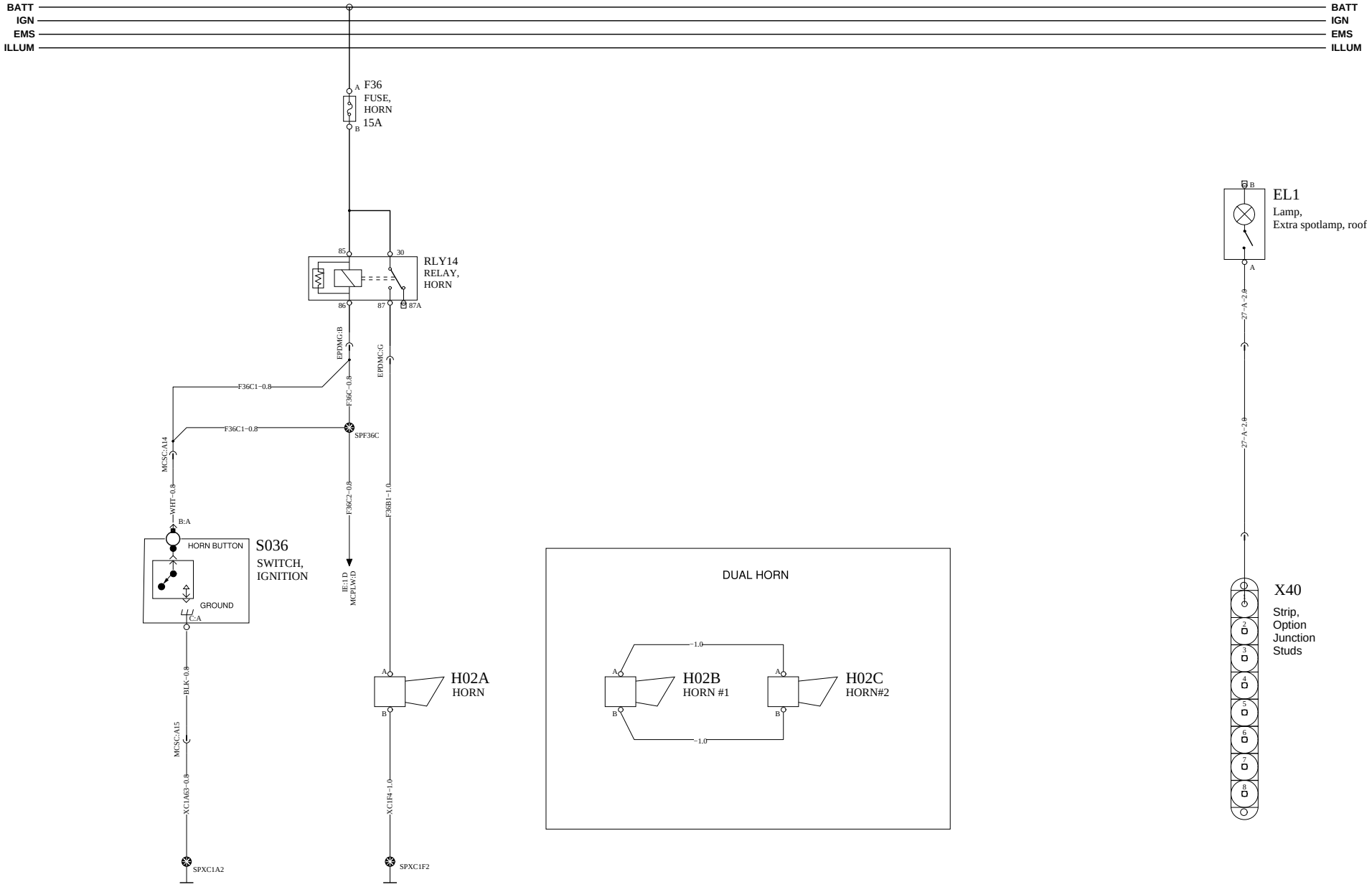

VOLVO Group Trucks Technology	Document title WIRE DIAGRAM-CONVENTIONAL, 12V MACK, 2013BP Document type PRODUCT SCHEMATIC	Document No 21628497	Issue 09	Volume 1 (2)	Page 65 (91)

LIGHTING − HOOK UP LAMPS

https://truckmanualshub.com/

WIRING DIAGRAM: GR

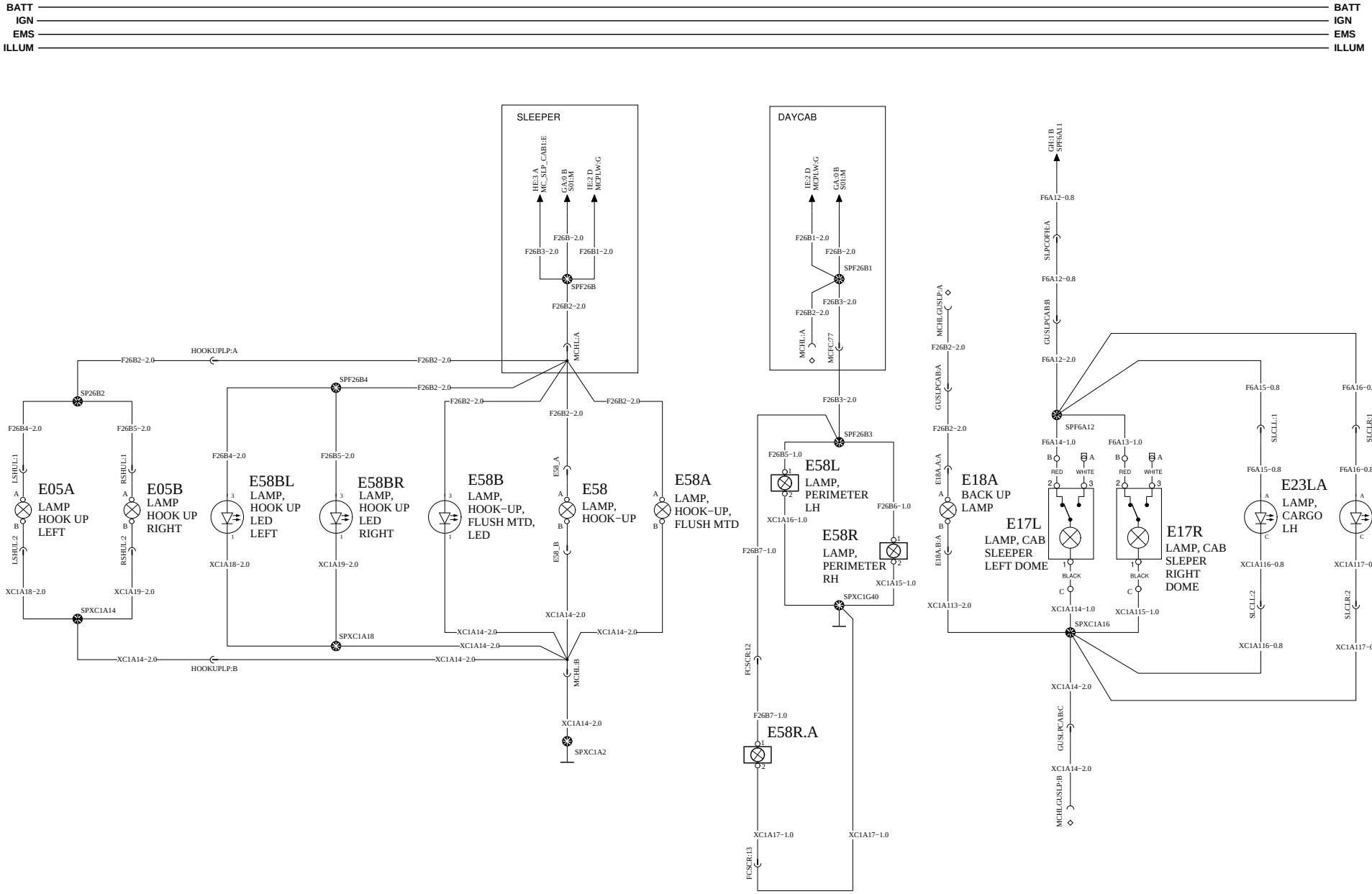

VOLVO Group Trucks Technology	Document title WIRE DIAGRAM-CONVENTIONAL, 12V MACK, 2013BP Document type PRODUCT SCHEMATIC	Document No 21628497	Issue 09	Volume 1 (2)	Page 66 (91)

CLIMATE CONTROL

https://truckmanualshub.com/

WIRING DIAGRAM: HA

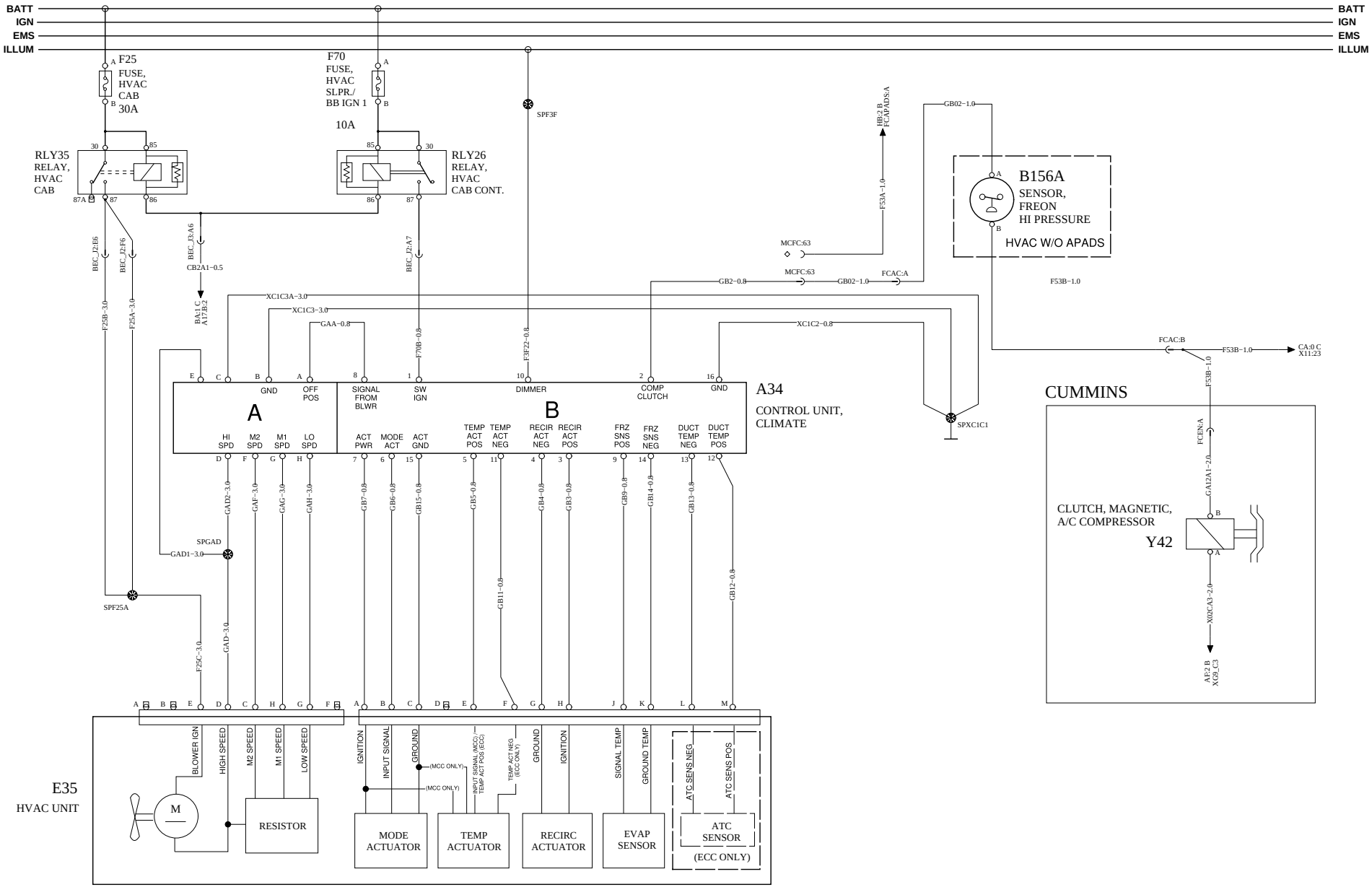

VOLVO Group Trucks Technology	Document title: WIRE DIAGRAM-CONVENTIONAL, 12V MACK, 2013BP	Document No	Issue	Volume	Page
	Document type: PRODUCT SCHEMATIC	21628497	09	1 (2)	67 (91)

https://truckmanualshub.com/

WIRING DIAGRAM: HB

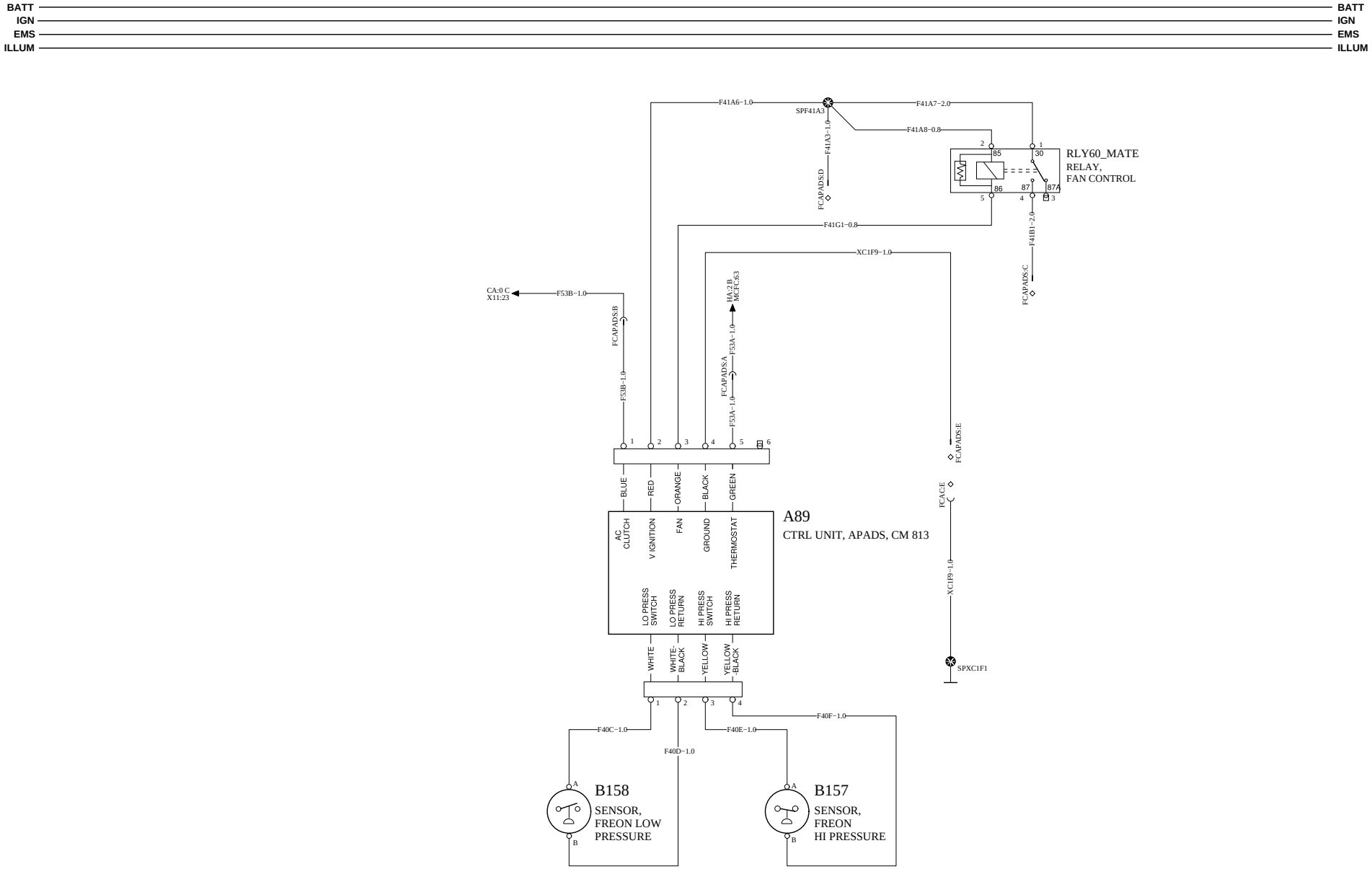

VOLVO Group Trucks Technology	Document title WIRE DIAGRAM-CONVENTIONAL, 12V MACK, 2013BP Document type PRODUCT SCHEMATIC	Document No 21628497	Issue 09	Volume 1 (2)	Page 68 (91)

HEATED SEATS, HEATED WINDSHIELD, AUX FAN 1/2

https://truckmanualshub.com/

WIRING DIAGRAM: HC

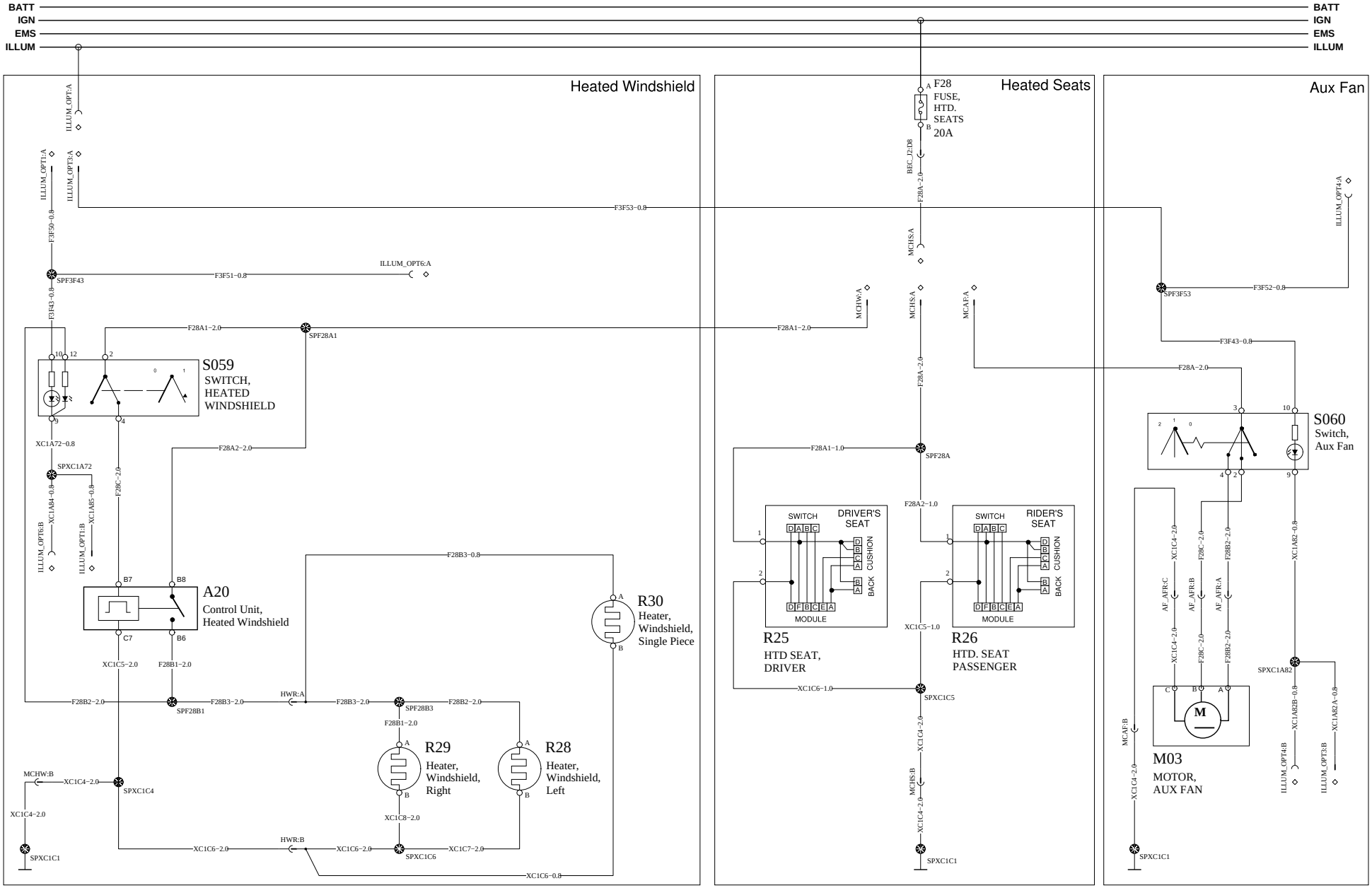

VOLVO Group Trucks Technology	Document title WIRE DIAGRAM-CONVENTIONAL, 12V MACK, 2013BP Document type PRODUCT SCHEMATIC	Document No 21628497	Issue 09	Volume 1 (2)	Page 69 (91)

SLEEPER CLIMATE CONTROL

https://truckmanualshub.com/

WIRING DIAGRAM: HD

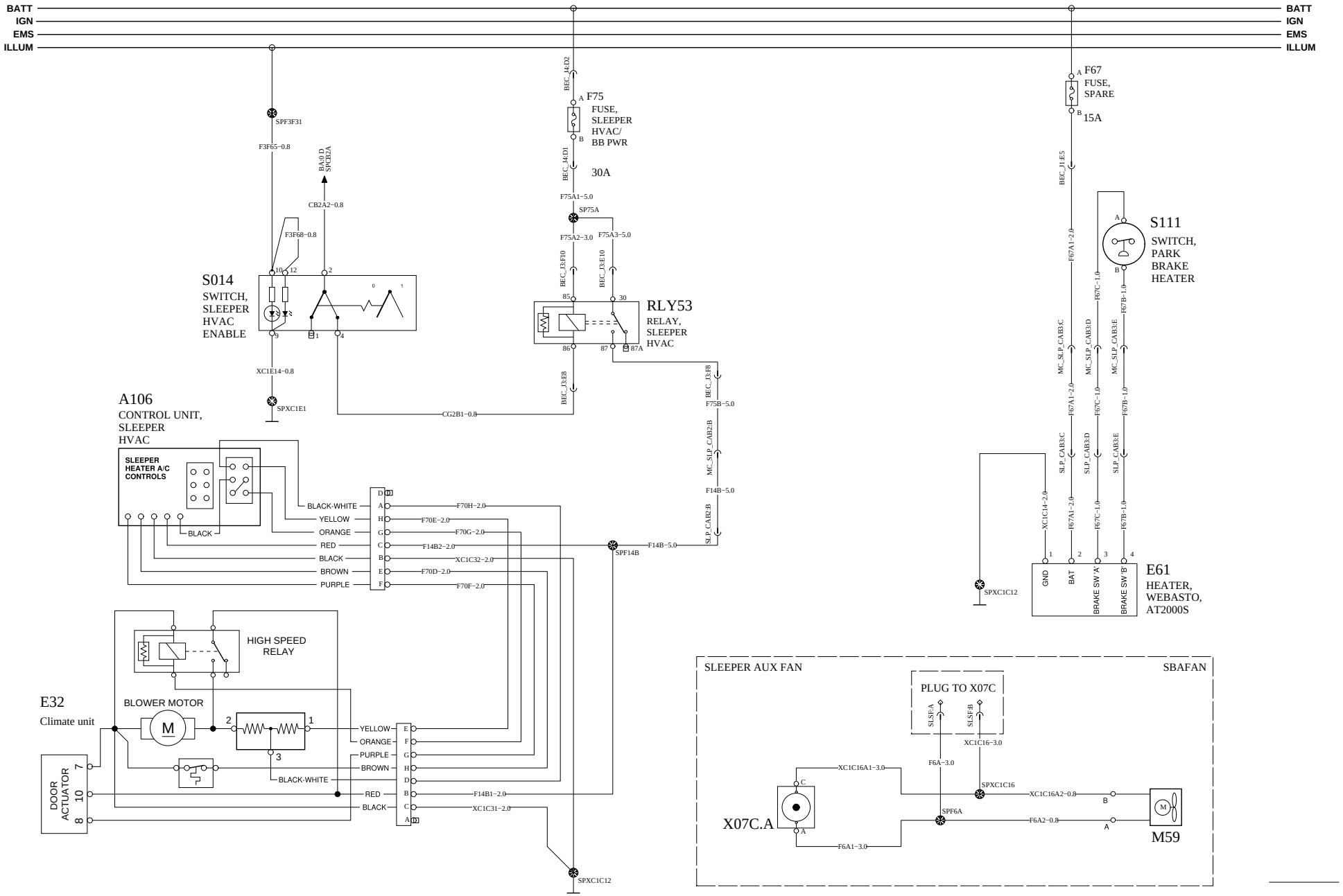

VOLVO Group Trucks Technology	Document title: WIRE DIAGRAM-CONVENTIONAL, 12V MACK, 2013BP Document type: PRODUCT SCHEMATIC	Document No: 21628497	Issue: 09	Volume: 1 (2)	Page: 70 (91)

SLEEPER FUNCTIONS

https://truckmanualshub.com/

WIRING DIAGRAM: HE

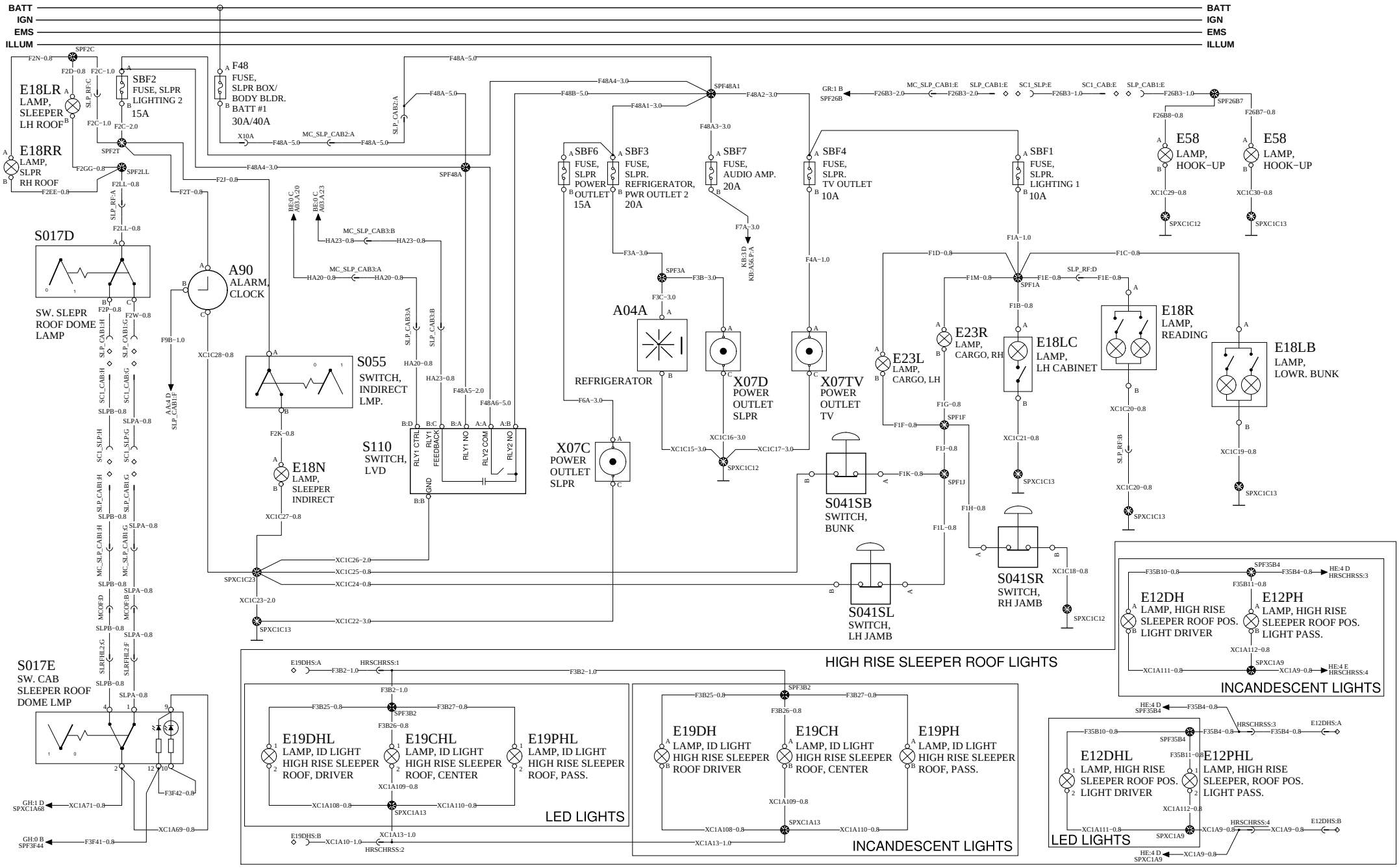

VOLVO Group Trucks Technology	Document title: WIRE DIAGRAM-CONVENTIONAL, 12V MACK, 2013BP	Document No	Issue	Volume	Page
	Document type: PRODUCT SCHEMATIC	21628497	09	1 (2)	71 (91)

120V AC SYSTEM/INVERTER

https://truckmanualshub.com/

WIRING DIAGRAM: HF

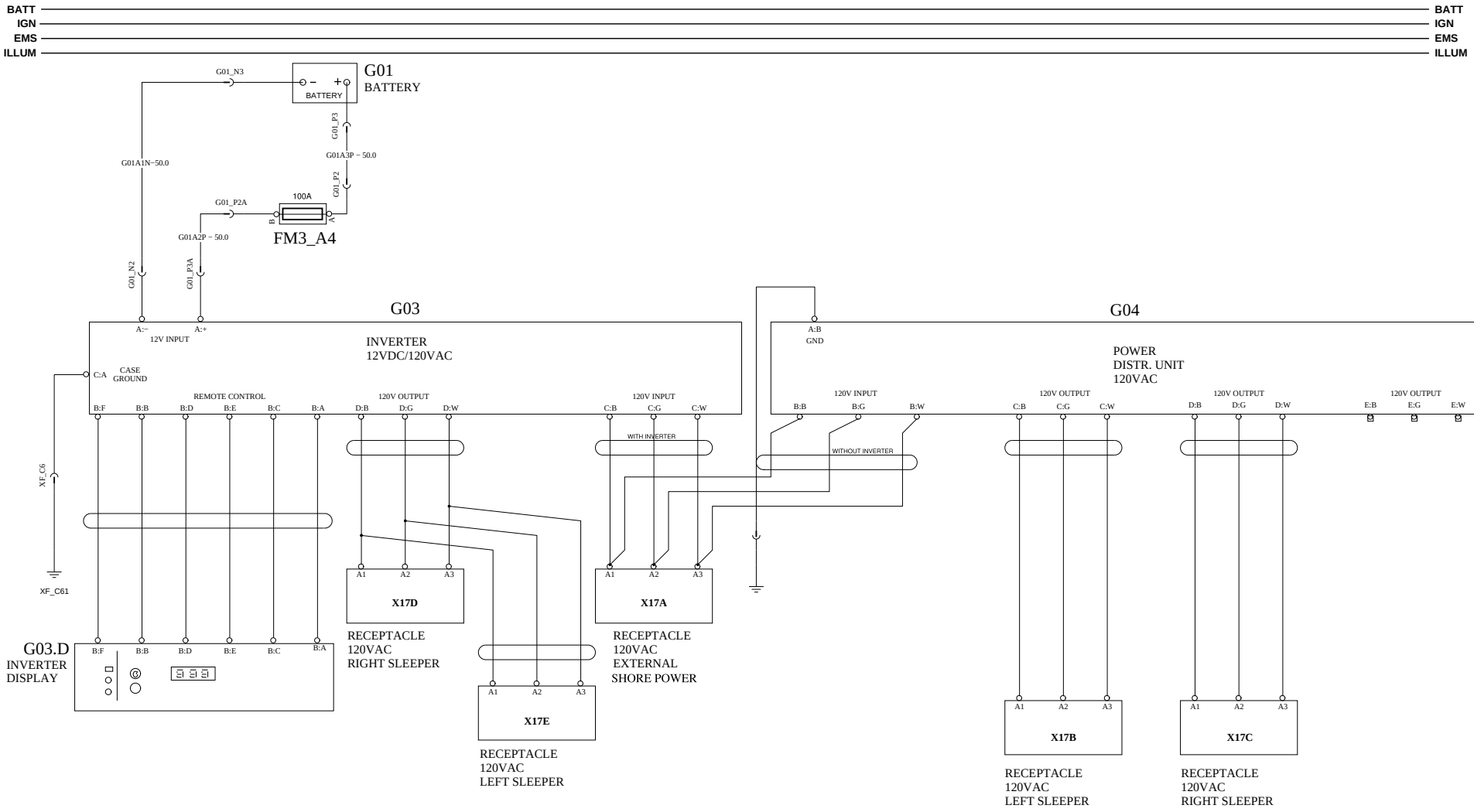

VOLVO Group Trucks Technology	Document title WIRE DIAGRAM-CONVENTIONAL, 12V MACK, 2013BP Document type PRODUCT SCHEMATIC	Document No 21628497	Issue 09	Volume 1 (2)	Page 72 (91)

https://truckmanualshub.com/

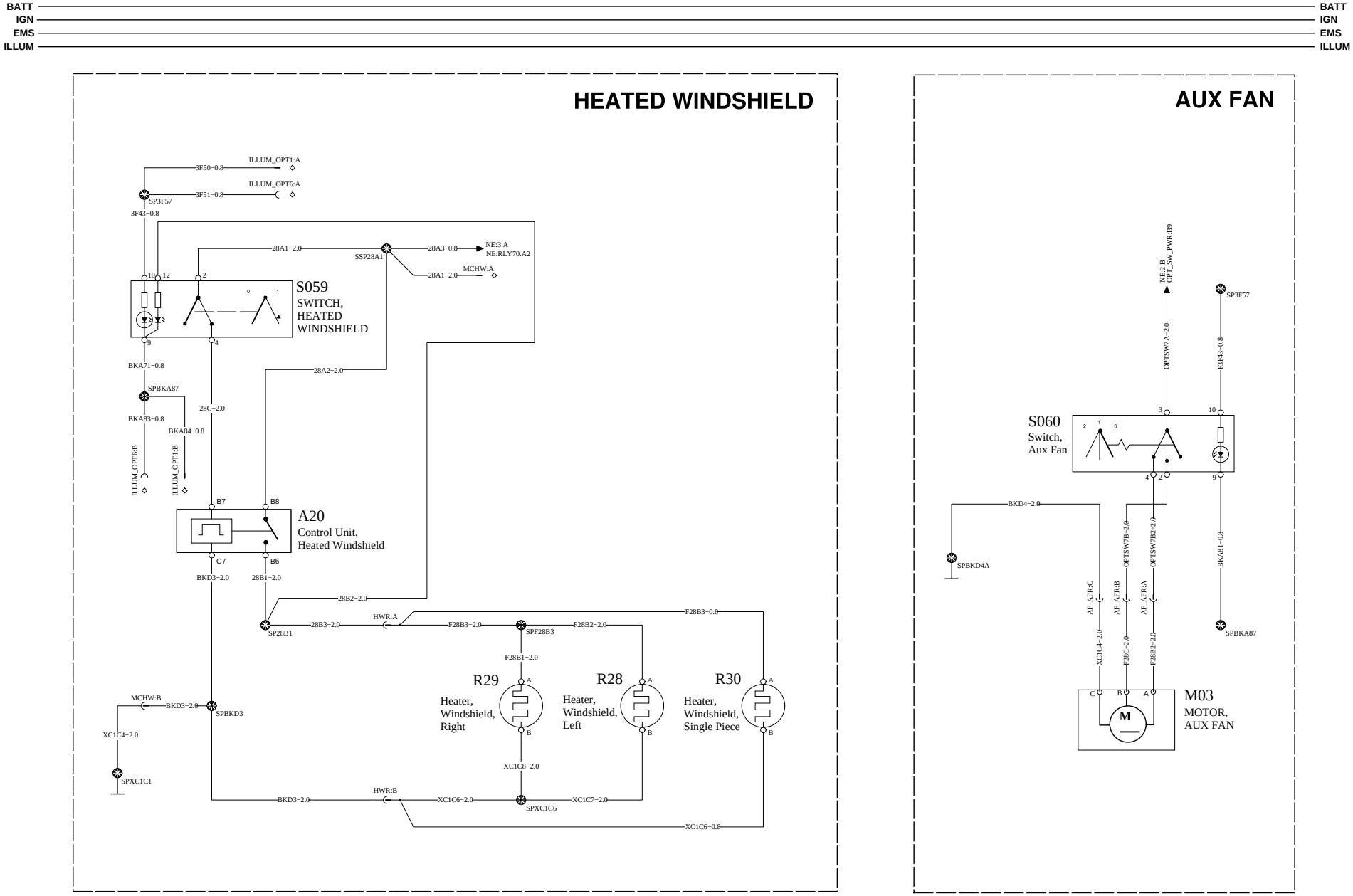

VOLVO Group Trucks Technology	Document title WIRE DIAGRAM-CONVENTIONAL, 12V MACK, 2013BP Document type PRODUCT SCHEMATIC	Document No 21628497	Issue 09	Volume 1 (2)	Page 73 (91)

RH & LH MOTORIZED WINDOWS

https://truckmanualshub.com/

WIRING DIAGRAM: IA

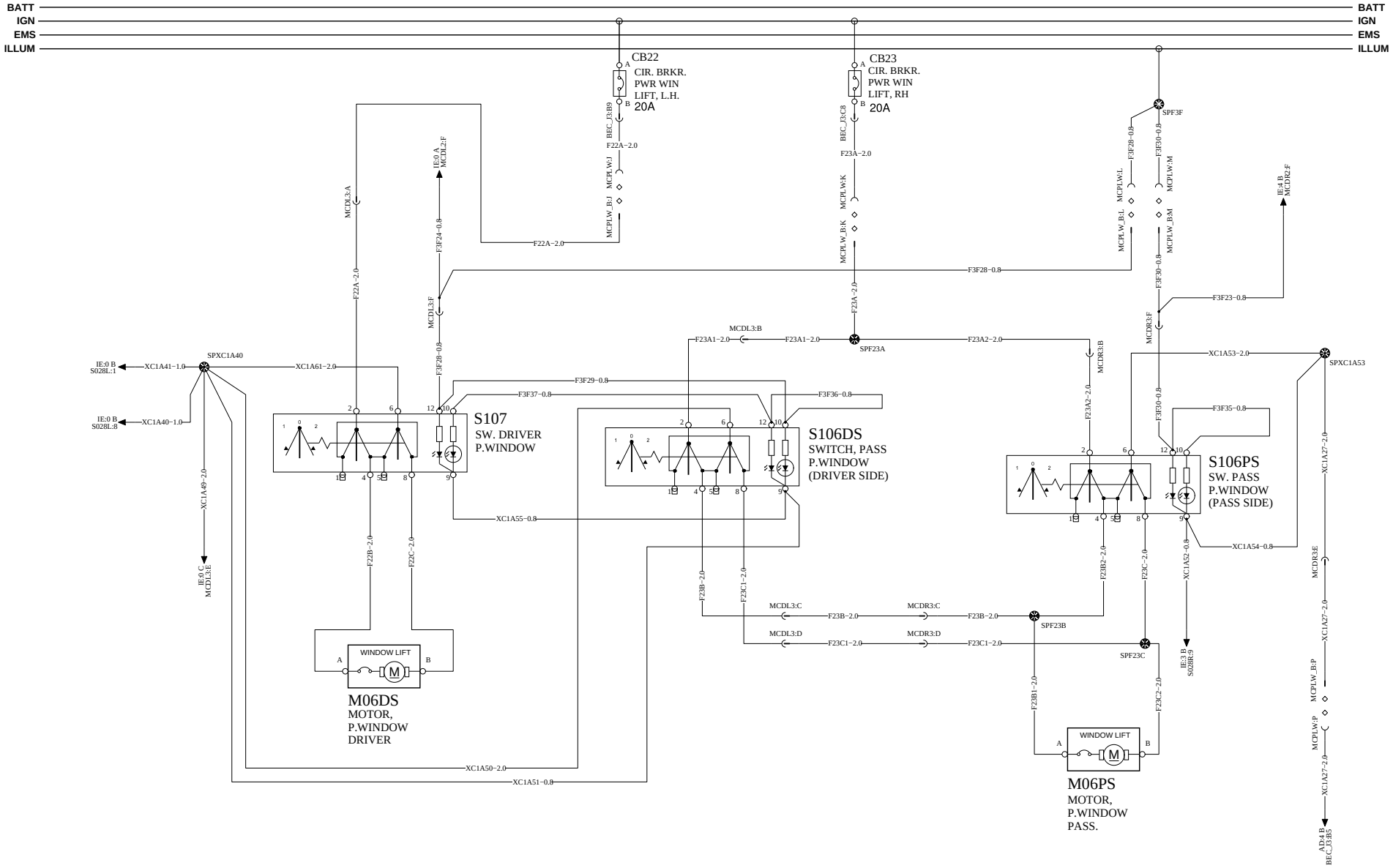

VOLVO Group Trucks Technology	Document title WIRE DIAGRAM-CONVENTIONAL, 12V MACK, 2013BP Document type PRODUCT SCHEMATIC	Document No 21628497	Issue 09	Volume 1 (2)	Page 74 (91)

MIRROR CONTROL 1/2

https://truckmanualshub.com/

WIRING DIAGRAM: IC

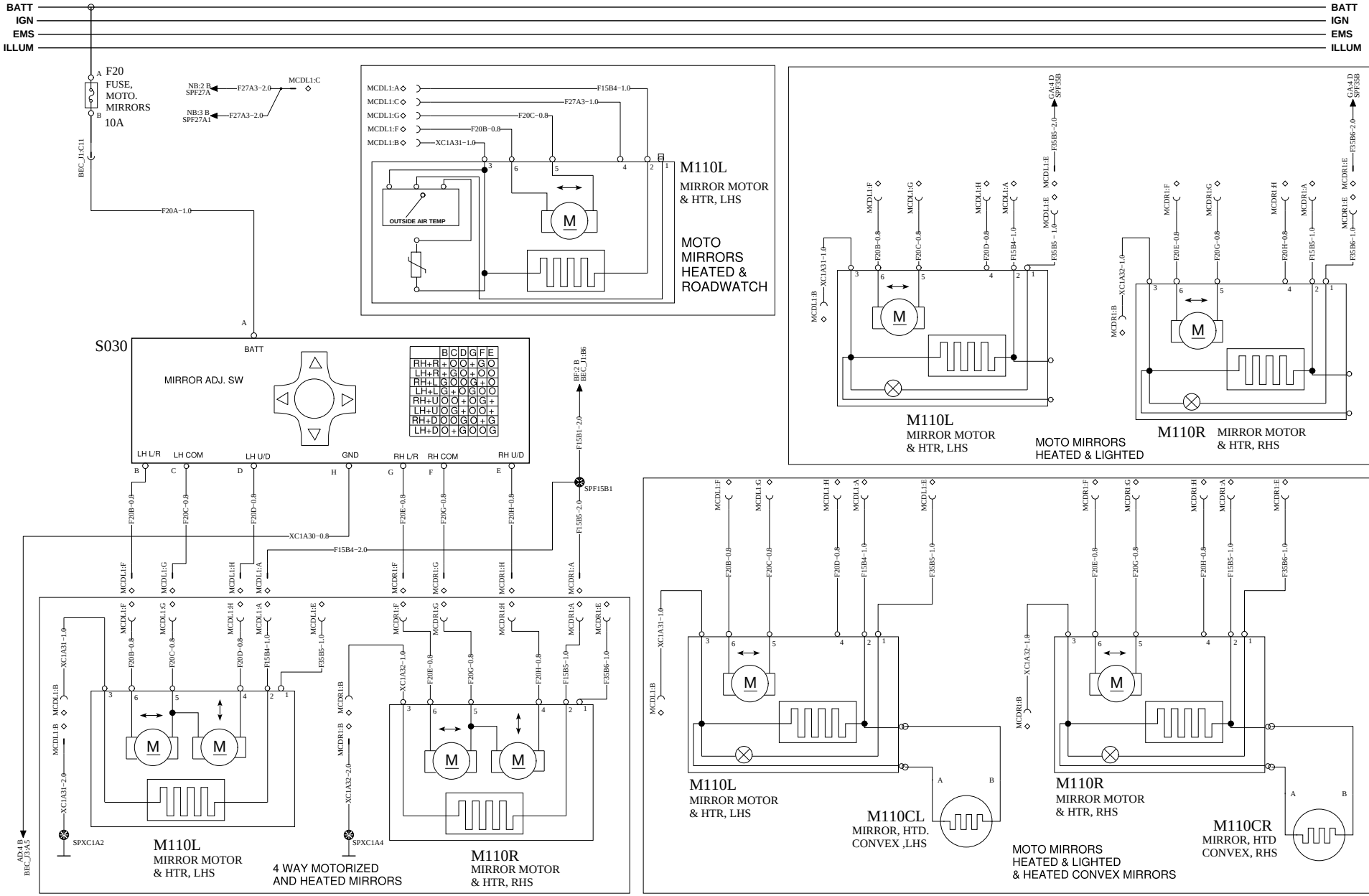

VOLVO Group Trucks Technology	Document title WIRE DIAGRAM-CONVENTIONAL, 12V MACK, 2013BP Document type PRODUCT SCHEMATIC	Document No 21628497	Issue 09	Volume 1 (2)	Page 75 (91)

RH ONLY MOTORIZED WINDOWS & DOOR CONTROL

https://truckmanualshub.com/

WIRING DIAGRAM: ID

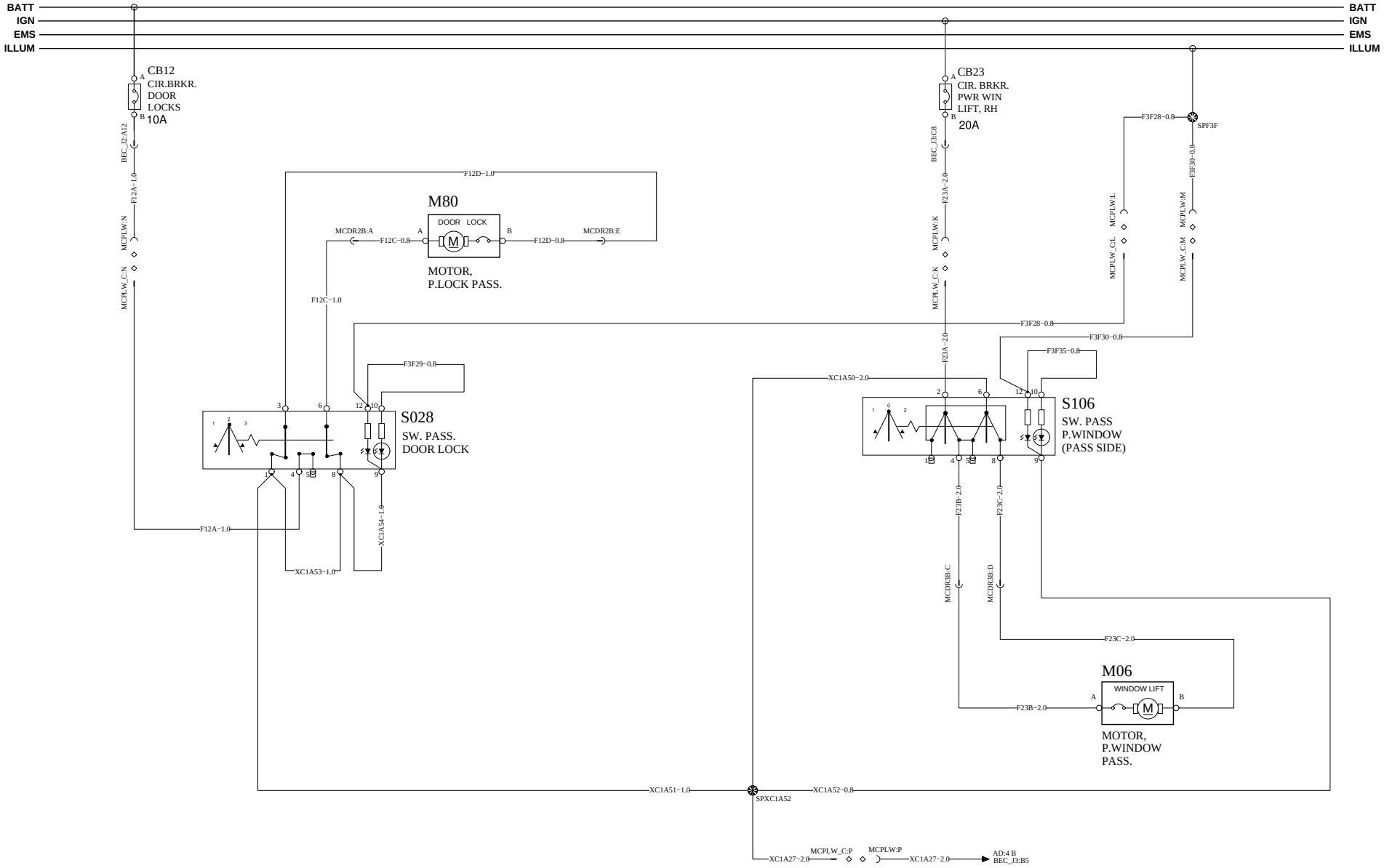

VOLVO Group Trucks Technology	Document title WIRE DIAGRAM-CONVENTIONAL, 12V MACK, 2013BP Document type PRODUCT SCHEMATIC	Document No 21628497	Issue 09	Volume 1 (2)	Page 76 (91)

RH & LH DOOR CONTROL

https://truckmanualshub.com/

WIRING DIAGRAM: IE

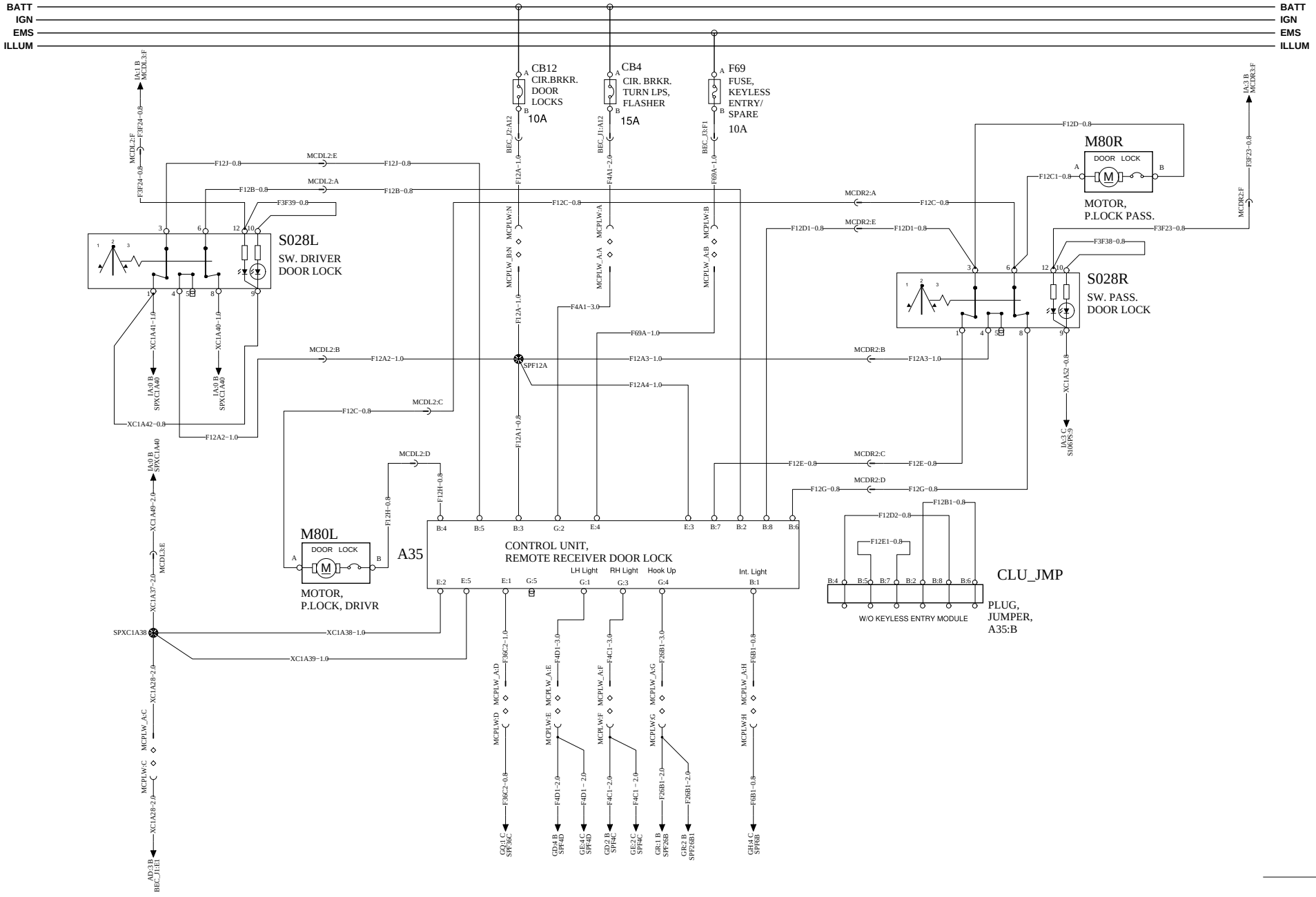

VOLVO Group Trucks Technology	Document title WIRE DIAGRAM-CONVENTIONAL, 12V MACK, 2013BP Document type PRODUCT SCHEMATIC	Document No 21628497	Issue 09	Volume 1 (2)	Page 77 (91)

https://truckmanualshub.com/

BATT
IGN
EMS
ILLUM

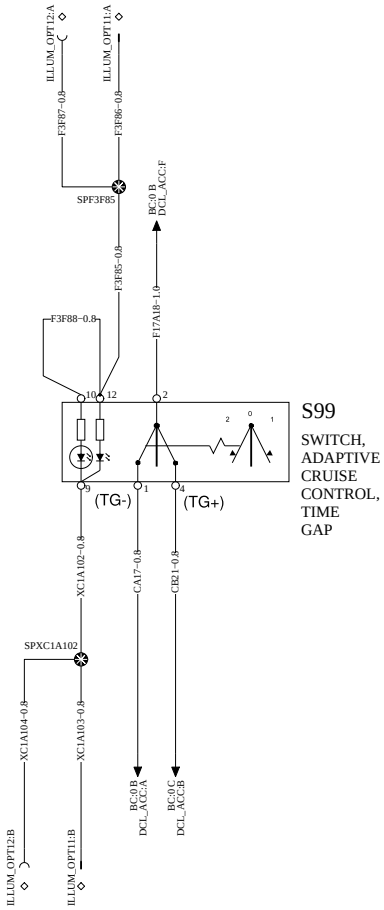

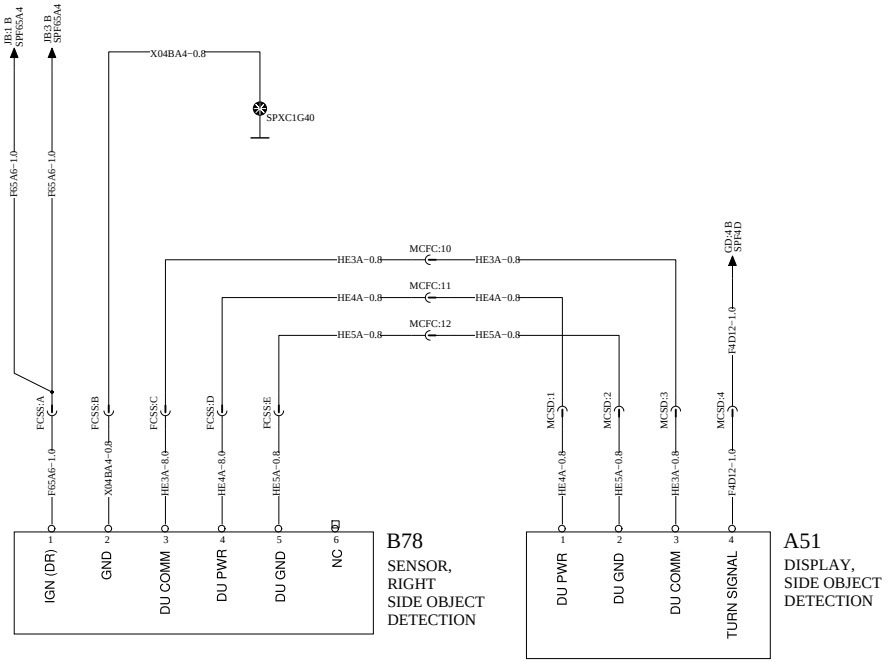

https://truckmanualshub.com/

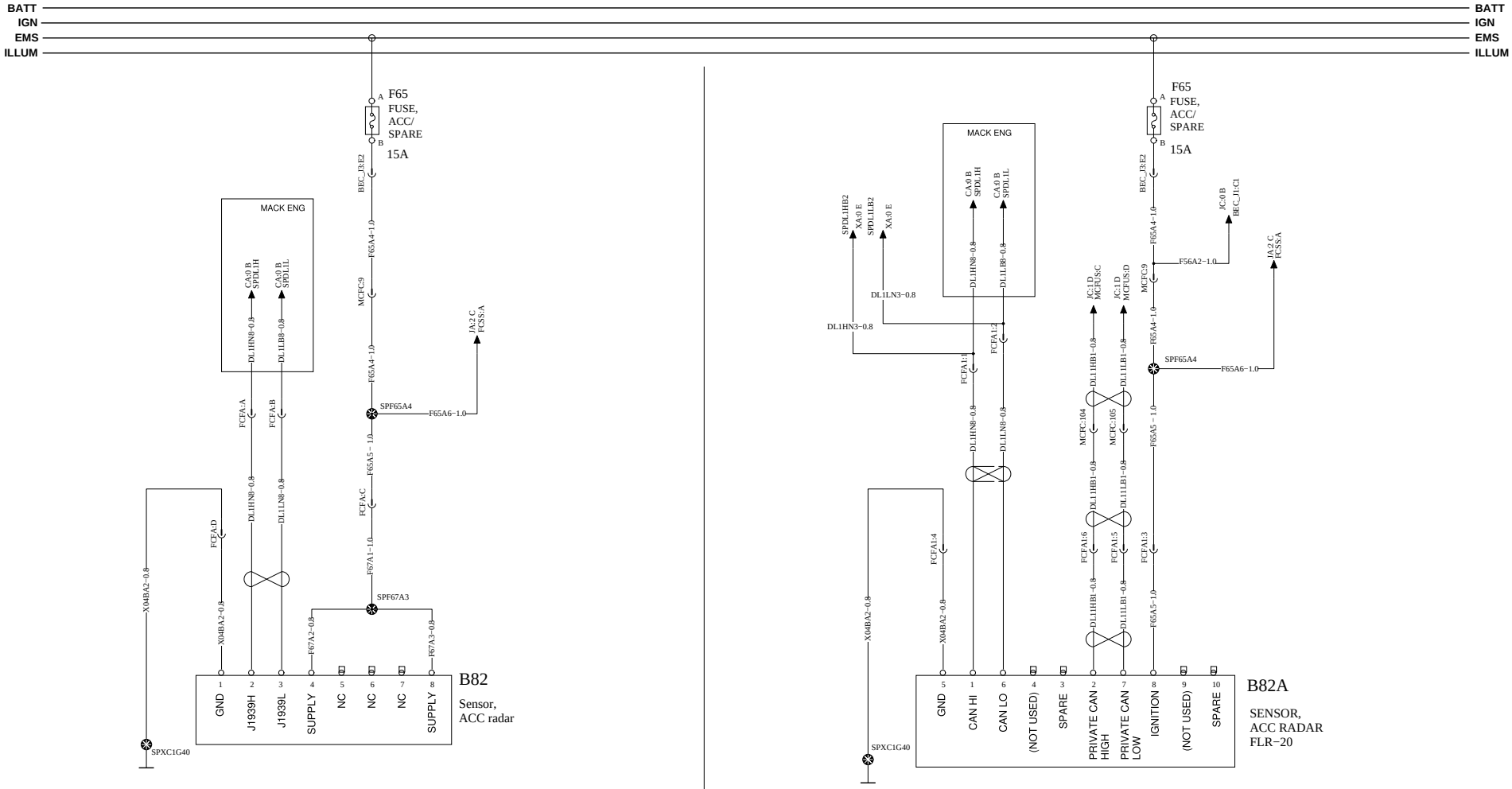

BENDIX FLR-10

BENDIX FLR-20

https://truckmanualshub.com/

WIRING DIAGRAM : JC

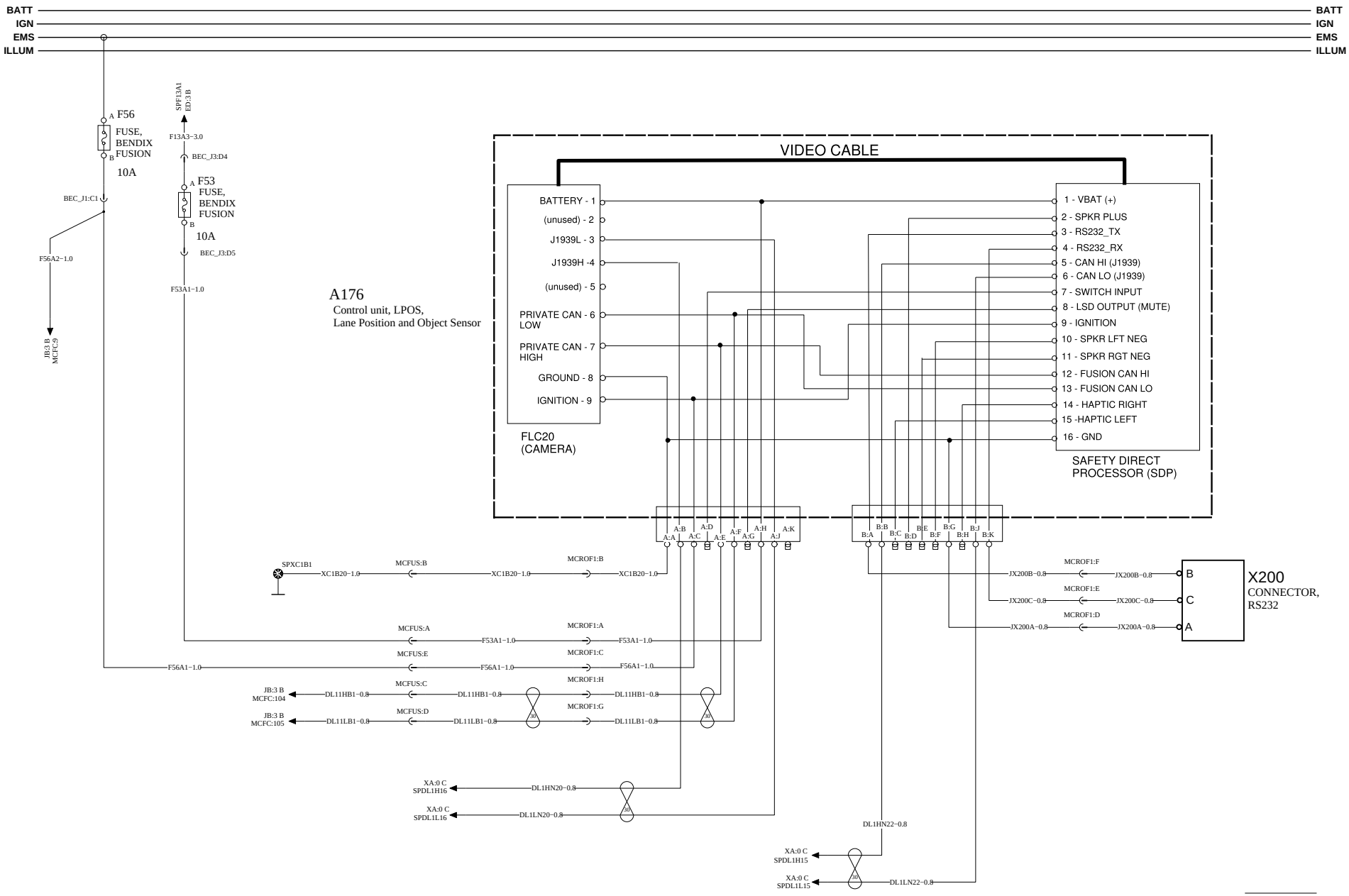

VOLVO Group Trucks Technology	Document title WIRE DIAGRAM-CONVENTIONAL, 12V MACK, 2013BP Document type PRODUCT SCHEMATIC	Document No 21628497	Issue 09	Volume 1 (2)	Page 80 (91)

AUDIO SYSTEM − NONPROGRAMMABLE

https://truckmanualshub.com/

WIRING DIAGRAM: KB

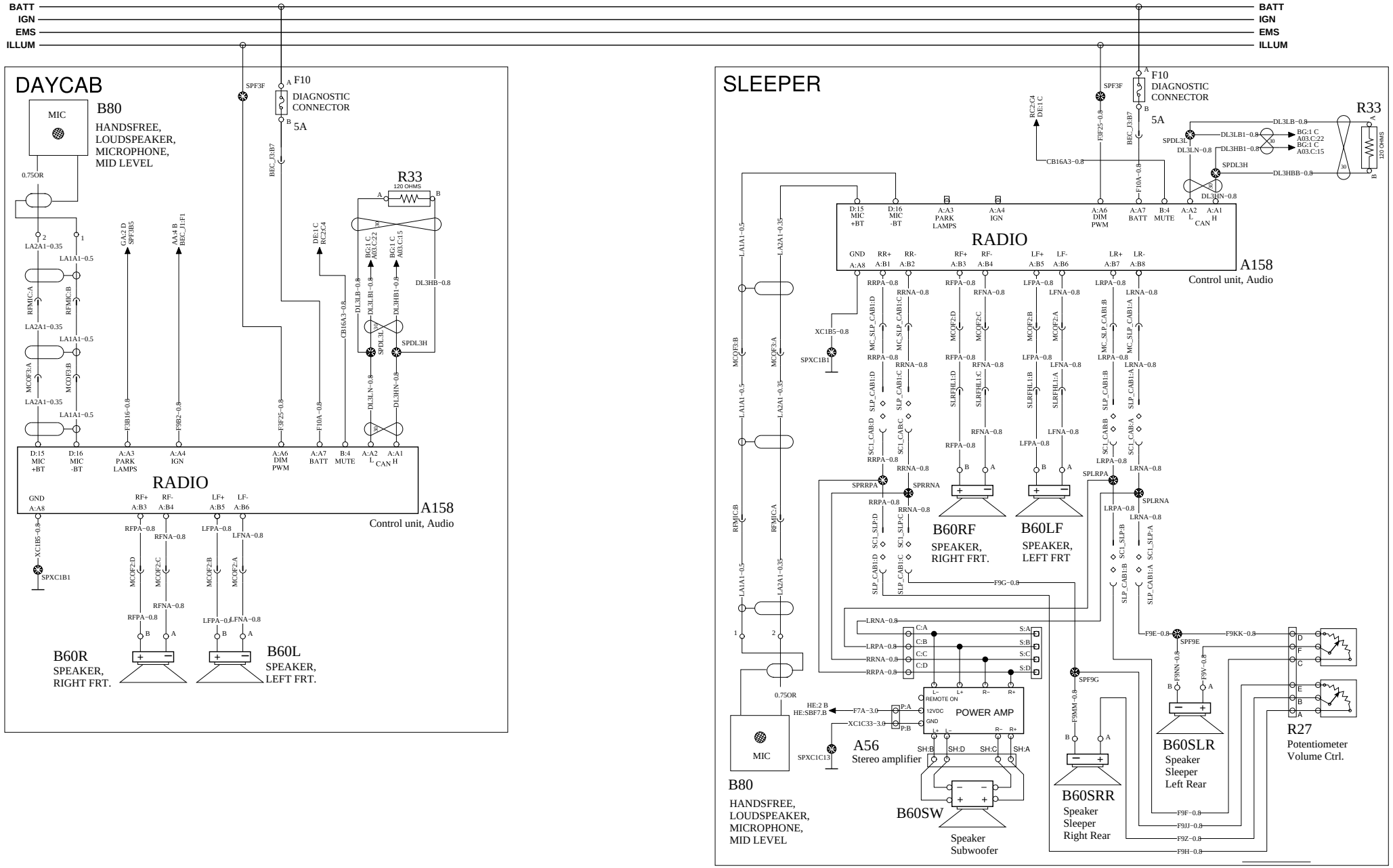

VOLVO Group Trucks Technology	Document title: WIRE DIAGRAM-CONVENTIONAL, 12V MACK, 2013BP Document type: PRODUCT SCHEMATIC	Document No: 21628497	Issue: 09	Volume: 1 (2)	Page: 81 (91)

POWER OUTLET CONNECTIONS

https://truckmanualshub.com/

WIRING DIAGRAM: KC

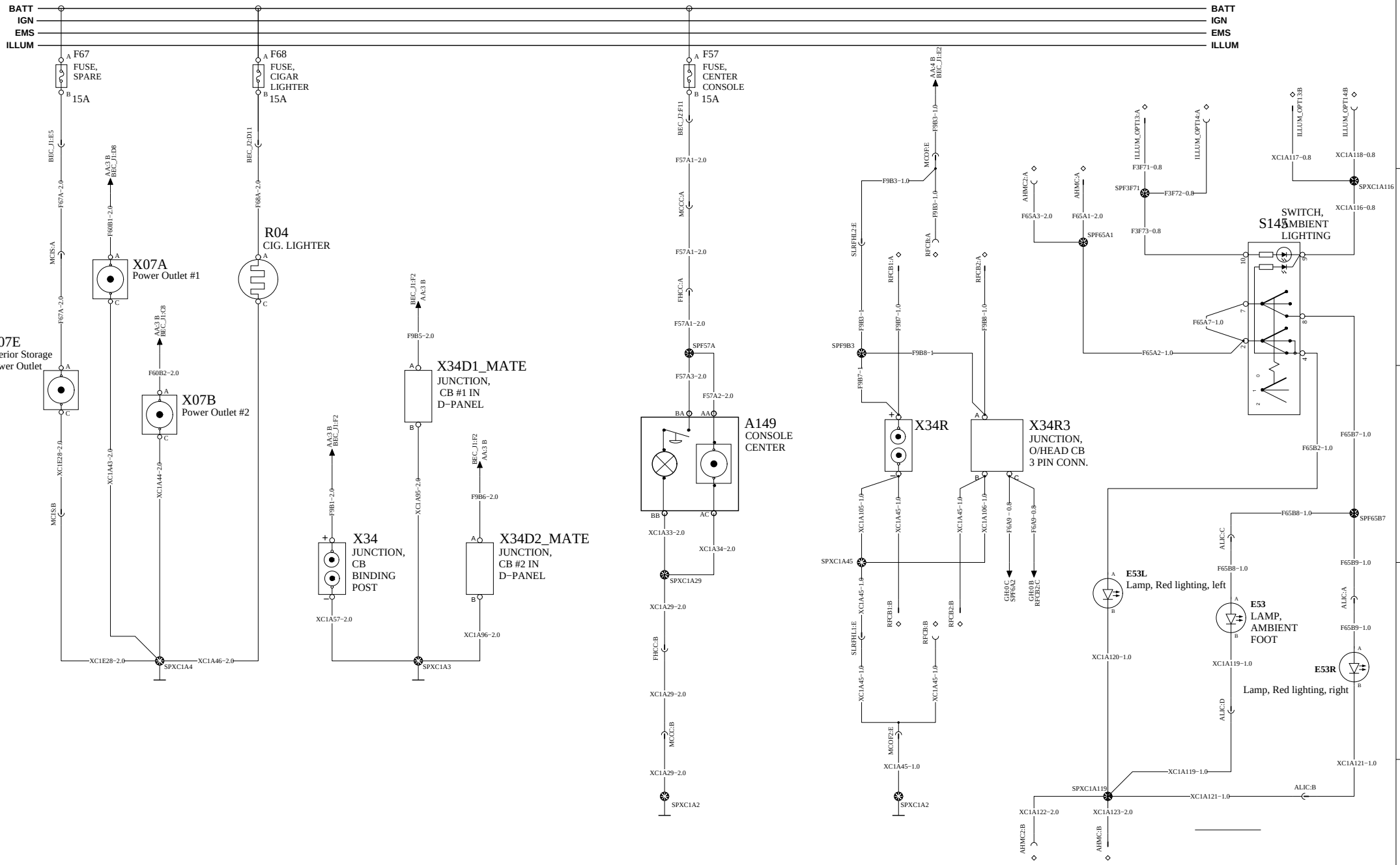

VOLVO Group Trucks Technology	Document title WIRE DIAGRAM-CONVENTIONAL, 12V MACK, 2013BP Document type PRODUCT SCHEMATIC	Document No 21628497	Issue 09	Volume 1 (2)	Page 82 (91)

IGNITON & BATTERY SWITCHES & SPARE CONNECTORS

https://truckmanualshub.com/

WIRING DIAGRAM: NA

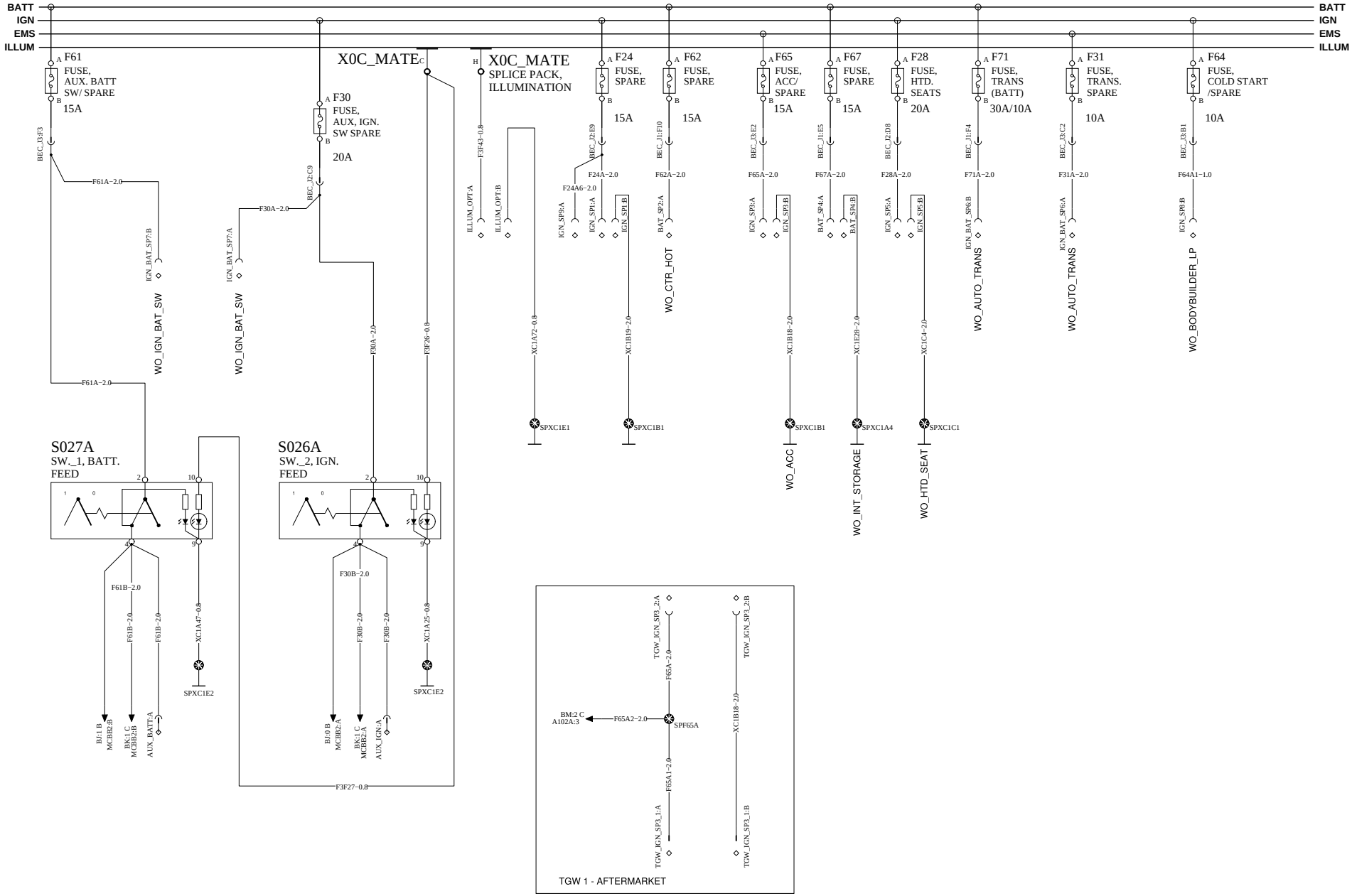

VOLVO Group Trucks Technology	Document title WIRE DIAGRAM-CONVENTIONAL, 12V MACK, 2013BP Document type PRODUCT SCHEMATIC	Document No 21628497	Issue 09	Volume 1 (2)	Page 83 (91)

https://truckmanualshub.com/

WIRING DIAGRAM: NB

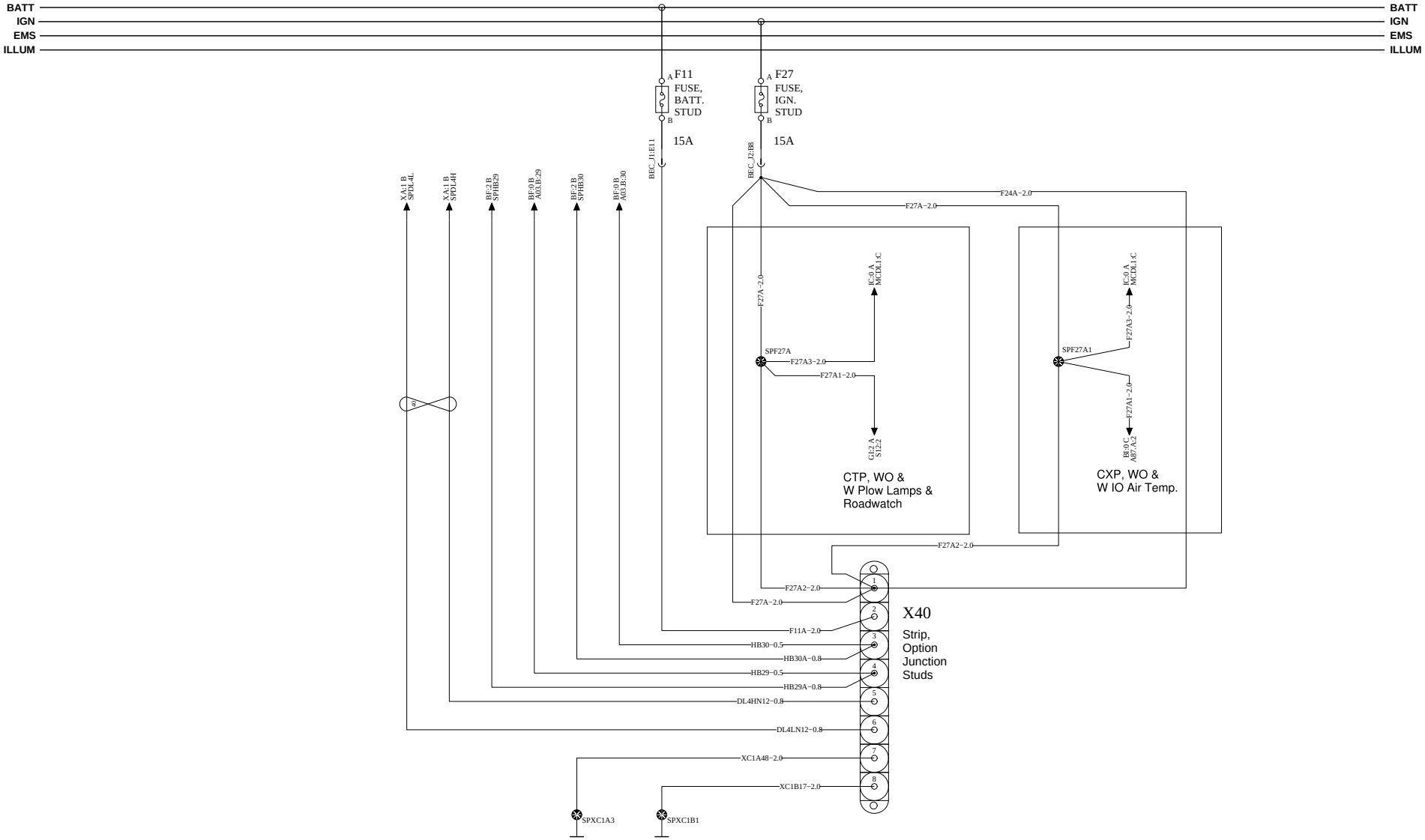

VOLVO Group Trucks Technology	Document title WIRE DIAGRAM-CONVENTIONAL, 12V MACK, 2013BP Document type PRODUCT SCHEMATIC	Document No 21628497	Issue 09	Volume 1 (2)	Page 84 (91)

ADDITIONAL IGNITION & BATTERY SWITCHES 1/3

https://truckmanualshub.com/

WIRING DIAGRAM: NC

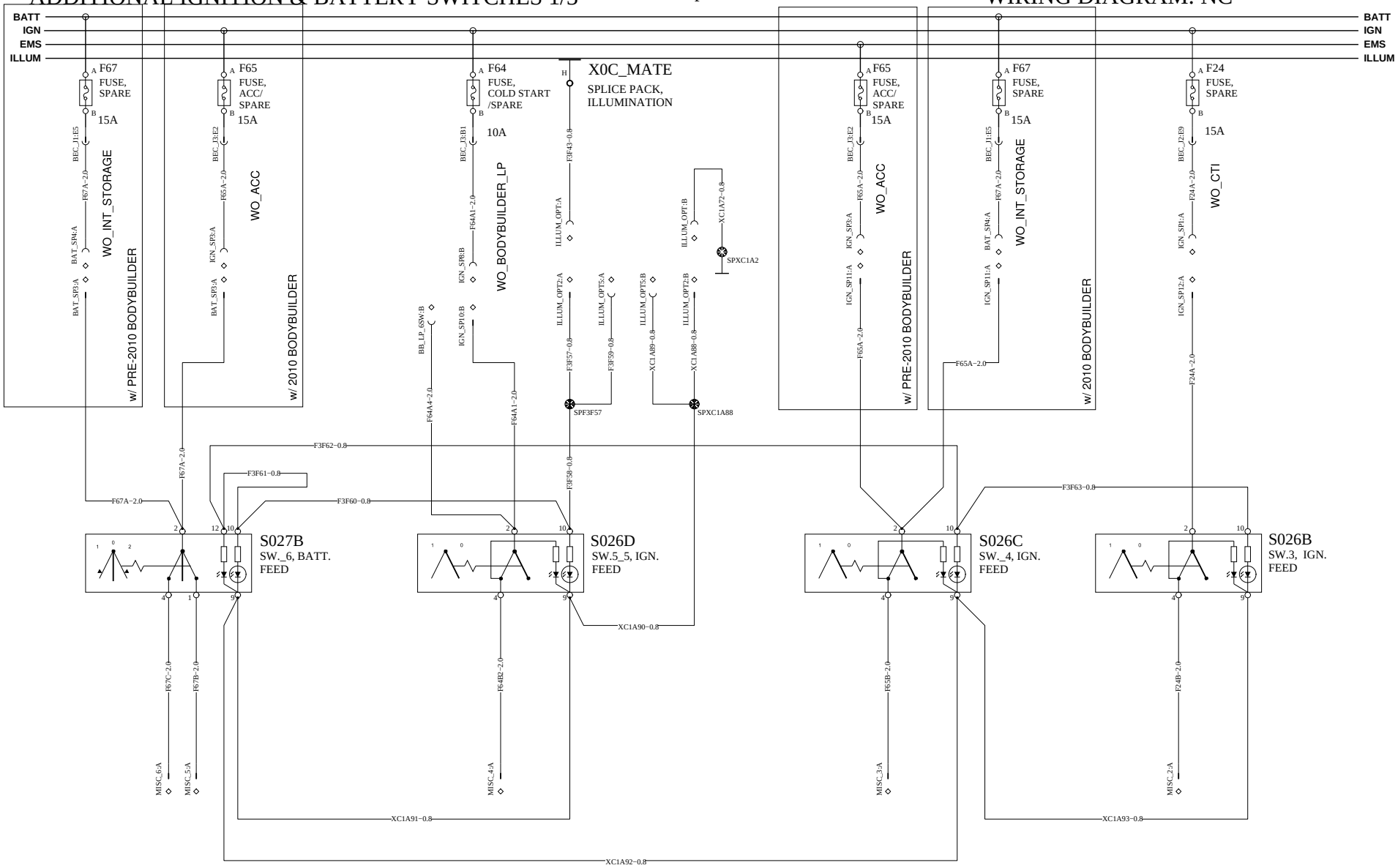

VOLVO Group Trucks Technology	Document title WIRE DIAGRAM-CONVENTIONAL, 12V MACK, 2013BP Document type PRODUCT SCHEMATIC	Document No 21628497	Issue 09	Volume 1 (2)	Page 85 (91)

https://truckmanualshub.com/

WIRING DIAGRAM: ND

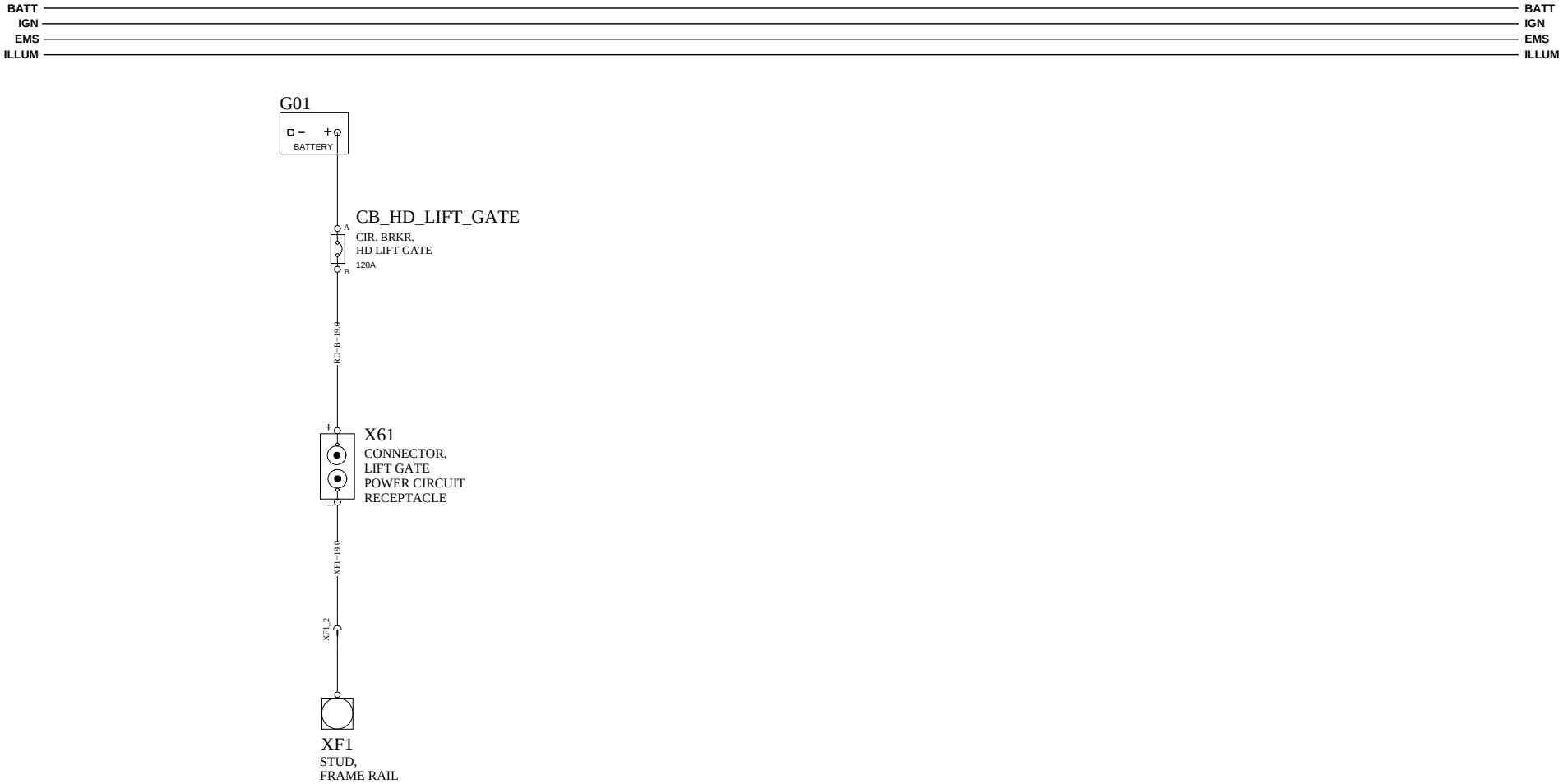

ADDITIONAL IGNITION & BATTERY SWITCHES 2/3

https://truckmanualshub.com/

WIRING DIAGRAM: NE

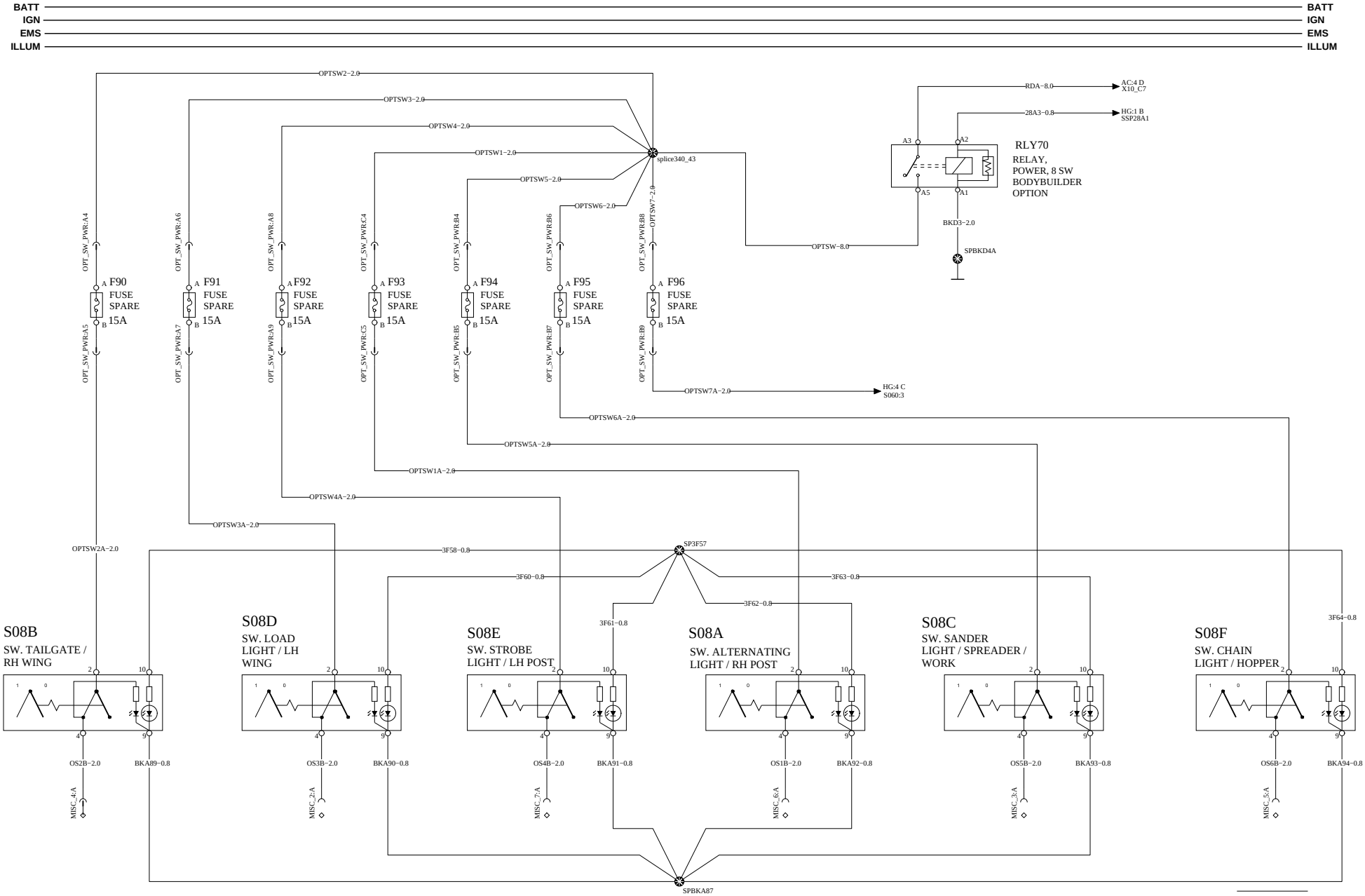

VOLVO Group Trucks Technology	Document title WIRE DIAGRAM-CONVENTIONAL, 12V MACK, 2013BP Document type PRODUCT SCHEMATIC	Document No 21628497	Issue 09	Volume 1 (2)	Page 87 (91)

ADDITIONAL IGNITION & BATTERY SWITCHES 3/3

https://truckmanualshub.com/

WIRING DIAGRAM: NF

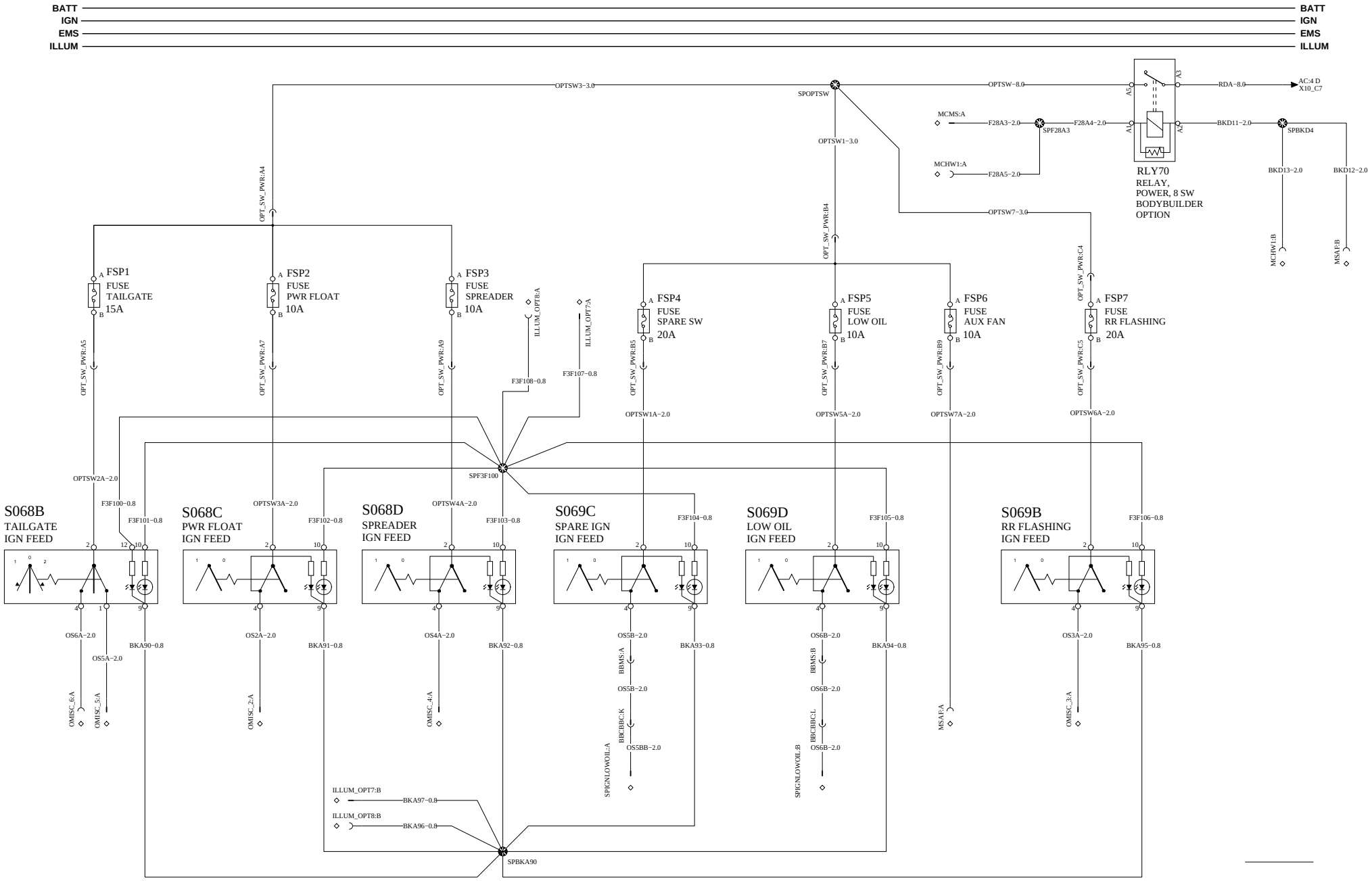

VOLVO Group Trucks Technology	Document title WIRE DIAGRAM-CONVENTIONAL, 12V MACK, 2013BP Document type PRODUCT SCHEMATIC	Document No 21628497	Issue 09	Volume 1 (2)	Page 88 (91)

DATALINK/DIAGNOSTICS 1/3

https://truckmanualshub.com/

WIRING DIAGRAM: XA

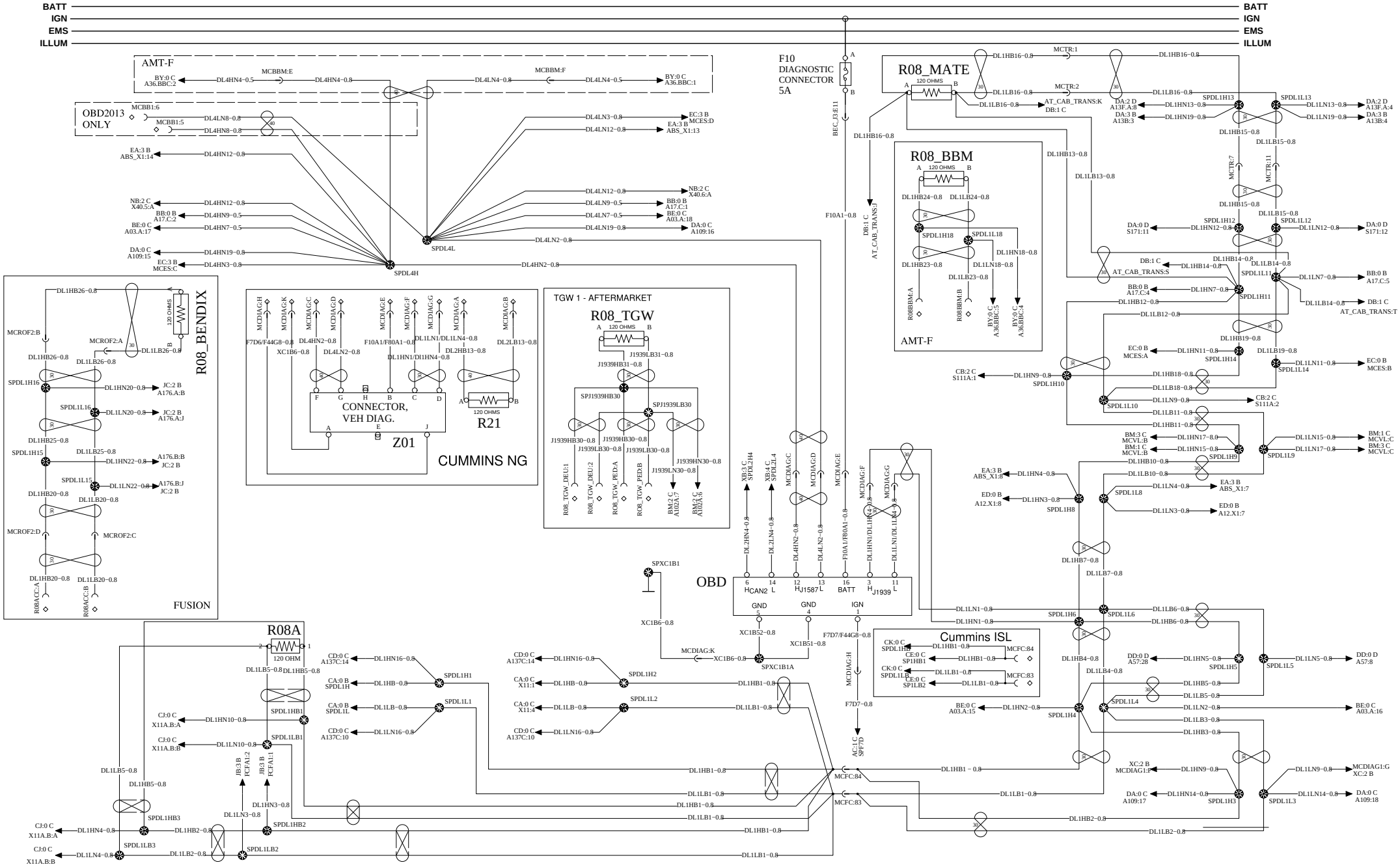

Document title	Document No	Issue	Volume	Page
WIRE DIAGRAM-CONVENTIONAL, 12V MACK, 2013BP	21628497	09	1 (2)	89 (91)
Document type: PRODUCT SCHEMATIC				

VOLVO Group Trucks Technology

https://truckmanualshub.com/

WIRING DIAGRAM: XB

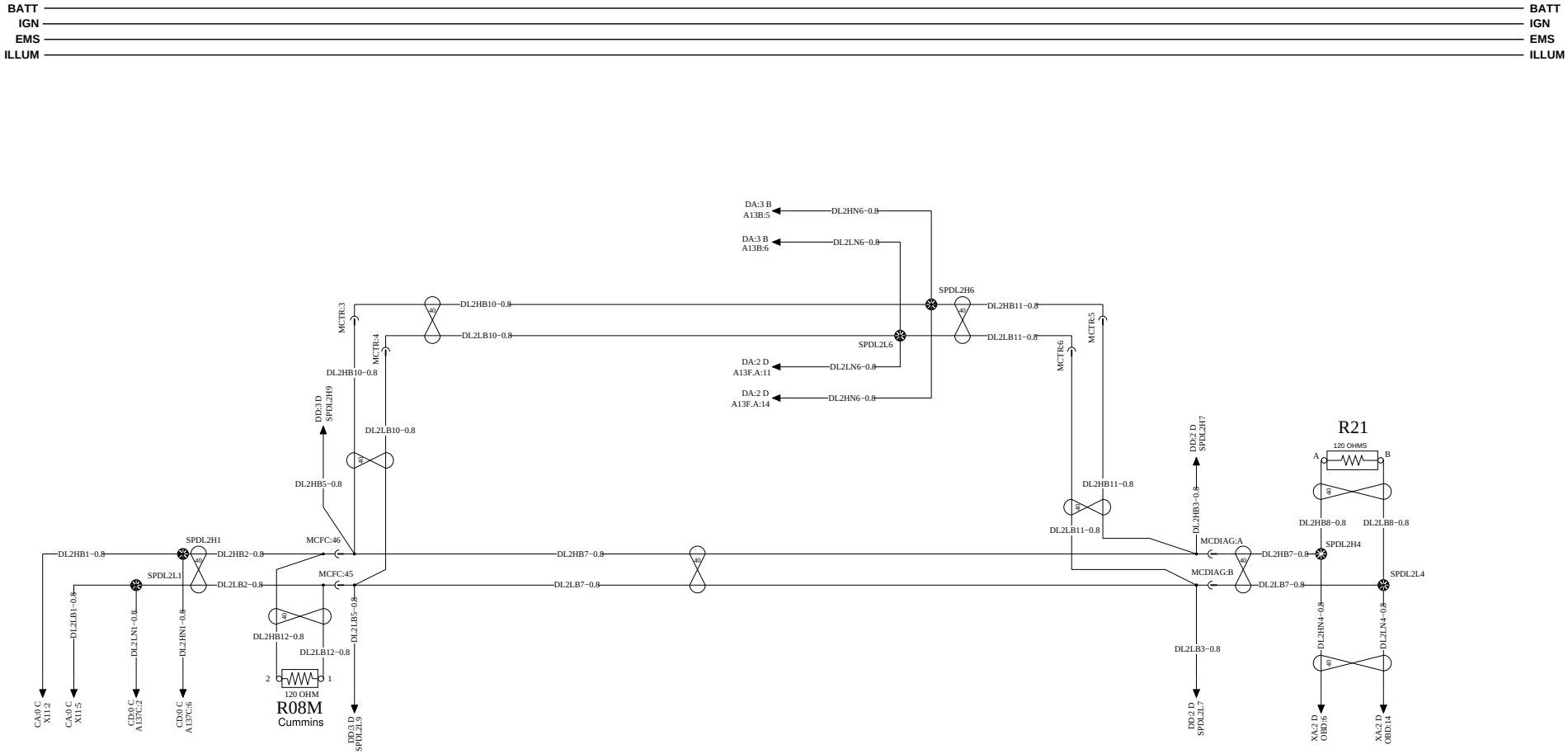

	Document title	Document No	Issue	Volume	Page
VOLVO Group Trucks Technology	WIRE DIAGRAM-CONVENTIONAL, 12V MACK, 2013BP	21628497	09	1 (2)	90 (91)
	Document type: PRODUCT SCHEMATIC				

DATA LINK DIAGNOSTIC 3/3

https://truckmanualshub.com/

WIRING DIAGRAM : XC

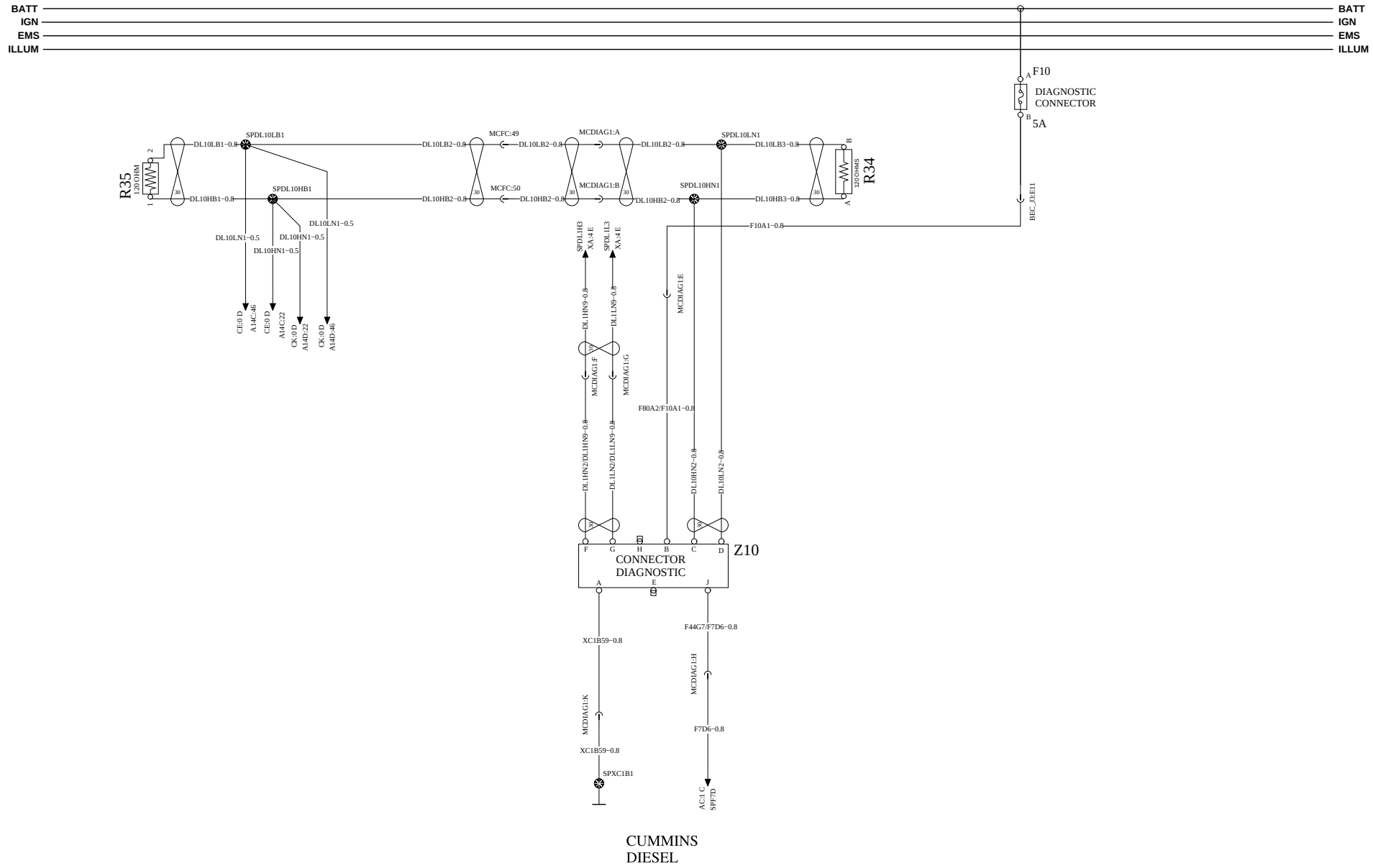

CUMMINS DIESEL

VOLVO Group Trucks Technology	Document title WIRE DIAGRAM-CONVENTIONAL, 12V MACK, 2013BP Document type PRODUCT SCHEMATIC	Document No 21628497	Issue 09	Volume 1 (2)	Page 91 (91)

https://truckmanualshub.com/

BILL OF MATERIALS INDEX (VOL 2)

NAME	PAGE
GROUNDS	2
FUSES AND CIRCUIT BREAKERS	3

NAME	PAGE
RELAYS	6
COMPONENTS	7

NAME	PAGE
INLINES	13
SPLICES	22

NAME	PAGE
SHELLS	25
REFERENCES	29

https://truckmanualshub.com/

GROUNDS

NAME	PAGE
SPX1C1B61	GL 0 D
SPX1C1B62	GL 0 C
SPX01D1	AF 1 C
SPX01F1	AG 0 C
SPX02CA3	CK 4 D
SPX02CA3	CL 3 C
SPX02CA15	CL 1 D
SPX109L1	AC 3 B
SPX109L2	AD 1 B
SPXC1A1	AD 2 C
SPXC1A2	AD 3 C
SPXC1A2	GA 4 E
SPXC1A2	GD 2 D
SPXC1A2	GE 2 D
SPXC1A2	GH 4 C
SPXC1A2	GM 1 E
SPXC1A2	GQ 0 E
SPXC1A2	GR 1 D
SPXC1A2	IC 0 E
SPXC1A2	KC 3 E
SPXC1A2	NC 2 B
SPXC1A3	AA 1 C
SPXC1A3	AD 3 B
SPXC1A3	BJ 0 B
SPXC1A3	BM 2 B
SPXC1A3	BY 0 B
SPXC1A3	GA 2 A
SPXC1A3	GP 0 E
SPXC1A3	KC 1 D
SPXC1A3	NB 1 D
SPXC1A4	AA 4 D

NAME	PAGE
SPXC1A4	AD 3 C
SPXC1A4	EC 4 D
SPXC1A4	GA 1 C
SPXC1A4	GD 4 D
SPXC1A4	GE 4 D
SPXC1A4	GH 3 C
SPXC1A4	IC 1 E
SPXC1A4	KC 0 D
SPXC1A4	NA 2 C
SPXC1A5	EC 4 C
SPXC1A7	GA 3 E
SPXC1A8A	GA 3 E
SPXC1A9	HE 4 E
SPXC1A9A	GA 3 E
SPXC1A10	CM 2 C
SPXC1A10	GA 0 E
SPXC1A10	GM 1 D
SPXC1A13	HE 1 E
SPXC1A14	GR 0 D
SPXC1A16	GR 3 D
SPXC1A18	GR 1 D
SPXC1A29	KC 2 D
SPXC1A35	BY 0 B
SPXC1A36	AD 1 D
SPXC1A38	IE 0 D
SPXC1A40	IA 0 B
SPXC1A45	KC 3 D
SPXC1A52	ID 2 D
SPXC1A53	IA 4 B
SPXC1A65	GD 4 D
SPXC1A66	GD 3 D

NAME	PAGE
SPXC1A68	GH 1 D
SPXC1A72	HC 0 C
SPXC1A82	HC 4 D
SPXC1A88	NC 2 B
SPXC1A97	FD 0 C
SPXC1A102	JA 1 D
SPXC1A116	KC 4 B
SPXC1A119	KC 3 E
SPXC1B1	AD 2 C
SPXC1B1	BA 4 E
SPXC1B1	BD 3 C
SPXC1B1	BE 0 E
SPXC1B1	CB 2 D
SPXC1B1	DA 0 E
SPXC1B1	DD 0 B
SPXC1B1	DE 1 B
SPXC1B1	EA 0 A
SPXC1B1	EC 3 E
SPXC1B1	ED 0 C
SPXC1B1	FD 2 B
SPXC1B1	GL 0 D
SPXC1B1	JC 1 C
SPXC1B1	KB 2 B
SPXC1B1	NA 2 C
SPXC1B1	NB 2 D
SPXC1B1	XA 2 D
SPXC1B1	XC 2 D
SPXC1B1A	XA 2 D
SPXC1B1D	EC 3 E
SPXC1B7B	ED 2 A
SPXC1B7W	EA 0 A

NAME	PAGE
SPXC1B18	FD 2 B
SPXC1B30	FD 1 E
SPXC1B46	DA 4 D
SPXC1B48	DA 0 D
SPXC1C1	AD 2 C
SPXC1C1	HA 3 C
SPXC1C1	HC 3 E
SPXC1C1	HG 0 D
SPXC1C1	NA 3 C
SPXC1C4	HC 0 D
SPXC1C5	HC 3 D
SPXC1C6	HC 1 E
SPXC1C6	HG 1 D
SPXC1C11	AD 2 D
SPXC1C12	AD 3 C
SPXC1C12	HD 1 E
SPXC1C12	HE 2 C
SPXC1C13	AD 3 D
SPXC1C13	HE 0 D
SPXC1C13	KB 2 D
SPXC1C14	AD 1 C
SPXC1C14	AF 1 C
SPXC1C16	HD 3 D
SPXC1C23	HE 0 D
SPXC1E	GL 0 C
SPXC1E1	AD 3 B
SPXC1E1	BA 3 C
SPXC1E1	BD 1 C
SPXC1E1	BE 2 B
SPXC1E1	CM 1 C
SPXC1E1	GJ 2 D

NAME	PAGE
SPXC1E1	HD 0 C
SPXC1E1	NA 1 C
SPXC1E1A	EA 1 B
SPXC1E2	AD 4 B
SPXC1E2	BG 0 C
SPXC1E2	EA 2 B
SPXC1E2	ED 2 B
SPXC1E2	FB 3 D
SPXC1E2	GJ 2 C
SPXC1E2	NA 1 D
SPXC1F1	AD 1 D
SPXC1F1	HB 3 D
SPXC1F2	AD 1 E
SPXC1F2	BG 1 E
SPXC1F2	GK 1 A
SPXC1F2	GP 0 E
SPXC1F2	GQ 1 E
SPXC1F6	BG 3 D
SPXC1F7	AD 1 E
SPXC1F7	BG 4 E
SPXC1F7	ED 4 D
SPXC1F7	GF 1 D
SPXC1F10	AD 1 D
SPXC1F10	FA 2 E
SPXC1F10	FB 1 E
SPXC1F10	GF 1 E
SPXC1F11	GF 1 D
SPXC1F12	GF 3 B
SPXC1F16	FB 1 E
SPXC1F22	FA 3 D
SPXC1F23	FA 1 D

NAME	PAGE
SPXC1G4A	CE 4 D
SPXC1G7	GA 1 E
SPXC1G8	GD 0 D
SPXC1G8	GE 0 D
SPXC1G14	GI 2 D
SPXC1G16	GD 1 D
SPXC1G16	GE 2 D
SPXC1G40	AC 2 E
SPXC1G40	AD 1 D
SPXC1G40	BF 4 A
SPXC1G40	CA 3 C
SPXC1G40	GA 1 E
SPXC1G40	GD 0 E
SPXC1G40	GE 0 E
SPXC1G40	GJ 2 D
SPXC1G40	GR 2 C
SPXC1G40	JA 2 B
SPXC1G40	JB 0 D
SPXC1G41	BF 3 B
SPXC1N1	GG 3 D
SPXC1N3	BP 1 D
SPXCIE23	GA 1 C
SPXF1A1	AD 1 C
SPXF1A1	CD 4 D
SPXF1A3	CF 4 C
SPXG9A1	CJ 3 B
SPXM1	AD 0 B
X0A_MATE	AD 3 C
X0A_MATE	BA 1 D
X0A_MATE	BC 2 C
X0A_MATE	BD 3 C

NAME	PAGE
X0A_MATE	BF 4 C
X0A_MATE	BI 0 C
X0A_MATE	BJ 3 B
X0A_MATE	FB 2 C
X0B_MATE	BE 2 C
X0C_MATE	BA 0 A
X0C_MATE	BD 2 A
X0C_MATE	BG 0 A
X0C_MATE	BI 1 A
X0C_MATE	CB 2 A
X0C_MATE	DB 1 A
X0C_MATE	DD 1 A
X0C_MATE	FB 2 A
X0C_MATE	GH 2 A
X0C_MATE	GI 2 A
X0C_MATE	GJ 1 A
X0C_MATE	NA 1 A
X0C_MATE	NC 1 A
X06D_MATE	BH 1 C
X07A	KC 0 B
X07B	KC 0 C
X07C	HE 2 C
X07D	HE 2 C
X07E	KC 0 C
X07TV	HE 2 C

https://truckmanualshub.com/

FUSES AND CIRCUIT BREAKERS

FUSE	DESCRIPTION	PAGE
CB2 (15A)	CIR. BRKR HDLPS, DRL MODULE, FOG LPS.	AA 1 A
CB2 (15A)	CIR. BRKR HDLPS, DRL MODULE, FOG LPS.	GA 1 A
CB3 (15A)	CIR. BRKR. PARK,TAIL MARKER LPS.	AA 1 A
CB3 (15A)	CIR. BRKR. PARK,TAIL MARKER LPS.	GA 0 A
CB4 (15A)	CIR. BRKR. TURN LPS, FLASHER	AA 1 A
CB4 (15A)	CIR. BRKR. TURN LPS, FLASHER	GA 2 A
CB4 (15A)	CIR. BRKR. TURN LPS, FLASHER	IE 2 A
CB12 (10A)	CIR.BRKR. DOOR LOCKS	AA 0 A
CB12 (10A)	CIR.BRKR. DOOR LOCKS	ID 0 A
CB12 (10A)	CIR.BRKR. DOOR LOCKS	IE 1 A
CB14 (10A)	CIR BRKR, HDLP, LH LOW BEAM	AA 4 A
CB14 (10A)	CIR BRKR, HDLP, LH LOW BEAM	GD 0 A
CB14 (10A)	CIR BRKR, HDLP, LH LOW BEAM	GE 0 A
CB21 (20A)	CIR. BRKR WINDSHIELD WIPER/WASH.	AA 0 E
CB21 (20A)	CIR. BRKR WINDSHIELD WIPER/WASH.	GP 0 A
CB22 (20A)	CIR. BRKR. PWR WIN LIFT, L.H.	AA 0 E
CB22 (20A)	CIR. BRKR. PWR WIN LIFT, L.H.	IA 2 A
CB23 (20A)	CIR. BRKR. PWR WIN LIFT, RH	AA 0 E
CB23 (20A)	CIR. BRKR. PWR WIN LIFT, RH	IA 2 A
CB23 (20A)	CIR. BRKR. PWR WIN LIFT, RH	ID 3 A
CB81 (10A)	CIR BRKR, HDLP, RH LOW BEAM	AA 4 B
CB81 (10A)	CIR BRKR, HDLP, RH LOW BEAM	GD 1 A
CB81 (10A)	CIR BRKR, HDLP, RH LOW BEAM	GE 1 A
F5 (10A)	FUSE, TRACTOR STOP LPS.	AA 1 A
F5 (10A)	FUSE, TRACTOR STOP LPS.	GA 3 A
F6 (10A)	FUSE, DOME/ CTSY. LMP	AA 2 A
F6 (10A)	FUSE, DOME/ CTSY. LMP	GH 0 A
F7 (10A)	FUSE, KEY SW	AA 0 A
F7 (10A)	FUSE, KEY SW	AC 0 A
F8 (15A)	FUSE, AIR SOL.	AA 0 E
F8 (15A)	FUSE, AIR SOL.	FB 1 A
F9 (15A)	FUSE, CB POSTS	AA 3 A
F10 (5A)	DIAGNOSTIC CONNECTOR	AA 2 B
F10 (5A)	DIAGNOSTIC CONNECTOR	KB 1 A
F10 (5A)	DIAGNOSTIC CONNECTOR	XA 3 A
F10 (5A)	DIAGNOSTIC CONNECTOR	XC 3 A
F11 (15A)	FUSE, BATT. STUD	AA 2 A
F11 (15A)	FUSE, BATT. STUD	BI 0 A
F11 (15A)	FUSE, BATT. STUD	BM 1 A
F11 (15A)	FUSE, BATT. STUD	NB 2 A
F13 (15A/30A)	FUSE, ABS BATT1	AA 1 B
F13 (15A/30A)	FUSE, ABS BATT1	EA 2 A
F13 (15A/30A)	FUSE, ABS BATT1	ED 3 A
F15 (20A)	FUSE, HTD. MIRROR	AA 0 B
F15 (20A)	FUSE, HTD. MIRROR	BF 2 A
F16 (10A)	FUSE, VEHICLE CTRL UNIT	AA 0 D
F16 (10A)	FUSE, VEHICLE CTRL UNIT	BA 0 A
F17 (10A)	FUSE, CTRL/SW. INPUTS	AA 1 D
F17 (10A)	FUSE, CTRL/SW. INPUTS	BA 1 A
F17 (10A)	FUSE, CTRL/SW. INPUTS	BB 0 A

FUSE	DESCRIPTION	PAGE
F17 (10A)	FUSE, CTRL/SW. INPUTS	BC 3 A
F17 (10A)	FUSE, CTRL/SW. INPUTS	BD 0 A
F18 (10A)	FUSE, DPF REGEN SWITCH	AA 2 D
F18 (10A)	FUSE, DPF REGEN SWITCH	CB 2 A
F19 (5A)	FUSE, INST. CLSTR	AA 0 A
F19 (5A)	FUSE, INST. CLSTR	BE 0 A
F19 (5A)	FUSE, INST. CLSTR	BG 0 A
F20 (10A)	FUSE, MOTO. MIRRORS	AA 1 B
F20 (10A)	FUSE, MOTO. MIRRORS	IC 0 A
F24 (15A)	FUSE, SPARE	AA 1 E
F24 (15A)	FUSE, SPARE	GL 0 A
F24 (15A)	FUSE, SPARE	NA 2 A
F24 (15A)	FUSE, SPARE	NC 3 A
F25 (30A)	FUSE, HVAC CAB	AA 3 C
F25 (30A)	FUSE, HVAC CAB	HA 0 A
F26 (15A)	FUSE, HOOK-UP LAMPS	AA 2 A
F26 (15A)	FUSE, HOOK-UP LAMPS	GA 1 A
F27 (15A)	FUSE, IGN. STUD	AA 1 E
F27 (15A)	FUSE, IGN. STUD	BM 1 A
F27 (15A)	FUSE, IGN. STUD	NB 2 A
F28 (20A)	FUSE, HTD. SEATS	AA 1 E
F28 (20A)	FUSE, HTD. SEATS	HC 3 A
F28 (20A)	FUSE, HTD. SEATS	NA 3 A
F29 (10A)	FUSE, EMS RELAYS	AA 1 B
F30 (20A)	FUSE, AUX, IGN. SW SPARE	AA 1 E
F30 (20A)	FUSE, AUX, IGN. SW SPARE	NA 1 A
F31 (10A)	FUSE, TRANS. SPARE	AA 1 D
F31 (10A)	FUSE, TRANS. SPARE	DB 2 A
F31 (10A)	FUSE, TRANS. SPARE	DD 3 A
F31 (10A)	FUSE, TRANS. SPARE	DE 2 A
F31 (10A)	FUSE, TRANS. SPARE	NA 3 A
F32 (30A)	FUSE, ISO CPH	AB 4 C
F32 (30A)	FUSE, ISO CPH	GJ 3 A
F33 (30A)	FUSE, TRAILER STOP LMP.	AB 3 A
F33 (30A)	FUSE, TRAILER STOP LMP.	GG 1 A
F34 (30A)	FUSE, REV/NEUTRAL POWER	AB 1 A
F34 (30A)	FUSE, REV/NEUTRAL POWER	GG 2 A
F35 (30A)	FUSE, CAB & TRLR CLEARANCE LMP.	AB 2 A
F35 (30A)	FUSE, CAB & TRLR CLEARANCE LMP.	GA 4 A
F36 (15A)	FUSE, HORN	AB 1 A
F36 (15A)	FUSE, HORN	GQ 1 A
F37 (30A)	FUSE, TRAILER TAIL LMP.	AB 2 A
F37 (30A)	FUSE, TRAILER TAIL LMP.	GG 0 A
F38 (30A/10A)	FUSE, ENG. CTRL UNIT	AB 3 D
F38 (30A/10A)	FUSE, ENG. CTRL UNIT	CA 1 A
F39 (30A)	FUSE, TRAILER ABS PWR	AB 2 D
F39 (30A)	FUSE, TRAILER ABS PWR	GG 3 A
F40 (15A)	HEATED DRAIN VALVE	AB 1 D
F40 (15A)	HEATED DRAIN VALVE	FA 3 A
F41 (15A)	FUSE, ENG. COMP #1	AB 2 E

https://truckmanualshub.com/

FUSES AND CIRCUIT BREAKERS

FUSE	DESCRIPTION	PAGE
F41 (15A)	FUSE, ENG. COMP #1	CA 1 A
F41 (15A)	FUSE, ENG. COMP #1	CF 3 A
F41 (15A)	FUSE, ENG. COMP #1	CJ 3 A
F42 (20A)	FUSE, BACKUP LMPS.	AB 1 D
F42 (20A)	FUSE, BACKUP LMPS.	BE 3 A
F43 (15A/5A)	FUSE, ENG. COMP #2/ CUMM. IGN	AB 2 E
F43 (15A/5A)	FUSE, ENG. COMP #2/ CUMM. IGN	CA 2 A
F43 (15A/5A)	FUSE, ENG. COMP #2/ CUMM. IGN	CE 2 B
F43 (15A/5A)	FUSE, ENG. COMP #2/ CUMM. IGN	CK 2 B
F44 (15A)	FUSE, HTD. AIR DRY /HTD DRAIN VALVE	AB 1 D
F44 (15A)	FUSE, HTD. AIR DRY /HTD DRAIN VALVE	FA 2 A
F45 (30A)	FUSE, SPARE/ FUEL SEP./ FUEL HTR	AB 0 D
F45 (30A)	FUSE, SPARE/ FUEL SEP./ FUEL HTR	GG 1 A
F46 (5A)	FUSE, ACM/ENG IGN	AB 3 D
F46 (5A)	FUSE, ACM/ENG IGN	CD 0 A
F46 (5A)	FUSE, ACM/ENG IGN	CJ 0 A
F47 (15A)	FUSE, TRANS/ SPARE	AB 3 D
F48 (30A/40A)	FUSE, SLPR BOX/ BODY BLDR. BATT #1	AB 0 A
F48 (30A/40A)	FUSE, SLPR BOX/ BODY BLDR. BATT #1	BK 0 A
F48 (30A/40A)	FUSE, SLPR BOX/ BODY BLDR. BATT #1	HE 0 A
F49 (10A)	FUSE, ABS	AB 2 D
F49 (10A)	FUSE, ABS	EA 3 A
F49 (10A)	FUSE, ABS	ED 3 A
F50 (5A)	FUSE, SPARE	AB 3 A
F51 (10A)	FUSE, SPARE	AB 4 A
F52 (15A/10A)	FUSE, SPARE/ GUARD DOG	AB 4 C
F52 (15A/10A)	FUSE, SPARE/ GUARD DOG	BG 2 A
F53 (10A)	FUSE, BENDIX FUSION	AA 1 D
F53 (10A)	FUSE, BENDIX FUSION	JC 0 B
F54 (5A)	FUSE, BBM ECU	AA 0 D
F54 (5A)	FUSE, BBM ECU	BJ 0 A
F54 (5A)	FUSE, BBM ECU	BY 0 A
F55 (10A)	FUSE ECS	AA 2 B
F55 (10A)	FUSE ECS	EC 4 A
F56 (10A)	FUSE, BENDIX FUSION	AA 2 D
F56 (10A)	FUSE, BENDIX FUSION	JC 0 A
F57 (15A)	FUSE, CENTER CONSOLE	AA 3 A
F57 (15A)	FUSE, CENTER CONSOLE	KC 2 A
F58 (30A)	FUSE, SPARE	AA 2 D
F60 (20A)	FUSE, POWER OUTLETS	AA 3 A
F61 (15A)	FUSE, AUX. BATT SW/ SPARE	AA 2 A
F61 (15A)	FUSE, AUX. BATT SW/ SPARE	NA 0 A
F62 (15A)	FUSE, SPARE	AA 3 A
F62 (15A)	FUSE, SPARE	GJ 0 A
F62 (15A)	FUSE, SPARE	NA 2 A
F63 (5A)	FUSE, INSTR. CLUSTER (EMS)	AA 0 D
F63 (5A)	FUSE, INSTR. CLUSTER (EMS)	BE 0 A
F64 (10A)	FUSE, COLD START /SPARE	AA 1 D
F64 (10A)	FUSE, COLD START /SPARE	BJ 3 A
F64 (10A)	FUSE, COLD START /SPARE	BK 2 A

FUSE	DESCRIPTION	PAGE
F64 (10A)	FUSE, COLD START /SPARE	NA 4 A
F64 (10A)	FUSE, COLD START /SPARE	NC 1 A
F65 (15A)	FUSE, ACC/ SPARE	AA 1 D
F65 (15A)	FUSE, ACC/ SPARE	FD 2 A
F65 (15A)	FUSE, ACC/ SPARE	JB 1 A
F65 (15A)	FUSE, ACC/ SPARE	NA 2 A
F65 (15A)	FUSE, ACC/ SPARE	NC 2 A
F67 (15A)	FUSE, SPARE	AA 0 A
F67 (15A)	FUSE, SPARE	HD 3 A
F67 (15A)	FUSE, SPARE	KC 0 A
F67 (15A)	FUSE, SPARE	NA 2 A
F67 (15A)	FUSE, SPARE	NC 0 A
F68 (15A)	FUSE, CIGAR LIGHTER	AA 2 B
F68 (15A)	FUSE, CIGAR LIGHTER	KC 0 A
F69 (10A)	FUSE, KEYLESS ENTRY/ SPARE	AA 2 D
F69 (10A)	FUSE, KEYLESS ENTRY/ SPARE	IE 2 A
F70 (10A)	FUSE, HVAC SLPR./ BB IGN 1	AA 3 C
F70 (10A)	FUSE, HVAC SLPR./ BB IGN 1	HA 1 A
F71 (30A/10A)	FUSE, TRANS (BATT)	AA 1 B
F71 (30A/10A)	FUSE, TRANS (BATT)	DB 3 A
F71 (30A/10A)	FUSE, TRANS (BATT)	DD 0 A
F71 (30A/10A)	FUSE, TRANS (BATT)	NA 3 A
F72 (10A)	FUSE, HVAC B	AA 3 D
F74 (5A)	FUSE, DIMMER	GA 1 A
F75 (30A)	FUSE, SLEEPER HVAC/ BB PWR	AA 0 B
F75 (30A)	FUSE, SLEEPER HVAC/ BB PWR	BK 0 A
F75 (30A)	FUSE, SLEEPER HVAC/ BB PWR	HD 1 A
F76 (30A)	FUSE, M-DRIVE /CUMMINS DEF PWR	AA 3 A
F76 (30A)	FUSE, M-DRIVE /CUMMINS DEF PWR	CE 2 A
F76 (30A)	FUSE, M-DRIVE /CUMMINS DEF PWR	CJ 3 A
F76 (30A)	FUSE, M-DRIVE /CUMMINS DEF PWR	DA 0 A
F79 (10A)	FUSE M-DRIVE GSECU	DA 2 C
F80 (20A)	FUSE M-DRIVE TECU	DA 2 C
F82 (2A)	FUSE DISCONNECT SWITCH	AI 1 D
F83 (10A)	FUSE CUMMINS DEF MOD	AH 2 B
F83 (10A)	FUSE CUMMINS DEF MOD	CE 1 B
F84 (15A)	FUSE DEF HOSE HEATERS	AH 1 B
F84 (15A)	FUSE DEF HOSE HEATERS	CF 2 A
F84 (15A)	FUSE DEF HOSE HEATERS	CL 2 A
F85 (10A)	FUSE CES	AH 1 B
F85 (10A)	FUSE CES	CL 3 A
F87 (5A)	FUSE MODULE IGN	AH 3 B
F87 (5A)	FUSE MODULE IGN	BP 2 B
F88 (5A)	FUSE SPARE	AH 4 C
F90 (15A)	FUSE SPARE	NE 0 B
F91 (15A)	FUSE SPARE	NE 0 B
F92 (15A)	FUSE SPARE	NE 1 B
F93 (15A)	FUSE SPARE	NE 1 B
F94 (15A)	FUSE SPARE	NE 1 B
F95 (15A)	FUSE SPARE	NE 2 B

https://truckmanualshub.com/

FUSES AND CIRCUIT BREAKERS

FUSE	DESCRIPTION	PAGE
F96 (15A)	FUSE SPARE	NE 2 B
F97 (10A)	FUSE DISCONNECT SOLENOID	AI 1 D
FM3 (150A)	FUSE, MAIN PWR, CAB	AC 3 D
FM3_A4 (100A)	FUSE INVERTER	HF 1 B
FM04 (400A)	GND MEGA FUSE	AD 1 C
SBF1 (10A)	FUSE, SLPR. LIGHTING 1	HE 3 B

FUSE	DESCRIPTION	PAGE
SBF2 (15A)	FUSE, SLPR LIGHTING 2	HE 0 A
SBF3 (20A)	FUSE, SLPR. REFRIGERATOR, PWR OUTLET 2	HE 2 B
SBF4 (10A)	FUSE, SLPR. TV OUTLET	HE 2 B
SBF6 (15A)	FUSE, SLPR POWER OUTLET	HE 2 B
SBF7 (20A)	FUSE, AUDIO AMP.	HE 2 B

https://truckmanualshub.com/

RELAYS

RELAY	DESCRIPTION	PAGE
RLY01	RELAY, EMS #1	AA 1 B
RLY02	RELAY, EMS #2	AB 2 C
RLY03	RELAY, IGN. #1	AA 1 D
RLY04	RELAY, IGN #3	AB 0 C
RLY06	RELAY, EMERGENCY STOP LAMP	GA 3 B
RLY08	RELAY, FLASH TO PASS	GA 1 D
RLY10	RELAY, FOG LAMP	GA 2 D
RLY11	RELAY, TRLR. LMP	AB 1 B
RLY11	RELAY, TRLR. LMP	GG 0 B
RLY12	RELAY, TRAILER STOP LAMP	AB 3 B
RLY12	RELAY, TRAILER STOP LAMP	GG 1 B
RLY13	RELAY, CAB & TRLR CLEARANCE LMP	AB 2 B
RLY13	RELAY, CAB & TRLR CLEARANCE LMP	GA 4 D
RLY14	RELAY, HORN	AB 1 B
RLY14	RELAY, HORN	GQ 1 B
RLY16	RELAY WINDSHIELD WIPER	GP 1 B
RLY17	RELAY, REV. PWR	AB 0 B
RLY17	RELAY, REV. PWR	GG 3 B
RLY20	RELAY, START ENABLE	DB 2 B
RLY26	RELAY, HVAC CAB CONT.	AA 3 D
RLY26	RELAY, HVAC CAB CONT.	HA 1 A
RLY28	RELAY, CB BINDING POST	AA 3 B
RLY29	RELAY, NEUTRAL PWR	AB 1 B
RLY29	RELAY, NEUTRAL PWR	GG 2 B
RLY31	RELAY, POWER OUTLETS	AA 3 B
RLY33	RELAY, HTD. MIRROR	BF 1 A
RLY34	RELAY, PRE-EMS	AA 1 B
RLY35	RELAY, HVAC CAB	AA 3 D
RLY35	RELAY, HVAC CAB	HA 0 A
RLY36	RELAY, START CNTL 1	AC 2 C
RLY38	RELAY, SPARE	AB 4 B
RLY39	RELAY, SPARE	AB 3 B
RLY42A	RELAY GRID HEATER	CF 0 B
RLY42A	RELAY GRID HEATER	CL 0 A
RLY43L_MATE	RELAY, SNOW PLOW LAMPS, LH LOW BEAM	GI 1 C
RLY43R_MATE	RELAY, SNOW PLOW LAMPS, RH LOW BEAM	GI 0 C
RLY44_MATE	RELAY, SNOW PLOW LAMPS, HIGH BEAM	GI 2 C
RLY46_MATE	RELAY, SNOW PLOW LAMPS, LOW BEAM FEED	GI 3 C
RLY47	RELAY REVERSE SIGNAL	DE 3 C
RLY48	REV MUTE RELAY	DE 0 C
RLY52	RELAY, HIGH BEAM	GA 1 A

RELAY	DESCRIPTION	PAGE
RLY53	RELAY, SLEEPER HVAC	AA 0 C
RLY53	RELAY, SLEEPER HVAC	BK 0 B
RLY53	RELAY, SLEEPER HVAC	HD 1 B
RLY54	RELAY, SPARE EPDM	DD 2 B
RLY56	RELAY, TRAILER AUX. POWER SAEJ560	GJ 0 C
RLY57	RELAY, REVERSE, LIFT AXLE/ECS	BE 3 D
RLY57	RELAY, REVERSE, LIFT AXLE/ECS	EC 3 B
RLY58	RELAY, TRAILER AUX. POWER ISO3731	GJ 2 C
RLY60_MATE	RELAY, FAN CONTROL	HB 3 A
RLY70	RELAY, POWER, 8 SW BODYBUILDER OPTION	NE 3 A
RLY70	RELAY, POWER, 8 SW BODYBUILDER OPTION	NF 4 A
RLY73	RELAY M-DRIVE POWER	DA 0 B
RLY80	RELAY CUMMINS DEF MOD	AH 2 C
RLY80	RELAY CUMMINS DEF MOD	CE 1 B
RLY81	RELAY STARTER LOCKOUT	AH 3 C
RLY81	RELAY STARTER LOCKOUT	BP 3 B
RLY81	RELAY STARTER LOCKOUT	CF 0 C
RLY81	RELAY STARTER LOCKOUT	CL 0 C
RLY82	RELAY DEF LINE HEATER 1	AH 0 C
RLY82	RELAY DEF LINE HEATER 1	CF 1 B
RLY82	RELAY DEF LINE HEATER 1	CL 1 B
RLY83	RELAY DEF LINE HEATER 2	AH 0 C
RLY83	RELAY DEF LINE HEATER 2	CF 2 B
RLY83	RELAY DEF LINE HEATER 2	CL 2 B
RLY84	RELAY DEF LINE HEATER 3	AH 1 C
RLY84	RELAY DEF LINE HEATER 3	CF 1 B
RLY84	RELAY DEF LINE HEATER 3	CL 1 B
RLY85	RELAY CES	AH 1 C
RLY85	RELAY CES	CL 3 B
RLY86	RELAY FUEL FILTER MODLUE	AH 2 C
RLY86	RELAY FUEL FILTER MODLUE	BP 1 B
RLY87	RELAY FUEL FILTER MODULE	AH 3 C
RLY87	RELAY FUEL FILTER MODULE	BP 2 C
RLY88	DEF PUMP SUPPLY	CK 1 B
RLY89	RELAY METHANE DETECTOR	CM 1 A
RLY97	RELAY, LO BEAM LH	GD 0 B
RLY97	RELAY, LO BEAM LH	GE 0 B
RLY98	RELAY, LO BEAM RH	GD 1 B
RLY98	RELAY, LO BEAM RH	GE 1 B
RLY99	RELAY, METHANE DETECT	CM 0 B

https://truckmanualshub.com/

COMPONENTS

COMPONENT	DESCRIPTION	PAGE
A03	INSTRUMENT CLUSTER	BE 0 C
A03	INSTRUMENT CLUSTER	BF 0 B
A03	INSTRUMENT CLUSTER	BG 1 C
A04A	REFRIGERATOR	HE 2 B
A06R1_65	El. adjustable seat (optional fan and hea	DD 3 B
A06R2_65	El. adjustable seat (optional fan and hea	DD 3 B
A06R4_65	El. adjustable seat (optional fan and hea	DD 4 B
A06R5_65	El. adjustable seat (optional fan and hea	DD 2 B
A12	Control unit, ABS (Anti-lock Brake System	ED 0 B
A12A	CONTROL UNIT, ABS (ANTI-LOCK BRAKE SYS.)	EA 0 C
A13B	TECU AMT-F	DA 3 B
A14C	CUMMINS EMS, OBD2016	CE 0 D
A14C	CUMMINS EMS, OBD2016	CF 0 E
A14D	CUMMINS EMS, OBD2017	CK 0 D
A14D	CUMMINS EMS, OBD2017	CL 0 E
A16	CONTROL UNIT, ECS (ELECTRONIC CONTROLLED	EC 0 C
A17	CONTROL UNIT, VECU (VEHICLE ECU)	AC 2 A
A17	CONTROL UNIT, VECU (VEHICLE ECU)	BA 1 C
A17	CONTROL UNIT, VECU (VEHICLE ECU)	BB 0 B
A17	CONTROL UNIT, VECU (VEHICLE ECU)	BC 2 D
A17	CONTROL UNIT, VECU (VEHICLE ECU)	BD 2 D
A17	CONTROL UNIT, VECU (VEHICLE ECU)	GD 1 A
A17	CONTROL UNIT, VECU (VEHICLE ECU)	GE 2 A
A17	CONTROL UNIT, VECU (VEHICLE ECU)	GH 2 B
A19D_MATE	CONTROL UNIT GECU (GEAR SELECTOR ECU) ALL	DD 0 E
A20	Control Unit, Heated Windshield	HC 0 C
A20	Control Unit, Heated Windshield	HG 0 C
A34	CONTROL UNIT, CLIMATE	HA 0 B
A35	CONTROL UNIT, REMOTE RECEIVER DOOR LOCK	IE 1 C
A36	Control unit, BBM (Body Builder Module)	BY 0 C
A51	DISPLAY, SIDE OBJECT DETECTION	JA 3 D
A56	Stereo amplifier	KB 3 D
A57	CONTROL UNIT, ALLISON TRANSMISSION	DC 0 A
A57	CONTROL UNIT, ALLISON TRANSMISSION	DD 0 D
A58	TRANSMISSION ALLISON	DC 0 D
A78	Autoshift II shift module	DB 0 C
A83	CTRL UNIT, DRL (DAYTIME RUNNING LIGHTS)	GD 1 B
A83	CTRL UNIT, DRL (DAYTIME RUNNING LIGHTS)	GE 2 B
A87	DISPLAY, INSIDE/ OUTSIDE TEMP.	BI 0 C
A89	CTRL UNIT, APADS, CM 813	HB 2 C
A90	ALARM, CLOCK	HE 0 B
A102A	CONTROL UNIT GPS RECEIVER TELEMATICS GATE	BM 2 C
A102B	CONTROL UNIT GPS RECEIVER TELEMATICS GAT	BM 0 D
A104	CONTROL UNIT, FLASHER	GA 3 A
A104A	FLASHER KYSOR	GA 2 A
A106	CONTROL UNIT, SLEEPER HVAC	HD 1 C
A107B	CONTROL UNIT, TRANSMISSION, EATON GEN III	DB 1 D
A108	CONTROL UNIT, ALLISON, RETARDER RELAY	DC 3 D
A109	CONTROL UNIT, GSECU (GEARSHIFT ECU)	DA 0 C
A124	COMPONENT GROUP, STARTER MOTOR, M04 & K65	AC 3 A

COMPONENT	DESCRIPTION	PAGE
A124	COMPONENT GROUP, STARTER MOTOR, M04 & K65	AD 0 A
A124A	MOTOR STARTER TC	AC 2 C
A124A	MOTOR STARTER TC	AD 1 A
A138	PUMP UNIT, UREA	CD 1 E
A138A	PUMP UNIT ADBLUE	CE 1 C
A141	GAUGE, THIRD AXLE TEMP	BF 4 C
A147	Control Unit, Fuel Filter Module	BP 1 D
A149	CONSOLE CENTER	KC 2 C
A158	Control unit, Audio	KB 0 C
A176	Control unit, LPOS, Lane Position and Obj	JC 2 B
B06AP	SENSOR, AIR PRESSURE, BRAKE APP.	BF 3 D
B06T1	SENSOR AIR PRESSURE TANK 1	BF 2 D
B06T2	SENSOR, AIR PRESSURE TANK 2	BF 2 D
B07	SENSOR, FUEL LEVEL	BF 0 D
B09A	SENSOR, OIL TEMP GEARBOX	BF 1 D
B13	SENSOR, WHEEL SPEED LHS. 1, ST FRT AXLE	EA 0 B
B13	SENSOR, WHEEL SPEED LHS. 1, ST FRT AXLE	ED 0 C
B14	SENSOR, WHEEL SPEED RHS, 1:ST FRT AXLE	EA 1 B
B14	SENSOR, WHEEL SPEED RHS, 1:ST FRT AXLE	ED 1 D
B15	SENSOR, WHEEL SPD LHS. 1:ST,DRIVEN REAR	EA 0 D
B15	SENSOR, WHEEL SPD LHS. 1:ST,DRIVEN REAR	ED 0 A
B16	SENSOR, WHEEL SPD, RHS, 1:ST DRIVE REA	EA 0 D
B16	SENSOR, WHEEL SPD, RHS, 1:ST DRIVE REA	ED 1 B
B17	SENSOR, WHEEL SPD, LHS, 2:ND, DRIVE REAR	EA 2 D
B17	SENSOR, WHEEL SPD, LHS, 2:ND, DRIVE REAR	ED 2 D
B18	SENSOR, WHEEL SPD, RHS, 2:ND, DRIVE REAR	EA 2 D
B18	SENSOR, WHEEL SPD, RHS, 2:ND, DRIVE REAR	ED 3 D
B22C	SENSOR AMBIENT AIR TEMP	CE 3 D
B22C	SENSOR AMBIENT AIR TEMP	CK 3 D
B23	SENSOR AMBIENT AIR	BF 0 D
B23.1	SENSOR, AMBIENT AIR TEMP	BF 0 D
B25A	SENSOR ACCELERATOR PEDAL	BB 3 C
B30A	SENSOR CHASSIS LEVEL DRIVE AXLE	EC 2 D
B49	SENSOR, STEERING ANGLE	ED 0 E
B50	SENSOR, YAW-RATE	ED 0 E
B55A	SENSOR AIR PRESS SUSPENSION AUX. AXLE	EC 0 D
B55B	SENSOR, PRESSURE LIFT AXLE	EC 0 D
B58A	SENSOR AIR PRESS. SUSPENSION DRIVE AXLE	EC 1 D
B58R	SENSOR, AIR PRESSURE REAR SUSP.	BF 2 D
B58R_ESP	SENSOR, AIR PRESSURE, REAR SUSPENSION RHS	ED 1 E
B59	SENSOR, INDOOR TEMP	BF 3 D
B60L	SPEAKER, LEFT FRT.	KB 0 D
B60LF	SPEAKER, LEFT FRT	KB 3 C
B60R	SPEAKER, RIGHT FRT.	KB 0 D
B60RF	SPEAKER, RIGHT FRT.	KB 3 C
B60SLR	Speaker Sleeper Left Rear	KB 4 D
B60SRR	Speaker Sleeper Right Rear	KB 3 D
B60SW	Speaker Subwoofer	KB 3 E
B68	SENSOR, OUTPUT SHAFT SPD, GEARBOX	BB 1 C
B68	SENSOR, OUTPUT SHAFT SPD, GEARBOX	CE 2 C

https://truckmanualshub.com/

COMPONENTS

COMPONENT	DESCRIPTION	PAGE
B68	SENSOR, OUTPUT SHAFT SPD, GEARBOX	CJ 1 B
B68	SENSOR, OUTPUT SHAFT SPD, GEARBOX	CK 2 C
B68_B	Sensor, output shaft speed, gearbox	BB 0 C
B78	SENSOR, RIGHT SIDE OBJECT DETECTION	JA 2 D
B80	HANDSFREE, LOUDSPEAKER, MICROPHONE, MID	KB 2 D
B82	Sensor, ACC radar	JB 0 D
B82A	SENSOR, ACC RADAR FLR-20	JB 2 D
B96	Sensor, NOx	CD 2 B
B96B	Sensor, NOx	CD 2 B
B105	SENSOR RETARDER TEMP	DC 3 D
B121	SENSOR, LOW LEVEL WASHER FLUID	BG 1 D
B122	SENSOR, EXHAUST TEMP	BF 0 A
B122A	SENSOR EXHAUST TEMP. CATALYST	CJ 2 D
B122B	SENSOR CATALYST OUTLET TEMP. 2	CJ 2 B
B123	SENSOR, COOLANT LEVEL	CA 2 E
B123	SENSOR, COOLANT LEVEL	CE 1 C
B123	SENSOR, COOLANT LEVEL	CJ 2 D
B123	SENSOR, COOLANT LEVEL	CK 0 C
B123.1	SENSOR, COOLANT LEVEL	CA 3 E
B124.3RD	SENSOR, OIL TEMP REAR CENTER AXLE	BF 4 D
B124FR	SENSOR, OIL TEMP FRONT REAR AXLE	BF 1 D
B124RR	SENSOR, OIL TEMP REAR REAR AXLE	BF 1 D
B133	SENSOR, AIR FILTER RESTRICTION.	BG 1 B
B133S	SENSOR, AIR FILTER RESTRICTION, TD7	BG 2 B
B142C	Sensor, AdBlue level and temperature	CD 1 B
B142C	Sensor, AdBlue level and temperature	CF 3 B
B142C	Sensor, AdBlue level and temperature	CL 3 A
B152	SENSOR, BRAKE AIR PRESSURE, FRONT FOR ESP	ED 2 E
B153	SENSOR, BRAKE AIR PRESSURE, REAR FOR ESP	ED 2 D
B156	SENSOR, FREON HI PRESSURE - FAN	BD 2 B
B156A	SENSOR, FREON HI PRESSURE	HA 3 A
B157	SENSOR, FREON HI PRESSURE	HB 2 D
B158	SENSOR, FREON LOW PRESSURE	HB 1 D
B160	SENSOR, OUTSIDE TEMP.	BI 0 C
B185A	SENSOR OXYGEN OUTLET EGO	CJ 1 D
B300B	METHANE SENSOR ENGINE	CM 1 D
B310	Sensor, Particulate Matter	CD 3 B
B319	SENSOR ALARM CO	CM 0 C
CLU_JMP	PLUG, JUMPER, A35:B	IE 3 C
E05A	LAMP HOOK UP LEFT	GR 0 C
E05B	LAMP HOOK UP RIGHT	GR 0 C
E06	Lamp, reversing light	GF 3 B
E07L	FOG LAMP LEFT	GA 1 D
E07R	FOG LAMP RIGHT	GA 1 D
E11L	LAMP, SIDE MARKER LEFT SIDE	GD 1 E
E11R	LAMP, SIDE MARKER, RIGHT SIDE	GD 1 D
E12D	LAMP, ROOF POS. LIGHT DRIVER	GA 3 D
E12DH	LAMP, HIGH RISE SLEEPER ROOF POS. LIGHT D	HE 4 D
E12DHL	LAMP, HIGH RISE SLEEPER ROOF POS. LIGHT D	HE 3 E
E12P	LAMP, ROOF POS. LIGHT, PASS.	GA 3 D

COMPONENT	DESCRIPTION	PAGE
E12PH	LAMP, HIGH RISE SLEEPER ROOF POS. LIGHT P	HE 4 D
E12PHL	LAMP, HIGH RISE SLEEPER, ROOF POS. LIGHT	HE 4 E
E13LS	LAMP, DIR. INDICATOR LEFT SIDE A-PILLAR	GD 2 C
E13LS	LAMP, DIR. INDICATOR LEFT SIDE A-PILLAR	GE 2 C
E13LSB	LAMP, DIRECTONAL/ MARKER LEFT SIDE	GD 3 D
E13LSB	LAMP, DIRECTONAL/ MARKER LEFT SIDE	GK 3 D
E13LSC	LAMP, DIR. LEFT SIDE SKIRT	GD 3 C
E13RS	LAMP, DIR. INDICATOR RIGHT SIDE A-PILLAR	GD 4 C
E13RS	LAMP, DIR. INDICATOR RIGHT SIDE A-PILLAR	GE 4 D
E13RSB	LAMP, DIRECTIONAL/ MARKER RIGHT SIDE	GD 4 D
E13RSB	LAMP, DIRECTIONAL/ MARKER RIGHT SIDE	GK 3 C
E13RSC	LAMP, DIR. RIGHT SIDE SKIRT	GD 4 C
E14L	LAMP, PARK/DIR INDICATOR LEFT FRT.	GD 2 D
E14L	LAMP, PARK/DIR INDICATOR LEFT FRT.	GE 3 D
E14R	LAMP, PARK/DIR INDICATOR RIGHT FRT.	GD 3 D
E14R	LAMP, PARK/DIR INDICATOR RIGHT FRT.	GE 3 D
E17AD	LAMP, CAB REAR DOME DRIVER	GH 0 C
E17AP	LAMP, CAB REAR DOME PASS.	GH 0 C
E17D	LAMP, FRONT DRIVER DOME	GH 2 C
E17L	LAMP, CAB SLEEPER LEFT DOME	GR 3 C
E17P	LAMP, FRONT PASS. DOME	GH 3 C
E17R	LAMP, CAB SLEPER RIGHT DOME	GR 3 C
E18A	BACK UP LAMP	GR 3 C
E18LB	LAMP, LOWR. BUNK	HE 4 B
E18LC	LAMP, LH CABINET	HE 3 B
E18LR	LAMP, SLEEPER LH ROOF	HE 0 A
E18N	LAMP, SLEEPER INDIRECT	HE 1 C
E18R	LAMP, READING	HE 4 B
E18RR	LAMP, SLPR RH ROOF	HE 0 A
E19C	LAMP, ID LIGHT ROOF, CENTER	GA 0 D
E19C	LAMP, ID LIGHT ROOF, CENTER	GM 1 D
E19CH	LAMP, ID LIGHT HIGH RISE SLEEPER ROOF, CE	HE 2 D
E19CHL	LAMP, ID LIGHT HIGH RISE SLEEPER ROOF, CE	HE 1 D
E19D	LAMP, ID LIGHT ROOF, DRIVER	GA 0 D
E19D	LAMP, ID LIGHT ROOF, DRIVER	GM 0 D
E19DH	LAMP, ID LIGHT HIGH RISE SLEEPER ROOF DRI	HE 2 D
E19DHL	LAMP, ID LIGHT HIGH RISE SLEEPER ROOF, DR	HE 0 D
E19P	LAMP, ID LIGHT ROOF, PASS.	GA 1 D
E19P	LAMP, ID LIGHT ROOF, PASS.	GM 1 D
E19PH	LAMP, ID LIGHT HIGH RISE SLEEPER ROOF, PA	HE 3 D
E19PHL	LAMP, ID LIGHT HIGH RISE SLEEPER ROOF, PA	HE 1 D
E23L	LAMP, CARGO, LH	HE 3 B
E23LA	LAMP, CARGO LH	GR 4 C
E23R	LAMP, CARGO, RH	HE 3 B
E23RA	LAMP, CARGO RH	GR 4 C
E27L	TAIL LAMP, MODULE, LEFT	GF 0 D
E27LA	TAIL LAMP LED, LEFT	GF 2 C
E27R	TAIL LAMP MODULE, RGHT	GF 1 C
E27RA		GF 2 C
E30L	HEADLAMP, LOW BEAM, LEFT	GD 0 D

https://truckmanualshub.com/

COMPONENTS

COMPONENT	DESCRIPTION	PAGE
E30R	HEADLAMP, LOW BEAM RIGHT	GD 1 D
E31L	LAMP, HIGH BEAM LEFT SIDE	GD 0 D
E31R	LAMP, HIGH BEAM, RIGHT SIDE	GD 1 D
E32	Climate unit	HD 1 D
E32L	HEADLAMP, LEFT	GE 0 D
E32R	HEADLAMP, RIGHT	GE 1 D
E35	HVAC UNIT	HA 0 D
E38_08	LAMP, INDICATOR, IWDL	BD 0 B
E38_09	LAMP, INDICATOR, BODY BUILDER	BJ 3 B
E38_09A	LAMP, INDICATOR BODY BUILDER	BK 2 B
E38_11	LAMP WTS INDICATOR	CE 0 B
E38_11	LAMP WTS INDICATOR	CK 0 B
E39	Lamp, Licence Plate Illumination	GF 2 D
E53	LAMP, AMBIENT FOOT	KC 4 D
E53L	Lamp, Red lighting, left	KC 3 D
E53R	Lamp, Red lighting, right	KC 4 D
E58	LAMP, HOOK-UP	GR 1 C
E58	LAMP, HOOK-UP	HE 4 A
E58A	LAMP, HOOK-UP, FLUSH MTD	GR 2 C
E58B	LAMP, HOOK-UP, FLUSH MTD, LED	GR 1 C
E58BL	LAMP, HOOK UP LED LEFT	GR 0 C
E58BR	LAMP, HOOK UP LED RIGHT	GR 1 C
E58L	LAMP, PERIMETER LH	GR 2 C
E58R	LAMP, PERIMETER RH	GR 2 C
E60D	LAMP, DOOR DRIVER	GH 3 B
E60P	LAMP, DOOR PASS.	GH 3 B
E61	HEATER, WEBASTO, AT2000S	HD 3 C
E65L	LAMP, ROOF LH BEACON	GL 0 C
E65R	LAMP, ROOF RH BEACON	GL 0 C
E80L	Lamp, Additional module, left	BP 2 B
E95L1	LAMP, SNORKEL LEFT SIDE	GK 0 A
E95L2	LAMP, SNORKEL LEFT SIDE	GK 0 B
E95L3	LAMP, SNROKEL LEFT SIDE	GK 0 B
E95L4	LAMP, SNORKEL LEFT SIDE	GK 0 B
E95L5	LAMP, SNORKEL LEFT SIDE	GK 0 C
E95L6	LAMP, SNORKEL LEFT SIDE	GK 0 C
E95R1	LAMP, SNORKEL RIGHT SIDE	GK 1 A
E95R2	LAMP, SNORKEL RIGHT SIDE	GK 1 B
E95R3	LAMP, SNORKEL RIGHT SIDE	GK 1 B
E95R4	LAMP, SNORKEL RIGHT SIDE	GK 1 C
E95R5	LAMP, SNORKEL RIGHT SIDE	GK 1 C
E95R6	LAMP, SNORKEL RIGHT SIDE	GK 1 C
E96L	Lamp, side dir indicator left side	GK 2 C
E96R	Lamp, side dir indicator right side	GK 3 B
E96R2	Lamp, side marker right side#2	GK 4 B
E96R3	Lamp, side marker right side#3	GK 4 B
E96R4	Lamp, side marker right side#4	GK 4 B
E97L1	Lamp, side marker left side#1	GK 2 B
E97L2	Lamp, side marker left side#2	GK 2 B
E97L3	Lamp, side marker left side#3	GK 2 B

COMPONENT	DESCRIPTION	PAGE
E97L4	Lamp, side marker left side#4	GK 2 C
E97R1	Lamp, side marker right side#1	GK 4 A
EL1	Lamp, Extra spotlamp, roof	GQ 4 B
EM01	CONNECTOR CUMMINS SCR	CF 2 D
EM02	CONNECTOR CROSSOVER CUMMINS	CF 3 C
EM03	CONNECTOR CUMMINS DPF	CF 4 D
EM04	SENSOR DEF QUAL CUMMINS	CF 4 B
FB07	FUSE, EAT SYSTEM	CD 0 B
FB8	FUSE REMOTE SENSE ALT.	AC 4 C
FB08	FUSE, EAT SYSTEM	CD 0 A
FM1	FUSE, MAIN GND PREHEATING	AD 0 B
FM02	FUSE GROUND PROTECTION	AF 1 C
FM03	Fuse Cummins Grid Heater	CF 1 A
FM03	Fuse Cummins Grid Heater	CL 1 A
FM3_A4	FUSE INVERTER	HF 1 B
G01	BATTERY	AC 3 C
G01	BATTERY	AD 1 B
G01	BATTERY	AF 0 E
G01	BATTERY	AG 3 E
G01	BATTERY	AI 2 D
G01	BATTERY	CD 0 C
G01	BATTERY	CE 4 B
G01	BATTERY	CK 4 B
G01	BATTERY	CM 2 C
G01	BATTERY	HF 0 A
G01	BATTERY	ND 0 A
G01_1_1213	Battery	AE 0 B
G01_2_1213	Battery	AE 0 D
G01_3_1213	Battery	AE 1 D
G01_4_1213	Battery	AE 1 B
G01_5_1213	Battery	AE 1 D
G01_6_1213	Battery	AE 3 B
G01_7_1213	Battery	AE 2 B
G01_8_1213	Battery	AE 3 B
G01_9_1213	Battery	AE 3 B
G01_11_1213	Battery	AE 2 C
G01_12_1213	Battery	AE 2 D
G01_13_1213	Battery	AE 3 C
G01_14_1213	Battery	AE 3 D
G02	ALTERNATOR	AF 2 A
G02	ALTERNATOR	AG 3 C
G02_1	ALTERNATOR	AC 4 A
G02_1	ALTERNATOR	AD 0 B
G02A	Alternator 1	AC 4 B
G03	INVERTER 12VDC/120VAC	HF 0 B
G03.D	INVERTER DISPLAY	HF 0 C
G04	POWER DISTR. UNIT 120VAC	HF 2 B
H02A	HORN	GQ 1 D
H02B	HORN #1	GQ 2 D
H02C	HORN#2	GQ 2 D

https://truckmanualshub.com/

COMPONENTS

COMPONENT	DESCRIPTION	PAGE
H03	REV. WARNG. ACOUSTIC	GF 1 C
H16	METHANE FUME DETECTOR	CM 2 B
H17	METHANE DETECTION STATUS	CM 3 B
M01	MOTOR, WSHLD. WIPER	GP 1 C
M02	MOTOR, WSHLD. WASHER PUMP	GP 0 C
M03	MOTOR, AUX FAN	HC 3 D
M03	MOTOR, AUX FAN	HG 3 D
M04_1	MOTOR, STARTER	AF 0 A
M04_1	MOTOR, STARTER	AG 3 B
M04_1	MOTOR, STARTER	AI 2 B
M41	Motor Pump, Urea	CK 2 C
M110CFL	MIRROR, HTD. CONVEX, FENDER MOUNTED, LEFT	BF 3 B
M110CFR	MIRROR, HTD. CONVEX, FENDER MOUNTED, RIGH	BF 3 B
M110CL	MIRROR, HTD. CONVEX ,LHS	IC 3 D
M110CR	MIRROR, HTD CONVEX, RHS	IC 4 D
M110L	MIRROR MOTOR & HTR, LHS	IC 0 D
M110R	MIRROR MOTOR & HTR, RHS	IC 1 D
R01	HEATER, ENG. PREHEAT	AD 0 A
R01C	Heater, Engine preheat	CF 0 B
R01C	Heater, Engine preheat	CL 0 B
R02	ENGINE BLOCK HEATER RECEPTACLE	CC 0 B
R03	ENGINE BLOCK HEATER ELEMENT	CC 0 D
R03A	OIL PAN HEATER ELEMENT	CC 1 C
R04	CIG. LIGHTER	KC 0 B
R05	AIR DRYER	FA 1 D
R08	RESISTOR, TERMINATION CAN-BUS	CF 2 B
R08	RESISTOR, TERMINATION CAN-BUS	CL 2 B
R08_BBM	RESISTOR TERMINATION	XA 3 B
R08_BENDIX	RESISTOR, TERMINATING	XA 0 B
R08_MATE	RESISTOR, TERMINATION J1939	XA 3 A
R08A	RESISTOR CAN TERMINATING	XA 1 D
R08M	RESISTOR CAN TERMINATING	XB 1 C
R09	HEATER, FUEL FILTER	FA 0 D
R14	Termination resistor	CE 0 C
R14	Termination resistor	CK 0 C
R19	HEATER, HTD DRAIN VALVE	FA 3 C
R21	Termination resistor	XA 1 C
R21	Termination resistor	XB 3 C
R21_TGW	TERMINATION RESISTOR	BM 1 C
R25	HTD SEAT, DRIVER	HC 2 C
R26	HTD. SEAT PASSENGER	HC 3 C
R27	Potentiometer Volume Ctrl.	KB 4 D
R28	Heater, Windshield, Left	HC 1 D
R28	Heater, Windshield, Left	HG 2 D
R29	Heater, Windshield, Right	HC 1 D
R29	Heater, Windshield, Right	HG 1 D
R29_A	Heater,Nox Care Tank to Pump Hose	CD 4 E
R29_A	Heater,Nox Care Tank to Pump Hose	CF 1 D
R29_A	Heater,Nox Care Tank to Pump Hose	CL 1 C
R30	Heater, Windshield, Single Piece	HC 2 C

COMPONENT	DESCRIPTION	PAGE
R30	Heater, Windshield, Single Piece	HG 2 D
R30_A	Heater Back Flow Hose	CF 2 D
R30_A	Heater Back Flow Hose	CL 2 C
R31_A	Heater nox Care Pump to Injector Hose	CF 1 C
R31_A	Heater nox Care Pump to Injector Hose	CL 1 C
R32	Heater, NOxCare pump to injector hose	CD 3 D
R32_A	Heater, NOxCare pump to injector hose	CD 3 D
R33	Termination resistor	KB 1 B
R34	Termination resistor	XC 2 B
R35	Termination resistor	XC 0 B
RC1_MATE	Electrical Equipment 2 RELAYS, 2 FUSES 2	AA 4 A
RC2_MATE	ELECTRICAL EQUIPMENT 3 RELAYS 3-25195197	AA 4 B
S01	SW. MAIN LIGHTING SELECT. TYPE	GA 0 B
S006	SWITCH, SPD CTRL	BA 1 B
S07	SW. ENG. BRKE, SEL. TYPE	BA 2 B
S007	SWITCH SET/RESUME	BA 1 B
S008	SW. SHUTDWN OVERRIDE	BA 3 B
S08A	SW. ALTERNATING LIGHT / RH POST	NE 2 D
S08B	SW. TAILGATE / RH WING	NE 0 D
S08C	SW. SANDER LIGHT / SPREADER / WORK	NE 3 D
S08D	SW. LOAD LIGHT / LH WING	NE 1 D
S08E	SW. STROBE LIGHT / LH POST	NE 2 D
S08F	SW. CHAIN LIGHT / HOPPER	NE 4 D
S009	SWITCH WIPER CTRL	GP 0 B
S011	SW. FAN OVERRIDE	BA 3 B
S12	SWITCH, SNOW PLOW LIGHTS	GI 2 A
S013	SW. MIRROR DEFROST	BE 2 B
S014	SWITCH, SLEEPER HVAC ENABLE	HD 1 B
S016	SW. ATC LTD SLIP	ED 2 A
S016A	SW. ATC LTD SLIP	EA 2 B
S017C	SWITCH, CAB REAR DOME LMP	GH 0 D
S017D	SW. SLEPR ROOF DOME LAMP	HE 0 B
S017E	SW. CAB SLEEPER ROOF DOME LMP	HE 0 E
S017F	SW. FRONT DRIVER DOME LAMP	GH 2 D
S017G	SW. FRONT PASS. DOME LMP	GH 3 D
S018	SW. PWR TAKE OFF	BC 2 B
S018_1_MATE	PT0#1	BC 2 B
S019	SW. PWR DIV. LOCKOUT	FB 4 C
S020	SWITCH, AIR SUSP.	FB 0 C
S021	SW., 5TH WHL. SLIDE	BD 3 B
S022	SWITCH, I/O AIR	FB 1 C
S023	SW. NEUTRL CONTROL	FB 3 C
S023_1	PRESSURE SW. NEUTRAL CONTROL	FB 3 A
S024	SW. INTERWHL DIFF. LOCK	BD 1 B
S24C	Switch ON/OFF Allison Retarder	DD 1 B
S026A	SW._2, IGN. FEED	NA 1 C
S026B	SW.3, IGN. FEED	NC 3 C
S026C	SW._4, IGN. FEED	NC 2 C
S026D	SW.5_5, IGN. FEED	NC 1 C
S027A	SW._1, BATT. FEED	NA 0 C

https://truckmanualshub.com/

COMPONENTS

COMPONENT	DESCRIPTION	PAGE
S027B	SW._6, BATT. FEED	NC 0 C
S028	SW. PASS. DOOR LOCK	ID 1 C
S028L	SW. DRIVER DOOR LOCK	IE 0 B
S028R	SW. PASS. DOOR LOCK	IE 3 B
S030	Switch, Mirror Control	IC 0 B
S036	SWITCH, IGNITION	AC 0 B
S036	SWITCH, IGNITION	GQ 0 C
S036B	SW, PUSH BUTT. START	AC 1 B
S038	SW, PRESSURE SERVICE BRKE.	GA 3 B
S038C	SW, PRESSURE SERVICE BRAKE	BB 2 B
S038C2	2ND SW, PRESSURE SERVICE BRAKE	BB 1 D
S039	SW. DIREC. SIGNAL	GA 2 C
S41	Switch, battery main switch control	AI 0 C
S041L	SW. DRIVR SIDE DR.	GH 4 A
S041R	SW. PASS SIDE DR.	GH 4 C
S041SB	SWITCH, BUNK	HE 3 C
S041SL	SWITCH, LH JAMB	HE 3 D
S041SR	SWITCH, RH JAMB	HE 3 C
S042	SWITCH, BACK UP	BE 3 B
S43	SW. PRESS. PRKNG BRKE INDICATOR, NC.	BA 3 D
S043	SW. INFO SELECTOR	BE 1 B
S43B	SW.PRESS. PRKNG BRKE BODYBUILDER	BK 2 B
S43C	TRAILER DETECTION SWITCH	BG 2 D
S044	SWITCH, CLUTCH	BB 2 B
S045	SW. DRL OVERRIDE	BA 1 D
S047	SW. IWDL FR- ENGAGED	BG 3 D
S047A	SW. IWDL 3RD AXLE - ENGAGED	BG 3 E
S048	SW. IWDL REAR- ENGAGED	BG 3 C
S050	SW., 5TH WHL. KING PIN LCK., AUX. AIR #2	FB 1 B
S051	SW., AUX. AIR #1	FB 2 B
S051A	SW., AUX. AIR #3	FB 2 C
S052	SW. AUTO. STRT/STOP ENGAGED	BG 0 B
S055	SWITCH, INDIRECT LMP.	HE 0 B
S056	DOWNHILL CRUISE SET	BD 1 B
S057	SWITCH, PARK BRAKE AUXILIARY	GJ 0 D
S058	SWITCH, CENTER PIN HOT SAE J560	GJ 0 B
S58B	POSITION SWITCH, CLUTCH PEDAL, STARTING,	AC 2 A
S059	SWITCH, HEATED WINDSHIELD	HC 0 B
S059	SWITCH, HEATED WINDSHIELD	HG 0 B
S060	Switch, Aux Fan	HC 4 C
S060	Switch, Aux Fan	HG 4 C
S61	POSITION SWITCH, DRIVER SEAT BELT LOCK, N	BE 1 D
S061	SWITCH, CENTER PIN HOT ISO 3731	GJ 2 B
S067	SWITCH BEACON LIGHTS	GL 0 B
S068B	TAILGATE IGN FEED	NF 0 C
S068C	PWR FLOAT IGN FEED	NF 0 C
S068D	SPREADER IGN FEED	NF 1 C
S069B	RR FLASHING IGN FEED	NF 3 C
S069C	SPARE IGN IGN FEED	NF 2 C
S069D	LOW OIL IGN FEED	NF 2 C

COMPONENT	DESCRIPTION	PAGE
S99	SWITCH, ADAPTIVE CRUISE CONTROL, TIME	JA 1 C
S101	Position switch, gear box neutral positi	DB 0 D
S106	SW. PASS P.WINDOW (PASS SIDE)	ID 3 B
S106DS	SWITCH, PASS P.WINDOW (DRIVER SIDE)	IA 2 C
S106PS	SW. PASS P.WINDOW (PASS SIDE)	IA 3 C
S107	SW. DRIVER P.WINDOW	IA 1 C
S110	SWITCH, LVD	HE 1 C
S111	SWITCH, PARK BRAKE HEATER	HD 3 B
S111A	SWITCH, DPF REGEN	CB 2 C
S130	Switch, Air suspension	EC 2 D
S133	Switch, Level control, Rear axle suspens	EC 3 D
S137	SWITCH PTO #2 MDRIVE	BC 3 B
S137A	Switch, PTO2 request	FD 1 B
S145	SWITCH, AMBIENT LIGHTING	KC 4 B
S169	SWITCH, BATTERY MAIN	AC 3 C
S169	SWITCH, BATTERY MAIN	AG 3 D
S169A	SWITCH BATTERY BI-STABLE	AI 1 C
S171	SWITCH GEAR LEVER M-DRIVE	DA 0 D
S212	SWITCH HILL ASSIST	ED 4 A
S311	Switch, Load Distribution	EC 4 E
S320	SWITCH, PRESSURE PARKER PTO	FD 1 D
V2_MATE	DIODE MODULE, AUTO START IGNITION	BE 0 B
V25	DIODE, DOOR STATUS	GH 2 B
V35	Diode	BA 2 D
V36	DIODE	BA 2 D
X10	B+ PASS THRU, CAB	AA 0 B
X10	B+ PASS THRU, CAB	AC 4 D
X10	B+ PASS THRU, CAB	DB 0 B
X11	CONNECTOR, ENGINE MANAGEMENT INTERFACE	CA 0 C
X11A	CONNECTORS CUMMINS ISX-G ENGINE INTERFACE	CJ 0 C
X16	POWER STUD, EPDM	AB 3 C
X16	POWER STUD, EPDM	AC 4 C
X17A	RECEPTACLE 120VAC EXTERNAL	HF 1 C
X17B	RECEPTACLE 120VAC LEFT SLEEPER	HF 3 D
X17C	RECEPTACLE 120VAC RIGHT SLEEPER	HF 3 D
X17D	RECEPTACLE 120VAC RIGHT SLEEPER	HF 1 C
X17E	RECEPTACLE 120VAC LEFT SLEEPER	HF 1 D
X21D	Socket, Body builder connector	BY 1 A
X21E	Socket Body Builder Connector	BY 1 D
X31	TERMINAL, TRAILER FUNCTION 10 POLE	GG 3 D
X32	TERMINAL BLOCK, ISO 3731 7 POLE	GJ 2 D
X34	JUNCTION, CB BINDING POST	KC 1 C
X34D1_MATE	JUNCTION, CB #1 IN D-PANEL	KC 1 C
X34D2_MATE	JUNCTION, CB #2 IN D-PANEL	KC 1 C
X34R3	JUNCTION, O/HEAD CB 3 PIN CONN.	KC 3 C
X40	Strip, Option Junction Studs	BM 3 B
X40	Strip, Option Junction Studs	BU 2 A
X40	Strip, Option Junction Studs	BV 2 A
X40	Strip, Option Junction Studs	BW 2 A
X40	Strip, Option Junction Studs	BX 2 B

https://truckmanualshub.com/

COMPONENTS

COMPONENT	DESCRIPTION	PAGE
X40	Strip, Option Junction Studs	BZ 0 B
X40	Strip, Option Junction Studs	GQ 4 C
X40	Strip, Option Junction Studs	NB 2 C
X61	CONNECTOR, LIFT GATE POWER CIRCUIT RECEPT	ND 0 B
X87	Connector, Cummins Crossover	CL 4 D
X89	Connector, Water-in-fuel Sensor	CF 0 D
X89	Connector, Water-in-fuel Sensor	CL 0 C
X109L	Jump Start Cable Stud	AC 4 B
X109L	Jump Start Cable Stud	AD 1 A
X192	CONNECTOR CUMMINS CES	CL 2 D
X200	CONNECTOR, RS232	JC 4 C
XC1	LH CAB GND	AD 1 C
XC1	LH CAB GND	AF 3 D
XG9	STUD, ENGINE BLOCK	AF 2 C
XG9	STUD, ENGINE BLOCK	CJ 3 A
Y11	SOL. VALVE, ABS,LHS,FRT,	EA 0 B
Y11	SOL. VALVE, ABS,LHS,FRT,	ED 0 C
Y12	SOL. VALVE ABS,RHS,FRT.	EA 1 B
Y12	SOL. VALVE ABS,RHS,FRT.	ED 1 C
Y13	SOL. VALVE ABS,LHS,REAR	EA 1 D
Y13	SOL. VALVE ABS,LHS,REAR	ED 0 A
Y14	SOL. VALVE ABS,RHS,REAR	EA 1 E
Y14	SOL. VALVE ABS,RHS,REAR	ED 1 A
Y15	SOL. VALVE ABS,LHS, 3RD AXLE	EA 3 D
Y15	SOL. VALVE ABS,LHS, 3RD AXLE	ED 3 D
Y16	SOL. VALVE ABS,RHS, 3RD AXLE	EA 2 D
Y16	SOL. VALVE ABS,RHS, 3RD AXLE	ED 3 D
Y18	Solenoid valve, PTO (Power Take Off)	FD 1 D

COMPONENT	DESCRIPTION	PAGE
Y18G	SOLENOID TRANS PTO 1	BC 3 D
Y18G	SOLENOID TRANS PTO 1	DA 4 D
Y18H	SOLENOID TRANS PTO 2	BC 4 D
Y18H	SOLENOID TRANS PTO 2	DA 3 D
Y25A	SOLENOID LEVEL CONTROL DRIVE AXLES	EC 1 B
Y29A	SOLENOID LEVEL CONTROL AUX. AXLE	EC 2 B
Y35	SOLENOID, ENGINE FAN	CA 2 C
Y35	SOLENOID, ENGINE FAN	CE 0 B
Y35	SOLENOID, ENGINE FAN	CJ 3 D
Y35	SOLENOID, ENGINE FAN	CK 0 D
Y42	CLUTCH, MAGNETIC, A/C COMPRESSOR	HA 3 C
Y51	SOL VALVE, AIR DRYER	FA 2 D
Y51_A	SOL VALVE AIR DRYER	FA 1 C
Y52	SOL. VALVE, RH, AIR DRYER	FA 1 D
Y57	SOL. VALVE, AUTO TRACTION CTRL	EA 1 D
Y57	SOL. VALVE, AUTO TRACTION CTRL	ED 1 A
Y57_SA	SOLENOID VALVE, TRACTION CONTROL, STEER A	ED 4 D
Y62	SOLENOID ACCUMULATOR	DC 1 C
Y80	SOLENOID VALVE, UREA DOSING UNIT	CD 2 B
Y80A	DEF INJ VALVE	CF 1 C
Y81	SOLENOID VALVE, UREA HEATING TANK	CD 2 D
Y86	SOL, MULTI VALVE ASSY.	FB 0 D
Y100	SOLENOID VALVE, TRAILER ABS FOR BENDIX ES	ED 2 D
Y106	SOLENOID HILL ASSIST BRAKE	ED 4 D
Y110	SOLENOID VALVE, OIL THERMOSTAT	DA 4 B
Z01	CONNECTOR, VEH DIAG.	XA 1 C
Z10	CONNECTOR DIAGNOSTIC	XC 2 C

https://truckmanualshub.com/

INLINES

INLINE	PAGE
ABS_X1:1	EA 1 B
ABS_X1:3	EA 3 B
ABS_X1:4	EA 1 C
ABS_X1:5	EA 1 C
ABS_X1:6	EA 2 B
ABS_X1:7	EA 3 B
ABS_X1:8	EA 3 B
ABS_X1:10	EA 0 C
ABS_X1:11	EA 0 C
ABS_X1:12	EA 1 B
ABS_X1:13	EA 3 B
ABS_X1:14	EA 3 B
ABS_X1:16	EA 2 B
ABS_X1:17	EA 2 B
ABS_X2:1	EA 0 C
ABS_X2:2	EA 0 C
ABS_X2:3	EA 0 A
ABS_X2:4	EA 1 C
ABS_X2:5	EA 0 B
ABS_X2:6	EA 1 A
ABS_X2:7	EA 1 C
ABS_X2:8	EA 0 B
ABS_X2:9	EA 0 D
ABS_X2:10	EA 1 C
ABS_X2:11	EA 1 C
ABS_X2:12	EA 0 B
ABS_X2:13	EA 1 C
ABS_X2:14	EA 1 C
ABS_X2:15	EA 0 C
ABS_X2:16	EA 1 C
ABS_X2:17	EA 1 C
ABS_X2:18	EA 0 C
ABS_X3:4	EA 3 C
ABS_X3:6	EA 3 E
ABS_X3:7	EA 3 C
ABS_X3:9	EA 2 E
ABS_X3:10	EA 3 C
ABS_X3:11	EA 2 C
ABS_X3:12	EA 2 C
ABS_X3:13	EA 2 C
ABS_X3:14	EA 2 C
ABS_X3:15	EA 2 C
ACC_SP1:A	AA 4 C
ACC_SP1:B	AA 4 C
AF_AFR:A	HC 4 C
AF_AFR:A	HG 3 C
AF_AFR:B	HC 3 C
AF_AFR:B	HG 3 C
AF_AFR:C	HC 3 C
AF_AFR:C	HG 3 C

INLINE	PAGE
AHMC2:A	KC 3 B
AHMC2:B	KC 3 E
AHMC:A	KC 3 B
AHMC:B	KC 3 E
AILH:A	GK 0 C
AILH:B	GK 1 A
AIRH:A	GK 1 C
AIRH:B	GK 1 B
ALIC:A	KC 4 D
ALIC:B	KC 4 E
ALIC:C	KC 4 C
ALIC:D	KC 4 D
ALLISON:1	DC 2 C
ALLISON:2	DC 2 D
ALLISON:3	DC 1 C
ALLISON:4	DC 2 C
ALLISON:5	DC 1 B
ALLISON:6	DC 1 C
ALLISON:7	DC 1 C
ALLISON:8	DC 1 C
ALLISON:9	DC 1 C
ALLISON:10	DC 0 C
ALLISON:11	DC 0 C
ALLISON:12	DC 1 C
ALLISON:13	DC 1 C
ALLISON:14	DC 2 C
ALLISON:15	DC 2 C
ALLISON:16	DC 2 C
ALLISON:17	DC 0 C
ALLISON:18	DC 0 C
ALLISON:19	DC 1 C
ALLISON:20	DC 1 C
ALLISON:21	DC 2 C
ALLISON:22	DC 2 C
ALLISON:23	DC 2 C
ALLISON:24	DC 2 C
ALLISON:25	GG 2 A
ALLISON:26	GG 2 C
ALLISON:27	DC 0 C
ALLISON:30	DC 0 C
ALLISON:31	DC 0 C
ALLISON_RLY:A1	DD 4 B
ALLISON_RLY:A3	DD 4 C
ALLISON_RLY:A4	DD 3 B
ALLISON_RLY:A6	DD 3 C
ALLISON_RLY:A7	DD 3 B
ALLISON_RLY:A9	DD 3 B
ALLISON_RLY:B1	DD 4 B
ALLISON_RLY:B2	DD 4 C
ALLISON_RLY:B3	DD 4 C

INLINE	PAGE
ALLISON_RLY:B4	DD 3 B
ALLISON_RLY:B6	DD 3 C
ALLISON_RLY:B7	DD 3 B
ALLISON_RLY:B8	DD 3 C
ALLISON_RLY:B9	DD 3 B
ALLISON_RLY:C2	DD 2 C
ALLISON_RLY:C3	DD 2 B
ALLISON_RLY:C4	DD 2 B
ALLISON_RLY:C6	DD 2 B
ALLISON_RLY:D1	DD 2 C
ALLISON_RLY:D3	DD 2 B
ALLISON_RLY:D4	DD 2 B
ALLISON_RLY:D6	DD 2 B
AT_CAB_TRANS:A	DB 1 C
AT_CAB_TRANS:B	DB 2 D
AT_CAB_TRANS:C	DB 1 C
AT_CAB_TRANS:G	DB 3 D
AT_CAB_TRANS:J	DB 1 C
AT_CAB_TRANS:K	DB 1 C
AT_CAB_TRANS:N	DB 2 C
AT_CAB_TRANS:P	DB 1 C
AT_CAB_TRANS:R	DB 2 C
AT_CAB_TRANS:S	DB 1 C
AT_CAB_TRANS:T	DB 1 C
AT_CAB_TRANS:U	DB 1 C
AT_CAB_TRANS:V	DB 1 C
AT_NU_PTO:A	DB 2 E
AT_NU_PTO:B	DB 2 E
AT_RLY:A1	DB 2 B
AT_RLY:A3	DB 2 C
AT_RLY:B1	DB 2 B
AT_RLY:B3	DB 2 C
AUX_BATT:A	NA 0 D
AUX_IGN:A	NA 1 D
B58R_EXT:A	BF 1 D
B58R_EXT:B	BF 2 D
B58R_EXT:C	BF 2 D
B58RE_EXT:A	ED 1 D
B58RE_EXT:B	ED 1 D
B58RE_EXT:C	ED 2 D
BAT_SP2:A	NA 2 B
BAT_SP3:A	NC 0 B
BAT_SP3:A	NC 0 B
BAT_SP4:A	NA 2 B
BAT_SP4:A	NC 0 B
BAT_SP4:A	NC 3 B
BAT_SP4:B	NA 2 B
BB_CAB:1	BJ 2 A
BB_CAB:1	BK 1 C
BB_CAB:2	BJ 2 A

INLINE	PAGE
BB_CAB:2	BK 1 C
BB_CAB:3	BK 0 C
BB_CAB:4	BK 0 C
BB_CAB:6	BK 2 C
BB_CAB:7	BK 2 C
BB_CAB:10	BK 3 C
BB_CAB:11	BK 3 C
BB_CAB:12	BK 2 C
BB_CAB:13	BK 2 C
BB_CAB:14	BK 1 C
BB_CAB:15	BK 1 C
BB_CAB:16	BK 1 C
BB_CAB:17	BK 2 C
BB_CAB:18	BK 3 C
BB_CAB:19	BK 2 C
BB_CAB:20	BK 3 C
BB_CAB:21	BK 3 C
BB_CAB:22	BK 3 C
BB_CAB:28	BK 2 C
BB_LP:B	BJ 3 B
BB_LP:B	BK 2 B
BB_LP_6SW:B	NC 1 B
BBBL:1	BK 0 D
BBBL:2	BK 0 D
BBBL:3	BK 0 D
BBBL:4	BK 0 D
BBBL:5	BK 0 D
BBBL:6	BK 1 D
BBBL:7	BK 1 D
BBBL:8	BK 1 D
BBBL:9	BK 1 D
BBBL:10	BK 1 D
BBBL:11	BK 1 D
BBBL:12	BK 1 D
BBBL:13	BK 2 D
BBBL:14	BK 2 D
BBBL:15	BK 2 D
BBBL:16	BK 2 D
BBBL:17	BK 2 D
BBBL:18	BK 2 D
BBBL:19	BK 2 D
BBBL:20	BK 2 D
BBBL:21	BK 3 D
BBBL:22	BK 3 D
BBBL:23	BK 3 D
BBBL:24	BK 3 D
BBBL:27	BK 3 D
BBBL:29	BK 3 D
BBCBBC:A	BN 3 C
BBCBBC:B	BN 3 C

INLINE	PAGE
BBCBBC:C	BN 3 C
BBCBBC:D	BN 2 C
BBCBBC:E	BN 1 C
BBCBBC:F	BN 1 C
BBCBBC:G	BN 1 C
BBCBBC:H	BN 1 C
BBCBBC:J	BN 1 C
BBCBBC:K	NF 2 D
BBCBBC:L	NF 2 D
BBCBBC:M	BN 3 C
BBIC1:V	BJ 2 B
BBIC1:W	BJ 2 B
BBIC1:X	BJ 2 B
BBIC1:Y	BJ 2 B
BBIC1:Z	BJ 2 B
BBIC2:1	BJ 2 B
BBIC2:2	BJ 2 B
BBIC2:27	BJ 3 C
BBIC2:29	BJ 3 C
BBIL:1	BJ 3 C
BBIL:2	BJ 3 C
BBM_1939:A	BK 3 C
BBM_1939:B	BK 3 C
BBMS:A	NF 2 D
BBMS:B	NF 2 D
BBPA1:A	BN 2 C
BBPA1:B	BN 2 C
BBPA1:C	BN 2 C
BBPA1:D	BN 3 C
BBPA1:E	BN 3 C
BBPA1:F	BN 3 C
BBPA1:G	BN 3 C
BBPA1:H	BN 3 C
BBPA2:A	BN 2 C
BBPA2:B	BN 2 C
BBPA2:C	BN 2 C
BBPA2:D	BN 1 C
BBPA2:E	BN 1 C
BBPA2:F	BN 1 C
BBPA2:G	BN 1 C
BBSP1:A	BJ 1 A
BBSP2:A	BJ 1 A
BBSP2:A	BK 1 B
BBSP3:A	BJ 1 A
BBSP3:A	BK 1 B
BBSP4:A	BJ 1 A
BBSP4:A	BK 1 B
BBSP5:A	BJ 1 A
BBSP5:A	BK 2 B
BBSP6:A	BJ 1 A

https://truckmanualshub.com/

INLINES

INLINE	PAGE
BBSP6:A	BK 2 B
BEC_J1:A1	GA 2 B
BEC_J1:A2	GA 0 A
BEC_J1:A4	GA 1 D
BEC_J1:A6	BF 2 B
BEC_J1:A7	BF 2 B
BEC_J1:A9	GD 0 A
BEC_J1:A9	GE 0 A
BEC_J1:A12	IE 2 A
BEC_J1:B1	GA 1 B
BEC_J1:B2	GA 1 B
BEC_J1:B3	GA 0 B
BEC_J1:B4	GA 2 B
BEC_J1:B6	BF 2 B
BEC_J1:B7	BF 1 B
BEC_J1:B8	AD 3 B
BEC_J1:B12	GA 2 A
BEC_J1:C1	JC 0 B
BEC_J1:C8	AA 3 B
BEC_J1:C11	IC 0 A
BEC_J1:D2	BJ 0 A
BEC_J1:D2	BY 0 A
BEC_J1:D8	AA 3 B
BEC_J1:D12	BI 0 A
BEC_J1:E1	AD 3 B
BEC_J1:E2	AA 4 B
BEC_J1:E5	HD 3 A
BEC_J1:E5	KC 0 A
BEC_J1:E5	NA 2 A
BEC_J1:E5	NC 0 A
BEC_J1:E5	NC 3 A
BEC_J1:E11	BM 1 A
BEC_J1:E11	BM 3 A
BEC_J1:E11	NB 2 A
BEC_J1:F1	AA 4 B
BEC_J1:F2	AA 3 B
BEC_J1:F3	AA 2 B
BEC_J1:F4	DB 3 A
BEC_J1:F4	DD 0 A
BEC_J1:F4	NA 3 A
BEC_J1:F10	GJ 0 B
BEC_J1:F10	NA 2 A
BEC_J1:F12	EA 2 A
BEC_J1:F12	ED 3 A
BEC_J2:A1	AA 1 B
BEC_J2:A2	AA 1 B
BEC_J2:A5	GA 1 C
BEC_J2:A7	HA 1 B
BEC_J2:A9	AC 0 A
BEC_J2:A12	ID 0 A

INLINE	PAGE
BEC_J2:A12	IE 1 A
BEC_J2:B1	AA 1 C
BEC_J2:B5	GA 1 C
BEC_J2:B8	BM 1 A
BEC_J2:B8	BM 3 A
BEC_J2:B8	NB 2 A
BEC_J2:B11	GA 0 B
BEC_J2:C4	BA 1 A
BEC_J2:C5	GA 0 C
BEC_J2:C9	NA 1 B
BEC_J2:C12	GA 1 A
BEC_J2:D1	BD 0 A
BEC_J2:D4	BA 3 A
BEC_J2:D5	GA 1 C
BEC_J2:D8	HC 3 A
BEC_J2:D8	NA 3 A
BEC_J2:D11	KC 0 A
BEC_J2:E2	BA 1 A
BEC_J2:E5	BB 0 B
BEC_J2:E6	HA 0 B
BEC_J2:E7	AA 3 D
BEC_J2:E9	GL 0 A
BEC_J2:E9	NA 2 A
BEC_J2:E9	NC 3 A
BEC_J2:E10	GP 1 B
BEC_J2:E12	AC 0 A
BEC_J2:F1	BE 0 A
BEC_J2:F2	BC 3 A
BEC_J2:F5	AD 3 B
BEC_J2:F6	HA 0 B
BEC_J2:F8	GP 1 B
BEC_J2:F9	GP 1 B
BEC_J2:F10	GP 1 B
BEC_J2:F11	KC 2 A
BEC_J3:A2	BA 0 A
BEC_J3:A5	AD 4 B
BEC_J3:A6	AA 3 E
BEC_J3:A6	HA 0 B
BEC_J3:A8	GP 0 B
BEC_J3:A11	GA 4 B
BEC_J3:A12	GA 3 A
BEC_J3:B1	BJ 3 A
BEC_J3:B1	BK 2 A
BEC_J3:B1	NA 4 A
BEC_J3:B1	NC 1 A
BEC_J3:B5	AD 4 B
BEC_J3:B6	FB 1 A
BEC_J3:B7	KB 1 A
BEC_J3:B7	KB 3 A
BEC_J3:B9	IA 2 A

INLINE	PAGE
BEC_J3:B10	GA 3 B
BEC_J3:B11	GA 3 B
BEC_J3:B12	GA 3 A
BEC_J3:C2	DB 2 A
BEC_J3:C2	DD 3 A
BEC_J3:C2	DE 2 B
BEC_J3:C2	NA 3 A
BEC_J3:C3	GD 1 A
BEC_J3:C3	GE 1 A
BEC_J3:C5	AD 3 B
BEC_J3:C8	IA 2 A
BEC_J3:C8	ID 3 A
BEC_J3:C10	GA 3 B
BEC_J3:C11	GA 1 B
BEC_J3:C12	GA 1 A
BEC_J3:D1	CB 2 B
BEC_J3:D3	GH 0 A
BEC_J3:D4	JC 0 A
BEC_J3:D5	JC 0 B
BEC_J3:D9	FB 2 A
BEC_J3:D10	EC 4 A
BEC_J3:E2	FD 2 A
BEC_J3:E2	JB 1 A
BEC_J3:E2	JB 3 A
BEC_J3:E2	NA 2 A
BEC_J3:E2	NC 2 A
BEC_J3:E2	NC 0 A
BEC_J3:E3	GH 1 A
BEC_J3:E5	BE 3 D
BEC_J3:E5	EC 3 B
BEC_J3:E6	BE 3 D
BEC_J3:E7	EC 4 B
BEC_J3:E8	BK 0 B
BEC_J3:E8	HD 1 C
BEC_J3:E10	AA 0 C
BEC_J3:E10	BK 0 B
BEC_J3:E10	HD 2 B
BEC_J3:E11	XA 3 A
BEC_J3:E11	XC 3 B
BEC_J3:F1	IE 2 A
BEC_J3:F3	NA 0 A
BEC_J3:F5	BE 3 D
BEC_J3:F5	EC 4 A
BEC_J3:F7	BE 3 D
BEC_J3:F7	EC 3 A
BEC_J3:F8	BK 0 B
BEC_J3:F8	HD 2 B
BEC_J3:F10	AA 0 C
BEC_J3:F10	BK 0 B
BEC_J3:F10	HD 1 B

INLINE	PAGE
BEC_J3:F11	BE 0 A
BEC_J3:F11	BG 0 A
BEC_J4:A2	AA 1 C
BEC_J4:C1	CE 2 A
BEC_J4:C1	CJ 3 A
BEC_J4:C1	DA 0 A
BEC_J4:C2	AA 0 D
BEC_J4:D1	AA 0 B
BEC_J4:D1	BK 0 A
BEC_J4:D1	HD 1 A
BEC_J4:D2	AA 0 B
BEC_J4:D2	BK 0 A
BEC_J4:D2	HD 1 A
CAB_SC_ESP:A	ED 1 D
CAB_SC_ESP:B	ED 1 E
CAB_SC_ESP:C	ED 1 D
CAB_SC_ESP:D	ED 0 D
CHPTO:A	FD 1 D
CHPTO:B	FD 1 D
CHPTO:C	FD 2 D
CIEC:1	CA 2 B
CIEC:1	CE 2 C
CIEC:1	CK 2 C
CIEC:2	CA 1 B
CIEC:2	CF 3 B
CIEC:2	CJ 3 B
CIEC:3	AC 2 D
CIEC:4	AC 1 D
CIEC:4	AC 1 D
CIEC:5	AC 1 D
CIEC:6	CK 1 B
CIEC:7	CE 2 B
CIEC:7	CK 2 B
CIEC:8	GD 3 C
CIEC:8	GE 3 C
CIEC:9	BE 3 C
CIEC:10	GF 1 B
CIEC:11	GD 3 C
CIEC:11	GE 3 C
CIEC:12	BG 1 B
CIEC:13	BE 3 B
CIEC:14	FA 2 B
CO_BB_LP1:B	BK 2 B
COBBC:A	BK 2 C
COBBC:B	BK 2 C
COSLIL:A	GD 3 C
COSLIL:B	GD 3 C
COSLIR:A	GD 4 C
COSLIR:B	GD 4 C
COSLL:A	GD 3 C

INLINE	PAGE
COSLL:B	GD 3 D
COSLL:C	GD 3 D
COSLR:A	GD 4 C
COSLR:B	GD 4 D
COSLR:C	GD 4 E
CTR_PIN_HOT:A	GJ 1 C
CTR_PIN_HOT:B	GJ 1 D
CTR_PIN_HOT_ISO:A	GJ 3 B
CTR_PIN_HOT_ISO:B	GJ 3 D
CTR_PIN_HOT_ISO:C	GJ 2 D
DCL:A	BC 1 B
DCL:B	BC 1 C
DCL:C	BC 1 C
DCL:C	BC 1 C
DCL:D	BC 1 D
DCL:D	BC 1 D
DCL:E	BC 1 D
DCL:E	BC 1 D
DCL:F	BC 1 B
DCL:G	BC 1 B
DCL:H	BC 1 D
DCL:J	BC 1 E
DCL_A:H	BC 0 D
DCL_A:J	BC 0 E
DCL_ACC:A	BC 0 B
DCL_ACC:B	BC 0 C
DCL_ACC:C	BC 0 C
DCL_ACC:D	BC 0 D
DCL_ACC:E	BC 0 D
DCL_ACC:F	BC 0 B
DCL_ACC:G	BC 0 A
DCL_ACC:H	BC 0 D
DCL_ACC:J	BC 0 E
DCL_ACC_A:C	BC 0 C
DCL_ACC_A:D	BC 0 D
DCL_ACC_A:E	BC 0 D
DCL_ACC_A:G	BC 0 A
DCL_ACC_A:H	BC 0 D
DCL_ACC_A:J	BC 0 E
DCL_B:A	BC 0 B
DCL_B:B	BC 0 C
DCL_B:C	BC 3 B
DCL_B:D	BC 0 D
DCL_B:E	BC 0 D
DCL_B:F	BC 3 A
DCL_B:G	BC 0 B
DCL_B:H	BC 0 E
DCL_B:J	BC 0 E
DCL_C:A	BC 0 B
DCL_C:B	BC 0 C

https://truckmanualshub.com/

INLINES

INLINE	PAGE
DCL_C:D	BC 0 D
DCL_C:E	BC 0 D
DCL_C:F	BC 3 A
DCL_C:G	BC 0 B
DCL_C:H	BC 0 E
DCL_C:J	BC 0 E
DFAT:H	CM 3 D
DFAT:J	CM 3 D
DFAT:K	BP 3 C
DFAT:L	BP 3 C
DFEPDM:1	GG 1 C
DFEPDM:2	GG 2 C
DFEPDM:3	GG 2 C
DFEPDM:4	GG 2 C
DHDH:A	CA 2 B
DHDH:B	CA 1 B
DHDH:C	GJ 3 B
DHFC:1	AD 1 D
DHFC:2	BG 1 D
DHFC:3	CD 0 B
DHFC:3	CJ 0 B
DHFC:4	GA 2 E
DHFC:5	BF 0 B
DHFC:6	GP 1 C
DHFC:7	GP 0 C
DHFC:8	GP 1 C
DHFC:9	GP 1 C
DHFC:10	GP 0 C
DHFC:11	BF 0 B
DHFC:12	CA 1 C
DSFC:A	BG 3 C
DSFC:B	BG 4 D
DSFC:C	BF 4 D
DSFC:D	BG 2 E
DSFC:E	BF 1 D
DSFC:F	BF 1 D
DSFC:J	BF 1 E
E12DHS:A	HE 4 D
E12DHS:B	HE 4 E
E18A.A:A	GR 3 C
E18A.B:A	GR 3 C
E19DHS:A	HE 1 D
E19DHS:B	HE 1 E
EFRC.A1.A:1	GG 4 C
EFRC.A1.A:2	GG 0 C
EFRC.A1.A:3	GG 1 C
EFRC.A1:1	GG 4 C
EFRC.A1:2	GG 0 C
EFRC.A1:3	GG 1 C
EFRC.A2.A:A	GG 2 C

INLINE	PAGE
EFRC.A2.A:B	GG 3 D
EFRC.A2.A:C	GG 2 C
EFRC.A2:A	GG 2 C
EFRC.A2:B	GG 3 C
EFRC.A2:C	GG 3 C
EPDMA:A	GG 1 B
EPDMA:B	GG 2 B
EPDMA:C	CA 1 A
EPDMA:D	GG 2 B
EPDMB:H	CM 2 D
EPDMB:J	CM 2 D
EPDMB:K	BP 2 B
EPDMB:L	BP 2 C
EPDMB_B:K	BC 0 D
EPDMB_B:L	BC 0 E
EPDMBA:D	GG 2 B
EPDMBA:E	GG 2 B
EPDMBA:H	CM 3 D
EPDMBA:J	CM 3 D
EPDMBA:K	BP 3 C
EPDMBA:L	BP 3 C
EPDMC:A	BG 2 A
EPDMC:B	GD 3 B
EPDMC:B	GE 3 B
EPDMC:C	GG 3 A
EPDMC:D	GG 3 A
EPDMC:E	GD 3 B
EPDMC:E	GE 3 B
EPDMC:G	GQ 1 B
EPDMC:H	BE 3 A
EPDMC:J	FA 2 A
EPDMC:K	CD 0 A
EPDMC:K	CJ 0 A
EPDMC:L	CA 2 A
EPDMC:L	CE 2 C
EPDMC:L	CK 2 C
EPDMC:M	AB 3 E
EPDMC:M	CA 2 A
EPDMC:M	CE 2 B
EPDMC:M	CK 2 B
EPDMD:C	GD 3 B
EPDMD:C	GE 3 B
EPDMD:D	GD 3 B
EPDMD:D	GE 3 B
EPDME:A	CA 1 A
EPDME:A	CF 3 B
EPDME:A	CJ 3 A
EPDME:B	AC 2 D
EPDME:C	GJ 3 B
EPDME:D	AC 1 D

INLINE	PAGE
EPDME:E	AC 1 D
EPDMF:A	GG 1 B
EPDMF:B	GG 0 B
EPDMF:C	GG 3 B
EPDMF:D	GA 4 D
EPDMG:A	GA 4 D
EPDMG:B	GQ 1 B
EPDMG:D	GG 1 B
EPDMG:F	EA 3 A
EPDMG:F	ED 3 A
EPDMG:G	AB 0 C
EPDMG:H	GD 4 B
EPDMG:H	GE 3 B
EPDMG:J	GA 4 D
EPDMG:M	GG 0 B
EPDMG:P	AC 2 B
EPDMG:R	AB 2 C
EPDMG:S	GD 3 B
EPDMG:S	GE 3 B
EPDMP_A:A	CM 2 D
EPDMP_A:B	CM 2 D
EPDMP_A:C	BC 0 D
EPDMP_A:C	BP 2 B
EPDMP_A:D	BC 0 E
EPDMP_A:D	BP 2 C
ESFC:A	EC 1 B
ESFC:C	EC 0 C
ESFC:F	EC 1 B
ESFC:H	EC 1 C
ESFC:J	EC 0 C
ESFC:K	EC 2 C
ESFC:R	EC 1 C
ESFC:S	EC 2 C
ESFC:T	EC 2 C
ESFC:U	EC 2 C
ESFC:V	EC 2 B
ESFC:W	EC 2 B
ESFC:X	EC 1 C
FCAC:A	HA 2 B
FCAC:B	HA 3 B
FCAC:C	BD 2 C
FCAC:D	BD 3 B
FCAC:E	HB 3 C
FCAD:A	FA 1 B
FCAD:A	FA 1 C
FCAD:A	FA 1 B
FCAD:B	FA 1 D
FCAD:B	FA 1 D
FCAD:B	FA 1 D
FCAE2:A	AF 2 D

INLINE	PAGE
FCAE2:B	CE 3 B
FCAE2:B	CK 3 B
FCAE:A	AD 1 C
FCAE:B	CD 0 B
FCAPADS:A	HB 2 B
FCAPADS:B	HB 2 B
FCAPADS:C	HB 3 B
FCAPADS:D	HB 2 B
FCAPADS:E	HB 3 C
FCBB:1	BJ 3 C
FCBB:2	BJ 3 C
FCBL:A	GF 1 B
FCBL:B	GA 2 E
FCBL:C	GF 1 C
FCBL:D	GF 1 C
FCBL:E	AD 1 E
FCCE1:1	GF 1 B
FCCE1:2	AD 1 D
FCCE1:4	EA 2 D
FCCE1:4	ED 3 D
FCCE1:5	EA 2 D
FCCE1:5	ED 3 D
FCCE1:9	BF 2 D
FCCE1:10	BF 2 D
FCCE1:11	EA 2 D
FCCE1:11	ED 3 D
FCCE1:12	GF 1 B
FCCE1:13	GF 0 B
FCCE1:14	GF 1 D
FCCE1:15	BF 1 D
FCCE1:16	BF 1 D
FCCE1:17	BF 1 D
FCCE1:18	EA 0 D
FCCE1:18	ED 1 B
FCCE1:19	EA 0 D
FCCE1:19	ED 1 B
FCCE1:20	EA 1 D
FCCE1:20	ED 1 B
FCCE1:21	EA 1 E
FCCE1:21	ED 1 B
FCCE1:22	EA 1 D
FCCE1:22	ED 1 B
FCCE1:23	BF 4 C
FCCE1:24	EA 2 D
FCCE1:24	ED 3 D
FCCE2:1	EA 3 D
FCCE2:1	ED 3 D
FCCE2:2	EA 3 E
FCCE2:2	ED 3 D
FCCE2:3	EA 2 D

INLINE	PAGE
FCCE2:3	ED 2 D
FCCE2:4	EA 2 D
FCCE2:4	ED 2 D
FCCE2:8	ED 1 D
FCCE2:9	ED 1 D
FCCE2:10	ED 2 D
FCCE2:11	ED 4 C
FCCE2:12	GF 0 B
FCCE2:13	EA 1 D
FCCE2:13	ED 1 B
FCCE2:14	EA 1 D
FCCE2:14	ED 1 B
FCCE2:16	BG 2 E
FCCE2:17	BG 3 C
FCCE2:18	EA 0 D
FCCE2:18	ED 0 B
FCCE2:19	EA 0 D
FCCE2:19	ED 0 B
FCCE2:20	EA 1 D
FCCE2:20	ED 0 B
FCCE2:21	EA 1 E
FCCE2:21	ED 0 B
FCCE2:22	EA 1 D
FCCE2:22	ED 0 B
FCCE2:23	EA 3 D
FCCE2:23	ED 3 D
FCCE2:24	EA 3 D
FCCE2:24	ED 3 D
FCCES:1	CL 3 D
FCCES:2	CL 3 D
FCCES:3	CL 3 D
FCCES:4	CL 3 D
FCCES:5	CL 3 D
FCCES:7	CL 3 D
FCCES:8	CL 3 C
FCCES:9	CL 3 C
FCCES:10	CL 3 C
FCCES:11	CL 3 C
FCCES:12	CL 3 C
FCCES:13	CL 3 C
FCCES:14	CL 3 C
FCCL:A	CA 2 D
FCCL:B	CA 2 D
FCCL:B	CE 1 C
FCCL:B	CJ 2 E
FCCL:B	CK 3 C
FCCL:C	BF 0 D
FCCL:C	CE 3 D
FCCL:C	CK 3 C
FCCL:D	BF 1 E

https://truckmanualshub.com/

INLINES

INLINE	PAGE
FCCL:D	CE 3 D
FCCL:D	CK 3 D
FCCL:E	CE 0 C
FCCL:E	CJ 2 D
FCCL:E	CK 0 C
FCEGO:A	CJ 2 B
FCEGO:B	CJ 2 A
FCEGO:C	CJ 1 D
FCEGO:D	CJ 2 D
FCEGO:E	CJ 1 D
FCEGO:F	CJ 1 D
FCEGO:G	CJ 1 D
FCEGO:H	CJ 1 D
FCEIC:1	CD 2 B
FCEIC:2	CD 2 B
FCEIC:3	CD 2 A
FCEIC:4	CD 2 B
FCEIC:5	CD 2 B
FCEIC:6	CD 3 A
FCEIC:7	CD 0 D
FCEIC:8	CD 0 D
FCEIC:9	CD 3 B
FCEIC:10	CD 1 D
FCEIC:11	CD 1 D
FCEIC:12	CD 2 C
FCEIC:13	CD 0 D
FCEIC:14	CD 1 D
FCEIC:15	CD 1 D
FCEN:A	HA 3 C
FCEN:B	CF 0 B
FCEN:B	CL 0 B
FCEN:C	AG 1 B
FCEN:D	CF 0 B
FCEN:D	CL 0 B
FCEPDM:A	GG 1 C
FCFA1:1	JB 3 B
FCFA1:2	JB 3 B
FCFA1:3	JB 3 C
FCFA1:4	JB 2 C
FCFA1:5	JB 3 C
FCFA1:6	JB 3 C
FCFA:A	JB 0 B
FCFA:B	JB 1 B
FCFA:C	JB 1 C
FCFA:D	JB 0 C
FCFS:A	BF 0 D
FCFS:B	BF 0 D
FCFS:C	BF 0 E
FCGND:1	CE 4 D
FCGND:1	CK 4 C

INLINE	PAGE
FCGND_2:1	CJ 3 B
FCHC:A	GD 0 D
FCHC:A	GE 0 D
FCHC:B	GD 3 D
FCHC:B	GE 3 C
FCHC:D	GD 2 C
FCHC:D	GE 3 C
FCHC:E	GD 0 E
FCHC:E	GE 1 E
FCHC:F	GD 1 D
FCHC:F	GE 1 D
FCHC:G	GD 1 C
FCHC:G	GE 1 C
FCHC:H	GD 1 C
FCHC:H	GE 1 C
FCHC:K	GA 2 E
FCHC_PL:A	GI 0 D
FCHC_PL:A	GI 3 D
FCHC_PL:B	GI 0 D
FCHC_PL:B	GI 3 D
FCHC_PL:D	GI 0 D
FCHC_PL:D	GI 3 D
FCHC_PL:E	GI 0 C
FCHC_PL:E	GI 3 C
FCHC_PL:F	GI 0 D
FCHC_PL:F	GI 3 D
FCHC_PL:G	GI 0 C
FCHC_PL:G	GI 3 C
FCHC_PL:H	GI 3 C
FCHC_PL:H	GI 0 C
FCHC_PL:K	GI 0 D
FCHC_PL:K	GI 3 D
FCHDV:A	FA 3 B
FCHDV:A	FA 3 C
FCHDV:B	FA 3 D
FCHDV:B	FA 3 D
FCHFF:A	FA 0 D
FCHFF:B	FA 0 D
FCHL:A	CD 4 D
FCHL:B	CD 3 D
FCHM:A	BF 3 A
FCHM:B	BF 3 A
FCHNP:A	CF 1 C
FCHNP:A	CL 1 C
FCHNP:B	CF 1 D
FCHNP:B	CL 1 D
FCLC:A	CA 3 D
FCLC:B	CA 3 D
FCMB:A	CM 1 C
FCRE:A	GF 1 C

INLINE	PAGE
FCRE:B	GF 0 C
FCRE:C	GF 0 C
FCRE:D	GF 1 C
FCRE:E	GF 1 D
FCSCR:1	CF 1 C
FCSCR:2	CF 1 C
FCSCR:3	CF 4 D
FCSCR:4	CF 4 D
FCSCR:5	CF 4 D
FCSCR:6	CF 4 D
FCSCR:7	CF 4 C
FCSCR:8	CF 4 C
FCSCR:9	CF 4 C
FCSCR:10	CF 4 C
FCSCR:12	GR 2 D
FCSCR:13	GR 2 E
FCSPL:A	GI 1 B
FCSS:A	JA 2 C
FCSS:B	JA 2 C
FCSS:C	JA 2 C
FCSS:D	JA 2 C
FCSS:E	JA 2 C
FCTAD:A	FA 1 C
FCTAD:B	FA 1 D
FCTC.A:A	GG 3 D
FCTC:A	GG 3 D
FCTR2:1	DA 2 D
FCTR2:1	DA 3 B
FCTR2:2	DA 2 D
FCTR2:2	DA 3 B
FCTR:A	BC 2 C
FCTR:B	BE 3 B
FCTR:C	BF 1 D
FCTR:D	BF 1 D
FCTR:E	BC 3 B
FCTR:F	BB 0 C
FCTR:F	BB 1 C
FCTR:F	CE 2 D
FCTR:F	CJ 1 B
FCTR:F	CK 2 D
FCTR:G	BB 0 C
FCTR:G	BB 1 C
FCTR:G	CE 2 D
FCTR:G	CJ 1 B
FCTR:G	CK 2 D
FCTR:H	BE 3 B
FCTR:K	FB 3 B
FCUT2:1	CE 1 D
FCUT2:2	CE 1 D
FCUT2:3	CE 1 D

INLINE	PAGE
FCUT2:4	CE 1 D
FCUT2:5	CE 1 D
FCUT2:6	CE 1 D
FCUT2:7	CE 2 D
FCUT2:8	CE 2 D
FCUT2:9	CE 2 D
FCUT2:10	CE 2 D
FCUT2:11	CF 3 B
FCUT2:12	CF 3 B
FCUT2:13	CF 2 C
FCUT2:14	CF 1 C
FCUT2:16	CE 3 C
FCUT2:17	CE 3 C
FCUT2:18	CE 3 C
FCUT2:19	CE 2 C
FCUT2:20	CF 1 D
FCUT2:21	CF 1 C
FCUT2:22	CF 1 C
FCUT2:23	CF 3 B
FCUT2:24	CF 3 B
FCUT4:1	CK 2 D
FCUT4:2	CK 2 D
FCUT4:3	CK 2 D
FCUT4:4	CK 2 D
FCUT4:5	CL 1 C
FCUT4:6	CL 1 C
FCUT4:7	CL 1 C
FCUT4:8	CL 1 D
FCUT4:9	CL 2 C
FCUT4:10	CL 3 B
FCUT4:11	CL 3 B
FCUT4:12	CL 3 A
FCUT4:13	CL 3 A
FCUT:1	CD 1 B
FCUT:2	CD 1 B
FCUT:3	CD 1 A
FCUT:4	CD 1 A
FCUT:5	CD 1 D
FCUT:6	CD 4 D
FCUT:7	CD 3 E
FCUT:8	CD 2 D
FCUT:9	CD 2 D
FCUT:10	CD 2 D
FCUT:11	CD 2 D
FCUT:12	CD 2 D
FCUT:13	CD 1 D
FCUT:14	CD 1 D
FCVEC1:A	AH 1 D
FCVEC1:A	CL 3 B
FCVEC1:B	AH 1 D

INLINE	PAGE
FCVEC1:B	CL 3 B
FCVEC1:C	AH 1 D
FCVEC1:C	CF 1 C
FCVEC1:C	CL 1 C
FCVEC1:D	AH 1 D
FCVEC1:D	CF 1 C
FCVEC1:D	CL 1 C
FCVEC1:E	AH 0 D
FCVEC1:E	CF 1 C
FCVEC1:E	CL 1 B
FCVEC1:F	AH 0 D
FCVEC1:F	CF 2 C
FCVEC1:F	CL 2 B
FCVEC1:G	AH 0 D
FCVEC1:G	CF 2 C
FCVEC1:G	CL 2 C
FCVEC1:H	AH 1 D
FCVEC1:H	CF 2 C
FCVEC1:H	CL 2 C
FCVEC2:A	CF 0 C
FCVEC2:A	CL 0 B
FCVEC2:B	AH 4 D
FCVEC2:B	BP 3 A
FCVEC2:B	CF 0 C
FCVEC2:B	CL 0 B
FCVEC2:C	AH 2 D
FCVEC2:D	AH 2 D
FCVEC2:D	BP 1 B
FCVEC2:E	AH 2 D
FCVEC2:E	CE 1 C
FCVEC2:F	AH 2 D
FCVEC2:F	CE 1 C
FCVEC2:G	AH 3 D
FCVEC2:G	BP 3 B
FCVEC2:G	CF 0 C
FCVEC2:G	CL 0 C
FCVEC2:H	AH 3 D
FCVEC2:H	BP 3 B
FCVEC2:H	CF 0 C
FCVEC2:H	CL 0 C
FCVEC3:A	AH 2 D
FCVEC3:A	BP 1 B
FCVEC3:B	AH 3 D
FCVEC3:B	BP 3 A
FCVEC3:C	AH 3 D
FCVEC3:F	AH 2 D
FCVEC3:F	BP 1 B
FCVEC3:G	AH 3 D
FCVEC3:G	BP 2 C
FCVEC3:H	AH 3 D

https://truckmanualshub.com/

INLINES

INLINE	PAGE
FCVEC3:H	BP 2 C
FCVEC4:A	AH 4 D
FCVEC4:B	AH 4 D
FCVEC4:C	AH 2 D
FCVEC4:C	BP 1 B
FCVEC4:D	AH 3 D
FCVEC4:E	AH 3 D
FCVEC4:E	BP 2 B
FCVEC4:F	AH 3 D
FCVEC4:F	BP 2 B
FCVEC4:G	AH 4 D
FCVEC4:H	AH 4 D
FCVEC6:A	AH 0 B
FCVEC6:A	BP 2 A
FCVEC6:A	CE 1 B
FCVEC6:C	AH 0 B
FCVEC6:C	BP 2 A
FCVEC6:C	CE 1 B
FHCC:A	KC 2 B
FHCC:B	KC 2 D
FLFC:A	GA 1 D
FLFC:B	GA 1 E
GUSLPCAB:A	GR 3 B
GUSLPCAB:B	GR 3 B
GUSLPCAB:C	GR 3 D
HFFHFF:A	FA 0 C
HFFHFF:B	FA 0 C
HL_CHU:A	GE 1 C
HL_CXU_GU:A	GD 0 C
HL_CXU_GU:A	GE 0 C
HLSO:A	GH 0 D
HLSO:B	GH 2 D
HLSO:C	GH 2 D
HLSO:D	GH 0 C
HLSO:E	GH 1 D
HLSO:F	GH 0 E
HOOKUPLP:A	GR 0 B
HOOKUPLP:B	GR 0 D
HRSCHRSS:1	HE 1 D
HRSCHRSS:2	HE 1 E
HRSCHRSS:3	HE 4 D
HRSCHRSS:4	HE 4 E
HWR:A	HC 0 D
HWR:A	HG 1 D
HWR:B	HC 0 E
HWR:B	HG 1 D
IGN_BAT_SP6:A	NA 3 B
IGN_BAT_SP6:B	NA 3 B
IGN_BAT_SP7:A	NA 0 B
IGN_BAT_SP7:B	NA 0 B

INLINE	PAGE
IGN_SP1:A	GL 0 B
IGN_SP1:A	NA 2 B
IGN_SP1:A	NC 3 B
IGN_SP1:B	GL 0 D
IGN_SP1:B	NA 2 B
IGN_SP1_BL:A	GL 0 B
IGN_SP1_BL:B	GL 0 D
IGN_SP3:A	FD 2 B
IGN_SP3:A	NA 2 B
IGN_SP3:A	NC 2 B
IGN_SP3:A	NC 0 B
IGN_SP3:B	FD 2 B
IGN_SP3:B	NA 2 B
IGN_SP3_DC:A	FD 1 B
IGN_SP3_DC:B	FD 2 B
IGN_SP3_PTO:A	FD 2 B
IGN_SP3_PTO:B	FD 2 B
IGN_SP5:A	NA 3 B
IGN_SP5:B	NA 3 B
IGN_SP8:B	NA 4 B
IGN_SP8:B	NC 1 B
IGN_SP9:A	NA 2 B
IGN_SP10:B	NC 1 B
IGN_SP11:A	NC 2 B
IGN_SP11:A	NC 3 B
IGN_SP12:A	NC 3 B
ILLUM_OPT1:A	HC 0 A
ILLUM_OPT1:A	HG 1 A
ILLUM_OPT1:B	HC 0 C
ILLUM_OPT1:B	HG 0 C
ILLUM_OPT2:A	NC 1 B
ILLUM_OPT2:B	NC 2 B
ILLUM_OPT3:A	HC 0 A
ILLUM_OPT3:B	HC 4 D
ILLUM_OPT4:A	HC 4 B
ILLUM_OPT4:B	HC 4 D
ILLUM_OPT5:A	NC 1 B
ILLUM_OPT5:B	NC 2 B
ILLUM_OPT6:A	HC 1 B
ILLUM_OPT6:A	HG 1 B
ILLUM_OPT6:B	HC 0 C
ILLUM_OPT6:B	HG 0 C
ILLUM_OPT7:A	NF 2 B
ILLUM_OPT7:B	NF 1 E
ILLUM_OPT8:A	NF 1 B
ILLUM_OPT8:B	NF 1 E
ILLUM_OPT11:A	JA 1 B
ILLUM_OPT11:B	JA 1 D
ILLUM_OPT12:A	JA 1 B
ILLUM_OPT12:B	JA 0 D

INLINE	PAGE
ILLUM_OPT13:A	KC 4 A
ILLUM_OPT13:B	KC 4 A
ILLUM_OPT14:A	KC 4 A
ILLUM_OPT14:B	KC 4 A
ILLUM_OPT15:A	BC 4 A
ILLUM_OPT15:B	BC 4 C
ILLUM_OPT16:A	BC 4 A
ILLUM_OPT16:B	BC 4 C
ILLUM_OPT17:A	FD 0 B
ILLUM_OPT17:B	FD 0 C
ILLUM_OPT18:A	FD 0 B
ILLUM_OPT18:B	FD 0 C
ILLUM_OPT19:A	GL 0 B
ILLUM_OPT19:B	GL 1 C
ILLUM_OPT20:A	GL 0 B
ILLUM_OPT20:B	GL 1 C
ILLUM_OPT:A	HC 0 A
ILLUM_OPT:A	NA 1 B
ILLUM_OPT:A	NC 1 B
ILLUM_OPT:B	NA 1 B
ILLUM_OPT:B	NC 2 B
LSHUL:1	GR 0 C
LSHUL:2	GR 0 C
MC_SLP_CAB1:A	KB 3 B
MC_SLP_CAB1:B	KB 3 B
MC_SLP_CAB1:C	KB 3 B
MC_SLP_CAB1:D	KB 3 B
MC_SLP_CAB1:E	HE 3 A
MC_SLP_CAB1:F	AA 4 C
MC_SLP_CAB1:G	HE 0 C
MC_SLP_CAB1:H	HE 0 C
MC_SLP_CAB2:A	HE 1 A
MC_SLP_CAB2:B	HD 2 C
MC_SLP_CAB2:C	AD 3 C
MC_SLP_CAB2:D	AD 3 D
MC_SLP_CAB3:A	HE 1 B
MC_SLP_CAB3:B	HE 1 B
MC_SLP_CAB3:C	HD 3 B
MC_SLP_CAB3:D	HD 3 B
MC_SLP_CAB3:E	HD 3 B
MC_TAS:A	BF 3 C
MC_TAS:B	BF 2 E
MCAF:A	HC 3 B
MCAF:B	HC 3 D
MCBB1:1	BF 3 A
MCBB1:2	BF 2 A
MCBB1:3	BK 2 C
MCBB1:4	BK 2 C
MCBB1:5	XA 0 A
MCBB1:6	XA 0 A

INLINE	PAGE
MCBB1:7	BK 3 C
MCBB1:8	BK 2 C
MCBB1:9	BK 3 C
MCBB1:10	BK 3 C
MCBB1:10	BN 3 B
MCBB1:11	BK 3 C
MCBB1:11	BN 3 B
MCBB1:12	BJ 1 B
MCBB1:12	BK 2 C
MCBB1:12	BN 1 B
MCBB1:13	BJ 1 B
MCBB1:13	BK 2 C
MCBB1:13	BN 1 B
MCBB1:14	BJ 1 B
MCBB1:14	BK 1 C
MCBB1:14	BN 2 B
MCBB1:16	BJ 1 B
MCBB1:16	BK 1 C
MCBB1:16	BN 3 B
MCBB1:17	BJ 1 B
MCBB1:17	BK 1 C
MCBB1:17	BN 1 B
MCBB1:18	BJ 1 B
MCBB2:A	BJ 0 B
MCBB2:A	BK 1 C
MCBB2:A	BN 1 B
MCBB2:B	BJ 1 B
MCBB2:B	BK 1 C
MCBB2:B	BN 1 B
MCBB2:C	BK 0 C
MCBB2:D	BK 0 B
MCBB:A	BJ 0 B
MCBB:B	BJ 0 B
MCBBM:A	BY 0 B
MCBBM:B	BY 0 B
MCBBM:C	BC 4 C
MCBBM:D	BC 4 E
MCBBM:E	XA 1 A
MCBBM:F	XA 1 A
MCCC:A	KC 2 B
MCCC:B	KC 2 D
MCDIAG1:A	XC 2 A
MCDIAG1:B	XC 2 B
MCDIAG1:E	XC 2 B
MCDIAG1:F	XC 2 B
MCDIAG1:G	XC 2 B
MCDIAG1:H	XC 2 D
MCDIAG1:K	XC 2 D
MCDIAG:A	XA 1 B
MCDIAG:A	XB 3 C

INLINE	PAGE
MCDIAG:B	XA 1 B
MCDIAG:B	XB 3 C
MCDIAG:C	XA 2 C
MCDIAG:C	XA 1 B
MCDIAG:D	XA 2 C
MCDIAG:D	XA 1 B
MCDIAG:E	XA 3 C
MCDIAG:E	XA 1 B
MCDIAG:F	XA 3 C
MCDIAG:F	XA 1 B
MCDIAG:G	XA 3 C
MCDIAG:G	XA 1 B
MCDIAG:H	XA 3 D
MCDIAG:H	XA 0 B
MCDIAG:K	XA 2 D
MCDIAG:K	XA 1 B
MCDL1:A	IC 0 D
MCDL1:A	IC 3 B
MCDL1:A	IC 0 C
MCDL1:A	IC 2 C
MCDL1:A	IC 1 A
MCDL1:B	IC 0 D
MCDL1:B	IC 2 B
MCDL1:B	IC 0 D
MCDL1:B	IC 2 D
MCDL1:B	IC 1 A
MCDL1:C	IC 0 A
MCDL1:C	IC 1 A
MCDL1:D	GH 1 B
MCDL1:E	IC 3 A
MCDL1:E	IC 3 C
MCDL1:E	IC 3 B
MCDL1:E	IC 1 D
MCDL1:F	IC 0 D
MCDL1:F	IC 2 B
MCDL1:F	IC 0 C
MCDL1:F	IC 2 C
MCDL1:F	IC 1 A
MCDL1:G	IC 0 D
MCDL1:G	IC 2 B
MCDL1:G	IC 0 C
MCDL1:G	IC 2 C
MCDL1:G	IC 1 A
MCDL1:H	IC 0 D
MCDL1:H	IC 3 B
MCDL1:H	IC 0 C
MCDL1:H	IC 2 C
MCDL2:A	IE 1 B
MCDL2:B	IE 1 B
MCDL2:C	IE 1 C

https://truckmanualshub.com/

INLINES

INLINE	PAGE
MCDL2:D	IE 1 C
MCDL2:E	IE 1 A
MCDL2:F	IE 0 A
MCDL3:A	IA 1 B
MCDL3:B	IA 2 B
MCDL3:C	IA 2 C
MCDL3:D	IA 2 D
MCDL3:E	IE 0 C
MCDL3:F	IA 1 B
MCDL4:B	GH 4 B
MCDL4:C	GH 3 A
MCDR1:A	IC 1 D
MCDR1:A	IC 4 B
MCDR1:A	IC 1 C
MCDR1:A	IC 3 C
MCDR1:B	IC 1 D
MCDR1:B	IC 3 B
MCDR1:B	IC 1 D
MCDR1:B	IC 3 D
MCDR1:D	GH 1 B
MCDR1:E	IC 4 A
MCDR1:E	IC 4 C
MCDR1:E	IC 4 B
MCDR1:E	IC 1 D
MCDR1:F	IC 1 D
MCDR1:F	IC 3 B
MCDR1:F	IC 1 C
MCDR1:F	IC 3 C
MCDR1:G	IC 1 D
MCDR1:G	IC 3 B
MCDR1:G	IC 1 C
MCDR1:G	IC 3 C
MCDR1:H	IC 1 D
MCDR1:H	IC 4 B
MCDR1:H	IC 1 C
MCDR1:H	IC 3 C
MCDR2:A	IE 2 B
MCDR2:B	IE 2 B
MCDR2:C	IE 2 C
MCDR2:D	IE 2 C
MCDR2:E	IE 2 B
MCDR2:F	IE 4 B
MCDR2B:A	ID 1 B
MCDR2B:E	ID 1 B
MCDR3:B	IA 3 B
MCDR3:C	IA 2 C
MCDR3:D	IA 2 D
MCDR3:E	IA 4 C
MCDR3:F	IA 3 B
MCDR3B:C	ID 3 C

INLINE	PAGE
MCDR3B:D	ID 3 C
MCDR4:B	GH 3 C
MCDR4:C	GH 4 C
MCES:A	EC 0 B
MCES:B	EC 0 B
MCES:C	EC 3 B
MCES:D	EC 3 B
MCES:E	EC 3 B
MCES:F	EC 3 B
MCES:G	EC 4 B
MCES:H	EC 4 D
MCES:J	EC 3 E
MCES:K	EC 2 E
MCFC:1	EA 3 E
MCFC:1	ED 3 C
MCFC:2	EA 3 D
MCFC:2	ED 3 C
MCFC:3	EA 3 D
MCFC:3	ED 3 C
MCFC:4	EA 2 E
MCFC:4	ED 3 C
MCFC:5	EA 2 D
MCFC:5	ED 3 C
MCFC:6	EA 3 D
MCFC:6	ED 3 C
MCFC:8	BE 3 B
MCFC:9	JB 1 B
MCFC:9	JB 3 B
MCFC:10	JA 3 C
MCFC:11	JA 3 C
MCFC:12	JA 3 C
MCFC:13	FB 1 D
MCFC:14	FB 2 C
MCFC:15	FB 1 D
MCFC:16	BJ 3 B
MCFC:17	EA 2 D
MCFC:17	ED 2 C
MCFC:18	EA 2 D
MCFC:18	ED 2 C
MCFC:19	EA 2 D
MCFC:19	ED 3 C
MCFC:20	EA 2 D
MCFC:20	ED 3 C
MCFC:21	EA 1 D
MCFC:21	ED 1 B
MCFC:22	EA 1 D
MCFC:22	ED 1 B
MCFC:23	EA 0 B
MCFC:23	ED 0 C
MCFC:24	EA 0 B

INLINE	PAGE
MCFC:24	ED 0 C
MCFC:25	EA 0 B
MCFC:25	ED 0 C
MCFC:26	EA 0 B
MCFC:26	ED 0 C
MCFC:27	EA 0 B
MCFC:27	ED 0 C
MCFC:28	EA 1 B
MCFC:28	ED 1 C
MCFC:29	EA 1 B
MCFC:29	ED 1 C
MCFC:30	EA 1 B
MCFC:30	ED 1 C
MCFC:31	EA 1 B
MCFC:31	ED 1 C
MCFC:32	EA 1 B
MCFC:32	ED 1 C
MCFC:33	EA 0 E
MCFC:33	ED 0 B
MCFC:34	EA 1 D
MCFC:34	ED 0 B
MCFC:35	EA 1 D
MCFC:35	ED 0 B
MCFC:36	EA 0 D
MCFC:36	ED 0 B
MCFC:37	EA 0 D
MCFC:37	ED 0 B
MCFC:38	EA 0 E
MCFC:38	ED 1 B
MCFC:39	EA 1 D
MCFC:39	ED 1 B
MCFC:40	EA 1 D
MCFC:40	ED 1 B
MCFC:41	EA 0 D
MCFC:41	ED 1 B
MCFC:42	EA 0 D
MCFC:42	ED 1 B
MCFC:43	BC 1 E
MCFC:43	ED 4 C
MCFC:44	CE 2 A
MCFC:44	CK 2 A
MCFC:45	XB 1 C
MCFC:46	XB 1 C
MCFC:47	BF 1 C
MCFC:48	BF 1 C
MCFC:49	BG 2 D
MCFC:49	XC 1 A
MCFC:50	BG 1 D
MCFC:50	XC 1 B
MCFC:51	BG 1 B

INLINE	PAGE
MCFC:52	BD 2 D
MCFC:53	GD 0 D
MCFC:53	GE 1 E
MCFC:54	GP 1 C
MCFC:55	BF 2 C
MCFC:56	BF 0 C
MCFC:57	BF 2 C
MCFC:58	BF 2 E
MCFC:59	BE 3 B
MCFC:60	BB 0 B
MCFC:60	BB 0 B
MCFC:61	BB 0 B
MCFC:61	BB 0 B
MCFC:62	BF 1 C
MCFC:63	HA 2 B
MCFC:63	HA 2 B
MCFC:64	FB 0 B
MCFC:65	BB 1 B
MCFC:66	BF 0 B
MCFC:67	BF 0 B
MCFC:68	AC 0 C
MCFC:69	BF 0 C
MCFC:70	BC 3 B
MCFC:71	GP 1 C
MCFC:72	GP 0 B
MCFC:73	GP 0 C
MCFC:74	GP 1 C
MCFC:75	BG 1 D
MCFC:76	BD 2 C
MCFC:77	GR 2 B
MCFC:78	FB 1 D
MCFC:79	GA 1 C
MCFC:80	GD 0 C
MCFC:80	GE 0 C
MCFC:81	GD 1 C
MCFC:81	GE 1 C
MCFC:82	GA 2 D
MCFC:83	XA 3 E
MCFC:83	XA 3 D
MCFC:84	XA 3 E
MCFC:84	XA 3 D
MCFC:85	BF 3 A
MCFC:86	FB 1 D
MCFC:87	BD 1 D
MCFC:88	BG 2 D
MCFC:89	BG 2 C
MCFC:90	FB 4 C
MCFC:91	BC 2 B
MCFC:92	BC 2 B
MCFC:93	FB 3 D

INLINE	PAGE
MCFC:94	FB 3 B
MCFC:95	GI 1 B
MCFC:96	BJ 3 B
MCFC:97	GF 1 B
MCFC:97	GF 1 B
MCFC:98	BA 2 D
MCFC:99	BF 4 C
MCFC:100	GF 0 B
MCFC:100	GF 0 B
MCFC:101	FB 4 B
MCFC:102	FB 4 C
MCFC:103	CE 0 B
MCFC:103	CK 0 C
MCFC:104	JB 3 B
MCFC:105	JB 3 B
MCFC:107	ED 4 C
MCFC:108	ED 4 C
MCFC:109	ED 2 C
MCFC:110	ED 2 C
MCFC:111	ED 2 C
MCFC:112	ED 2 C
MCFC:113	ED 2 C
MCFC:114	ED 2 C
MCFC:115	ED 1 D
MCFC:116	ED 1 D
MCFC:117	ED 1 D
MCFC:118	ED 1 D
MCFC:119	ED 2 C
MCFC:120	ED 2 C
MCFC:124	CE 1 A
MCFC:124	CJ 3 B
MCFC:125	GJ 3 C
MCFC:126	GJ 3 D
MCFC:127	GJ 1 C
MCFC:128	GJ 1 D
MCFL:A	GA 2 A
MCFL:B	GA 2 B
MCFL:C	GA 2 A
MCFUS:A	JC 1 D
MCFUS:B	JC 1 C
MCFUS:C	JC 1 D
MCFUS:D	JC 1 D
MCFUS:E	JC 1 D
MCHL:A	GR 1 B
MCHL:A	GR 2 B
MCHL:B	GR 1 D
MCHLGUSLP:A	GR 3 B
MCHLGUSLP:B	GR 3 D
MCHS:A	HC 3 B
MCHS:A	HC 3 B

https://truckmanualshub.com/

INLINES

INLINE	PAGE
MCHS:B	HC 3 D
MCHW1:A	NF 3 B
MCHW1:B	NF 4 B
MCHW:A	HC 2 B
MCHW:A	HG 1 B
MCHW:B	HC 0 D
MCHW:B	HG 0 D
MCIS:A	KC 0 B
MCIS:B	KC 0 C
MCLA:A	BF 4 B
MCLA:B	BF 4 B
MCLA:C	BF 4 B
MCLSL:A	GD 2 B
MCLSL:A	GD 2 B
MCLSL:A	GE 2 C
MCLSL:B	GD 2 D
MCLSL:B	GD 2 C
MCLSL:B	GE 2 D
MCLSLCO1:A	GD 2 B
MCLSLCO1:B	GD 2 D
MCLSLCO2:A	GD 2 B
MCLSLCO2:B	GD 2 D
MCMS:A	NF 3 A
MCNAV:A	BM 4 B
MCNAV:B	BM 4 B
MCNAV:C	BM 4 B
MCNAV:D	BM 4 B
MCOF2:A	KB 3 B
MCOF2:A	KB 0 C
MCOF2:B	KB 3 B
MCOF2:B	KB 0 C
MCOF2:C	KB 0 C
MCOF2:C	KB 3 B
MCOF2:D	KB 0 C
MCOF2:D	KB 3 B
MCOF2:E	KC 3 D
MCOF2:G	GA 1 E
MCOF2:G	GM 1 D
MCOF3:A	KB 2 B
MCOF3:A	KB 0 C
MCOF3:B	KB 2 B
MCOF3:B	KB 0 C
MCOF4:A	GA 3 D
MCOF4:B	GA 3 E
MCOF5:A	CM 1 B
MCOF5:B	CM 2 C
MCOF5:C	CM 0 C
MCOF5:D	CM 2 C
MCOF:A	GH 0 B
MCOF:A	GH 0 A

INLINE	PAGE
MCOF:B	HE 0 D
MCOF:C	GH 1 C
MCOF:D	HE 0 D
MCOF:E	KC 3 A
MCOF:F	GH 0 A
MCOF:H	GA 0 C
MCOF:H	GA 0 D
MCOF:H	GM 1 C
MCOF:H	GM 1 B
MCOFCOA:A	GH 0 B
MCOFCOA:C	GH 4 D
MCOFCOA:E	GH 4 D
MCOFCOA:F	GH 4 D
MCOFCOA:G	GH 4 D
MCOFCOA:H	GH 4 D
MCOFCOB:A	GH 0 B
MCOFCOB:C	GH 4 E
MCOFCOB:E	GH 4 E
MCOFCOB:F	GH 4 E
MCOFCOB:G	GH 4 E
MCOFCOB:H	GH 4 E
MCOFCOC:A	GM 0 B
MCOFCOC:B	GM 0 B
MCOFCOC:C	GM 0 B
MCOFCOC:D	GM 0 B
MCOFCOC:E	GM 0 B
MCOFCOC:F	GM 0 B
MCOFCOC:G	GM 1 B
MCOFCOC:H	GM 1 B
MCOFCOD:A	GM 0 C
MCOFCOD:B	GM 0 C
MCOFCOD:C	GM 0 C
MCOFCOD:D	GM 0 C
MCOFCOD:E	GM 0 C
MCOFCOD:F	GM 0 C
MCOFCOD:G	GM 1 C
MCOFCOD:H	GM 1 C
MCOWL:A	GL 0 C
MCOWL:B	GL 0 D
MCPLW:A	IE 2 B
MCPLW:B	IE 2 B
MCPLW:C	IE 0 D
MCPLW:D	IE 1 D
MCPLW:E	IE 1 D
MCPLW:F	IE 2 D
MCPLW:G	IE 2 D
MCPLW:H	IE 2 D
MCPLW:J	IA 2 A
MCPLW:K	IA 2 B
MCPLW:K	ID 3 B

INLINE	PAGE
MCPLW:L	IA 3 B
MCPLW:L	ID 3 B
MCPLW:M	IA 3 B
MCPLW:M	ID 3 B
MCPLW:N	ID 0 B
MCPLW:N	IE 1 B
MCPLW:P	IA 4 D
MCPLW:P	ID 2 E
MCPLW_A:A	IE 2 B
MCPLW_A:B	IE 2 B
MCPLW_A:C	IE 0 D
MCPLW_A:D	IE 1 D
MCPLW_A:E	IE 1 D
MCPLW_A:F	IE 2 D
MCPLW_A:G	IE 2 D
MCPLW_A:H	IE 2 D
MCPLW_B:J	IA 2 B
MCPLW_B:K	IA 2 B
MCPLW_B:L	IA 3 B
MCPLW_B:M	IA 3 B
MCPLW_B:N	IE 1 B
MCPLW_B:P	IA 4 D
MCPLW_C:K	ID 3 B
MCPLW_C:L	ID 3 B
MCPLW_C:M	ID 3 B
MCPLW_C:N	ID 0 B
MCPLW_C:P	ID 2 E
MCROF1:A	JC 2 D
MCROF1:B	JC 2 C
MCROF1:C	JC 2 D
MCROF1:D	JC 3 D
MCROF1:E	JC 3 D
MCROF1:F	JC 3 C
MCROF1:G	JC 2 D
MCROF1:H	JC 2 D
MCROF2:A	XA 0 B
MCROF2:B	XA 0 B
MCROF2:C	XA 0 C
MCROF2:D	XA 0 C
MCRSL:A	GD 4 B
MCRSL:A	GD 4 B
MCRSL:A	GE 4 C
MCRSL:B	GD 4 D
MCRSL:B	GD 4 D
MCRSL:B	GE 4 D
MCRSLCO1:A	GD 4 B
MCRSLCO1:B	GD 4 D
MCRSLCO2:A	GD 4 B
MCRSLCO2:B	GD 4 D
MCSC:A1	GA 2 C

INLINE	PAGE
MCSC:A2	GA 2 D
MCSC:A3	GA 2 C
MCSC:A4	GA 2 B
MCSC:A5	GA 2 C
MCSC:A6	GA 2 D
MCSC:A7	GA 3 B
MCSC:A8	GA 2 B
MCSC:A9	GA 3 D
MCSC:A9	GA 3 D
MCSC:A10	AC 0 B
MCSC:A11	AC 0 C
MCSC:A12	AC 0 B
MCSC:A13	AC 0 C
MCSC:A14	GQ 0 C
MCSC:A15	GQ 0 D
MCSC:B1	BE 1 B
MCSC:B2	BE 1 B
MCSC:B3	BE 1 B
MCSC:B4	BE 1 B
MCSC:B5	BE 1 B
MCSC:B7	GA 3 B
MCSC:B8	GA 3 B
MCSC:B9	GA 3 D
MCSC:B9	GA 3 D
MCSD:1	JA 3 C
MCSD:2	JA 3 C
MCSD:3	JA 3 C
MCSD:4	JA 4 C
MCTR:1	XA 3 A
MCTR:2	XA 3 A
MCTR:3	XB 1 B
MCTR:4	XB 1 B
MCTR:5	XB 3 B
MCTR:6	XB 3 B
MCTR:7	XA 4 B
MCTR:11	XA 4 B
MCTR:12	DA 2 D
MCTR:14	DA 4 D
MCTR:16	BC 4 D
MCTR:17	BC 4 C
MCTR:18	BC 3 C
MCTR:19	BC 2 E
MCVL:A	BM 0 C
MCVL:A	BM 3 C
MCVL:B	BM 1 C
MCVL:B	BM 3 C
MCVL:C	BM 1 C
MCVL:C	BM 3 C
MISC_2:A	NC 3 D
MISC_2:A	NE 1 D

INLINE	PAGE
MISC_3:A	NC 2 D
MISC_3:A	NE 3 D
MISC_4:A	NC 1 D
MISC_4:A	NE 0 D
MISC_5:A	NC 0 D
MISC_5:A	NE 4 D
MISC_6:A	NC 0 D
MISC_6:A	NE 2 D
MISC_7:A	NE 2 D
MSAF:A	NF 3 D
MSAF:B	NF 4 B
OMISC_2:A	NF 0 D
OMISC_3:A	NF 3 D
OMISC_4:A	NF 1 D
OMISC_5:A	NF 0 D
OMISC_6:A	NF 0 D
OPT_SW_PWR:A4	NE 0 B
OPT_SW_PWR:A4	NF 0 B
OPT_SW_PWR:A5	NE 0 B
OPT_SW_PWR:A5	NF 0 B
OPT_SW_PWR:A6	NE 0 B
OPT_SW_PWR:A7	NE 0 B
OPT_SW_PWR:A7	NF 0 B
OPT_SW_PWR:A8	NE 1 B
OPT_SW_PWR:A9	NE 1 B
OPT_SW_PWR:A9	NF 1 B
OPT_SW_PWR:B4	NE 1 B
OPT_SW_PWR:B4	NF 2 B
OPT_SW_PWR:B5	NE 1 B
OPT_SW_PWR:B5	NF 2 B
OPT_SW_PWR:B6	NE 2 B
OPT_SW_PWR:B7	NE 2 B
OPT_SW_PWR:B7	NF 2 B
OPT_SW_PWR:B8	NE 2 B
OPT_SW_PWR:B9	NE 2 B
OPT_SW_PWR:B9	NF 3 B
OPT_SW_PWR:C4	NE 1 B
OPT_SW_PWR:C4	NF 3 B
OPT_SW_PWR:C5	NE 1 B
OPT_SW_PWR:C5	NF 3 B
PB_START:A	AC 1 B
PB_START:B	AC 1 B
PBS_CLUTCH_SW:A	AC 1 A
PBS_CLUTCH_SW:A	AC 1 A
PBS_CLUTCH_SW:B	AC 1 A
PBS_CLUTCH_SW:B	AC 1 A
PBSTART:A	AC 1 B
PBSTART:B	AC 1 B
PBSTART:B	AC 1 B
PL:1	GI 2 D

https://truckmanualshub.com/

INLINES

INLINE	PAGE
PL:2	GI 2 D
PL:3	GI 2 D
PL:4	GI 2 D
PL:5	GI 2 D
PL:6	GI 2 D
PL:7	GI 1 D
PL:8	GI 2 D
PM:1	GA 3 B
PM:2	GA 3 A
PM:3	AA 0 D
PM:4	AA 0 D
PM:5	AA 0 D
PM:6	AA 0 D
PM:7	AA 0 B
PM:8	AA 1 C
PM:9	AA 1 B
PM:10	AA 1 C
PM:11	GD 1 B
PM:11	GE 1 C
PM:12	GD 2 B
PM:12	GE 2 C
PM:13	GD 1 B
PM:13	GE 2 B
PM:14	GD 1 B
PM:14	GE 2 C
PM:15	GD 1 B
PM:15	GE 2 B
PND:A	BZ 1 C
PND:B	BZ 1 C
PND:C	BZ 1 C
PNF:A	BZ 1 C
PNF:B	BZ 1 C
PNF:C	BZ 1 C
PPCO:1	FD 1 C
PPCO:2	FD 1 C
PPCO:3	FD 2 C
R08_PNP_MATE:A	BZ 0 D
R08_PNP_MATE:B	BZ 0 D
R08_TGW_DEU:1	XA 2 C
R08_TGW_DEU:2	XA 2 C
R08ACC:A	XA 0 D
R08ACC:B	XA 0 D
R08BBM:A	XA 3 B
R08BBM:B	XA 3 B
R21_TGW_OL:A	BM 0 C
R21_TGW_OL:B	BM 1 C
RC1:B8	DA 2 C
RC1:B9	DA 2 C
RC1:C1	DE 3 C
RC1:C3	DE 3 B

INLINE	PAGE
RC1:C4	DA 0 B
RC1:C6	DA 0 B
RC1:C8	DA 2 C
RC1:C9	DA 2 C
RC1:D1	DE 3 C
RC1:D3	DE 3 B
RC1:D4	DA 0 B
RC1:D6	DA 0 B
RC2:A1	GD 0 B
RC2:A1	GE 0 B
RC2:A2	GD 0 B
RC2:A2	GE 0 B
RC2:A3	GD 0 B
RC2:A3	GE 0 B
RC2:A4	GA 2 D
RC2:A6	GA 2 C
RC2:A8	CM 1 C
RC2:A9	CM 0 B
RC2:B1	GD 0 B
RC2:B1	GE 0 B
RC2:B3	GD 0 B
RC2:B3	GE 0 B
RC2:B4	GA 2 D
RC2:B6	GA 2 C
RC2:B7	CM 0 C
RC2:B9	CM 1 B
RC2:C1	GD 1 B
RC2:C1	GE 1 B
RC2:C2	GD 1 B
RC2:C2	GE 1 B
RC2:C3	GD 1 B
RC2:C3	GE 1 B
RC2:C4	DE 1 C
RC2:C6	DE 0 B
RC2:C7	CM 1 B
RC2:C9	CM 1 A
RC2:D1	GD 1 B
RC2:D1	GE 1 B
RC2:D3	GD 1 B
RC2:D3	GE 1 B
RC2:D4	DE 0 C
RC2:D6	DE 1 B
RC2:D7	CM 1 B
RC2:D9	CM 1 A
RCECS:1	EC 1 B
RCECS:2	EC 1 B
RCECS:3	EC 1 B
RCECS:4	EC 2 B
RCECS:5	EC 2 B
RCECS:6	EC 2 B

INLINE	PAGE
RCECS:7	EC 2 D
RCECS:8	EC 2 D
RCECS:9	EC 2 D
RCECS:10	EC 1 D
RCECS:11	EC 1 D
RCECS:12	EC 1 D
RCECS:13	EC 0 D
RCECS:14	EC 2 B
RCECS:15	EC 0 D
RCSP:1	FB 2 E
RCSP:2	FB 0 D
RCSP:3	FB 1 D
RCSP:4	FB 1 D
RCSP:5	FB 1 D
RCSP:6	FB 1 D
RCSP:7	FB 1 D
RCSP:8	FB 2 D
RCSP:9	FB 2 D
RCSP:10	FB 2 D
RCSP:11	FB 0 E
RCSP:12	FB 1 D
RCSP:13	FB 1 E
RCSP:14	FB 1 E
RDCRDCH:1	AI 1 C
RDCRDCH:2	AI 1 C
RDCRDCH:3	AI 1 C
RDCRDCH:4	AI 1 C
RFCB1:A	KC 3 B
RFCB1:B	KC 3 D
RFCB2:A	KC 3 B
RFCB2:B	KC 3 D
RFCB2:C	GH 0 B
RFCB:A	KC 3 B
RFCB:B	KC 3 D
RFCB:C	GH 0 B
RFHL:A	GH 0 B
RFHL:B	GA 3 E
RFHL:C	GH 1 D
RFHL:D	GH 0 B
RFMIC:A	KB 0 B
RFMIC:A	KB 2 C
RFMIC:B	KB 0 B
RFMIC:B	KB 2 C
RFRC:E	GH 0 A
RLY42:1	CF 0 A
RLY42:2	CF 0 B
RO8_TGW_PED:A	XA 2 C
RO8_TGW_PED:B	XA 2 C
RSHUL:1	GR 0 C
RSHUL:2	GR 0 C

INLINE	PAGE
S038C_A:C	BB 2 E
S038C_A:D	BB 2 E
S038MC:A	BB 2 E
S038MC:B	BB 2 E
SBW:A	BE 1 E
SBW:B	BE 1 D
SC1_CAB:A	KB 3 C
SC1_CAB:B	KB 3 C
SC1_CAB:C	KB 3 C
SC1_CAB:D	KB 3 C
SC1_CAB:E	HE 3 A
SC1_CAB:F	AA 4 C
SC1_CAB:G	HE 0 C
SC1_CAB:H	HE 0 C
SC1_SLP:A	KB 3 C
SC1_SLP:B	KB 3 C
SC1_SLP:C	KB 3 C
SC1_SLP:D	KB 3 C
SC1_SLP:E	HE 3 A
SC1_SLP:F	AA 4 C
SC1_SLP:G	HE 0 C
SC1_SLP:H	HE 0 C
SLCLL:1	GR 4 C
SLCLL:2	GR 4 C
SLCLR:1	GR 4 C
SLCLR:2	GR 4 C
SLFR:A	GK 1 C
SLFR:A	GK 4 C
SLFR:B	GK 2 B
SLFR:B	GK 3 A
SLLH:A	GK 1 E
SLLH:B	GK 2 D
SLLH:C	GK 2 A
SLP_CAB1:A	KB 3 D
SLP_CAB1:A	KB 3 C
SLP_CAB1:B	KB 3 C
SLP_CAB1:B	KB 3 D
SLP_CAB1:C	KB 3 C
SLP_CAB1:C	KB 3 C
SLP_CAB1:D	KB 3 C
SLP_CAB1:D	KB 3 C
SLP_CAB1:E	HE 3 A
SLP_CAB1:E	HE 4 A
SLP_CAB1:F	AA 4 C
SLP_CAB1:F	AA 4 D
SLP_CAB1:G	HE 0 B
SLP_CAB1:G	HE 0 C
SLP_CAB1:H	HE 0 B
SLP_CAB1:H	HE 0 C
SLP_CAB2:A	HE 1 A

INLINE	PAGE
SLP_CAB2:B	HD 2 C
SLP_CAB2:C	AD 3 C
SLP_CAB2:D	AD 3 D
SLP_CAB3:A	HE 1 B
SLP_CAB3:B	HE 1 B
SLP_CAB3:C	HD 3 C
SLP_CAB3:D	HD 3 C
SLP_CAB3:E	HD 3 C
SLP_RF:A	HE 0 B
SLP_RF:B	HE 4 C
SLP_RF:C	HE 0 A
SLP_RF:D	HE 3 B
SLPCOFH:A	GR 3 B
SLRFHL1:A	KB 3 C
SLRFHL1:B	KB 3 C
SLRFHL1:C	KB 3 C
SLRFHL1:D	KB 3 C
SLRFHL1:E	KC 3 D
SLRFHL1:F	GA 3 E
SLRFHL2:A	GH 0 B
SLRFHL2:C	GH 1 D
SLRFHL2:D	GH 0 B
SLRFHL2:E	KC 3 B
SLRFHL2:F	HE 0 D
SLRFHL2:G	HE 0 D
SLRH:A	GK 3 E
SLRH:B	GK 3 B
SLRH:C	GK 2 A
SLSF:A	HD 3 D
SLSF:B	HD 3 D
SPIGNLOWOIL:A	NF 2 D
SPIGNLOWOIL:B	NF 2 D
SPIGNLOWOIL:C	BN 1 C
TAS_SLP:A	BF 3 D
TAS_SLP:B	BF 3 E
TGW_IGN_SP3_1:A	NA 2 E
TGW_IGN_SP3_1:B	NA 2 E
TGW_IGN_SP3_2:A	NA 2 D
TGW_IGN_SP3_2:B	NA 2 D
TGWBB1:A	BM 0 E
TGWBB1:A	BM 3 D
TGWBB1:B	BM 0 E
TGWBB1:B	BM 3 D
TGWBB1:C	BM 1 E
TGWBB1:C	BM 3 D
TGWBB1:D	BM 1 E
TGWBB1:D	BM 3 D
TGWBB1:E	BM 1 E
TGWBB1:E	BM 3 D
TGWBB1:F	BM 1 E

https://truckmanualshub.com/

INLINES

INLINE	PAGE
TGWBB1:F	BM 3 D
TGWBB1:G	BM 1 E
TGWBB1:G	BM 3 D
TLBU:A	GF 1 C

INLINE	PAGE
TLBU:A	GF 3 B
TLBU:B	GF 1 C
TLBU:B	GF 3 B
TLRE:A	GF 1 C

INLINE	PAGE
TLRE:A	GF 3 B
TLRE:B	GF 0 C
TLRE:B	GF 2 B
TLRE:C	GF 0 C

INLINE	PAGE
TLRE:C	GF 2 B
TLRE:D	GF 1 C
TLRE:D	GF 2 B
TLRE:E	GF 1 D

INLINE	PAGE
TLRE:E	GF 2 B
Y53:A	FA 3 C
Y53:B	FA 3 C

https://truckmanualshub.com/

SPLICES

SPLICE	PAGE
Power (S)	GK 1 C
SP1HB1 (S)	CE 0 C
SP1LB2 (S)	CE 0 C
SP3F57 (T)	HG 0 B
SP3F57 (T)	NE 2 C
SP4FB (T)	GA 3 B
SP26B2 (S)	GR 0 C
SP28B1 ( )	HG 1 D
SP42B3 (S)	GF 1 C
SP43A1 (S)	CE 2 D
SP44B ( )	FA 1 C
SP47A ( )	FA 3 C
SP75A (T)	AA 0 B
SP75A (T)	BK 0 B
SP75A (T)	HD 1 B
SPAC62A (S)	CK 3 C
SPAX4:1 (S)	ED 2 D
SPAX4:4 (S)	ED 2 D
SPAX4:7 (T)	ED 1 D
SPAX4:8 (T)	ED 1 D
SPAX4:10 (T)	ED 1 D
SPAX4:11 (T)	ED 1 E
SPBKA57 (T)	DD 2 C
SPBKA87 (T)	HG 0 C
SPBKA87 (T)	NE 2 E
SPBKA90 (T)	NF 1 E
SPBKD3 ( )	HG 0 D
SPBKD4 ( )	NF 4 A
SPBKD4A (T)	AD 2 D
SPBKD4A (T)	HG 3 C
SPBKD4A (T)	NE 3 B
SPBKXC1G26 (S)	GI 2 D
SPC15JA3 (S)	AG 0 B
SPCB1 (T)	BA 0 D
SPCB2A (T)	BA 0 D
SPCB7 (T)	BC 1 C
SPCB11 (T)	BA 3 D
SPCB16 (T)	BC 1 D
SPCB18 (T)	BC 2 D
SPCB19A (T)	BB 3 C
SPCB19A1 ( )	BB 1 E
SPCB28B (T)	DB 2 C
SPDL1H (S)	CA 0 B
SPDL1H1 (S)	XA 1 D
SPDL1H2 (S)	XA 2 D
SPDL1H3 (S)	XA 4 E
SPDL1H4 (S)	XA 3 D
SPDL1H5 (S)	XA 4 D
SPDL1H6 (S)	XA 3 D
SPDL1H8 (S)	XA 3 C

SPLICE	PAGE
SPDL1H9 (S)	XA 4 C
SPDL1H10 (S)	XA 3 C
SPDL1H11 (S)	XA 4 B
SPDL1H12 (S)	XA 4 B
SPDL1H13 (S)	DB 1 D
SPDL1H13 (S)	XA 4 A
SPDL1H14 (S)	XA 4 B
SPDL1H15 ( )	XA 0 C
SPDL1H16 (S)	XA 0 C
SPDL1H18 (S)	XA 3 B
SPDL1HB (S)	CK 0 C
SPDL1HB1 ( )	XA 1 D
SPDL1HB2 ( )	XA 0 E
SPDL1HB3 ( )	XA 0 E
SPDL1L (S)	CA 0 B
SPDL1L1 (S)	XA 1 D
SPDL1L2 (S)	XA 2 D
SPDL1L3 (S)	XA 4 E
SPDL1L4 (S)	XA 3 D
SPDL1L5 (S)	XA 4 D
SPDL1L6 (S)	XA 3 D
SPDL1L8 (S)	XA 3 C
SPDL1L9 (S)	XA 4 C
SPDL1L10 (S)	XA 3 C
SPDL1L11 (S)	XA 4 B
SPDL1L12 (S)	XA 4 B
SPDL1L13 (S)	DB 1 D
SPDL1L13 (S)	XA 4 A
SPDL1L14 (S)	XA 4 C
SPDL1L15 ( )	XA 0 C
SPDL1L16 (S)	XA 0 C
SPDL1L18 (S)	XA 3 B
SPDL1LB (S)	CK 0 C
SPDL1LB1 ( )	XA 0 D
SPDL1LB2 ( )	XA 0 E
SPDL1LB3 ( )	XA 0 E
SPDL2H1 (S)	XB 0 C
SPDL2H4 (S)	XB 3 C
SPDL2H6 (S)	XB 2 B
SPDL2H7 (S)	DD 2 D
SPDL2H8 (S)	BM 0 C
SPDL2H9 (S)	DD 3 D
SPDL2L1 (S)	XB 0 C
SPDL2L4 (S)	XB 4 C
SPDL2L6 (S)	XB 2 B
SPDL2L7 (S)	DD 2 D
SPDL2L8 (S)	BM 1 C
SPDL2L9 (S)	DD 3 D
SPDL3H (S)	KB 1 B
SPDL3L (S)	KB 1 B

SPLICE	PAGE
SPDL4H (S)	XA 1 B
SPDL4L (S)	XA 1 B
SPDL7H1 (S)	CD 1 B
SPDL7H2 (S)	CF 3 D
SPDL7H3 (S)	CF 3 B
SPDL7HB7 (S)	CL 3 B
SPDL7L1 (S)	CD 1 C
SPDL7L2 (S)	CF 3 C
SPDL7L3 (S)	CF 3 B
SPDL7LB7 (S)	CL 3 B
SPDL10HB1 (S)	XC 1 B
SPDL10HN1 (S)	XC 2 B
SPDL10LB1 (S)	XC 0 A
SPDL10LN1 (S)	XC 2 A
SPEA13A (S)	CF 0 A
SPEA13A5 (S)	CF 0 B
SPEA24A1 (S)	CE 0 B
SPEA24A2 ( )	CK 0 D
SPEC3A (S)	CF 1 C
SPEC3A1 (S)	CL 1 C
SPEC8A (S)	CE 1 D
SPEC13A1 (S)	CF 0 D
SPEC13A2 (S)	CL 0 D
SPEC32A (S)	CE 1 D
SPEC38A (S)	CF 2 C
SPEC38A1 (S)	CL 2 C
SPEC39A (S)	CF 2 C
SPEC39A1 (S)	CL 2 C
SPEC40A (S)	CF 1 C
SPEC40A1 (S)	CL 1 C
SPEC54A (S)	CE 2 D
SPEC57 (S)	CE 0 B
SPEC57A2 (S)	CK 0 D
SPEC62 (S)	CE 3 D
SPEC66A1 (S)	CL 0 D
SPEC66A2 (S)	CF 0 D
SPEC76 (S)	CF 0 B
SPEC76A (S)	CF 0 B
SPEC76A1 (S)	CL 0 B
SPEC84A (S)	CF 1 D
SPEC84A2 (S)	CF 1 D
SPEC84A2 (S)	CL 1 D
SPECHA1 ( )	CJ 1 C
SPEMA28A1 (S)	CD 3 D
SPEMA49A (S)	CD 2 A
SPEMA54A1 (S)	CD 1 D
SPEMA59A1 (S)	CD 3 D
SPEMA62A2 (S)	CD 2 D
SPF1A ( )	HE 3 B
SPF1F ( )	HE 3 C

SPLICE	PAGE
SPF1J ( )	HE 3 C
SPF2C ( )	HE 0 A
SPF2C2 (S)	GD 1 E
SPF2C2 (S)	GE 0 D
SPF2D (T)	GA 1 B
SPF2E (S)	GA 1 D
SPF2LL ( )	HE 0 B
SPF2T ( )	HE 0 A
SPF2Y (S)	GI 2 C
SPF3A ( )	HE 2 B
SPF3B (T)	GA 0 C
SPF3B1 (T)	GA 0 D
SPF3B1 (T)	GM 1 C
SPF3B2 (S)	HE 1 D
SPF3B3 (T)	GM 1 B
SPF3B5 (T)	GA 2 D
SPF3B7 (S)	GF 0 C
SPF3B8 (S)	GA 2 D
SPF3B9 (S)	GD 2 E
SPF3B9 (S)	GE 3 D
SPF3B11 (S)	GF 2 C
SPF3B14 (S)	GK 0 E
SPF3B19 (S)	GK 1 B
SPF3B21 (S)	GI 1 D
SPF3F (T)	BC 2 A
SPF3F (T)	BD 4 A
SPF3F (T)	BE 1 A
SPF3F (T)	EC 2 E
SPF3F (T)	FB 0 A
SPF3F (T)	GA 1 A
SPF3F (T)	GH 0 A
SPF3F (T)	HA 1 A
SPF3F (T)	IA 3 A
SPF3F (T)	ID 3 A
SPF3F (T)	KB 3 A
SPF3F31 (T)	BA 2 A
SPF3F31 (T)	BD 1 B
SPF3F31 (T)	BE 2 A
SPF3F31 (T)	EA 2 A
SPF3F31 (T)	ED 2 A
SPF3F31 (T)	GH 1 A
SPF3F31 (T)	GP 0 A
SPF3F31 (T)	HD 0 A
SPF3F43 ( )	HC 0 B
SPF3F44 ( )	GH 0 B
SPF3F53 ( )	HC 3 B
SPF3F57 ( )	NC 1 B
SPF3F71 (T)	KC 4 B
SPF3F85 ( )	JA 1 B
SPF3F96 (T)	FD 0 B

SPLICE	PAGE
SPF3F100 (T)	NF 1 C
SPF3F110 (T)	GL 0 B
SPF4A (T)	GA 3 A
SPF4C (T)	GD 2 B
SPF4C (T)	GE 2 C
SPF4C3 ( )	GG 3 C
SPF4C5 (T)	GD 3 B
SPF4C8 (S)	GI 2 D
SPF4C10 (S)	GD 3 B
SPF4D (T)	GD 4 B
SPF4D (T)	GE 4 C
SPF4D3 ( )	GG 2 C
SPF4D5 (T)	GD 4 B
SPF4D8 (S)	GI 2 D
SPF4D10 (S)	GD 3 B
SPF5D (T)	GA 3 D
SPF5D1 (S)	GF 1 B
SPF5E (T)	GA 3 D
SPF5E1 (S)	GF 0 B
SPF6A ( )	HD 3 E
SPF6A2 ( )	GH 0 C
SPF6A9 (T)	GH 0 A
SPF6A11 ( )	GH 1 B
SPF6A12 (S)	GR 3 C
SPF6B (T)	GH 4 C
SPF6E ( )	GH 0 D
SPF7D (T)	AC 1 C
SPF8A (T)	FB 2 B
SPF8A6 (S)	FB 0 C
SPF8M (T)	FB 2 B
SPF9B3 ( )	KC 3 B
SPF9E ( )	KB 4 D
SPF9G ( )	KB 3 D
SPF12A (S)	IE 1 B
SPF13A1 (T)	ED 3 B
SPF14B ( )	HD 2 C
SPF15B1 (T)	IC 1 C
SPF15B2 (S)	BF 3 B
SPF17A1 (T)	BA 3 B
SPF17A7 (T)	BA 1 B
SPF17A14 (S)	BC 3 B
SPF17C (T)	BA 1 C
SPF17D (T)	BA 1 C
SPF17E (T)	BA 1 C
SPF17M (T)	BC 2 C
SPF23A (S)	IA 2 B
SPF23B (S)	IA 3 C
SPF23C (S)	IA 3 D
SPF24A3 (T)	GL 0 B
SPF24D (T)	GL 0 C

https://truckmanualshub.com/

SPLICES

SPLICE	PAGE
SPF25A (T)	HA 0 C
SPF26B (T)	GR 1 B
SPF26B1 (T)	GR 2 B
SPF26B3 (S)	GR 2 C
SPF26B4 (S)	GR 1 B
SPF26B7 ( )	HE 4 A
SPF27A (T)	NB 2 B
SPF27A1 (T)	NB 3 B
SPF27B ( )	GI 1 C
SPF28A ( )	HC 3 C
SPF28A1 ( )	HC 1 B
SPF28A3 ( )	NF 3 A
SPF28B1 ( )	HC 0 D
SPF28B3 (S)	HC 1 D
SPF28B3 (S)	HG 1 D
SPF31A (T)	DD 3 B
SPF33B ( )	GG 1 C
SPF35B (T)	GA 4 D
SPF35B2 (T)	GA 3 D
SPF35B3A (T)	GA 3 D
SPF35B4 (S)	HE 4 D
SPF35B4A (T)	GA 3 D
SPF35B7 (S)	BN 2 C
SPF35B8 ( )	GG 4 C
SPF36C (T)	GQ 1 C
SPF37B ( )	GG 0 C
SPF38A (S)	CF 3 B
SPF38A1 (S)	CA 1 B
SPF38A2 (S)	CA 1 C
SPF39B ( )	GG 2 C
SPF39B1 ( )	GG 3 B
SPF41A1 ( )	CJ 3 B
SPF41A3 (S)	HB 2 A
SPF42A (S)	BE 3 B
SPF42B (S)	BE 3 B
SPF42B2 (S)	GF 1 B
SPF42B3 (S)	GF 3 B
SPF43A (S)	CA 2 B
SPF43A2 (S)	CK 2 D
SPF45A (S)	GG 1 D
SPF45A1 ( )	GG 1 B
SPF46A1 ( )	CJ 0 B
SPF46B1 ( )	BP 2 B
SPF48A ( )	HE 1 B
SPF48A1 ( )	HE 2 A
SPF50B1 ( )	BP 2 C
SPF52A5 ( )	BG 2 B
SPF54 (S)	GI 1 C
SPF55B (T)	EC 4 B
SPF57A (S)	KC 2 B

SPLICE	PAGE
SPF63A (T)	BE 0 B
SPF65A (T)	NA 2 D
SPF65A1 (T)	KC 3 B
SPF65A4 (S)	JB 1 B
SPF65A9 (T)	FD 1 B
SPF65B1 ( )	FD 1 D
SPF65B7 (T)	KC 4 C
SPF67A3 (S)	JB 1 C
SPF76A (T)	DA 0 B
SPF76A1 ( )	CJ 3 B
SPF76B (T)	DA 2 C
SPF79A (T)	DA 2 D
SPF80A (S)	DA 2 D
SPF80A3 (S)	DA 3 A
SPF82A1 (S)	AI 0 C
SPF83B ( )	CK 1 D
SPF85B1 (S)	CL 3 C
SPFB05A1 (S)	CE 3 D
SPFB05A2 (S)	CK 3 D
SPFB07A1 (S)	CD 0 C
SPFB09 ( )	CM 1 D
SPFB09A3 ( )	CM 2 C
SPFU1A1 (S)	DB 0 C
SPFU1A2 (S)	DB 0 D
SPG01A4 (S)	AI 1 E
SPGAD (T)	HA 0 C
SPHA12 (T)	BF 2 E
SPHA12A15 (S)	BF 1 E
SPHA12G (S)	BF 1 E
SPHA12H (S)	BF 1 D
SPHB29 (T)	BF 2 B
SPHB30 (T)	BF 2 B
SPHC11A2 (S)	BG 3 E
SPHC19 (T)	BG 2 D
SPHC20 (T)	BG 2 C
SPJ1939HB30 (S)	XA 2 C
SPJ1939LB30 (S)	XA 2 C
SPLRNA ( )	KB 3 C
SPLRPA ( )	KB 3 C
SPMB2A1 ( )	BY 2 B
SPN109 (T)	DD 0 C
SPN110 (T)	DD 0 C
SPN112 (T)	DC 3 C
SPN124CM (T)	DD 2 C
SPN131 (S)	DC 1 D
SPN145NO (T)	DD 3 C
SPN158 (S)	DC 2 D
SPN158A (T)	DC 2 C
SPNA19A1 (S)	DA 4 B
SPNAA1 (S)	DA 3 C

SPLICE	PAGE
SPOPTSW ( )	NF 2 A
SPRA7A1 (S)	EC 1 E
SPRA30A1 (S)	EC 1 D
SPRDA (S)	AA 0 B
SPRDA1 (S)	AA 0 B
SPRRNA ( )	KB 3 C
SPRRPA ( )	KB 3 C
SPX1C1B61 (T)	GL 0 D
SPX1C1B62 (T)	GL 0 C
SPX01D1 ( )	AF 1 C
SPX01F1 (S)	AG 0 C
SPX02CA3 (S)	CK 4 D
SPX02CA3 (S)	CL 3 C
SPX02CA15 (S)	CL 1 D
SPX109L1 ( )	AC 3 B
SPX109L2 ( )	AD 1 B
SPXC1A1 (T)	AD 2 C
SPXC1A2 (T)	AD 3 C
SPXC1A2 (T)	GA 4 E
SPXC1A2 (T)	GD 2 D
SPXC1A2 (T)	GE 2 D
SPXC1A2 (T)	GH 4 C
SPXC1A2 (T)	GM 1 E
SPXC1A2 (T)	GQ 0 E
SPXC1A2 (T)	GR 1 D
SPXC1A2 (T)	IC 0 E
SPXC1A2 (T)	KC 3 E
SPXC1A2 (T)	NC 2 B
SPXC1A3 (T)	AA 1 C
SPXC1A3 (T)	AD 3 B
SPXC1A3 (T)	BJ 0 B
SPXC1A3 (T)	BM 2 B
SPXC1A3 (T)	BY 0 B
SPXC1A3 (T)	GA 2 A
SPXC1A3 (T)	GP 0 E
SPXC1A3 (T)	KC 1 D
SPXC1A3 (T)	NB 1 D
SPXC1A4 (T)	AA 4 D
SPXC1A4 (T)	AD 3 C
SPXC1A4 (T)	EC 4 D
SPXC1A4 (T)	GA 1 C
SPXC1A4 (T)	GD 4 D
SPXC1A4 (T)	GE 4 D
SPXC1A4 (T)	GH 3 C
SPXC1A4 (T)	IC 1 E
SPXC1A4 (T)	KC 0 D
SPXC1A4 (T)	NA 2 C
SPXC1A5 (T)	EC 4 C
SPXC1A7 (T)	GA 3 E
SPXC1A8A (T)	GA 3 E

SPLICE	PAGE
SPXC1A9 (S)	HE 4 E
SPXC1A9A (T)	GA 3 E
SPXC1A10 (T)	CM 2 C
SPXC1A10 (T)	GA 0 E
SPXC1A10 (T)	GM 1 D
SPXC1A13 (S)	HE 1 E
SPXC1A14 (S)	GR 0 D
SPXC1A16 (S)	GR 3 D
SPXC1A18 (S)	GR 1 D
SPXC1A29 (S)	KC 2 D
SPXC1A35 ( )	BY 0 B
SPXC1A36 (S)	AD 1 D
SPXC1A38 (S)	IE 0 D
SPXC1A40 ( )	IA 0 B
SPXC1A45 ( )	KC 3 D
SPXC1A52 ( )	ID 2 D
SPXC1A53 (S)	IA 4 B
SPXC1A65 (T)	GD 4 D
SPXC1A66 (T)	GD 3 D
SPXC1A68 ( )	GH 1 D
SPXC1A72 ( )	HC 0 C
SPXC1A82 ( )	HC 4 D
SPXC1A88 ( )	NC 2 B
SPXC1A97 (T)	FD 0 C
SPXC1A102 ( )	JA 1 D
SPXC1A116 (T)	KC 4 B
SPXC1A119 (T)	KC 3 E
SPXC1B1 (T)	AD 2 C
SPXC1B1 (T)	BA 4 E
SPXC1B1 (T)	BD 3 C
SPXC1B1 (T)	BE 0 E
SPXC1B1 (T)	CB 2 D
SPXC1B1 (T)	DA 0 E
SPXC1B1 (T)	DD 0 B
SPXC1B1 (T)	DE 1 B
SPXC1B1 (T)	EA 0 A
SPXC1B1 (T)	EC 3 E
SPXC1B1 (T)	ED 0 C
SPXC1B1 (T)	FD 2 B
SPXC1B1 (T)	GL 0 D
SPXC1B1 (T)	JC 1 C
SPXC1B1 (T)	KB 2 B
SPXC1B1 (T)	NA 2 C
SPXC1B1 (T)	NB 2 D
SPXC1B1 (T)	XA 2 D
SPXC1B1 (T)	XC 2 D
SPXC1B1A (T)	XA 2 D
SPXC1B1D (T)	EC 3 E
SPXC1B7B (T)	ED 2 A
SPXC1B7W (T)	EA 0 A

SPLICE	PAGE
SPXC1B18 (T)	FD 2 B
SPXC1B30 ( )	FD 1 E
SPXC1B46 (S)	DA 4 D
SPXC1B48 (T)	DA 0 D
SPXC1C1 (T)	AD 2 C
SPXC1C1 (T)	HA 3 C
SPXC1C1 (T)	HC 3 E
SPXC1C1 (T)	HG 0 D
SPXC1C1 (T)	NA 3 C
SPXC1C4 ( )	HC 0 D
SPXC1C5 ( )	HC 3 D
SPXC1C6 (S)	HC 1 E
SPXC1C6 (S)	HG 1 D
SPXC1C11 (T)	AD 2 D
SPXC1C12 (T)	AD 3 C
SPXC1C12 (T)	HD 1 E
SPXC1C12 (T)	HE 2 C
SPXC1C13 ( )	AD 3 D
SPXC1C13 ( )	HE 0 D
SPXC1C13 ( )	KB 2 D
SPXC1C14 (S)	AD 1 C
SPXC1C14 (S)	AF 1 C
SPXC1C16 ( )	HD 3 D
SPXC1C23 ( )	HE 0 D
SPXC1E (T)	GL 0 C
SPXC1E1 (T)	AD 3 B
SPXC1E1 (T)	BA 3 C
SPXC1E1 (T)	BD 1 C
SPXC1E1 (T)	BE 2 B
SPXC1E1 (T)	CM 1 C
SPXC1E1 (T)	GJ 2 D
SPXC1E1 (T)	HD 0 C
SPXC1E1 (T)	NA 1 C
SPXC1E1A (T)	EA 1 B
SPXC1E2 (T)	AD 4 B
SPXC1E2 (T)	BG 0 C
SPXC1E2 (T)	EA 2 B
SPXC1E2 (T)	ED 2 B
SPXC1E2 (T)	FB 3 D
SPXC1E2 (T)	GJ 2 C
SPXC1E2 (T)	NA 1 D
SPXC1F1 (S)	AD 1 D
SPXC1F1 (S)	HB 3 D
SPXC1F2 (S)	AD 1 E
SPXC1F2 (S)	BG 1 E
SPXC1F2 (S)	GK 1 A
SPXC1F2 (S)	GP 0 E
SPXC1F2 (S)	GQ 1 E
SPXC1F6 (S)	BG 3 D
SPXC1F7 (S)	AD 1 E

https://truckmanualshub.com/

SPLICES

SPLICE	PAGE
SPXC1F7 (S)	BG 4 E
SPXC1F7 (S)	ED 4 D
SPXC1F7 (S)	GF 1 D
SPXC1F10 (S)	AD 1 D
SPXC1F10 (S)	FA 2 E
SPXC1F10 (S)	FB 1 E
SPXC1F10 (S)	GF 1 E
SPXC1F11 (S)	GF 1 D

SPLICE	PAGE
SPXC1F12 (S)	GF 3 B
SPXC1F16 (S)	FB 1 E
SPXC1F22 ( )	FA 3 D
SPXC1F23 ( )	FA 1 D
SPXC1G4A (S)	CE 4 D
SPXC1G7 (S)	GA 1 E
SPXC1G8 (S)	GD 0 D
SPXC1G8 (S)	GE 0 D

SPLICE	PAGE
SPXC1G14 (S)	GI 2 D
SPXC1G16 (S)	GD 1 D
SPXC1G16 (S)	GE 2 D
SPXC1G40 (S)	AC 2 E
SPXC1G40 (S)	AD 1 D
SPXC1G40 (S)	BF 4 A
SPXC1G40 (S)	CA 3 C
SPXC1G40 (S)	GA 1 E

SPLICE	PAGE
SPXC1G40 (S)	GD 0 E
SPXC1G40 (S)	GE 0 E
SPXC1G40 (S)	GJ 2 D
SPXC1G40 (S)	GR 2 C
SPXC1G40 (S)	JA 2 B
SPXC1G40 (S)	JB 0 D
SPXC1G41 (S)	BF 3 B
SPXC1N1 ( )	GG 3 D

SPLICE	PAGE
SPXC1N3 ( )	BP 1 D
SPXCIE23 (T)	GA 1 C
SPXF1A1 (S)	AD 1 C
SPXF1A1 (S)	CD 4 D
SPXF1A3 (S)	CF 4 C
SPXG9A1 ( )	CJ 3 B
SPXM1 ( )	AD 0 B
SSP28A1 ( )	HG 1 B

https://truckmanualshub.com/

SHELLS

REF	PAGE
A03	BE 0 C
A03	BF 0 B
A03	BG 1 C
A04A	HE 2 B
A06R1_65	DD 3 B
A06R2_65	DD 3 B
A06R4_65	DD 4 B
A06R5_65	DD 2 B
A12	ED 0 B
A12A	EA 0 C
A13B	DA 3 B
A13F	DA 2 D
A14C	CE 0 D
A14C	CF 0 E
A14D	CK 0 D
A14D	CL 0 E
A16	EC 0 C
A17	AC 2 A
A17	BA 1 C
A17	BB 0 B
A17	BC 2 D
A17	BD 2 D
A17	GD 1 A
A17	GE 2 A
A17	GH 2 B
A19D_MATE	DD 0 E
A20	HC 0 C
A20	HG 0 C
A34	HA 0 B
A35	IE 1 C
A36	BY 0 C
A51	JA 3 D
A56	KB 3 D
A57	DC 0 A
A57	DD 0 D
A58	DC 0 D
A78	DB 0 C
A83	GD 1 B
A83	GE 2 B
A87	BI 0 C
A89	HB 2 C
A90	HE 0 B
A102A	BM 2 C
A102B	BM 0 D
A104	GA 3 A
A104A	GA 2 A
A106	HD 1 C
A107B	DB 1 D
A108	DC 3 D
A109	DA 0 C

REF	PAGE
A124	AC 3 A
A124	AD 0 A
A124A	AC 2 C
A124A	AD 1 A
A137C	CD 0 C
A138	CD 1 E
A138A	CE 1 C
A141	BF 4 C
A147	BP 1 D
A149	KC 2 C
A158	KB 0 C
A176	JC 2 B
B06AP	BF 3 D
B06T1	BF 2 D
B06T2	BF 2 D
B07	BF 0 D
B09A	BF 1 D
B13	EA 0 B
B13	ED 0 C
B14	EA 1 B
B14	ED 1 D
B15	EA 0 D
B15	ED 0 A
B16	EA 0 D
B16	ED 1 B
B17	EA 2 D
B17	ED 2 D
B18	EA 2 D
B18	ED 3 D
B22C	CE 3 D
B22C	CK 3 D
B23	BF 0 D
B23.1	BF 0 D
B25A	BB 3 C
B30A	EC 2 D
B49	ED 0 E
B50	ED 0 E
B55A	EC 0 D
B55B	EC 0 D
B58A	EC 1 D
B58R	BF 2 D
B58R_ESP	ED 1 E
B59	BF 3 D
B60L	KB 0 D
B60LF	KB 3 C
B60R	KB 0 D
B60RF	KB 3 C
B60SLR	KB 4 D
B60SRR	KB 3 D
B60SW	KB 3 E

REF	PAGE
B68	BB 1 C
B68	CE 2 C
B68	CJ 1 B
B68	CK 2 C
B68_B	BB 0 C
B78	JA 2 D
B80	KB 2 D
B82	JB 0 D
B82A	JB 2 D
B96	CD 2 B
B96B	CD 2 B
B105	DC 3 D
B121	BG 1 D
B122	BF 0 A
B122A	CJ 2 D
B122B	CJ 2 B
B123	CA 2 E
B123	CE 1 C
B123	CJ 2 D
B123	CK 0 C
B123.1	CA 3 E
B124.3RD	BF 4 D
B124FR	BF 1 D
B124RR	BF 1 D
B133	BG 1 B
B133S	BG 2 B
B142C	CD 1 B
B142C	CF 3 B
B142C	CL 3 A
B152	ED 2 E
B153	ED 2 D
B156	BD 2 B
B156A	HA 3 A
B157	HB 2 D
B158	HB 1 D
B160	BI 0 C
B185A	CJ 1 D
B300B	CM 1 D
B310	CD 3 B
B319	CM 0 C
CB2	AA 1 A
CB2	GA 1 A
CB3	AA 1 A
CB3	GA 0 A
CB4	AA 1 A
CB4	GA 2 A
CB4	IE 2 A
CB12	AA 0 A
CB12	ID 0 A
CB12	IE 1 A

REF	PAGE
CB14	AA 4 A
CB14	GD 0 A
CB14	GE 0 A
CB21	AA 0 E
CB21	GP 0 A
CB22	AA 0 E
CB22	IA 2 A
CB23	AA 0 E
CB23	IA 2 A
CB23	ID 3 A
CB81	AA 4 B
CB81	GD 1 A
CB81	GE 1 A
CB_HD_LIFT_GATE	ND 0 B
CLU_JMP	IE 3 C
E05A	GR 0 C
E05B	GR 0 C
E06	GF 3 B
E07L	GA 1 D
E07R	GA 1 D
E11L	GD 1 E
E11R	GD 1 D
E12D	GA 3 D
E12DH	HE 4 D
E12DHL	HE 3 E
E12P	GA 3 D
E12PH	HE 4 D
E12PHL	HE 4 E
E13LS	GD 2 C
E13LS	GE 2 C
E13LSB	GD 3 D
E13LSB	GK 3 D
E13LSC	GD 3 C
E13RS	GD 4 C
E13RS	GE 4 D
E13RSB	GD 4 D
E13RSB	GK 3 C
E13RSC	GD 4 C
E14L	GD 2 D
E14L	GE 3 D
E14R	GD 3 D
E14R	GE 3 D
E17AD	GH 0 C
E17AP	GH 0 C
E17D	GH 2 C
E17L	GR 3 C
E17P	GH 3 C
E17R	GR 3 C
E18A	GR 3 C
E18LB	HE 4 B

REF	PAGE
E18LC	HE 3 B
E18LR	HE 0 A
E18N	HE 1 C
E18R	HE 4 B
E18RR	HE 0 A
E19C	GA 0 D
E19C	GM 1 D
E19CH	HE 2 D
E19CHL	HE 1 D
E19D	GA 0 D
E19D	GM 0 D
E19DH	HE 2 D
E19DHL	HE 0 D
E19P	GA 1 D
E19P	GM 1 D
E19PH	HE 3 D
E19PHL	HE 1 D
E23L	HE 3 B
E23LA	GR 4 C
E23R	HE 3 B
E23RA	GR 4 C
E27L	GF 0 D
E27LA	GF 2 C
E27R	GF 1 C
E27RA	GF 2 C
E30L	GD 0 D
E30R	GD 1 D
E31L	GD 0 D
E31R	GD 1 D
E32	HD 1 D
E32L	GE 0 D
E32R	GE 1 D
E35	HA 0 D
E38_08	BD 0 B
E38_09	BJ 3 B
E38_09A	BK 2 B
E38_11	CE 0 B
E38_11	CK 0 B
E39	GF 2 D
E53	KC 4 D
E53L	KC 3 D
E53R	KC 4 D
E58	GR 1 C
E58	HE 4 A
E58A	GR 2 C
E58B	GR 1 C
E58BL	GR 0 C
E58BR	GR 1 C
E58L	GR 2 C
E58R	GR 2 C

https://truckmanualshub.com/

SHELLS

REF	PAGE
E58R.A	GR 2 D
E60D	GH 3 B
E60P	GH 3 B
E61	HD 3 C
E65L	GL 0 C
E65R	GL 0 C
E80L	BP 2 B
E95L1	GK 0 A
E95L2	GK 0 B
E95L3	GK 0 B
E95L4	GK 0 B
E95L5	GK 0 C
E95L6	GK 0 C
E95R1	GK 1 A
E95R2	GK 1 B
E95R3	GK 1 B
E95R4	GK 1 C
E95R5	GK 1 C
E95R6	GK 1 C
E96L	GK 2 C
E96R	GK 3 B
E96R2	GK 4 B
E96R3	GK 4 B
E96R4	GK 4 B
E97L1	GK 2 B
E97L2	GK 2 B
E97L3	GK 2 B
E97L4	GK 2 C
E97R1	GK 4 A
EL1	GQ 4 B
EM01	CF 2 D
EM02	CF 3 C
EM03	CF 4 D
EM04	CF 4 B
F5	AA 1 A
F5	GA 3 A
F6	AA 2 A
F6	GH 0 A
F7	AA 0 A
F7	AC 0 A
F8	AA 0 E
F8	FB 1 A
F9	AA 3 A
F10	AA 2 B
F10	KB 1 A
F10	XA 3 A
F10	XC 3 A
F11	AA 2 A
F11	BI 0 A
F11	BM 1 A

REF	PAGE
F11	NB 2 A
F13	AA 1 B
F13	EA 2 A
F13	ED 3 A
F15	AA 0 B
F15	BF 2 A
F16	AA 0 D
F16	BA 0 A
F17	AA 1 D
F17	BA 1 A
F17	BB 0 A
F17	BC 3 A
F17	BD 0 A
F18	AA 2 D
F18	CB 2 A
F19	AA 0 A
F19	BE 0 A
F19	BG 0 A
F20	AA 1 B
F20	IC 0 A
F24	AA 1 E
F24	GL 0 A
F24	NA 2 A
F24	NC 3 A
F25	AA 3 C
F25	HA 0 A
F26	AA 2 A
F26	GA 1 A
F27	AA 1 E
F27	BM 1 A
F27	NB 2 A
F28	AA 1 E
F28	HC 3 A
F28	NA 3 A
F29	AA 1 B
F30	AA 1 E
F30	NA 1 A
F31	AA 1 D
F31	DB 2 A
F31	DD 3 A
F31	DE 2 A
F31	NA 3 A
F32	AB 4 C
F32	GJ 3 A
F33	AB 3 A
F33	GG 1 A
F34	AB 1 A
F34	GG 2 A
F35	AB 2 A
F35	GA 4 A

REF	PAGE
F36	AB 1 A
F36	GQ 1 A
F37	AB 2 A
F37	GG 0 A
F38	AB 3 D
F38	CA 1 A
F39	AB 2 D
F39	GG 3 A
F40	AB 1 D
F40	FA 3 A
F41	AB 2 E
F41	CA 1 A
F41	CF 3 A
F41	CJ 3 A
F42	AB 1 D
F42	BE 3 A
F43	AB 2 E
F43	CA 2 A
F43	CE 2 B
F43	CK 2 B
F44	AB 1 D
F44	FA 2 A
F45	AB 0 D
F45	GG 1 A
F46	AB 3 D
F46	CD 0 A
F46	CJ 0 A
F47	AB 3 D
F48	AB 0 A
F48	BK 0 A
F48	HE 0 A
F49	AB 2 D
F49	EA 3 A
F49	ED 3 A
F50	AB 3 A
F51	AB 4 A
F52	AB 4 C
F52	BG 2 A
F53	AA 1 D
F53	JC 0 B
F54	AA 0 D
F54	BJ 0 A
F54	BY 0 A
F55	AA 2 B
F55	EC 4 A
F56	AA 2 D
F56	JC 0 A
F57	AA 3 A
F57	KC 2 A
F58	AA 2 D

REF	PAGE
F60	AA 3 A
F61	AA 2 A
F61	NA 0 A
F62	AA 3 A
F62	GJ 0 A
F62	NA 2 A
F63	AA 0 D
F63	BE 0 A
F64	AA 1 D
F64	BJ 3 A
F64	BK 2 A
F64	NA 4 A
F64	NC 1 A
F65	AA 1 D
F65	FD 2 A
F65	JB 1 A
F65	NA 2 A
F65	NC 2 A
F67	AA 0 A
F67	HD 3 A
F67	KC 0 A
F67	NA 2 A
F67	NC 0 A
F68	AA 2 B
F68	KC 0 A
F69	AA 2 D
F69	IE 2 A
F70	AA 3 C
F70	HA 1 A
F71	AA 1 B
F71	DB 3 A
F71	DD 0 A
F71	NA 3 A
F72	AA 3 D
F74	GA 1 A
F75	AA 0 B
F75	BK 0 A
F75	HD 1 A
F76	AA 3 A
F76	CE 2 A
F76	CJ 3 A
F76	DA 0 A
F79	DA 2 C
F80	DA 2 C
F82	AI 1 D
F83	AH 2 B
F83	CE 1 B
F84	AH 1 B
F84	CF 2 A
F84	CL 2 A

REF	PAGE
F85	AH 1 B
F85	CL 3 A
F86	AH 2 B
F87	AH 3 B
F87	BP 2 B
F88	AH 4 C
F89	AH 4 C
F90	NE 0 B
F91	NE 0 B
F92	NE 1 B
F93	NE 1 B
F94	NE 1 B
F95	NE 2 B
F96	NE 2 B
F97	AI 1 D
FB05	CE 4 A
FB05	CK 4 A
FB07	CD 0 B
FB8	AC 4 C
FB08	CD 0 A
FB09	CM 1 C
FGPS1_MATE	BM 0 B
FGPS2_MATE	BM 0 B
FGPS3	BM 2 B
FGPS4	BM 2 C
FM1	AD 0 B
FM02	AF 1 C
FM3	AC 3 D
FM03	CF 1 A
FM03	CL 1 A
FM3_A4	HF 1 B
FM04	AD 1 C
FSP1	NF 0 B
FSP2	NF 0 B
FSP3	NF 1 B
FSP4	NF 2 B
FSP5	NF 2 B
FSP6	NF 3 B
FSP7	NF 3 B
FT02	DB 0 C
G02	AF 2 A
G02	AG 3 C
G02A	AC 4 B
G03	HF 0 B
G03.D	HF 0 C
G04	HF 2 B
H02A	GQ 1 D
H02B	GQ 2 D
H02C	GQ 2 D
H03	GF 1 C

https://truckmanualshub.com/

SHELLS

REF	PAGE
H16	CM 2 B
H17	CM 3 B
IEH	CE 0 A
JB1	AG 3 C
JB1	AI 2 B
M01	GP 1 C
M02	GP 0 C
M03	HC 3 D
M03	HG 3 D
M04_1	AF 0 A
M04_1	AG 3 B
M04_1	AI 2 B
M06	ID 3 D
M06DS	IA 1 D
M06PS	IA 3 D
M41	CK 2 C
M59	HD 3 E
M80	ID 1 B
M80L	IE 1 C
M80R	IE 3 B
M110CFL	BF 3 B
M110CFR	BF 3 B
M110CL	IC 3 D
M110CR	IC 4 D
M110L	IC 0 D
M110R	IC 1 D
OBD	XA 2 D
R01	AD 0 A
R01C	CF 0 B
R01C	CL 0 B
R02	CC 0 B
R03	CC 0 D
R03A	CC 1 C
R04	KC 0 B
R05	FA 1 D
R08	CF 2 B
R08	CL 2 B
R08_BBM	XA 3 B
R08_BENDIX	XA 0 B
R08_MATE	XA 3 A
R08_PNP	BZ 1 D
R08_TGW	XA 2 B
R08A	XA 1 D
R08M	XB 1 C
R09	FA 0 D
R14	CE 0 C
R14	CK 0 C
R19	FA 3 C
R21	XA 1 C
R21	XB 3 C

REF	PAGE
R21_TGW	BM 1 C
R25	HC 2 C
R26	HC 3 C
R27	KB 4 D
R28	HC 1 D
R28	HG 2 D
R29	HC 1 D
R29	HG 1 D
R29_A	CD 4 E
R29_A	CF 1 D
R29_A	CL 1 C
R30	HC 2 C
R30	HG 2 D
R30_A	CF 2 D
R30_A	CL 2 C
R31_A	CF 1 C
R31_A	CL 1 C
R32	CD 3 D
R32_A	CD 3 D
R33	KB 1 B
R34	XC 2 B
R35	XC 0 B
RLY01	AA 1 B
RLY02	AB 2 C
RLY03	AA 1 D
RLY04	AB 0 C
RLY06	GA 3 B
RLY08	GA 1 D
RLY10	GA 2 D
RLY11	AB 1 B
RLY11	GG 0 B
RLY12	AB 3 B
RLY12	GG 1 B
RLY13	AB 2 B
RLY13	GA 4 D
RLY14	AB 1 B
RLY14	GQ 1 B
RLY16	GP 1 B
RLY17	AB 0 B
RLY17	GG 3 B
RLY20	DB 2 B
RLY26	AA 3 D
RLY26	HA 1 A
RLY28	AA 3 B
RLY29	AB 1 B
RLY29	GG 2 B
RLY31	AA 3 B
RLY33	BF 1 A
RLY34	AA 1 B
RLY35	AA 3 D

REF	PAGE
RLY35	HA 0 A
RLY36	AC 2 C
RLY38	AB 4 B
RLY39	AB 3 B
RLY42A	CF 0 B
RLY42A	CL 0 A
RLY43L_MATE	GI 1 C
RLY43R_MATE	GI 0 C
RLY44_MATE	GI 2 C
RLY46_MATE	GI 3 C
RLY47	DE 3 C
RLY48	DE 0 C
RLY52	GA 1 A
RLY53	AA 0 C
RLY53	BK 0 B
RLY53	HD 1 B
RLY54	DD 2 B
RLY56	GJ 0 C
RLY57	BE 3 D
RLY57	EC 3 B
RLY58	GJ 2 C
RLY60_MATE	HB 3 A
RLY70	NE 3 A
RLY70	NF 4 A
RLY73	DA 0 B
RLY80	AH 2 C
RLY80	CE 1 B
RLY81	AH 3 C
RLY81	BP 3 B
RLY81	CF 0 C
RLY81	CL 0 C
RLY82	AH 0 C
RLY82	CF 1 B
RLY82	CL 1 B
RLY83	AH 0 C
RLY83	CF 2 B
RLY83	CL 2 B
RLY84	AH 1 C
RLY84	CF 1 B
RLY84	CL 1 B
RLY85	AH 1 C
RLY85	CL 3 B
RLY86	AH 2 C
RLY86	BP 1 B
RLY87	AH 3 C
RLY87	BP 2 C
RLY88	CK 1 B
RLY89	CM 1 A
RLY97	GD 0 B
RLY97	GE 0 B

REF	PAGE
RLY98	GD 1 B
RLY98	GE 1 B
RLY99	CM 0 B
S01	GA 0 B
S006	BA 1 B
S07	BA 2 B
S007	BA 1 B
S008	BA 3 B
S08A	NE 2 D
S08B	NE 0 D
S08C	NE 3 D
S08D	NE 1 D
S08E	NE 2 D
S08F	NE 4 D
S009	GP 0 B
S011	BA 3 B
S12	GI 2 A
S013	BE 2 B
S014	HD 1 B
S016	ED 2 A
S016A	EA 2 B
S017C	GH 0 D
S017D	HE 0 B
S017E	HE 0 E
S017F	GH 2 D
S017G	GH 3 D
S018	BC 2 B
S018_1_MATE	BC 2 B
S019	FB 4 C
S020	FB 0 C
S021	BD 3 B
S022	FB 1 C
S023	FB 3 C
S023_1	FB 3 A
S024	BD 1 B
S24C	DD 1 B
S026A	NA 1 C
S026B	NC 3 C
S026C	NC 2 C
S026D	NC 1 C
S027A	NA 0 C
S027B	NC 0 C
S028	ID 1 C
S028L	IE 0 B
S028R	IE 3 B
S030	IC 0 B
S036	AC 0 B
S036	GQ 0 C
S036B	AC 1 B
S038	GA 3 B

REF	PAGE
S038C	BB 2 B
S038C2	BB 1 D
S039	GA 2 C
S41	AI 0 C
S041L	GH 4 A
S041R	GH 4 C
S041SB	HE 3 C
S041SL	HE 3 D
S041SR	HE 3 C
S042	BE 3 B
S43	BA 3 D
S043	BE 1 B
S43B	BK 2 B
S43C	BG 2 D
S044	BB 2 B
S045	BA 1 D
S047	BG 3 D
S047A	BG 3 E
S048	BG 3 C
S050	FB 1 B
S051	FB 2 B
S051A	FB 2 C
S052	BG 0 B
S055	HE 0 B
S056	BD 1 B
S057	GJ 0 D
S058	GJ 0 B
S58B	AC 2 A
S059	HC 0 B
S059	HG 0 B
S060	HC 4 C
S060	HG 4 C
S61	BE 1 D
S061	GJ 2 B
S067	GL 0 B
S068B	NF 0 C
S068C	NF 0 C
S068D	NF 1 C
S069B	NF 3 C
S069C	NF 2 C
S069D	NF 2 C
S99	JA 1 C
S101	DB 0 D
S106	ID 3 B
S106DS	IA 2 C
S106PS	IA 3 C
S107	IA 1 C
S110	HE 1 C
S111	HD 3 B
S111A	CB 2 C

https://truckmanualshub.com/

SHELLS

REF	PAGE
S130	EC 2 D
S133	EC 3 D
S137	BC 3 B
S137A	FD 1 B
S145	KC 4 B
S169	AC 3 C
S169	AG 3 D
S169A	AI 1 C
S171	DA 0 D
S212	ED 4 A
S311	EC 4 E
S320	FD 1 D
SBF1	HE 3 B
SBF2	HE 0 A
SBF3	HE 2 B
SBF4	HE 2 B
SBF6	HE 2 B
SBF7	HE 2 B
sym675_4748	BX 4 D
sym682_2029	AF 0 D
sym684	HD 2 D
TBAP	CE 1 A
V2_MATE	BE 0 B
V25	GH 2 B
V35	BA 2 D

REF	PAGE
V36	BA 2 D
X0A_MATE	AD 3 C
X0A_MATE	BA 1 D
X0A_MATE	BC 2 C
X0A_MATE	BD 3 C
X0A_MATE	BF 4 C
X0A_MATE	BI 0 C
X0A_MATE	BJ 3 B
X0A_MATE	FB 2 C
X0B_MATE	BE 2 C
X0C_MATE	BA 0 A
X0C_MATE	BD 2 A
X0C_MATE	BG 0 A
X0C_MATE	BI 1 A
X0C_MATE	CB 2 A
X0C_MATE	DB 1 A
X0C_MATE	DD 1 A
X0C_MATE	FB 2 A
X0C_MATE	GH 2 A
X0C_MATE	GI 2 A
X0C_MATE	GJ 1 A
X0C_MATE	NA 1 A
X0C_MATE	NC 1 A
X06D_MATE	BH 1 C
X07A	KC 0 B

REF	PAGE
X07B	KC 0 C
X07C	HE 2 C
X07D	HE 2 C
X07E	KC 0 C
X07TV	HE 2 C
X10	AA 0 B
X10	AC 4 D
X10	DB 0 B
X11	CA 0 C
X11A	CJ 0 C
X16	AB 3 C
X16	AC 4 C
X17A	HF 1 C
X17B	HF 3 D
X17C	HF 3 D
X17D	HF 1 C
X17E	HF 1 D
X21D	BY 1 A
X21E	BY 1 D
X34	KC 1 C
X34D1_MATE	KC 1 C
X34D2_MATE	KC 1 C
X34R	KC 3 C
X34R3	KC 3 C
X61	ND 0 B

REF	PAGE
X87	CL 4 D
X89	CF 0 D
X89	CL 0 C
X192	CL 2 D
X200	JC 4 C
XG9	AF 2 C
XG9	CJ 3 A
Y11	EA 0 B
Y11	ED 0 C
Y12	EA 1 B
Y12	ED 1 C
Y13	EA 1 D
Y13	ED 0 A
Y14	EA 1 E
Y14	ED 1 A
Y15	EA 3 D
Y15	ED 3 D
Y16	EA 2 D
Y16	ED 3 D
Y18	FD 1 D
Y18G	BC 3 D
Y18G	DA 4 D
Y18H	BC 4 D
Y18H	DA 3 D
Y25A	EC 1 B

REF	PAGE
Y29A	EC 2 B
Y35	CA 2 C
Y35	CE 0 B
Y35	CJ 3 D
Y35	CK 0 D
Y42	HA 3 C
Y51	FA 2 D
Y51_A	FA 1 C
Y52	FA 1 D
Y57	EA 1 D
Y57	ED 1 A
Y57_SA	ED 4 D
Y62	DC 1 C
Y80	CD 2 B
Y80A	CF 1 C
Y81	CD 2 D
Y81A	CF 1 C
Y81A	CL 1 C
Y86	FB 0 D
Y100	ED 2 D
Y106	ED 4 D
Y110	DA 4 B
Z01	XA 1 C
Z10	XC 2 C

https://truckmanualshub.com/

REFERENCES

REF	DESCRIPTION	PAGE
A03	INSTRUMENT CLUSTER	BE 0 C
A03	INSTRUMENT CLUSTER	BF 0 B
A03	INSTRUMENT CLUSTER	BG 1 C
A04A	REFRIGERATOR	HE 2 B
A06R1_65	El. adjustable seat (optional fan and hea	DD 3 B
A06R2_65	El. adjustable seat (optional fan and hea	DD 3 B
A06R4_65	El. adjustable seat (optional fan and hea	DD 4 B
A06R5_65	El. adjustable seat (optional fan and hea	DD 2 B
A12	Control unit, ABS (Anti-lock Brake System	ED 0 B
A12A	CONTROL UNIT, ABS (ANTI-LOCK BRAKE SYS.)	EA 0 C
A13B	TECU AMT-F	DA 3 B
A13F		DA 2 D
A14C	CUMMINS EMS, OBD2016	CE 0 D
A14C	CUMMINS EMS, OBD2016	CF 0 E
A14D	CUMMINS EMS, OBD2017	CK 0 D
A14D	CUMMINS EMS, OBD2017	CL 0 E
A16	CONTROL UNIT, ECS (ELECTRONIC CONTROLLED	EC 0 C
A17	CONTROL UNIT, VECU (VEHICLE ECU)	AC 2 A
A17	CONTROL UNIT, VECU (VEHICLE ECU)	BA 1 C
A17	CONTROL UNIT, VECU (VEHICLE ECU)	BB 0 B
A17	CONTROL UNIT, VECU (VEHICLE ECU)	BC 2 D
A17	CONTROL UNIT, VECU (VEHICLE ECU)	BD 2 D
A17	CONTROL UNIT, VECU (VEHICLE ECU)	GD 1 A
A17	CONTROL UNIT, VECU (VEHICLE ECU)	GE 2 A
A17	CONTROL UNIT, VECU (VEHICLE ECU)	GH 2 B
A17_A5		BB 1 D
A17_B19		BB 1 E
A19D_MATE	CONTROL UNIT GECU (GEAR SELECTOR ECU) ALL	DD 0 E
A20	Control Unit, Heated Windshield	HC 0 C
A20	Control Unit, Heated Windshield	HG 0 C
A34	CONTROL UNIT, CLIMATE	HA 0 B
A35	CONTROL UNIT, REMOTE RECEIVER DOOR LOCK	IE 1 C
A36	Control unit, BBM (Body Builder Module)	BY 0 C
A51	DISPLAY, SIDE OBJECT DETECTION	JA 3 D
A56	Stereo amplifier	KB 3 D
A57	CONTROL UNIT, ALLISON TRANSMISSION	DC 0 A
A57	CONTROL UNIT, ALLISON TRANSMISSION	DD 0 D
A58	TRANSMISSION ALLISON	DC 0 D
A78	Autoshift II shift module	DB 0 C
A83	CTRL UNIT, DRL (DAYTIME RUNNING LIGHTS)	GD 1 B
A83	CTRL UNIT, DRL (DAYTIME RUNNING LIGHTS)	GE 2 B
A87	DISPLAY, INSIDE/ OUTSIDE TEMP.	BI 0 C
A89	CTRL UNIT, APADS, CM 813	HB 2 C
A90	ALARM, CLOCK	HE 0 B
A102A	CONTROL UNIT GPS RECEIVER TELEMATICS GATE	BM 2 C
A102B	CONTROL UNIT GPS RECEIVER TELEMATICS GAT	BM 0 D
A104	CONTROL UNIT, FLASHER	GA 3 A
A104A	FLASHER KYSOR	GA 2 A
A106	CONTROL UNIT, SLEEPER HVAC	HD 1 C
A107B	CONTROL UNIT, TRANSMISSION, EATON GEN III	DB 1 D

REF	DESCRIPTION	PAGE
A108	CONTROL UNIT, ALLISON, RETARDER RELAY	DC 3 D
A109	CONTROL UNIT, GSECU (GEARSHIFT ECU)	DA 0 C
A124	COMPONENT GROUP, STARTER MOTOR, M04 & K65	AC 3 A
A124	COMPONENT GROUP, STARTER MOTOR, M04 & K65	AD 0 A
A124_B-1		AD 1 B
A124_B1		AC 3 A
A124A	MOTOR STARTER TC	AC 2 C
A124A	MOTOR STARTER TC	AD 1 A
A137C		CD 0 C
A138	PUMP UNIT, UREA	CD 1 E
A138A	PUMP UNIT ADBLUE	CE 1 C
A141	GAUGE, THIRD AXLE TEMP	BF 4 C
A147	Control Unit, Fuel Filter Module	BP 1 D
A149	CONSOLE CENTER	KC 2 C
A158	Control unit, Audio	KB 0 C
A176	Control unit, LPOS, Lane Position and Obj	JC 2 B
ABS_X1:1		EA 1 B
ABS_X1:3		EA 3 B
ABS_X1:4		EA 1 C
ABS_X1:5		EA 1 C
ABS_X1:6		EA 2 B
ABS_X1:7		EA 3 B
ABS_X1:8		EA 3 B
ABS_X1:10		EA 0 C
ABS_X1:11		EA 0 C
ABS_X1:12		EA 1 B
ABS_X1:13		EA 3 B
ABS_X1:14		EA 3 B
ABS_X1:16		EA 2 B
ABS_X1:17		EA 2 B
ABS_X2:1		EA 0 C
ABS_X2:2		EA 0 C
ABS_X2:3		EA 0 A
ABS_X2:4		EA 1 C
ABS_X2:5		EA 0 B
ABS_X2:6		EA 1 A
ABS_X2:7		EA 1 C
ABS_X2:8		EA 0 B
ABS_X2:9		EA 0 D
ABS_X2:10		EA 1 C
ABS_X2:11		EA 1 C
ABS_X2:12		EA 0 B
ABS_X2:13		EA 1 C
ABS_X2:14		EA 1 C
ABS_X2:15		EA 0 C
ABS_X2:16		EA 1 C
ABS_X2:17		EA 1 C
ABS_X2:18		EA 0 C
ABS_X3:4		EA 3 C
ABS_X3:6		EA 3 E

https://truckmanualshub.com/

REFERENCES

REF	DESCRIPTION	PAGE
ABS_X3:7		EA 3 C
ABS_X3:9		EA 2 E
ABS_X3:10		EA 3 C
ABS_X3:11		EA 2 C
ABS_X3:12		EA 2 C
ABS_X3:13		EA 2 C
ABS_X3:14		EA 2 C
ABS_X3:15		EA 2 C
ACC_SP1:A		AA 4 C
ACC_SP1:B		AA 4 C
AF_AFR:A		HC 4 C
AF_AFR:A		HG 3 C
AF_AFR:B		HC 3 C
AF_AFR:B		HG 3 C
AF_AFR:C		HC 3 C
AF_AFR:C		HG 3 C
AHMC2:A		KC 3 B
AHMC2:B		KC 3 E
AHMC:A		KC 3 B
AHMC:B		KC 3 E
AILH:A		GK 0 C
AILH:B		GK 1 A
AIRH:A		GK 1 C
AIRH:B		GK 1 B
ALIC:A		KC 4 D
ALIC:B		KC 4 E
ALIC:C		KC 4 C
ALIC:D		KC 4 D
ALLISON:1		DC 2 C
ALLISON:2		DC 2 D
ALLISON:3		DC 1 C
ALLISON:4		DC 2 C
ALLISON:5		DC 1 B
ALLISON:6		DC 1 C
ALLISON:7		DC 1 C
ALLISON:8		DC 1 C
ALLISON:9		DC 1 C
ALLISON:10		DC 0 C
ALLISON:11		DC 0 C
ALLISON:12		DC 1 C
ALLISON:13		DC 1 C
ALLISON:14		DC 2 C
ALLISON:15		DC 2 C
ALLISON:16		DC 2 C
ALLISON:17		DC 0 C
ALLISON:18		DC 0 C
ALLISON:19		DC 1 C
ALLISON:20		DC 1 C
ALLISON:21		DC 2 C
ALLISON:22		DC 2 C

REF	DESCRIPTION	PAGE
ALLISON:23		DC 2 C
ALLISON:24		DC 2 C
ALLISON:25		GG 2 A
ALLISON:26		GG 2 C
ALLISON:27		DC 0 C
ALLISON:30		DC 0 C
ALLISON:31		DC 0 C
ALLISON_RLY:A1		DD 4 B
ALLISON_RLY:A3		DD 4 C
ALLISON_RLY:A4		DD 3 B
ALLISON_RLY:A6		DD 3 C
ALLISON_RLY:A7		DD 3 B
ALLISON_RLY:A9		DD 3 B
ALLISON_RLY:B1		DD 4 B
ALLISON_RLY:B2		DD 4 C
ALLISON_RLY:B3		DD 4 C
ALLISON_RLY:B4		DD 3 B
ALLISON_RLY:B6		DD 3 C
ALLISON_RLY:B7		DD 3 B
ALLISON_RLY:B8		DD 3 C
ALLISON_RLY:B9		DD 3 B
ALLISON_RLY:C2		DD 2 C
ALLISON_RLY:C3		DD 2 B
ALLISON_RLY:C4		DD 2 B
ALLISON_RLY:C6		DD 2 B
ALLISON_RLY:D1		DD 2 C
ALLISON_RLY:D3		DD 2 B
ALLISON_RLY:D4		DD 2 B
ALLISON_RLY:D6		DD 2 B
AT_CAB_TRANS:A		DB 1 C
AT_CAB_TRANS:B		DB 2 D
AT_CAB_TRANS:C		DB 1 C
AT_CAB_TRANS:G		DB 3 D
AT_CAB_TRANS:J		DB 1 C
AT_CAB_TRANS:K		DB 1 C
AT_CAB_TRANS:N		DB 2 C
AT_CAB_TRANS:P		DB 1 C
AT_CAB_TRANS:R		DB 2 C
AT_CAB_TRANS:S		DB 1 C
AT_CAB_TRANS:T		DB 1 C
AT_CAB_TRANS:U		DB 1 C
AT_CAB_TRANS:V		DB 1 C
AT_NU_PTO:A		DB 2 E
AT_NU_PTO:B		DB 2 E
AT_RLY:A1		DB 2 B
AT_RLY:A3		DB 2 C
AT_RLY:B1		DB 2 B
AT_RLY:B3		DB 2 C
AUX_BATT:A		NA 0 D
AUX_IGN:A		NA 1 D

https://truckmanualshub.com/

REFERENCES

REF	DESCRIPTION	PAGE
AX_20828057_3311		DC 0 D
AZ_20828057_3311		DC 0 D
B06AP	SENSOR, AIR PRESSURE, BRAKE APP.	BF 3 D
B06T1	SENSOR AIR PRESSURE TANK 1	BF 2 D
B06T2	SENSOR, AIR PRESSURE TANK 2	BF 2 D
B07	SENSOR, FUEL LEVEL	BF 0 D
B09A	SENSOR, OIL TEMP GEARBOX	BF 1 D
B13	SENSOR, WHEEL SPEED LHS. 1, ST FRT AXLE	EA 0 B
B13	SENSOR, WHEEL SPEED LHS. 1, ST FRT AXLE	ED 0 C
B14	SENSOR, WHEEL SPEED RHS, 1:ST FRT AXLE	EA 1 B
B14	SENSOR, WHEEL SPEED RHS, 1:ST FRT AXLE	ED 1 D
B15	SENSOR, WHEEL SPD LHS. 1:ST,DRIVEN REAR	EA 0 D
B15	SENSOR, WHEEL SPD LHS. 1:ST,DRIVEN REAR	ED 0 A
B16	SENSOR, WHEEL SPD, RHS, 1:ST DRIVE REA	EA 0 D
B16	SENSOR, WHEEL SPD, RHS, 1:ST DRIVE REA	ED 1 B
B17	SENSOR, WHEEL SPD, LHS, 2:ND, DRIVE REAR	EA 2 D
B17	SENSOR, WHEEL SPD, LHS, 2:ND, DRIVE REAR	ED 2 D
B18	SENSOR, WHEEL SPD, RHS, 2:ND, DRIVE REAR	EA 2 D
B18	SENSOR, WHEEL SPD, RHS, 2:ND, DRIVE REAR	ED 3 D
B22C	SENSOR AMBIENT AIR TEMP	CE 3 D
B22C	SENSOR AMBIENT AIR TEMP	CK 3 D
B23	SENSOR AMBIENT AIR	BF 0 D
B23.1	SENSOR, AMBIENT AIR TEMP	BF 0 D
B25_3		BB 1 E
B25A	SENSOR ACCELERATOR PEDAL	BB 3 C
B30A	SENSOR CHASSIS LEVEL DRIVE AXLE	EC 2 D
B49	SENSOR, STEERING ANGLE	ED 0 E
B50	SENSOR, YAW-RATE	ED 0 E
B55A	SENSOR AIR PRESS SUSPENSION AUX. AXLE	EC 0 D
B55B	SENSOR, PRESSURE LIFT AXLE	EC 0 D
B58A	SENSOR AIR PRESS. SUSPENSION DRIVE AXLE	EC 1 D
B58R	SENSOR, AIR PRESSURE REAR SUSP.	BF 2 D
B58R_ESP	SENSOR, AIR PRESSURE, REAR SUSPENSION RHS	ED 1 E
B58R_EXT:A		BF 1 D
B58R_EXT:B		BF 2 D
B58R_EXT:C		BF 2 D
B58RE_EXT:A		ED 1 D
B58RE_EXT:B		ED 1 D
B58RE_EXT:C		ED 2 D
B59	SENSOR, INDOOR TEMP	BF 3 D
B60L	SPEAKER, LEFT FRT.	KB 0 D
B60LF	SPEAKER, LEFT FRT	KB 3 C
B60R	SPEAKER, RIGHT FRT.	KB 0 D
B60RF	SPEAKER, RIGHT FRT.	KB 3 C
B60SLR	Speaker Sleeper Left Rear	KB 4 D
B60SRR	Speaker Sleeper Right Rear	KB 3 D
B60SW	Speaker Subwoofer	KB 3 E
B68	SENSOR, OUTPUT SHAFT SPD, GEARBOX	BB 1 C
B68	SENSOR, OUTPUT SHAFT SPD, GEARBOX	CE 2 C
B68	SENSOR, OUTPUT SHAFT SPD, GEARBOX	CJ 1 B

REF	DESCRIPTION	PAGE
B68	SENSOR, OUTPUT SHAFT SPD, GEARBOX	CK 2 C
B68_B	Sensor, output shaft speed, gearbox	BB 0 C
B78	SENSOR, RIGHT SIDE OBJECT DETECTION	JA 2 D
B80	HANDSFREE, LOUDSPEAKER, MICROPHONE, MID	KB 2 D
B82	Sensor, ACC radar	JB 0 D
B82A	SENSOR, ACC RADAR FLR-20	JB 2 D
B96	Sensor, NOx	CD 2 B
B96B	Sensor, NOx	CD 2 B
B105	SENSOR RETARDER TEMP	DC 3 D
B121	SENSOR, LOW LEVEL WASHER FLUID	BG 1 D
B122	SENSOR, EXHAUST TEMP	BF 0 A
B122A	SENSOR EXHAUST TEMP. CATALYST	CJ 2 D
B122B	SENSOR CATALYST OUTLET TEMP. 2	CJ 2 B
B123	SENSOR, COOLANT LEVEL	CA 2 E
B123	SENSOR, COOLANT LEVEL	CE 1 C
B123	SENSOR, COOLANT LEVEL	CJ 2 D
B123	SENSOR, COOLANT LEVEL	CK 0 C
B123.1	SENSOR, COOLANT LEVEL	CA 3 E
B124.3RD	SENSOR, OIL TEMP REAR CENTER AXLE	BF 4 D
B124FR	SENSOR, OIL TEMP FRONT REAR AXLE	BF 1 D
B124RR	SENSOR, OIL TEMP REAR REAR AXLE	BF 1 D
B133	SENSOR, AIR FILTER RESTRICTION.	BG 1 B
B133S	SENSOR, AIR FILTER RESTRICTION, TD7	BG 2 B
B142C	Sensor, AdBlue level and temperature	CD 1 B
B142C	Sensor, AdBlue level and temperature	CF 3 B
B142C	Sensor, AdBlue level and temperature	CL 3 A
B152	SENSOR, BRAKE AIR PRESSURE, FRONT FOR ESP	ED 2 E
B153	SENSOR, BRAKE AIR PRESSURE, REAR FOR ESP	ED 2 D
B156	SENSOR, FREON HI PRESSURE - FAN	BD 2 B
B156A	SENSOR, FREON HI PRESSURE	HA 3 A
B157	SENSOR, FREON HI PRESSURE	HB 2 D
B158	SENSOR, FREON LOW PRESSURE	HB 1 D
B160	SENSOR, OUTSIDE TEMP.	BI 0 C
B185A	SENSOR OXYGEN OUTLET EGO	CJ 1 D
B211	SENSOR, ASSEMBLY, DPF TEMP, PRESSURE	CD 0 E
B300B	METHANE SENSOR ENGINE	CM 1 D
B310	Sensor, Particulate Matter	CD 3 B
B319	SENSOR ALARM CO	CM 0 C
BAT_SP2:A		NA 2 B
BAT_SP3:A		NC 0 B
BAT_SP3:A		NC 0 B
BAT_SP4:A		NA 2 B
BAT_SP4:A		NC 0 B
BAT_SP4:A		NC 3 B
BAT_SP4:B		NA 2 B
BB_CAB:1		BJ 2 A
BB_CAB:1		BK 1 C
BB_CAB:2		BJ 2 A
BB_CAB:2		BK 1 C
BB_CAB:3		BK 0 C

https://truckmanualshub.com/

REFERENCES

REF	DESCRIPTION	PAGE
BB_CAB:4		BK 0 C
BB_CAB:6		BK 2 C
BB_CAB:7		BK 2 C
BB_CAB:10		BK 3 C
BB_CAB:11		BK 3 C
BB_CAB:12		BK 2 C
BB_CAB:13		BK 2 C
BB_CAB:14		BK 1 C
BB_CAB:15		BK 1 C
BB_CAB:16		BK 1 C
BB_CAB:17		BK 2 C
BB_CAB:18		BK 3 C
BB_CAB:19		BK 2 C
BB_CAB:20		BK 3 C
BB_CAB:21		BK 3 C
BB_CAB:22		BK 3 C
BB_CAB:28		BK 2 C
BB_LP:B		BJ 3 B
BB_LP:B		BK 2 B
BB_LP_6SW:B		NC 1 B
BBBL:1		BK 0 D
BBBL:2		BK 0 D
BBBL:3		BK 0 D
BBBL:4		BK 0 D
BBBL:5		BK 0 D
BBBL:6		BK 1 D
BBBL:7		BK 1 D
BBBL:8		BK 1 D
BBBL:9		BK 1 D
BBBL:10		BK 1 D
BBBL:11		BK 1 D
BBBL:12		BK 1 D
BBBL:13		BK 2 D
BBBL:14		BK 2 D
BBBL:15		BK 2 D
BBBL:16		BK 2 D
BBBL:17		BK 2 D
BBBL:18		BK 2 D
BBBL:19		BK 2 D
BBBL:20		BK 2 D
BBBL:21		BK 3 D
BBBL:22		BK 3 D
BBBL:23		BK 3 D
BBBL:24		BK 3 D
BBBL:27		BK 3 D
BBBL:29		BK 3 D
BBCBBC:A		BN 3 C
BBCBBC:B		BN 3 C
BBCBBC:C		BN 3 C
BBCBBC:D		BN 2 C

REF	DESCRIPTION	PAGE
BBCBBC:E		BN 1 C
BBCBBC:F		BN 1 C
BBCBBC:G		BN 1 C
BBCBBC:H		BN 1 C
BBCBBC:J		BN 1 C
BBCBBC:K		NF 2 D
BBCBBC:L		NF 2 D
BBCBBC:M		BN 3 C
BBIC1:V		BJ 2 B
BBIC1:W		BJ 2 B
BBIC1:X		BJ 2 B
BBIC1:Y		BJ 2 B
BBIC1:Z		BJ 2 B
BBIC2:1		BJ 2 B
BBIC2:2		BJ 2 B
BBIC2:27		BJ 3 C
BBIC2:29		BJ 3 C
BBIL:1		BJ 3 C
BBIL:2		BJ 3 C
BBM_1939:A		BK 3 C
BBM_1939:B		BK 3 C
BBMS:A		NF 2 D
BBMS:B		NF 2 D
BBPA1:A		BN 2 C
BBPA1:B		BN 2 C
BBPA1:C		BN 2 C
BBPA1:D		BN 3 C
BBPA1:E		BN 3 C
BBPA1:F		BN 3 C
BBPA1:G		BN 3 C
BBPA1:H		BN 3 C
BBPA2:A		BN 2 C
BBPA2:B		BN 2 C
BBPA2:C		BN 2 C
BBPA2:D		BN 1 C
BBPA2:E		BN 1 C
BBPA2:F		BN 1 C
BBPA2:G		BN 1 C
BBSP1:A		BJ 1 A
BBSP2:A		BJ 1 A
BBSP2:A		BK 1 B
BBSP3:A		BJ 1 A
BBSP3:A		BK 1 B
BBSP4:A		BJ 1 A
BBSP4:A		BK 1 B
BBSP5:A		BJ 1 A
BBSP5:A		BK 2 B
BBSP6:A		BJ 1 A
BBSP6:A		BK 2 B
BEC_J1:A1		GA 2 B

https://truckmanualshub.com/

REFERENCES

REF	DESCRIPTION	PAGE
BEC_J1:A2		GA 0 A
BEC_J1:A4		GA 1 D
BEC_J1:A6		BF 2 B
BEC_J1:A7		BF 2 B
BEC_J1:A9		GD 0 A
BEC_J1:A9		GE 0 A
BEC_J1:A12		IE 2 A
BEC_J1:B1		GA 1 B
BEC_J1:B2		GA 1 B
BEC_J1:B3		GA 0 B
BEC_J1:B4		GA 2 B
BEC_J1:B6		BF 2 B
BEC_J1:B7		BF 1 B
BEC_J1:B8		AD 3 B
BEC_J1:B12		GA 2 A
BEC_J1:C1		JC 0 B
BEC_J1:C8		AA 3 B
BEC_J1:C11		IC 0 A
BEC_J1:D2		BJ 0 A
BEC_J1:D2		BY 0 A
BEC_J1:D8		AA 3 B
BEC_J1:D12		BI 0 A
BEC_J1:E1		AD 3 B
BEC_J1:E2		AA 4 B
BEC_J1:E5		HD 3 A
BEC_J1:E5		KC 0 A
BEC_J1:E5		NA 2 A
BEC_J1:E5		NC 0 A
BEC_J1:E5		NC 3 A
BEC_J1:E11		BM 1 A
BEC_J1:E11		BM 3 A
BEC_J1:E11		NB 2 A
BEC_J1:F1		AA 4 B
BEC_J1:F2		AA 3 B
BEC_J1:F3		AA 2 B
BEC_J1:F4		DB 3 A
BEC_J1:F4		DD 0 A
BEC_J1:F4		NA 3 A
BEC_J1:F10		GJ 0 B
BEC_J1:F10		NA 2 A
BEC_J1:F12		EA 2 A
BEC_J1:F12		ED 3 A
BEC_J2:A1		AA 1 B
BEC_J2:A2		AA 1 B
BEC_J2:A5		GA 1 C
BEC_J2:A7		HA 1 B
BEC_J2:A9		AC 0 A
BEC_J2:A12		ID 0 A
BEC_J2:A12		IE 1 A
BEC_J2:B1		AA 1 C

REF	DESCRIPTION	PAGE
BEC_J2:B5		GA 1 C
BEC_J2:B8		BM 1 A
BEC_J2:B8		BM 3 A
BEC_J2:B8		NB 2 A
BEC_J2:B11		GA 0 B
BEC_J2:C4		BA 1 A
BEC_J2:C5		GA 0 C
BEC_J2:C9		NA 1 B
BEC_J2:C12		GA 1 A
BEC_J2:D1		BD 0 A
BEC_J2:D4		BA 3 A
BEC_J2:D5		GA 1 C
BEC_J2:D8		HC 3 A
BEC_J2:D8		NA 3 A
BEC_J2:D11		KC 0 A
BEC_J2:E2		BA 1 A
BEC_J2:E5		BB 0 B
BEC_J2:E6		HA 0 B
BEC_J2:E7		AA 3 D
BEC_J2:E9		GL 0 A
BEC_J2:E9		NA 2 A
BEC_J2:E9		NC 3 A
BEC_J2:E10		GP 1 B
BEC_J2:E12		AC 0 A
BEC_J2:F1		BE 0 A
BEC_J2:F2		BC 3 A
BEC_J2:F5		AD 3 B
BEC_J2:F6		HA 0 B
BEC_J2:F8		GP 1 B
BEC_J2:F9		GP 1 B
BEC_J2:F10		GP 1 B
BEC_J2:F11		KC 2 A
BEC_J3:A2		BA 0 A
BEC_J3:A5		AD 4 B
BEC_J3:A6		AA 3 E
BEC_J3:A6		HA 0 B
BEC_J3:A8		GP 0 B
BEC_J3:A11		GA 4 B
BEC_J3:A12		GA 3 A
BEC_J3:B1		BJ 3 A
BEC_J3:B1		BK 2 A
BEC_J3:B1		NA 4 A
BEC_J3:B1		NC 1 A
BEC_J3:B5		AD 4 B
BEC_J3:B6		FB 1 A
BEC_J3:B7		KB 1 A
BEC_J3:B7		KB 3 A
BEC_J3:B9		IA 2 A
BEC_J3:B10		GA 3 B
BEC_J3:B11		GA 3 B

https://truckmanualshub.com/

REFERENCES

REF	DESCRIPTION	PAGE
BEC_J3:B12		GA 3 A
BEC_J3:C2		DB 2 A
BEC_J3:C2		DD 3 A
BEC_J3:C2		DE 2 B
BEC_J3:C2		NA 3 A
BEC_J3:C3		GD 1 A
BEC_J3:C3		GE 1 A
BEC_J3:C5		AD 3 B
BEC_J3:C8		IA 2 A
BEC_J3:C8		ID 3 A
BEC_J3:C10		GA 3 B
BEC_J3:C11		GA 1 B
BEC_J3:C12		GA 1 A
BEC_J3:D1		CB 2 B
BEC_J3:D3		GH 0 A
BEC_J3:D4		JC 0 A
BEC_J3:D5		JC 0 B
BEC_J3:D9		FB 2 A
BEC_J3:D10		EC 4 A
BEC_J3:E2		FD 2 A
BEC_J3:E2		JB 1 A
BEC_J3:E2		JB 3 A
BEC_J3:E2		NA 2 A
BEC_J3:E2		NC 2 A
BEC_J3:E2		NC 0 A
BEC_J3:E3		GH 1 A
BEC_J3:E5		BE 3 D
BEC_J3:E5		EC 3 B
BEC_J3:E6		BE 3 D
BEC_J3:E7		EC 4 B
BEC_J3:E8		BK 0 B
BEC_J3:E8		HD 1 C
BEC_J3:E10		AA 0 C
BEC_J3:E10		BK 0 B
BEC_J3:E10		HD 2 B
BEC_J3:E11		XA 3 A
BEC_J3:E11		XC 3 B
BEC_J3:F1		IE 2 A
BEC_J3:F3		NA 0 A
BEC_J3:F5		BE 3 D
BEC_J3:F5		EC 4 A
BEC_J3:F7		BE 3 D
BEC_J3:F7		EC 3 A
BEC_J3:F8		BK 0 B
BEC_J3:F8		HD 2 B
BEC_J3:F10		AA 0 C
BEC_J3:F10		BK 0 B
BEC_J3:F10		HD 1 B
BEC_J3:F11		BE 0 A
BEC_J3:F11		BG 0 A

REF	DESCRIPTION	PAGE
BEC_J4:A2		AA 1 C
BEC_J4:C1		CE 2 A
BEC_J4:C1		CJ 3 A
BEC_J4:C1		DA 0 A
BEC_J4:C2		AA 0 D
BEC_J4:D1		AA 0 B
BEC_J4:D1		BK 0 A
BEC_J4:D1		HD 1 A
BEC_J4:D2		AA 0 B
BEC_J4:D2		BK 0 A
BEC_J4:D2		HD 1 A
BEC_P1	BEC POWER STUD	AA 0 A
BEC_P2	BEC POWER STUD	AA 0 A
BL_20828057_3311		DC 0 D
BL_20828057_33111	W/O_W/O_40t_m	EA 2 D
BP_20828057_33111	W/O_W/O_40t_m	EA 2 D
BQ_806GS13-7.1.0	W/O_W/O_40t_m	DC 0 B
BR_806GS13-7.1.0	W/O_W/O_40t_m	DC 0 B
CAB_SC_ESP:A		ED 1 D
CAB_SC_ESP:B		ED 1 E
CAB_SC_ESP:C		ED 1 D
CAB_SC_ESP:D		ED 0 D
CB2	CIR. BRKR HDLPS, DRL MODULE, FOG LPS.	AA 1 A
CB2	CIR. BRKR HDLPS, DRL MODULE, FOG LPS.	GA 1 A
CB3	CIR. BRKR. PARK,TAIL MARKER LPS.	AA 1 A
CB3	CIR. BRKR. PARK,TAIL MARKER LPS.	GA 0 A
CB4	CIR. BRKR. TURN LPS, FLASHER	AA 1 A
CB4	CIR. BRKR. TURN LPS, FLASHER	GA 2 A
CB4	CIR. BRKR. TURN LPS, FLASHER	IE 2 A
CB12	CIR.BRKR. DOOR LOCKS	AA 0 A
CB12	CIR.BRKR. DOOR LOCKS	ID 0 A
CB12	CIR.BRKR. DOOR LOCKS	IE 1 A
CB14	CIR BRKR, HDLP, LH LOW BEAM	AA 4 A
CB14	CIR BRKR, HDLP, LH LOW BEAM	GD 0 A
CB14	CIR BRKR, HDLP, LH LOW BEAM	GE 0 A
CB21	CIR. BRKR WINDSHIELD WIPER/WASH.	AA 0 E
CB21	CIR. BRKR WINDSHIELD WIPER/WASH.	GP 0 A
CB22	CIR. BRKR. PWR WIN LIFT, L.H.	AA 0 E
CB22	CIR. BRKR. PWR WIN LIFT, L.H.	IA 2 A
CB23	CIR. BRKR. PWR WIN LIFT, RH	AA 0 E
CB23	CIR. BRKR. PWR WIN LIFT, RH	IA 2 A
CB23	CIR. BRKR. PWR WIN LIFT, RH	ID 3 A
CB81	CIR BRKR, HDLP, RH LOW BEAM	AA 4 B
CB81	CIR BRKR, HDLP, RH LOW BEAM	GD 1 A
CB81	CIR BRKR, HDLP, RH LOW BEAM	GE 1 A
CB_HD_LIFT_GATE	CIR. BRKR. HD LIFT GATE	ND 0 B
CHPTO:A		FD 1 D
CHPTO:B		FD 1 D
CHPTO:C		FD 2 D
CIEC:1		CA 2 B

https://truckmanualshub.com/

REFERENCES

REF	DESCRIPTION	PAGE
CIEC:1		CE 2 C
CIEC:1		CK 2 C
CIEC:2		CA 1 B
CIEC:2		CF 3 B
CIEC:2		CJ 3 B
CIEC:3		AC 2 D
CIEC:4		AC 1 D
CIEC:4		AC 1 D
CIEC:5		AC 1 D
CIEC:6		CK 1 B
CIEC:7		CE 2 B
CIEC:7		CK 2 B
CIEC:8		GD 3 C
CIEC:8		GE 3 C
CIEC:9		BE 3 C
CIEC:10		GF 1 B
CIEC:11		GD 3 C
CIEC:11		GE 3 C
CIEC:12		BG 1 B
CIEC:13		BE 3 B
CIEC:14		FA 2 B
CLU_JMP	PLUG, JUMPER, A35:B	IE 3 C
CO_BB_LP1:B		BK 2 B
COBBC:A		BK 2 C
COBBC:B		BK 2 C
COSLIL:A		GD 3 C
COSLIL:B		GD 3 C
COSLIR:A		GD 4 C
COSLIR:B		GD 4 C
COSLL:A		GD 3 C
COSLL:B		GD 3 D
COSLL:C		GD 3 D
COSLR:A		GD 4 C
COSLR:B		GD 4 D
COSLR:C		GD 4 E
CTR_PIN_HOT:A		GJ 1 C
CTR_PIN_HOT:B		GJ 1 D
CTR_PIN_HOT_ISO:A		GJ 3 B
CTR_PIN_HOT_ISO:B		GJ 3 D
CTR_PIN_HOT_ISO:C		GJ 2 D
d3_4837		FD 2 D
D4		AG 0 C
d5_570		CL 0 B
d11_2029		CF 0 B
DCL:A		BC 1 B
DCL:B		BC 1 C
DCL:C		BC 1 C
DCL:C		BC 1 C
DCL:D		BC 1 D
DCL:D		BC 1 D

REF	DESCRIPTION	PAGE
DCL:E		BC 1 D
DCL:E		BC 1 D
DCL:F		BC 1 B
DCL:G		BC 1 B
DCL:H		BC 1 D
DCL:J		BC 1 E
DCL_A:H		BC 0 D
DCL_A:J		BC 0 E
DCL_ACC:A		BC 0 B
DCL_ACC:B		BC 0 C
DCL_ACC:C		BC 0 C
DCL_ACC:D		BC 0 D
DCL_ACC:E		BC 0 D
DCL_ACC:F		BC 0 B
DCL_ACC:G		BC 0 A
DCL_ACC:H		BC 0 D
DCL_ACC:J		BC 0 E
DCL_ACC_A:C		BC 0 C
DCL_ACC_A:D		BC 0 D
DCL_ACC_A:E		BC 0 D
DCL_ACC_A:G		BC 0 A
DCL_ACC_A:H		BC 0 D
DCL_ACC_A:J		BC 0 E
DCL_B:A		BC 0 B
DCL_B:B		BC 0 C
DCL_B:C		BC 3 B
DCL_B:D		BC 0 D
DCL_B:E		BC 0 D
DCL_B:F		BC 3 A
DCL_B:G		BC 0 B
DCL_B:H		BC 0 E
DCL_B:J		BC 0 E
DCL_C:A		BC 0 B
DCL_C:B		BC 0 C
DCL_C:D		BC 0 D
DCL_C:E		BC 0 D
DCL_C:F		BC 3 A
DCL_C:G		BC 0 B
DCL_C:H		BC 0 E
DCL_C:J		BC 0 E
DFAT:H		CM 3 D
DFAT:J		CM 3 D
DFAT:K		BP 3 C
DFAT:L		BP 3 C
DFEPDM:1		GG 1 C
DFEPDM:2		GG 2 C
DFEPDM:3		GG 2 C
DFEPDM:4		GG 2 C
DHDH:A		CA 2 B
DHDH:B		CA 1 B

https://truckmanualshub.com/

REFERENCES

REF	DESCRIPTION	PAGE
DHDH:C		GJ 3 B
DHFC:1		AD 1 D
DHFC:2		BG 1 D
DHFC:3		CD 0 B
DHFC:3		CJ 0 B
DHFC:4		GA 2 E
DHFC:5		BF 0 B
DHFC:6		GP 1 C
DHFC:7		GP 0 C
DHFC:8		GP 1 C
DHFC:9		GP 1 C
DHFC:10		GP 0 C
DHFC:11		BF 0 B
DHFC:12		CA 1 C
DSFC:A		BG 3 C
DSFC:B		BG 4 D
DSFC:C		BF 4 D
DSFC:D		BG 2 E
DSFC:E		BF 1 D
DSFC:F		BF 1 D
DSFC:J		BF 1 E
E05A	LAMP HOOK UP LEFT	GR 0 C
E05B	LAMP HOOK UP RIGHT	GR 0 C
E06	Lamp, reversing light	GF 3 B
E07L	FOG LAMP LEFT	GA 1 D
E07R	FOG LAMP RIGHT	GA 1 D
E11L	LAMP, SIDE MARKER LEFT SIDE	GD 1 E
E11R	LAMP, SIDE MARKER, RIGHT SIDE	GD 1 D
E12D	LAMP, ROOF POS. LIGHT DRIVER	GA 3 D
E12DH	LAMP, HIGH RISE SLEEPER ROOF POS. LIGHT D	HE 4 D
E12DHL	LAMP, HIGH RISE SLEEPER ROOF POS. LIGHT D	HE 3 E
E12DHS:A		HE 4 D
E12DHS:B		HE 4 E
E12P	LAMP, ROOF POS. LIGHT, PASS.	GA 3 D
E12PH	LAMP, HIGH RISE SLEEPER ROOF POS. LIGHT P	HE 4 D
E12PHL	LAMP, HIGH RISE SLEEPER, ROOF POS. LIGHT	HE 4 E
E13LS	LAMP, DIR. INDICATOR LEFT SIDE A-PILLAR	GD 2 C
E13LS	LAMP, DIR. INDICATOR LEFT SIDE A-PILLAR	GE 2 C
E13LSB	LAMP, DIRECTONAL/ MARKER LEFT SIDE	GD 3 D
E13LSB	LAMP, DIRECTONAL/ MARKER LEFT SIDE	GK 3 D
E13LSC	LAMP, DIR. LEFT SIDE SKIRT	GD 3 C
E13RS	LAMP, DIR. INDICATOR RIGHT SIDE A-PILLAR	GD 4 C
E13RS	LAMP, DIR. INDICATOR RIGHT SIDE A-PILLAR	GE 4 D
E13RSB	LAMP, DIRECTIONAL/ MARKER RIGHT SIDE	GD 4 D
E13RSB	LAMP, DIRECTIONAL/ MARKER RIGHT SIDE	GK 3 C
E13RSC	LAMP, DIR. RIGHT SIDE SKIRT	GD 4 C
E14L	LAMP, PARK/DIR INDICATOR LEFT FRT.	GD 2 D
E14L	LAMP, PARK/DIR INDICATOR LEFT FRT.	GE 3 D
E14R	LAMP, PARK/DIR INDICATOR RIGHT FRT.	GD 3 D
E14R	LAMP, PARK/DIR INDICATOR RIGHT FRT.	GE 3 D

REF	DESCRIPTION	PAGE
E17AD	LAMP, CAB REAR DOME DRIVER	GH 0 C
E17AP	LAMP, CAB REAR DOME PASS.	GH 0 C
E17D	LAMP, FRONT DRIVER DOME	GH 2 C
E17L	LAMP, CAB SLEEPER LEFT DOME	GR 3 C
E17P	LAMP, FRONT PASS. DOME	GH 3 C
E17R	LAMP, CAB SLEPER RIGHT DOME	GR 3 C
E18A	BACK UP LAMP	GR 3 C
E18A.A:A		GR 3 C
E18A.B:A		GR 3 C
E18LB	LAMP, LOWR. BUNK	HE 4 B
E18LC	LAMP, LH CABINET	HE 3 B
E18LR	LAMP, SLEEPER LH ROOF	HE 0 A
E18N	LAMP, SLEEPER INDIRECT	HE 1 C
E18R	LAMP, READING	HE 4 B
E18RR	LAMP, SLPR RH ROOF	HE 0 A
E19C	LAMP, ID LIGHT ROOF, CENTER	GA 0 D
E19C	LAMP, ID LIGHT ROOF, CENTER	GM 1 D
E19CH	LAMP, ID LIGHT HIGH RISE SLEEPER ROOF, CE	HE 2 D
E19CHL	LAMP, ID LIGHT HIGH RISE SLEEPER ROOF, CE	HE 1 D
E19D	LAMP, ID LIGHT ROOF, DRIVER	GA 0 D
E19D	LAMP, ID LIGHT ROOF, DRIVER	GM 0 D
E19DH	LAMP, ID LIGHT HIGH RISE SLEEPER ROOF DRI	HE 2 D
E19DHL	LAMP, ID LIGHT HIGH RISE SLEEPER ROOF, DR	HE 0 D
E19DHS:A		HE 1 D
E19DHS:B		HE 1 E
E19P	LAMP, ID LIGHT ROOF, PASS.	GA 1 D
E19P	LAMP, ID LIGHT ROOF, PASS.	GM 1 D
E19PH	LAMP, ID LIGHT HIGH RISE SLEEPER ROOF, PA	HE 3 D
E19PHL	LAMP, ID LIGHT HIGH RISE SLEEPER ROOF, PA	HE 1 D
E23L	LAMP, CARGO, LH	HE 3 B
E23LA	LAMP, CARGO LH	GR 4 C
E23R	LAMP, CARGO, RH	HE 3 B
E23RA	LAMP, CARGO RH	GR 4 C
E27L	TAIL LAMP, MODULE, LEFT	GF 0 D
E27LA	TAIL LAMP LED, LEFT	GF 2 C
E27R	TAIL LAMP MODULE, RGHT	GF 1 C
E27RA		GF 2 C
E30L	HEADLAMP, LOW BEAM, LEFT	GD 0 D
E30R	HEADLAMP, LOW BEAM RIGHT	GD 1 D
E31L	LAMP, HIGH BEAM LEFT SIDE	GD 0 D
E31R	LAMP, HIGH BEAM, RIGHT SIDE	GD 1 D
E32	Climate unit	HD 1 D
E32L	HEADLAMP, LEFT	GE 0 D
E32R	HEADLAMP, RIGHT	GE 1 D
E35	HVAC UNIT	HA 0 D
E38_08	LAMP, INDICATOR, IWDL	BD 0 B
E38_09	LAMP, INDICATOR, BODY BUILDER	BJ 3 B
E38_09A	LAMP, INDICATOR BODY BUILDER	BK 2 B
E38_11	LAMP WTS INDICATOR	CE 0 B
E38_11	LAMP WTS INDICATOR	CK 0 B

https://truckmanualshub.com/

REFERENCES

REF	DESCRIPTION	PAGE
E39	Lamp, Licence Plate Illumination	GF 2 D
E53	LAMP, AMBIENT FOOT	KC 4 D
E53L	Lamp, Red lighting, left	KC 3 D
E53R	Lamp, Red lighting, right	KC 4 D
E58	LAMP, HOOK-UP	GR 1 C
E58	LAMP, HOOK-UP	HE 4 A
E58_A	LAMP, HOOK UP	GR 1 C
E58_B	LAMP, HOOK UP	GR 1 C
E58A	LAMP, HOOK-UP, FLUSH MTD	GR 2 C
E58B	LAMP, HOOK-UP, FLUSH MTD, LED	GR 1 C
E58BL	LAMP, HOOK UP LED LEFT	GR 0 C
E58BR	LAMP, HOOK UP LED RIGHT	GR 1 C
E58L	LAMP, PERIMETER LH	GR 2 C
E58R	LAMP, PERIMETER RH	GR 2 C
E58R.A		GR 2 D
E60D	LAMP, DOOR DRIVER	GH 3 B
E60P	LAMP, DOOR PASS.	GH 3 B
E61	HEATER, WEBASTO, AT2000S	HD 3 C
E65L	LAMP, ROOF LH BEACON	GL 0 C
E65R	LAMP, ROOF RH BEACON	GL 0 C
E80L	Lamp, Additional module, left	BP 2 B
E95L1	LAMP, SNORKEL LEFT SIDE	GK 0 A
E95L2	LAMP, SNORKEL LEFT SIDE	GK 0 B
E95L3	LAMP, SNROKEL LEFT SIDE	GK 0 B
E95L4	LAMP, SNORKEL LEFT SIDE	GK 0 B
E95L5	LAMP, SNORKEL LEFT SIDE	GK 0 C
E95L6	LAMP, SNORKEL LEFT SIDE	GK 0 C
E95R1	LAMP, SNORKEL RIGHT SIDE	GK 1 A
E95R2	LAMP, SNORKEL RIGHT SIDE	GK 1 B
E95R3	LAMP, SNORKEL RIGHT SIDE	GK 1 B
E95R4	LAMP, SNORKEL RIGHT SIDE	GK 1 C
E95R5	LAMP, SNORKEL RIGHT SIDE	GK 1 C
E95R6	LAMP, SNORKEL RIGHT SIDE	GK 1 C
E96L	Lamp, side dir indicator left side	GK 2 C
E96R	Lamp, side dir indicator right side	GK 3 B
E96R2	Lamp, side marker right side#2	GK 4 B
E96R3	Lamp, side marker right side#3	GK 4 B
E96R4	Lamp, side marker right side#4	GK 4 B
E97L1	Lamp, side marker left side#1	GK 2 B
E97L2	Lamp, side marker left side#2	GK 2 B
E97L3	Lamp, side marker left side#3	GK 2 B
E97L4	Lamp, side marker left side#4	GK 2 C
E97R1	Lamp, side marker right side#1	GK 4 A
earth6_328		HF 2 C
earth8_328	BODY BUILDER GROUND STUD	BK 1 B
earth10_6710	BODY BUILDER GROUND STUD	BJ 3 B
earth11	STUD, ENGINE BLOCK	AD 0 D
EFRC.A1.A:1		GG 4 C
EFRC.A1.A:2		GG 0 C
EFRC.A1.A:3		GG 1 C

REF	DESCRIPTION	PAGE
EFRC.A1:1		GG 4 C
EFRC.A1:2		GG 0 C
EFRC.A1:3		GG 1 C
EFRC.A2.A:A		GG 2 C
EFRC.A2.A:B		GG 3 D
EFRC.A2.A:C		GG 2 C
EFRC.A2:A		GG 2 C
EFRC.A2:B		GG 3 C
EFRC.A2:C		GG 3 C
EL1	Lamp, Extra spotlamp, roof	GQ 4 B
EM01	CONNECTOR CUMMINS SCR	CF 2 D
EM02	CONNECTOR CROSSOVER CUMMINS	CF 3 C
EM03	CONNECTOR CUMMINS DPF	CF 4 D
EM04	SENSOR DEF QUAL CUMMINS	CF 4 B
EPDMA:A		GG 1 B
EPDMA:B		GG 2 B
EPDMA:C		CA 1 A
EPDMA:D		GG 2 B
EPDMB:H		CM 2 D
EPDMB:J		CM 2 D
EPDMB:K		BP 2 B
EPDMB:L		BP 2 C
EPDMB_B:K		BC 0 D
EPDMB_B:L		BC 0 E
EPDMBA:D		GG 2 B
EPDMBA:E		GG 2 B
EPDMBA:H		CM 3 D
EPDMBA:J		CM 3 D
EPDMBA:K		BP 3 C
EPDMBA:L		BP 3 C
EPDMC:A		BG 2 A
EPDMC:B		GD 3 B
EPDMC:B		GE 3 B
EPDMC:C		GG 3 A
EPDMC:D		GG 3 A
EPDMC:E		GD 3 B
EPDMC:E		GE 3 B
EPDMC:G		GQ 1 B
EPDMC:H		BE 3 A
EPDMC:J		FA 2 A
EPDMC:K		CD 0 A
EPDMC:K		CJ 0 A
EPDMC:L		CA 2 A
EPDMC:L		CE 2 C
EPDMC:L		CK 2 C
EPDMC:M		AB 3 E
EPDMC:M		CA 2 A
EPDMC:M		CE 2 B
EPDMC:M		CK 2 B
EPDMD:C		GD 3 B

https://truckmanualshub.com/

REFERENCES

REF	DESCRIPTION	PAGE
EPDMD:C		GE 3 B
EPDMD:D		GD 3 B
EPDMD:D		GE 3 B
EPDME:A		CA 1 A
EPDME:A		CF 3 B
EPDME:A		CJ 3 A
EPDME:B		AC 2 D
EPDME:C		GJ 3 B
EPDME:D		AC 1 D
EPDME:E		AC 1 D
EPDMF:A		GG 1 B
EPDMF:B		GG 0 B
EPDMF:C		GG 3 B
EPDMF:D		GA 4 D
EPDMG:A		GA 4 D
EPDMG:B		GQ 1 B
EPDMG:D		GG 1 B
EPDMG:F		EA 3 A
EPDMG:F		ED 3 A
EPDMG:G		AB 0 C
EPDMG:H		GD 4 B
EPDMG:H		GE 3 B
EPDMG:J		GA 4 D
EPDMG:M		GG 0 B
EPDMG:P		AC 2 B
EPDMG:R		AB 2 C
EPDMG:S		GD 3 B
EPDMG:S		GE 3 B
EPDMP_A:A		CM 2 D
EPDMP_A:B		CM 2 D
EPDMP_A:C		BC 0 D
EPDMP_A:C		BP 2 B
EPDMP_A:D		BC 0 E
EPDMP_A:D		BP 2 C
ESFC:A		EC 1 B
ESFC:C		EC 0 C
ESFC:F		EC 1 B
ESFC:H		EC 1 C
ESFC:J		EC 0 C
ESFC:K		EC 2 C
ESFC:R		EC 1 C
ESFC:S		EC 2 C
ESFC:T		EC 2 C
ESFC:U		EC 2 C
ESFC:V		EC 2 B
ESFC:W		EC 2 B
ESFC:X		EC 1 C
F1_2_4748		BU 2 B
F1_3_4748		BV 2 B
F1_4_4748		BW 2 B

REF	DESCRIPTION	PAGE
F1_5_4748		BX 2 B
F3_2_4748		BU 2 B
F3_3_4748		BV 2 B
F3_4_4748		BW 2 B
F3_5_4748		BX 2 B
F5	FUSE, TRACTOR STOP LPS.	AA 1 A
F5	FUSE, TRACTOR STOP LPS.	GA 3 A
F6	FUSE, DOME/ CTSY. LMP	AA 2 A
F6	FUSE, DOME/ CTSY. LMP	GH 0 A
F7	FUSE, KEY SW	AA 0 A
F7	FUSE, KEY SW	AC 0 A
F8	FUSE, AIR SOL.	AA 0 E
F8	FUSE, AIR SOL.	FB 1 A
F9	FUSE, CB POSTS	AA 3 A
F10	DIAGNOSTIC CONNECTOR	AA 2 B
F10	DIAGNOSTIC CONNECTOR	KB 1 A
F10	DIAGNOSTIC CONNECTOR	XA 3 A
F10	DIAGNOSTIC CONNECTOR	XC 3 A
F11	FUSE, BATT. STUD	AA 2 A
F11	FUSE, BATT. STUD	BI 0 A
F11	FUSE, BATT. STUD	BM 1 A
F11	FUSE, BATT. STUD	NB 2 A
F13	FUSE, ABS BATT1	AA 1 B
F13	FUSE, ABS BATT1	EA 2 A
F13	FUSE, ABS BATT1	ED 3 A
F15	FUSE, HTD. MIRROR	AA 0 B
F15	FUSE, HTD. MIRROR	BF 2 A
F16	FUSE, VEHICLE CTRL UNIT	AA 0 D
F16	FUSE, VEHICLE CTRL UNIT	BA 0 A
F17	FUSE, CTRL/SW. INPUTS	AA 1 D
F17	FUSE, CTRL/SW. INPUTS	BA 1 A
F17	FUSE, CTRL/SW. INPUTS	BB 0 A
F17	FUSE, CTRL/SW. INPUTS	BC 3 A
F17	FUSE, CTRL/SW. INPUTS	BD 0 A
F18	FUSE, DPF REGEN SWITCH	AA 2 D
F18	FUSE, DPF REGEN SWITCH	CB 2 A
F19	FUSE, INST. CLSTR	AA 0 A
F19	FUSE, INST. CLSTR	BE 0 A
F19	FUSE, INST. CLSTR	BG 0 A
F20	FUSE, MOTO. MIRRORS	AA 1 B
F20	FUSE, MOTO. MIRRORS	IC 0 A
F24	FUSE, SPARE	AA 1 E
F24	FUSE, SPARE	GL 0 A
F24	FUSE, SPARE	NA 2 A
F24	FUSE, SPARE	NC 3 A
F25	FUSE, HVAC CAB	AA 3 C
F25	FUSE, HVAC CAB	HA 0 A
F26	FUSE, HOOK-UP LAMPS	AA 2 A
F26	FUSE, HOOK-UP LAMPS	GA 1 A
F27	FUSE, IGN. STUD	AA 1 E

https://truckmanualshub.com/

REFERENCES

REF	DESCRIPTION	PAGE
F27	FUSE, IGN. STUD	BM 1 A
F27	FUSE, IGN. STUD	NB 2 A
F28	FUSE, HTD. SEATS	AA 1 E
F28	FUSE, HTD. SEATS	HC 3 A
F28	FUSE, HTD. SEATS	NA 3 A
F29	FUSE, EMS RELAYS	AA 1 B
F30	FUSE, AUX, IGN. SW SPARE	AA 1 E
F30	FUSE, AUX, IGN. SW SPARE	NA 1 A
F31	FUSE, TRANS. SPARE	AA 1 D
F31	FUSE, TRANS. SPARE	DB 2 A
F31	FUSE, TRANS. SPARE	DD 3 A
F31	FUSE, TRANS. SPARE	DE 2 A
F31	FUSE, TRANS. SPARE	NA 3 A
F32	FUSE, ISO CPH	AB 4 C
F32	FUSE, ISO CPH	GJ 3 A
F33	FUSE, TRAILER STOP LMP.	AB 3 A
F33	FUSE, TRAILER STOP LMP.	GG 1 A
F34	FUSE, REV/NEUTRAL POWER	AB 1 A
F34	FUSE, REV/NEUTRAL POWER	GG 2 A
F35	FUSE, CAB & TRLR CLEARANCE LMP.	AB 2 A
F35	FUSE, CAB & TRLR CLEARANCE LMP.	GA 4 A
F36	FUSE, HORN	AB 1 A
F36	FUSE, HORN	GQ 1 A
F37	FUSE, TRAILER TAIL LMP.	AB 2 A
F37	FUSE, TRAILER TAIL LMP.	GG 0 A
F38	FUSE, ENG. CTRL UNIT	AB 3 D
F38	FUSE, ENG. CTRL UNIT	CA 1 A
F39	FUSE, TRAILER ABS PWR	AB 2 D
F39	FUSE, TRAILER ABS PWR	GG 3 A
F40	HEATED DRAIN VALVE	AB 1 D
F40	HEATED DRAIN VALVE	FA 3 A
F41	FUSE, ENG. COMP #1	AB 2 E
F41	FUSE, ENG. COMP #1	CA 1 A
F41	FUSE, ENG. COMP #1	CF 3 A
F41	FUSE, ENG. COMP #1	CJ 3 A
F42	FUSE, BACKUP LMPS.	AB 1 D
F42	FUSE, BACKUP LMPS.	BE 3 A
F43	FUSE, ENG. COMP #2/ CUMM. IGN	AB 2 E
F43	FUSE, ENG. COMP #2/ CUMM. IGN	CA 2 A
F43	FUSE, ENG. COMP #2/ CUMM. IGN	CE 2 B
F43	FUSE, ENG. COMP #2/ CUMM. IGN	CK 2 B
F44	FUSE, HTD. AIR DRY /HTD DRAIN VALVE	AB 1 D
F44	FUSE, HTD. AIR DRY /HTD DRAIN VALVE	FA 2 A
F45	FUSE, SPARE/ FUEL SEP./ FUEL HTR	AB 0 D
F45	FUSE, SPARE/ FUEL SEP./ FUEL HTR	GG 1 A
F46	FUSE, ACM/ENG IGN	AB 3 D
F46	FUSE, ACM/ENG IGN	CD 0 A
F46	FUSE, ACM/ENG IGN	CJ 0 A
F47	FUSE, TRANS/ SPARE	AB 3 D
F48	FUSE, SLPR BOX/ BODY BLDR. BATT #1	AB 0 A

REF	DESCRIPTION	PAGE
F48	FUSE, SLPR BOX/ BODY BLDR. BATT #1	BK 0 A
F48	FUSE, SLPR BOX/ BODY BLDR. BATT #1	HE 0 A
F49	FUSE, ABS	AB 2 D
F49	FUSE, ABS	EA 3 A
F49	FUSE, ABS	ED 3 A
F50	FUSE, SPARE	AB 3 A
F51	FUSE, SPARE	AB 4 A
F52	FUSE, SPARE/ GUARD DOG	AB 4 C
F52	FUSE, SPARE/ GUARD DOG	BG 2 A
F53	FUSE, BENDIX FUSION	AA 1 D
F53	FUSE, BENDIX FUSION	JC 0 B
F54	FUSE, BBM ECU	AA 0 D
F54	FUSE, BBM ECU	BJ 0 A
F54	FUSE, BBM ECU	BY 0 A
F55	FUSE ECS	AA 2 B
F55	FUSE ECS	EC 4 A
F56	FUSE, BENDIX FUSION	AA 2 D
F56	FUSE, BENDIX FUSION	JC 0 A
F57	FUSE, CENTER CONSOLE	AA 3 A
F57	FUSE, CENTER CONSOLE	KC 2 A
F58	FUSE, SPARE	AA 2 D
F60	FUSE, POWER OUTLETS	AA 3 A
F61	FUSE, AUX. BATT SW/ SPARE	AA 2 A
F61	FUSE, AUX. BATT SW/ SPARE	NA 0 A
F62	FUSE, SPARE	AA 3 A
F62	FUSE, SPARE	GJ 0 A
F62	FUSE, SPARE	NA 2 A
F63	FUSE, INSTR. CLUSTER (EMS)	AA 0 D
F63	FUSE, INSTR. CLUSTER (EMS)	BE 0 A
F64	FUSE, COLD START /SPARE	AA 1 D
F64	FUSE, COLD START /SPARE	BJ 3 A
F64	FUSE, COLD START /SPARE	BK 2 A
F64	FUSE, COLD START /SPARE	NA 4 A
F64	FUSE, COLD START /SPARE	NC 1 A
F65	FUSE, ACC/ SPARE	AA 1 D
F65	FUSE, ACC/ SPARE	FD 2 A
F65	FUSE, ACC/ SPARE	JB 1 A
F65	FUSE, ACC/ SPARE	NA 2 A
F65	FUSE, ACC/ SPARE	NC 2 A
F67	FUSE, SPARE	AA 0 A
F67	FUSE, SPARE	HD 3 A
F67	FUSE, SPARE	KC 0 A
F67	FUSE, SPARE	NA 2 A
F67	FUSE, SPARE	NC 0 A
F68	FUSE, CIGAR LIGHTER	AA 2 B
F68	FUSE, CIGAR LIGHTER	KC 0 A
F69	FUSE, KEYLESS ENTRY/ SPARE	AA 2 D
F69	FUSE, KEYLESS ENTRY/ SPARE	IE 2 A
F70	FUSE, HVAC SLPR./ BB IGN 1	AA 3 C
F70	FUSE, HVAC SLPR./ BB IGN 1	HA 1 A

https://truckmanualshub.com/

REFERENCES

REF	DESCRIPTION	PAGE
F71	FUSE, TRANS (BATT)	AA 1 B
F71	FUSE, TRANS (BATT)	DB 3 A
F71	FUSE, TRANS (BATT)	DD 0 A
F71	FUSE, TRANS (BATT)	NA 3 A
F72	FUSE, HVAC B	AA 3 D
F74	FUSE, DIMMER	GA 1 A
F75	FUSE, SLEEPER HVAC/ BB PWR	AA 0 B
F75	FUSE, SLEEPER HVAC/ BB PWR	BK 0 A
F75	FUSE, SLEEPER HVAC/ BB PWR	HD 1 A
F76	FUSE, M-DRIVE /CUMMINS DEF PWR	AA 3 A
F76	FUSE, M-DRIVE /CUMMINS DEF PWR	CE 2 A
F76	FUSE, M-DRIVE /CUMMINS DEF PWR	CJ 3 A
F76	FUSE, M-DRIVE /CUMMINS DEF PWR	DA 0 A
F79	FUSE M-DRIVE GSECU	DA 2 C
F80	FUSE M-DRIVE TECU	DA 2 C
F82	FUSE DISCONNECT SWITCH	AI 1 D
F83	FUSE CUMMINS DEF MOD	AH 2 B
F83	FUSE CUMMINS DEF MOD	CE 1 B
F84	FUSE DEF HOSE HEATERS	AH 1 B
F84	FUSE DEF HOSE HEATERS	CF 2 A
F84	FUSE DEF HOSE HEATERS	CL 2 A
F85	FUSE CES	AH 1 B
F85	FUSE CES	CL 3 A
F86	FUSE SPARE	AH 2 B
F87	FUSE MODULE IGN	AH 3 B
F87	FUSE MODULE IGN	BP 2 B
F88	FUSE SPARE	AH 4 C
F89	FUSE SPARE	AH 4 C
F90	FUSE SPARE	NE 0 B
F91	FUSE SPARE	NE 0 B
F92	FUSE SPARE	NE 1 B
F93	FUSE SPARE	NE 1 B
F94	FUSE SPARE	NE 1 B
F95	FUSE SPARE	NE 2 B
F96	FUSE SPARE	NE 2 B
F97	FUSE DISCONNECT SOLENOID	AI 1 D
FB05		CE 4 A
FB05		CK 4 A
FB07	FUSE, EAT SYSTEM	CD 0 B
FB8	FUSE REMOTE SENSE ALT.	AC 4 C
FB08	FUSE, EAT SYSTEM	CD 0 A
FB09	FUSE, METHANE BATTERY	CM 1 C
FCAC:A		HA 2 B
FCAC:B		HA 3 B
FCAC:C		BD 2 C
FCAC:D		BD 3 B
FCAC:E		HB 3 C
FCAD:A		FA 1 B
FCAD:A		FA 1 C
FCAD:A		FA 1 B

REF	DESCRIPTION	PAGE
FCAD:B		FA 1 D
FCAD:B		FA 1 D
FCAD:B		FA 1 D
FCAE2:A		AF 2 D
FCAE2:B		CE 3 B
FCAE2:B		CK 3 B
FCAE:A		AD 1 C
FCAE:B		CD 0 B
FCAPADS:A		HB 2 B
FCAPADS:B		HB 2 B
FCAPADS:C		HB 3 B
FCAPADS:D		HB 2 B
FCAPADS:E		HB 3 C
FCBB:1		BJ 3 C
FCBB:2		BJ 3 C
FCBL:A		GF 1 B
FCBL:B		GA 2 E
FCBL:C		GF 1 C
FCBL:D		GF 1 C
FCBL:E		AD 1 E
FCCE1:1		GF 1 B
FCCE1:2		AD 1 D
FCCE1:4		EA 2 D
FCCE1:4		ED 3 D
FCCE1:5		EA 2 D
FCCE1:5		ED 3 D
FCCE1:9		BF 2 D
FCCE1:10		BF 2 D
FCCE1:11		EA 2 D
FCCE1:11		ED 3 D
FCCE1:12		GF 1 B
FCCE1:13		GF 0 B
FCCE1:14		GF 1 D
FCCE1:15		BF 1 D
FCCE1:16		BF 1 D
FCCE1:17		BF 1 D
FCCE1:18		EA 0 D
FCCE1:18		ED 1 B
FCCE1:19		EA 0 D
FCCE1:19		ED 1 B
FCCE1:20		EA 1 D
FCCE1:20		ED 1 B
FCCE1:21		EA 1 E
FCCE1:21		ED 1 B
FCCE1:22		EA 1 D
FCCE1:22		ED 1 B
FCCE1:23		BF 4 C
FCCE1:24		EA 2 D
FCCE1:24		ED 3 D
FCCE2:1		EA 3 D

https://truckmanualshub.com/

REFERENCES

REF	DESCRIPTION	PAGE
FCCE2:1		ED 3 D
FCCE2:2		EA 3 E
FCCE2:2		ED 3 D
FCCE2:3		EA 2 D
FCCE2:3		ED 2 D
FCCE2:4		EA 2 D
FCCE2:4		ED 2 D
FCCE2:8		ED 1 D
FCCE2:9		ED 1 D
FCCE2:10		ED 2 D
FCCE2:11		ED 4 C
FCCE2:12		GF 0 B
FCCE2:13		EA 1 D
FCCE2:13		ED 1 B
FCCE2:14		EA 1 D
FCCE2:14		ED 1 B
FCCE2:16		BG 2 E
FCCE2:17		BG 3 C
FCCE2:18		EA 0 D
FCCE2:18		ED 0 B
FCCE2:19		EA 0 D
FCCE2:19		ED 0 B
FCCE2:20		EA 1 D
FCCE2:20		ED 0 B
FCCE2:21		EA 1 E
FCCE2:21		ED 0 B
FCCE2:22		EA 1 D
FCCE2:22		ED 0 B
FCCE2:23		EA 3 D
FCCE2:23		ED 3 D
FCCE2:24		EA 3 D
FCCE2:24		ED 3 D
FCCES:1		CL 3 D
FCCES:2		CL 3 D
FCCES:3		CL 3 D
FCCES:4		CL 3 D
FCCES:5		CL 3 D
FCCES:7		CL 3 D
FCCES:8		CL 3 C
FCCES:9		CL 3 C
FCCES:10		CL 3 C
FCCES:11		CL 3 C
FCCES:12		CL 3 C
FCCES:13		CL 3 C
FCCES:14		CL 3 C
FCCL:A		CA 2 D
FCCL:B		CA 2 D
FCCL:B		CE 1 C
FCCL:B		CJ 2 E
FCCL:B		CK 3 C

REF	DESCRIPTION	PAGE
FCCL:C		BF 0 D
FCCL:C		CE 3 D
FCCL:C		CK 3 C
FCCL:D		BF 1 E
FCCL:D		CE 3 D
FCCL:D		CK 3 D
FCCL:E		CE 0 C
FCCL:E		CJ 2 D
FCCL:E		CK 0 C
FCEGO:A		CJ 2 B
FCEGO:B		CJ 2 A
FCEGO:C		CJ 1 D
FCEGO:D		CJ 2 D
FCEGO:E		CJ 1 D
FCEGO:F		CJ 1 D
FCEGO:G		CJ 1 D
FCEGO:H		CJ 1 D
FCEIC:1		CD 2 B
FCEIC:2		CD 2 B
FCEIC:3		CD 2 A
FCEIC:4		CD 2 B
FCEIC:5		CD 2 B
FCEIC:6		CD 3 A
FCEIC:7		CD 0 D
FCEIC:8		CD 0 D
FCEIC:9		CD 3 B
FCEIC:10		CD 1 D
FCEIC:11		CD 1 D
FCEIC:12		CD 2 C
FCEIC:13		CD 0 D
FCEIC:14		CD 1 D
FCEIC:15		CD 1 D
FCEN:A		HA 3 C
FCEN:B		CF 0 B
FCEN:B		CL 0 B
FCEN:C		AG 1 B
FCEN:D		CF 0 B
FCEN:D		CL 0 B
FCEPDM:A		GG 1 C
FCFA1:1		JB 3 B
FCFA1:2		JB 3 B
FCFA1:3		JB 3 C
FCFA1:4		JB 2 C
FCFA1:5		JB 3 C
FCFA1:6		JB 3 C
FCFA:A		JB 0 B
FCFA:B		JB 1 B
FCFA:C		JB 1 C
FCFA:D		JB 0 C
FCFS:A		BF 0 D

https://truckmanualshub.com/

REFERENCES

REF	DESCRIPTION	PAGE
FCFS:B		BF 0 D
FCFS:C		BF 0 E
FCGND:1		CE 4 D
FCGND:1		CK 4 C
FCGND_2:1		CJ 3 B
FCHC:A		GD 0 D
FCHC:A		GE 0 D
FCHC:B		GD 3 D
FCHC:B		GE 3 C
FCHC:D		GD 2 C
FCHC:D		GE 3 C
FCHC:E		GD 0 E
FCHC:E		GE 1 E
FCHC:F		GD 1 D
FCHC:F		GE 1 D
FCHC:G		GD 1 C
FCHC:G		GE 1 C
FCHC:H		GD 1 C
FCHC:H		GE 1 C
FCHC:K		GA 2 E
FCHC_PL:A		GI 0 D
FCHC_PL:A		GI 3 D
FCHC_PL:B		GI 0 D
FCHC_PL:B		GI 3 D
FCHC_PL:D		GI 0 D
FCHC_PL:D		GI 3 D
FCHC_PL:E		GI 0 C
FCHC_PL:E		GI 3 C
FCHC_PL:F		GI 0 D
FCHC_PL:F		GI 3 D
FCHC_PL:G		GI 0 C
FCHC_PL:G		GI 3 C
FCHC_PL:H		GI 3 C
FCHC_PL:H		GI 0 C
FCHC_PL:K		GI 0 D
FCHC_PL:K		GI 3 D
FCHDV:A		FA 3 B
FCHDV:A		FA 3 C
FCHDV:B		FA 3 D
FCHDV:B		FA 3 D
FCHFF:A		FA 0 D
FCHFF:B		FA 0 D
FCHL:A		CD 4 D
FCHL:B		CD 3 D
FCHM:A		BF 3 A
FCHM:B		BF 3 A
FCHNP:A		CF 1 C
FCHNP:A		CL 1 C
FCHNP:B		CF 1 D
FCHNP:B		CL 1 D

REF	DESCRIPTION	PAGE
FCLC:A		CA 3 D
FCLC:B		CA 3 D
FCMB:A		CM 1 C
FCRE:A		GF 1 C
FCRE:B		GF 0 C
FCRE:C		GF 0 C
FCRE:D		GF 1 C
FCRE:E		GF 1 D
FCSCR:1		CF 1 C
FCSCR:2		CF 1 C
FCSCR:3		CF 4 D
FCSCR:4		CF 4 D
FCSCR:5		CF 4 D
FCSCR:6		CF 4 D
FCSCR:7		CF 4 C
FCSCR:8		CF 4 C
FCSCR:9		CF 4 C
FCSCR:10		CF 4 C
FCSCR:12		GR 2 D
FCSCR:13		GR 2 E
FCSPL:A		GI 1 B
FCSS:A		JA 2 C
FCSS:B		JA 2 C
FCSS:C		JA 2 C
FCSS:D		JA 2 C
FCSS:E		JA 2 C
FCTAD:A		FA 1 C
FCTAD:B		FA 1 D
FCTC.A:A		GG 3 D
FCTC:A		GG 3 D
FCTR2:1		DA 2 D
FCTR2:1		DA 3 B
FCTR2:2		DA 2 D
FCTR2:2		DA 3 B
FCTR:A		BC 2 C
FCTR:B		BE 3 B
FCTR:C		BF 1 D
FCTR:D		BF 1 D
FCTR:E		BC 3 B
FCTR:F		BB 0 C
FCTR:F		BB 1 C
FCTR:F		CE 2 D
FCTR:F		CJ 1 B
FCTR:F		CK 2 D
FCTR:G		BB 0 C
FCTR:G		BB 1 C
FCTR:G		CE 2 D
FCTR:G		CJ 1 B
FCTR:G		CK 2 D
FCTR:H		BE 3 B

https://truckmanualshub.com/

REFERENCES

REF	DESCRIPTION	PAGE
FCTR:K		FB 3 B
FCUT2:1		CE 1 D
FCUT2:2		CE 1 D
FCUT2:3		CE 1 D
FCUT2:4		CE 1 D
FCUT2:5		CE 1 D
FCUT2:6		CE 1 D
FCUT2:7		CE 2 D
FCUT2:8		CE 2 D
FCUT2:9		CE 2 D
FCUT2:10		CE 2 D
FCUT2:11		CF 3 B
FCUT2:12		CF 3 B
FCUT2:13		CF 2 C
FCUT2:14		CF 1 C
FCUT2:16		CE 3 C
FCUT2:17		CE 3 C
FCUT2:18		CE 3 C
FCUT2:19		CE 2 C
FCUT2:20		CF 1 D
FCUT2:21		CF 1 C
FCUT2:22		CF 1 C
FCUT2:23		CF 3 B
FCUT2:24		CF 3 B
FCUT4:1		CK 2 D
FCUT4:2		CK 2 D
FCUT4:3		CK 2 D
FCUT4:4		CK 2 D
FCUT4:5		CL 1 C
FCUT4:6		CL 1 C
FCUT4:7		CL 1 C
FCUT4:8		CL 1 D
FCUT4:9		CL 2 C
FCUT4:10		CL 3 B
FCUT4:11		CL 3 B
FCUT4:12		CL 3 A
FCUT4:13		CL 3 A
FCUT:1		CD 1 B
FCUT:2		CD 1 B
FCUT:3		CD 1 A
FCUT:4		CD 1 A
FCUT:5		CD 1 D
FCUT:6		CD 4 D
FCUT:7		CD 3 E
FCUT:8		CD 2 D
FCUT:9		CD 2 D
FCUT:10		CD 2 D
FCUT:11		CD 2 D
FCUT:12		CD 2 D
FCUT:13		CD 1 D

REF	DESCRIPTION	PAGE
FCUT:14		CD 1 D
FCVEC1:A		AH 1 D
FCVEC1:A		CL 3 B
FCVEC1:B		AH 1 D
FCVEC1:B		CL 3 B
FCVEC1:C		AH 1 D
FCVEC1:C		CF 1 C
FCVEC1:C		CL 1 C
FCVEC1:D		AH 1 D
FCVEC1:D		CF 1 C
FCVEC1:D		CL 1 C
FCVEC1:E		AH 0 D
FCVEC1:E		CF 1 C
FCVEC1:E		CL 1 B
FCVEC1:F		AH 0 D
FCVEC1:F		CF 2 C
FCVEC1:F		CL 2 B
FCVEC1:G		AH 0 D
FCVEC1:G		CF 2 C
FCVEC1:G		CL 2 C
FCVEC1:H		AH 1 D
FCVEC1:H		CF 2 C
FCVEC1:H		CL 2 C
FCVEC2:A		CF 0 C
FCVEC2:A		CL 0 B
FCVEC2:B		AH 4 D
FCVEC2:B		BP 3 A
FCVEC2:B		CF 0 C
FCVEC2:B		CL 0 B
FCVEC2:C		AH 2 D
FCVEC2:D		AH 2 D
FCVEC2:D		BP 1 B
FCVEC2:E		AH 2 D
FCVEC2:E		CE 1 C
FCVEC2:F		AH 2 D
FCVEC2:F		CE 1 C
FCVEC2:G		AH 3 D
FCVEC2:G		BP 3 B
FCVEC2:G		CF 0 C
FCVEC2:G		CL 0 C
FCVEC2:H		AH 3 D
FCVEC2:H		BP 3 B
FCVEC2:H		CF 0 C
FCVEC2:H		CL 0 C
FCVEC3:A		AH 2 D
FCVEC3:A		BP 1 B
FCVEC3:B		AH 3 D
FCVEC3:B		BP 3 A
FCVEC3:C		AH 3 D
FCVEC3:F		AH 2 D

https://truckmanualshub.com/

REFERENCES

REF	DESCRIPTION	PAGE
FCVEC3:F		BP 1 B
FCVEC3:G		AH 3 D
FCVEC3:G		BP 2 C
FCVEC3:H		AH 3 D
FCVEC3:H		BP 2 C
FCVEC4:A		AH 4 D
FCVEC4:B		AH 4 D
FCVEC4:C		AH 2 D
FCVEC4:C		BP 1 B
FCVEC4:D		AH 3 D
FCVEC4:E		AH 3 D
FCVEC4:E		BP 2 B
FCVEC4:F		AH 3 D
FCVEC4:F		BP 2 B
FCVEC4:G		AH 4 D
FCVEC4:H		AH 4 D
FCVEC6:A		AH 0 B
FCVEC6:A		BP 2 A
FCVEC6:A		CE 1 B
FCVEC6:C		AH 0 B
FCVEC6:C		BP 2 A
FCVEC6:C		CE 1 B
FGPS1_MATE	FUSE, ROAD CONNECT, BATTERY	BM 0 B
FGPS2_MATE	FUSE, ROAD CONNECT, IGNITION	BM 0 B
FGPS3	FUSE TGW1 IGNITION	BM 2 B
FGPS4	FUSE TGW1 BATTERY	BM 2 C
FHCC:A		KC 2 B
FHCC:B		KC 2 D
FLFC:A		GA 1 D
FLFC:B		GA 1 E
FM1	FUSE, MAIN GND PREHEATING	AD 0 B
FM1_A1		AD 1 B
FM1_A1		AE 1 B
FM02	FUSE GROUND PROTECTION	AF 1 C
FM3	FUSE, MAIN PWR, CAB	AC 3 D
FM03	Fuse Cummins Grid Heater	CF 1 A
FM03	Fuse Cummins Grid Heater	CL 1 A
FM3_A1	FUSE HOLDER	AC 3 D
FM3_A4	FUSE INVERTER	HF 1 B
FM3_B	FUSE HOLDER BATTERY	AC 3 D
FM3_B1		AC 3 D
FM3_B2	FUSE HOLDER	AC 3 D
FM3G		CD 0 B
FM04	GND MEGA FUSE	AD 1 C
FM4G		CD 0 B
FSP1	FUSE TAILGATE	NF 0 B
FSP2	FUSE PWR FLOAT	NF 0 B
FSP3	FUSE SPREADER	NF 1 B
FSP4	FUSE SPARE SW	NF 2 B
FSP5	FUSE LOW OIL	NF 2 B

REF	DESCRIPTION	PAGE
FSP6	FUSE AUX FAN	NF 3 B
FSP7	FUSE RR FLASHING	NF 3 B
FT02	Fuse Clutch Power	DB 0 C
G01	BATTERY	AC 3 C
G01	BATTERY	AD 1 B
G01	BATTERY	AF 0 E
G01	BATTERY	AG 3 E
G01	BATTERY	AI 2 D
G01	BATTERY	CD 0 C
G01	BATTERY	CE 4 B
G01	BATTERY	CK 4 B
G01	BATTERY	CM 2 C
G01	BATTERY	HF 0 A
G01	BATTERY	ND 0 A
G01.A5		AG 3 D
G01.A6		AG 4 D
G01_1_1213	Battery	AE 0 B
G01_2_1213	Battery	AE 0 D
G01_3_1213	Battery	AE 1 D
G01_4_1213	Battery	AE 1 B
G01_5_1213	Battery	AE 1 D
G01_6_1213	Battery	AE 3 B
G01_7_1213	Battery	AE 2 B
G01_8_1213	Battery	AE 3 B
G01_9_1213	Battery	AE 3 B
G01_11_1213	Battery	AE 2 C
G01_12_1213	Battery	AE 2 D
G01_13_1213	Battery	AE 3 C
G01_14_1213	Battery	AE 3 D
G01_A7		AI 2 D
G01_A8		AI 2 D
G01_N1		AD 1 B
G01_N1		AE 0 D
G01_N2	INVERTER GROUND	HF 0 B
G01_N3	INVERTER BATTERY	HF 0 A
G01_P1		AC 3 C
G01_P1		AE 0 B
G01_P2	INVERTER FUSE	HF 1 B
G01_P2A	INVERTER BATTERY FUSE	HF 0 B
G01_P3	INVERTER BATTERY	HF 1 A
G01_P3A	INVERTER POSITIVE	HF 0 B
G01A	Battery	AC 3 C
G01A	Battery	AE 1 B
G01A2		AF 0 D
G01A3		AF 0 D
G01A4		AF 1 D
G01A_1		AC 3 C
G01A_2	BATTERY TERMIANL	AC 3 C
G01C	Battery 3	CE 4 A
G01MTH	BATTERY METHANE	CM 1 C

https://truckmanualshub.com/

REFERENCES

REF	DESCRIPTION	PAGE
G02	ALTERNATOR	AF 2 A
G02	ALTERNATOR	AG 3 C
G02.B+		AG 3 C
G02.B-		AF 2 B
G02_1	ALTERNATOR	AC 4 A
G02_1	ALTERNATOR	AD 0 B
G02_A.B+		AG 3 C
G02_A.B-		AF 2 B
G02A	Alternator 1	AC 4 B
G03	INVERTER 12VDC/120VAC	HF 0 B
G03.D	INVERTER DISPLAY	HF 0 C
G04	POWER DISTR. UNIT 120VAC	HF 2 B
GUSLPCAB:A		GR 3 B
GUSLPCAB:B		GR 3 B
GUSLPCAB:C		GR 3 D
H02A	HORN	GQ 1 D
H02B	HORN #1	GQ 2 D
H02C	HORN#2	GQ 2 D
H03	REV. WARNG. ACOUSTIC	GF 1 C
H16	METHANE FUME DETECTOR	CM 2 B
H17	METHANE DETECTION STATUS	CM 3 B
HFFHFF:A		FA 0 C
HFFHFF:B		FA 0 C
HL_CHU:A		GE 1 C
HL_CXU_GU:A		GD 0 C
HL_CXU_GU:A		GE 0 C
HLSO:A		GH 0 D
HLSO:B		GH 2 D
HLSO:C		GH 2 D
HLSO:D		GH 0 C
HLSO:E		GH 1 D
HLSO:F		GH 0 E
HOOKUPLP:A		GR 0 B
HOOKUPLP:B		GR 0 D
HRSCHRSS:1		HE 1 D
HRSCHRSS:2		HE 1 E
HRSCHRSS:3		HE 4 D
HRSCHRSS:4		HE 4 E
HWR:A		HC 0 D
HWR:A		HG 1 D
HWR:B		HC 0 E
HWR:B		HG 1 D
IEH		CE 0 A
IGN_BAT_SP6:A		NA 3 B
IGN_BAT_SP6:B		NA 3 B
IGN_BAT_SP7:A		NA 0 B
IGN_BAT_SP7:B		NA 0 B
IGN_SP1:A		GL 0 B
IGN_SP1:A		NA 2 B
IGN_SP1:A		NC 3 B

REF	DESCRIPTION	PAGE
IGN_SP1:B		GL 0 D
IGN_SP1:B		NA 2 B
IGN_SP1_BL:A		GL 0 B
IGN_SP1_BL:B		GL 0 D
IGN_SP3:A		FD 2 B
IGN_SP3:A		NA 2 B
IGN_SP3:A		NC 2 B
IGN_SP3:A		NC 0 B
IGN_SP3:B		FD 2 B
IGN_SP3:B		NA 2 B
IGN_SP3_DC:A		FD 1 B
IGN_SP3_DC:B		FD 2 B
IGN_SP3_PTO:A		FD 2 B
IGN_SP3_PTO:B		FD 2 B
IGN_SP5:A		NA 3 B
IGN_SP5:B		NA 3 B
IGN_SP8:B		NA 4 B
IGN_SP8:B		NC 1 B
IGN_SP9:A		NA 2 B
IGN_SP10:B		NC 1 B
IGN_SP11:A		NC 2 B
IGN_SP11:A		NC 3 B
IGN_SP12:A		NC 3 B
ILLUM_OPT1:A		HC 0 A
ILLUM_OPT1:A		HG 1 A
ILLUM_OPT1:B		HC 0 C
ILLUM_OPT1:B		HG 0 C
ILLUM_OPT2:A		NC 1 B
ILLUM_OPT2:B		NC 2 B
ILLUM_OPT3:A		HC 0 A
ILLUM_OPT3:B		HC 4 D
ILLUM_OPT4:A		HC 4 B
ILLUM_OPT4:B		HC 4 D
ILLUM_OPT5:A		NC 1 B
ILLUM_OPT5:B		NC 2 B
ILLUM_OPT6:A		HC 1 B
ILLUM_OPT6:A		HG 1 B
ILLUM_OPT6:B		HC 0 C
ILLUM_OPT6:B		HG 0 C
ILLUM_OPT7:A		NF 2 B
ILLUM_OPT7:B		NF 1 E
ILLUM_OPT8:A		NF 1 B
ILLUM_OPT8:B		NF 1 E
ILLUM_OPT11:A		JA 1 B
ILLUM_OPT11:B		JA 1 D
ILLUM_OPT12:A		JA 1 B
ILLUM_OPT12:B		JA 0 D
ILLUM_OPT13:A		KC 4 A
ILLUM_OPT13:B		KC 4 A
ILLUM_OPT14:A		KC 4 A

https://truckmanualshub.com/

REFERENCES

REF	DESCRIPTION	PAGE
ILLUM_OPT14:B		KC 4 A
ILLUM_OPT15:A		BC 4 A
ILLUM_OPT15:B		BC 4 C
ILLUM_OPT16:A		BC 4 A
ILLUM_OPT16:B		BC 4 C
ILLUM_OPT17:A		FD 0 B
ILLUM_OPT17:B		FD 0 C
ILLUM_OPT18:A		FD 0 B
ILLUM_OPT18:B		FD 0 C
ILLUM_OPT19:A		GL 0 B
ILLUM_OPT19:B		GL 1 C
ILLUM_OPT20:A		GL 0 B
ILLUM_OPT20:B		GL 1 C
ILLUM_OPT:A		HC 0 A
ILLUM_OPT:A		NA 1 B
ILLUM_OPT:A		NC 1 B
ILLUM_OPT:B		NA 1 B
ILLUM_OPT:B		NC 2 B
JB1		AG 3 C
JB1		AI 2 B
JB1.A.B		AI 2 B
JB1.B.B		AI 2 B
LSHUL:1		GR 0 C
LSHUL:2		GR 0 C
M01	MOTOR, WSHLD. WIPER	GP 1 C
M02	MOTOR, WSHLD. WASHER PUMP	GP 0 C
M03	MOTOR, AUX FAN	HC 3 D
M03	MOTOR, AUX FAN	HG 3 D
M04	MOTOR, STARTER	AG 3 B
M04.A		AG 3 B
M04.A.B		AG 3 B
M04.A1		AG 3 B
M04.A2		AG 3 B
M04.B1		AI 2 A
M04.C		AF 0 B
M04.C1		AF 0 B
M04.C2		AF 0 B
M04.C3		AF 0 B
M04_1	MOTOR, STARTER	AF 0 A
M04_1	MOTOR, STARTER	AG 3 B
M04_1	MOTOR, STARTER	AI 2 B
M06	MOTOR, P.WINDOW PASS.	ID 3 D
M06DS	MOTOR, P.WINDOW DRIVER	IA 1 D
M06PS	MOTOR, P.WINDOW PASS.	IA 3 D
M41	Motor Pump, Urea	CK 2 C
M59		HD 3 E
M80	MOTOR, P.LOCK PASS.	ID 1 B
M80L	MOTOR, P.LOCK, DRIVR	IE 1 C
M80R	MOTOR, P.LOCK PASS.	IE 3 B
M110CFL	MIRROR, HTD. CONVEX, FENDER MOUNTED, LEFT	BF 3 B

REF	DESCRIPTION	PAGE
M110CFR	MIRROR, HTD. CONVEX, FENDER MOUNTED, RIGH	BF 3 B
M110CL	MIRROR, HTD. CONVEX ,LHS	IC 3 D
M110CR	MIRROR, HTD CONVEX, RHS	IC 4 D
M110L	MIRROR MOTOR & HTR, LHS	IC 0 D
M110R	MIRROR MOTOR & HTR, RHS	IC 1 D
MC-1_328		HF 3 C
MC-1_411		HF 0 C
MC-1_518		HF 1 C
MC-1_877		HF 2 C
MC-2_328		HF 3 C
MC-4_328		HF 1 C
MC-5_328		HF 1 C
MC_SLP_CAB1:A		KB 3 B
MC_SLP_CAB1:B		KB 3 B
MC_SLP_CAB1:C		KB 3 B
MC_SLP_CAB1:D		KB 3 B
MC_SLP_CAB1:E		HE 3 A
MC_SLP_CAB1:F		AA 4 C
MC_SLP_CAB1:G		HE 0 C
MC_SLP_CAB1:H		HE 0 C
MC_SLP_CAB2:A		HE 1 A
MC_SLP_CAB2:B		HD 2 C
MC_SLP_CAB2:C		AD 3 C
MC_SLP_CAB2:D		AD 3 D
MC_SLP_CAB3:A		HE 1 B
MC_SLP_CAB3:B		HE 1 B
MC_SLP_CAB3:C		HD 3 B
MC_SLP_CAB3:D		HD 3 B
MC_SLP_CAB3:E		HD 3 B
MC_TAS:A		BF 3 C
MC_TAS:B		BF 2 E
MCAF:A		HC 3 B
MCAF:B		HC 3 D
MCBB1:1		BF 3 A
MCBB1:2		BF 2 A
MCBB1:3		BK 2 C
MCBB1:4		BK 2 C
MCBB1:5		XA 0 A
MCBB1:6		XA 0 A
MCBB1:7		BK 3 C
MCBB1:8		BK 2 C
MCBB1:9		BK 3 C
MCBB1:10		BK 3 C
MCBB1:10		BN 3 B
MCBB1:11		BK 3 C
MCBB1:11		BN 3 B
MCBB1:12		BJ 1 B
MCBB1:12		BK 2 C
MCBB1:12		BN 1 B
MCBB1:13		BJ 1 B

https://truckmanualshub.com/

REFERENCES

REF	DESCRIPTION	PAGE
MCBB1:13		BK 2 C
MCBB1:13		BN 1 B
MCBB1:14		BJ 1 B
MCBB1:14		BK 1 C
MCBB1:14		BN 2 B
MCBB1:16		BJ 1 B
MCBB1:16		BK 1 C
MCBB1:16		BN 3 B
MCBB1:17		BJ 1 B
MCBB1:17		BK 1 C
MCBB1:17		BN 1 B
MCBB1:18		BJ 1 B
MCBB2:A		BJ 0 B
MCBB2:A		BK 1 C
MCBB2:A		BN 1 B
MCBB2:B		BJ 1 B
MCBB2:B		BK 1 C
MCBB2:B		BN 1 B
MCBB2:C		BK 0 C
MCBB2:D		BK 0 B
MCBB:A		BJ 0 B
MCBB:B		BJ 0 B
MCBBM:A		BY 0 B
MCBBM:B		BY 0 B
MCBBM:C		BC 4 C
MCBBM:D		BC 4 E
MCBBM:E		XA 1 A
MCBBM:F		XA 1 A
MCCC:A		KC 2 B
MCCC:B		KC 2 D
MCDIAG1:A		XC 2 A
MCDIAG1:B		XC 2 B
MCDIAG1:E		XC 2 B
MCDIAG1:F		XC 2 B
MCDIAG1:G		XC 2 B
MCDIAG1:H		XC 2 D
MCDIAG1:K		XC 2 D
MCDIAG:A		XA 1 B
MCDIAG:A		XB 3 C
MCDIAG:B		XA 1 B
MCDIAG:B		XB 3 C
MCDIAG:C		XA 2 C
MCDIAG:C		XA 1 B
MCDIAG:D		XA 2 C
MCDIAG:D		XA 1 B
MCDIAG:E		XA 3 C
MCDIAG:E		XA 1 B
MCDIAG:F		XA 3 C
MCDIAG:F		XA 1 B
MCDIAG:G		XA 3 C

REF	DESCRIPTION	PAGE
MCDIAG:G		XA 1 B
MCDIAG:H		XA 3 D
MCDIAG:H		XA 0 B
MCDIAG:K		XA 2 D
MCDIAG:K		XA 1 B
MCDL1:A		IC 0 D
MCDL1:A		IC 3 B
MCDL1:A		IC 0 C
MCDL1:A		IC 2 C
MCDL1:A		IC 1 A
MCDL1:B		IC 0 D
MCDL1:B		IC 2 B
MCDL1:B		IC 0 D
MCDL1:B		IC 2 D
MCDL1:B		IC 1 A
MCDL1:C		IC 0 A
MCDL1:C		IC 1 A
MCDL1:D		GH 1 B
MCDL1:E		IC 3 A
MCDL1:E		IC 3 C
MCDL1:E		IC 3 B
MCDL1:E		IC 1 D
MCDL1:F		IC 0 D
MCDL1:F		IC 2 B
MCDL1:F		IC 0 C
MCDL1:F		IC 2 C
MCDL1:F		IC 1 A
MCDL1:G		IC 0 D
MCDL1:G		IC 2 B
MCDL1:G		IC 0 C
MCDL1:G		IC 2 C
MCDL1:G		IC 1 A
MCDL1:H		IC 0 D
MCDL1:H		IC 3 B
MCDL1:H		IC 0 C
MCDL1:H		IC 2 C
MCDL2:A		IE 1 B
MCDL2:B		IE 1 B
MCDL2:C		IE 1 C
MCDL2:D		IE 1 C
MCDL2:E		IE 1 A
MCDL2:F		IE 0 A
MCDL3:A		IA 1 B
MCDL3:B		IA 2 B
MCDL3:C		IA 2 C
MCDL3:D		IA 2 D
MCDL3:E		IE 0 C
MCDL3:F		IA 1 B
MCDL4:B		GH 4 B
MCDL4:C		GH 3 A

https://truckmanualshub.com/

REFERENCES

REF	DESCRIPTION	PAGE
MCDR1:A		IC 1 D
MCDR1:A		IC 4 B
MCDR1:A		IC 1 C
MCDR1:A		IC 3 C
MCDR1:B		IC 1 D
MCDR1:B		IC 3 B
MCDR1:B		IC 1 D
MCDR1:B		IC 3 D
MCDR1:D		GH 1 B
MCDR1:E		IC 4 A
MCDR1:E		IC 4 C
MCDR1:E		IC 4 B
MCDR1:E		IC 1 D
MCDR1:F		IC 1 D
MCDR1:F		IC 3 B
MCDR1:F		IC 1 C
MCDR1:F		IC 3 C
MCDR1:G		IC 1 D
MCDR1:G		IC 3 B
MCDR1:G		IC 1 C
MCDR1:G		IC 3 C
MCDR1:H		IC 1 D
MCDR1:H		IC 4 B
MCDR1:H		IC 1 C
MCDR1:H		IC 3 C
MCDR2:A		IE 2 B
MCDR2:B		IE 2 B
MCDR2:C		IE 2 C
MCDR2:D		IE 2 C
MCDR2:E		IE 2 B
MCDR2:F		IE 4 B
MCDR2B:A		ID 1 B
MCDR2B:E		ID 1 B
MCDR3:B		IA 3 B
MCDR3:C		IA 2 C
MCDR3:D		IA 2 D
MCDR3:E		IA 4 C
MCDR3:F		IA 3 B
MCDR3B:C		ID 3 C
MCDR3B:D		ID 3 C
MCDR4:B		GH 3 C
MCDR4:C		GH 4 C
MCES:A		EC 0 B
MCES:B		EC 0 B
MCES:C		EC 3 B
MCES:D		EC 3 B
MCES:E		EC 3 B
MCES:F		EC 3 B
MCES:G		EC 4 B
MCES:H		EC 4 D

REF	DESCRIPTION	PAGE
MCES:J		EC 3 E
MCES:K		EC 2 E
MCFC:1		EA 3 E
MCFC:1		ED 3 C
MCFC:2		EA 3 D
MCFC:2		ED 3 C
MCFC:3		EA 3 D
MCFC:3		ED 3 C
MCFC:4		EA 2 E
MCFC:4		ED 3 C
MCFC:5		EA 2 D
MCFC:5		ED 3 C
MCFC:6		EA 3 D
MCFC:6		ED 3 C
MCFC:8		BE 3 B
MCFC:9		JB 1 B
MCFC:9		JB 3 B
MCFC:10		JA 3 C
MCFC:11		JA 3 C
MCFC:12		JA 3 C
MCFC:13		FB 1 D
MCFC:14		FB 2 C
MCFC:15		FB 1 D
MCFC:16		BJ 3 B
MCFC:17		EA 2 D
MCFC:17		ED 2 C
MCFC:18		EA 2 D
MCFC:18		ED 2 C
MCFC:19		EA 2 D
MCFC:19		ED 3 C
MCFC:20		EA 2 D
MCFC:20		ED 3 C
MCFC:21		EA 1 D
MCFC:21		ED 1 B
MCFC:22		EA 1 D
MCFC:22		ED 1 B
MCFC:23		EA 0 B
MCFC:23		ED 0 C
MCFC:24		EA 0 B
MCFC:24		ED 0 C
MCFC:25		EA 0 B
MCFC:25		ED 0 C
MCFC:26		EA 0 B
MCFC:26		ED 0 C
MCFC:27		EA 0 B
MCFC:27		ED 0 C
MCFC:28		EA 1 B
MCFC:28		ED 1 C
MCFC:29		EA 1 B
MCFC:29		ED 1 C

https://truckmanualshub.com/

REFERENCES

REF	DESCRIPTION	PAGE
MCFC:30		EA 1 B
MCFC:30		ED 1 C
MCFC:31		EA 1 B
MCFC:31		ED 1 C
MCFC:32		EA 1 B
MCFC:32		ED 1 C
MCFC:33		EA 0 E
MCFC:33		ED 0 B
MCFC:34		EA 1 D
MCFC:34		ED 0 B
MCFC:35		EA 1 D
MCFC:35		ED 0 B
MCFC:36		EA 0 D
MCFC:36		ED 0 B
MCFC:37		EA 0 D
MCFC:37		ED 0 B
MCFC:38		EA 0 E
MCFC:38		ED 1 B
MCFC:39		EA 1 D
MCFC:39		ED 1 B
MCFC:40		EA 1 D
MCFC:40		ED 1 B
MCFC:41		EA 0 D
MCFC:41		ED 1 B
MCFC:42		EA 0 D
MCFC:42		ED 1 B
MCFC:43		BC 1 E
MCFC:43		ED 4 C
MCFC:44		CE 2 A
MCFC:44		CK 2 A
MCFC:45		XB 1 C
MCFC:46		XB 1 C
MCFC:47		BF 1 C
MCFC:48		BF 1 C
MCFC:49		BG 2 D
MCFC:49		XC 1 A
MCFC:50		BG 1 D
MCFC:50		XC 1 B
MCFC:51		BG 1 B
MCFC:52		BD 2 D
MCFC:53		GD 0 D
MCFC:53		GE 1 E
MCFC:54		GP 1 C
MCFC:55		BF 2 C
MCFC:56		BF 0 C
MCFC:57		BF 2 C
MCFC:58		BF 2 E
MCFC:59		BE 3 B
MCFC:60		BB 0 B
MCFC:60		BB 0 B

REF	DESCRIPTION	PAGE
MCFC:61		BB 0 B
MCFC:61		BB 0 B
MCFC:62		BF 1 C
MCFC:63		HA 2 B
MCFC:63		HA 2 B
MCFC:64		FB 0 B
MCFC:65		BB 1 B
MCFC:66		BF 0 B
MCFC:67		BF 0 B
MCFC:68		AC 0 C
MCFC:69		BF 0 C
MCFC:70		BC 3 B
MCFC:71		GP 1 C
MCFC:72		GP 0 B
MCFC:73		GP 0 C
MCFC:74		GP 1 C
MCFC:75		BG 1 D
MCFC:76		BD 2 C
MCFC:77		GR 2 B
MCFC:78		FB 1 D
MCFC:79		GA 1 C
MCFC:80		GD 0 C
MCFC:80		GE 0 C
MCFC:81		GD 1 C
MCFC:81		GE 1 C
MCFC:82		GA 2 D
MCFC:83		XA 3 E
MCFC:83		XA 3 D
MCFC:84		XA 3 E
MCFC:84		XA 3 D
MCFC:85		BF 3 A
MCFC:86		FB 1 D
MCFC:87		BD 1 D
MCFC:88		BG 2 D
MCFC:89		BG 2 C
MCFC:90		FB 4 C
MCFC:91		BC 2 B
MCFC:92		BC 2 B
MCFC:93		FB 3 D
MCFC:94		FB 3 B
MCFC:95		GI 1 B
MCFC:96		BJ 3 B
MCFC:97		GF 1 B
MCFC:97		GF 1 B
MCFC:98		BA 2 D
MCFC:99		BF 4 C
MCFC:100		GF 0 B
MCFC:100		GF 0 B
MCFC:101		FB 4 B
MCFC:102		FB 4 C

https://truckmanualshub.com/

REFERENCES

REF	DESCRIPTION	PAGE
MCFC:103		CE 0 B
MCFC:103		CK 0 C
MCFC:104		JB 3 B
MCFC:105		JB 3 B
MCFC:107		ED 4 C
MCFC:108		ED 4 C
MCFC:109		ED 2 C
MCFC:110		ED 2 C
MCFC:111		ED 2 C
MCFC:112		ED 2 C
MCFC:113		ED 2 C
MCFC:114		ED 2 C
MCFC:115		ED 1 D
MCFC:116		ED 1 D
MCFC:117		ED 1 D
MCFC:118		ED 1 D
MCFC:119		ED 2 C
MCFC:120		ED 2 C
MCFC:124		CE 1 A
MCFC:124		CJ 3 B
MCFC:125		GJ 3 C
MCFC:126		GJ 3 D
MCFC:127		GJ 1 C
MCFC:128		GJ 1 D
MCFL:A		GA 2 A
MCFL:B		GA 2 B
MCFL:C		GA 2 A
MCFUS:A		JC 1 D
MCFUS:B		JC 1 C
MCFUS:C		JC 1 D
MCFUS:D		JC 1 D
MCFUS:E		JC 1 D
MCHL:A		GR 1 B
MCHL:A		GR 2 B
MCHL:B		GR 1 D
MCHLGUSLP:A		GR 3 B
MCHLGUSLP:B		GR 3 D
MCHS:A		HC 3 B
MCHS:A		HC 3 B
MCHS:B		HC 3 D
MCHW1:A		NF 3 B
MCHW1:B		NF 4 B
MCHW:A		HC 2 B
MCHW:A		HG 1 B
MCHW:B		HC 0 D
MCHW:B		HG 0 D
MCIS:A		KC 0 B
MCIS:B		KC 0 C
MCLA:A		BF 4 B
MCLA:B		BF 4 B

REF	DESCRIPTION	PAGE
MCLA:C		BF 4 B
MCLSL:A		GD 2 B
MCLSL:A		GD 2 B
MCLSL:A		GE 2 C
MCLSL:B		GD 2 D
MCLSL:B		GD 2 C
MCLSL:B		GE 2 D
MCLSLCO1:A		GD 2 B
MCLSLCO1:B		GD 2 D
MCLSLCO2:A		GD 2 B
MCLSLCO2:B		GD 2 D
MCMS:A		NF 3 A
MCNAV:A		BM 4 B
MCNAV:B		BM 4 B
MCNAV:C		BM 4 B
MCNAV:D		BM 4 B
MCOF2:A		KB 3 B
MCOF2:A		KB 0 C
MCOF2:B		KB 3 B
MCOF2:B		KB 0 C
MCOF2:C		KB 0 C
MCOF2:C		KB 3 B
MCOF2:D		KB 0 C
MCOF2:D		KB 3 B
MCOF2:E		KC 3 D
MCOF2:G		GA 1 E
MCOF2:G		GM 1 D
MCOF3:A		KB 2 B
MCOF3:A		KB 0 C
MCOF3:B		KB 2 B
MCOF3:B		KB 0 C
MCOF4:A		GA 3 D
MCOF4:B		GA 3 E
MCOF5:A		CM 1 B
MCOF5:B		CM 2 C
MCOF5:C		CM 0 C
MCOF5:D		CM 2 C
MCOF:A		GH 0 B
MCOF:A		GH 0 A
MCOF:B		HE 0 D
MCOF:C		GH 1 C
MCOF:D		HE 0 D
MCOF:E		KC 3 A
MCOF:F		GH 0 A
MCOF:H		GA 0 C
MCOF:H		GA 0 D
MCOF:H		GM 1 C
MCOF:H		GM 1 B
MCOFCOA:A		GH 0 B
MCOFCOA:C		GH 4 D

https://truckmanualshub.com/

REFERENCES

REF	DESCRIPTION	PAGE
MCOFCOA:E		GH 4 D
MCOFCOA:F		GH 4 D
MCOFCOA:G		GH 4 D
MCOFCOA:H		GH 4 D
MCOFCOB:A		GH 0 B
MCOFCOB:C		GH 4 E
MCOFCOB:E		GH 4 E
MCOFCOB:F		GH 4 E
MCOFCOB:G		GH 4 E
MCOFCOB:H		GH 4 E
MCOFCOC:A		GM 0 B
MCOFCOC:B		GM 0 B
MCOFCOC:C		GM 0 B
MCOFCOC:D		GM 0 B
MCOFCOC:E		GM 0 B
MCOFCOC:F		GM 0 B
MCOFCOC:G		GM 1 B
MCOFCOC:H		GM 1 B
MCOFCOD:A		GM 0 C
MCOFCOD:B		GM 0 C
MCOFCOD:C		GM 0 C
MCOFCOD:D		GM 0 C
MCOFCOD:E		GM 0 C
MCOFCOD:F		GM 0 C
MCOFCOD:G		GM 1 C
MCOFCOD:H		GM 1 C
MCOWL:A		GL 0 C
MCOWL:B		GL 0 D
MCPLW:A		IE 2 B
MCPLW:B		IE 2 B
MCPLW:C		IE 0 D
MCPLW:D		IE 1 D
MCPLW:E		IE 1 D
MCPLW:F		IE 2 D
MCPLW:G		IE 2 D
MCPLW:H		IE 2 D
MCPLW:J		IA 2 A
MCPLW:K		IA 2 B
MCPLW:K		ID 3 B
MCPLW:L		IA 3 B
MCPLW:L		ID 3 B
MCPLW:M		IA 3 B
MCPLW:M		ID 3 B
MCPLW:N		ID 0 B
MCPLW:N		IE 1 B
MCPLW:P		IA 4 D
MCPLW:P		ID 2 E
MCPLW_A:A		IE 2 B
MCPLW_A:B		IE 2 B
MCPLW_A:C		IE 0 D

REF	DESCRIPTION	PAGE
MCPLW_A:D		IE 1 D
MCPLW_A:E		IE 1 D
MCPLW_A:F		IE 2 D
MCPLW_A:G		IE 2 D
MCPLW_A:H		IE 2 D
MCPLW_B:J		IA 2 B
MCPLW_B:K		IA 2 B
MCPLW_B:L		IA 3 B
MCPLW_B:M		IA 3 B
MCPLW_B:N		IE 1 B
MCPLW_B:P		IA 4 D
MCPLW_C:K		ID 3 B
MCPLW_C:L		ID 3 B
MCPLW_C:M		ID 3 B
MCPLW_C:N		ID 0 B
MCPLW_C:P		ID 2 E
MCROF1:A		JC 2 D
MCROF1:B		JC 2 C
MCROF1:C		JC 2 D
MCROF1:D		JC 3 D
MCROF1:E		JC 3 D
MCROF1:F		JC 3 C
MCROF1:G		JC 2 D
MCROF1:H		JC 2 D
MCROF2:A		XA 0 B
MCROF2:B		XA 0 B
MCROF2:C		XA 0 C
MCROF2:D		XA 0 C
MCRSL:A		GD 4 B
MCRSL:A		GD 4 B
MCRSL:A		GE 4 C
MCRSL:B		GD 4 D
MCRSL:B		GD 4 D
MCRSL:B		GE 4 D
MCRSLCO1:A		GD 4 B
MCRSLCO1:B		GD 4 D
MCRSLCO2:A		GD 4 B
MCRSLCO2:B		GD 4 D
MCSC:A1		GA 2 C
MCSC:A2		GA 2 D
MCSC:A3		GA 2 C
MCSC:A4		GA 2 B
MCSC:A5		GA 2 C
MCSC:A6		GA 2 D
MCSC:A7		GA 3 B
MCSC:A8		GA 2 B
MCSC:A9		GA 3 D
MCSC:A9		GA 3 D
MCSC:A10		AC 0 B
MCSC:A11		AC 0 C

https://truckmanualshub.com/

REFERENCES

REF	DESCRIPTION	PAGE
MCSC:A12		AC 0 B
MCSC:A13		AC 0 C
MCSC:A14		GQ 0 C
MCSC:A15		GQ 0 D
MCSC:B1		BE 1 B
MCSC:B2		BE 1 B
MCSC:B3		BE 1 B
MCSC:B4		BE 1 B
MCSC:B5		BE 1 B
MCSC:B7		GA 3 B
MCSC:B8		GA 3 B
MCSC:B9		GA 3 D
MCSC:B9		GA 3 D
MCSD:1		JA 3 C
MCSD:2		JA 3 C
MCSD:3		JA 3 C
MCSD:4		JA 4 C
MCTR:1		XA 3 A
MCTR:2		XA 3 A
MCTR:3		XB 1 B
MCTR:4		XB 1 B
MCTR:5		XB 3 B
MCTR:6		XB 3 B
MCTR:7		XA 4 B
MCTR:11		XA 4 B
MCTR:12		DA 2 D
MCTR:14		DA 4 D
MCTR:16		BC 4 D
MCTR:17		BC 4 C
MCTR:18		BC 3 C
MCTR:19		BC 2 E
MCVL:A		BM 0 C
MCVL:A		BM 3 C
MCVL:B		BM 1 C
MCVL:B		BM 3 C
MCVL:C		BM 1 C
MCVL:C		BM 3 C
MISC_2:A		NC 3 D
MISC_2:A		NE 1 D
MISC_3:A		NC 2 D
MISC_3:A		NE 3 D
MISC_4:A		NC 1 D
MISC_4:A		NE 0 D
MISC_5:A		NC 0 D
MISC_5:A		NE 4 D
MISC_6:A		NC 0 D
MISC_6:A		NE 2 D
MISC_7:A		NE 2 D
MSAF:A		NF 3 D
MSAF:B		NF 4 B

REF	DESCRIPTION	PAGE
MSTC-1_16	RADXL_0.8_2	CD 3 B
MSTC-1_30	GXL_0.8_2	CL 3 B
MSTC-1_301	RADXL_0.8_2	JB 3 C
MSTC-1_320	GXL_0.8_2	EA 0 D
MSTC-1_526	RADXL_0.8_2	XA 1 E
MSTC-1_570	GXL_0.8_2	CK 0 C
MSTC-1_759	GXL_0.8_2	EA 0 D
MSTC-1_958	GXL_0.8_2	CL 3 C
MSTC-1_1450	GXL_0.8_2	CD 3 B
MSTC-1_1890	GXL_0.8_2	CE 0 C
MSTC-1_2048	RADXL_0.8_2	CA 1 D
MSTC-1_2144	RADXL_0.8_2	CD 3 B
MSTC-1_3589	GXL_0.8_2	CF 3 B
MSTC-1_3651	GXL_0.8_2	CF 3 C
MSTC-1_3667	GXL_0.8_2	CF 3 D
MSTC-1_3967	GXL_0.8_2	CF 3 B
MSTC-1_7269	RADXL_0.8_2	CD 1 B
MSTC-2_16	RADXL_0.8_2	CD 2 B
MSTC-2_320	GXL_0.8_2	EA 0 D
MSTC-2_570	GXL_0.8_2	CK 0 C
MSTC-2_759	GXL_0.8_2	EA 0 D
MSTC-2_1450	GXL_0.8_2	CD 3 B
MSTC-2_2972	GXL_0.8_2	CD 2 B
MSTC-2_3651	GXL_0.8_2	CF 2 B
MSTC-2_7269	RADXL_0.8_2	CA 0 B
MSTC-3_16	GXL_0.8_2	CD 2 B
MSTC-3_320	GXL_0.8_2	EA 0 B
MSTC-3_526	RADXL_0.8_2	XA 0 E
MSTC-3_759	GXL_0.8_2	EA 0 D
MSTC-3_1450	GXL_0.8_2	CD 3 B
MSTC-3_1890	GXL_0.8_2	CE 0 C
MSTC-3_2972	GXL_0.8_2	CD 3 B
MSTC-3_3651	GXL_0.8_2	CF 3 C
MSTC-3_4708	GXL_0.8_2	CF 4 D
MSTC-4_16	RADXL_0.8_2	CD 2 B
MSTC-4_320	GXL_0.8_2	EA 1 B
MSTC-4_570	GXL_0.8_2	CL 3 B
MSTC-4_759	GXL_0.8_2	EA 0 D
MSTC-4_2972	GXL_0.8_2	CD 2 B
MSTC-4_3651	GXL_0.8_2	CF 3 D
MSTC-5_16	RADXL_0.8_2	CA 0 C
MSTC-5_526	GXL_0.8_2	CJ 1 D
MSTC-5_570	GXL_0.8_2	CL 3 B
MSTC-6_16	RADXL_0.8_2	CA 0 B
MSTC-6_526	RADXL_0.8_2	XA 0 E
MSTC-6_570	GXL_0.8_2	CL 3 C
MSTC-7_16	RADXL_0.8_2	CA 0 B
MSTC-7_526	RADXL_0.8_2	XA 0 D
MSTC-8_16	RADXL_0.8_2	CA 0 B
MSTC-9_16	RADXL_0.8_2	CA 3 C

https://truckmanualshub.com/

REFERENCES

REF	DESCRIPTION	PAGE
MSTC-9_570	GXL_0.8_2	CL 3 C
MSTC-10_16	RADXL_0.8_2	XA 2 D
MSTC-10_526	RADXL_0.8_2	XA 1 E
MSTC-10_570	GXL_0.8_2	CL 3 C
MSTC-11_16	RADXL_0.8_2	XA 2 E
MSTC-12_35	GXL_0.8_2	CJ 1 C
OBD		XA 2 D
OMISC_2:A		NF 0 D
OMISC_3:A		NF 3 D
OMISC_4:A		NF 1 D
OMISC_5:A		NF 0 D
OMISC_6:A		NF 0 D
OPT_SW_PWR:A4		NE 0 B
OPT_SW_PWR:A4		NF 0 B
OPT_SW_PWR:A5		NE 0 B
OPT_SW_PWR:A5		NF 0 B
OPT_SW_PWR:A6		NE 0 B
OPT_SW_PWR:A7		NE 0 B
OPT_SW_PWR:A7		NF 0 B
OPT_SW_PWR:A8		NE 1 B
OPT_SW_PWR:A9		NE 1 B
OPT_SW_PWR:A9		NF 1 B
OPT_SW_PWR:B4		NE 1 B
OPT_SW_PWR:B4		NF 2 B
OPT_SW_PWR:B5		NE 1 B
OPT_SW_PWR:B5		NF 2 B
OPT_SW_PWR:B6		NE 2 B
OPT_SW_PWR:B7		NE 2 B
OPT_SW_PWR:B7		NF 2 B
OPT_SW_PWR:B8		NE 2 B
OPT_SW_PWR:B9		NE 2 B
OPT_SW_PWR:B9		NF 3 B
OPT_SW_PWR:C4		NE 1 B
OPT_SW_PWR:C4		NF 3 B
OPT_SW_PWR:C5		NE 1 B
OPT_SW_PWR:C5		NF 3 B
PB_START:A		AC 1 B
PB_START:B		AC 1 B
PBS_CLUTCH_SW:A		AC 1 A
PBS_CLUTCH_SW:A		AC 1 A
PBS_CLUTCH_SW:B		AC 1 A
PBS_CLUTCH_SW:B		AC 1 A
PBSTART:A		AC 1 B
PBSTART:B		AC 1 B
PBSTART:B		AC 1 B
PL:1		GI 2 D
PL:2		GI 2 D
PL:3		GI 2 D
PL:4		GI 2 D
PL:5		GI 2 D

REF	DESCRIPTION	PAGE
PL:6		GI 2 D
PL:7		GI 1 D
PL:8		GI 2 D
PLUG		CE 1 B
PLUG2		BP 2 A
PM:1		GA 3 B
PM:2		GA 3 A
PM:3		AA 0 D
PM:4		AA 0 D
PM:5		AA 0 D
PM:6		AA 0 D
PM:7		AA 0 B
PM:8		AA 1 C
PM:9		AA 1 B
PM:10		AA 1 C
PM:11		GD 1 B
PM:11		GE 1 C
PM:12		GD 2 B
PM:12		GE 2 C
PM:13		GD 1 B
PM:13		GE 2 B
PM:14		GD 1 B
PM:14		GE 2 C
PM:15		GD 1 B
PM:15		GE 2 B
PND:A		BZ 1 C
PND:B		BZ 1 C
PND:C		BZ 1 C
PNF:A		BZ 1 C
PNF:B		BZ 1 C
PNF:C		BZ 1 C
Power	S	GK 1 C
PPCO:1		FD 1 C
PPCO:2		FD 1 C
PPCO:3		FD 2 C
R01	HEATER, ENG. PREHEAT	AD 0 A
R01C	Heater, Engine preheat	CF 0 B
R01C	Heater, Engine preheat	CL 0 B
R01C.A	PREHEATER GRID CUMMINS	CF 0 B
R02	ENGINE BLOCK HEATER RECEPTACLE	CC 0 B
R03	ENGINE BLOCK HEATER ELEMENT	CC 0 D
R03A	OIL PAN HEATER ELEMENT	CC 1 C
R04	CIG. LIGHTER	KC 0 B
R05	AIR DRYER	FA 1 D
R08	RESISTOR, TERMINATION CAN-BUS	CF 2 B
R08	RESISTOR, TERMINATION CAN-BUS	CL 2 B
R08_BBM	RESISTOR TERMINATION	XA 3 B
R08_BENDIX	RESISTOR, TERMINATING	XA 0 B
R08_MATE	RESISTOR, TERMINATION J1939	XA 3 A
R08_PNP		BZ 1 D

https://truckmanualshub.com/

REFERENCES

REF	DESCRIPTION	PAGE
R08_PNP_MATE:A		BZ 0 D
R08_PNP_MATE:B		BZ 0 D
R08_TGW		XA 2 B
R08_TGW_DEU:1		XA 2 C
R08_TGW_DEU:2		XA 2 C
R08A	RESISTOR CAN TERMINATING	XA 1 D
R08ACC:A		XA 0 D
R08ACC:B		XA 0 D
R08BBM:A		XA 3 B
R08BBM:B		XA 3 B
R08M	RESISTOR CAN TERMINATING	XB 1 C
R09	HEATER, FUEL FILTER	FA 0 D
R14	Termination resistor	CE 0 C
R14	Termination resistor	CK 0 C
R19	HEATER, HTD DRAIN VALVE	FA 3 C
R21	Termination resistor	XA 1 C
R21	Termination resistor	XB 3 C
R21_TGW	TERMINATION RESISTOR	BM 1 C
R21_TGW_OL:A		BM 0 C
R21_TGW_OL:B		BM 1 C
R25	HTD SEAT, DRIVER	HC 2 C
R26	HTD. SEAT PASSENGER	HC 3 C
R27	Potentiometer Volume Ctrl.	KB 4 D
R28	Heater, Windshield, Left	HC 1 D
R28	Heater, Windshield, Left	HG 2 D
R29	Heater, Windshield, Right	HC 1 D
R29	Heater, Windshield, Right	HG 1 D
R29_A	Heater,Nox Care Tank to Pump Hose	CD 4 E
R29_A	Heater,Nox Care Tank to Pump Hose	CF 1 D
R29_A	Heater,Nox Care Tank to Pump Hose	CL 1 C
R30	Heater, Windshield, Single Piece	HC 2 C
R30	Heater, Windshield, Single Piece	HG 2 D
R30_A	Heater Back Flow Hose	CF 2 D
R30_A	Heater Back Flow Hose	CL 2 C
R31_A	Heater nox Care Pump to Injector Hose	CF 1 C
R31_A	Heater nox Care Pump to Injector Hose	CL 1 C
R32	Heater, NOxCare pump to injector hose	CD 3 D
R32_A	Heater, NOxCare pump to injector hose	CD 3 D
R33	Termination resistor	KB 1 B
R34	Termination resistor	XC 2 B
R35	Termination resistor	XC 0 B
R42A.30		CF 0 B
R42A.87		CF 1 A
RC1:B8		DA 2 C
RC1:B9		DA 2 C
RC1:C1		DE 3 C
RC1:C3		DE 3 B
RC1:C4		DA 0 B
RC1:C6		DA 0 B
RC1:C8		DA 2 C

REF	DESCRIPTION	PAGE
RC1:C9		DA 2 C
RC1:D1		DE 3 C
RC1:D3		DE 3 B
RC1:D4		DA 0 B
RC1:D6		DA 0 B
RC1_MATE	Electrical Equipment 2 RELAYS, 2 FUSES 2	AA 4 A
RC2:A1		GD 0 B
RC2:A1		GE 0 B
RC2:A2		GD 0 B
RC2:A2		GE 0 B
RC2:A3		GD 0 B
RC2:A3		GE 0 B
RC2:A4		GA 2 D
RC2:A6		GA 2 C
RC2:A8		CM 1 C
RC2:A9		CM 0 B
RC2:B1		GD 0 B
RC2:B1		GE 0 B
RC2:B3		GD 0 B
RC2:B3		GE 0 B
RC2:B4		GA 2 D
RC2:B6		GA 2 C
RC2:B7		CM 0 C
RC2:B9		CM 1 B
RC2:C1		GD 1 B
RC2:C1		GE 1 B
RC2:C2		GD 1 B
RC2:C2		GE 1 B
RC2:C3		GD 1 B
RC2:C3		GE 1 B
RC2:C4		DE 1 C
RC2:C6		DE 0 B
RC2:C7		CM 1 B
RC2:C9		CM 1 A
RC2:D1		GD 1 B
RC2:D1		GE 1 B
RC2:D3		GD 1 B
RC2:D3		GE 1 B
RC2:D4		DE 0 C
RC2:D6		DE 1 B
RC2:D7		CM 1 B
RC2:D9		CM 1 A
RC2_MATE	ELECTRICAL EQUIPMENT 3 RELAYS 3-25195197	AA 4 B
RCECS:1		EC 1 B
RCECS:2		EC 1 B
RCECS:3		EC 1 B
RCECS:4		EC 2 B
RCECS:5		EC 2 B
RCECS:6		EC 2 B
RCECS:7		EC 2 D

https://truckmanualshub.com/

REFERENCES

REF	DESCRIPTION	PAGE
RCECS:8		EC 2 D
RCECS:9		EC 2 D
RCECS:10		EC 1 D
RCECS:11		EC 1 D
RCECS:12		EC 1 D
RCECS:13		EC 0 D
RCECS:14		EC 2 B
RCECS:15		EC 0 D
RCSP:1		FB 2 E
RCSP:2		FB 0 D
RCSP:3		FB 1 D
RCSP:4		FB 1 D
RCSP:5		FB 1 D
RCSP:6		FB 1 D
RCSP:7		FB 1 D
RCSP:8		FB 2 D
RCSP:9		FB 2 D
RCSP:10		FB 2 D
RCSP:11		FB 0 E
RCSP:12		FB 1 D
RCSP:13		FB 1 E
RCSP:14		FB 1 E
RDCRDCH:1		AI 1 C
RDCRDCH:2		AI 1 C
RDCRDCH:3		AI 1 C
RDCRDCH:4		AI 1 C
RFCB1:A		KC 3 B
RFCB1:B		KC 3 D
RFCB2:A		KC 3 B
RFCB2:B		KC 3 D
RFCB2:C		GH 0 B
RFCB:A		KC 3 B
RFCB:B		KC 3 D
RFCB:C		GH 0 B
RFHL:A		GH 0 B
RFHL:B		GA 3 E
RFHL:C		GH 1 D
RFHL:D		GH 0 B
RFMIC:A		KB 0 B
RFMIC:A		KB 2 C
RFMIC:B		KB 0 B
RFMIC:B		KB 2 C
RFRC:E		GH 0 A
RLY01	RELAY, EMS #1	AA 1 B
RLY02	RELAY, EMS #2	AB 2 C
RLY03	RELAY, IGN. #1	AA 1 D
RLY04	RELAY, IGN #3	AB 0 C
RLY06	RELAY, EMERGENCY STOP LAMP	GA 3 B
RLY08	RELAY, FLASH TO PASS	GA 1 D
RLY10	RELAY, FOG LAMP	GA 2 D

REF	DESCRIPTION	PAGE
RLY11	RELAY, TRLR. LMP	AB 1 B
RLY11	RELAY, TRLR. LMP	GG 0 B
RLY12	RELAY, TRAILER STOP LAMP	AB 3 B
RLY12	RELAY, TRAILER STOP LAMP	GG 1 B
RLY13	RELAY, CAB & TRLR CLEARANCE LMP	AB 2 B
RLY13	RELAY, CAB & TRLR CLEARANCE LMP	GA 4 D
RLY14	RELAY, HORN	AB 1 B
RLY14	RELAY, HORN	GQ 1 B
RLY16	RELAY WINDSHIELD WIPER	GP 1 B
RLY17	RELAY, REV. PWR	AB 0 B
RLY17	RELAY, REV. PWR	GG 3 B
RLY20	RELAY, START ENABLE	DB 2 B
RLY26	RELAY, HVAC CAB CONT.	AA 3 D
RLY26	RELAY, HVAC CAB CONT.	HA 1 A
RLY28	RELAY, CB BINDING POST	AA 3 B
RLY29	RELAY, NEUTRAL PWR	AB 1 B
RLY29	RELAY, NEUTRAL PWR	GG 2 B
RLY31	RELAY, POWER OUTLETS	AA 3 B
RLY33	RELAY, HTD. MIRROR	BF 1 A
RLY34	RELAY, PRE-EMS	AA 1 B
RLY35	RELAY, HVAC CAB	AA 3 D
RLY35	RELAY, HVAC CAB	HA 0 A
RLY36	RELAY, START CNTL 1	AC 2 C
RLY38	RELAY, SPARE	AB 4 B
RLY39	RELAY, SPARE	AB 3 B
RLY42:1		CF 0 A
RLY42:2		CF 0 B
RLY42A	RELAY GRID HEATER	CF 0 B
RLY42A	RELAY GRID HEATER	CL 0 A
RLY43L_MATE	RELAY, SNOW PLOW LAMPS, LH LOW BEAM	GI 1 C
RLY43R_MATE	RELAY, SNOW PLOW LAMPS, RH LOW BEAM	GI 0 C
RLY44_MATE	RELAY, SNOW PLOW LAMPS, HIGH BEAM	GI 2 C
RLY46_MATE	RELAY, SNOW PLOW LAMPS, LOW BEAM FEED	GI 3 C
RLY47	RELAY REVERSE SIGNAL	DE 3 C
RLY48	REV MUTE RELAY	DE 0 C
RLY52	RELAY, HIGH BEAM	GA 1 A
RLY53	RELAY, SLEEPER HVAC	AA 0 C
RLY53	RELAY, SLEEPER HVAC	BK 0 B
RLY53	RELAY, SLEEPER HVAC	HD 1 B
RLY54	RELAY, SPARE EPDM	DD 2 B
RLY56	RELAY, TRAILER AUX. POWER SAEJ560	GJ 0 C
RLY57	RELAY, REVERSE, LIFT AXLE/ECS	BE 3 D
RLY57	RELAY, REVERSE, LIFT AXLE/ECS	EC 3 B
RLY58	RELAY, TRAILER AUX. POWER ISO3731	GJ 2 C
RLY60_MATE	RELAY, FAN CONTROL	HB 3 A
RLY70	RELAY, POWER, 8 SW BODYBUILDER OPTION	NE 3 A
RLY70	RELAY, POWER, 8 SW BODYBUILDER OPTION	NF 4 A
RLY73	RELAY M-DRIVE POWER	DA 0 B
RLY80	RELAY CUMMINS DEF MOD	AH 2 C
RLY80	RELAY CUMMINS DEF MOD	CE 1 B

https://truckmanualshub.com/

REFERENCES

REF	DESCRIPTION	PAGE
RLY81	RELAY STARTER LOCKOUT	AH 3 C
RLY81	RELAY STARTER LOCKOUT	BP 3 B
RLY81	RELAY STARTER LOCKOUT	CF 0 C
RLY81	RELAY STARTER LOCKOUT	CL 0 C
RLY82	RELAY DEF LINE HEATER 1	AH 0 C
RLY82	RELAY DEF LINE HEATER 1	CF 1 B
RLY82	RELAY DEF LINE HEATER 1	CL 1 B
RLY83	RELAY DEF LINE HEATER 2	AH 0 C
RLY83	RELAY DEF LINE HEATER 2	CF 2 B
RLY83	RELAY DEF LINE HEATER 2	CL 2 B
RLY84	RELAY DEF LINE HEATER 3	AH 1 C
RLY84	RELAY DEF LINE HEATER 3	CF 1 B
RLY84	RELAY DEF LINE HEATER 3	CL 1 B
RLY85	RELAY CES	AH 1 C
RLY85	RELAY CES	CL 3 B
RLY86	RELAY FUEL FILTER MODLUE	AH 2 C
RLY86	RELAY FUEL FILTER MODLUE	BP 1 B
RLY87	RELAY FUEL FILTER MODULE	AH 3 C
RLY87	RELAY FUEL FILTER MODULE	BP 2 C
RLY88	DEF PUMP SUPPLY	CK 1 B
RLY89	RELAY METHANE DETECTOR	CM 1 A
RLY97	RELAY, LO BEAM LH	GD 0 B
RLY97	RELAY, LO BEAM LH	GE 0 B
RLY98	RELAY, LO BEAM RH	GD 1 B
RLY98	RELAY, LO BEAM RH	GE 1 B
RLY99	RELAY, METHANE DETECT	CM 0 B
RO8_TGW_PED:A		XA 2 C
RO8_TGW_PED:B		XA 2 C
RSHUL:1		GR 0 C
RSHUL:2		GR 0 C
S01	SW. MAIN LIGHTING SELECT. TYPE	GA 0 B
S006	SWITCH, SPD CTRL	BA 1 B
S07	SW. ENG. BRKE, SEL. TYPE	BA 2 B
S007	SWITCH SET/RESUME	BA 1 B
S008	SW. SHUTDWN OVERRIDE	BA 3 B
S08A	SW. ALTERNATING LIGHT / RH POST	NE 2 D
S08B	SW. TAILGATE / RH WING	NE 0 D
S08C	SW. SANDER LIGHT / SPREADER / WORK	NE 3 D
S08D	SW. LOAD LIGHT / LH WING	NE 1 D
S08E	SW. STROBE LIGHT / LH POST	NE 2 D
S08F	SW. CHAIN LIGHT / HOPPER	NE 4 D
S009	SWITCH WIPER CTRL	GP 0 B
S011	SW. FAN OVERRIDE	BA 3 B
S12	SWITCH, SNOW PLOW LIGHTS	GI 2 A
S013	SW. MIRROR DEFROST	BE 2 B
S014	SWITCH, SLEEPER HVAC ENABLE	HD 1 B
S016	SW. ATC LTD SLIP	ED 2 A
S016A	SW. ATC LTD SLIP	EA 2 B
S017C	SWITCH, CAB REAR DOME LMP	GH 0 D
S017D	SW. SLEPR ROOF DOME LAMP	HE 0 B

REF	DESCRIPTION	PAGE
S017E	SW. CAB SLEEPER ROOF DOME LMP	HE 0 E
S017F	SW. FRONT DRIVER DOME LAMP	GH 2 D
S017G	SW. FRONT PASS. DOME LMP	GH 3 D
S018	SW. PWR TAKE OFF	BC 2 B
S018_1_MATE	PT0#1	BC 2 B
S019	SW. PWR DIV. LOCKOUT	FB 4 C
S020	SWITCH, AIR SUSP.	FB 0 C
S021	SW., 5TH WHL. SLIDE	BD 3 B
S022	SWITCH, I/O AIR	FB 1 C
S023	SW. NEUTRL CONTROL	FB 3 C
S023_1	PRESSURE SW. NEUTRAL CONTROL	FB 3 A
S024	SW. INTERWHL DIFF. LOCK	BD 1 B
S24C	Switch ON/OFF Allison Retarder	DD 1 B
S026A	SW._2, IGN. FEED	NA 1 C
S026B	SW.3, IGN. FEED	NC 3 C
S026C	SW._4, IGN. FEED	NC 2 C
S026D	SW.5_5, IGN. FEED	NC 1 C
S027A	SW._1, BATT. FEED	NA 0 C
S027B	SW._6, BATT. FEED	NC 0 C
S028	SW. PASS. DOOR LOCK	ID 1 C
S028L	SW. DRIVER DOOR LOCK	IE 0 B
S028R	SW. PASS. DOOR LOCK	IE 3 B
S030	Switch, Mirror Control	IC 0 B
S036	SWITCH, IGNITION	AC 0 B
S036	SWITCH, IGNITION	GQ 0 C
S036B	SW, PUSH BUTT. START	AC 1 B
S038	SW, PRESSURE SERVICE BRKE.	GA 3 B
S038C	SW, PRESSURE SERVICE BRAKE	BB 2 B
S038C2	2ND SW, PRESSURE SERVICE BRAKE	BB 1 D
S038C_A:C		BB 2 E
S038C_A:D		BB 2 E
S038MC:A		BB 2 E
S038MC:B		BB 2 E
S039	SW. DIREC. SIGNAL	GA 2 C
S41	Switch, battery main switch control	AI 0 C
S041L	SW. DRIVR SIDE DR.	GH 4 A
S041R	SW. PASS SIDE DR.	GH 4 C
S041SB	SWITCH, BUNK	HE 3 C
S041SL	SWITCH, LH JAMB	HE 3 D
S041SR	SWITCH, RH JAMB	HE 3 C
S042	SWITCH, BACK UP	BE 3 B
S43	SW. PRESS. PRKNG BRKE INDICATOR, NC.	BA 3 D
S043	SW. INFO SELECTOR	BE 1 B
S43B	SW.PRESS. PRKNG BRKE BODYBUILDER	BK 2 B
S43C	TRAILER DETECTION SWITCH	BG 2 D
S044	SWITCH, CLUTCH	BB 2 B
S045	SW. DRL OVERRIDE	BA 1 D
S047	SW. IWDL FR- ENGAGED	BG 3 D
S047A	SW. IWDL 3RD AXLE - ENGAGED	BG 3 E
S048	SW. IWDL REAR- ENGAGED	BG 3 C

https://truckmanualshub.com/

REFERENCES

REF	DESCRIPTION	PAGE
S050	SW., 5TH WHL. KING PIN LCK., AUX. AIR #2	FB 1 B
S051	SW., AUX. AIR #1	FB 2 B
S051A	SW., AUX. AIR #3	FB 2 C
S052	SW. AUTO. STRT/STOP ENGAGED	BG 0 B
S055	SWITCH, INDIRECT LMP.	HE 0 B
S056	DOWNHILL CRUISE SET	BD 1 B
S057	SWITCH, PARK BRAKE AUXILIARY	GJ 0 D
S058	SWITCH, CENTER PIN HOT SAE J560	GJ 0 B
S58B	POSITION SWITCH, CLUTCH PEDAL, STARTING,	AC 2 A
S059	SWITCH, HEATED WINDSHIELD	HC 0 B
S059	SWITCH, HEATED WINDSHIELD	HG 0 B
S060	Switch, Aux Fan	HC 4 C
S060	Switch, Aux Fan	HG 4 C
S61	POSITION SWITCH, DRIVER SEAT BELT LOCK, N	BE 1 D
S061	SWITCH, CENTER PIN HOT ISO 3731	GJ 2 B
S067	SWITCH BEACON LIGHTS	GL 0 B
S068B	TAILGATE IGN FEED	NF 0 C
S068C	PWR FLOAT IGN FEED	NF 0 C
S068D	SPREADER IGN FEED	NF 1 C
S069B	RR FLASHING IGN FEED	NF 3 C
S069C	SPARE IGN IGN FEED	NF 2 C
S069D	LOW OIL IGN FEED	NF 2 C
S99	SWITCH, ADAPTIVE CRUISE CONTROL, TIME	JA 1 C
S101	Position switch, gear box neutral positi	DB 0 D
S106	SW. PASS P.WINDOW (PASS SIDE)	ID 3 B
S106DS	SWITCH, PASS P.WINDOW (DRIVER SIDE)	IA 2 C
S106PS	SW. PASS P.WINDOW (PASS SIDE)	IA 3 C
S107	SW. DRIVER P.WINDOW	IA 1 C
S110	SWITCH, LVD	HE 1 C
S111	SWITCH, PARK BRAKE HEATER	HD 3 B
S111A	SWITCH, DPF REGEN	CB 2 C
S130	Switch, Air suspension	EC 2 D
S133	Switch, Level control, Rear axle suspens	EC 3 D
S137	SWITCH PTO #2 MDRIVE	BC 3 B
S137A	Switch, PTO2 request	FD 1 B
S145	SWITCH, AMBIENT LIGHTING	KC 4 B
S169	SWITCH, BATTERY MAIN	AC 3 C
S169	SWITCH, BATTERY MAIN	AG 3 D
S169.1A		AG 3 D
S169.1A1		AG 4 D
S169.1A2		AI 2 D
S169.2A		AG 3 C
S169.2A1		AG 3 C
S169.2A2		AG 4 C
S169.A1_1		AI 2 D
S169A	SWITCH BATTERY BI-STABLE	AI 1 C
S171	SWITCH GEAR LEVER M-DRIVE	DA 0 D
S212	SWITCH HILL ASSIST	ED 4 A
S311	Switch, Load Distribution	EC 4 E
S320	SWITCH, PRESSURE PARKER PTO	FD 1 D

REF	DESCRIPTION	PAGE
SBF1	FUSE, SLPR. LIGHTING 1	HE 3 B
SBF2	FUSE, SLPR LIGHTING 2	HE 0 A
SBF3	FUSE, SLPR. REFRIGERATOR, PWR OUTLET 2	HE 2 B
SBF4	FUSE, SLPR. TV OUTLET	HE 2 B
SBF6	FUSE, SLPR POWER OUTLET	HE 2 B
SBF7	FUSE, AUDIO AMP.	HE 2 B
SBW:A		BE 1 E
SBW:B		BE 1 D
SC-1_4748		BX 0 C
SC-1_6837	MKFK_0.35_1	KB 0 B
SC-2_4748		BX 2 B
SC-3_4748		BX 0 B
SC-3_6837	MKFK_0.35_1	KB 0 C
SC-4_4748		BX 1 B
SC-5_6837	MKFK_0.35_1	KB 2 B
SC-6_6837	MKFK_0.35_1	KB 2 C
SC-7_6837	MKFK_0.35_1	KB 0 B
SC-8_6837	MKFK_0.35_1	KB 2 D
SC-9_4748		BU 0 D
SC-10_4748		BU 2 C
SC-11_4748		BU 3 E
SC-12_4748		BU 0 C
SC-13_4748		BU 2 B
SC-14_4748		BU 0 B
SC-15_4748		BU 1 B
SC-16_4748		BU 0 B
SC-17_4748		BV 1 B
SC-18_4748		BV 0 B
SC-19_4748		BV 1 D
SC-20_4748		BV 2 B
SC-21_4748		BV 3 E
SC-22_4748		BV 2 C
SC-23_4748		BW 0 B
SC-24_4748		BW 2 B
SC-25_4748		BW 1 B
SC-26_4748		BW 1 D
SC1_CAB:A		KB 3 C
SC1_CAB:B		KB 3 C
SC1_CAB:C		KB 3 C
SC1_CAB:D		KB 3 C
SC1_CAB:E		HE 3 A
SC1_CAB:F		AA 4 C
SC1_CAB:G		HE 0 C
SC1_CAB:H		HE 0 C
SC1_SLP:A		KB 3 C
SC1_SLP:B		KB 3 C
SC1_SLP:C		KB 3 C
SC1_SLP:D		KB 3 C
SC1_SLP:E		HE 3 A
SC1_SLP:F		AA 4 C

https://truckmanualshub.com/

REFERENCES

REF	DESCRIPTION	PAGE
SC1_SLP:G		HE 0 C
SC1_SLP:H		HE 0 C
SLCLL:1		GR 4 C
SLCLL:2		GR 4 C
SLCLR:1		GR 4 C
SLCLR:2		GR 4 C
SLFR:A		GK 1 C
SLFR:A		GK 4 C
SLFR:B		GK 2 B
SLFR:B		GK 3 A
SLLH:A		GK 1 E
SLLH:B		GK 2 D
SLLH:C		GK 2 A
SLP_CAB1:A		KB 3 D
SLP_CAB1:A		KB 3 C
SLP_CAB1:B		KB 3 C
SLP_CAB1:B		KB 3 D
SLP_CAB1:C		KB 3 C
SLP_CAB1:C		KB 3 C
SLP_CAB1:D		KB 3 C
SLP_CAB1:D		KB 3 C
SLP_CAB1:E		HE 3 A
SLP_CAB1:E		HE 4 A
SLP_CAB1:F		AA 4 C
SLP_CAB1:F		AA 4 D
SLP_CAB1:G		HE 0 B
SLP_CAB1:G		HE 0 C
SLP_CAB1:H		HE 0 B
SLP_CAB1:H		HE 0 C
SLP_CAB2:A		HE 1 A
SLP_CAB2:B		HD 2 C
SLP_CAB2:C		AD 3 C
SLP_CAB2:D		AD 3 D
SLP_CAB3:A		HE 1 B
SLP_CAB3:B		HE 1 B
SLP_CAB3:C		HD 3 C
SLP_CAB3:D		HD 3 C
SLP_CAB3:E		HD 3 C
SLP_RF:A		HE 0 B
SLP_RF:B		HE 4 C
SLP_RF:C		HE 0 A
SLP_RF:D		HE 3 B
SLPCOFH:A		GR 3 B
SLRFHL1:A		KB 3 C
SLRFHL1:B		KB 3 C
SLRFHL1:C		KB 3 C
SLRFHL1:D		KB 3 C
SLRFHL1:E		KC 3 D
SLRFHL1:F		GA 3 E
SLRFHL2:A		GH 0 B

REF	DESCRIPTION	PAGE
SLRFHL2:C		GH 1 D
SLRFHL2:D		GH 0 B
SLRFHL2:E		KC 3 B
SLRFHL2:F		HE 0 D
SLRFHL2:G		HE 0 D
SLRH:A		GK 3 E
SLRH:B		GK 3 B
SLRH:C		GK 2 A
SLSF:A		HD 3 D
SLSF:B		HD 3 D
SP1HB1	S	CE 0 C
SP1LB2	S	CE 0 C
SP3F57	T	HG 0 B
SP3F57	T	NE 2 C
SP4FB	T	GA 3 B
SP26B2	S	GR 0 C
SP28B1		HG 1 D
SP42B3	S	GF 1 C
SP43A1	S	CE 2 D
SP44B		FA 1 C
SP47A		FA 3 C
SP75A	T	AA 0 B
SP75A	T	BK 0 B
SP75A	T	HD 1 B
SPAC62A	S	CK 3 C
SPAX4:1	S	ED 2 D
SPAX4:4	S	ED 2 D
SPAX4:7	T	ED 1 D
SPAX4:8	T	ED 1 D
SPAX4:10	T	ED 1 D
SPAX4:11	T	ED 1 E
SPBKA57	T	DD 2 C
SPBKA87	T	HG 0 C
SPBKA87	T	NE 2 E
SPBKA90	T	NF 1 E
SPBKD3		HG 0 D
SPBKD4		NF 4 A
SPBKD4A	T	AD 2 D
SPBKD4A	T	HG 3 C
SPBKD4A	T	NE 3 B
SPBKXC1G26	S	GI 2 D
SPC15JA3	S	AG 0 B
SPCB1	T	BA 0 D
SPCB2A	T	BA 0 D
SPCB7	T	BC 1 C
SPCB11	T	BA 3 D
SPCB16	T	BC 1 D
SPCB18	T	BC 2 D
SPCB19A	T	BB 3 C
SPCB19A1		BB 1 E

https://truckmanualshub.com/

REFERENCES

REF	DESCRIPTION	PAGE
SPCB28B	T	DB 2 C
SPDL1H	S	CA 0 B
SPDL1H1	S	XA 1 D
SPDL1H2	S	XA 2 D
SPDL1H3	S	XA 4 E
SPDL1H4	S	XA 3 D
SPDL1H5	S	XA 4 D
SPDL1H6	S	XA 3 D
SPDL1H8	S	XA 3 C
SPDL1H9	S	XA 4 C
SPDL1H10	S	XA 3 C
SPDL1H11	S	XA 4 B
SPDL1H12	S	XA 4 B
SPDL1H13	S	DB 1 D
SPDL1H13	S	XA 4 A
SPDL1H14	S	XA 4 B
SPDL1H15		XA 0 C
SPDL1H16	S	XA 0 C
SPDL1H18	S	XA 3 B
SPDL1HB	S	CK 0 C
SPDL1HB1		XA 1 D
SPDL1HB2		XA 0 E
SPDL1HB3		XA 0 E
SPDL1L	S	CA 0 B
SPDL1L1	S	XA 1 D
SPDL1L2	S	XA 2 D
SPDL1L3	S	XA 4 E
SPDL1L4	S	XA 3 D
SPDL1L5	S	XA 4 D
SPDL1L6	S	XA 3 D
SPDL1L8	S	XA 3 C
SPDL1L9	S	XA 4 C
SPDL1L10	S	XA 3 C
SPDL1L11	S	XA 4 B
SPDL1L12	S	XA 4 B
SPDL1L13	S	DB 1 D
SPDL1L13	S	XA 4 A
SPDL1L14	S	XA 4 C
SPDL1L15		XA 0 C
SPDL1L16	S	XA 0 C
SPDL1L18	S	XA 3 B
SPDL1LB	S	CK 0 C
SPDL1LB1		XA 0 D
SPDL1LB2		XA 0 E
SPDL1LB3		XA 0 E
SPDL2H1	S	XB 0 C
SPDL2H4	S	XB 3 C
SPDL2H6	S	XB 2 B
SPDL2H7	S	DD 2 D
SPDL2H8	S	BM 0 C

REF	DESCRIPTION	PAGE
SPDL2H9	S	DD 3 D
SPDL2L1	S	XB 0 C
SPDL2L4	S	XB 4 C
SPDL2L6	S	XB 2 B
SPDL2L7	S	DD 2 D
SPDL2L8	S	BM 1 C
SPDL2L9	S	DD 3 D
SPDL3H	S	KB 1 B
SPDL3L	S	KB 1 B
SPDL4H	S	XA 1 B
SPDL4L	S	XA 1 B
SPDL7H1	S	CD 1 B
SPDL7H2	S	CF 3 D
SPDL7H3	S	CF 3 B
SPDL7HB7	S	CL 3 B
SPDL7L1	S	CD 1 C
SPDL7L2	S	CF 3 C
SPDL7L3	S	CF 3 B
SPDL7LB7	S	CL 3 B
SPDL10HB1	S	XC 1 B
SPDL10HN1	S	XC 2 B
SPDL10LB1	S	XC 0 A
SPDL10LN1	S	XC 2 A
SPEA13A	S	CF 0 A
SPEA13A5	S	CF 0 B
SPEA24A1	S	CE 0 B
SPEA24A2		CK 0 D
SPEC3A	S	CF 1 C
SPEC3A1	S	CL 1 C
SPEC8A	S	CE 1 D
SPEC13A1	S	CF 0 D
SPEC13A2	S	CL 0 D
SPEC32A	S	CE 1 D
SPEC38A	S	CF 2 C
SPEC38A1	S	CL 2 C
SPEC39A	S	CF 2 C
SPEC39A1	S	CL 2 C
SPEC40A	S	CF 1 C
SPEC40A1	S	CL 1 C
SPEC54A	S	CE 2 D
SPEC57	S	CE 0 B
SPEC57A2	S	CK 0 D
SPEC62	S	CE 3 D
SPEC66A1	S	CL 0 D
SPEC66A2	S	CF 0 D
SPEC76	S	CF 0 B
SPEC76A	S	CF 0 B
SPEC76A1	S	CL 0 B
SPEC84A	S	CF 1 D
SPEC84A2	S	CF 1 D

https://truckmanualshub.com/

REFERENCES

REF	DESCRIPTION	PAGE
SPEC84A2	S	CL 1 D
SPECHA1		CJ 1 C
SPEMA28A1	S	CD 3 D
SPEMA49A	S	CD 2 A
SPEMA54A1	S	CD 1 D
SPEMA59A1	S	CD 3 D
SPEMA62A2	S	CD 2 D
SPF1A		HE 3 B
SPF1F		HE 3 C
SPF1J		HE 3 C
SPF2C		HE 0 A
SPF2C2	S	GD 1 E
SPF2C2	S	GE 0 D
SPF2D	T	GA 1 B
SPF2E	S	GA 1 D
SPF2LL		HE 0 B
SPF2T		HE 0 A
SPF2Y	S	GI 2 C
SPF3A		HE 2 B
SPF3B	T	GA 0 C
SPF3B1	T	GA 0 D
SPF3B1	T	GM 1 C
SPF3B2	S	HE 1 D
SPF3B3	T	GM 1 B
SPF3B5	T	GA 2 D
SPF3B7	S	GF 0 C
SPF3B8	S	GA 2 D
SPF3B9	S	GD 2 E
SPF3B9	S	GE 3 D
SPF3B11	S	GF 2 C
SPF3B14	S	GK 0 E
SPF3B19	S	GK 1 B
SPF3B21	S	GI 1 D
SPF3F	T	BC 2 A
SPF3F	T	BD 4 A
SPF3F	T	BE 1 A
SPF3F	T	EC 2 E
SPF3F	T	FB 0 A
SPF3F	T	GA 1 A
SPF3F	T	GH 0 A
SPF3F	T	HA 1 A
SPF3F	T	IA 3 A
SPF3F	T	ID 3 A
SPF3F	T	KB 3 A
SPF3F31	T	BA 2 A
SPF3F31	T	BD 1 B
SPF3F31	T	BE 2 A
SPF3F31	T	EA 2 A
SPF3F31	T	ED 2 A
SPF3F31	T	GH 1 A

REF	DESCRIPTION	PAGE
SPF3F31	T	GP 0 A
SPF3F31	T	HD 0 A
SPF3F43		HC 0 B
SPF3F44		GH 0 B
SPF3F53		HC 3 B
SPF3F57		NC 1 B
SPF3F71	T	KC 4 B
SPF3F85		JA 1 B
SPF3F96	T	FD 0 B
SPF3F100	T	NF 1 C
SPF3F110	T	GL 0 B
SPF4A	T	GA 3 A
SPF4C	T	GD 2 B
SPF4C	T	GE 2 C
SPF4C3		GG 3 C
SPF4C5	T	GD 3 B
SPF4C8	S	GI 2 D
SPF4C10	S	GD 3 B
SPF4D	T	GD 4 B
SPF4D	T	GE 4 C
SPF4D3		GG 2 C
SPF4D5	T	GD 4 B
SPF4D8	S	GI 2 D
SPF4D10	S	GD 3 B
SPF5D	T	GA 3 D
SPF5D1	S	GF 1 B
SPF5E	T	GA 3 D
SPF5E1	S	GF 0 B
SPF6A		HD 3 E
SPF6A2		GH 0 C
SPF6A9	T	GH 0 A
SPF6A11		GH 1 B
SPF6A12	S	GR 3 C
SPF6B	T	GH 4 C
SPF6E		GH 0 D
SPF7D	T	AC 1 C
SPF8A	T	FB 2 B
SPF8A6	S	FB 0 C
SPF8M	T	FB 2 B
SPF9B3		KC 3 B
SPF9E		KB 4 D
SPF9G		KB 3 D
SPF12A	S	IE 1 B
SPF13A1	T	ED 3 B
SPF14B		HD 2 C
SPF15B1	T	IC 1 C
SPF15B2	S	BF 3 B
SPF17A1	T	BA 3 B
SPF17A7	T	BA 1 B
SPF17A14	S	BC 3 B

https://truckmanualshub.com/

REFERENCES

REF	DESCRIPTION	PAGE
SPF17C	T	BA 1 C
SPF17D	T	BA 1 C
SPF17E	T	BA 1 C
SPF17M	T	BC 2 C
SPF23A	S	IA 2 B
SPF23B	S	IA 3 C
SPF23C	S	IA 3 D
SPF24A3	T	GL 0 B
SPF24D	T	GL 0 C
SPF25A	T	HA 0 C
SPF26B	T	GR 1 B
SPF26B1	T	GR 2 B
SPF26B3	S	GR 2 C
SPF26B4	S	GR 1 B
SPF26B7		HE 4 A
SPF27A	T	NB 2 B
SPF27A1	T	NB 3 B
SPF27B		GI 1 C
SPF28A		HC 3 C
SPF28A1		HC 1 B
SPF28A3		NF 3 A
SPF28B1		HC 0 D
SPF28B3	S	HC 1 D
SPF28B3	S	HG 1 D
SPF31A	T	DD 3 B
SPF33B		GG 1 C
SPF35B	T	GA 4 D
SPF35B2	T	GA 3 D
SPF35B3A	T	GA 3 D
SPF35B4	S	HE 4 D
SPF35B4A	T	GA 3 D
SPF35B7	S	BN 2 C
SPF35B8		GG 4 C
SPF36C	T	GQ 1 C
SPF37B		GG 0 C
SPF38A	S	CF 3 B
SPF38A1	S	CA 1 B
SPF38A2	S	CA 1 C
SPF39B		GG 2 C
SPF39B1		GG 3 B
SPF41A1		CJ 3 B
SPF41A3	S	HB 2 A
SPF42A	S	BE 3 B
SPF42B	S	BE 3 B
SPF42B2	S	GF 1 B
SPF42B3	S	GF 3 B
SPF43A	S	CA 2 B
SPF43A2	S	CK 2 D
SPF45A	S	GG 1 D
SPF45A1		GG 1 B

REF	DESCRIPTION	PAGE
SPF46A1		CJ 0 B
SPF46B1		BP 2 B
SPF48A		HE 1 B
SPF48A1		HE 2 A
SPF50B1		BP 2 C
SPF52A5		BG 2 B
SPF54	S	GI 1 C
SPF55B	T	EC 4 B
SPF57A	S	KC 2 B
SPF63A	T	BE 0 B
SPF65A	T	NA 2 D
SPF65A1	T	KC 3 B
SPF65A4	S	JB 1 B
SPF65A9	T	FD 1 B
SPF65B1		FD 1 D
SPF65B7	T	KC 4 C
SPF67A3	S	JB 1 C
SPF76A	T	DA 0 B
SPF76A1		CJ 3 B
SPF76B	T	DA 2 C
SPF79A	T	DA 2 D
SPF80A	S	DA 2 D
SPF80A3	S	DA 3 A
SPF82A1	S	AI 0 C
SPF83B		CK 1 D
SPF85B1	S	CL 3 C
SPFB05A1	S	CE 3 D
SPFB05A2	S	CK 3 D
SPFB07A1	S	CD 0 C
SPFB09		CM 1 D
SPFB09A3		CM 2 C
SPFU1A1	S	DB 0 C
SPFU1A2	S	DB 0 D
SPG01A4	S	AI 1 E
SPGAD	T	HA 0 C
SPHA12	T	BF 2 E
SPHA12A15	S	BF 1 E
SPHA12G	S	BF 1 E
SPHA12H	S	BF 1 D
SPHB29	T	BF 2 B
SPHB30	T	BF 2 B
SPHC11A2	S	BG 3 E
SPHC19	T	BG 2 D
SPHC20	T	BG 2 C
SPIGNLOWOIL:A		NF 2 D
SPIGNLOWOIL:B		NF 2 D
SPIGNLOWOIL:C		BN 1 C
SPJ1939HB30	S	XA 2 C
SPJ1939LB30	S	XA 2 C
splice340_43	T	NE 2 A

https://truckmanualshub.com/

REFERENCES

REF	DESCRIPTION	PAGE
splice351		GK 0 B
splice352		GK 0 B
splice359		GK 2 B
splice360		GK 2 B
splice363		GK 4 B
splice364		GK 4 B
splice429_431		GK 2 A
splice431_431		GK 3 A
splice580_24		BZ 1 D
splice581_24		BZ 1 D
splice687_570	S	CL 0 B
splice690_570	S	CL 0 B
splice695_570	S	CL 0 A
SPLRNA		KB 3 C
SPLRPA		KB 3 C
SPMB2A1		BY 2 B
SPN109	T	DD 0 C
SPN110	T	DD 0 C
SPN112	T	DC 3 C
SPN124CM	T	DD 2 C
SPN131	S	DC 1 D
SPN145NO	T	DD 3 C
SPN158	S	DC 2 D
SPN158A	T	DC 2 C
SPNA19A1	S	DA 4 B
SPNAA1	S	DA 3 C
SPOPTSW		NF 2 A
SPRA7A1	S	EC 1 E
SPRA30A1	S	EC 1 D
SPRDA	S	AA 0 B
SPRDA1	S	AA 0 B
SPRRNA		KB 3 C
SPRRPA		KB 3 C
SPX1C1B61	T	GL 0 D
SPX1C1B62	T	GL 0 C
SPX01D1		AF 1 C
SPX01F1	S	AG 0 C
SPX02CA3	S	CK 4 D
SPX02CA3	S	CL 3 C
SPX02CA15	S	CL 1 D
SPX109L1		AC 3 B
SPX109L2		AD 1 B
SPXC1A1	T	AD 2 C
SPXC1A2	T	AD 3 C
SPXC1A2	T	GA 4 E
SPXC1A2	T	GD 2 D
SPXC1A2	T	GE 2 D
SPXC1A2	T	GH 4 C
SPXC1A2	T	GM 1 E
SPXC1A2	T	GQ 0 E

REF	DESCRIPTION	PAGE
SPXC1A2	T	GR 1 D
SPXC1A2	T	IC 0 E
SPXC1A2	T	KC 3 E
SPXC1A2	T	NC 2 B
SPXC1A3	T	AA 1 C
SPXC1A3	T	AD 3 B
SPXC1A3	T	BJ 0 B
SPXC1A3	T	BM 2 B
SPXC1A3	T	BY 0 B
SPXC1A3	T	GA 2 A
SPXC1A3	T	GP 0 E
SPXC1A3	T	KC 1 D
SPXC1A3	T	NB 1 D
SPXC1A4	T	AA 4 D
SPXC1A4	T	AD 3 C
SPXC1A4	T	EC 4 D
SPXC1A4	T	GA 1 C
SPXC1A4	T	GD 4 D
SPXC1A4	T	GE 4 D
SPXC1A4	T	GH 3 C
SPXC1A4	T	IC 1 E
SPXC1A4	T	KC 0 D
SPXC1A4	T	NA 2 C
SPXC1A5	T	EC 4 C
SPXC1A7	T	GA 3 E
SPXC1A8A	T	GA 3 E
SPXC1A9	S	HE 4 E
SPXC1A9A	T	GA 3 E
SPXC1A10	T	CM 2 C
SPXC1A10	T	GA 0 E
SPXC1A10	T	GM 1 D
SPXC1A13	S	HE 1 E
SPXC1A14	S	GR 0 D
SPXC1A16	S	GR 3 D
SPXC1A18	S	GR 1 D
SPXC1A29	S	KC 2 D
SPXC1A35		BY 0 B
SPXC1A36	S	AD 1 D
SPXC1A38	S	IE 0 D
SPXC1A40		IA 0 B
SPXC1A45		KC 3 D
SPXC1A52		ID 2 D
SPXC1A53	S	IA 4 B
SPXC1A65	T	GD 4 D
SPXC1A66	T	GD 3 D
SPXC1A68		GH 1 D
SPXC1A72		HC 0 C
SPXC1A82		HC 4 D
SPXC1A88		NC 2 B
SPXC1A97	T	FD 0 C

https://truckmanualshub.com/

REFERENCES

REF	DESCRIPTION	PAGE
SPXC1A102		JA 1 D
SPXC1A116	T	KC 4 B
SPXC1A119	T	KC 3 E
SPXC1B1	T	AD 2 C
SPXC1B1	T	BA 4 E
SPXC1B1	T	BD 3 C
SPXC1B1	T	BE 0 E
SPXC1B1	T	CB 2 D
SPXC1B1	T	DA 0 E
SPXC1B1	T	DD 0 B
SPXC1B1	T	DE 1 B
SPXC1B1	T	EA 0 A
SPXC1B1	T	EC 3 E
SPXC1B1	T	ED 0 C
SPXC1B1	T	FD 2 B
SPXC1B1	T	GL 0 D
SPXC1B1	T	JC 1 C
SPXC1B1	T	KB 2 B
SPXC1B1	T	NA 2 C
SPXC1B1	T	NB 2 D
SPXC1B1	T	XA 2 D
SPXC1B1	T	XC 2 D
SPXC1B1A	T	XA 2 D
SPXC1B1D	T	EC 3 E
SPXC1B7B	T	ED 2 A
SPXC1B7W	T	EA 0 A
SPXC1B18	T	FD 2 B
SPXC1B30		FD 1 E
SPXC1B46	S	DA 4 D
SPXC1B48	T	DA 0 D
SPXC1C1	T	AD 2 C
SPXC1C1	T	HA 3 C
SPXC1C1	T	HC 3 E
SPXC1C1	T	HG 0 D
SPXC1C1	T	NA 3 C
SPXC1C4		HC 0 D
SPXC1C5		HC 3 D
SPXC1C6	S	HC 1 E
SPXC1C6	S	HG 1 D
SPXC1C11	T	AD 2 D
SPXC1C12	T	AD 3 C
SPXC1C12	T	HD 1 E
SPXC1C12	T	HE 2 C
SPXC1C13		AD 3 D
SPXC1C13		HE 0 D
SPXC1C13		KB 2 D
SPXC1C14	S	AD 1 C
SPXC1C14	S	AF 1 C
SPXC1C16		HD 3 D
SPXC1C23		HE 0 D

REF	DESCRIPTION	PAGE
SPXC1E	T	GL 0 C
SPXC1E1	T	AD 3 B
SPXC1E1	T	BA 3 C
SPXC1E1	T	BD 1 C
SPXC1E1	T	BE 2 B
SPXC1E1	T	CM 1 C
SPXC1E1	T	GJ 2 D
SPXC1E1	T	HD 0 C
SPXC1E1	T	NA 1 C
SPXC1E1A	T	EA 1 B
SPXC1E2	T	AD 4 B
SPXC1E2	T	BG 0 C
SPXC1E2	T	EA 2 B
SPXC1E2	T	ED 2 B
SPXC1E2	T	FB 3 D
SPXC1E2	T	GJ 2 C
SPXC1E2	T	NA 1 D
SPXC1F1	S	AD 1 D
SPXC1F1	S	HB 3 D
SPXC1F2	S	AD 1 E
SPXC1F2	S	BG 1 E
SPXC1F2	S	GK 1 A
SPXC1F2	S	GP 0 E
SPXC1F2	S	GQ 1 E
SPXC1F6	S	BG 3 D
SPXC1F7	S	AD 1 E
SPXC1F7	S	BG 4 E
SPXC1F7	S	ED 4 D
SPXC1F7	S	GF 1 D
SPXC1F10	S	AD 1 D
SPXC1F10	S	FA 2 E
SPXC1F10	S	FB 1 E
SPXC1F10	S	GF 1 E
SPXC1F11	S	GF 1 D
SPXC1F12	S	GF 3 B
SPXC1F16	S	FB 1 E
SPXC1F22		FA 3 D
SPXC1F23		FA 1 D
SPXC1G4A	S	CE 4 D
SPXC1G7	S	GA 1 E
SPXC1G8	S	GD 0 D
SPXC1G8	S	GE 0 D
SPXC1G14	S	GI 2 D
SPXC1G16	S	GD 1 D
SPXC1G16	S	GE 2 D
SPXC1G40	S	AC 2 E
SPXC1G40	S	AD 1 D
SPXC1G40	S	BF 4 A
SPXC1G40	S	CA 3 C
SPXC1G40	S	GA 1 E

https://truckmanualshub.com/

REFERENCES

REF	DESCRIPTION	PAGE
SPXC1G40	S	GD 0 E
SPXC1G40	S	GE 0 E
SPXC1G40	S	GJ 2 D
SPXC1G40	S	GR 2 C
SPXC1G40	S	JA 2 B
SPXC1G40	S	JB 0 D
SPXC1G41	S	BF 3 B
SPXC1N1		GG 3 D
SPXC1N3		BP 1 D
SPXCIE23	T	GA 1 C
SPXF1A1	S	AD 1 C
SPXF1A1	S	CD 4 D
SPXF1A3	S	CF 4 C
SPXG9A1		CJ 3 B
SPXM1		AD 0 B
SSP28A1		HG 1 B
T30_1_24	J1939	BZ 0 D
T30_1_35	J1939	CD 1 B
T30_1_526	J1939	CJ 1 B
T30_1_570	twisted_pair	CK 0 D
T30_1_578	J1939	DB 1 C
T30_1_681	J1939	XA 3 A
T30_1_958	twisted_pair	CK 0 D
T30_1_2941	J1939	XA 3 C
T30_1_3991	J1939	XA 1 C
T30_1_5416	J1939	EC 0 B
T30_1_5444	J1939	EC 0 C
T30_1_6173	J1939	BK 3 C
T30_1_6361	J1939	BB 1 B
T30_1_6785	J1939	XA 4 B
T30_1_6837	J1939	KB 4 A
T30_2_1	J1939	DB 1 C
T30_2_24	J1939	BZ 1 D
T30_2_578	J1939	DB 1 C
T30_2_2941	J1939	XA 3 C
T30_2_3348		XA 2 C
T30_2_5444	J1939	XA 4 C
T30_2_6173	J1939	BK 3 C
T30_2_6361	J1939	XA 3 B
T30_2_6785	J1939	KB 4 B
T30_2_6837	J1939	KB 1 B
T30_3_1	J1939	DB 1 C
T30_3_24	J1939	BZ 1 D
T30_3_2941	J1939	XA 3 E
T30_3_3348		XA 2 C
T30_3_5416	J1939	XA 4 A
T30_3_5444	J1939	XA 4 B
T30_3_6361	J1939	DA 3 B
T30_3_6837	J1939	KB 1 C
T30_4_24	J1939	DB 1 C

REF	DESCRIPTION	PAGE
T30_4_2941	J1939	XA 3 E
T30_4_3348		XA 2 C
T30_4_6361	J1939	XA 3 B
T30_4_6837	J1939	KB 1 B
T30_5_24	J1939	XC 2 C
T30_5_2941	J1939	XA 4 E
T30_5_3348		XA 2 C
T30_5_5416	J1939	XA 3 A
T30_5_6361	J1939	DA 3 B
T30_6_24	J1939	XC 2 B
T30_6_2941	J1939	XA 3 D
T30_6_6361	J1939	BY 3 B
T30_6_6837	J1939	KB 4 B
T30_7_24	J1939	XA 0 D
T30_7_2941	J1939	XA 3 C
T30_7_6837	J1939	ED 3 B
T30_8_24	J1939	JC 1 D
T30_8_638	J1939	XA 0 C
T30_8_2941	J1939	XA 3 C
T30_9_24	J1939	XA 0 C
T30_9_638	J1939	XA 0 C
T30_9_2941	J1939	XA 4 B
T30_10_24	J1939	XA 0 B
T30_10_35	J1939	CJ 1 B
T30_10_638	J1939	JC 2 E
T30_11_2941	J1939	XA 4 D
T30_12_638	J1939	JC 3 E
T30_12_2941	J1939	XA 4 D
T30_13_1	J1939	DB 1 D
T30_13_638	J1939	JC 2 D
T30_15_2941	J1939	XA 4 C
T30_16_2941	J1939	XA 4 C
T30_17_2941	J1939	XA 3 B
T30_19_2941	J1939	BM 1 C
T30_20_2941	twisted_pair	BM 1 C
T30_21_2941	J1939	BM 3 C
T30_22_2941	twisted_pair	BM 3 C
T30_24_2941	J1939	DA 1 D
T30_25_2941	J1939	DA 1 C
T30_26_2941	J1939	BB 1 B
T30_29_2941	J1939	CB 2 C
T30_34_2941	J1939	DD 4 D
T30_35_2941	J1939	BE 1 C
T30_36_2941	J1939	DB 1 C
T30_42_35	J1939	XC 2 C
T30_43_35	J1939	XC 2 B
T30_44_35	J1939	XC 1 B
T30_45_35	J1939	XC 1 B
T30_46_35	J1939	XC 0 B
T30_48_35	J1939	XC 2 B

https://truckmanualshub.com/

REFERENCES

REF	DESCRIPTION	PAGE
TAS_SLP:A		BF 3 D
TAS_SLP:B		BF 3 E
TBAP		CE 1 A
TC40-1_1		DC 0 D
TC40-1_864	twisted pair	ED 0 D
TC40-1_2972		CD 2 C
TC40-1_3354		DD 2 D
TC40-1_3612		BM 1 B
TC40-1_4654		BM 0 C
TC40-1_5416		EC 3 B
TC40-1_5444		EC 3 C
TC40-1_6361		BY 3 B
TC40-1_6710		XA 1 A
TC40-1_6837		ED 2 D
TC40-2_2972		CA 0 D
TC40-2_3354		DD 2 D
TC40-2_3991		XA 1 C
TC40-2_4654		BM 1 C
TC40-2_6710		XA 0 A
TC40-2_6785		XB 3 C
TC40-2_6837		ED 1 B
TC40-3_2941		BM 0 C
TC40-3_3612		BM 1 B
TC40-3_3991		XA 1 C
TC40-3_6361		DA 3 B
TC40-3_6785		XB 3 C
TC40-3_6837		ED 1 B
TC40-4_6785		XB 3 C
TC40-4_6837	twisted cable	ED 3 C
TC40-5_3354		DD 3 D
TC40-5_6785		XB 2 C
TC40-5_6837		ED 3 D
TC40-6_6785		XB 1 C
TC40-6_6837		ED 2 C
TC40-7_6785		XB 3 C
TC40-7_6837		ED 2 C
TC40-8_2941		XA 2 C
TC40-8_3354		DD 2 E
TC40-8_6785		XB 1 C
TC40-8_6837		ED 1 C
TC40-9_6785		XB 1 B
TC40-9_6837	W/O_W/O_W/O_W/O_TXL	ED 1 D
TC40-10_6785		XB 2 B
TC40-10_6837	W/O_W/O_W/O_W/O_TXL	ED 1 E
TC40-11_2941		XA 2 C
TC40-11_6785		XB 0 C
TC40-11_6837		ED 0 C
TC40-12_2941		DA 3 D
TC40-12_6785		DD 3 E
TC40-13_6837		ED 3 C

REF	DESCRIPTION	PAGE
TC40-14_6837	W/O_W/O_W/O_W/O_TXL	ED 1 D
TC40-15_6837		ED 0 B
TC40-16_6837		ED 1 B
TC40-18_2941		BM 4 C
TC40-19_2941		DA 1 C
TC40-20_2941		BB 2 B
TC40-21_2941		BB 0 B
TC40-22_2941		BB 0 B
TC40-33_2941		BE 1 C
TC40-35_2941		NB 1 B
TC_1_35	30 TWISTS PER METER	CD 2 C
TC_1_241	twisted_pair	CE 0 D
TC_1_431	W/O_W/O_40t_m	EA 2 D
TC_1_570		CK 2 D
TC_1_707		CE 0 D
TC_1_1106	J1939	DA 2 D
TC_1_3651		CE 2 D
TC_1_5416	J1939	DA 3 D
TC_1_5960	J1939	JB 0 C
TC_1_6039		EA 3 B
TC_1_6837		ED 0 C
TC_2_24	J1939	JB 3 C
TC_2_431	W/O_W/O_40t_m	EA 2 D
TC_2_707		CE 0 D
TC_2_1284	PROPRIETARY J1939	BB 0 C
TC_2_1532	W/O_W/O_W/O_W/O_TXL	CE 1 A
TC_2_1668		CE 2 D
TC_2_5416	W/O_W/O_40t_m	EA 2 D
TC_2_6837		ED 1 C
TC_3_24	J1939	JB 3 C
TC_3_5416	W/O_W/O_40t_m	EA 2 D
TC_3_6837	W/O_W/O_W/O_W/O_TXL	ED 0 E
TC_4_24	J1939	JB 3 B
TC_4_570		CK 2 D
TC_4_1284		BB 0 C
TC_5_5416	W/O_W/O_40t_m	EA 1 C
TC_5_6837		ED 0 B
TC_6_5416	W/O_W/O_40t_m	EA 0 C
TC_6_6837		ED 0 B
TC_7_5416		EA 0 C
TC_8_971	30 TWISTS PER METER	BB 1 C
TC_8_5416		EA 0 C
TC_9_971	30 TWISTS PER METER	BB 1 C
TC_9_5416	W/O_W/O_40t_m	EA 2 C
TC_10_5416	W/O_W/O_40t_m	EA 2 C
TC_11_971	W/O_W/O_40t_m	DC 0 B
TC_12_5416	Y_GN_30t_m	EA 3 C
TGW_IGN_SP3_1:A		NA 2 E
TGW_IGN_SP3_1:B		NA 2 E
TGW_IGN_SP3_2:A		NA 2 D

https://truckmanualshub.com/

REFERENCES

REF	DESCRIPTION	PAGE
TGW_IGN_SP3_2:B		NA 2 D
TGWBB1:A		BM 0 E
TGWBB1:A		BM 3 D
TGWBB1:B		BM 0 E
TGWBB1:B		BM 3 D
TGWBB1:C		BM 1 E
TGWBB1:C		BM 3 D
TGWBB1:D		BM 1 E
TGWBB1:D		BM 3 D
TGWBB1:E		BM 1 E
TGWBB1:E		BM 3 D
TGWBB1:F		BM 1 E
TGWBB1:F		BM 3 D
TGWBB1:G		BM 1 E
TGWBB1:G		BM 3 D
TLBU:A		GF 1 C
TLBU:A		GF 3 B
TLBU:B		GF 1 C
TLBU:B		GF 3 B
TLRE:A		GF 1 C
TLRE:A		GF 3 B
TLRE:B		GF 0 C
TLRE:B		GF 2 B
TLRE:C		GF 0 C
TLRE:C		GF 2 B
TLRE:D		GF 1 C
TLRE:D		GF 2 B
TLRE:E		GF 1 D
TLRE:E		GF 2 B
V2_MATE	DIODE MODULE, AUTO START IGNITION	BE 0 B
V25	DIODE, DOOR STATUS	GH 2 B
V35	Diode	BA 2 D
V36	DIODE	BA 2 D
X0A_MATE	SPLICE PACK, GROUND	AD 3 C
X0A_MATE	SPLICE PACK, GROUND	BA 1 D
X0A_MATE	SPLICE PACK, GROUND	BC 2 C
X0A_MATE	SPLICE PACK, GROUND	BD 3 C
X0A_MATE	SPLICE PACK, GROUND	BF 4 C
X0A_MATE	SPLICE PACK, GROUND	BI 0 C
X0A_MATE	SPLICE PACK, GROUND	BJ 3 B
X0A_MATE	SPLICE PACK, GROUND	FB 2 C
X0B_MATE	SPLICE PACK, REVERSE	BE 2 C
X0C_MATE	SPLICE PACK, ILLUMINATION	BA 0 A
X0C_MATE	SPLICE PACK, ILLUMINATION	BD 2 A
X0C_MATE	SPLICE PACK, ILLUMINATION	BG 0 A
X0C_MATE	SPLICE PACK, ILLUMINATION	BI 1 A
X0C_MATE	SPLICE PACK, ILLUMINATION	CB 2 A
X0C_MATE	SPLICE PACK, ILLUMINATION	DB 1 A
X0C_MATE	SPLICE PACK, ILLUMINATION	DD 1 A
X0C_MATE	SPLICE PACK, ILLUMINATION	FB 2 A

REF	DESCRIPTION	PAGE
X0C_MATE	SPLICE PACK, ILLUMINATION	GH 2 A
X0C_MATE	SPLICE PACK, ILLUMINATION	GI 2 A
X0C_MATE	SPLICE PACK, ILLUMINATION	GJ 1 A
X0C_MATE	SPLICE PACK, ILLUMINATION	NA 1 A
X0C_MATE	SPLICE PACK, ILLUMINATION	NC 1 A
X06D_MATE	BODY BLDR CONN. ALLISON GEN. 4	BH 1 C
X07A	Power Outlet #1	KC 0 B
X07B	Power Outlet #2	KC 0 C
X07C	POWER OUTLET SLPR	HE 2 C
X07D	POWER OUTLET SLPR	HE 2 C
X07E	Interior Storage Power Outlet	KC 0 C
X07TV	POWER OUTLET TV	HE 2 C
X10	B+ PASS THRU, CAB	AA 0 B
X10	B+ PASS THRU, CAB	AC 4 D
X10	B+ PASS THRU, CAB	DB 0 B
X10_C1	L.H. CAB B+ STUD	AA 0 B
X10_C3	L.H. CAB B+ STUD	DB 0 B
X10_C4	L.H. CAB B+ STUD	AC 4 D
X10_C5	B+ PASS THRU, CAB	AC 4 D
X10_C7		AC 4 D
X10A	LH CAB EPDM B + STUD	HE 0 A
X10B	LH CAB EPDM B+ STUD	BK 0 B
X11	CONNECTOR, ENGINE MANAGEMENT INTERFACE	CA 0 C
X11A	CONNECTORS CUMMINS ISX-G ENGINE INTERFACE	CJ 0 C
X16	POWER STUD, EPDM	AB 3 C
X16	POWER STUD, EPDM	AC 4 C
X16_C1	STUD, EPDM POWER	AC 4 D
X16_C2	STUD, EPDM POWER	AC 4 C
X17A	RECEPTACLE 120VAC EXTERNAL	HF 1 C
X17B	RECEPTACLE 120VAC LEFT SLEEPER	HF 3 D
X17C	RECEPTACLE 120VAC RIGHT SLEEPER	HF 3 D
X17D	RECEPTACLE 120VAC RIGHT SLEEPER	HF 1 C
X17E	RECEPTACLE 120VAC LEFT SLEEPER	HF 1 D
X21D	Socket, Body builder connector	BY 1 A
X21E	Socket Body Builder Connector	BY 1 D
X31	TERMINAL, TRAILER FUNCTION 10 POLE	GG 3 D
X31_B2	JUNCTION CLEARANCE LMP	BN 2 B
X31_B2	JUNCTION CLEARANCE LMP	GG 3 E
X31_B3	JUNCTION LH TURN	GG 3 D
X31_B4	JUNCTION STOP LAMPS	BN 3 B
X31_B4	JUNCTION STOP LAMPS	GG 2 E
X31_B5	JUNCTION RH TURN	GG 2 D
X31_B6	JUNCTION TAIL LAMPS	BN 2 B
X31_B6	JUNCTION TAIL LAMPS	GG 2 E
X31_B8	JUNCTION REVERSE PWR	BN 3 B
X31_B8_A	JUNCTION REVERSE SIGNAL	GG 2 E
X31_B9	JUNCTION NEUTRAL PWR	GG 2 E
X32	TERMINAL BLOCK, ISO 3731 7 POLE	GJ 2 D
X32_1		GJ 2 D
X32_7		GJ 2 D

https://truckmanualshub.com/

REFERENCES

REF	DESCRIPTION	PAGE
X34	JUNCTION, CB BINDING POST	KC 1 C
X34D1_MATE	JUNCTION, CB #1 IN D-PANEL	KC 1 C
X34D2_MATE	JUNCTION, CB #2 IN D-PANEL	KC 1 C
X34R		KC 3 C
X34R3	JUNCTION, O/HEAD CB 3 PIN CONN.	KC 3 C
X40	Strip, Option Junction Studs	BM 3 B
X40	Strip, Option Junction Studs	BU 2 A
X40	Strip, Option Junction Studs	BV 2 A
X40	Strip, Option Junction Studs	BW 2 A
X40	Strip, Option Junction Studs	BX 2 B
X40	Strip, Option Junction Studs	BZ 0 B
X40	Strip, Option Junction Studs	GQ 4 C
X40	Strip, Option Junction Studs	NB 2 C
X40_C1	X40 JUNCTION BLOCK, TERMINAL, STUD 1	BM 1 B
X40_C2	X40 JUNCTION BLOCK, TERMINAL, STUD 2	BM 1 B
X40_C5	X40 JUNCTION BLOCK, TERMINAL, STUD 5	BM 1 B
X40_C6	X40 JUNCTION BLOCK, TERMINAL, STUD 6	BM 1 B
X40_C7	X40 JUNCTION BLOCK, TERMINAL, STUD 7	BM 1 B
X40_C7_1	X40 JUNCTION BLOCK, TERMINAL, STUD 7	BK 2 B
X40_D1	X40 JUNCTION BLOCK TERMINAL, STUD 1	BZ 0 B
X40_D2	X40 JUNCTION BLOCK TERMINAL, STUD 2	BZ 0 B
X40_D5	X40_D4 J1708BL	BZ 0 B
X40_D6	X40_D6 J1708BH	BZ 1 B
X40_D7	X40 JUNCTION BLOCK TERMINAL, STUD 7	BZ 1 B
X61	CONNECTOR, LIFT GATE POWER CIRCUIT RECEPT	ND 0 B
X87	Connector, Cummins Crossover	CL 4 D
X89	Connector, Water-in-fuel Sensor	CF 0 D
X89	Connector, Water-in-fuel Sensor	CL 0 C
X109_L1		AC 4 B
X109_L2		AD 1 A
X109L	Jump Start Cable Stud	AC 4 B
X109L	Jump Start Cable Stud	AD 1 A
X135	GROUND FIFTH WHEEL	AD 0 D
X192	CONNECTOR CUMMINS CES	CL 2 D
X200	CONNECTOR, RS232	JC 4 C
XC1	LH CAB GND	AD 1 C
XC1	LH CAB GND	AF 3 D
XC1_10		AD 1 D
XC1_11		AD 2 E
XC1_12	LH CAB GND STUD	AD 2 E
XC1_13		AD 2 D
XC1_C1	L.H. CAB GND STUD	AD 2 C
XC1_C2	L.H. CAB GND STUD	AD 2 C
XC1_C3	L.H. CAB GND STUD	AD 2 C
XC1_C5	L.H. CAB GND STUD	AD 2 D
XC1_C6	L.H. CAB GND STUD	AD 1 D
XC1_C7	L.H. CAB GND STUD	AD 1 D
XC1_C7	L.H. CAB GND STUD	GE 1 D
XC1_C8	L.H. CAB GND STUD	AD 1 C
XC1_C9	L.H. CAB GND STUD	AD 1 C

REF	DESCRIPTION	PAGE
XC1_C9	L.H. CAB GND STUD	AF 3 C
XC1_C10	L.H. CAB GND STUD	AD 1 D
XC1_C11	LH CAB GND STUD	AD 1 D
XC1_C12		AF 2 C
XC1_C13		AD 1 D
XC1_C13		BN 2 B
XC1_C14		AD 2 D
XC1_C15		CJ 3 B
XC_BB	BODY BUILDER GND STUD	BJ 3 B
XC_BB	BODY BUILDER GND STUD	BK 1 A
XF1	STUD, FRAME RAIL	AD 0 C
XF1	STUD, FRAME RAIL	AF 1 D
XF1	STUD, FRAME RAIL	ND 0 C
XF1_1	STUD, FRAME RAIL	AF 1 D
XF1_2	STUD, FRAME RAIL	ND 0 C
XF1_A1	STUD, FRAMERAIL	AD 0 C
XF1_A2	TERMINAL, FRAMERAIL GROUND	AD 0 C
XF1_C2		AD 0 B
XF1_C3	FRAME GROUND	AD 0 C
XF1_C3	FRAME GROUND	AF 1 D
XF1_C4	GND FUSE HOLDER	AD 1 C
XF1_C5	GND FUSE HOLDER	AD 1 C
XF1_C6	GND BATTERY	AD 2 B
XF1A11	GROUND, ECS	EC 1 B
XF_C6	Inverter Case Ground	HF 0 C
XF_C61	Inverter Earth Ground	HF 0 C
XG9	STUD, ENGINE BLOCK	AF 2 C
XG9	STUD, ENGINE BLOCK	CJ 3 A
XG9_C1	ENGINE GND	AD 0 D
XG9_C1	ENGINE GND	AF 1 C
XG9_C2		AF 2 B
XG9_C3		AF 2 B
XG9_C4		AF 2 B
XH	GROUND JUNCTION	AD 2 D
XH	GROUND JUNCTION	EC 1 B
Y11	SOL. VALVE, ABS,LHS,FRT,	EA 0 B
Y11	SOL. VALVE, ABS,LHS,FRT,	ED 0 C
Y12	SOL. VALVE ABS,RHS,FRT.	EA 1 B
Y12	SOL. VALVE ABS,RHS,FRT.	ED 1 C
Y13	SOL. VALVE ABS,LHS,REAR	EA 1 D
Y13	SOL. VALVE ABS,LHS,REAR	ED 0 A
Y14	SOL. VALVE ABS,RHS,REAR	EA 1 E
Y14	SOL. VALVE ABS,RHS,REAR	ED 1 A
Y15	SOL. VALVE ABS,LHS, 3RD AXLE	EA 3 D
Y15	SOL. VALVE ABS,LHS, 3RD AXLE	ED 3 D
Y16	SOL. VALVE ABS,RHS, 3RD AXLE	EA 2 D
Y16	SOL. VALVE ABS,RHS, 3RD AXLE	ED 3 D
Y18	Solenoid valve, PTO (Power Take Off)	FD 1 D
Y18G	SOLENOID TRANS PTO 1	BC 3 D
Y18G	SOLENOID TRANS PTO 1	DA 4 D

https://truckmanualshub.com/

REFERENCES

REF	DESCRIPTION	PAGE
Y18H	SOLENOID TRANS PTO 2	BC 4 D
Y18H	SOLENOID TRANS PTO 2	DA 3 D
Y25A	SOLENOID LEVEL CONTROL DRIVE AXLES	EC 1 B
Y29A	SOLENOID LEVEL CONTROL AUX. AXLE	EC 2 B
Y35	SOLENOID, ENGINE FAN	CA 2 C
Y35	SOLENOID, ENGINE FAN	CE 0 B
Y35	SOLENOID, ENGINE FAN	CJ 3 D
Y35	SOLENOID, ENGINE FAN	CK 0 D
Y42	CLUTCH, MAGNETIC, A/C COMPRESSOR	HA 3 C
Y51	SOL VALVE, AIR DRYER	FA 2 D
Y51_A	SOL VALVE AIR DRYER	FA 1 C
Y52	SOL. VALVE, RH, AIR DRYER	FA 1 D
Y53:A		FA 3 C
Y53:B		FA 3 C
Y57	SOL. VALVE, AUTO TRACTION CTRL	EA 1 D

REF	DESCRIPTION	PAGE
Y57	SOL. VALVE, AUTO TRACTION CTRL	ED 1 A
Y57_SA	SOLENOID VALVE, TRACTION CONTROL, STEER A	ED 4 D
Y62	SOLENOID ACCUMULATOR	DC 1 C
Y80	SOLENOID VALVE, UREA DOSING UNIT	CD 2 B
Y80A	DEF INJ VALVE	CF 1 C
Y81	SOLENOID VALVE, UREA HEATING TANK	CD 2 D
Y81A		CF 1 C
Y81A		CL 1 C
Y86	SOL, MULTI VALVE ASSY.	FB 0 D
Y100	SOLENOID VALVE, TRAILER ABS FOR BENDIX ES	ED 2 D
Y106	SOLENOID HILL ASSIST BRAKE	ED 4 D
Y110	SOLENOID VALVE, OIL THERMOSTAT	DA 4 B
Z01	CONNECTOR, VEH DIAG.	XA 1 C
Z10	CONNECTOR DIAGNOSTIC	XC 2 C