Repair manual

MAN Industrial Diesel Engines

D 2842 LE 620

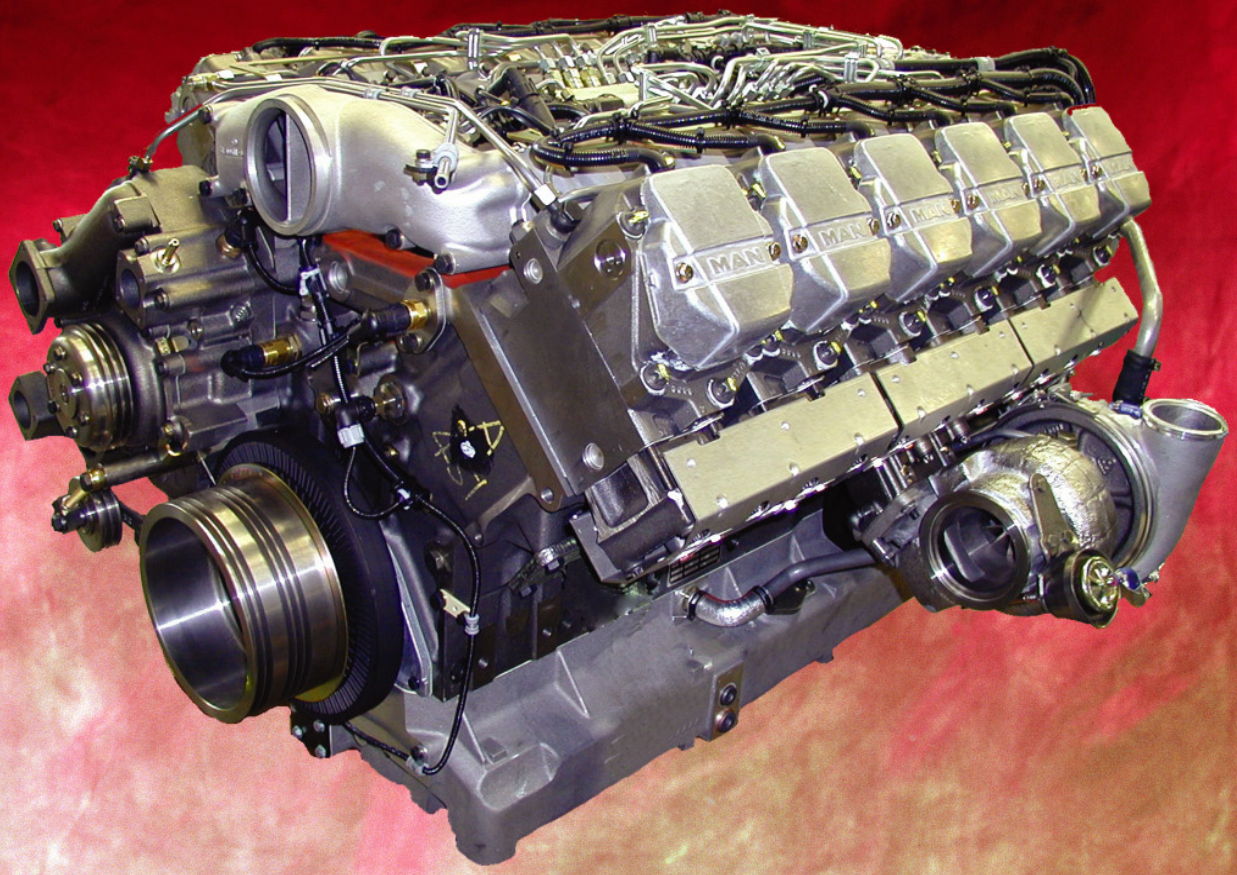

https://truckmanualshub.com/

https://truckmanualshub.com/

This Repair Manual is designed to facilitate competent repair of the engines listed herein.

The pictures and relevant descriptions show typical work that may not always be applicable to the engine in hand, which nevertheless does not mean that they are not correct.
In such cases the repair work is to be planned and carried out in a similar way.

Please note that all jobs described in this Repair Manual were carried out on an engine which was not installed.

The expert knowledge necessary for handling Diesel engines was taken for granted when this publication was compiled.

Note:
Only use fuel, coolants and lubricants in accordance with MAN regulations, otherwise the manufacturer's warranty will not apply!
For basic information on the fuels see the publication "Fuels, Lubricants and Coolants for MAN Diesel Engines".
You can find the approved products on the Internet at:
–**http://www.man-mn.com**/ → **Products & Solutions** → **E-Business**–

Any repair of components such as injection pump, alternator etc. ought to be left to our or the manufacturer's service department.

Yours faithfully,
MAN Nutzfahrzeuge Aktiengesellschaft
Nuremberg Works

We reserve the right to make technical modifications in the course of further development.

© 2004 MAN Nutzfahrzeuge Aktiengesellschaft
Reprinting, copying or translation, even in the form of excerpts, is forbidden without the written permission of MAN. MAN expressly reserves all rights in accordance with the law on copyright.

MTDB Technical status: 11.2004 51.99598–8157

Important instructions which concern technical safety and protection of persons are emphasised as shown below.

Danger:
This refers to working and operating procedures which must be complied with in order to rule out the risk to persons.

Caution:
This refers to working and operating procedures which must be complied with in order to prevent damage to or destruction of material.

Note:
Explanations useful for understanding the working or operating procedure to be performed.

Fitting flat seals / gaskets

Flat seals / gaskets are often inserted with sealing agents or adhesives to make fitting them easier or to achieve better sealing. Flat seals may slip in operation due to the “sewing-machine” effect, in particular if they are used between parts with different rates of linear expansion under heat (e.g. aluminium and cast iron), and leaks may then occur.

Example:
the cap of the front crankshaft seal. If a sealing agent or an adhesive is used here the flat seal will move inwards in the course of time as a result of the different expansion rates of the materials. Oil will be lost, for which the shaft seal may be thought to be responsible.

Flat seals / gaskets can be fitted properly only if the following points are observed:

- Use only genuine MAN seals/gaskets.
- The sealing faces must be undamaged and clean.
- Do not use any sealing agent or adhesive – as an aid to fitting the seals a little grease can be used if necessary so that the seal will stick to the part to be fitted.
- Tighten bolts evenly to the specified torque.

https://truckmanualshub.com/

Engine type classification 5
Safety instructions 6
Troubleshooting table 12
General notes on engine overhaul 15
Commissioning after engine overhaul 16
Engine views D 2842 LE 620 18
Engine lubrication schedule 20
Fuel diagram 22
Schematic diagram of cooling system 23

Fuel system
Check the base fitting of the high−pressure pump 24
Removing and installing the high-pressure lines 26
Removing and installing high-pressure pump 27
Removing and installing the rail 29
Removing and installing the rail pressure sensor, pressure relief valve 31
Removing and installing the injectors 32
Fuel prefilter with water separator 37
Fuel filter, exchanging filter cartridge 38
Flame-starter sheathed-element glow plug, removing and installing 39

Cooling system
Draining and filling coolant 40
Removing and installing thermostats 41
Removing and installing coolant pump 42
Repairing coolant pump with high-temperature and low-temperature parts 44
Cleaning cooling system 51

Lubrication
Changing oil filter 53
Removing and installing the oil cooler 54
Removing and installing, repairing oil pump 55
Oil injection nozzle 59

Flywheel / Crankshaft seal
Removing and fitting vibration damper, replacing front crankshaft gasket 61
Removing and installing flywheel,replacing starter gear ring 65
Replacing crankshaft seal (flywheel end) 67
Replacing the bearing race 68
Crankshaft gaskets 69

Intake / exhaust system
Removing and installing intake manifold 70
Removing and installing exhaust pipe 71
Turbocharger, trouble shooting 72
Checking the charge-air pressure 74
Removing and installing turbocharger 75
Checking axial and radial clearance of turbocharger rotor shaft 77

Cylinder head
Removing and installing the cylinder head 78
Setting the valve clearance 82
Dismantling and assembling the rocker arm mechanism 83
Removing and installing valves 87
Removing and installing valve guides 93
Replacing valve seat insert 94
Reworking valve seat 96
Refacing valves 99

https://truckmanualshub.com/

Valve timing
Removing and installing the gear case 100
Removing and installing camshaft 102
Removing and fitting camshaft bearing bushes 105
Checking the valve timing 114

Crankgear, pistons
Removing and installing crankshaft 115
Removing and installing pistons with conrods 118
Removing pistons from conrod and fitting, checking – replacing conrod 121
Removing and installing piston rings 123
Replacing cylinder liners 125
Measuring piston protrusion 129

Attachments
Removing and installing starter motor 130
V–belts 131
Tensioning and changing V–belt 132
Removing and installing speed pickup 133

Service Data
Specifications 136
Crankcase 137
Cylinder liner 137
Crankshaft 138
Flywheel and starter gear ring 141
Conrods 142
Pistons 143
Cylinder head 144
Valve gear 146
Engine lubrication D 2842 LE 620 149
Cooling system 151
Repairing coolant pump with high–temperatureand low–temperature parts 151
Turbocharger 152
Fuel system 153
Starter motor 154
Torque guide values 155

Special tools 161

Index 174

https://truckmanualshub.com/

All the engines dealt with here are related in terms of their design and make up a family.

The type classification, which is made up of a series of letters and numbers, reveals some of the features of the engine in question provided the reader is familiar with the underlying nomenclature.

The system is explained below using the model type D 2842 LE 620 as an example:

D	The “D” at the start of the type classification stands for “**Diesel**”
28	The numbers “28” indicates that the power plant in question has a bore of 1**28** mm
4	The “4” means 1**4**2 mm stroke
2	The “2” indicates that there are 12 **cylinders. If there is a “0”, this is a 10–cylinder engine**
L	This letter stands for “**charge–air cooling**” (German: Ladeluftkühlung)
E	The “E” stands for “**fitted engine**” (German: Einbaumotor) and is intended to distinguish MAN vehicle engines
620	This is a factory-internal development number

General information

This brief overview summarises important instructions and is structured into areas of main concern in order to impart the knowledge necessary to prevent accidents involving injury to persons, damage to the engine or other property and harm to the environment. Additional notes are included in the operator's manual for the engine.

Important:
If despite all safety precautions an accident occurs as a result of contact with caustic acids, penetration of fuel into the skin, scalding with hot oil, anti-freeze splashes into the eyes etc, ***consult a doctor immediatel.***

1. Instructions for preventing accidents with injury to persons

Checks, setting jobs and repair work must be carried out by authorised skilled personnel only.

- When carrying out maintenance and repair work, ensure that the engine cannot be accidentally started from the bridge by unauthorised persons.
- The engine must be started and operated by authorised personnel only.
- When the engine is running, do not get too close to revolving components.
  Wear tight-fitting working clothes.

- Do not touch hot engine with bare hands: risk of burning yourself.

- Keep engine vicinity, ladder and steps free of oil and grease. Accidents resulting from slipping may have serious consequences.
- Work only with tools that are in good condition. Worn spanners slip: risk of injuries.
- Persons must not stand under an engine suspended from a crane hook.
  Keep lifting gear in good order.

- Open coolant circuit only after the engine has cooled down. If opening the coolant circuit while the engine is hot is unavoidable, observe the instructions in the chapter "Maintenance and care" in the Operator's Manual.
- Neither retighten nor open pressurised pipelines and hoses (lube oil circuit, coolant circuit and downstream hydraulic oil circuit if fitted): risk of injuries resulting from emerging fluids.

- When checking the injection nozzles, do not hold your hands in the fuel jet.
  Do not inhale fuel mist.

https://truckmanualshub.com/

- When working on the electrical system, unplug earth cable from battery first and reconnect it last to avoid short-circuits.

- Observe the manufacturer's instructions for handling batteries.
  Caution:
  Battery acid is toxic and caustic. Battery gases are explosive.

- When carrying out welding work, observe the "Information sheets for welders".

2. Instructions for preventing damage to the engine and premature wear

- ***Prior to repairing the engine, clean it thoroughly. Ensure that dirt, sand or foreign matter will not get into the engine during repair work.***
- In the event of operational faults immediately identy the cause and rectify to prevent more serious damage.
- Always use genuine MAN parts only. Installation of "equally" good parts from other suppliers may cause severe damage for which the workshop carrying out the work is responsible.
- Never operate the engine while it is dry, i.e. without lubricant or coolant.
  Use a suitable label to mark engines not ready for operation.
- Only use operating materials (fuel, engine oil, antifreeze and anticorrosion agents) approved by MAN. Ensure that everything is kept clean. Diesel fuel must be free of water.
- ***Do not fill up with engine oil above the max. notch on the dipstick. Do not exceed the engine's maximum permissible operating inclination.***
  Non-compliance with these instructions may cause severe engine damage.
- Control and monitoring devices (charge check, oil pressure, coolant temperature) must work faultlessly.
- Observe the instructions for operating the alternator; see chapter "Maintenance and care" in the Operator's Manual.

https://truckmanualshub.com/

3. Instructions for preventing environmental damage

Engine oil and filter cartridges and elements, fuel / fuel filters

- Take old oil to an old oil disposal point only.
- Ensure without fail that oil and Diesel fuel will not get into the sewerage system or the ground.
  Caution:
  Danger of contaminating potable water!
- Treat filter elements and cartridges as special waste.

Coolant

- Treat undiluted anticorrosion and / or antifreeze agents as special waste.
- The regulations of the relevant local authorities are to be observed for the disposal of spent coolants.

4. Instructions for handling used engine oil *

Prolonged or repeated contact of any kind of engine oil with the skin causes the skin to degrease, which may result in dryness, irritation or inflammation. Old engine oil also contains hazardous substances which in animal experiments have caused skin cancer. Handling old engine oil does not pose any health hazard if the basic safety and hygiene related regulations are observed.

Health and safety regulations:

- Avoid prolonged, excessive or repeated contact of old engine oil with the skin.
- Use a suitable skin protection agent or wear protective gloves.
- Clean the skin that has been in contact with engine oil.
  - Wash yourself thoroughly with soap and water. A nailbrush is an effective aid.
  - Special hand cleaning agents facilitate cleaning soiled hands.
  - Do not use petrol, Diesel fuel, gas oil, fluxes or solvents as cleaning agents.
- After washing apply moisturising handcream to your skin.
- Change oil-soaked clothes and shoes.
- Do not put any oil-soaked cloths into pockets.

Pay meticulous attention to the proper disposal of old engine oil.
– Old oil is a water hazard –

Therefore, do not pour any old oil into the ground, the drains or the sewerage system. Any violation of this rule is punishable.

Collect and dispose of old engine oil properly. For information concerning collection points, contact seller, supplier or the local authorities.

* Based on the “Information sheed for handling used engine oil”
(Notes on how to handle old engine oil).

https://truckmanualshub.com/

5. Special instructions when working on the common rail system

Accident protection

- **Risk of injury!**
  Fuel jets can cut through skin.
  The atomisation of fuel creates a fire risk.

  - When the engine is running **never** loosen the screw connections on the fuel's high-pressure side of the common rail system (injection line from the high-pressure pump to the rail, on the rail and on the cylinder head to the injector)

  - Keep away from the engine when it is running

- **Risk of injury!**
  When the engine is running the lines are constantly under a fuel pressure of up to 1600 bar.

  - Wait at least a minute until the pressure in the rail has dropped before loosening a screw connection
  - If necessary check the pressure drop in the rail with MAN-Cats

- **Risk of injury!**
  - People with pacemaker must keep at least 20 cm away from the running engine

  - Do not touch live parts on the electric connection of the injectors when the engine is running

https://truckmanualshub.com/

Cleanliness

Today modern components of diesel injection consist of high-precision parts which are exposed to extreme stresses. The high-precision technology requires the **utmost cleanliness** during all work on the fuel system.
Even a particle of dirt over **0.2 mm** can lead to the failure of components.

The measures described as follows are therefore **essential** before work begins:

Risk of damage from penetration of dirt!

- Before working on the clean side of the fuel system clean the engine and the engine compartment (high-pressure cleaner). During cleaning the fuel system must be closed
- Carry out visual inspection for any leakage or damage to the fuel system
- Do not spray the high-pressure cleaner direct onto the electric components, or alternatively keep them covered
- Do not carry out any welding or sanding work in the engine compartment during maintenance / repair
- Avoid air movements (any swirling of dust when starting engines)
- The area of the still closed fuel system must be cleaned and dried with the aid of compressed air
- Remove detached particles of dirt such as paint chippings and insulation material with a suitable extractor (industrial type vacuum cleaner)
- Cover areas of the engine compartment from which dust particles could be detached with clean foil
- Wash your hands and put on clean work clothes before starting the disassembly work
- Clean tools and working materials before starting to work

https://truckmanualshub.com/

When carrying out the work it is **essential** to comply with the following measures:

Risk of damage from penetration of dirt!

- When the clean side of the fuel system has been opened it is not permissible to use compressed air for cleaning
- During assembly work loose dirt must be removed with the aid of suitable extractors (industrial type vacuum cleaners)
- Use only fluff-free cleaning cloths on the fuel system
- Only tools without any damage may be used (cracked chrome coatings)
- When removing and installing components do not use materials such as cloths, cardboard or wood since these could shed particles and fine fibres
- If any paint chips / flakes off when connections are loosened (from possible over-coating) these chippings must be carefully removed before finally loosening the screw connection
- The connection openings of all removed parts on the clean side of the fuel system are to be closed **immediately** with suitable caps (see special tools, page 172)
- These caps / stoppers must be packed protected from dust prior to use and after being used once they must be disposed of
- Following this all the components must be carefully stored in a clean, closed container
- **Never** use used cleaning or testing liquids for these components
- New parts must not be removed from their original packing material until directly before use
- Work on removed components may be carried out only at a workplace specially equipped for it
- If removed parts are shipped always use the original packing material of the new part

https://truckmanualshub.com/

Faults and possible causes

We recommend

Repair work is to be considered complete only after the damage which has occurred and the possible causes have been eliminated. Ascertaining the causes of damage is frequently more difficult than eliminating the damage caused. For this reason we recommend you have the operational fault exactly described to you before removal or disassembly work is commenced. Then, track down the probable causes by asking specific questions, examining and eliminating these causes one by one with the aid of the table ***and your own experience.*** This helps to reduce repairs to those necessary and counter complaints about “premature” exchange of parts and expensive working and downtimes.

Remark:

The subsequent list is meant to be a memory aid so that no causes of damage will be overlooked in the elimination of faults. The precondition for this, however, is that you are familiar with the Repair Manual for the engine and the relevant Operator’s Manual as well as the publication “Fuels, Lubricants, Coolants for MAN Diesel Engines”.

1. EDC self-diagnosis	2. Starter motor turns over engine slowly or not at all	3. Starter motor turns, engine fails to start, engine fails to start / difficult to start when cold	4. Engine stalls (dies) during operation, no longer starts (starter motor turns), engine fails to start / difficult to start when hot	5. Sudden, temporary engine shutdown, engine does not reach full revs	6. Engine runs at idle speed only, no throttle response	7. Engine runs at increased idle speed only, no throttle response	8. Rated engine speed significantly reduced (even at no load)	9. Reduced power output in all ranges	10. Irregular engine operation, loss of traction	11. Unstable idle speed, engine surges, misfiring, engine knocking	12. Engine judder	13. Unusual combustion noises	14. Excessive smoke emission: white smoke / blue smoke	15. Excessive smoke emission: black smoke	16. Engine temperature too high (coolant loss)	17. Fuel consumption too high	18. Lubrication oil pressure too low	19. Lube oil pressure too high	20. Lube oil consumption too high	21. Engine too “loud” / mechanical noises	22. Idle speed cannot be adjusted with idle speed operating unit	**Possible causes**
	x	x																				Battery flat, battery lead connections loose or corroded, break in power circuit
	x																					Crankshaft drive blocked
	x	x																				Starter solenoid switch sticks (clicks) / damaged, cable connection loose or damaged
	x	x																				Starter motor / starter interlock relay defective (carbon brushes worked loose / worn, winding damaged, short to ground)
	x															x	x	x				Engine oil viscosity unsuitable, not suitable for ambient temperature, lube oil quality does not comply with specifications
								x										x				Oil level in oil pan too high
																x						Oil level in pan too low, oil in oil pan too thin (mixed with condensate or fuel)
																x						Engine temperature too high
																x						Oil filter clogged
																x	x					Oil pressure gauge defective
																x						Safety valve in the oil circuit defective (does not close, spring fatigued or broken)
																x			x			Heavy bearing wear
																x						Oil pump gears heavily worn
																			x			Timing gears worn, tooth flank backlash too great
									x		x						x					Engine cold
											x											Lube oil entering combustion chamber (piston rings worn, piston rings broken) – valve stem guide worn – overpressure in crankcase (crankcase breather clogged)
																	x					Safety valve in oil circuit defective (does not open), oil lines / oil galleries clogged
																		x				Leaks in lube oil circuit, particularly at turbocharger and oil cooler
									x									x				Piston rings heavily worn, broken
									x										x			Piston pins or crankshaft bearings loose
																		x				Valve stems heavily worn, bent
		x							x										x			Valve clearance not correct
		x							x													Valves jammed
		x	x					x	x													Compression deficient, or more than 3–4 bar pressure difference between individual cylinders
		x							x						x							Valve seats leaking
	o			x											x							Increased power input due to defective secondary loads / consumers such as hydraulic pumps, fan etc., power take-off engaged
				x				x					x		x				x			Air filter fouled or clogged, charge air system leaking, air intake / exhaust lines clogged / leaking
		x	x	x	x			x	x		x		x		x							Fuel low pressure system: fuel tank, prefilter, water trap faulty / clogged / mould / fungal attack, fuel unsuitable / contaminated (paraffin added)
		x	x	x				x	x	x			x		x							Fuel low pressure system: fuel lines leaking, broken, clogged

1. EDC self-diagnosis	2. Starter motor turns over engine slowly or not at all	3. Starter motor turns, engine fails to start, engine fails to start / difficult to start when cold	4. Engine stalls (dies) during operation, no longer starts (starter motor turns), engine fails to start / difficult to start when hot	5. Sudden, temporary engine shutdown, engine does not reach full revs	6. Engine runs at idle speed only, no throttle response	7. Engine runs at increased idle speed only, no throttle response	8. Rated engine speed significantly reduced (even at no load)	9. Reduced power output in all ranges	10. Irregular engine operation, loss of traction	11. Unstable idle speed, engine surges, misfiring, engine knocking	12. Engine judder	13. Unusual combustion noises	14. Excessive smoke emission: white smoke / blue smoke	15. Excessive smoke emission: black smoke	16. Engine temperature too high (coolant loss)	17. Fuel consumption too high	18. Lubrication oil pressure too low	19. Lube oil pressure too high	20. Lube oil consumption too high	21. Engine too “loud” / mechanical noises	22. Idle speed cannot be adjusted with idle speed operating unit	**Possible causes**
		x	x	x				x	x		x		x									Fuel low pressure system: air in system (turn on ignition when bleeding system)
		x	x	x				x	x	x	x		x			x						Fuel low pressure system: feed pump, main filter
		x						x		x	x	x	o	x		x						Fuel high pressure system: injectors defective / clogged / leaking / coked
								x		x	x	x				o						Fuel high pressure system: pressure lines – constriction, cavitation, leaking
			x					x		o	x	x	x	x		o						Fuel high pressure system: high-pressure pump worn
x					x		x	x	x	o												Pedal value sensor (driving lever signal) defective: connection lines, short circuit, interruption
x							x															EDC rpm sensor defective, lead defective
							x			x	o											EDC rpm sensor, polarity reversed
x		x	x	x	o				o	o					o							EDC detects incorrect engine speed (interference signal on rpm sensor lead)
x								x						x								EDC boost pressure sensor: faulty, incorrect, implausible with atmospheric pressure sensor, line fault
								x		x			o	x								Exhaust turbocharger leaking or defective
																				x		Turbine and compressor wheel in the turbocharger soiled (running off balance)
														x								Intercooler leaking, defective
x		o						x	x				o		x							EDC coolant temperature sensor: faulty, line fault
x								x	x													EDC charge-air temperature sensor: faulty, line fault
o								x							x							Radiator fouled or failure of cooling system (temperatures too high)
															x							Coolant level too low, air in the coolant circuit
															x							V-belt for coolant pump drive not tensioned correctly
															x					x		Incorrect V-belt tension
															x							Coolant pump leaking, defective / thermostat defective, does not open
															x							Coolant lines leaking, blocked or twisted
													x									Coolant entering combustion chamber (cylinder head / gasket leaking)
x		x	x	o					o													Power supply to EDC control unit interrupted or battery voltage too low
x		o	o	o																		EDC control unit defective (internal fault)
	x																					Incorrect EDC control unit (check MAN part number)
x																						Afterrunning not completed
								x						x								Thermostat defective
											x											Engine bearings worn

https://truckmanualshub.com/

The service life of an engine is influenced by very different factors. It is therefore not possible to specify certain fixed numbers of operating hours for general overhauls.

In our view, it is not necessary to open up and engine or perform a general overhaul
as long as the engine has good compression values and the following operating values have not changed significantly in relation to the values measured on commissioning the engine:

- Charging pressure
- Exhaust temperature
- Coolant and lubricant temperature
- Oil pressure and oil consumption
- Smoke emissions

The following criteria greatly influence the length of the engine service life:

- Correct power output setting according to the type of application
- Technically correct installation
- Inspection if installation by authorised personnel
- Regular maintenance as per maintenance plan
- Choice and quality of lube oil, fuel and coolant in accordance with the publication “Fuels, Lubricants and Coolants for MAN Diesel Engines”

https://truckmanualshub.com/

Pressurisation

It is extremely important for internal combustion engines (following the completion of repair work, i.e. in their dry state) to be pressurised with lube oil before being recommissioned. This procedure can also be used for ascertaining damage and its causes.

If engines are not pressurised, the risk of premature damage to bearing surfaces is very high because it takes a relatively long period of time for the lube oil drawn in from the oil pan via the oil pump to reach the individual bearings.

Such incipient damage need not necessarily lead to immediate bearing failure, but may impair the proper functioning of the bearings and reduce their service lives.

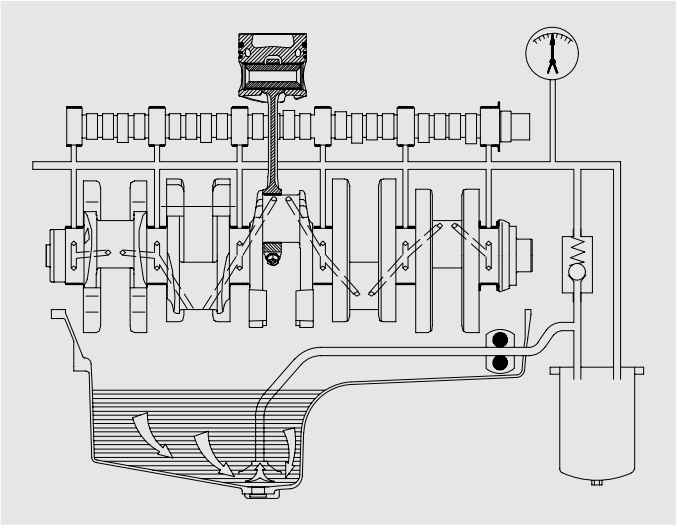

Diagram of the oil flow with unpressurised engines

https://truckmanualshub.com/

Pressurising an engine affords the following advantages:

- All engine parts are lubricated before engine startup; a lubricating film can be built up inside the bearings as early as after the first few rotations of the crankshaft, thereby preventing damage to the bearing races
- Any loss of oil, be it the result of excessively large bearing play or leaks from the crankcase or from crankcase bores which may not be plugged, can be detected immediately. For this purpose, mount the engine on an assembly dolly, remove the oil pan and install a suitable oil collector under the crankcase in such a way that the bearings are visible

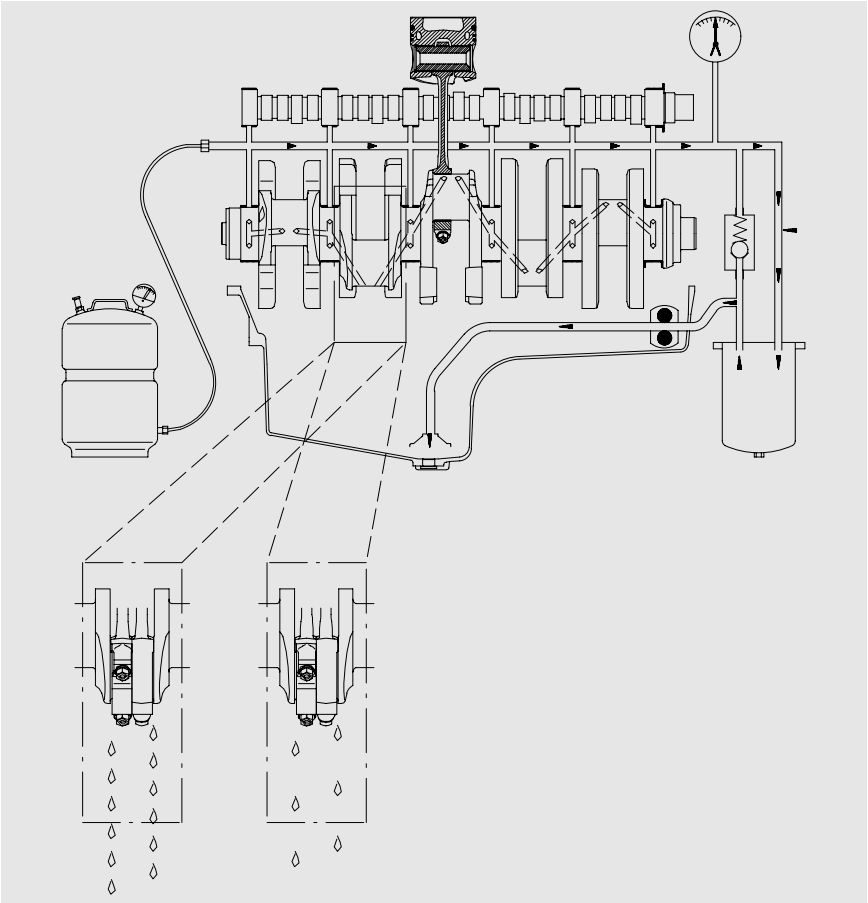

Performance of pressurisation:
At least 30% of the total oil quantity is forced from the pressurisation container into the engine oil circuit. The operating pressure serves as the yardstick for the pressure to be forced in and must not be exceeded. The pressurisation container is connected up to the engine oil circuit at the oil filter (screw plug).

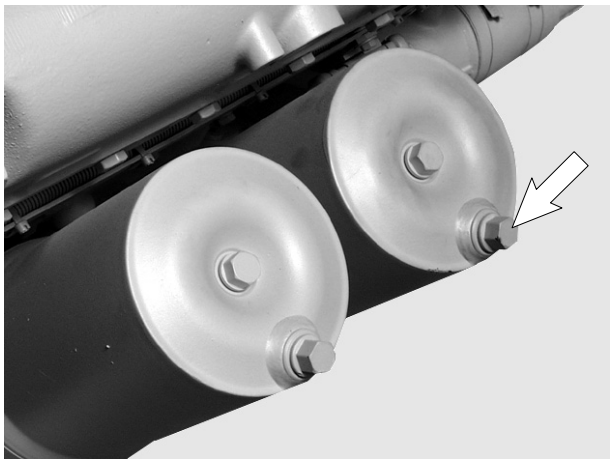

Engine views D 2842 LE 620

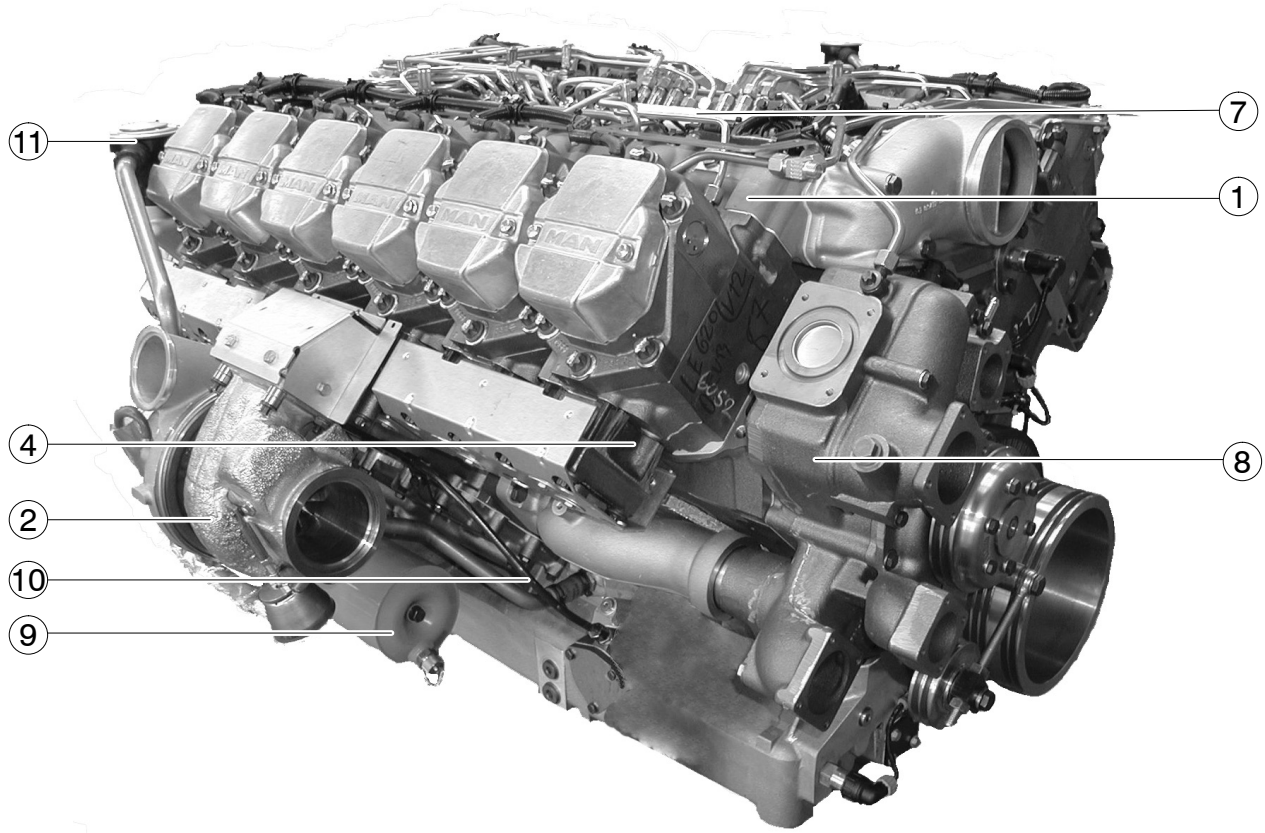

https://truckmanualshub.com/

① In take pipe

② Turbocharger

③ Starter motor

④ Exhaust manifold

⑤ Oil sump

⑥ Tension pulley

⑦ Rail

⑧ Coolant pump

⑨ Oil filter

⑩ Oil dipstick

⑪ Oil separator valve for crankcase breather

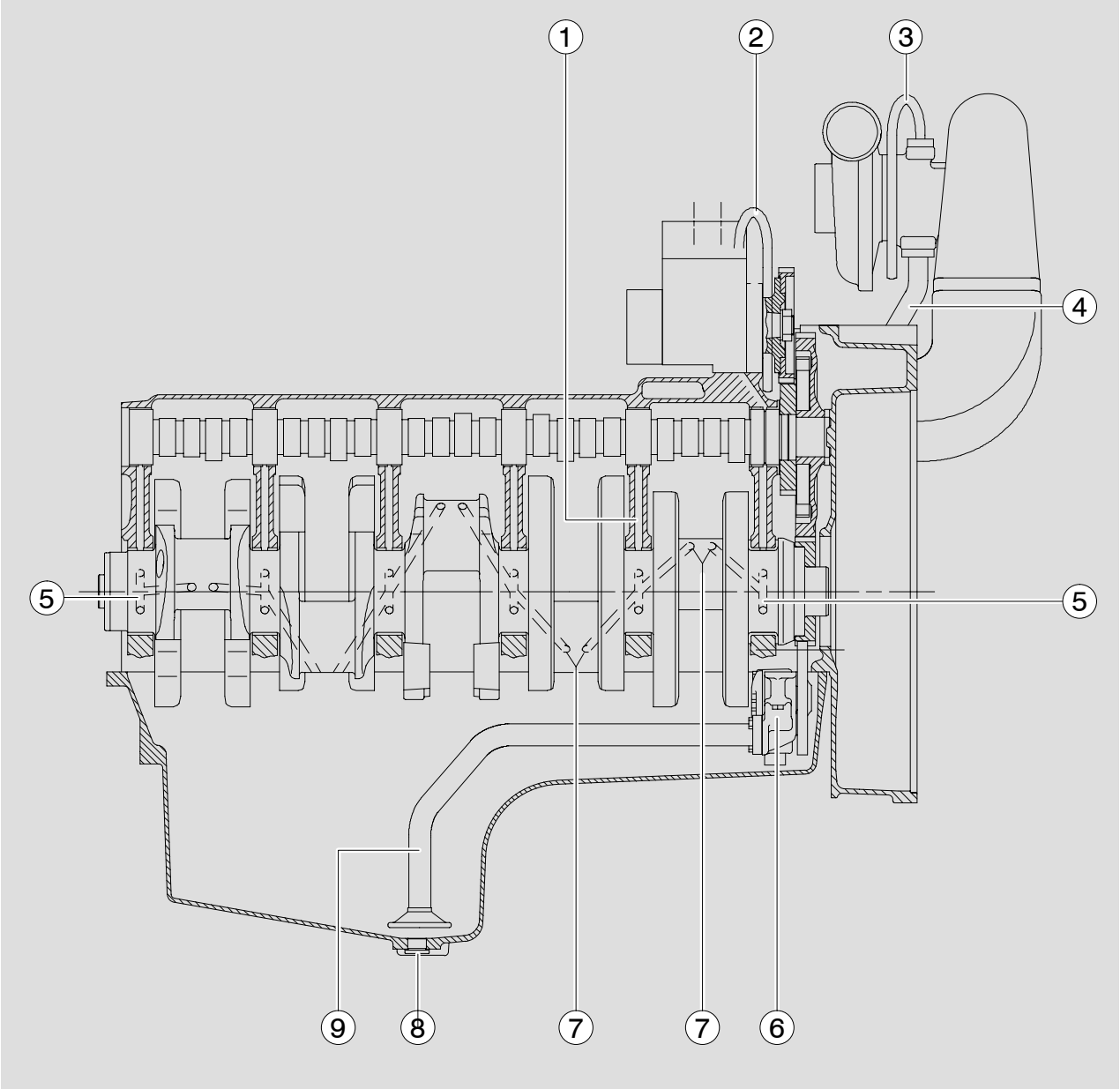

① Oil line to crankshaft
② High–pressure pump lubrication
③ Lubricating oil lines to exhaust turbochargers
④ Oil return line from exhaust turbochargers
⑤ Holes for main bearing lubrication
⑥ Oil pump with oil pressure relief valves
⑦ Holes for conrod bearing lubrication
⑧ Oil drain screw
⑨ Oil intake pipe

https://truckmanualshub.com/

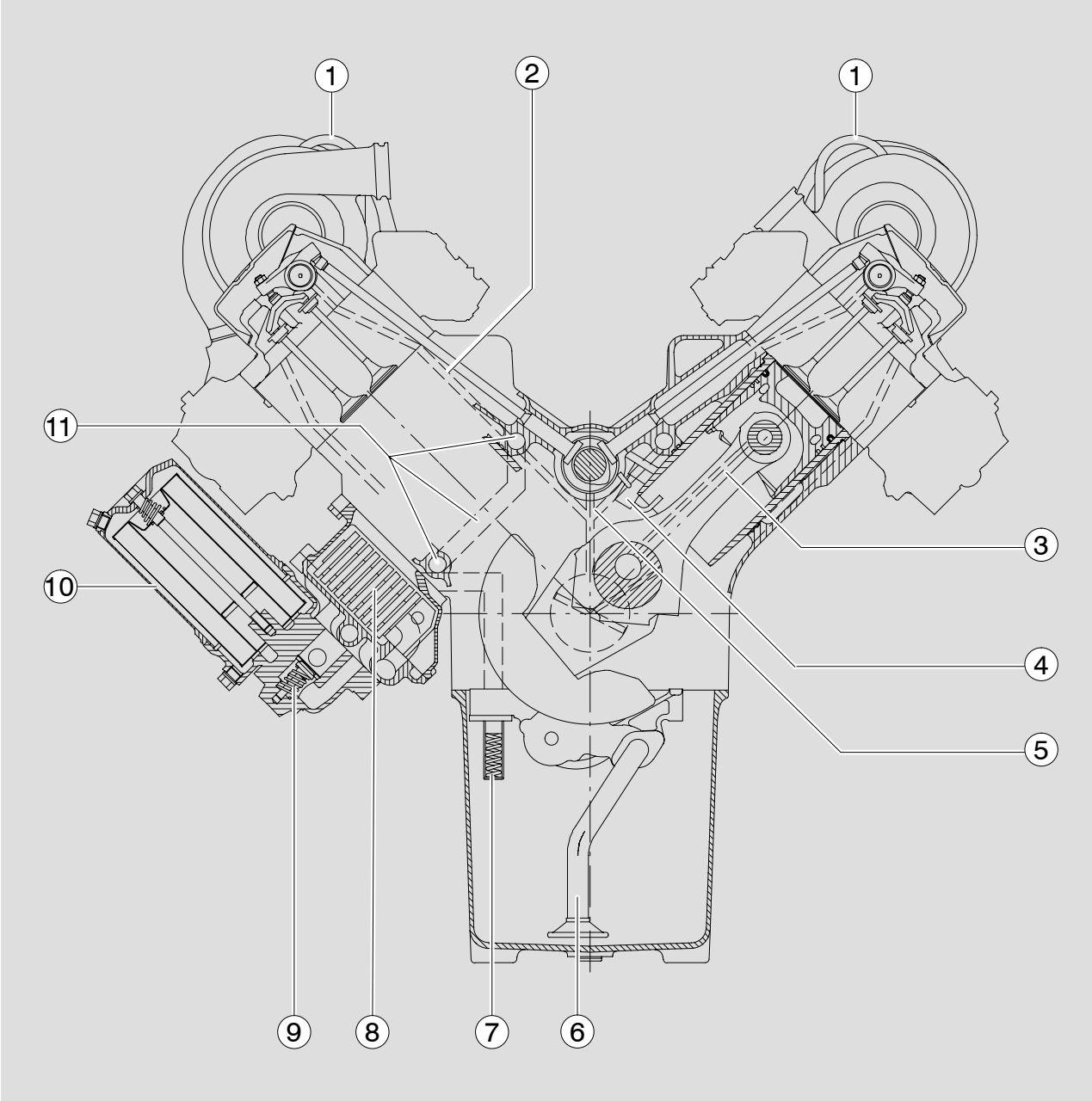

① Lubricating oil lines to exhaust turbochargers

② Rocker arm lubrication

③ Piston pin lubrication

④ Spray nozzles for piston cooling and cam lubrication

⑤ Camshaft bearing lubrication

⑥ Oil intake pipe

⑦ Oil pressure relief valves

⑧ Oil cooler

⑨ Bypass valve

⑩ Oil filter

⑪ Main oil galleries

https://truckmanualshub.com/

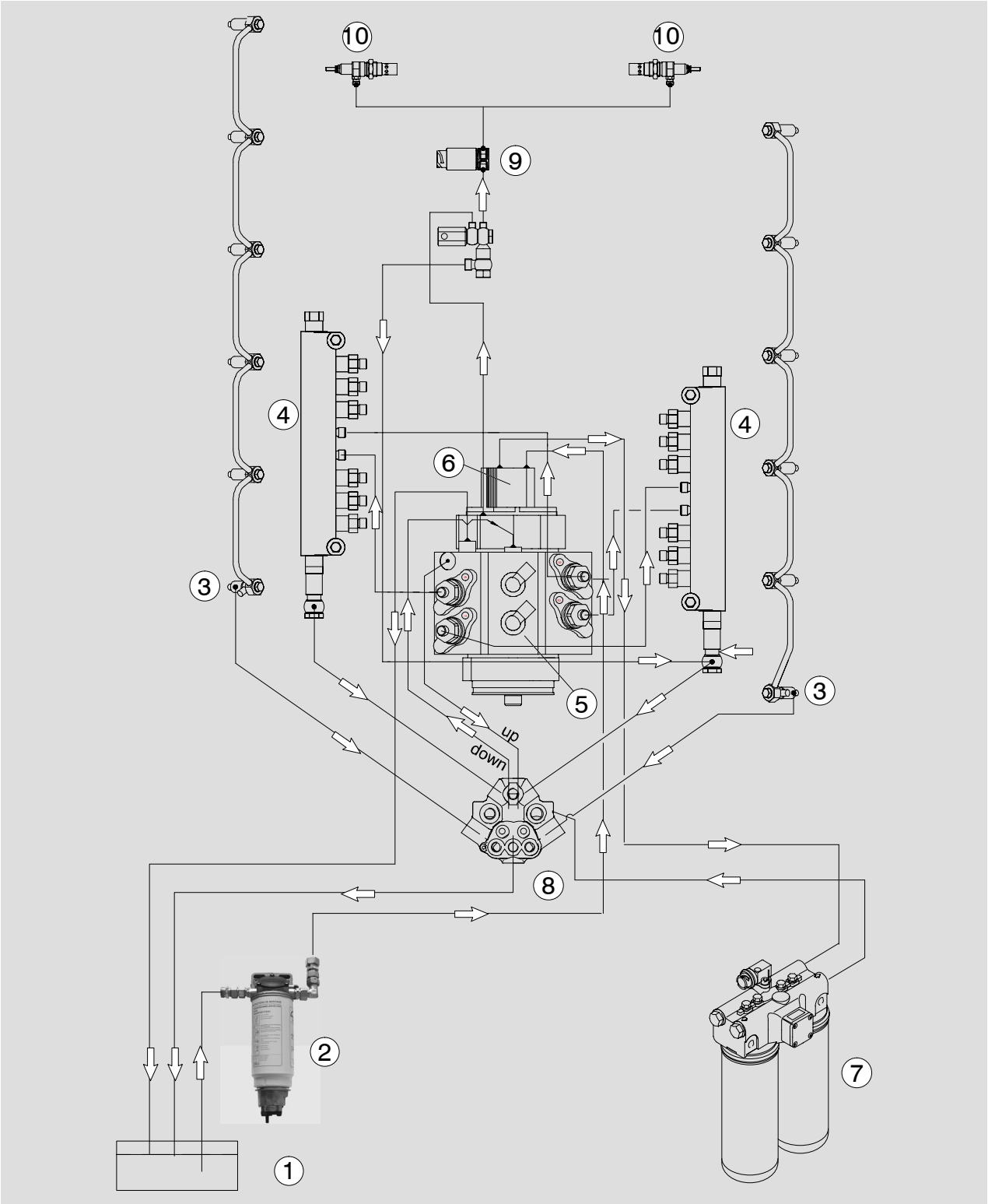

① Tank

② Fuel prefilter with water separator

③ Injector

④ Rail

⑤ High pressure pump

⑥ Fuel pump

⑦ Fuel filter

⑧ Fuel distributor

⑨ Solenoid valve

⑩ Glow plug

https://truckmanualshub.com/

Schematic diagram of cooling system

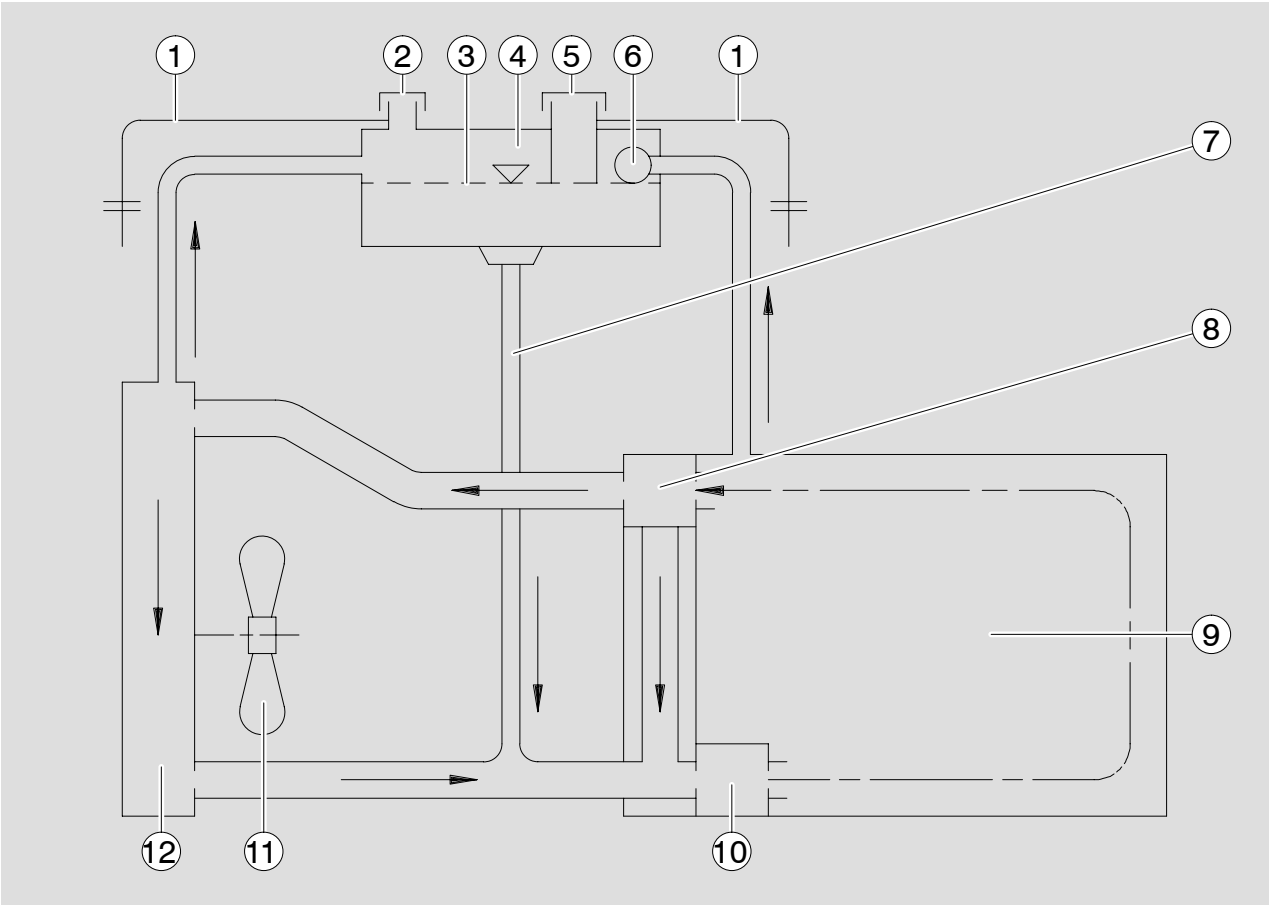

① Overflow and vent pipe

② Positive pressure / negative pressure valve

③ Coolant level in surge tank

④ Surge tank

⑤ Coolant filler neck

⑥ Degassing system

⑦ Filler pipe

⑧ Thermostat

⑨ Engine / crankcase

⑩ Water pump

⑪ Fan

⑫ Radiator / intercooler

https://truckmanualshub.com/

Check the base fitting of the high–pressure pump

Fig. 1 and Fig. 2

For the purpose of checking the start–of–delivery setting, an “OT” (= TDC) mark and a scale from 10...50° before TDC are engraved on a disc ② fitted in front of the torsional vibration damper.

The scale marks are read against an indicator ① fitted to the crankcase.

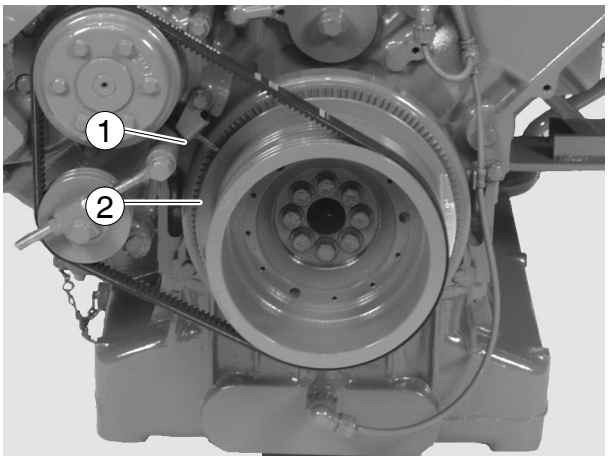

1

To turn the engine over manually during the setting work, a plate with a central hexagon bolt must be located on the front side of the crankshaft pulley.

For this purpose, the speed pickup together with the plate is to be previously detached.

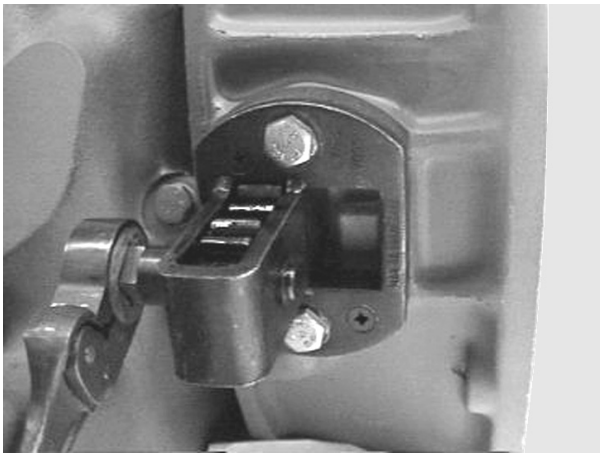
2

Fig. 3

The graduated scale on the flywheel, which is visible through the inspection hole in the flywheel housing, is often difficult to access. However it must be used to readjust the indicator after the vibration damper has been removed or replaced.

For this purpose, before the vibration damper with scale disc is installed, the engine must be set to “TDC” using the flywheel marking.

The indicator must then be aligned so that its measuring edge points exactly to the “TDC” mark on the scale disc.

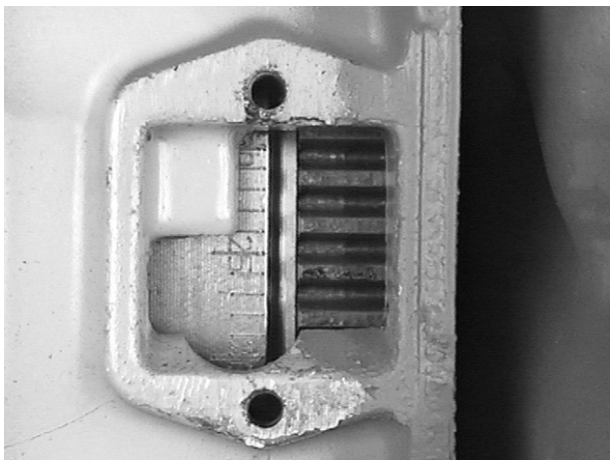
3

Fig. 4

To avoid read–off errors, always look over the notch on the flywheel housing vertically to the centre of the flywheel.

The marking on the graduated scale must be on the imaginary “notch – flywheel centre” line.

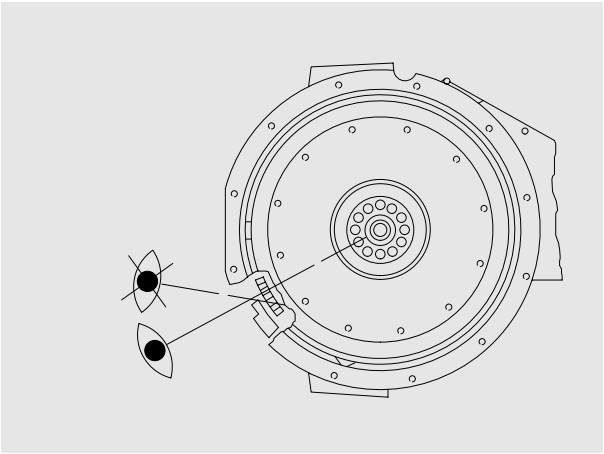
4

https://truckmanualshub.com/

Fig. 5

The indicator (arrow) must then be aligned so that its measuring edge points exactly to the “TDC” mark on the scale disc.

Turn engine to ignition TDC 1.

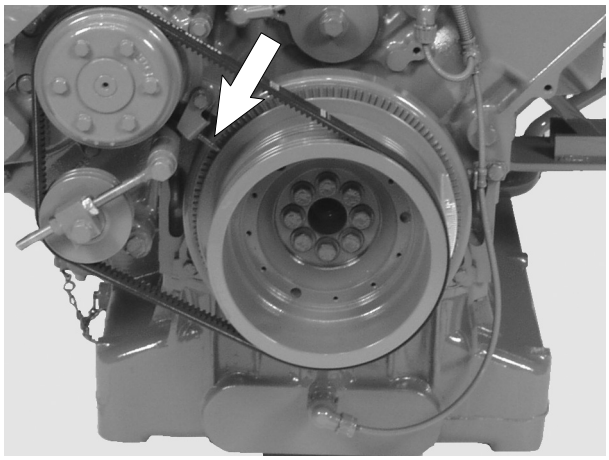

5

Fig. 6

Pull the connector off the rpm sensor ②.

Unscrew the mounting bolt ① of the rpm sensor ② and pull out the rpm sensor.

No marking may be visible.

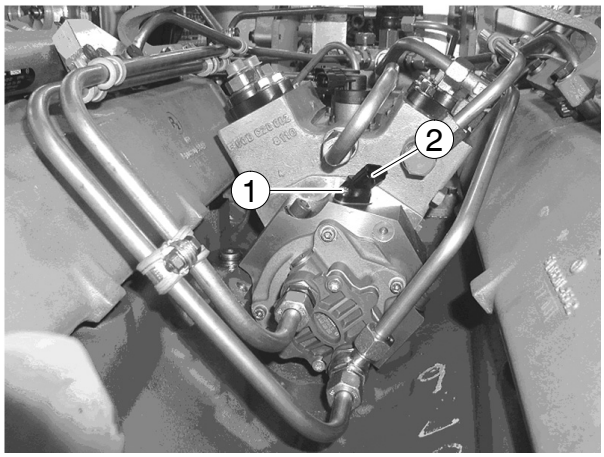

7

Fig. 7

If the engine is now turned back to 69° before TDC, **2 markings** ① must be visible.

If both markings are visible, then fit the rpm sensor and tighten the mounting bolt with **9 Nm**.

Reconnect the control unit.

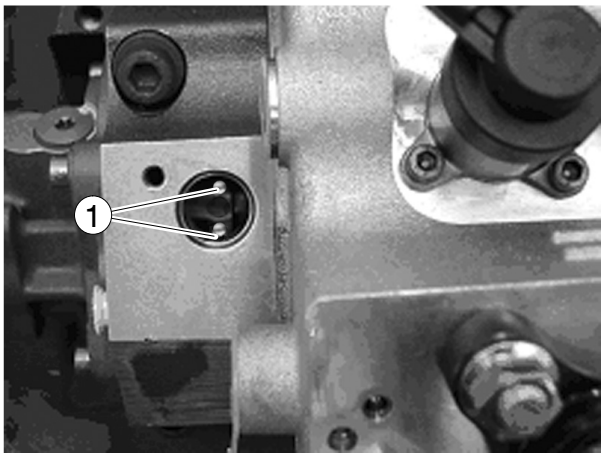

8

Fig. 9

> **Caution:**
> If only 1 marking is visible, the high–pressure pump has been fitted and twisted by 180° towards ignition TDC engine cylinder 1.

In this case, the high-pressure pump has to be removed.

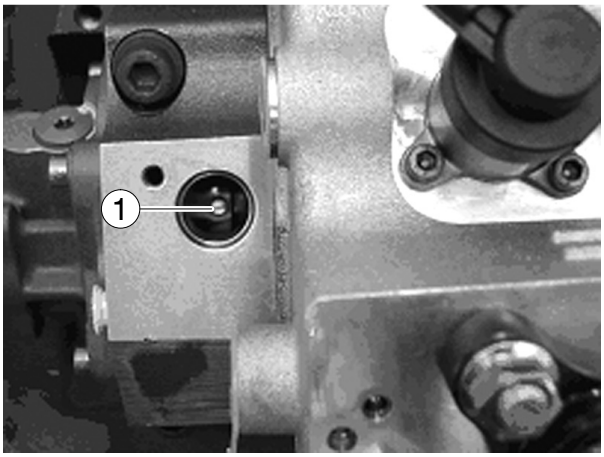

9

https://truckmanualshub.com/

Danger:
Before starting the work, comply with “Special instructions when working on the common rail system” (see page 9).

Caution:
All connections and removed parts are to be closed **immediately** with suitable caps!
Dirt in the injection system causes:
- injectors to jam
- the high-pressure pump drive to break

The lines contain fuel.
Catch escaping fuel in a suitable container.

Fig. 1

Unscrew the union nuts ① of the high-pressure lines between the rail and high-pressure pump.

Fig. 2

Unscrew the union nuts ② of the high-pressure lines between the rail and injectors.

The lines are installed in reverse order.

Danger:
High-pressure lines with **WAF 17 union nuts must be replaced**!
High-pressure lines with **WAF 19 union nuts may be reused**!
Injection lines must be fitted without tension.

Tightening torques for high-pressure lines:

Initial fit:

Pretightening	10 Nm
Final tightening	60°

Reuse:

Pretightening	10 Nm
Final tightening	30°

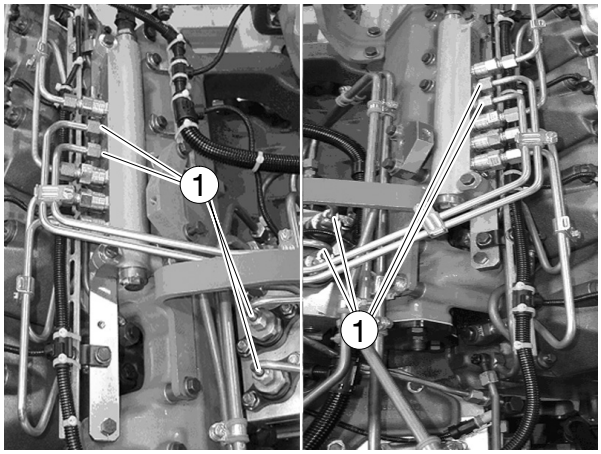

1

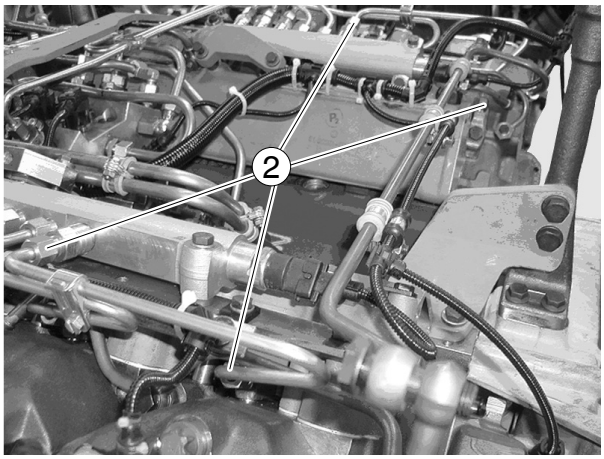

2

https://truckmanualshub.com/

Removing high-pressure pump

- Remove the high-pressure lines between the high-pressure pump and rail, see page 26

Note:
The subsequent reinstallation of the high-pressure pump is rendered considerably easier if before its removal the engine has been turned to ignition TDC cylinder 1(see page 24).

Danger:
Before starting the work, comply with ”Special instructions when working on the common rail system” (see page 9).

Fig. 1

Unscrew and remove all fuel and oil lines to the high-pressure pump ② and to fuel distributor ③. Undo all the electrical connections to the high-pressure pump.

Caution:
All connections and removed parts are to be closed **immediately** with suitable caps!
The lines contain fuel!
Catch escaping fuel in a suitable container.

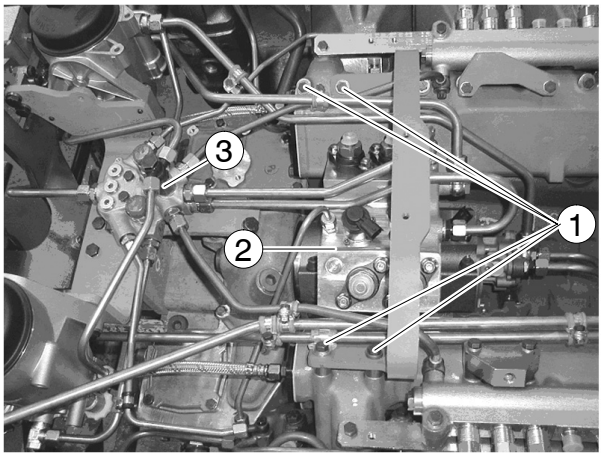

1

Note:
To facilitate reassembly, memorise or mark down in a drawing or photo the positions of the brackets, pipe clamps and spacer sleeves etc.

To remove the injection pump, the high-pressure pump drive must be made accessible.
For this purpose the fuel distributor must be detached.
Close shutoff valve from tank to engine.

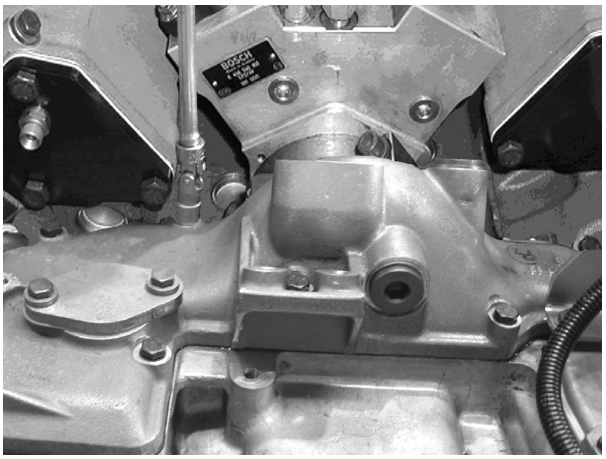
2

Fig. 2

Remove timing case cover.

The injection pump drive can now be seen.

Fig. 3

Remove mounting bolts from high-pressure pump (arrow).

Take off high-pressure pump.

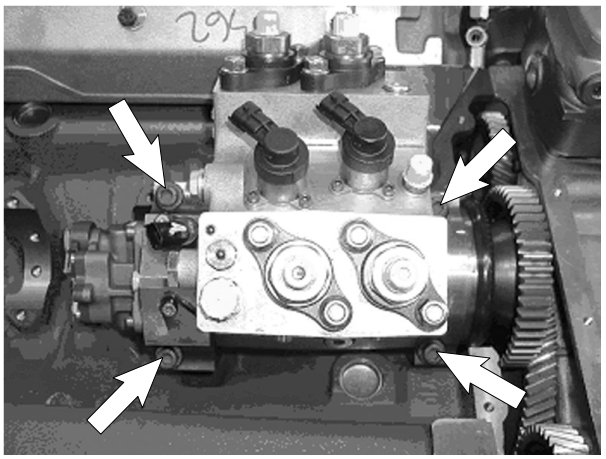
3

https://truckmanualshub.com/

Installing high-pressure pump

- Turn engine to ignition TDC 1.

Fig. 4

Turn mark “TOP” on the high-pressure pump drive gear in the middle to pump.

Insert high-pressure pump.

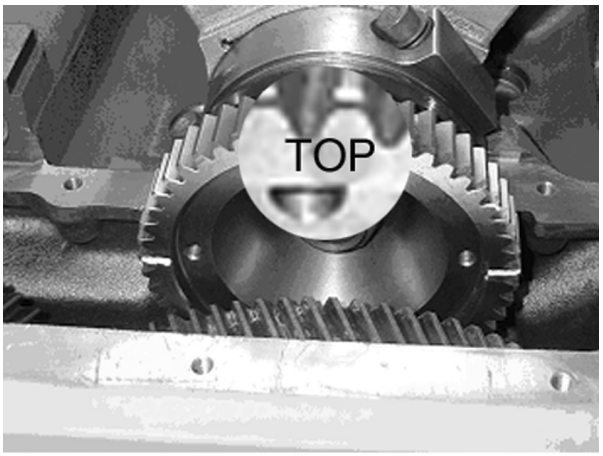

4

Fig. 5

Tighten the mounting bolts in the sequence and method specified (pos. 1–4).

Order of tightening: 1–2–3–4 in the steps:

1. Initial torque:	**10–15 Nm**
2. final torque:	**65–70 Nm**

Check the base fitting of the high-pressure pump, see page 24.

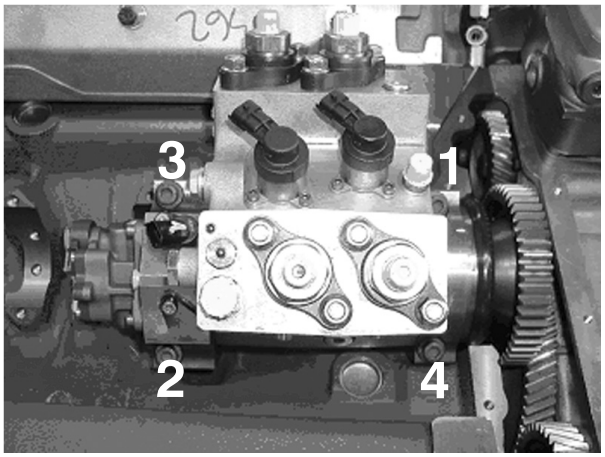

5

Fig. 6

Tighten bolts on timing case cover to the torque and in the sequence specified.

Tightening torque: 25 Nm

Refit all components previously removed.

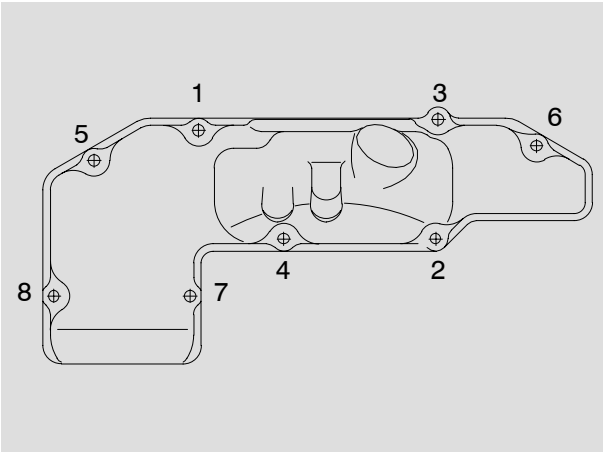

6

https://truckmanualshub.com/

Danger:
Before starting the work, comply with “Special instructions when working on the common rail system” (see page 9).

Caution:
All connections and removed parts are to be closed **immediately** with suitable caps.
Dirt in the injection system causes:
- injectors to jam
- the high-pressure pump drive to break

The lines contain fuel.
Catch escaping fuel in a suitable container.

Fig. 1

- Close shutoff valve from tank to engine

Caution:
Before the high-pressure lines are removed it is necessary to clean the CR system again.

Unscrew the union nuts ⑦ of the high-pressure lines between the rail and injectors.

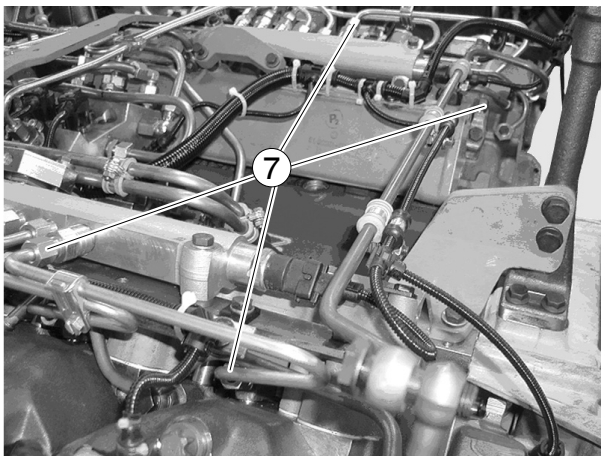

1

Fig. 2

Unscrew the union nuts ⑧ of the high-pressure lines between the rail and high-pressure pump.

Fig. 3

Remove fuel pipe for rail return.

Take out rail ⑩.

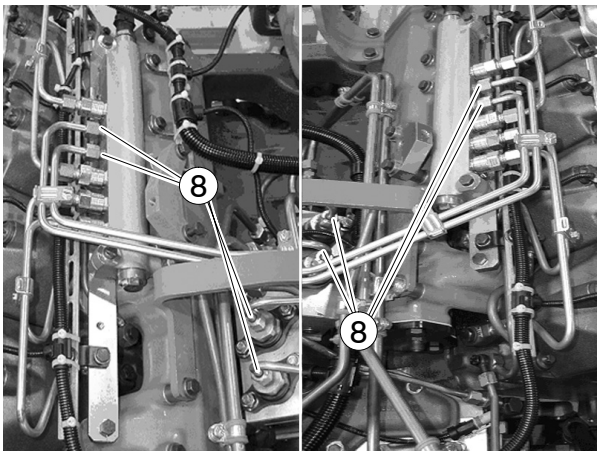

2

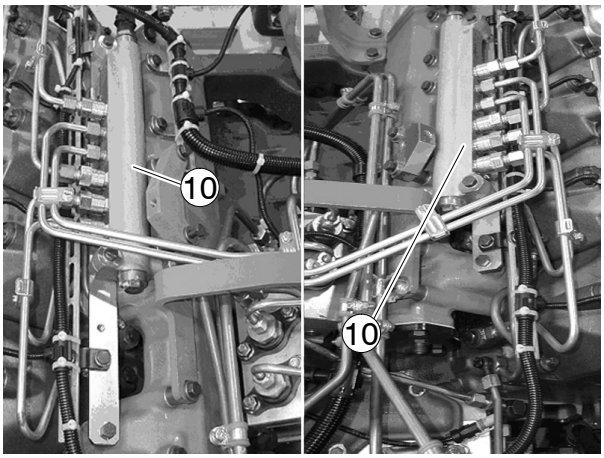

3

https://truckmanualshub.com/

Install rail

Install the filter in reverse order:

- Install rail and fuel pipe for rail return
- Fit high-pressure pipes

> **Danger:**
> High-pressure lines with **WAF 17 union nuts must be replaced**.
> High-pressure lines with **WAF 19 union nuts may be reused**.
> Injection lines must be fitted without tension.

Tightening torques for high-pressure lines:

Initial fit:

Pretightening: 10 Nm

Final tightening: 60°

Reuse:

Pretightening: 10 Nm

Final tightening: 30°

- Install intake neck and bleed pipes
- Vent the fuel system, see page 38

https://truckmanualshub.com/

Removing and installing the rail pressure sensor, pressure relief valve

Danger:
Before starting the work, comply with “Special instructions when working on the common rail system” (see page 9).

Caution:
All connections and removed parts are to be closed **immediately** with suitable caps!
Dirt in the injection system causes:
- injectors to jam
- the high−pressure pump drive to break

The lines contain fuel.
Catch escaping fuel in a suitable container.

Fig. 1

Remove the rail pressure sensor ① or pressure relief valve ② from the rail. Undo the electrical connection of the rail pressure sensor.

Fit the rail pressure sensor ① or pressure relief valve ② on the rail.

Tightening torque:

Rail pressure sensor ①	70 Nm
Pressure relief valve ②	100 Nm

2

Reconnect the rail pressure sensor.

https://truckmanualshub.com/

Danger:
Before starting the work, comply with ”Special instructions when working on the common rail system” (see page 9).

Caution:
All connections and removed parts are to be closed **immediately** with suitable caps!
Dirt in the injection system causes:
- injectors to jam
- the high-pressure pump drive to break

The lines contain fuel!
Catch escaping fuel in a suitable container.

Removing injectors

- Close shutoff valve from tank to engine
- Removing rail, see page 29
- Draining off coolant, see page 40

Fig. 1

Remove the cylinder head covers.

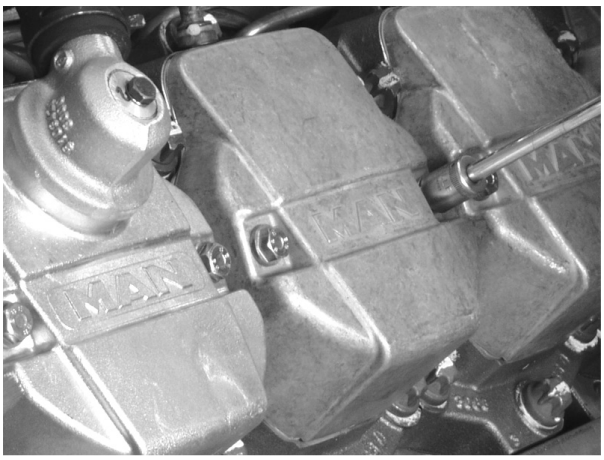

1

Fig. 2

Remove the cable lugs on the injector.

Caution:
There are small copper washers under the cable lugs; these could **fall into the engine**!

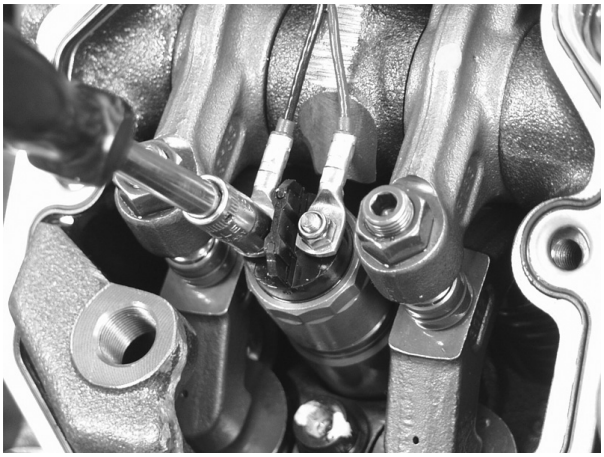
2

Fig. 3

Remove the valve cover seal.

Remove mounting bolts from carrier for injector cable harness and slew carrier to one side.

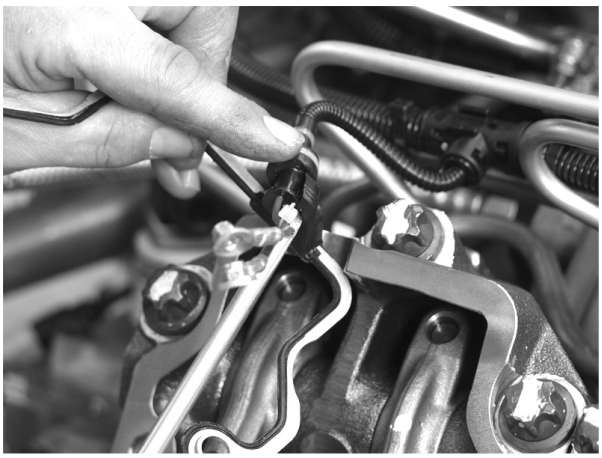
3

https://truckmanualshub.com/

Fig. 4

Remove coolant bleed pipe, rail carrier and leak-oil pipe.

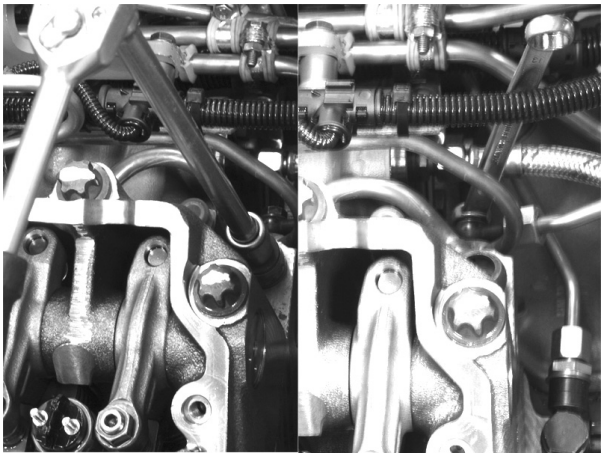

4

Fig. 5 and Fig. 6

Unscrew the mounting bolt ② of the connector fitting and pull the pressure pipe fittings ③ out of the cylinder head.

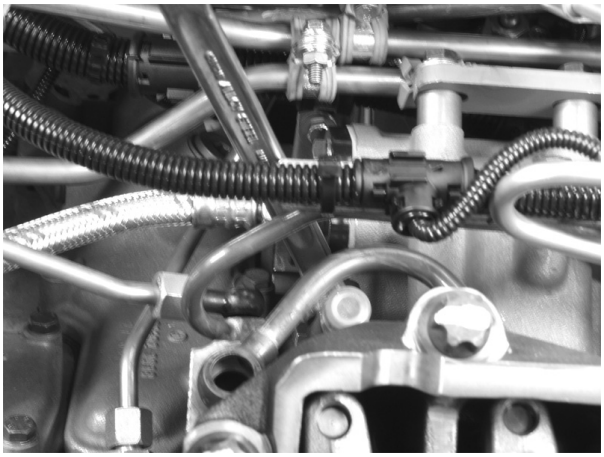

5

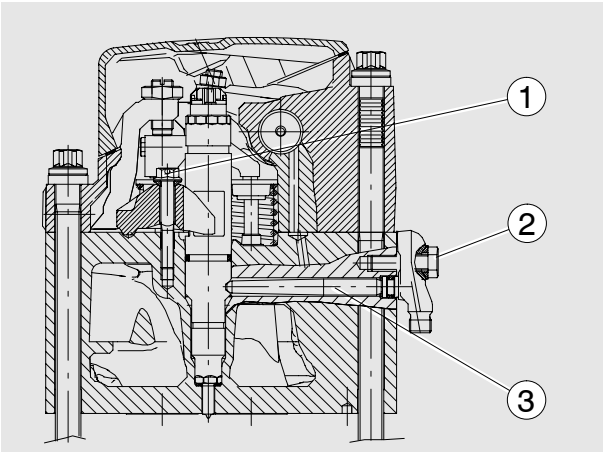

6

Fig. 7

Unscrew the mounting bolt of the pressure flange (see item ① Fig. 6).

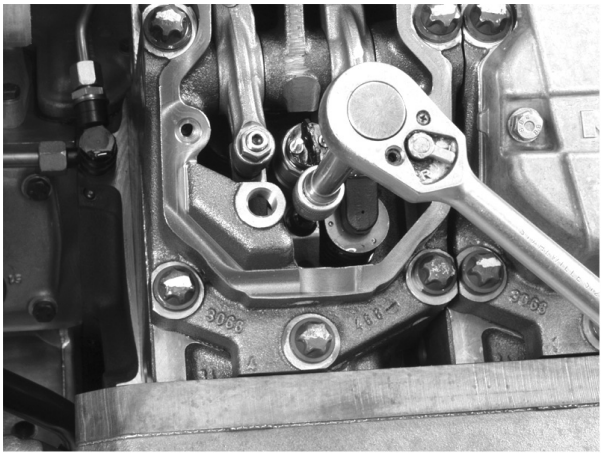

7

https://truckmanualshub.com/

Fig. 8

Use a support bridge ① and extractor tool ② (see page 172) to pull out the injector and pressure flange.

- Push the extractor tool ② through the support bridge ① over the injector, making sure that the clamping sleeve is turned back far enough
- Tension the clamping sleeve and pull the injector with knurled nut out of the cylinder head

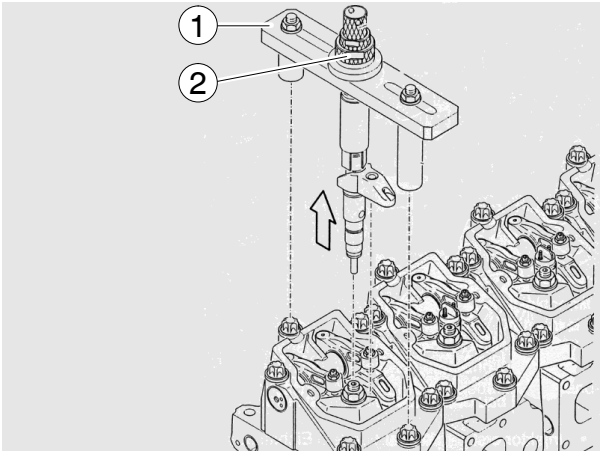

8

Danger:
Injectors must **not** be opened!

Caution:
Immediately close off the connection openings of the injector with suitable caps (see page 172) and place in the storage sleeve.

Clean the injector seat in the nozzle bushing.

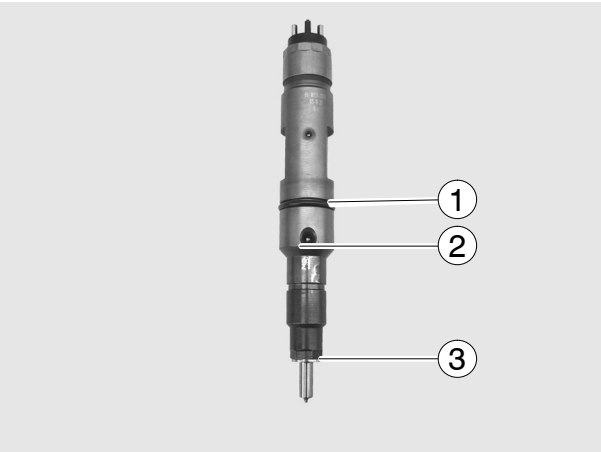

9

Fitting injectors

Fig. 9

Insert new O-ring ① and new copper sealing ring ③.
Grease the O-ring.

10

Figs. 10 and 11

Insert the injector with pressure flange into the nozzle bushing in such a way that the feed bore hole ② (see also item ② on Fig. 9) points to the bore hole for the pressure pipe ① in the cylinder head.
Press in the injector by hand as far as it will go.

Pretighten the mounting bolt for pressure flange with **1.5 Nm**.

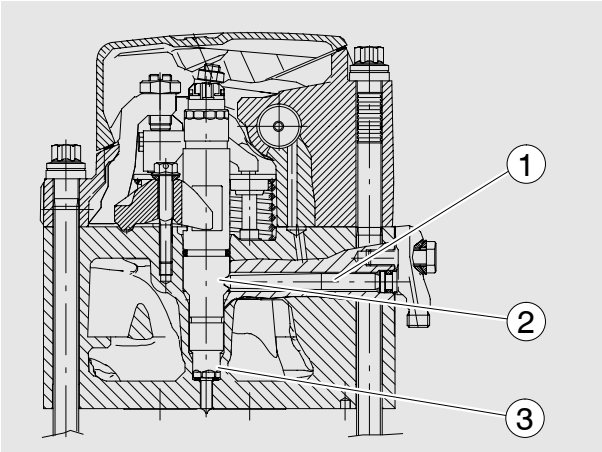

11

https://truckmanualshub.com/

Fig. 11 and Fig. 12

Caution:
Removed pressure pipes must be replaced.

Insert pressure pipe into the cylinder head.

Caution:
The thin end of the pressure pipe points towards the injection nozzle.

Replace the O-ring and apply a light coating of grease.
Insert the connector fitting and align in such a way that the high-pressure line can be connected without tension (see also item ② Fig. 6).
Pretightening: 10 Nm

Fully tighten the mounting bolt for pressure flange (see also item ① Fig. 6).
Final tightening: 25 Nm
Angle tightening: 90°

Fully tighten the mounting bolt for connector fitting (see also item ① Fig. 6).
Final tightening: 20 Nm
Angle tightening: 90°

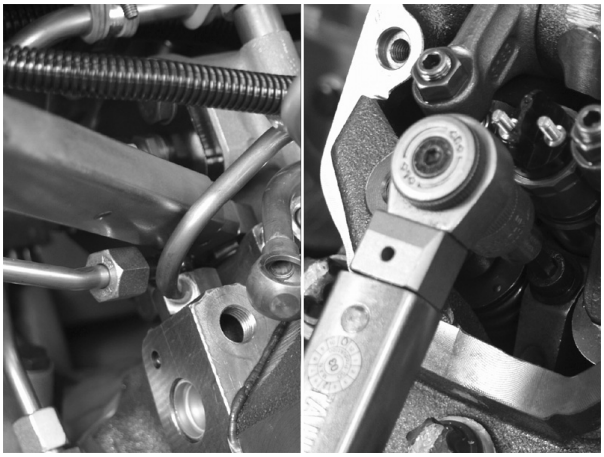
12

Check tightness of injector, pressure pipe and leak-oil line

Caution:
After the injectors have been installed, always check to ensure that the injectors, pressure pipes and leak-off oil lines do not leak.

Note:
The check for leaks can only be performed for one row of cylinders at a time.

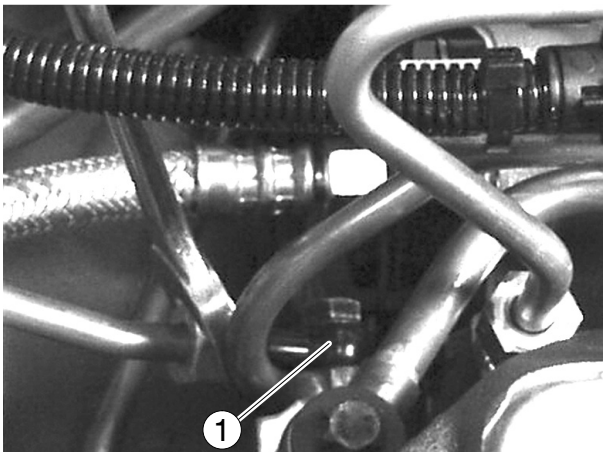

13

Fig. 13 and Fig. 14

- Remove the high-pressure lines to the individual cylinders on the rail or on the connector fitting
- Connect test device ② up to the ring piece of the leak-oil pipe ①
- Pump approx. 2 bar pressure to fuel system

The pressure must not drop for a period of 3 minutes.

If there is a leak in the fuel system, the injectors have to be removed once again. Check the removed parts for damage or soiling - replace if necessary and then refit, observing the greatest possible cleanliness.

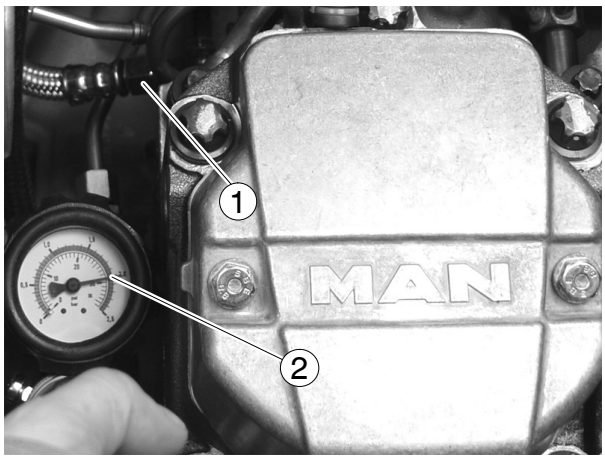

14

https://truckmanualshub.com/

Fig. 15

Install rail carrier, coolant bleep pipe and cable harness for injector.

Connect cable harness to the injectors.

Tightening torque: 1.5 Nm

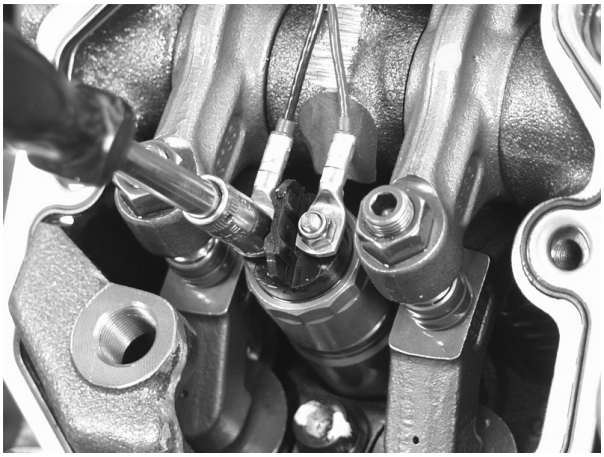

15

Fig. 16

Fit valve cover with seal and tighten mounting bolts.

- Installing rail, see page 30
- Fill coolant, see page 40

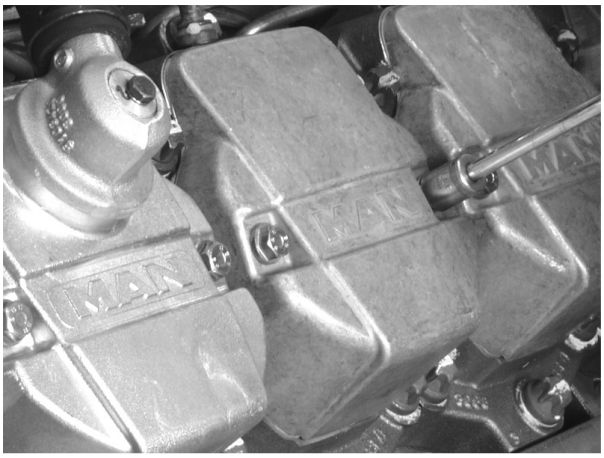

16

Fuel pre-filter with water separator

Fig. 1
Draining water:

- Open drain screw ① and let off water
- Close drain screw ① again

Changing filter element

Only when the engine is switched off
Close shut-off valves between engine, pre-filter and tank.

- Disconnect plug
- Remove filter bowl ② and filter element ③
- Wet seal on new filter with fuel
- Screw on filter ③ and filter bowl ②
- Connect plug
- After this, bleed the fuel system
- Check filter for leaks

Caution:
Used fuel filters are classed as dangerous waste and must be disposed of accordingly.

1

https://truckmanualshub.com/

Changing fuel filter cartridge

Only when the engine is swiched off.
Close shut-off valves between engine, pre-filter and tank.

Fig. 1

- Loosen filter cartridge by means of tape wrench, unscrew it by hand and take it off
- Moisten the seals on the new filter cartridge with fuel
- Screw on the filter cartridges and tighten them vigorously by hand
- Bleeding the fuel system
- Check filter for leaks

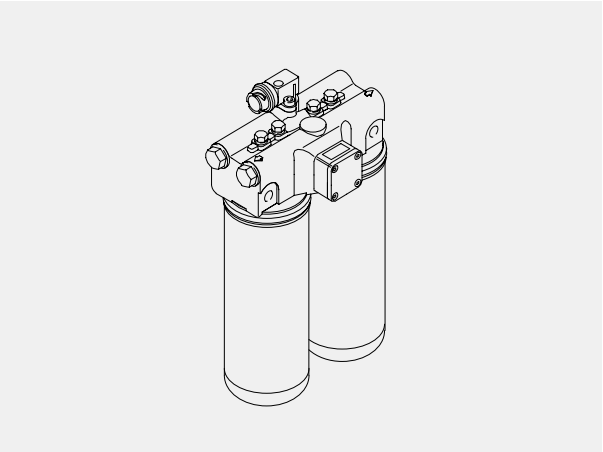

1

Caution:
Used fuel filters are classed as dangerous waste and must be disposed of accordingly.

Bleeding the fuel system

To bleed the fuel system follow the instructions of the vehicle manufacturer.

https://truckmanualshub.com/

Removing sheathed-element glow plug

Fig. 1

Disconnect the electric connections from the sheathed-element glow plug.

Remove fuel line carefully.

Loosen counter nut on sheathed-element glow plug and remove glow plug.

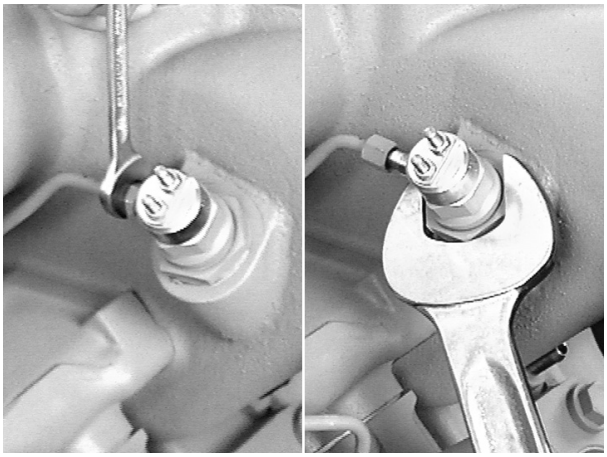

1

Installing sheathed-element glow plug

Fig. 2

Turn counter nut on sheathed-element glow plug upwards until it stops and apply “Curil T” sealant to threaded portion.

Screw in sheathed-element glow plug with new sealing ring until it stops at the counter nut and align it with fuel line.

Connect up fuel line and electric connection. Tighten counter nut.

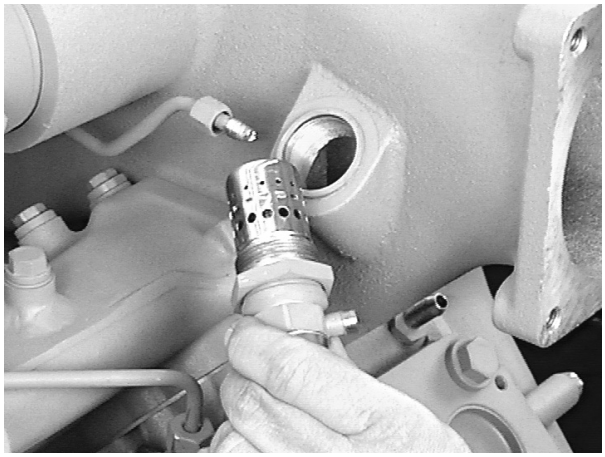

2

Checking solenoid valve for leaks

Remove fuel line from flame glow plug.
When the engine is running and hot, no fuel must emerge.

Removing solenoid valve

Fig. 3

- Detach fuel lines. Ensure that insulation element does not burst.
- Remove electric connection from valve
- Remove the two hex bolts and take off valve

The valve cannot be repaired.
Exchange the defective valves.

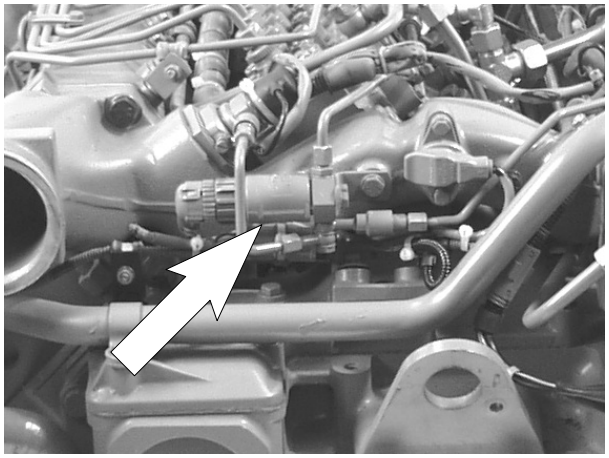

3

Fitting solenoid valve

- Screw valve to holder
- Screw on electric connection
- Refit fuel lines with new seals. Ensure that insulation element does not burst.

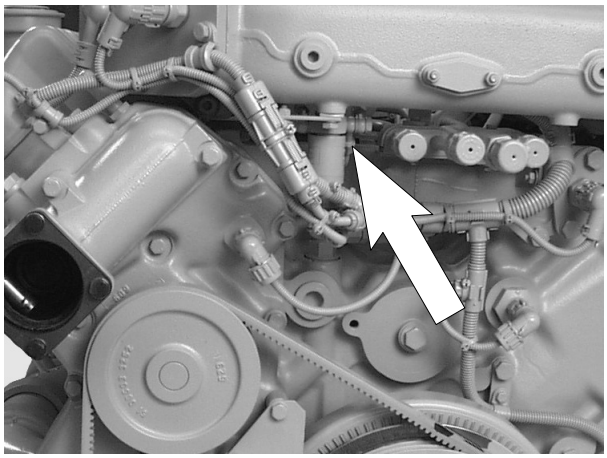

4

Draining coolant

Danger:
When draining hot coolant, there is a danger of scalding!

Drain coolant as follows when cooling system has cooled down:

Caution:
Collect the drained coolant and dispose of it in accordance with regulations!

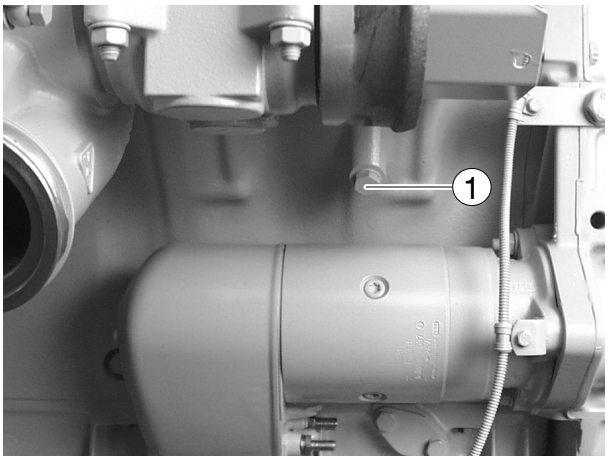

1

Fig. 1 and Fig. 2

To let off pressure briefly open cap on filler neck of expansion tank.
Observe the vehicle manufacturer's instructions.

Open drain plug in crankcase ① or in the oil cooler housing ②.

Catch emerging coolant in a suitable container.

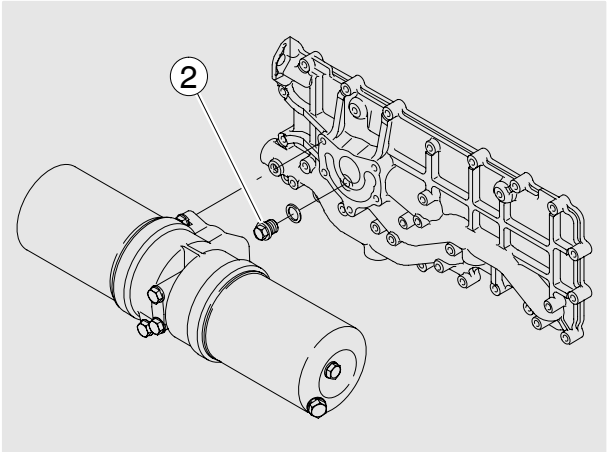

2

Fill / bleed the cooling system (only when engine has cooled down)

The cooling system of the engine is to be filled with a mixture of drinking water from the mains and anti-freeze based on ethylene glycol and / or anticorrosion additive.
See Publication "Fuels, Lubricants and Coolants for MAN Diesel Engines".

Coolant must be poured in according to the vehicle manufacturer's filling specifications.

Do not pour any cold coolant into an engine which is still warm.

Ensure that the mixing ratio "water-antifreeze" is preserved.

- Pour in coolant slowly until the correct coolant level is reached (max. 10 ltr./min.)
- Run the engine briefly and then check coolant level once more

Danger:
If, in exceptional cases, the coolant level on warm engines has to be checked or the cooling circuit opened, observe the vehicle manufacturer's safety regulations.

https://truckmanualshub.com/

Fig.1

- Draining off coolant, see page 40

Remove the three mounting bolts from the coolant neck and take off coolant neck.

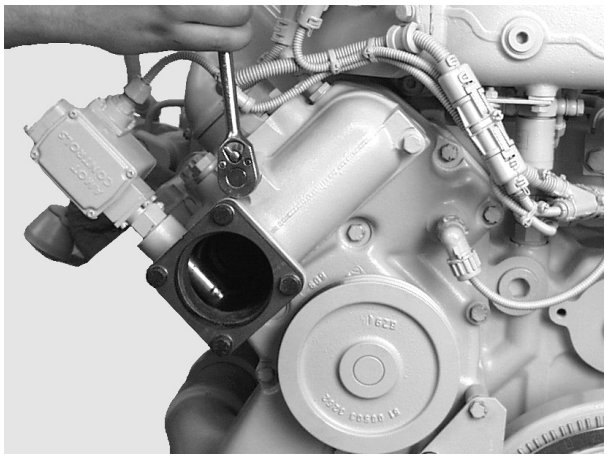

1

Fig. 2

Take out short-circuit inserts / thermostats.

Check the function of the thermostats as follows.

- Suspend the thermostat in a bowl of water
- Heat up the water
- Use suitable thermometer to ascertain the opening start and compare it with the set-point value given in “Service Data”.
- If necessary, measure the opening stroke

Replace defective thermostats.

2

Insert thermostat inserts ball valve facing upwards (“TOP”) with new O-ring seal and new seal.

Caution:
Never let engine run without thermostats or short-circuit inserts.

Note:
Exchange or repair coolant pump only if it has been found to be leaky.

The design of the coolant pump mechanical cassette seal permits small amounts of coolant to pass through it. This coolant passing through results in a trace of drained coolant below the drain bore. The coolant pump need not be exchanged or repaired because of this trace of permeating coolant.

For this reason before exchanging or repairing a coolant pump ascertain

- whether the cooling circuit shows visible and recurring signs of coolant loss; if yes
- whether the coolant loss is caused by spillage from the expansion tank (e.g. too full) or by other leakages from hoses, radiator etc.

Coolant pumps must be exchanged only if coolant drips visibly while the engine is in operation or after the engine has been switched off.

Removing coolant pump

- Draining off coolant, see page 40
- Remove the thermostats, see page 41

Fig. 1

Take V-belt off coolant pump, see page 132

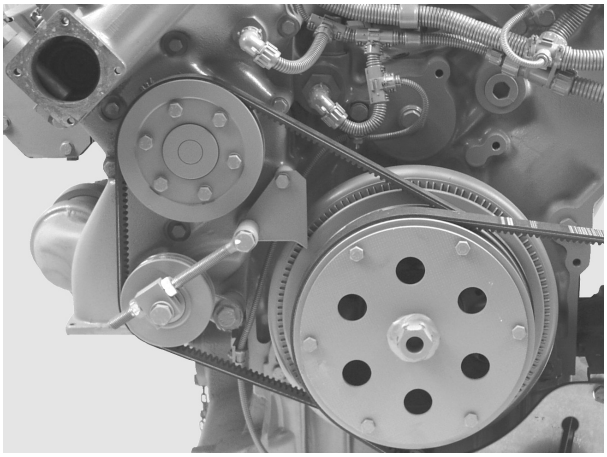

1

Fig. 2

Remove the mounting bolts from coolant pump

Take off coolant pump and delivery start indicator

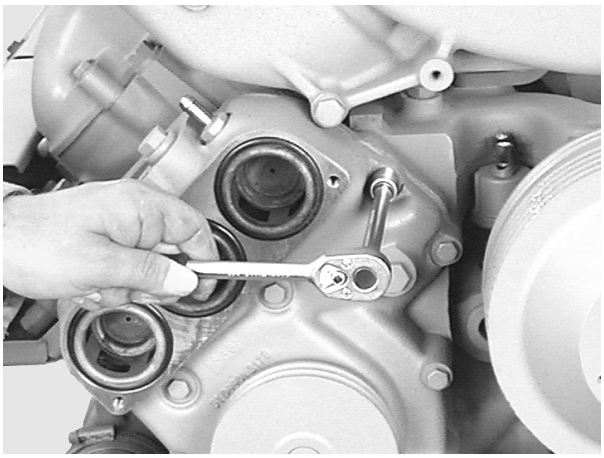

2

https://truckmanualshub.com/

Installing coolant pump

Fig. 3

Clean the sealing faces on coolant pump and engine housing.

Fit coolant pump with new seal.

Fit the mounting bolts.

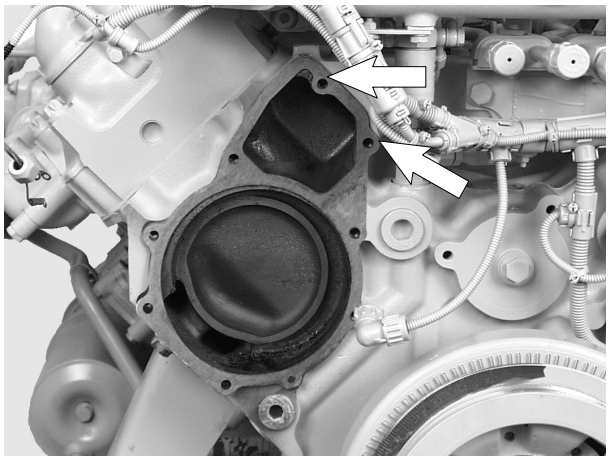

3

Fig. 4

Coolant pumps with high-temperature and low-temperature sections

To aid in assembly pins (special tool, see page 171, no. 43) can be screwed into the crankcase (arrows, Fig. 3). The water pump can then be fixed to the protruding pins.

Fit the mounting bolts.

There is a screw for removing the pins (special tool, see page 171, no. 42).
This screw has a left-handed thread and is screwed into the pin. In this way the two can be screwed out together.

Fit remaining mounting bolts.

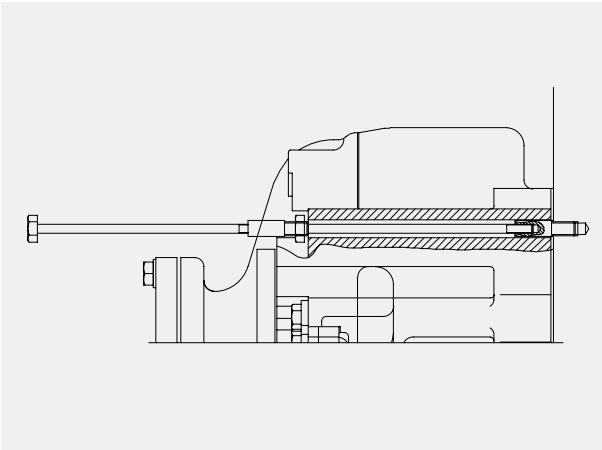

4

Fig. 5

Tighten the mounting bolts with the prescribed torque.

Screw coolant hose pipe on to oil cooler.

Install short-circuit inserts / thermostats, , see page 41.

Refit and tension V-belt, see page 132.

Filling up with coolant, see page 40.

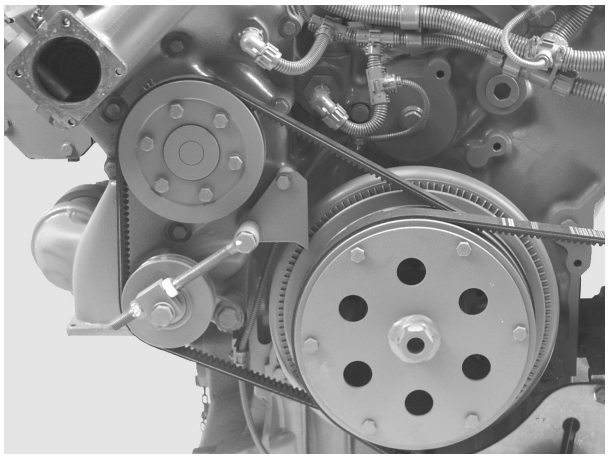

5

https://truckmanualshub.com/

Coolant pump for three thermostats

Fig. 1 and 2

1 Pump housing HT (high-temperature part)
2 Pump housing LT (low-temperature suction part)
3 Hub
4 Bolt DIN 931–M8x155, hex nut DIN 934–M8
5 Bolt DIN 933–M8x35–8.8
6 Mechanical seal 51.06520–0085
7 Impeller for coolant pump, HT circuit
8 Mechanical seal 51.06520–0099
9 Counterring complete 51.06520–0100
10 Impeller for coolant pump, LT circuit
11 Splash shield
12 Mechanical seal 51.06520–0096
13 Coolant pump bearing
14 Drive shaft for coolant pump
15 Circlip
16 Coolant pump seal
17 Grooved ball bearing 6003
18 Cap

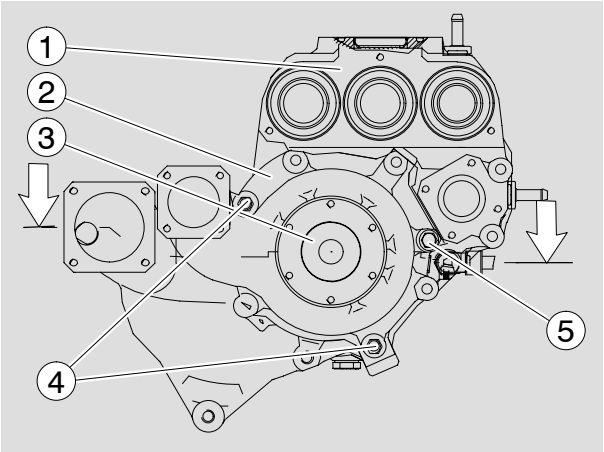

1

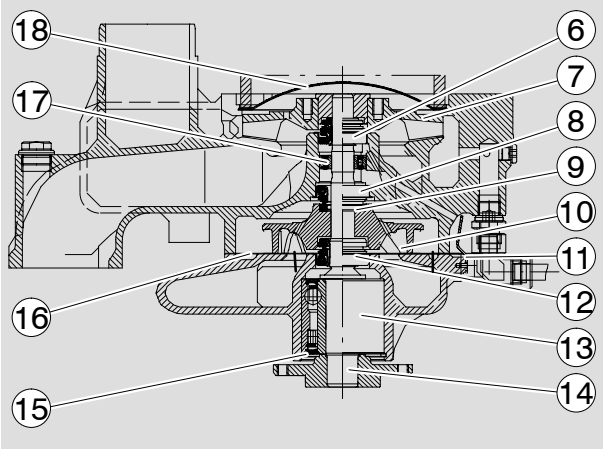

2

Disassembling water pump

Fig. 3

Removing the water pump, see page 42.

Clamp water pump in a vice, use protective jaws.

Pull off boss with three-arm puller.

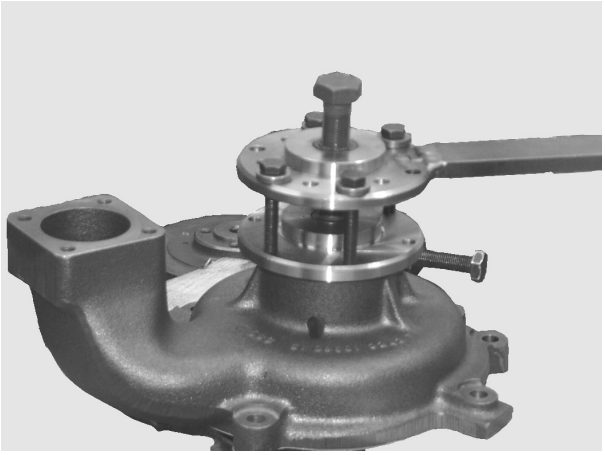
3

Fig. 4

Unclip the circlip from the coolant pump housing.

4

https://truckmanualshub.com/

Fig. 5

Knock out cover by driving a suitable mandrel under it (Fig. 1, item 3) at notch (arrow).

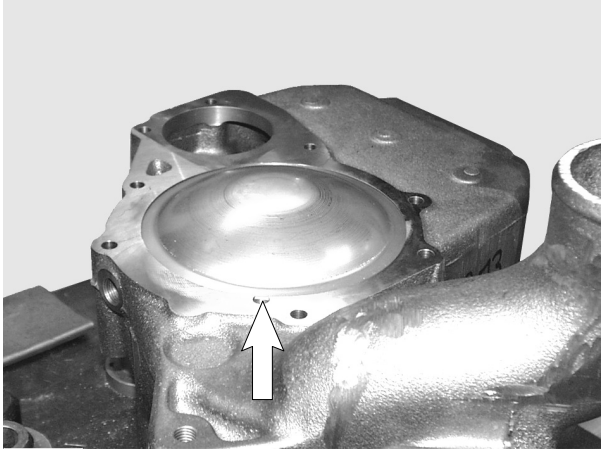

5

Fig. 6

Pull impeller off coolant pump shaft.

For this purpose four threaded bores M8 are provided.

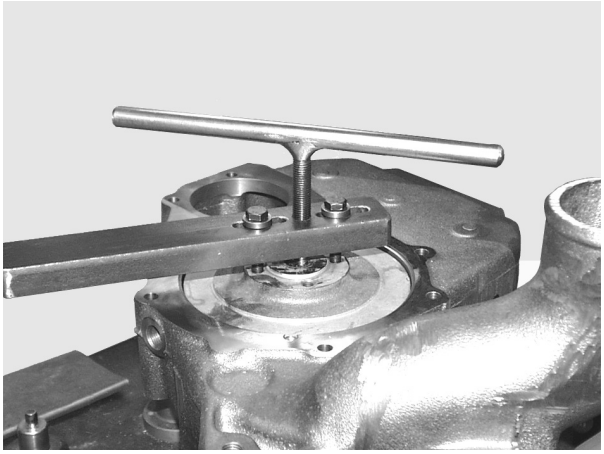

6

Fig. 7

Note:
Remove bolt from low-temperature part (Fig. 1, item 5).

Align water pump housing on a suitable and stable surface.

Use a suitable mandrel to press the water pump shaft together with bearing out of the housing.

Take off mechanical seal.

The high-temperature part and the low-temperature suction part are now separated.

Remove axial face seals and grooved ball bearing from high-temperature part if they are still in the housing.

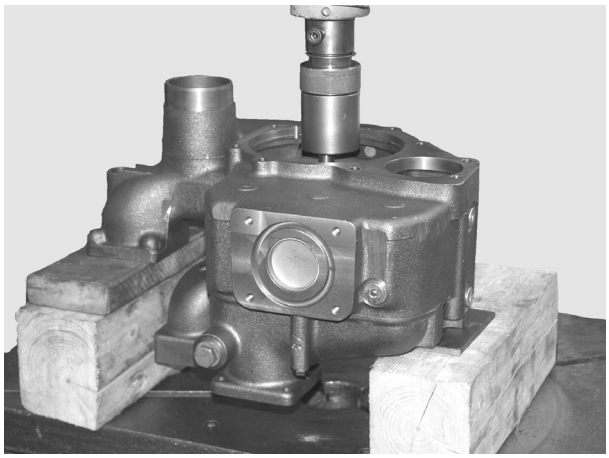

7

https://truckmanualshub.com/

Reassembling coolant pump

Fig. 8

Press in water pump bearing.

Fit the circlip.

Note:
If you change the seals always install a new shaft and axial face seals.

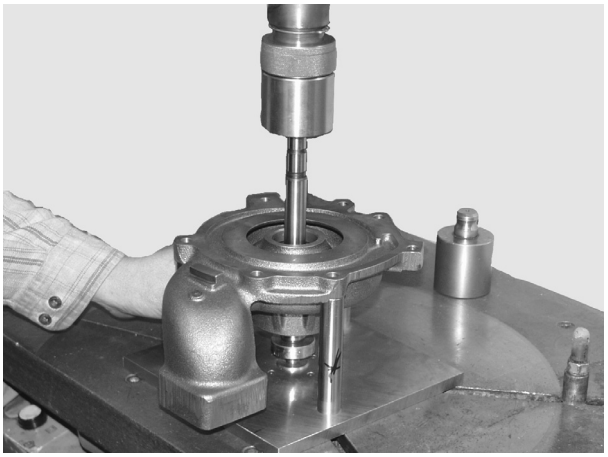

8

Fig. 9

Press boss flush on to bearing shaft.

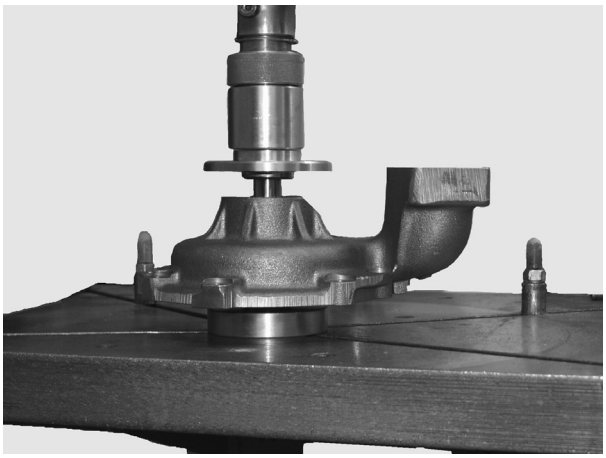

9

Fig. 10

Turn water pump housing over Press in new mechanical seal with press-fitting sleeve (special tool) until it stops.

Observe installation note for seal on page 50.

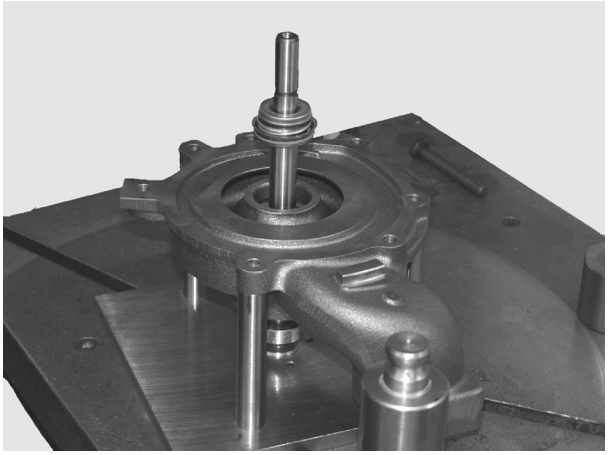

10

Fig. 11

Press in counterring (arrow) with a suitable pressing tool (may be possible by hand).

Install mechanical seal while “wet”, i.e. to install it, coat holding sleeve and water pump shaft with a mixture of either 50% water and 50% cleaning spirit or 40% to 50% antifreeze agent as per MAN 324 and water.

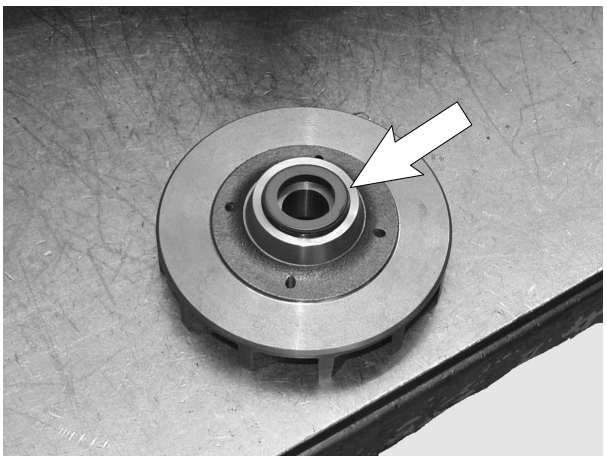

11

Fig. 12

Note:
Brace the bearing shaft.

Slowly press impeller on to bearing shaft to ensure correct gap ($0{,}5^{+0{,}4}$).

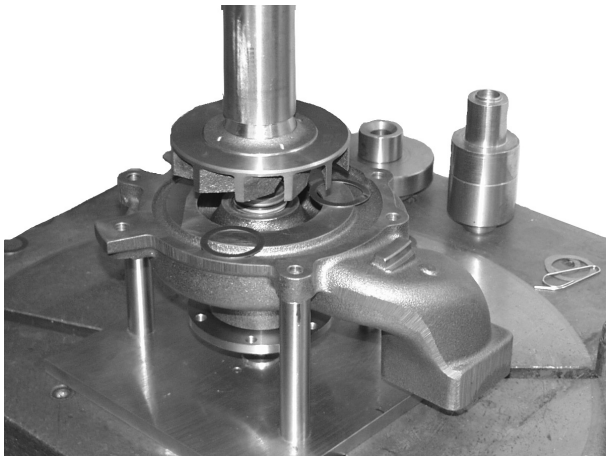

12

Fig. 13

Press in new mechanical seal (pos. 8) with press-fitting sleeve (special tool) until it stops.

Observe installation note for seal on page 50.

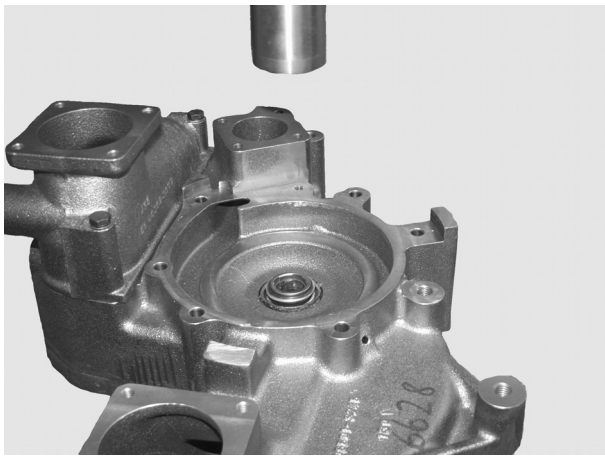

13

Fig. 14

Lay coolant pump gasket on pump housing.

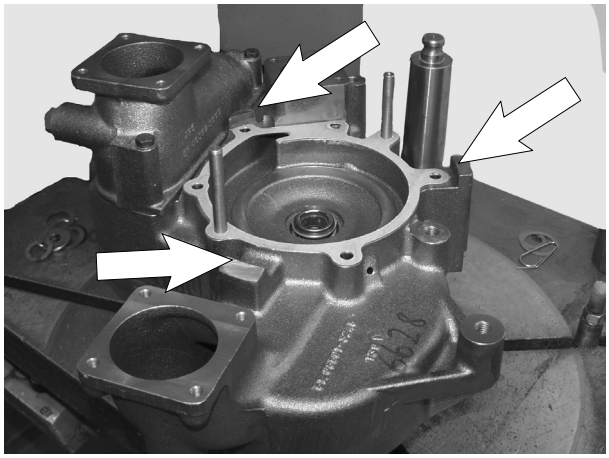

14

Fig. 15

Carefully fit low-temperature suction part to high-temperature pump housing.

To make assembly easier insert 2 pins in opposite sides of HT part (see Fig. 14)

Do not use force (hammer etc.) and note the 3 centring features (see arrows in Fig. 14).

Screw in bolt (Fig. 1, item 5).

Bolt LT and HT parts together with 2 bolts and nuts on opposite sides (Fig. 1, item 4).

15

Fig. 16

Note:
For subsequent steps brace the bearing shaft.

Press grooved ball bearing 6003 into position using special tool.

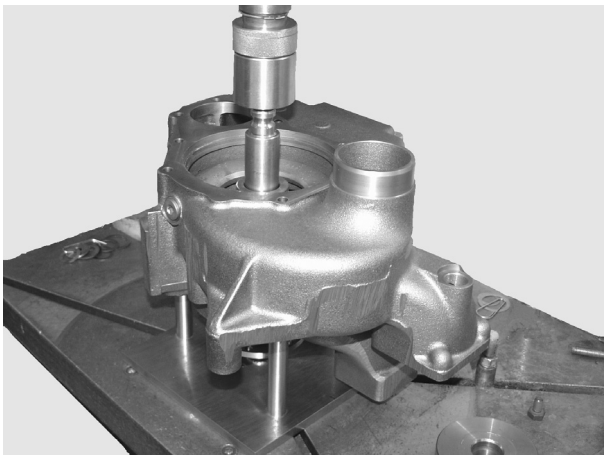

16

Fig. 17

Press in new mechanical seal (pos. 6) with press-fitting sleeve (special tool) until it stops.

Observe installation note for seal on page 50.

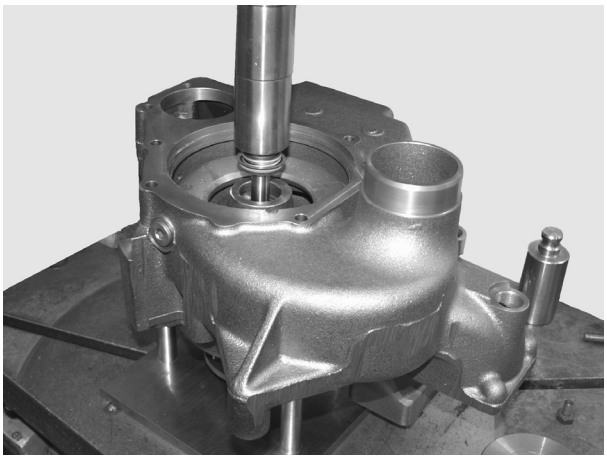

17

Fig. 18

Slowly press impeller on to bearing shaft to ensure correct gap.

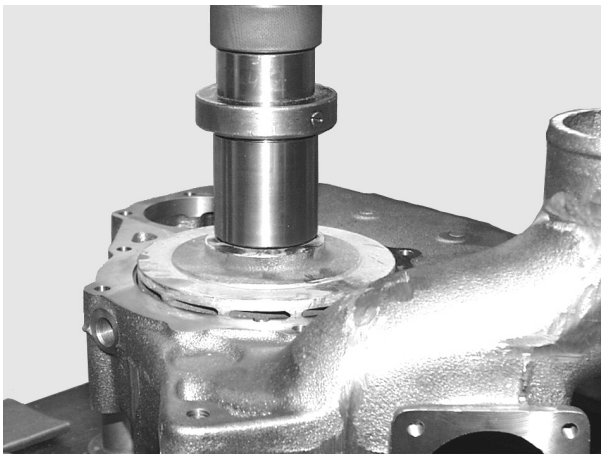

18

Fig. 19

For this purpose an inspection hole closed up with a screw plug (M16x1.5) is provided on the bottom of the water pump housing.

1 Impeller
2 Coolant pump housing

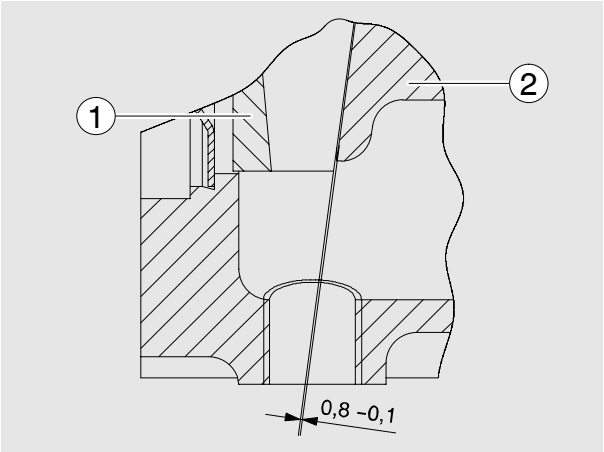

19

https://truckmanualshub.com/

Fig. 20

Fit new pump cover and press it into housing, using a suitable pressing tool.

Attach water pump with new seal, see page 42.

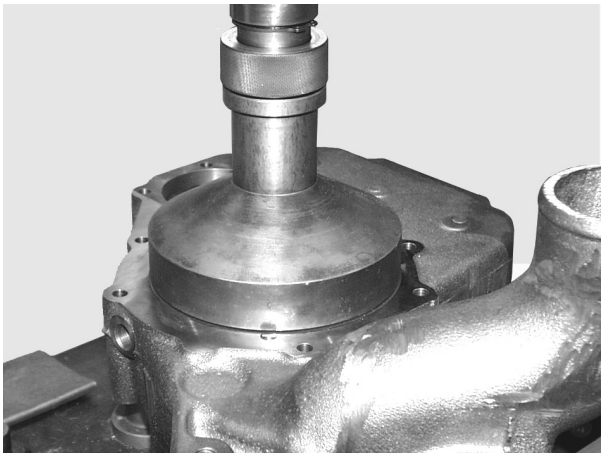

20

Installation note for mechanical seal:

Install mechanical seal while “wet”, i.e. to install it, coat holding sleeve and water pump shaft with a mixture of either 50% water and 50% cleaning spirit or 40% to 50% antifreeze agent as per MAN 324 and water.

Other antiseize agents must not be used.

Because the seal on collar ② is coated with sealing paint, no sealing paint needs to be applied if the locating bore in the coolant pump housing is in perfect condition.
If the bore shows even the slightest scoring or other minor damage, a sealing bead of Dirko-Transparent, Part No. , must be applied to collar ②.
Fit the seal with a plastic transportation cap onto shaft ① and use installation tool to press it in until the tool contacts the housing. Remove the plastic cap.

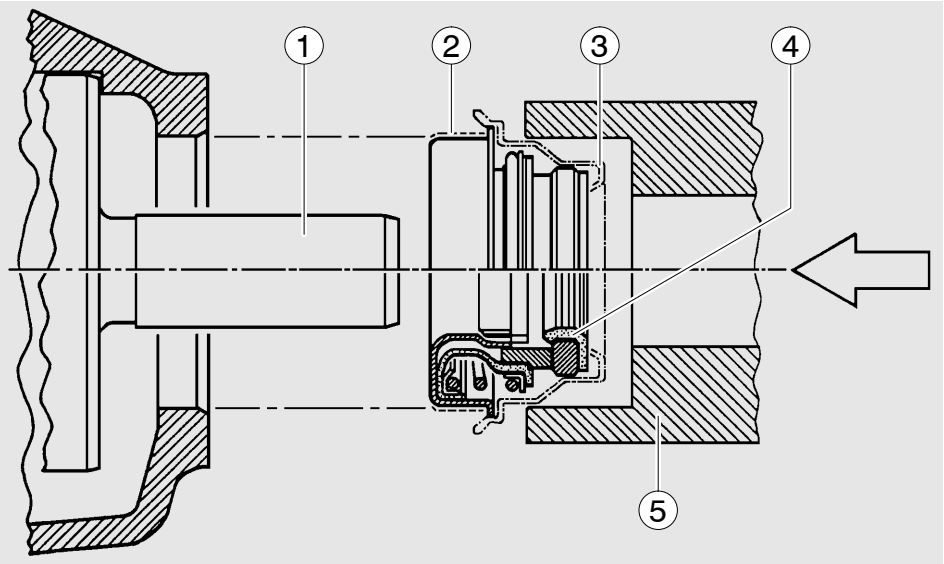

Note:
Tests have shown that most cases of damage to the coolant pump can be attributed to the use of unsuitable coolants.
Only the anticorrosion and antifreeze agents expressly approved by MAN Nutzfahrzeuge AG as per MAN norm 324 (see brochure “Fuels, Lubricants, Coolants for and MAN Diesel Engines”) guarantee faultless operation

Cleaning inside of cooling system

Tests have shown that in many cases the poor condition of the coolant and / or the cooling system accounts for damage to the coolant pump seal. The poor condition of the cooling system is normally due to the use of unsuitable or no antifreeze or corrosion inhibitor or to defective caps for filler necks and service valves which are not punctually replaced.

If the coolant pump of an engine develops leaks twice in short succession or the coolant is heavily contaminated (cloudy, brown, mechanically contaminated, grey or black signs of leakage on the coolant pump housing, after the defect on the oil cooler), clean the cooling system **prior** to removing the faulty coolant pump as follows:

a) Drain coolant
b) Open the thermostats positively (use bypass inserts) so that the entire cooling circuit is flushed immediately during the cleaning operation
c) Fill coolant circuit with a mixture of hot water (min. 50°C) and Henkel P 3 neutrasel 5265 detergent (1.5% by volume) (–5266, –5225, Kluthe Hakopur 316), refer to Publication ”Fuels, Lubricants ...”
d) Warm up the engine under load. After a temperature of 60°C is reached, run the engine for a further 15 minutes
e) Drain cleaning fluid
f) Repeat steps c) and d)
g) Flush the cooling circuit; to this effect
h) Open the drain valve slightly
i) Fill the cooling circuit with hot water
k) Run the engine at idle for 30 minutes. At the same time, continuously replenish the water emerging through the drain valve by adding fresh water at the filler neck
l) Drain off cleaning fluid and close the drain valve

Only now should the coolant pump be repaired. On completion of repairs, fill the cooling system with coolant, refer to publication “Fuels, Lubricants ...”.

Note:
Only sediments and suspended particles can be removed by this cleaning method. If rust and lime deposits are detected, proceed following the instructions set out in the section below:

Removing lime deposits in cooling system

Proceed as follows:

- Drain coolant
- Fill the system with undiluted original pickling fluid (lithsolvent acid or engine pickling fluid RB-06). Keep the engine running for approx. 8 hours with this fluid in the system (also in normal operation)
- Drain the pickling fluid and flush the system thoroughly with tap water
- If necessary, refill the system with fresh pickling fluid and pickle the system for a further 8 hours
- Drain the pickling fluid, fill the system with tap water, and run the engine at idle for 5 minutes to flush out all fluid; then drain the water
- Fill the system with soda solution (1%). Drain the soda solution after running the engine at idle for 5 minutes, and flush with tap water until the discharging water runs clear
- Fill cooling circuit with a mixture of potable tap water and anti–freeze with at least 40% by volume, refer to Publication ”Fuels, Lubricants ...”

Filler caps and service valves of cooling system

The rubber seals on the filler caps and service valves (negative pressure and positive pressure valves) of the cooling system are subject to natural ageing.
To prevent leakages in the cooling system together with the associated loss of pressure and its consequences through to serious engine damage, replace the filler caps and service valves at the same time as changing the coolant (every two years at the latest).

Waste water treatment

Drained and spent cleaning and pickling fluid should be brought up to a pH value of 7.5 to 8.5 with the aid of caustic soda. Once the precipitation has settled to the bottom of the container, the clear fluid above can be tipped into the sewer system. To be sure, it is advisable to consult the local authorities for more information on waste water rules and restrictions. The sludge at the bottom must be taken to a special waste dump.

https://truckmanualshub.com/

Caution:
Used oil and oil filters are classed as dangerous waste and must de disposed of accordingly. Note instructions for preventing environmental damage.

Fig. 1

Open oil drain plug on oil filter can and use container to catch oil that may emerge.

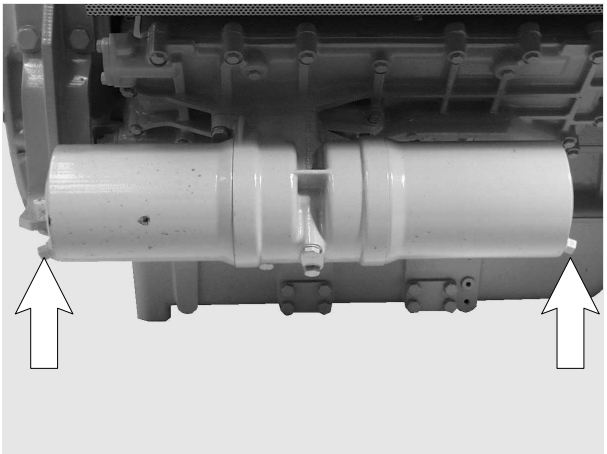
1

Danger:
Oil filter can and oil filter are filled with hot oil.
Risk of burns and scalding.

Fig. 2

Remove mounting bolt of filter bowl.

Take off filter bowl and clean it internally.

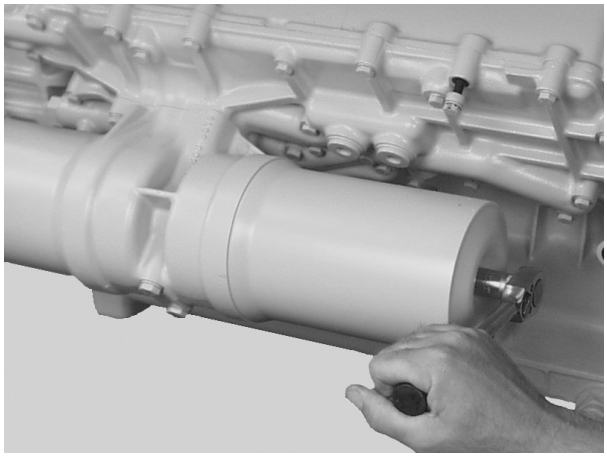
2

Fig. 3

Insert new filter element and fit filter bowl with new seals.

Refit oil drain plug with new seal.

Observe tightening torque for mounting bolt.

Note:
To prevent the seal from twisting hold the filter bowl firmly when tightening the tensioning screw.

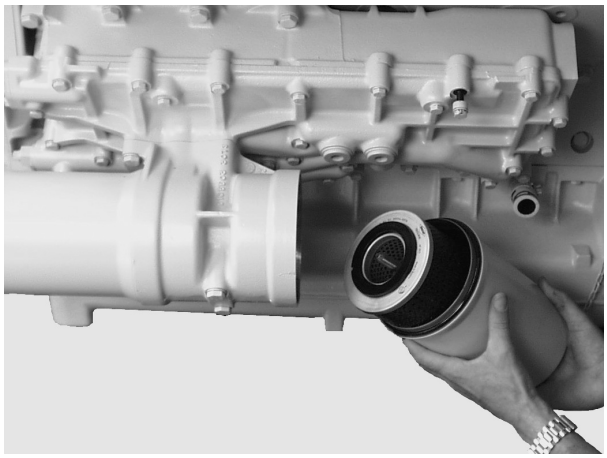
3

Top up with engine oil, let engine run briefly and then check for leaks.

Check oil level.

https://truckmanualshub.com/

- Draining off coolant, see page 40
- Removing the oil filter, see page 53

Caution:
Old oil and used oil filters are hazardous waste.
Observe safety instructions for the prevention of environmental damage.

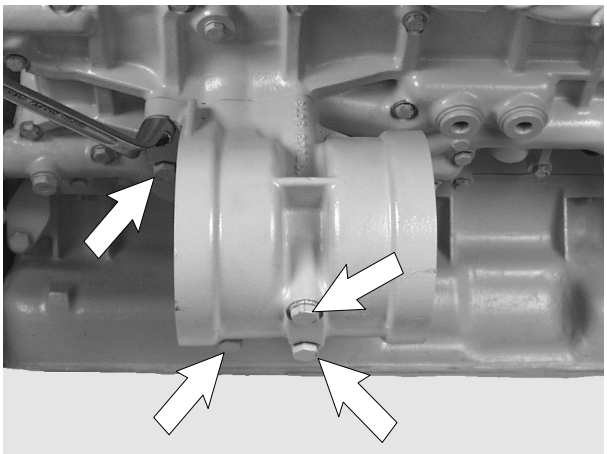

1

Fig. 1

Remove oil filter head (5 screws).

Remove filter head gasket.

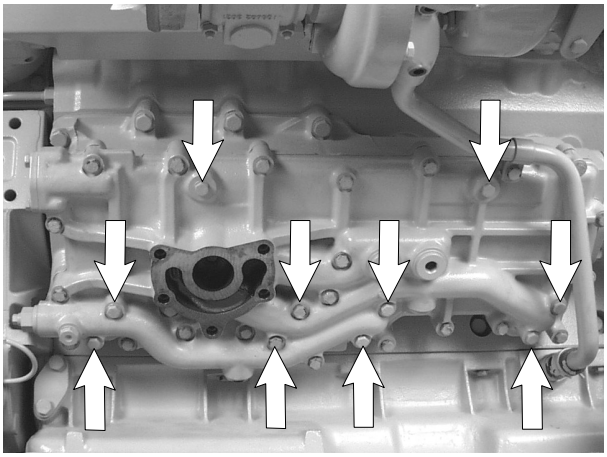

2

Fig. 2

Unscrew oil cooler housing cover with fitted oil cooler.

The 10 marked screws hold the oil cooler. Only loosen these screws after removing the housing cover.

3

Fig. 3

Check both oil cooler for damage and if necessary replace them. Fit oil cooler with new gaskets.

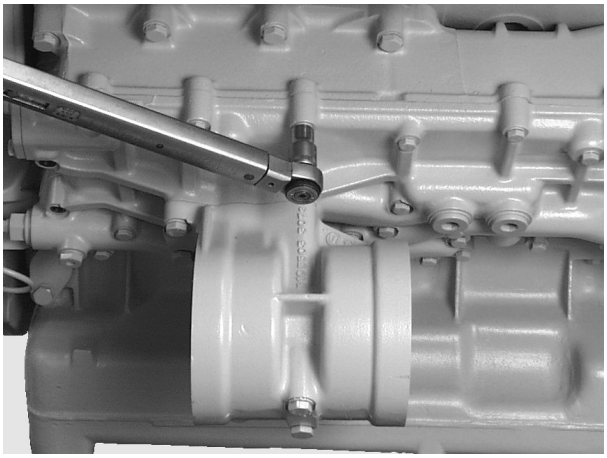

4

Fig. 4

Tighten the mounting bolts with the prescribed torque.

- Screw on oil cooler housing cover with fitted oil cooler
- Attach oil filter head and oil filter with new seals, see also page 53
- Fill engine oil and check for leaks after a short engine run
- Check oil level
- Filling up with coolant

https://truckmanualshub.com/

Drain engine oil

Danger:
The oil is hot, risk of scalding! Do not touch the oil drain plug with bare fingers. Oil is an environmental hazard. Handle with care!

Fig. 1 and Fig. 2

With the engine at operating temperature, remove the oil drain plugs on the oil sump and the oil filter bowl and allow the old oil to drain off completely.

Use a suitable container of sufficient capacity here to prevent oil from overflowing.

Caution:
Old oil is hazardous waste.
Observe safety instructions for the prevention of environmental damage.

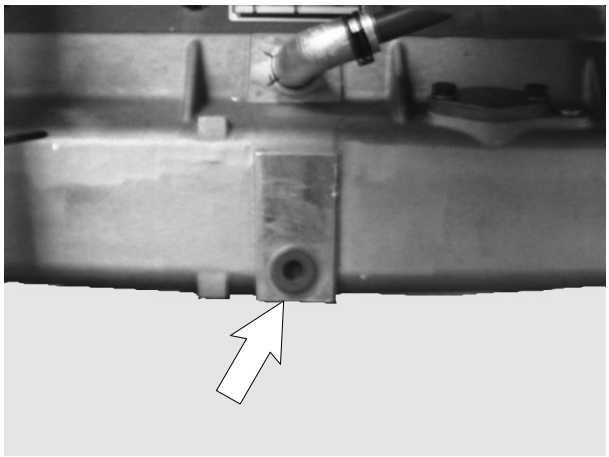
1

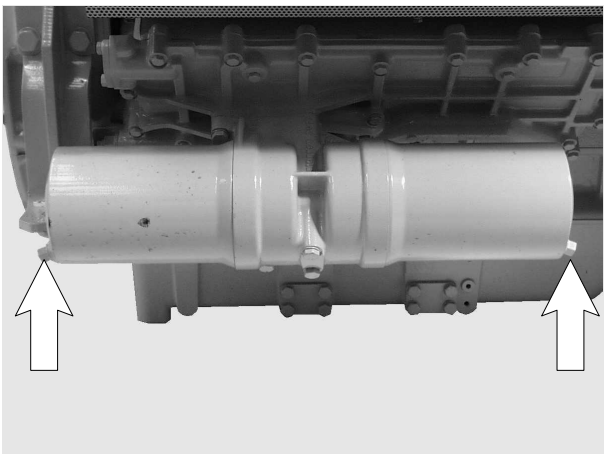
2

Remove oil pan

Caution:
Oil pans are awkward to handle and heavy.
They may contain residual amounts of engine oil.
Use lifting gear or work with a helper.

Fig. 3

Remove the mounting bolts from oil pan.

Take off oil pan.

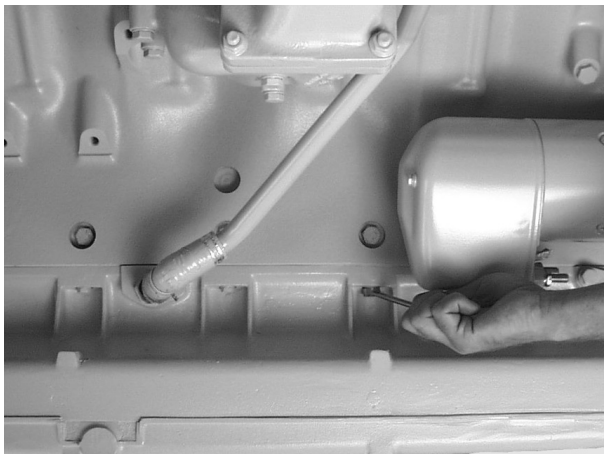
3

Removing oil pump

Fig. 4

Remove the mounting bolts from the bracket and from the oil pump.

Take off oil suction pipe.

Measure backlash between oil pump drive gear and crankshaft gear and compare value with the nominal value.

Replace worn gears.

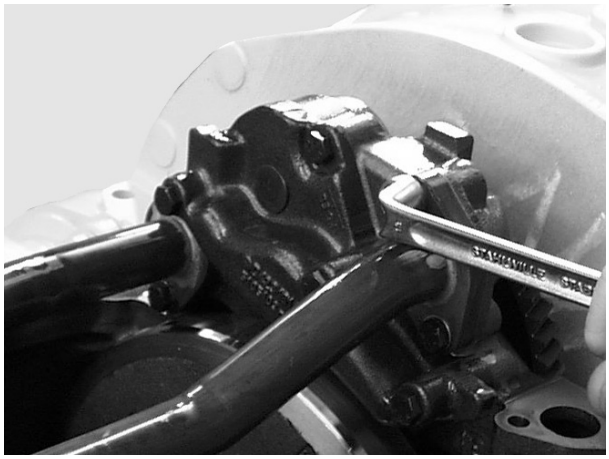
4

Fig. 5

Unscrew the mounting bolts of the pressure relief valve and oil pump.
Take off overpressure valve and oil pump.

The overpressure valve is encapsulated.

Opening pressure, see “Service Data”.

Note:
Depending on the engine model and oil pan variant, various oil pump versions are possible.

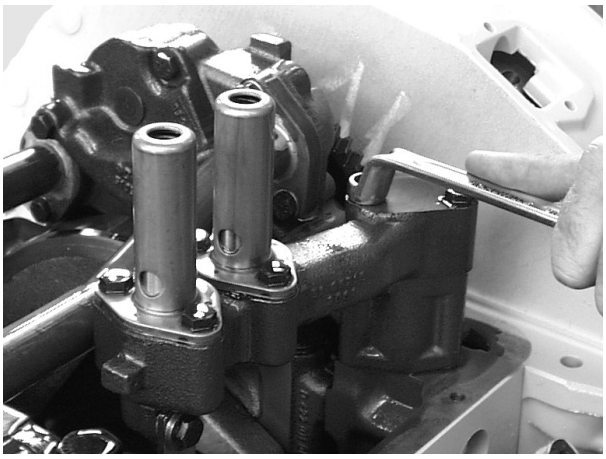
5

Repairing oil pump

Fig. 6

Fit the oil pump in a vice (use protective jaws).

Remove oil pump cover.

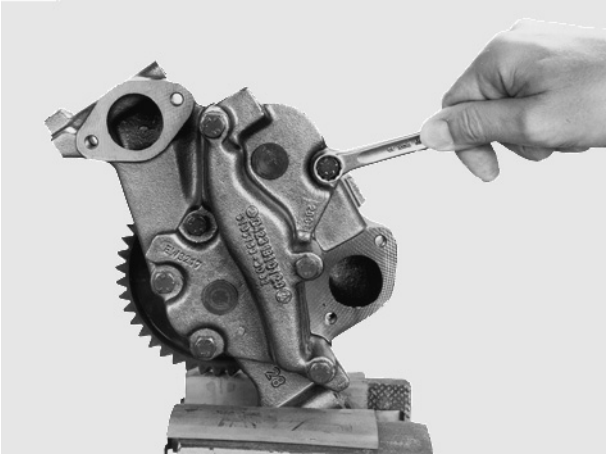
6

Fig. 7

Pull the driven oil pump wheel from the casing.
Check the toothed wheels and pump casing for wear (see “Service Data”).

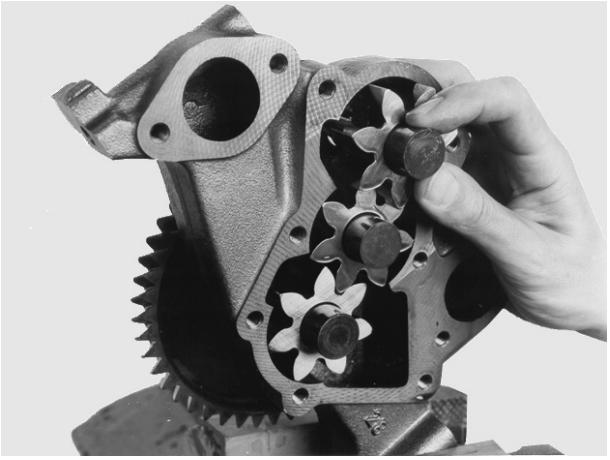
7

Fig. 8

Remove oil pump drive gear.

To do this, lay pump on suitable support and press off drive gear using a mandrel.

To install it, put drive gear on shaft, supporting facing shaft end.

Press on the drive wheel, observing the prescribed gap (see “Service Data”).

8

https://truckmanualshub.com/

Fig. 9

Fit on the cover.

Tighten the mounting bolts with the prescribed torque.

Grind or exchange heavily worn covers.

9

Checking the axial clearance of the pump wheels

Fig. 10

Position dial gauge and push shaft up to the stop in one direction and set dial gauge to ”0”.

Push the shaft in the opposite direction and read off the needle deflection on the dial gauge.

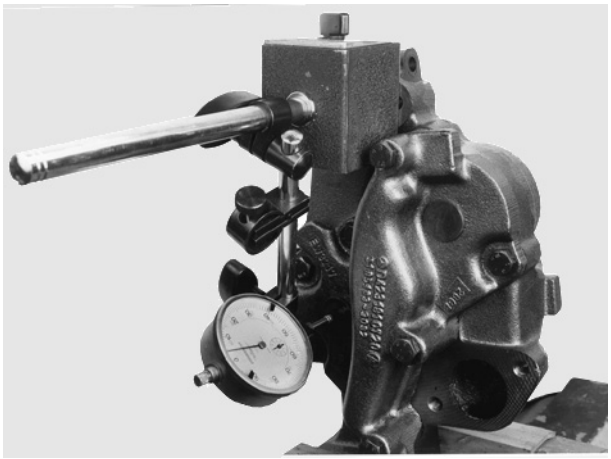

10

Installing oil pump

Fig. 11

Tighten the mounting bolts with the prescribed torque.

- Before installing, check whether the oil pump run smoothly and then fit it / them free of tension
- Fit oil suction line ① with seal in a tension–free manner
- Screw on pressure–relief valve ② without seal

Before fitting the oil pan, run the engine to check that the crankshaft drive and oil pumps are running smoothly and easily.

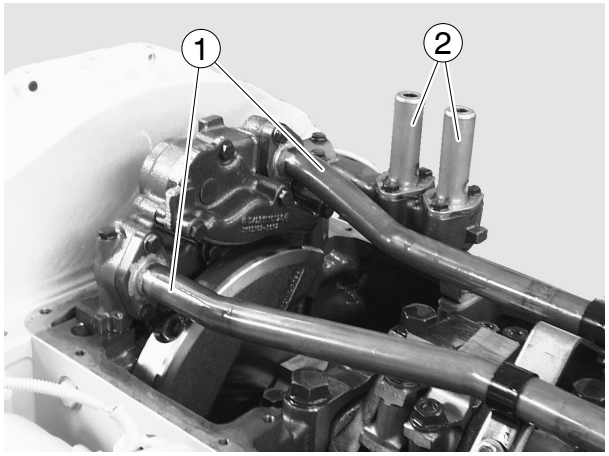

11

Attaching oil pan

Fig. 12

Fit an oil pan seal.

Fit oil pan to crankcase and screw in the mounting bolts.

Tighten the mounting bolts with the prescribed torque.

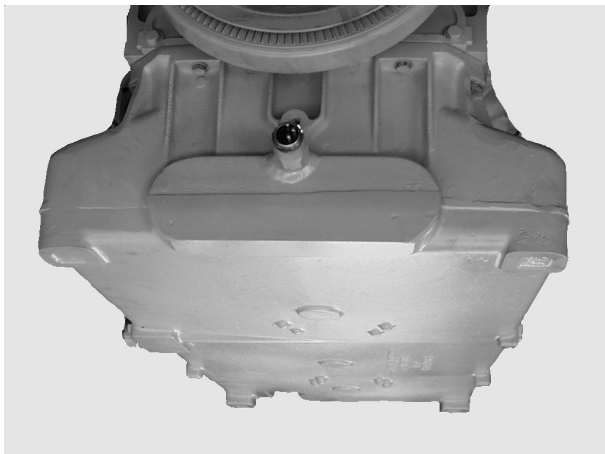

12

Filling with engine oil

Caution:
Do not add so much engine oil that the oil level rises above the max. marking on the dipstick. Overfilling will result in damage to the engine.

Fig. 13 and Fig. 15

Refill with fresh engine oil at the oil filler neck ①.

After filling with oil disconnect electric connection from speed pickup. Turn engine over with starter until oil pressure warning lamp goes out / oil pressure gauge indicates pressure. Then restore electric connection to speed pickup. Then start the engine and allow it to run at medium speed for a few minutes. Check oil pressure and leaks.

Then shut down the engine. After about 20 minutes, check the oil level.

- Pull out dipstick
- wipe it with a clean, lint–free cloth
- and push it in again up to the stop
- Pull out dipstick again

The oil level should be between the two notches in the dipstick and must never fall below the lower notch. Top up oil as necessary. Do not overfill.

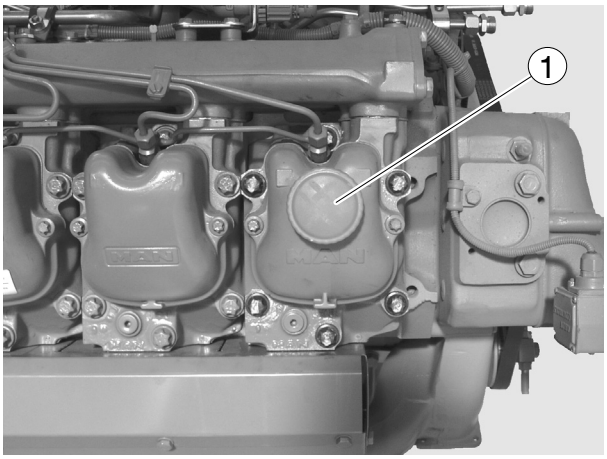

13

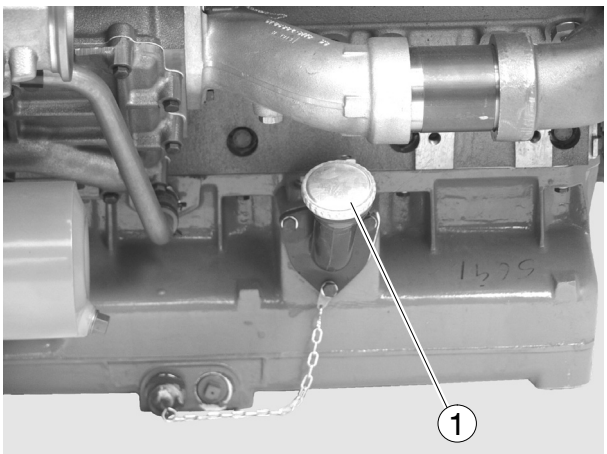

14

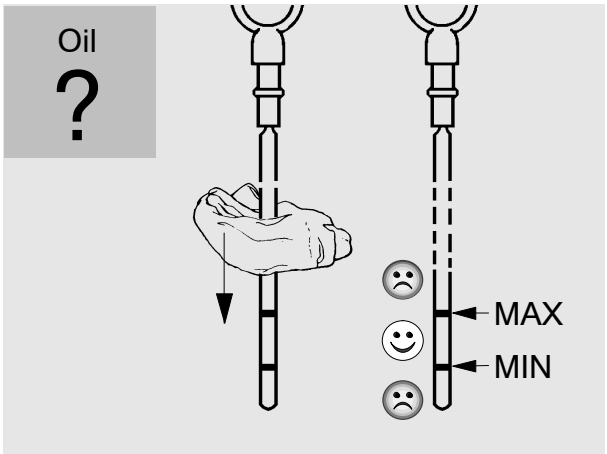

15

https://truckmanualshub.com/

Removing the oil injection nozzle

- Draining off oil, see page 55
- Removing the oil pan, see page 55

Fig. 1

Unscrew the securing bolts of the oil injection nozzle (arrow).

Remove oil injection nozzle with valve.

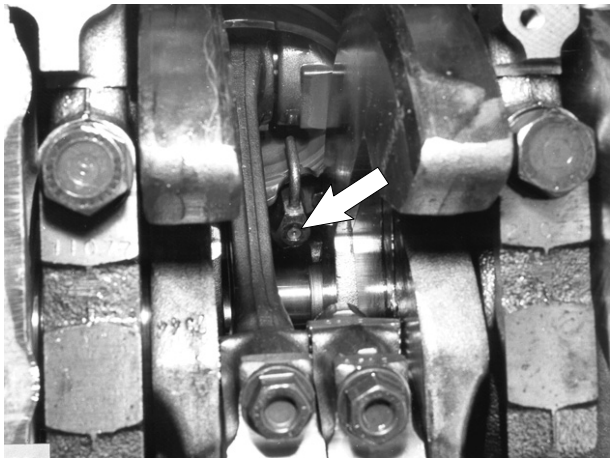

1

Check the oil injection nozzle valve

Fig. 2

Unscrew the oil injection nozzle valve from the body of the oil injection nozzle.

The valve plunger must move up and down easily. If the valve plunger sticks or jams, replace the oil injection nozzle valve.

Opening pressure, see “Service Data”.

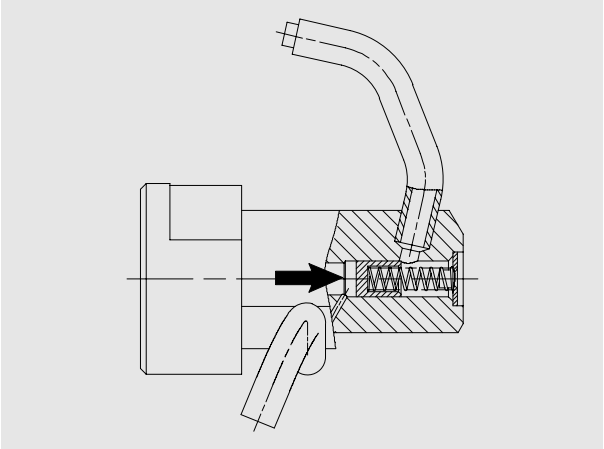

2

Installing the oil injection nozzle

Fig. 3

Position the oil injection nozzle ① at the oil injection nozzle flange ②.

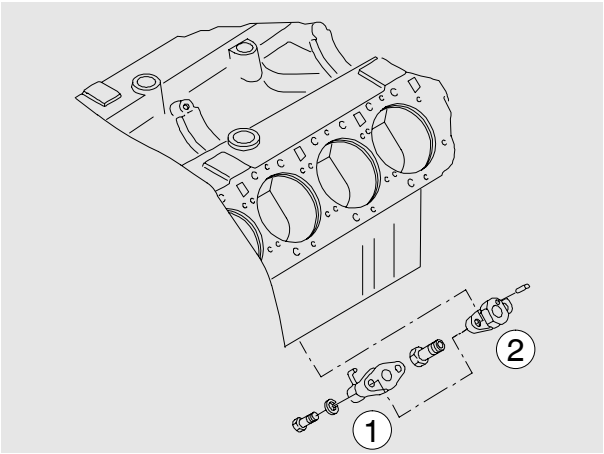

3

Fig. 4

Tighten the securing bolts with the prescribed torque.

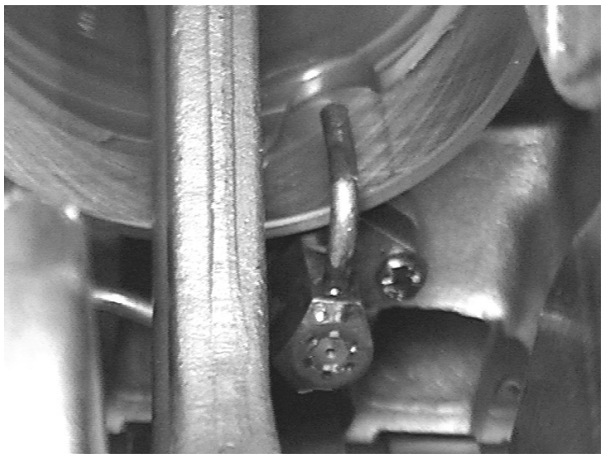

4

https://truckmanualshub.com/

Fig. 5

The oil spray from each nozzle must reach the entry bore hole of the cooling duct in the piston crown ① and cams ② without hindrance.

Bent oil injection nozzles must on no account be repaired.

Turn the engine. The crankshaft drive or pistons must not collide with the oil injection nozzle.

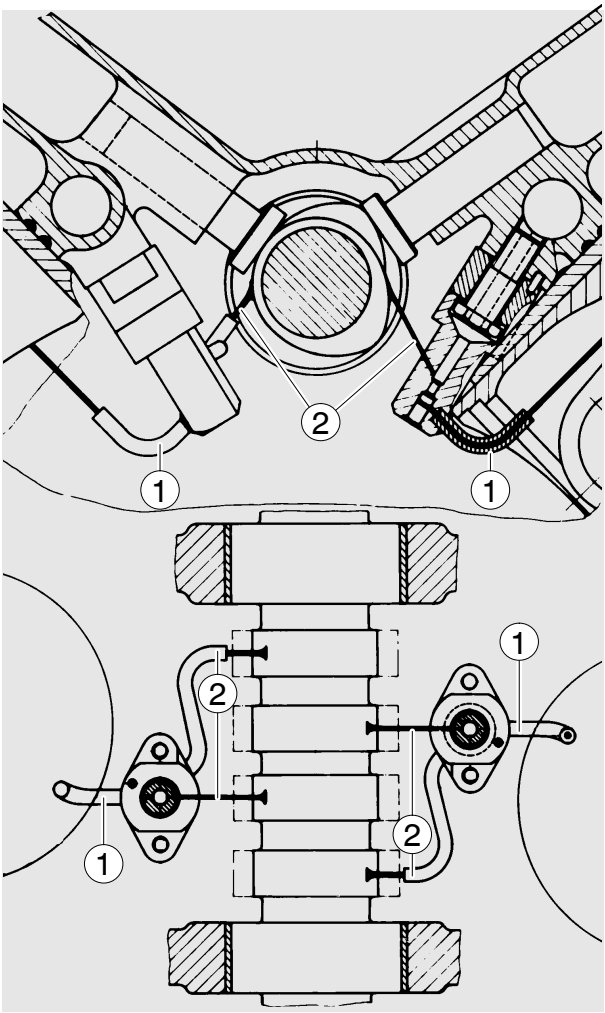

5

https://truckmanualshub.com/

Removing vibration damper

- Relax and remove V-belt; see page 132
- Turn engine to ignition “TDC”. This ensures that in subsequent assembly work the indicating dial will be in the correct position

Fig. 1

Block the crank gear.
The illustration shows a special tool that is to be fitted to the inspection port of the flywheel housing.

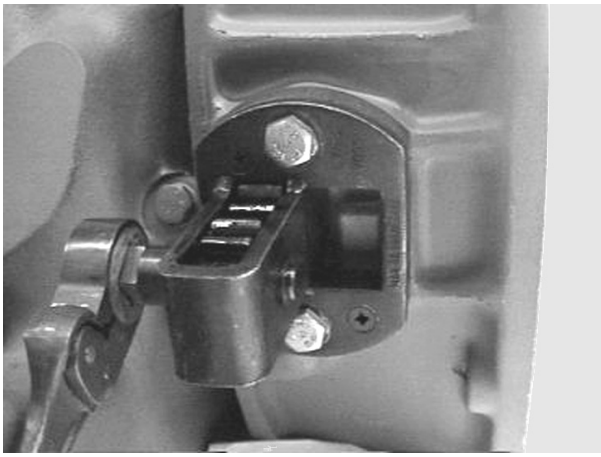
1

Fig. 2

Loosen the securing screws of the vibration damper.

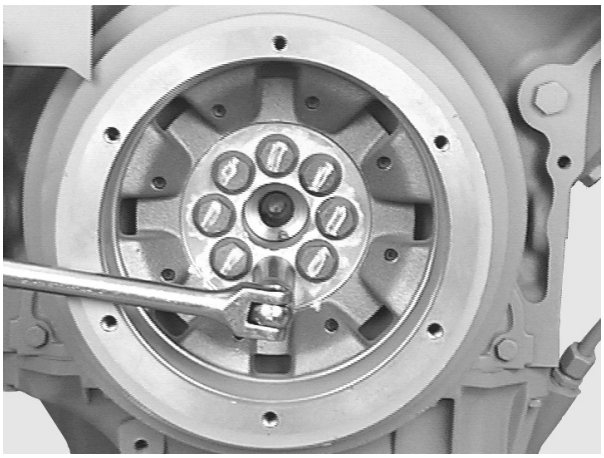
2

Fig. 3

Unscrew the two mounting bolts opposite one another and screw in the guide mandrel (M16x1,5).

Remove all remaining bolts.

Remove the vibration damper.

> **Caution:**
> The vibration damper is sensitive to impacts.

Remove oil thrower from the crankshaft.

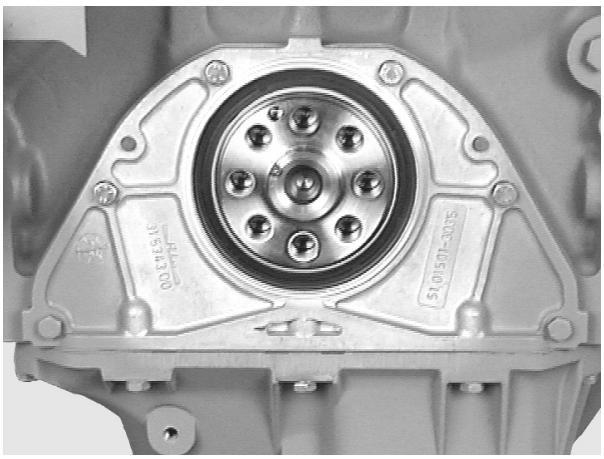
3

https://truckmanualshub.com/

Replacing the front crankshaft gasket

Fig. 4

Loosen the mounting bolts of the cover.

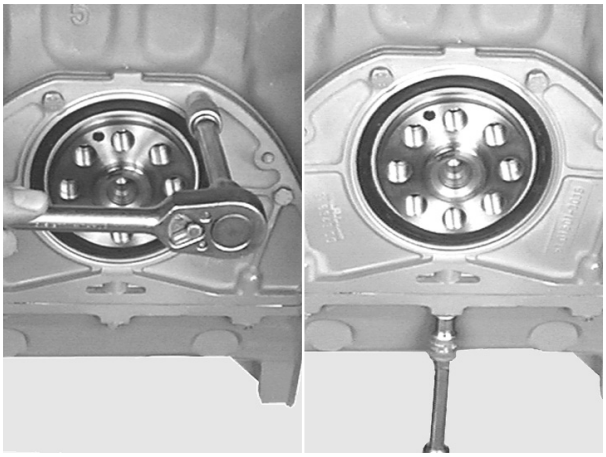

4

Fig. 5

Remove the cover.

Only replace the front crankshaft gasket as a complete unit,
i.e. replace the bearing race and the radial shaft sealing ring.

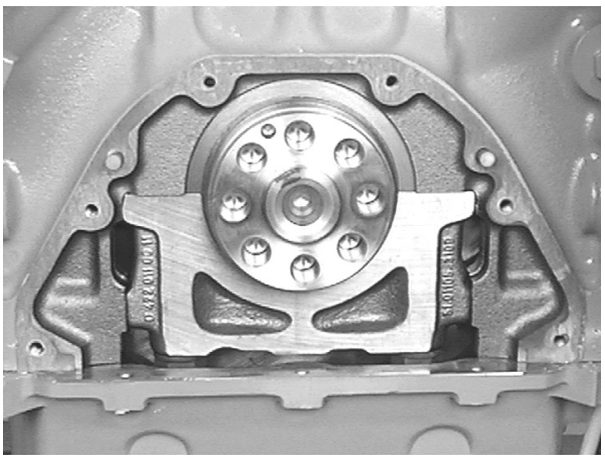

5

Replacing the bearing race

Fig. 6

A stripping device (special tool) is required to remove the bearing race.

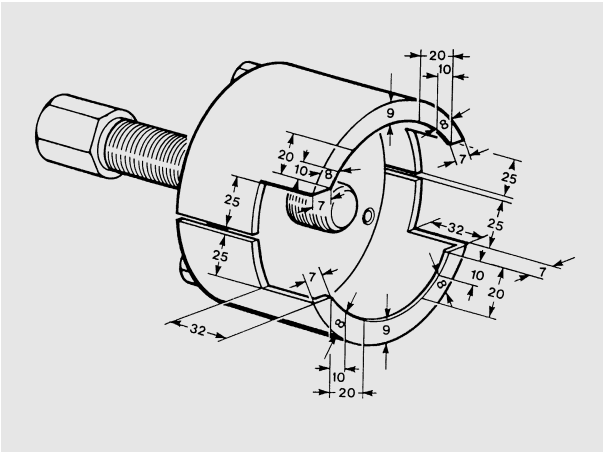

6

Fig. 7

Pull off the bearing race.

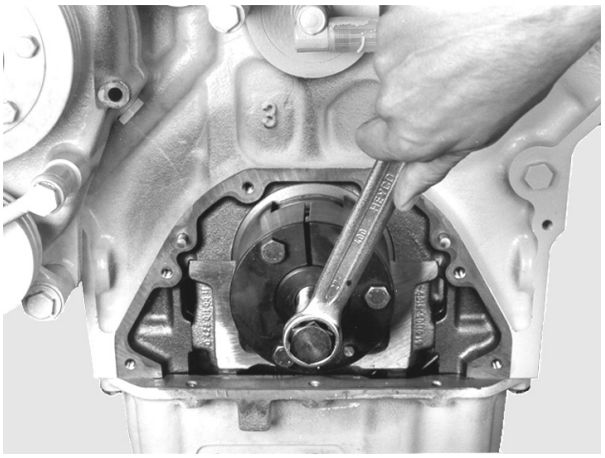

7

https://truckmanualshub.com/

Fig. 8

A special too is required to fit the bearing race.

Clean the inside of the bearing race and tail shaft. Coat the tail shaft with sealing compound “Antipor 46”.

- Push race ① and pressing sleeve ② onto adapter ⑥
- Tighten spindle ⑤ in adapter ⑥ with nut ⑦
- Bolt adapter ⑥ to crankshaft

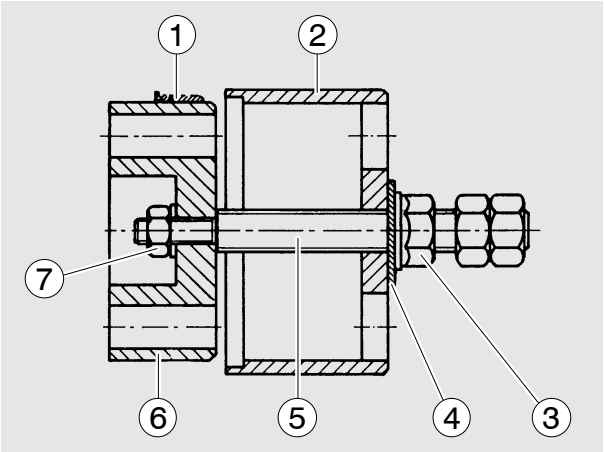

8

Fig. 9

The adapter must lie free of clearance on the crankshaft so that the right press–in depth of the bearing race is ensured.

Pull the bearing race as far as it will go into the press–in sleeve ② on the adapter with collar nut and thrust washer (③ and ④ in Fig. 9).

> **Note:**
> The bearing race can also be mounted when the cover is fitted.

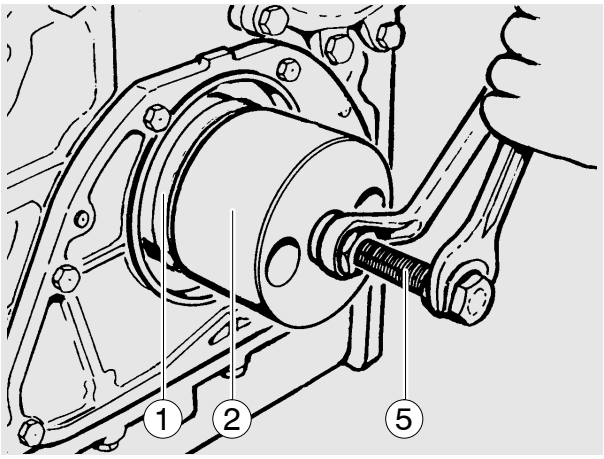

9

Replacing the radial shaft sealing ring

Fig. 10

To ensure perfect installation, the replacement cover and shaft sealing ring are only delivered as a complete unit.

So that it remains possible to mount the shaft sealing ring, it must stay on the transport and installation sleeve until assembly.

Refer to the comments and assembly instructions on page 69.

10

Fig. 11

Fit cover ① with new gasket ②.

The cylinder pins ③ provide better guidance for the cover.
The sealing ring is thus not damaged so easily when the cover is replaced.

Tighten the bolts with the prescribed torque.

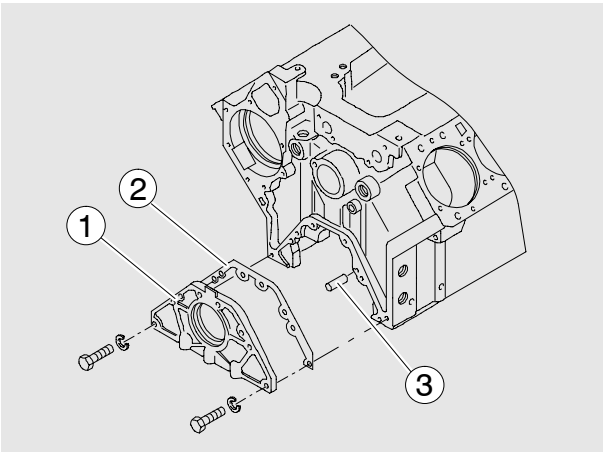

11

https://truckmanualshub.com/

Fitting the vibration damper

Fig. 12

Position the oil thrower on the crankshaft.

Position the vibration damper on two guide mandrels (M16x1.5). Ensure that the position of the graduated disc relative to the crankshaft is correct.

Tighten the mounting bolts with the prescribed torque.

Fit cranking device.

Fit and tension V-belts, see page 132

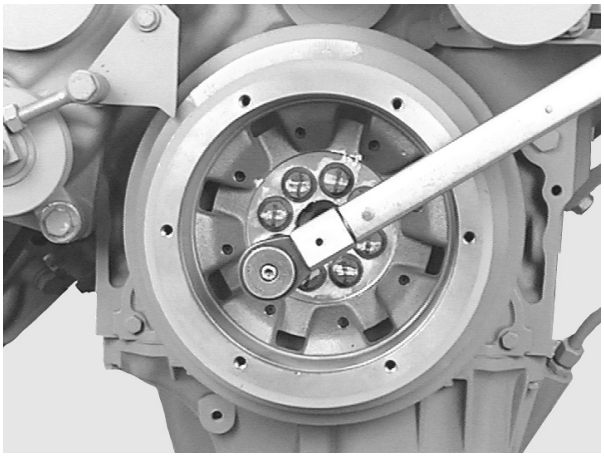

12

Fig. 13 and Fig. 14

During assembly the delivery start indicator on the vibration damper may have moved out of correct adjustment.

This is why you should check whether the scale of degrees on the inspection hole cover of the flywheel housing (picture 14) and on the vibration damper (picture 15) indicate the same values.

If necessary readjust delivery start indicator.

Caution:
Unblock the crankshaft drive!

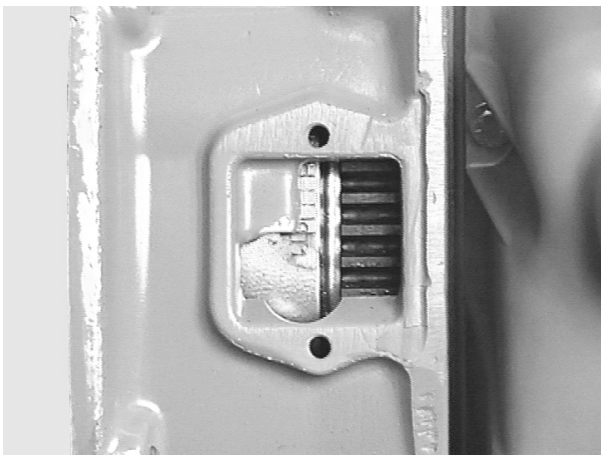

13

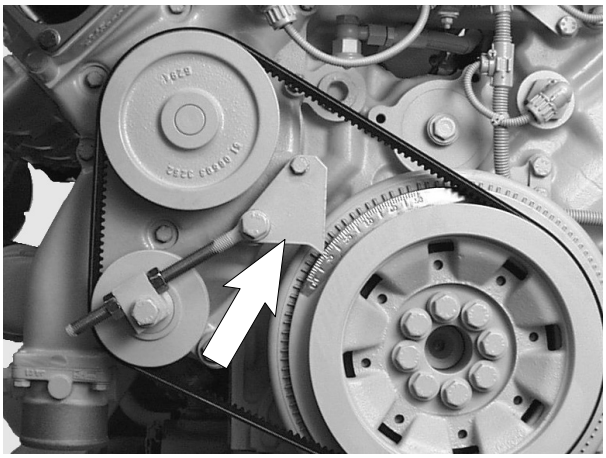

14

https://truckmanualshub.com/

Removing flywheel

- Remove speed pickup, see page 133

Fig. 1

Release the mounting bolts, securing the engine against rotating if necessary.

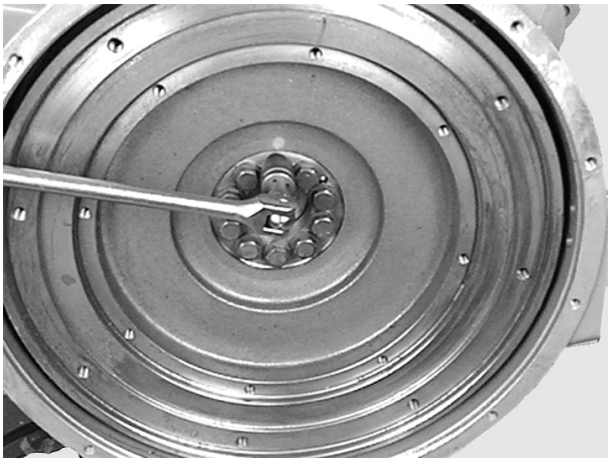

1

Fig. 2

Unscrew two bolts opposite one another and replace with two guide mandrels (special tool).

Remove all the bolts.
Pull off the flywheel with suitable lifting gear.

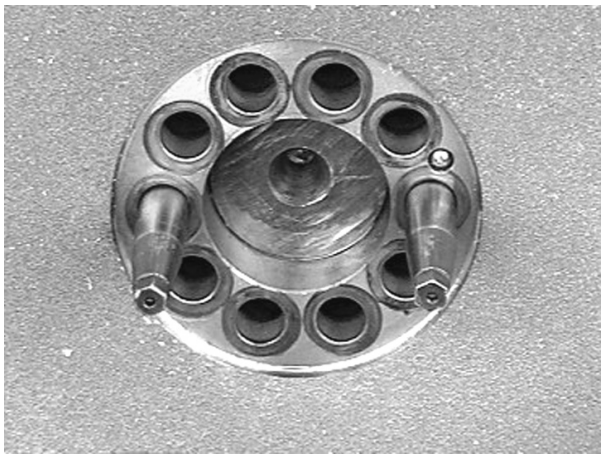

2

> **Danger:**
> The flywheel is heavy.
> Use lifting gear.

Fitting the flywheel

Fig. 3

Insert the guide pins.

Coat the sealing face on the inside of the flywheel with “Antipor 46” sealing compound.

Place guide mandrels on the flywheel; in doing so, pay attention to the assignment of the centring pin (arrow) to the hole in the flywheel.

Push the flywheel on as far as it will go.

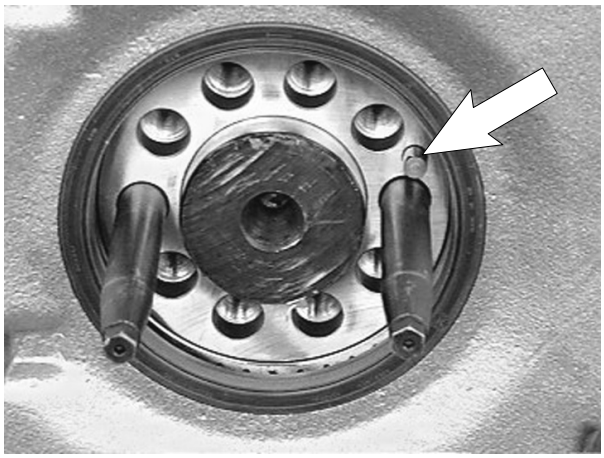

3

Fig. 4

Lightly oil new mounting bolts (elasticated bolts), screw them in and tighten alternately on opposite sides of the ring gear to specified torque.

- Install speed pickup, see page 133

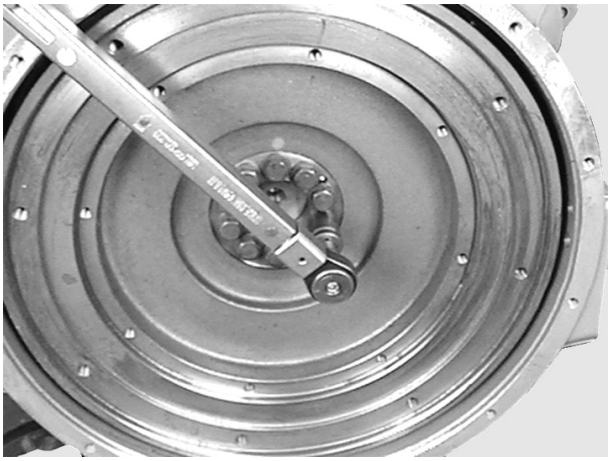

4

https://truckmanualshub.com/

Replacing starter ring gear

Fig. 5

Remove the flywheel.
Drill the starter motor toothed wheel and break with a chisel.

Caution:
In doing so, do not damage the flywheel.

5

Fig. 6

Note:
As the maximum axial run-out of the starter motor toothed wheel must not be exceeded, the axial run-out of the flywheel should be measured on the contact surface of the starter motor toothed wheel prior to shrinking on the starter motor toothed wheel.
If the required value is exceeded, replace the flywheel.

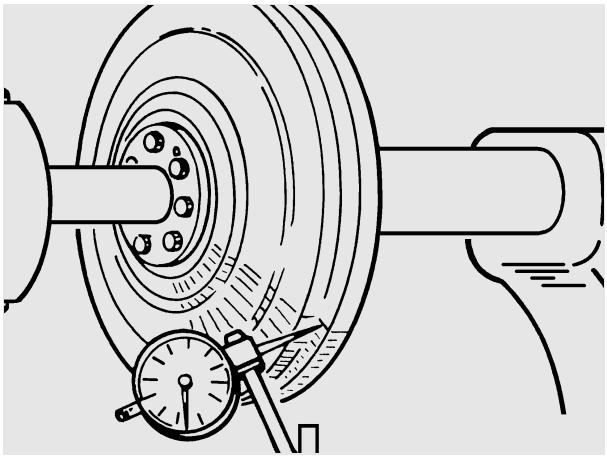

6

Engage the flywheel at the hub.
Apply the dial gauge to the contact surface of the toothed wheel.
Turn the flywheel a few revolutions by hand and observe the reaction of the dial gauge.

Fig. 7

Heat the new starter ring gear to approx. 200°C to 230°C and press on as far as it will go.

Danger:
The parts are hot! Risk of burns.
Wear protective gloves.

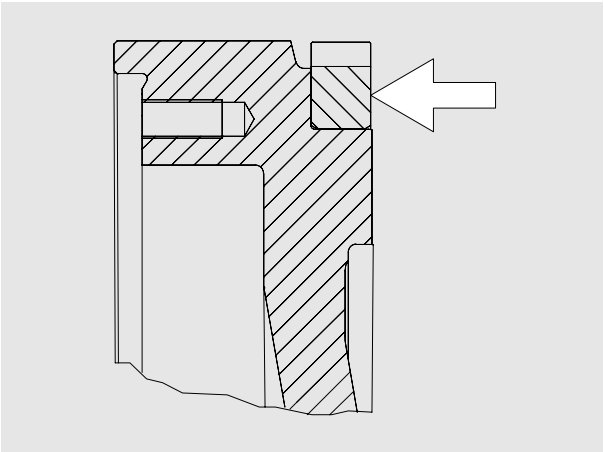

7

Check the axial runout and compare with the max. permissible value.

https://truckmanualshub.com/

Removing shaft sealing ring

Fig. 1

Remove flywheel, see page 65.

Prisey out the insulation ring with the special tool or a screwdriver

1

Fit shaft sealing ring

Fig. 2

When fitting a new shaft seal, you should also exchange the bearing race of the flywheel.

Insert the new shaft sealing ring into the flywheel housing.

Use mandrel (special tool) to drive in sealing ring until flush.

Refer to the comments and assembly instructions on page 69.

3

Replacing bearing race

Remove flywheel, see page 65.

Fig. 1

If the shaft sealing ring on flywheel side is replaced, it is also recommended to replace the bearing race of the flywheel.

Pull off the bearing race to be exchanged using a puller (special tool, see Page163, no. 12.2).

1

Fig. 2

Insert the new bearing race in the drift (special tool) in such a way that the inner bevelled side faces the flywheel when fitted later.

Carefully warm up the drift with bearing race.
The installation temperature of the bearing race is approx. 150°C.

2

Fig. 3

Press in the bearing race as far as it will go.

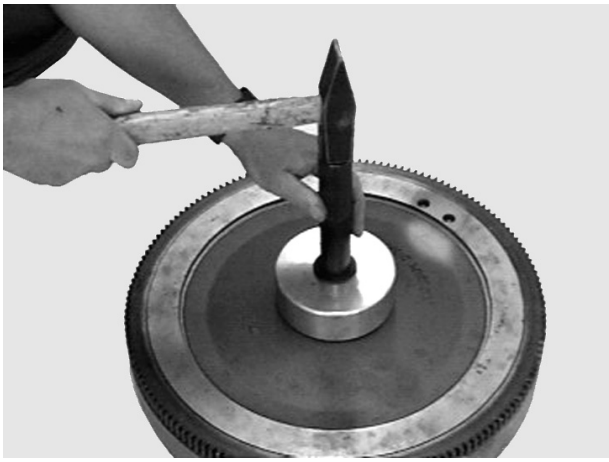

3

Fig. 4

Seal the gap between flywheel and bearing race with “Antipor 46”.

4

https://truckmanualshub.com/

General information on crankshaft seals

As a general principle, the radial shaft sealing rings are made of polytetrafluorothylene (PTFE), otherwise known as Teflon.

PTFE sealing rings differ from the elastomer sealing rings that used to be common in that they have a much wider, flat sealing lip that is not pretensioned by a coiled spring expander.

The relatively large pretension of the sealing lip itself means that it curves inwards. This is why the PTFE sealing ring is delivered on a transport sleeve. So that it remains possible to mount the sealing ring, it must stay on this sleeve until assembly. This applies also because the sealing lip is very sensitive and the smallest damage causes leaks.

The sealing lip and the bearing race of the flywheel must not be coated with oil or other lubricants.

On fitting the new sealing ring, always replace the bearing race alongside it.

Assembly instructions for crankshaft seals

- The PTFE sealing ring must be fitted absolutely free of oil and grease. Even the slightest traces of oil on the bearing race or sealing ring will cause leakage
- Clean oil, grease and corrosion protection agents from the bearing race before assembly. All standard cleaning agents can be used here
- If the PTFE sealing ring is soiled with oil or grease, it is unusable. Cleaning is not permitted in this instance
- The PTFE sealing ring must never be stored without the supplied transport sleeve. Even after it has been stored for a period of only 30 minutes without the transport sleeve, it will lose it pretension and thus be rendered unusable

https://truckmanualshub.com/

Note:
When carrying out work on the intake system, ensure meticulous cleanliness to prevent dirt and foreign matter from penetrating into the system.

Removing intake manifold

Fig. 1

Removing intake manifold.

Remove the injection lines, see page 32

1

Fig. 2

Remove the mounting bolts from the charge-air pipe.

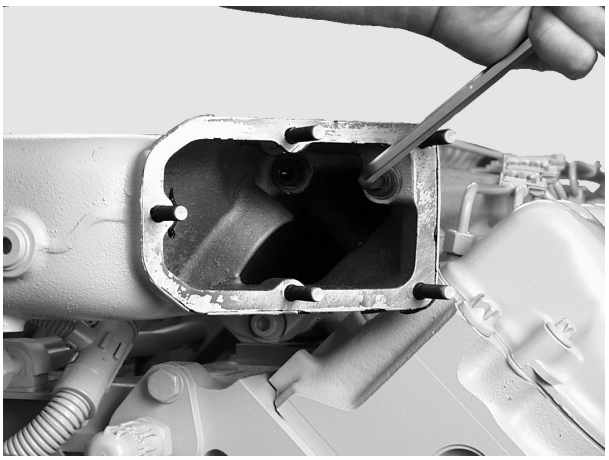
2

Fig. 3

Remove the mounting bolts from the intake pipe.

Remove the intake pipe.

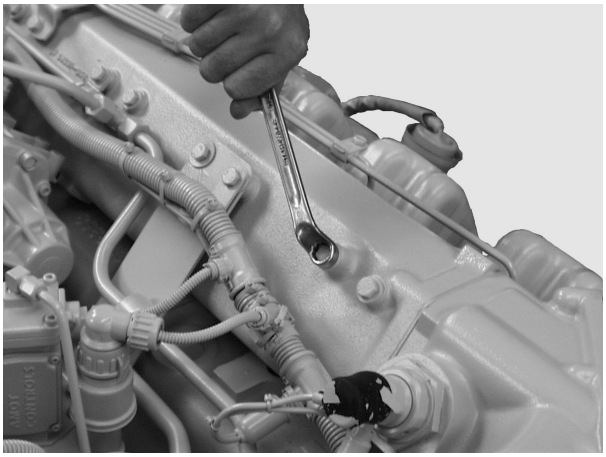
3

Installing intake pipe

Fig. 4

Place intake manifold with new seals in position.

Fit the mounting bolts.

Ensure that the seals are correctly seated.

Tighten the mounting bolts with the prescribed torque.

Attach the injection lines.

Fit the charge-air elbow and the charge-air pipes leading to the turbocharger. Exchange O-ring seals.

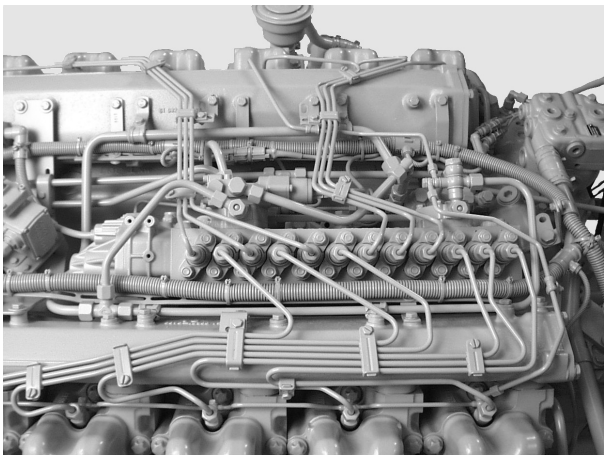
4

https://truckmanualshub.com/

Removing the exhaust pipe

- Removing the turbocharger, see page 75

Fig. 1

Remove the guard plates.

Fig. 2

Note:
The exhaust-gas pipe can be removed along with the attached turbocharger.

Loosen the securing bolts of the exhaust pipe.

Danger:
The exhaust pipe is heavy.

Before unscrewing all securing bolts, if appropriate replace 2 bolts by stud bolts as guides.

The stud bolts with thread M10 have been produced by MAN.

Remove exhaust pipe.

Installing the exhaust pipe

Fig. 3

Before fitting the exhaust pipe, screw in 2 stud bolts as a guide.

Position the exhaust pipe with new gaskets.

Ensure that the gaskets are correctly seated.

Fig. 4

Tighten the securing bolts with the prescribed torque (see “Service Data”).

- Installing turbocharger

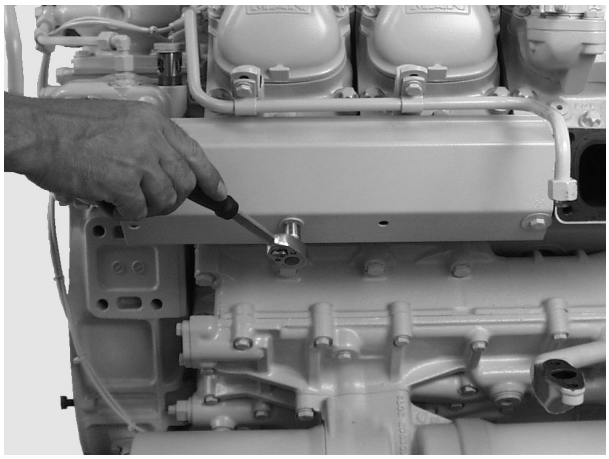
1

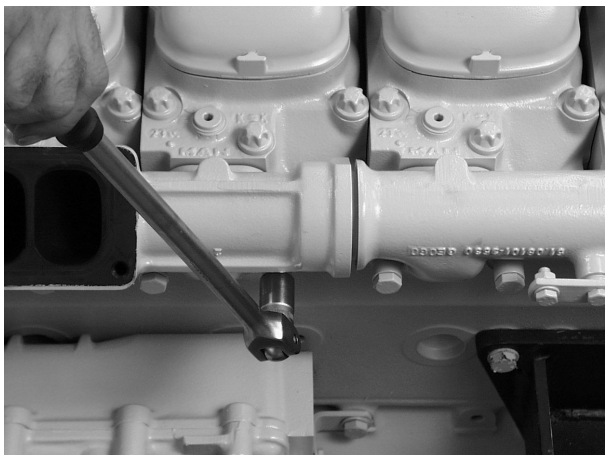
2

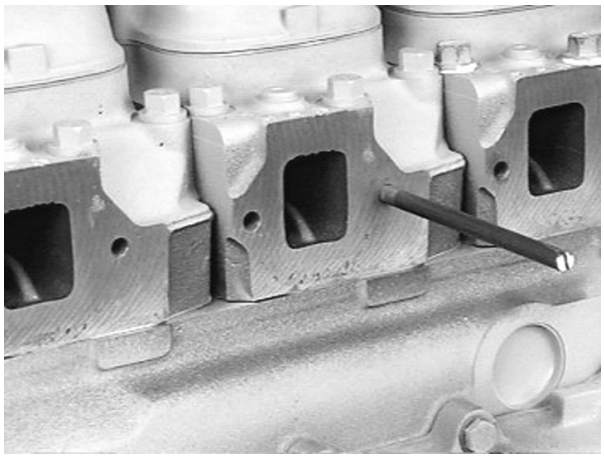
3

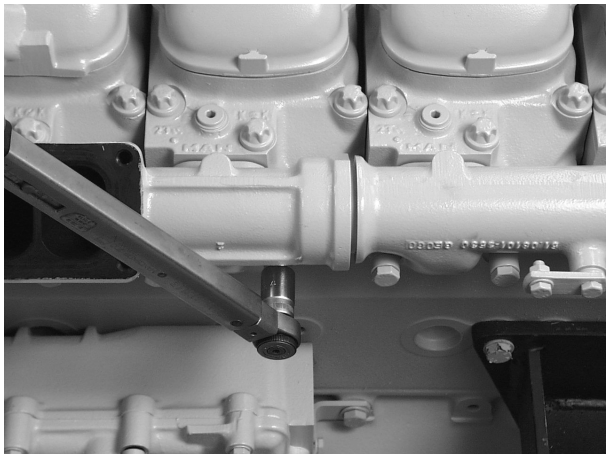
4

https://truckmanualshub.com/

Before removing the turbocharger carry out the following checks

Turbochargers are frequently exchanged if the oil consumption is too high, the output too low or the intake and / or exhaust gas noises appear to be abnormal.
Subsequent inspections by the manufacturer of the supposedly defective parts frequently prove the turbochargers to be in order.
To ensure that only defective turbochargers will be exchanged in future, the following checks are to be carried out beforehand:

If the oil consumption is too high

- Check air filter for contamination
- ensure that the engine room ventilation is adequate
- check intake pipe for cross section reduction (owing e.g. to damage, contamination)

These causes lead to higher oil consumption owing to the increased vacuum on the intake side of the compressor.

- Check outside of turbocharger for oil traces

Oil consumption caused directly by turbocharger depends on the bearing wear and results in relatively early mechanical damage.

If engine performance is not satisfactory

Correct adjustment of the
- delivery start
- valve clearance
- speed adjustment (to full load stop)

In addition, the following are to be checked:
- the compression
- the air filters for contamination
- the charge-air pressure
- intake system for reduction of cross-section and for leaks
- exhaust system for damage and leaks

If you do not detect any possible cause in the above checks, check the turbocharger for:
- Carbonization in the turbine area, which impairs the movement of the wheel assembly (can be eliminated by axial movement)
- Dirt in the compressor area
- Damage caused by foreign objects
- Scraping of the turbine rotor on the housing

If a considerable amount of dirt has accumulated, clean the compressor end and check the bearing clearance.

Caution:
Do not damage the aluminium compressor wheel.

When there is unusual intake or exhaust noise

- Check the intake and exhaust system in the area of the charger group.
  Defective gaskets can lead you to think the turbocharger is defective. Replace them.
- If there are still unusual noises, check the bearing clearance.
  Turbochargers in good working order do not make any excessive noise.

https://truckmanualshub.com/

Oil accumulation in charge-air lines and the intercooler

A small amount of oil collects in the charge-air system. This is supposed to happen, is caused by oil mist, and is desirable. The oil mist is required to lubricate the intake valve seats.

If more oil accumulates than usual, that is, if oil pockets develop in the lower air box of the intercooler, for example, this can lead to oil disintegration or uncontrolled raising of the engine speed when the oil is separated. In such cases, you must eliminate the cause.

Possible causes:

- The engine is overfilled with oil
  - Check whether the correct dipstick and guide pipe combination is installed
- The engine oil used is unsuitable (see publication “Fuels, Lubricants, Coolants for MAN Diesel Engines”)
- The engine is being run on impermissibly steep inclines
- The crankcase pressure is to high. This may be caused by a defective oil separator valve or piston ring wear

Compressor carbonization

This can occur when the charge-air temperature is permanently high, for example when the engine is constantly run at full load.

Carbonization lowers the charging pressure but does not negatively affect performance or acceleration. Carbonization can lead to increased exhaust clouding.

If exhaust emissions test values are no longer met:

- Remove the compressor housing, being careful not to let it get jammed
  - If it gets jammed, the compressor wheel blades may get damaged or bent, and the resultant imbalance can ruin the turbocharger
- Remove carbonization in the compressor housing with a suitable cleaning agent

Danger:
Never spray in cleaning agent while the engine is running.
- ineffective
- dangerous

- In problem cases, use oil types that are less likely to lead to compressor carbonisation (see publication “Fuels, Lubricants, Coolants for MAN Diesel Engines”)

https://truckmanualshub.com/

Checking the charge-air pressure

Sufficient charge-air pressure is indispensable for full power output and clean combustion.
The check is designed to ascertain whether damage to the turbocharger and leaks in the intercooler and in the charge-air pipes have occurred.
Extreme operating conditions (full-load operation and high air temperature) and the use of unsuitable engine oils (also see publication “Fuels, Lubricants, Coolants for MAN Diesel Engines”) may cause deposits on the compressor as well as in the intercooler, which results in a reduction in charge-air pressure.

Preconditions for the measurement:

The delivery start and the valve clearance must be set as specified, and the engine must be at operating temperature.

Charge-air pressure:

A general set-point value for charge-air pressure cannot be given, as the installation conditions have a bearing on this.
The value ascertained during the commissioning of the engine and noted in the commissioning report is to be used as the set-point value.

When carrying out the measurement, observe the following:

Owing to various atmospheric reference conditions during the measurements and to tolerances of the pressure gauges used, deviations of max. ± 100 hPa (± 100 mbar) are permissible.

Fig. 1

The measuring connection for checking the charge-air pressure and the charge-air temperature is located in the intake pipe at the point where the flame-starter sheathed-element glow plug is screwed in.

Remove flame-starter sheathed-element glow plug, see page 39.

Connect up pressure gauge (if necessary using a suitable threaded pipe as adapter).

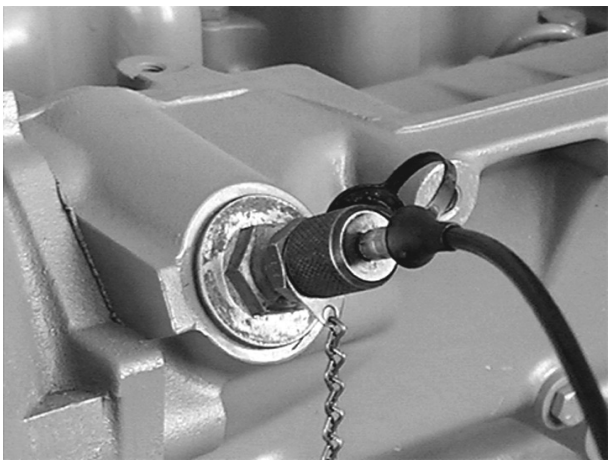

1

Fig. 2

Measure the charge-air pressure downstream of the intercooler at nominal engine speed and full load.

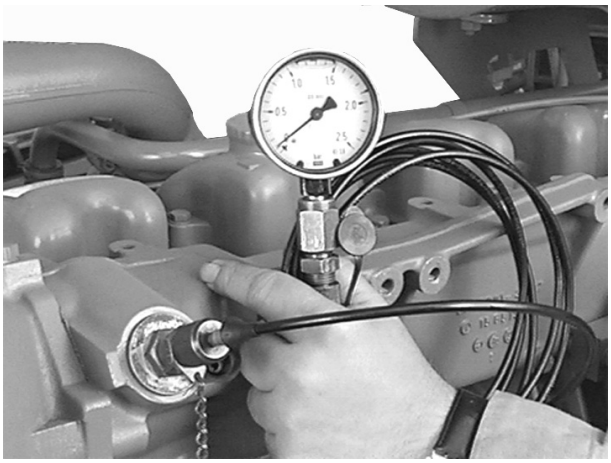

2

https://truckmanualshub.com/

Removing turbocharger

Fig. 1

Remove the charge–air elbow and the charge–air pipes leading to the turbocharger.

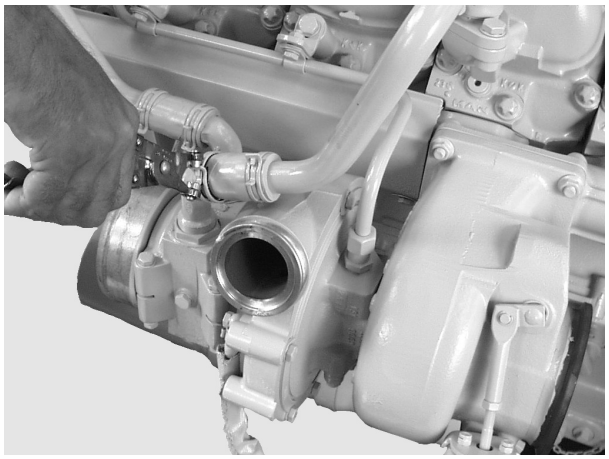

1

Fig. 2

Detach intake neck.

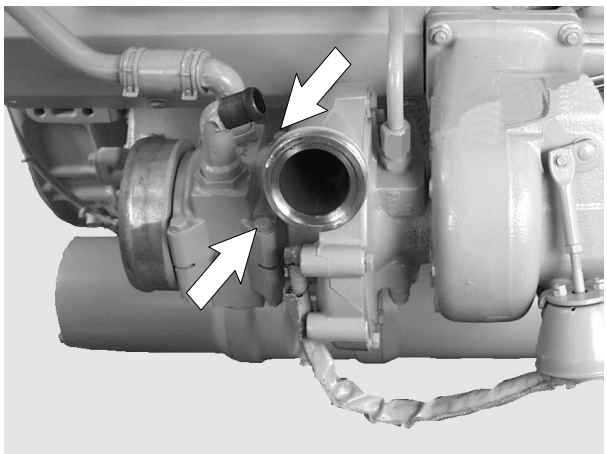

2

Fig. 3

Remove oil pressure line from turbocharger.

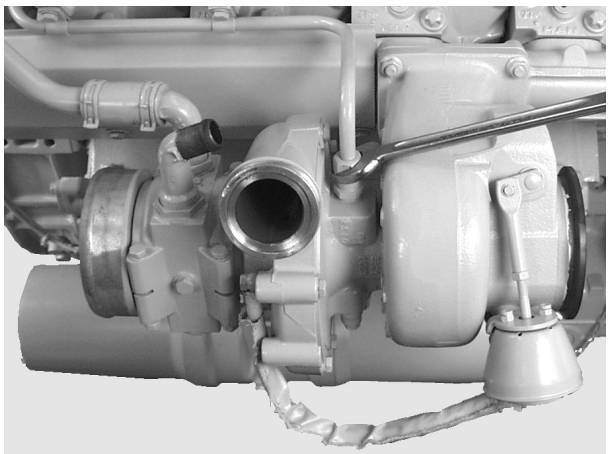

3

Fig. 4

Remove oil return line from turbocharger.

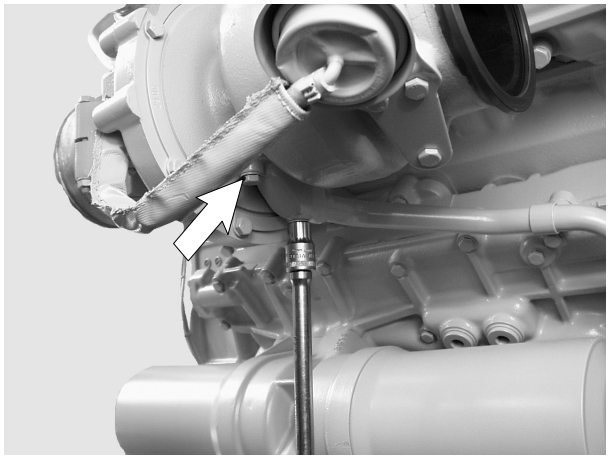

4

Fig. 5

Remove the bolts from the turbocharger.

Take off turbocharger.

Note:
When placing the turbocharger to one side, ensure extreme cleanliness to prevent penetration of dirt and foreign bodies.

5

Installing turbocharger

Fig. 6

The turbocharger is fitted in reverse order.

On assembly, new gaskets and new self–locking nuts are to be used.

Before connecting the oil supply line, fill the bearing housing with fresh engine oil.

Check all the connections for leaks and to ensure they are not subjected to strain.

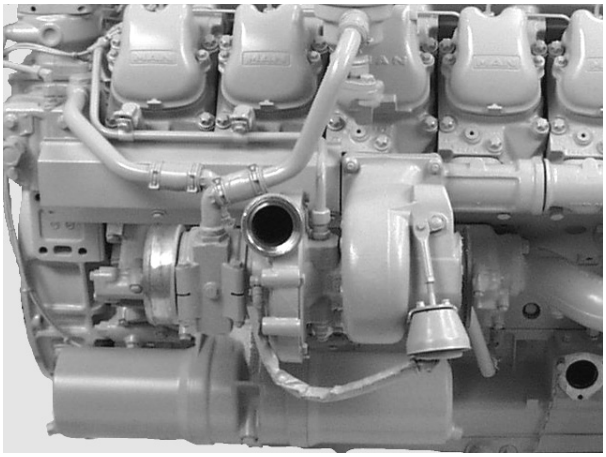

6

Fig. 7

Note:
Ensure that the clamping area of the hose is always behind the bead of the pipe.

1 Pipe
2 Hose
3 Hose clamp
4 Distance
5 Bead on pipe

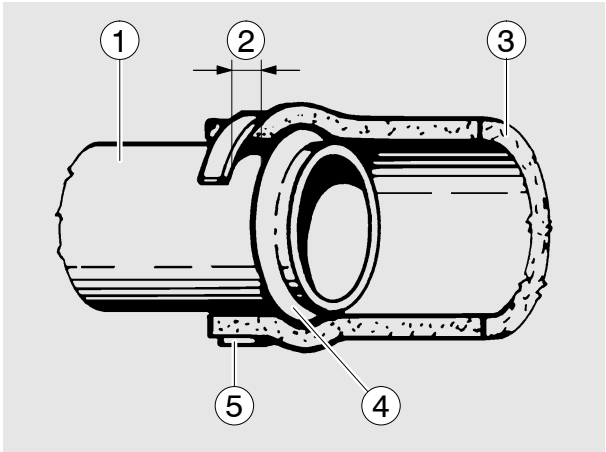

7

https://truckmanualshub.com/

- Remove turbocharger, see page 75
- Mark turbine housing relative to the bearing housing
- Remove turbine housing

Axial clearance

Fig. 1

Apply dial gauge holder and dial gauge under pre-load to shaft end face of the turbine wheel as shown.
Press rotor shaft against dial gauge. Read and note down value. Push rotor in opposite direction. Read and note down value.
The difference between the two is the axial play.
Change turbocharger if axial clearance is exceeded.

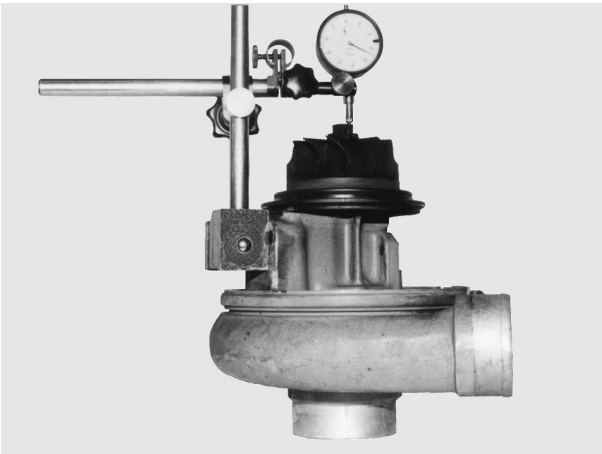
1

Radial clearance

Radial clearance is measured only on turbine end with dial gauge or feeler gauge.

Fig. 2

Dial gauge:
Apply dial gauge tip to side of hub. Push turbine wheel towards dial gauge. Read and note down value.
Push turbine wheel in opposite direction. Read and note down value. The difference between the values is the radial clearance.
Measure at several points.
If the play exceeds the permissible value, exchange turbocharger.

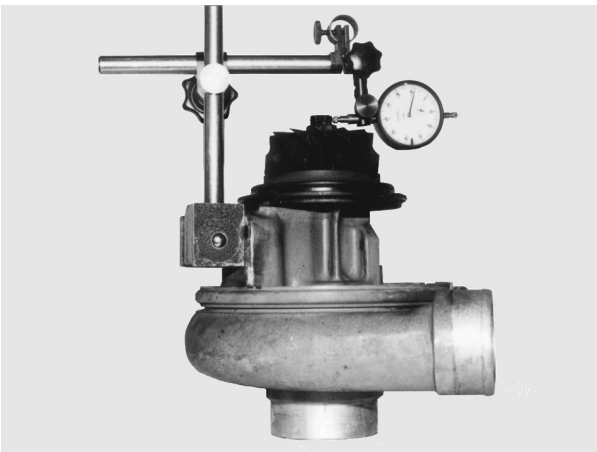
2

- Fit turbine housing. Ensure that the markings coincide
- Tighten turbine housing bolts to specified torque
- Installing turbocharger

https://truckmanualshub.com/

Removing cylinder head

- Drain off coolant, see page 40
- Removing injectors, see page 32
- Remove exhaust pipe, see page 71
- Remove intake pipe, see page 70

Fig. 1

Remove the cylinder head covers.
Remove the coolant bleed pipe.
Detach fuel leak–off oil line.

Caution:
Here, oil residues can escape.
Old oil is hazardous waste.
Observe safety instructions for the prevention of environmental damage.

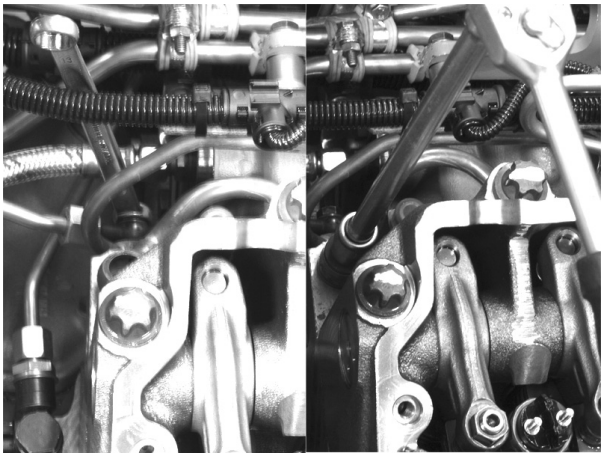
1

Fig. 2

Back off the valve adjusting screws.
Release and remove the cylinder head bolts in reverse order of tightening.

Remove the rocker arm bearing housing.

2

Fig. 3

Remove the valve bridges.
Take out the push rods.

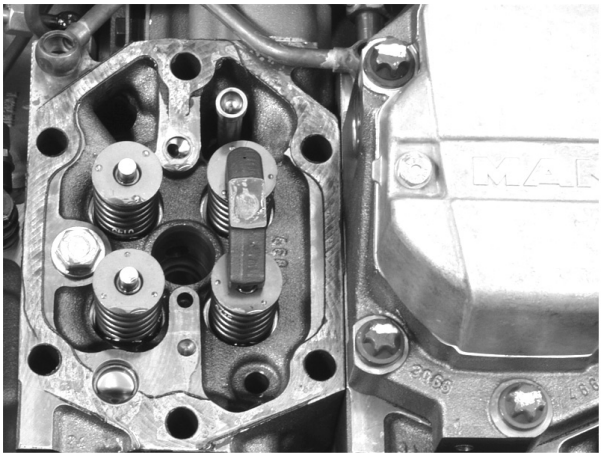
3

Fig. 4

Remove the cylinder head and cylinder head seal.

Check whether the cylinder head sealing face and cylinder block are flat using a straightedge.

Caution:
The cylinder head sealing face must **not** be machined.

Comply with the specified nozzle projection and valve recess (see “Service Data”).

Note:
Check the cylinder heads for cracks.

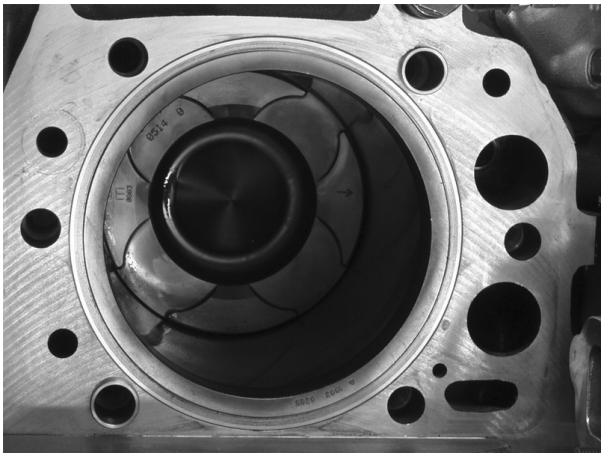
4

https://truckmanualshub.com/

Installing cylinder head

Fig. 5

Before fitting, clean and blow out the threaded holes in the crankcase. Clean the sealing surfaces on the cylinder head and on the crankcase.

Lay the new cylinder head seal in place, ensuring that the hole patterns match up, and place the cylinder head on top.

Each cylinder head is fixed in position with 2 fitting sleeves.

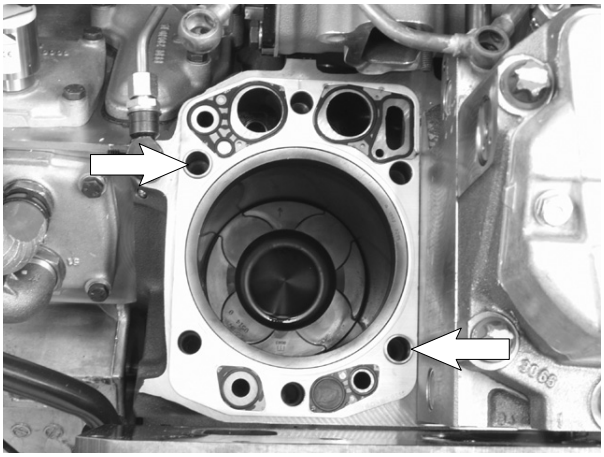

5

Fig. 6

Check the tappet push rod for deformation.
When inserting the tappet push rods, ensure that they fit in the socket of the valve tappet.

Insert the valve bridges with the cut–through sides ② facing the push rods.

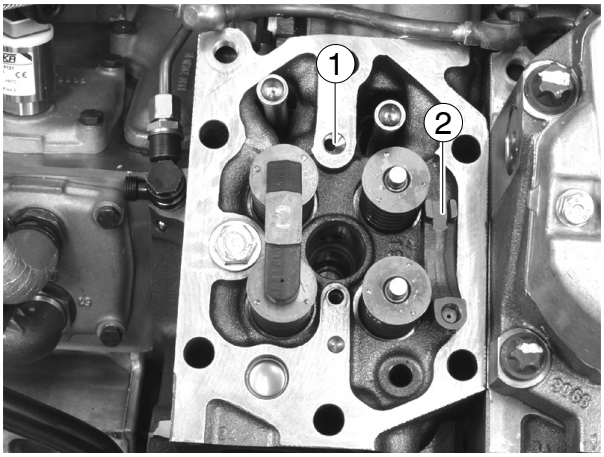

6

Fig. 7

Apply a thin bead of “Loctite 5900” sealing compound to seal the rocker arm bearing housing.

> **Caution:**
> The bore hole (① in Fig. 6) must be kept clear for the oil supply!

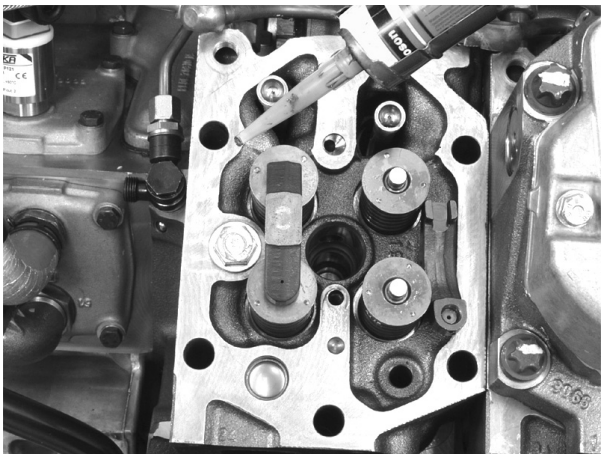

7

Fig. 8

Fit the rocker arm bearing housing, inserting the rocker arm ball pins into the tappet ball sockets.

8

https://truckmanualshub.com/

Fig. 9

Check cylinder head bolts for max. permitted length (see “Service Data”). Removed bolts can be reused if the max. permitted length is not exceeded.

Before inserting the cylinder–head bolts, apply engine oil to the thread and coat the seating surface of the bolt head with installation paste “Optimoly White T”.

9

Fig. 10

Tighten the bolts according to the rotation angle method. Observe the tightening sequence, specified tightening method, information and instructions on the cylinder head bolts in the publication “Service Data”.

Note:
To avoid any distortion between the cylinder heads and exhaust pipes, we recommend proceeding as follows:

- Place the cylinder head seals and cylinder heads in position
- Screw in the head bolts a few turns
- Fit the straightedge (special tool) with ground surface on the exhaust side; tightening torque for mounting bolts: 20 Nm.If a straightedge is not available, mount the exhaust manifold and tighten to 20 Nm.
- Tighten the cylinder head bolts as specified
- Remove the straightedge
- Tighten the exhaust and intake pipes to specified torque

10

Fig. 11

- Installing intake pipe, see page 70
- Installing exhaust pipe, see page 71
- Installing injectors, see page 32
- Set valve clearance, see page 82
- Fit the cylinder head cover with a new seal
- Fill up with coolant, see page 40

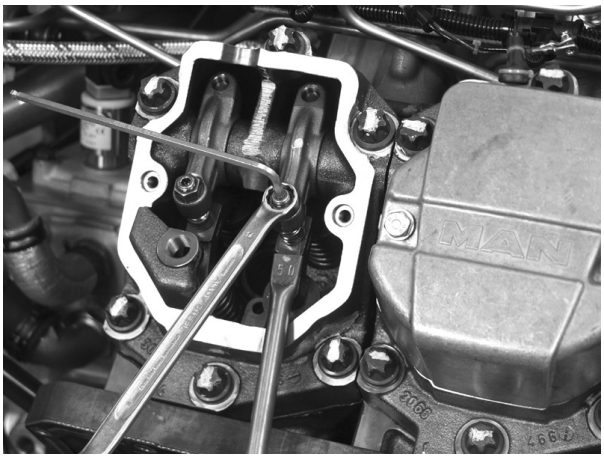

11

https://truckmanualshub.com/

General notes

The sealing effect of the cylinder head seal depends mainly on whether the required initial tension of the cylinder–head bolt is actually achieved and retained.

To tighten the cylinder–head bolts, use a calibrated torque wrench. The specified final torque must be maintained for at least 5 seconds when it is applied. When using snap–type torque wrenches, tighten the bolts gradually as otherwise the torque selected will not be fully transferred to the bolts.

Observe the notes on the usability of cylinder–head bolts, tightening sequence, and prescribed tightening method in the chapter “Service Data”.

Tightening

“Tightening” is the initial tightening of the newly fitted bolts that have not yet been tightened following a repair - e.g. after replacement of the cylinder head seal. Tighten the cylinder–head bolts with the engine cold, i.e. the crankcase is hand–warm or colder.

Before inserting the cylinder–head bolts, apply engine oil to the thread (not the threaded hole) and coat the seating surface of the bolt head with installation paste “Optimoly White T”.
Do not use oils or oil additives containing MoS_2.
In the case of unoiled bolts, a significant portion of the tightening torque is converted into friction and is thus lost for the bolt pretensioning.

- To secure the cylinder heads, tighten the cylinder head bolts only slightly
- Align the cylinder heads by screwing on the straightedge (special tool).
  If no straightedge is available, use the exhaust or intake pipe
- Tighten step by step in the right order and with the prescribed tightening torque and / or angle of rotation

Caution:
If individual bolts are tightened too much during preliminary tightening, the cylinder head is distorted. The distortion can no longer be removed with continued tightening in accordance with regulations!

https://truckmanualshub.com/

Adjust the valves only when engine is cold (max. coolant temperature 50°C).

Fig. 1

Remove the cylinder head covers.

> **Caution:**
> Here, oil residues can escape.
> Old oil is hazardous waste.
> Observe safety instructions for the prevention of environmental damage.

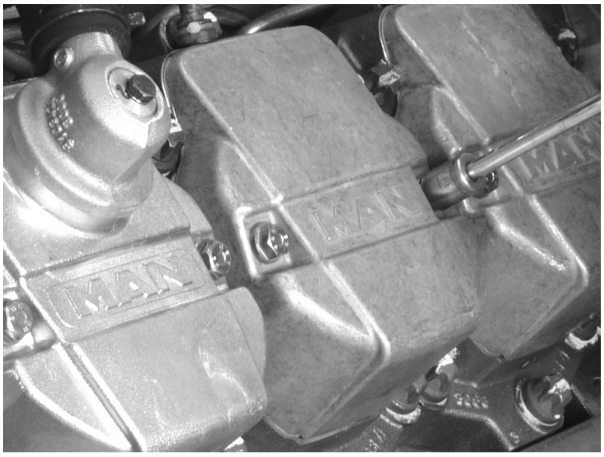

1

Fig. 2

Turn the engine using the barring gear until the piston of the cylinder to be set is at ignition TDC and the rocker arms are relieved of load.

The valves of the synchronised cylinder are then on overlap.

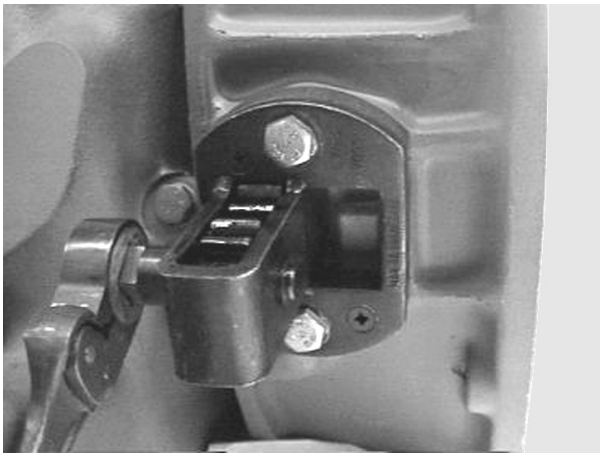

2

Fig. 3

D 2842 LE 620

Valves overlap in cylinder

1	12	5	8	3	10	6	7	2	11	4	9
6	7	2	11	4	9	1	12	5	8	3	10

Adjust valves in cylinder

Valve clearance:

Intake: 0.5 mm
Exhaust: 0.6 mm

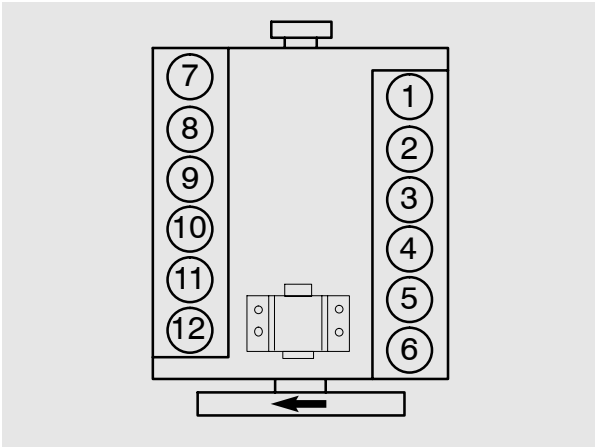

3

Fig. 4

- Slide the feeler gauge between the valve bridge and the rocker arm
- Loosen lock nut and turn adjusting screw with screwdriver until feeler gauge can be moved with slight resistance
- Tighten the lock nut
  Tightening torque: 40 Nm
- Check the clearance once again
- Fit the cylinder head covers:
  Screw in the bolts by hand and then tighten

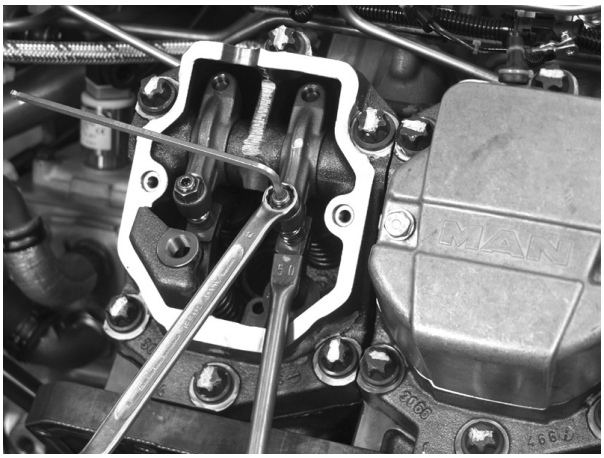

4

https://truckmanualshub.com/

Disassembling rocker arm mechanism

- Remove cylinder head, see page 78

Fig. 1

Clamp mounting plate ② (special tool) in a vice and bolt the rocker arm bearing housing onto the mounting plate.

The exhaust valve rocker arm shaft has a tapped hole.

Screw adapter and impact puller ① into this tapped hole.

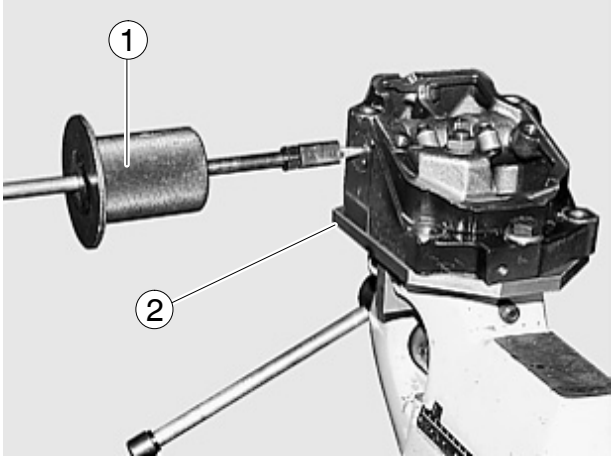

1

Fig. 2

Pull out the exhaust valve rocker arm shaft and remove the rocker arm.

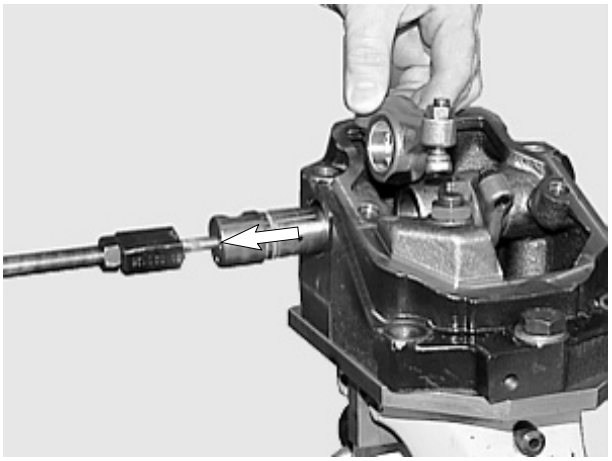
2

Fig. 3

Drive out the intake valve rocker arm shaft with a suitable plastic mandrel.

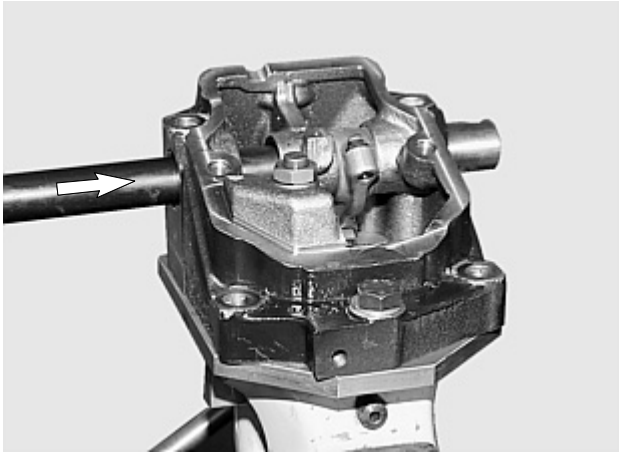
3

Fig. 4

Remove the rocker arm shaft and rocker arm.

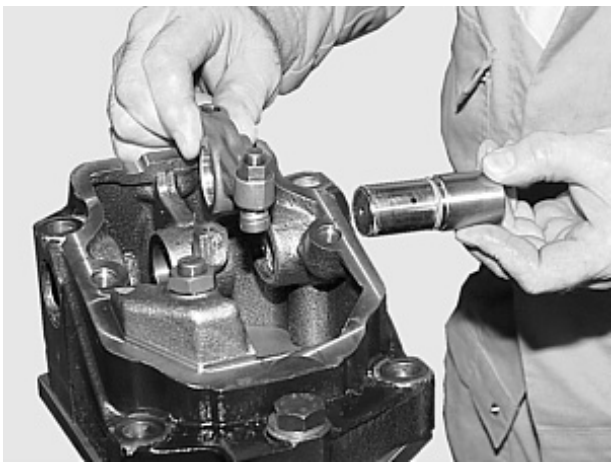
4

https://truckmanualshub.com/

Fig. 5

① Rocker arm shaft for exhaust valves
② Rocker arm shaft for inlet valves
③ Rocker arm

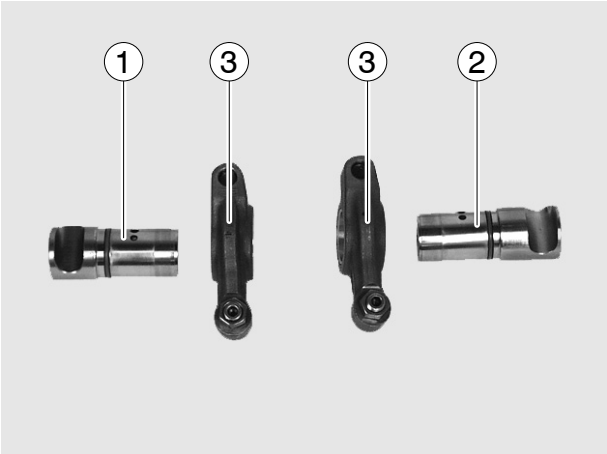

5

Assembling rocker arm mechanism

Fig. 6 and Fig. 7

Recesses ① in the rocker arm shafts serve to accommodate the cylinder head bolts ②.

Align the rocker arm shafts so that the holes for the cylinder head bolts are kept free.

Lightly oil the shafts and O-rings.

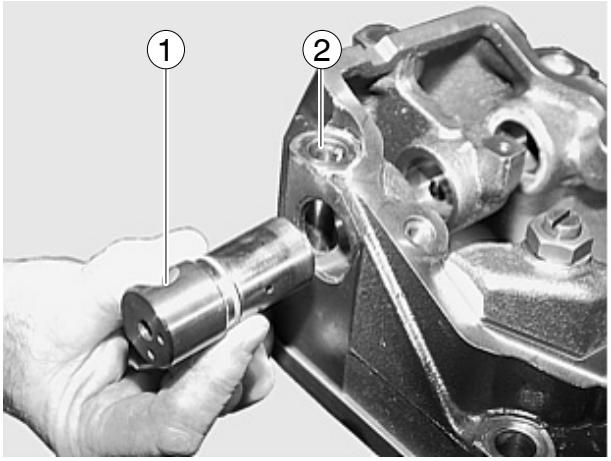

6

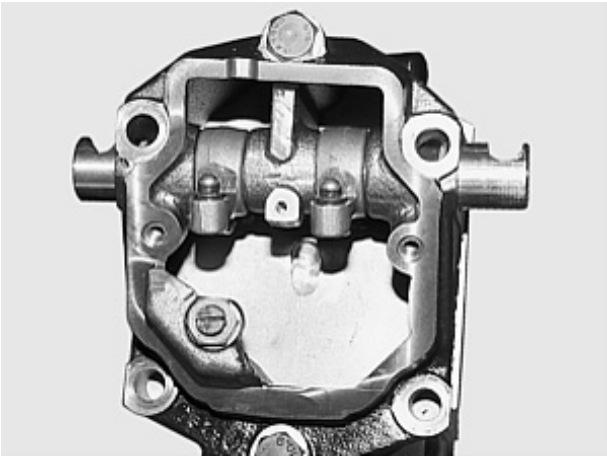
7

Fig. 8

Press–in device for the rocker arm shafts (special tools).

① Guide plate
② Mounting bolts
③ Press–in part “A” for exhaust–side shaft
④ Press–in part “B” for intake–side shaft

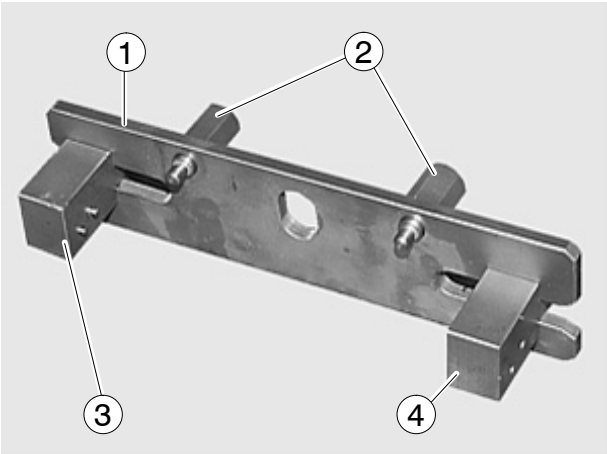

8

https://truckmanualshub.com/

Fig. 9

Bolt the guide plate onto the rocker arm bearing shaft – with “TOP” facing the intake side.

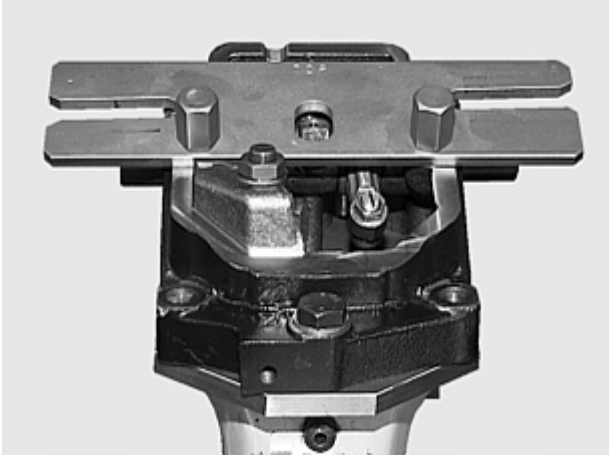

9

Fig. 10

Insert press–in part “A” for the exhaust–side shaft into the guide plate, ensuring that the alignment pins fit into the shaft bores.

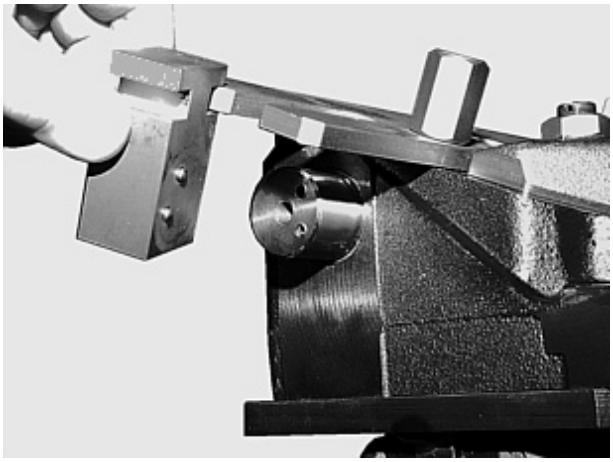

10

Fig. 11

Drive the rocker arm shaft fully home into the bearing housing.

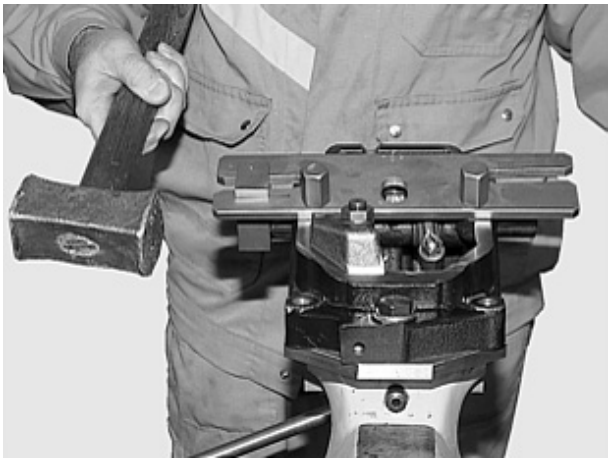

11

Fig. 12

Insert press–in part “B” for the intake–side shaft into the guide plate, ensuring that the alignment pins fit into the shaft bores.

Drive the rocker arm shaft fully home into the bearing housing.

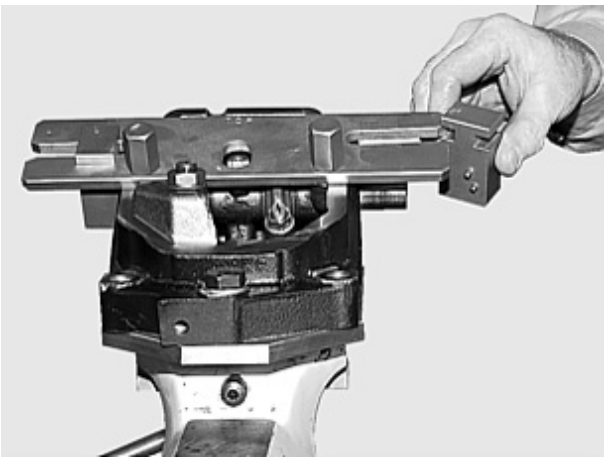

12

https://truckmanualshub.com/

Fig. 13

Remove the press−in tool.

Check the rocker arms for ease of movement and axial play.

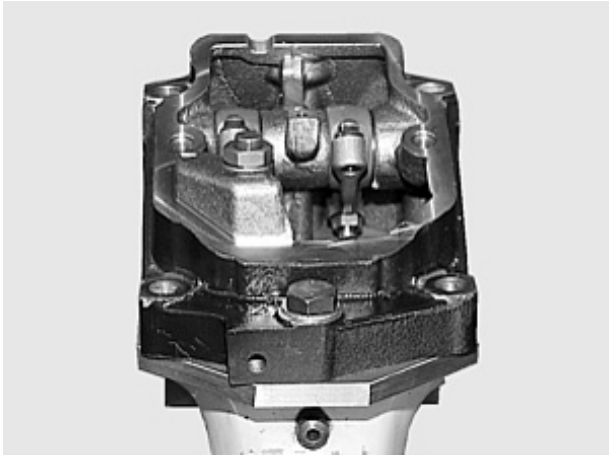

13

https://truckmanualshub.com/

Removing valves

- Remove cylinder head, see page 78

Fig. 1

Special tools for removing and installing the valve springs:

① Assembly plate for cylinder head and rocker arm bearing housing (not in tool case)
② Anchor plate with grid part
③ Guide sleeve
④ Additional guide sleeve for 4–valve cylinder head
⑤ Pressure fork
⑥ Extension for pressure fork
⑦ Assembly cartridge for retaining wedges
⑧ Sleeve with large diameter for 2–valve cylinder head
⑨ Sleeve with small diameter for 4–valve cylinder head

Depending on the cylinder head, the sleeves are bolted onto the mounting cartridge.

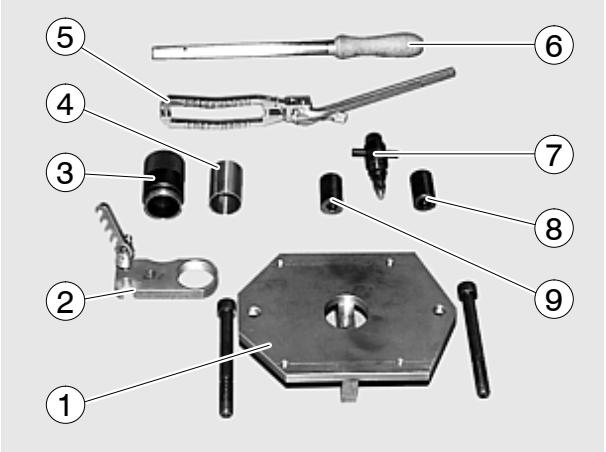

1

Fig. 2

Secure the cylinder head on mounting plate ①.

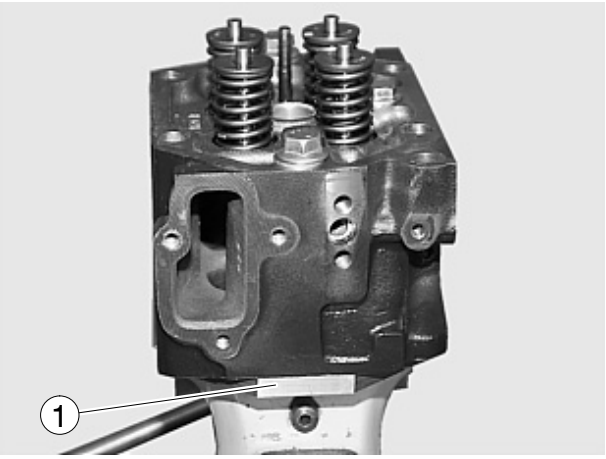

2

Fig. 3

Fit guide sleeve ④ over the valve spring for centring.

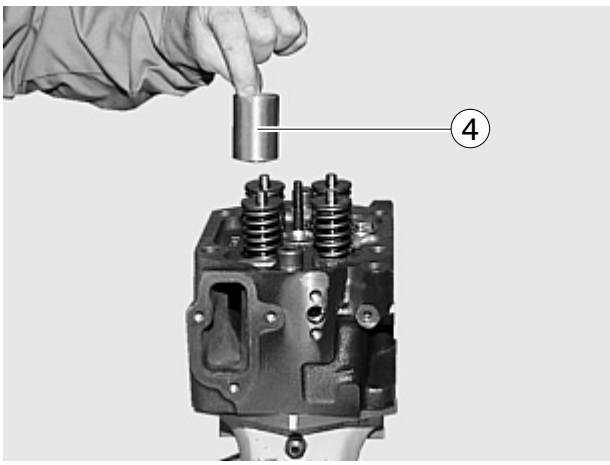

3

Fig. 4

Screw guide sleeve ③ into anchor plate ② and push both parts over guide sleeve ④ onto the cylinder head.
Bolt down the anchor plate.

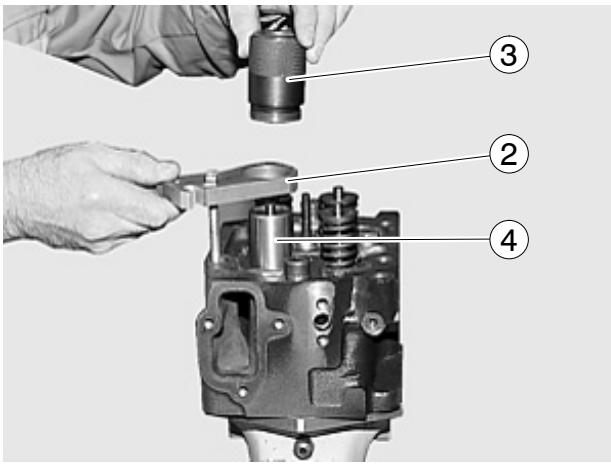

4

https://truckmanualshub.com/

Fig. 5

Feed mounting cartridge ⑦ with sleeve ⑨ (small dia.) into the guide sleeve and using the knurled grip insert the holder into the joint between the retaining wedges.

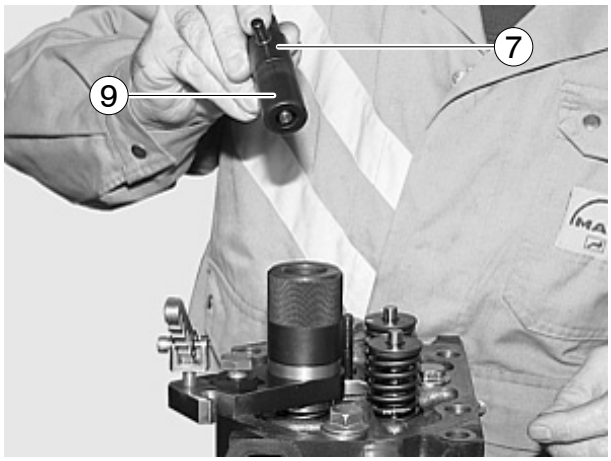

5

Fig. 6

Attach pressure fork ⑤ and press down as far as possible with the mounting cartridge.

Press the knurled grip (arrow) down, turning a little if necessary.

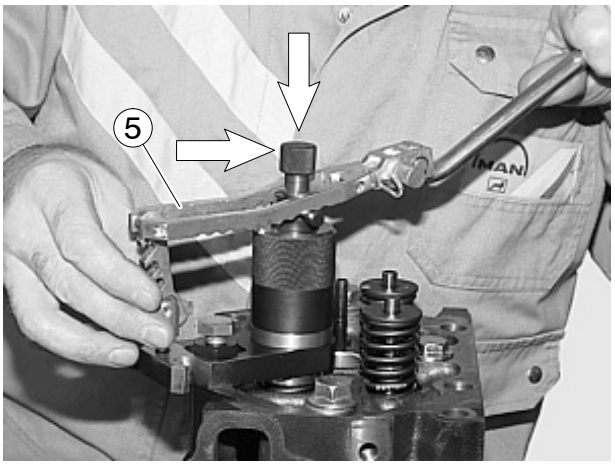

6

Fig. 7

Release the pressure fork slowly. The retaining wedges must now be in the mounting cartridge.

7

Fig. 8

Remove the guide sleeves and the valve spring.

Remove the anchor plate and attach it for removal of the next valve spring.

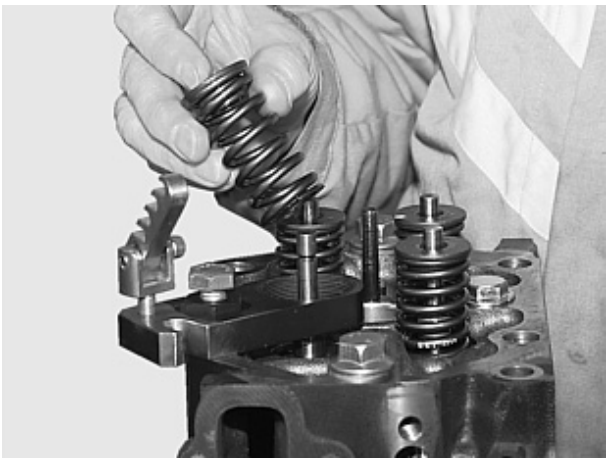
8

https://truckmanualshub.com/

Fig. 9

Remove the valve stem seals with a quick gripper (if available).

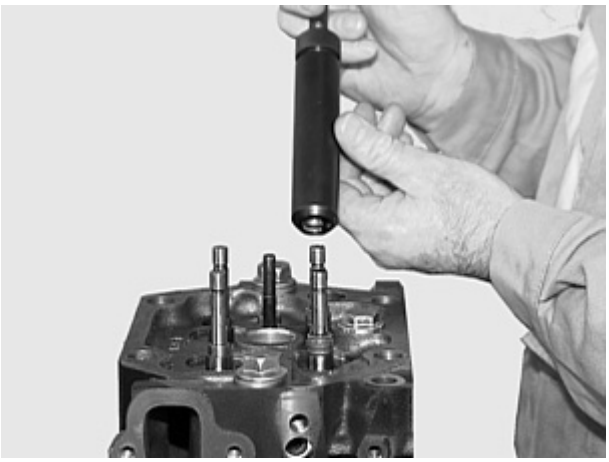

9

Fig. 10

Remove the washers for the valve springs.

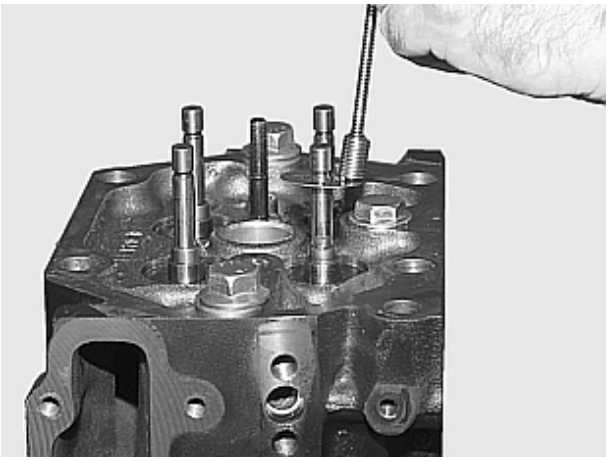

10

Fig. 11

Turn the cylinder head over and remove the valves.
Clean parts.
Inspect the valve stem for pitting and wear.
Inspect the valve guides for wear; if necessary, measure internal diameter (see “Service Data”) with a plug gauge.
Inspect the valve seat inserts for burnt−out spots.

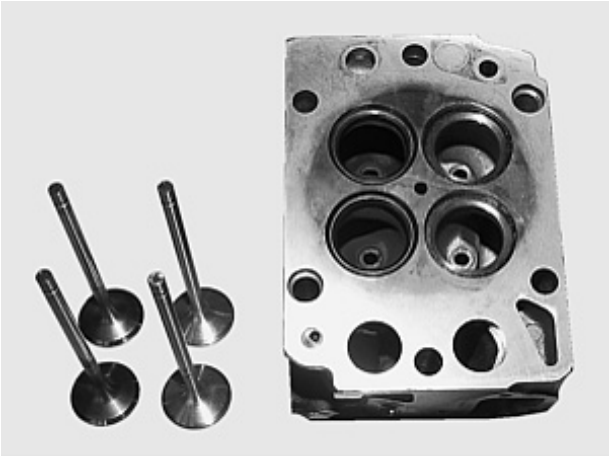

11

Fig. 12

Inspect the valve seat for heavy notching and burnt−out spots; if necessary, regrind the valves, paying attention to the valve recess (see “Service Data”) while doing so.

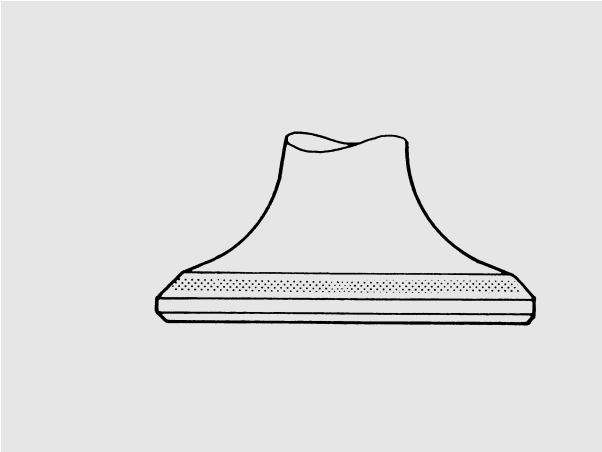

12

Installing valves

Fig. 13

Lubricate the valves at the stems and insert in the correct valve guides.

- Small valve plate recess = intake valve
- Large valve plate recess = exhaust valve

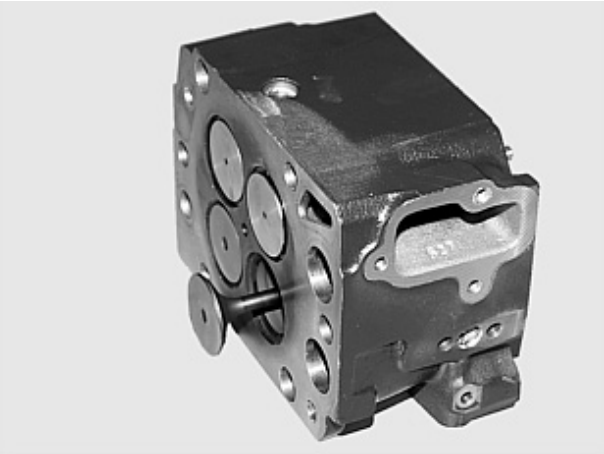

13

Fig. 14

Turn the cylinder head over and secure to the mounting plate.

Insert the washers for the valve springs.

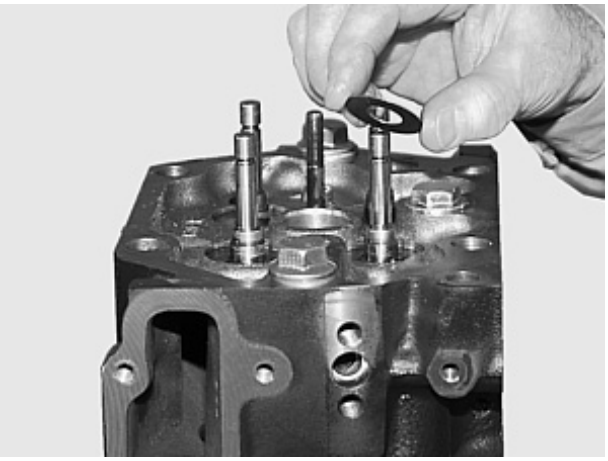

14

Fig. 15

Mount the insertion sleeve for the valve stem seals (special tool) on the relevant exhaust valve.

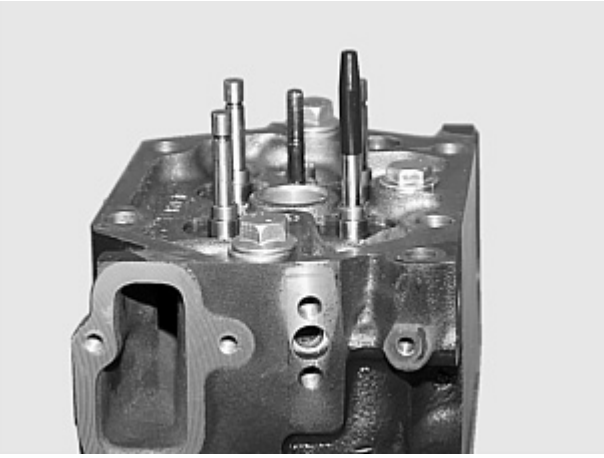

15

Fig. 16

Place the valve stem seal in the quick gripper so that after installation the spiral–type expander is at the top.

Note:
Use only new valve stem seals.

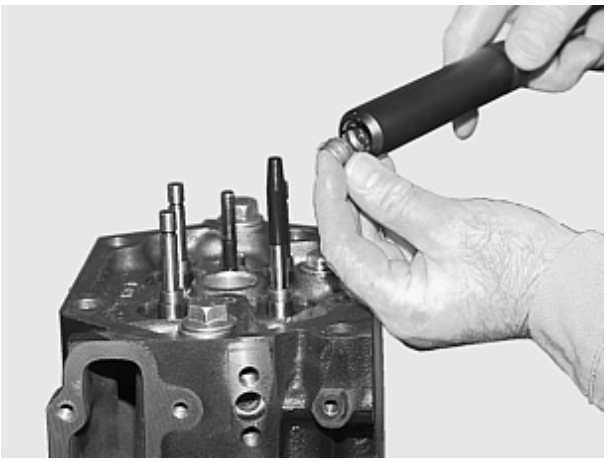

16

https://truckmanualshub.com/

Fig. 17

Press in the valve stem seal as far as it will go.

Remove the guide sleeve.

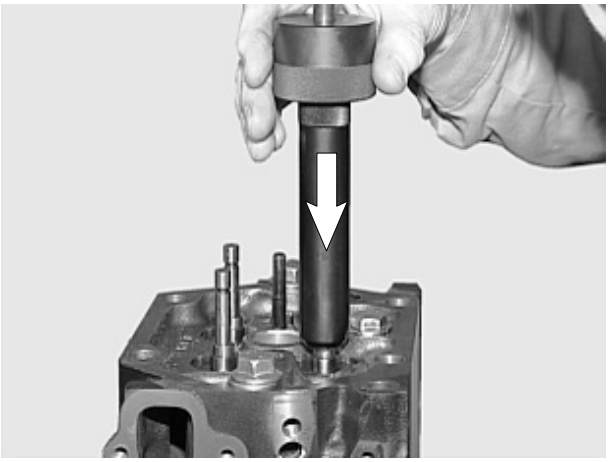

17

Fig. 18

Mount the valve springs and spring seats.

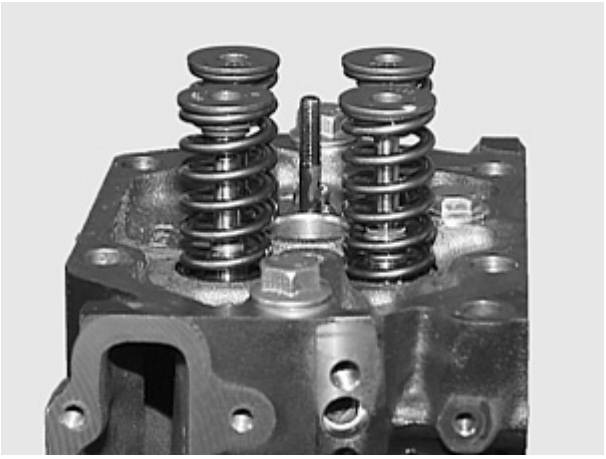

18

Fig. 19

Fit guide sleeve ④ over the valve spring for centring.

Mount anchor plate ② and guide sleeve ③ from the special tool kit.

Insert the retaining wedges in mounting cartridge ⑦.

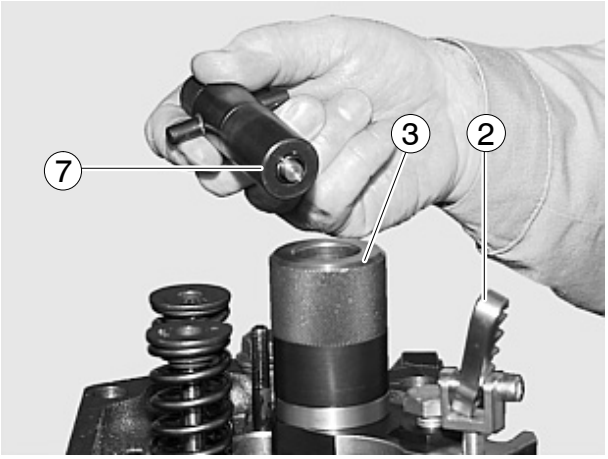

19

Fig. 20

Insert the mounting cartridge in the guide sleeve and press down with pressure fork ⑤ as far as it will go.

Release the pressure fork and remove the mounting cartridge.

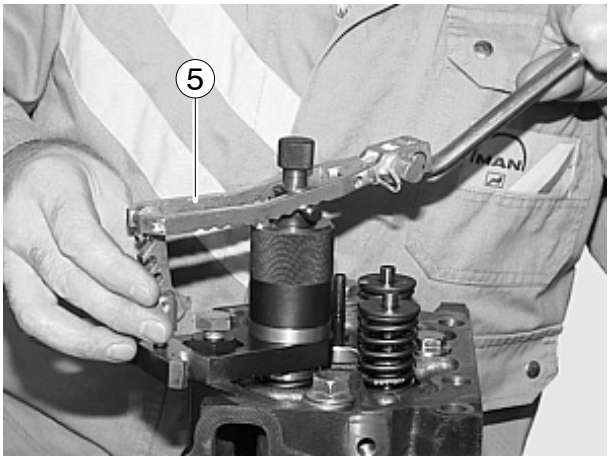

20

https://truckmanualshub.com/

Fig. 21

The valve tapers must snap reliably into place when the pressure fork is released.

Caution:
Make sure the valve tapers are correctly seated as tapers which spring out may cause serious engine damage.

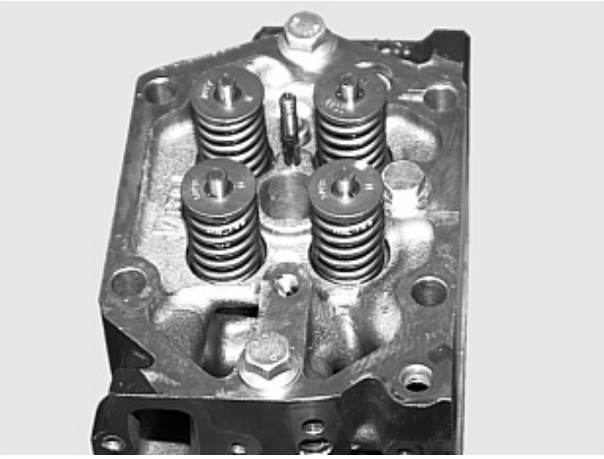

21

Measuring valve recess

Fig. 22

Position the dial gauge with its holder on the cylinder head. Set the tip of the dial gauge on the cylinder head and set the gauge to “0”, swivel to the valve plate and read off the recess. Replace the valve and valve seat insert if necessary.

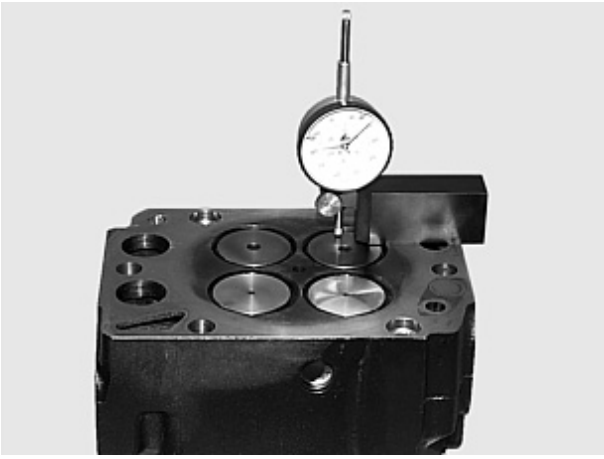

22

https://truckmanualshub.com/

- Removing and installing cylinder head, see page 78
- Remove and install valves, see page 87

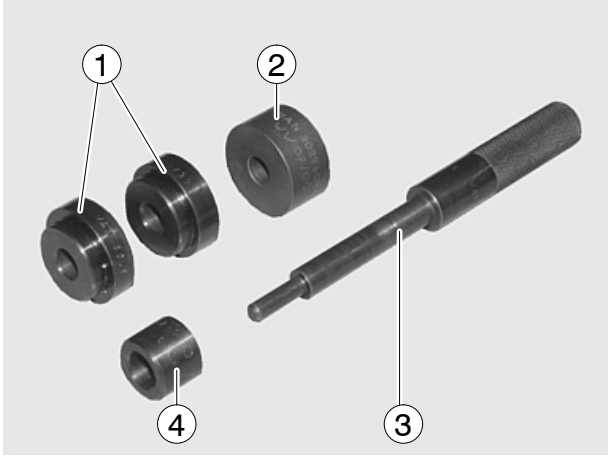

1

Fig. 1

Special tool for removing and installing the valve guides and valve seats:

① Press-in plates for valve seat inserts
② Spacer ring for ①
③ Extraction and press-in punch for valve guides and valve seats
④ Press-in sleeve for valve guides

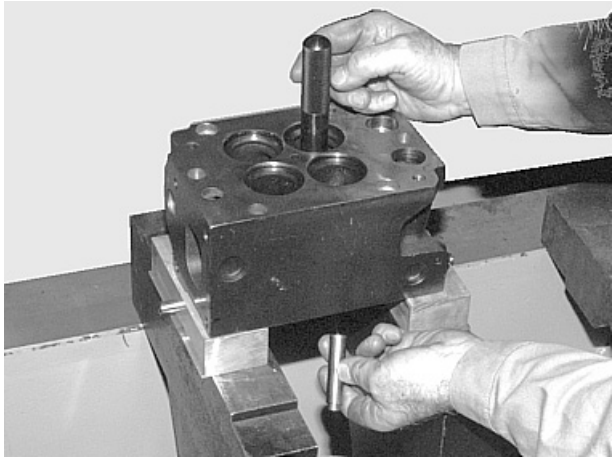
2

Fig. 2

Press out the valve guide from the combustion chamber side with press-in punch ③.

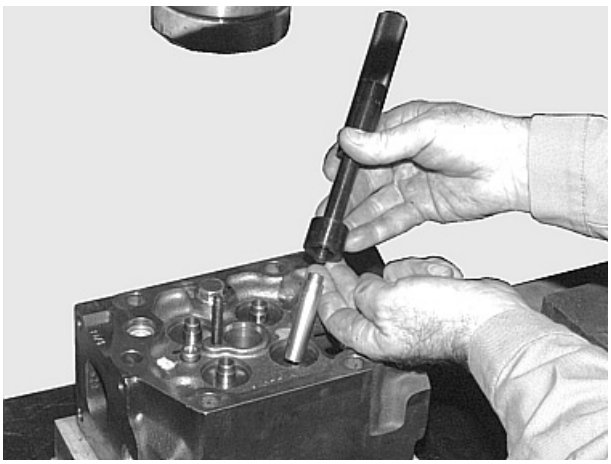
3

Fig. 3

Lubricate the new valve guide and press in with the press-in punch and press-in sleeve from the rocker arm side.

Press-in depth, see publication “Service Data”.

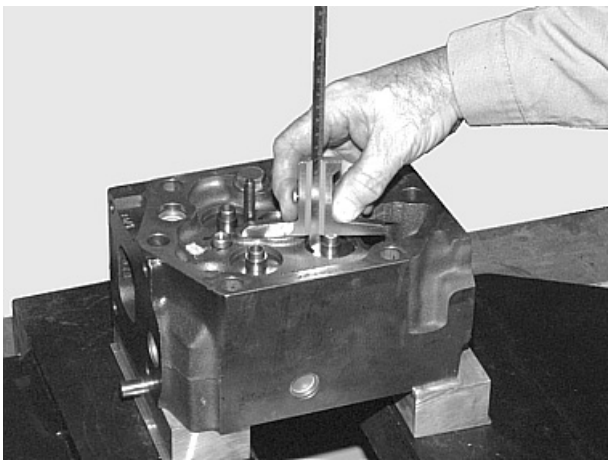
4

Fig. 4

The press–in depth of the valve guides is determined by the press-in sleeve.

Note:
When the valve guides have been replaced, the valve seats must also be reconditioned (refer to technical data and manufacturer’s instructions of the valve seat turning equipment available in the machine shops).

Removing valve seat insert

Note:
If the valve seat inserts are replaced, the valve guides must be replaced at the same time as otherwise exact refacing of the valve seat inserts cannot be guaranteed.
For the above–mentioned reasons, the tool for removing and installing the valve guides and valve seat inserts have been designed in such a way that, when this tool is used, the valve guides and the valve seat inserts can be replaced only together or only the valve guides alone can be replaced.

Fig. 1

Use a valve seat machining tool (valve seat turning tool) to cut a groove approx. 3–4 mm wide in the valve seat insert.

Insert an internal puller into the cut groove and tighten.

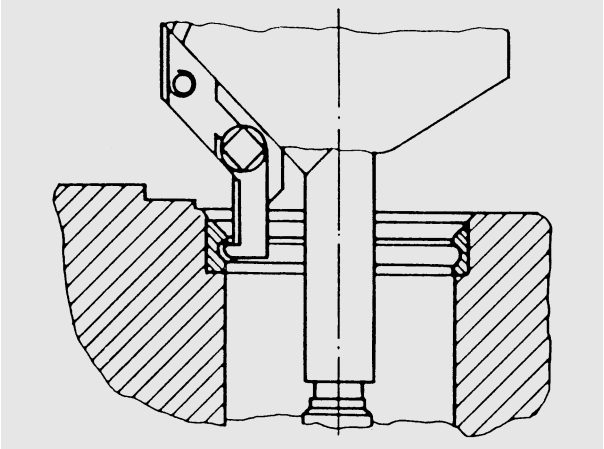

1

Fig. 2

Note:
To avoid damaging the cylinder head sealing face, lay disc ④ or similar item under the arms ② of the support.

Screw threaded spindle ⑤ into internal puller ③, align arms ② of the support and pull out the valve seat insert by turning nut ①.

Clean the contact face of the seat insert in the cylinder head.

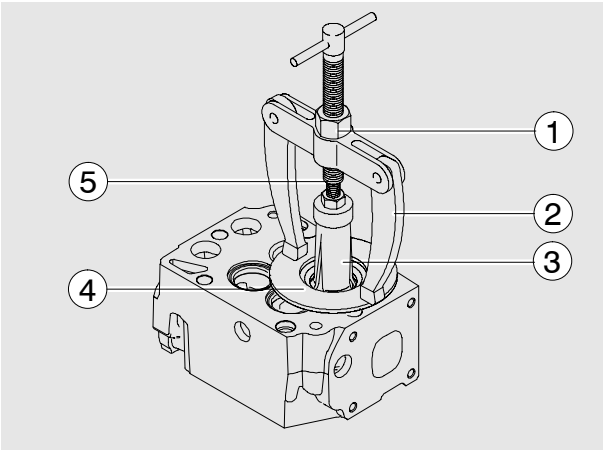

2

Fig. 3

If a valve seat machining tool is not available, the following procedure may be adopted:

- Apply two short welding beads on the valve seat (arrow) using an arc welding set
- Pull out the valve seat insert
- Clean the contact face of the seat insert in the cylinder head

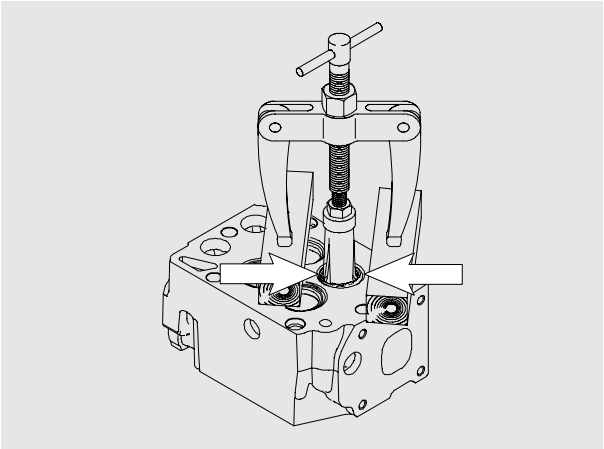

3

Installing valve seat insert

Fig. 4

Chill the new valve seat insert down to approx. −200°C and insert in the cylinder head (approx. 20°C room temperature).
Carry out a check by driving it in as far as it will go using a pressing tool.
Install the valve guides.

Note:
When the valve seat inserts are replaced, the valve seats must also be refaced.

4

Note:
- After temperature compensation: machine the valve seats
- After machining: clean the cylinder head and check for leaks with a leak testing device
- If the cylinder head is excessively heated (above +200°C), the core hole covers (end covers) lose their tightness and must be replaced
- To do this, clean the core holes, blow out the channels and press in new core hold covers with “LOCTITE 648” and press−in mandrel

Reworking valve seat

(with Mira precision valve seat machining tool)

Fig. 1

① Driving crank
② Toggle switch
③ Handle
④ Lubricating nipple
⑤ Mains connection
⑥ Magnetic flange with coil
⑦ Guide pipe
⑧ Slewing arm
⑨ Guide mandrel
⑩ Tool
⑪ Hex socket screw
⑫ Rotary head
⑬ Lubricating nipple
⑭ Jaccard lever
⑮ Guide ball
⑯ Feed nut with mm scale

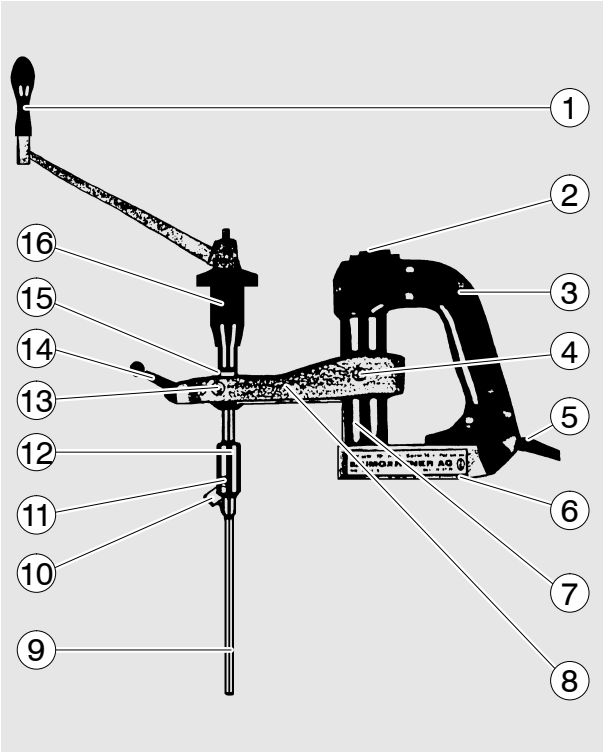

1

Fig. 2

Select a suitable guide mandrel, screw it in and tighten with a fork wrench.

> **Note:**
> For extreme precision work, the guide mandrel must fit snugly.

Select and insert a forming cutter with the corresponding seat width and corresponding seat angle.

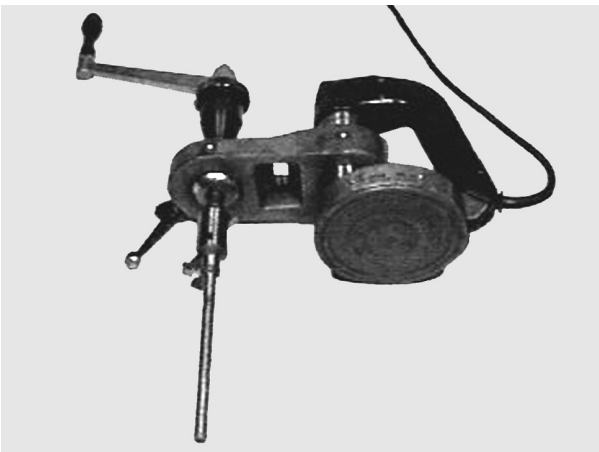

2

Fig. 3

Adjust the forming cutter with a setting gauge and tighten with the hexagon socket screw.

Insert the tool complete with guide mandrel in the valve guide.

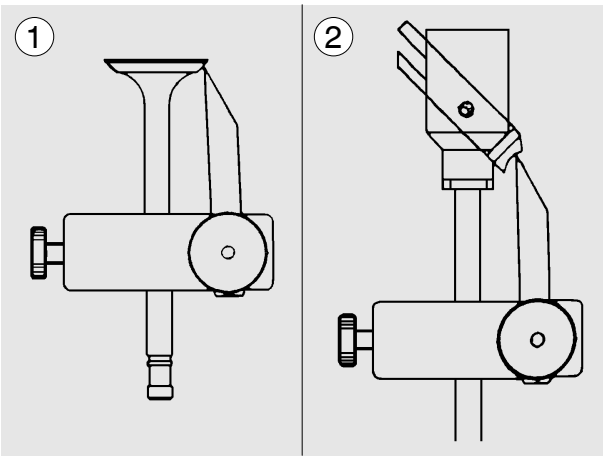

3

https://truckmanualshub.com/

Fig. 4

Release the Jaccard lever, set the magnetic flange down flat on the clamping plate and adjust the height so that the forming cutter does not contact the valve seat.

Set the toggle switch to position 1.

Tighten the Jaccard lever.

4

Fig. 5

Machine the valve seat by turning the driving crank steadily in a clockwise direction and simultaneously operating the feed nut.

Caution:
During the machining process, turn the crank vigourously and steadily but under no circumstances against the direction of turning as this may cause the carbide cutting edge to break off.

5

Fig. 6

Once the valve seat has been cleanly machined, reduce the working pressure of the forming cutter by 2–3 turns without feed motion.
During these turns, turn the feed nut back 2–3 turns.

Press the toggle switch briefly to position 2 to lift the magnetic field.

Now move the entire Mira tool upwards and insert it in the next valve guide, repeating the centring operation.

Use the same cutter settings for all the intake and exhaust valve seats.

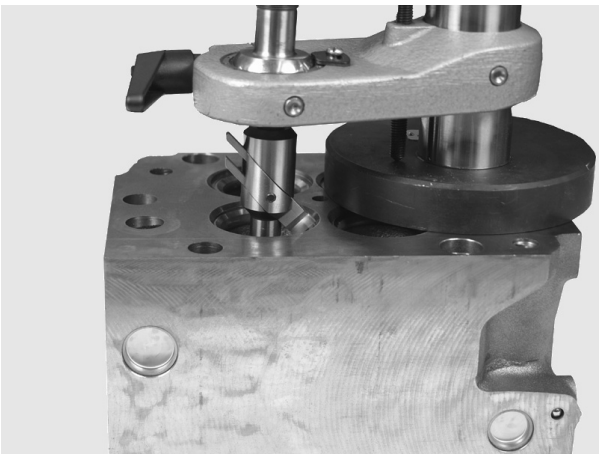

6

Fig. 7

Observe the specified seat angle.

① Exhaust
② Intake

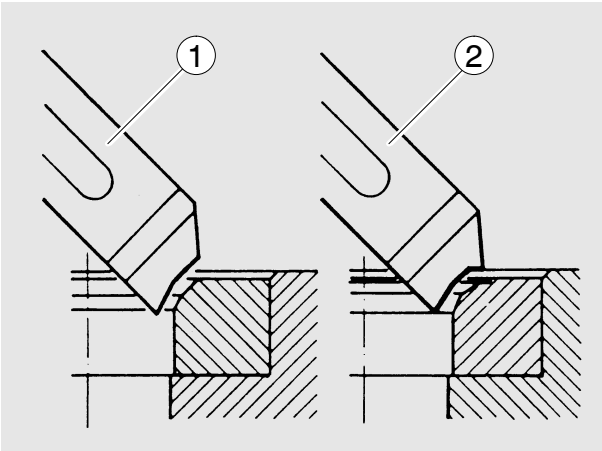

7

Fig. 8

When reworking the valve seat inserts, remove as little material as possible from the seat face.

The valve recess serves as the reference value.

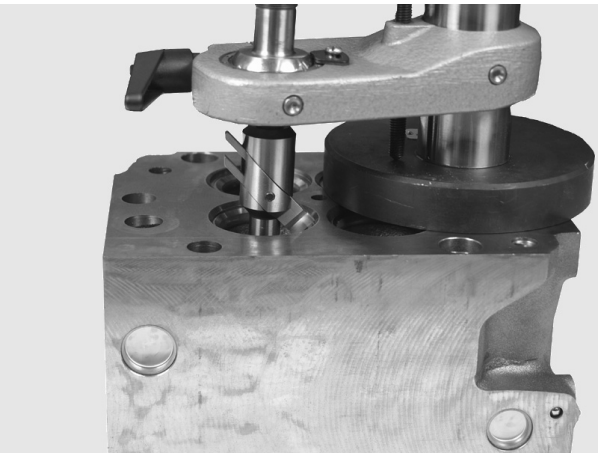

8

Fig. 9

The valve seat insert must be changed if as a result of the cylinder head interface and the valve seat insert having been machined the theoretical valve seat is too deep in the cylinder head or the seat face has become too wide.

Ensure that the valve recess (X) is correct, see “Service Data”.

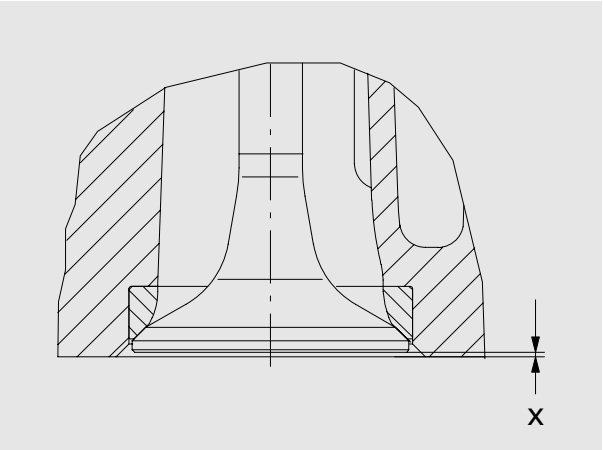

9

https://truckmanualshub.com/

Fig. 1

Apply abrasive paste to the tapered area of the valve seat.
Lubricate the valve guide and insert the valve.

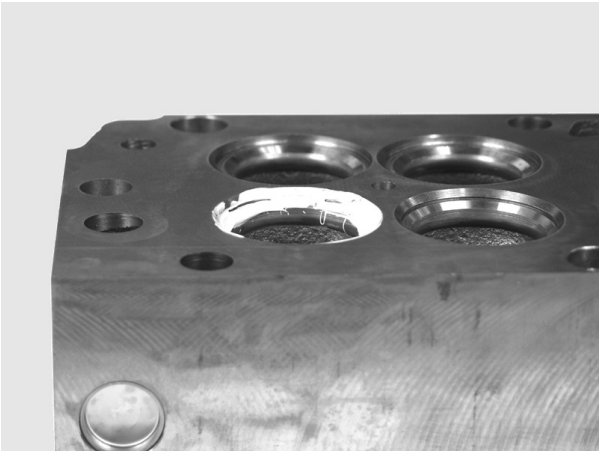

1

Fig. 2

Use a valve grinder to reface the valve seat by applying moderate axial pressure and describing a turning motion.

> **Note:**
> Keep the valve stem and the valve guide free of abrasive paste.

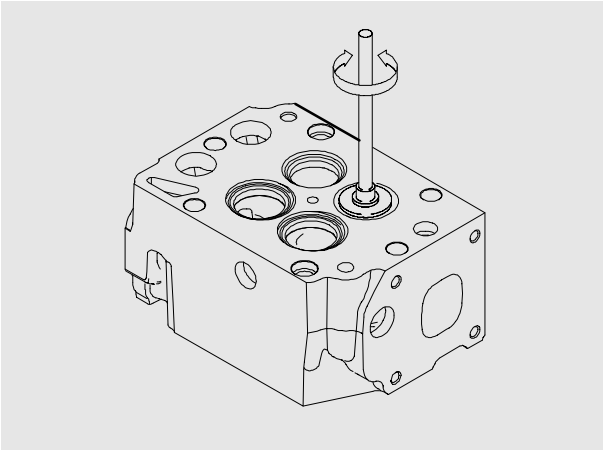

2

Fig. 3

The valve seat must have a faultless, contained grinding pattern.
The grinding pattern width is correct if the valve seat insert is in order.

① Valve tapered area
② Valve seat

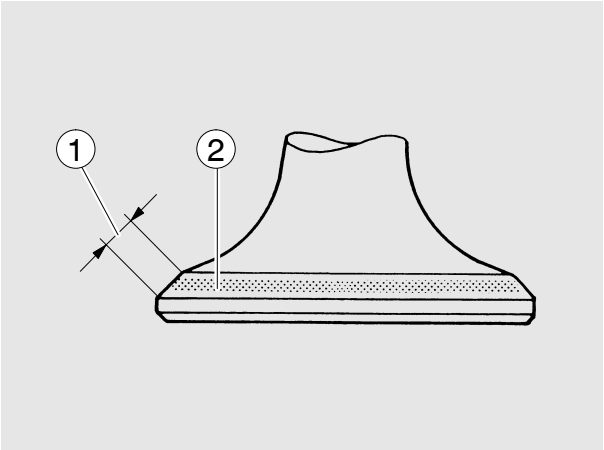

3

Fig. 4

① Valve seat insert
② Valve
③ Valve seat too wide
④ Valve seat good

> **Note:**
> Valve seats which are too wide tend to accumulate coking residues,
> – valves start to leak –
>
> Valve seats which are to narrow prevent rapid dissipation of heat from the valve plate to the cylinder head,
> – valves burn –

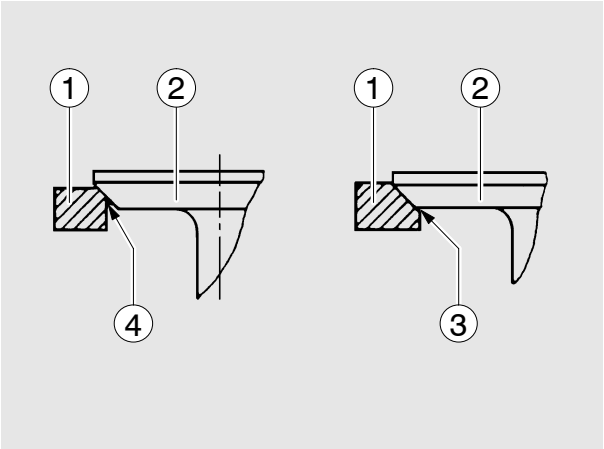

4

https://truckmanualshub.com/

Removing the gear case

- Removing the starter motor, see page 130
- Removing the flywheel, see page 65

Fig. 1

Oil and coolant lines, brackets for wiring harnesses etc. are attached to the timing case, and these must be removed.

Remove the timing case cover.

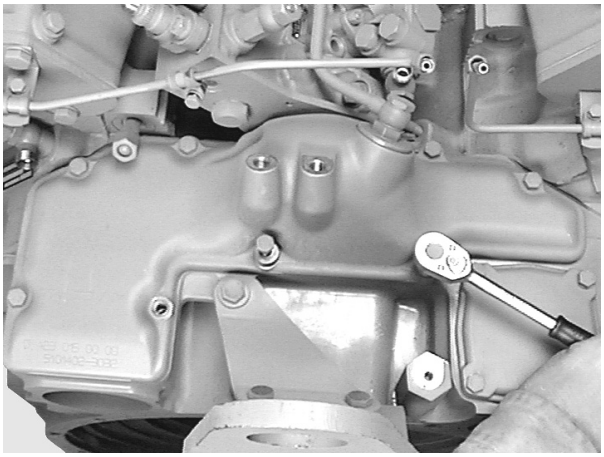
1

Fig. 2

Loosen the mounting bolts of the timing case.

The bottom of the timing case is bolted to the oil pan.
Loosen the mounting bolts of the oil pan.

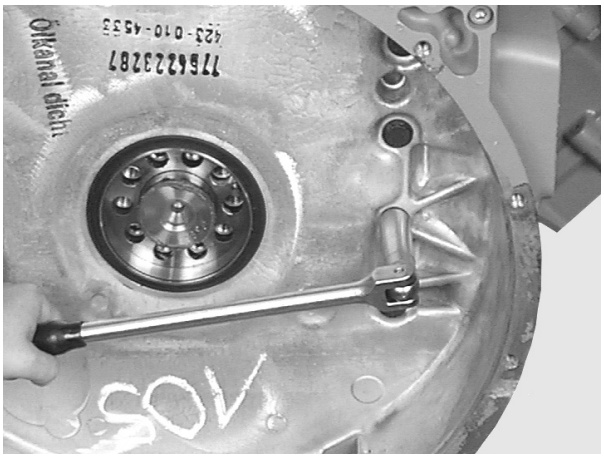
2

Fig. 3

> **Danger:**
> The gear case is heavy!
> Use lifting gear.

To facilitate assembly, two bolts on opposite sides can be replaced by guide pins M12x1.5 ①.

Two long M10 ② bolts screwed into pocket holes on the flanging level make it easier to handle the gear case.

Remove the timing case.

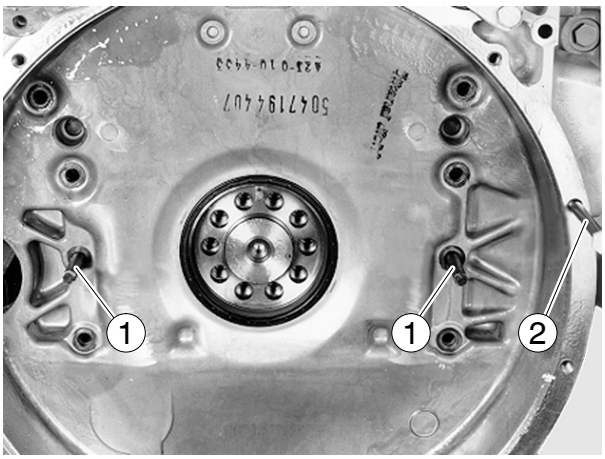

3

Fitting the timing case

Fig. 4

Clean residues of gaskets from the seating surface on the crankcase. Stick the new seal on with a little grease.

Guide timing case on to the alignment pins and bolt it into place.

In doing so, examine the oil pan seal; replace if necessary.

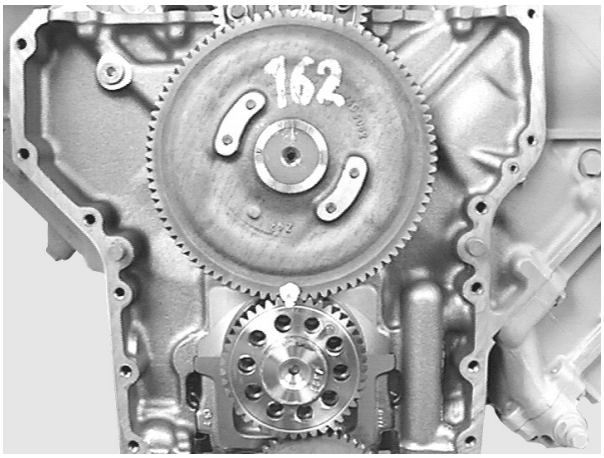

4

https://truckmanualshub.com/

Fig. 5

Tighten the bolts with the prescribed torque.

Tighten the mounting bolts of the oil pan.

Clean gasket residues from the sealing surface of the timing case cover.

Screw the timing case cover on with a new seal.

Secure the oil and coolant lines.

Fit all removed components.

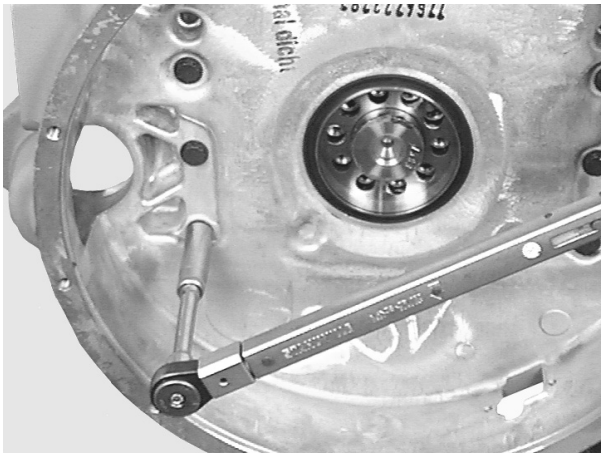

5

Removing camshaft

- Draining off coolant, see page 40
- Removing the oil pan, see page 55
- Removing the starter motor, see page 130
- Removing the flywheel and timing case, see page 100
- Removing cylinder heads, see page 78

Note:
The engine must be turned through 180° in order to remove the camshaft.
To do so, the engine must be placed on assembly truck.

Fig. 1

Turn the engine upside down so that the valve tappets do not obstruct removal of the camshaft.

Fit inserting mandrel (special tool) to the camshaft.

Carefully remove the camshaft at the drive gear (arrow). Take care not to damage the camshaft bearings. Check the camshaft for wear and damage.

In the case of damage to the camshaft or drive toothed gear, the entire unit (camshaft – toothed gear) must be replaced.

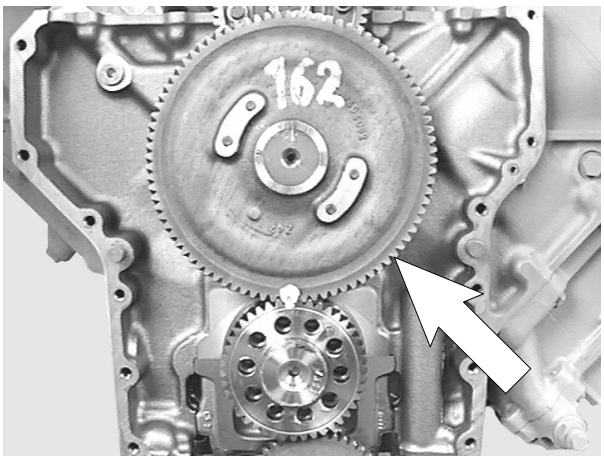

1

Fig. 2

Use a suitable mandrel to push the valve tappet out of the guide; check for wear; if required, renew.

Valve tappets can only be removed when the camshaft has been removed.

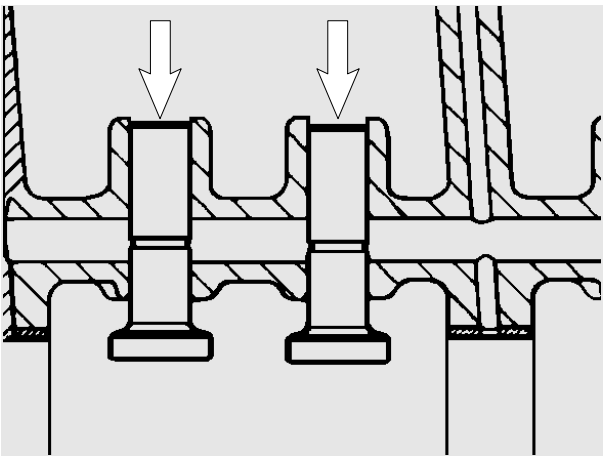
2

https://truckmanualshub.com/

Installing camshaft

Fig. 3

Oil and insert the valve tappets.

Oil the camshaft bearing bushings.

Fit inserting mandrel (special tool) to the camshaft. Oil the camshaft and insert carefully.

Caution:
Do not damage the bearings.

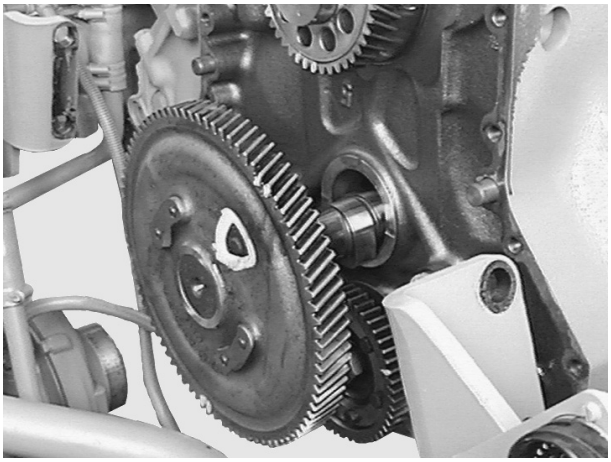

3

Fig. 4

In doing so, note the marking of the crankshaft and camshaft toothed gear.

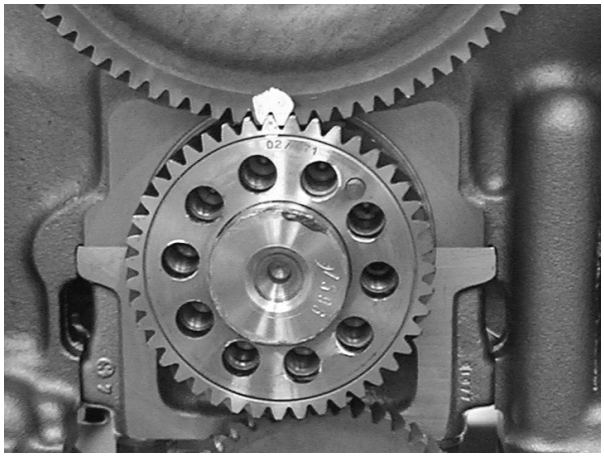

4

Fig. 5

If the camshaft cover in the crankcase has been removed, insert it as follows:

- Remove grease from bore hole and cover
- Apply the sealing compound ”Hylomar” to the bore hole and cover, including bevel
- Carefully press in the cover as straight as possible
- Ensure there are no oil leaks

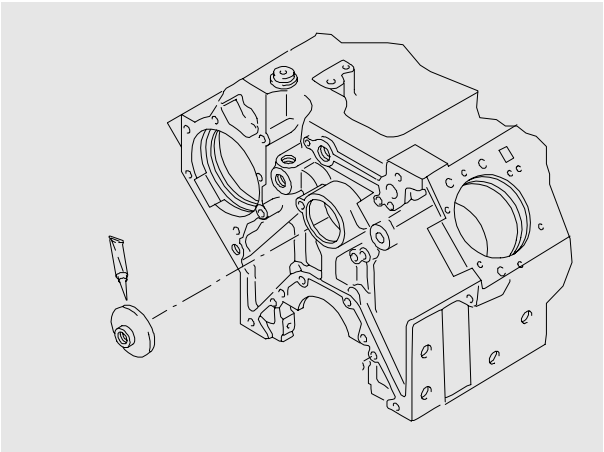

5

https://truckmanualshub.com/

Measuring the axial clearance of the camshaft

Fig. 6

Remove screw plug or angle drive for tachometer from camshaft cover.

Apply the sensor of the dial gauge to the front of the camshaft or driver for the revcounter.

Set the dial gauge to ”0”.

6

Fig. 7

Use a suitable lever to press the camshaft as far as it will go on the timing case.

Press the camshaft forwards against the dial gauge sensor as far as it will go. The movement of the dial gauge corresponds to the axial clearance of the camshaft.

Refit all of the removed parts.
Fill engine oil and coolant in accordance with regulations. Check delivery start and valve clearance.

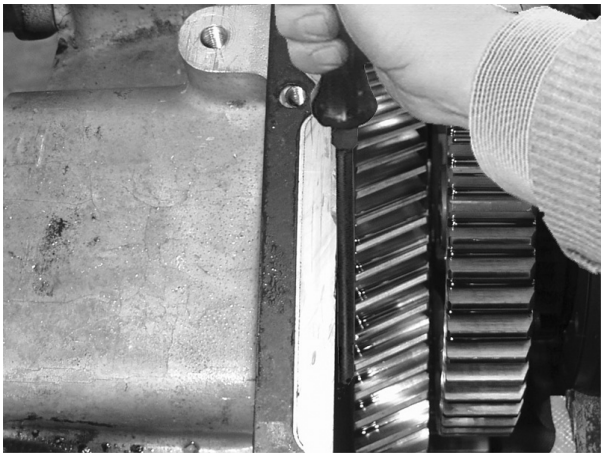

7

https://truckmanualshub.com/

Removing the camshaft bearing bushes

Note:
The engine is equipped with 7 camshaft bearings. Bearing no. 1 is located on the counter-flywheel side.

Press out the camshaft bearing bush, bearing 1

Fig. 1

Use the impact extractor (special tool) to pull out the bearing bush of bearing 1 from the counter-flywheel side.

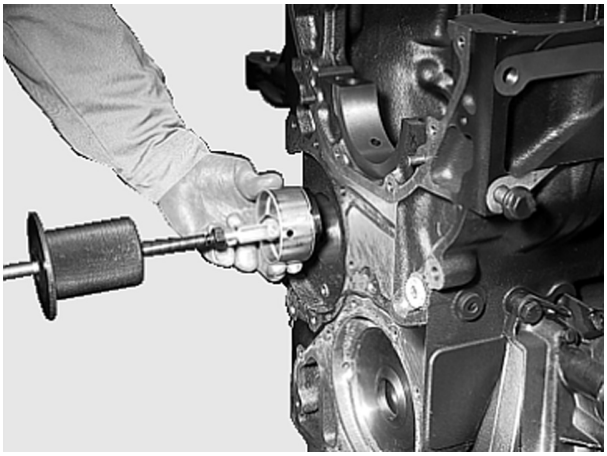

1

Fig. 2

Special tool for pressing out bearing bushes 2 to 6 from the mounting too.

① Shaft with groove and fixed stop
② Double-sided guide bush
③ Press-out plate

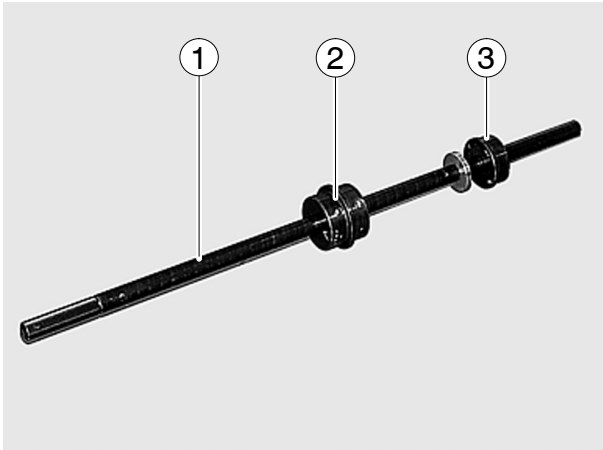

2

Press out camshaft bearing bush of bearings 2, 3 and 4

Fig. 3

Use the special tool, see Fig. 2, to pull out bearings 2, 3 and 4 from the counter-flywheel side.

Place the guide bush ② on the shaft with groove, ensuring that you have the correct bush side (the sides have different diameters!).

The spring-loaded balls lock into the oil holes.

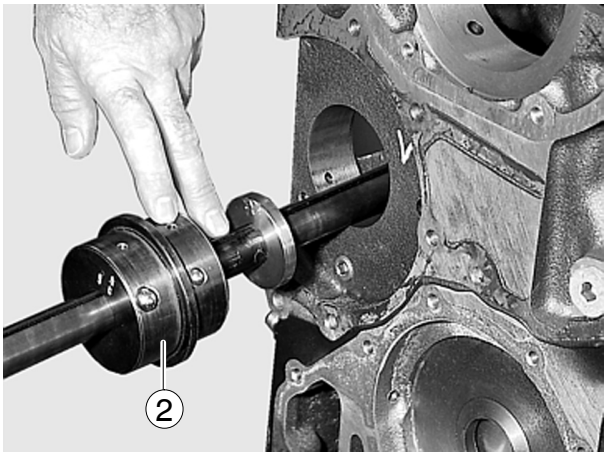

3

Fig. 4

Place the press-out plate ③ from the other side of the stop onto the shaft and insert in bearing bush 2.

Here, insert the guide bush ② with the small diameter in the bearing hole and let the spring-loaded balls lock into the oil holes.

The groove of the shaft must face upwards.

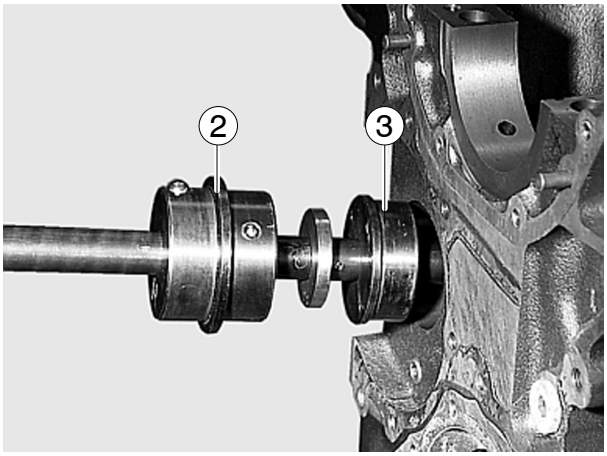

4

https://truckmanualshub.com/

Fig. 5

Use a soft hammer (plastic or copper) to knock out camshaft bearing bushes 2, 3 and 4 in succession.

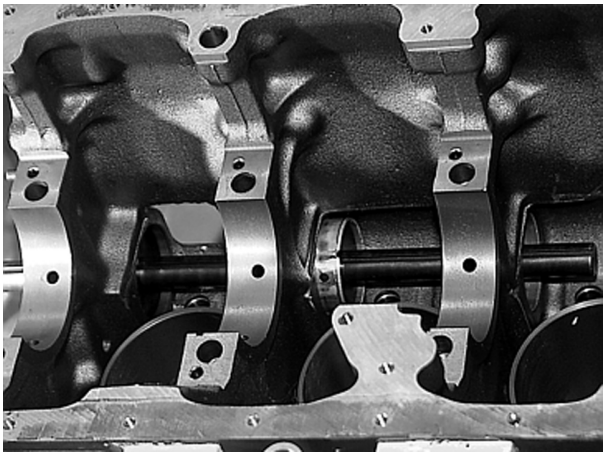

5

Press out the camshaft bearing bush, bearing 7

Fig. 6

Use the impact extractor (special tool) to pull out the cam bearing bush of bearing 7 from the flywheel side.

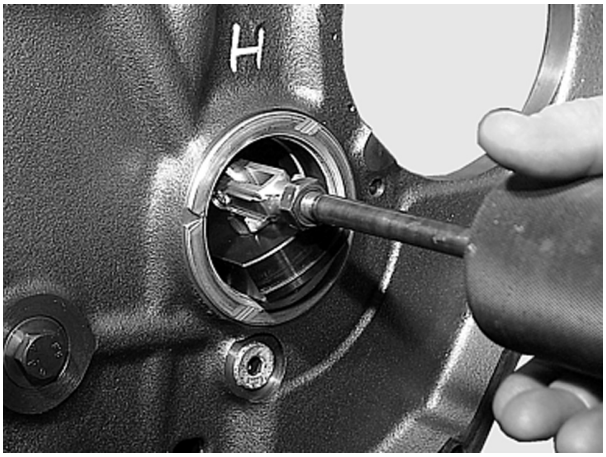

6

Fig. 7

Pull out the bearing bush.

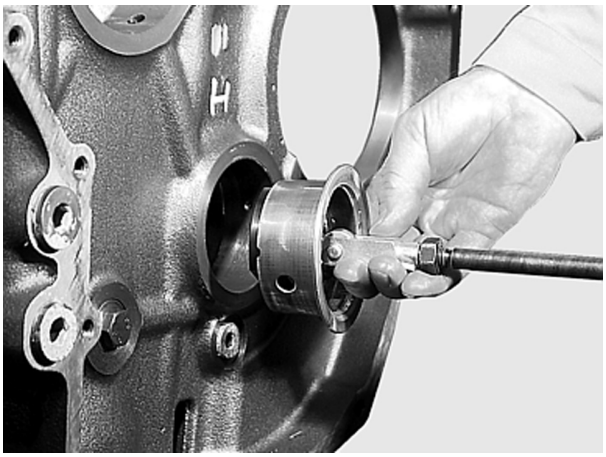

7

Press out camshaft bearing bushes of bearings 5 and 6

Fig. 8

Press out the bearing bushes of bearings 5 and 6 from the flywheel side.

Place the guide bush ② on the shaft with groove, ensuring that you have the correct bush side (the sides have different diameters!).

The spring-loaded balls lock into the oil holes.

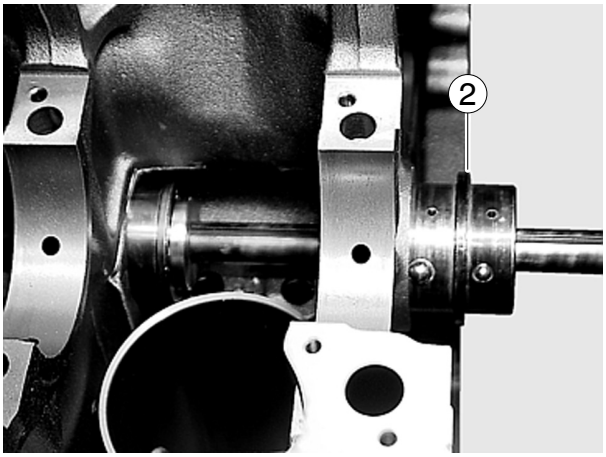

8

https://truckmanualshub.com/

Fig. 9

Place the press-out plate ③ from the other side of the stop onto the shaft and insert in bearing bush 6.

Here, insert the guide bush ② with the larger diameter in the bearing hole and let the spring-loaded balls lock into the oil holes.
The groove of the shaft must then face upwards.

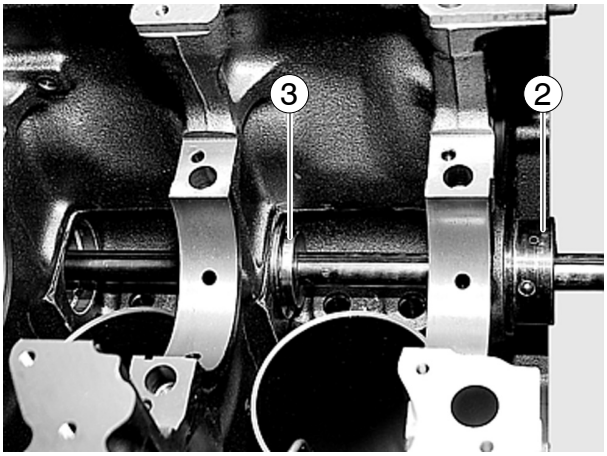

9

Fig. 10

Use a soft hammer (plastic or copper) to knock out bearing bushes 6 and 5 in succession.

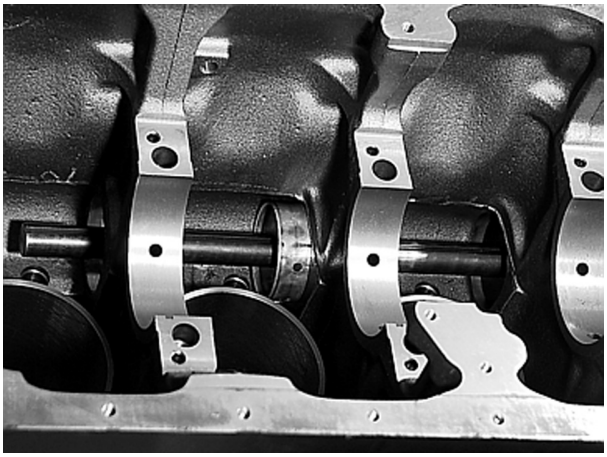
10

https://truckmanualshub.com/

Fitting the camshaft bearing bushes

Fig. 11

Depending on the number of the camshaft bearing, there are various press-in plates (special too) for pressing in the bearing bushes

① Shaft with groove and fixed stop
② Striking weight for ①
③ Double-sided guide bush
④ Press-out plate for bearing bushes 2 to 6
⑤ Press-in plate for bearing bush 1
⑥ Press-in plate for bearing bushes 2 to 4
⑦ Press-in plate for bearing bushes 5 and 6
⑧ Press-in plate for bearing bush 7

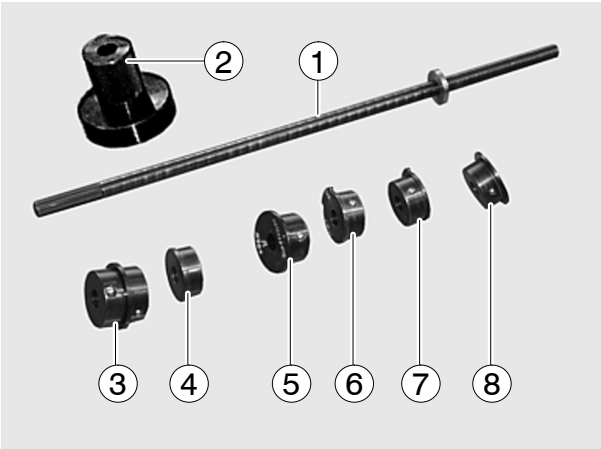

11

Press in the camshaft bearing bush, bearing 2

Figs. 12 and 13

Place the bearing bush on the press-in plate ⑥.

Caution:
- One oil hole of the bearing bush must be fixed in place by the spring-loaded ball
- The other oil hole must be flush with the recess of the press-in plate
- The bearing bush must be seated up to the stop on the press-in plate

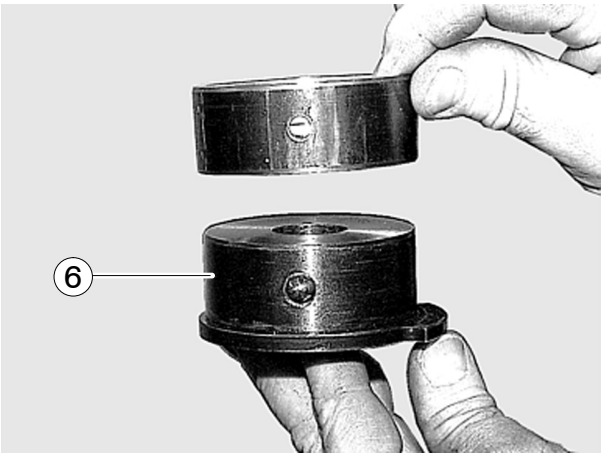

12

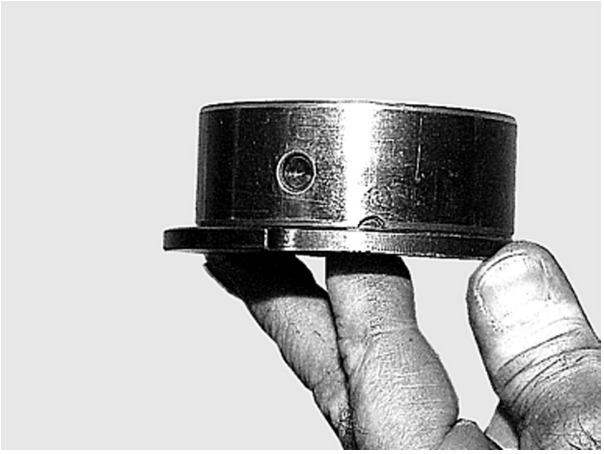
13

Fig. 14

Place the guide bush ③ on the shaft with groove, ensuring that you have the correct bush side (the sides have different diameters!).

When the shaft is put in place, the groove must face upwards so that the guide bush is fixed in place by the correct oil holes.

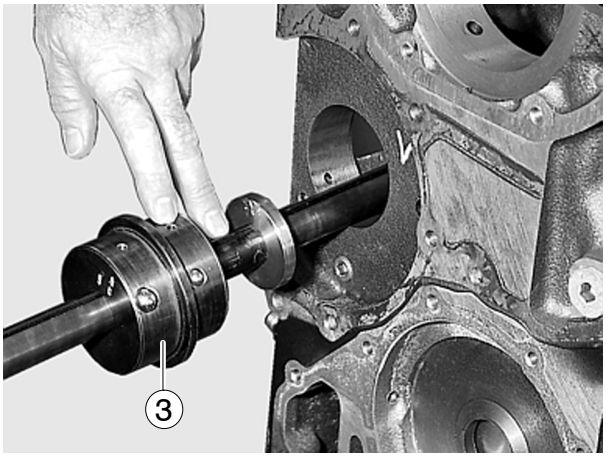

14

https://truckmanualshub.com/

Fig. 15

Place the press-in plate ⑥ with fitted bearing bush on the shaft.

The press-in plate is fixed in place by the groove so that the oil holes line up after pressing in.

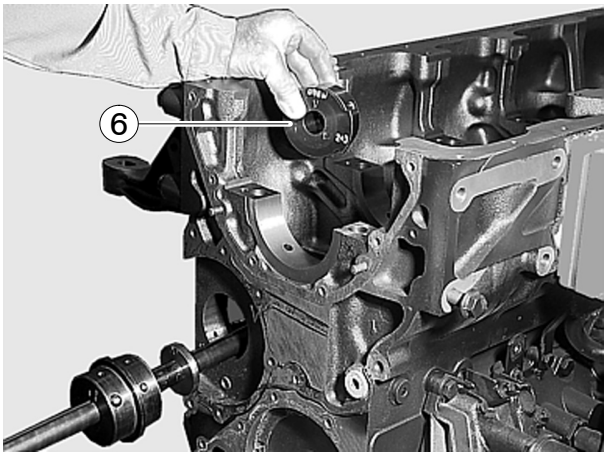

15

Fig. 16

Here, insert the guide bush ③ with the small diameter in the bearing hole and let the spring-loaded balls lock into the oil holes.

The groove of the shaft must then face upwards. Apply the press-in plate ⑥ with fitted bearing bush.

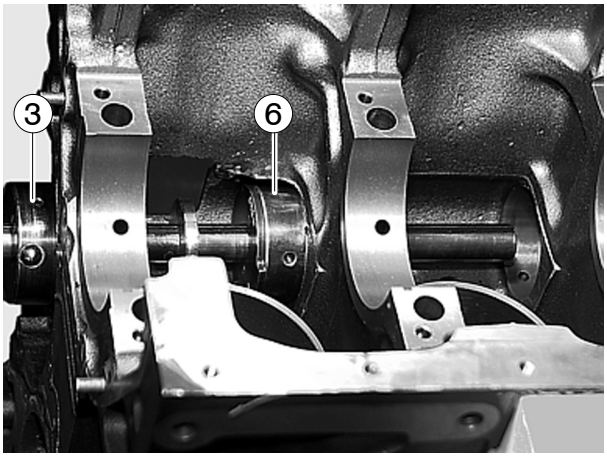

16

Fig. 17

Use a soft hammer (plastic or copper) to drive camshaft bearing bush 2 in as far as it will go.

17

Press in camshaft bearing bushes, bearings 3 and 4

Fig. 18

Arrangement of special tools:

① Shaft with groove and fixed stop
③ Double-sided guide bush
④ Press-out plate as additional guide
⑥ Press-in plate

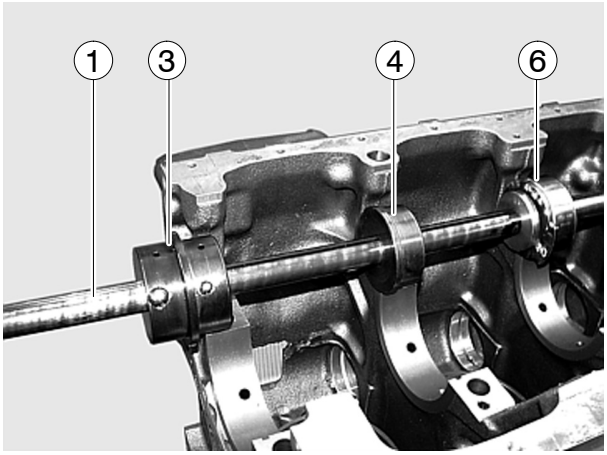

18

https://truckmanualshub.com/

Fig. 19

From the counter-flywheel side, insert the press-out plate ④ in bearing 2.
Insert the shaft with guide bush ③ through bearing 1, then through the press-out plate ④ (bearing 2).

Here, insert the guide bush ③ with the small diameter in the bearing hole and let the spring-loaded balls lock into the oil holes.
The groove of the shaft must then face upwards.

Place the press-in plate ⑥ with fitted bearing bush on the shaft.
The press-in plate is fixed in place by the groove so that the oil holes line up after pressing in.

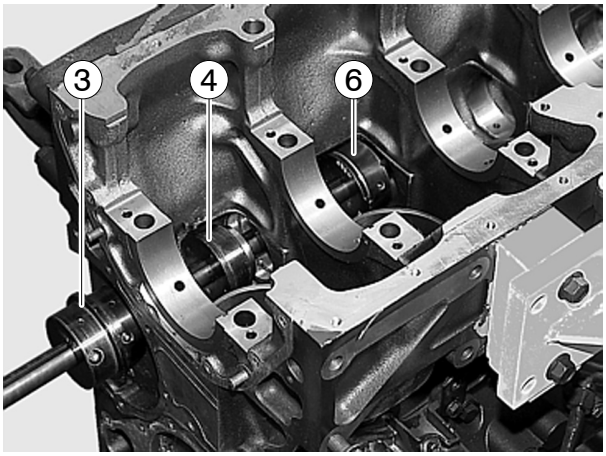

19

Fig. 20

Use a soft hammer (plastic or copper) to drive the bearing bush into bearing 3 as far as it will go.

To fit bearing 4, proceed in the same manner.

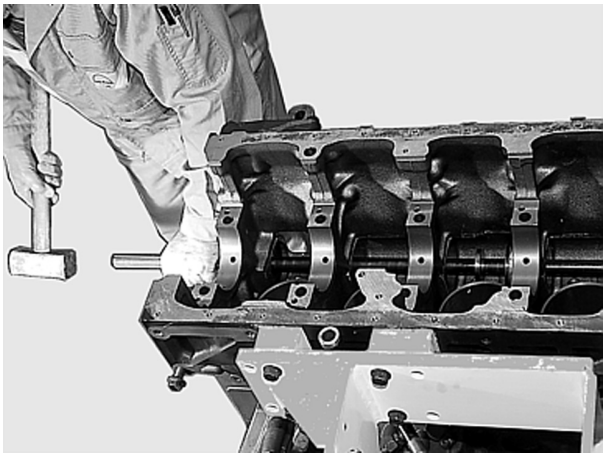
20

Press in the camshaft bearing bush, bearing 1

Figs. 21 and 22

Place the bearing bush on the press-in plate.

> **Note:**
> The bearing bush and press-in plate ⑤ for bearing 1 are wider than for bearings 2 to 6.

> **Caution:**
> - One oil hole of the bearing bush must be fixed in place by the spring-loaded ball
> - The other oil hole must be flush with the recess of the press-in plate
> - The bearing bush must be seated up to the stop on the press-in plate

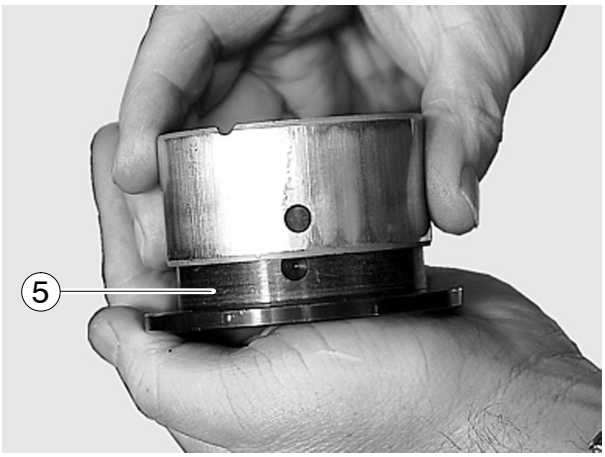

21

22

https://truckmanualshub.com/

Figs. 23 and 24

Arrangement of special tools:

① Shaft with groove and fixed stop
④ Press-out plate for bearing bushes 2 to 6 as additional guide
⑤ Press-in plate for bearing bush 1
⑥ Press-in plate for bearing bushes 2 to 4 as additional guide

From the counter-flywheel side,insert the press-out plate as guide in camshaft bearing 2.

Insert the press-in plate ⑥ in bearing 3 , letting the spring-loaded ball for fixing the position of the shaft ① lock into the oil hole.

Insert the shaft up to the stop into the press-in plate (bearing 2) and press-out plate (bearing 3).

Caution:
Do not twist the fixing from the groove.
The groove must face upwards.

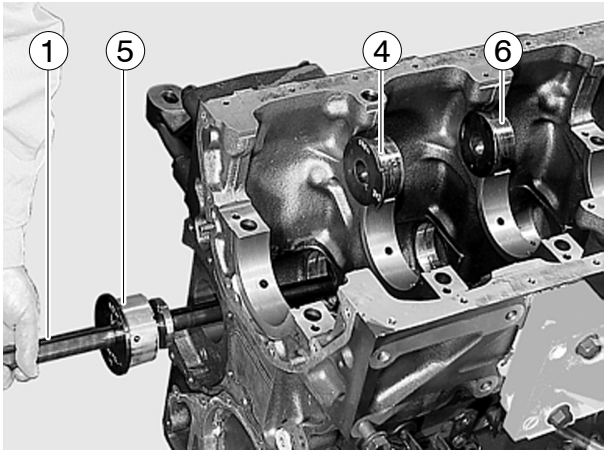

23

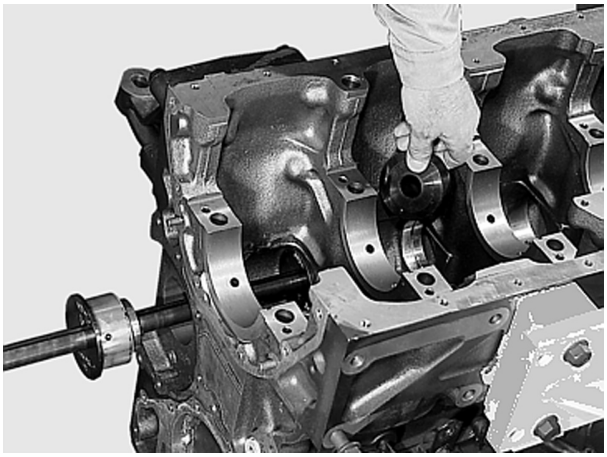
24

Fig. 25

Place the press-in plate with fitted bearing bush on the shaft.

The oil holes are covered in that the press-in plate is fixed in position by the groove of the shaft.
Drive in the bearing bush with striking weight ②.

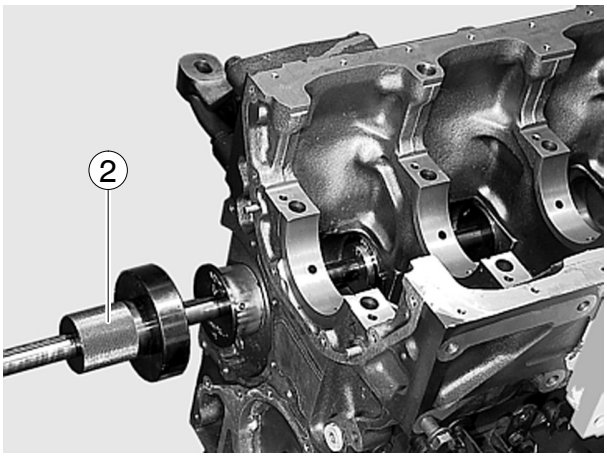

25

Fig. 26

Check all the pressed-in bearing bushes for seating and free access to the oil holes.

Caution:
Check that the bearing hole matches up to the oil hole in the housing.
Minimum cross section with mandrel
∅ = 2.5 mm.

26

https://truckmanualshub.com/

Fitting camshaft bearing bushes, bearings 3 and 4

Fig. 27

Special tool for pressing out bearing bushes 5, 6 and 7 from the mounting tool:

① Shaft with groove and fixed stop
② Striking weight for ①
③ Double-sided guide bush
④ Press-out plate as additional guide
⑦ Press-in plate for bearing bushes 5 and 6
⑧ Press-in plate for bearing bush 7

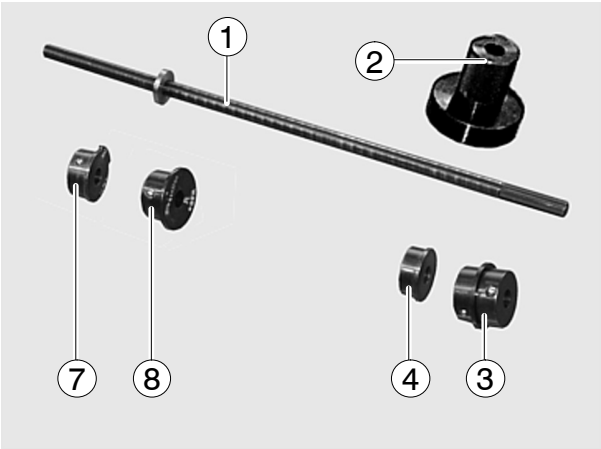

27

Fig. 28

From the counter-flywheel side, press in bearing bushes 5 and 6 as described for bearing bushes 2, 3, and 4.

Insert the guide bush ③ with large diameter in bearing 7.
The groove of the shaft must then face upwards.

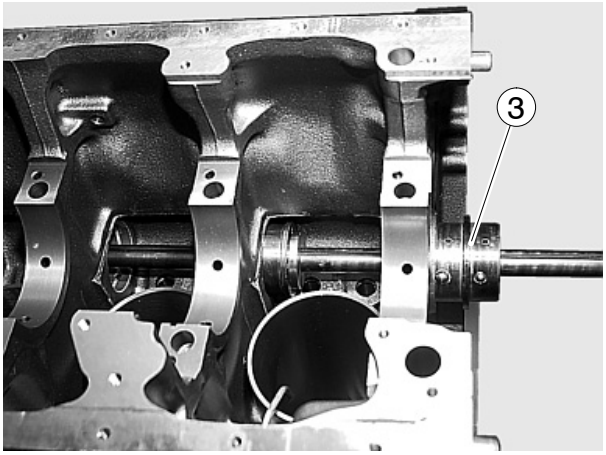

28

Fig. 29

Use a soft hammer (plastic or copper) to drive bearing bush 6 in as far as it will go.

To fit bearing 5, proceed in the same manner.

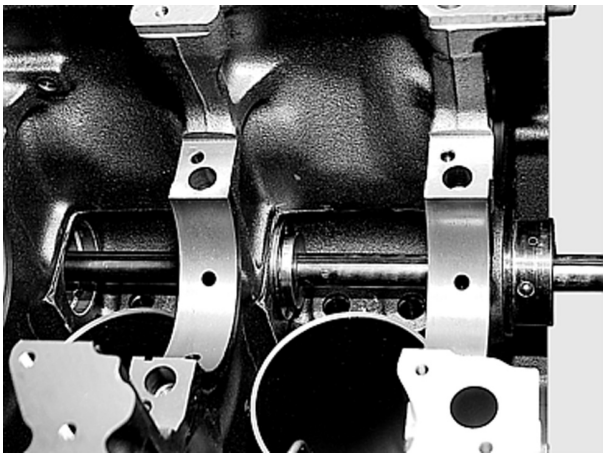
29

Press in the camshaft bearing bush, bearing 7

Fig. 30

From the flywheel side,insert the press-out plate as guide in bearing 5.

Insert the press-in plate as guide in bearing 6, letting the spring-loaded ball for fixing the position of the shaft lock into the oil hole.

Insert the shaft up to the stop into the press-in plate (bearing 6) and press-out plate (bearing 5).

> **Caution:**
> Do not twist the fixing from the groove.
> The groove must face upwards.

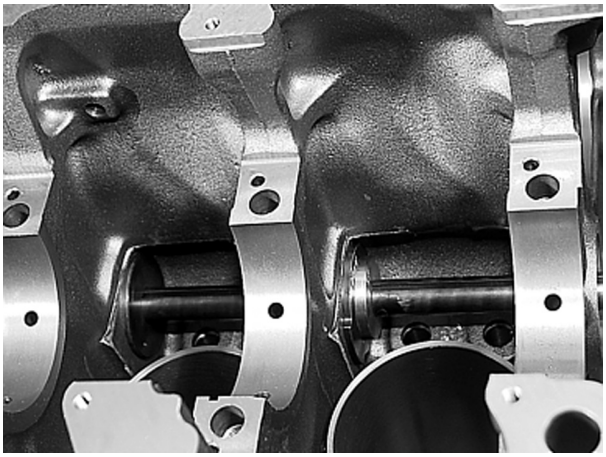
30

https://truckmanualshub.com/

Fig.31

Place the bearing bush with edge on the press-in plate.

Caution:
- One oil hole of the bearing bush must be fixed in place by the spring-loaded ball
- The other oil hole must be flush with the recess of the press-in plate
- The bearing bush must be seated up to the stop on the press-in plate

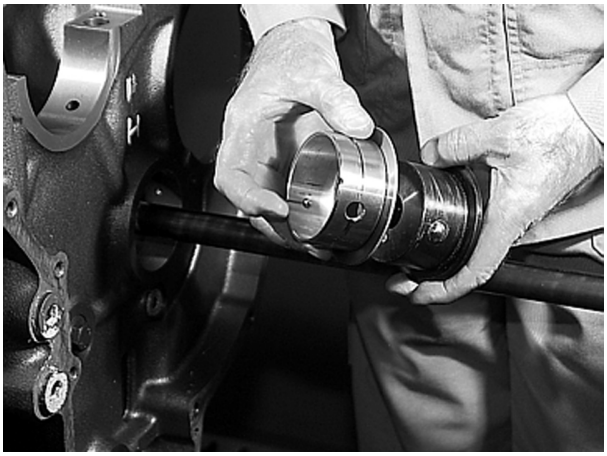
31

Fig. 32

The oil holes are covered in that the press-in plate is fixed in position by the groove of the shaft.

Drive in the bearing bush with striking weight ②.

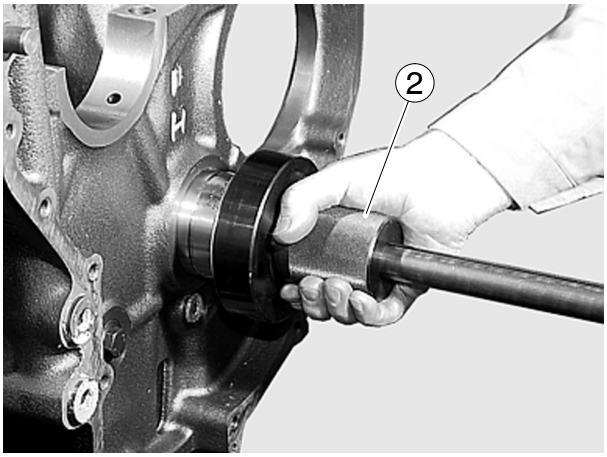

32

Fig. 33

Check all the pressed-in bearing bushes for seating and free access to the oil holes.

Caution:
Check that the bearing hole matches up to the oil hole in the housing.
Minimum cross section with mandrel
∅ = 2.5 mm.

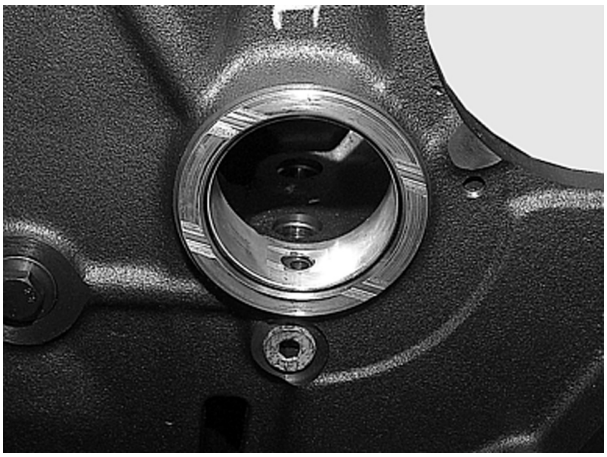
33

Note:
Unsynchronised valve timing can cause severe engine damage.
For this reason, following engine faults that can cause twisting of the shrunk–on camshaft toothed wheel, the correct seating must be checked by checking the valve timing.
This check is also recommended after the camshaft is fitted.

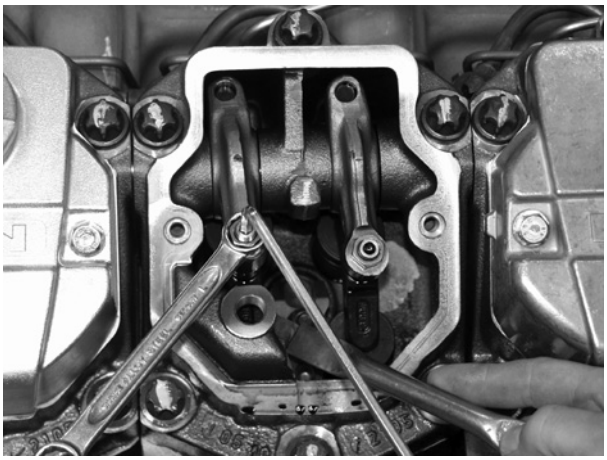
1

Fig. 1

Remove the cylinder head cover from the 1st cylinder.
Set the valve clearance of the 1st cylinder correctly.

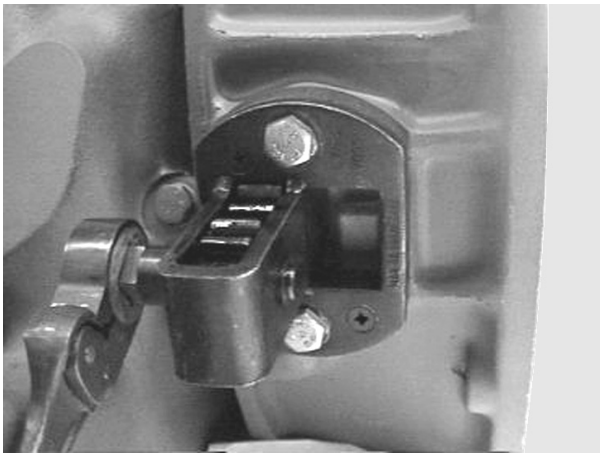
2

Fig. 2

Turn engine over with cranking device until the valves of cylinder 1 are in cross–over.

Turn the engine back to approx. 50° before “TDC”, then turn forwards to 30° before “TDC” again.
–observe graduation on flywheel–

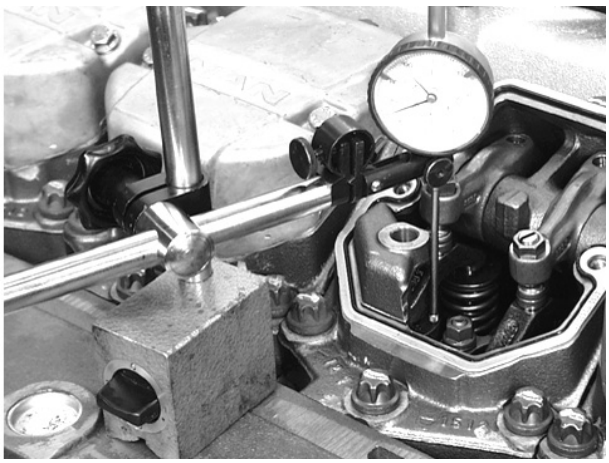
3

Fig. 3

Place the dial gauge with approx. 2 mm initial tension on the valve spring retainer of the exhaust valve on cylinder no. 1 and set to “0”.

Turn engine in running direction through 180°.
–exhaust valve fully closed–

Read the stroke of the valve on the dial gauge.

The valve stroke must be between 4.5 and 5.3 mm.

https://truckmanualshub.com/

Removing crankshaft

- Remove oil pan and oil pump, see page 55
- Remove timing case, see page 100
- Remove front cover of crankshaft seal, see page 61
- Remove all pistons with connecting rods, see page 118

Fig. 1

Remove the bolts from the conrod bearing covers, take out the conrods with pistons and set them down in order of installation.

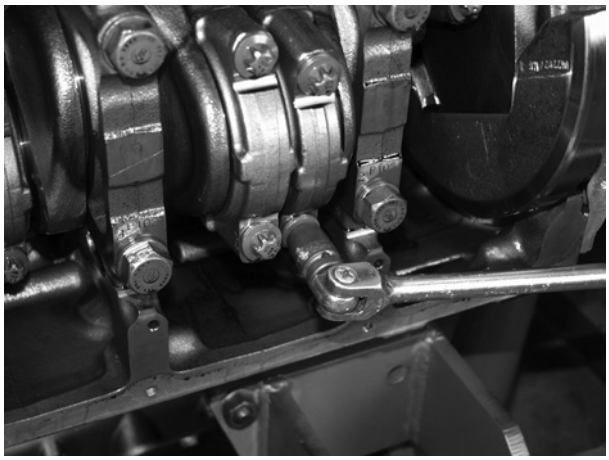

1

Fig. 2

Undo the side bolts of the crankshaft bearing cover.

> **Note:**
> Crankshaft bearing no. 1 is located on the opposite side of the flywheel.

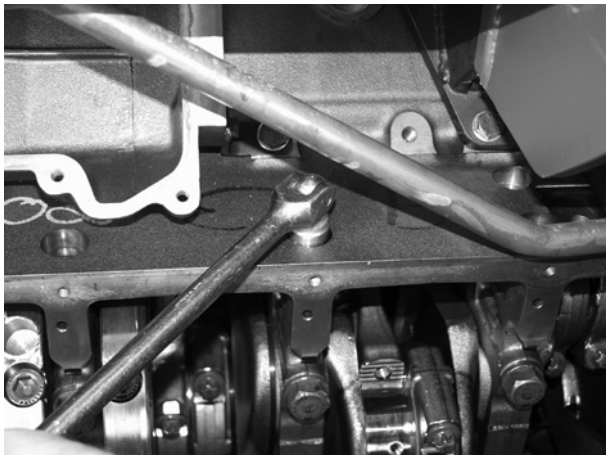

2

Fig. 3

Gradually loosen the securing bolts of the crankshaft bearing cover from inside to out and unscrew. Remove the bearing caps and place to one side in the order of installation.

Remove the bearing shell halves from the bearing caps and place to one side assigned to the bearing caps.

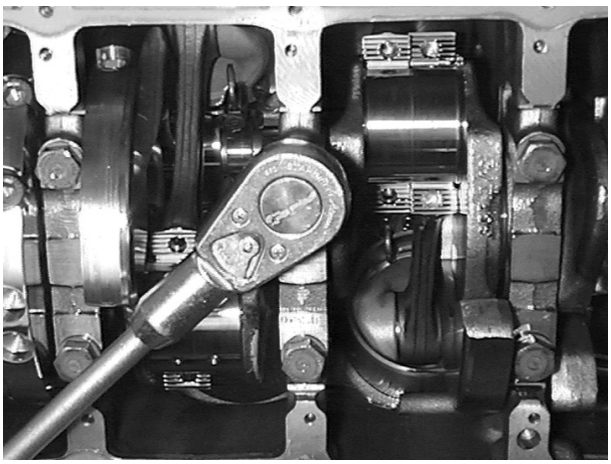

3

Fig. 4

Lever out the crankshaft.

> **Caution:**
> Do not damage the bearing surfaces of the crankshaft bearing pins.

Remove the bearing bushes from the crankcase and place to one side in the order of installation. Clean the parts and check for wear; replace if necessary.

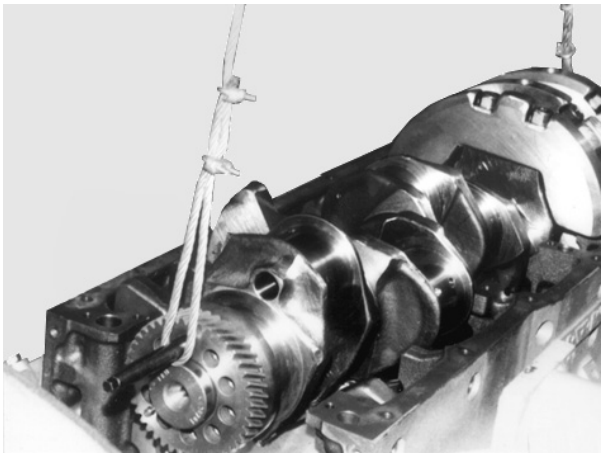

4

Check the spread of the bearing bushes

Fig. 5

Place the bearing shells together on a level surface. Measure and note down dimensions **“A”** and **“B”**.

Spread dimension = A–B

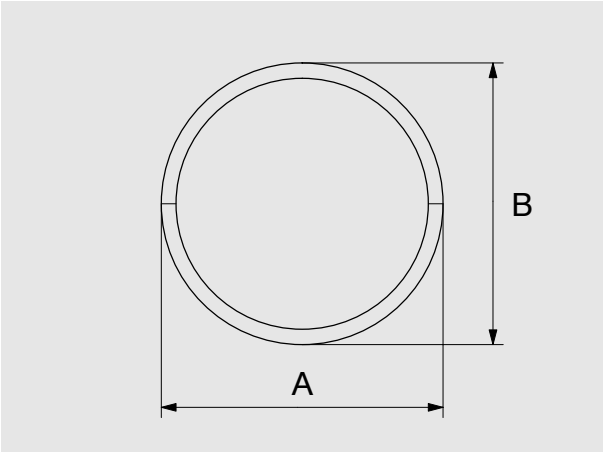

5

Installing crankshaft

Fig. 6 and Fig. 7

Clean the oil ducts in the crankcase and in the crankshaft with dry compressed air.

Thoroughly clean the bearing shells and journals.

Install the bearing shells in the crankcase, paying attention to the numbering.

> **Caution:**
> If new bearing shells are used, pay attention to the corresponding repair stage.

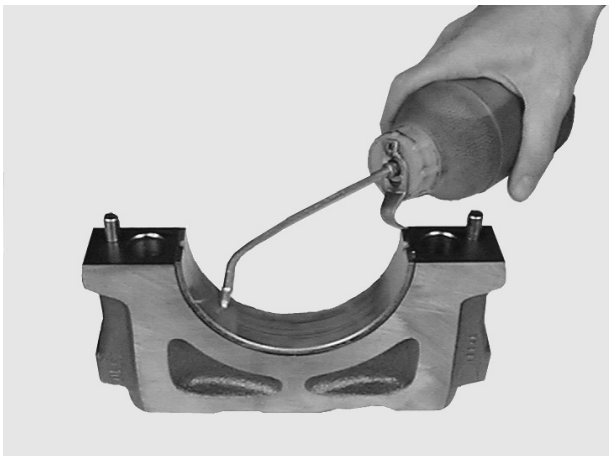

6

Oil the contact surfaces of the bearing shells and insert the crankshaft.

In doing so, note the markings of the crankshaft and camshaft gears.

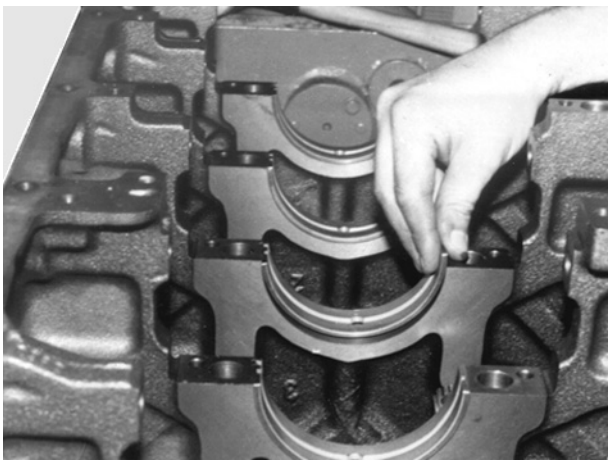

7

Fig. 8

Check bearing cover bolts for max. permitted length (see “Service Data”).
Removed bolts can be reused if the max. permitted length is not exceeded.

Complete the bearing covers with the associated bearing bushes. Insert the vertical bearing cover bolts and tighten in stages from inside to outside.

Pretightening: 300–330 Nm

Angle tightening: 90°

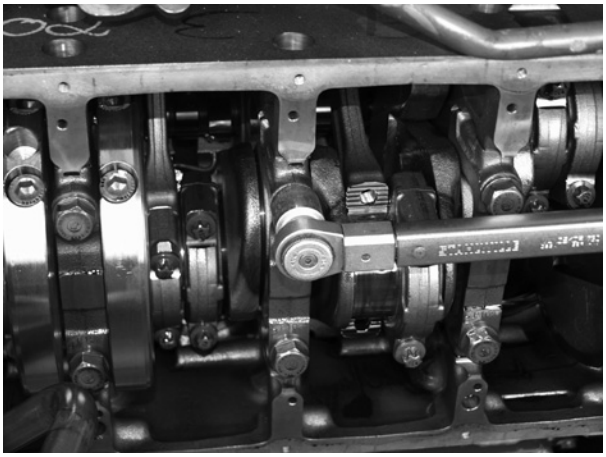

8

Fig. 9

Caution:
Removed bolts must be replaced.

Screw in the crankshaft bearing cover bolts and tighten them.

Pretightening: 80–90 Nm

1st angle tightening: 90°
2nd angle tightening: 90°

Check that the crankshaft runs smoothly.

Caution:
Damaged bearing caps cannot be replaced on an individual basis.

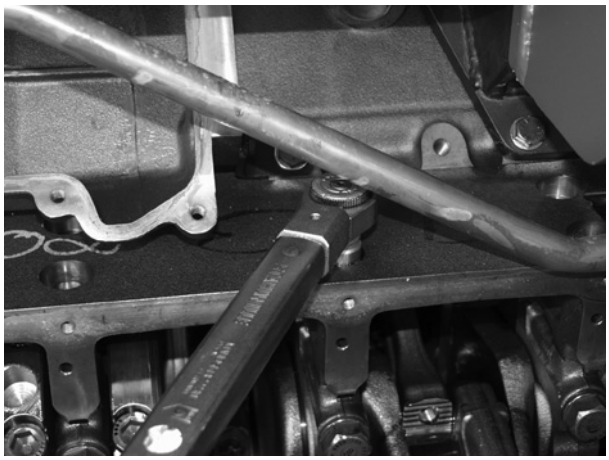
9

Checking axial clearance

Fig. 10

Note:
The axial clearance of the crankshaft is determined by the crankshaft bearing (alignment bearing) on the flywheel side.

- Fit the dial gauge holder with dial gauge to the crankcase
- Apply the tip of the dial gauge to the crankshaft
- Move the crankshaft back and forth in axial direction and read off the clearance from the dial gauge
- If the permitted axial clearance is exceeded, replace the main bearing shells completely

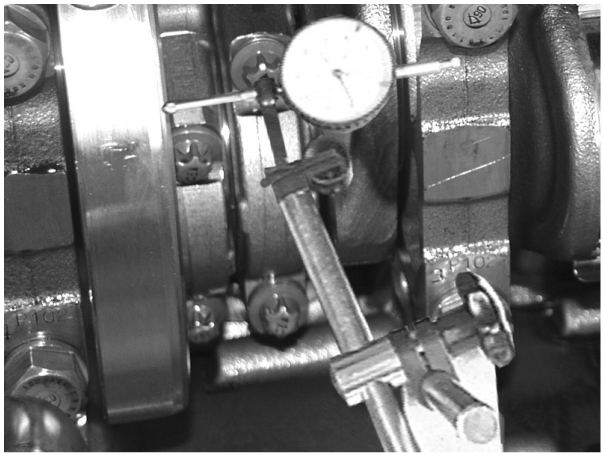
10

Fig. 11

Measure the conrod bearings, insert the pistons with conrods. Coat the conrod bearing shells with oil and pull the conrods to the journals.

Fit the conrod bearing covers with bearing shells (observe marking - numbers must be on the same side).

Screw in the mounting bolts and tighten them in stages.

Pretightening: 100–110 Nm

Angle tightening: 90°

Caution:
Removed bolts must be replaced.
After inadvertent attachment of cracked conrods and conrod bearing covers that do not belong together, the parts must not be reused!

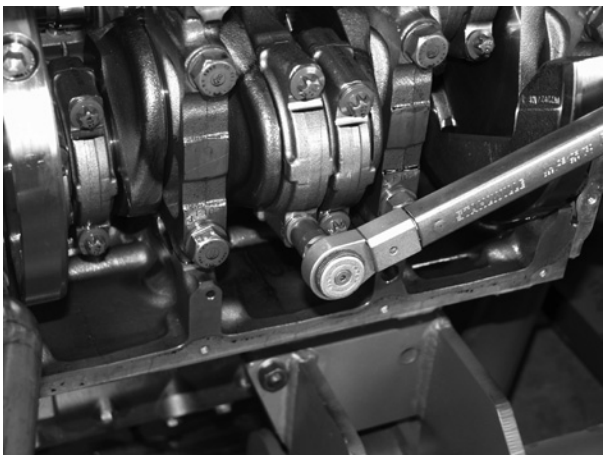
11

Fit oil pan and other detachable components.

https://truckmanualshub.com/

Removing pistons with conrods

- Removing oil pan, see page 55
- Removing cylinder heads, see page 78

Fig. 1

Loosen and remove conrod bearing cover bolts.

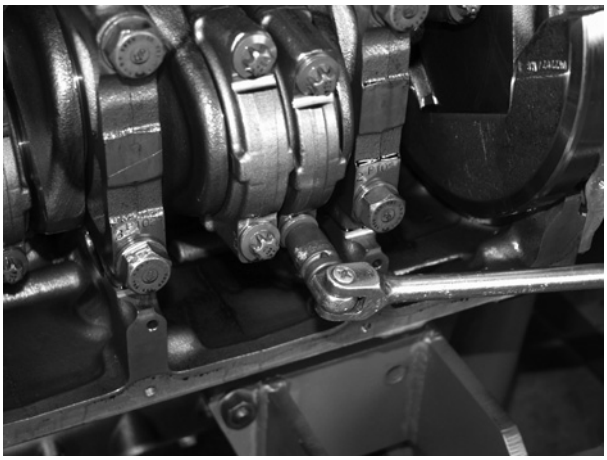

1

Fig. 2

Take off conrod bearing covers with bearing bushes; if necessary, light knocks with a plastic hammer will help here.

Note:
Connecting rod bearing caps are match–marked with the connecting rod big ends; arrange them in corresponding order.
Do not place the conrod bearing covers on the cracked faces.

Caution:
If their cracked surfaces are damaged the connecting rods must be changed.

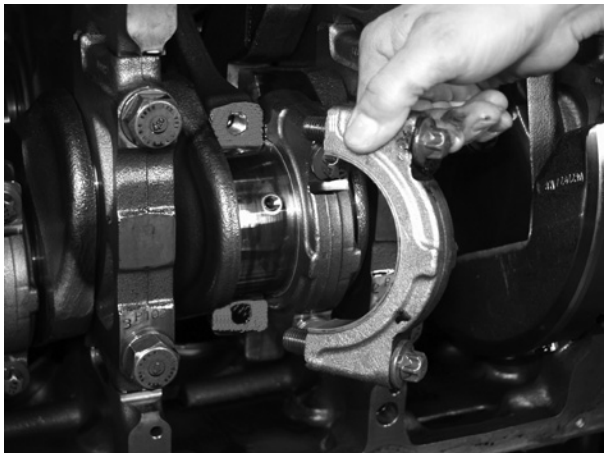

2

Remove combustion residues (oil carbon) from top cylinder edge using a piece of hard wood.

Caution:
Do not damage the cylinder liners!

Fig. 3

Press out the conrod with piston upwards.

Caution:
Do not damage the oil injection nozzles!

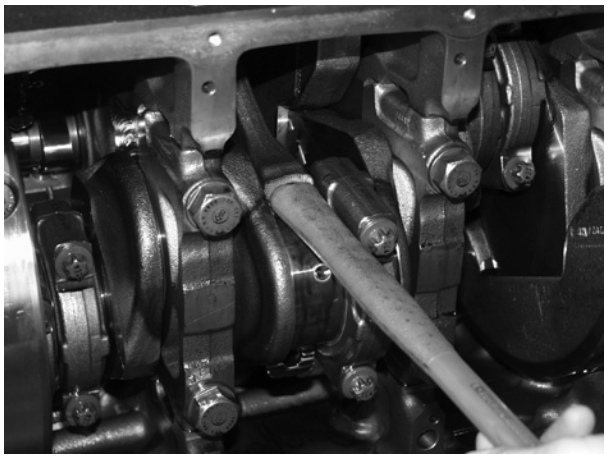

3

Fig. 4

Lay pistons with conrods and associated covers aside; use deposit rack if available.
Perform visual check of piston and piston rings.

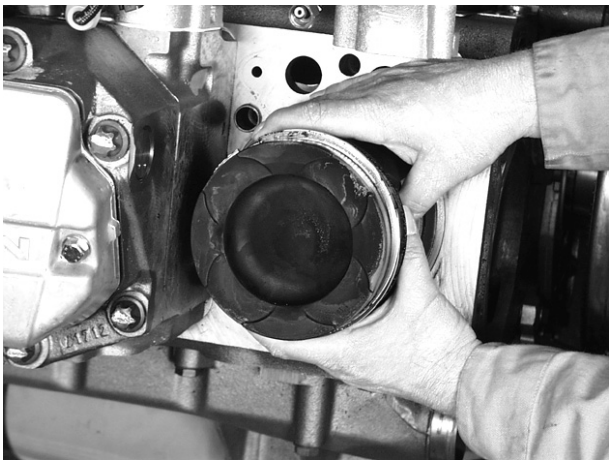

4

https://truckmanualshub.com/

Installing pistons with conrods

Note:
If the pistons have to be replaced, it must be determined whether oversize pistons were fitted by measuring the pistons or reading off the dimension on the piston crown.
If this is the case, oversize pistons are to be used.

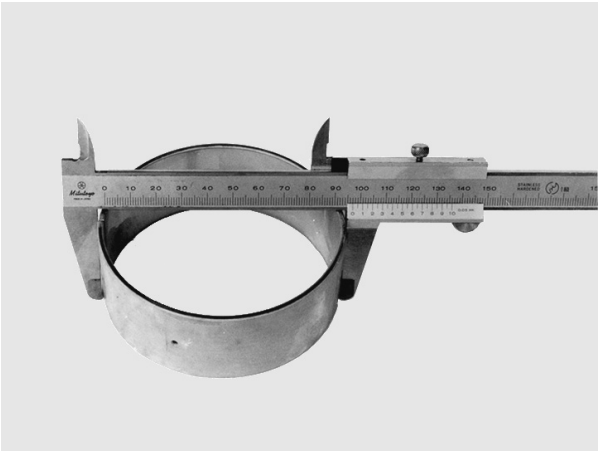

5

Fig. 5

Check bearing bushes for wear and damage.
Measure spread as in the case of main bearing bushes.
If required, fit new bearing bushes.
In the case of repairs to the conrod journals, use bearing bush of the corresponding repair level.

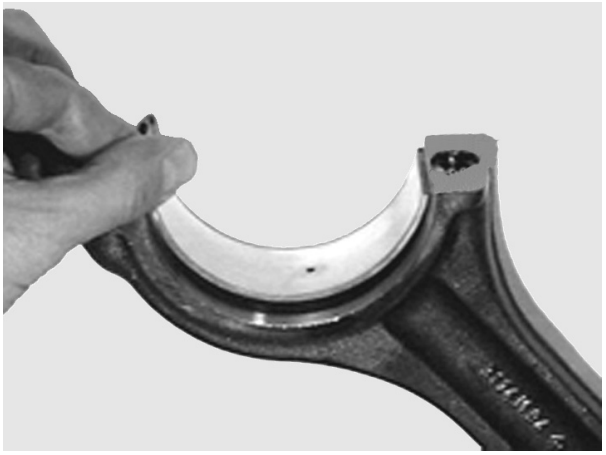

6

Fig. 6

Insert the bearing bushes in the conrod or conrod bearing cover so that they are **flush**.

Caution:
The rod shell has a red mark on the side and a brown reverse side.

The running surface must not be damaged!
Apply a thin coat of oil to the conrod bushes.

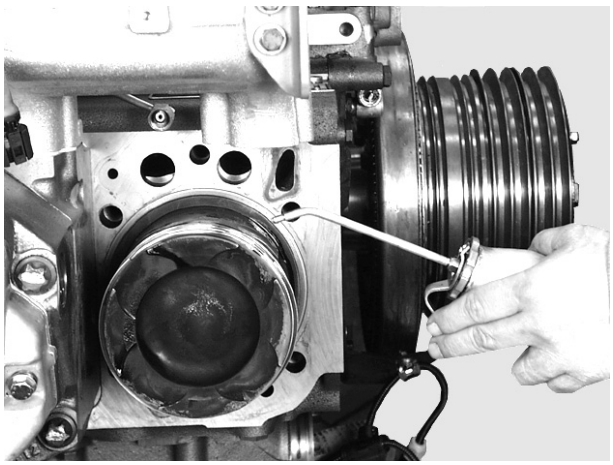

7

Fig. 7

Apply a thin coat of oil to the cylinder walls and pistons.
Adjust the piston ring joints by approx. 120° each.
Slide on the piston ring scuff band and tension the piston rings.

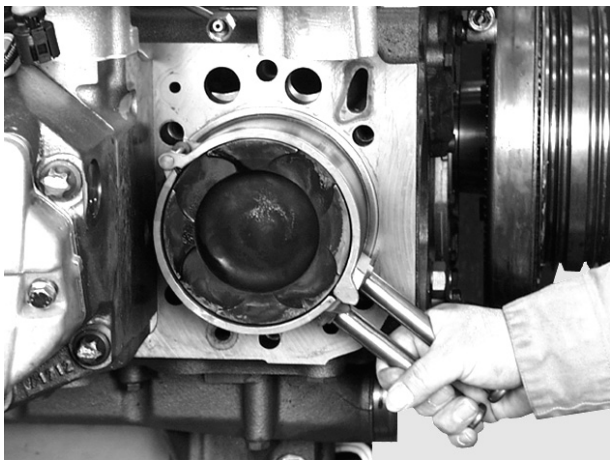

8

Fig. 8

Guide the conrod and push the piston on until it contacts the conrod foot on the conrod journal.

Caution:
Do not damage the oil injection nozzles!

https://truckmanualshub.com/

Fig. 9

Place the conrod bearing cover in position.

Caution:
The numbers on the connecting rod bearing cap and connecting rod big end must be on one side.

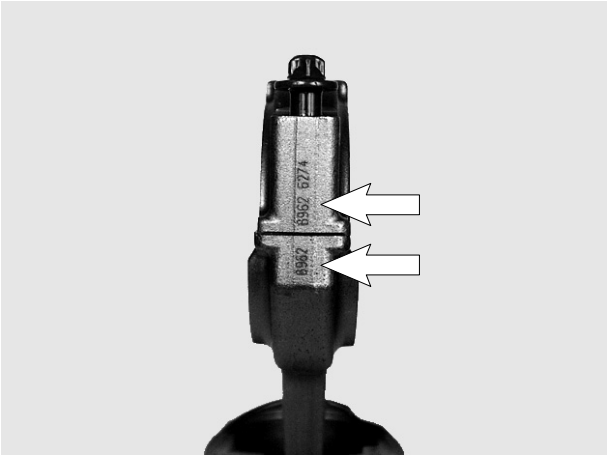

9

Fig. 10

Screw in the conrod bearing bolts and tighten them in stages.

Pretightening: 100–110 Nm

Angle tightening: 90°

Caution:
Removed bolts must be replaced.
After inadvertent attachment of cracked conrods and conrod bearing covers that do not belong together, the parts must not be reused!

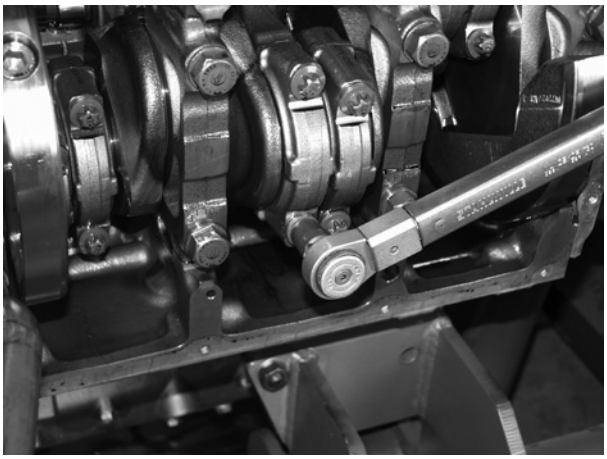

10

Fig. 11

Turn the engine slowly.
The conrods and oil injection nozzles (arrow) must not collide or scuff.

Note:
As far as possible turn engine only in direction of rotation (anti–clockwise as seen when looking at the flywheel) in order to prevent the direction of rotation of the sea water pump impeller being reversed.

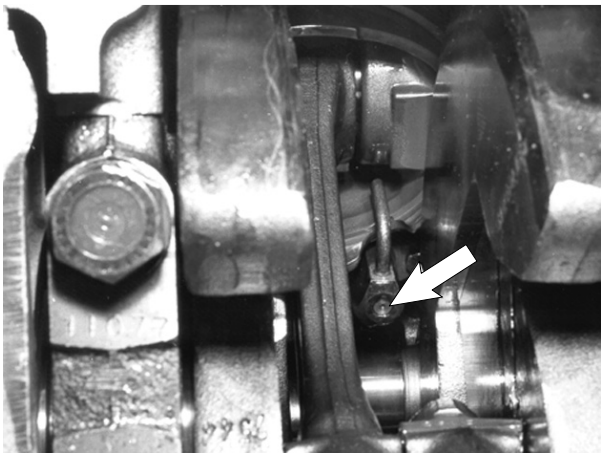

11

Refit in reverse order to the removal procedure all parts previously removed.

https://truckmanualshub.com/

Removing pistons from conrod and fitting

Fig. 1

Remove pistons with conrods.

Clamp the conrod in a vice using protective jaws.

Disengage piston pin fastening.

1

Fig. 2

Press out the gudgeon pin, in doing so, hold the piston. Remove piston and place to one side.

2

Measure conrod foot bore (base hole)

Fig. 3

Insert the new conrod bearing and fit the cap. Tighten bolts according to regulation.

Measure bearing bore hole with an internal micrometer in measuring directions 1, 2 and 3 as well as planes a and b.
Max. permitted values, see “Service Data”.

In the case of deviations beyond the tolerance range, replace conrod.

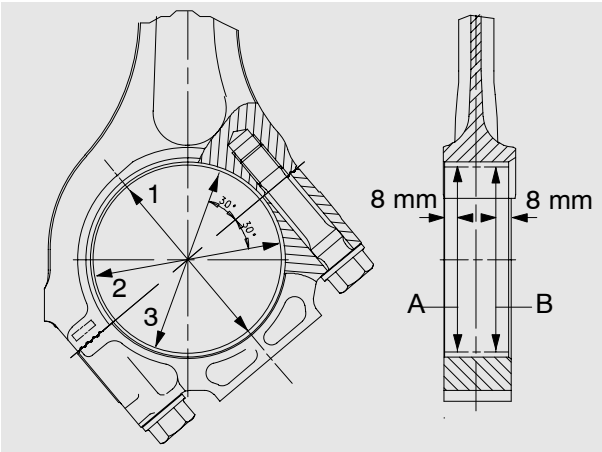

3

Fig. 4

Piston pin sockets are not available.

In the case of worn sockets, fit exchange conrods.

4

https://truckmanualshub.com/

Fig. 5

Clean conrod. Inspect for external damage, replace damaged conrods if necessary.

Check parallel location of conrod and twisting of piston pin eye to bearing bush bore hole. In the case of deviations beyond the tolerance range, replace conrod.

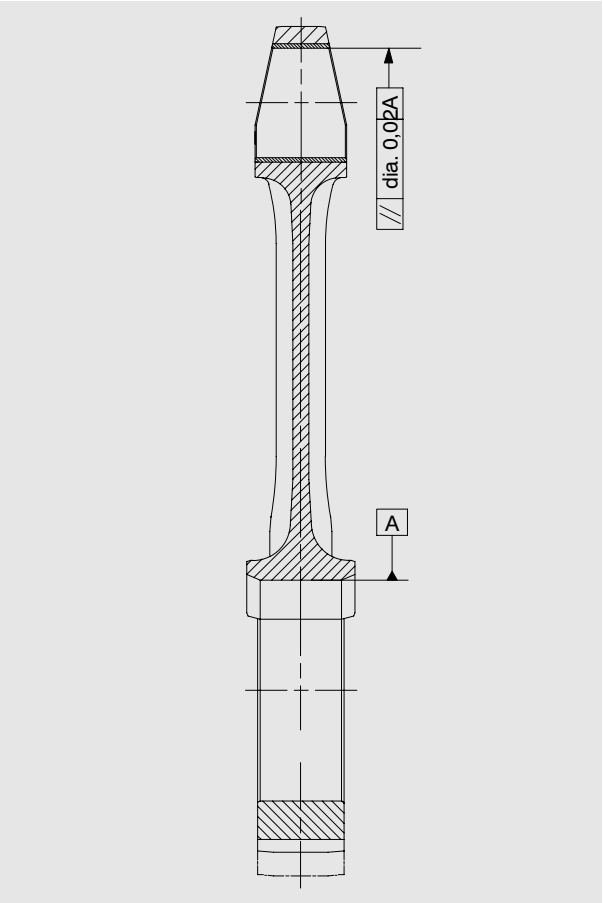

5

Fig. 6

Place piston on the conrod.

Caution:
The recess for the oil injection nozzle in the piston shaft (arrow) must lie on the side of the long conrod foot.

Insert piston pin. Engage fastenings.
Fitting pistons, see page 118.

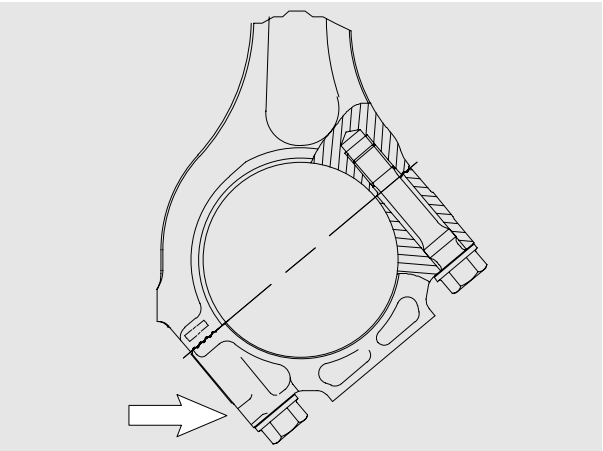

6

https://truckmanualshub.com/

Piston ring arrangement

Fig. 1

① Compression ring (double–sided keystone ring)
② Compression ring (tapered compression ring)
③ Oil scraper ring (bevelled–edge ring)

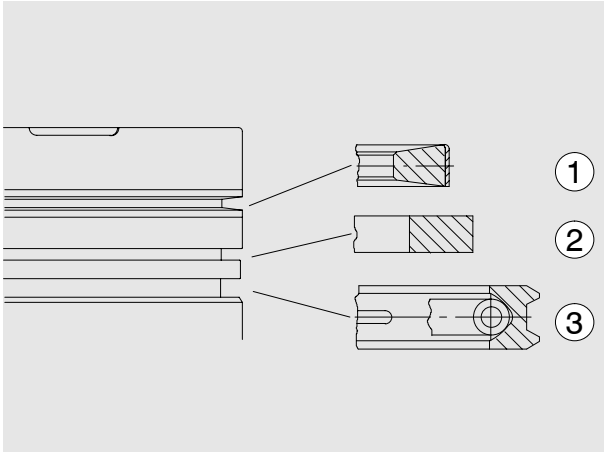

1

Removing piston rings

Fig. 2

Remove pistons with conrods.
Fit conrod in a vice, use protective jaws.

Set piston ring wrench to piston diameter.

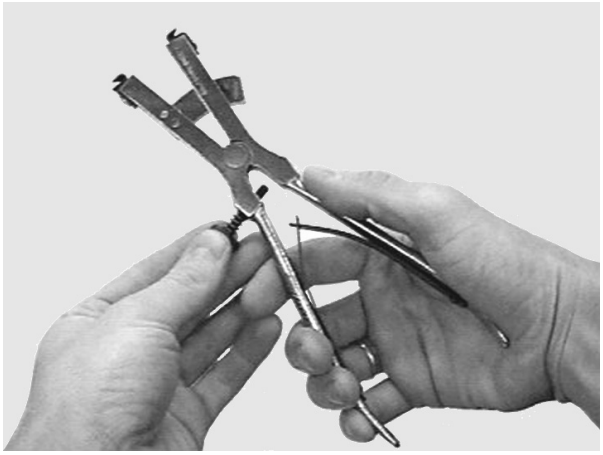

2

Fig. 3

Apply piston ring wrench to piston ring joint and disengage the piston ring from the piston ring grooves.

> **Note:**
> The coiled spring expanders mean that the oil scraper ring has greater tangential tension.

Carefully clean the piston ring grooves using sawdust. Do not damage the piston ring grooves.

3

Checking ring end clearance

Fig. 4

Insert the piston rings individually in the cylinders and use a feeler gauge to determine the ring end clearance.

If the ring end clearance is too great, replace the piston rings.

Ring end clearance, see “Service Data”.

4

https://truckmanualshub.com/

Installing piston rings

Fig. 5 and Fig. 6

use the piston ring wrench to engage the piston rings in the relevant piston ring groove (TOP facing upwards).

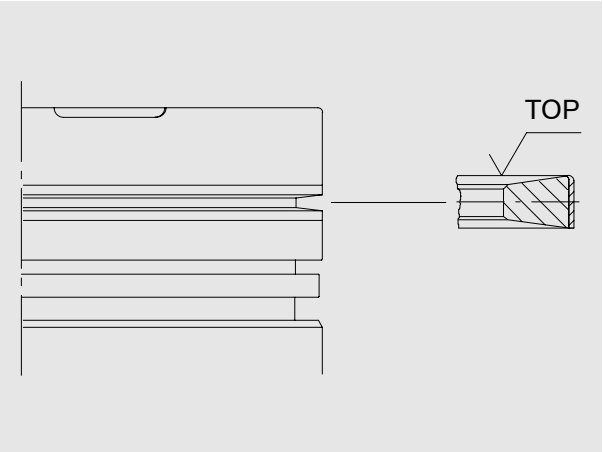

5

6

Checking piston ring axial clearance

Fig. 7

Determine the piston ring clearance in each piston ring groove at various points using a feeler gauge.

To do so, press the piston ring fully into the piston ring groove at the point to be measured.

If the clearance determined is too great, replace the pistons and piston rings.

Piston ring axial clearance, see “Service Data”.

7

https://truckmanualshub.com/

Removing cylinder liners

Note:
Observe oversizes for cylinder liner outside diameters and collar heights (see “Service data”).

- Remove cylinder head, see page 78
- Remove piston, see page 118

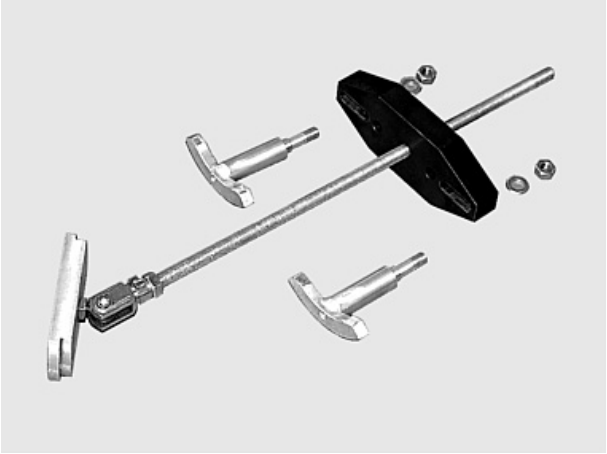

1

Fig. 1

Special tool for removing the cylinder liners.

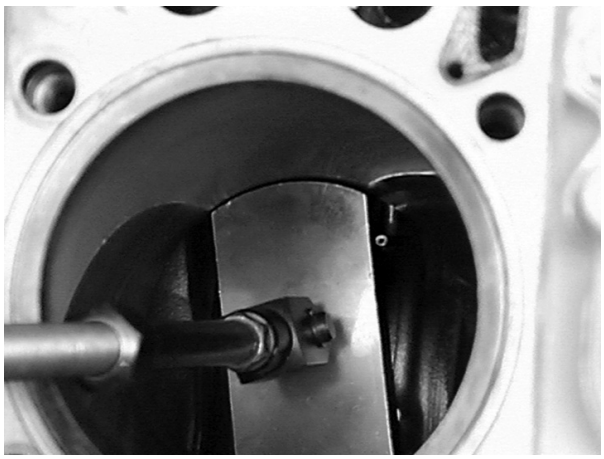

2

Fig. 2

Mark the cylinder liner position relative to the engine so that it can be reinstalled if reused.

Insert the cylinder liner extractor apparatus into the cylinder liner, taking care not to damage the oil spray nozzle.

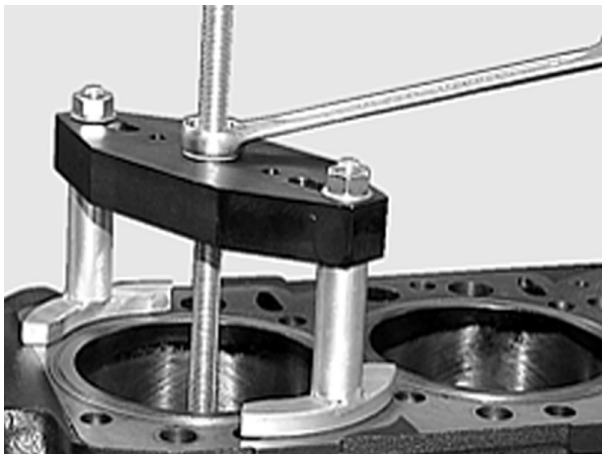

3

Fig. 3

Fit the support on the extractor spindle and screw on the nut.

Hold the extractor spindle in place and extract the cylinder liner by turning the nut.

4

Fig. 4

Remove the extractor apparatus and take out the cylinder liner.

https://truckmanualshub.com/

Fig. 5

Set the cylinder liner down in an upright position.
Remove the O-rings.

Number cylinder liners in order of installation.

5

Fig. 6

Remove the O-rings from the crankcase.
Clean the seat for the cylinder liners in the crankcase.

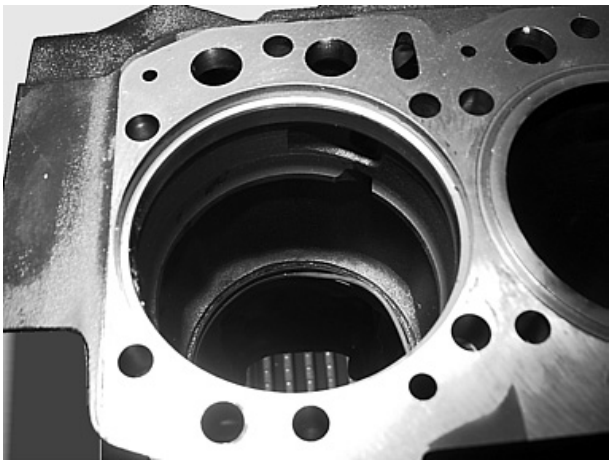

6

https://truckmanualshub.com/

Installing cylinder liners

Checking cylinder liner protrusion

Fig. 7

Clean the basic bore and the cylinder liner.

Insert the cylinder liner without O-rings into the crankcase, observing the marking (ensure that it is identical to the position prior to removal).

Using the dial gauge and its holder, measure the cylinder liner protrusion at no less than 4 different points.
Specified values see “Service Data”.

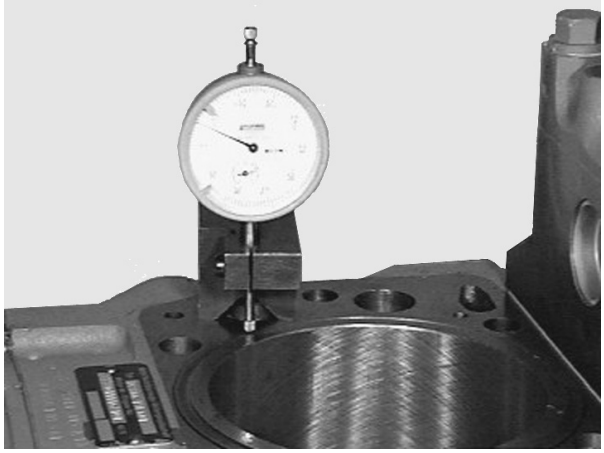

7

Fig. 8

The cylinder liner protrusion is the difference between the collar height and the collar recess in the crankcase.

① Crankcase
② Cylinder liner
B–A = Cylinder liner protrusion

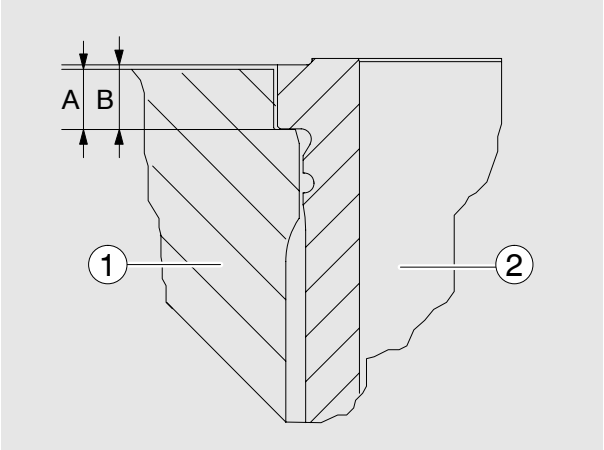

8

Fig. 9

Fit a shim if the protrusion is below the minimum level, even at only a single point.
The shim is placed under the cylinder liner collar.
However, it may only be used if after installation the upper tolerance limit is not exceeded.

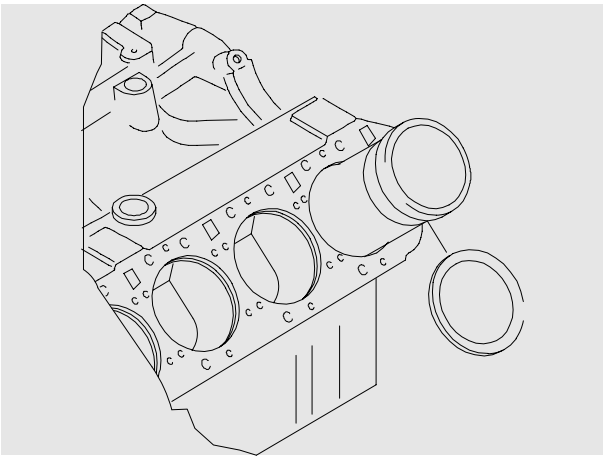

9

Fig. 10

Insert new O-rings for the lower seal (144x4) dry into the crankcase.

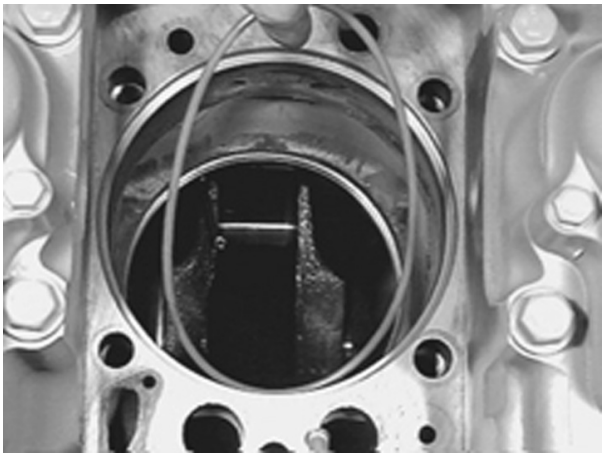

10

Fig. 11

Insert new O-rings for the upper seal (138x2) into the cylinder liner grooves.
Do not overstretch the O-rings.

> **Note:**
> Do not use grease or sealing compounds of any type to install the cylinder liners and O-rings.

11

Fig. 12

Apply a thin coat of engine oil to the cylinder liner in the upper and lower O-ring areas.
Apply a thin coat of engine oil to the lower O-rings in the crankcase.

Insert the liners into the crankcase and press them in with both hands.
Then place a clean metal plate on the liner and exert uniform and downward pressure until the liner is seated in the crankcase recess.

> **Note:**
> To verify that the O–rings are correctly seated after the cylinder liners are fitted, check the liner protrusion with special tool, as follows:
> Position the press-on measuring plate with turned collar facing the liner, using 2 fitting sleeves to centre the plate.
> Fit press–on measuring plate with 4 bolts (own manufacture: Collar screw 51.90020–0270, length shortened to 90 mm) in stages in diagonal sequence with 40 Nm.
> Set the dial gauge combination to “0” over the measuring plate under preload relative to the crankcase.
> Measure the liner protrusion at no less than 4 different points.

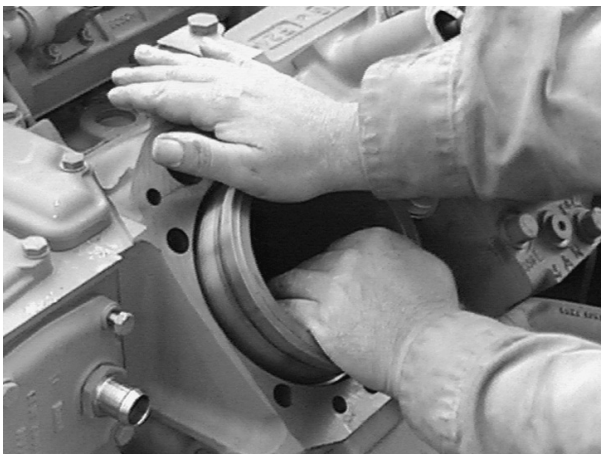

12

If noticeable resistance can be felt during this procedure, the O-rings are no longer in their proper position.
Check O-rings for damage; if necessary, replace, rearrange and reinsert the cylinder liner.

https://truckmanualshub.com/

Measuring piston protrusion

Fig. 1

Remove the cylinder heads.
Turn the piston to be measured to TDC.

Apply the dial gauge bracket with dial gauge to the crankcase gasket surface.
Set the dial gauge to ”0”.

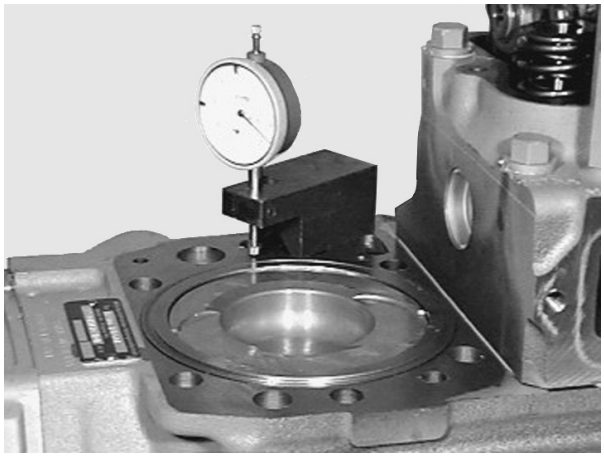

1

Fig. 2

Carefully swing the dial gauge bracket around while raising the tip of the dial gauge.

Lower the tip of the dial gauge to the piston crown and read off the excess piston projection.

2

https://truckmanualshub.com/

Fig. 1

Disconnect the negative lead from the battery or, if fitted, switch off the battery master switch.
Disconnect connection cable terminal 31 (negative pole, thick cable), connection cable terminal 30 (positive pole, thick cable) and terminals 48 and 50 from the starter.

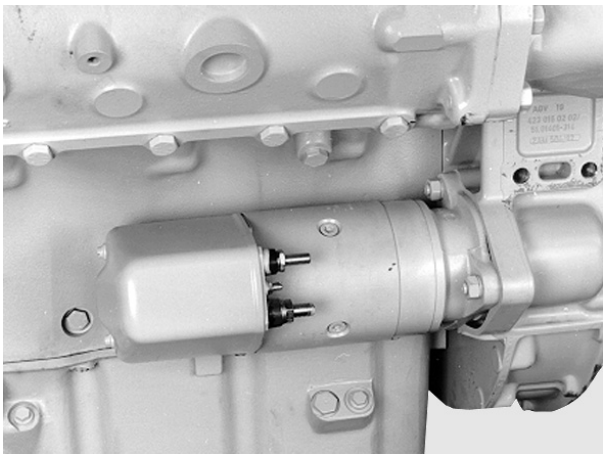
1

Fig. 2

Remove mounting nuts.

Caution:
An angle spanner is an advantage for accessing the inner screws (see illustration).

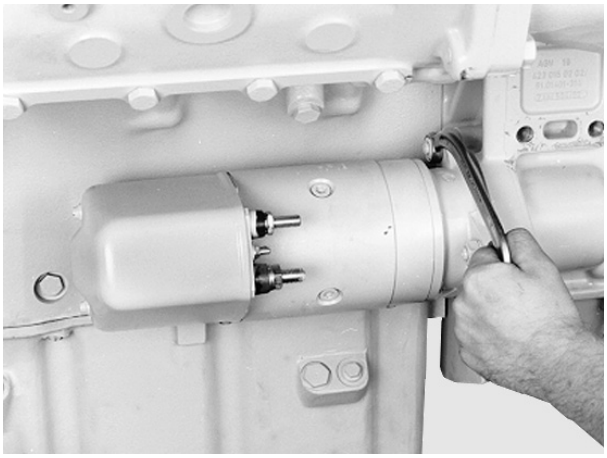
2

Fig. 3

Remove the starter motor.
Check the starter pinion for wear and whether it can move freely. If necessary, clean piston using a brush dipped in fuel and regrease it.

3

Check the flywheel ring gear for wear and damage.
Turn over engine by hand once, paying particular attention to the positions at which the engine finally stops; i. e. when the engine is switched off it always stops in certain positions.
The starter pinion engages in these positions when the engine is started.

Replacing the starter ring gear, see page 66.

The starter motor is installed in reverse order to its removal; when doing so, connect the cables correctly and tighten the bolts as specified.

Connect the battery or turn on the battery master switch.
Check the function of the starter motor after installation.

V–belts

Checking condition

- Check V–belts for cracks, oil, overheating and wear
- Change demaged V–belts

If, in the case of a multiple belt drive , wear or differing tensions are found, always replace the complete set of belts.

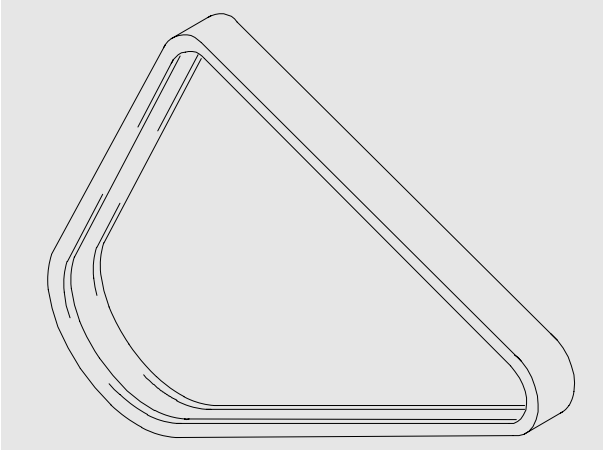

Checking tension

Use V–belt tension tester to check V–belt tension.

- Lower indicator arm ① into the scale
- Apply tester to belt at a point midway between two pulleys so that edge of contact surface ② is flush with the V–belt
- Slowly depress pad ③ until the spring can be heard to disengage. This will cause the indicator to move upwards

If pressure is maintained after the spring has disengaged a false reading will be obtained!

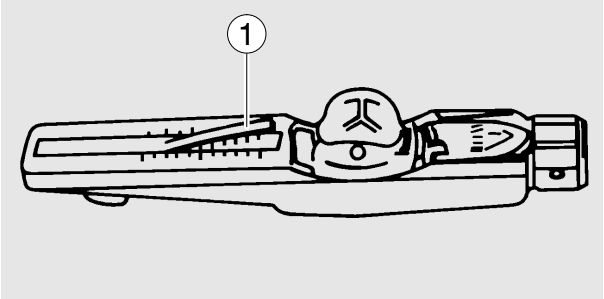

Reading of tension

- Read of the tensioning force of the belt at the point where the top surface of the indicator arm ① intersects with the scale
- Before taking readings make ensure that the indicator arm remains in its position

If the value measured deviates from the setting value specified, the V–belt tension must be corrected.

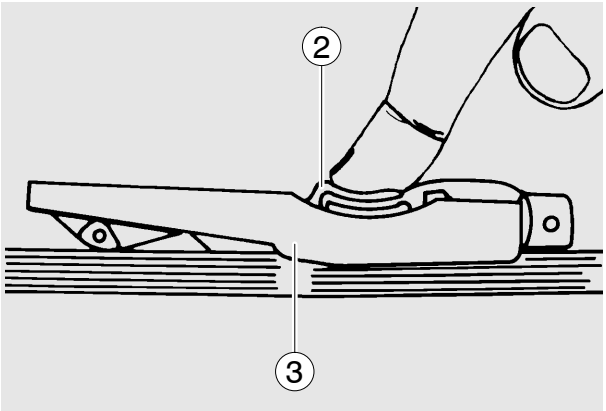

Drive belt width	Tensioning forces according to the kg graduation on the tester		
	New installation		When servicing after long running time
	Installation	After 10 min. running time	
2/3VX	90–100	70–80	60

Tensioning and changing V–belt

Crankshaft – water pump – tension pulley

- Remove fixing bolts ①
- Release lock nut ②
- Turn adjusting nut ③ until the V–belt is correctly tensioned
- Retighten lock–nut and fixing bolts

To change the V–belt, turn back the setting nut and swivel the tension pulley inwards.

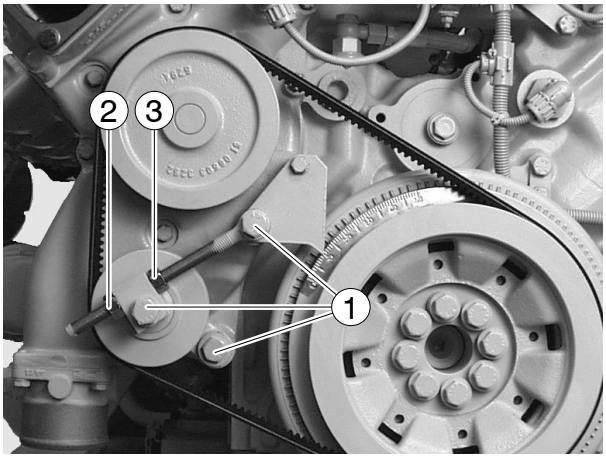

https://truckmanualshub.com/

Fig. 1

The speed pickup and the auxiliary speed pickup are fitted to the flywheel housing, at bottom right.

Only the lower transmitter is installed on engine D 2842 LE 620.

For removal, disconnect cable from plug connection (arrow).

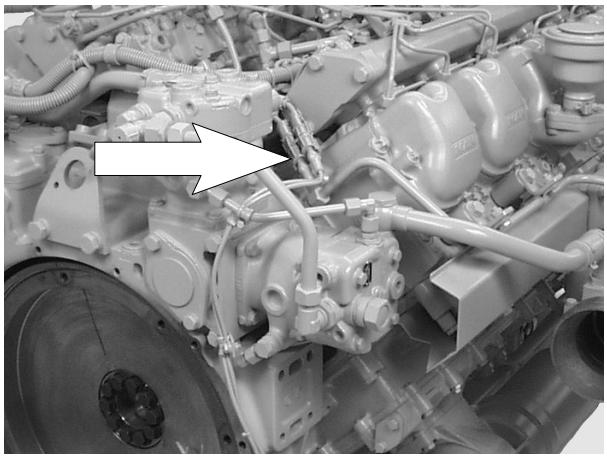

1

Fig. 2

Remove mounting bolt and take off transmitter.

The unit is installed in reverse sequence to removal procedure.

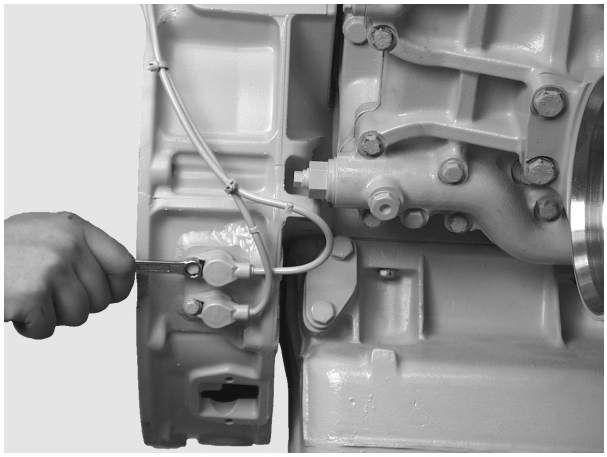

2

https://truckmanualshub.com/

https://truckmanualshub.com/

Service Data

https://truckmanualshub.com/

Engine D 2842 LE 620

Design	V 90°
Cycle	4–stroke diesel with turbocharger / inter-cooler and charge–air regulation (waste gate)
Number of cylinders	12
Compression ratio	15,5 : 1
Bore	128 mm
Stroke	142 mm
Engine capacity	21 930 cm^3
Direction of rotation viewed on flywheel	anti clockwise
Firing order	1–12–5–8–3–10–6–7–2–11–4–9
Power based on DIN ISO 3046	
D 2842 LE 620	662 kW / 900 PS at 2100 rpm
Lubrication	Pressure circulation
forced feed lubrication by	gear oil pump
Filling capacities	
Oil capacity in oil sump flat	min. 35 ltr.
	max. 50 ltr.
Oil change quantity (with filter) flat	53 ltr.
Cooling	Fluid cooling
by impeller pump	
Coolant temperature	
normal	90°C
temporarily	95°C

https://truckmanualshub.com/

Crankcase

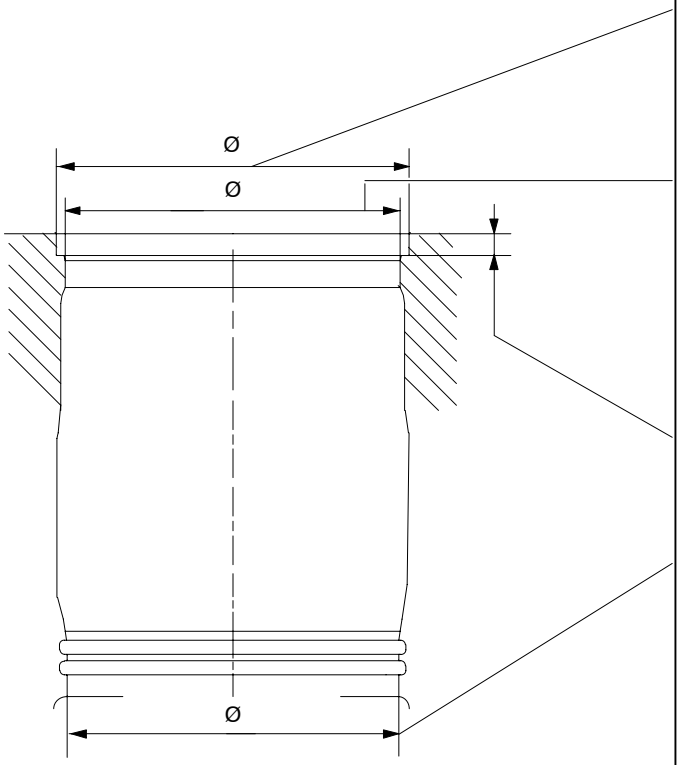

standard size: 153,90–154,00 mm
for liners with larger outer diameter:
0,5 and 1,0 mm: 54,40–154,50 mm

standard size: 145,80–145,84 mm
for liners with larger outer diameter:
0,5 mm: 146,30–146,34 mm
1,0 mm: 146,80–146,84 mm

9,97–9,99 mm

standard size: 144,50–144,54 mm
for liners with larger outer diameter:
0,5 mm: 145,00–145,04 mm
1,0 mm: 145,50–145,54 mm

Cylinder liner

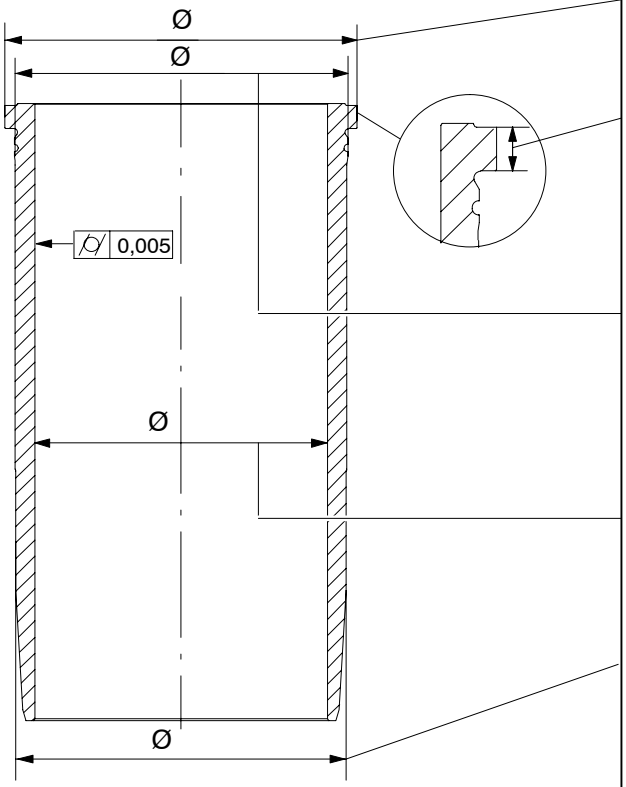

standard size: 153,694–153,757 mm
with larger outside diameter
0,5 and 1,0 mm: 154,194–154,257 mm

standard size: 10,030–10,050 mm
with more flange height:
0,2 mm: 10,230–10,250 mm

Liner protrusion above upper deck of crankcase: 0,04–0,08 mm

standard size: 145,761–145,786 mm
with larger outside diameter
0,5 mm: 146,261–146,286 mm
1,0 mm: 146,761–146,786 mm

127,990–128,010
Max. wear limit:
0.15 mm below base dimension

standard size: 144,432–144,457 mm
with larger outside diameter
0,5 mm: 144,932–144,957 mm
1,0 mm: 145,432–145,457 mm

https://truckmanualshub.com/

Service Data	Dimensions Limit values
Crankshaft	
Crankshaft front end (opposite end to flywheel) 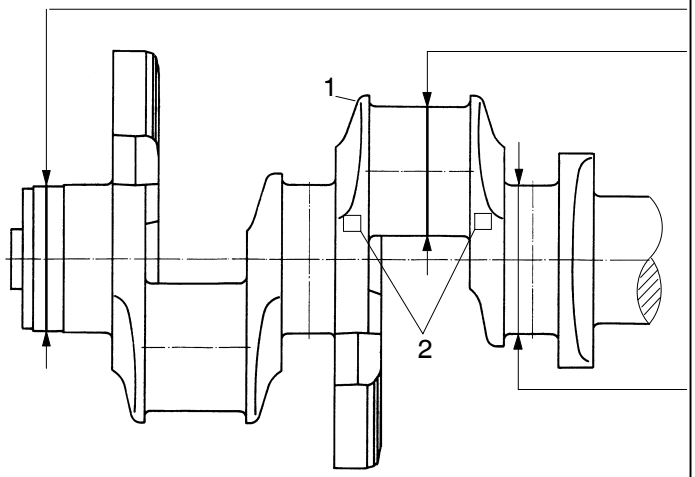 	99,985–100,020 mm Standard size: 89.98–90.00 mm undersize –0.25: 89.73–89.75 mm undersize –0.50: 89.48–89.50 mm undersize –0,75: 89.23–89.25 mm undersize –1.00: 88,98–89,00 mm Standard size: 103.98–104.00 mm undersize –0.25: 103.73–103.75 mm undersize –0.50: 103.48–103.50 mm undersize –0.75: 103.23–103.25 mm undersize –1.00: 102,98–103,00 mm 1 = Colour marking for size identification of crank pin diameter 2 = Colour marking for size identification of main bearing journal diameter Undersize 0,25: red Undersize 0,50: white Undersize 0,75: yellow Undersize 1,00: lilac Permissible axial clearance of crankshaft: 0,190–0,322 mm
Bearing race for crankshaft, front end 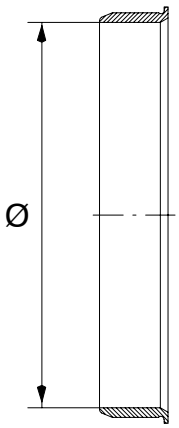 	Inner diameter: 99,907–99,942 mm

https://truckmanualshub.com/

Crankshaft rear end (adjacent to flywheel)

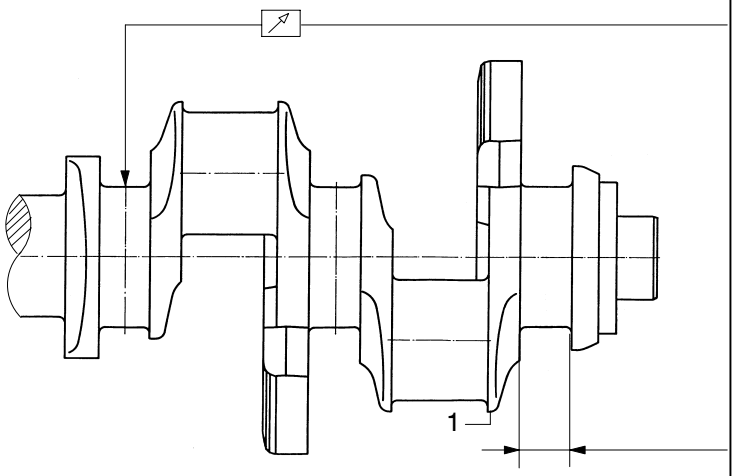

Max. permissible runout with crankshaft taken up in end bearings:

D 2842	at bearing 4	0,08 mm

Standard size:	38.000–38.062 mm
undersize –0.25:	38.500–38.562 mm
undersize –0.50:	38.500–38.562 mm
undersize –0.75:	39.000–39.062 mm
undersize –1.00:	39,000–39,062 mm

1 = Colour marking for size identification of thrust bearing journal length

undersize –0,25:	red
Undersize –0,50:	white
Undersize –0,75:	yellow
Undersize –1,00:	lilac

Main bearing

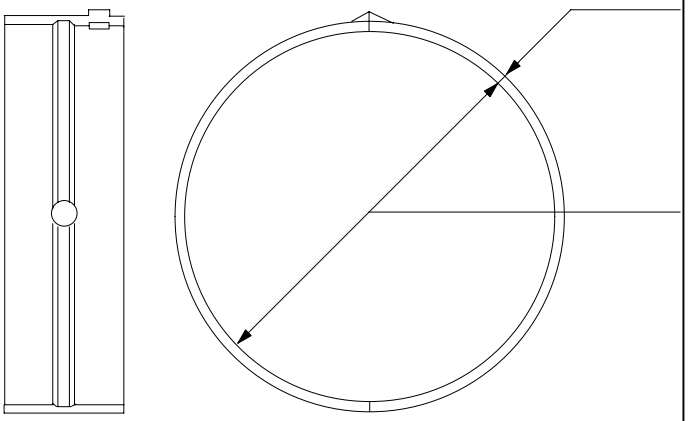

Data for wall thickness and bearing inner diameter also apply to the alignment bearing

Standard size:	3.455–3.467 mm
undersize –0.25:	3.580–3.592 mm
undersize –0.50:	3.705–3.717 mm
undersize –0.75:	3.830–3.842 mm
undersize –1.00:	3,955–3,967 mm

Internal bearing Ø when fitted:

Standard size:	104.066–104.112 mm
undersize –0.25:	103.816–103.862 mm
undersize –0.50:	103.566–103.612 mm
undersize –0.75:	103.316–103.362 mm
undersize –1.00:	103,066–103,112 mm

Spread: 0,3–1,2 mm

Marking:
top / bottom

standard size:	0958 / 0079 mm
undersize –0.25:	0962 / 0081 mm
undersize –0.50:	0964 / 0082 mm
undersize –0.75:	0966 / 0083 mm
undersize –1.00:	0968 / 0084

https://truckmanualshub.com/

Thrust bearing

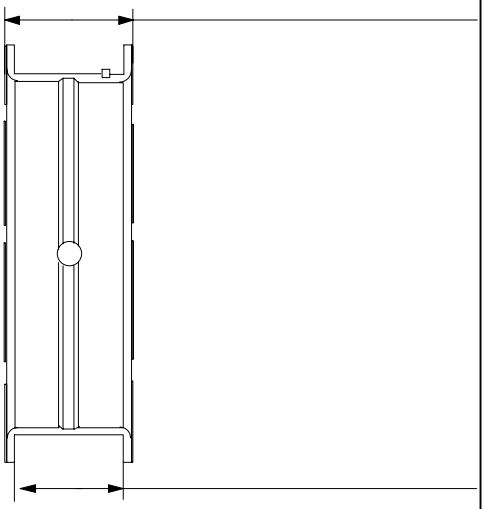

Standard size:	37.74–37.81 mm
undersize –0.25:	38.24–38.31 mm
undersize –0.50:	38.24–38.31 mm
undersize –0.75:	38.74–38.81 mm
undersize –1.00:	38,74–38,81 mm
Spread:	0,1–0,5 mm
Marking: top / bottom	
standard size:	0164 / 0165 mm
undersize –0.25:	0168 / 0169 mm
undersize –0.50:	0170 / 0171 mm
undersize –0.75:	0172 / 0173 mm
undersize –1.00:	0174 / 0175

31,01–31,04 mm

Data for wall thickness and bearing bore see ”main bearing””

Mounting bolts for crankshaft bearing caps

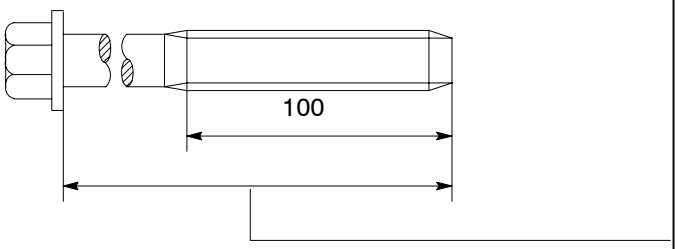

Length With each tightening, the bolts are deliberately stressed beyond the stretch limit and each tightening thus extends their length permanently. When the max. length has been reached, the bolt may no longer be used.

new:	152,5–153 mm
max.:	154,5 mm

https://truckmanualshub.com/

Flywheel and starter gear ring

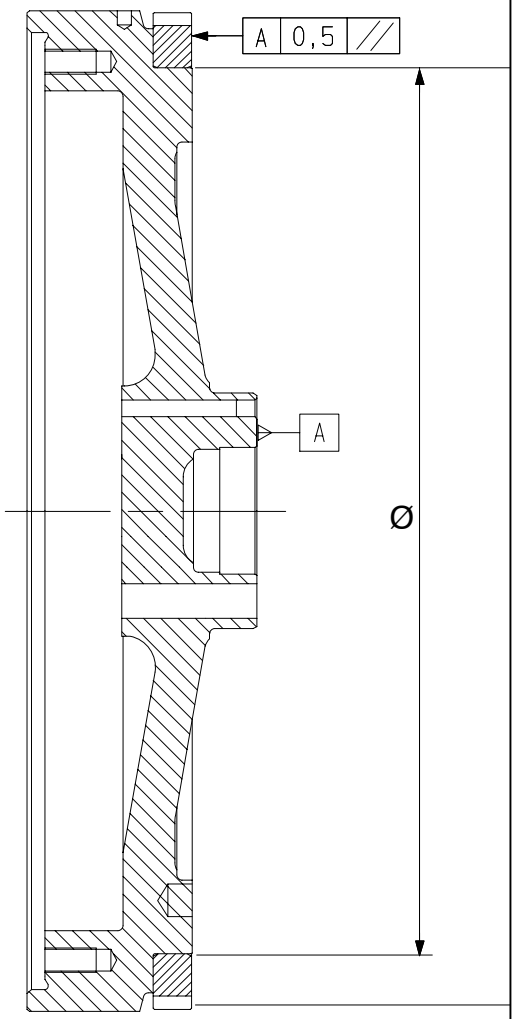

Ø Flywheel: 432,490–432,645 mm

Internal gear ring Ø:
432,000–432,155 mm

Interference: 0,335–0,645 mm
Installation temperature: 200–230°C

m = 54,2 kg (with gear ring)
J = 1,98 kgm^2

Number of teeth: Z = 160, module 3
Matching gear: Starter pinion (Z = 9)

Backlash: 0,6–0,9 mm

https://truckmanualshub.com/

Service Data	Dimensions Limit values
Conrods 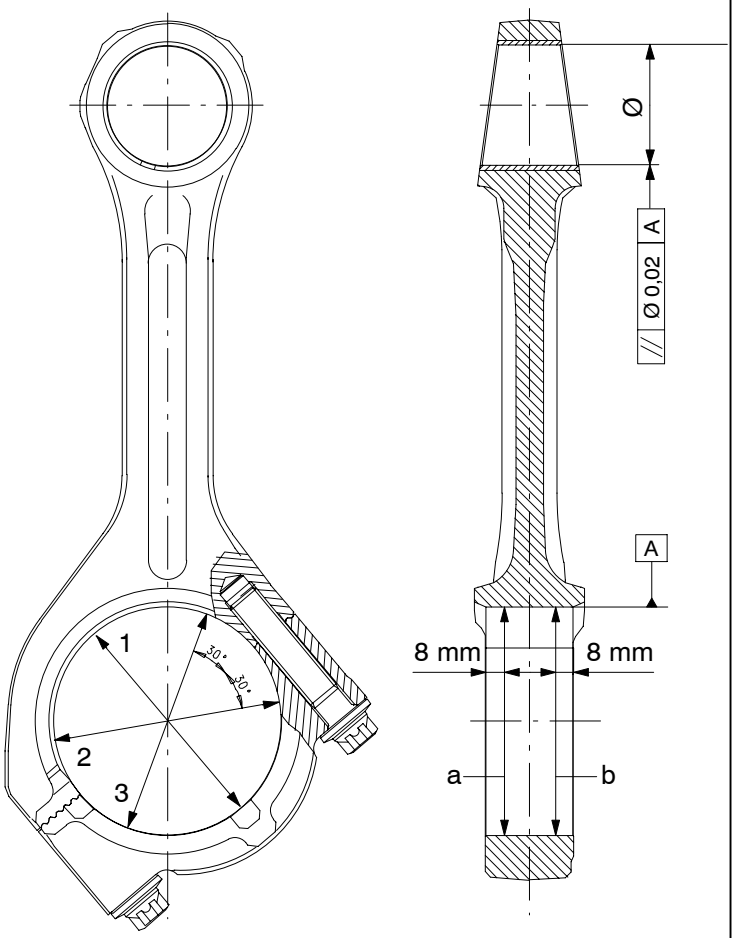 	46,055–46,065 mm **Wear limit: 46,09 mm** Bearing bore in measuring directions 1, 2 and 3 and in measuring planes a and b: 90,064–90,106 mm Edge condition: New conrod bearing in place, conrod assembled
Conrod bearings 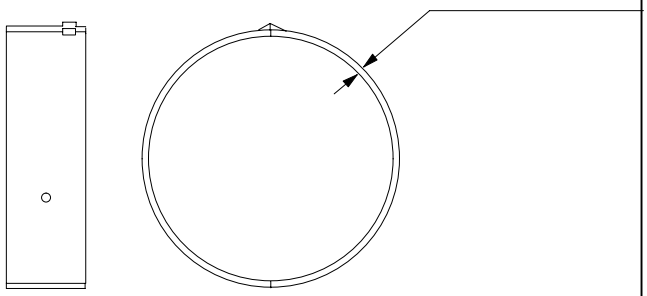	Standard size: 2.463–2.473 mm undersize 0.25: 2.588–2.598 mm undersize 0.50: 2.713–2.723 mm undersize 0.75: 2.838–2.848 mm undersize 1.00: 2,963–2,973 mm Spread: 0,6–1,5 mm If signs of wear are present (scores,antiwaer coating damaged), change both bearing shells Important: Observe installation position (rod shell has red or yellow colour markings on the side)
Conrod bolts 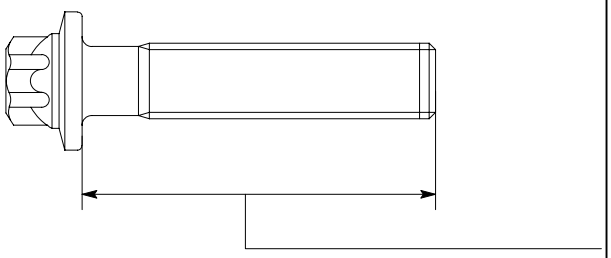	Removed bolts must be replaced.

https://truckmanualshub.com/

Pistons

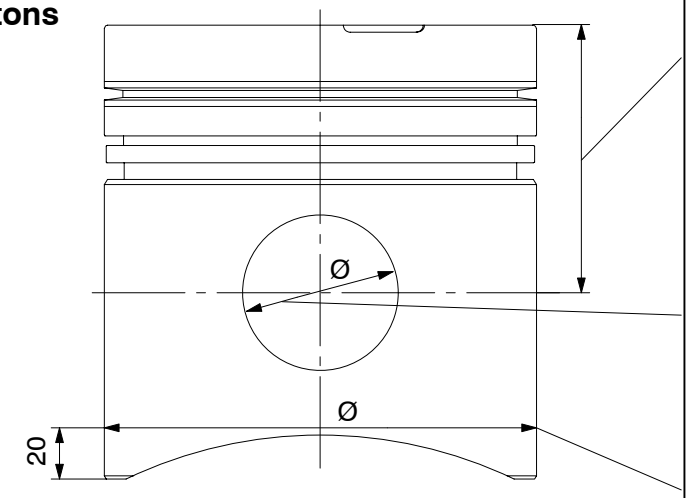

Compression height: 81,250–81,300 mm

Piston protrusion above crankcase top: 0,01–0,38 mm

46,030–46,040 mm
Piston bolt diameter:
45,994–46,000 mm

127,870–127,880 mm
Max. difference in weight per engine piston set: 100g

Piston ring grooves

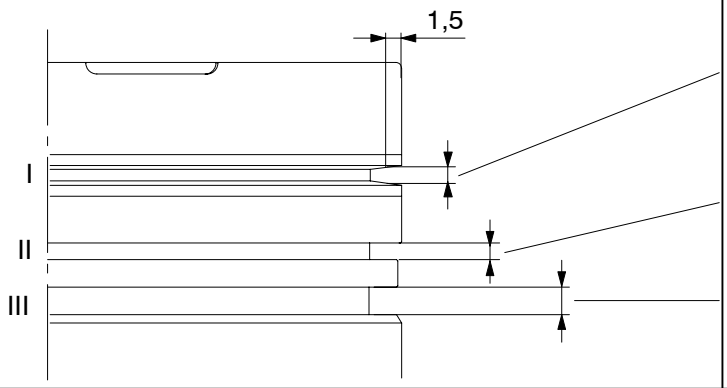

3,695–3,725 mm

3,040–3,060 mm

4,02–4,04 mm

Piston rings

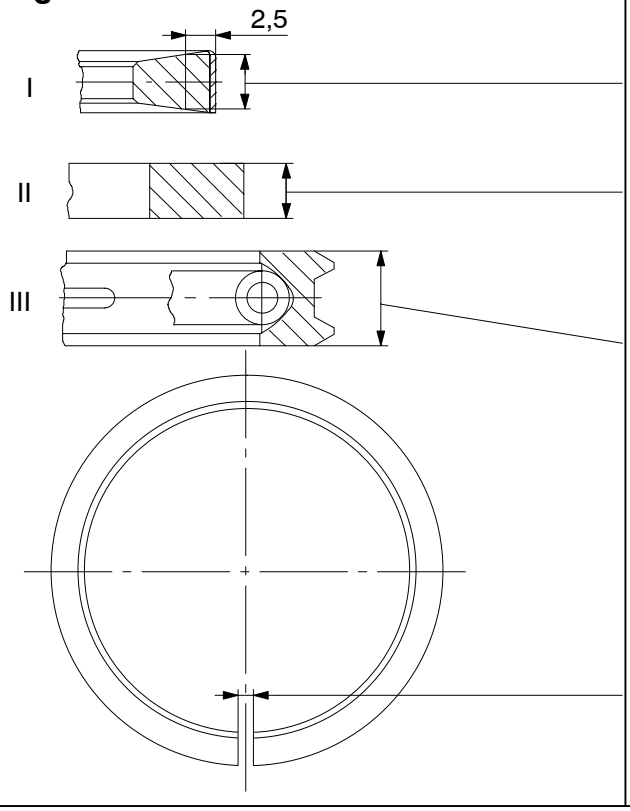

1st ring – keystone ring
Height: 3,296–3,33 mm

2 nd ring – Minute ring:
Height: 2,970–2,990 mm

3rd ring – bevelled ring
Height: 3,975–3,990 mm

Ring gap:
1.st ring: 0,50–0,70 mm
2nd Ring: 0,70–0,90 mm
3rd Ring: 0,25–0,55 mm

https://truckmanualshub.com/

Cylinder head

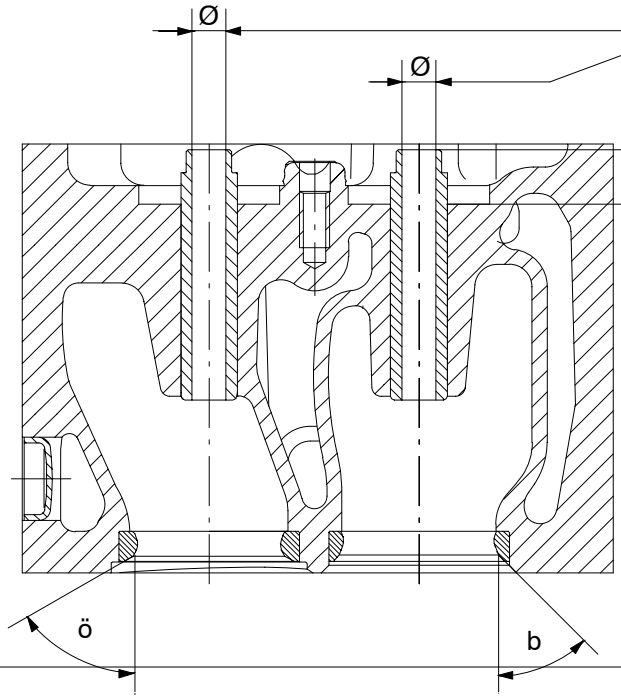

9,000–9,015 mm

14,1–14,5 mm

Intake valve φ = 60°
Exhaust valve β = 45°

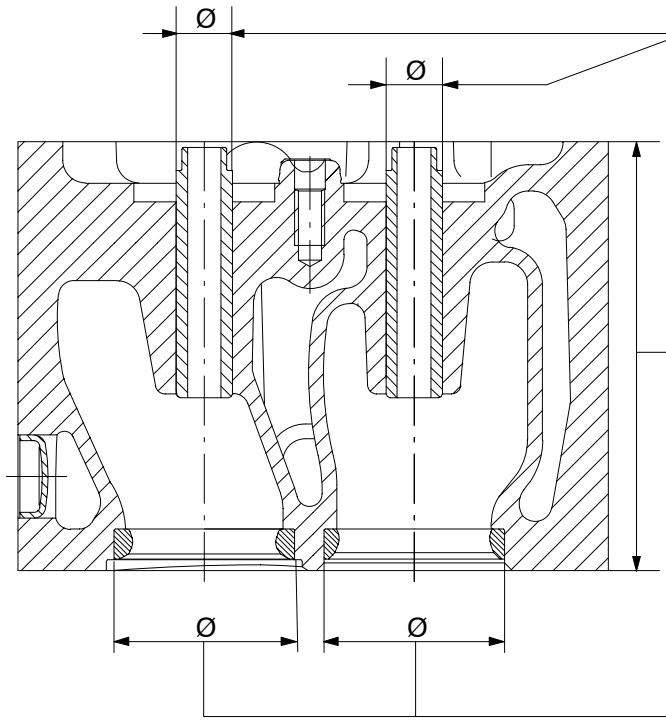

Valve guide bore in cylinder head: 15,000–15,018 mm
Valve guide outside diameter: 15,028–15,046 mm

standard: 113,9–114 mm

(observe specified dimensions for valve recess and injector projection)

Valve seat insert bore in cylinder head: 44,000–44,025 mm
46,000–44,025 mm
Valve seat insert outside diameter: 44,105–44,115 mm
46,095–46,105 mm

https://truckmanualshub.com/

Cylinder–head bolts

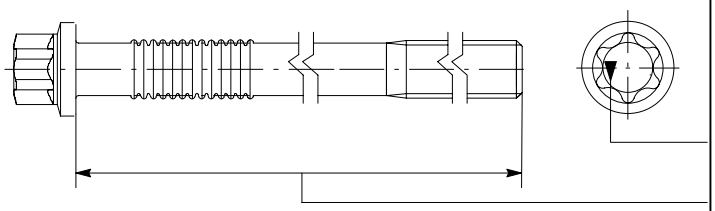

Length With each tightening, the bolts are deliberately stressed beyond the stretch limit and each tightening thus extends their length permanently.
When the max. length has been reached, the bolt may no longer be used.

Angle of rotation symbol

51.90490–0041 / 0070:
new: 259–259.5 mm, max. 261.5 mm
51.90490–0042 / 0071:
new: 197,5–198 mm, max. 200 mm

Valve recess

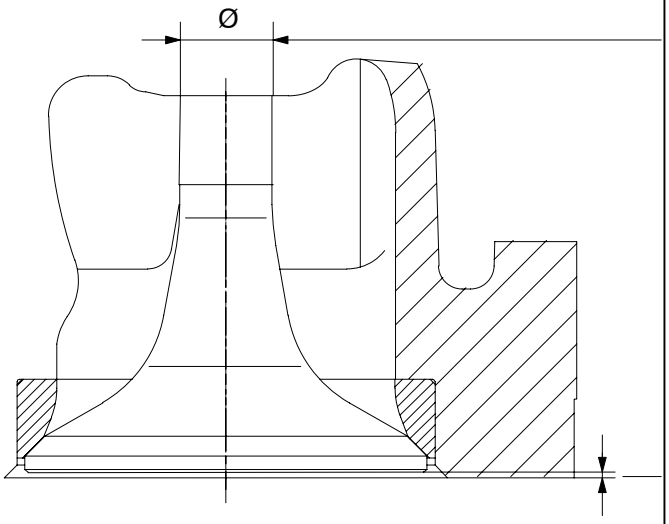

Intake valve: 8,963–8,977 mm
Exhaust valve: 8,950–8,964 mm

Valve recess: 0,70–1,00 mm

Valve springs

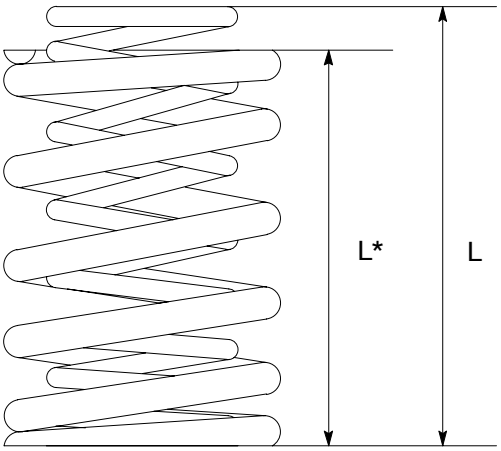

Inner spring:
Free length (L), approx. 64,8 mm
Spring force at L 46,38 mm: 142–158 N
Spring force at L = 26 mm: 213–239 N

Outer spring:
Free length (L), approx. 63,3 mm
Spring force at L 46,45 mm: 410–470 N
Spring force at L = 33 mm: 714–790 N

The lowest spring force is at the same time the wear limit value.

https://truckmanualshub.com/

Valve gear

Rocker arm shaft

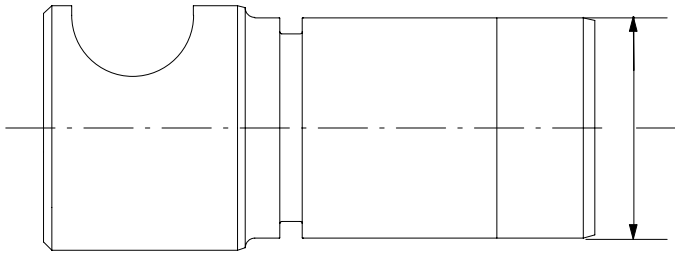

27,961–27,97 mm

Rocker arms

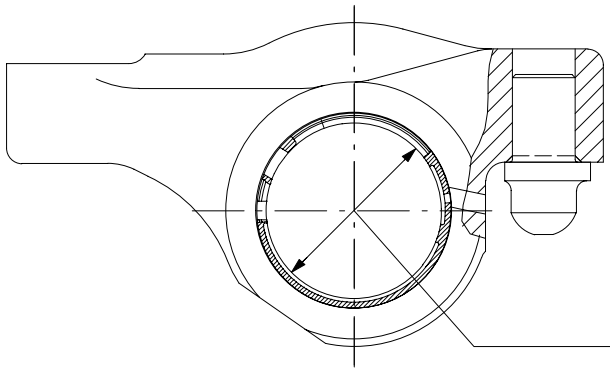

28,005–28,021 mm

Rocker arm radial clearance: 0,035–0,06 mm

Camshaft

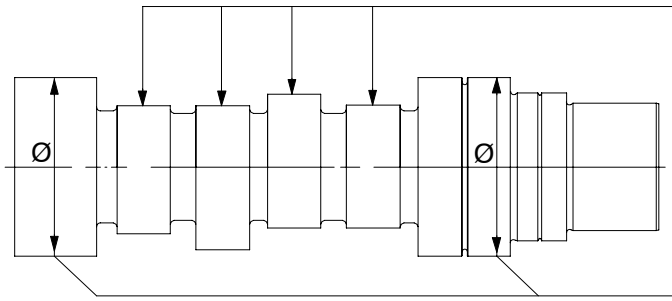

Replace if there are traces of wear

Camshaft axial clearance: 0,20–0,90 mm
Wear limit: 1,5 mm

69,910–69,940 mm

Backlash:
Crankshaft wheel and camshaft wheel:
0,118 mm–0,242 mm

https://truckmanualshub.com/

Camshaft bearing

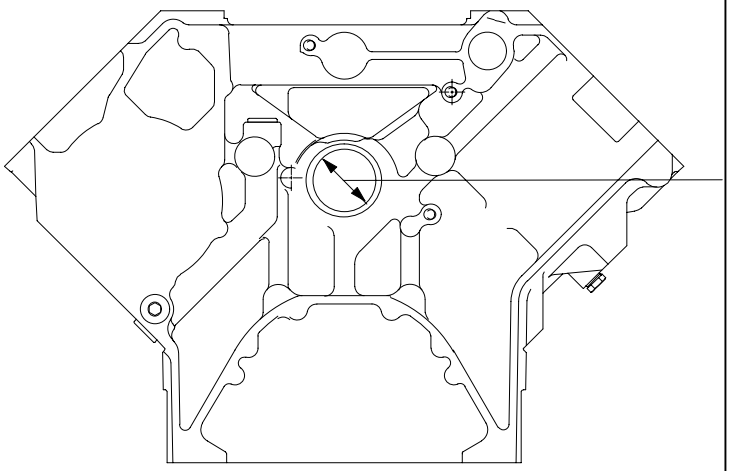

70,000–70,030 mm for bush 7 (V 12),
= bush at timing case end

Ventilstößel

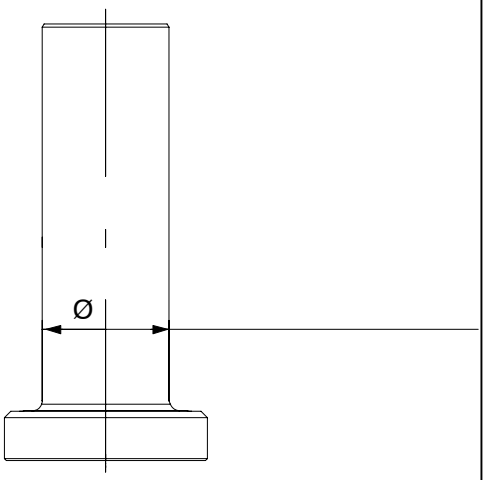

Bore in crankcase: 20,000–20,021 mm

19,944–19,965 mm

Valve clearance

Valve clearance (cold engine)

Einlassventil: 0,5 mm
Exhaust valve: 0,6 mm

https://truckmanualshub.com/

Valve timing

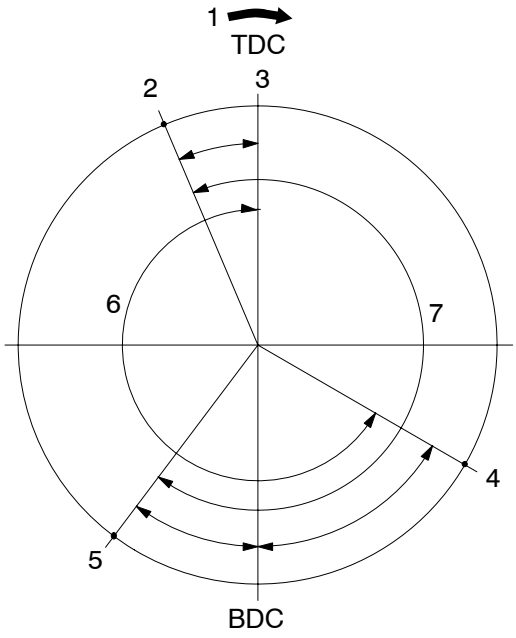

1 = engine direction of turn
2 = intake valve opens 24° before TDC
3 = exhaust closes in TDC
4 = exhaust valve opens 60° before BDC
5 = intake valve closes 36° after BDC
6 = Exhaust open for 240°
7 = Inlet open for 240°

The degrees specified refer to the crankshaft angle

Compression pressures

good	above 26 bar
permitted	23–26 bar
repair required	**below 23 bar**
Pressure difference (between the individual cylinders)	**max. 4 bar**

https://truckmanualshub.com/

Service Data	Dimensions Limit values
Engine lubrication D 2842 LE 620	
Valve opening pressures	
Bypass valve for oil filter	2,2–2,8 bar
Overpressure valve on the oil pump	9–10 bar
Pressure valve of the oil injection nozzles	
Opening pressure	1,66–1,9 bar
Pressure at max. opening	1,3–1,6 bar
Oil pump D 2842 LE 620 **3/2–gear oil pump**	
Oil pump wheel	**Gear width: 34 mm**
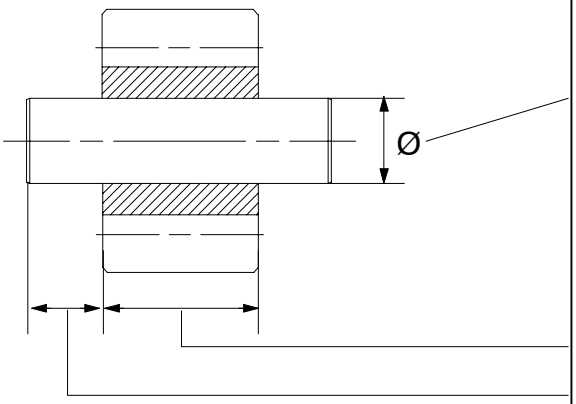	Shaft: 21,930–21,940 mm Bore Ø in housing: 22,000–22,021 mm Radial clearance 0,060–0,091 mm Press on force: 12200 N Housing depth: 34,000–34,039 mm Axial clearance: 0,050–0,128 mm 33,911–33,950 mm 14,5–14,7 mm
	Gear width: 38 mm
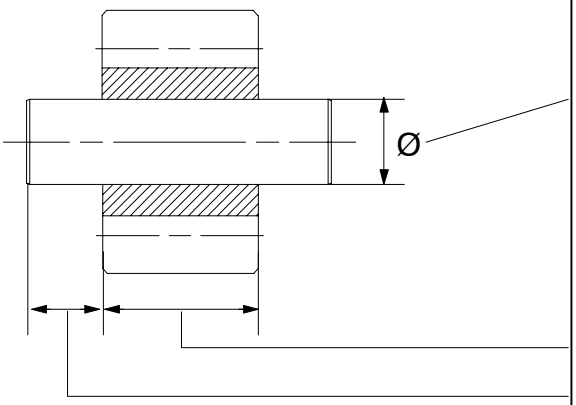	Shaft: 17,930–17,940 mm Bore Ø in housing: 18,000–18,018 mm Radial clearance 0,060–0,088 mm Press on force: 10000 N Housing depth: 38,000–38,039 mm Axial clearance: 0,050–0,128 mm 37,911–37,950 mm 14,5–14,7 mm
	Gear width: 28 mm
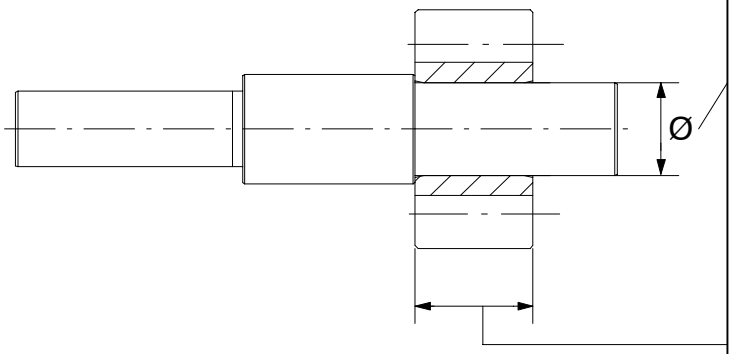	Shaft: 21,930–21,940 mm Bore Ø in housing: 22,000–22,021 mm Radial clearance 0,060–0,091 mm Press on force: 10000 N Housing depth: 28,000–28,033 mm Axial clearance: 0,040–0,106 mm 27,927–27,960 mm

https://truckmanualshub.com/

Service Data	Dimensions Limit values
Drive wheel with oil pump wheel	
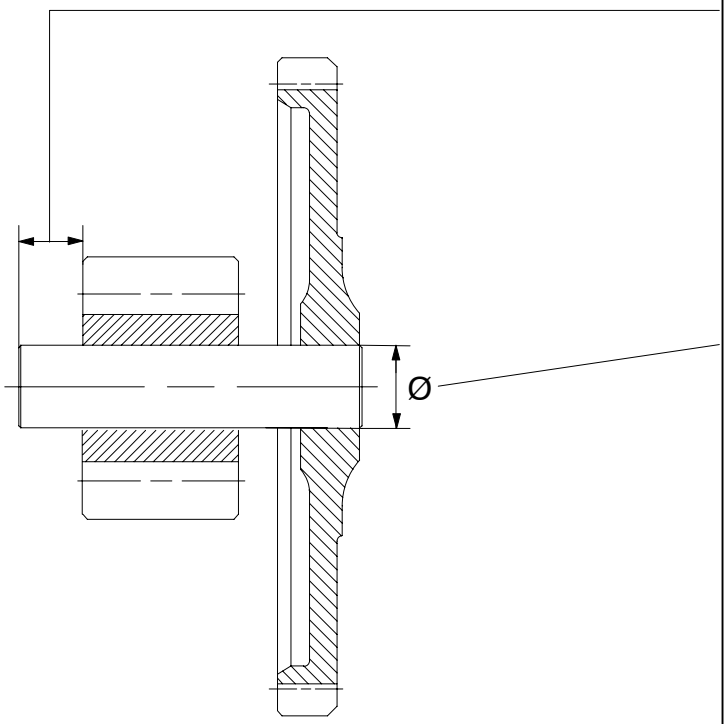	14,5–14,7 mm Shaft: 21,930–21,940 mm Bore in drive gear: 21,870–21,885 mm Press on force: 12000 N Backlash: Drive wheel and crankshaft wheel: 0,099–0,451 mm
Oil pump delivery rate The speeds are pump speeds. Oil pump speed: engine speed x 0,977 (i = 1,023) Delivery rates with SAE 20 oil at 90°C and 6 bar oil pressure	
at n = 585 rpm	67 l/min
at n = 2247 rpm	279 l/min

https://truckmanualshub.com/

Service Data	Dimensions Limit values
Cooling system	
Repairing coolant pump with high-temperature and low-temperature parts	

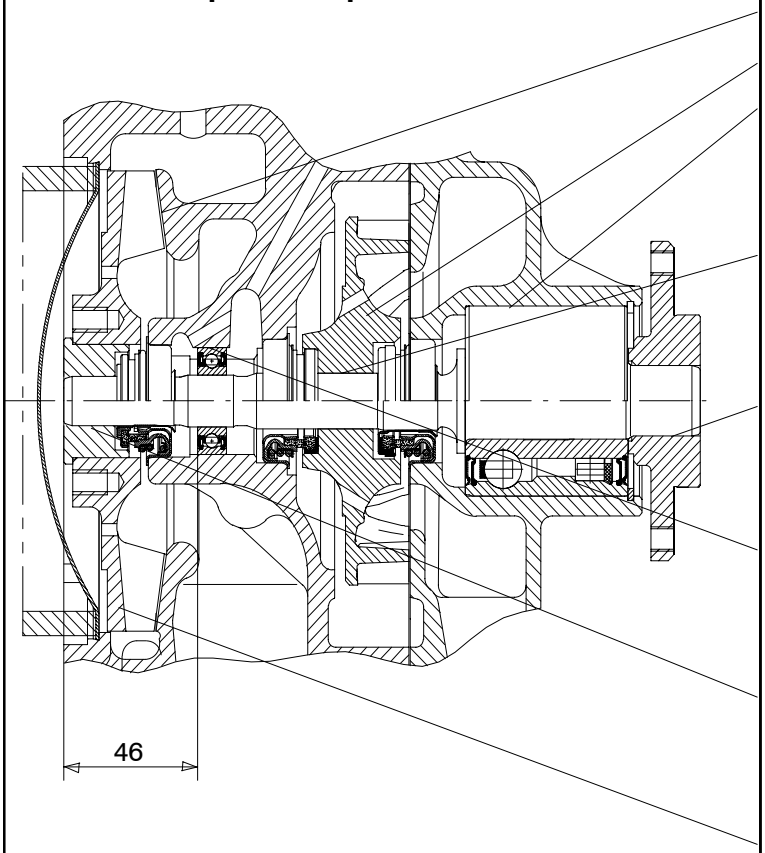

gap: 0,7–0,8 mm

Ø impeller: 120 mm

Bearing seat in housing:
Ø 61,976–61,995 mm
Ø of bearing: 61,987–62,000 mm
Interference: 0,008–0,024 mm

Bore for bearing shaft in impeller NT:
17.992–18.010mm
Ø of bearing shaft: 18,045–18,056 mm
Interference: 0,035–0,064 mm

Bore in hub / belt pulley:
23.007–23.020 mm
Ø of bearing shaft: 23,048–23,061 mm
Interference: 0,028–0,054 mm

Bearing seat in housing HT:
35,994–35,010 mm
Ø of bearing: 34,989–35,000 mm
Interference: 0,006–0,021 mm

Bore for bearing shaft in impeller
HT:15.992–16.010mm
Ø of bearing shaft: 16,045–16,056 mm
Interference: 0,035–0,064 mm

Ø impeller: 149,5–150 mm

Thermostat

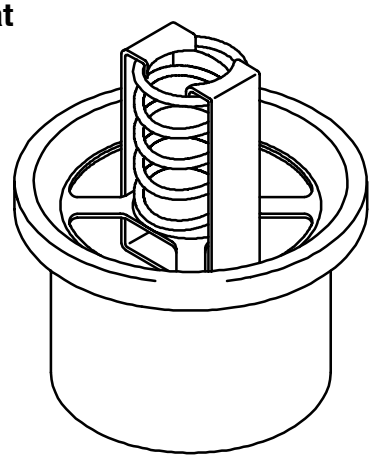

Opening begins at: 82–86°C (±2°)
Fully open: 95°C (±2°)
Lift at least: 9,5 mm at 95°C

(The temperature for the start of opening is printed on the thermostat)

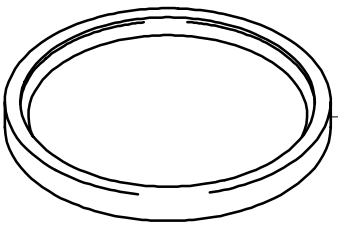

Change seal if thermostat is removed

https://truckmanualshub.com/

Turbocharger

D 2842 LE 620	K33–4267 OPAKB–22.90 GDAYK

Axial clearance

K33 max. 0,16 mm

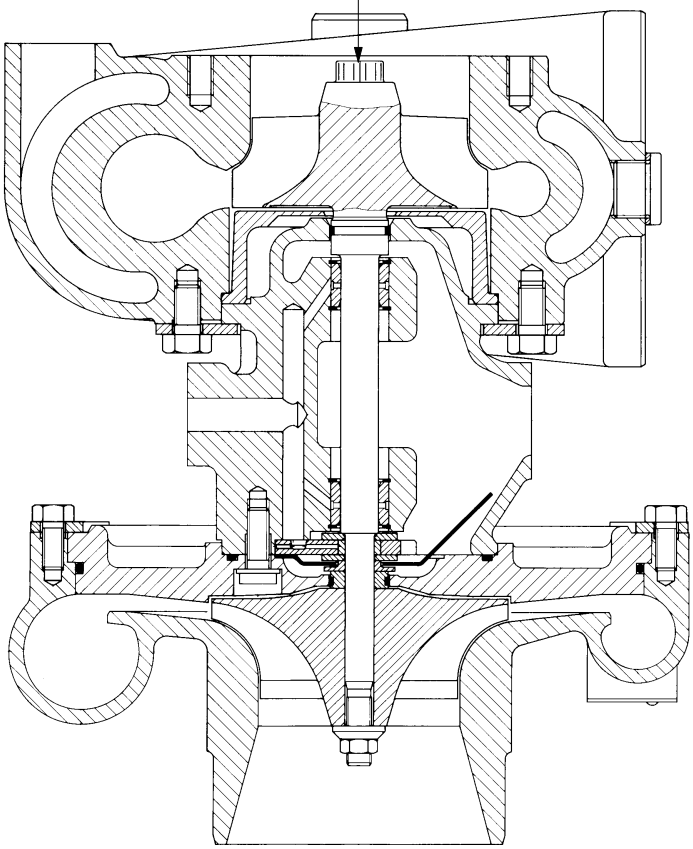

Radial clearance

K33 max. 0,45 mm

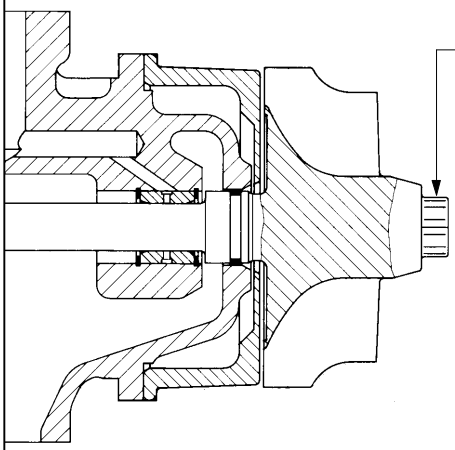

https://truckmanualshub.com/

Service Data	Dimensions Limit values
Fuel system	
Injectors	
Manufacturer	Bosch
Number of holes	7
High-pressure pump	Bosch-CP2V4
Governor	Elektronic Diesel Control(EDC) – Type EDC 7

https://truckmanualshub.com/

Starter motor

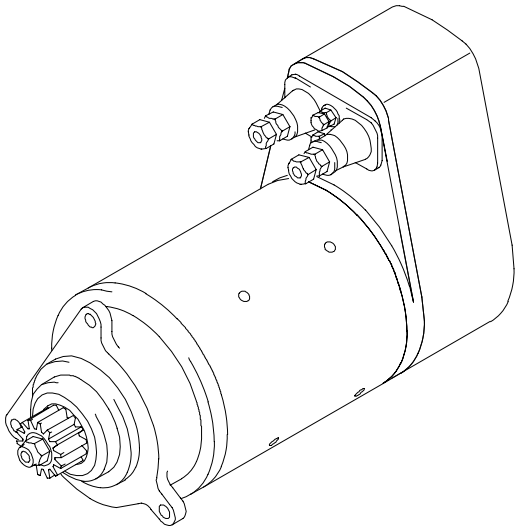

Manufacturer: Bosch
Type: KB
Operation: splined shaft

Starter motor pinion:
Number of teeth: Z = 9
Module: 3

Nominal power: 6,6 kW
Nominal voltage: 24 V

V–belts / Powerband

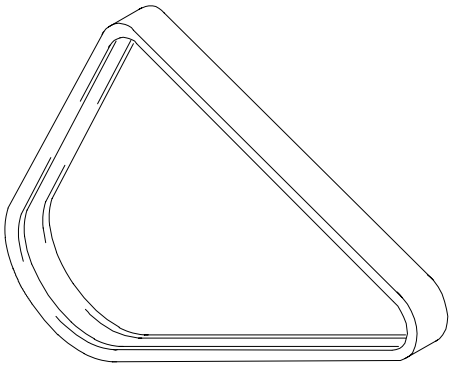

Change damaged V–belts (cracks, wear, oil)

Measuring tension withtension tester

Drive belt width	Tensioning forces according to the kg graduation on the tester		
	New installation		When servicing after long running time
	Installa-tion	After 10 min. run-ning time	
2/3VX	90–100	70–80	60

https://truckmanualshub.com/

Note:
All screw connections whose purpose is not stated in the following table are to be tightened in accordance with the guide values in our company standard M 3059 (see page 158). Fit the bolts slightly oiled!

Screw plugs

DIN 908
- M14x1.5, M16x1.5 . . . . . 80 Nm
- M18x1.5, M22x1.5 . . . . . 100 Nm
- M24x1.5, M26x1.5 . . . . . 120 Nm
- AM14x1.5 . . . . . 150 Nm

DIN 7604
- AM10x1, M12x1.5 . . . . . 50 Nm
- AM14x1.5 . . . . . 80 Nm

Crankcase, crankshaft drive

Engine mounting to crankcase M14, 12.9 . . . . . 225 Nm
Gear case to crankcase M10, 12.9 . . . . . 75 Nm
Gear case to crankcase M12x1,5, 12.9 . . . . . 100 Nm
Inspection port cover to gear case M8, 12.9 . . . . . 40 Nm
Timing case cover to crankcase M8, 10.9 . . . . . 25 Nm

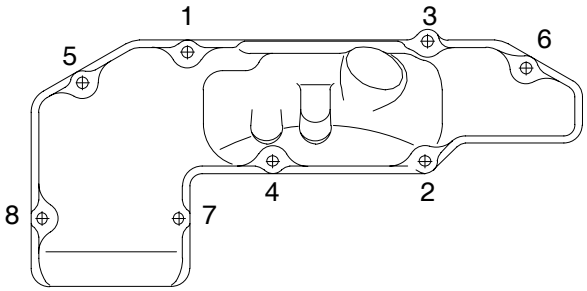

Crankshaft bearing cover to crankcase M18x2
- Initial torque . . . . . 300 – 330 Nm
- Angle tightening . . . . . 90–100°

Crankshaft main bearing caps, side
- Hex bolt M12x1,5x85, 12.9
  - Initial torque . . . . . 80–90 Nm
  - Angle tightening . . . . . 180–190°

Counterweight to crankshaft M 16x1,5
- Initial torque . . . . . 140–160 Nm
- Angle tightening . . . . . 90–100°

Vibration damper to crankshaft M16x1.5, 12.9 . . . . . 260 Nm

Flywheel to crankshaft M16x1,5
- Initial torque . . . . . 100–110 Nm
- 1st angle tightening . . . . . 90–100°
- 2nd angle tightening . . . . . 90–100°

Conrod bearing cover M14x1.5
- Initial torque . . . . . 100–110 Nm
- Angle tightening . . . . . 90–100°

Cylinder head

Tightening / retightening the cylinder–head bolts, see page 159

https://truckmanualshub.com/

Lubrication

Oil cooler to oil filter head M8, 8.8 . . . . . 22 Nm
Cover oil pump M8, 8.8 . . . . . 22 Nm
Oil cooler housing on crankcase
  Initial torque 50Nm
  Angle tightening . . . . . 90°
Oil cooler to oil filter head M8, 8.8 . . . . . 22 Nm
Oil cooler to oil filter head M8, 10.9 . . . . . 50 Nm
Oil pan to crankcase . . . . . 30 Nm
Oil drain plug to oil pan M26x1.5 . . . . . 80 Nm
Oil jet to crankcase M14x1,5 . . . . . 70 Nm

Exhaust / Intake pipes

Exhaust manifold to cylinder head M10
  Initial torque . . . . . 60–65 Nm
  Angle tightening 90–1005
Oil cooler to oil filter head M8, 8.8 . . . . . 22 Nm

Fuel system

Nut for hub on high–pressure pump . . . . . 280 Nm

High–pressure pump to crankcase
  Order of tightening: 1–2–3–4 in the steps:
    1. Initial torque . . . . . 10–15 Nm
    2. final torque . . . . . 65–70 Nm
    Bracket tightening method effective only if bolts of the **strength class 8.8** (no more) are used.

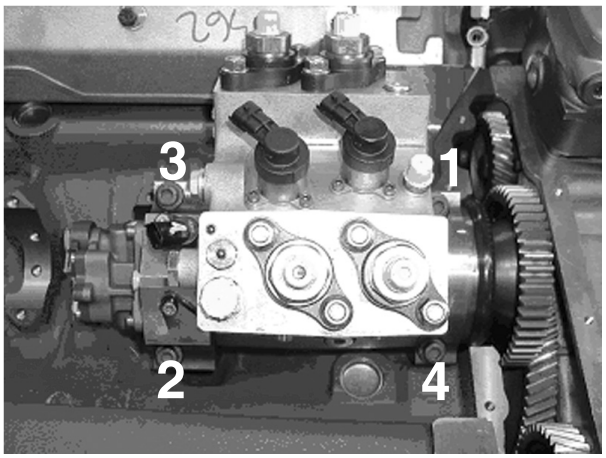

https://truckmanualshub.com/

Assembly sequence for injector and injection line:

1. Collar nut for injector retainer ①, initial torque . . . . . 1,5 Nm
2. Injection line ③, initial torque . . . . . 10 Nm
3. Mounting bolt for connector to injection line ②, initial torque . . . . . 10 Nm
4. Collar nut for injector retainer ①
   Initial torque 25Nm
   Angle tightening . . . . . 90°
5. Mounting bolt for connector to injection line ②
   Final torque . . . . . 20 Nm
   Angle tightening . . . . . 90°
6. High–pressure line③

Danger:
High–pressure lines with-**WAF 17 union nuts must be replaced**.
High–pressure lines with-**WAF 19 union nuts may be reused**.

Rotation angle for first installation . . . . . 60°
Rotation angle for assembly sequence . . . . . 30°

7. Electrical connections to injektor . . . . . 1,5 Nm

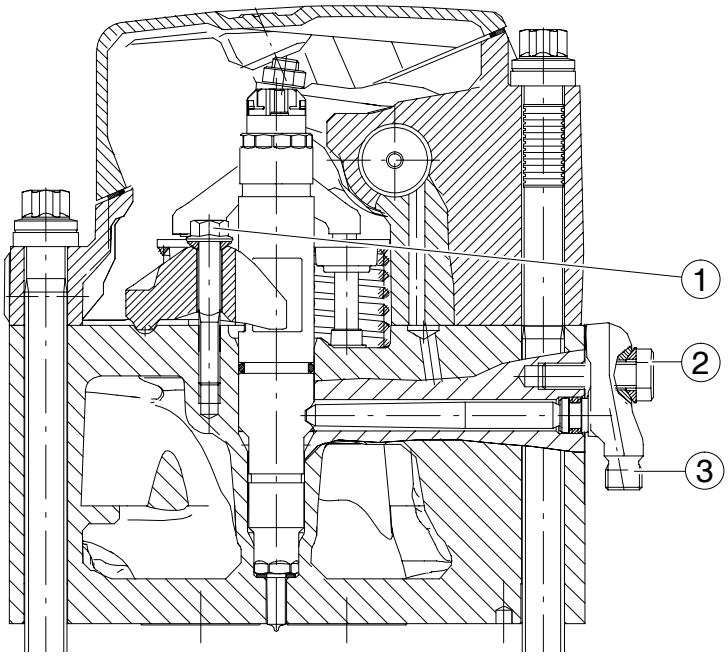

Starter

Starter to timing case M10, 5 . . . . . 80 Nm

https://truckmanualshub.com/

Installation tightening torques according to company standard M 3059

Bolts / nuts with external or internal hexagon, head without collar or flange

Thread size x pitch	Property classes / tightening torques in Nm		
	for **8.8 / 8**	for **10.9 / 10**	for **12.9 / 12**
M4	2,5	4,0	4,5
M5	5,0	7,5	9,0
M6	9,0	13,0	15,0
M7	14,0	20,0	25,0
M8	22,0	30,0	35,0
M8x1	23,0	35,0	40,0
M10	45,0	65,0	75,0
M10x1.25	45,0	65,0	75,0
M10x1	50,0	70,0	85,0
M12	75,0	105,0	125,0
M12x1.5	75,0	110,0	130,0
M12x1.25	80,0	115,0	135,0
M14	115,0	170,0	200,0
M14x1.5	125,0	185,0	215,0
M16	180,0	260,0	310,0
M16x1.5	190,0	280,0	330,0
M18	260,0	370,0	430,0
M18x2	270,0	290,0	450,0
M18x1.5	290,0	410,0	480,0
M20	360,0	520,0	600,0
M20x2	380,0	540,0	630,0
M20x1.5	400,0	570,0	670,0
M22	490,0	700,0	820,0
M22x2	510,0	730,0	860,0
M22x1.5	540,0	770,0	900,0
M24	620,0	890,0	1040,0
M24x2	680,0	960,0	1130,0
M24x1.5	740,0	1030,0	1220,0

https://truckmanualshub.com/

Retightening of the cylinder head bolts
(Engine cold or warm)

The cylinder heads are fitted with cylinder–head bolts for rotation angle tightening. On new engines, the cylinder–head bolts are retightened at the factory after running in and marked by the sticker **“First retightening of cylinder–head bolts ...”** on a cylinder head cover.

Zweiter Nachzug der Zylinderkopfschrauben erledigt

Second retightening of cylinder-head-bolts completed

Spare part no. 51.97801–0211

After the first 400 hours of operation, following a repair, tighten the cylinder-head bolts in the order specified in the tightening schedule **“1”** by 90° (1/4 turn).

Intake side

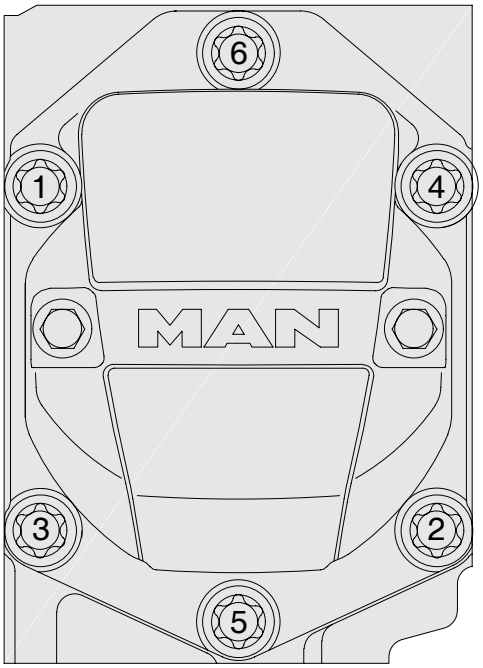

Exhaust side

Tightening schedule **“1”**

Note:
The cylinder-head bolts to be retightened must not be loosened; they are to be tightened further from their current position by 90° (1/4 turn).

Remove the sticker **“First retightening of the cylinder–head bolts ...”** and attach the sticker **“Second retightening of the cylinder–head bolts ...”** to verify the second retightening.

Zweiter Nachzug der Zylinderkopfschrauben erledigt

Second retightening of cylinder-head-bolts completed

Spare part no. 51.97801–0212

https://truckmanualshub.com/

Retightening the cylinder–head bolts following a repair
(engine cold)

Before inserting the cylinder–head bolts, apply engine oil to the thread (not the threaded hole) and coat the seating surface of the bolt head with installation paste “Optimoly White T”. Do not use oils or oil additives containing MoS_2. The bolts are to be tightened using the rotation angle method according to tightening schedule **“2”** as follows.

- 1rd pretightening = to 10 Nm
- 2rd pretightening = to 80 Nm
- 3rd pretightening = to 150 Nm
- 4th pretightening = 90°
- Final tightening = 90°

Set the valve clearance.

Intake side

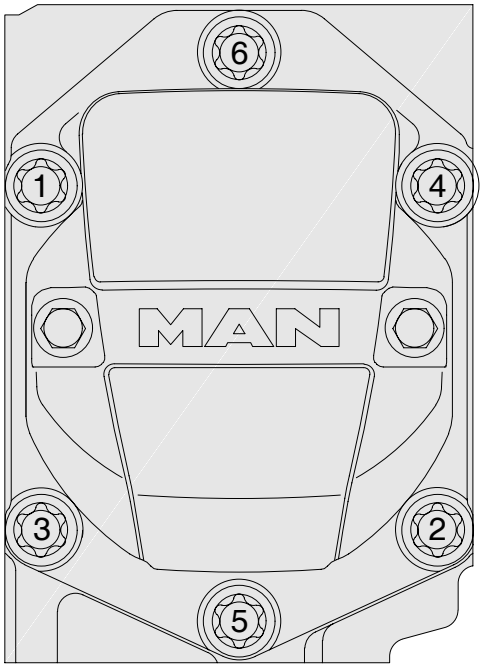

Exhaust side

Tightening schedule **“2”**

Retightening the cylinder–head bolts following a repair
(Engine cold or warm)

After the first 10 to 20 hours of operation, following a repair, tighten the cylinder–head bolts in the order specified in the tightening schedule **“1”** by 90° (2/4 turn).
The cylinder–head bolts to be retightened must not be loosened; they are to be tightened further from their current position by 90° (1/4 turn).
Attach the sticker **“First retightening of cylinder–head bolts ...”** (remove sticker that might already be attached).
After the first 400 hours of operation, following a repair, tighten cylinder–head bolts in the order specified in the tightening schedule **“1”** by another 90° (1/4 turn).
Attach sticker **“Second retightening of cylinder–head bolts ...”**.

Note:
When the head has been removed, the cylinder head gasket must always be replaced.

https://truckmanualshub.com/

Special tools

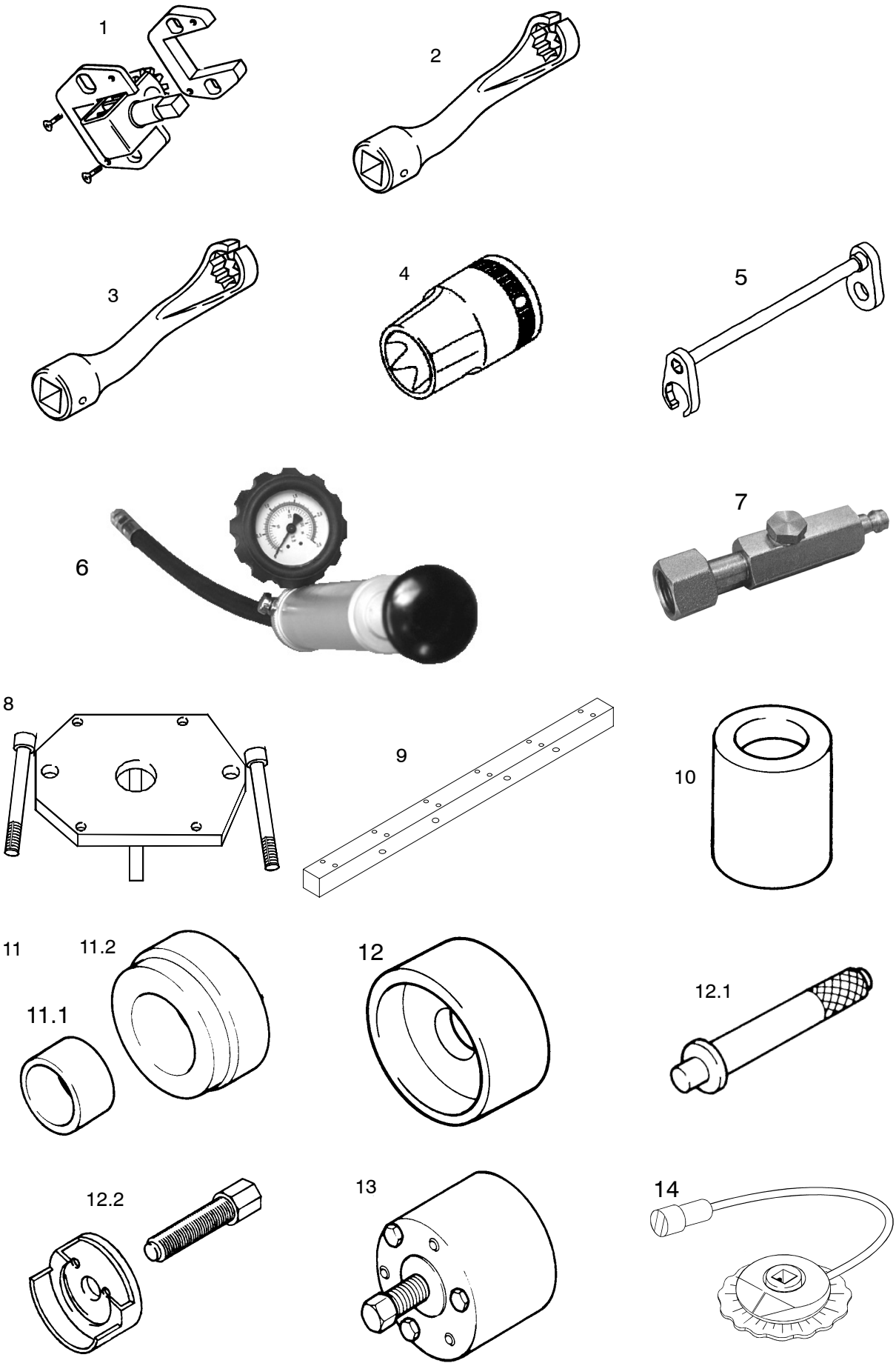
1
2
3
4
5
6
7
8
9
10
11
11.2
11.1
12
12.1
12.2
13
14

Fig. no.	Designation	Item number
1	Engine cranking device	80.99626–6008
	with standard ratchet	80.99627–0001
2	Special spanner (WAF 17) for injection pressure lines	80.99603–0025
3	Special spanner (WAF 19) for injection pressure lines	80.99603–0310
4	Wrench socket for cylinder head bolts (Torx)	08.06143–0215
5	Socket spanner for injection line on the cylinder head	80.99603–6019
6	Tester for checking for leaks at nozzle holder seat, pressure pipe and leakage oil duct	80.99620–0029
7	Adapter	80.99620–0033
	with compressed air connection	81.98130–0614
	in conjunction with tester 6	
	with the following reducing bolted connection:	
	2x reducing connection D8134A-RED15/10-PLA3C	82.98130–0174
	2x reducing connection D8134A-RED22/15-PLA3C	82.98130–0194
	1x screw plug D813A-VKA 10A3C	82.90310–0023
8	Mounting plate for cylinder head and rocker arm bearing housing	80.99606–6089
9	Straightedge for cylinder heads	80.99606–0582
10	Pressing mandrel for cassette seal in conjunction with handle 12.1	80.99617–0191
11	Driving mandrel for seal in timing case	
	comprising:	
11.1	Guide sleeve	80.99604–0068
11.2	Pressing plate in conjunction with handle 12.1	80.99604–0069
12	Driving mandrel for race on flywheel in conjunction with handle 12.1	80.99617–0017
12.1	Attachment handle for all press–in plates	80.99617–0129
12.2	Puller for bearing race on the flywheel	80.99601–6017
13	Puller for front crankshaft bearing race	80.99601–0076
14	Rotation angle measuring device	80.99607–0134

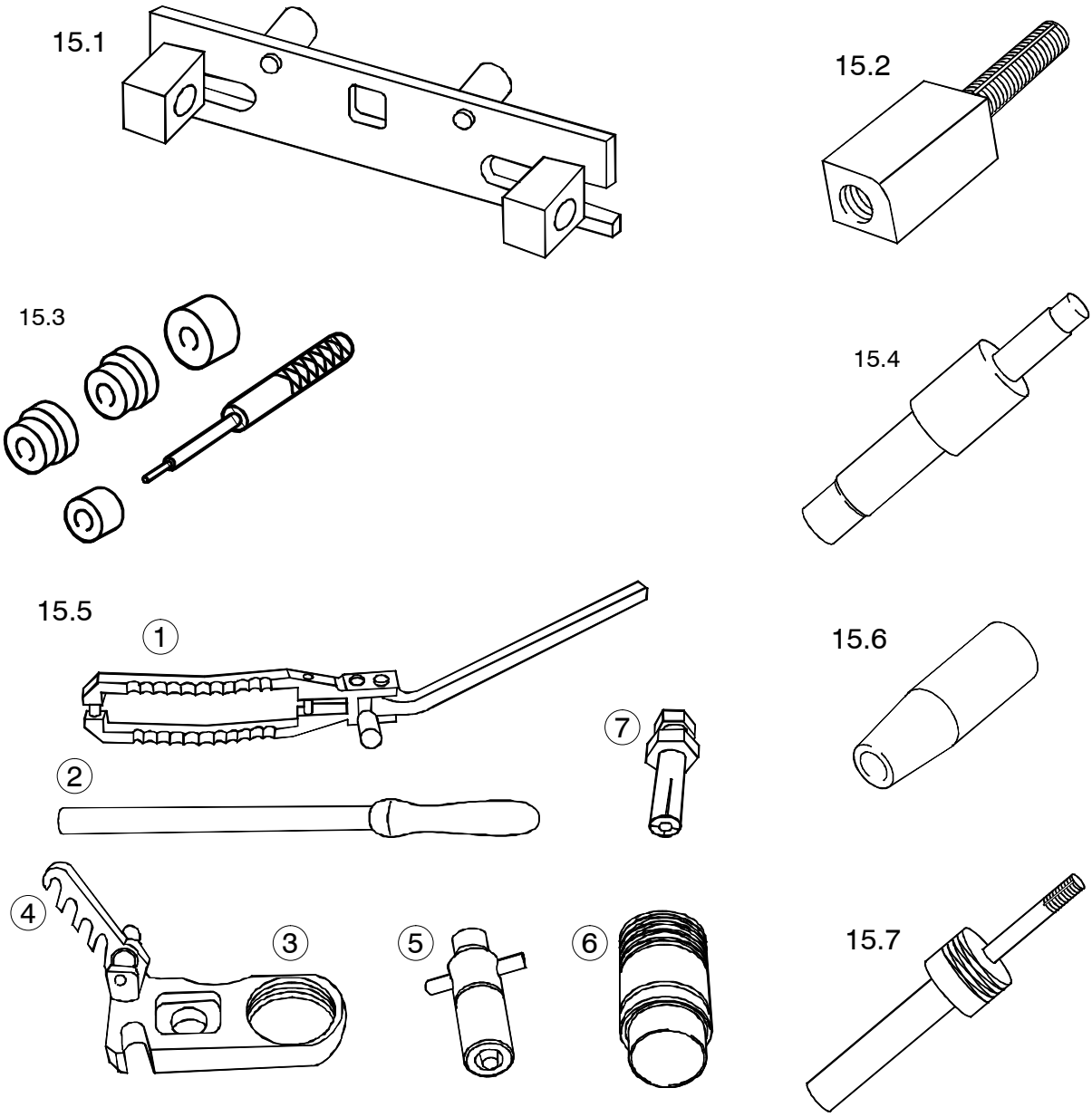
15.1
15.2
15.3
15.4
15.5
1
2
7
15.6
4
3
5
6
15.7

https://truckmanualshub.com/

Fig. no.	Designation	Item number
	Cylinder head tools:	
15.1	Centring and press–in tool for rocker arm shafts	80.99606–6090
15.2	Adapter for impact puller for pulling out rocker arm shafts	80.99602–0140
15.3	Press–in tool for valve guides and valve seats	80.99604–6024
15.4	Connecting piece for compression recorder	80.99607–0158
15.5	Mounting tool for valve springs and tapers (set)	80.99606–6087
	① Mounting tool	80.99606–6093
	② Extension	80.99606–6094
	③ Centring plate	80.99606–0512
	④ Mounting tool	80.99606–6092
	⑤ Mounting cartridge	80.99606–6120
	⑥ Guide sleeve	80.99606–0587
	⑦ Hexagon bolt M10x25 – 8.8	06.01283–5215
	Hexagon bolt M8x140 – 8.8	06.01013–3129
15.6	Mounting sleeve for valve stem seals	80.99606–0516
15.7	Mounting tool for valve stem seals	80.99606–6088

16

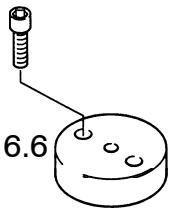

16.1

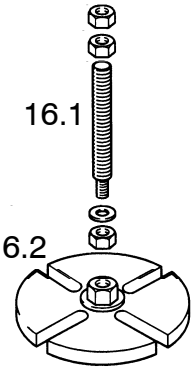

16.2

16.3

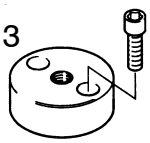

16.6

16.7

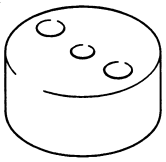

16.4

16.5

17

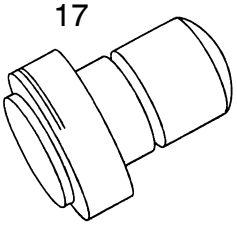

18

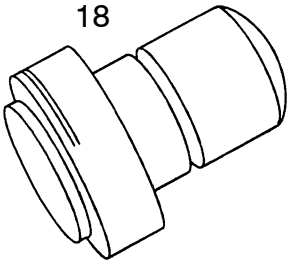

19

20.1

20.2

21

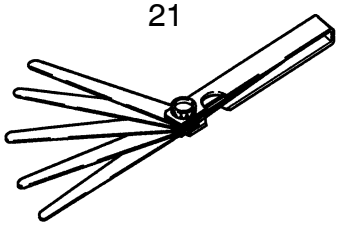

22

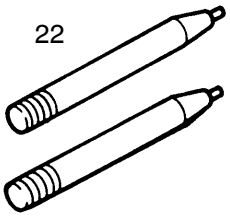

23

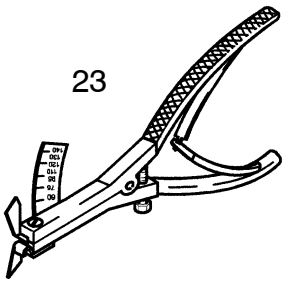

24

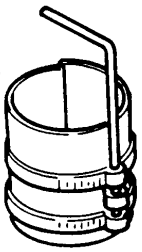

25

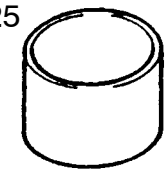

26

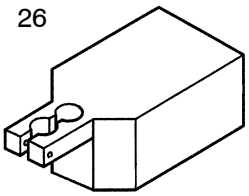

27

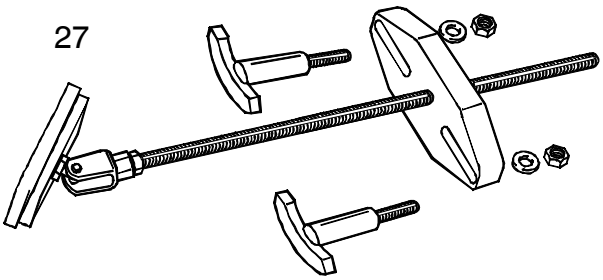

28

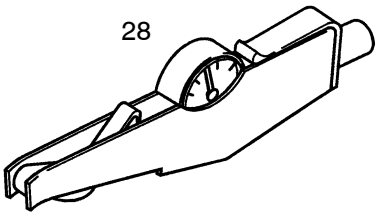

https://truckmanualshub.com/

Fig. no.	Designation	Item number
16	Special tool for front crankshaft seal	80.99606–6011
	Component parts:	
16.1	Spindle	80.99606–0229
16.2	Extractor apparatus	80.99606–0298
16.3	Adapter	80.99606–0264
16.4	Extractor hook	80.99606–6013
16.5	Press–in sleeve	80.99606–0300
16.6	Adapter	80.99606–0302
16.7	Fitting sleeve	80.99606–0301
17	Press–in mandrel for cap, dia. 50.2 mm	51.91606–0053
18	Press–in mandrel for cap, dia. 62.2 mm	51.91606–0045
19	Hexagon bolt wrench 5 with transverse handle for valve clearance setting	08.06125–9035
20.1	Torque wrench 6–50 Nm for valve clearance setting	08.06450–0006
20.2	Ring socket tool for valve clearance setting in conjunction with 20.1	08.06460–0003
21	Valve gauge for valve setting	80.99607–6019
22	Guide pins for flywheel	80.99617–0020
23	Piston ring pliers	83.09144–6090
24	Piston ring scuff band	80.99613–0035
25	Piston ring tensioning sleeve	83.09144-0187
26	Dial gauge holder	80.99605–0172
27	Extractor apparatus for cylinder liners	80.99601–6018
28	V–belt tension tester	80.99605–0279

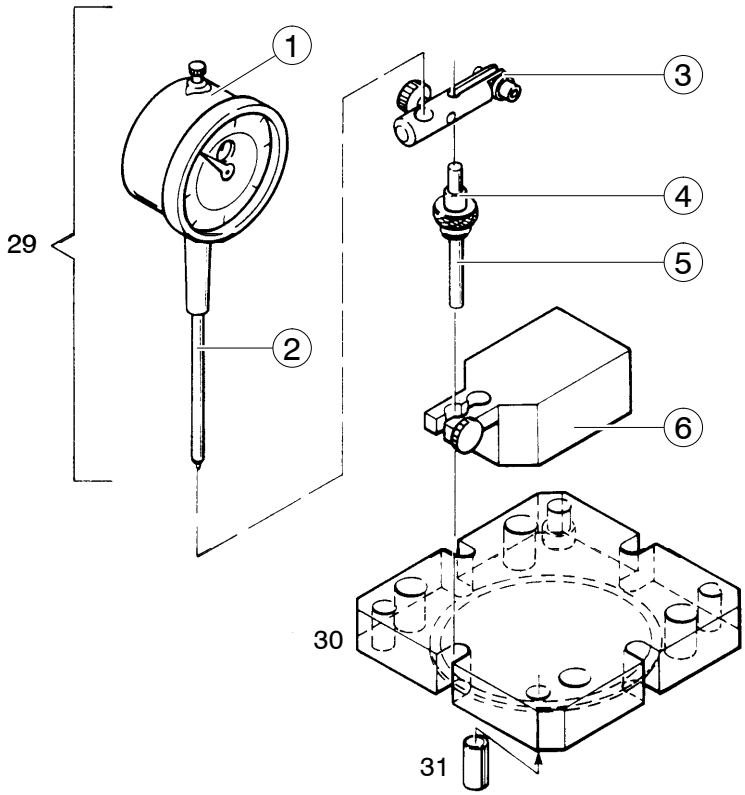

32

33

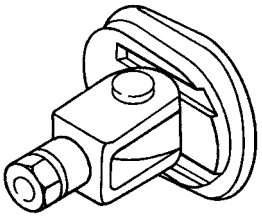

34

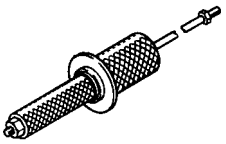

35

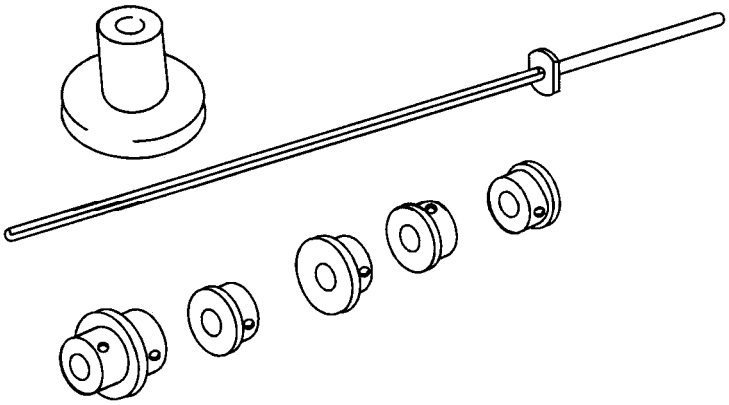

https://truckmanualshub.com/

Fig. no.	Designation	Item number
29	Measuring combination for measuring the cylinder liner protrusion comprising:	
	① Dial gauge	08.71000–1205
	② Tracer pin for dial gauge	80.99605–0197
	③ Dial gauge bracket	80.99605–0179
	④ Support pin	80.99605–0180
	⑤ Dial gauge bracket	80.99605–6006
	⑥ Dial gauge bracket	80.99605–0172
30	Press-on measuring plate	80.99605–0195
31	Fitting sleeves	51.91701–0247
32	Inserting mandrel for camshaft	80.99617–6007
33	Extractor device for front and rear camshaft bearing bush	80.99606–6103
	in conjunction with:	
34	Impact extractor	80.99602–0016
35	Mounting tool for camshaft bearing bushes	80.99606–6099

36

37

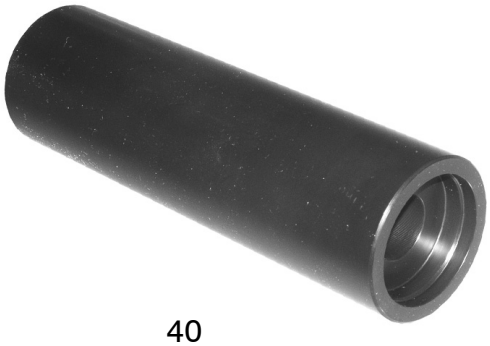

38

39

40

41

42

43

43.1
43.2
43.3

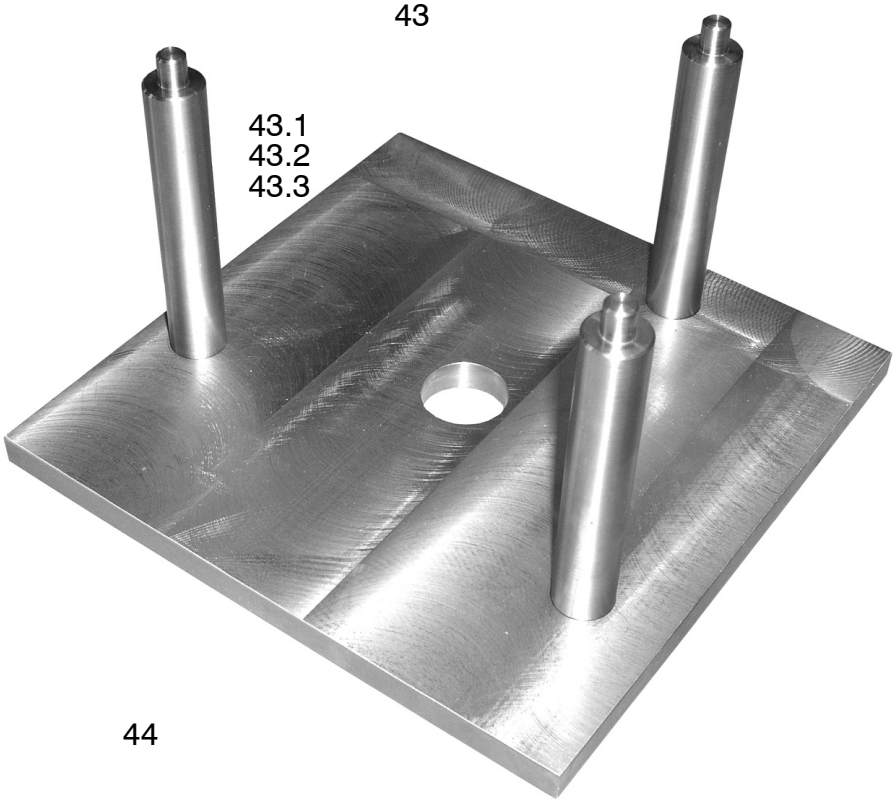

44.1

44

44.2

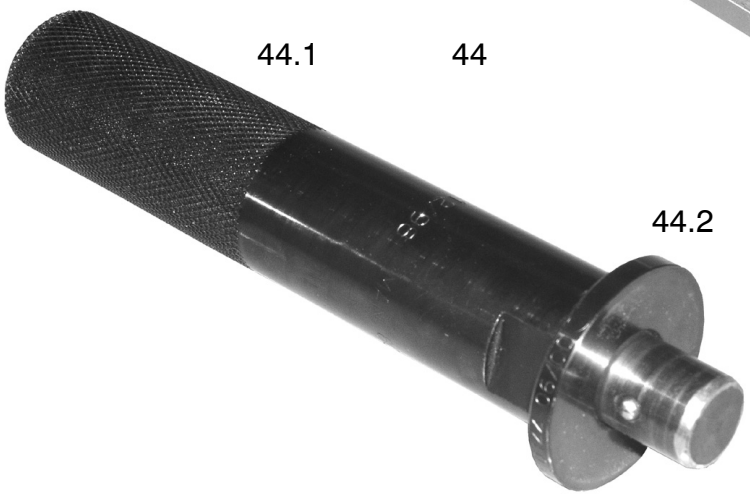

45

46

https://truckmanualshub.com/

Special tools for high- and low-temperature coolant pump

Fig. no.	Designation	Item number
36	Pressing plate / pressing in the coolant pump bearing,coolant pump shaft and V-belt pulley	80.99604−0251
37	Pressing mandrel / pressing the axial face seal into the pump housing	80.99604−0252
38	Base plate for various pressing jobs	80.99614−0027
39	Pressing mandrel / pressing the deep-groove ball bearing into the HT pump housing	80.99604−0254
40	Support for coolant pump housing for pressing on the V-belt pulley	80.99606−0628
41	Support for coolant pump housing for pressing in the V-belt pump shaft	80.99606−0629
42	Press-in mandrel for axial face seal	80.99617−0191
43	Assembly device for pump housing	80.99606−6128
	consisting of::	
43.1	Plate	80.99606−0631
43.2	Pick−up pins	80.99606−0632
43.3	Mouting bolts	06.02192−0308
44	Detachable handle for all press−in plates and clamps	80.99617−6006
	consisting of::	
44.1	Handle	80.99617−0187
44.2	Disc	80.99617−0144
45	M5 bolt with left−handed thread for installing coolant pump	80.99606−0642
46	Centring pin for installation of coolant pump	80.99606−0643
47	Bush for pressing in end cover (no fig.)	80.99604−0263

Special tool for removing and fitting injectors

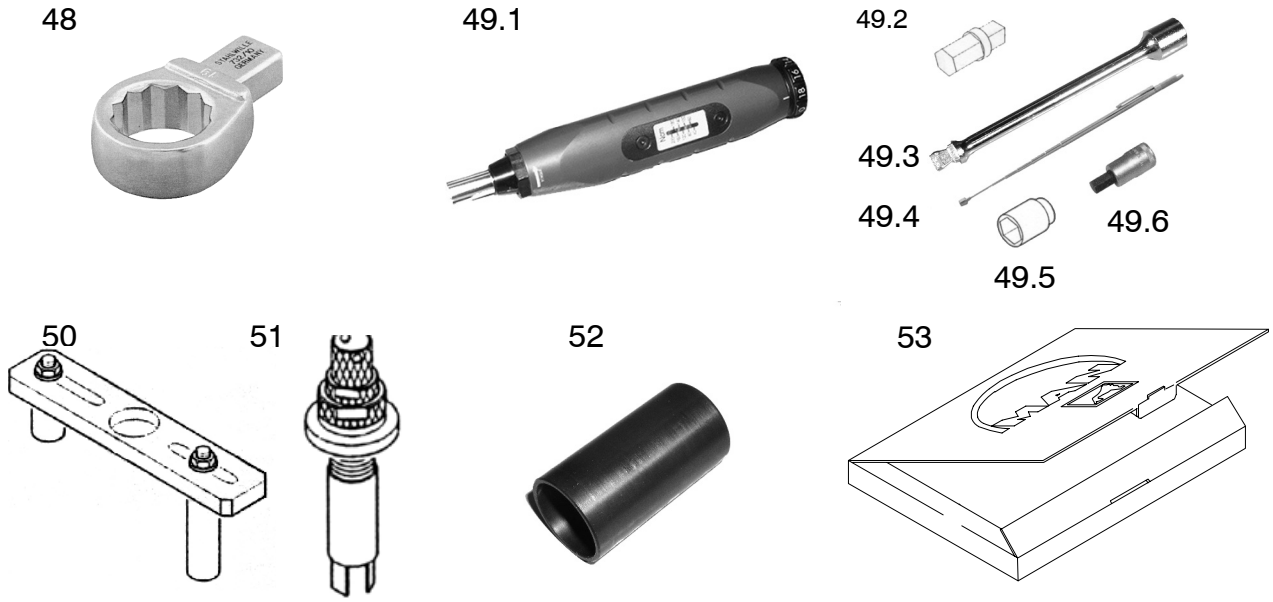

Fig. no.	Designation	Item number
48	Ring socket tool for fitting the claw in conjunction with 20.1	08.06455–0026
49.1	Torque wrench	08.06510–9024
49.2	Adapter	08.06139–9029
49.3	Extension	08.06139–9007
49.4	Magnetic lifter for removing pressure pipe fittings	80.99639–0009
49.5	Wrench socket for injector cable connection	08.06141–0700
49.6	Wrench socket for injector pressure flange	08.06141–1300
50	Bridge with adjustable supports	80.99602–6017
51	Extractor device for injectors	80.99601–6022
52	Thrust member for fitting injectors	80.99606–0609
53	Set of protective sleeves, injection system	80.96002–6005

Power wrench

54

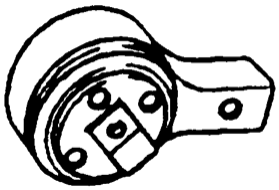

55

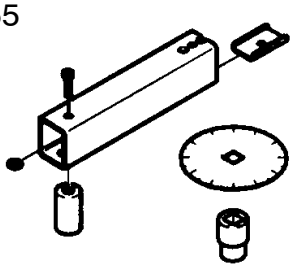

56

57

58

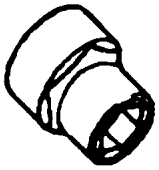

59

54	Power wrench 1:3.3 / 242.5 – 800 Nm	80.99619–0006

Tightening cylinder head bolts
(in conjunction with item 54)

55	Mounting tool for cylinder head bolts	80.99606–6100

Tightening flywheel bolts
(in conjunction with items 54, 55)

56	Insert WAF 19	80.99603–0311
57	Support	80.99606–0585

Tightening main bearing bolts
(in conjunction with items 54, 55)

58	Insert WAF 27	80.99603–0312
59	Support	80.99606–0584

Note:
There is a complete catalogue of ”MAN special tools”.
This catalogue contains all of the special tools for maintenance and servicing MAN trucks, omnibuses and engines available from MAN.
Available from the central spare parts warehouse.

B
Barring gear 82
Bearing race 68
Bleeding the fuel system 38

C
Camshaft 146
  Installing 103
  Removing 102
Camshaft axial clearance 104
Camshaft bearing 147
Camshaft bearings
  fitting 108
  removing 105
Changing oil filter 53
Charge−air pressure 74
Checking conrod 121
Checking piston ring axial clearance 124
Checking valve timing 114
Compression pressures 148
Coolant Draining 40
Coolant pump . . . . . 42–43 , 151
Coolant pump axial face seal 50
Cooling, D 2842 LE 620 136
Cooling system
  Filler caps and service valves 52
  Inside cleaning 51
  Removing lime deposits 52
Cooling system − Schematic diagram 23
Crankcase 137
Crankshaft 138
  Installing 116
  Removing 115
Crankshaft axial clearance 117
Crankshaft bearing 139
Crankshaft seals − Assembly instructions 69
Crankshaft seals General information 69
Cylinder head . . . . . 78 , 144
Cylinder head − general notes 81
Cylinder liner 137
Cylinder liners 125

D
Drain engine oil 55

E
Engine Lubrication, D 2842 LE 620 136
Engine lubrication, D 2842 LE 620 149

E
Engine oil filling capacities, D 2842 LE620 . . . 136
Engine overhaul 15
Engine specifications, D 2842 LE 620 136
Exhaust pipe 71

F
Fill / bleed the cooling system 40
Filling with engine oil 58
Fitting injectors 34
Flame starter sheathed−element glow plug . . . 39
Flywheel . . . . . 65 , 141
Front bearing race 62
Front crankshaft gasket 62
Fuel pre−filter with water separator 37
Fuel system 153
  Checking tightness 35

G
Gear case 100

H
High−pressure lines 26
High−pressure pump 153
  Base fitting 24
  installing 28
  removing 27

I
Injectors 153
Installing oil pump 57
Installing piston rings 124
Installing pistons with conrods 119
Installing valves 90
Intake manifold 70

O
Oil cooler, removing and installing 54
Oil injection nozzle, removing 59
Oil pan 55
Oil pump 55
  D 2842 LE 620 149
Oil pump delivery rate, D 2842 LE 620 150
Oil pump gears, axial clearance 57

P
Piston protrusion 129
Piston rings 143

https://truckmanualshub.com/

P

Pistons 143
Pistons with conrods, Removing 118
Power wrench 173
Preventing environmental damage 8

R

Rail pressure sensor, pressure relief valve 31
Rear crankshaft gasket 67
Refacing valves 99
Removing and installing the rail 29
Removing injectors 32
Removing piston rings 123
Removing valves 87
Repairing coolant pump 44–48
Replacing valve seat insert 94
Retightening cylinder head 159
Rocker arm mechanism 83
Rocker arms 146

S

Safety precautions 6–11
Safety regulations, Special instructions when working on the common rail system 9
Service Daten 135–161
Solenoid valve 39
Special tool for removing injectors 172
Special tools 161–170
Starter motor . . . . . 130 , 154
Starter ring gear 66

T

Thermostat . . . . . 41 , 151
Troubleshooting table 12–14
Turbocharger . . . . . 75–76 , 152
Turbocharger, Axial clearance 77
Turbocharger, Radial clearance 77
Turbocharger, Trouble shooting 72

U

Used engine oil 8

V

V–belts . . . . . 131–132 , 154
Valve clearance . . . . . 82 , 147
Valve gear 146
Valve guides 93
Valve recess . . . . . 92 , 98 , 145
Valve seat 96
Valve seat angle 97
Valve stroke 114
Valve timing 148
Valves 145
Ventilstößel 147
Vibration damper 61

W

Waste water treatment 52

https://truckmanualshub.com/

https://truckmanualshub.com/

https://manualsdump.com/

MAN Nutzfahrzeuge AG
Business Unit Engines
Vogelweiherstraße 33
D-90441 Nürnberg

A member of the MAN Group

Printed in Germany 51.99598-8157