Repair manual

MAN Industrial Diesel Engines

D 2876 LUE 601
D 2876 LUE 602
D 2876 LUE 603
D 2876 LUE 604
D 2876 LUE 605
D 2876 LUE 606

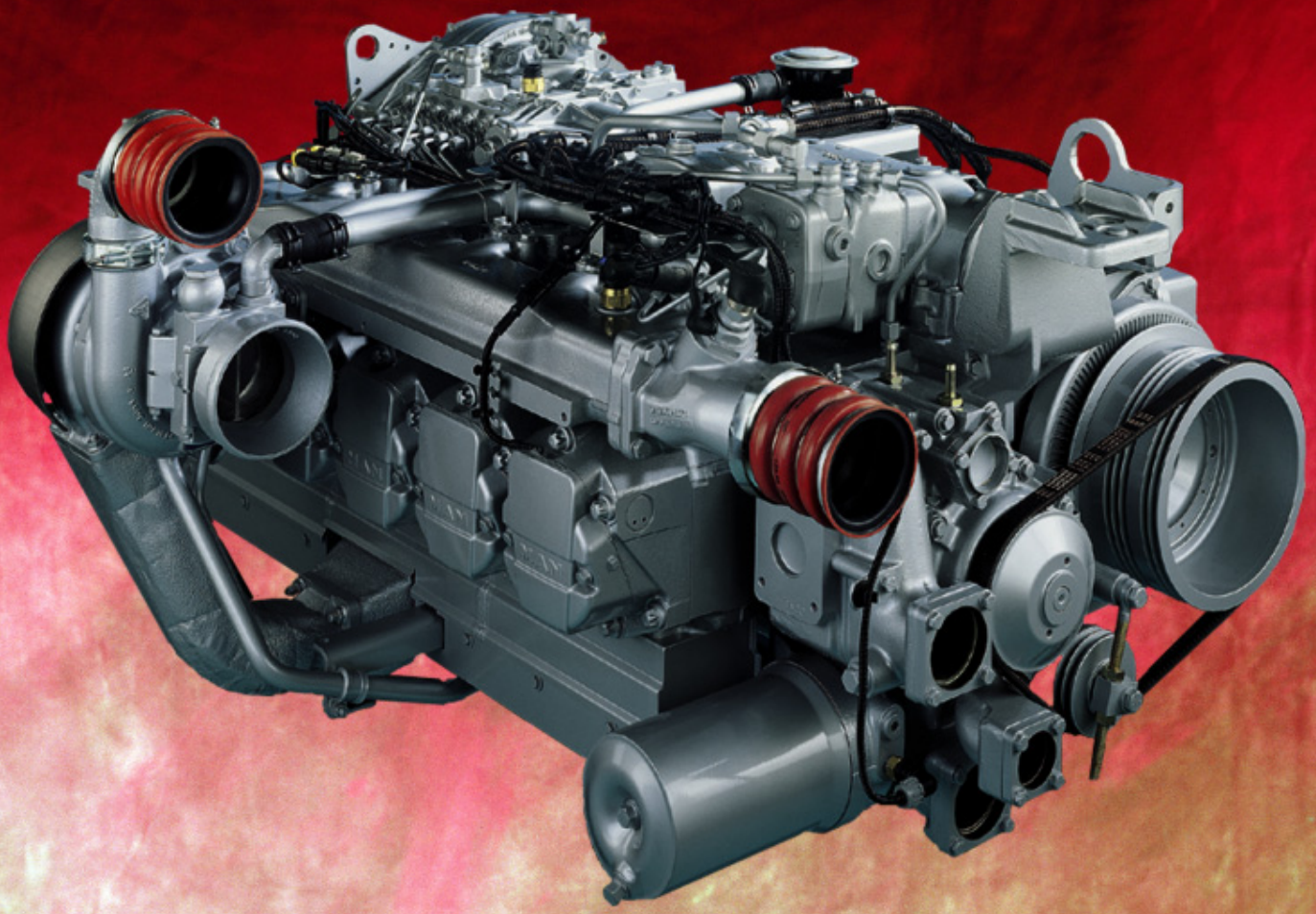

https://truckmanualshub.com/

https://truckmanualshub.com/

This Repair Manual is designed to facilitate competent repair of the engines listed here in.

The pictures and relevant descriptions show typical work that may not always be applicable to the engine in hand, which nevertheless does not mean that they are not correct.
In such cases the repair work is to be planned and carried out in a similar way.

Please note that all jobs described in this Repair Manual were carried out on an engine which was not installed.

The expert knowledge necessary for handling Diesel engines was taken for granted when this publication was compiled.

Any repair of components such as injection pump, alternator etc. ought to be left to our or the manufacturer's service department.

Best regards
MAN Nutzfahrzeuge Aktiengesellschaft
Nuremberg Plant

We reserve the right to make technical modifications in the course of further development.

© 2004 MAN Nutzfahrzeuge Aktiengesellschaft
Reprinting, copying or translation, even in the form of excerpts, is forbidden without the written permission of MAN. MAN expressly reserves all rights in accordance with the law on copyright.

Important instructions which concern technical safety and protection of persons are emphasised as shown below.

Danger:
This refers to working and operating procedures which must be complied with in order to rule out the risk to persons.

Caution:
This refers to working and operating procedures which must be complied with in order to prevent damage to or destruction of material.

Note:
Explanations useful for understanding the working or operating procedure to be performed.

Fitting flat seals / gaskets

Flat seals / gaskets are often inserted with sealing agents or adhesives to make fitting them easier or to achieve better sealing. Flat seals may slip in operation due to the “sewing-machine” effect, in particular if they are used between parts with different rates of linear expansion under heat (e.g. aluminium and cast iron), and leaks may then occur.

Example:
The cap of the front crankshaft seal. If a sealing agent or an adhesive is used here the flat seal will move inwards in the course of time as a result of the different expansion rates of the materials. Oil will be lost, for which the shaft seal may be thought to be responsible.

Flat seals / gaskets can be fitted properly only if the following points are observed:

- Use only genuine MAN seals / gaskets.
- The sealing faces must be undamaged and clean.
- Do not use any sealing agent or adhesive – as an aid to fitting the seals a little grease can be used if necessary so that the seal will stick to the part to be fitted.
- Tighten bolts evenly to the specified torque.

Fitting toric seals

- Use only genuine MAN toric seals.
- The sealing faces must be undamaged and clean.
- Always wet toric seals with engine oil before fitting them.

https://truckmanualshub.com/

Contents

Page

Preface 1

Instructions 2

Engine type classification 5

Safety instructions 7

General notes on engine overhaul 9

Commissioning After Engine Overhaul 10

Fault table 12

Troubleshooting chart 13

Engine views 16

Engine lubrication schedule 18

Fuel System Diagram 19

Cooling System Diagram 21

Engine management schedule 23

Fuel system

Checking and adjusting start of fuel delivery 24
Removing and Installing Injection Pump 28
Removing and Installing Injection Nozzles 30
Checking Injection Nozzles 36
Fuel Prefilter 38
Removing and attaching fuel filter, exchanging filter cartridge 40
Flame starter sheathed−element glow plug,removing and installing 41

Cooling system

Draining and filling coolant 42
Removing and Installing Thermostats 43
Removing and installing the engine coolant pump 44
Repairing engine coolant pump 46
Repairing coolant pump with high-temperature and low-temperature parts 51
Cleaning cooling system 58

Lubrication

Changing the oil filter 60
Removing and installing the oil cooler 61
Removing and installing the oil pan 63
Removing and Installing / Repairing Oil Pump 65
Removing and Installing Oil Spray Nozzle 68

Flywheel
Removing and fitting vibration damper, replacing front crankshaft gasket 69
Removing and installing flywheel, replacing gear ring 74
Removing and installing flywheel, replacing gear ring 75
Replacing crankshaft seal (flywheel end) 76
Replacing the bearing race 77
Crankshaft gaskets 78

Intake / exhaust system
Removing and installing the intake manifold 79
Removing and installing the exhaust manifold 80
Removing and fitting exhaust-gas recirculation (EGR) module 82
Turbocharger, troubleshooting 84
Checking charging pressure 86
Removing and installing the turbocharger 87
Measuring the axial / radial clearance or the turbocharger shaft 89

Cylinder Head
Removing and installing the cylinder head 90
Setting the valve clearance 94
Disassembling and Assembling Rocker Arm Mechanism 95
Removing and installing valves 99
Removing and Installing Valve Guides 105
Replacing valve seat insert 106
Reworking valve seat 108
Refacing Valves 111
Checking Compression 112

Valve timing
Removing and installing the gear case 113
Removing and installing the camshaft, replacing camshaft bearings 114
Checking the valve timing 116

Crankgear
Removing and installing crankshaft 117
Removing and installing pistons with conrods 120
Removing pistons from conrod and fitting, checking – replacing conrod 123
Removing and Installing/Replacing Piston Rings 125
Replacing cylinder liners 127
Measuring Piston Protrusion 131

Attachments
V–belts 133
Pilot clutch 135
Removing and Installing Air Compressor 139

Service Data 141

Special tools 166

Index 179

https://truckmanualshub.com/

All the engines dealt with here are related in terms of their design and make up a family.

The type classification, which is made up of a series of letters and numbers, reveals some of the features of the engine in question provided the reader is familiar with the underlying nomenclature.

The system is explained here using the type D 2876 LUE 601 as an example:

D	The “D” at the start of the type classification stands for “**diesel**”.
28	The numbers “28” indicates that the power plant in question has a bore of 1**28** mm.
7	The “7” means 170 mm stroke This figure is, however, only approximate for this model. The actual stroke is 166 mm.
6	The “6” indicates the number of cylinders 6
L	This letter stands for “**charge-air cooling**” (German: Ladeluftkühlung)
U	The “U” stands for “**Underfloor**”
E	The “E” stands for “**fitted engine**” (German: Einbaumotor) and is intended to distinguish MAN vehicle engines
601/6..	This is a factory-internal development number.

https://truckmanualshub.com/

General information

This brief overview summarises important instructions and is structured into areas of main concern in order to impart the knowledge necessary to prevent accidents involving injury to persons, damage to the engine or other property and harm to the environment. Additional notes are included in the operator's manual for the engine.

Important: If despite all safety precautions an accident occurs as a result of contact with caustic acids, penetration of fuel into the skin, scalding with hot oil, anti-freeze splashes into the eyes etc, ***consult a doctor immediately!***

1. Instructions for preventing accidents with injury to persons

Checks, setting jobs and repair work must be carried out by authorised skilled personnel only.

- When carrying out maintenance and repair work, ensure that the engine cannot be accidentally started from the bridge by unauthorised persons.
- The engine must be started and operated by authorised personnel only.
- When the engine is running, do not get too close to revolving components. Wear tight-fitting working clothes.

- Do not touch hot engine with bare hands: risk of burning yourself.

- Keep engine vicinity, ladder and steps free of oil and grease. Accidents resulting from slipping may have serious consequences.
- Work only with tools that are in good condition. Worn spanners slip: risk of injuries.
- Persons must not stand under an engine suspended from a crane hook. Keep lifting gear in good order.

- Open coolant circuit only after the engine has cooled down. If opening the coolant circuit while the engine is hot is unavoidable, observe the instructions in the chapter "Maintenance and care" in the Operator's Manual.
- Neither retighten nor open pressurised pipelines and hoses (lube oil circuit, coolant circuit and downstream hydraulic oil circuit if fitted): risk of injuries resulting from emerging fluids.

- When checking the injection nozzles, do not hold your hands in the fuel jet. Do not inhale fuel mist.

https://truckmanualshub.com/

- When working on the electrical system, unplug earth cable from battery first and reconnect it last to avoid short-circuits.

- Observe the manufacturer's instructions for handling batteries.
  Caution:
  Battery acid is toxic and caustic. Battery gases are explosive.

- When carrying out welding work, observe the "Information sheets for welders".

2. Instructions for preventing damage to the engine and premature wear

- ***Prior to repairing the engine, clean it thoroughly. Ensure that dirt, sand or foreign matter will not get into the engine during repair work.***
- In the event of operational faults immediately identy the cause and rectify to prevent more serious damage.
- Always use genuine MAN parts only. Installation of "equally" good parts from other suppliers may cause severe damage for which the workshop carrying out the work is responsible.
- Never operate the engine while it is dry, i.e. without lubricant or coolant.
  Use a suitable label to mark engines not ready for operation.
- Only use operating materials (fuel, engine oil, antifreeze and anticorrosion agents) approved by MAN. Ensure that everything is kept clean. Diesel fuel must be free of water.
- ***Do not fill up with engine oil above the max. notch on the dipstick. Do not exceed the engine's maximum permissible operating inclination.***
  Non–compliance with these instructions may cause severe engine damage.
- Control and monitoring devices (charge check, oil pressure, coolant temperature) must work faultlessly.
- Observe the instructions for operating the alternator; see chapter "Commissioning and operation" in the Operator's Manual.

https://truckmanualshub.com/

3. Instructions for preventing environmental damage

Engine oil and filter cartridges and elements, fuel/fuel filters

- Take old oil to an old oil disposal point only.
- Ensure without fail that oil and Diesel fuel will not get into the sewerage system or the ground.

Caution:
Danger of contaminating potable water!

- Treat filter elements and cartridges as special waste.

Coolant

- Treat undiluted anticorrosion and/or antifreeze agents as special waste.
- The regulations of the relevant local authorities are to be observed for the disposal of spent coolants.

4. Instructions for handling used engine oil *

Prolonged or repeated contact of any kind of engine oil with the skin causes the skin to degrease, which may result in dryness, irritation or inflammation. Old engine oil also contains hazardous substances which in animal experiments have caused skin cancer. Handling old engine oil does not pose any health hazard if the basic safety and hygiene related regulations are observed.

Health and safety regulations:

- Avoid prolonged, excessive or repeated contact of old engine oil with the skin.
- Use a suitable skin protection agent or wear protective gloves.
- Clean the skin that has been in contact with engine oil.
  - Wash yourself thoroughly with soap and water. A nailbrush is an effective aid.
  - Special hand cleaning agents facilitate cleaning soiled hands.
  - Do not use petrol, Diesel fuel, gas oil, fluxes or solvents as cleaning agents.
- After washing apply moisturising handcream to your skin.
- Change oil-soaked clothes and shoes.
- Do not put any oil-soaked cloths into pockets.

Pay meticulous attention to the proper disposal of old engine oil.
– Old oil is a water hazard –

Therefore, do not pour any old oil into the ground, the drains or the sewerage system. Any violation of this rule is punishable.

Collect and dispose of old engine oil properly. For information concerning collection points, contact seller, supplier or the local authorities.

* Based on the “Information sheed for handling used engine oil”
(Notes on how to handle old engine oil).

https://truckmanualshub.com/

The service life of an engine is influenced by very different factors. It is therefore not possible to specify certain fixed numbers of operating hours for general overhauls.

In our view, it is not necessary to open up and engine or perform a general overhaul
as long as the engine has good compression values and the following operating values have not changed significantly in relation to the values measured on commissioning the engine:

- Charging pressure
- Exhaust temperature
- Coolant and lubricant temperature
- Oil pressure and oil consumption
- Smoke emissions

The following criteria greatly influence the length of the engine service life:

- Correct power output setting according to the type of application
- Technically correct installation
- Inspection if installation by authorised personnel
- Regular maintenance as per maintenance plan in the Operator's manual
- Choice and quality of lube oil, fuel and coolant in accordance with the publication "Fuels, Lubricants and Coolants for MAN Diesel Engines"

Pressurisation

It is extremely important for internal combustion engines (following the completion of repair work, i.e. in their dry state) to be pressurised with lube oil before being recommissioned. This procedure can also be used for ascertaining damage and its causes.

If engines are not pressurised, the risk of premature damage to bearing surfaces is very high because it takes a relatively long period of time for the lube oil drawn in from the oil pan via the oil pump to reach the individual bearings.

Such incipient damage need not necessarily lead to immediate bearing failure, but may impair the proper functioning of the bearings and reduce their service lives.

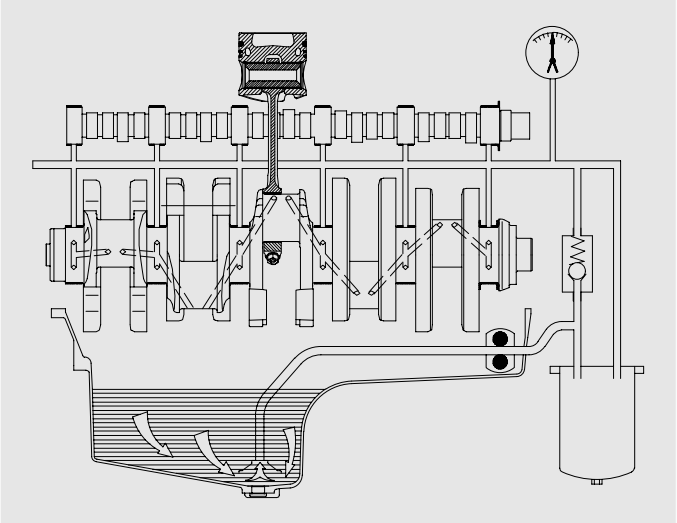

Schematic diagram of the flow of oil in non−pressurised engines (source: MIBA)

https://truckmanualshub.com/

Pressurising an engine affords the following advantages:

- All engine parts are lubricated before engine startup; a lubricating film can be built up inside the bearings as early as after the first few rotations of the crankshaft, thereby preventing damage to the bearing races.
- Any loss of oil, be it the result of excessively large bearing play or leaks from the crankcase or from crankcase bores which may not be plugged, can be detected immediately. For this purpose, mount the engine on an assembly dolly, remove the oil pan and install a suitable oil collector under the crankcase in such a way that the bearings are visible.

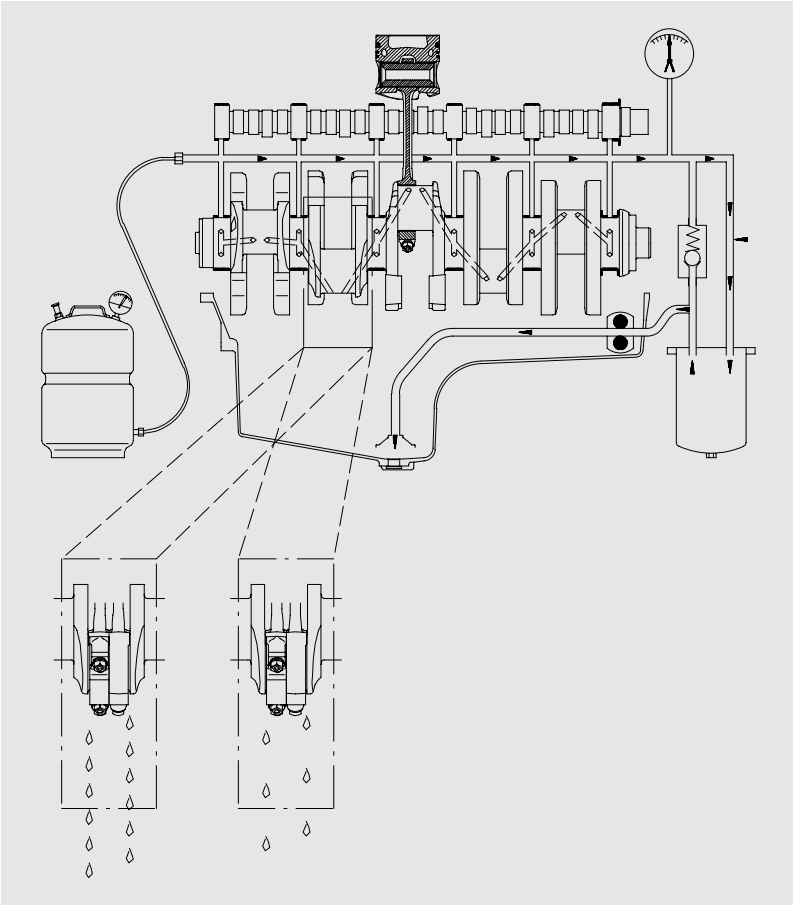

Performance of pressurisation:

At least 30% of the total oil quantity is forced from the pressurisation container into the engine oil circuit. The operating pressure serves as the yardstick for the pressure to be forced in and must not be exceeded. The pressurisation container is connected up to the engine oil circuit at the oil filter head (screw plug, arrowed).

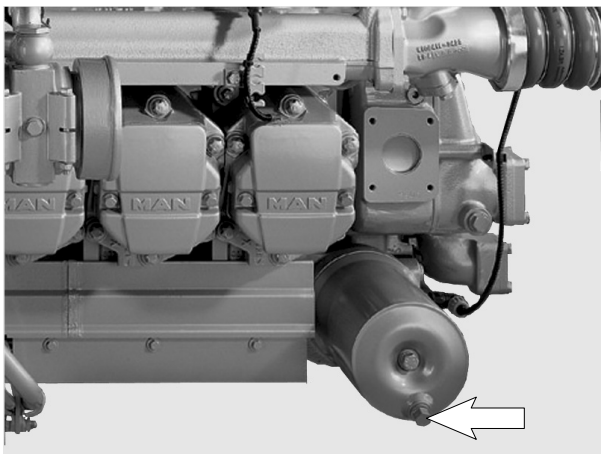

Operating faults and possible causes

We recommend

A repair is only complete when both the damage that occurred and the possible causes have been eliminated. Finding out the cause of damage is often more difficult than repairing the damage that occurred. We therefore recommend that you obtain a precise description of the operating fault before removing and dismantling components. Then use a process of elimination (questions) to pinpoint the probable causes and investigate and eliminate these successively on the basis of the table ***and your own experience***. This helps to reduce repairs to the required scale and to counteract claims regarding “overeager” replacement of parts and complaints about expensive work and down time.

Note:

The following list is conceived as an aid to memory for experts so that to causes of damage are overlooked when dealing with faults. The precondition for this, however, is that the experts are familiar with the Repair Manual for the engine as well as the accompanying Operating Instructions and the publication “Fuels, Lubricants and Coolants for MAN Diesel Engines”.

Troubleshooting chart

1. EDC self-diagnosis or flash code output	2. Starter turns over engine only slowly or not at all	3. Starter turns, engine does not start, engine does not start / difficult to start when cold	4. Engine stalls (dies) during operation, no longer starts (starter turns), engine does not start / starts with difficulty when hot	5. . Sudden, temporary engine shut-down, engine does not reach full revs	6. Engine only runs at idle speed, no throttle response	7. Engine only runs at elevated idle speed, no throttle response	8. Rated engine speed distinctly reduced (even under no load)	9. Reduced output in all ranges	10. Irregular engine operation, traction loss	11. Unstable idle speed, engine hunting, misfiring, knocking in engine	12. Engine judder	13. Unusual combustion noise	14. Excessive smoke emission: White smoke / blue smoke	15. Excessive smoke emission: Black smoke	16. Engine temperature too high (coolant loss)	17. Intermediate engine speed control cannot be activated / does not switch off, engine revs too high	18. Fuel consumption too high	19. Lubricating oil pressure too low	20. Lubricating oil pressure too high	21. Lubricating oil consumption too high	22. Engine too loud / mechanical noise	**Possible causes**
	x	x																				Batteries discharged, battery lead connections loose or corroded, break in power circuit
	x																					Crank gear blocked
	x	x																				Starter solenoid switch sticking (clicks) / defective, cable connection loose or damaged
	x	x																				Starter / starter interlock relay defective (carbon brushes worked loose / worn, winding defective, short to ground)
	x																x	x	x			Engine oil viscosity unsuitable, not suitable for ambient temperature, lubricating oil quality does not correspond to specifications
								x											x			Oil level in sump too high
																	x					Oil level in sump too low, oil in sump too thin (mixed with condensate or fuel)
																	x					Engine temperature too high
																	x					Oil filter clogged
																	x	x				Oil pressure gauge faulty
																	x					Safety valve in oil circuit defective (does not close, spring fatigued or broken)
																	x				x	Bearing wear
																	x					Oil pump gears worn
																					x	Crankshaft timing gears worn, tooth flank backlash too great
										x		x						x				Engine cold
												x										Lubricating oil entering combustion chamber (piston rings worn, piston rings broken) – valve stem guide worn – overpressure in crankcase (crankcase vent clogged)
																		x				Relief valve in oil circuit faulty (does not open), oil lines / oil galleries clogged
																			x			Leaks in lubricating oil circuit, particularly at turbocharger and oil cooler
										x									x			Piston rings heavily worn, broken
										x											x	Piston pin or crankshaft bearing worn
																			x			Valve stems worn
		x								x											x	Valve clearance not correct
		x								x												Valves jam
		x	x					x		x												Compression deficient, or more than 3–4 bar pressure difference between individual cylinders
		x								x						x						Valve seats leaking
	o			x												x						Increased power consumption due to faulty secondary consumers such as hydraulic pumps, fan, etc, power take-off engaged
				x				x						x		x					x	Air cleaner soiled or clogged, charge-air system leaking, air inlet / exhaust lines clogged / leaking
		x	x	x	x			x	x		x		x			x						Fuel low pressure system: Fuel tank, prefilter, water trap faulty / clogged / mould / fungal attack, fuel unsuitable / contaminated (paraffin added)

x = Probable
o = Possible

https://truckmanualshub.com/

Troubleshooting chart

1. EDC self-diagnosis or flash code output	2. Starter turns over engine only slowly or not at all	3. Starter turns, engine does not start, engine does not start / difficult to start when cold	4. Engine stalls (dies) during operation, no longer starts (starter turns), engine does not start / starts with difficulty when hot	5. . Sudden, temporary engine shut-down, engine does not reach full revs	6. Engine only runs at idle speed, no throttle response	7. Engine only runs at elevated idle speed, no throttle response	8. Rated engine speed distinctly reduced (even under no load)	9. Reduced output in all ranges	10. Irregular engine operation, traction loss	11. Unstable idle speed, engine hunting, misfiring, knocking in engine	12. Engine judder	13. Unusual combustion noise	14. Excessive smoke emission: White smoke / blue smoke	15. Excessive smoke emission: Black smoke	16. Engine temperature too high (coolant loss)	17. Intermediate engine speed control cannot be activated / does not switch off, engine revs too high	18. Fuel consumption too high	19. Lubricating oil pressure too low	20. Lubricating oil pressure too high	21. Lubricating oil consumption too high	22. Engine too loud / mechanical noise	**Possible causes**
	x	x	x				x	x	x			x				x						Fuel low pressure system: Fuel lines leaking, broken, clogged
	x	x	x				x	x		x		x										Fuel low pressure system: Air in system (turn on ignition when bleeding system)
	x	x	x				x	x	x	x		x				x						Fuel low pressure system: Fuel pump, overflow valve, main filter
	x						x		x	x	x	o	x			x						Fuel high pressure system: Jets defective / clogged / leaking / coked
							x		x	x	x					o						Fuel high pressure system: Pressure lines – constriction, cavitation, leaking
		x					x		o	x	x	x	x			o						Fuel high pressure system: Injection pump worn/set incorrectly
							o			x	o					o						Fuel high pressure system: Injection pump constant-pressure control valve / return flow restrictor defective
	x	x	x				o	x														Safty relay defective, drive faulty
	o	o					o		x		o	x	x			x						Injection pump-engine allocation: Start of delivery incorrect (basic installation), start of delivery set incorrectly
x	x	x	x				o		x	o												Injection pump–controller: Stiff movement-fuel delivery controller (control deviation)
x	x	x	x					o														Control rod position transducer in controller: Connection lines, break, short-circuit
	o						o						o									Control rod position transducer in controller: Set incorrectly
x	x		o																			Control rod position transducer in controller: Capacitance reserve of wiring harness too low (e.g. water penetrated wiring harness)
							x		o	x	o		o									Injection pump: Delivery set incorrectly / uniform delivery, lower idle speed set too low
x	o	x	x	x										x								Delivery actuating solenoid in controller: Connection lines, break, short–circuit, or CAN–Bus
x				x		x	x	x	o													Drive stage selection defective: Connection lines, break, short-circuit
x																						EDC rpm sensor faulty, implausible with auxiliary rpm sensor, line fault
									x	o												EDC rpm sensor, polarity reversed
x																						EDC rpm sensor faulty, implausible with auxiliary rpm sensor, line fault
x	x	x	x	o				o	o					o								EDC detects incorrect engine speed (interference signal on rpm sensor line)
x	x	x	x							o												Both rpm sensors faulty, line fault
x							x						x									EDC boost pressure sensor: faulty, incorrect, implausible with atmospheric pressure sensor, line fault
							x		x			o	x									Exhaust turbocharger leaking or faulty
																					x	Turbine and compressor rotor in turbocharger dirty (out-of-balance, irregular running)
													x									Intercooler leaking, faulty
	x											x										Flame starting system defective
x	o						x	x				o		x								EDC coolant temperature sensor: faulty, line fault
x							x	x														EDC charge-air temperature sensor: faulty, line fault
o							x							x								Radiator dirty or cooling system failure (temperatures too high)
														x								Coolant level too low, air in coolant circuit

x = Probable
o = Possible

1. EDC self-diagnosis or flash code output	2. Starter turns over engine only slowly or not at all	3. Starter turns, engine does not start, engine does not start / difficult to start when cold	4. Engine stalls (dies) during operation, no longer starts (starter turns), engine does not start / starts with difficulty when hot	5. . Sudden, temporary engine shut-down, engine does not reach full revs	6. Engine only runs at idle speed, no throttle response	7. Engine only runs at elevated idle speed, no throttle response	8. Rated engine speed distinctly reduced (even under no load)	9. Reduced output in all ranges	10. Irregular engine operation, traction loss	11. Unstable idle speed, engine hunting, misfiring, knocking in engine	12. Engine judder	13. Unusual combustion noise	14. Excessive smoke emission: White smoke / blue smoke	15. Excessive smoke emission: Black smoke	16. Engine temperature too high (coolant loss)	17. Intermediate engine speed control cannot be activated / does not switch off, engine revs too high	18. Fuel consumption too high	19. Lubricating oil pressure too low	20. Lubricating oil pressure too high	21. Lubricating oil consumption too high	22. Engine too loud / mechanical noise	**Possible causes**
															x							V-belt for water pump drive not tensioned correctly
																					x	Incorrect V-belt tension
															x							Water pump leaking, faulty / thermostat faulty, does not open
															x							Coolant lines leaking, clogged or twisted
													x									Coolant entering combustion chamber (cylinder head / gasket leaking)
								x														Resistor bank EDC control unit pin 51
x		x	x	o				o														Power supply to EDC control unit interrupted or battery voltage too low / Relay K1 faulty
		x	x	o				o														Line terminal 15 to EDC control unit (pin 47) interrupted/loose contact
																x						Line defective: Line defective: Pin 23 or 41
x		o	o	o																		EDC control unit faulty (internal fault)
		x				x	x	x		o	o		o	x								Incorrect EDC control unit (check MAN part number)
						x	x									o						Intermediate engine speed activated
		x																				EOL programming terminated / voltage interrupt
x																						Afterrunning not completed (e.g. shutdown via EMERGENCY STOP)
																x						EOL programming: Configuration incorrect
											x											Engine bearings worn
x		o					x															Injection pump pilot stroke / start of delivery regulator: stiff movement

x = Probable
o = Possible

https://truckmanualshub.com/

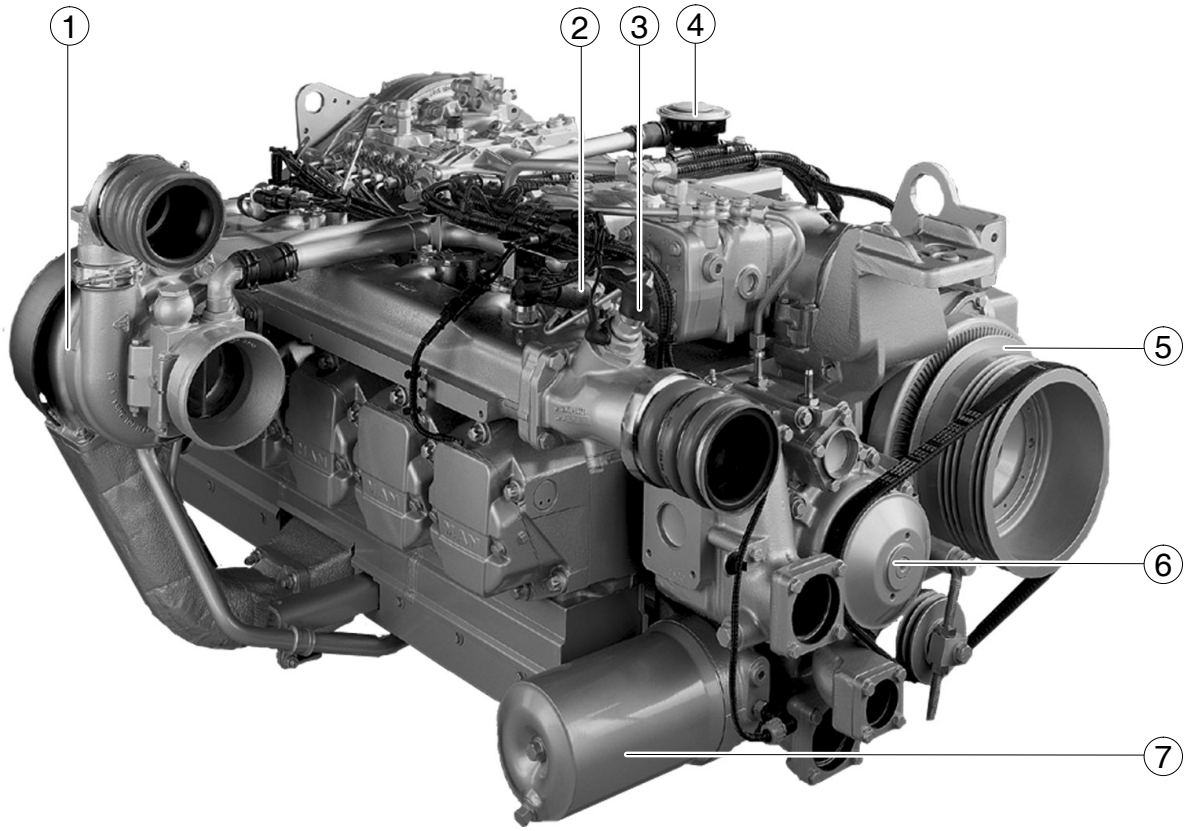

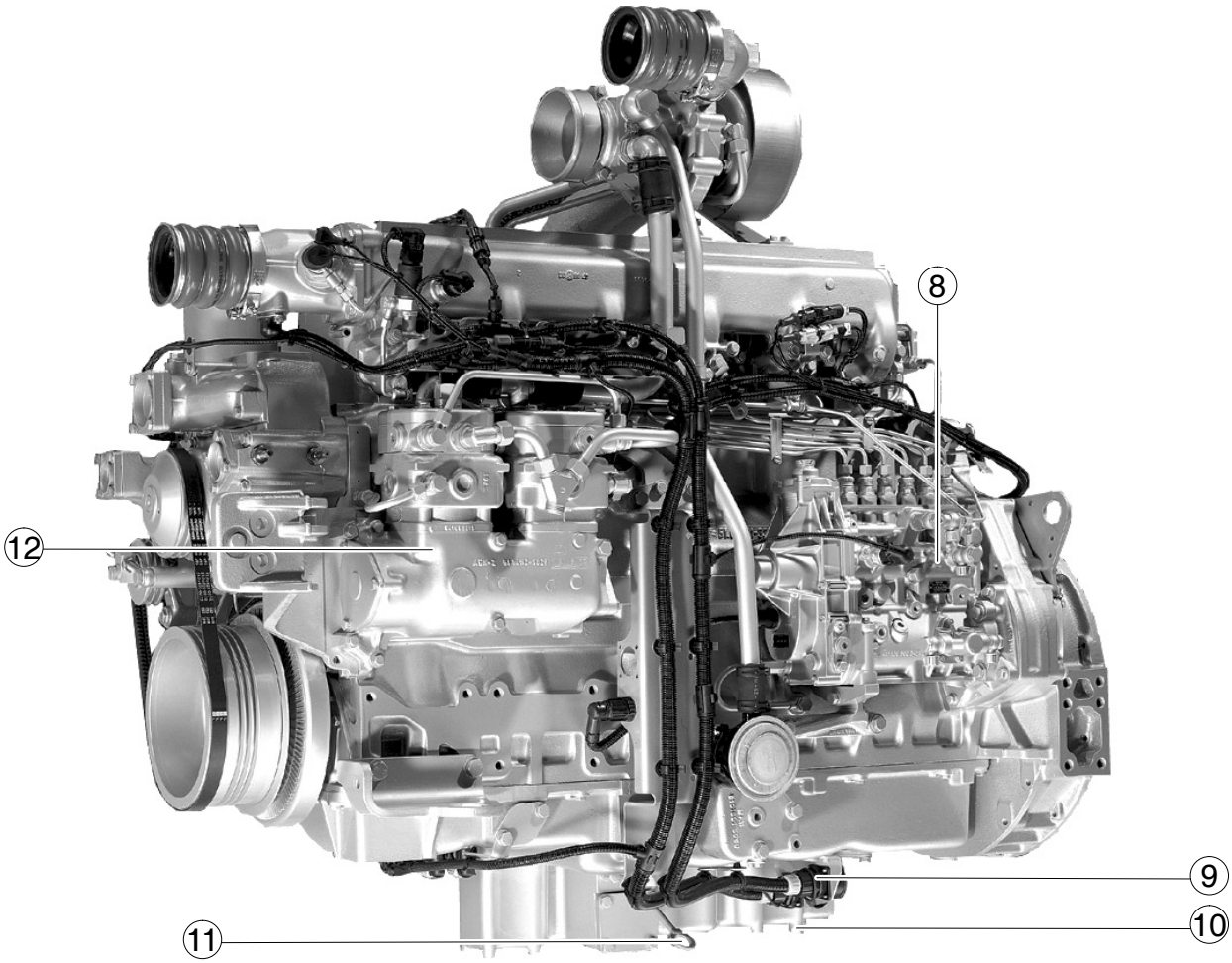

https://truckmanualshub.com/

① Turbocharger

② Solenoid valve for flame-starter

③ Flame-starter sheathed-element glow plug

④ Crankcase breather

⑤ TDC mark

⑥ Coolant pump

⑦ Oil filter

⑧ Injection pump

⑨ Engine / EDC harness

⑩ Oil drain plugs

⑪ Dipstick

⑫ Air compressor

Schematic diagram of engine lubrication system

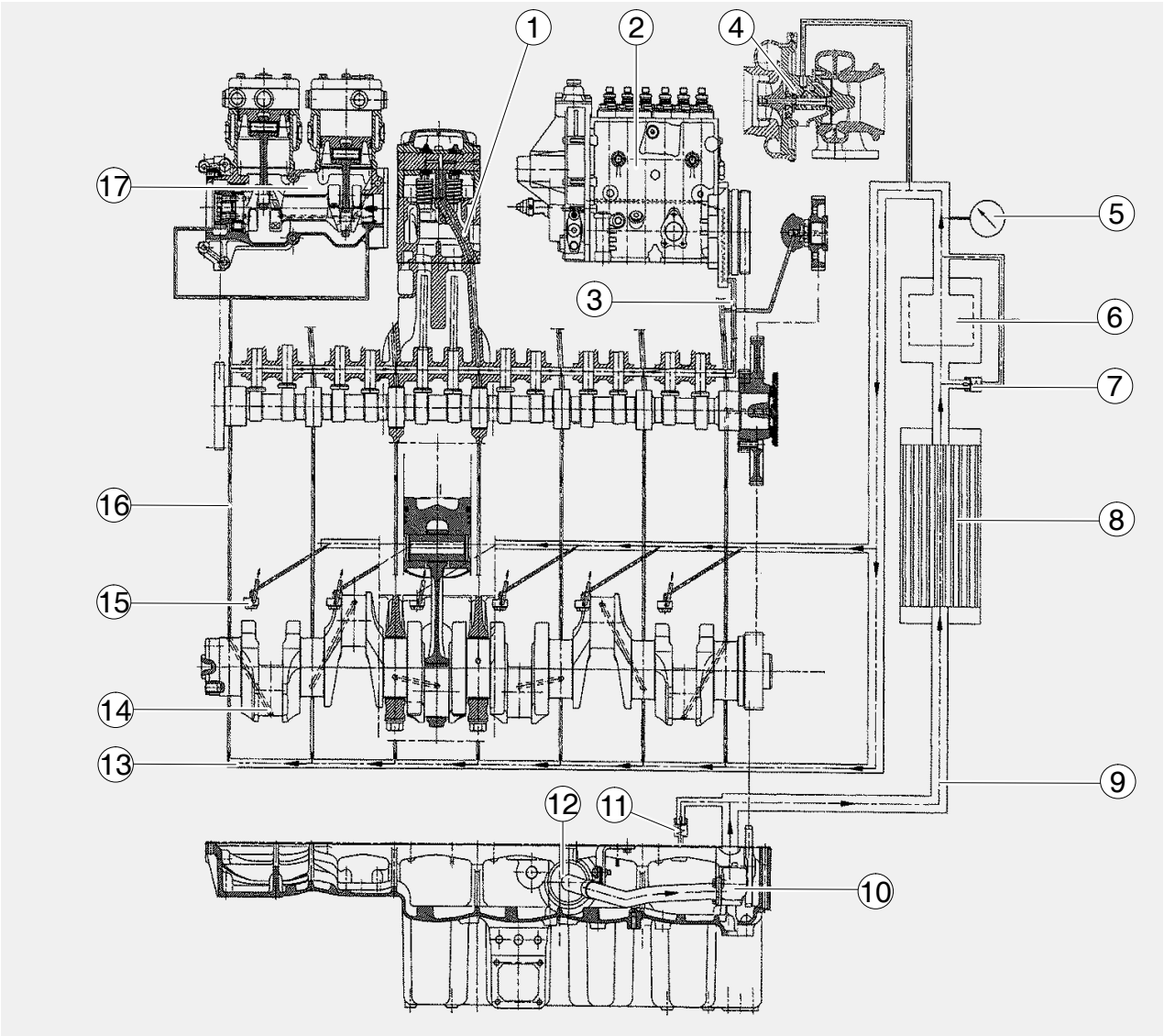

① Bore for ro#ker arm lubrication

② Injection pump

③ Bore for injection pump lubrication

④ Turbocharger

⑤ Oil pressure sensor

⑥ Oil filter

⑦ Bypass valve

⑧ Oil cooler

⑨ Bore for oilcooler

⑩ Oil pump

⑪ Oil pressure relief valve

⑫ Oil suction pipe

⑬ Bore for main bearing lubrication

⑭ Bore for thrust bearing

⑮ Spray nozzles for piston cooling

⑯ Bore for camshaft bearing lubrication

⑰ Air compressor

Fuel System Diagram

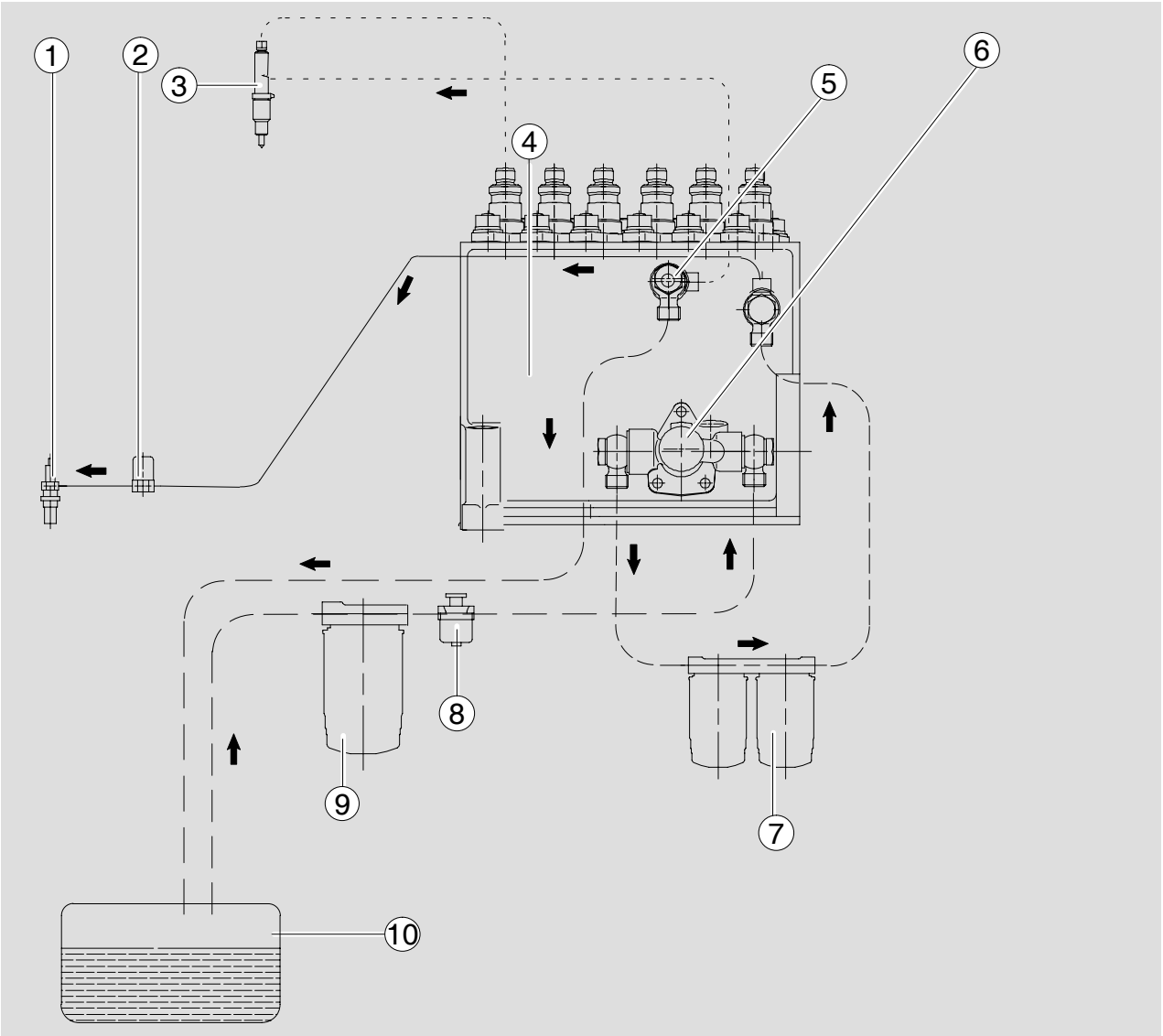

① Flame-starter sheathed-element glow plug
② Soleniod valve
③ Fuel injector
④ Injection pump
⑤ Overflow valve
⑥ Fuel delivery pump
⑦ Fuel filter
⑧ Hand pump
⑨ Fuel pre-filter
⑩ Tank

Fuel System Diagram

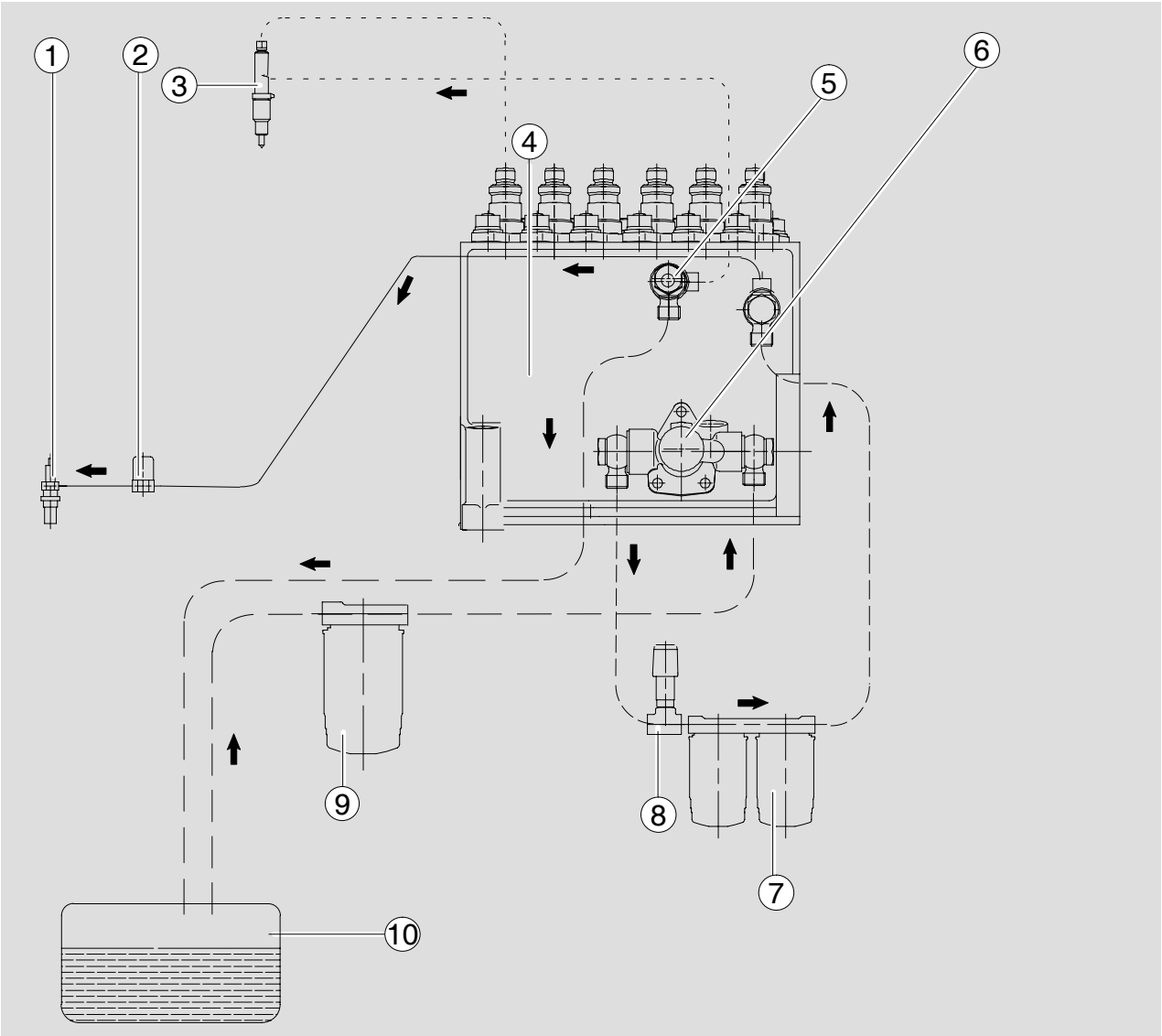

① Flame-starter sheathed-element glow plug
② Soleniod valve
③ Fuel injector
④ Injection pump
⑤ Overflow valve
⑥ Fuel delivery pump
⑦ Fuel filter
⑧ Hand pump
⑨ Fuel pre-filter
⑩ Tank

Air/Water Intercooler

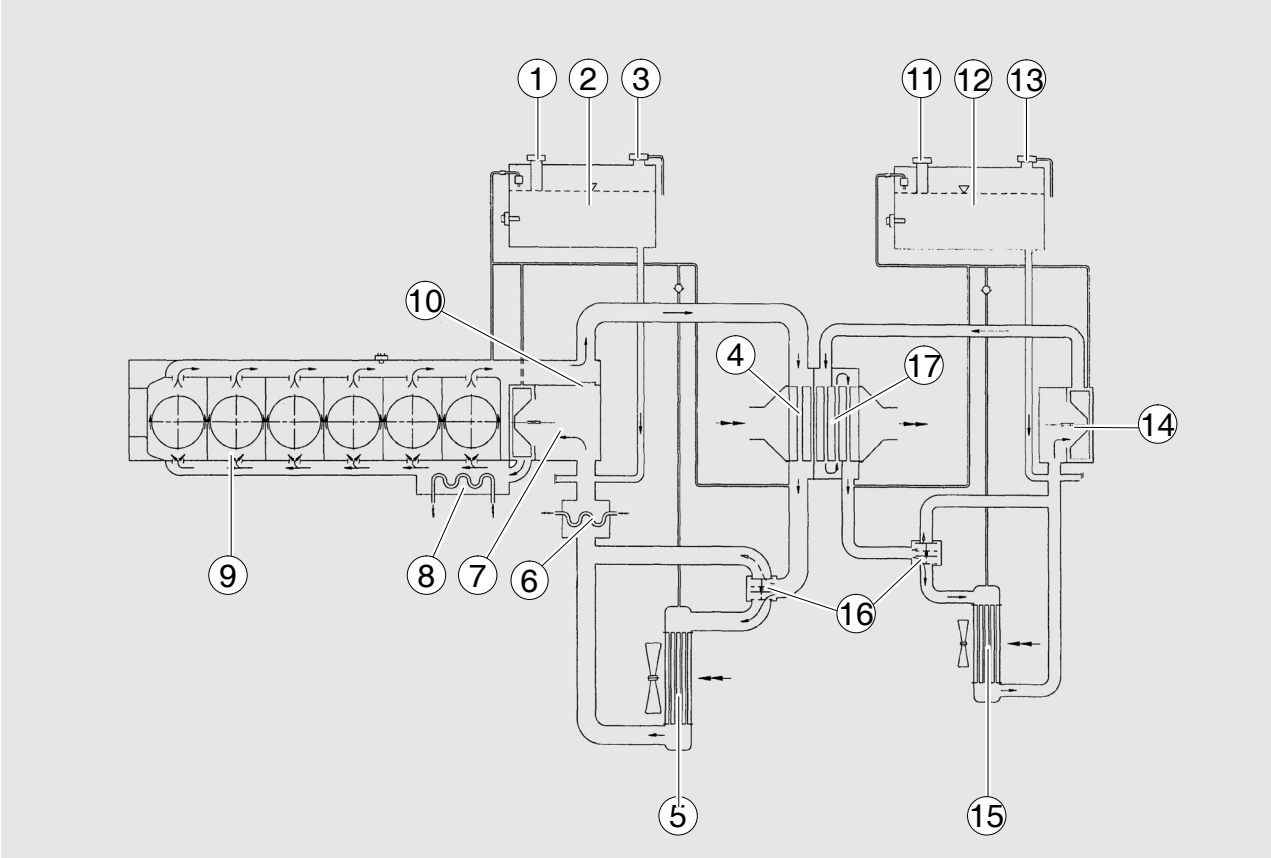

High temperatur cooling system

① Positive pressure valve 0,85–1,2 bar
② Surge tank
③ Filler neck, Positive pressure- 0,6–0,7 bar / negative pressure valve 0,02–0,08 bar
④ Intercooler
⑤ Radiator
⑥ Retarder–oil cooler
⑦ Water pump
⑧ Radiator
⑨ Engine / crankcase
⑩ Short circuit inserts

Low temperatur cooling system

⑪ Positive pressure valve 0,85–1,2 bar
⑫ Surge tank
⑬ Filler neckseinfüllstutzen, Positive pressure- 0,6–0,7 bar / negative pressure valve 0,02–0,08 bar
⑭ Water pump low temperatur cooling system
⑮ Radiator
⑯ Thermostat
⑰ Intercooler

Air/Air Intercooler

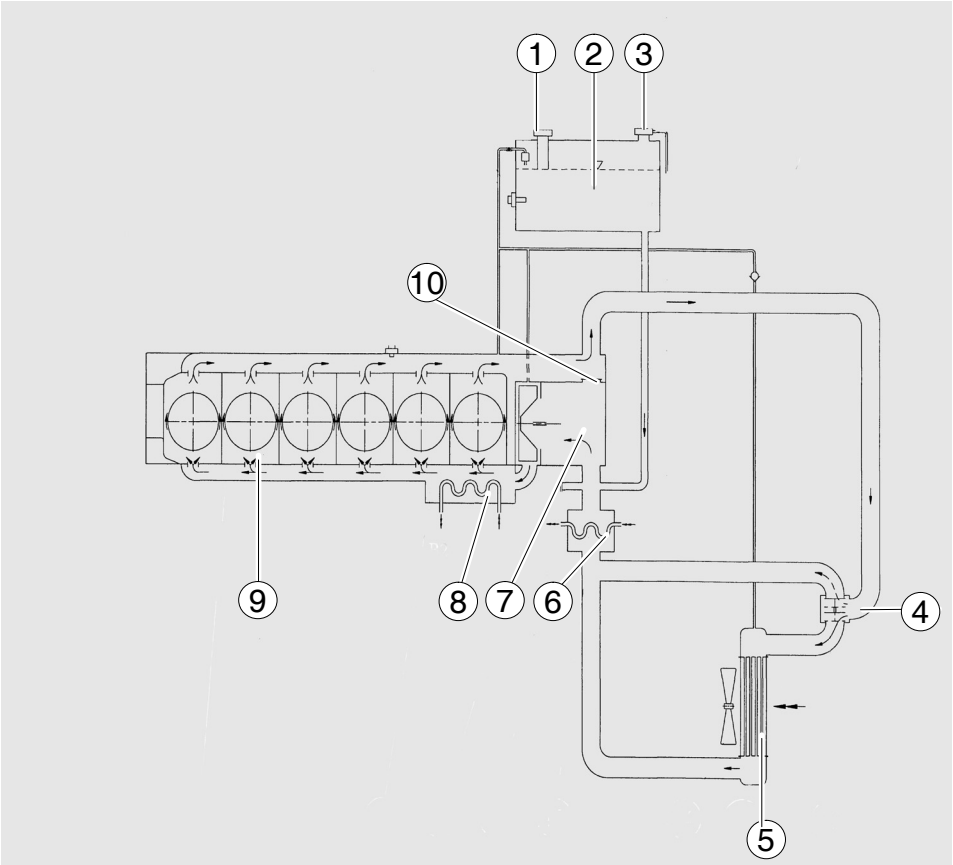

① Positive pressure valve 0,85–1,2 bar
② Surge tank
③ Filler neck, Positive pressure- / negative pressure valve
Positive pressure 0,6–0,7 bar / negative pressure 0,02–0,08 bar
④ Thermostat
⑤ Radiator
⑥ Retarder-oil cooler
⑦ Water pump
⑧ Engine oil cooler
⑨ Engine / crankcase
⑩ Short circuit inserts

https://truckmanualshub.com/

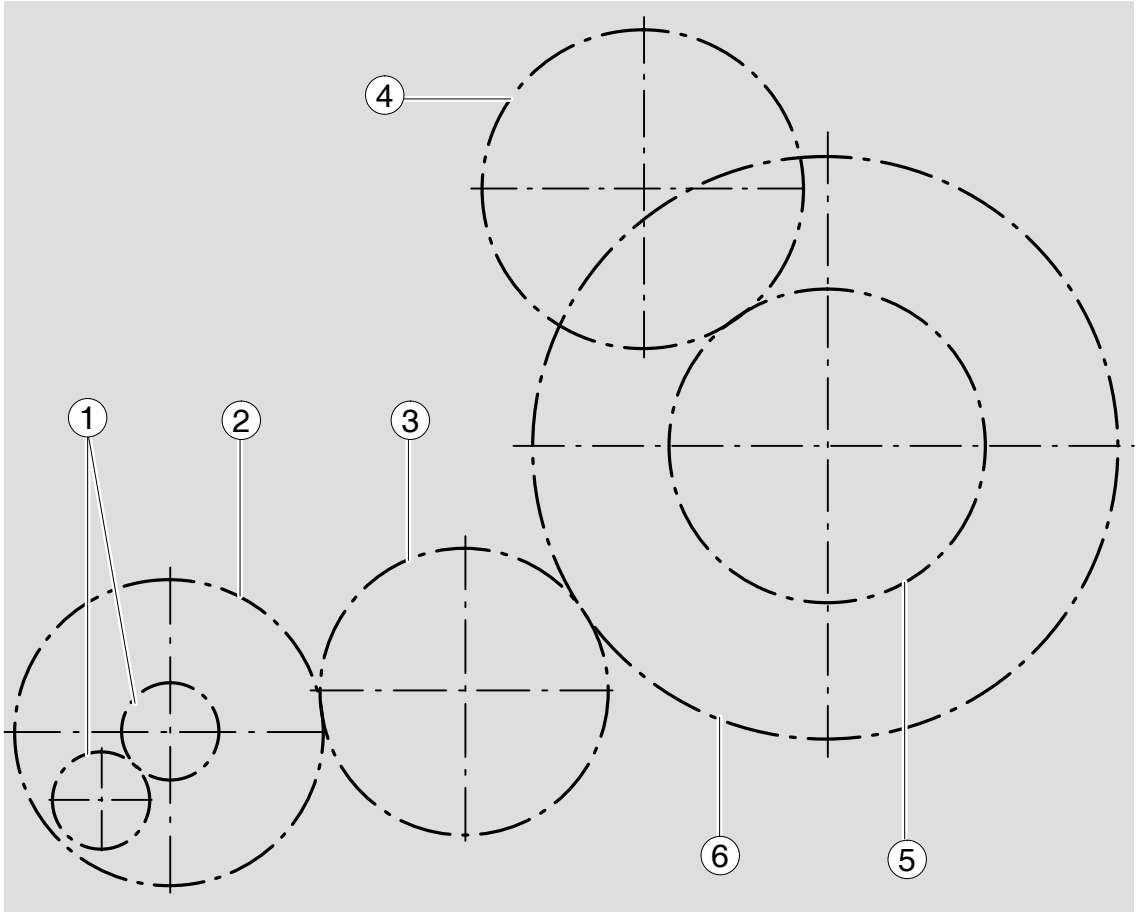

① Oil pump impeller gear
② Oil pump drive gear
③ Crankshaft gear
④ Injection pump drive gear
⑤ Idler gear
⑥ Camshaft gear

https://truckmanualshub.com/

Checking start of delivery

Fig. 1

For the purpose of checking the start-of-delivery setting, an “OT” (= TDC) mark and a scale from 10 ... 50° before TDC are engraved on a disc ② fitted in front of the torsional vibration damper.

The scale marks are read against a pointer ① fitted to the crankcase.

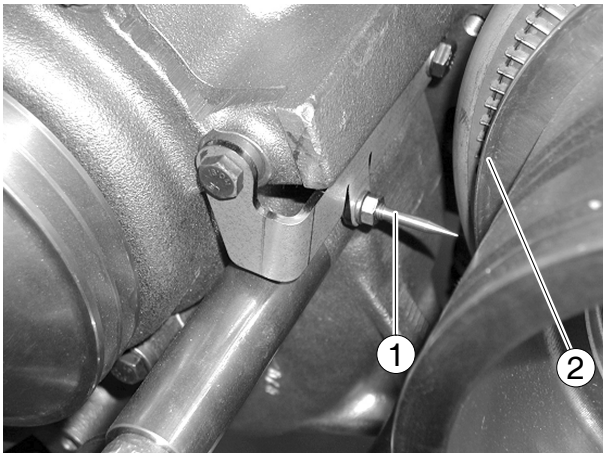

1

Fig. 2

An engine cranking device (special tool) may be mounted also at the inspection hole of the flywheel housing. For this purpose, the speed pickup together with the plate is to be previously detached.

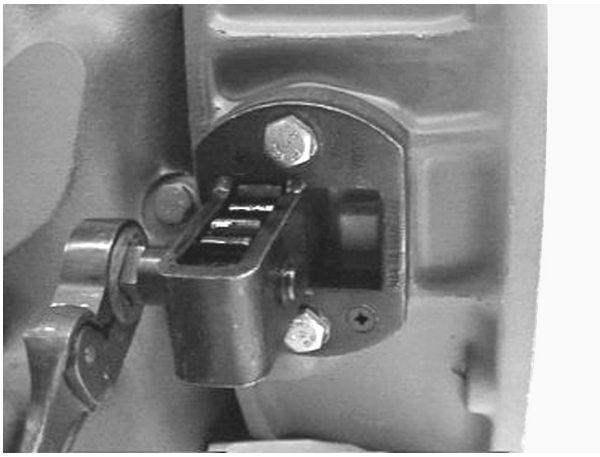

2

Fig. 3

There is another scale engraved on the flywheel which can be read through an inspection hole in the flywheel housing but access may be difficult. The scale should be used for readjusting the pointer after the vibration damper has been removed or replaced.

In other words, before the vibration damper with the scale disc is installed, the engine should be positioned at “OT” (top dead centre) by means of the scale on the flywheel.

The pointer should then be aligned such that its measuring edge exactly coincides with the “OT” mark on the scale disc.

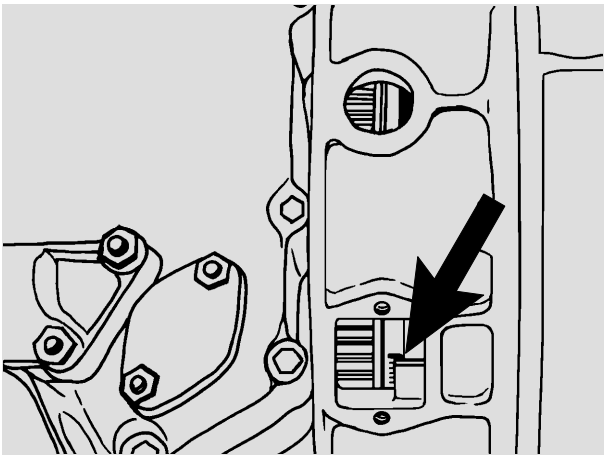

3

Fig. 4

To avoid incorrect readings, always look past the notch on the flywheel housing and straight towards the flywheel centre.

The marking on the graduated scale must be on the imaginary “notch - flywheel centre” line.

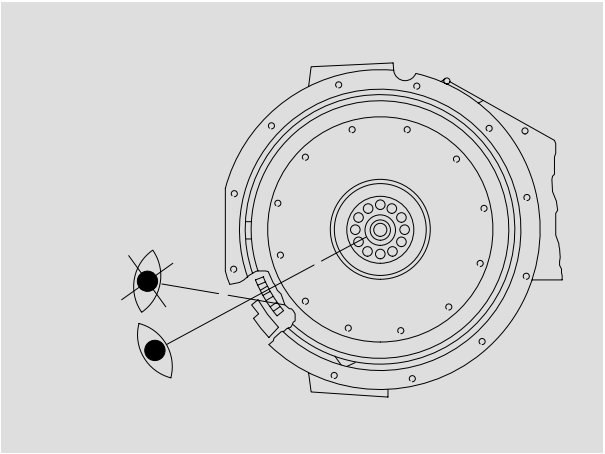

4

https://truckmanualshub.com/

Fig. 5

Remove screw plug ① on governor housing.
If fitted, take out blocking pin ②.

Caution:
If the injection pump is blocked the camshaft must on no account be loaded or turned because parts of the blocking pin may break off and fall into the governor. **Non-compliance with this may result in severe damage to the injection pump.**

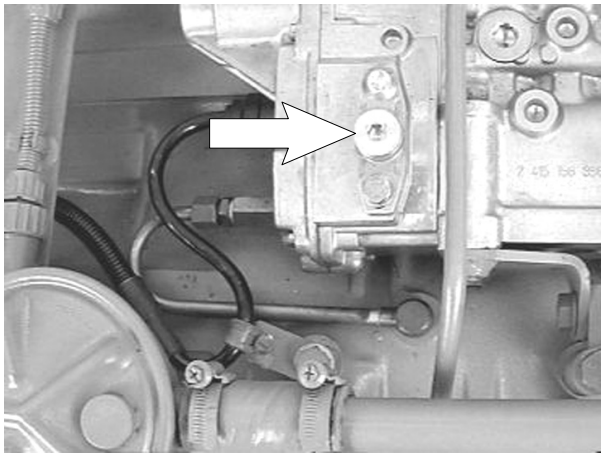
5

If the pointer is exactly in the centre of the inspection hole, the pump plunger for cylinder no. 1 is at start of delivery. However, it is possible to determine exactly whether or not the pump is at start of delivery only by means of the following special tools:

1. Light signal transmitter

Fig. 6

Push light signal transmitter into socket in governor housing. Ensure that the lug fits in the groove. Tighten the knurled nut by hand.

Turn engine by hand so that piston in cylinder no. 1 in the compression stroke comes close to the start of delivery.
Lamp (A) comes on shortly before start of delivery is reached.

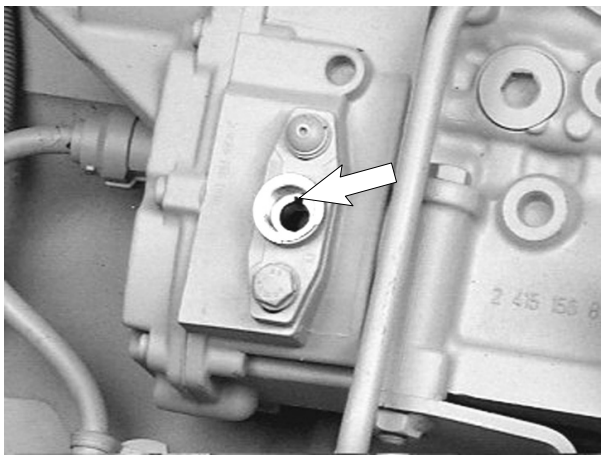
6

Fig. 7

Slowly turn the engine further until lamp (B) comes on too. The injection pump is now at start of delivery.

Note:
If only lamp (B) comes on during this test, the engine has been turned past the start of delivery. In this case turn the engine back and repeat the procedure.

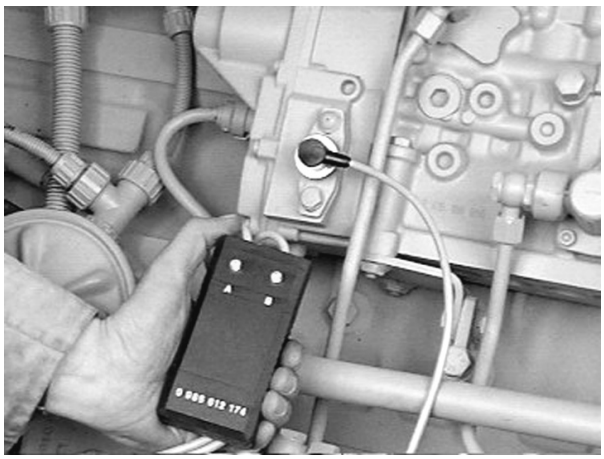
7

If only lamp (B) comes on during this test, the engine has been turned past the start of delivery. In this case turn the engine back and repeat the procedure.

https://truckmanualshub.com/

2. Sleeve

Fig. 8

If a light signal transmitter is not available, good measurement results can also be achieved with a plug-in sleeve.
The sleeve is to be made of aluminium or steel.

Set engine to start of delivery as described above. Insert the sleeve into the governor housing up to the stop.

The start of delivery is set exactly when the pointer for start of delivery is in the centre of the 3 mm bore in the sleeve.

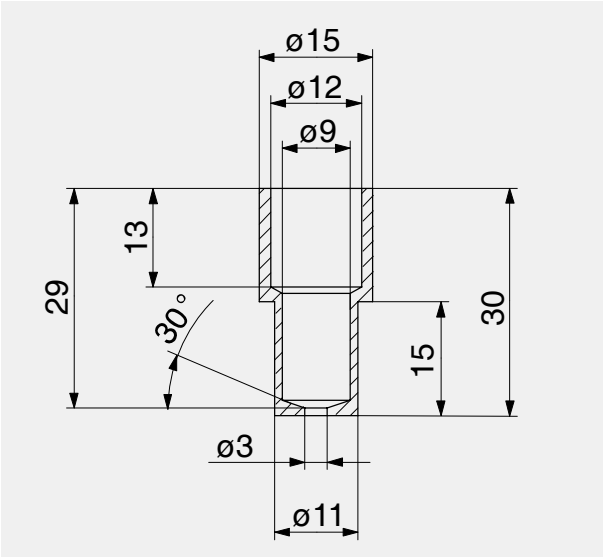

8

https://truckmanualshub.com/

Adjusting start of delivery

If the check according to method 1) or 2) should prove that the delivery start is not correct, proceed as follows:

Remove timing case cover.

Fig. 9

Loosen all bolts fastening the drive gear to the injection pump hub. For this, two complete turns of the engine are necessary.

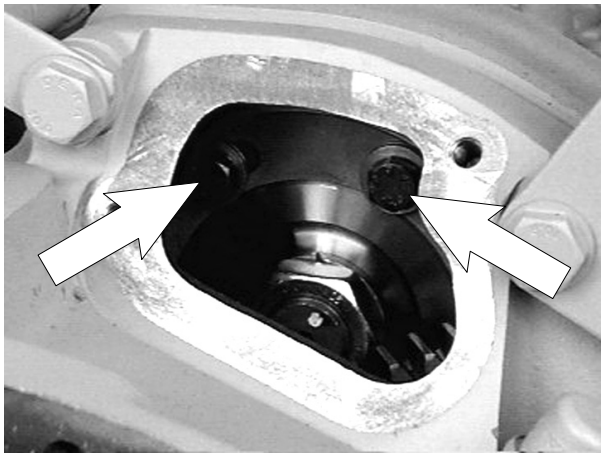

9

Fig. 10

Turn engine to specified angle for delivery start. Remove cylinder head cover from cylinder no. 6 (flywheel end). When the values of this cylinder are in crossover, the piston in cylinder no. 1 is at ignition TDC.
Remove screw plug from governor housing (see Fig. 5). The delivery start pointer must be visible in the centre of the inspection hole.
Fit a socket wrench to the mounting bolts and turn the injection pump camshaft at the drive flange to the left or right until the conditions stated under 1) or 2) (depending on test method) are met.

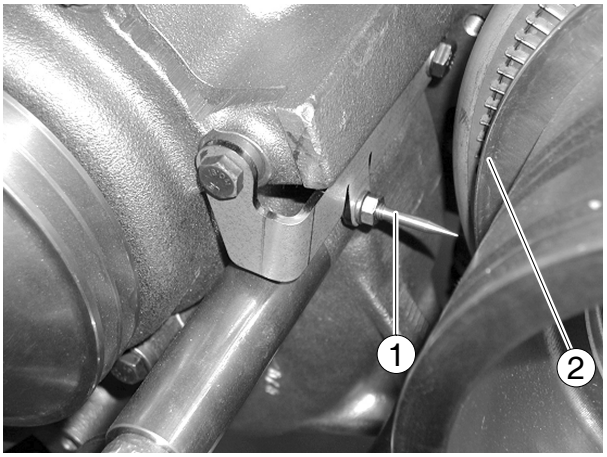

10

Fig. 11

Tighten bolts for fastening drive gear to drive flange consecutively to 5 Nm and then to 30 Nm.
Check delivery start once again.
Install timing case cover.

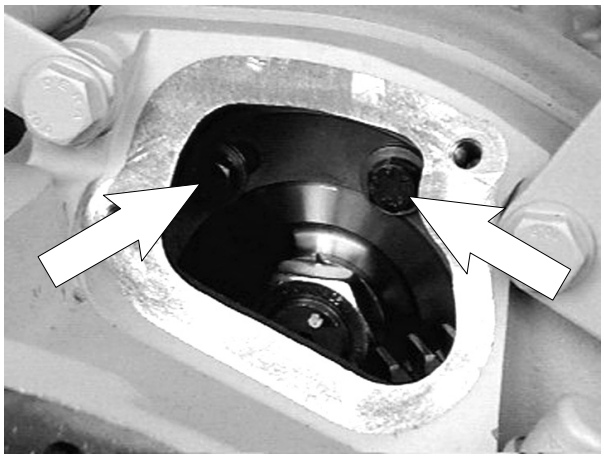

11

Removing injection pump

Fig. 1

On the injection lines, remove the union nuts at the injection nozzles and at the injection pump.

Detach all connections for fuel and EDC from the injection pump.

> **Caution:**
> The lines contain fuel!
> Catch escaping fuel in a suitable container.

After removal of the injection lines we recommend fitting caps to the connections on the injection nozzles and injection pump.
This prevents dirt from getting into the injection system.

> **Caution:**
> Dirt in the injection system causes:
> - nozzles to jam
> - the injection pump drive to break

Fig. 2

Remove holders (arrow) from injection pump.

Unscrew the mounting bolts from the injection pump flange.

Fig. 3

The engine-side mounting bolts are difficult to access.

Use the following special tools here:

① Cardan universal joint
② Extension
③ Socket wrench

Take off injection pump.

> **Caution:**
> The injection pump is heavy!
> Use lifting gear.

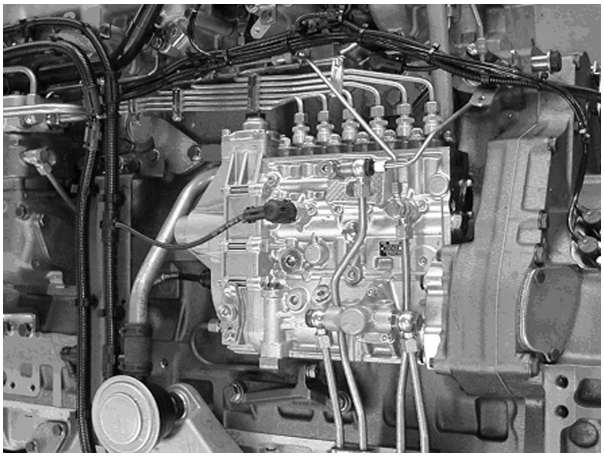

1

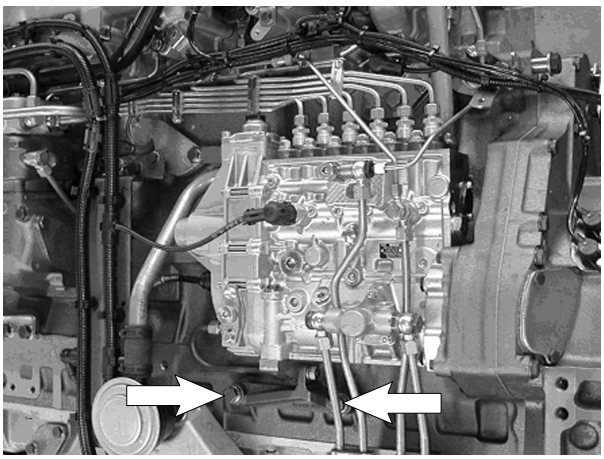

2

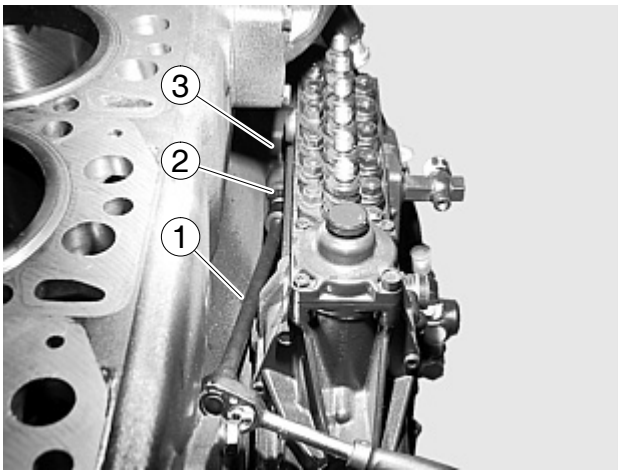

3

https://truckmanualshub.com/

Installing injection pump

Fig. 4

Caution:
If the injection pump is blocked, the camshaft must on no account be loaded or rotated because parts of the blocking pin may break off and drop into the governor. **Failure to comply with this instruction may result in serious damage to the injection pump!**

Remove screw plug ① on governor housing.
If fitted, take out blocking pin ②.

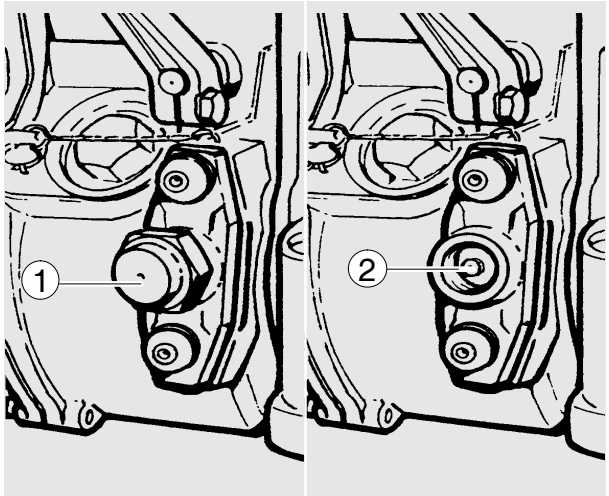

4

Fig. 5

Check whether the engine is at start of delivery.

Start of delivery see “Service Data”.

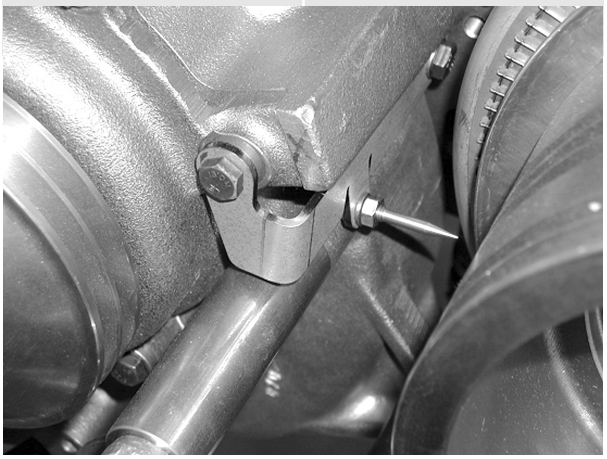
5

Fig. 6

Check whether the injection pump is at start of delivery. Remove screw plug from governor housing (fig. 4). The start of delivery pointer must be visible in the centre of the inspection hole.

Release the mounting bolts on the injection pump drive gear so that it can be turned in the elongated holes.

Hold the injection pump camshaft in place while turning the gear.
Fit a new O-ring (lightly oiled) on the injection pump flange.

Insert the injection pump and tighten the mounting bolts to specified torque.

6

Fig. 7

Provisionally tighten all the mounting bolts of the gear through the inspection hole to 5 Nm. Two complete engine revolutions are necessary for this.

Now tighten down all the mounting bolts to 30 Nm.

Check and if necessary set start of delivery (see page 24).

Install timing case cover.

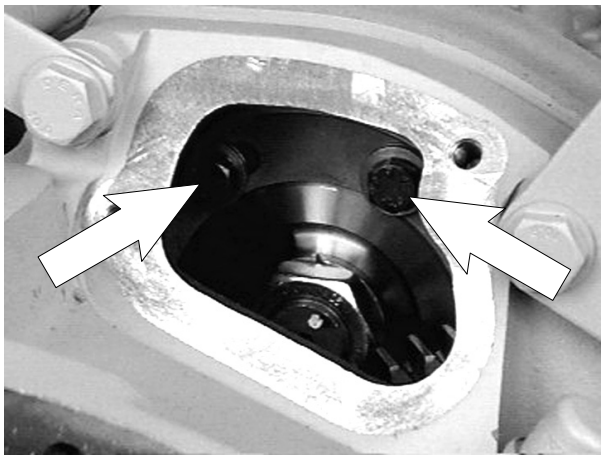
7

https://truckmanualshub.com/

Removing injection nozzles

Fig. 1

Remove injection lines ①.

Unscrew mounting bolts of the connecting piece ②.

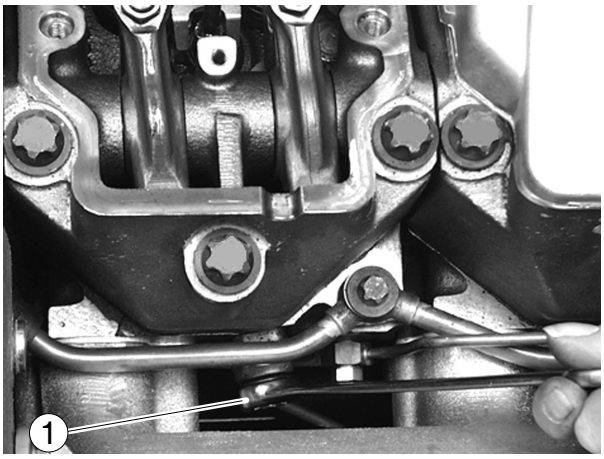

1

Fig. 2

Remove connecting piece ②.

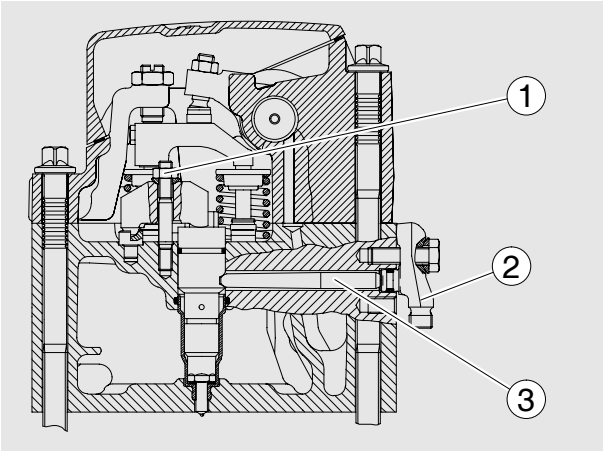

2

Fig. 3

Pull the pressure pipe ③ out of the cylinder head.

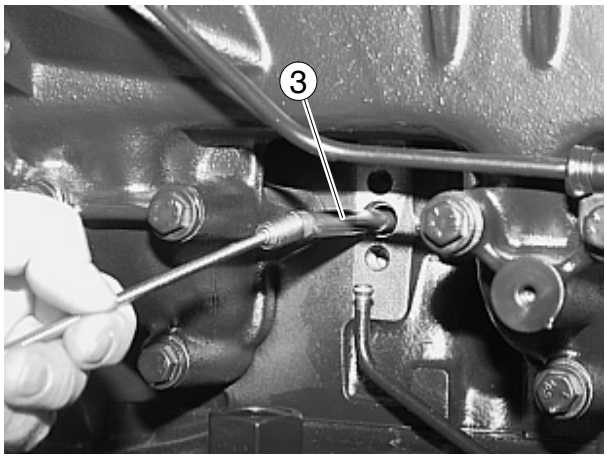

3

Fig. 4

Remove cylinder head covers.

The injector nozzle of the first cylinder is equipped with a needle movement sensor. Unscrew holder for cable (arrow).

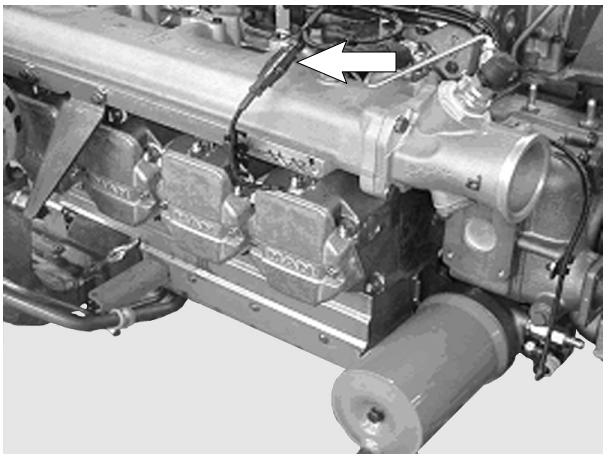

4

https://truckmanualshub.com/

Fig. 5

Remove the cover gasket with cable lead-through ①, unscrew mounting clamp ②.

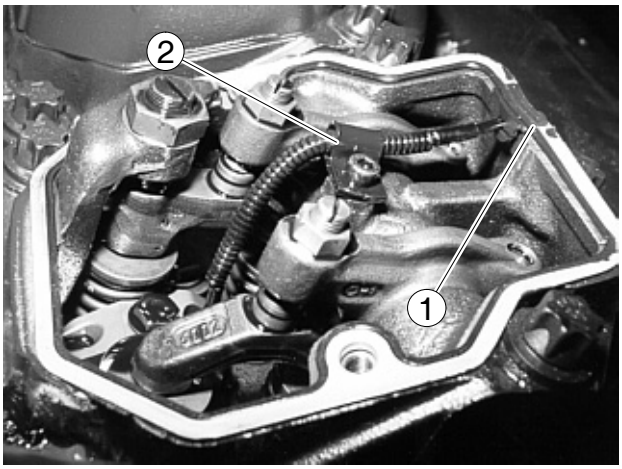

5

Fig. 6

Unscrew the mounting bolt ① of the pressure flange (see item ②) and remove the pressure flange.

Take off centring washer and pressure flange.

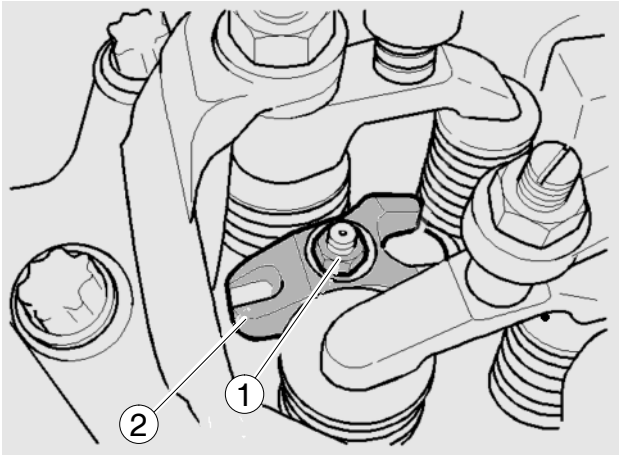

6

https://truckmanualshub.com/

Extractor for injection nozzles

Fig. 7

Extractor tube for injector nozzles (special tools, see item. 26.1, page 169).

① Knurled nut
② Extractor with slit for the passage of the cable for the needle movement sensor
③ Bridge

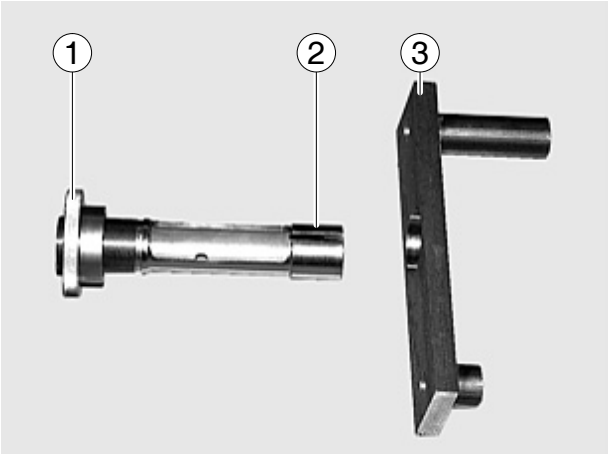

7

Fig. 8

Thread the needle movement sensor through the extractor tube slit ② and up the connector up through the tube.
Screw the extractor tube onto the injection nozzle.

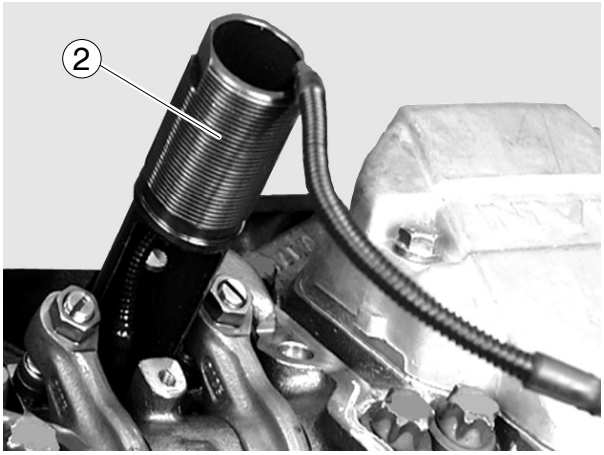

8

Fig. 9

Place bridge ① over the extractor tube.
The bridge rests on the cylinder head bolts.
Screw on knurled nut ③.

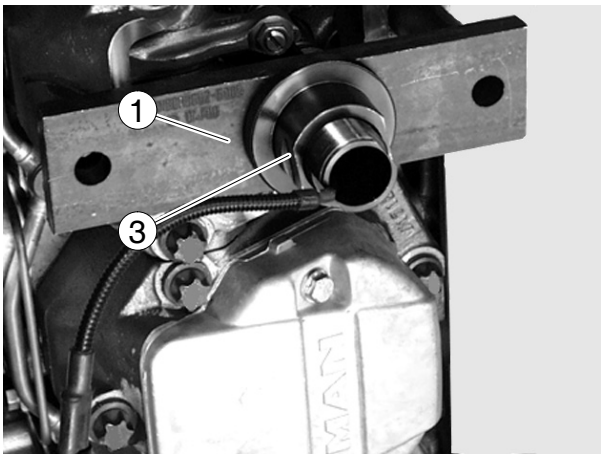

9

Fig. 10

Withdraw the injection nozzle by turning the knurled nut.
Clean the nozzle seat in the nozzle bushing.

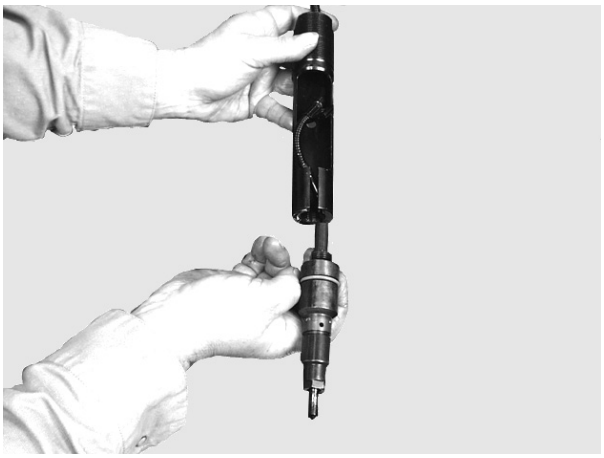
10

https://truckmanualshub.com/

Installing injection nozzles

Fig. 11

Insert new O-ring ① and new copper sealing ring ③.
Grease the O-ring.

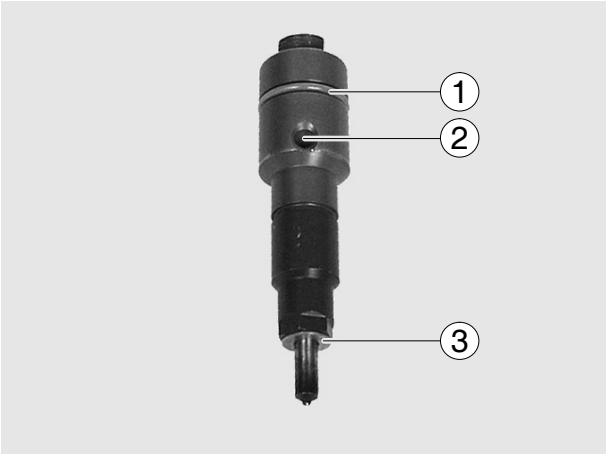

11

Fig. 12

Insert the injection nozzle into nozzle bushing ③ so that inlet hole ② (see also item ② in Fig. 11) points to the hole for pressure pipe ① in the cylinder head.
Press in the injection nozzle by hand as far as it will go.

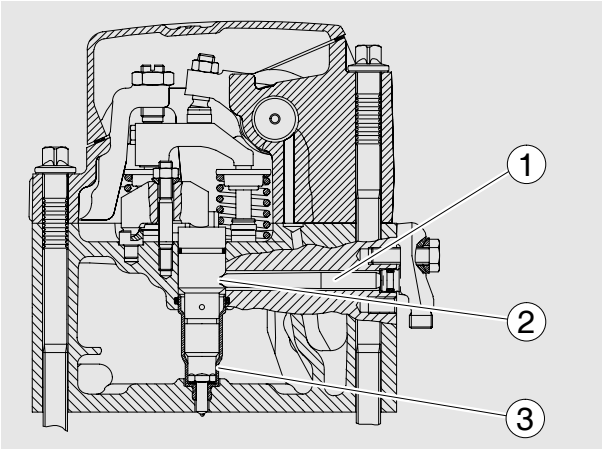

12

Fig. 13

Fit pressure flange and provisionally tighten mounting nut to 10 Nm.

13

Fig. 14

Insert pressure pipe into the cylinder head.

> **Caution:**
> The thin end of the pressure pipe points towards the injection nozzle.

Replace the O-ring and apply a light coating of grease.
Insert the connection piece and align it so that the injection line can be connected without tension.

Apply initial torque of 10 Nm to injection line.

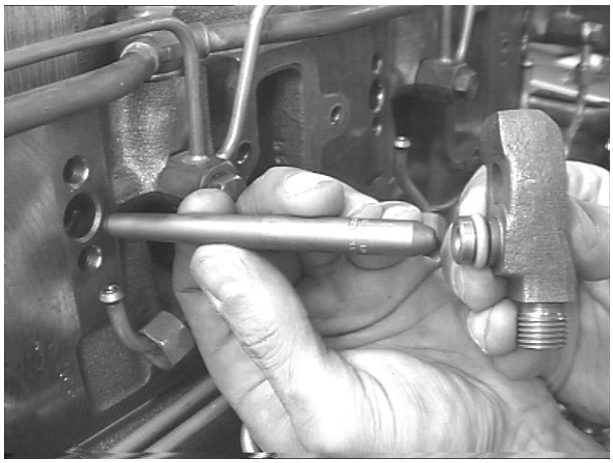
14

https://truckmanualshub.com/

Fig. 15

Apply initial torque of 10 Nm to mounting bolt on connection piece.

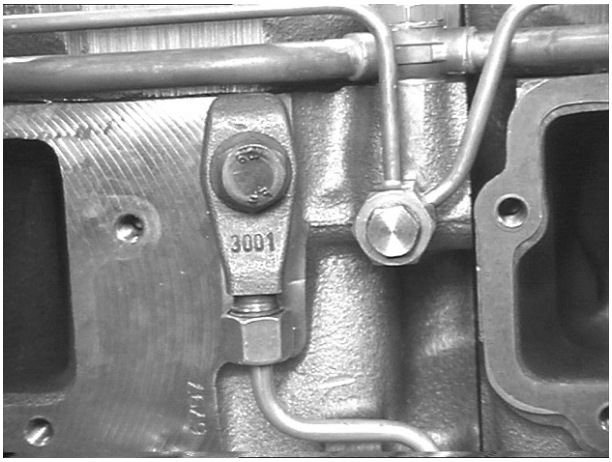

15

Fig. 16

Tighten the mounting nut of the pressure flange (arrowed) first to 25 Nm and then to an angle of 90°.

Then tighten connection piece to 20 Nm and afterwards tighten it using a 90° torque wrench.

16

Fig. 17

Secure the injection line .

Initial installation:

Angle tightening: . . . . . 60°

Subsequent installation:

Angle tightening: . . . . . 30°

Afterwards tighten the mounting nut on the compression flange.

Angle tightening: . . . . . 45°

Let engine warm up

Angle tightening: . . . . . 90°

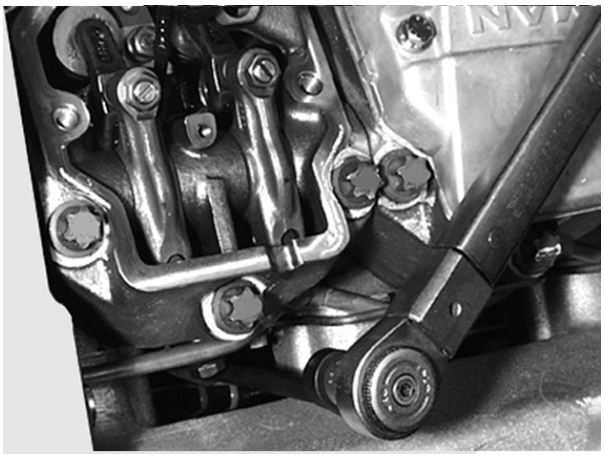

17

https://truckmanualshub.com/

Check tightness of nozzle holder base, pressure pipe and leak-oil line

Caution:
After the injection nozzles have been installed, always check to ensure that the nozzle holder seat, pressure pipe and leak–off oil lines do not leak.

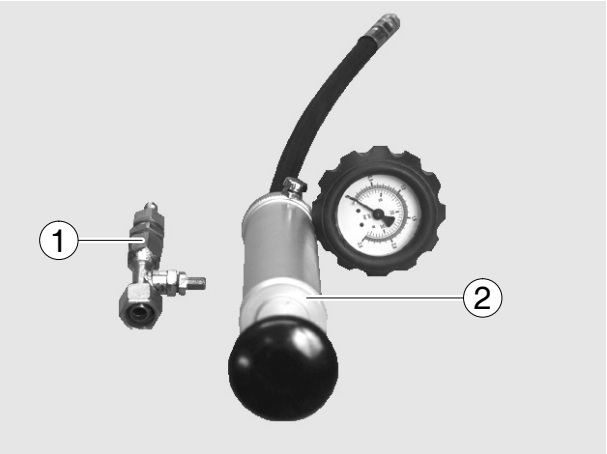

18

Fig. 18

① Adapter for connecting up the compressed air hand pump (to make yourself)
② Compressed air hand pump with pressure gauge, special tool, see item. 25, page LEERER MERKER.

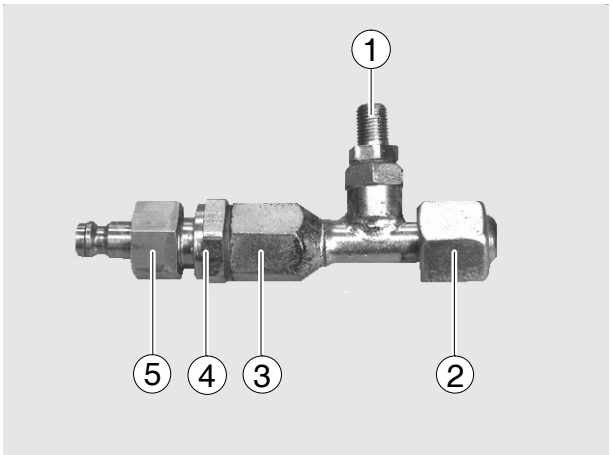

19

Fig. 19

Make adapter item ①, fig. 19 from standard parts

① T-connector for connecting up a pressure gauge with internal thread M8x1, is not necessary if the compressed air hand pump with pressure gauge item ②, fig. 18 is used and it must be closed
② Union nut M16x1,5
③ Connector M14x1,5
④ Adapter GE 8-PLR 1/4”
⑤ Connector fitting for compressed air hand pump (ewo, part-number 320.031)

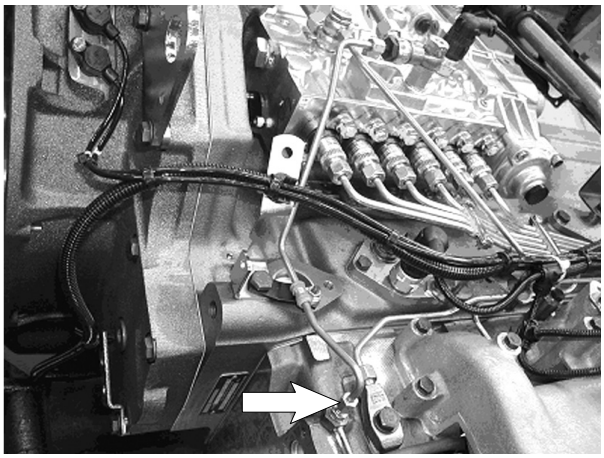
20

Fig. 20

Proceed as follows:

- Loosen injection lines on the connector fitting or on the injection pump
- Close fuel feed, e.g. on fuel pre-cleaner with taper plug VKA10
- Connect compressed air hand pump to fuel return (arrow) with screw connector
- Pump approx. 2 bar pressure to fuel system

Caution:
The pressure must not drop for a period of 3 minutes.

- Tighten up the injection lines again with the specified torque, see page 34.
- Reconnect leakage fuel return line

Checking injection nozzle

Fig. 1

The nozzle tester (hand tester) is used to check the

- – opening pressure (injection pressure),
- – leak-tightness and
- – spray pattern of each injection nozzle.

Use pure calibrating oil or pure diesel fuel for the test.
Prior to testing, clean the nozzle and check it for wear.
Check the nozzle with its nozzle holder.

1

> **Danger:**
> The high injection pressure can cause serious injury. Do not place hands under the jet spray.
> Wear safety goggles.

Fig. 2

① Testing device
② Inlet connection

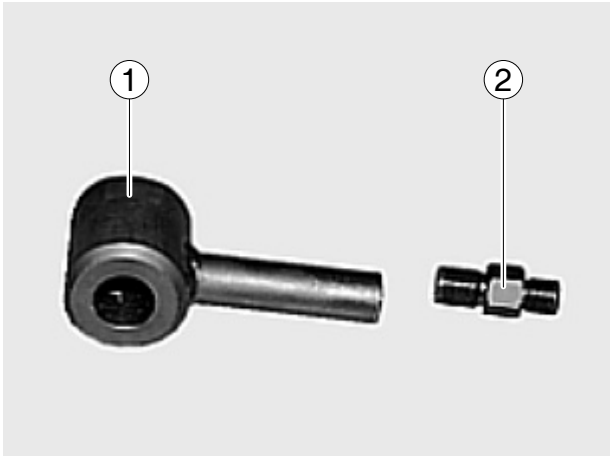

2

Fig. 3

Feed the needle movement sensor cable through the testing device.

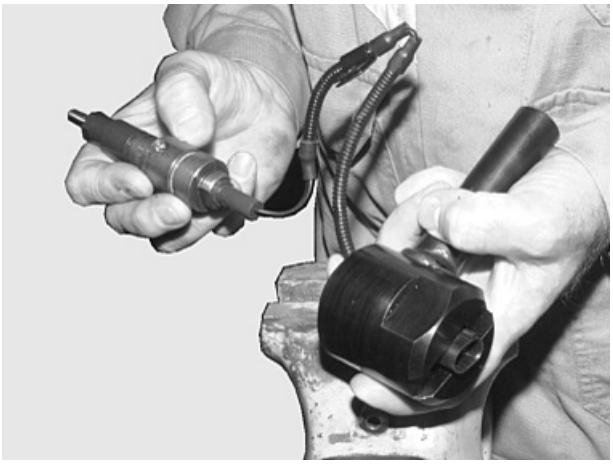
3

Fig. 4

Insert the injection nozzle with inlet hole ① towards the guide tube for pressure pipe ② in the testing device.

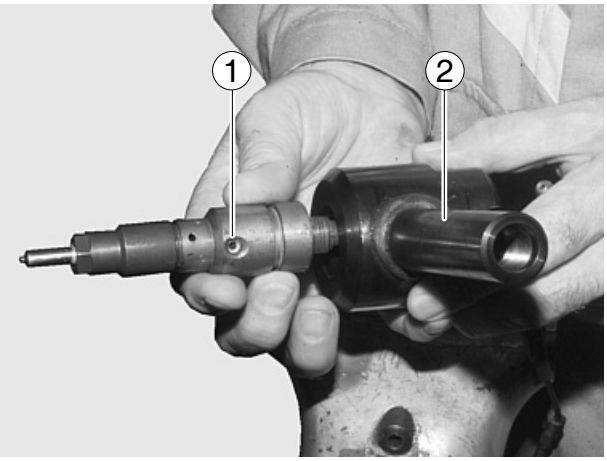

4

https://truckmanualshub.com/

Fig. 5

Insert the pressure pipe with edge-type filter ① into the guide tube.

Note:
The thin end of the pressure pipe points towards the injection nozzle.

Screw inlet connection ② into the guide tube and tighten up.

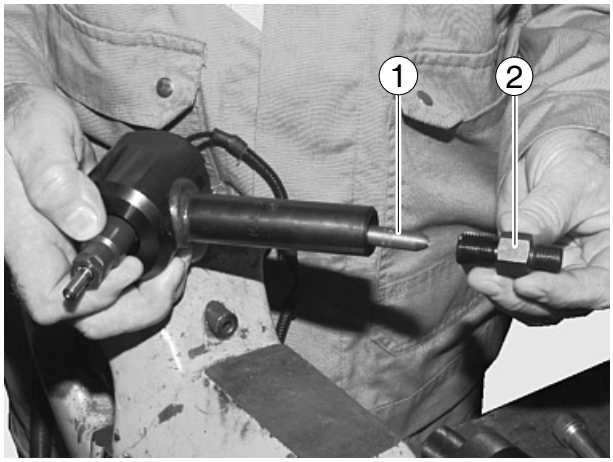

5

Fig. 6

Connect the pressure line of the tester to the injection nozzle inlet connection.

6

https://truckmanualshub.com/

Cleaning fuel prefilter

Figs. 1 and 2

Strip the fuel prefilter ①:

- Unscrew knurled nut of prefilter
- Swing out retaining arm and take out filter housin ③ with strainer filter ②
- Clean filter housing and strainer in clean diesel fuel and blow out with compressed air
- Re-assemble in reserve order

- Switch on EDC (if EHAB is fitted)
- Operate the plunger on the hand pump until the overflow valve in the injection pump can be heard to open
- Screw in and tighten the hand pump plunger
- Start the engine
- Check the fuel prefilter for leaks

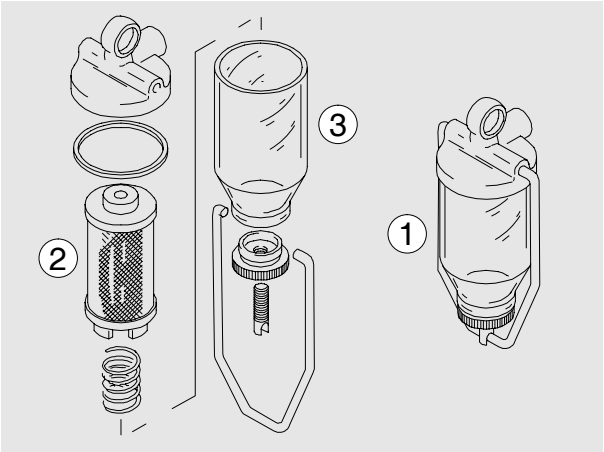

1

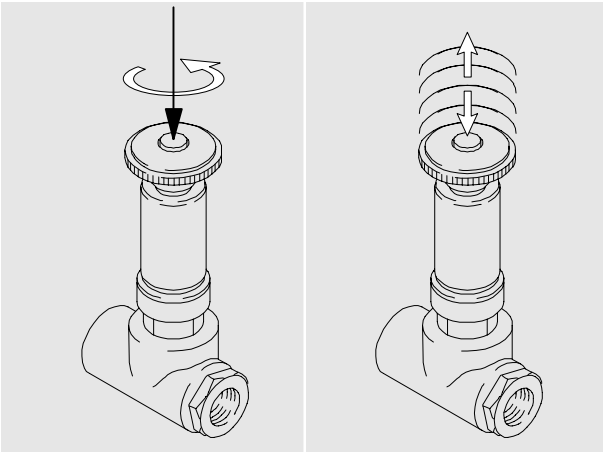
2

Cleaning fuel prefilter

Figs. 3 and 4

Strip the fuel prefilter:

- Remove filter housing ①
- Wash out filter housing ① and gauze filter ② in clean Diesel fuel and blow them out with compressed air
- Reassemble with a new seal
- Screw on filter housing and tighten it to 10 – 12 Nm

- Actuate tappet of hand primer until overflow valve of injection pump is heard to open
- Screw in and tighten the hand pump plunger
- Start the engine
- Check the fuel prefilter for leaks

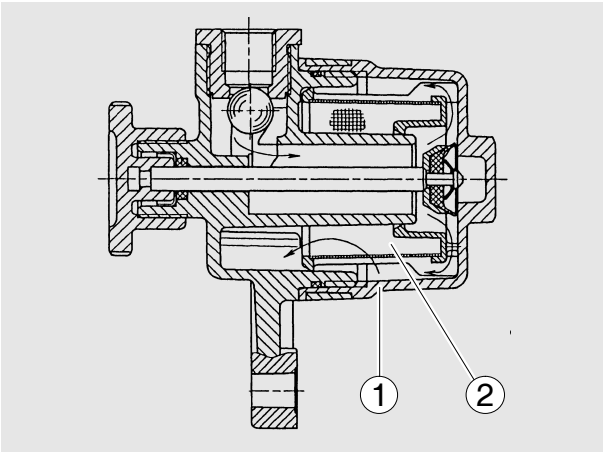

3

4

https://truckmanualshub.com/

Fuel prefilter with water separator

Fig. 5

Draining water:

- Open drain screw ① and let off water.
- Close drain screw ① again

Changing filter element

Only when the engine is swiched off.

- Remove inspection glass ② and filter element ③
- Wet seal on new filter with fuel
- Screw on filter ③ and inspection glass ② by hand
- After this, bleed the fuel system
- Check the filter for leaks

Caution:
Used fuel filters are classed as dangerous waste and must be disposed of accordingly.

5

https://truckmanualshub.com/

Changing fuel filter

Only when the engine is swiched off.

Figs. 1 and 2

- Remove filter cartridge using tape wrench.
- Wet seal on new filter with fuel
- Screw on filter by hand
- After this, bleed the fuel system
- Check the filter for leaks

Caution:
Used fuel filters are classed as dangerous waste and must be disposed of accordingly.

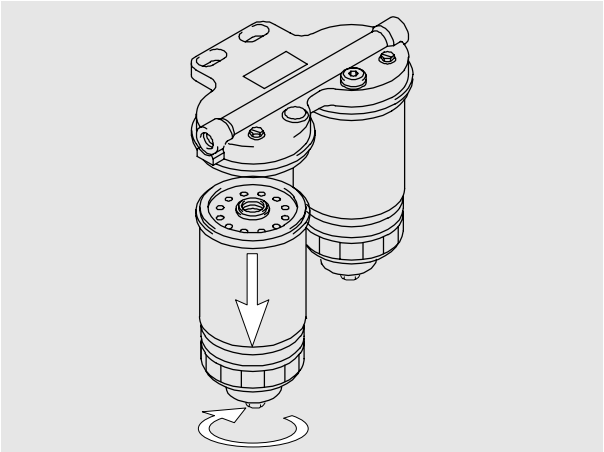

1

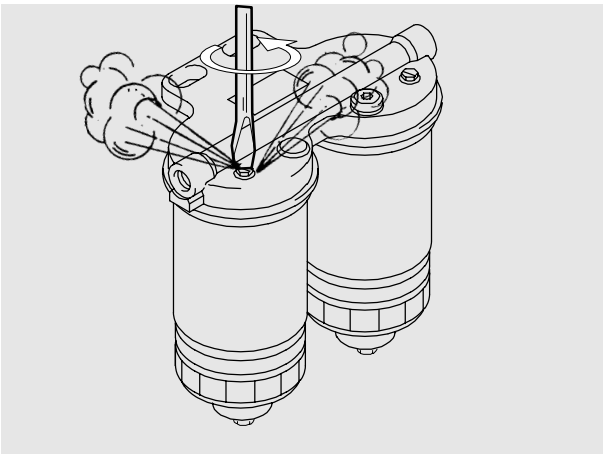

2

Bleeding the fuel system

Figs. 3 and 4

Note:
To bleed the fuel system switch on the “ignition” so that the EHAB will be open.

An arrow on the filter head indicates the direction of fuel flow.

- Unscrew the vent screw of the first filter in the direction of flow by one or two turns
- Actuate tappet of hand primer until fuel emerges without bubbles
- Screw in and tighten the hand pump plunger
- Close bleed screw
- Repeat this procedure at the second bleed screw
- Check the filter for leaks

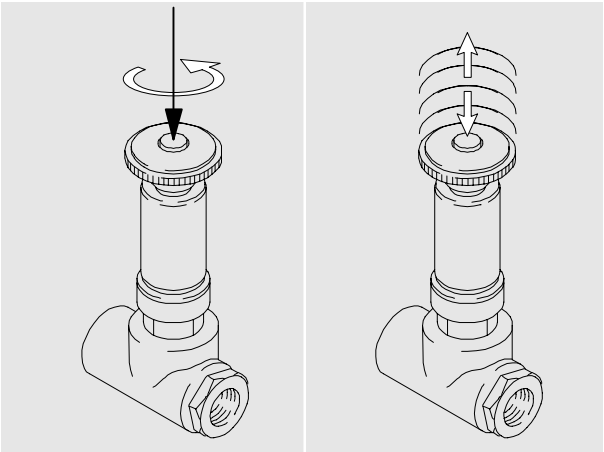

3

4

https://truckmanualshub.com/

Removing sheathed-element glow plug

Fig. 1

Disconnect the electric connections from the sheathed-element glow plug.

Remove fuel line carefully.

Loosen counter nut on sheathed-element glow plug and remove glow plug.

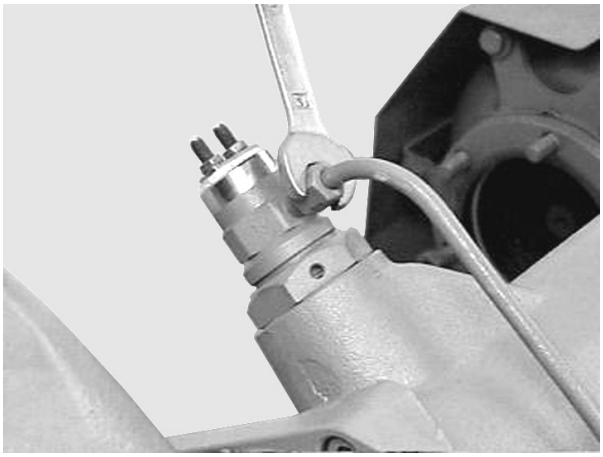

1

Installing sheathed-element glow plug

Fig. 2

Turn counter nut on sheathed-element glow plug upwards until it stops.
Screw in sheathed-element glow plug with “Hylomar” until it stops at the counter nut and align it with fuel line.

Connect up fuel line and electric connection.
Tighten counter nut.

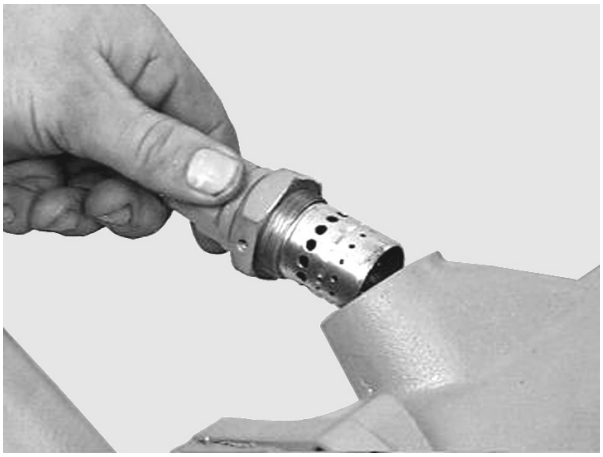

2

Checking solenoid valve for leaks

Remove fuel line from flame glow plug.
When the engine is running and hot, no fuel must emerge.

Removing solenoid valve

Fig. 3

- Remove fuel lines
- Remove electric connection from valve
- Remove the two hex bolts and take off valve

The valve cannot be repaired.
Exchange the defective valves.

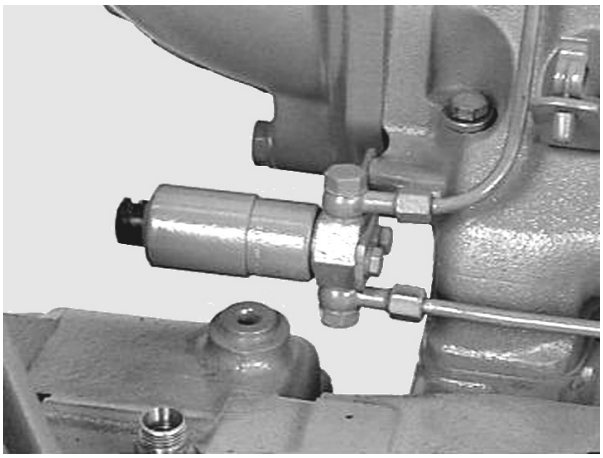

3

Fitting solenoid valve

- Screw valve to holder
- Screw on electric connection
- Fit the fuel lines with new sealing rings

Note:
For detailed description see
“EDC repair manual”.

Draining coolant

Danger:
When draining hot coolant, there is a danger of scalding!

Drain coolant as follows when cooling system has cooled down

Note:
Collect the drained coolant and dispose of it in accordance with regulations!

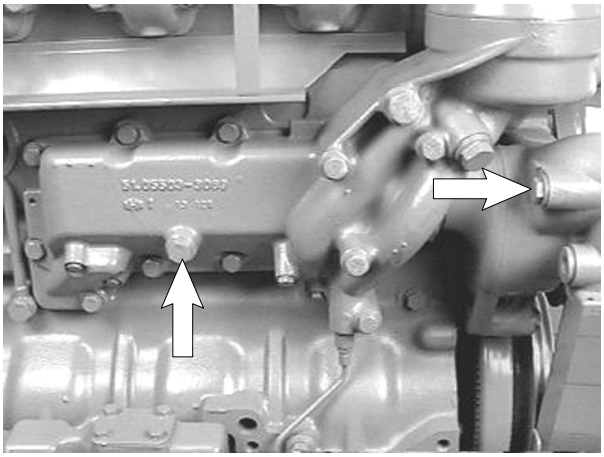

To drain the coolant open one or both of the drain plugs (arrows). There is a further drain plug on the coolant elbow in the exhaust-gas recirculation system; use a container of sufficient size to catch the coolant.

Catch emerging coolant in a suitable container.

Fill / bleed the cooling system (only when engine has cooled down)

The cooling system of the engine is to be filled with a mixture of drinking water from the mains and anti-freeze based on ethylene glycol and/or anticorrosion additive.
See Publication “Fuels, Lubricants and Coolants for MAN Diesel Engines”.

Coolant must be poured in according to the vehicle manufacturer’s filling specifications.

Do not pour any cold coolant into an engine which is still warm.

Ensure that the ratio of water to anti-freeze is correct.

- Pour in coolant slowly until the correct coolant level is reached (max. 10 ltr./min.)
- Open the drain plug on the coolant elbow in the exhaust–gas recirculation system and bleed the exhaust-gas recirculation module
- Run the engine briefly and then check coolant level once more

Danger:
If, in exceptional cases, the coolant level on warm engines has to be checked or the cooling circuit opened, observe the vehicle manufacturer’s safety regulations.

https://truckmanualshub.com/

Note:
If the thermostat is fitted to the outside, short-circuit inserts instead of thermostat inserts are installed in the engine.

- Drain off coolant, see page 42

Remove the three mounting bolts from coolant neck ① and take off coolant neck.

Take out thermostats.

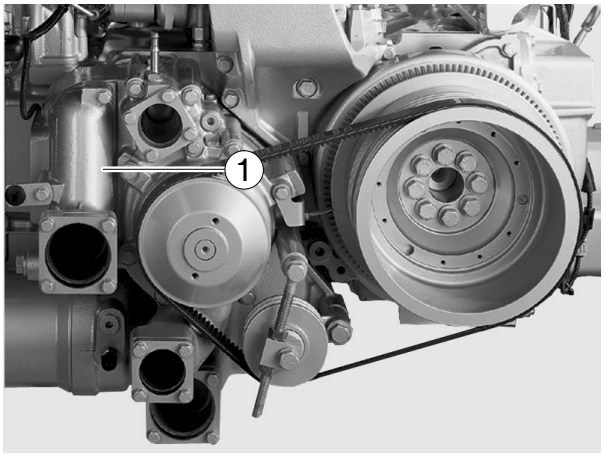

Check the function of the thermostat insert as follows.

- Suspend the thermostat in a bowl of water
- Heat up the water
- Using a suitable thermometer, ascertain the start of opening and compare it with the set-point value in “Service data”
- If necessary, measure the opening stroke

Replace defective thermostats.

Install thermostat inserts with ball valve facing upwards (TOP) with new O-ring ① and new seal ②.

Caution:
Never let the enging run without thermostats or short-circuit inserts.

https://truckmanualshub.com/

Removing coolant pump

- Draining off coolant, see page 42
- Remove the thermostats, see page 43

Take V-belt off, see page 133.

Fig. 1

Remove al bolts from the hub.

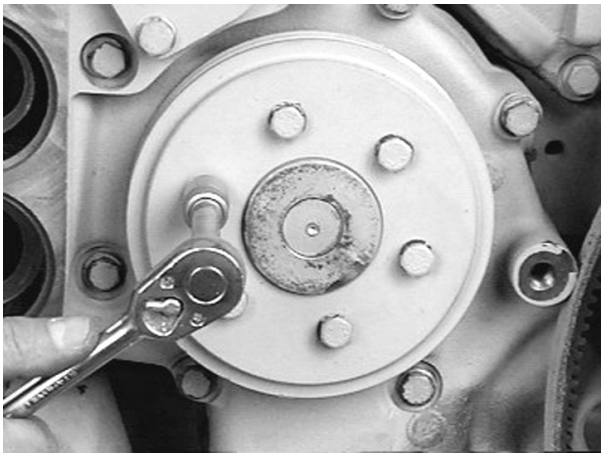

1

Fig. 2

Release the coolant pump mounting bolts and remove the coolant pump.

Clean the sealing faces on coolant pump and engine housing.

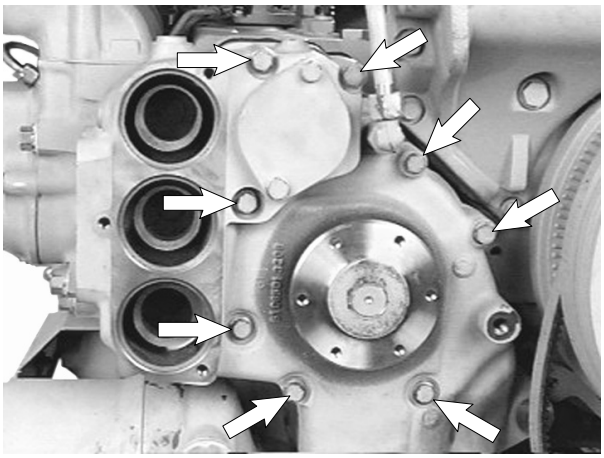

2

https://truckmanualshub.com/

Instaling coolant pump

Fig. 3

Renew O–ring.

Fit coolant pump with new seal.

Tighten the securing bolts with the prescribed torque.

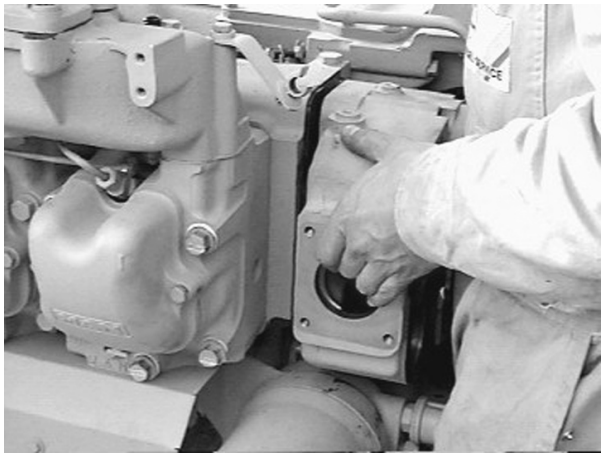

3

Fig. 4

Refit V-belt pulley and coolant neck.

Insert thermostat insert, see page 43.

Fit and tension the V-belt see Page 134.

Fill coolant, see page 42

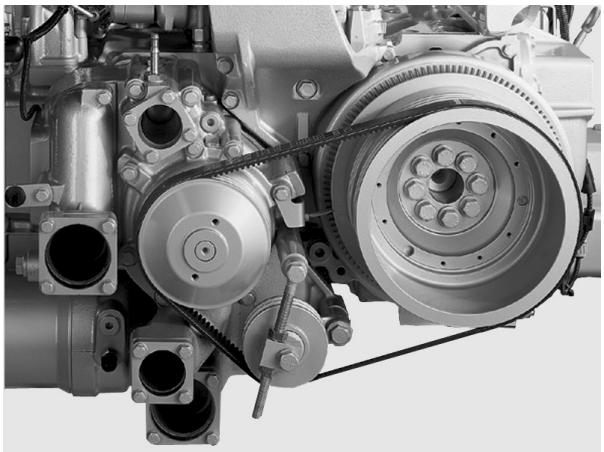

4

Note:
Exchange or repair coolant pump only if it has been found to be leaky.

The design of the coolant pump mechanical cassette seal permits small amounts of coolant to pass through it. This coolant passing through results in a trace of drained coolant below the drain bore. The coolant pump need not be exchanged or repaired because of this trace of permeating coolant.

For this reason, before replacing or repairing a coolant pump, ascertain

- whether the cooling circuit shows visible and recurring signs of coolant loss; if yes
- whether the coolant loss is caused by spillage from the expansion tank (e.g. too full) or by other leakages from hoses, radiator etc.

Coolant pumps must be exchanged only if water drips visibly while the engine is in operation or after the engine has been switched off.

https://truckmanualshub.com/

Fig. 1

① Pump housing
② Impeller
③ Cap
④ Mechanical seal
⑤ Coolant pump bearing
⑥ Hub
⑦ Circlip

Removing the coolant pump, see page 44

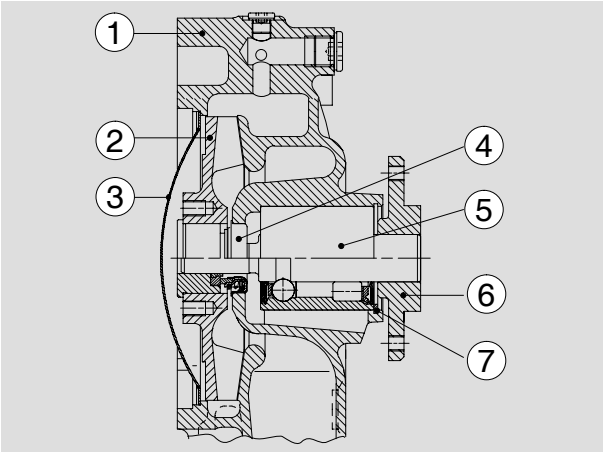

1

Disassembling coolant pump

Fig. 2

Clamp coolant pump in vice (using soft jaws).

Pull off V-belt pulley with three-arm puller.

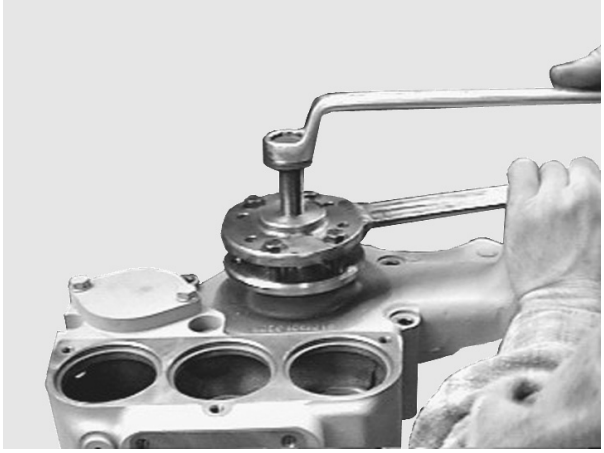
2

Fig. 3

Unclip the circlip from the coolant pump housing.

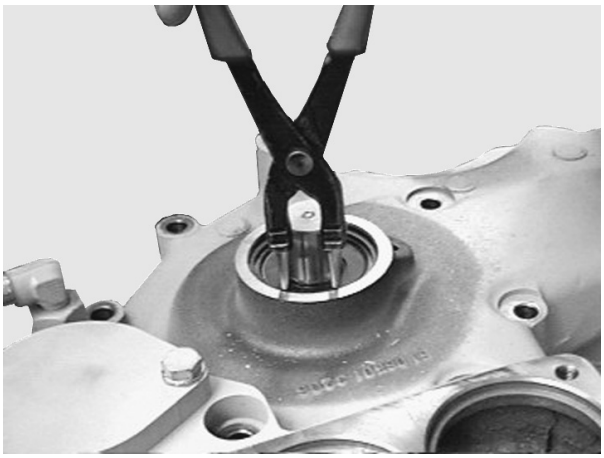
3

Fig. 4

Knock out cover by driving a suitable mandrel under it (Fig. 1, item ③) at notch (arrow).

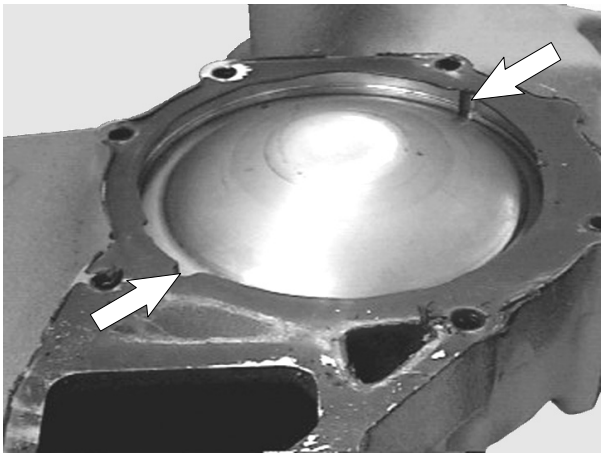
4

https://truckmanualshub.com/

Fig. 5

Pull impeller off the coolant pump bearing.
For this purpose four M8 threaded bores are provided.

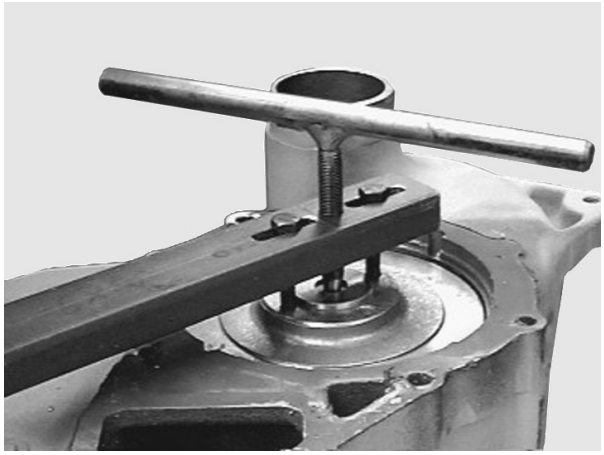

5

Fig. 6

Align water pump housing on a suitable and stable surface.

Use suitable mandrel to press the coolant pump shaft with bearing out of the housing.
Shaft and bearing are encapsulated and replaced as a single unit only.

Take off axial face seal.

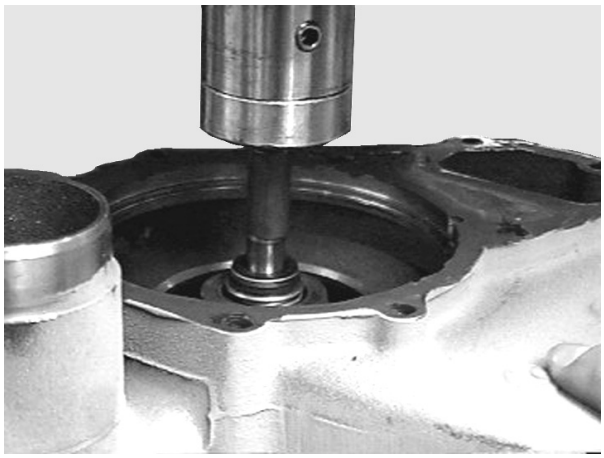

6

Reassembling coolant pump

Fig. 7

Press in coolant pump bearing.

For this purpose use suitable pressing die to ensure that pressure is applied to the bearing outer ring and not to the bearing shaft.

Fit the circlip.

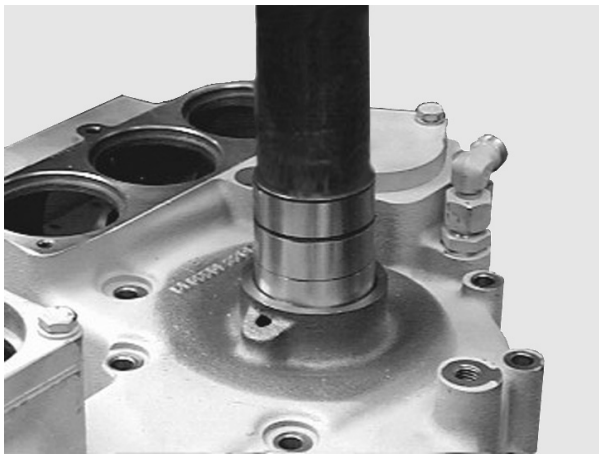

7

Fig. 8

Press boss flush on to bearing shaft.

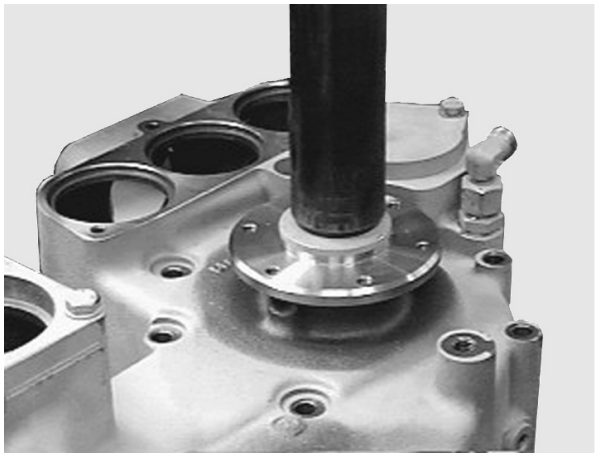

8

https://truckmanualshub.com/

Fig. 9

Turn water pump housing over and Press in new mechanical seal with press-fitting sleeve (special tool) until it stops.

Observe installation note for seal on page 50.

Note:
The seal can be exchanged even without removing the coolant pump shaft.

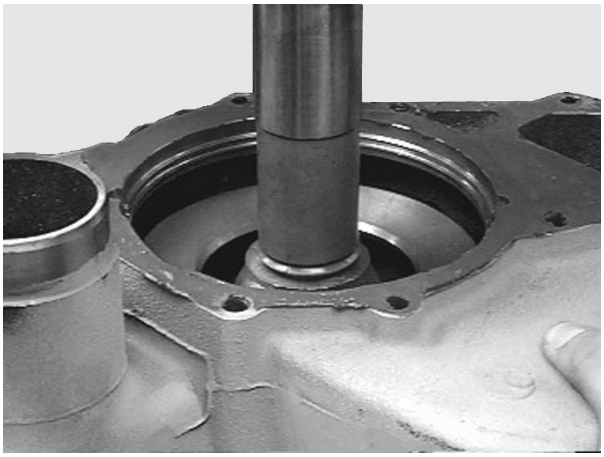

9

Fig. 10

Press impeller slowly on to bearing shaft to ensure correct gap.

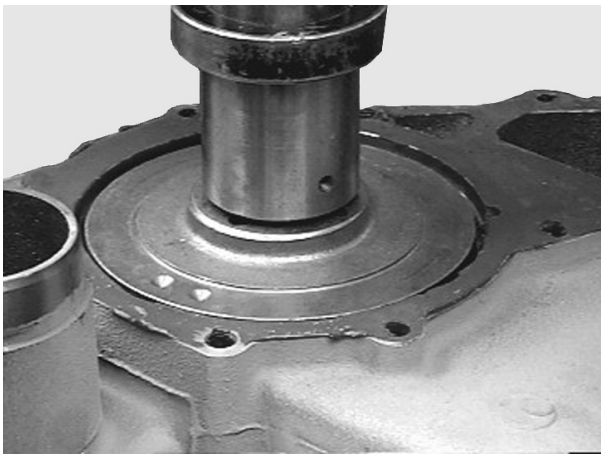

10

Fig. 11

For this purpose an inspection hole closed up with a screw plug (M16x1.5) is provided on the bottom of the coolant pump housing.

① Impeller
② Coolant pump housing

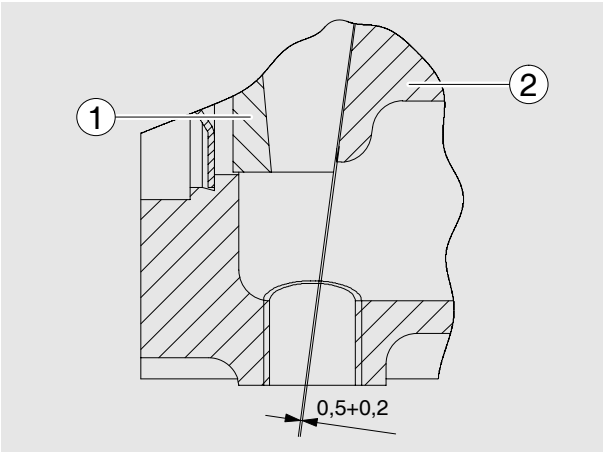

11

Fig. 12

Fit new pump cover and press it into housing, using a suitable pressing tool.

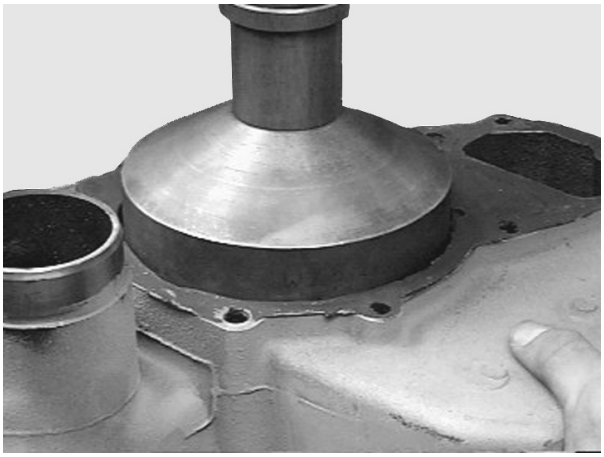

12

https://truckmanualshub.com/

Fig. 13

If no suitable pressing tool is available, you may use self-made special tools (see chapter “Special tools”) and proceed as follows:

- Align guide ring ② with the two dowel pins on the pump housing
- Insert pressing ring ① into guide ring
- Place a flat steel (min. thickness: 10 mm) on the pressing ring
- Press cover into housing using a press

Fit coolant pump with new gasket,
see page 44.

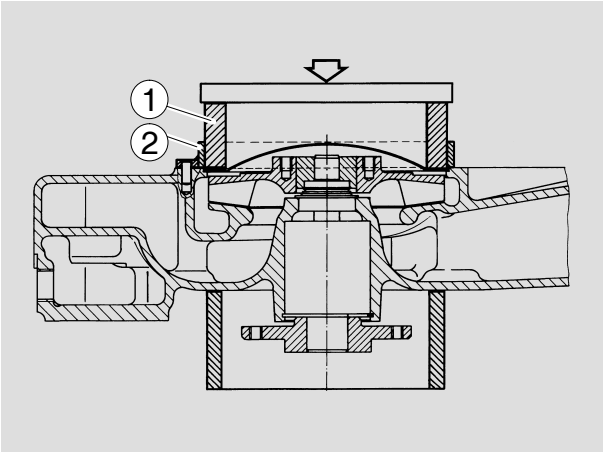

13

Replacing coolant pump during repair work only in event of identified leakage

The design of the coolant pump mechanical cassette seal permits small amounts of coolant to pass through it.
This coolant passing through results in a trace of drained coolant below the drain bore.
This trace of drained coolant does not mean that the coolant pump has to be replaced.

For this reason before exchanging or repairing a coolant pump ascertain

- whether the cooling circuit shows visible and recurring signs of coolant loss; if yes
- whether the coolant loss is caused by spillage from the expansion tank (e.g. too full) or by other leakages from hoses, radiator etc.

Coolant pumps may only then be replaced if dripping water can clearly be seen while the engine is running or after it has been turned off.

Installation note for mechanical seal

Fit the mechanical seal “wet”, i.e. when fitting, coat holding sleeve ④ and coolant pump shaft ① with a mixture of 50% water and 50% cleaning spirit or 40% to 50% antifreeze as per MAN 324 and water.
Other antiseize agents must not be used.

Because the seal on collar ② is coated with sealing paint, no sealing paint needs to be applied if the locating bore in the coolant pump housing is in perfect condition.
If the bore shows even the slightest scoring or other minor damage, a sealing bead of Dirko-Transparent, Part No. , must be applied to collar ②.
Fit the seal with a plastic transportation cap onto shaft ① and use installation tool ⑤ to press it in until the tool contacts the housing. Remove the plastic cap.

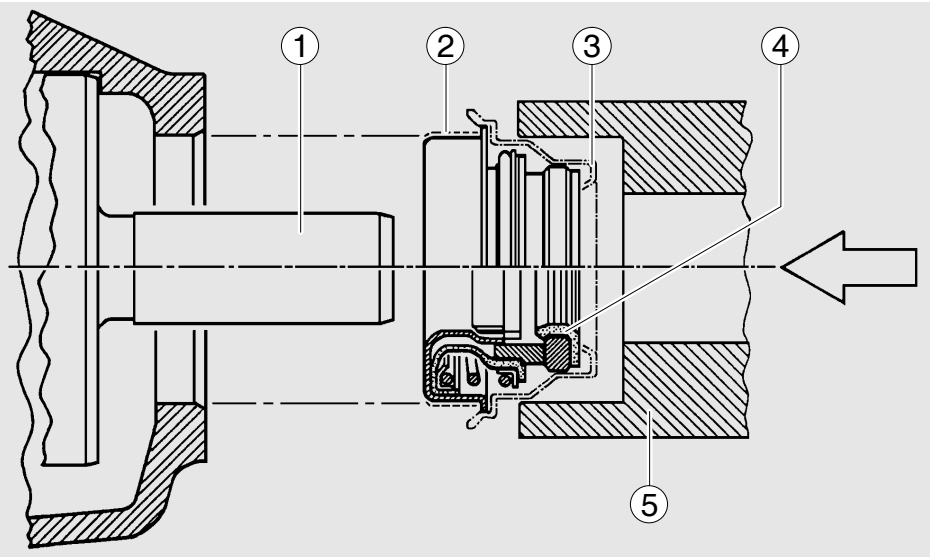

Note:
Tests have shown that most cases of damage to the coolant pump can be attributed to the use of unsuitable coolants.
Only the anticorrosion and antifreeze agents expressly approved by MAN Nutzfahrzeuge AG as per MAN norm 324 (see brochure “Fuels, Lubricants, Coolants for and MAN Diesel Engines”) guarantee faultless operation

https://truckmanualshub.com/

Coolant pump for three thermostats

Fig. 1 and 2

① Pump housing HT (high-temperature part)
② Pump housing LT (low-temperature suction part)
③ Hub
④ Bolt DIN 931–M8x155, hex nut DIN 934–M8
⑤ Bolt DIN 933–M8x358.8
⑥ Mechanical seal 51.06520–0085
⑦ Impeller for coolant pump, HT circuit
⑧ Mechanical seal 51.06520–0099
⑨ Counterring complete 51.06520–0100
⑩ Impeller for coolant pump, LT circuit
⑪ Splash shield
⑫ Mechanical seal 51.06520–0096
⑬ Coolant pump bearing
⑭ Drive shaft for coolant pump
⑮ Circlip
⑯ Coolant pump seal
⑰ Grooved ball bearing 6003
⑱ Cap

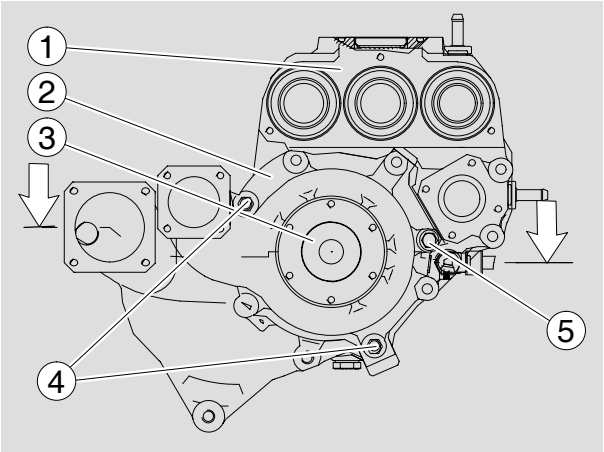

1

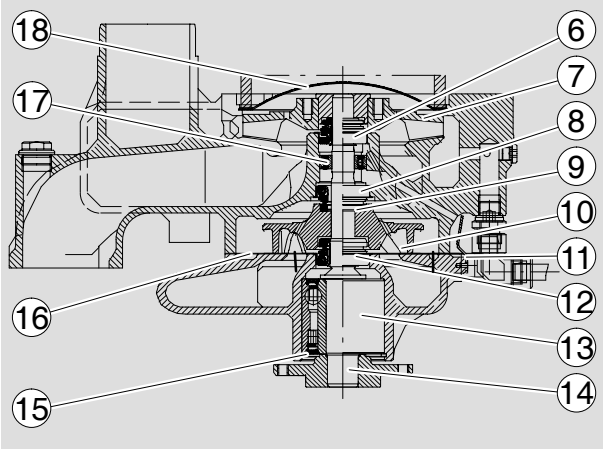

2

Disassembling coolant pump

Fig. 3

Removing the water pump, see page 44

Clamp water pump in a vice, use protective jaws.

Pull off boss with three-arm puller.

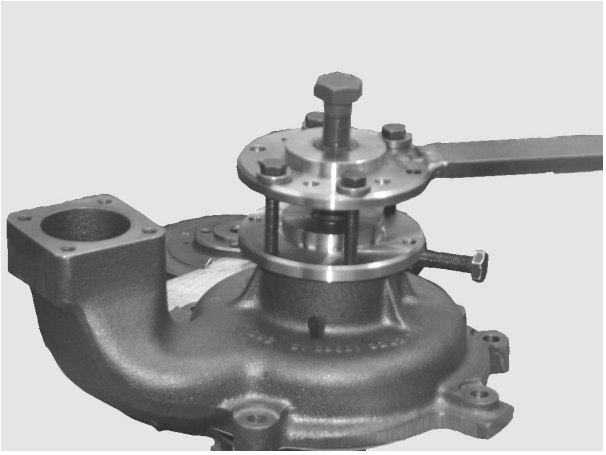
3

Fig. 4

Unclip the circlip from the coolant pump housing.

4

https://truckmanualshub.com/

Fig. 5

Knock out cover by driving a suitable mandrel under it (Fig. 2, item 18) at notch (arrow).

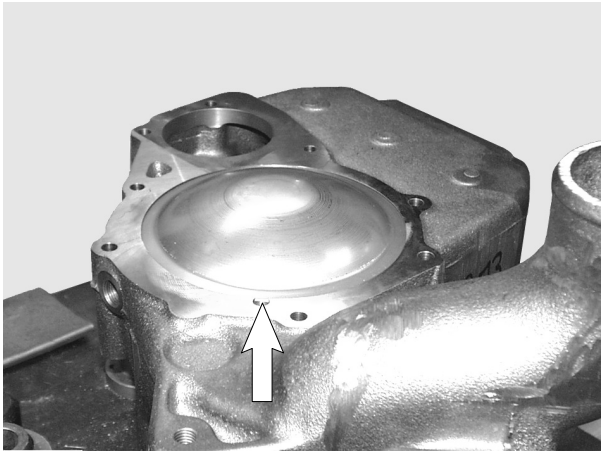

5

Fig. 6

Pull impeller off coolant pump shaft.

For this purpose four threaded bores M8 are provided.

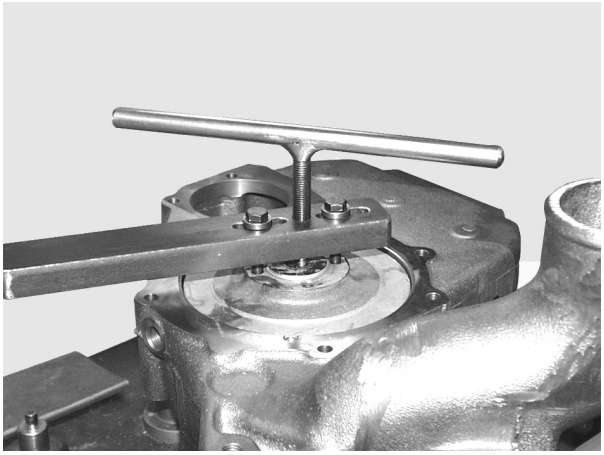

6

Fig. 7

Note:
Remove bolt from low-temperature part (Fig. 1, item 5).

Align water pump housing on a suitable and stable surface.

Use a suitable mandrel to press the water pump shaft together with bearing out of the housing.

Take off mechanical seal.

The high-temperature part and the low-temperature suction part are now separated.

Remove axial face seals and grooved ball bearing from high-temperature part if they are still in the housing.

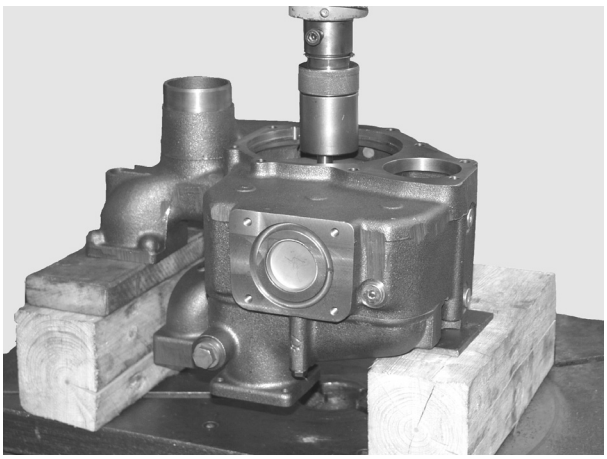

7

https://truckmanualshub.com/

Reassembling coolant pump

Fig. 8

Press in water pump bearing.

Fit the circlip.

Note:
If you change the seals always install a new shaft and axial face seals.

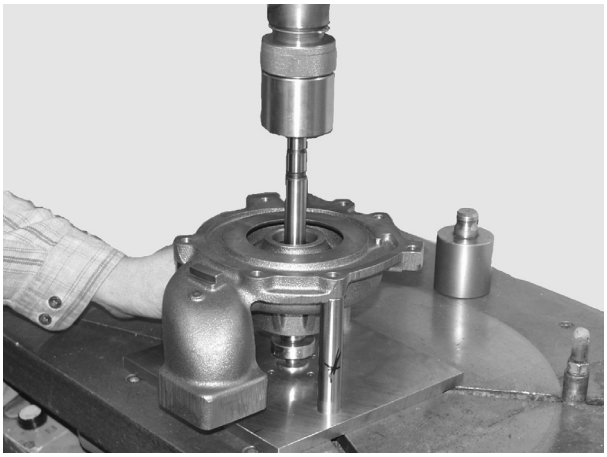

8

Fig. 9

Press boss flush on to bearing shaft.

Use suitable plates (80.99614–0027 and 80.99606–0628) to brace the bearing shaft.

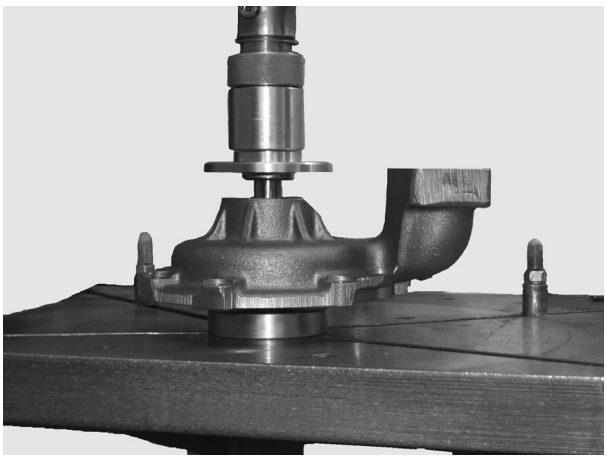

9

Fig. 10

Turn coolant pump over (for this support bearing shaft with 80.99606–0629) and press in new axial–face seal (Fig. 1, no. 12) using mandrel (80.99606–0252) until mandrel is in contact.

Observe installation note for seal on page 57.

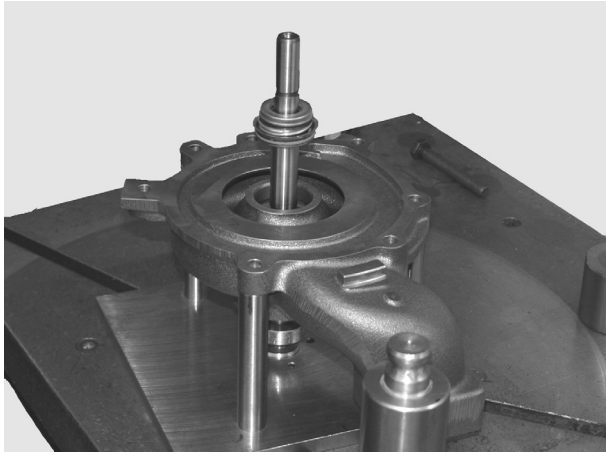

10

Fig. 11

Press in counterring (arrow) with a suitable pressing tool (may be possible by hand).

Install mechanical seal while “wet”, i.e. to install it, coat holding sleeve and water pump shaft with a mixture of either 50% water and 50% cleaning spirit or 40% to 50% antifreeze agent as per MAN 324 and water.

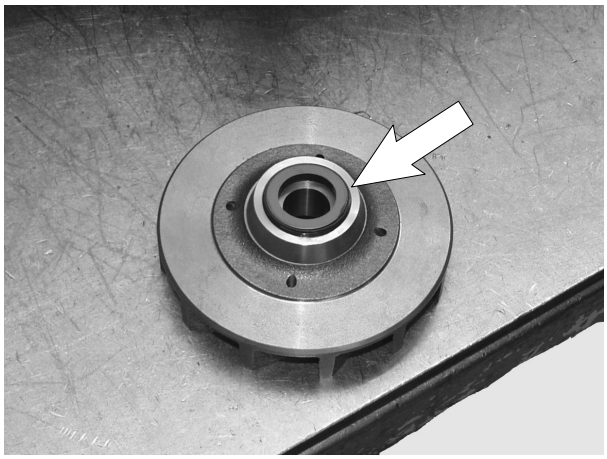

11

https://truckmanualshub.com/

Fig. 12

Note:
Brace the bearing shaft.

Press impeller slowly on to bearing shaft (mandrel 80.99604–0252) to ensure that the correct gap ($0{,}5^{+0{,}4}$) is achieved.

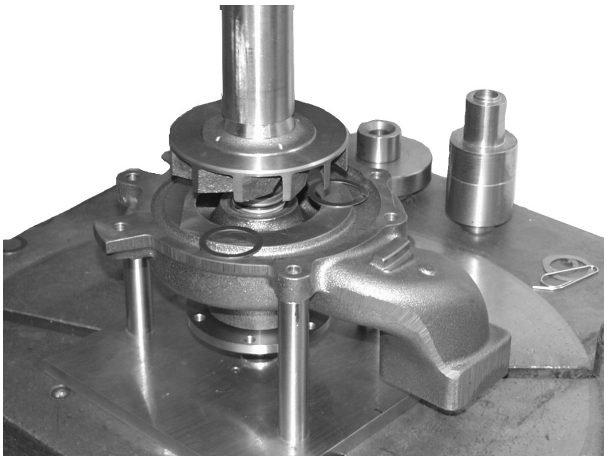

12

Fig. 13

Press axial–face seal (no. 8) into pump housing (no. 1) using pressing tool (80.99606–0252).

Observe installation note for seal on page 57.

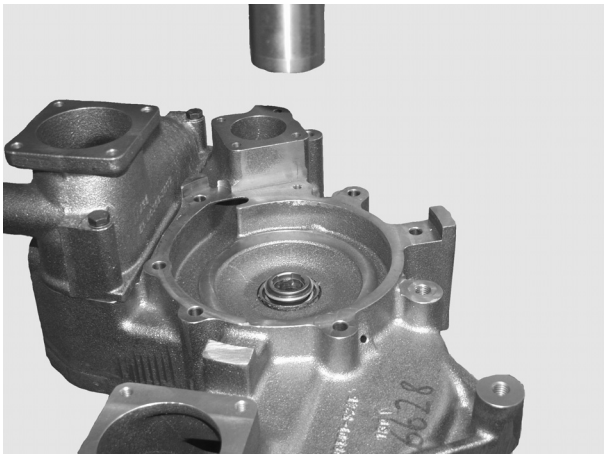

13

Fig. 14

Lay coolant pump gasket on pump housing.

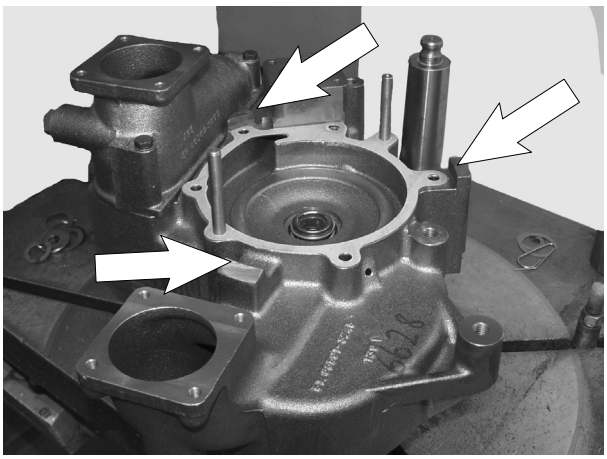

14

Fig. 15

Carefully fit low-temperature suction part to high–temperature pump housing.

To make assembly easier insert 2 pins in opposite sides of HT part (see Fig. 14)

Do not use force (hammer etc.) and note the 3 centring features (see arrows in Fig. 14).

Screw in bolt (Fig. 1, item 1).

Bolt LT and HT parts together with 2 bolts and nuts on opposite sides (Fig. 1, item 4).

15

https://truckmanualshub.com/

Fig. 16

Note:
For subsequent steps brace the bearing shaft.

Press grooved ball bearing 6003 into position using special die (80.99604–0254).

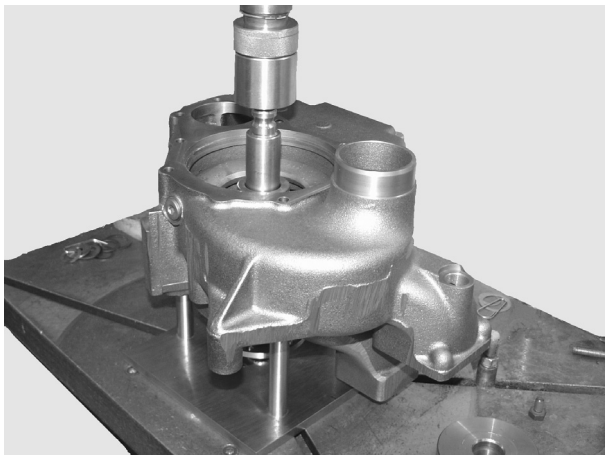

16

Fig. 17

Press axial-face seal (no. 6) into pump housing (no. 1) using pressing tool (80.99617–0191).

Observe installation note for seal on page 57.

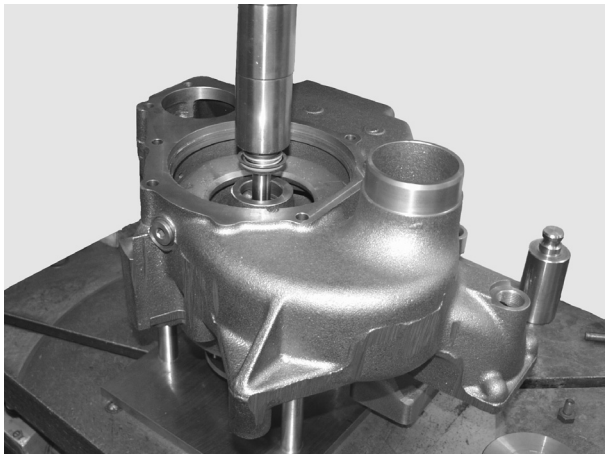

17

Fig. 18

Slowly press impeller on to bearing shaft to ensure correct gap.

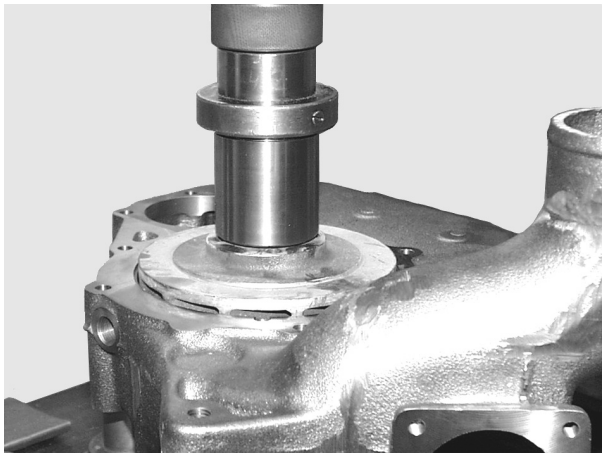

18

Fig. 19

For this purpose an inspection hole closed up with a screw plug (M16x1.5) is provided on the bottom of the coolant pump housing.

① Impeller
② Coolant pump housing

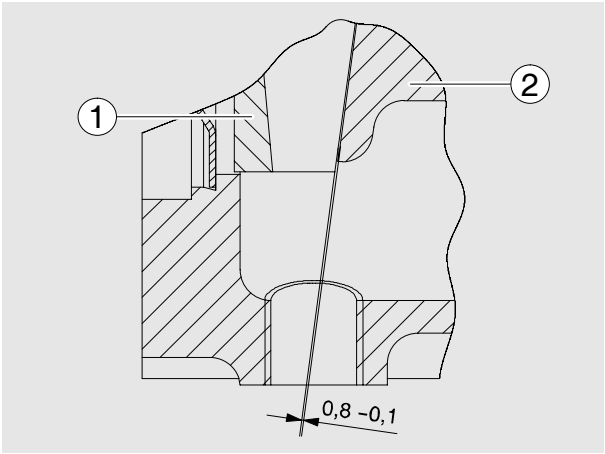

19

https://truckmanualshub.com/

Fig. 20

Fit new pump cover and press it into housing, using a suitable pressing tool.

Fit coolant pump with new gasket, see page 44.

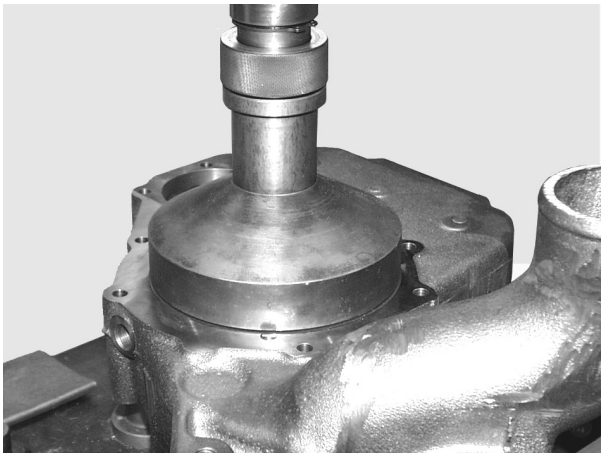

20

https://truckmanualshub.com/

Replacing coolant pump during repair work only in event of identified leakage

The design of the coolant pump mechanical cassette seal permits small amounts of coolant to pass through it.
This coolant passing through results in a trace of drained coolant below the drain bore.
This trace of drained coolant does not mean that the coolant pump has to be replaced.

For this reason before exchanging or repairing a coolant pump ascertain

- whether the cooling circuit shows visible and recurring signs of coolant loss; if yes
- whether the coolant loss is caused by spillage from the expansion tank (e.g. too full) or by other leakages from hoses, radiator etc.

Coolant pumps may only then be replaced if dripping water can clearly be seen while the engine is running or after it has been turned off.

Installation note for mechanical seal

Fit the mechanical seal “wet”, i.e. when fitting, coat holding sleeve ④ and coolant pump shaft ① with a mixture of 50% water and 50% cleaning spirit or 40% to 50% antifreeze as per MAN 324 and water.

Other antiseize agents must not be used.

Because the seal on collar ② is coated with sealing paint, no sealing paint needs to be applied if the locating bore in the coolant pump housing is in perfect condition.
If the bore shows even the slightest scoring or other minor damage, a sealing bead of Dirko-Transparent, Part No. , must be applied to collar ②.
Fit the seal with a plastic transportation cap onto shaft ① and use installation tool ⑤ to press it in until the tool contacts the housing. Remove the plastic cap.

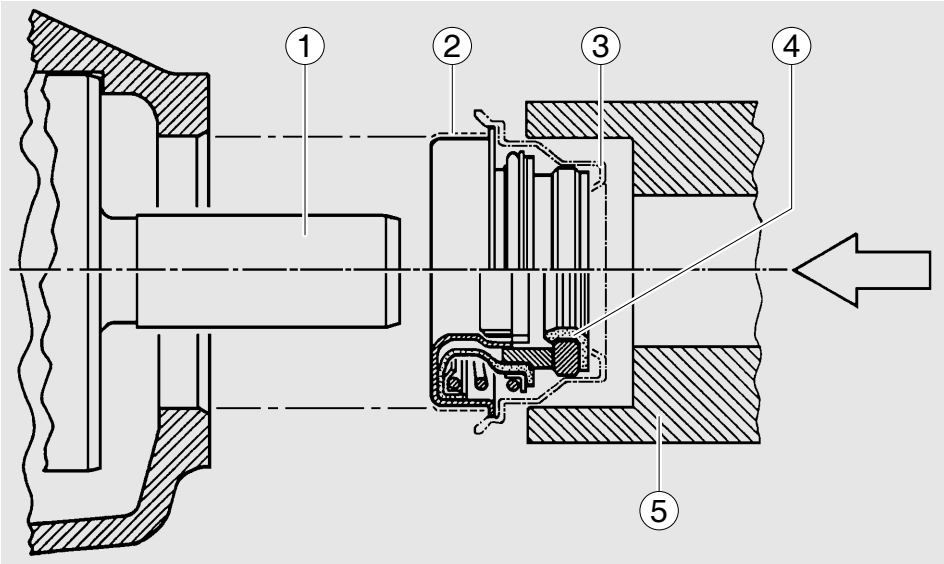

Note:
Tests have shown that most cases of damage to the coolant pump can be attributed to the use of unsuitable coolants.
Only the anticorrosion and antifreeze agents expressly approved by MAN Nutzfahrzeuge AG as per MAN norm 324 (see brochure Fuels, Lubricants, Coolants for and MAN Diesel Engines”) guarantee faultless operation

Cleaning the inside of the cooling system

Note:
Co-ordinate cleaning measure with radiator manufacturer beforehand!

Investigations have shown that in many cases the poor condition of the coolant and / or the cooling system accounts for damage to the water pump mechanical seal. The poor condition of the cooling system is normally due to use of unsuitable or no anti-freezing agents and corrosion inhibitor or defect, not early enough replaced covers for filler neck and working valves.

If twice in a short time the water pump of an engine develops leakes or the coolant is heavily contaminated (dull, brown, mechanically contaminated, grey or black signs of a leakage on the water pump casing, after the defect on the oil cooler) clean the cooling system **prior to** removing that water pump as follows:

a) Drain coolant
b) Open thermostats positively (use short-circuit inserts), so that the entire coolant circuit is flushed in the cleaning operation
c) Fill coolant circuit with a mixture of hot water (min. 50°C) and Henkel P 3 neutrasel 5265 detergent (1.5% by volume) (-5266, -5225, Kluthe Hakopur 316), refer to Publication “Fuels, Lubricants ...”
d) Warm up engine under load. After a temperature of 60°C is reached, run engine for a further 15 minutes
e) Drain cleaning fluid
f) Repeat steps c) and d)
g) Flush cooling system. To this effect
h) Replace drain plug by drain plug with a bore of 8 mm dia
i) Fill cooling system with hot water
k) Run engine at idle for 30 minutes. At the same time continuously replenish the water leaking from the bore in drain plug by adding fresh water

Repair water pump only now. Thereafter, fill the cooling system with approved cooling fluid. See Publication “Fuels, Lubricants ...”.

Note:
Only sediments and suspended particles can be removed by this cleaning method. If corrosion and lime deposits are found, proceed according to the following section:

https://truckmanualshub.com/

Removal of lime deposits in the cooling system

Note:
Co-ordinate decalcifying measure with radiator manufacturer beforehand!

Procedure:
- Drain the coolant
- Fill the system with undiluted original pickling fluid (Engine pickling fluid RB-06), see sources of supply
- Let the engine run (also in normal operation) for approx. 8 hours with this filling in the cooling circuit
- Drain the pickling fluid and thoroughly flush the system with tap water
- If necessary, refill the circuit again with fresh pickling fluid and pickle the engine for another 8 hours
- Drain the pickling fluid, fill the system with tap water, and run the engine at idle for 5 minutes to flush out all fluid; then drain the water
- Fill the system with a 1% soda solution. Drain the soda solution after running the engine at idle for 5 minutes, and flush with tap water until the discharging water is clear
- Fill cooling circuit with a mixture of potable tap water and anti-freeze with at least 40% by volume, refer to Publication “Fuels, Lubricants ...”

Note:
Older radiators may develop leaks when such deposits are removed. The surge tank should be filled only up to the bottom edge as otherwise foaming will cause the pickling fluid to spill over. Damaged tube bundles may develop leaks when dirt deposits are removed.

Filler caps and working valves of cooling system

The rubber gaskets of the filler caps and working valves (negative pressure and positive pressure valves) of the cooling system are subject to natural aging.
To preclude leakages in the cooling system and tailing pressure drop and its consequences up to severe engine damage, renew the filler caps and working valves in line with the change of coolant (every two years at the latest) see also “Filling-in of coolant” in this chapter.

Waste water treatment

Drained and spent cleaning and pickling fluid should be brought up to a pH value of 7.5 to 8.5 with the aid of caustic soda. Once the precipitation has settled to the bottom of the container the clear fluid above can be dumped into the sewer. The sludge at the bottom should be taken to a special waste dump. Anyway, it is recommended to consult the local authorities for more information about waste water rules or restrictions.

Sources of supply for pickling fluids

Motor pickling fluid RB–06
Reincolor-Chemie GmbH
Werkstr. 21
D–90518 Altdorf
Phone: (0 91 87) 97 03 0

Caution:
Old oil and used oil filters are hazardous waste.
Observe safety instructions for the prevention of environmental damage.

Fig. 1

Open the oil drain plug on the oil filter casing and catch emerging oil in a suitable container.

1

Danger:
The oil filter casing and filter insert are filled with hot oil; danger of burns and scalding!

Reinsert oil drain plug with new gasket.

Fig. 2

Loosen the securing bolt of the filter cup.

Remove filter cup and clean inside.

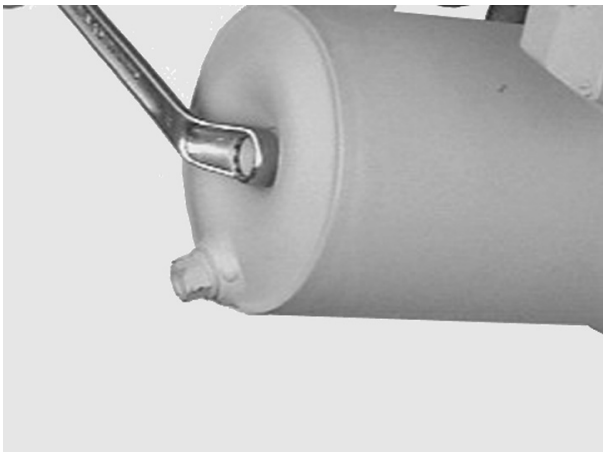

2

Fig. 3

Insert a new filter cartridge and reinstall the filter casing with new seals.

Observe tightening torque for securing screw.

Note:
To avoid twisting the gasket, hold the filter cup while tightening the tensioning screw.

Fill engine oil and check for leaks after a short engine run

Check oil level.

3

https://truckmanualshub.com/

Removing the oil cooler

Caution:
Old oil is hazardous waste.
Observe safety instructions for the prevention of environmental damage.

Fig. 1

Oper oil drain plug and use container to catch the oil that may emerge.
Use a vessel of sufficient size to ensure that the oil does not overflow.

1

Danger:
The oil is hot– risk of scalding. Do not touch the oil drain plug with bare fingers. Oil is an environmental hazard. Handle it with care!

- Draining off coolant, see page 42
- Remove oil filter, see page 60

Fig. 2

Unscrew the mounting bolts from the oil cooler housing.

Remove the oil cooler housing together with the oil cooler.

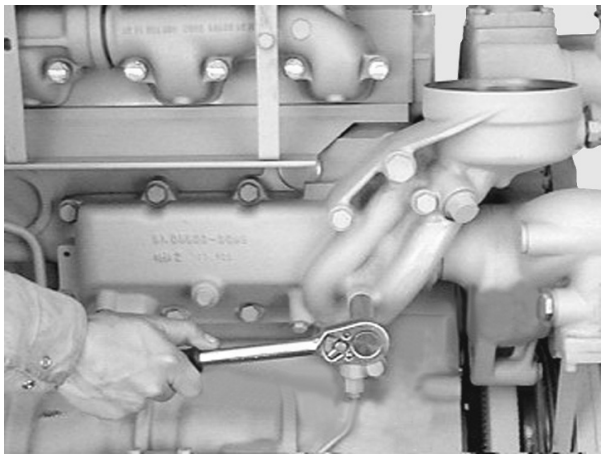
2

Fig. 3

Remove the oil cooler from the housing.

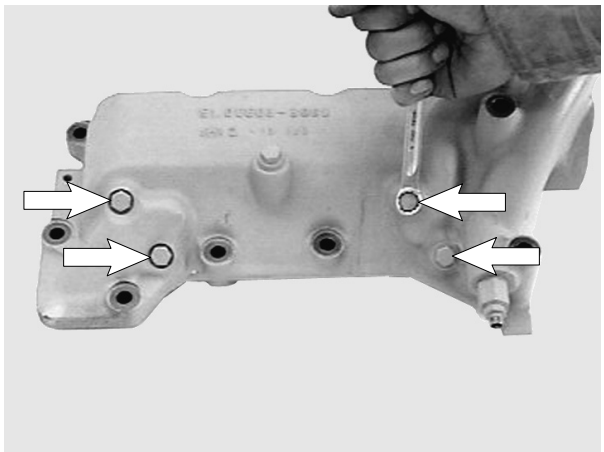
3

Fig. 4

Inspect the oil cooler for damage and replace if necessary.

Fit oil cooler with new gaskets.

4

https://truckmanualshub.com/

Fig. 5

Take a new o-ring for oil cooler housing.

Screw on oil cooler housing together with attached oil cooler.

5

Fig. 6

Tighten the securing bolts with the prescribed torque.

- Attach oil filter with new seals
- Top up engine with oil
- Top up coolant.

6

https://truckmanualshub.com/

Remove oil pan

Caution:
Old oil is hazardous waste.
Observe safety instructions for the prevention of environmental damage.

Fig. 1

Open oil filler neck.
Remove oil drai plugs and allow the oil to drain off completely.
Use a vessel of sufficient size to ensure that the oil does not overflow.

1

Danger:
The oil is hot– risk of scalding. Do not touch the oil drain plug with your bare fingers. Oil is an environmental hazard. Handle it with care!

Fig. 2

Completely remove crankcase breather, the oil level probes and the oil filler pipe.

Remove bridge for cable harness and move cable harness to one side.

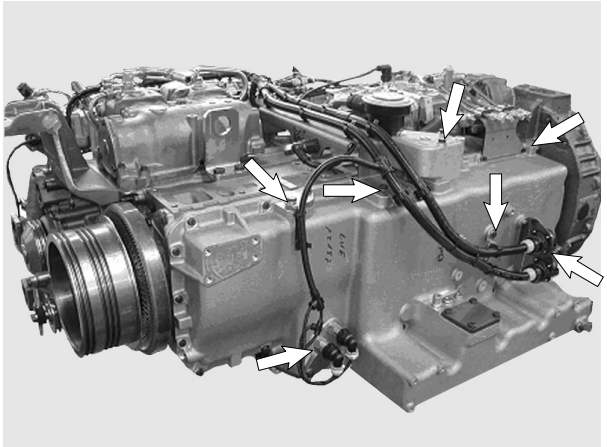
2

Fig. 3

Loosen the securing bolts of the oil pan.
Take off oil pan.

Caution:
Oil pans are heavy.
It is now supported only by the lower oil.

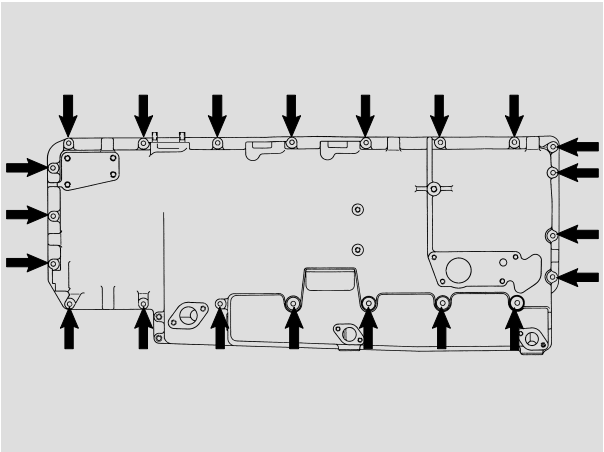
3

Fitting the oil pan

Fig. 4

Replace the oil pan gasket.

Tighten the securing bolts with the prescribed torque.

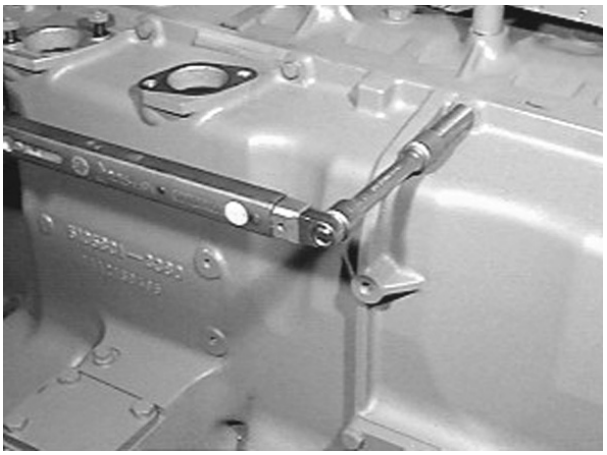
4

https://truckmanualshub.com/

Fig. 5

Fit engine cable harness, the bridge for the cable harness, the oil filler pipe, the oil level probe and the crankcase breather.

Refit oil drain plugs with new seals.

Fill up the engine oil. Check oil level. Check the oil pan for leaks

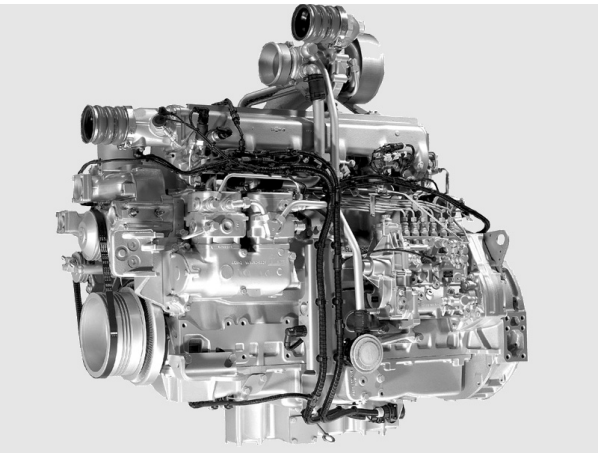

5

https://truckmanualshub.com/

Removing the oil pump

Drain engine oil from the oil pan and from the oil filters.
Use a vessel of sufficient size to ensure that the oil does not overflow.

Danger:
The oil is hot– risk of scalding. Do not touch the oil drain plug with bare fingers. Oil is an environmental hazard. Handle it with care!

Caution:
Old oil is hazardous waste.
Observe safety instructions for the prevention of environmental damage.

- Removing the oil pan, see page 63

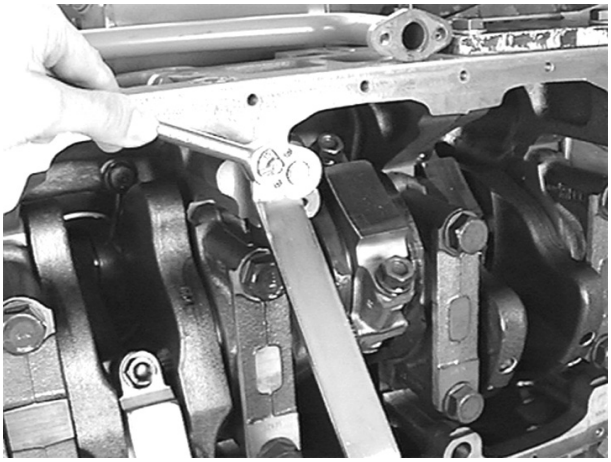

1

Fig. 1

Unscrew the oil intake pipe.

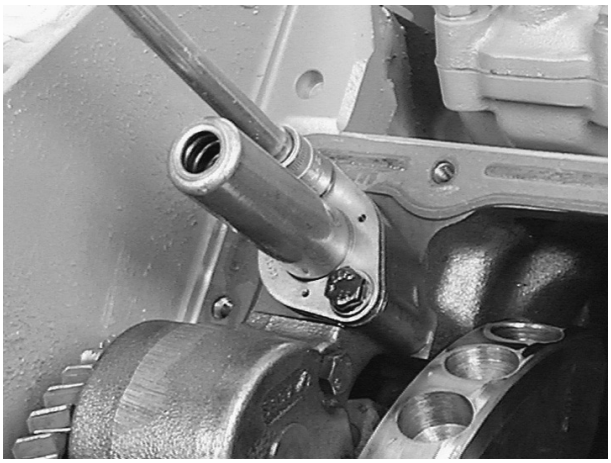

2

Fig. 2

Remove mounting bolts of pressure relief valve and the oil pump.

The overpressure valve is encapsulated.

Opening pressure, see “Service Data”.

Remove oil pump.

https://truckmanualshub.com/

Servicing the oil pump

Fig. 3

Clamp the oil pump in a vice (use protective jaws).

Remove the oil pump cover.

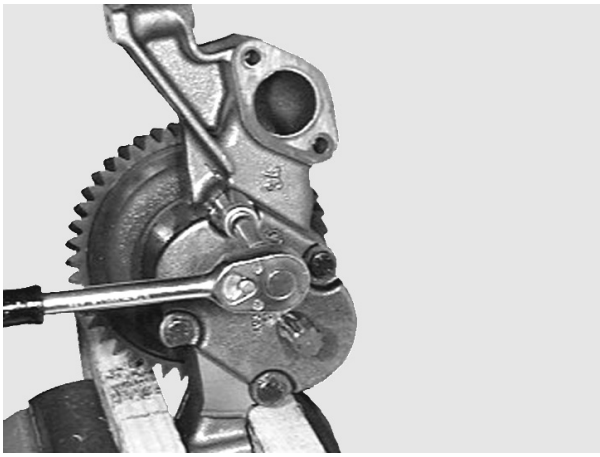

3

Fig. 4

Pull the driven oil pump wheel from the casing. Check the toothed wheels and pump casing for wear (see “Service Data”).

4

Fig. 5

Remove the oil pump drive gear.

To do this, lay the pump on a suitable surface and press off the drive gear with a mandrel.

To install, place the drive gear on the shaft, supporting the opposite shaft end in the process.

Press on the drive wheel, observing the prescribed gap (see “Service Data”).

5

Fig. 6

Fit the cover.

Tighten the securing bolts with the prescribed torque.

6

https://truckmanualshub.com/

Checking the axial clearance of the pump wheels

Fig. 7

Attach a dial gauge, push the shaft in one direction up to the stop and set the dial gauge to “0”.
Press the shaft in the opposite direction and read off the reaction of the dial gauge.

Axial clearance of pump gears in new condition see “Service Data”.

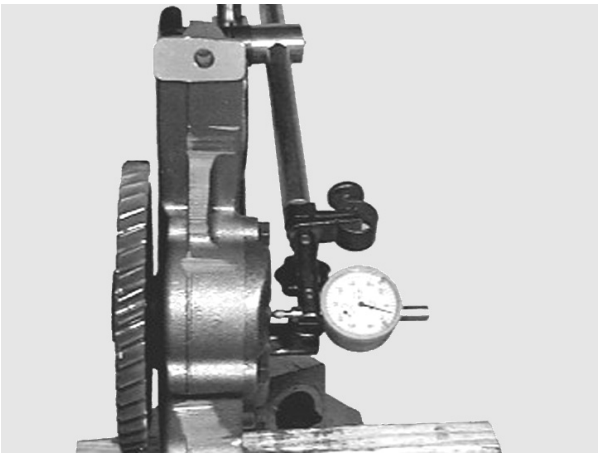

7

Fitting the oil pump

Fig. 8

before fitting, check that the oil pump is running smoothly.

Fit the oil intake line ① with seal. Screw on the pressure-relief valve ② without seal.

Before installing the oil pan, crank the engine to check whether the crank gear and the oil pumps run unimpeded and smoothly.

Stick new oil pan gasket on to oil pan using grease and then bolt oil pan into place.

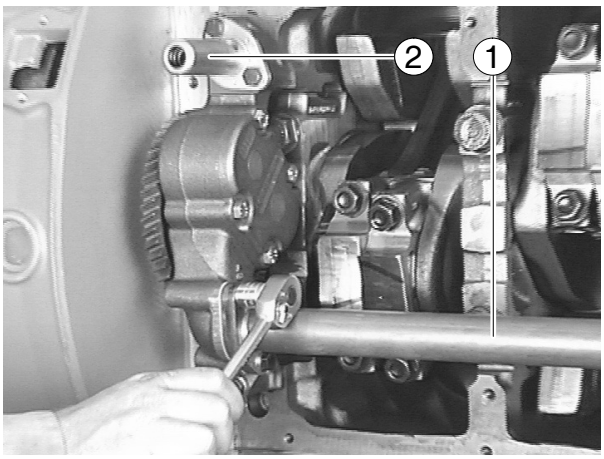

8

https://truckmanualshub.com/

Removing oil spray nozzle

- Drain engine oil
- Removing the oil pan, see page 65

Fig. 1

Unscrew the oil spray nozzle valve (arrowed) and remove with the oil spray nozzle.

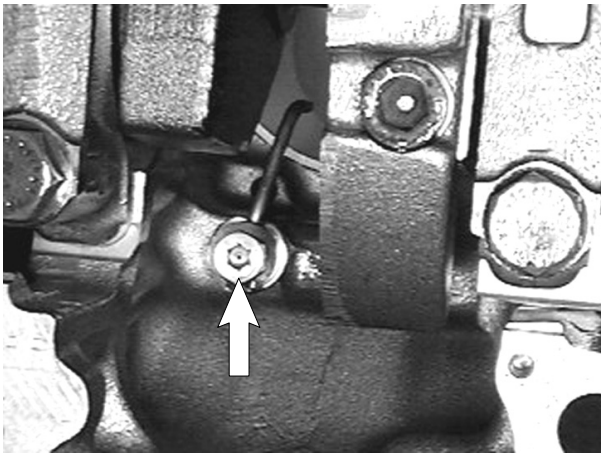

1

Fig. 2

① Oil spray nozzle valve
② Oil spray nozzle

> **Note:**
> The oil spray nozzles are provided with balls. When the oil spray nozzle valve is tightened at the factory, the balls are pressed into the crankcase where they make impressions which are used as marker points for installing the nozzle in the event of repairs.

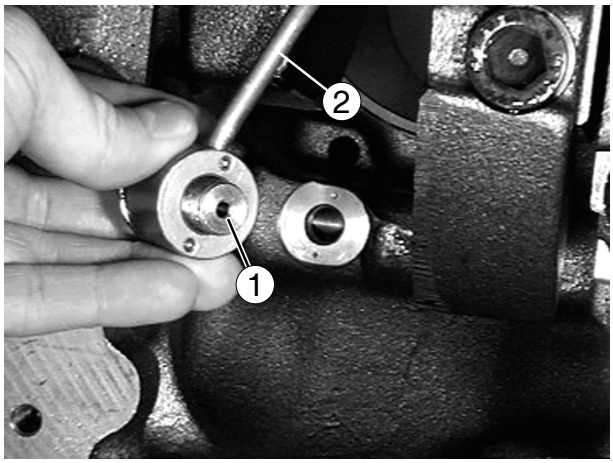

2

Checking oil spray nozzle valve

Fig. 3

Use a piece of wire to check whether the valve piston is easy to move.

Opening pressure, see “Service Data”.

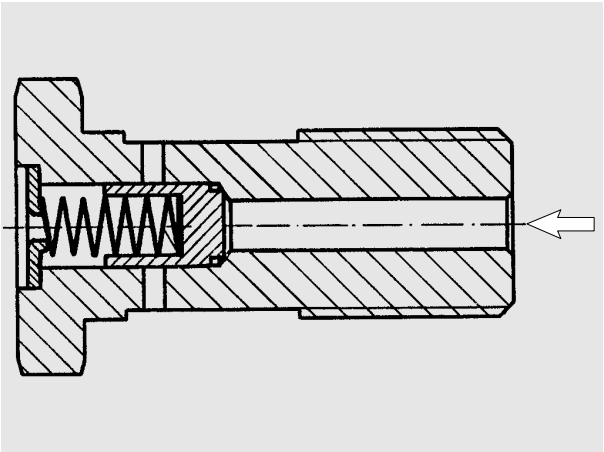

3

Installing the oil injection nozzle

Fig. 4

Screw in the oil spray nozzle together with its valve.
The balls of the oil spray nozzle must be located in the impressions designated for this purpose in the crankcase. This ensures that the nozzle is secured in the correct installation position.
Turn the engine. The crankshaft drive or pistons must not collide with the oil injection nozzle.

Tighten the securing bolts with the prescribed torque.

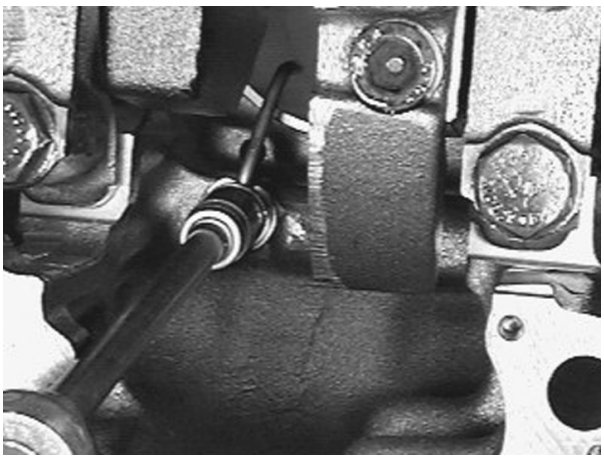

4

https://truckmanualshub.com/

Remove pilot clutch

Note:
Match–mark the parts and remove them.

Fig. 1

- Disconnect propshaft from clutch and pull it off
- Remove inner bolts ① and lift out clutch.

Strip and check pilot clutch; see page 135.

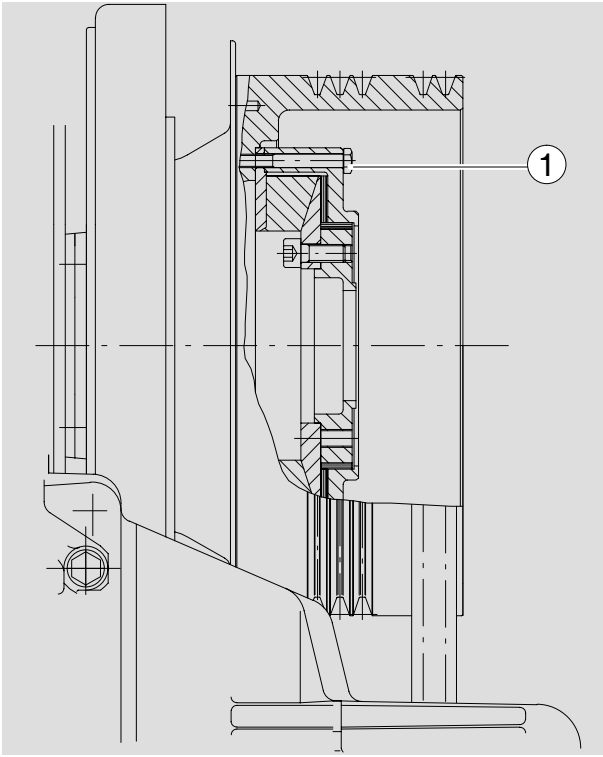

1

Removing vibration damper

- Crank the engine to TDC. This ensures that it is easier to fit the graduated disc during subsequent assembly work.
- Block the crankshaft drive.
- Relieve tension on the V–belt and remove the belt.
- Remove the delivery start pointer

Fig. 2

Loosen the securing screws of the vibration damper.

Remove the vibration damper.

Remove oil thrower from the crankshaft.

Note:
Prior to removal mark the position of the vibration damper relative to the crankshaft. This will ensure that in the subsequent reassembly the graduated disc is in correct position.

Caution:
The vibration damper is sensitive to impacts.

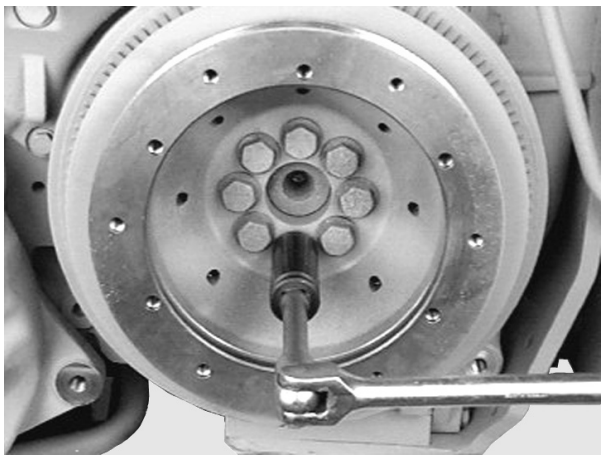

2

https://truckmanualshub.com/

Replacing the front crankshaft gasket

Fig. 3

Loosen the securing screws of the cover.

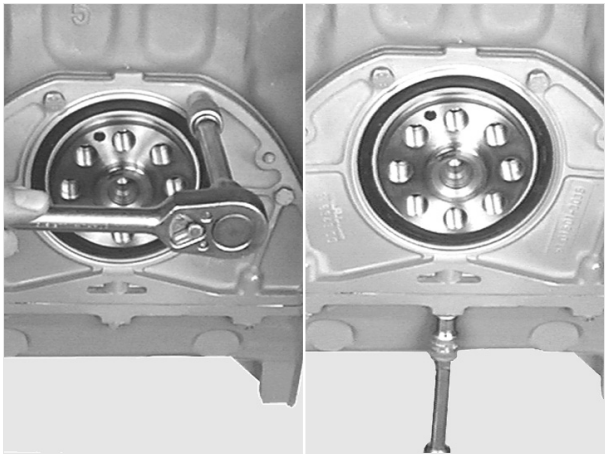

3

Fig. 4

Remove the cover.

Only replace the front crankshaft gasket as a complete unit, i.e. replace the bearing race and the radial shaft sealing ring.

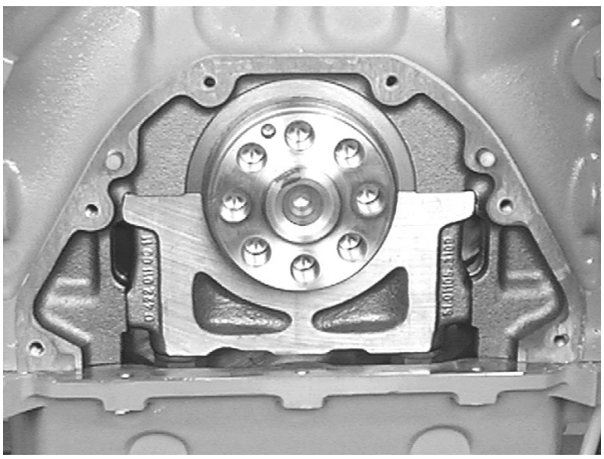

4

Replacing the bearing race

> **Note:**
> The engine is not delivered with the thrust ring as a series feature.
> The spare crankshaft seal also contains the thrust ring.

Fig. 5

A stripping device (special tool) is required to remove the bearing race.

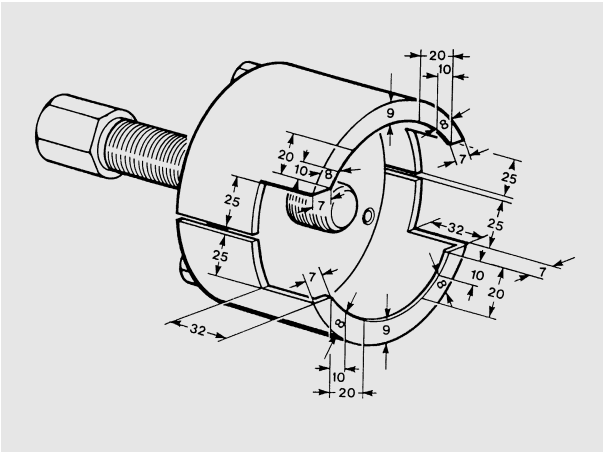

5

Fig. 6

Pull off the bearing race.

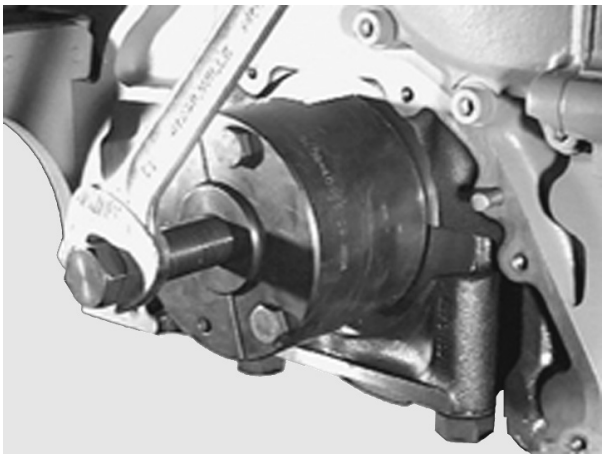

6

https://truckmanualshub.com/

Fig. 7

A special too is required to fit the bearing race.

Clean the inside of the bearing race and tail shaft. Coat the crankshaft stub with “Antipor 46” sealing compound.

- Push the bearing race ① and press-in sleeve ② onto adapter ⑥.
- Tighten spindle ⑤ in adapter ⑥ with nut ⑦
- Screw adapter ⑥ securely onto the crankshaft.

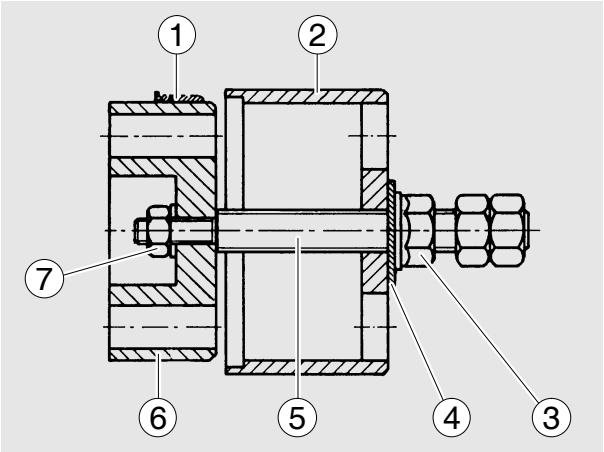

7

Fig. 8

The adapter must lie free of clearance on the crankshaft so that the right press–in depth of the bearing race is ensured.

Pull the bearing race as far as it will go into the press–in sleeve ② on the adapter with collar nut and thrust washer (③ and ④ in Fig. 7).

Note:
The bearing race can also be mounted when the cover is fitted.

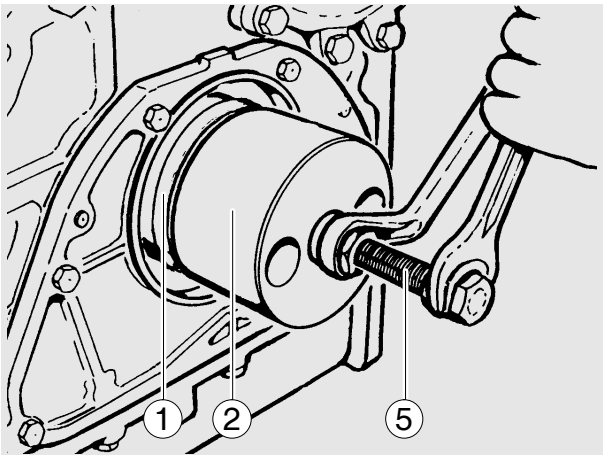

8

Replacing the radial shaft sealing ring

Fig. 9

To ensure perfect installation, the replacement cover and shaft sealing ring are only delivered as a complete unit.

So that it remains possible to mount the shaft sealing ring, it must stay on the transport and installation sleeve until assembly.

Refer to the comments and assembly instructions on page 78.

9

Fig. 10

Fit the cover with a new seal.

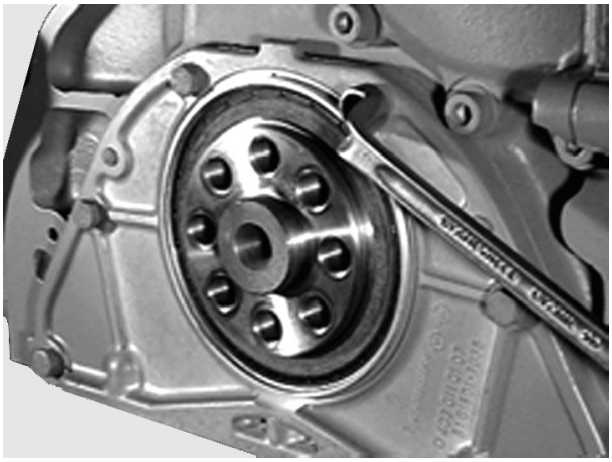
10

https://truckmanualshub.com/

Fitting the vibration damper

Fig. 11

Position vibration damper; note the position of the scale disc relative to the crankshaft as you do so!

Tighten the securing bolts with the prescribed torque.

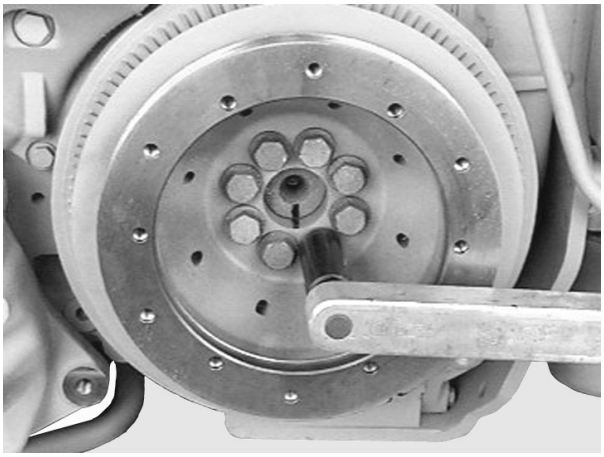

11

Fig. 12

Screw on delivery start indicator.

Refit and tension V-belt, see page 134.

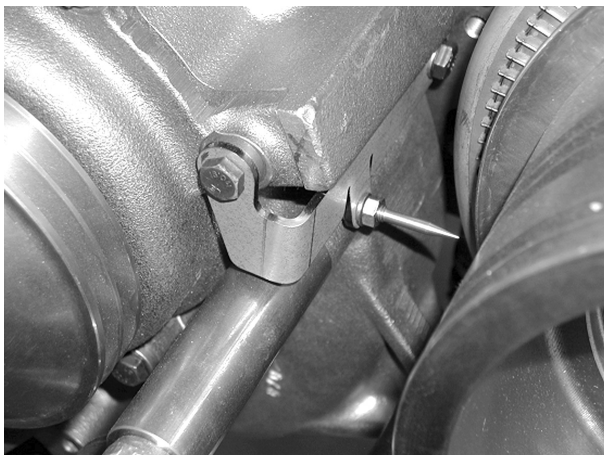

12

Fig. 13

Therefore check whether the scale of degrees on the inspection hole cover of the flywheel housing and on the vibration damper indicate the same values.

If necessary readjust delivery start indicator.

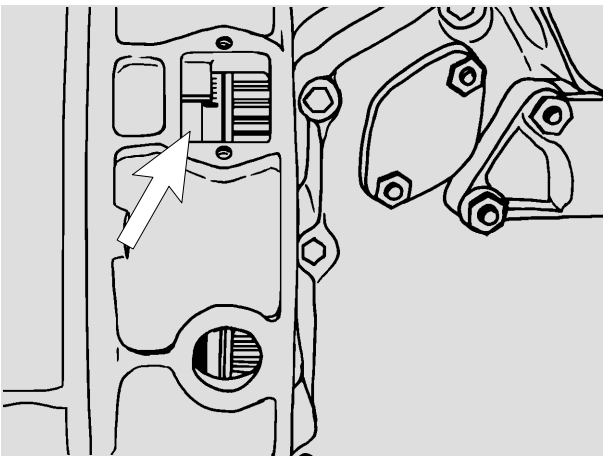

13

https://truckmanualshub.com/

Fit pilot clutch

Fig. 14

Before assembly clean all clutch parts,
see page 135.

Push pre-assembled clutch on to driver flange and fasten it with interior bolts (①, 14 Nm).

Reconnect propshaft and clutch.

The positions of the individual parts are marked.

Comply with specified torques.

Caution:
Unblock the crankshaft drive!

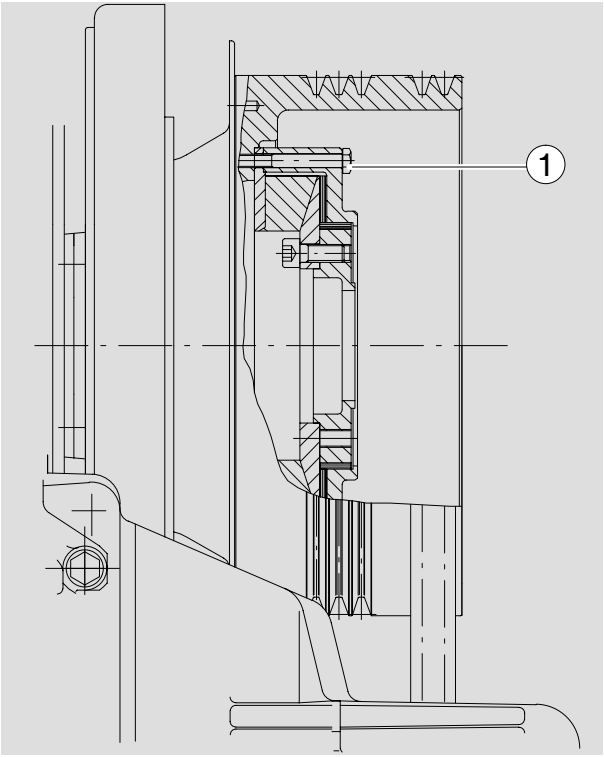

14

https://truckmanualshub.com/

Removing the flywheel

Fig. 1

Release the mounting bolts, securing the engine against rotating if necessary.

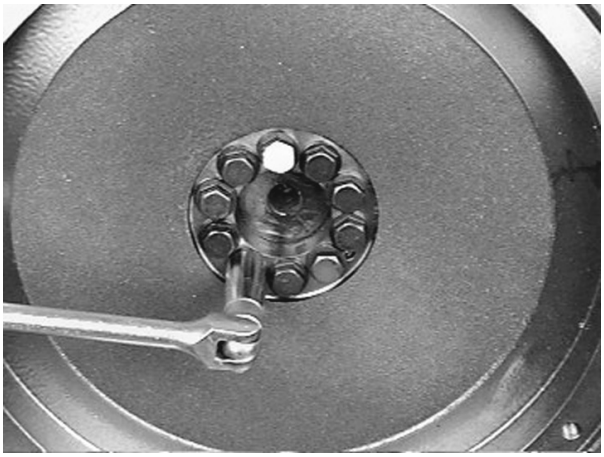

1

Fig. 2

Unscrew two bolts opposite one another and replace with two guide mandrels (special tool).

Remove all the bolts.
Pull off the flywheel with suitable lifting gear.

> **Danger:**
> The flywheel is heavy!
> Use lifting gear.

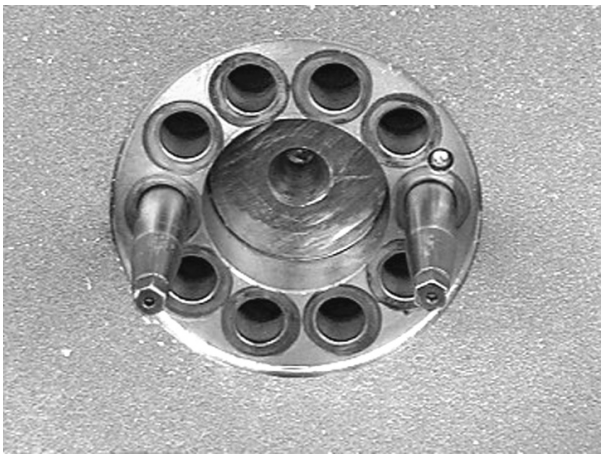

2

Fitting the flywheel

Fig. 3

Insert the guide pins.

Coat the sealing face on the inside of the flywheel with “Antipor 46” sealing compound.

Place guide mandrels on the flywheel; ensuring that the centering mandrel (arrow) fits correctly into the bore in the flywheel.

Push the flywheel on as far as it will go.

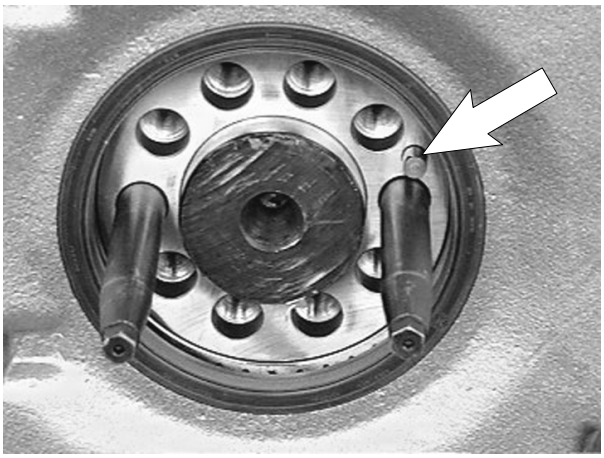

3

Fig. 4

Lightly oil the new mounting bolts (stress bolts), screw them in and tighten in diagonal sequence to specified torque.

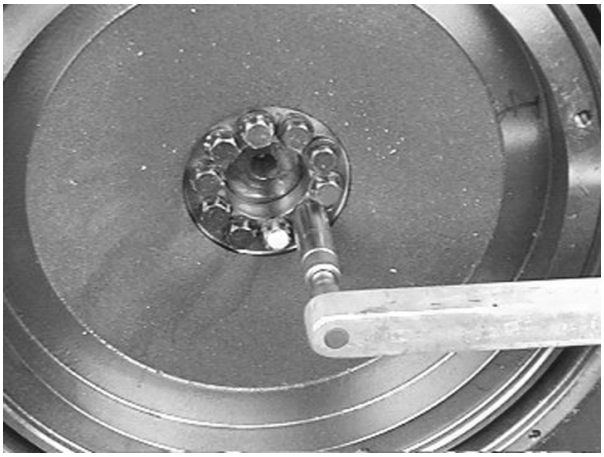

4

https://truckmanualshub.com/

Replacing starter ring gear

Fig. 5

Remove the flywheel.
Drill the starter motor toothed wheel and break with a chisel.

Caution:
In doing so, do not damage the flywheel.

5

Fig. 6

Note:
As the maximum axial run–out of the starter motor toothed wheel must not be exceeded, the axial run–out of the flywheel should be measured on the contact surface of the starter motor toothed wheel prior to shrinking on the starter motor toothed wheel.
If the required value is exceeded, replace the flywheel.

Engage the flywheel at the hub.
Apply the dial gauge to the contact surface of the toothed wheel.
Turn the flywheel a few revolutions by hand and observe the reaction of the dial gauge.

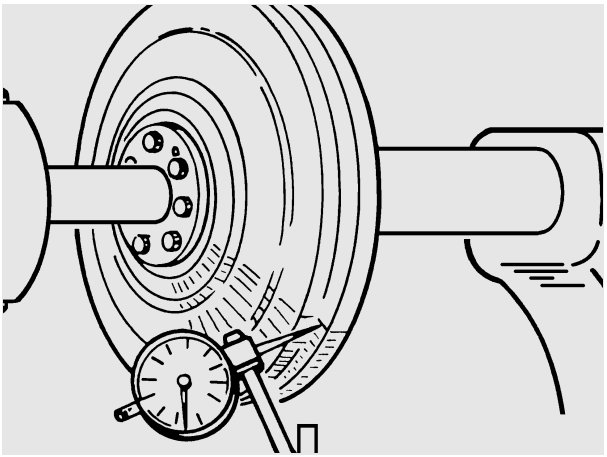

6

Fig. 7

Heat the new starter ring gear to approx. 200°C to 230°C and press on as far as it will go.

Danger:
The parts are hot! Risk of burns!
Wear protective gloves.

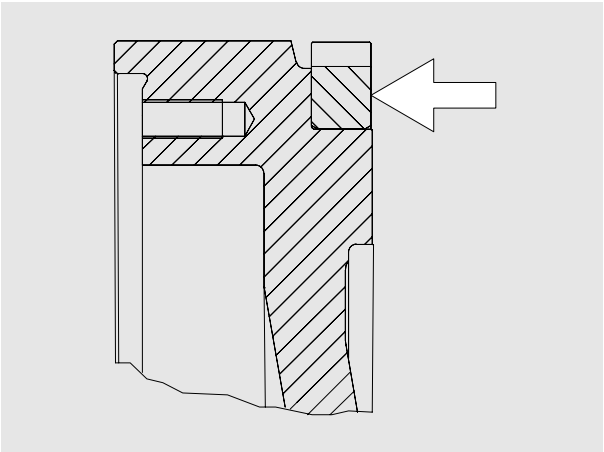

7

Check the axial runout and compare with the max. permissible value.

https://truckmanualshub.com/

Removing shaft sealing ring

Fig. 1

Remove flywheel, see page 74.

Prise out the seal using the special tool (Fig. 2) or a screwdriver.

1

Fig. 2

Special tool for levering out the crankshaft gasket.

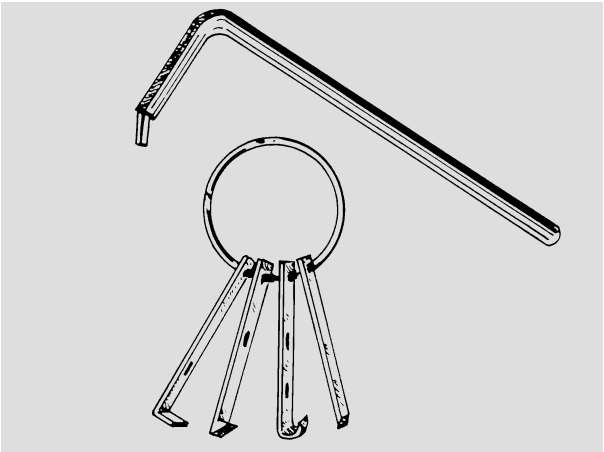

2

Fit shaft sealing ring

Fig. 3

If the shaft sealing ring on flywheel side is replaced, it is also recommended to replace the bearing race of the flywheel.

Insert the new shaft seal into the flywheel housing.

Use mandrel (special tool) to drive in sealing ring until flush.

Refer to the comments and assembly instructions on page 78.

3

Replacing bearing race

Remove flywheel, see Page 74.

Fig. 1

If the shaft sealing ring on flywheel side is replaced, it is also recommended to replace the bearing race of the flywheel.

Pull off the bearing race to be exchanged using a puller (special tool).

1

Fig. 2

Insert the new bearing race in the drift (special tool) in such a way that the inner bevelled side faces the flywheel when fitted later.

Carefully warm up the drift with bearing race.
The installation temperature of the bearing race is approx. 150°C.

2

Fig. 3

Press in the bearing race as far as it will go.

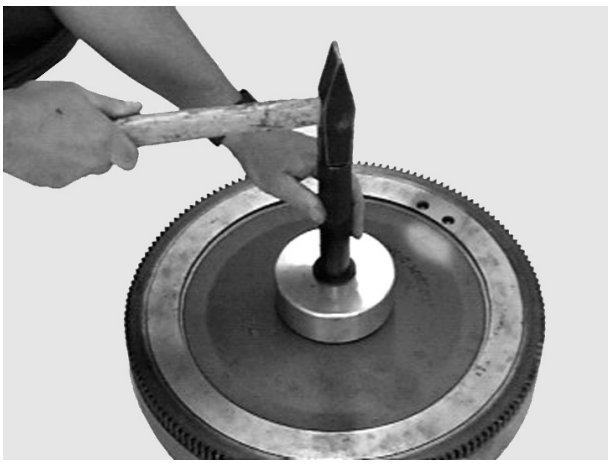

3

Fig. 4

Seal the gap between flywheel and bearing race with “Antipor 46”.

4

General notes on the crankshaft gaskets

As a general principle, the radial shaft sealing rings are made of polytetrafluorethylene (PTFE), otherwise known as Teflon.

PTFE sealing rings differ from the elastomer sealing rings that used to be common in that they have a much wider, flat sealing lip that is not pretensioned by a coiled spring expander.

The relatively large pretension of the sealing lip itself means that it curves inwards. This is why the PTFE sealing ring is delivered on a transport sleeve. So that it remains possible to mount the sealing ring, it must stay on this sleeve until assembly. This applies also because the sealing lip is very sensitive and the smallest damage causes leaks.

The sealing lip and the bearing race of the flywheel must not be coated with oil or other lubricants.

On fitting the new sealing ring, always replace the bearing race alongside it.

Assembly instructions for crankshaft gaskets

- The PTFE sealing ring must be fitted absolutely free of oil and grease. Even the slightest traces of oil on the bearing race or sealing ring will cause leakage.
- Remove oil, grease and corrosion inhibitor from the bearing race before assembly. All standard cleaning agents can be used here.
- If the PTFE sealing ring is fouled with oil or grease, it is rendered unusable. Cleaning is not permitted in this instance.
- The PTFE sealing ring must never be stored without the supplied transport sleeve. Even after it has been stored for a period of only 30 minutes without the transport sleeve, it will lose it pretension and thus be rendered unusable.

https://truckmanualshub.com/

- Disconnect cable from needle motion sensor, see page 30
- Remove fuel pipe leading to flame glow plug and solenoid valve, see page 41

Note:
When working on the air intake system, ensure meticulous cleanliness to prevent penetration of dirt and foreign bodies.

Removing intake manifold

Fig. 1

Disconnect cable from charge air pressure sensor ① and charge air temperatur sensor ②.

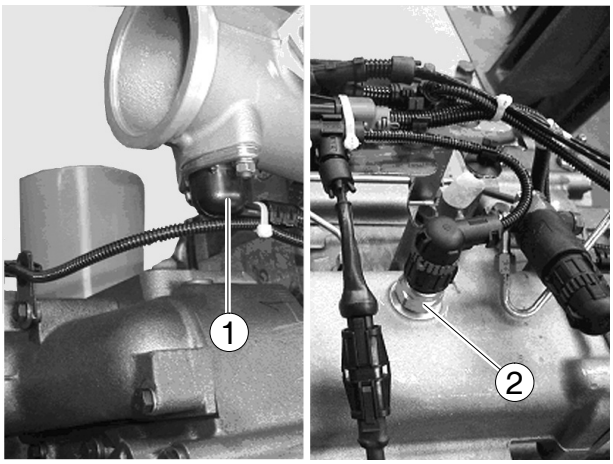

1

Fig. 2

Remove connection to turbocharger ①.

Unscrew exhaust-gas recirculation pipe ② from intake pipe.

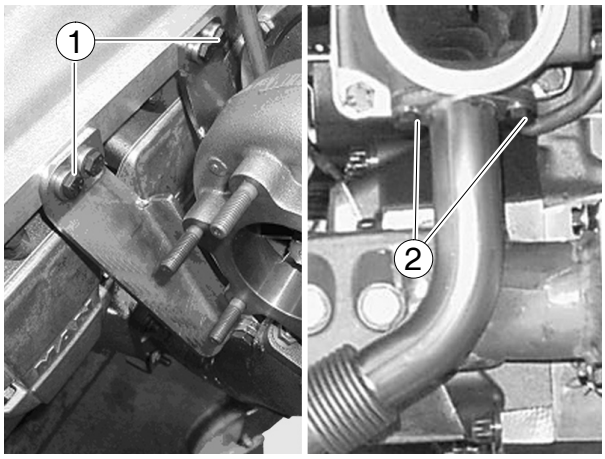

2

Fig. 3

Remove the mounting bolts on the intake manifold.

Remove the intake manifold.

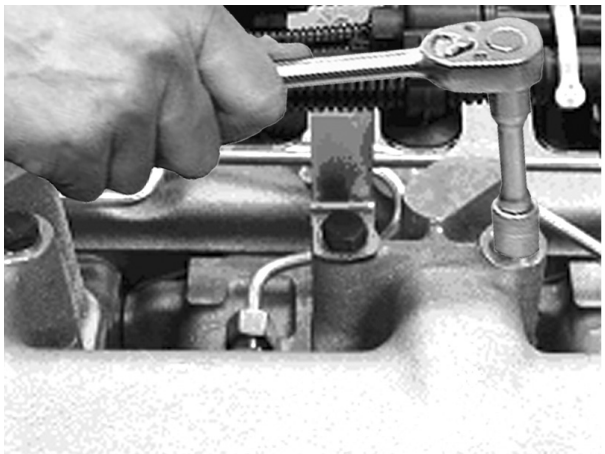
3

Installing the intake pipe

Fig. 4

Place the intake manifold in position with new gaskets.

Fit the mounting bolts.

Make sure the gaskets are correctly seated.

Tighten the securing bolts with the prescribed torque.

- Reconnect cable for needle motion sensor, fuel pipe to flame glow plug and solenoid valve and cable for boost pressure sensor and charge–air temperature sensor
- Fit connection to turbocharger.
- Refit exhaust-gas recirculation pipe with new seal

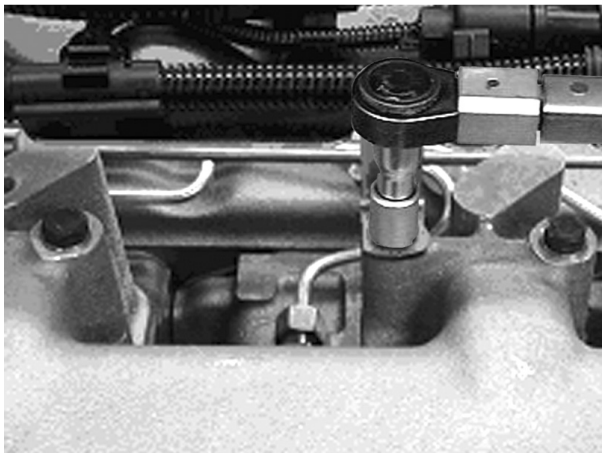
4

https://truckmanualshub.com/

Note:
The following text describes the removal and fitting of the exhaust pipe in the D 2876 LUE 601 / 602 / 603 engines **with exhaust-gas recirculation**.
The steps relating to the exhaust-gas re-circulation do not apply the D 2876 LUE 604 / 605 / 606 engines **without exhaust–gas recirculation**.

- Removing the turbocharger, see page 79

Removing the exhaust manifold

Fig. 1

Remove bracket for exhaust manifold (arrow).

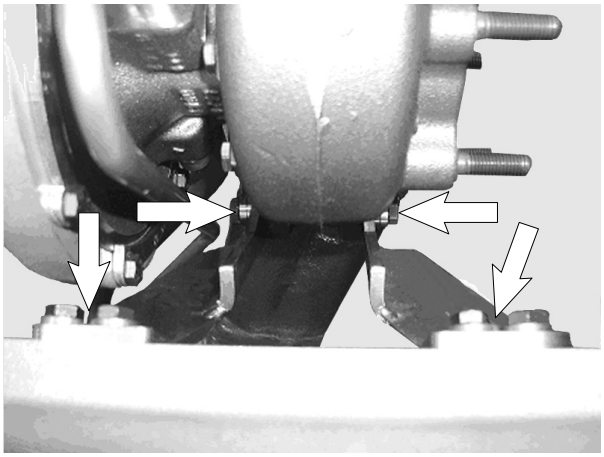

1

Fig. 2

Remove mounting bolts for heat shield and take off lower part of heat shield.

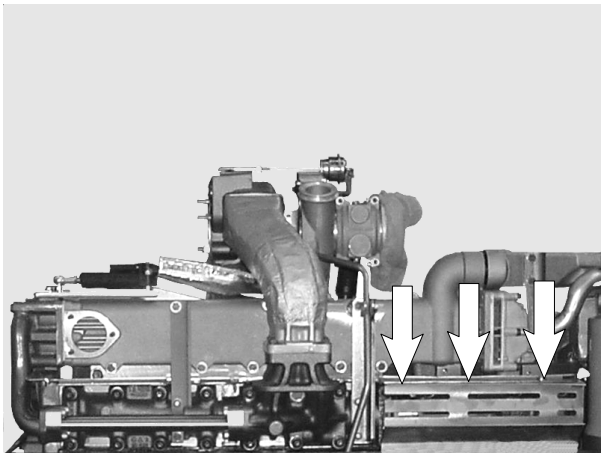

2

Fig. 3

Remove mounting bolts (arrow) from exhaust pipe and exhaust manifold.

Remove exhaust manifold.

Danger:
The exhaust manifold is heavy!

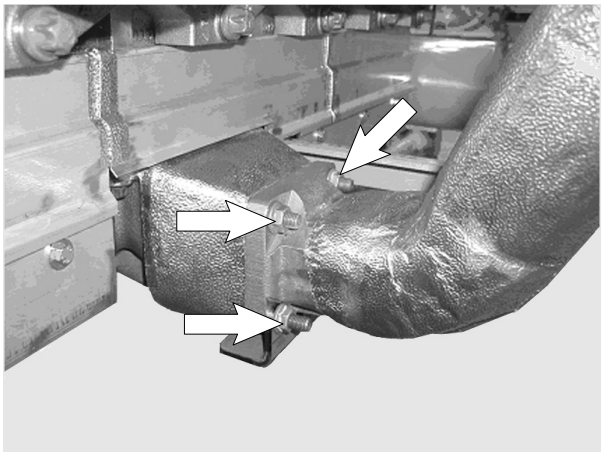

3

Fig. 4

Remove pipes and brace (arrow) for exhaust–gas recirculation.

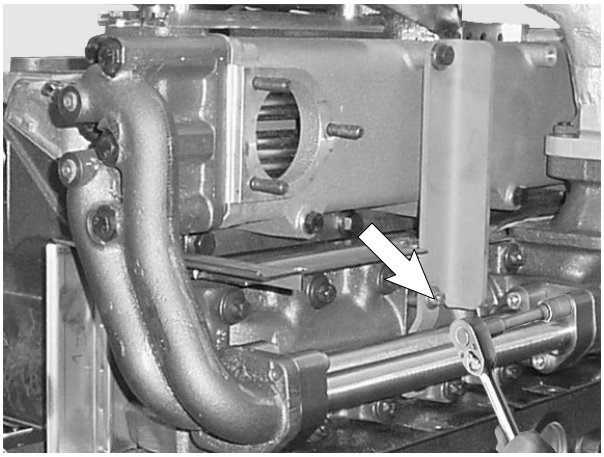

4

https://truckmanualshub.com/

Fig. 5

Before unscrewing all securing bolts, if appropriate replace 2 bolts by stud bolts as guides.

The stud bolts with thread M10 have been produced by MAN.

Danger:
The exhaust manifold is heavy!

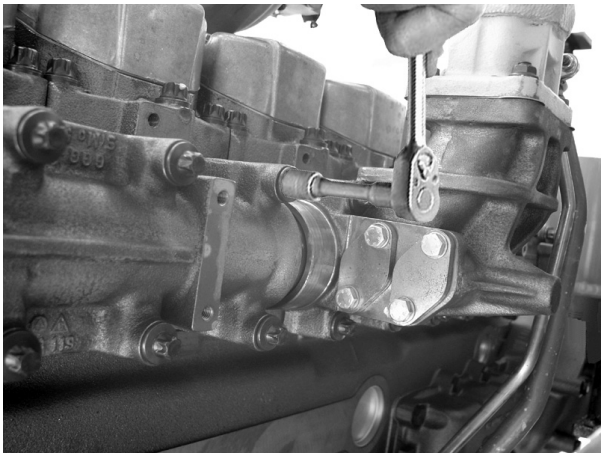

5

Installing exhaust manifold

Fig. 6

Before fitting the exhaust pipe, screw in 2 stud bolts as a guide.

Bolt guard plate and exhaust manifold together, inserting new gaskets between guard plate and exhaust manifold (bead must face guard plate).

Refit exhaust-gas elbow with brace, turobcharger, pipes for exhaust-gas recirculation and heatshield.

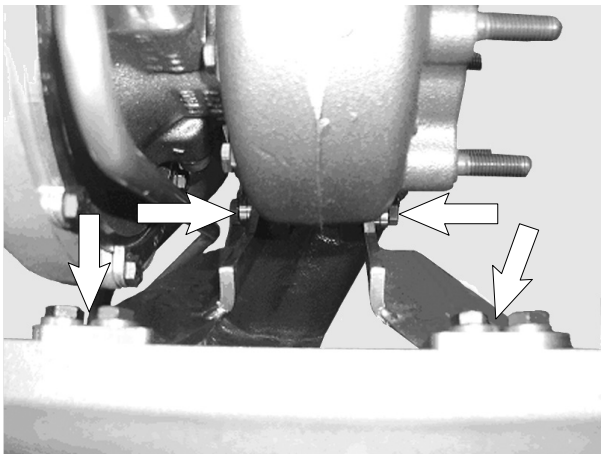

6

https://truckmanualshub.com/

Pneumatic cylinder

Fig. 1

Caution:
If the pneumatic cylinder is changed set the ball head ① so that it is hooked up with approx. 4 mm pre-load with the shut-off flap ② closed.

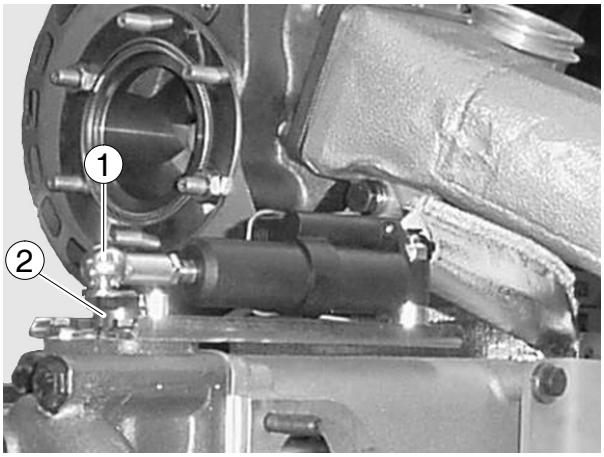

1

Removing EGR module

- Removing the turbocharger, see page 79
- Remove exhaust manifold, see page 80
- Drain off coolant, see page 42
- Detach air line from pneumatic cylinder

Fig. 2

Remove pipes and brace (arrow) and coolant elbow for exhaust-gas recirculation (EGR).

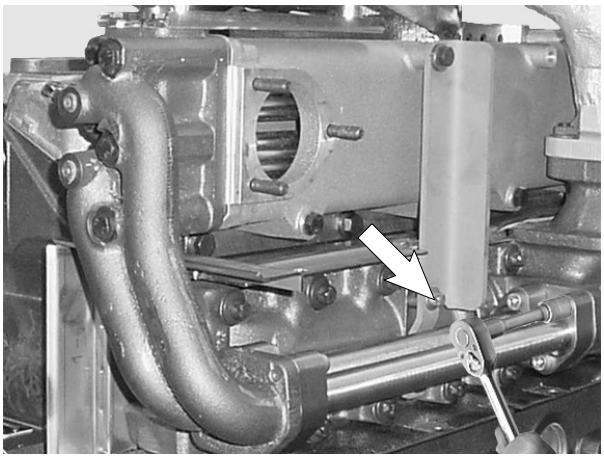
2

Fig. 3

Remove mounting bolts for exhaust-gas recirculation line ① and coolant elbow ②.

Take off exhaust-gas recirculation elbow and coolant elbow.

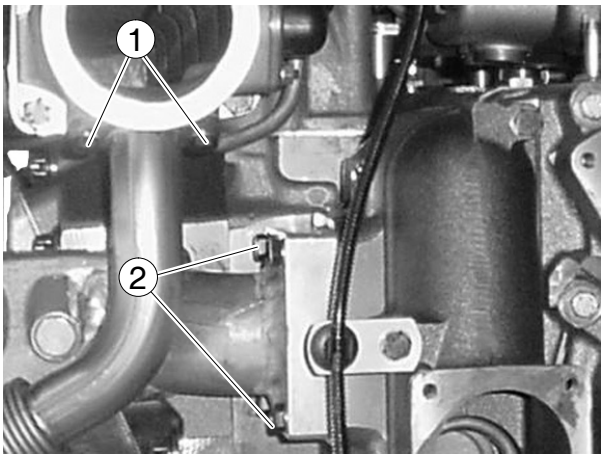

3

Fig. 4

Remove mounting bolts for EGR module and take off EGR module.

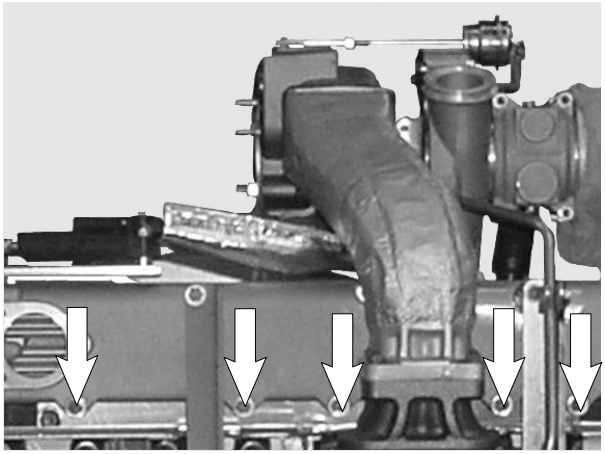
4

https://truckmanualshub.com/

Fitting EGR module

Fig. 5

To refit the EGR module follow the removal procedure in reverse.

- Position the EGR module and secure it with the mounting bolts
- Refit exhaust-gas recirculation line, pipes and coolant elbow with new seals
- Installing the exhaust manifold and turbo-charger
- Connect up air line to pneumatic cylinder
- Fill coolant, see page 42

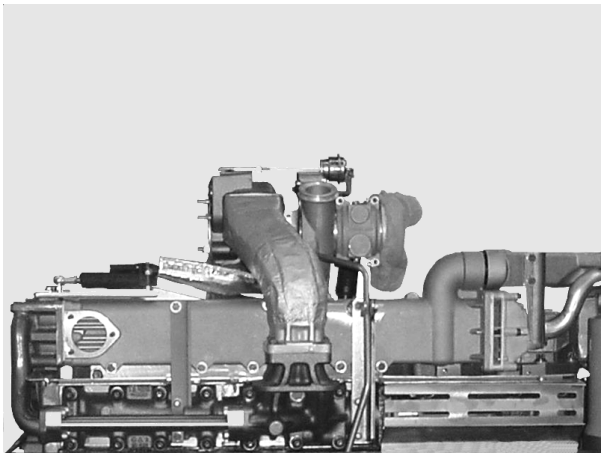

5

Stripping the EGR module

- Remove EGR module, see page 82

Caution:
Do **not** strip the exhaust-gas pipes / heat exchanger housing unit as otherwise the sealing between the gas-carrying and coolant-carrying components is no longer guaranteed.
Leaks between these components can cause coolant to get into the cylinders and thus lead to “water hammer”.

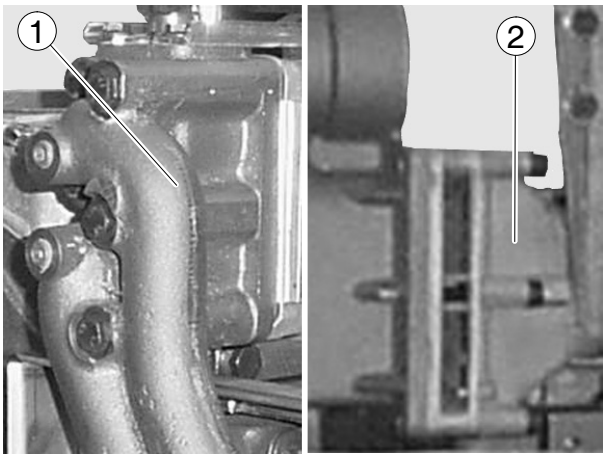

6

Fig. 6

Remove bolts from butterfly valve housing ① and from valve housing ② and take off both housings.

The check valves are under the valve housing and can be changed if necessary.

Reassembling the EGR module

Position butterfly valve housing and valve housing with new gaskets, secure them with the mounting bolts and tighten the bolts to the specified torque.

Refit EGR module, see page 83.

Before replacing the turbocharger, perform the following checks

It is frequently the case that with excessive engine oil consumption, low power or abnormal intake and/or exhaust noise the turbocharger is replaced.
Subsequent inspections by the manufacturer of the supposedly defective parts frequently prove the turbochargers to be in working order.
To ensure that only defective turbochargers are replaced in future, the following checks must be carried out beforehand:

In the case of excessive oil consumption

- check the air filter for soiling
- the intake system for reductions in diameter and leaks.

All of these cause higher oil consumption due to the increased vacuum.

- Check the outside of the turbocharger for traces of oil.

Oil consumption caused directly by the charger depends on the bearing wear and leads relatively quickly to mechanical damage.

In the case of unsatisfactory engine power

A requirement for a satisfactory level of engine power is setting in accordance with regulations
- start of fuel delivery
- and of the valve clearance
- speed adjustment (pedal value)

The following must also be checked
- the compression pressure
- soiling of the air filters
- the intake system for reductions in diameter and leaks
- the exhaust system for damage and leaks
- the fuel delivery quantity is to be checked by measuring the fuel return

If these checks do not lead to detection of a possible cause, the turbocharger must be checked for
- coking in the turbine area leading to sluggishness of the rotor assembly(can be remedied by axial movement)
- coarse dirt in the compressor area
- damage caused by foreign bodies
- scraping of the rotor disk on the casing.

In the case of coarse dirt, the compressor side must be cleaned and the bearing clearance checked.

Caution:
Do not damage the light-alloy compressor wheel.

In the case of abnormal intake and exhaust noise

- Check the intake and exhaust system in the area of the charge group.
  Damaged gaskets lead to false diagnosis of a defective turbocharger; these must be replaced.
- If the abnormal noise is still present, replace the turbocharger.
  Mechanically perfect turbochargers do not generate any noise!

https://truckmanualshub.com/

In the case of oil accumulation in charge-air lines and charge-air cooler

Slight oil accumulation due to oil spray in the charge−air system is a result of the design and is desirable. The oil mist is required to lubricate the intake valve seats.

If more oil accumulates than is normal, i.e. to the extent that oil pockets develop e.g. in the lower air box of the intercooler, this can lead to oil disintegration or uncontrolled engine racing when the oil is separated. In such cases, remove the cause.

Possible causes:

- Oil overfilling of the engine.
  - Check whether the correct dipstick and guide tube combination is fitted.
- Use of unsuitable engine oil (see brochure “Fluids and lubricants”)
- Operation of the engine on non-permitted inclines.
- Excessive crankcase pressure, e.g. due to defective oil separator valve (crankcase breather) or piston ring wear.

Compressor coking

This can occur when the charge-air temperature is permanently high, for example when the engine is constantly run at full load.

Coking leads to a reduction in the charging pressure, but not to drops in power or poorer acceleration characteristics.
Coking can lead to increased exhaust haze.

In the case of compressor coking:

- Remove the compressor housing without tilting it
  - If it jams, the compressor wheel blades may get damaged or bent and the resulting imbalance may destroy the turbocharger.
- Remove coking from the compressor housing using coke-dissolving cleaner.

Danger:
Under no circumstances should cleaner be sprayed in while the engine is running
- ineffective
- danger of accident!

- In problem cases, use oil types that are less likely to lead to compressor carbonisation (see publication “Fuels, Lubricants and Coolants for MAN Diesel Engines”).

https://truckmanualshub.com/

Checking charging pressure

Sufficient boost pressure is essential to ensuring full power output and clean combustion.
Checking the boost pressure helps to detect damage to the turbocharger and leaks in the intercooler and in the charge-air pipes.
Extreme operating conditions (full-load operation and high air temperature) and the use of unsuitable engine oils (see also publication “Fuels, Lubricants and Coolants for MAN Diesel Engines”) may give rise to deposits on the compressor and in the intercooler, resulting in a reduction in boost pressure.

Note:
The charge-air pressure can be read out also via the MAN Cats diagnostic system.

Preconditions for measurement

The start of fuel delivery and valve clearance must be set as specified and the engine must be at normal operating temperature.

Charge-air pressuer:

No generally applicable target value for charging pressure can be given, as the installation conditions exert an influence.
The target value is the value determined on commissioning of the engine and reported in the commissioning log.

Specific instructions during measurement

Based on various atmospheric reference conditions during the measurements and on tolerances of the pressure gauges used, deviations of max. ±100 hPa (±100 mbar) are permitted.

Fig. 1

The measuring connection for checking the charge–air pressure and the charge–air temperature is located in the intake pipe at the point where the flame–starter sheathed–element glow plug is screwed in.

Remove flame-starter sheathed-element glow plug see page 41.

Connect up pressure gauge (if necessary using a suitable threaded pipe as adapter).

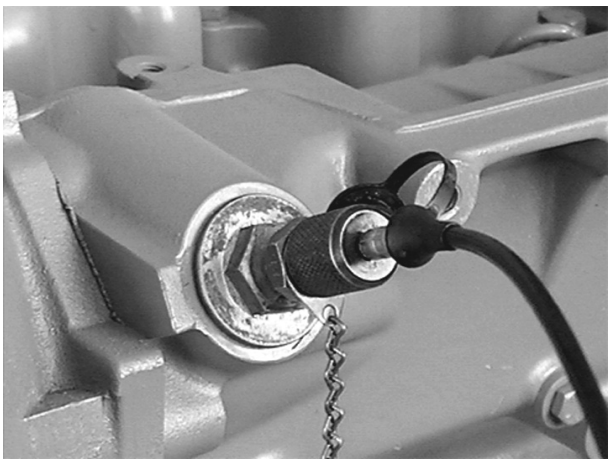

1

Fig. 2

Measure the boost pressure downstream of the intercooler at rated engine speed and full load.

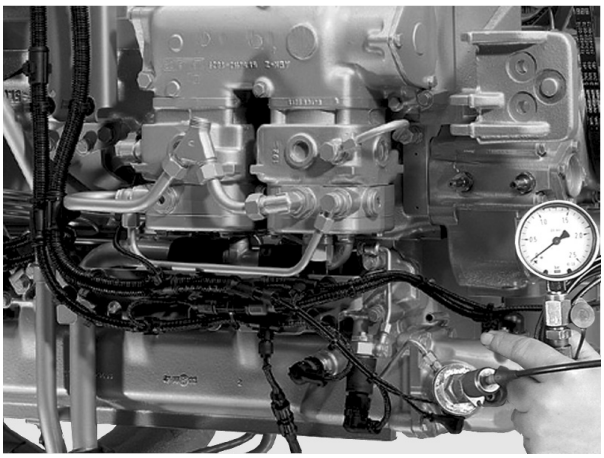

2

https://truckmanualshub.com/

Remove turbocharger

Fig. 1

Remove oil supply ① and return lines ②.

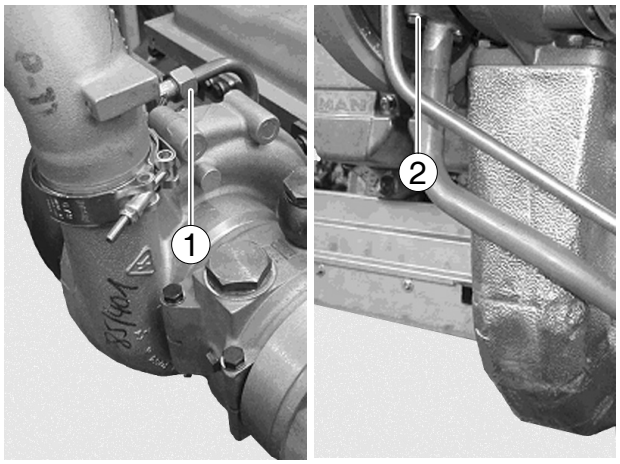

1

Fig. 2

Afterwards remove the pipe leading to the crankcase breather ③ the spring band clamp from the air compressor intake pipe ④ and the V-clamp from the charge-air elbow ⑤ and take off the pipes.

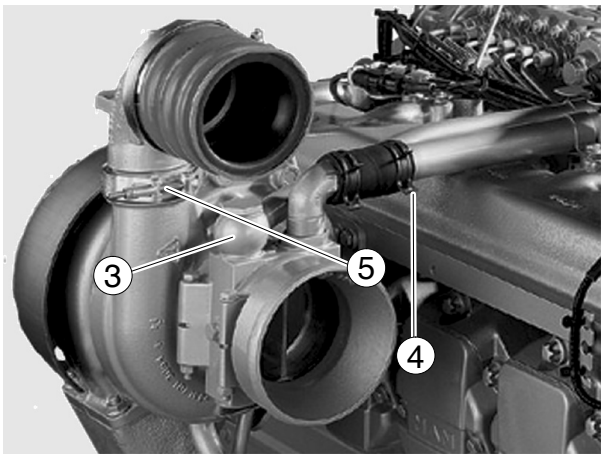

2

Fig. 3

Remove the nuts ⑥ from the turbocharger flange.

Take off turbocharger.

> **Note:**
> When placing the turbocharger to one side, ensure extreme cleanliness to prevent penetration of dirt and foreign bodies.

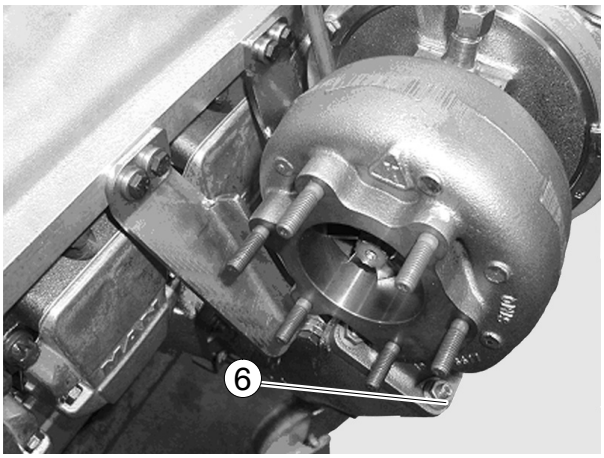

3

Install the turbocharger

Fig. 4

The turbocharger is fitted in reverse order.

On assembly, new gaskets and new self-locking nuts are to be used.

Before connecting the oil supply line, fill the bearing housing with fresh engine oil.

Check all the connections for leaks and to ensure they are not subjected to strain.

4

Fig. 5

Note:
Ensure that the clamping area of the hose is always behind the bead of the pipe.

① Pipe
② Hose
③ Hose clamp
④ Distance
⑤ Bead on pipe

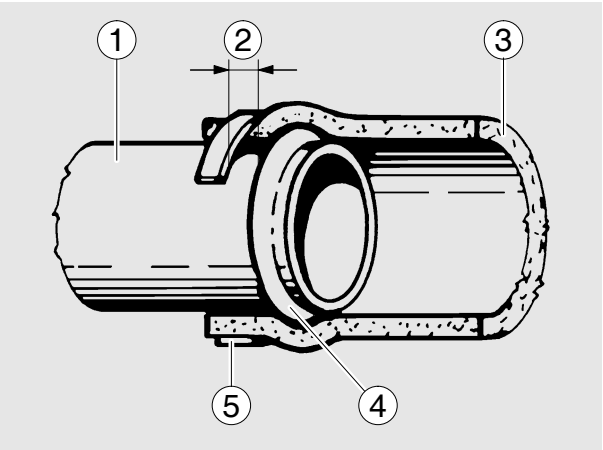

5

https://truckmanualshub.com/

- Removing the turbocharger, see page 87
- Mark turbine housing relative to the bearing housing and remove turbine housing

Axial clearance

Fig. 1

Apply dial gauge holder and dial gauge under preload to shaft end face of the turbine wheel as shown. Apply the dial gauge with initial tension on the face of the shaft end of the turbine wheel.
Press the rotor shaft against the dial gauge, read off and note the value. Press the rotor shaft in the opposite direction, read off and note the value.
The difference between the values obtained is the axial clearance.
If the play exceeds the permissible value, exchange turbocharger.

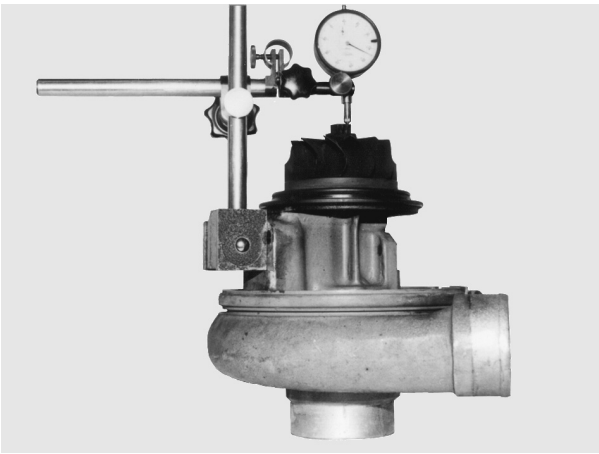
1

Radial clearance

The radial clearance is measured only on the turbine side with a dial gauge or feeler gauge.

Fig. 2

Dial gauge:
Place the measuring tip of the dial gauge to the side of the hub, press the turbine wheel to the dial gauge, read off and note the value.
Press the turbine wheel in the opposite direction, read off and note the value. The difference between the values obtained is the radial clearance.
Measure at several points.
If the play exceeds the permissible value, exchange turbocharger.

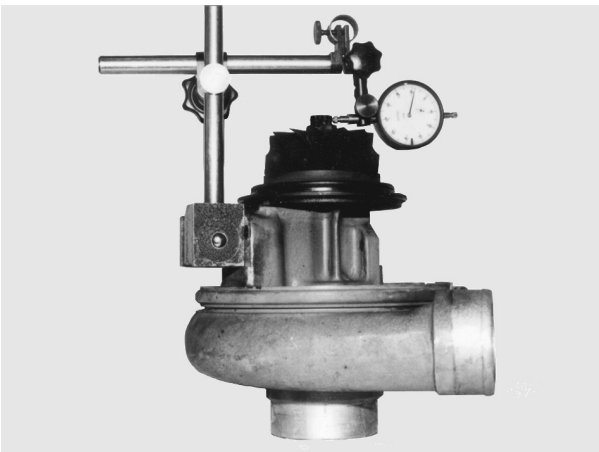
2

https://truckmanualshub.com/

Removing the cylinder head

- Draining off coolant, see page 42
- Remove injection nozzles, see page 30
- Removing EGR module, see page 82
- Removing intake manifold, see page 79
- Removing exhaust manifold, see page 80

Fig. 1

Remove the coolant bleed pipe.
Remove the cylinder head covers.

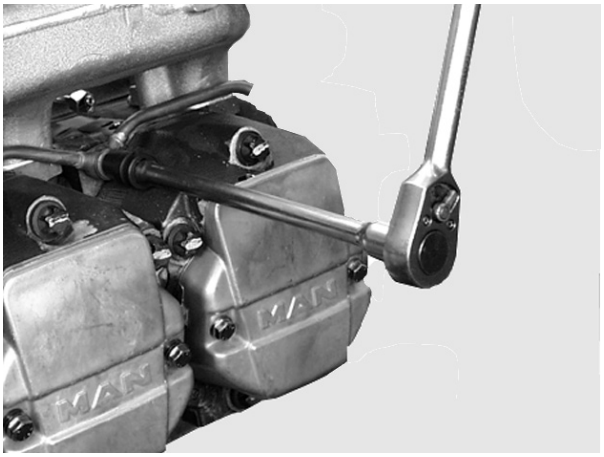
1

Fig. 2

Back off the valve adjusting screws.
Release and remove the cylinder head bolts in reverse order of tightening.

Note:
Use a reinforced screwdriving machine to loosen and tighten the cylinder head bolts.

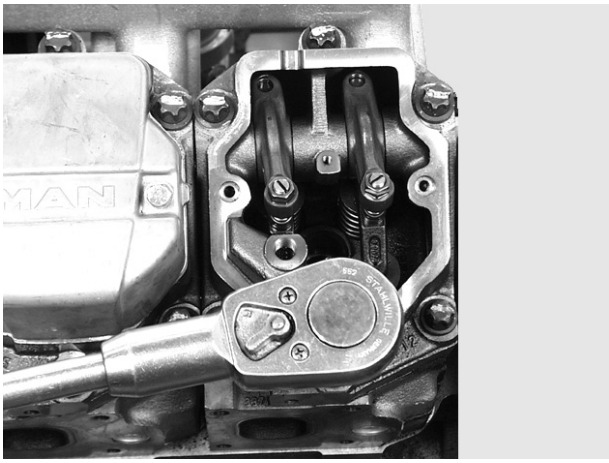
2

Fig. 3

Remove rocker arm bearing housing.

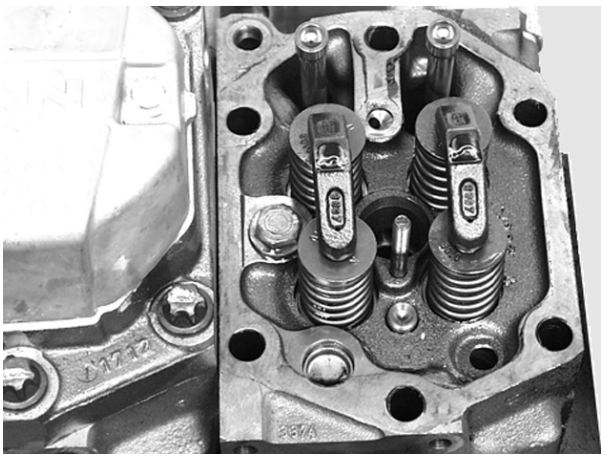
3

Fig. 4

Remove the valve bridges.
Take out the tappet push rods.

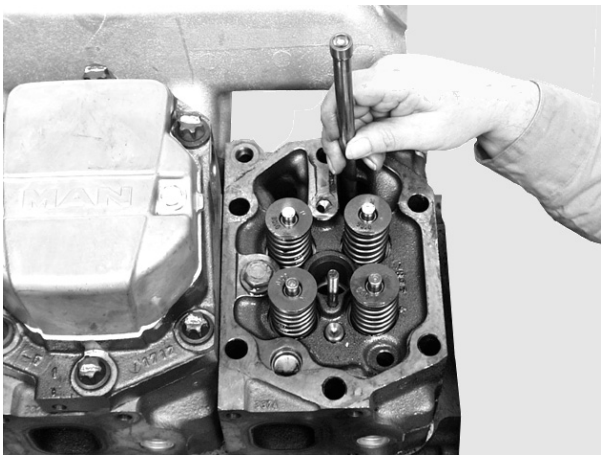
4

https://truckmanualshub.com/

Fig. 5

Remove the cylinder head and cylinder head gasket.

Check whether cylinder head sealing face and cylinder block are plane using a straight edge.

> **Caution:**
> The cylinder head sealing face must **not** be reworked.

Note specified nozzle projection and valve recess (see “Service Data”).

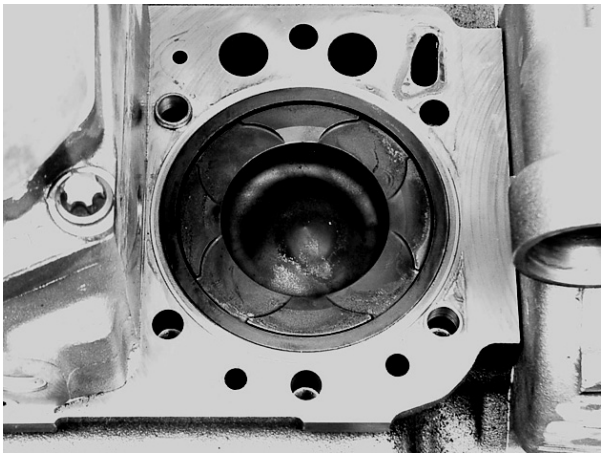

5

Fitting the cylinder head

Fig. 6

Before fitting, clean and blow out the tapped holes in the crankcase. Clean the sealing faces on the cylinder head and on the crankcase.

Lay the new cylinder head gasket in place, ensuring that the hole patterns match up, and place the cylinder head on top.

Each cylinder head is fixed in position with 2 fitting sleeves.

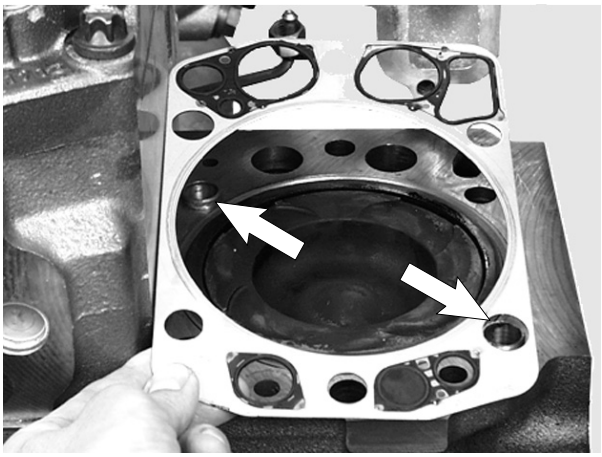

6

Fig. 7

Check the push rods for distortion. When inserting the tappet push rods, ensure that they fit in the socket of the valve tappet.

Insert the valve bridges with the cut-through sides ② facing the push rods.

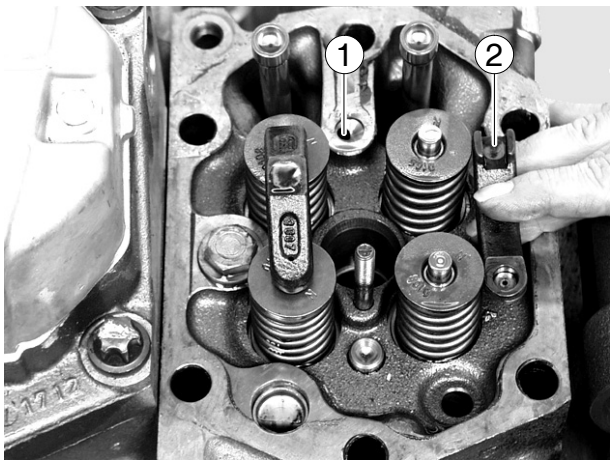

7

Fig. 8

Apply a thin bead of “Loctite 5900” sealing compound to seal the rocker arm bearing housing.

> **Caution:**
> The bore hole (① in Fig. 7) must be kept clear for the oil supply!

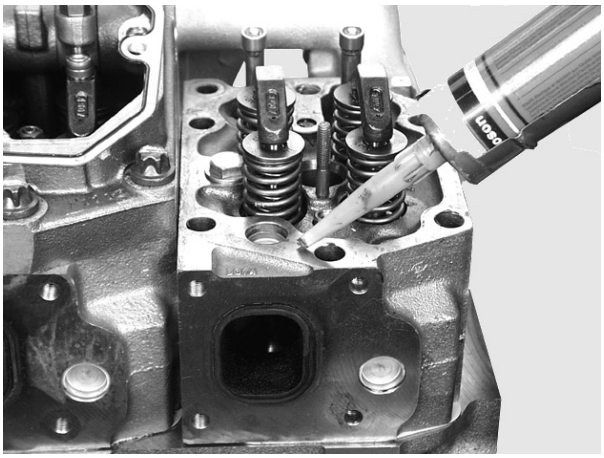

8

https://truckmanualshub.com/

Fig. 9

Fit the rocker arm bearing housing, inserting the rocker arm ball pins into the tappet ball sockets.

Fig. 10

Check cylinder–head bolts for max. permitted length (see “Service Data”). Removed bolts can be reused if the max. permitted length is not exceeded.

Before inserting the cylinder head bolts, apply engine oil to the threads and coat the contact faces of the bolt heads with “Optimoly White T” installation paste.

Fig. 11

Tighten the bolts according to the rotation angle method. Observe the tightening sequence, prescribed tightening method, instructions and notes on cylinder head bolts in the chapter “Service Data”.

Note:
To avoid any distortion between the cylinder heads and exhaust manifolds, we recommend proceeding as follows:

- Fit the cylinder head gaskets and cylinder heads.
- Turn the head bolts a few thread turns.
- Secure steel ruler (special tool) with ground face on the exhaust side; tightening torque for mounting bolts 20 Nm.
  If a steel ruler is not available, mount exhaust manifold and tighten to 20 Nm.
- Tighten the cylinder–head bolts as prescribed.
- Unscrew the straightedge.
- Tighten the exhaust pipe and intake manifold with the prescribed torque.

9

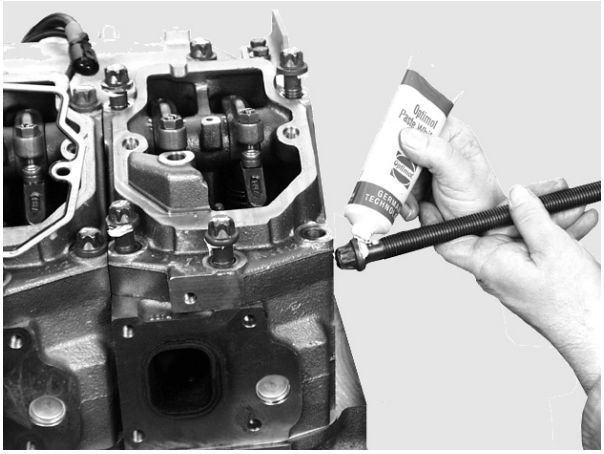
10

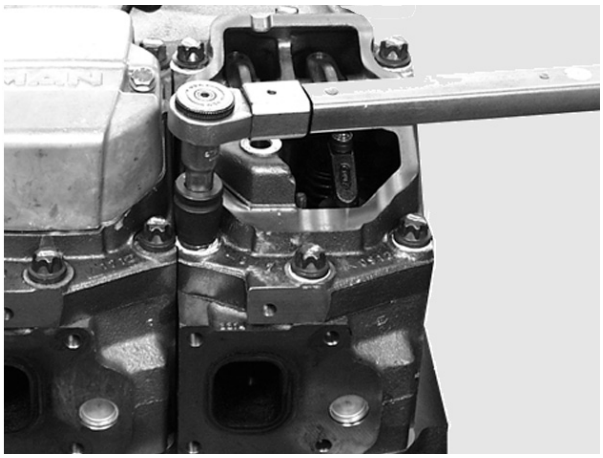
11

Fig. 12

Set valve clearance, see page 94.
Fit injection nozzle.
Fit the cylinder head cover with a new gasket.
Fitting EGR module.
Fit coolant bleed line with new seals.
Fill up with coolant, see page 42.

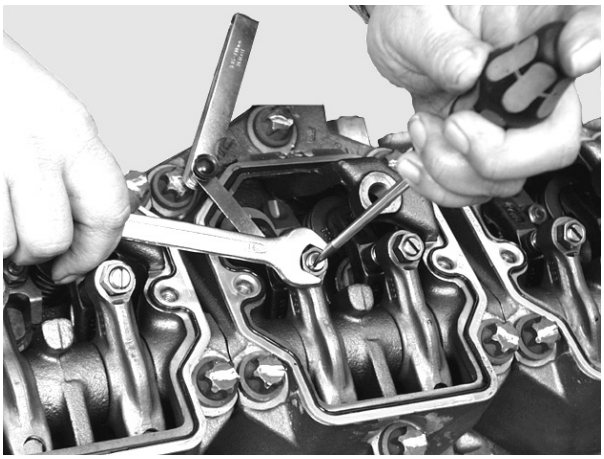
12

https://truckmanualshub.com/

General notes

The sealing effect of the cylinder head gasket depends mainly on whether the required initial tension of the cylinder head bolt is actually achieved and retained.

Use calibrated torque wrenches to tighten the cylinder head bolts. The specified final torque must be maintained for at least 5 seconds when it is applied. When using snap-type torque wrenches, tighten the bolts gradually as otherwise the torque selected will not be fully transferred to the bolts.

Observe the notes on the usability of cylinder-head bolts, tightening sequence, and prescribed tightening method in the chapter “Service Data”.

Tightening

“Tightening” is defined as the initial tightening of newly fitted bolts that have not been tightened following a repair - e.g. after replacement of the cylinder head gasket. Tighten cylinder head bolts while the engine is cold, i.e. the crankcase is warm to the touch or colder.

Before inserting the cylinder–head bolts, apply engine oil to the thread (not the threaded hole) and coat the seating surface of the bolt head with installation paste “Optimoly White T”.
Do not use oils or oil additives containing MoS_2.
In the case of unoiled bolts, a significant amount of the tightening torque is converted into friction and is thus lost for bolt pretensioning.

- To secure the cylinder heads, tighten the cylinder head bolts only slightly
- Align cylinder heads by screwing on the steel ruler (special tool). If a steel ruler is not available, use exhaust or intake manifold
- Tighten step by step in the correct order to specified torque/angle of rotation

Caution:
If individual bolts are tightened too much during preliminary tightening, the cylinder head is distorted.
The distortion cannot be cancelled out by continued tightening according to instructions!

https://truckmanualshub.com/

Fig. 1

Remove the cylinder head covers.

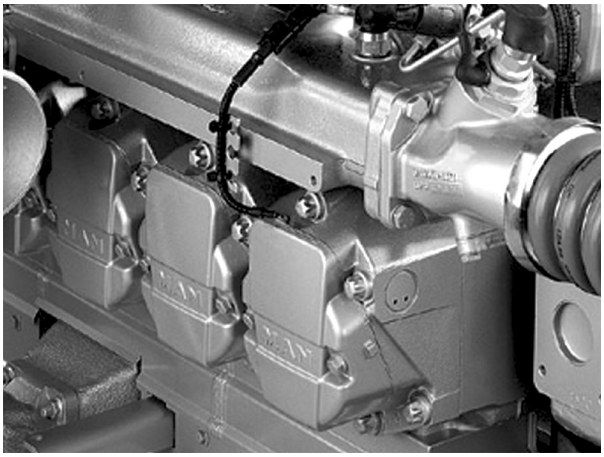

1

Fig. 2

An engine cranking device (special tool) may be mounted also at the inspection hole of the flywheel housing.

Use barring device to turn engine so that the piston in the cylinder to be set is at TDC and the all valves are closed. At this point both inlet and exhaust valves will be open i.e. valves overlap.

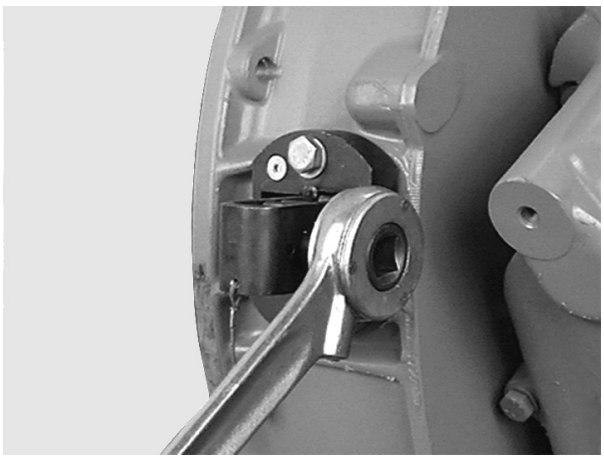

2

Fig. 3

Valves are in crossover in cylinder:

1	5	3	6	2	4
6	2	4	1	5	3

Set valves on cylinder:

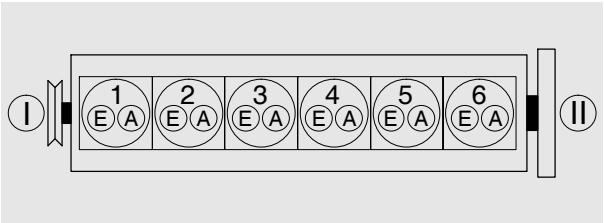

3

Arrangement of cylinders and valves

I Engine front end
II Flywheel side
A Exhaust valve
E Inlet valve

Fig. 4

Push feeler gauge between valve connection and rocker arm. Loosen the locknut and turn the adjustment screw until the feeler gauge can be moved with slight resistance

Tighten lock nut to the specified torque (see “Service Data”) using screwdriver to prevent adjusting screw from turning. Check clearance again.

Refit cylinder head covers.

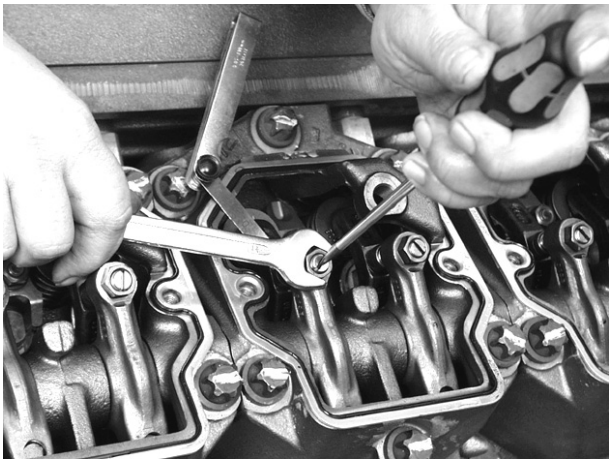

4

https://truckmanualshub.com/

Disassembling rocker arm mechanism

- Remove cylinder head, see Page 90

Fig. 1

Clamp mounting plate ② (special toolLEERER MERKER, item. 24) in a vice and bolt the rocker arm bearing housing onto the mounting plate.
The exhaust valve rocker arm shaft has a tapped hole.
Screw adapter and impact puller ① into this tapped hole.

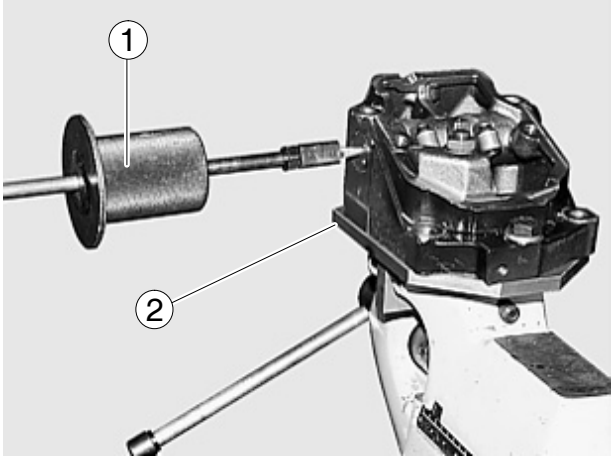

1

Fig. 2

Pull out the exhaust valve rocker arm shaft and remove the rocker arm.

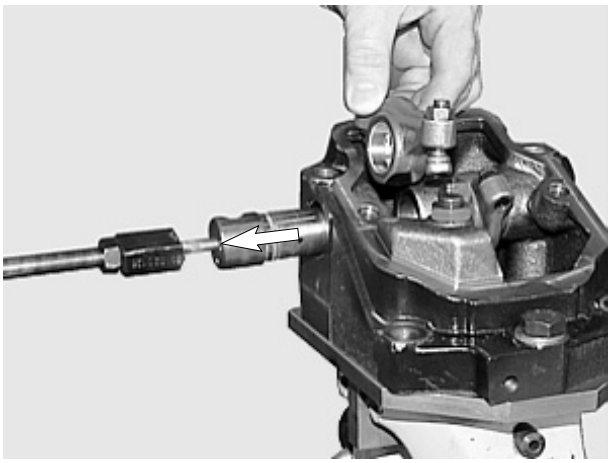
2

Fig. 3

Drive out the intake valve rocker arm shaft with a suitable plastic mandrel.

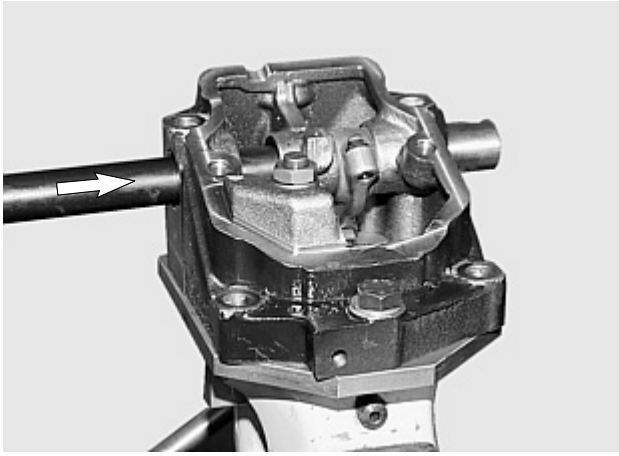
3

Fig. 4

Remove the rocker arm shaft and rocker arm.

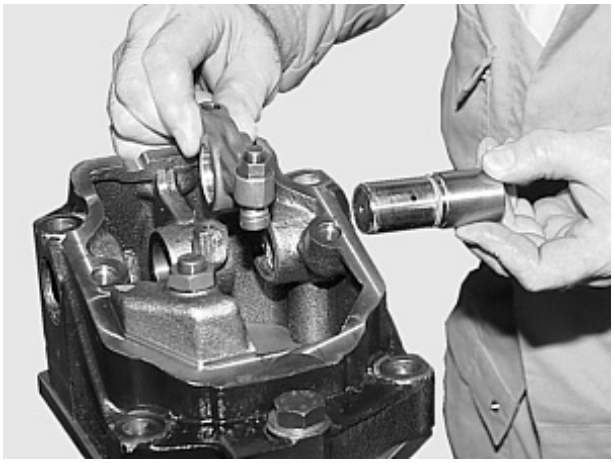
4

https://truckmanualshub.com/

Fig. 5

① Rocker arm shaft for exhaust valves
② Rocker arm shaft for inlet valves
③ Rocker arm

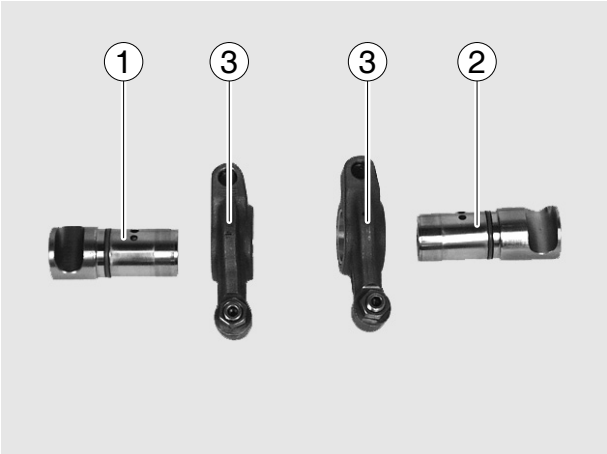

5

Assembling rocker arm mechanism

Fig. 6 and Fig. 7

Recesses ① in the rocker arm shafts serve to accommodate the cylinder head bolts ②.

Align the rocker arm shafts so that the holes for the cylinder head bolts are kept free.

Lightly oil the shafts and O-rings.

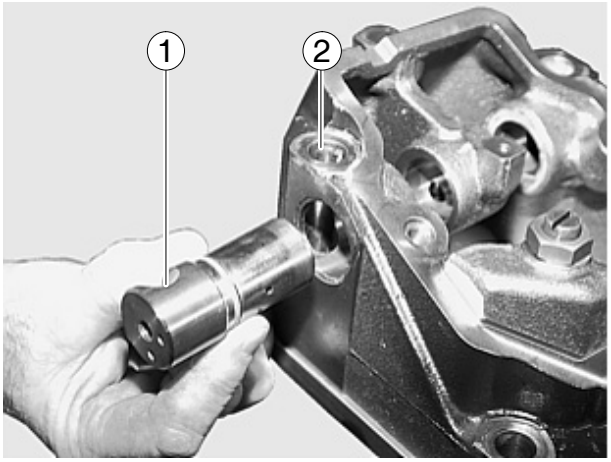

6

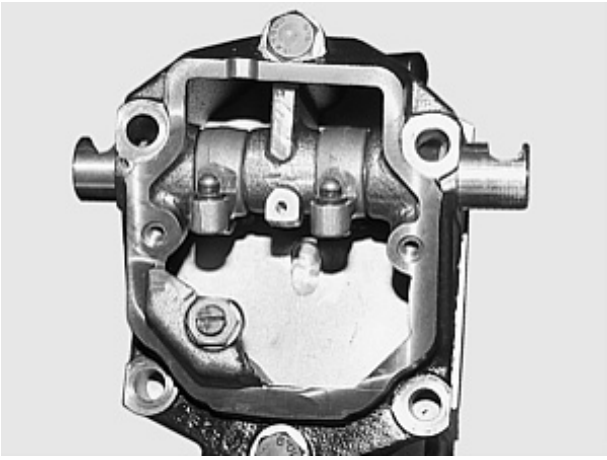
7

Fig. 8

Press-in device for the rocker arm shafts (special tools, item. 27.3, see page 169).

① Guide plate
② Mounting bolts
③ Press-in part “A” for exhaust-side shaft
④ Press-in part “B” for intake-side shaft

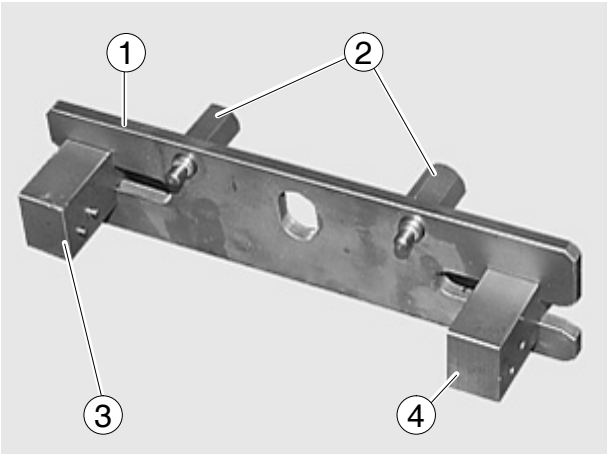

8

https://truckmanualshub.com/

Fig. 9

Bolt the guide plate onto the rocker arm bearing shaft – with “TOP” facing the intake side.

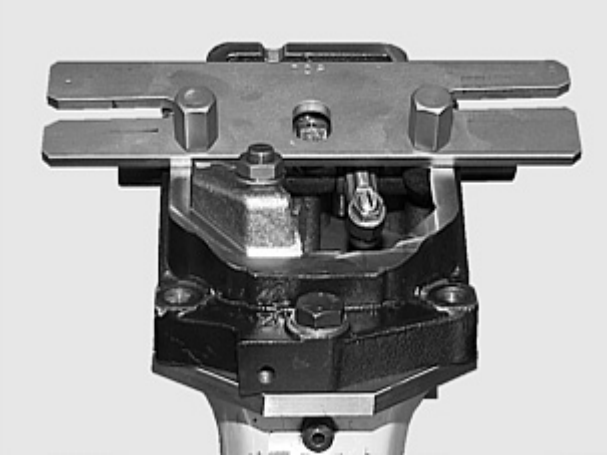

9

Fig. 10

Insert press-in part “A” for the exhaust-side shaft into the guide plate, ensuring that the alignment pins fit into the shaft bores.

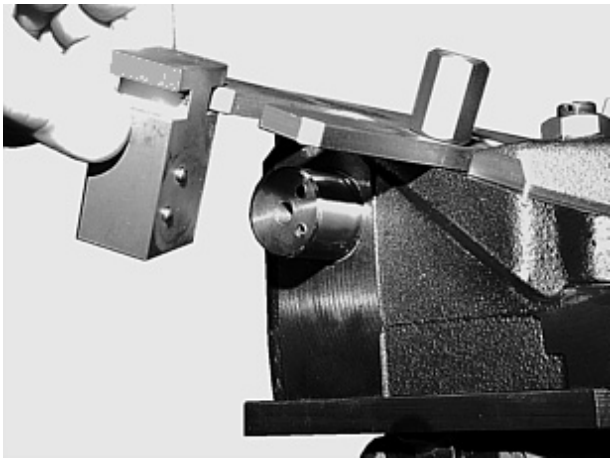

10

Fig. 11

Drive the rocker arm shaft fully home into the bearing housing.

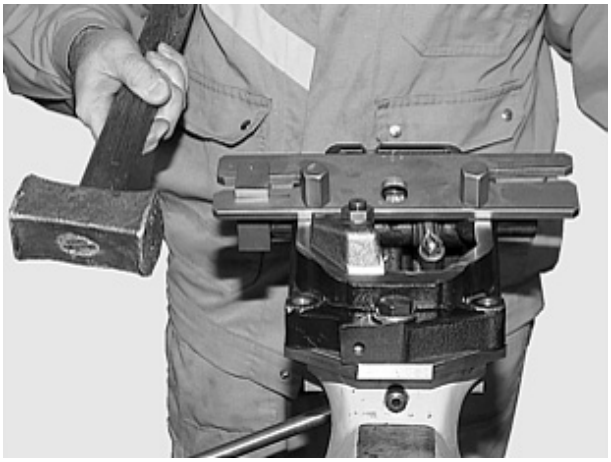

11

Fig. 12

Insert press-in part “B” for the intake-side shaft into the guide plate, ensuring that the alignment pins fit into the shaft bores.
Drive the rocker arm shaft fully home into the bearing housing.

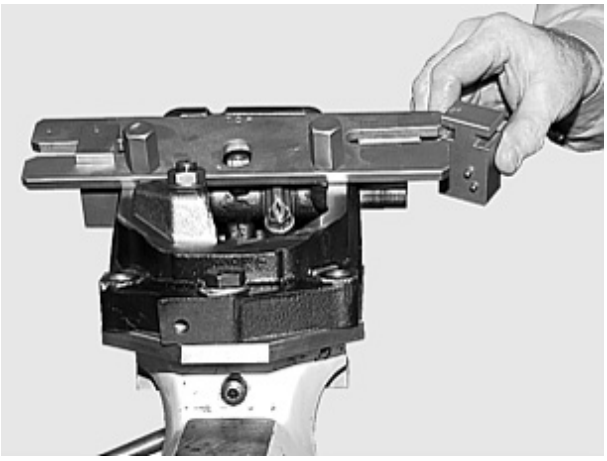

12

https://truckmanualshub.com/

Fig. 13

Remove the press-in tool.
Check the rocker arms for ease of movement and axial play.

13

https://truckmanualshub.com/

Removing valves

- Remove cylinder head, see page 90

Fig. 1

Special tools for removing and installing the valve springs (item. 26, see page 169):

① Assembly plate for cylinder head and rocker arm bearing housing (not in tool case)
② Anchor plate with grid part
③ Guide sleeve
④ Additional guide sleeve for 4-valve cylinder head
⑤ Pressure fork
⑥ Extension for pressure fork
⑦ Assembly cartridge for retaining wedges
⑧ Sleeve with large diameter for ∅ 2 valve cylinder head
⑨ Sleeve with small diameter for ∅ 4-valve cylinder head

Depending on the cylinder head, the sleeves are bolted onto the mounting cartridge.

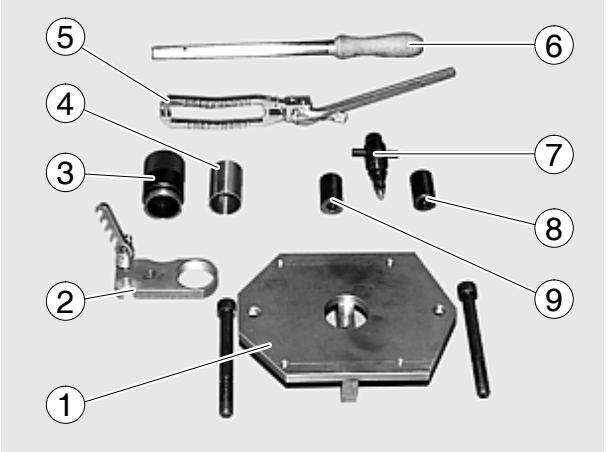

1

Fig. 2

Secure the cylinder head on mounting plate ①.

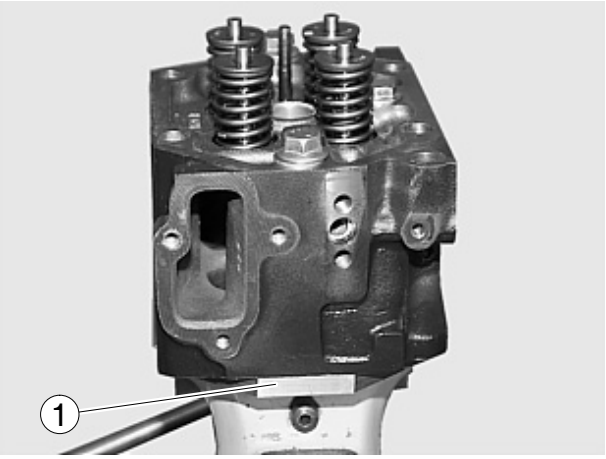

2

Fig. 3

Fit guide sleeve ④ over the valve spring for centring.

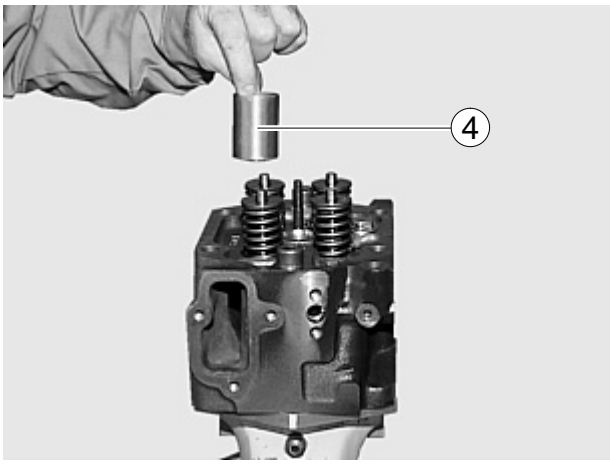

3

Fig. 4

Screw guide sleeve ③ into anchor plate ② and push both parts over guide sleeve ④ onto the cylinder head.
Bolt down the anchor plate.

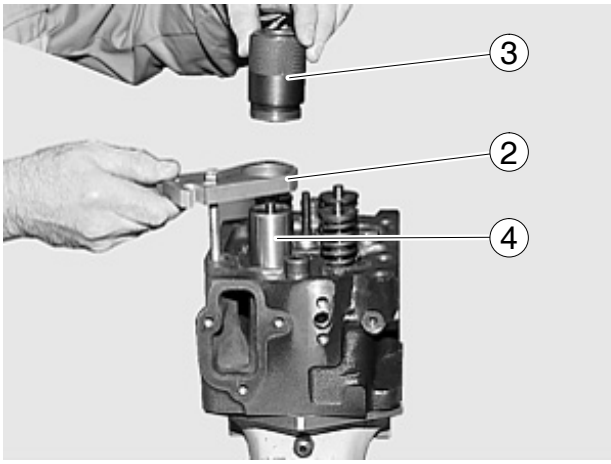

4

https://truckmanualshub.com/

Fig. 5

Feed mounting cartridge ⑦ with sleeve ⑨ (small dia.) into the guide sleeve and using the knurled grip insert the holder into the joint between the retaining wedges.

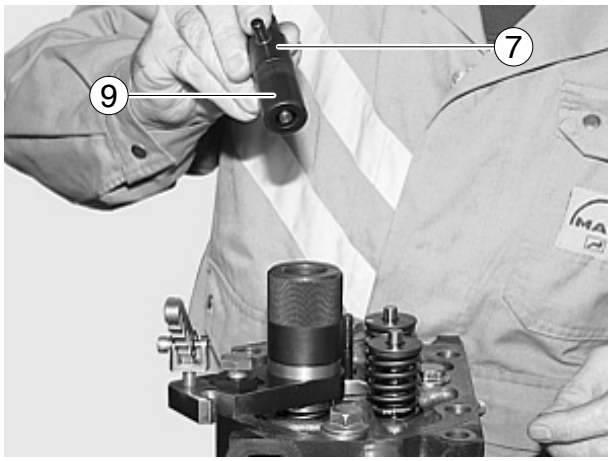

5

Fig. 6

Attach pressure fork ⑤ and press down as far as possible with the mounting cartridge.
Press the knurled grip (arrowed) down, turning a little if necessary.

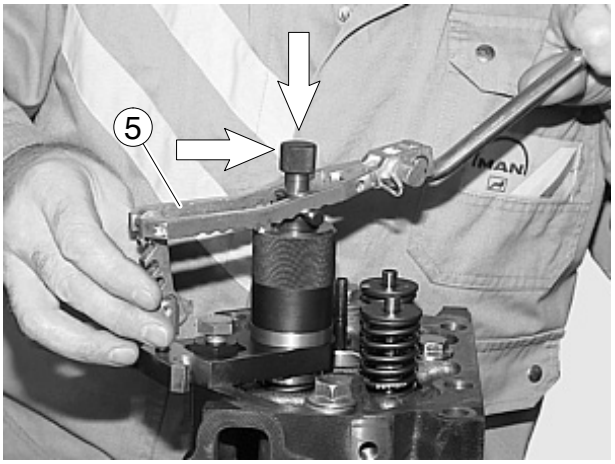

6

Fig. 7

Release the pressure fork slowly. The retaining wedges must now be in the mounting cartridge.

7

Fig. 8

Remove the guide sleeves and the valve spring. Remove the anchor plate and attach it for removal of the next valve spring.

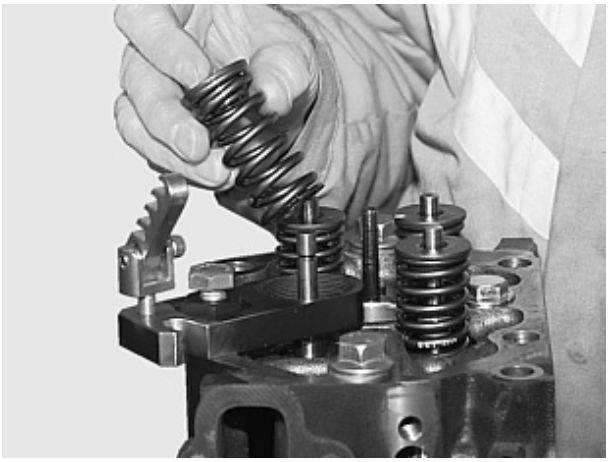
8

https://truckmanualshub.com/

Fig. 9

Remove the valve stem seals with a quick gripper (if available).

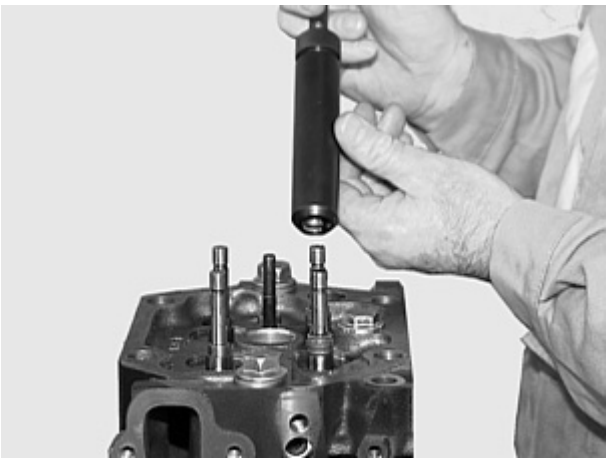

9

Fig. 10

Remove the washers for the valve springs.

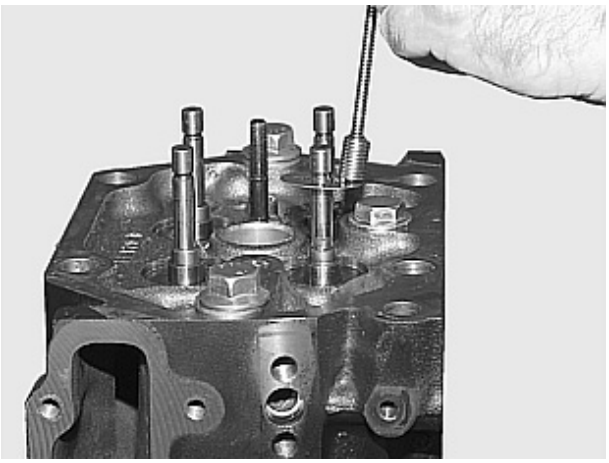

10

Fig. 11

Turn the cylinder head over and remove the valves.
Clean parts.
Inspect the valve stem for pitting and wear.
Inspect the valve guides for wear; if necessary, measure internal diameter (see “Servive Data”) with a plug gauge.
Inspect the valve seat inserts for burnt-out spots.

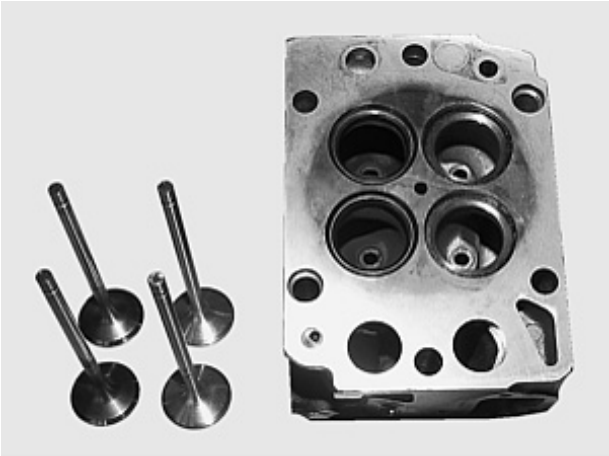

11

Fig. 12

Inspect the valve seat for heavy notching and burnt-out spots; if necessary, regrind the valves, paying attention to the valve recess (see “Service Data”) while doing so.

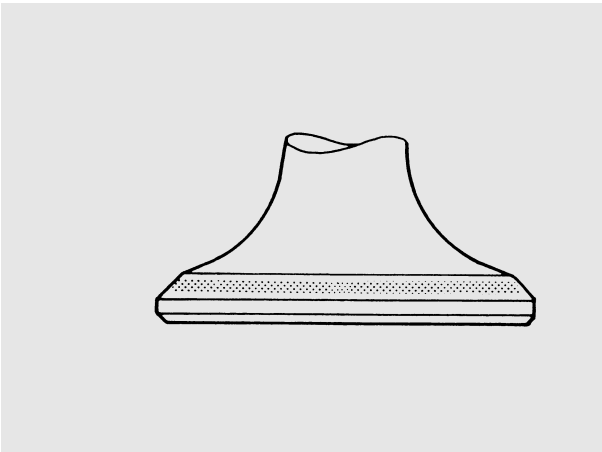

12

Installing valves

Fig. 13

Lubricate the valves at the stems and insert in the correct valve guides.

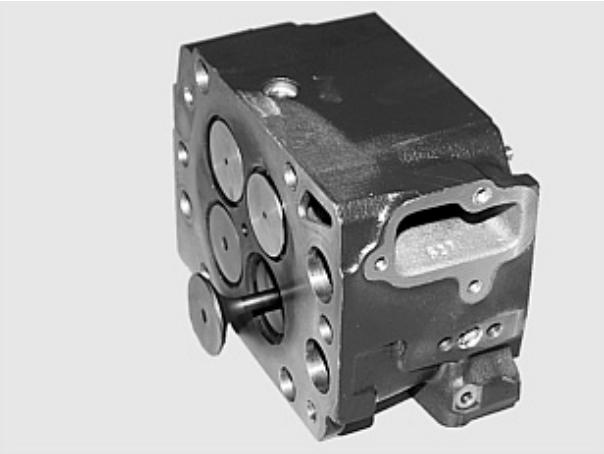

13

Fig. 14

Turn the cylinder head over and secure to the mounting plate.
Insert the washers for the valve springs.

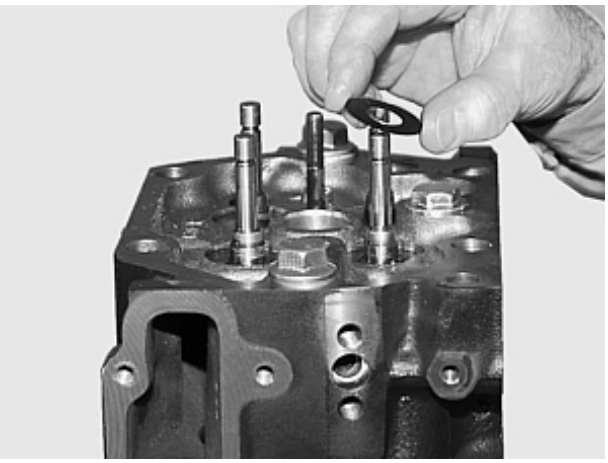

14

Fig. 15

Mount the insertion sleeve for the valve stem seals (special tool, see item. 26.2 page 169) on the relevant valve.

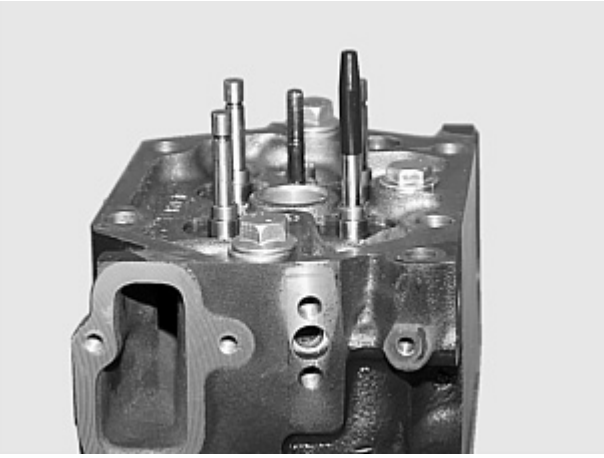

15

Fig. 16

Place the valve stem seal in the quick gripper so that after installation the spiral-type expander is at the top.

Note:
Only use new valve shaft sealing rings!

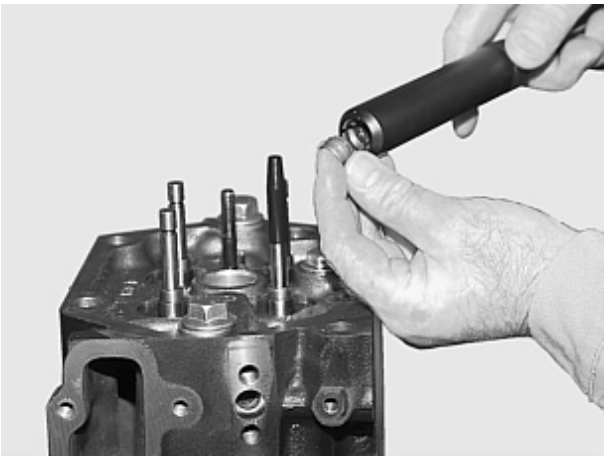

16

https://truckmanualshub.com/

Fig. 17

Press in the valve stem seal as far as it will go.
Remove the guide sleeve.

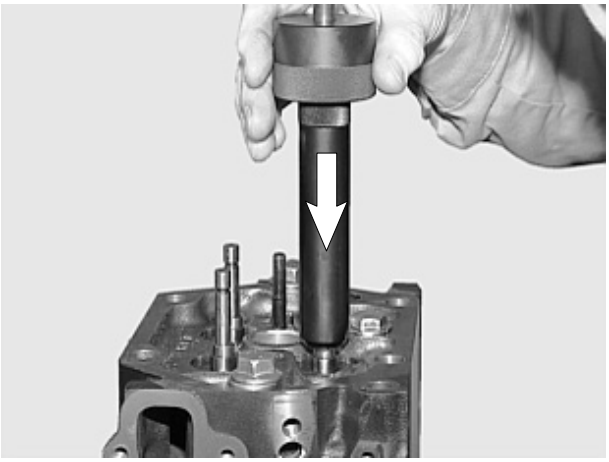

17

Fig. 18

Mount the valve springs and spring seats.

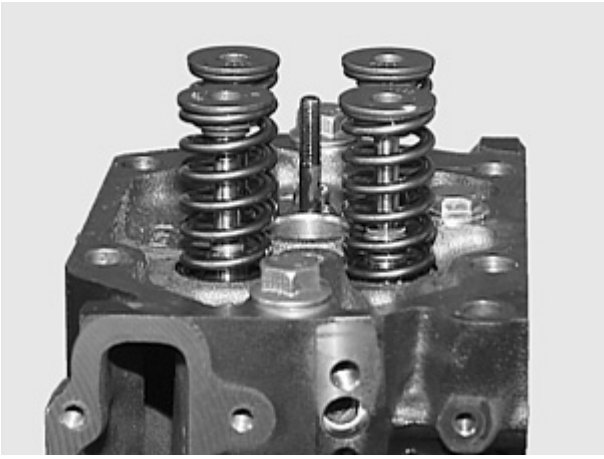

18

Fig. 19

Fit guide sleeve ④ over the valve spring for centring.
Mount anchor plate ② and guide sleeve ③ from the special tool kit.
Insert the retaining wedges in mounting cartridge ⑦.

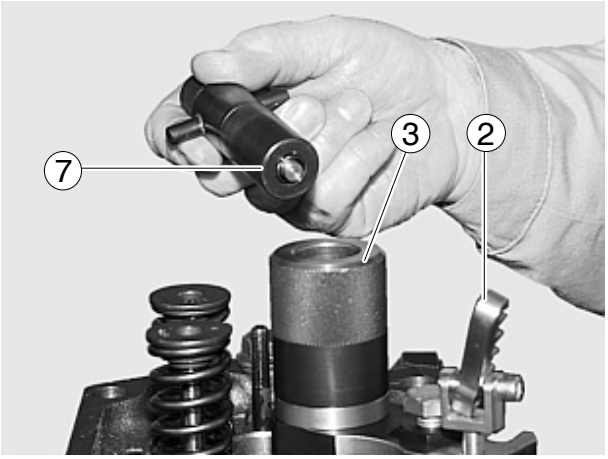

19

Fig. 20

Insert the mounting cartridge in the guide sleeve and press down with pressure fork ⑤ as far as it will go.
Release the pressure fork and remove the mounting cartridge.

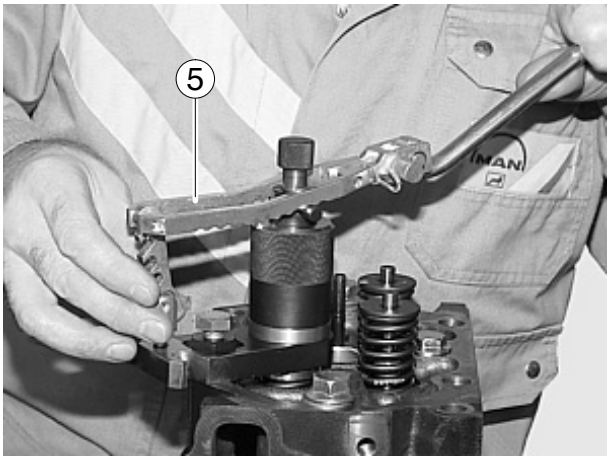

20

Fig. 21

The valve tapers must snap reliably into place when the pressure fork is released.

Caution:
Make sure the valve tapers are correctly seated as tapers which spring out may cause serious engine damage.

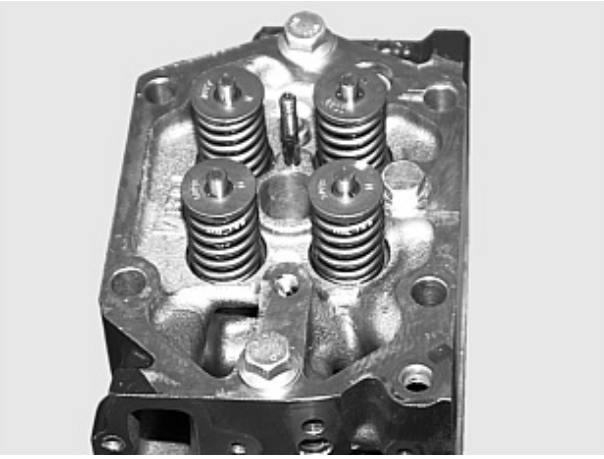

21

Measuring valve projection

Fig. 22

Apply the dial gauge bracket with dial gauge to the cylinder head. Place the dial gauge tip on the cylinder head and set the dial gauge to “0”; swing towards the valve plate and read off projection. If necessary, replace the valve and valve seat ring.

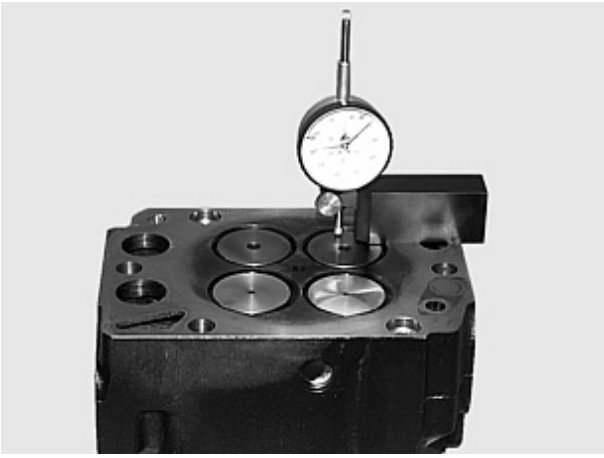

22

https://truckmanualshub.com/

- Removing and attaching cylinder head, see page 90
- Remove and install valves, see page 99

Fig. 1

Special tool for removing and installing the valve guides and valve seats(see page 169, Pos. 26.5):

① Press-in plates for valve seat inserts
② Spacer ring for ①
③ Extraction and press-in punch for valve guides and valve seats
④ Press-in sleeve for valve guides

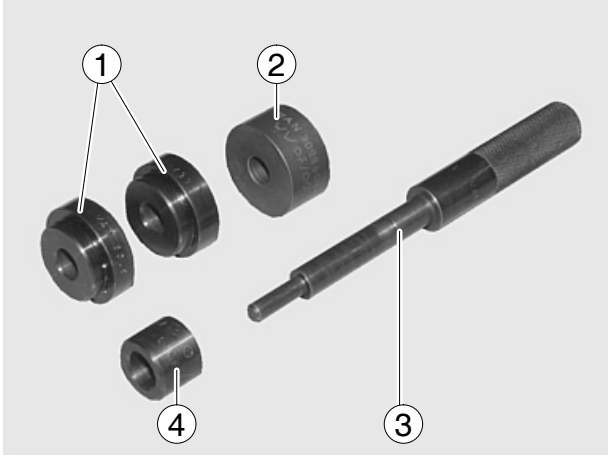

1

Fig. 2

Press out the valve guide from the combustion chamber side with press-in punch ③.

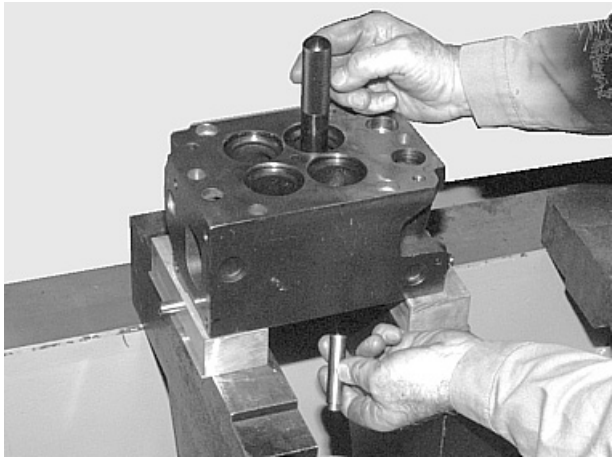
2

Fig. 3

Lubricate the new valve guide and press in with the press-in punch and press-in sleeve from the rocker arm side.

Press-in depth (see “Service Data”).

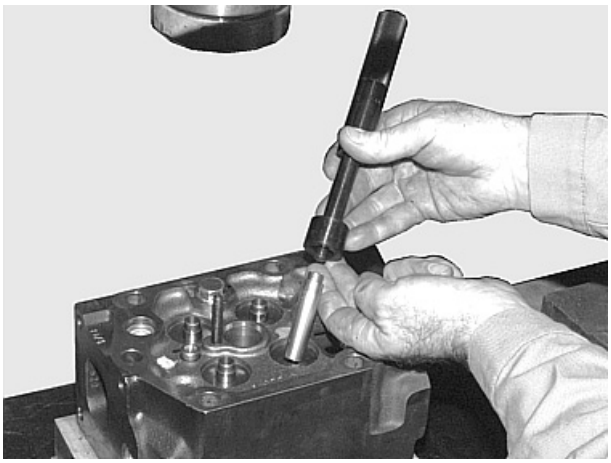
3

Fig. 4

The press-in depth of the valve guides is determined by the press-in sleeve.

Note:
When the valve guides have been replaced, the valve seats must also be reconditioned (refer to technical data and manufacturer’s instructions of the valve seat turning equipment available in the machine shops).

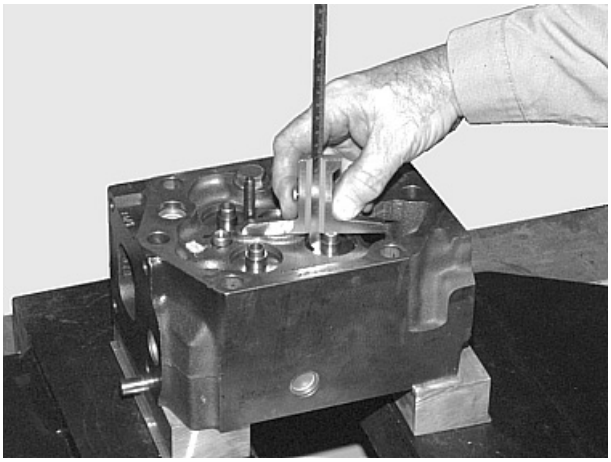
4

Removing valve seat insert

Note:
If the valve seat inserts have to be changed it is necessary to change the valve guides too, as otherwise exact refacing of the valve seat inserts after the replacement cannot be guaranteed. For these reasons previously mentioned the tool for removing and installing valve guides and valve seat inserts was also designed in such a way that if this tool is used valve seat inserts can be replaced only together with the valve guides, i.e. valve guides, however, can also be changed alone.

Fig. 1

Use a valve seat machining tool (valve seat lathe) to cut an approx. 3–4 mm wide groove in the valve seat insert.

Insert internal puller ① (Fig. 2) into the groove and tighten it.

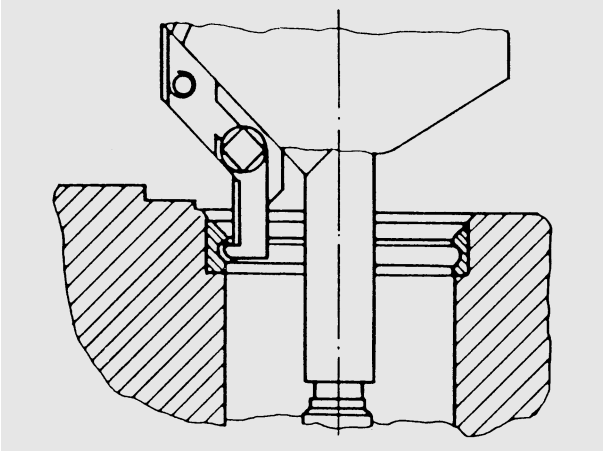

1

Fig. 2

Note:
To avoid damage to the cylinder head sealing face, lay disc ② or similar item under the arms ③ of the support.

Turn threaded spindle ④ into the internal puller (1), align the arms ③ of the support and pull out valve seat insert by turning the nut ⑤.

Clean contact face of the seat insert in the cylinder head.

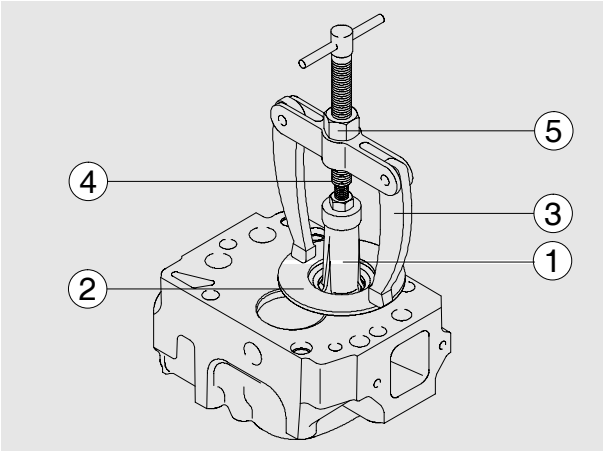

2

Fig. 3

If no valve seat machining tool is available, the following procedure may be followed:

- Apply circular weld bead on the valve seat using an arc welding set (arrows),
- then pull out valve seat insert.
- Clean contact face of the seat insert in the cylinder head.

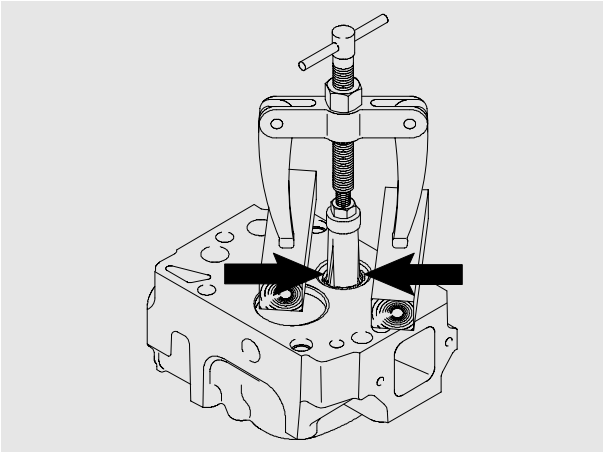

3

https://truckmanualshub.com/

Installing valve seat insert

Fig. 4

Heat cylinder head to approx. 80°C in water bath.
Cool new valve seat insert to approx. –200°C and insert it in the cylinder head.
Carry out check by driving it in until the stop is reached using pressing tool.
Install valve guides.

Note:
When the valve seat inserts have been changed, the valve seats must be reworked.

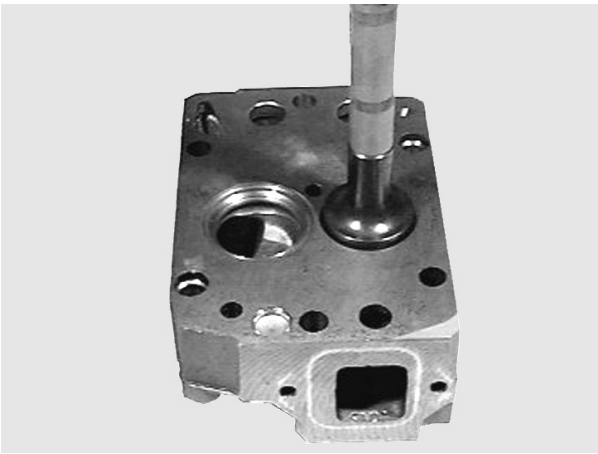

4

Note:
- After temperature equalization, machine valve seats.
- After machining, clean cylinder head and check for leaks using leak testing device.
- If the cylinder head is excessively heated (above +200°C, +390°F) the core hole covers (end covers) loose their tightness and must be exchanged.
- To do this, clean core holes, blow out channels and press in new core hole covers with “LOCTITE 648” and pressing mandrel.

Reworking valve seat

(with Mira precision valve seat machining device)

Fig. 1

① Feed nut with mm scale
② Guide ball
③ Jaccard lever
④ Lubricating nipple
⑤ Rotary head
⑥ Hex socket screw
⑦ Tool
⑧ Guide mandrel
⑨ Driving crank
⑩ Toggle switch
⑯ Handle
⑫ Lubricating nipple
⑬ Mains connection
⑭ Magnetic flange with coil
⑮ Guide pipe
⑯ Slewing arm

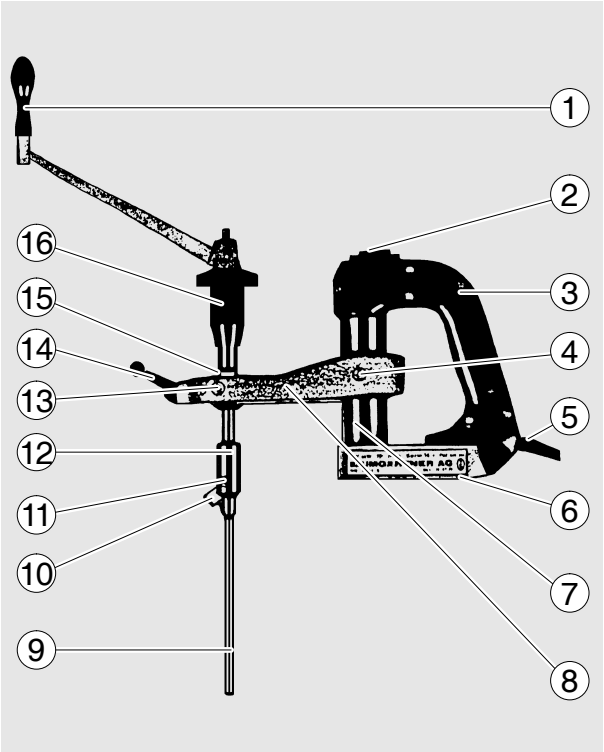

1

Fig. 2

Select suitable guide mandrel, screw it in with a spanner (12 mm) and tighten it.

> **Note:**
> For extreme precision work the guide mandrel must fit snugly.

Select and insert the tool with the corresponding seat width and the corresponding seat angle.

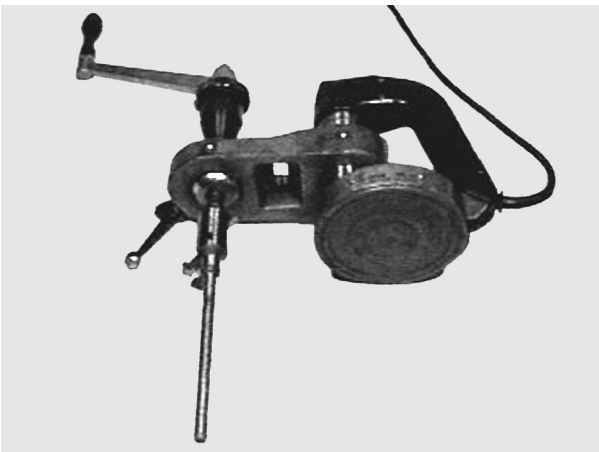

2

Fig. 3

Set the tool with a setting gauge and tighten it with the hex socket screw.

Insert unit with guide mandrel into the valve guide.

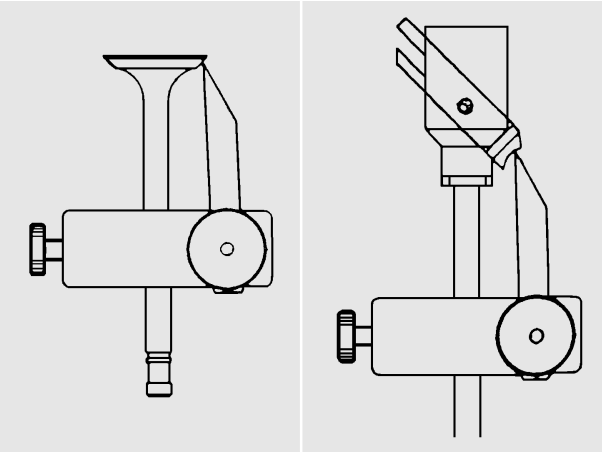

3

https://truckmanualshub.com/

Fig. 4

Release Jaccard lever, place magnetic flange flush on the clamping plate and set the height so that the tool does not contact the valve seat.

Set toggle switch to position 1.

Tighten the Jaccard lever.

4

Fig. 5

Machine the valve seat by turning the driving crank evenly in clockwise direction and simultaneously operating the feed nut.

Caution:
During the machining process turn the driving crank vigorously and evenly but under no circumstances against the direction of turning, as otherwise the carbide cutting edge may break.

5

Fig. 6

Once the valve seat has been expertly machined, reduce the working pressure of the tool by 2-3 revolutions without feed motion.
During these revolutions turn the feed nut 2-3 revolutions back.

Press toggle switch briefly to position 2 to lift the magnetic field.

Now move the whole Mira unit out upwards and insert it into the next valve guide, repeating the centering operation.
Use the same tool settings for all intake and all exhaust valve seats (see below).

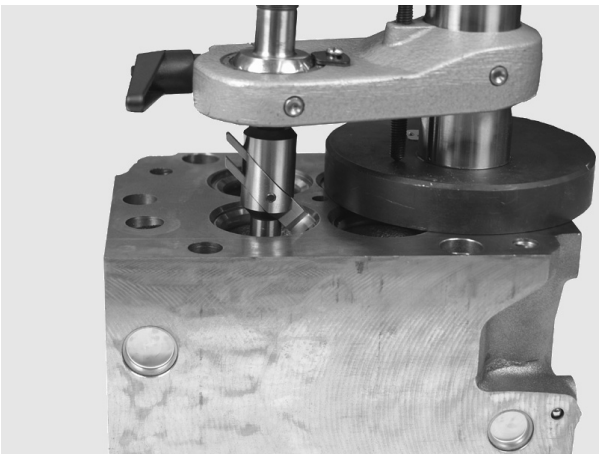

6

Fig. 7

Observe specified seat angle.

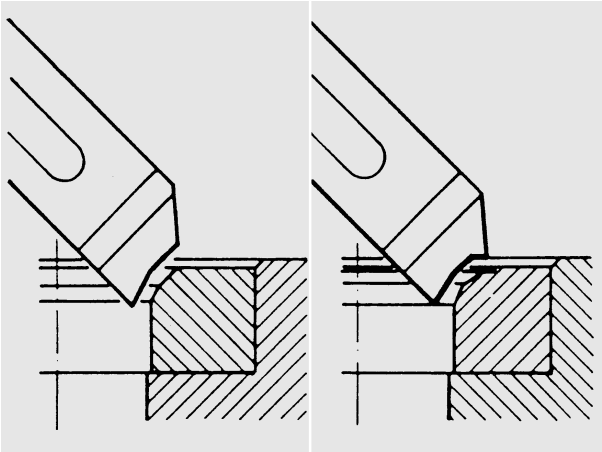

7

https://truckmanualshub.com/

Fig. 8

When dressing the valve seat inserts, remove as little material as possible from the seat face.

The valve retrusion is to be used as reference value.

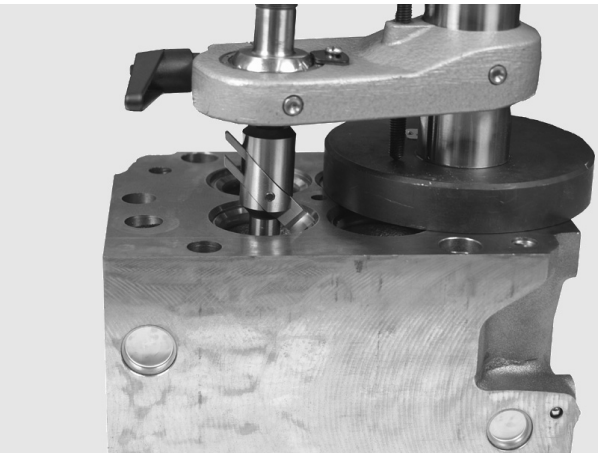

8

Fig. 9

The valve seat insert must be changed if the theoretical valve seat is too deep in the cylinder head or if the seat face has become too wide.

Ensure that the valve recess (X) is correct, see publication “Service Data”.

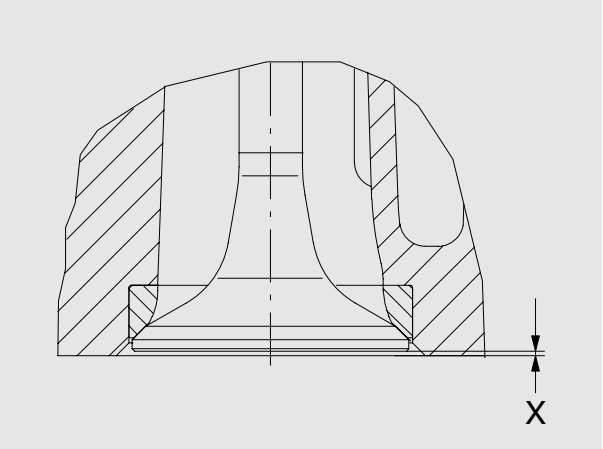

9

https://truckmanualshub.com/

Fig. 1

Apply abrasive paste to the tapered area of the valve seat.
Lubricate the valve guide and insert the valve.

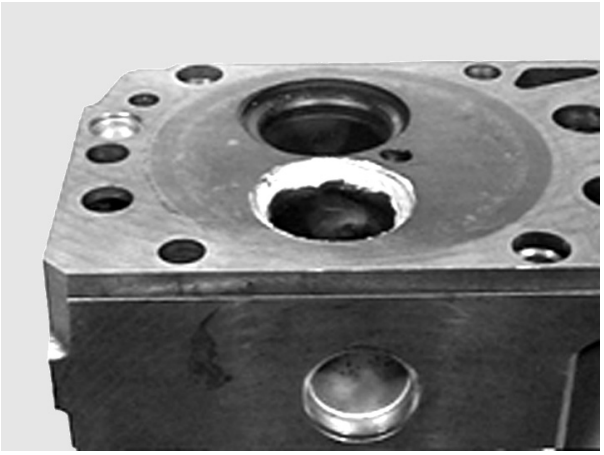

1

Fig. 2

Use a valve grinder to reface the valve seat by applying moderate axial pressure and describing a turning motion.

> **Note:**
> Keep the valve stem and the valve guide free of abrasive paste.

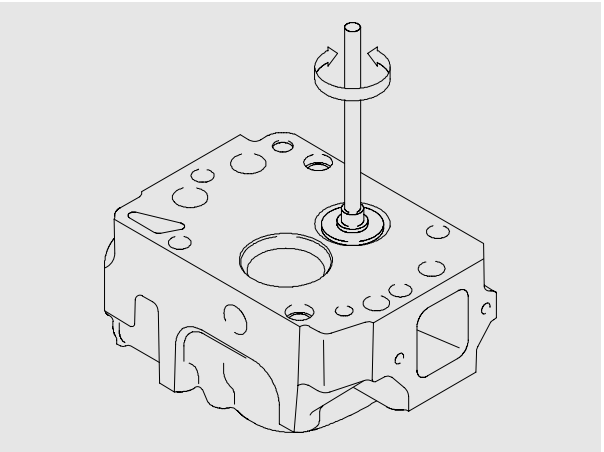

2

Fig. 3

The valve seat must have a faultless, contained grinding pattern.
The grinding pattern width is correct if the valve seat insert is in order.

① Valve tapered area
② Valve seat

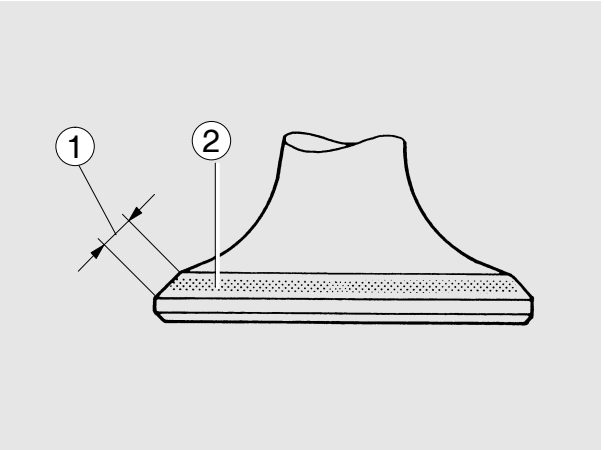

3

Fig. 4

① Valve seat insert
② Valve
③ Valve seat good
④ Valve seat too wide

> **Note:**
> Valve seats which are too wide tend to accumulate coking residues,
> – valves start to leak –
> Valve seats which are to narrow prevent rapid dissipation of heat from the valve plate to the cylinder head,
> – valves burn –

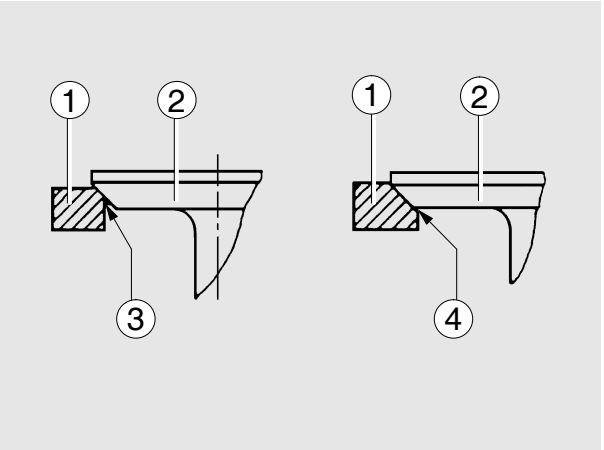

4

https://truckmanualshub.com/

- Checking and/or setting valve clearance, see page 94
- Run engine up to normal operating temperature
- Remove all fuel injectors, see page 30
- Guide values for compression pressures are specified in the chapter “Service Data”

Fig. 1

Starting with the 1st cylinder (water pump end) insert new sealing ring and tighten up test connection of the compression recorder with a pressure flange.

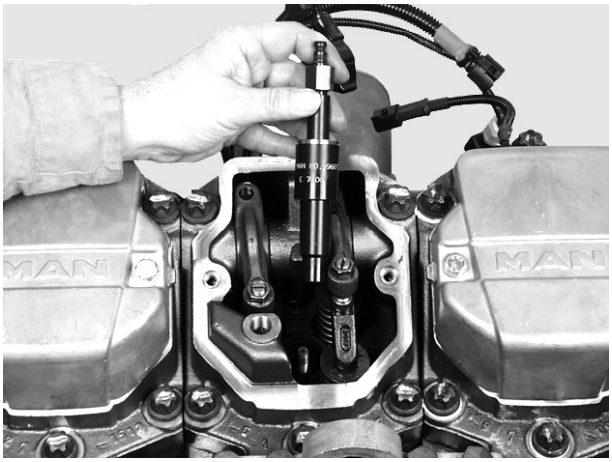
1

Fig. 2

Disconnect injection pump plug (arrow).

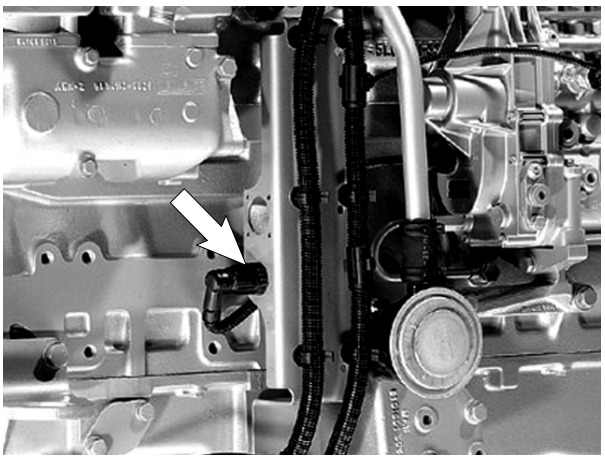
2

Fig. 3

Insert a test chart in the compression recorder for diesel engines. Screw the compression recorder onto the test connection.

Turn the engine over with the starter motor until there is no longer any needle deflection shown by the compression recorder.

Connect the compression recorder together with the test connection to the next cylinder and check all the cylinders as described above.

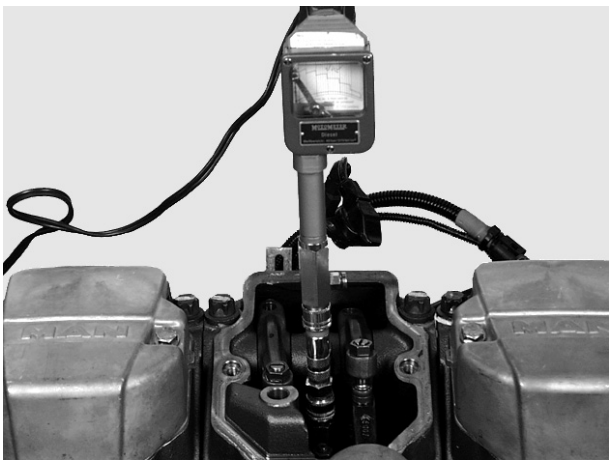
3

Fig. 4

Depending on the configuration of the compression recording device, the engine can also be turned directly from the compression recording device. Here, the electrical connections must be established at the starter motor solenoid switch (terminals 50 and 30).

Compare the recorded values and remove the compression recorder and test connection.
Screw in fuel injectors with nozzle and new seal, see page 33.
Connect the injection and leak-off oil lines.
Connect injection pump plug.

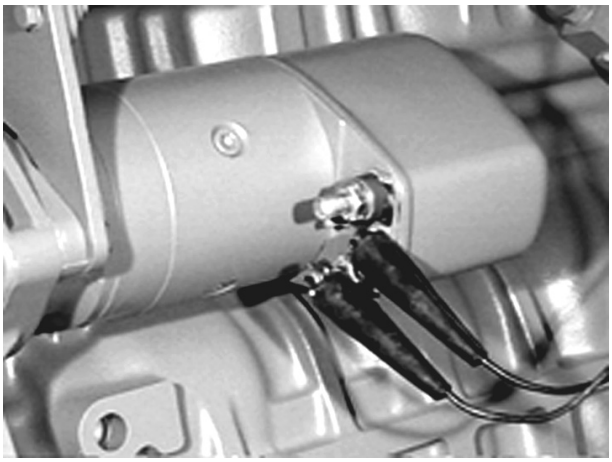
4

https://truckmanualshub.com/

Removing the gear case

- Removing the starter motor, see page 132
- Removing flywheel, see page 74

Fig. 1

Remove pipes.

The timing case is bolted to the oil pan at the bottom.

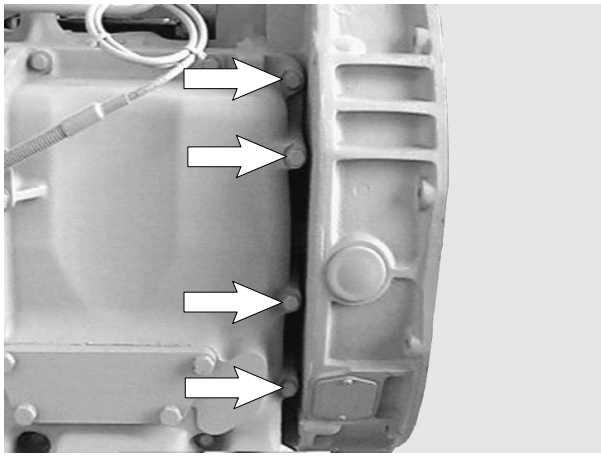

1

Fig. 2

Release the mounting bolts.

> **Note:**
> To facilitate assembly, two bolts on opposite sides can be replaced by guide pins.

Remove the gear case.

> **Danger:**
> The gear case is heavy!
> Use lifting gear.

Take the gasket off the timing case and fit a new one.

Clean contact face on timing case and crankcase of sealing residues.

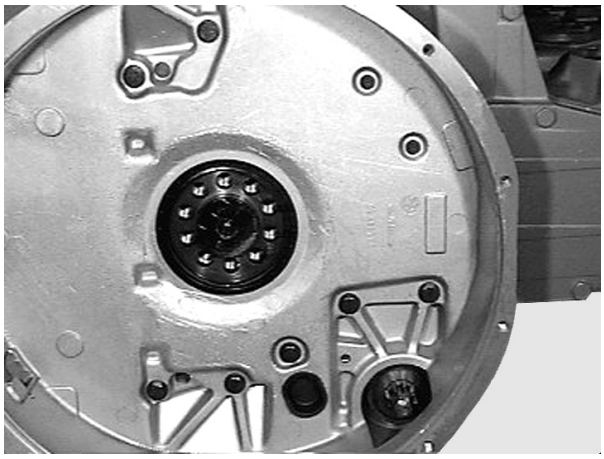

2

Fig. 3

Check the contact washer on the camshaft for wear, in necessary fitting a new one.

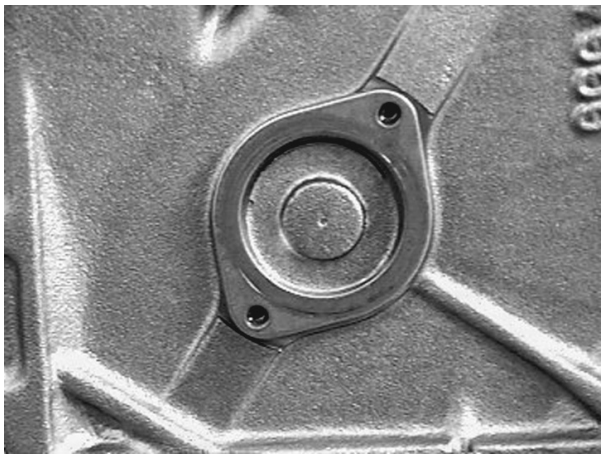

3

Fitting the gear case

Fig. 4

Stick the new gasket on with a little grease.

Fit the flywheelhousing.
In doing so, examine the oil pan gasket; replace if necessary.

Lightly oil the threads and contact faces of the mounting bolts and tighten to specified torque (see “Service data”).

- Refit timing gear
- Refit starter motor
- Refit pipes

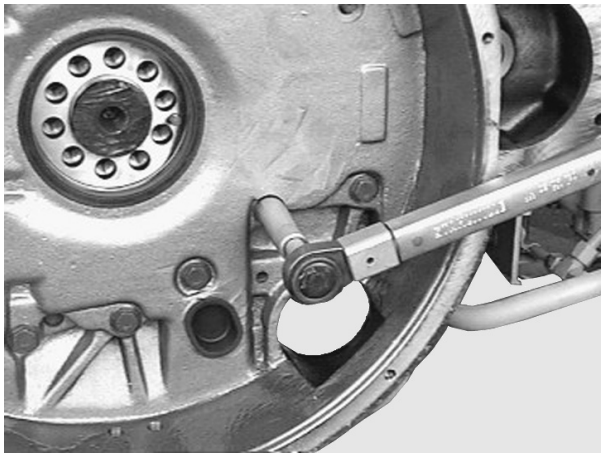

4

https://truckmanualshub.com/

Removing the camshaft

- Draining off coolant, see page 42
- Removing the oil pan, see page 65
- Removing the starter motor, see page 132
- Removing the flywheel and timing case, see page 113
- Remove cylinder head, see Page 90
- Remove vibration damper, see page 69

Fig. 1

Remove end cover (arrow) from air compressor wheel.

Take off air compressor wheel..

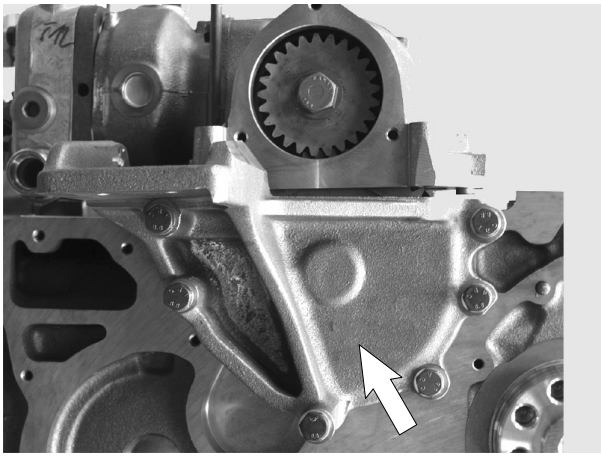

1

Fig. 2

Withdraw the camshaft. Take care not to damage the camshaft bearings. Check the camshaft for wear and damage.
In the case of damage to the camshaft or drive toothed wheel, the entire unit (camshaft – gear wheel) must be replaced.

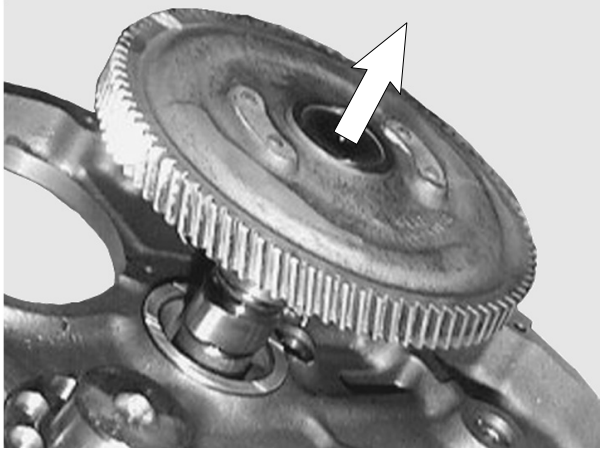

2

Fig. 3

Pull out the valve tappets with a magnet, check for wear and replace if necessary.

Valve tappets can only be removed when the camshaft has been removed.

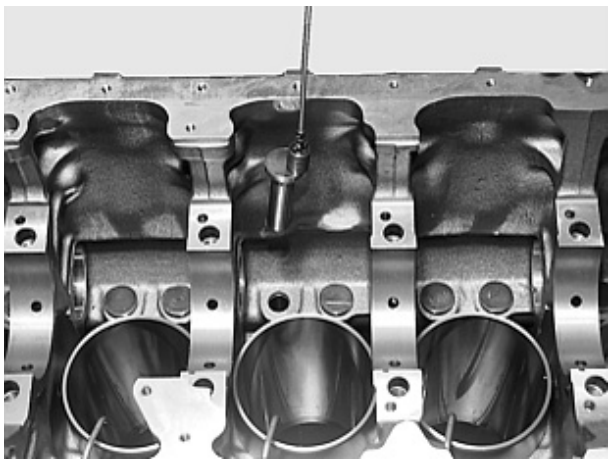

3

https://truckmanualshub.com/

Replacing the camshaft bearings

Remove the cylinder heads, the pistons with the connecting rods and the crankshaft, before removing camshaft bearings.

Fig. 4

Remove camshaft bearing bushes with suitable mandrel and drive in new bushes. In doing so, observe the correct position of the oil supply bore hole.

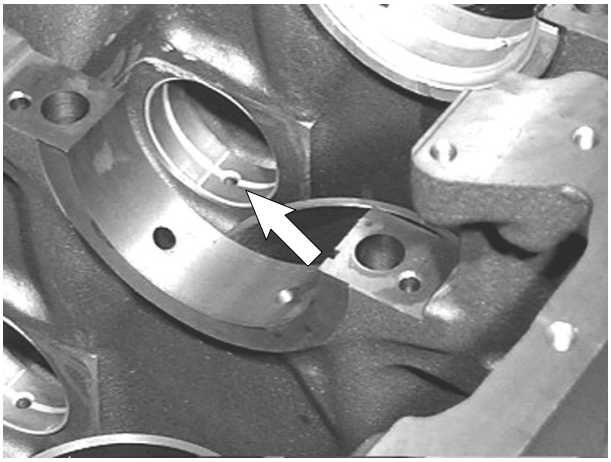

4

Fitting the camshaft

Fig. 5

Oil the camshaft and insert carefully.

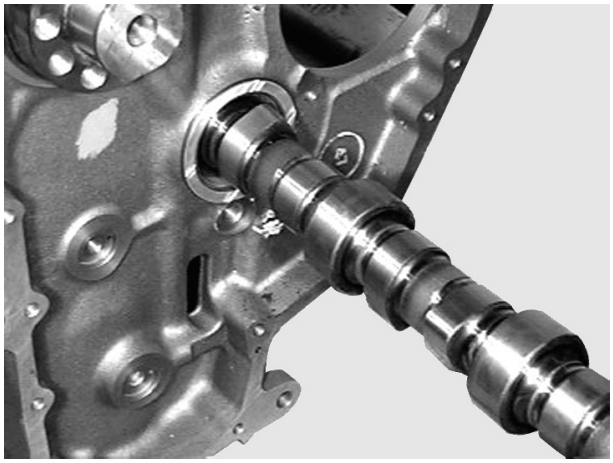

5

Fig. 6

In doing so, note the marking of the crankshaft and camshaft gear wheel.

Drive gear for air compressor on camshaft and end cover; heed the torques specified, see “Service data”.

- Fitting the vibration damper
- Installing zylinder head
- Installing timing case and flywheel
- Refit starter motor
- Installing oil pan
- Filling up with coolant

6

https://truckmanualshub.com/

Note:
Unsynchronised valve timing can cause severe engine damage.
For this reason, following engine faults that can cause twisting of the shrunk–on camshaft toothed wheel, the correct seating must be checked by checking the valve timing.
This check is also recommended after the camshaft is fitted.

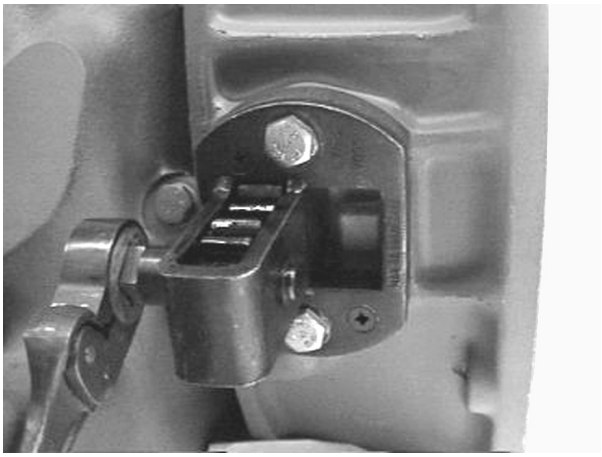

1

Fig. 1

Remove the cylinder head cover from the 1st cylinder.

Set the valve clearance of the 1st cylinder correctly. Turn the engine using the barring gear until the valves of the 1st cylinder overlap.

Turn the engine back to approx. 50° before “TDC”, then turn forwards to 30° bevore “TDC” again.

– Note the degree marking on the flywheel –

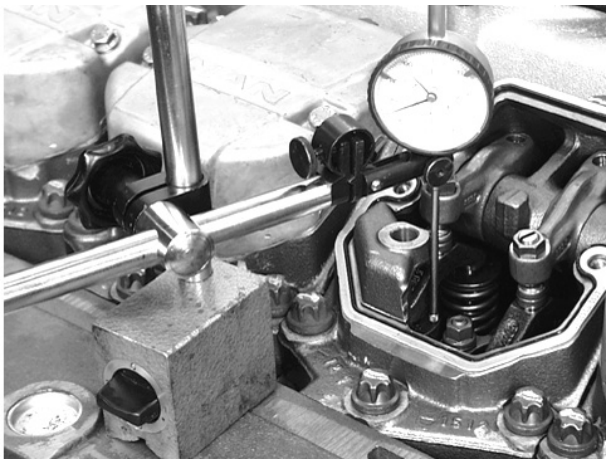

2

Fig. 2

Place the dial gauge with approx. 2 mm initial tension on the valve-spring pocket of the outlet valve on the 1st cylinder and set to “0”.

Turn the engine in the running direction by 180° – The outlet valve is then fully closed –.

Read the stroke of the valve on the dial gauge.

The valve stroke must lie between
4.8 and 5.7 mm.

https://truckmanualshub.com/

Removing the crankshaft

- Removing the oil pan and oil pump, see page 65
- Removing the gear case, see page 113
- Remove front cover of crankshaft seal, see page 69
- Removing cylinder heads, see page 90

Fig. 1

Remove the bolts from the conrod bearing caps, take out the conrods with pistons and set them down in order of installation.

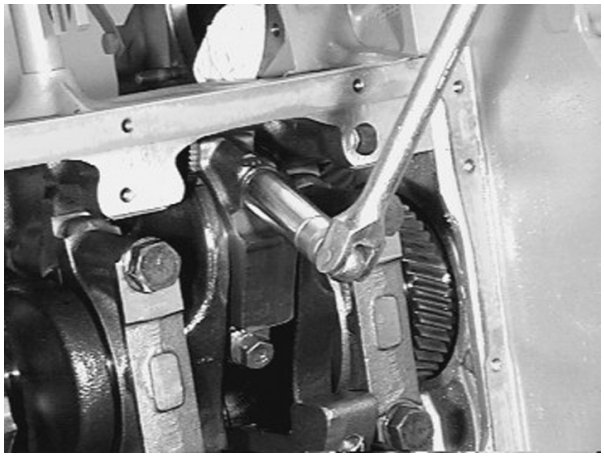
1

Fig. 2

Release the mounting bolts from the crankshaft bearing caps in stages from the inside outwards and remove.
Remove the bearing caps and place to one side in the order of installation.

Remove the bearing shell halves from the bearing caps and place to one side assigned to the bearing caps.

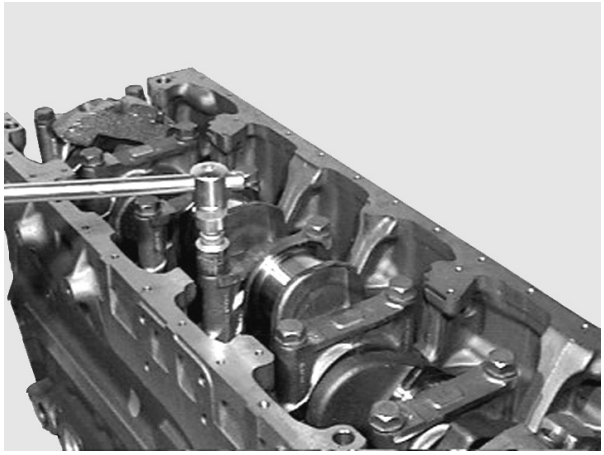
2

Fig. 3

Remove the lower half of the contact washers.

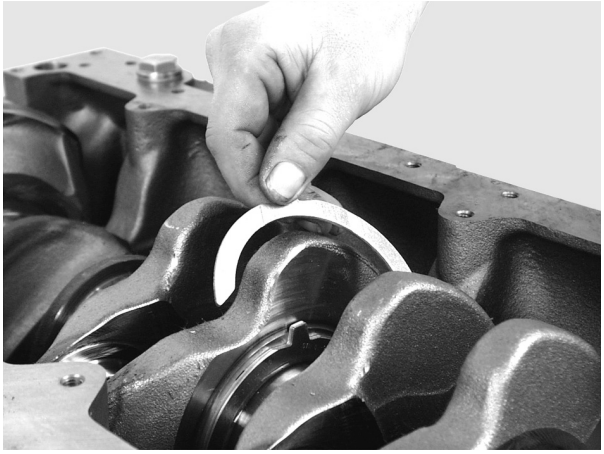
3

Fig. 4

Lift the crankshaft out of the crankcase with hemp rope or a leather belt.

> **Caution:**
> If a steel cable is used, the contact surfaces of the crankshaft bearing journals could be destroyed.

Remove the bearing shells and the upper halves of the contact washers from the crankcase. If they have not yet been marked, mark the bearing shell halves for the bearing caps.
Clean the parts and check for wear; replace if necessary.

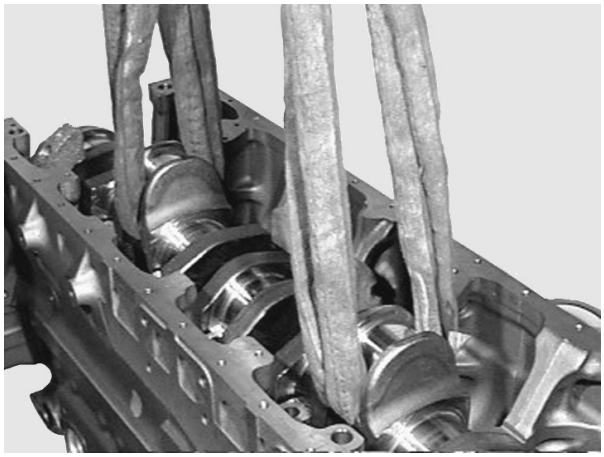
4

https://truckmanualshub.com/

Check the spread of the bearing bushes

Fig. 5

Place the bearing shells together on a level surface. Measure and note down dimensions **"A"** and **"B"**.

Spread dimension = A–B

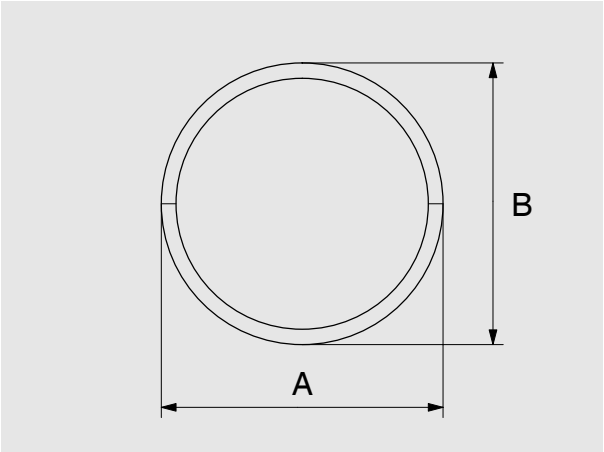

5

Install the crankshaft

Fig. 6

Clean the oilways in the crankcase and in the crankshaft with dry compressed air.
Thoroughly clean the bearing shells and journals.

Insert the bearing bushes in the crankcase, observing the numbering.
Tack the upper halves of the contact washer to the crankcase with a little grease.

> **Caution:**
> If new bearing shells are used, pay attention to the corresponding repair stage.

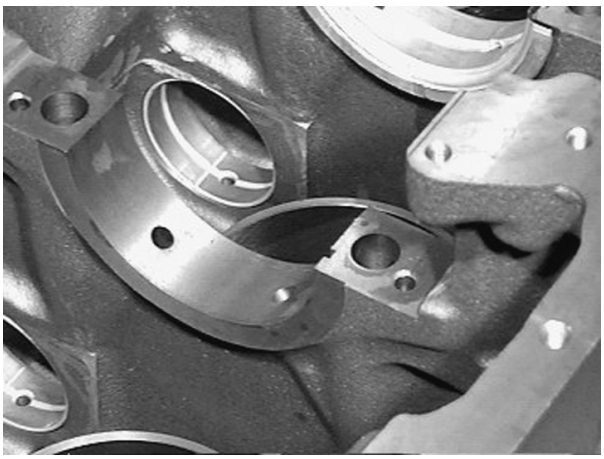
6

Fig. 7

Oil the contact surfaces of the bearing shells and insert the crankshaft.

In doing so, note the markings of the crankshaft and camshaft gears.

7

Fig. 8

Check bearing cover bolts for max. permitted length (see "Service Data").
Removed bolts can be reused if the max. permitted length is not exceeded.

Assemble the bearing caps with the associated bearing shells in accordance with the installations sequence.
Oil the contact surfaces of the bearing shells and fit the bearing caps.
Insert the bearing cap bolts and tighten to specified torque in stages from the inside outwards.

Final tightening according to rotation angle method.
Check that the crankshaft runs smoothly.

> **Caution:**
> Damaged bearing caps cannot be replaced on an individual basis.

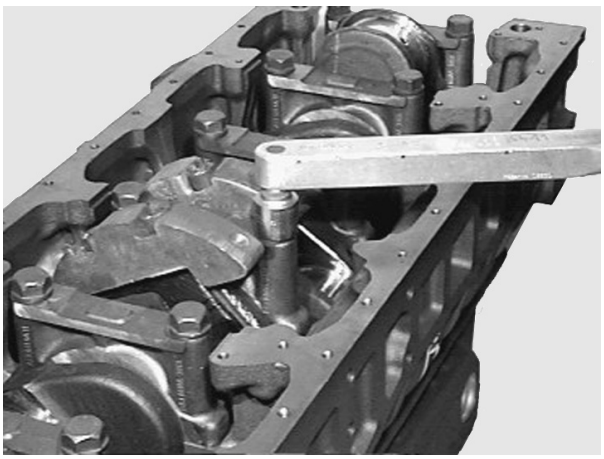
8

https://truckmanualshub.com/

Checking axial clearance

Fig. 9

Note:
The crankshaft axial clearance is determined by the centre crankshaft bearing (thrust bearing).

- Fit the dial gauge holder with dial gauge to the crankcase
- Apply the tip of the dial gauge to the crankshaft
- Move the crankshaft back and forth in axial direction and read off the clearance from the dial gauge
- If the permitted axial clearance is exceeded, replace the main bearing shells completely

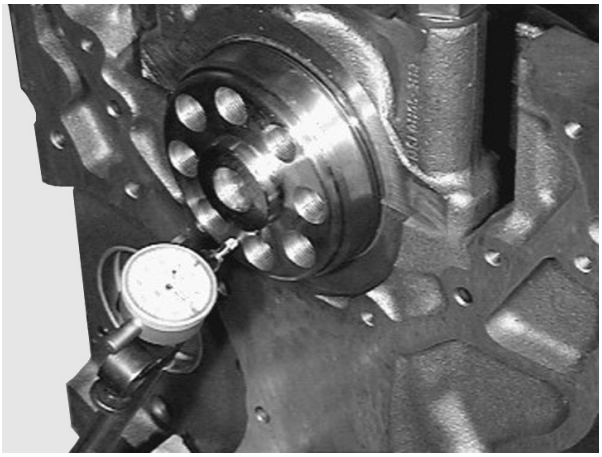
9

Fig. 10

Measure the conrod bearings, insert the pistons with conrods. Coat the conrod bearing shells with oil and pull the conrods to the journals.

Fit the conrod bearing caps with bearing shells (observe marking - numbers must be on the same side).

Screw in the mounting bolts and tighten them in stages to specified torque.

Final tightening according to rotation angle method.
For tightening torques and reusability of bolts, see “Service Data”.

Fit oil pan and other detachable components.

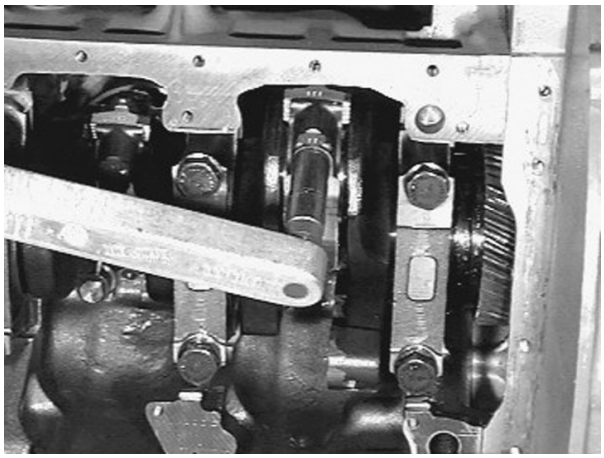
10

https://truckmanualshub.com/

Removing pistons with conrods

- Remove oil pan and oil suction pipe, see page 65
- Removing cylinder heads, see page 90

Fig. 1

Loosen and remove conrod bearing cover bolts.

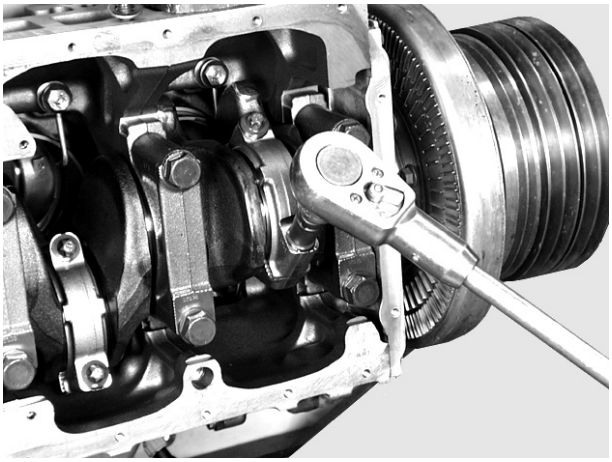

1

Fig. 2

Take off connecting rod bearingcaps with bearing shells; expediting the procedure by means of light strokes with a synthetic hammer if necessary.

Note:
The conrod bearing covers are numbered at the conrod foot; arrage them in corresponding order.

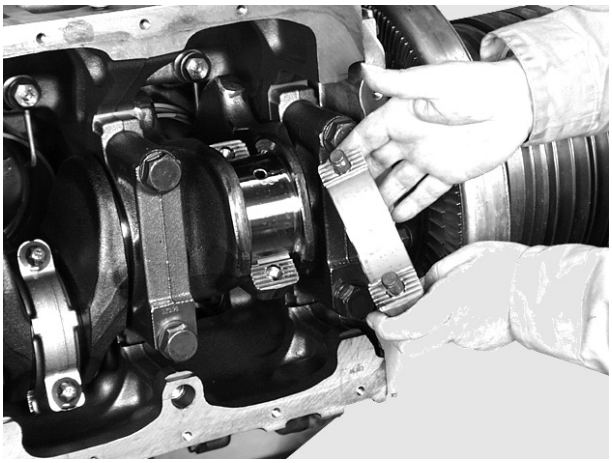

2

Fig. 3

Remove combustion residues (oil carbon) from top cylinder edge using a piece of hard wood.

Caution:
Do not damage the cylinder liners!

Press out the conrod with piston upwards.

Caution:
Do not damage the oil injection nozzles!

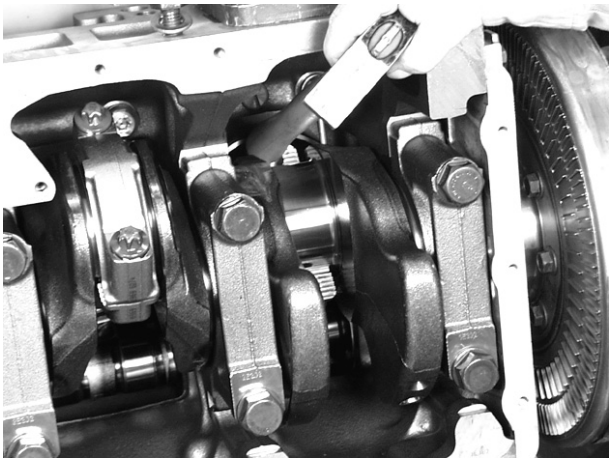

3

Fig. 4

Lay pistons with connecting rods and associated caps aside; use deposit rack if available.
Perform visual check of piston and piston rings.

Note:
For remachined crankcase sealing surfaces, there are repair pistons with 0.2, 0.4 and 0.6 mm lower dimension in compression height (see “Service Data”).

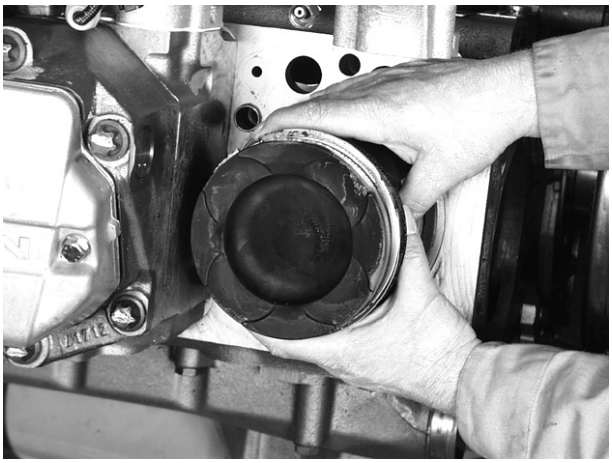

4

https://truckmanualshub.com/

Installing pistons with conrods

Note:
If the pistons have to be replaced, it must be determined whether oversize pistons were fitted by measuring the pistons or reading off the dimension on the piston crown.
If this is the case, oversize pistons are to be used.

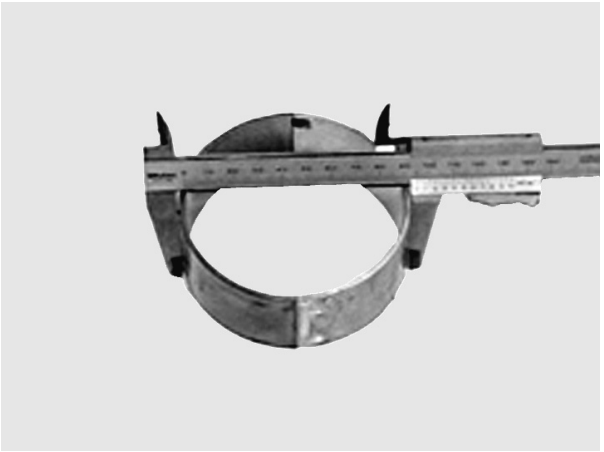
5

Fig. 5

Check bearing bushes for wear and damage.
Measure spread as in the case of main bearing bushes.
if required, fit new bearing bushes.
In the case of repairs to the conrod journals, use bearing bush of the corresponding repair level.

6

Fig. 6

Insert the bearing bushes in the conrod or conrod bearing cover.

Caution:
The rod shell has a red or yellow mark on the side.

The running surface must not be damaged!
Apply a thin coat of oil to the conrod bushes.

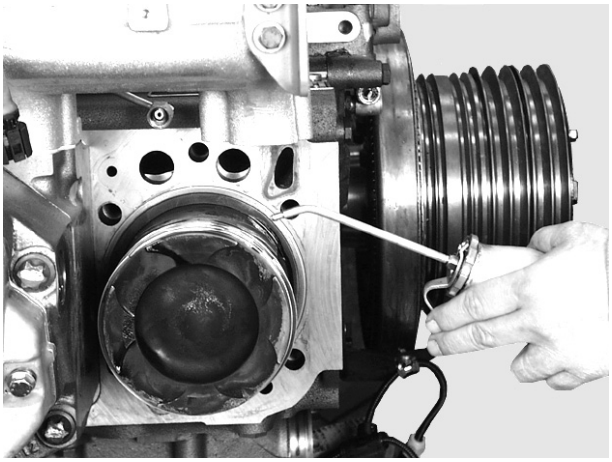
7

Fig. 7

Apply a thin coat of oil to the cylinder walls and pistons.
Adjust the piston ring joints by approx. 120° each.
Slide on the piston ring scuff band and tension the piston rings.

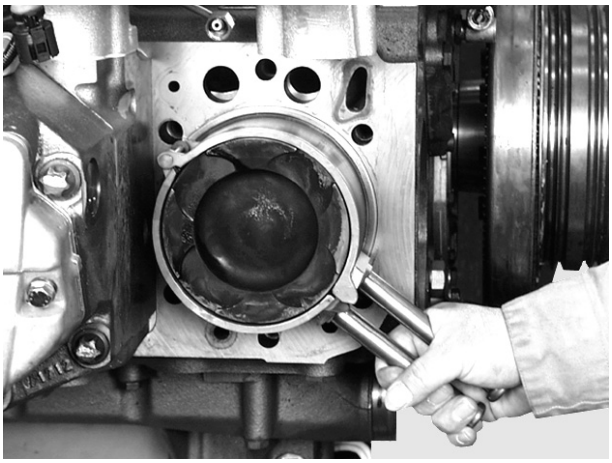
8

Fig. 8

Insert the piston so that the recess on the piston skirt points to the oil spray nozzle.
Guide the conrod and push the piston on until it contacts the conrod foot on the conrod journal.

Caution:
Do not damage the oil injection nozzles!

https://truckmanualshub.com/

Fig. 9

Fit the conrod bearing cover.

Caution:
The numbers on the conrod bearing cap and the conrod big end must be on one side.

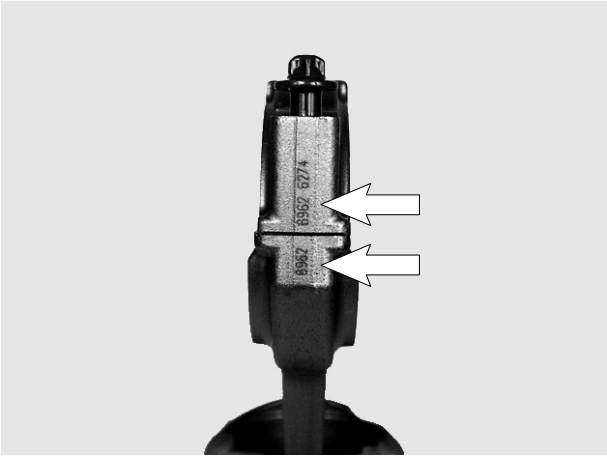

9

Fig. 10

Caution:
The bolts removed must be exchanged for new ones!

Screw in the conrod bolts and tighten them in stages to the prescribed value.

Final tightening according to rotation angle method.

For tightening torques see “Service Data”.

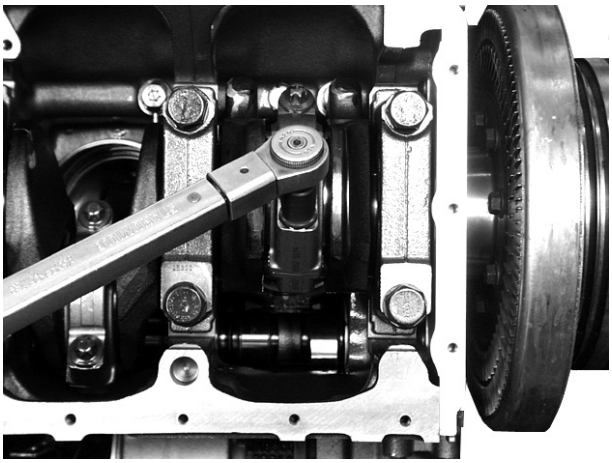

10

Fig. 11

Turn the engine slowly.
The conrods and oil injection nozzles (arrow) must not collide or scuff.

Check piston protrusion, see page 131.

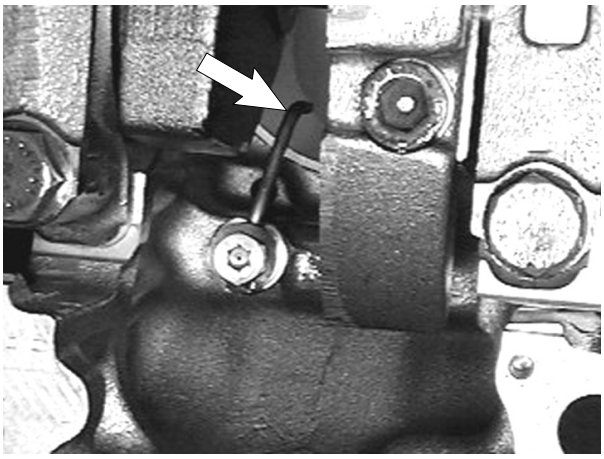

11

https://truckmanualshub.com/

Removing pistons from conrod and fitting

Fig. 1

Remove pistons with conrods
Clamp the conrod in a vice using protective jaws.
Disengage piston pin fastening.

1

Fig. 2

Push out gudgeon pin, holding piston in place. Remove piston and place to one side.

Measure conrod foot bore (base hole)

2

Fig. 3

Insert the new conrod bearing and fit the cap.
Tighten bolts according to regulation.
Measure the bearing bore with an inside micrometer in measuring directions 1, 2 and 3 and in planes a and b.
Max. permitted values, see “Service Data”. In the case of deviations beyond the tolerance range, replace conrod.

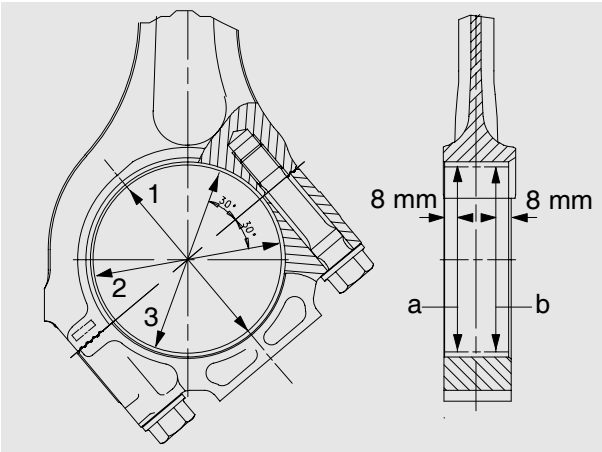

3

Fig. 4

Piston pin sockets are not available. In the case of worn sockets, fit exchange conrods.

4

https://truckmanualshub.com/

Fig. 5

Clean conrod. Inspect for external damage, replace damaged conrods if necessary.
Check parallel location of conrod and twisting of piston pin eye to bearing bush bore hole. In the case of deviations beyond the tolerance range, replace conrod.

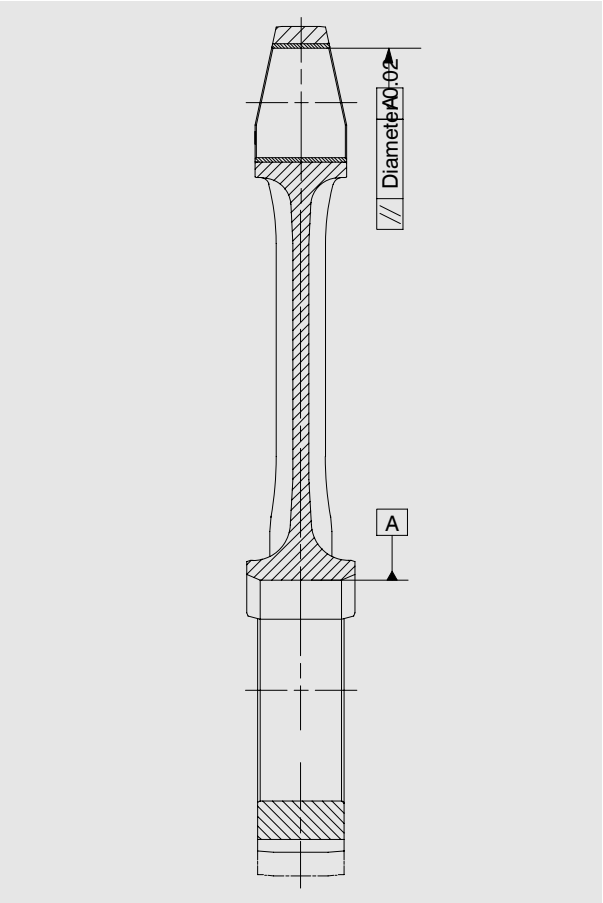

5

Fig. 6 and Fig. 7

Place piston on the conrod.

Caution:
The recess for the oil injection nozzle in the piston shaft (arrow) must lie on the side of the short conrod foot.

Insert piston pin. Engage fastenings.
Fitting pistons, see page 121.

6

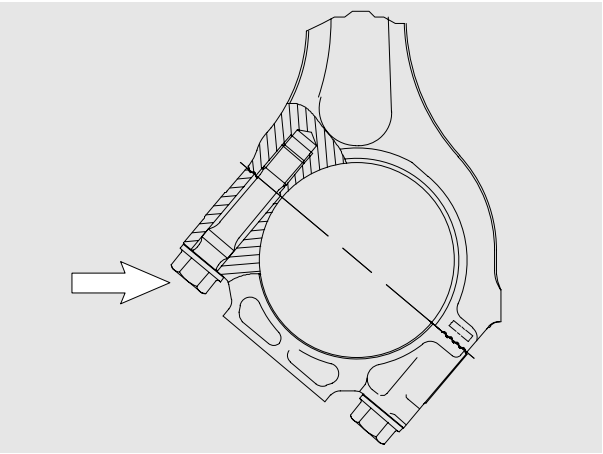

7

https://truckmanualshub.com/

Piston ring arrangement

Fig. 1

① Compression ring (double-sided keystone ring)
② Compression ring (tapered compression ring)
③ Oil scraper ring (bevelled-edge ring)

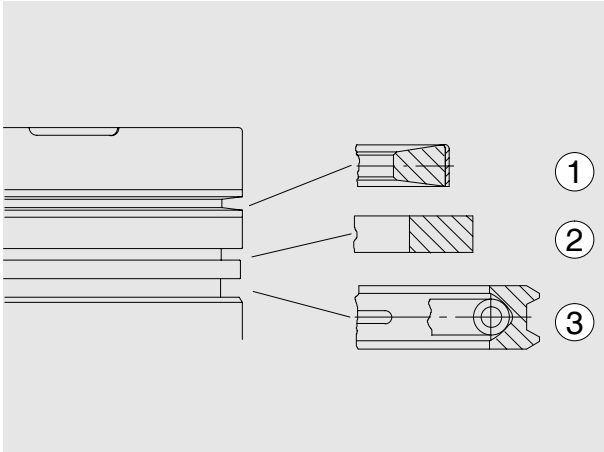

1

Removing piston rings

Fig. 2

Remove the piston and conrod.
Clamp the conrod in a vice, use protective jaws.

Adjust the piston ring pliers to the piston diameter.

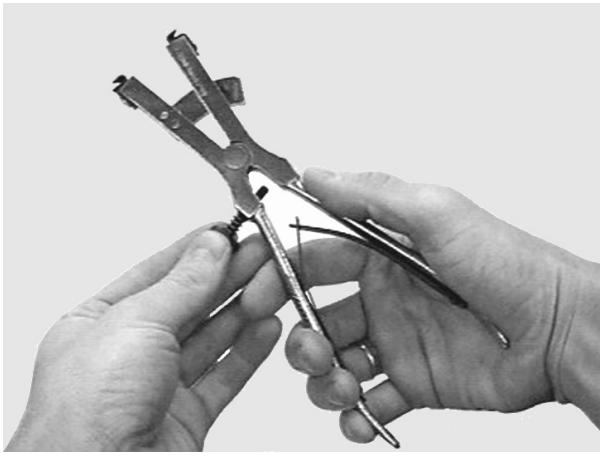

2

Fig. 3

Apply piston ring wrench to piston ring joint and disengage the piston ring from the piston ring grooves.

> **Note:**
> The coiled spring expanders mean that the oil control ring has greater tangential tension.

Carefully clean the piston ring grooves using a piece of wood. Do not damage the piston ring grooves.

3

Checking ring end clearance

Fig. 4

Insert the piston rings individually in the cylinders and use a feeler gauge to determine the ring end clearance.

Replace the piston rings. If the ring end clearance is too large.

Ring end clearance, see “Service Data”.

4

https://truckmanualshub.com/

Installing piston rings

Fig. 5 and Fig. 6

Use the piston ring pliers to engage the piston rings in the relevant piston ring groove (TOP facing upwards).

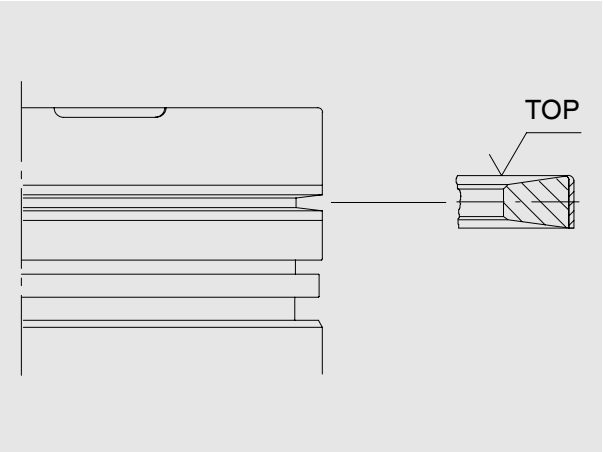

5

6

Checking piston ring axial clearance

Fig. 7

Determine the piston ring clearance in each piston ring groove at various points using a feeler gauge.

To do so, press the piston ring fully into the piston ring groove at the point to be measured.

Replace the piston and piston rings if the clearance determined is too large.

Piston ring axial clearance, see “Service Data”.

7

Removing cylinder liners

Note:
Observe oversizes for cylinder liner outside diameters and collar heights (see ”Service Data”).

- Remove cylinder head, see Page 90
- Remove piston, see Page 120

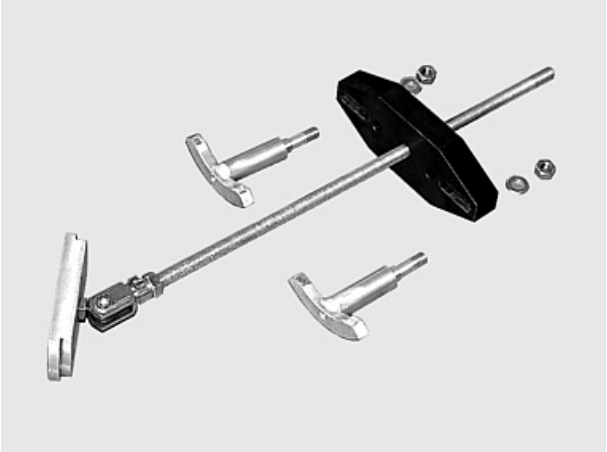

1

Fig. 1

Observe oversizes for cylinder liner outer diameters and collar heights (see Service Data)

2

Fig. 2

Mark cylinder liner position relative to engine so that it can be reinstalled in the same position if reused.

Insert cylinder liner extractor device into cylinder liner, taking care not to damage the oil spray nozzle

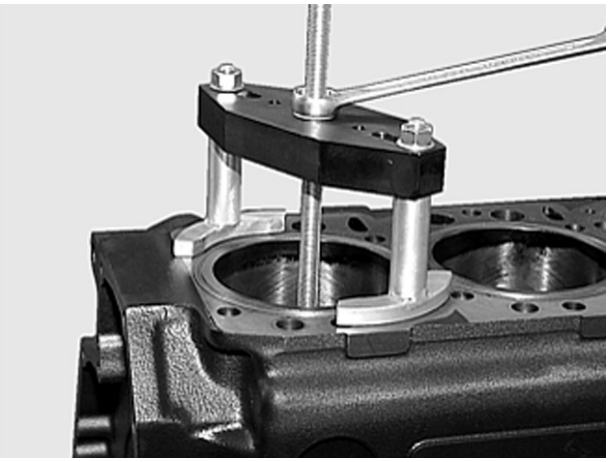

3

Fig. 3

Fit the support on the extractor spindle and screw on the nut.
Hold extractor spindle in place and extract cylinder liner by turning nut.

4

Fig. 4

Take off extractor device and take out cylinder liner.

https://truckmanualshub.com/

Fig. 5

Deposit cylinder liner upright. Number cylinder liners in order of installation.
Take off O-rings.

5

Fig. 6

Remove O-rings from the crankcase.
Clean seat for cylinder liners in the crankcase.

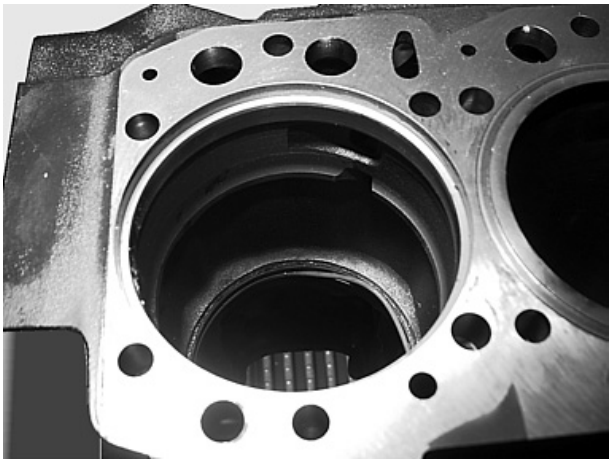

6

https://truckmanualshub.com/

Checking cylinder liner protrusion

Fig. 7

Clean basic bore and cylinder liner.
Insert cylinder liner without O-rings into crankcase, observing the marking (ensure that it is identical with the position prior to removal).
Measure cylinder liner protrusion at at least four different points, using gauge holder and gauge.
Specified values see “Service Data”.

Note:
Measure cylinder liner protrusion after installation of cylinder liners to ensure that the O-rings are seated correctly see pageLEERER MERKER, Pos. Proceed sa follows:
Position the press-on measuring plate with turned collar facing the liner, using 2 fitting sleeves to centre the plate.
Tighten 4 boltsimprovised: collar bolt 51.90020–0270, length shortened to 90 mm) n the press-on measuring plate in stages and crosswise to 40 Nm.
Set dial gauge combination above press–on plate to “0” under preload relative to the crankcase.
Measure cylinder liner protrusion at least at four points.

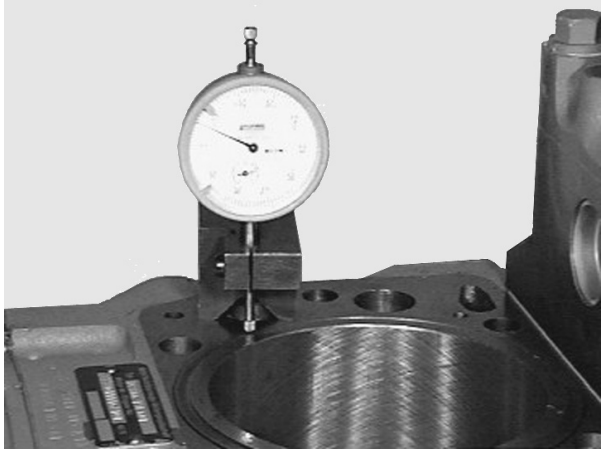
7

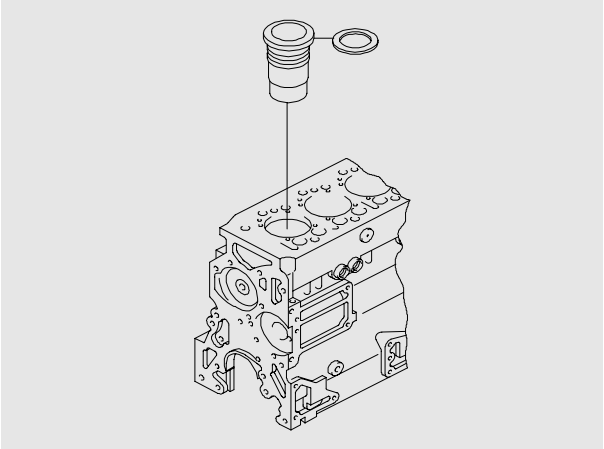
8

Fig. 8

Install shim if the protrusion is below the minimum protrusion even at only one point.
The shim is placed under the cylinder liner collar.
However, it may be used only if after installation the upper tolerance limit is not exceeded.

Installing cylinder liners

Fig. 9

Insert dry new O-rings for the lower seal (144x4) into the crankcase.
Insert new O-rings for the upper seal (138x2) into the grooves on the cylinder liner.
Do not overstretch the O-rings.

Note:
No grease or sealing agents of any kind must be used for installing cylinder liners and O-rings

9

Fig. 10 and Fig. 11

Apply thin coat of engine oil to cylinder liner in the area of the upper and lower O-ring.
Apply thin coat of engine oil to lower O-rings in the crankcase.

Insert cylinder liners into crankcase and push them down by hand.
Place clean metal plate on liner and exert uniform downward pressure until the liner is seated in the crankcase recess

If a perceptible resistance can be felt in this operation, the O-rings are no longer in their proper place.
Reposition O-rings and insert cylinder liner again.

10

Note:
Measure cylinder liner protrusion after installation of cylinder liners to ensure that the O-rings are seated correctly see pageLEERER MERKER, Pos. Proceed sa follows:
Position the press-on measuring plate with turned collar facing the liner, using 2 fitting sleeves to centre the plate.
Tighten 4 boltsimprovised: collar bolt 51.90020–0270, length shortened to 90 mm) n the press–on measuring plate in stages and crosswise to 40 Nm.
Set dial gauge combination above press–on plate to “0” under preload relative to the crankcase.
Measure cylinder liner protrusion at least at four points.

11

https://truckmanualshub.com/

Measuring piston protrusion

Fig. 1

Remove the cylinder heads.
Turn the piston to be measured to TDC.

Apply the dial gauge bracket with dial gauge to the crankcase gasket surface.
Set the dial gauge to “0”.

1

Fig. 2

Carefully swing the dial gauge bracket around while raising the tip of the dial gauge.

Lower the tip of the dial gauge to the piston crown and read off the excess piston projection.

2

https://truckmanualshub.com/

Fig 1

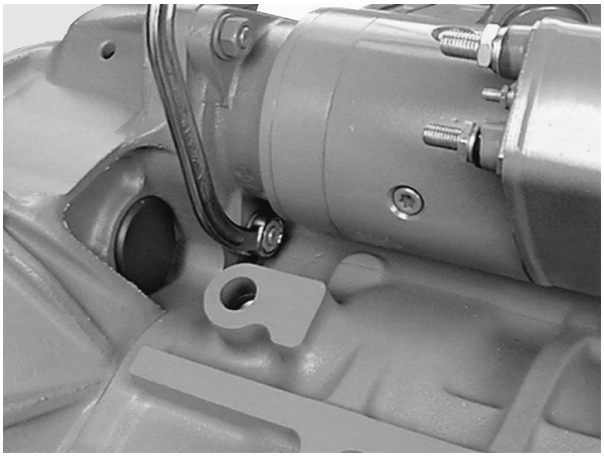

1

Disconnect the negative cable from the battery or, if present, switch off the main battery switch.
Disconnect the connecting cable at terminal 31 (negative terminal, thick cable), connecting cable at terminal 30 (positive terminal, thick cable) and at terminal 50 from the starter motor.
Loosen the securing nuts.

An angle spanner is an advantage for accessing the inner screws see illustration.

Remove the starter motor.

Check the starter pinion for wear and whether it can move freely. If required, clean the pinion with a brush dipped in fuel and grease it again.

Check the flywheel ring gear for wear and damage.
In doing so, crank the engine once by hand and pay particular attention to points where the engine finally stops, i.e. when the engine is switched off, it always stops at certain points.
The starter pinion engages in these positions when the engine is started.

Replacing the starter ring gear, see Page 75.

The starter motor is installed in reverse order to its removal; when doing so, connect the cables correctly and tighten the bolts as specified.

Connect the battery or turn on the battery master switch.
Check the function of the starter motor after installation.

Checking condition

Fig. 1

- Check V-belts for cracks, oil, overheating and wear
- Change demaged V-belts

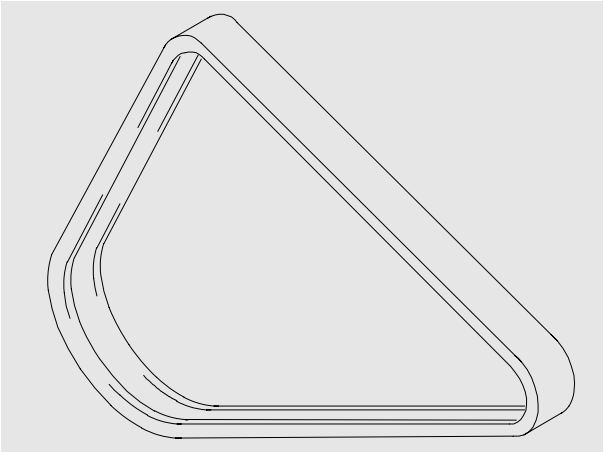

1

Checking tension

Fig. 2

Use V-belt tension tester to check V-belt tension.

- Lower indicator arm ① into the scale

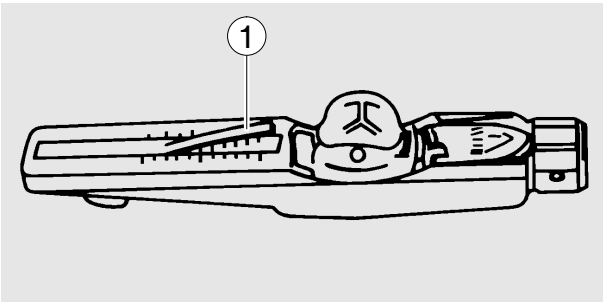

2

Fig. 3

- Position the tension tester on the belt at a point midway between two pulleys so that the edge of contact face ② locates against the side of the belt
- Slowly depress pad ③ until the spring can be heard to disengage; this will cause the gauge arm to move upwards

Maintaining pressure after the spring has disengaged will result in a false reading!

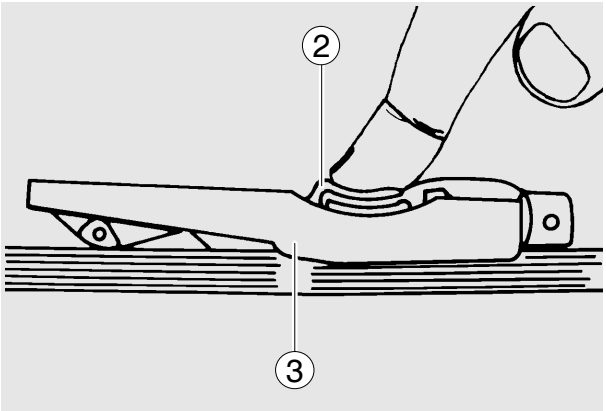

3

Taking tension reading

Fig. 4

- Read of the tensioning force of the belt at the point where the top surface of the indicator arm ① intersects with the scale
- Make sure the gauge arm does not move before taking the reading

If the value measured deviates from the setting value specified, the V-belt tension must be corrected.

Belt width	Tensioning forces according to the kg graduation on the tester		
	New installation		Service after extended running time
	Installation	After 10 mins. running time	
2/3VX	90	90	75

4

https://truckmanualshub.com/

Tensioning and changing V–belts

Fig. 5

- Remove fixing bolts ①
- Release lock nut ②
- Turn adjusting nut ③ until the V-belt is correctly tensioned
- Retighten the lock nut and mounting bolts

To change the V-belts, back off the adjusting nut and swing the tensioning pulley inwards.

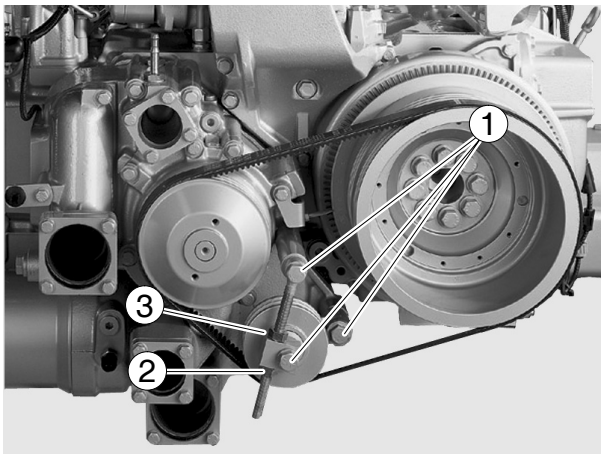

5

Dismantle pilot clutch

Removing pilot clutch, see page 69

Remove external bolts ①.
Clutch can be dismantled into its individual parts.

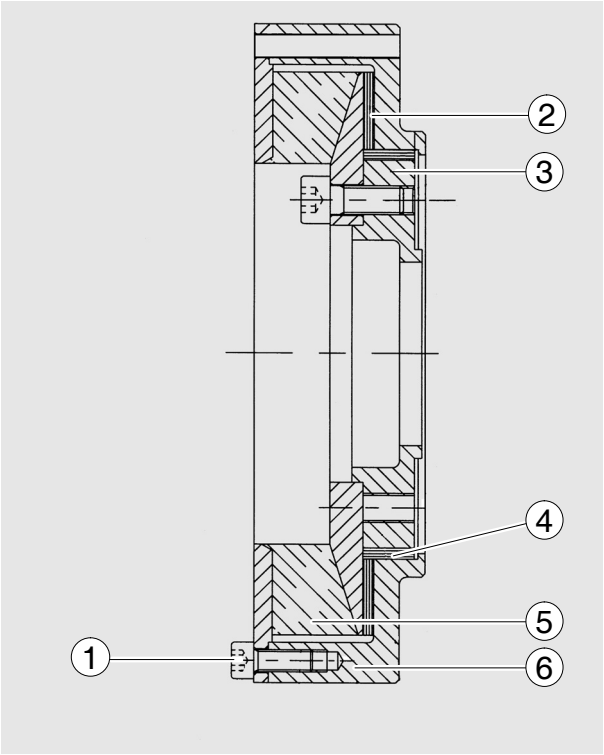

Clean pilot cluntch

Before assembly clean all clutch parts, see page.
No petrol, kerosene or oil may be used on rubber.

If there is little contamination, i.e. dry, powdery dust, the clutch parts may be cleaned only with a dusting brush.

The polished down bearing surfaces of the adjacent steel parts for the friction disk and friction ring (② and ④) should not be damaged.
Score marks on the bearing surfaces can be smoothed with fine emery paper (grain 400).

In the event of severe contamination, i.e. sticky, smeared rubber deposits, as arise when the clutch slips, the steel parts of the clutch can be cleaned with a cold cleaning agent.

If an element ⑤ cracks in operation the clutch has slipped. In this case control the diameters of friction ring ② and friction disk ④.

The wear limits are indicated in the table on page 136.

Pilot clutch – examination and maintenance (general)

The clutch is dismantled in accordance with the corresponding dismantling guides. After the clutch has been dismantled the friction disk and friction ring can be measured.
Refer to the table for the permissible wear.

The clutch element can be examined for any detachment and incipient cracks by extending it axially under a press.

The maximum pulling distance must not exceed 1/3 of the entire clutch element height. Any detachment and incipient cracks are visible in the pulled condition. If there are any the element must be replaced.

The cleaning and assembly is carried out in accordance with corresponding guides to cleaning and assembly.

It is a good idea to keep a stock of the listed clutch elements as spare parts.

The parts must be replaced in the event of the following:

Clutch element	– if any damage is detected
Friction disk and friction ring	– if the wear limits in the table are exceeded

Note:
If the rubber element is replaced the friction ring and friction disk must always be renewed to make sure that the clutch is in new condition.

Wear limits for the friction disk and friction ring above which it is advisable to replace these components

Type	005	010	020	030	035	040	045	050	055	060	065	070	075	080	085	090
Thickness	3	3	3	4	4	4	4	5	5	6	6	6	7	7	8	8
Permissible wear	0,3	0,3	0,3	0,4	0,4	0,4	0,4	0,5	0,5	0,6	0,6	0,6	0,7	0,7	0,8	0,8

Caution:
All front-mounted clutches are balanced with a balance quality of Q = 6.3!
If running after repairs is not smooth the clutch must be rebalanced with the limits contained in the assembly drawing.

Balancing
All front-mounted clutchs are balanced with a balance quality of Q = 6.3! In the production of new parts in our company the parts are well below the permissible limits. The wearing parts to be replaced in the event of a repair are rotationally symmetric and experience has proven that they do not lead to an impermissible or disturbing imbalance.

If contrary to expectation running is irregular the balancing must be checked. The assembly drawing is to be referred to for the permissible imbalance data.

Friction ring wear

The friction ring is a centring bearing. In drive systems with a combination of pilot clutch and propshaft vibrations may occur in the entire unit as a result of the friction ring's wear limits being exceeded. For this reason the wear should be checked and measured after a certain number of hours or kilometres. To this end the relative movement between the clutch housing and the hub or the connected propshaft flange is measured with a measuring test gauge.

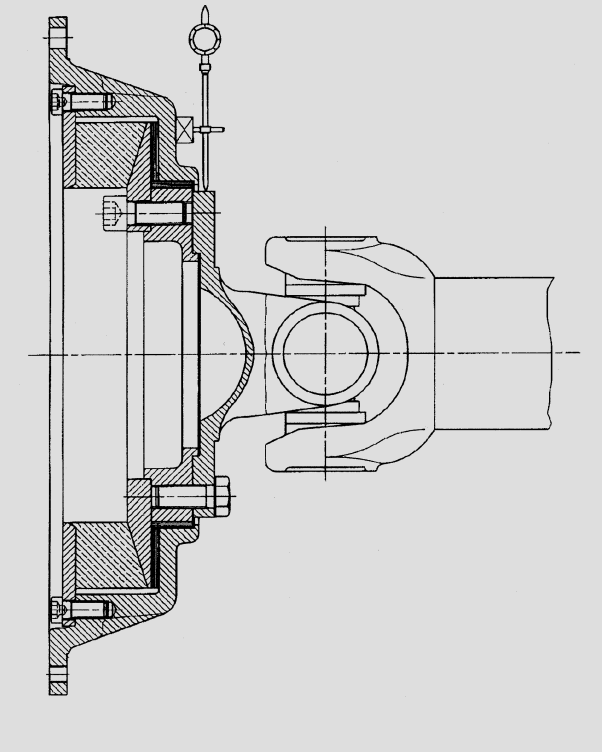

The procedure is as follows:

- The test gauge holder – a magnetic stand is a good idea – is attached in a vertical plane to the housing and the tip of the test gauge is applied to the propshaft flange
- With a suitable lever the clutch–end link of the propshaft is pressed down and the test gauge aligned to zero
- The friction ring is a centring bearing. In drive systems with a combination of pilot clutch and propshaft vibrations may occur in the entire unit as a result of the friction ring's wear limits being
- Measured values which are below the double value named in the table above the wear values for the friction disk and friction ring are OK and experience has shown that they do not lead to a marked change in the running smoothness
- If the limit is reached or exceeded it is a good idea to replace the friction ring. The replacement is made in accordance with the procedure described in the general service and maintenance instructions
- It is advisable to determine the wear of the metal parts which serve as a counterpart to the friction ring after a kilometrage of 1,200,000 km (about 24,000 service hours). The permissible tolerances correspond to the dimensions in the production drawings

Note:
- The expected kilometrage of the clutch elements is about 1,200,000 km (about 24,000 service hours)
- The friction disk and friction ring could have reached the wear limits after 600,000 km (about 12,000 service hours)

https://truckmanualshub.com/

Assemble pilot clutch

When assembling the clutch the bolt tightening torques must be observed.

Place friction disk ② and friction ring ④ in the flange plate ⑥ if re-utilised the friction disk and the friction ring should be inserted dry).

Push on hub ③ and clutch element ⑤ and bolt on with flange bolt connection (14 Nm).

Attach pilot clutch, see page 73

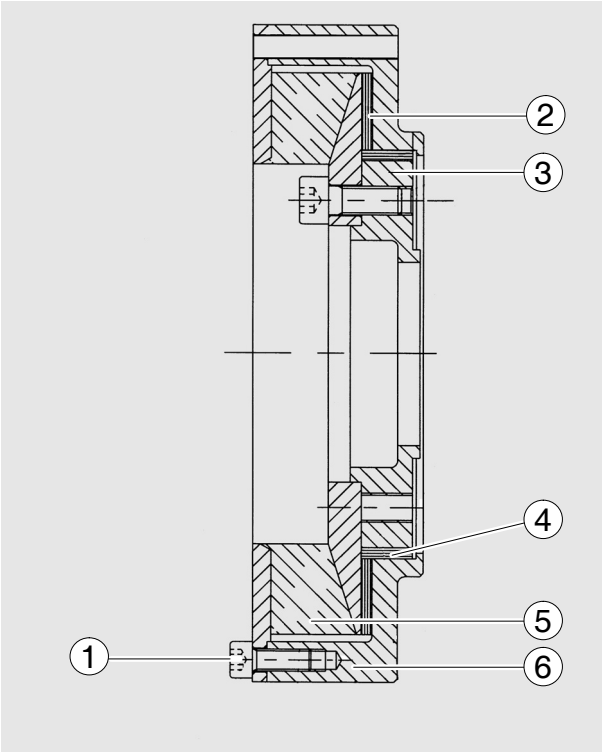

https://truckmanualshub.com/

Removing air compressor

Fig. 1

Detach the coolant lines and the suction and pressure lines from the air compressor.

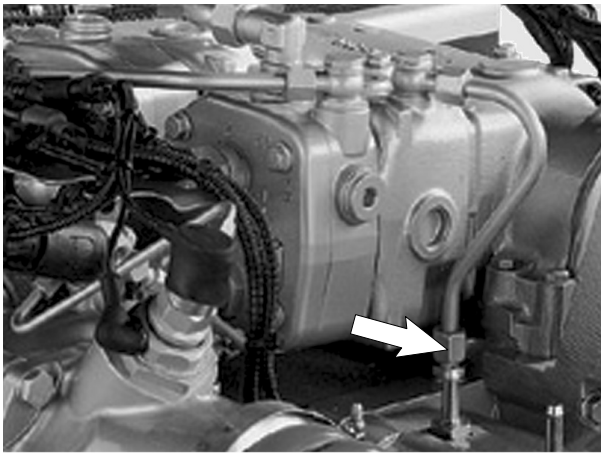

1

Fig. 2

Release the compressor mounting bolts ① andremove the compressor, clean the sealing faces.

Check the compressor for external damage.
The compressor must be replaced if fractures or cracks are found at the holes for the mounting bolts or machined contact faces.

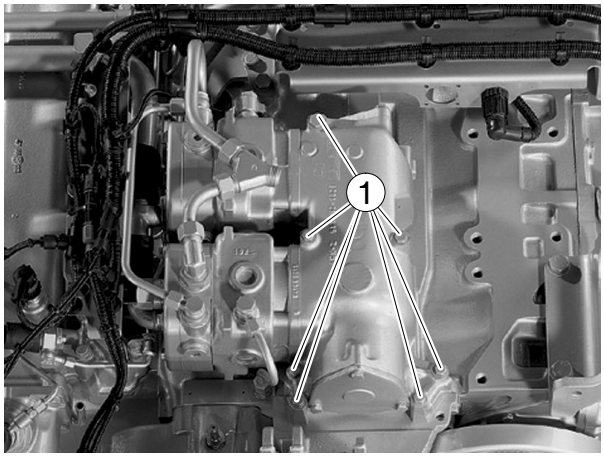

2

Installing air compressor

To seal the air compressor housing apply a thin bead of sealant .

> **Caution:**
> This must be kept clear of the hole for the oil supply!

Make sure the centring sleeves are fitted.

Fit the air compressor, insert the mounting bolts and tighten to specified torque.

Fit the coolant lines and the suction and pressure lines to the air compressor.

https://truckmanualshub.com/

Notes

https://truckmanualshub.com/

Service Data

https://truckmanualshub.com/

Engine

Design	in-line, underfloor
Mode of operation	4-stroke Diesel with turbocharger and intercooler
Number of cylinders	6
Compression ratio	16,75 : 1
Bore	128 mm
Stroke	166 mm
Engine capacity	12 816 cm^3
Direction of rotation viewed on flywheel	anti clockwise
Firing order	1–5–3–6–2–4
Firing interval	120°
Power based on UIC 624	
D 2876 LE 601	375 kW at 2000 rpm
D 2876 LE 602	338 kW at 2000 rpm
D 2876 LE 603	301 kW at 2000 rpm
D 2876 LE 604	375 kW at 2000 rpm
D 2876 LE 605	338 kW at 2000 rpm
D 2876 LE 606	301 kW at 2000 rpm
Lubrication	Pressure circulation
Filling capacities	
Oil capacity in oil sump	min. 24 ltr. max. 30 ltr.
Oil change quantity (with filter)	33 ltr.
Cooling	Fluid cooling
by	impeller pump
Coolant temperature	80–95°C

https://truckmanualshub.com/

Crankcase

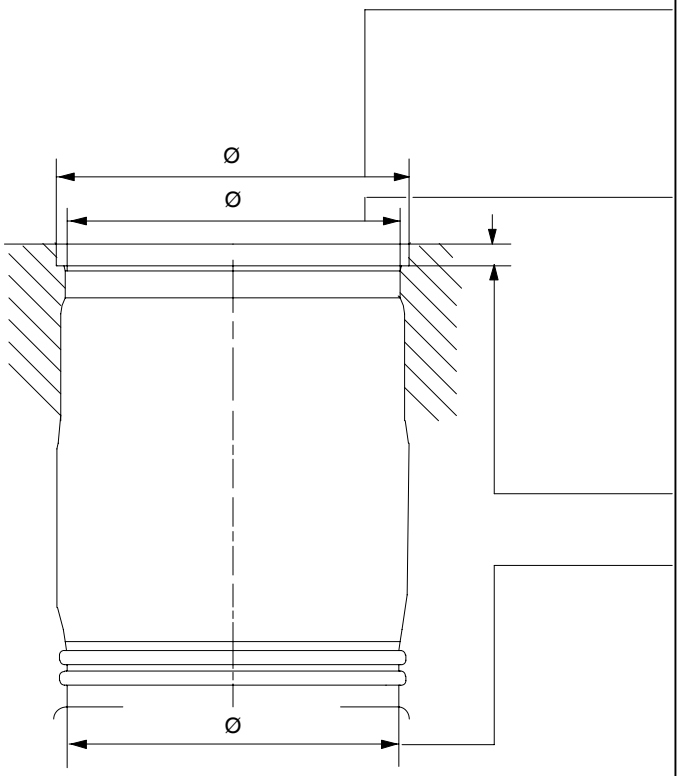

standard size:
153.90–153,94 mm
for cylinder liners with 0,5 und 1,0 mm larger outside Ø:
154,40–154,44 mm

standard size:
145,80–145,84 mm
for cylinder liners with 0,5 mm larger outside Ø:
146,30–146,34 mm
for cylinder liners with 1,0 mm larger outside Ø:
146,80–146,84 mm

9,955–10,025 mm

standard size:
144,50–144,54 mm
for cylinder liners with 0,5 mm larger outside Ø:
145,00–145,04 mm
for cylinder liners with 1,0 mm larger outside Ø:
145,50–145,54 mm

Cylinder liner

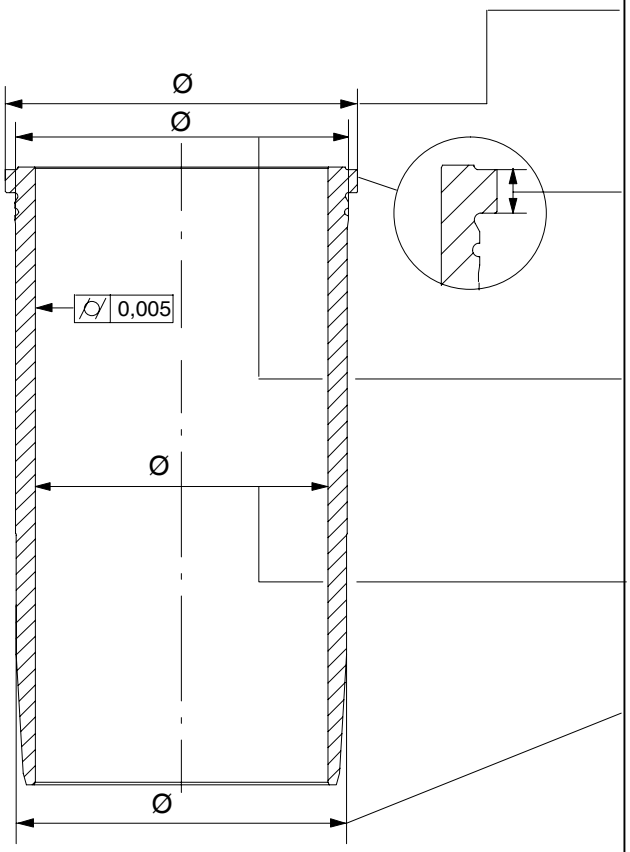

standard size:
153,694–153,757 mm
with 0,5 and 1,0 mm larger outside Ø:
154,194–154,257 mm

standard size:10,05–10,07 mm
with 0,5 mm more flange height:
10,55–10,57 mm
Liner protrusion above upper deck of crancase: 0,03–0,08 mm

standard size:
145,761–145,786 mm
with 0,5 mm larger outside Ø:
146,261–146,286 mm
with 1,0 mm larger outside Ø:
146,761–146,786 mm

127,990–128,010
Max. wear limit:
0,15 mm below base dimension

standard size:
144,432–144,457 mm
with 0,5 mm larger outside Ø:
144,932–144,957 mm
with 1,0 mm larger outside Ø:
145,432–145,457 mm

https://truckmanualshub.com/

Crankshaft

Crankshaft, front (opposite side to flywheel)

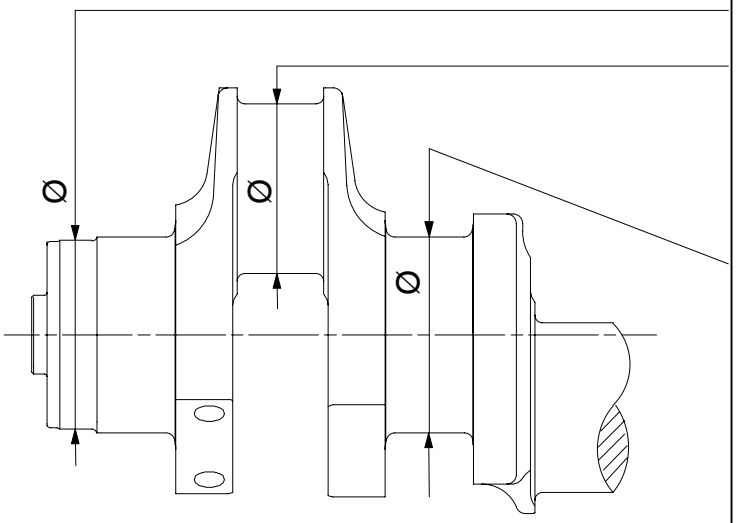

99,985–100,020 mm

standard size:	89,98–90,00 mm
undersize –0,25:	89,73–89,75 mm
undersize –0,50:	89,48–89,50 mm
undersize –0,75:	89,23–89,25 mm
undersize –1,00:	88,98–89,00 mm

standard size:	103,98–104,00 mm
undersize –0,25:	103,73–103,75 mm
undersize –0,50:	103,48–103,50 mm
undersize –0,75:	103,23–103,25 mm
undersize –1,00:	102,98–103,00 mm

Bearing race for crankshaft, front

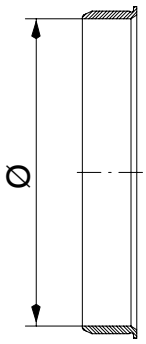

Inner diameter:
99,907–99,942 mm

Thrust bearing journal

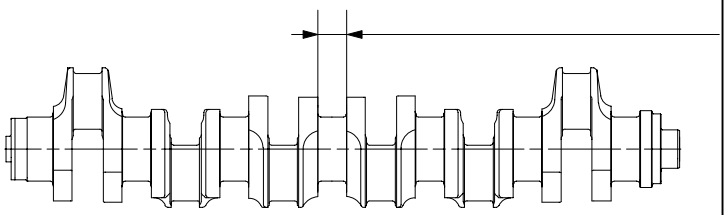

standard size:	46,000–46,062 mm
undersize :	
–0,25 and –0,50:	46,500–46,562 mm
–0,75 and –1,00:	47,000–47,062 mm

https://truckmanualshub.com/

Main bearing

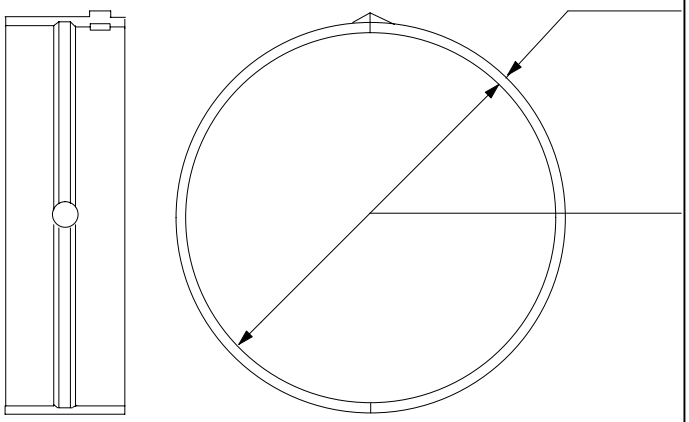

Data for wall thickness and bearing inner diameter also apply to the alignment bearing

standard size:	3,455–3,467 mm
undersize –0,25:	3,580–3,592 mm
undersize –0,50:	3,705–3,717 mm
undersize –0,75:	3,830–3,842 mm
undersize –1,00:	3,955–3,967 mm

Bearing bore in installed condition:

standard size:	104,066–104,112 mm
undersize –0,25:	103,816–103,862 mm
undersize –0,50:	103,566–103,612 mm
undersize –0,75:	103,316–103,362 mm
undersize –1,00:	103,066–103,112 mm

Spread: 0,3 – 1,2 mm

Marking:	top / bottom
standard size:	0005 / 0006
undersize –0,25:	0011 / 0012
undersize –0,50:	0013 / 0014
undersize –0,75:	0015 / 0016
undersize –1,00:	0017/ 0018

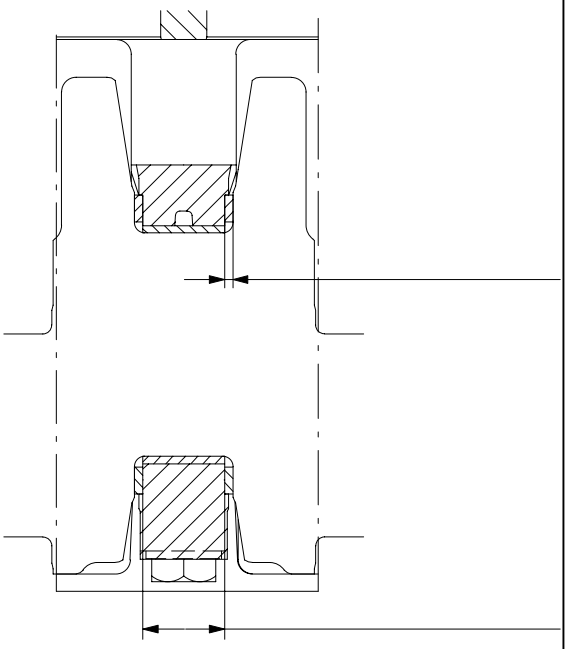

max. axial clearance of crankshaft:
0,200–0,401 mm:

Width of thrust washer:

standard:	3,350–3,400 mm
oversize1:	3,600–3,650 mm
oversize2:	3,850–3,900 mm

38,961–39,000 mm

https://truckmanualshub.com/

Flywheel and starter motor gear ring

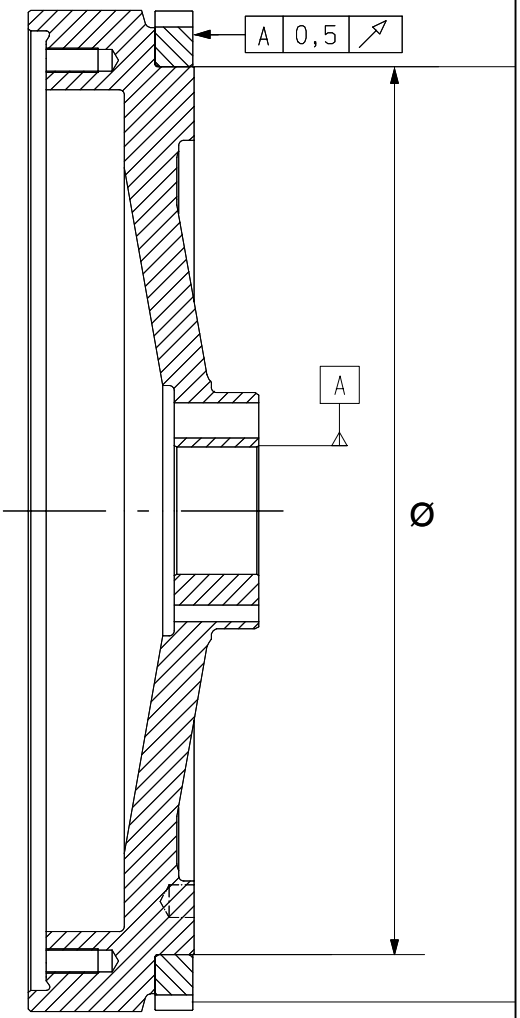

Ø Flywheel: 432,490–432,645 mm

Starter gear ring, inside diameter:
432,000–432,155 mm

Interference: 0,335–0,645 mm
Installation temperature: 200–230°C

m = 52,3 kg (with starter gear)
J = 1,975 kgm^2

Number of teeth: Z = 160, Module 3
Matching gear:
Starter pinion: number of teeth: (Z = 9)

Backlash: 0,6–0,9 mm

https://truckmanualshub.com/

Conrods

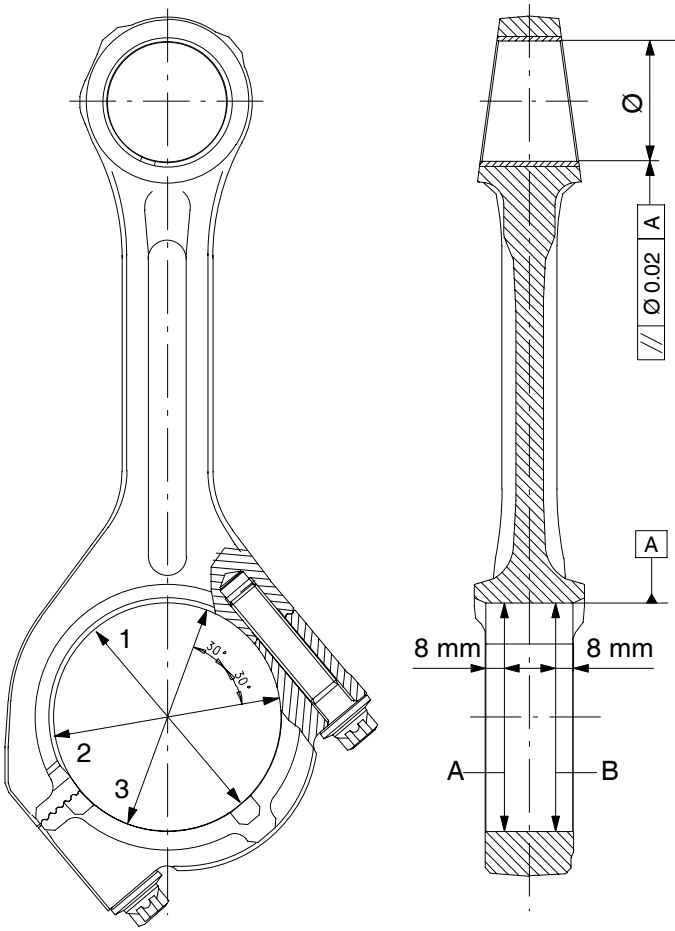

50,055–50,065 mm

Conrods which are discoloured and tarnished at the big end must not be re-installed.

Bearing bore in directions 1, 2 and 3 and in planes a and b:

90,044–90,086 mm

Pre-conditions:
new big-end bearing in place,
conrod assembled

Conrod bearings

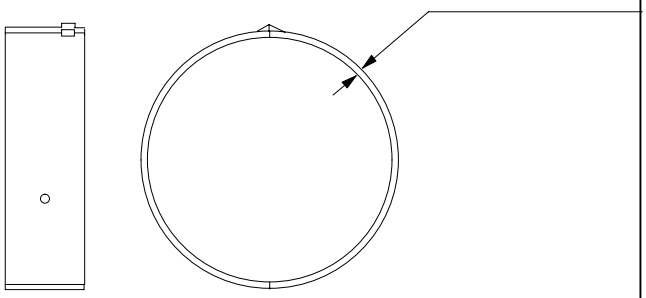

standard: 2,468–2,478 mm
undersize –0,25: 2,593–2,603 mm
undersize –0,50: 2,718–2,728 mm
undersize –0,75: 2,843–2,853 mm
undersize –1,00: 2,968–2,978 mm

Spread: 0,6–1,5 mm

If signs of wear are present
(scores, antiwaer coating damaged),
change both bearing shells
Important: note installation position (upper half bearing shell has red mark on side)

https://truckmanualshub.com/

Pistons

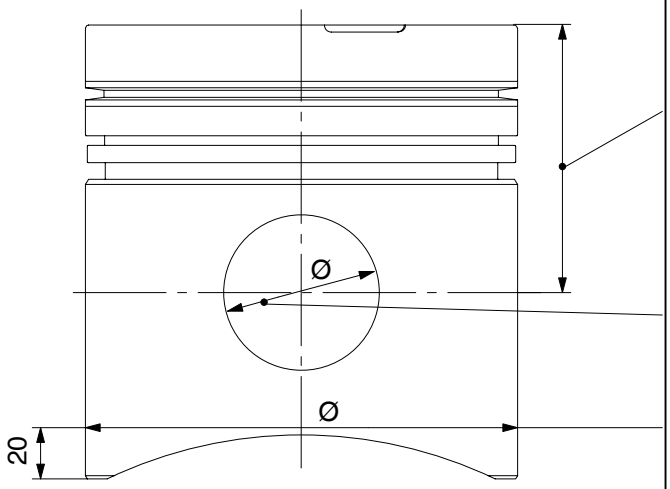

Compression height: 79,20–79,25 mm

0,2 mm: 79,00–79,05 mm
0,4 mm: 79,80–79,85 mm
0,6 mm: 78,60–78,65 mm

Piston protrusion above crankcase: 0,013–0,331 mm

50,010–50,018 mm
Piston bolt diameter: 49,994–50,000 mm

127,855–127,895 mm

Piston weight difference per set in an engine: max. 100g

Piston ring grooves

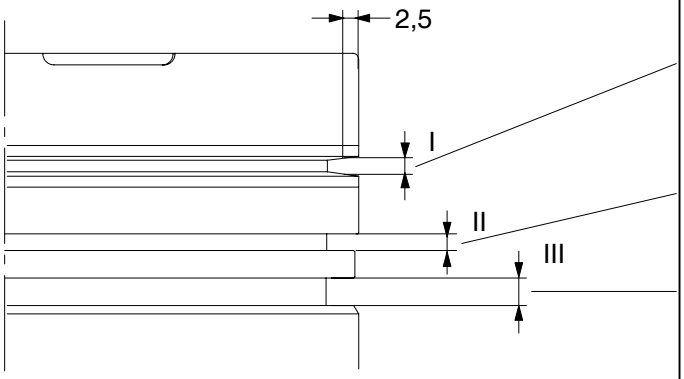

3,470–3,500 mm

3,050–3,070 mm

4,020–4,040 mm

Piston rings

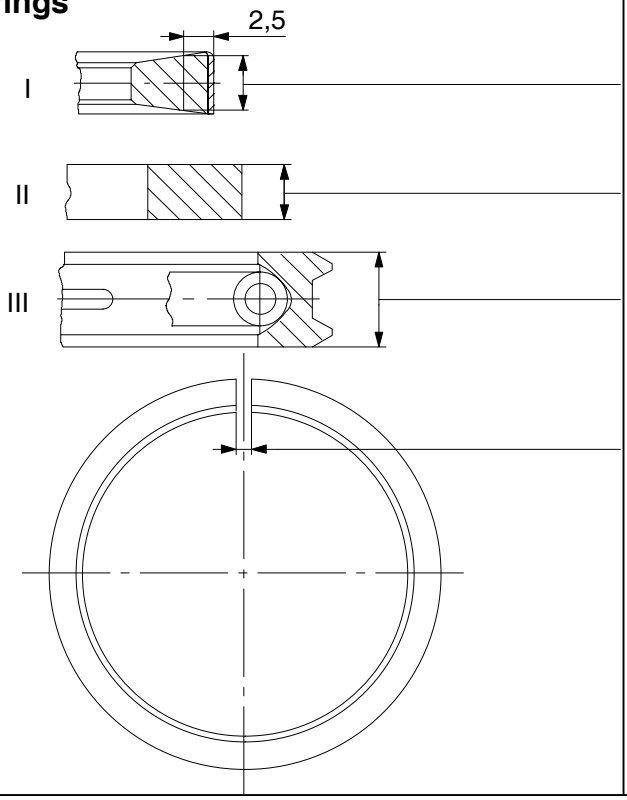

1st ring – keystone ring
Height: 3,296–3,330 mm

2nd ring – minute ring:
Height: 2,970–3,000 mm
Axial clearance: 0,050–0,010 mm

3rd ring – bevelled ring
Height: 3,975–3,990 mm
Axial clearance: 0,030–0,065 mm

Ring gap:
1st ring: 0,50–0,70 mm
Wear limit: 1,00 mm*
2nd ring: 0,70–0,90 mm
Wear limit: 1,00 mm*
3rd ring: 0,25–0,55 mm
Wear limit: 0,80 mm*
*Measured in new liner.

https://truckmanualshub.com/

Service data	Dimensions Limit values
Cylinder head	
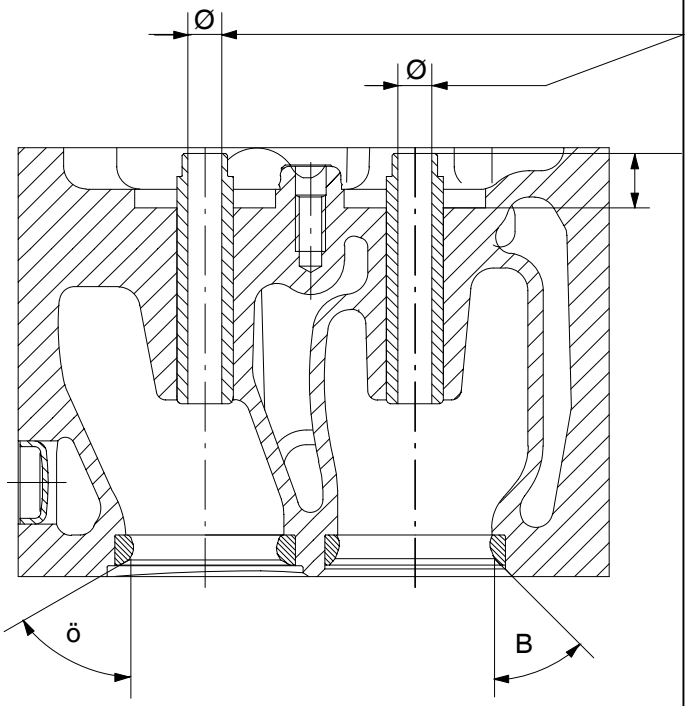	9.000–9.015 mm 14.1–15.5 mm Intake valve φ = 60° Exhaust valve β = 45°
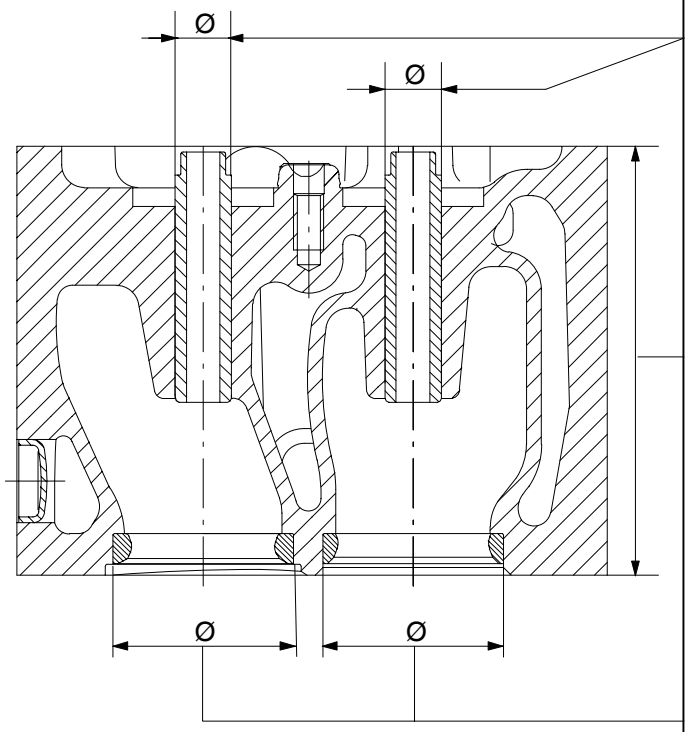	Bore in cylinder head for valve guide: 15.000–15.018 mm External diameter of valve guide: 15.028–15.046 mm Standard size: 113.9–114 mm (observe specified dimensions for injector projection and valve recess) Bore in cylinder head: 48.00–48.025 mm External diameter of valve seat ring: 48.10–48.11 mm

https://truckmanualshub.com/

Service data	Dimensions Limit values
Cylinder head bolts 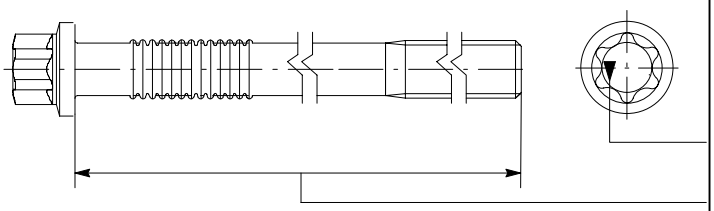	Length With each tightening, the bolts are deliberately stressed beyond the stretch limit and each tightening thus extends their length permanently. When the bolt has reached its maximum length, it must not be re−used. Angle of rotation symbol 51.90490−0041 / 0070: new: 259−259.5 mm, max. 261.5 mm 51.90490−0042 / 0071: new: 197.5−198 mm, max. 200 mm
Valve recess 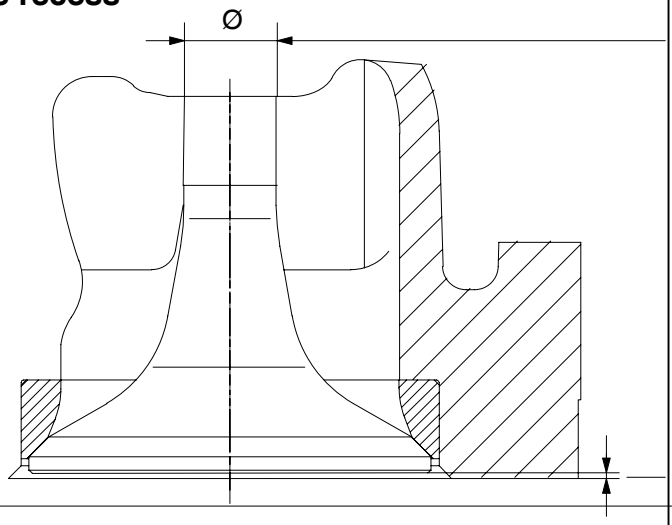	Intake valve: 8.963−8.977 mm Exhaust valve: 8.95−8.964 mm Valve recess: 0.80 mm
Valve springs 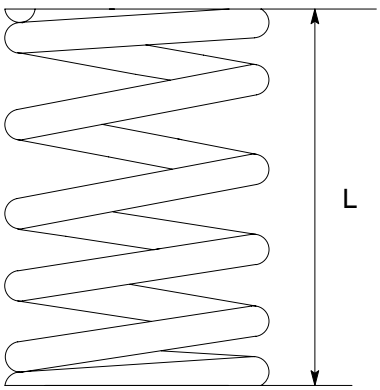	Free length (L), approx. 63.3 mm L = 45.0 mm: at spring force 410−470 N L = 33.0 mm: at spring force 714−790 N

https://truckmanualshub.com/

Service data	Dimensions Limit values
Valve gear	
Rocker arm shaft 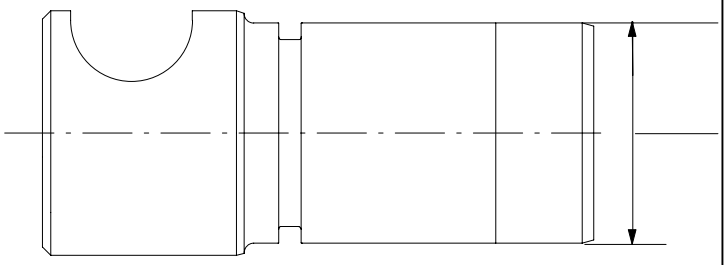	27.961–27.97 mm
Rocker arm 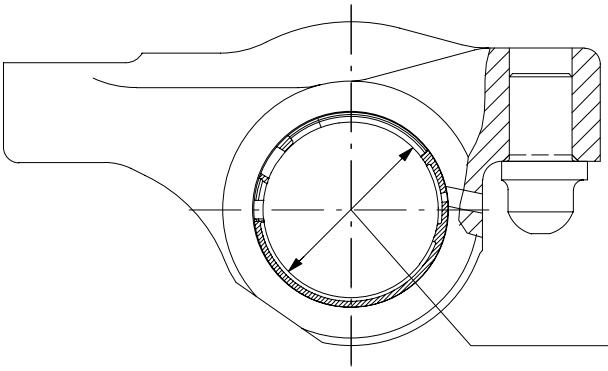	28.021–28.005 mm Rocker arm radial clearance: 0.035–0.06 mm

https://truckmanualshub.com/

Service data	Dimensions Limit values
Camshaft	
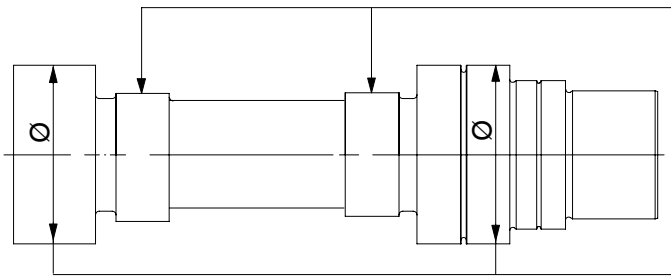	Replace if signs of wear are present Camshaft axial clearance: 0.20–0.90 mm Wear limit: 1.5 mm 69.910–69.940 mm Backlash: Crankshaft gear and camshaft gear: 0.128 mm–0.252 mm
Camshaft bearing	
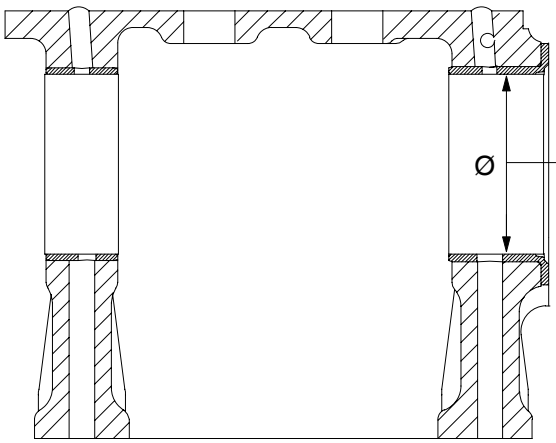	70.000–70.030 mm
Valve tappet	
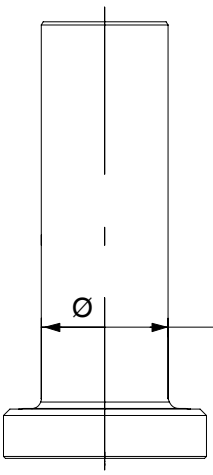	Matching bore in crankcase: 20.000–20.021 mm 19.944–19.965 mm

https://truckmanualshub.com/

Valve clearance

set when engine is cold

Intake valve: 0,5 mm
Exhaust valve: 0,6 mm

Valve timing

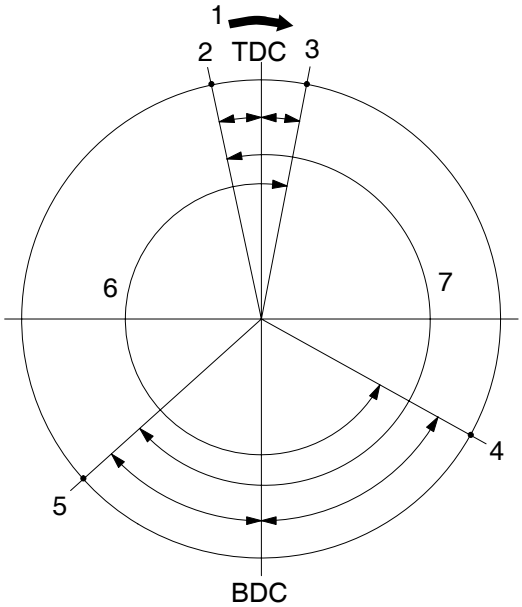

1 = engine direction of turn
2 = intake valve opens 23° before TDC
3 = exhaust valve closes 30° after TDC
4 = exhaust valve opens 60° before BDC
5 = intake valve closes 12° after BDC
6 = exhaust valve opening angle 270°
7 = intake valve opening angle 215°

The degrees specified refer to the crankshaft angle

Compression pressures

good	above 16 bar
permitted	13–16 bar
repair required	**below 13 bar**
Pressure difference (between the individual cylinders)	**max. 3 bar**

Backlash

Crankshaft wheel and camshaft wheel	0,128–0,252 mm
Crankshaft wheel and oil pump drive wheel	0,099–0,451 mm
Camshaft drive wheel and injection pump drive wheel	0,102–0,338 mm

https://truckmanualshub.com/

Service Data	Dimensions Limiting values
Engine lubrication	
Valve opening pressures	
Bypass valve for oil filter	1,8–2,6 bar
Overpressure valve on the oil pump	9–10 bar
Pressure valve of the oil injection nozzles	
Opening pressure	1,4–1,6 bar
Pressure at max. opening	1,9–2,1 bar
Spray hole diameter of the oil injection nozzles	2,3–2,5 mm
Two-gears oil pump **Oil pump wheel**	
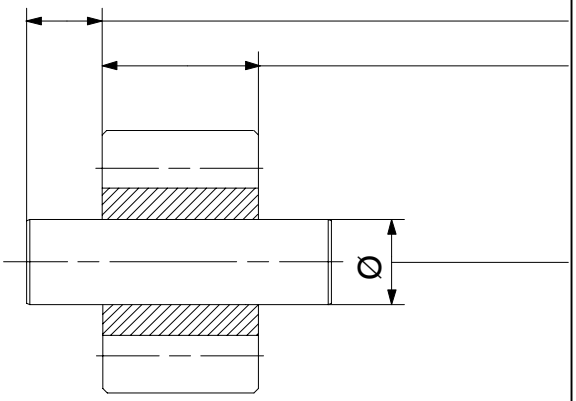	11,5–11,7 mm 42,950–42,910 mm Housing depth: 43,000–43,039 mm Axial clearance: 0,040–0,106 mm Shaft: 21,930–21,940 mm Bore Ø in housing: 22,000–22,017 mm
Drive wheel with oil pump wheel	
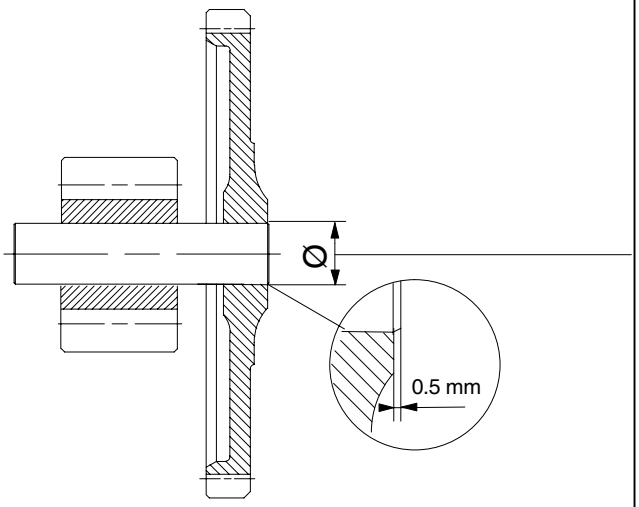	Shaft: 21,930–21,940 mm Bore Ø in drive wheel: 21,885–21,883 mm Press on force: 12000 N Backlash between: Drive wheel and crankshaft wheel: 0,099–0,451 mm
Delivery volume of oil pump at oil pump speed (with SAE10 oil, at 50°C and p = 4 bar) Oil pump speed = engine speed x 0,977	
at n = 600 rpm	37 ltr./min
at n = 2440 rpm	175 ltr./min

https://truckmanualshub.com/

Engine coolant pump

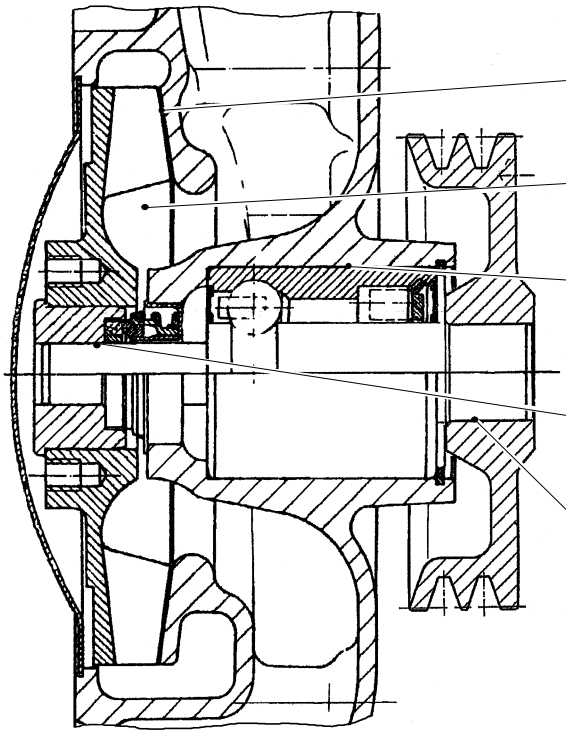

gap: 0,5–0,7 mm
Minimum: 0.5 mm if impeller is pressed on.

Ø impeller: 149,5–150 mm

Bearing seat in housing:
54,940–54,970 mm
Ø of bearing: 54,981–54,994 mm
Interference: 0,021–0,064 mm

Bore for bearing shaft in impeller:
15,992–16,010 mm (Ø 16 J7)
Ø of bearing shaft: 16,043–16,056 mm
Interference: 0,033–0,064 mm

Bore in hub / belt pulley:
25,007–25,020 mm (Ø 25 G6)
Ø of bearing shaft: 25,048–25,061 mm
Interference: 0,028–0,054 mm

Coolant pump with high-temperature and low-temperature parts

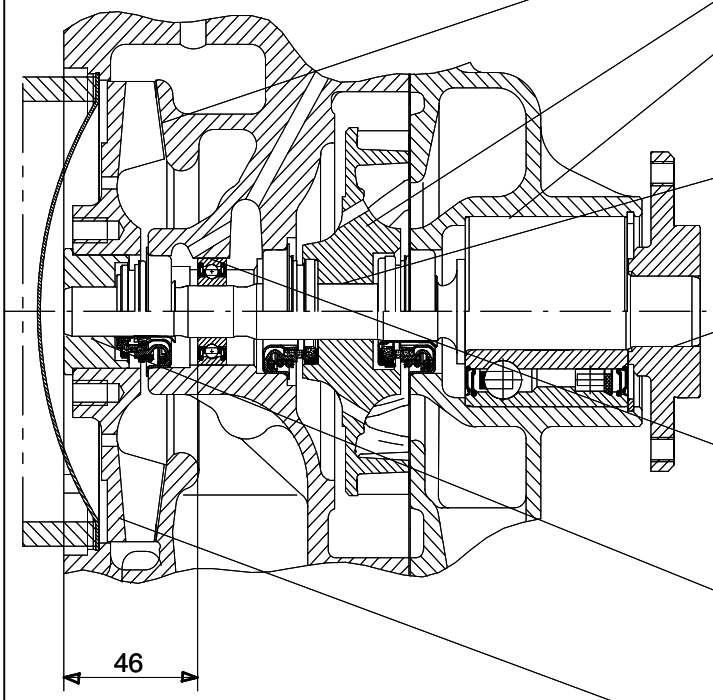

gap: 0,7–0,8 mm

Ø impeller: 120 mm

Bearing seat in housing:
Ø 61,976–61,995 mm
Ø of bearing: 61,987–62,000 mm
Interference: 0,008–0,024 mm

Bore for bearing shaft in impeller NT:
17,992–18,010 mm
Ø bearing shaft: 18,045–18,056 mm
Interference: 0,035–0,064 mm

Bore in hub / belt pulley:
23,007–23,020 mm
Ø bearing shaft: 23,048–23,061 mm
Interference: 0,028–0,054 mm

Bearing seat in housing HT:
35,994–35,010 mm
Ø of bearing: 34,989–35,000 mm
Interference: 0,006–0,021 mm

Bore for bearing shaft in impeller HT:
15,992–16,010 mm
Ø bearing shaft: 16,045–16,056 mm
interference: 0,035–0,064 mm

Ø impeller: 149,5–150 mm

https://truckmanualshub.com/

Turbocharger
Axial clearance

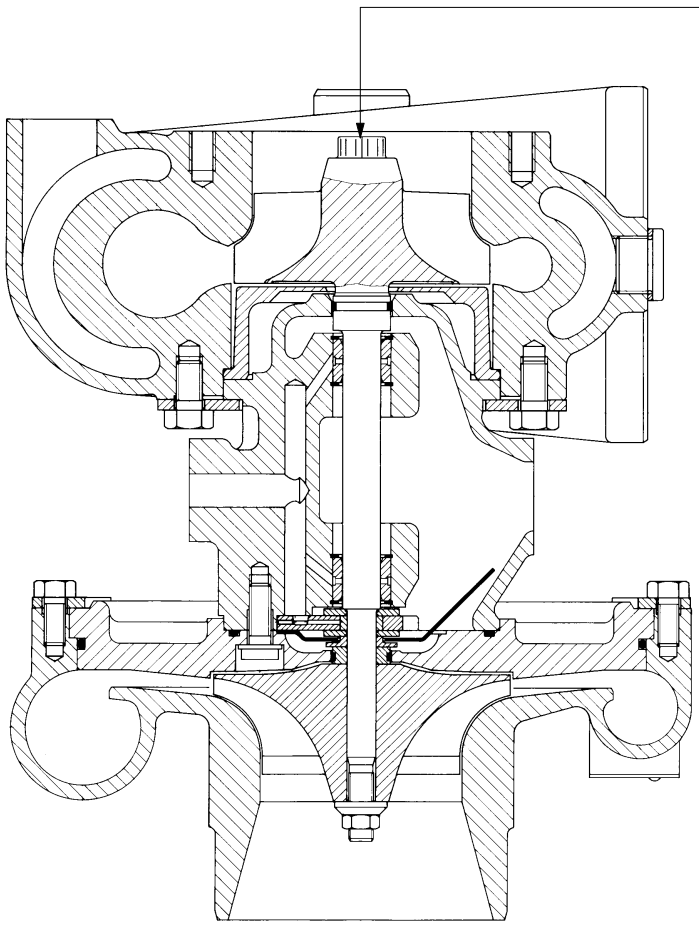

Max. axial clearance: max. 0,16 mm

Radial clearance

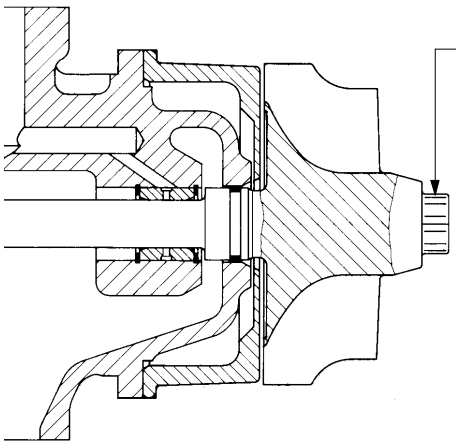

Max. radial clearance: 0,64 mm

https://truckmanualshub.com/

Service data	Dimensions Limit values
Fuel system	
Injection nozzles	
Manufacturer	Bosch
Type of injector	DLLA 154 P 866
Number of holes	7
Opening pressure of injector New nozzle holder: Used nozzle holder:	 320+ 8 bar
Projection above cylinder head contact surfaces	
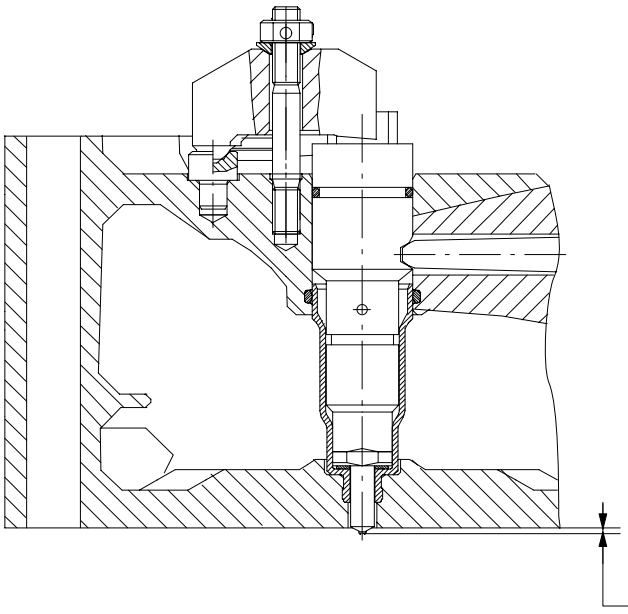	2.12–3.13 mm
Injection pump	Bosch control-slide pump RP 39 Governor Bosch-EDC MS 5.5
Start of delivery	
All models	Crank angle before TDC
	2°±1°

https://truckmanualshub.com/

Starter motor

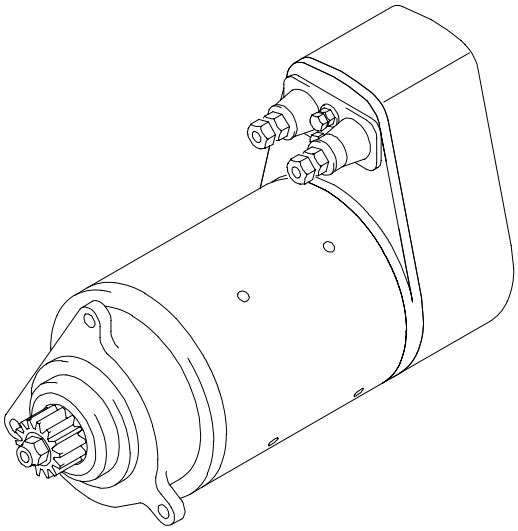

Manufacturer:	Bosch
Type:	KB
Operating method:	splined shaft
Starter motor pinion:	
Number of teeth:	Z = 9
Module:	3
Nominal power:	5,4 kW
Nominal voltage:	24 V

V–belts / Powerband

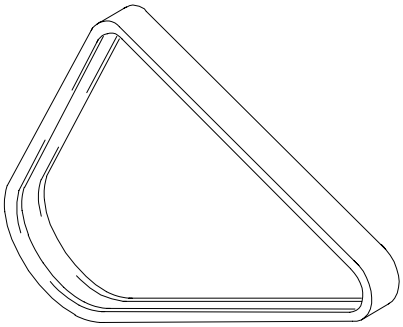

Replace damaged V–belts (cracks, wear, oil)

Measuring tension withtension tester

Belt width	Tensioning forces according to the kg graduation on the tester		
	New installation		When servicing after long running time
	Installa-tion	After 10 min. run-ning time	
2/3VX	90-100	70-80	60

Pilot clutch

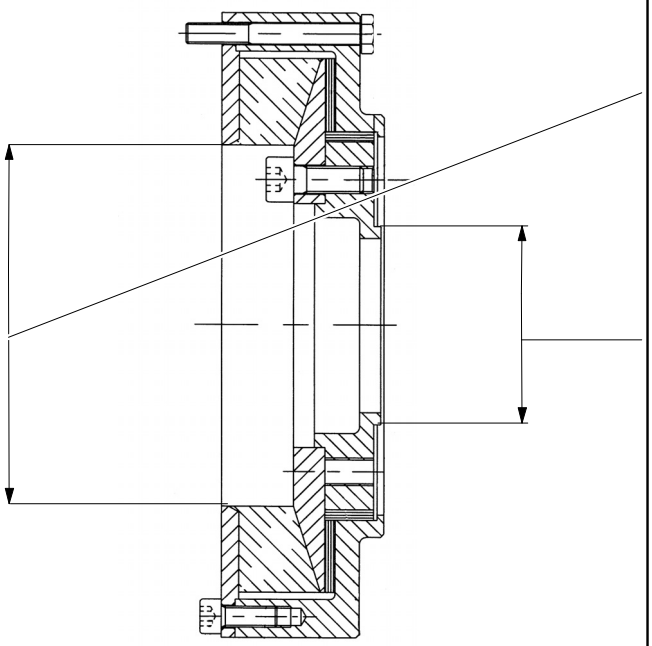

179,986–179,946 mm

56,990–56,960 mm

https://truckmanualshub.com/

Note:
All screw connections, the purpose of which is not stated in the following table, are to be tightened in accordance with the guide values in our company standard M 3059 (see page 161). Fit the bolts slightly oiled!

Screw plugs

DIN 908
- M14x1.5, M16x1.5 . . . . . 80 Nm
- M18x1.5, M22x1.5 . . . . . 100 Nm
- M24x1.5, M26x1.5 . . . . . 120 Nm
- M30x1.5 . . . . . 150 Nm

DIN 7604
- AM10x1, M12x1.5 . . . . . 50 Nm
- AM14x1.5 . . . . . 80 Nm

Crankcase, crankshaft drive

Gear case to crankcase M14, 12.9 . . . . . 225 Nm
Gear case to crankcase M10, 12.9 . . . . . 75 Nm
Inspection port cover to gear case M8, 12.9 . . . . . 40 Nm
Inspection port cover to gear case M8, 8.8 . . . . . 10 Nm
Crankshaft bearing caps to crankcase M18 x 2
- Initial torque . . . . . 300–330 Nm
- Angle tightening . . . . . 90–100°

Vibration damper to crankshaft M16 x 1.5, 12.9 . . . . . 260 Nm
Flywheel to crankshaft M16 x 1.5
- Initial torque . . . . . 100–110 Nm
- 1st angle tightening . . . . . 90–100°
- 2nd angle tightening . . . . . 90–100°

Connecting rod bearing caps M14 x 1.5
- Initial torque . . . . . 100–110 Nm
- Angle tightening . . . . . 90 to 100°

Cylinder head

Tightening / retightening the cylinder–head bolts, see page 162

Lubrication system

Oil pump to crankcase M8, 8.8 . . . . . 22 Nm
Cover oil pump M8, 8.8 . . . . . 22 Nm
Oil cooler to oil filter head M8, 8.8 . . . . . 22 Nm
Filter box to oil filter head M8, 10.9 . . . . . 50 Nm
Oil pan to crankcase . . . . . 22 Nm
Oil drain plug to oil pan M26 x 1.1.5 . . . . . 80 Nm
Oil jet flange to crankcase M14 x 1.5 70 Nm

Exhaust / intake manifold

Exhaust manifold to intermediate plate M10 45 Nm
Intermediate plate to cylinder head M10
- Initial torque . . . . . 60 Nm
- Angle tightening . . . . . 90°

Intake pipe to cylinder head M8, 8.8 . . . . . 22 Nm

https://truckmanualshub.com/

Fuel system

Assembly sequence for injector and injection line:

1. Collar nut for injector retainer ①, initial torque ..... 10 Nm
2. Injection line ③, initial torque ..... 10 Nm
3. Mounting bolt for connector to injection line ②, initial torque ..... 10 Nm
4. Collar nut for injector retainer ①
   Initial torque ..... 25 Nm
   Rotation angle ..... 90°
5. Mounting bolt for connector to injection line ②
   Final torque ..... 20 Nm
   Rotation angle ..... 90°
6. Injection line ③
   Rotation angle for first installation ..... 60°
   Rotation angle for assembly sequence ..... 30°
7. Collar nut for injector retainer ①
   Rotation angle ..... 45°
   Let engine warm up
   Rotation angle ..... 90°

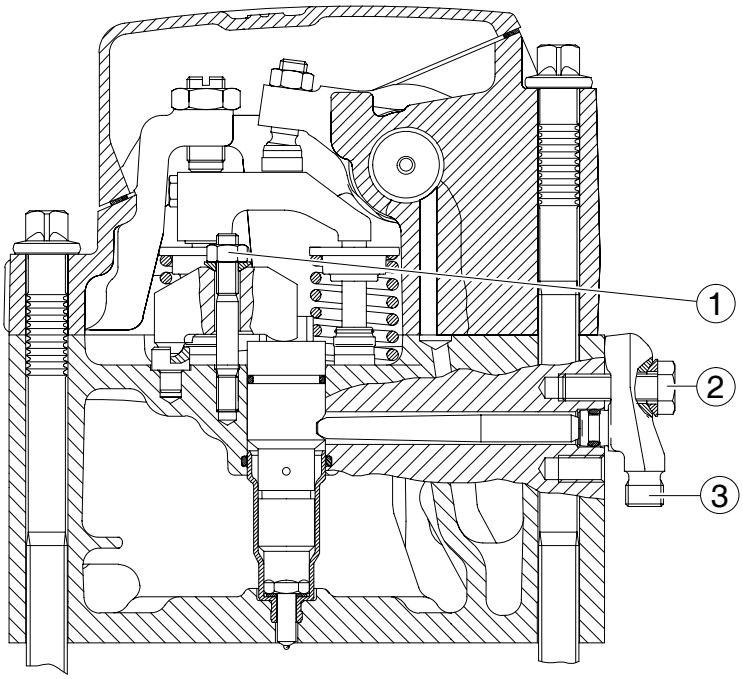

1) Collar nut for injector retainer
2) Mounting bolt for connector to injection line
3) Connection for injection line

Starter / alternator

Starter to crankcase M12 x 1.5 ..... 80 Nm
V–belt pulley on alternator ..... 40–50 Nm

https://truckmanualshub.com/

Installation tightening torques according to company standard M 3059

Bolts / nuts with external or internal hexagon, head without collar or flange

Thread size x pitch	Grades / tightening torques in Nm		
	for **8.8 / 8**	for **10.9 / 10**	for **12.9 / 12**
M4	2.5	4.0	4.5
M5	5.0	7.5	9.0
M6	9.0	13.0	15.0
M7	14.0	20.0	25.0
M8	22.0	30.0	35.0
M8x1	23.0	35.0	40.0
M10	45.0	65.0	75.0
M10x1.25	45.0	65.0	75.0
M10x1	50.0	70.0	85.0
M12	75.0	105.0	125.0
M12x1.5	75.0	110.0	130.0
M12x1.25	80.0	115.0	135.0
M14	115.0	170.0	200.0
M14x1.5	125.0	185.0	215.0
M16	180.0	260.0	310.0
M16x1.5	190.0	280.0	330.0
M18	260.0	370.0	430.0
M18x2	270.0	290.0	450.0
M18x1.5	290.0	410.0	480.0
M20	360.0	520.0	600.0
M20x2	380.0	540.0	630.0
M20x1.5	400.0	570.0	670.0
M22	490.0	700.0	820.0
M22x2	510.0	730.0	860.0
M22x1.5	540.0	770.0	900.0
M24	620.0	890.0	1040.0
M24x2	680.0	960.0	1130.0
M24x1.5	740.0	1030.0	1220.0

https://truckmanualshub.com/

Retightening of the cylinder head bolts

(Engine cold or warm)

Erster Nachzug der Zylinder-kopfschrauben erledigt

First retightening of cylinder-head-bolts completed

Spare part no. 51.97801–0211

The cylinder heads are fitted with cylinder head bolts for rotation angle tightening. On new engines, the cylinder–head bolts are retightened at the factory after running in and marked by the sticker **"First retightening of cylinder–head bolts ..."** on a cylinder head cover.

Intake side

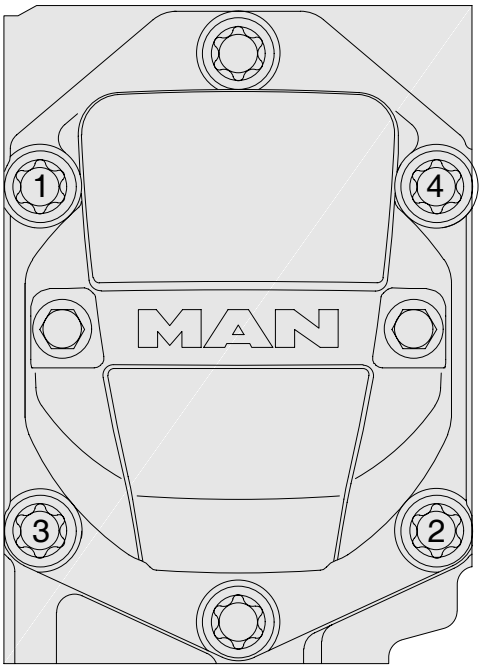

Exhaust side

Tightening schedule **"1"**

After the first 400 hours of operation, tighten the cylinder–head bolts 1 – 4 in the order specified in tightening schedule **"1"** by 90° (1/4 turn).

The two outer bolts (intake and exhaust side) must not be retightened.

Note:
The cylinder head bolts to be retightened must not be loosened; they are to be tightened further from their current position by 90° (1/4 turn).

Zweiter Nachzug der Zylinder-kopfschrauben erledigt

Second retightening of cylinder-head-bolts completed

Spare part no. 51.97801–0212

Remove the sticker "**First retightening of the cylinder–head bolts ...**" and attach the sticker **"Second retightening of the cylinder–head bolts ..."** to verify the second retightening.

https://truckmanualshub.com/

Tightening the cylinder head bolts following a repair
(engine cold)

Intake side

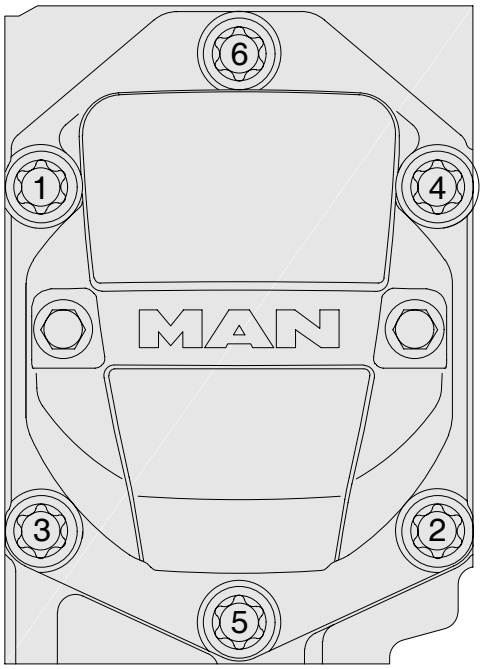

Exhaust side

Tightening schedule **"2"**

Before inserting the cylinder head bolts, apply engine oil to the threads (not the tapped holes) and "Optimoly White T" installation past to the bolt head contact faces. Do not use oils or oil additives containing MoS_2. The bolts are to be tightened using the rotation angle method according to tightening schedule **"2"** as follows.

- 1st pretightening = to 10 Nm
- 2nd pretightening = to 80 Nm
- 3rd pretightening = to 150 Nm
- 4th pretightening = 90°
- Final tightening = 90°

Set the valve clearance.

Note:
When the head has been removed, the cylinder head gasket must always be replaced.

Retightening the cylinder–head bolts following a repair
(Engine cold or warm)

After the first 10 to 20 hours of operation, following a repair, retighten the cylinder–head bolts in the order specified in tightening schedule **"2"** by 90° (1/4 turn).
The cylinder–head bolts to be retightened must not be loosened; they are to be tightened further from their current position by 90° (1/4 turn).
Attach the sticker **"First retightening of cylinder–head bolts ..."** (remove sticker that might already be attached).
After the first 400 hours of operation, following a repair, tighten cylinder–head bolts 1 to 4 in the order specified in tightening schedule **"1"** by another 90° (1/4 turn).
The two outer bolts (intake and exhaust side) must not be retightened.
Attach sticker **"Second retightening of cylinder–head bolts ..."**.

Following successful tightening, attach the **"Retightening of cylinder–head bolts completed"** sticker to one of the valve caps.

Notes

https://truckmanualshub.com/

Special tools

1

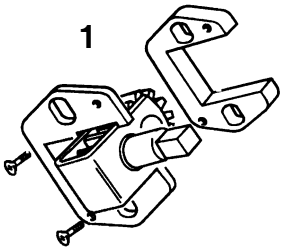

2

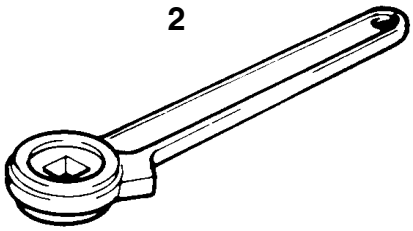

3

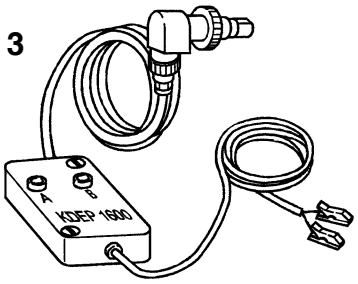

3.1

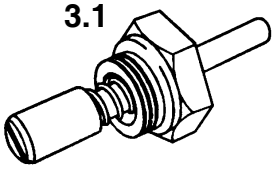

4

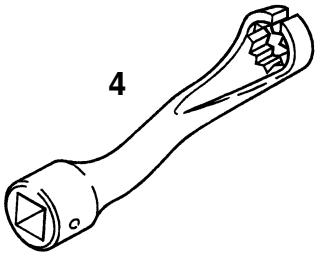

5

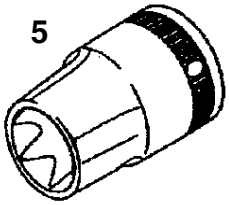

6

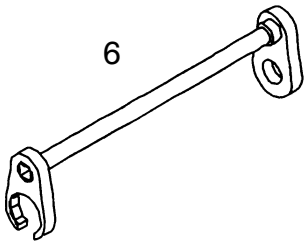

7

8

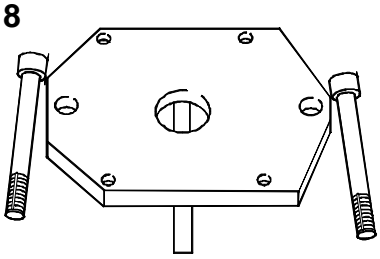

9

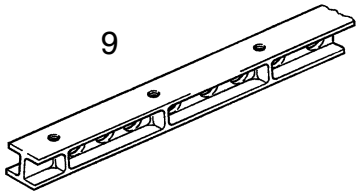

10

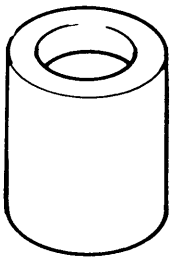

11.1

11.2

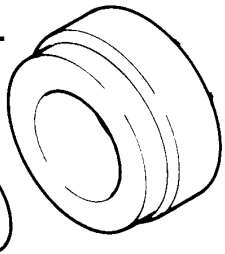

12

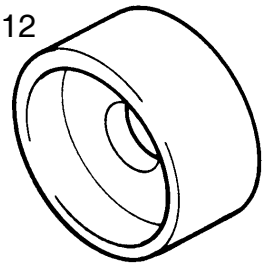

12.1

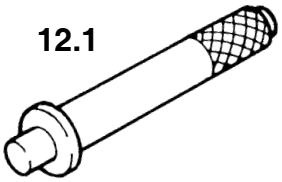

12.2

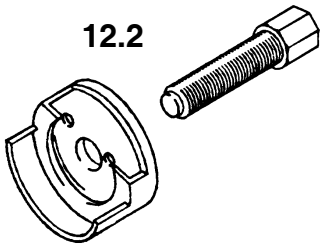

13

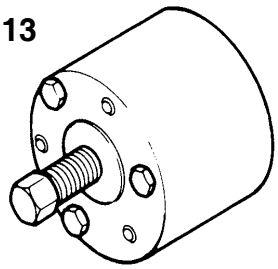

14

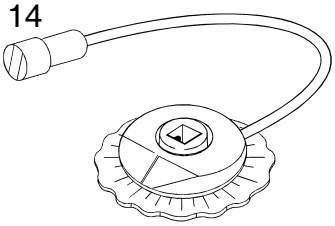

https://truckmanualshub.com/

Fig. no.	Designation	Item number
1	Engine cranking device	80.99626–6008
2	Standard ratchet	80.99627–0001
3	Light signal sensor for start of delivery setting	80.99605–6002
3.1	Blocking device for start of delivery setting in the case of injection pumps with start of delivery sensor in conjunction with light signal sensor 2	80.99605–0217
4	Special spanner (WAF 17) for injection pressure lines	80.99603–0025
5	Wrench socket for cylinder head bolts (Torx)	08.06143–0215
6	Socket spanner for injection line on the cylinder head	80.99603–6019
7	Tester for checking for leaks at nozzle holder seat, pressure pipe and leakage oil duct	80.99620–0029
8	Mounting plate for cylinder head and rocker arm bearing housing	80.99606–6089
9	Straightedge for cylinder heads	80.99605–0175
10	Pressing mandrel for cassette seal in conjunction with handle 12.1	80.99617–0191
11	Driving mandrel for seal in timing case	
	comprising:	
11.1	Guide sleeve	80.99604–0068
11.2	Pressing plate in conjunction with handle 12.1	80.99604–0069
12	Driving mandrel for race on flywheel in conjunction with handle 12.1	80.99617–0017
12.1	Attachment handle for all press-in plates	80.99617–0129
12.2	Puller for bearing race on the flywheel	80.99601–6017
13	Puller for front crankshaft bearing race	80.99601–0076
14	Rotation angle measuring device	80.99607–0134

15

15.1

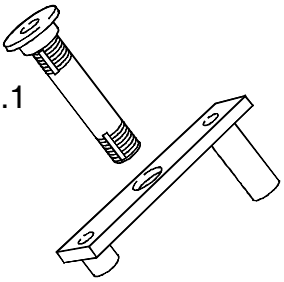

15.2

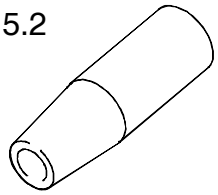

15.3

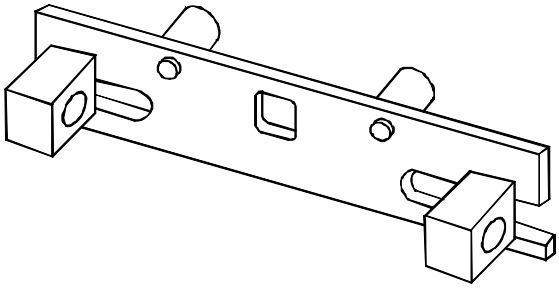

15.4

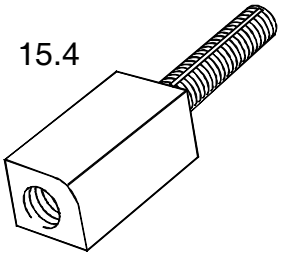

15.5

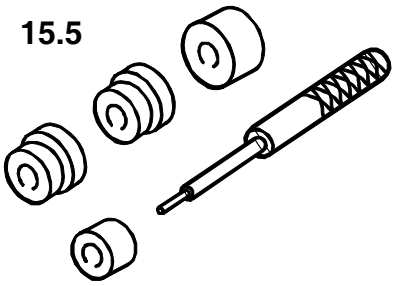

15.6

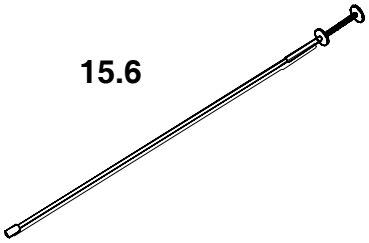

15.7

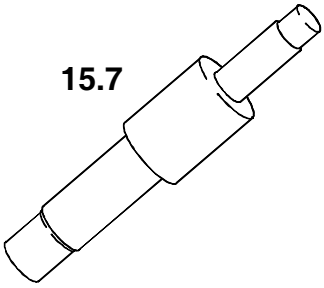

15.8

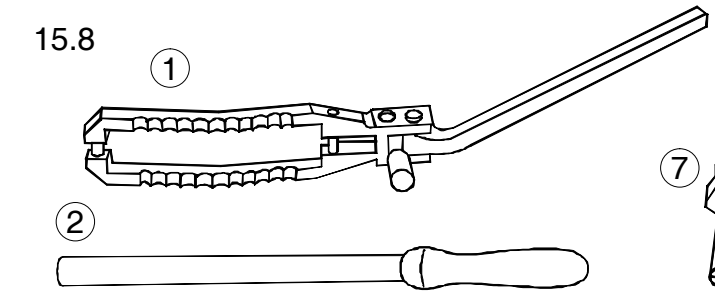

15.9

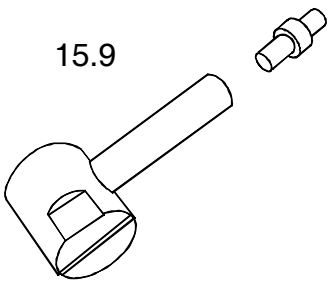

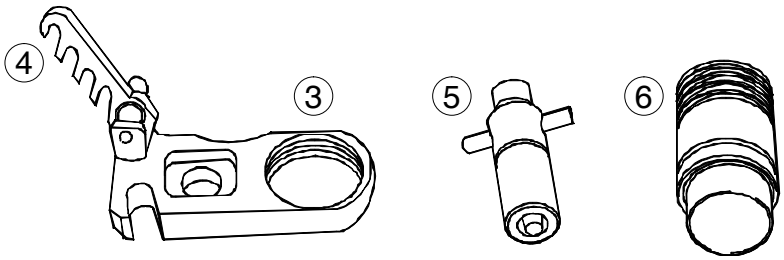

15.10

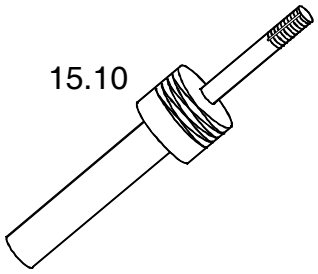

https://truckmanualshub.com/

Fig. no.	Designation	Item number
15	Tool case complete with special tools for cylinder heads	80.99606–6096
	Contents:	
15.1	Extractor for injection nozzles	80.99602–6005
15.2	Mounting sleeve for valve stem seals	80.99606–0516
15.3	Centring and press-in tool for rocker arm shafts	80.99606–6090
15.4	Adapter for impact puller for pulling out rocker arm shafts	80.99602–0140
15.5	Press-in tool for valve guides and valve seats	80.99604–6024
15.6	Magnetic lifter for pressure pipe fittings	80.99639–0009
15.7	Connecting piece for compression recorder	80.99607–0158
15.8	Mounting tool for valve springs and tapers (set)	80.99606–6087
	① Mounting tool	80.99606–6093
	② Extension	80.99606–6094
	③ Centring plate	80.99606–0512
	④ Mounting tool	80.99606–6092
	⑤ Mounting cartridge	80.99606–6120
	⑥ Guide sleeve	80.99606–0587
	⑦ Hexagon bolt M10x25 – 8.8	06.01283–5215
	Hexagon bolt M8x140 – 8.8	06.01013–3129
15.9	Adapter for ejecting injection nozzles	80.99607–6018
15.10	Mounting tool for valve stem seals	80.99606–6088

16

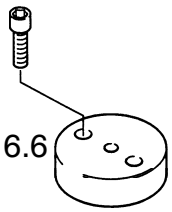

16.1

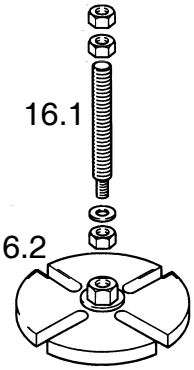

16.2

16.3

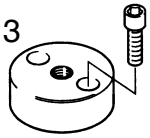

16.6

16.7

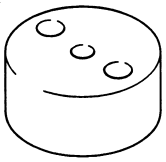

16.4

16.5

17

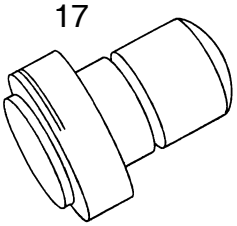

18

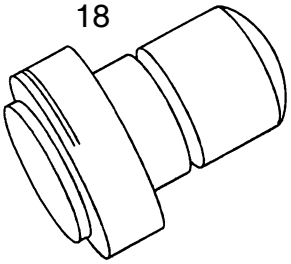

19

20.1

20.2

21

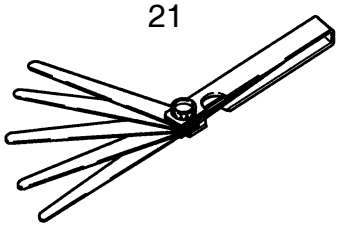

22

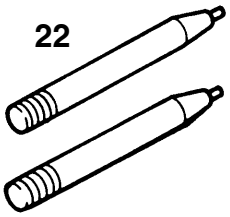

23

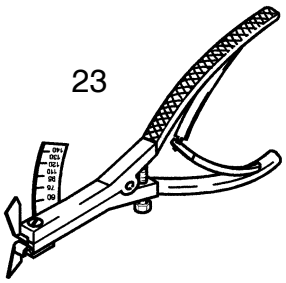

24

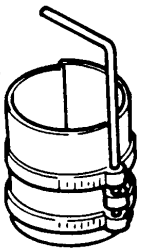

25

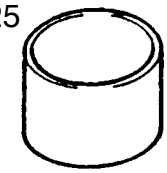

26

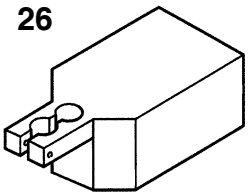

27

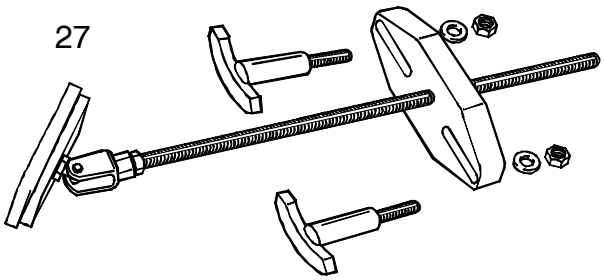

28

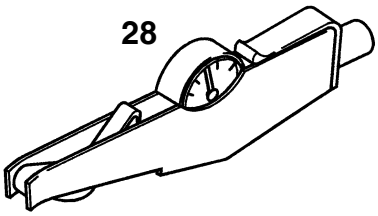

https://truckmanualshub.com/

Fig. no.	Designation	Item number
16	Special tool for front crankshaft seal	80.99606–6011
	Component parts:	
16.1	Spindle	80.99606–0229
16.2	Extractor apparatus	80.99606–0298
16.3	Adapter	80.99606–0264
16.4	Extractor hook	80.99606–6013
16.5	Press-in sleeve	80.99606–0300
16.6	Adapter	80.99606–0302
16.7	Fitting sleeve	80.99606–0301
17	Press-in mandrel for cap, dia. 50.2 mm	51.91606–0053
18	Press-in mandrel for cap, dia. 62.2 mm	51.91606–0045
19	Hexagon bolt wrench 5 with transverse handle for valve clearance setting	08.06125–9035
20.1	Torque wrench 6–50 Nm for valve clearance setting	08.06450–0006
20.2	Ring socket tool for valve clearance setting in conjunction with 20.1	08.06460–0003
21	Valve gauge for valve setting	80.99607–0019
22	Guide pins for flywheel	80.99617–0020
23	Piston ring pliers	83.09144–6090
24	Piston ring scuff band	80.99613–0035
25	Piston ring tensioning sleeve	83.09144-0187
26	Dial gauge holder	80.99605–0172
27	Extractor apparatus for cylinder liners	80.99601–6018
28	V-belt tension tester	80.99605–0279

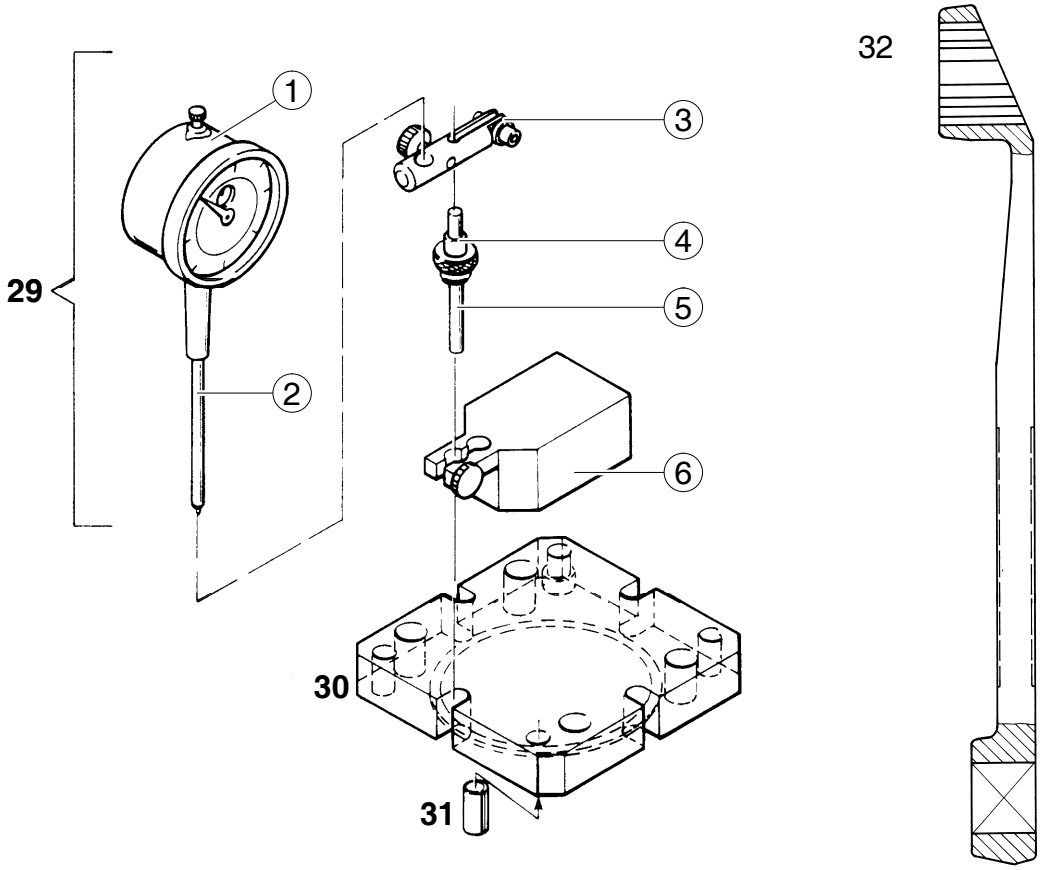
1
2
3
4
5
6
29
30
31
32

https://truckmanualshub.com/

Fig. no.	Designation	Item number
29	Measuring combination for measuring the cylinder liner protrusion comprising:	
	① Dial gauge	08.71000–1205
	② Tracer pin for dial gauge	80.99605–0197
	③ Dial gauge bracket	80.99605–0179
	④ Support pin	80.99605–0180
	⑤ Dial gauge bracket	80.99605–6006
	⑥ Dial gauge bracket	80.99605–0172
30	Press-on measuring plate	80.99605–0195
31	Fitting sleeves	51.91701–0247
32	Ring spanner for PTO drive gear	80.99603–0210

Note:
There is a complete catalogue of “MAN special tools”.
This catalogue contains all of the special tools for maintenance and servicing MAN trucks, omnibuses and engines available from MAN.
Available from the central spare parts warehouse.

Special tools for coolant pump repair for improvised manufacture

(Material: steel as available)

Support ring for pressing out coolant pump bearing

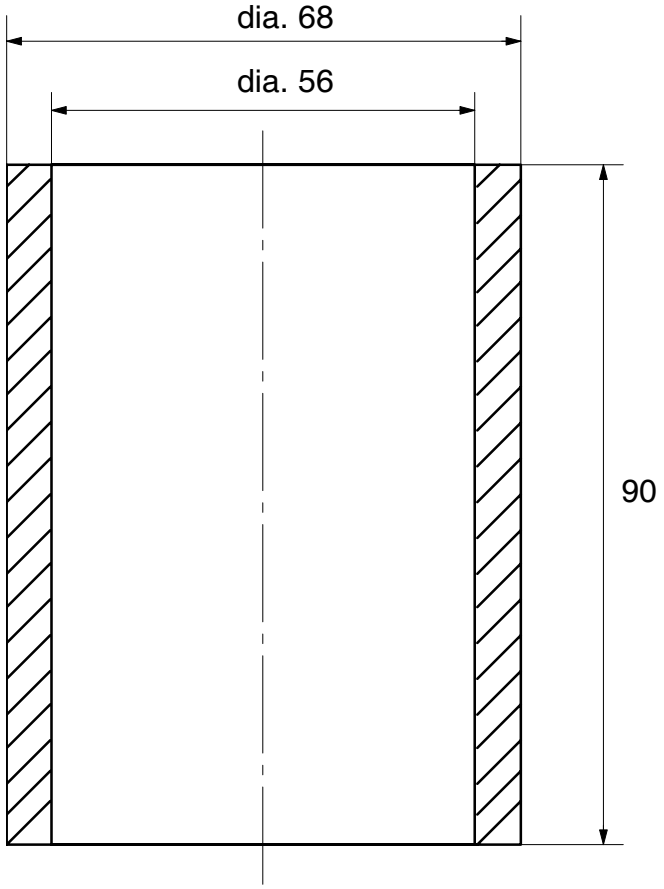

33

34

35

36

37

38

39

40

40.1
40.2
40.3

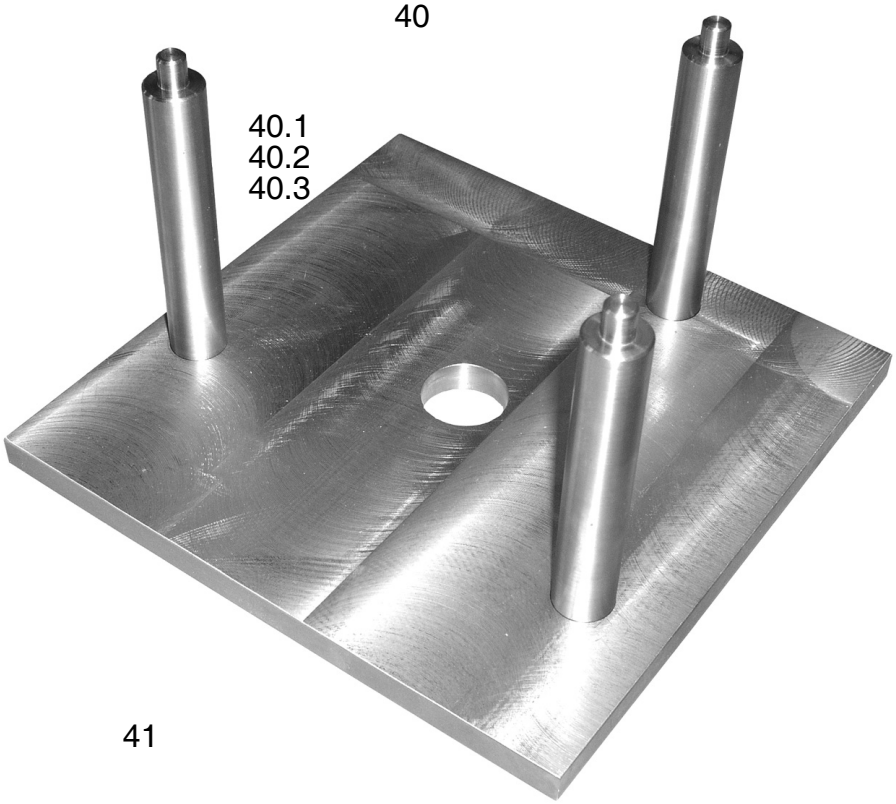

41.1

41

41.2

42

43

Special tools for high- and low-temperature coolant pump

Fig. no.	Designation	Item code
33	Pressing plate / pressing in the coolant pump bearing, coolant pump shaft and V-belt pulley	80.99604–0251
34	Pressing mandrel / pressing the axial face seal into the pump housing	80.99604–0252
35	Base plate for various pressing jobs	80.99614–0027
36	Pressing mandrel / pressing the deep-groove ball bearing into the HT pump housing	80.99604–0254
37	Clamp / assembly device for pump housing	80.99606–0628
38	Clamp / assembly device for pump housing	80.99606–0629
39	Pressing mandrel / pressing in the axial face seal 51.06520–0085	80.99617–0191
40	Assembly device for pump housing	80.99606–6128
	consisting of:	
40.1	Plate	80.99606–0631
40.2	Location pin / assembly device for pump housing	80.99606–0632
40.3	Mouting bolts	06.02192–0308
41	Detachable handle for all press-in plates and clamps	80.99617–6006
	consisting of:	
41.1	Handle	80.99617–0187
41.2	Disc	80.99617–0144
42	M5 bolt with left–handed thread for installing coolant pump	80.99606–0642
43	Centring pin for installation of coolant pump	80.99606–0643
44	Bush for pressing in end cover (no fig.)	80.99604–0263

https://truckmanualshub.com/

A
Arrangement of cylinders 94
Assembling rocker arm mechanism 96
Axial clearence 145

B
Backlash 153
Bearing race 77
Bleeding the fuel system 40

C
Camshaft 114, 152
Camshaft bearings 115
Changing the oil filter 60
Checking boost pressure 86
Checking conrod 123
Checking injection nozzle 36
Checking piston ring axial clearance 126
Checking valve timing 116
Cleaning fuel prefilter 38
Compression Checking 112
Compression pressures 153
Contact washer on the camshaft for wear 113
Coolant draining 42
Coolant pump 155
  HT–LT 155
  installing 45–46
coolant pump, removing 44–45
Coolant pumpe – mechanical seal 50, 57
Cooling 142
Cooling circuit
  Descaling 59
  Filler caps and working valves 59
  Internal cleaning 58
Crankcase 118, 143
Crankshaft 117–119, 144
Crankshaft axial clearance 119
Crankshaft bearing 145
Crankshaft bearing caps 117
Crankshaft gaskets Assembly instructions 78
Crankshaft gaskets General 78
Cylinder head 149
Cylinder head – general notes 93
Cylinder head bolts 150
Cylinder head fitting 91
Cylinder head removing 90

C
Cylinder liners 127

D
Disassembling rocker arm mechanism 95
Dismantling the oil pump 66
Drain oil 61

E
EGR module 82
  Stripping 83
Engine lubrication 142, 154
Engine overhaul 9
Engine specifications 142
Engine Timing Arrangement – Diagram 23
Engine views 16–18
Exhaust manifold 80

F
Fault table 12–14
Fill / bleed the cooling system 42
Flame starter sheathed-element glow plug 41
Flywheel 74, 146
Front bearing race 70
Front crankshaft gasket 70
Fuel filter, Changing fuel filter 40
Fuel system 157
  Checking tightness 35
Fuel System Diagram 19, 20

G
Gear case 113

I
Injection nozzles 157
Injection pump 157
  Remove and install 28
Installing cylinder liners 130
Installing injection nozzles 33
Installing piston rings 126
Installing valves 102
Intake manifold 79

L
Light signal transmitter 25

https://truckmanualshub.com/

O
Oil cooler 61–62
Oil filler neck 63
Oil pan 63–64
Oil pump, removing and installing 65
Oil pump wheels, axial clearance 67
Oil spray nozzle, removing and installing 68
Oil spray nozzle valve checking 68

P
Pilot cluntch 158
Pilot clutch 69, 135–138
Piston protrusion 131
Piston rings 148–150
Pistons 148–150
Pistons with conrods installing 121
Pistons with conrods Removing 120
Preventing environmental damage 8

R
Rear crankshaft gasket 76
Refacing valves 111
Removing and installing the starter motor 132
Removing and installing valve guides 105
Removing injection nozzles 30
Removing piston rings 125
Removing valves 99
Repairing coolant pump 46–50
HT–LT Coolant pump 51–55
Retightening the cylinder head 162
Retightening the cylinder head bolts 162–164
Rocker arm 151
Rocker arm mechanism 95

S
Safety precautions 6–11
Schematic diagram of cooling system
Air/Air Intercooler 22
Air/water Intercooler 21
Schematic diagram of
engine lubrication system 18
Service Data 141–165
Solenoid valve 41
Start of delivery 24–26, 157
Adjusting 27
Starter motor 158
Starter ring gear 75

T
Thermostate 43
Torque guide values 159–162
Troubleshooting chart 13–15
Turbocharger 87–88, 156
Turbocharger axial clearance 89
turbocharger radial clearance 89
Turbocharger, troubleshooting 84

U
Used engine oil 8

V
V-belt tension 133
V-belts 133–134, 158
Valve clearance 94, 153
Valve gear 151
Valve projection 104
Valve retrusion 110
Valve seat 108
Valve seat angle 109
Valve seat insert, Removing, installing 106
Valve tappets 114
Valve timing 153
Valves 150
Vibration damper 69–71

W
Waste water treatment 59

https://truckmanualshub.com/

MAN Nutzfahrzeuge AG
Business Unit Engines
Vogelweiherstraße 33
D-90441 Nürnberg

A member of the MAN Group

Printed in Germany 51.99598-8107