https://truckmanualshub.com/

BODY BUILDER'S DRAWINGS AND SUPPORTING DATA

FE.FG

LIT. No. LTE07001-A

SEP. 2007

https://truckmanualshub.com/

INTRODUCTION

This book has been designed to provide information for body and equipment manufacturers who mount their products on MITSUBISHI-FUSO FE chassis.
We believe that all the detailed information which is essential for that purpose is contained in this book, but if you require any additional data or information, please contact:

MITSUBISHI FUSO TRUCK OF AMERICA, INC.
2015 Center Square Road,
Logan Township, NJ 08085
(Phone : (856) 467-4500)

The specifications and descriptions contined in this book are based on the latest product information at the time of publication, but since the design of MITSUBISHI-FUSO truck is continuously being improved, we must reserve the right to discontinue or change at any time without prior notice.

https://truckmanualshub.com/

COMPLIANCE WITH FEDERAL MOTOR VEHICLE SAFETY STANDARDS

The federal government has established Federal Motor Vehicle Safety Standards (FMVSS) for various categories of motor vehicles and motor vehicle equipment under the provisions of the National Traffic and Motor Vehicle Safety Act of 1966. The Act imposes important legal responsibilities on manufacturers, dealers, body builders and others engaged in the marketing of motor vehicles and motor vehicle equipment.

Vehicles manufactured by Mitsubishi FUSO Truck & Bus Corporation (MFTBC) for the subsequent installation of commercial bodies are classified as incomplete vehicles. These vehicles fully comply with certain applicable Motor Vehicle Safety Standards, and partially (or do not) comply with others. They cannot be certified fully because certain components which are required for certification are not furnished. Under present federal regulations, vehicles completed from these units are required to meet all applicable standards in effect on the date of manufacture of the incomplete vehicle, the date of final completion, or date between those two dates, as determined by their final configuration.

MFTBC incomplete vehicles carry in the glove box a document, as shown on the next page, that provides the vehicle types (truck) into which they may appropriately be completed, and the degree to which the incomplete vehicles comply with each of the standards in effect on the date of its manufacture. The completing manufacturer must certify compliance with all applicable standards, but may rely on MFTBC certification for those standards so indicated in the instructions for completing the vehicle document, provided that the instructions for completing the vehicle are followed. Questions may be directed to the Engineering or Service Department of MFTBC.

Alterations, modifications, or additions to the vehicle which affect compliance with FMVSS are not covered by MFTBC certification and are the responsibility of the completing manufacturer. Likewise the completing manufacturer must assume responsibility for compliance with changes in federal requirements that occur after the manufacture of the incomplete vehicle by MFTBC, if he elects to certify compliance as of a later date.

https://truckmanualshub.com/

INCOMPLETE VEHICLE DOCUMENT

DO NOT REMOVE

THIS DOCUMENT MUST REMAIN WITH THIS VEHICLE

UNTIL IT IS CERTIFIED AS A COMPLETE VEHICLE

THIS INCOMPLETE VEHICLE MANUFACTURED BY

MITSUBISHI FUSO TRUCK & BUS CORPORATION
890-12, Kashimada. Saiwai-ku, Kawasaki-shi,
Kanagawa, Japan

DATE OF MANUFACTURE :

VIN :

https://truckmanualshub.com/

List of FMVSS and CMVSS applicable to MFTBC trucks with GVWR of more than 10,000 lbs. manufactured after Jan. 1, 2007 is shown below.

FMVSS/CMVSS NO.	Title
101	Controls and Displays
102	Transmission Shift Lever Sequence, Starter Interlock and Transmission Braking Effect
103	Windshield Defrosting and Defogging Systems
104	Windshield Wiping and Washing Systems
105	Hydraulic Brake Systems
106	Brake Hoses
108	Lamps, Reflective Devices and Associated Equipment
111	Rearview Mirrors
115	Vehicle Identification Number (CMVSS ONLY)
116	Motor Vehicle Brake Fluids
119	New Pneumatic Tires for Vehicles other than Passenger Cars
120	Tire Selection and Rims for Motor Vehicles other than Passenger Cars
124	Accelerator Control Systems
205	Glazing Materials
206	Door Locks and Door Retention Components
207	Seating Systems
208	Occupant Crash Protection
209	Seat Belt Assemblies
210	Seat Belt Assembly Anchorages
302	Flammability of Interior Materials
1100	Vehicle Emissions (CMVSS only)
1106	Noise Emission (CMVSS only)

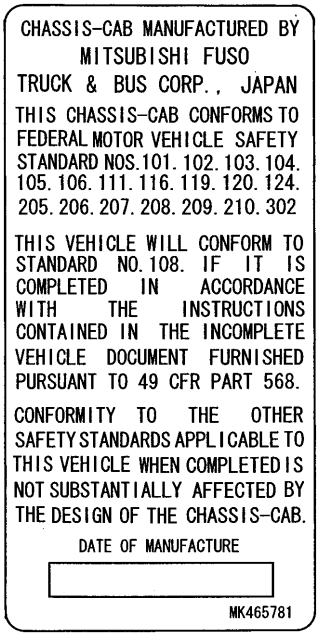
CHASSIS-CAB MANUFACTURED BY
MITSUBISHI FUSO
TRUCK & BUS CORP., JAPAN
THIS CHASSIS-CAB CONFORMS TO FEDERAL MOTOR VEHICLE SAFETY STANDARD NOS.101. 102. 103. 104. 105. 106. 111. 116. 119. 120. 124. 205. 206. 207. 208. 209. 210. 302
THIS VEHICLE WILL CONFORM TO STANDARD NO.108. IF IT IS COMPLETED IN ACCORDANCE WITH THE INSTRUCTIONS CONTAINED IN THE INCOMPLETE VEHICLE DOCUMENT FURNISHED PURSUANT TO 49 CFR PART 568.
CONFORMITY TO THE OTHER SAFETY STANDARDS APPLICABLE TO THIS VEHICLE WHEN COMPLETED IS NOT SUBSTANTIALLY AFFECTED BY THE DESIGN OF THE CHASSIS-CAB.
DATE OF MANUFACTURE
MK465781

In addition to the Incomplete Vehicle Document, a Safety conformance Label as shown to the right is affixed to all the vehicles when shipped from the factory. This label contains all the FMVSS numbers applicable not only to chassis-cabs but also to completed vehicles if they are completed in accordance with the Incomplete Vehicle Document.

This label is affixed to the door latch post of the left-hand side door.

DO NOT COVER OVER WITH ANY OTHER LABEL.

https://truckmanualshub.com/

NOISE REGULATIONS

The U.S. Environmental Protection Agency (EPA) has established noise emission standards applicable to medium and heavy trucks in excess of 10,000 lbs. GVWR manufactured after January 1, 1988 (40 CFR §205.52), requiring that they must conform to an 80 dB (A) maximum noise level when tested pursuant to EPA's test procedures.

MFTBC trucks are built in conformance with EPA Noise Emission Standards. Modified or altered vehicles may increase in noise emissions; compliance with applicable noise standards are the responsibility of the subsequent stage manufacturer.

A sample of Noise Emission Conformity Label is shown below. This label is affixed to all the vehicles when shipped from the factory.

DO NOT COVER OVER WITH ANY OTHER LABEL.

VEHICLE NOISE EMISSION CONTROL INFORMATION

MITSUBISHI FUSO TRUCK & BUS CORPORATION

DATE OF MANUFACTURE

THIS VEHICLE CONFORMS TO U.S. EPA REGULATIONS FOR NOISE EMISSION APPLICABLE TO MEDIUM AND HEAVY TRUCKS.
THE FOLLOWING ACTS OR THE CAUSING THEREOF BY ANY PERSON ARE PROHIBITED BY THE NOISE CONTROL ACT OF 1972;

A. THE REMOVAL OR RENDERING INOPERATIVE, OTHER THAN FOR PURPOSES OF MAINTENANCE, REPAIR, OR REPLACEMENT OF ANY NOISE CONTROL DEVICE OR ELEMENT OF DESIGN (LISTED IN THE OWNER'S MANUAL) INCORPORATED INTO THIS VEHICLE IN COMPLIANCE WITH THE NOISE CONTROL ACT.
B. THE USE OF THIS VEHICLE AFTER SUCH DEVICE OR ELEMENT OF DESIGN HAS BEEN REMOVED OR RENDERED INOPERATIVE.

This label is affixed to the left-hand side door panel.

https://truckmanualshub.com/

PART II

DRAWINGS AND TECHNICAL DATA

https://truckmanualshub.com/

TABLE OF CONTENTS

1. LINE-UP CHART II–1–1

2. TYPICAL BODY LENGTH II–2–1

3. CHASSIS CAB DRAWING II–3–1

3.1 Chassis cab drawing II–3–1
3.1.1 FE8□DDZ (automatic transmission) II–3–1
3.1.2 FE85DDZ (manual transmission) II–3–2
3.1.3 FE8□DEZ (automatic transmission) II–3–3
3.1.4 FE85DEZ (manual transmission) II–3–4
3.1.5 FE8□DGZ (automatic transmission) II–3–5
3.1.6 FE85DGZ (manual transmission) II–3–6
3.1.7 FE84DHW (automatic transmission) II–3–7
3.1.8 FE8□DJZ (automatic transmission) II–3–8
3.1.9 FE85DJZ (manual transmission) II–3–9
3.1.10 FE85DKZ (automatic transmission) II–3–10
3.1.11 FE85DKZ (manual transmission) II–3–11
3.1.12 FG84DF6 (manual transmission) II–3–12
3.2 Cab front and rear view II–3–13

4. CHASSIS FRAME ASSEMBLY II–4–1

4.1 FE8□DDZ II–4–1
4.2 FE8□DEZ II–4–2
4.3 FE8□DGZ II–4–3
4.4 FE8□DJZ II–4–4
4.5 FE85DKZ II–4–5
4.6 FE84DHW II–4–6
4.7 FG84DF6 ..... II–4–7

5. CROSSMEMBER REAR VIEW II–5–1

5.1 FE Series (Except FE84DHW) II–5–1
5.2 FE84DHW II–5–2
5.3 FG Series II–5–3

https://truckmanualshub.com/

6. FRAME SECTION MODULUS DIAGRAMS II–6–1
6.1 FE8□DDZ II–6–1
6.2 FE8□DEZ II–6–2
6.3 FE8□DGZ II–6–3
6.4 FE8□DJZ II–6–4
6.5 FE85DKZ II–6–5
6.6 FE84DHW II–6–6
6.7 FG84DF6 ..... II–6–7

7. FRAME HEIGHT II–7–1
7.1 Tire radius II–7–1
7.2 Front and rear springs II–7–2
7.2.1 FE83 ..... II–7–2
7.2.2 FE84 (Except FE84DHW) II–7–3
7.2.3 FE84DHW II–7–4
7.2.4 FE85 ..... II–7–5
7.2.5 FG84 ..... II–7–6
7.3 Vehicle’s sprung weight II–7–7

8. TIRE AND DISC WHEEL II–8–1

9. FRONT AXLE II–9–1

10. REAR AXLE II–10–1

11. REAR AXLE BOUNCE HEIGHT II–11–1

12. FUEL TANK II–12–1
12.1 FE Series II–12–1
12.2 FE Series (Rear fuel tank) II–12–3
12.3 FE Series (Spare fuel tank) II–12–4
12.4 FG Series II–12–5

13. BATTERY BOX II–13–1

14. LICENSE PLATE LAMP II–14–1

15. REAR COMBINATION LAMP II–15–1

https://truckmanualshub.com/

16. BRAKES PIPING DIAGRAM II–16–1
16.1 FE83D, FE84D II–16–1
16.2 FE85D II–16–2
16.3 FG84DF6 ..... II–16–3

17. PROPELLER SHAFT II–17–1

18. EXHAUST SYSTEM II–18–1
18.1 FE8□DDZ II–18–1
18.2 FE8□DEZ II–18–2
18.3 FE8□DGZ II–18–3
18.4 FE8□DJZ, FE85DKZ II–18–4
18.5 FE84DHW II–18–5
18.6 FG84DF6 ..... II–18–6

19. ELECTRIC CIRCUIT DIAGRAM II–19–1
19.1 POWER, CHARGE AND GROUND CIRCUIT II–19–1
110 POWER CIRCUIT II–19–1
115 RESERVE POWER CIRCUIT II–19–13
125 BATTERY CHARGING CIRCUIT II–19–14
130 GROUND II–19–15
19.2 STARTING CIRCUIT II–19–32
210 ENGINE STARTING CIRCUIT II–19–32
220 ENGINE PREHEATING CIRCUIT II–19–34
19.3 LIGHTING CIRCUIT II–19–36
310 HEADLAMP CIRCUIT II–19–36
313 DAYTIME RUNNING LIGHT CIRCUIT II–19–37
320 TAIL, CLEARANCE AND LICENSE PLATE LAMPS CIRCUIT II–19–39
325 STOP LAMP CIRCUIT II–19–40
330 TURN SIGNAL AND HAZARD LAMP CIRCUIT II–19–42
340 BACKUP LAMP CIRCUIT II–19–43
345 CAB LAMP CIRCUIT II–19–45
348 ILLUMINATION LAMP CIRCUIT II–19–46
349 IDENTIFICATION LAMP AND SIDE MARKER LAMP CIRCUIT II–19–47
352 VAN BODY DOME LIGHT CIRCUIT II–19–48
19.4 METER CLUSTER II–19–49
401 METER CLUSTER INTERNAL CIRCUIT II–19–49
410 TACHOMETER CIRCUIT II–19–51
412 SPEEDOMETER CIRCUIT II–19–52
420 FUEL GAUGE CIRCUIT II–19–53
425 WATER TEMPERATURE GAUGE CIRCUIT II–19–54

https://truckmanualshub.com/

19.5 INDICATOR AND WARNING LAMP CIRCUIT II–19–55
510 PARKING BRAKE INDICATOR CIRCUIT II–19–55
515 BRAKE WARNING CIRCUIT II–19–56
535 ENGINE OIL LEVEL WARNING CIRCUIT II–19–58
536 ENGINE OIL PRESSURE WARNING CIRCUIT II–19–59
537 OVERHEATING WARNING CIRCUIT II–19–60
540 BRAKE PAD WARNING CIRCUIT II–19–61
550 CAB TILT WARNING CIRCUIT II–19–62
566 FUEL FILTER WARNING CIRCUIT II–19–63
19.6 CAB SIDE ELECTRICAL CIRCUIT II–19–64
610 CIGARETTE LIGHTER CIRCUIT II–19–64
612 AUDIO CIRCUIT II–19–65
614 WIPER AND WASHER CIRCUIT II–19–66
616 HORN CIRCUIT II–19–67
620 AIR-CONDITIONER CIRCUIT II–19–68
622 POWER WINDOW AND CENTRAL DOOR LOCK CIRCUIT II–19–70
629 MIRROR HEATER CIRCUIT II–19–71
19.7 CHASSIS SIDE ELECTRICAL CIRCUIT II–19–72
710 EXHAUST BRAKE CIRCUIT II–19–72
19.8 ENGINE AND TRANSMISSION SIDE ELECTRICAL CIRCUIT II–19–74
850 TRANSMISSION POWER TAKE-OFF CIRCUIT II–19–74
19.9 OTHER CIRCUIT II–19–75
905 JOINT CONNECTOR (J/C) II–19–75
907 DIAGNOSIS SWITCH AND MEMORY CLEAR SWITCH II–19–79
COMMONRAIL SYSTEM CIRCUIT II–19–80
AUTOCRUISE SYSTEM CIRCUIT II–19–87
AUTOMATIC TRANSMISSION CIRCUIT II–19–89
ANTI-LOCK BRAKE SYSTEM CIRCUIT II–19–93

https://truckmanualshub.com/

1. LINE-UP CHART

MODEL SERIES	VEHICLE MODEL	BASIC COMPORNENTS			BASIC DIMENSIONS mm (in.)					CURB WEIGHT kg (lbs.)			RATING kg (lbs.)		
		ENGINE	TRANSMISSION	TIRES	WHEEL BASE	OVERALL LENGTH	OVERALL WIDTH (approx.)	OVERALL HEIGHT (approx.)	CAB TO REAR AXLE (ACTUAL)	FRONT	REAR	TOTAL	FRONT	REAR	TOTAL
FE83D	FE83DDZSLSUH	4M50T-8AT8	M036A6 (AISIN)	LT215/85R16	2,910 (114.6)	5,771 (227.2)	2,130 (83.9)	2,270 (89.4)	2,385 (93.9)	1,810 (3,990)	865 (1,910)	2,675 (5,900)	2,430 (5,360)	4,480 (9,880)	5,670 (12,500)
	FE83DEZSLSUH				3,410 (134.3)	6,271 (246.9)			2,885 (113.6)	1,850 (4,080)	845 (1,865)	2,695 (5,945)			
	FE83DGZSLSUH				3,870 (152.4)	6,731 (265.0)			3,345 (131.7)	1,880 (4,145)	845 (1,865)	2,725 (6,010)			
FE84D	FE84DDZSLSUH	4M50T-6AT8	M036A6 (AISIN)		2,910 (114.6)	5,771 (227.2)		2,290 (90.2)	2,385 (93.9)	1,820 (4,010)	900 (1,985)	2,720 (5,995)			6,575 (14,500)
	FE84DEZSLSUH				3,410 (134.3)	6,271 (246.9)			2,885 (113.6)	1,860 (4,100)	875 (1,930)	2,735 (6,030)			
	FE84DGZSLSUH				3,870 (152.4)	6,731 (265.0)			3,345 (131.7)	1,880 (4,145)	885 (1,950)	2,765 (6,095)			
	FE84DJZSLSUH				4,470 (176.0)	7,331 (288.6)			3,945 (155.3)	1,895 (4,180)	900 (1,985)	2,795 (6,165)			
	FE84DHWSLSUH				4,200 (165.4)	6,460 (254.3)	2,030 (79.9)	2,275 (89.6)	2,675 (105.3)	1,980 (4,365)	940 (2,070)	2,920 (6,435)			
FE85D	FE85DDZSLSUG	4M50T-6AT8	M036S6	215/75R17.5	2,910 (114.6)	5,771 (227.2)	2,126 (83.7)	2,285 (90.0)	2,385 (93.9)	1,825 (4,025)	955 (2,105)	2,780 (6,130)	2,900 (6,395)	5,760 (12,700)	8,160 (17,995)
	FE85DEZSLSUG				3,410 (134.3)	6,271 (246.9)			2,885 (113.6)	1,860 (4,100)	940 (2,070)	2,800 (6,170)			
	FE85DGZSLSUG				3,870 (152.4)	6,731 (265.0)			3,345 (131.7)	1,885 (4,155)	945 (2,085)	2,830 (6,240)			
	FE85DJZSLSUG				4,470 (176.0)	7,331 (288.6)			3,945 (155.3)	1,890 (4,170)	965 (2,130)	2,855 (6,300)			
	FE85DKZSLSUG				4,810 (189.4)	7,671 (302.0)			4,285 (168.7)	1,910 (4,210)	960 (2,115)	2,870 (6,325)			
	FE85DDZSLSUH		M036A6 (AISIN)		2,910 (114.6)	5,771 (227.2)			2,385 (93.9)	1,860 (4,100)	965 (2,130)	2,825 (6,230)			
	FE85DEZSLSUH				3,410 (134.3)	6,271 (246.9)			2,885 (113.6)	1,900 (4,190)	945 (2,085)	2,845 (6,275)			
	FE85DGZSLSUH				3,870 (152.4)	6,731 (265.0)			3,345 (131.7)	1,920 (4,235)	955 (2,105)	2,875 (6,340)			
	FE85DJZSLSUH				4,470 (176.0)	7,331 (288.6)			3,945 (155.3)	1,930 (4,255)	970 (2,140)	2,900 (6,395)			
	FE85DKZSLSUH				4,810 (189.4)	7,671 (302.0)			4,285 (168.7)	1,945 (4,290)	965 (2,130)	2,910 (6,420)			
FG84D	FG84DF6SLSUJ	4M50T-6AT7	M036S5	LT235/85R16	3,510 (138.2)	5,713 (224.9)	2,060 (81.1)	2,510 (98.8)	2,970 (116.9)	1,940 (4,280)	795 (1,755)	2,735 (6,035)	2,600 (5,730)	4,300 (9,480)	6,375 (14,050)

Return to Table of Contents

https://truckmanualshub.com/

2. TYPICAL BODY LENGTH

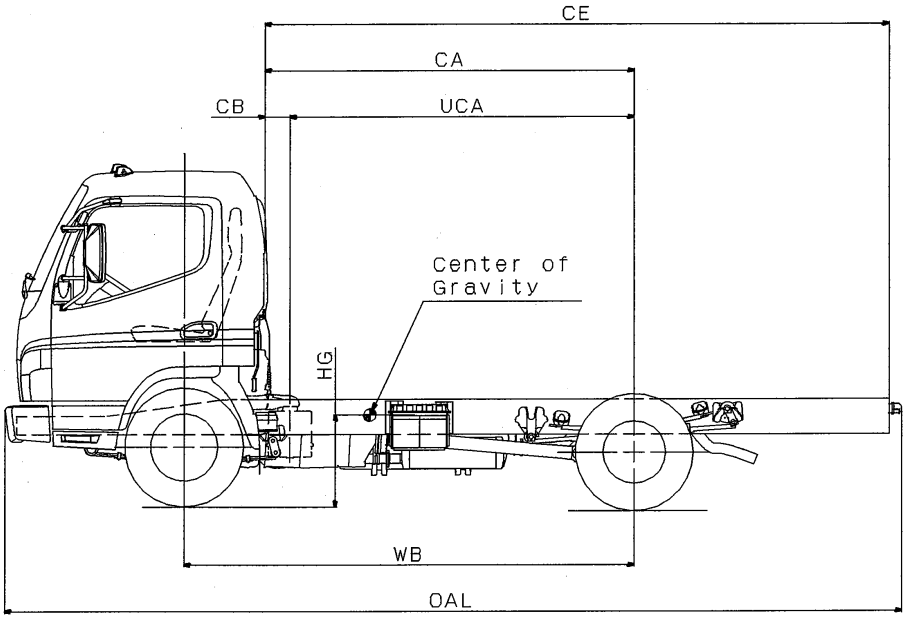

1. MFTA suggests the X-marked body length of each model because of stability, commerciality and reliability.
2. Rear body dimensions shall not exceed 96” wide (outside) and 96” from top of frame to top of body without prior approval from MFTA Applications Group.

Vehicle Model		Dimensions, Inch (mm)							Body Length (ft)					
		WB	CA	UCA	CB	CE	OAL	HG	12	14	16	18	20	22
FE83D FE84D FE85D	D	114.6 (2,910)	93.9 (2,385)	86 (2,185)	7.9 (200)	158.5 (4,025)	227.2 (5,771)	24.0 (610)	X					
	E	134.3 (3,410)	113.6 (2,885)	105.7 (2,685)	7.9 (200)	178.1 (4,525)	246.9 (6,271)	24.0 (610)		X	X			
	G	152.4 (3,870)	131.7 (3,345)	123.8 (3,145)	7.9 (200)	196.3 (4,985)	265 (6,731)	24.0 (610)			X	X		
	J	176 (4,470)	155.3 (3,945)	147.4 (3,745)	7.9 (200)	219.9 (5,585)	288.6 (7,331)	24.0 (610)				X	X	
	K	189.4 (4,810)	168.7 (4,285)	160.8 (4,085)	7.9 (200)	233.3 (5,925)	302 (7,671)	24.0 (610)					X	X
FE84D	HW	165.4 (4,200)	105.3 (2,675)	103.4 (2,626)	1.9 (49)	147.8 (3,753)	254.3 (6,460)	26.6 (675)		X1	X1			
FG84D	F	138.2 (3,510)	116.9 (2,970)	108.5 (2,755)	8.5 (215)	158.0 (4,013)	224.9 (5,713)	28.3 (720)		X1	X1			

X1: NOT APPLICABLE TO REAR FUEL TANK

Variations to this chart require prior approval from MFTA Applications Group.

NOTES:

(1) Selection of the correct model and wheelbase is dependent on many factors. This chart can serve only as a quick reference guide. It does not preclude the necessity of performing a complete weight distribution analysis, particularly when equipment such as lift gates, reefers or others are required.

(2) MFTA assumes no liability whatsoever for any damage(s) to person(s) or property caused by utilization of this chart. Selection of the correct model and wheelbase is solely the responsibility of the selling dealers and final stage manufacturer.

(3) All weight distribution calculations herein are based on water level loading and a cab-to-body clearance on above table.

(4) When selection of the correct model and wheelbase is made, carefully follow the requirements below;
   (a) Individual GAWR’s and GVWR’s must not be exceeded.
   (b) It is advisable that front axle loading ratio be 33% of total vehicle weight or more for vehicle stability.
   (c) The length of the rear overhang must comply with state and local regulations, if any.

(5) The center of gravity of the completed vehicle with a full load should not exceed 60” above ground level and must be located horizontally between the centerlines of the front and rear axles.

Return to Table of Contents

3. CHASSIS CAB DRAWING

3.1 Chassis cab drawing

3.1.1 FE8□DDZ (automatic transmission)

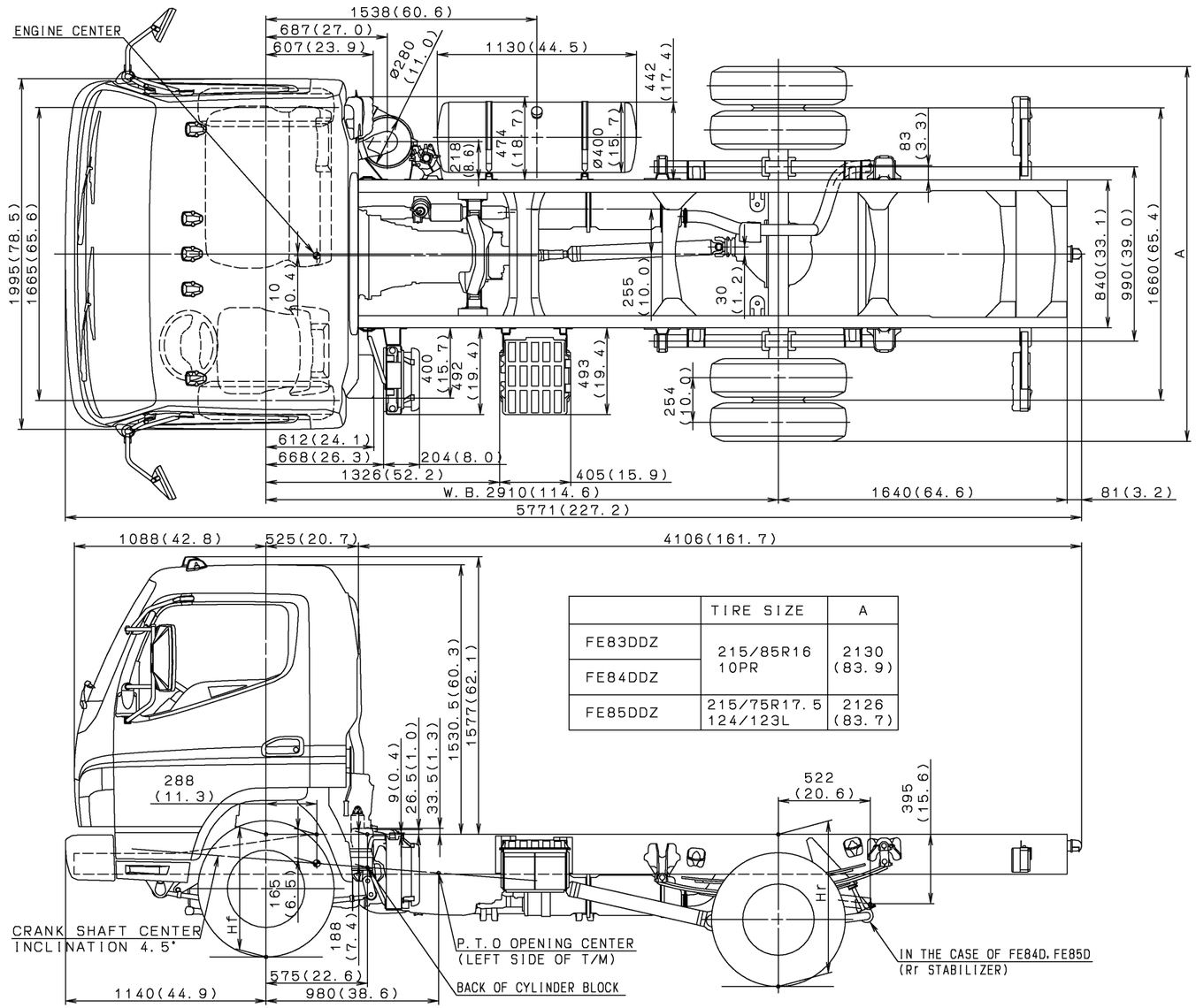

	TIRE SIZE	A
FE83DDZ	215/85R16 10PR	2130 (83.9)
FE84DDZ		
FE85DDZ	215/75R17.5 124/123L	2126 (83.7)

UNIT : mm (in.)
SCALE : 1/30

Return to Table of Contents

3.1.2 FE85DDZ (manual transmission)

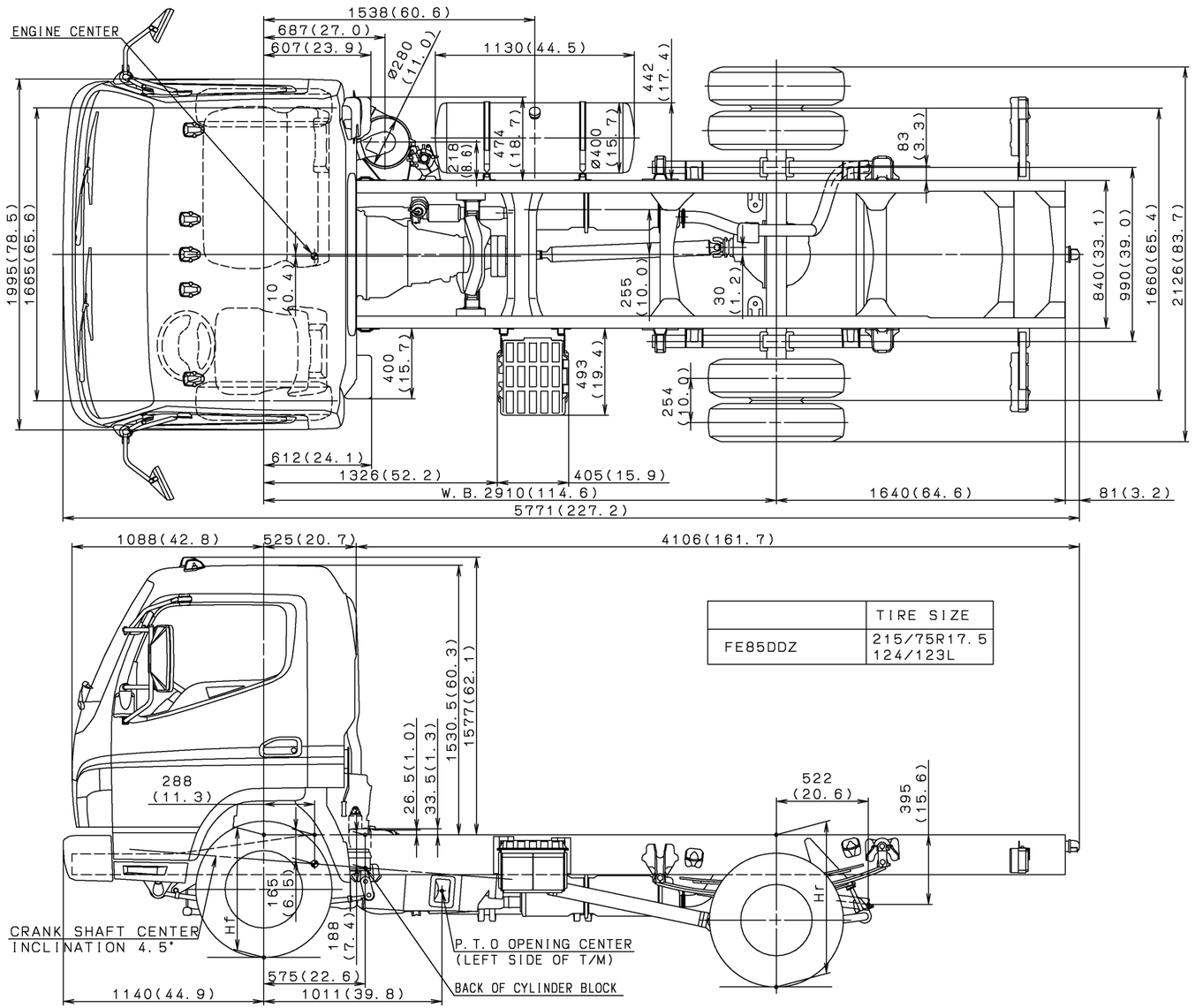

	TIRE SIZE
FE85DDZ	215/75R17.5 124/123L

UNIT : mm (in.)
SCALE : 1/30

Return to Table of Contents

3.1.3 FE8□DEZ (automatic transmission)

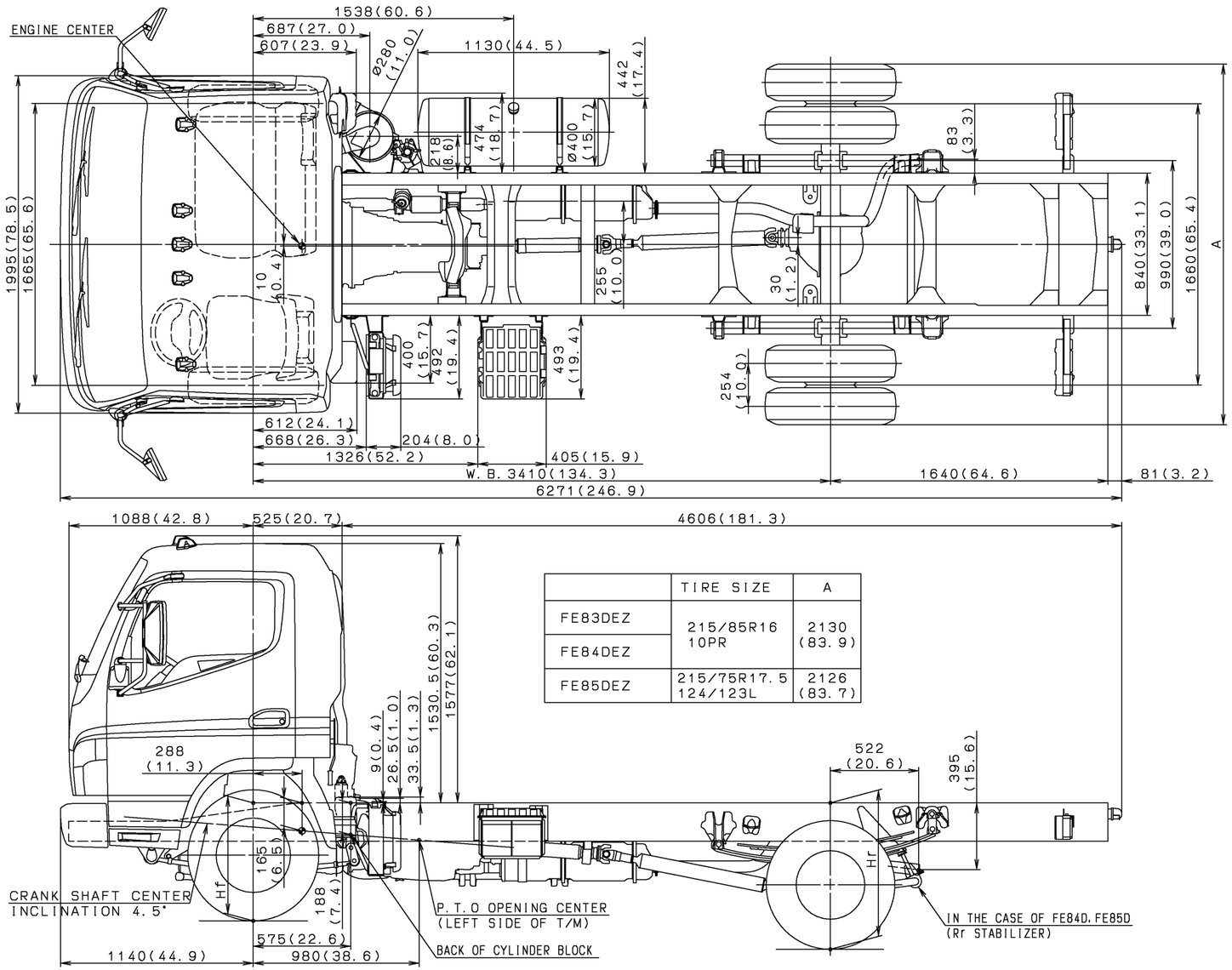

	TIRE SIZE	A
FE83DEZ	215/85R16 10PR	2130 (83.9)
FE84DEZ		
FE85DEZ	215/75R17.5 124/123L	2126 (83.7)

UNIT : mm (in.)
SCALE : 1/30

Return to Table of Contents

3.1.4 FE85DEZ (manual transmission)

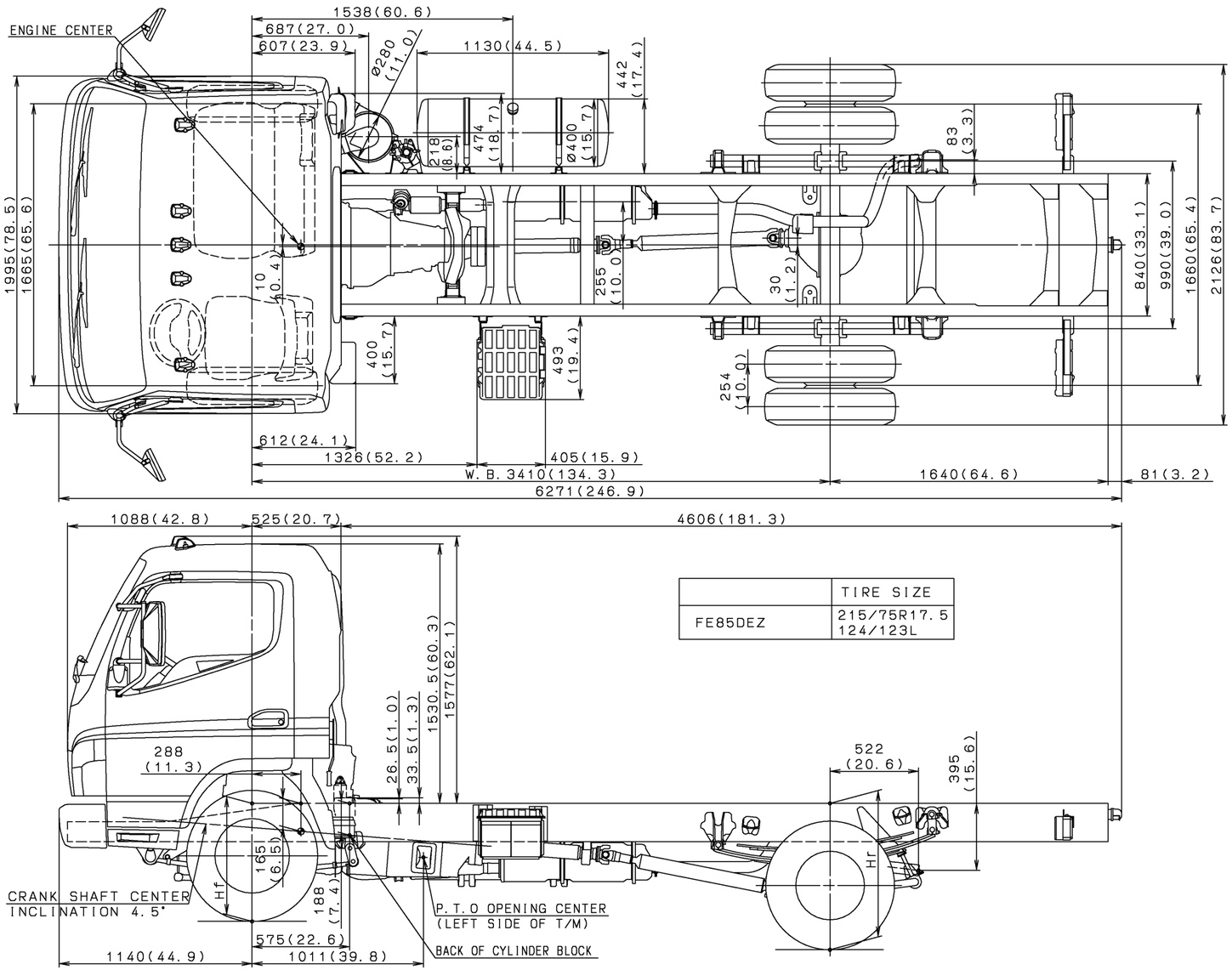

	TIRE SIZE
FE85DEZ	215/75R17.5 124/123L

UNIT : mm (in.)
SCALE : 1/30

Return to Table of Contents

3.1.5 FE8□DGZ (automatic transmission)

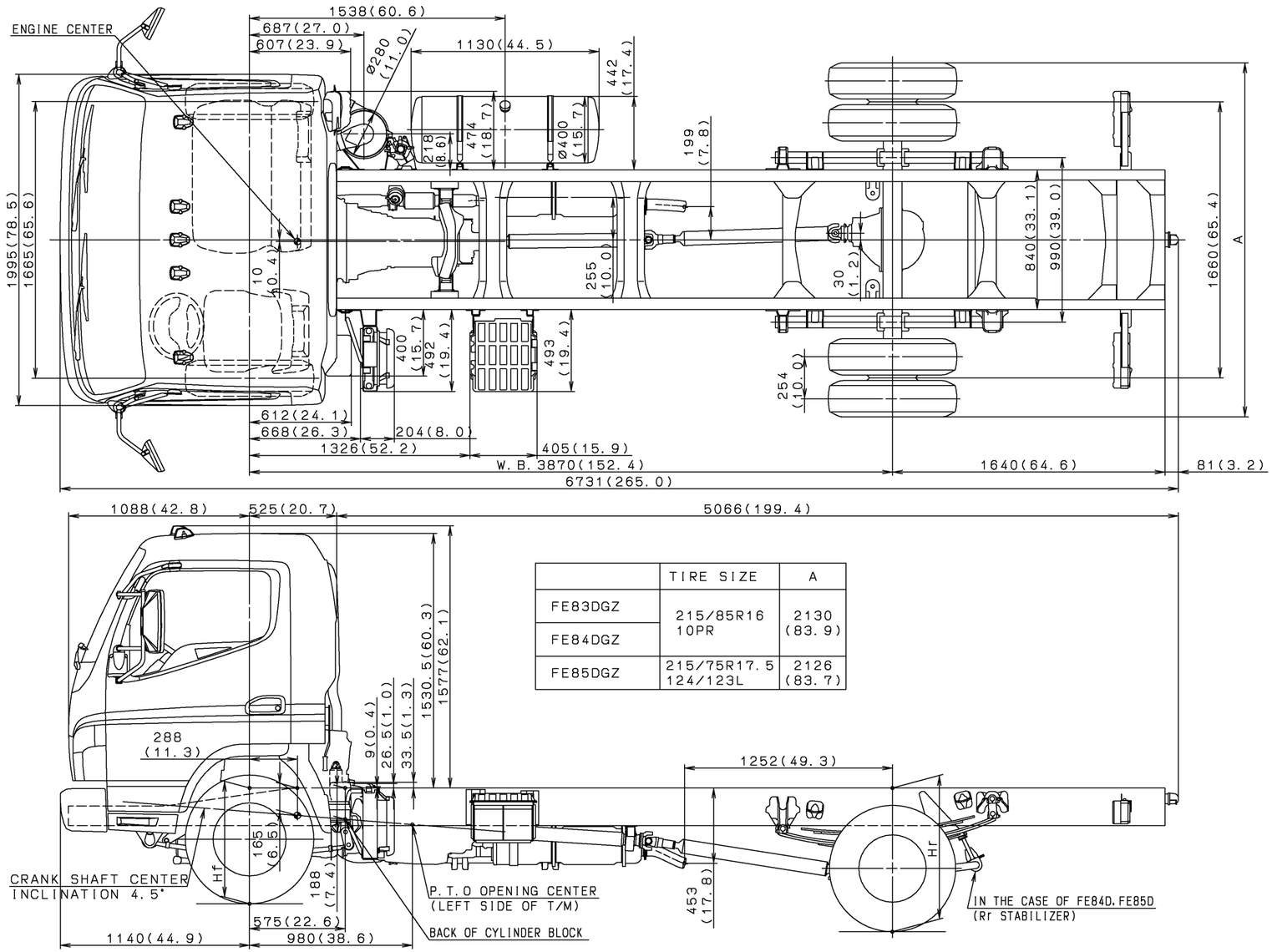

	TIRE SIZE	A
FE83DGZ	215/85R16 10PR	2130 (83.9)
FE84DGZ		
FE85DGZ	215/75R17.5 124/123L	2126 (83.7)

UNIT : mm (in.)
SCALE : 1/30

Return to Table of Contents

3.1.6 FE85DGZ (manual transmission)

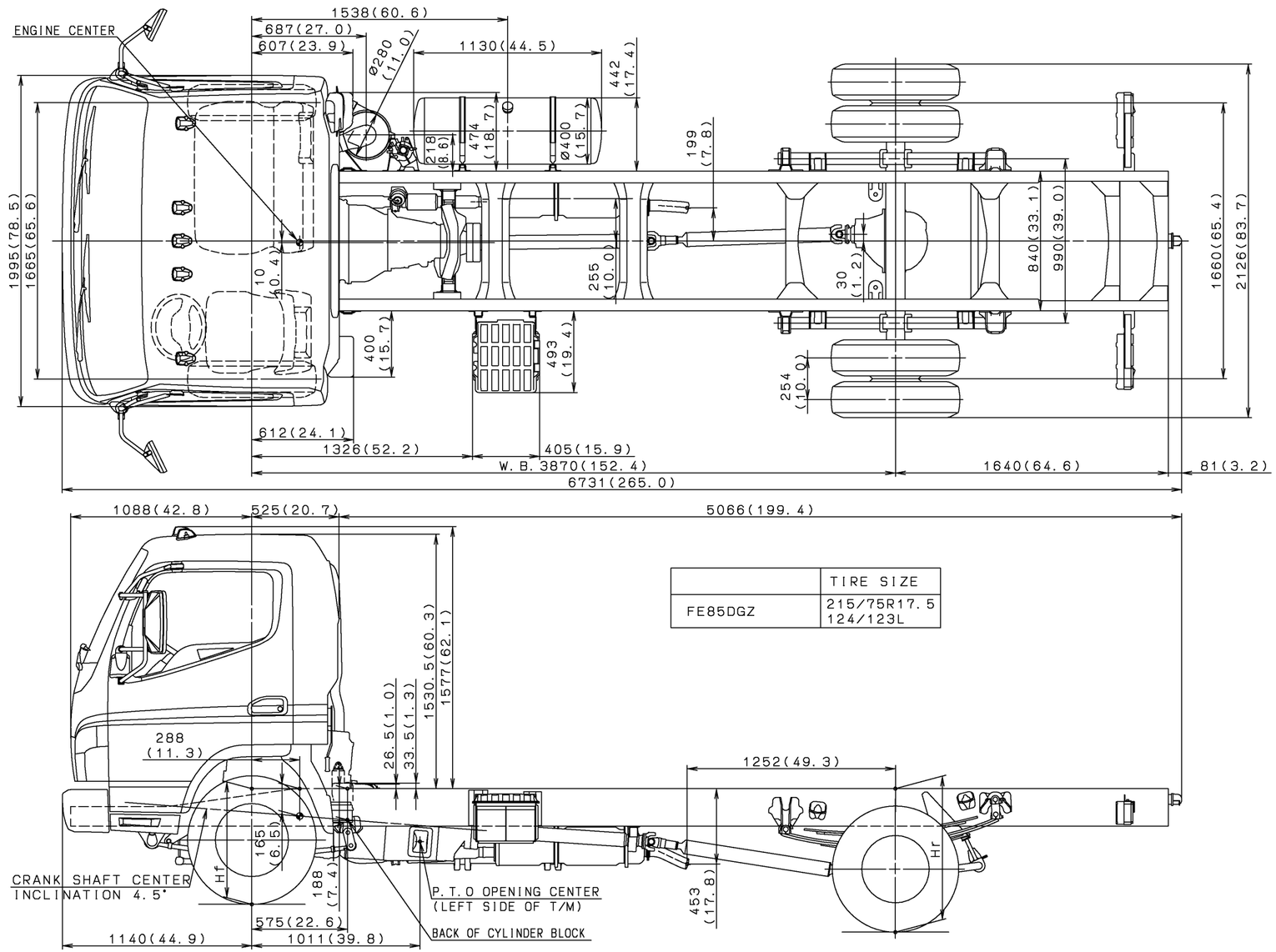

	TIRE SIZE
FE85DGZ	215/75R17.5 124/123L

UNIT : mm (in.)
SCALE : 1/30

Return to Table of Contents

https://truckmanualshub.com/

3.1.7 FE84DHW (automatic transmission)

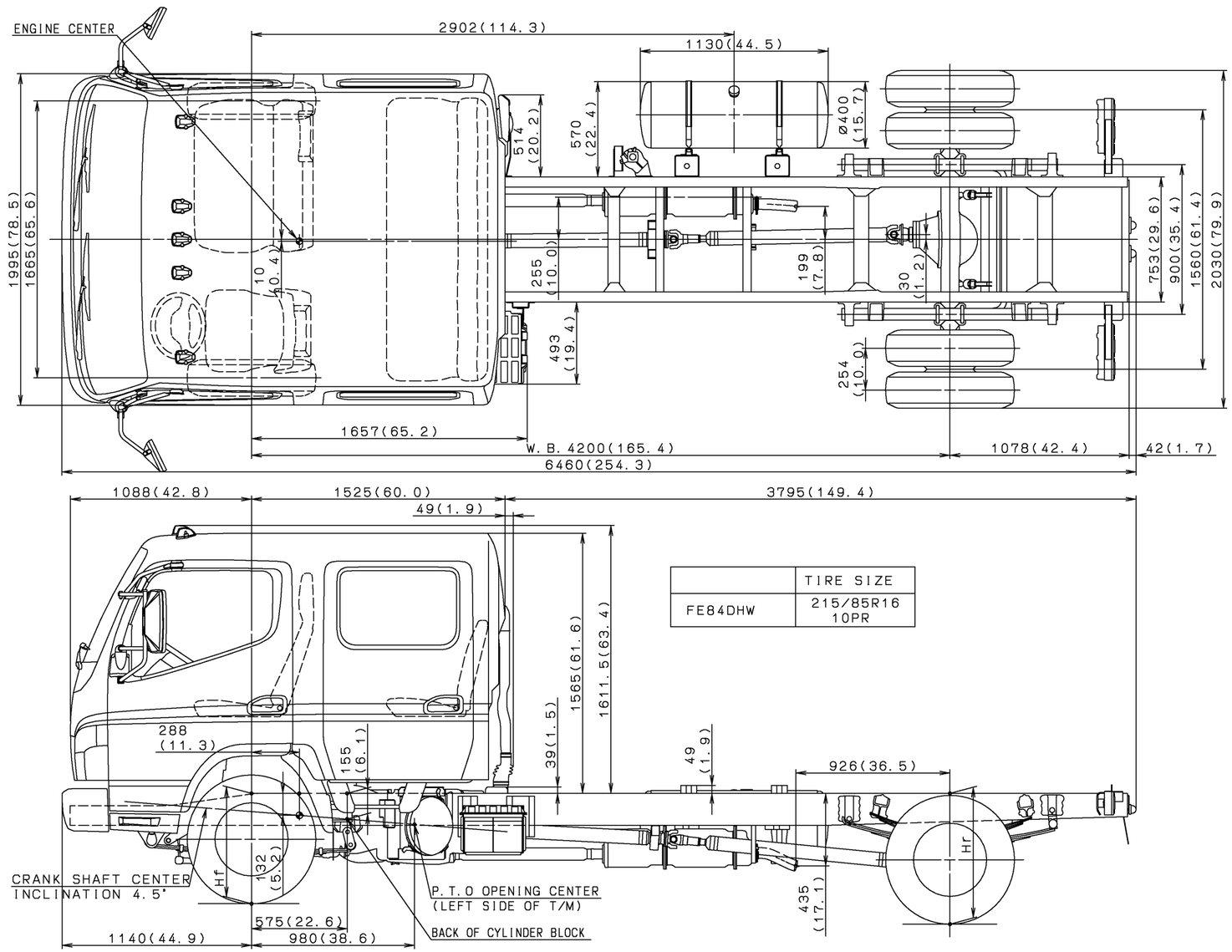

	TIRE SIZE
FE84DHW	215/85R16 10PR

UNIT : mm (in.)
SCALE : 1/30

Return to Table of Contents

3.1.8 FE8□DJZ (automatic transmission)

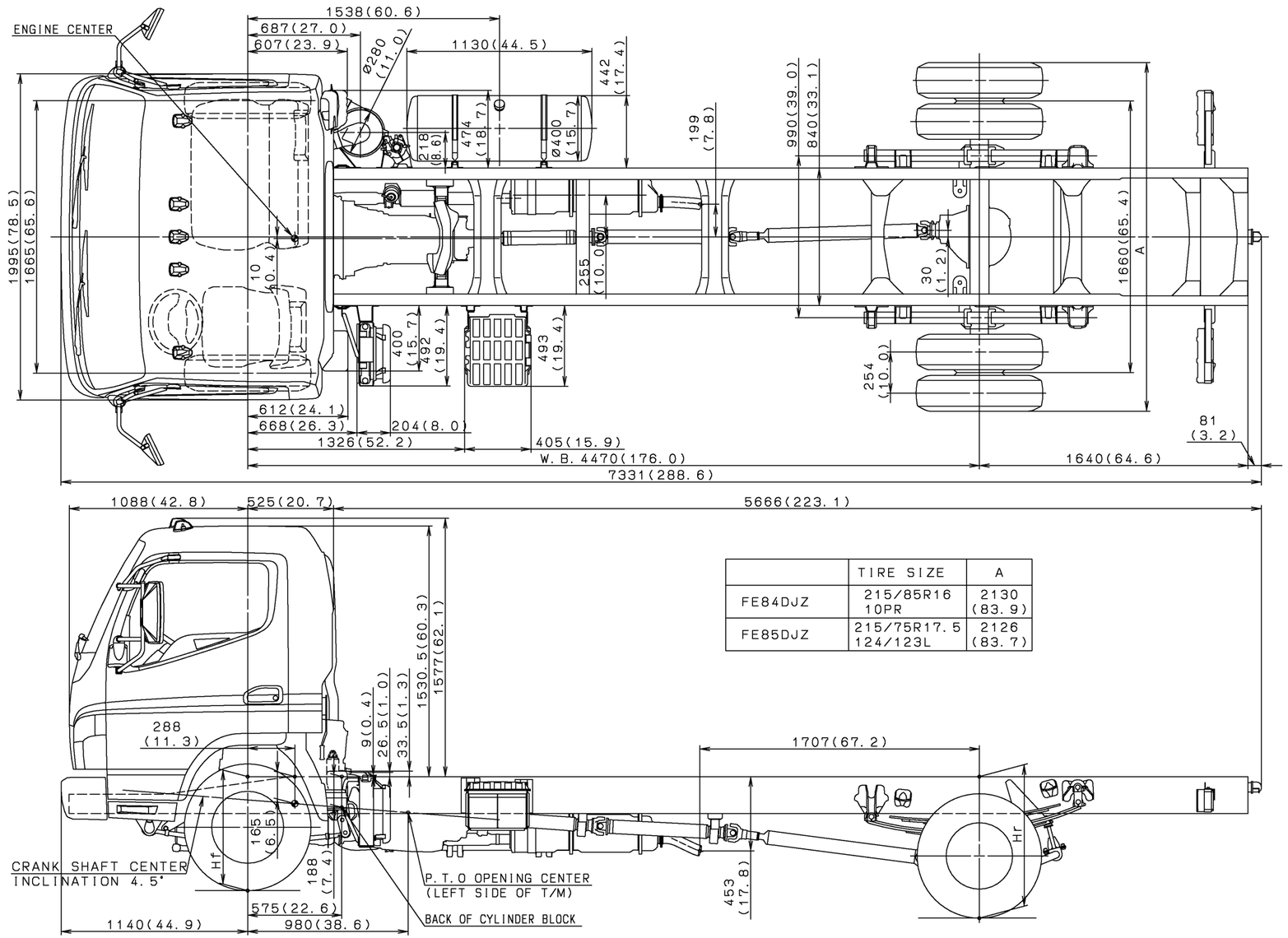

	TIRE SIZE	A
FE84DJZ	215/85R16 10PR	2130 (83.9)
FE85DJZ	215/75R17.5 124/123L	2126 (83.7)

UNIT : mm (in.)
SCALE : 1/30

Return to Table of Contents

3.1.9 FE85DJZ (manual transmission)

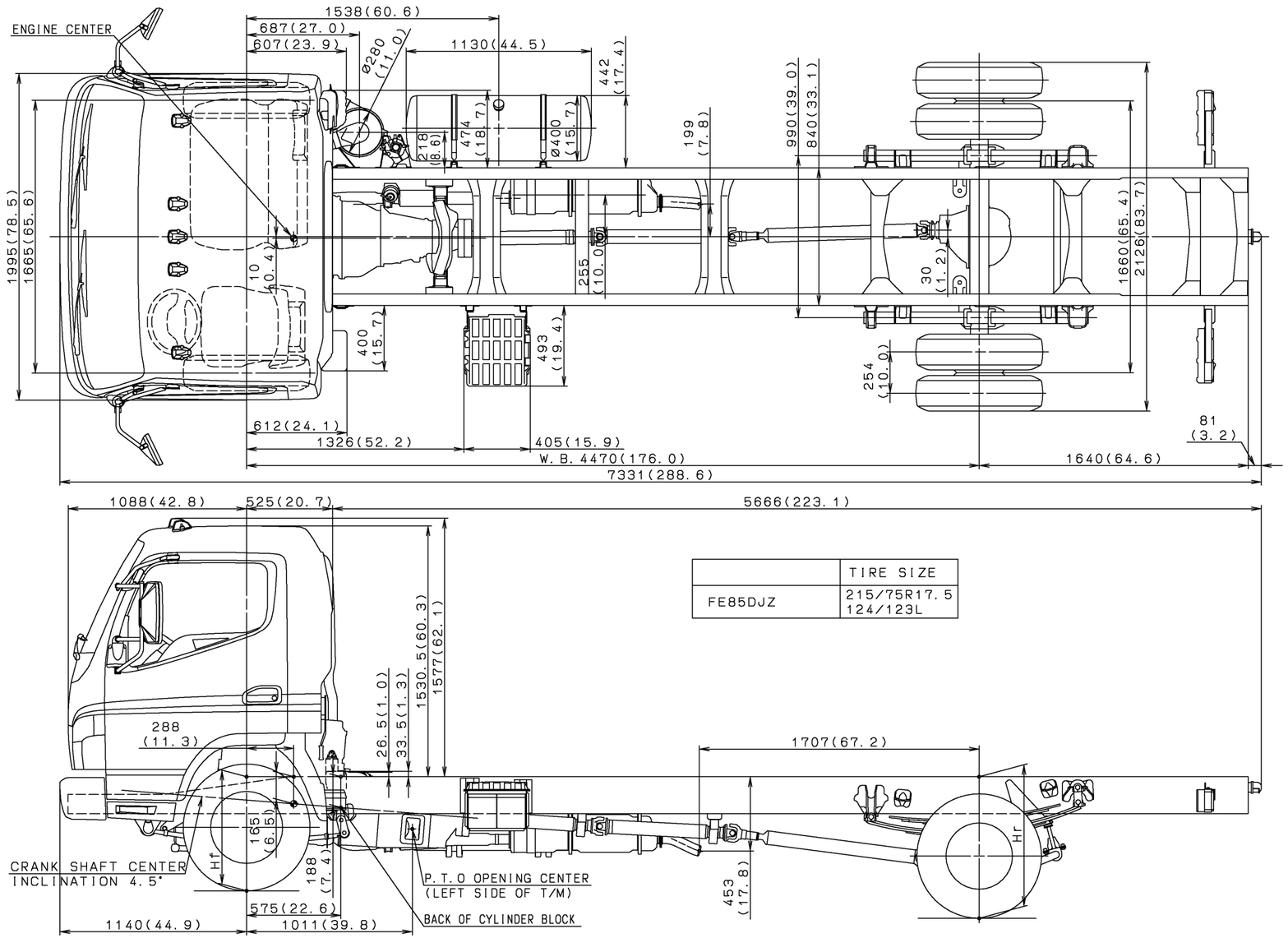

UNIT : mm (in.)
SCALE : 1/30

Return to Table of Contents

3.1.10 FE85DKZ (automatic transmission)

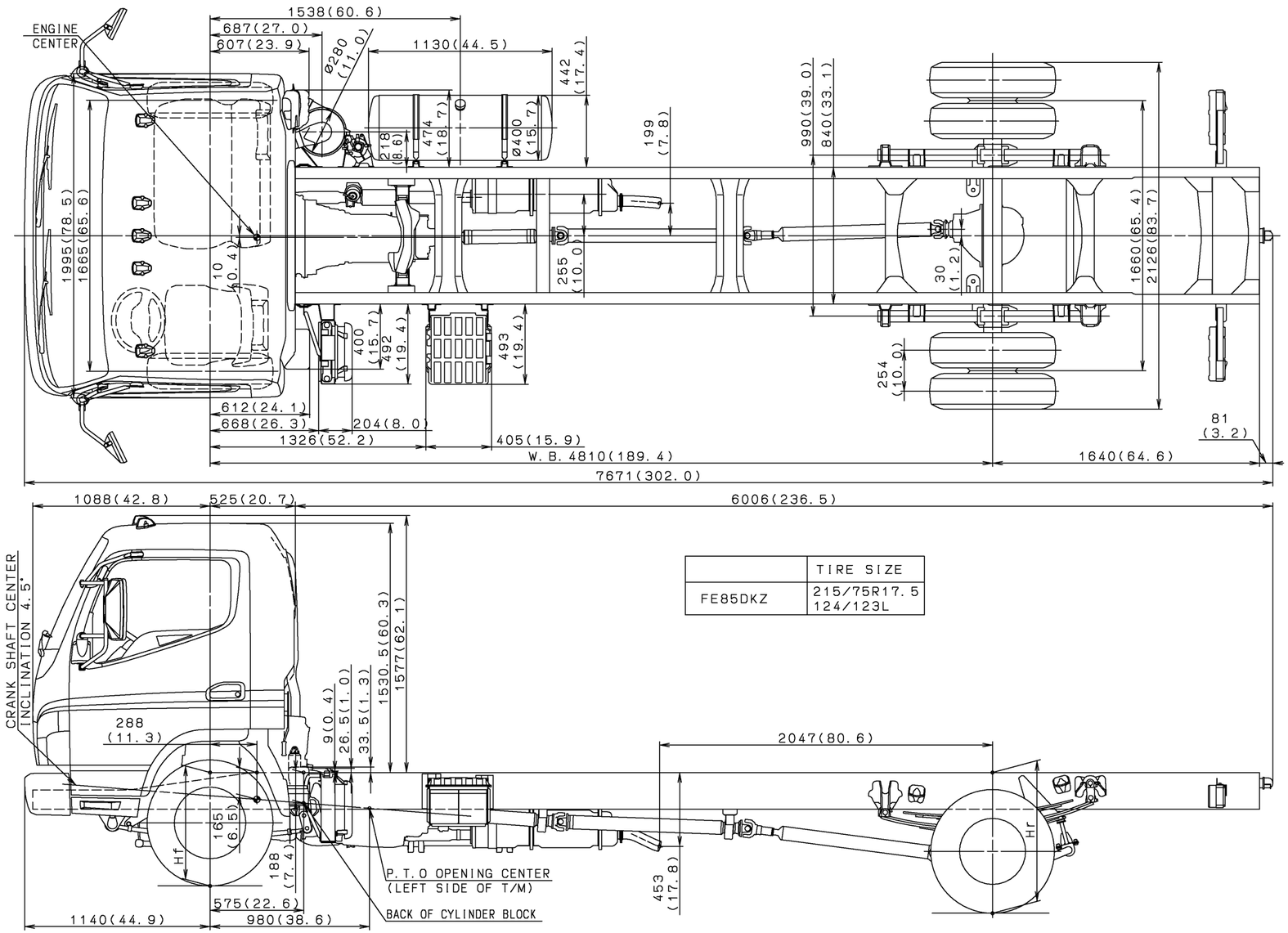

	TIRE SIZE
FE85DKZ	215/75R17.5 124/123L

UNIT : mm (in.)
SCALE : 1/30

Return to Table of Contents

3.1.11 FE85DKZ (manual transmission)

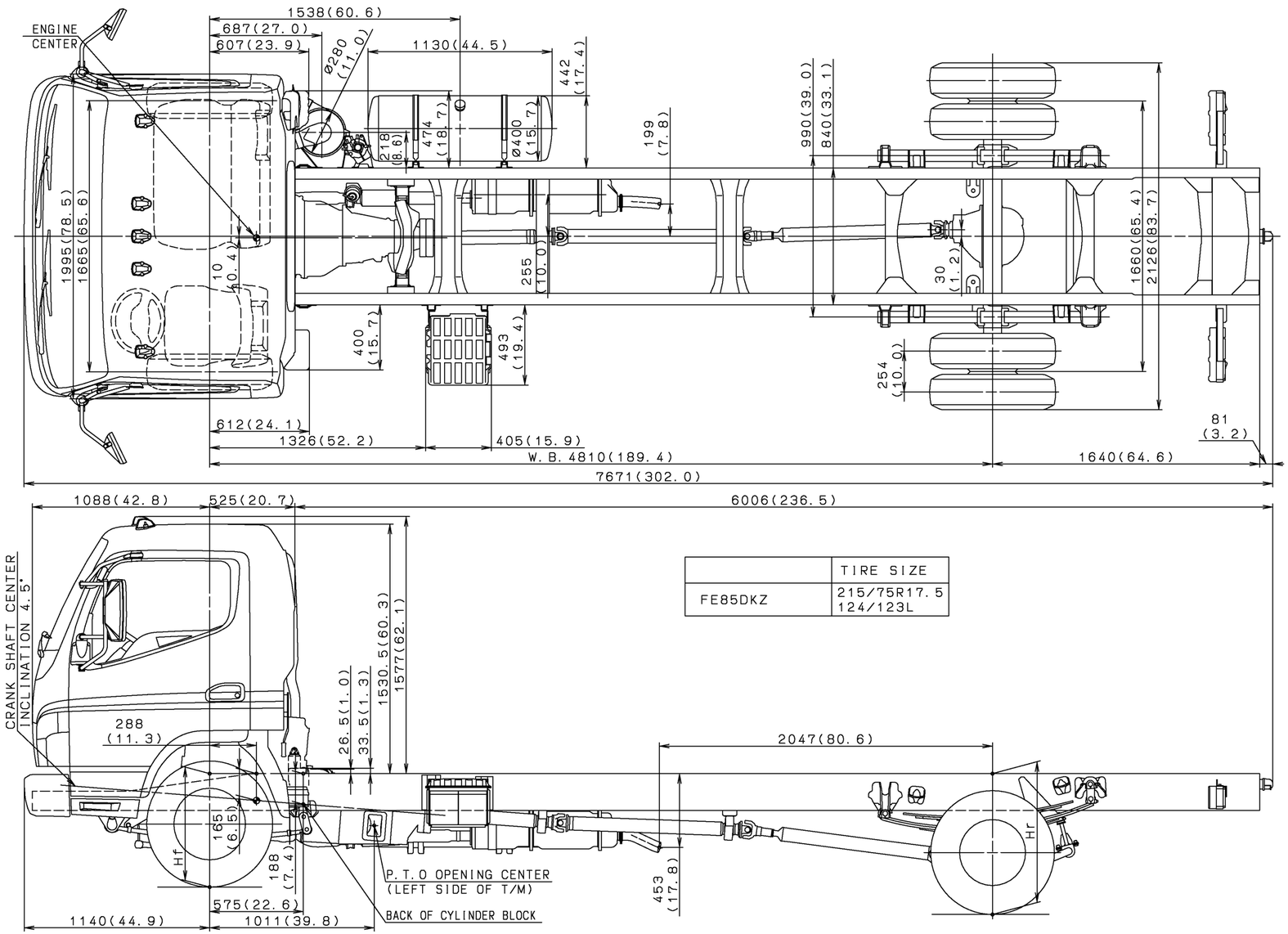

	TIRE SIZE
FE85DKZ	215/75R17.5 124/123L

UNIT : mm (in.)
SCALE : 1/30

Return to Table of Contents

3.1.12 FG84DF6 (manual transmission)

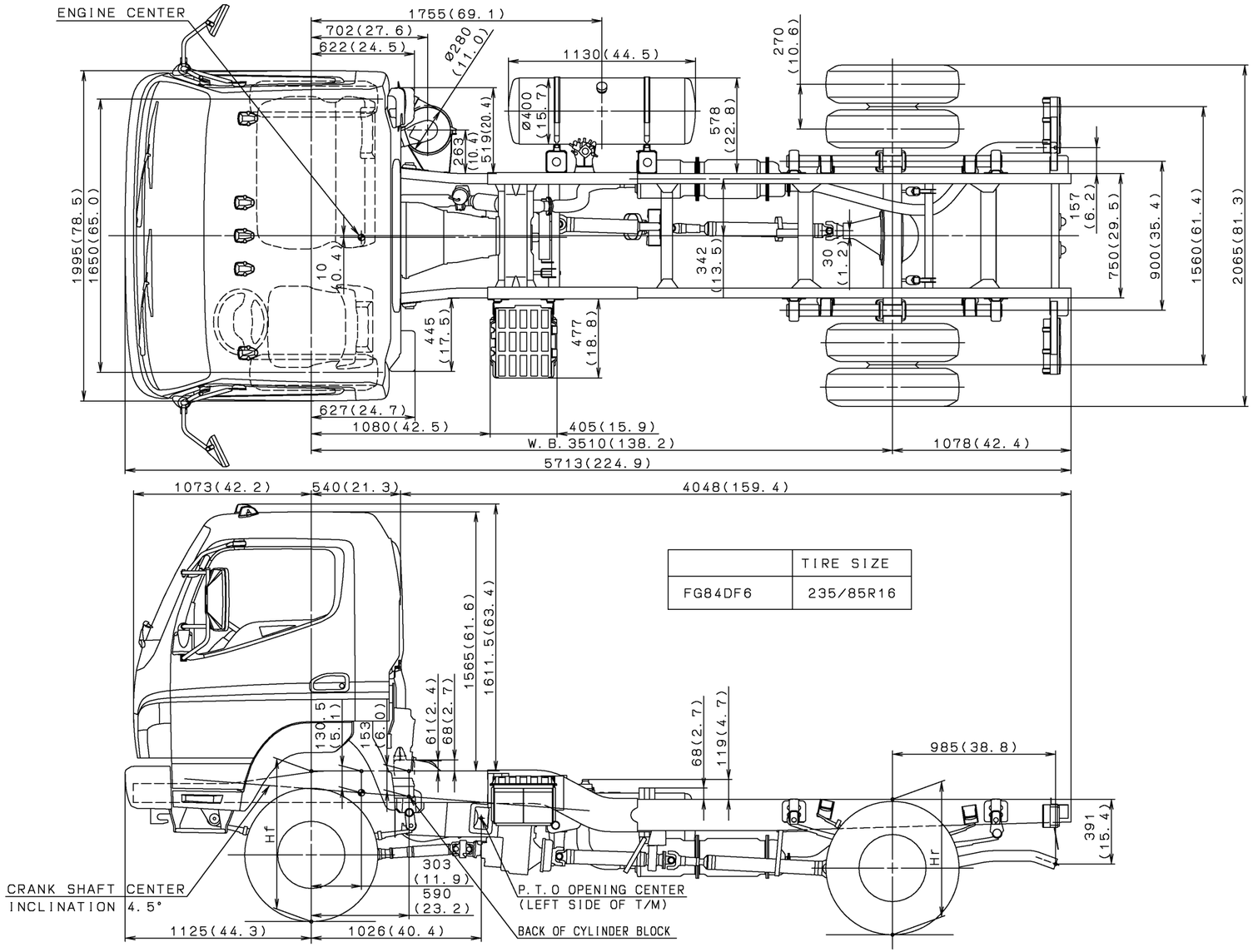

	TIRE SIZE
FG84DF6	235/85R16

UNIT : mm (in.)
SCALE : 1/30

Return to Table of Contents

https://truckmanualshub.com/

3.2 Cab front and rear view

CAB FRONT AND REAR VIEWS (FE)

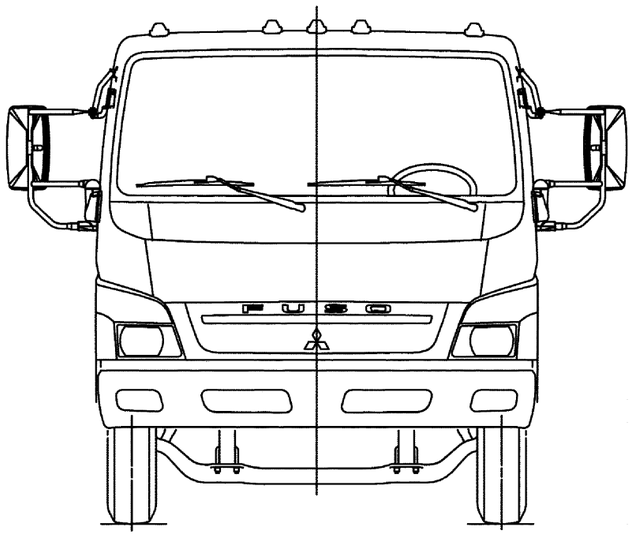

CAB FRONT AND REAR VIEWS (FG)

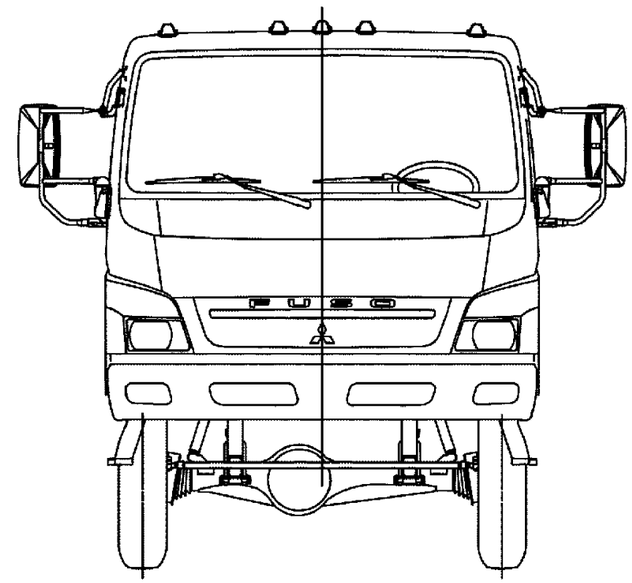

CAB REAR VIEWS (FE8W)

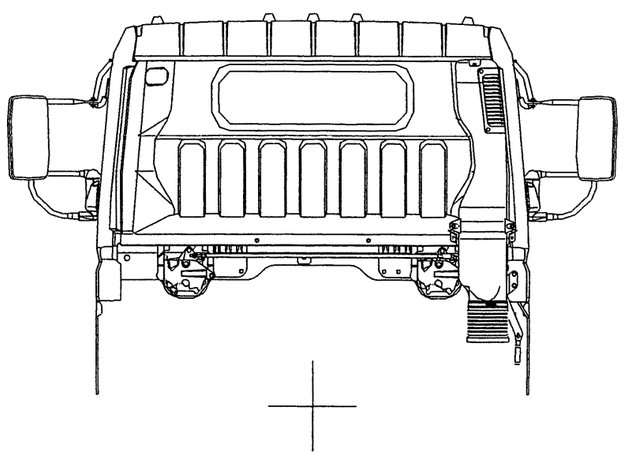

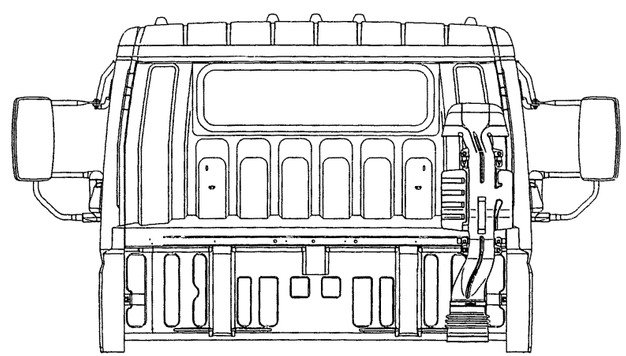

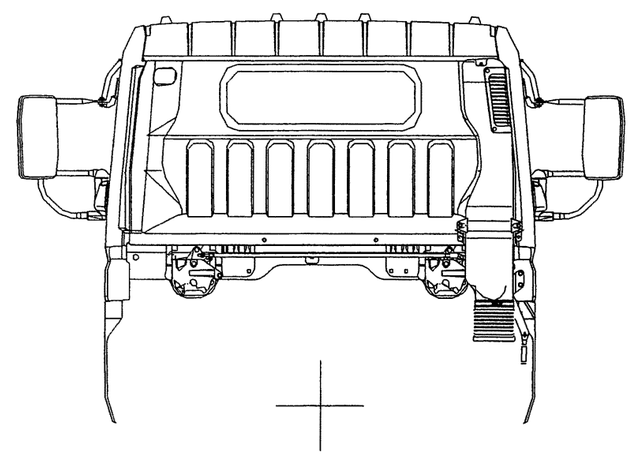

Return to Table of Contents

4. CHASSIS FRAME ASSEMBLY

4.1 FE8□DDZ

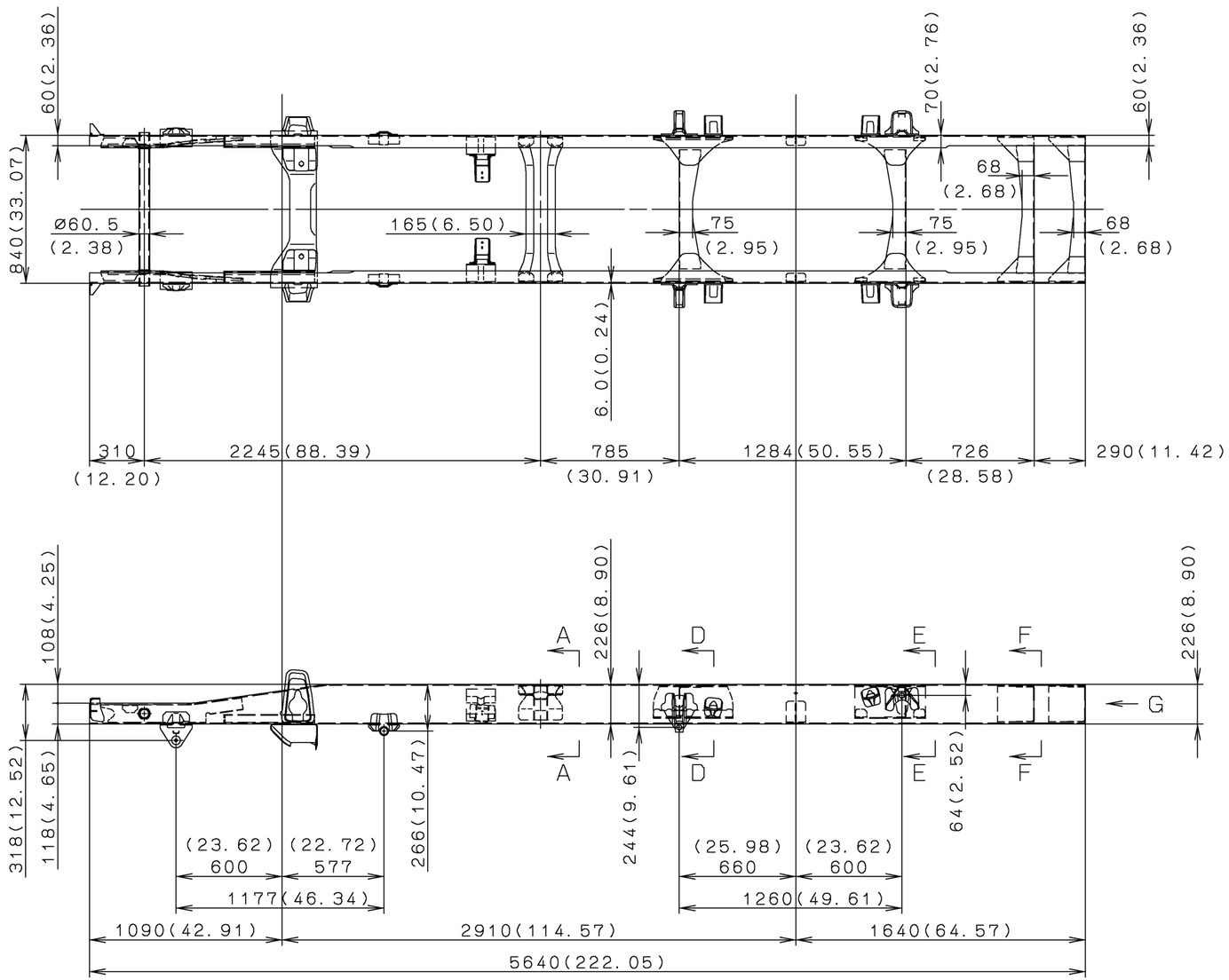

UNIT : mm (in.)
SCALE : 1/30

Return to Table of Contents

4.2 FE8□DEZ

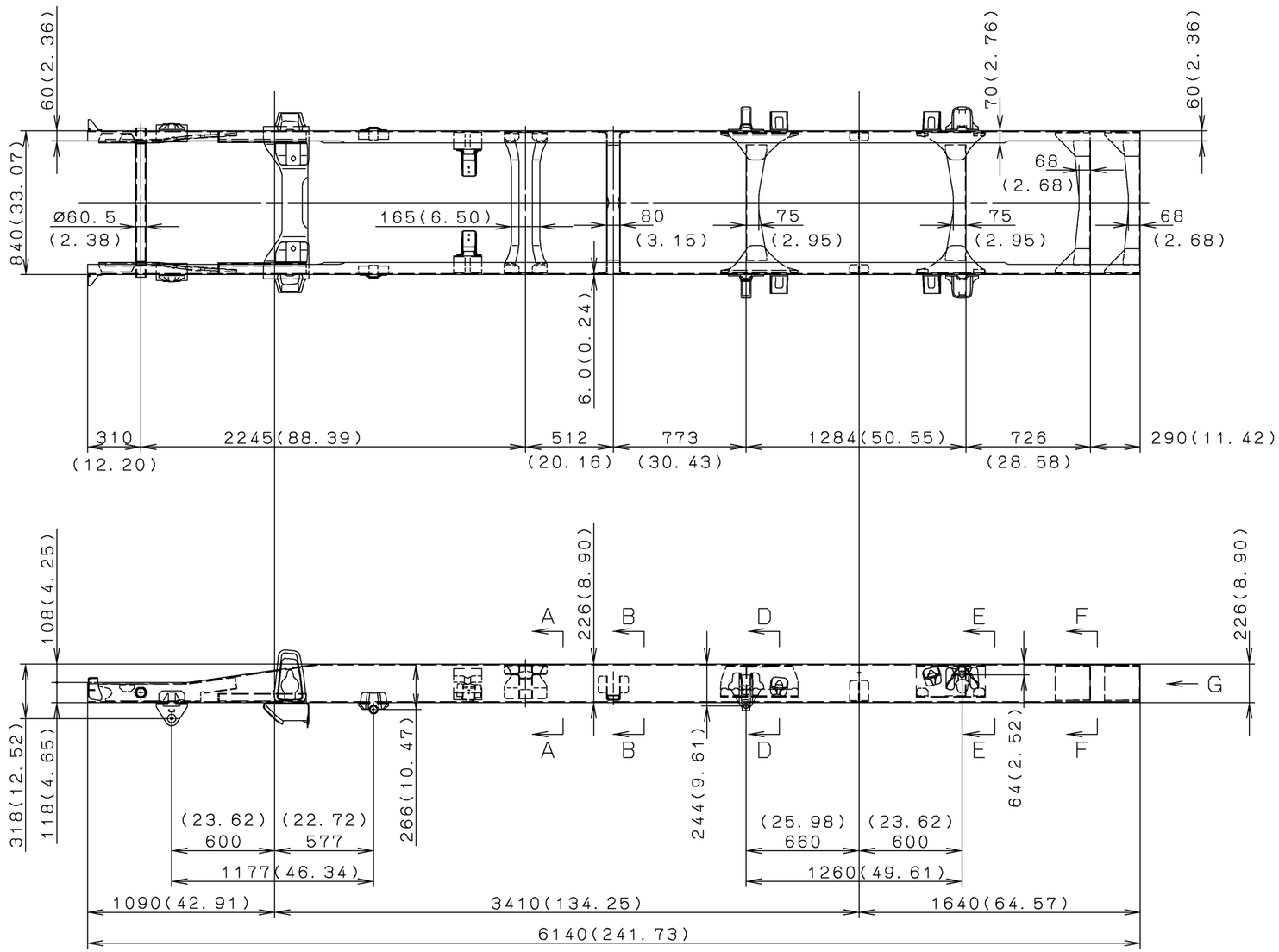

UNIT : mm (in.)
SCALE : 1/30

Return to Table of Contents

4.3 FE8□DGZ

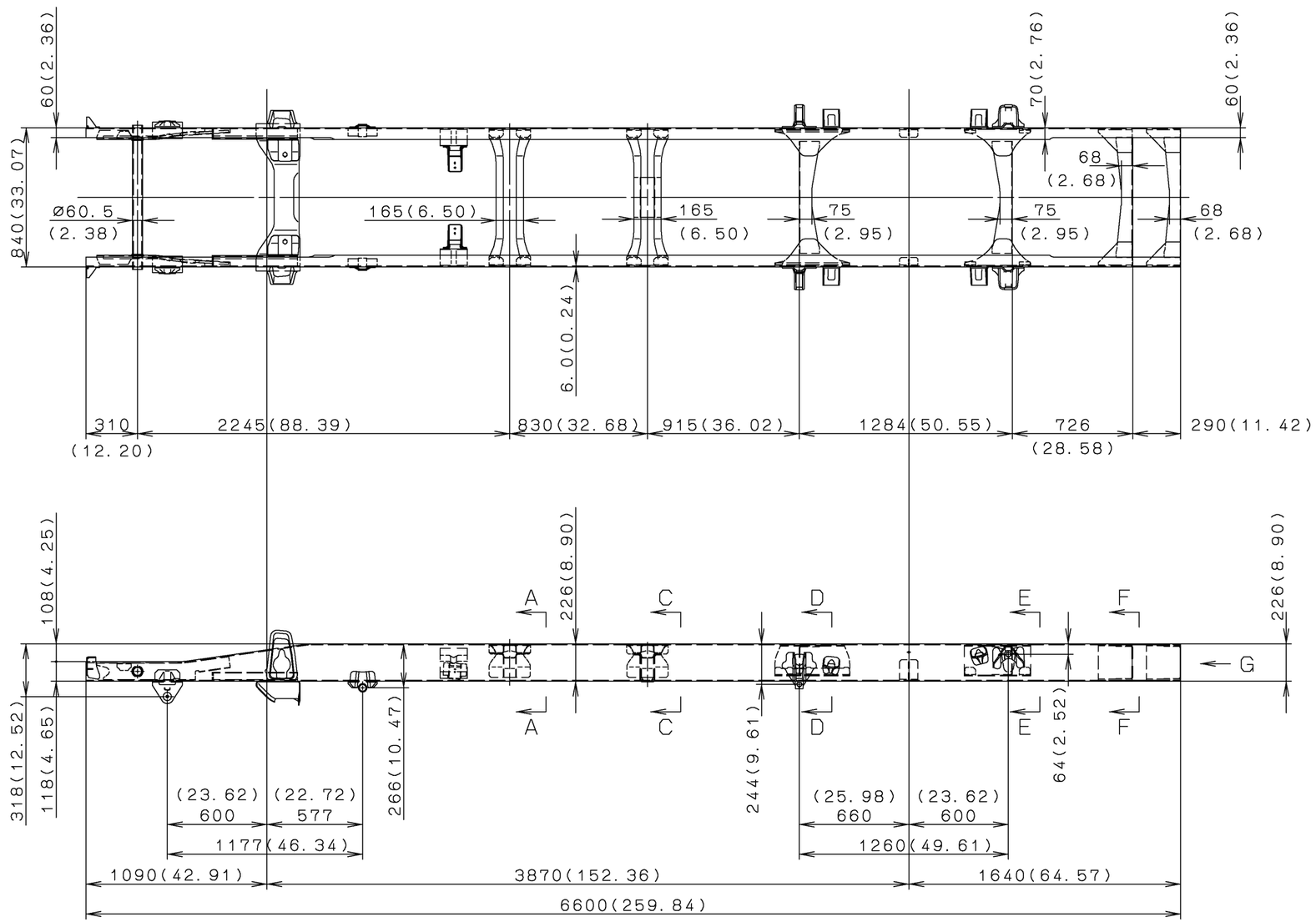

UNIT : mm (in.)
SCALE : 1/30

Return to Table of Contents

4.4 FE8□DJZ

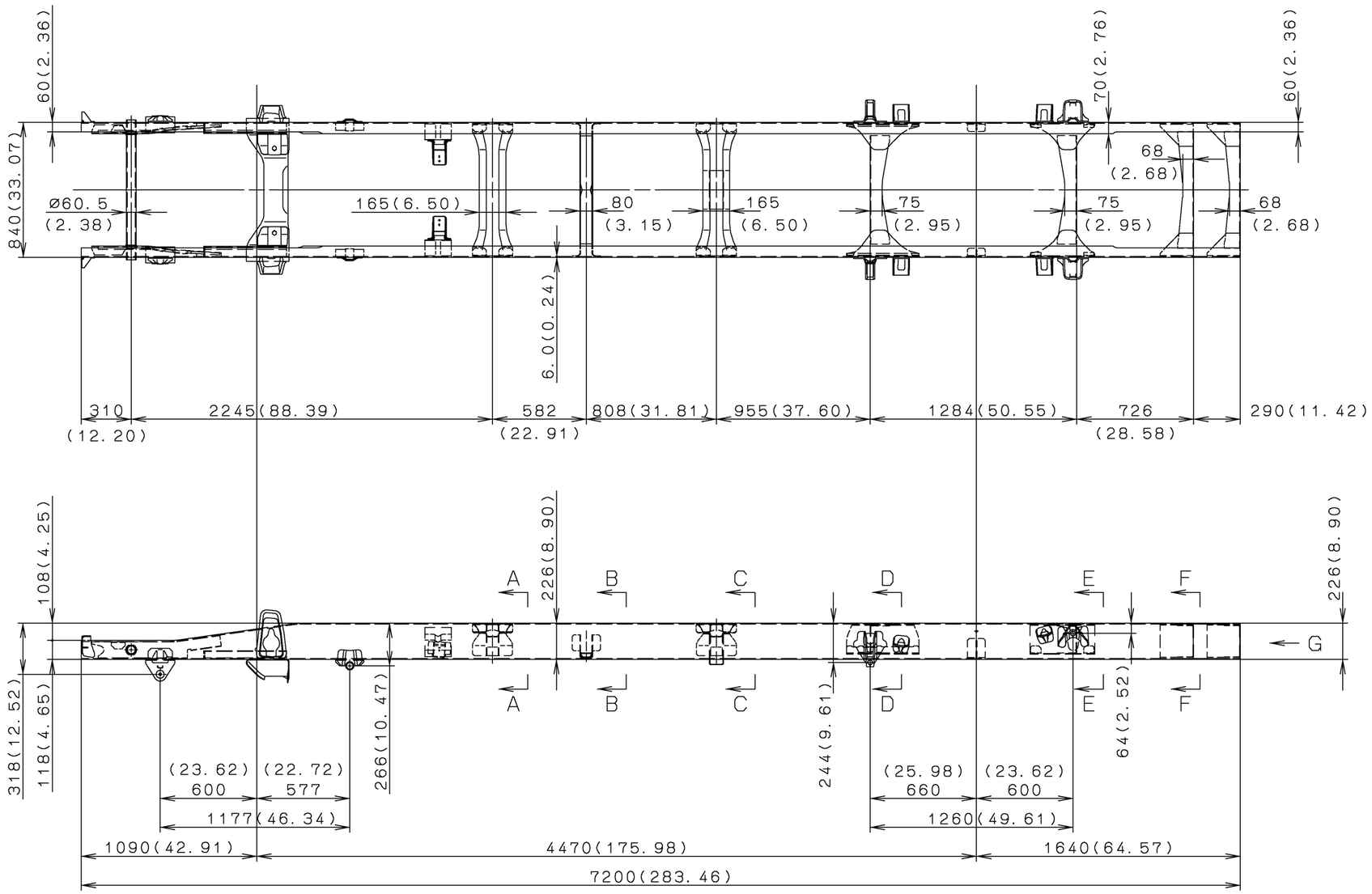

UNIT : mm (in.)
SCALE : 1/30

Return to Table of Contents

4.5 FE85DKZ

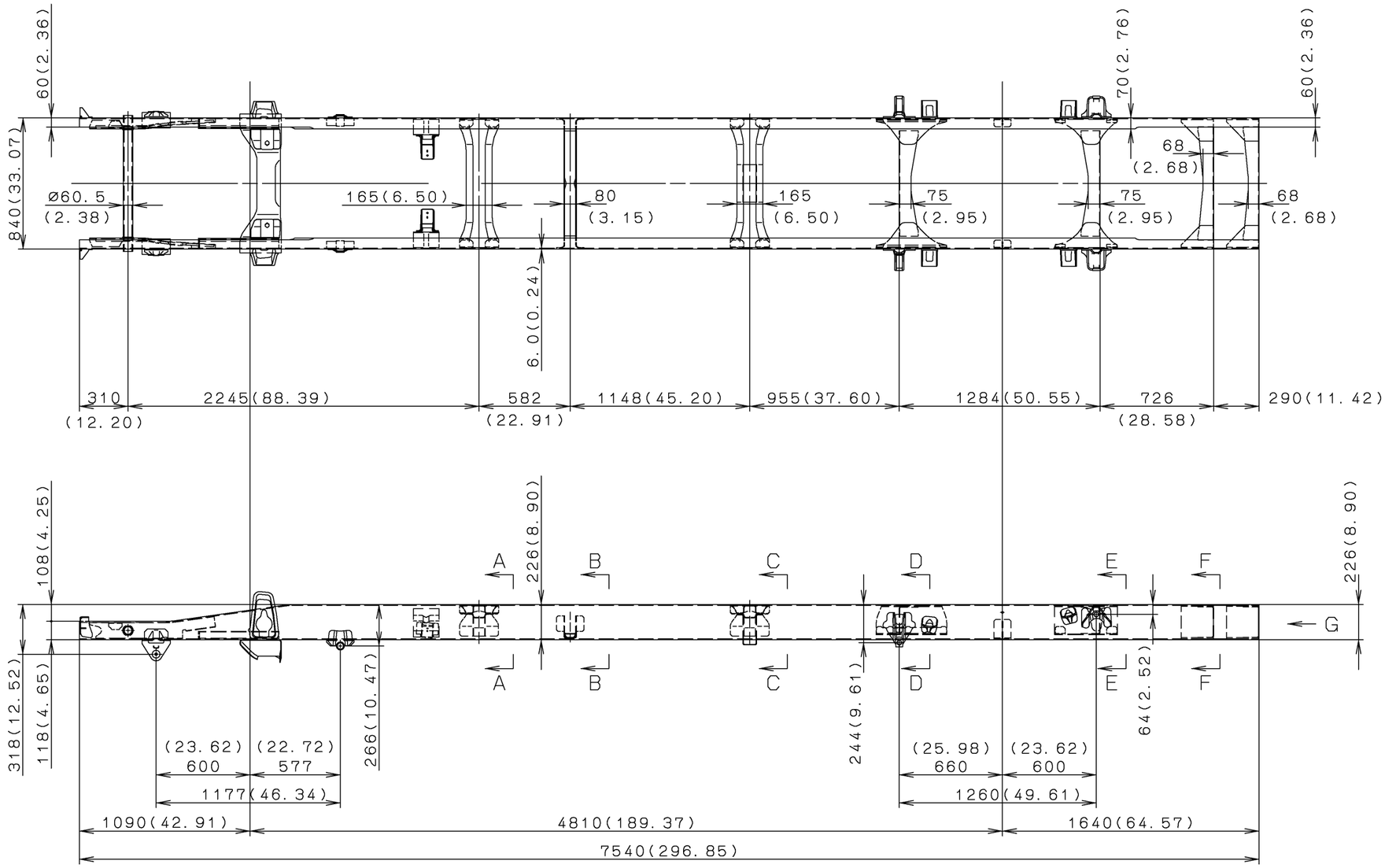

UNIT : mm (in.)
SCALE : 1/30

Return to Table of Contents

4.6 FE84DHW

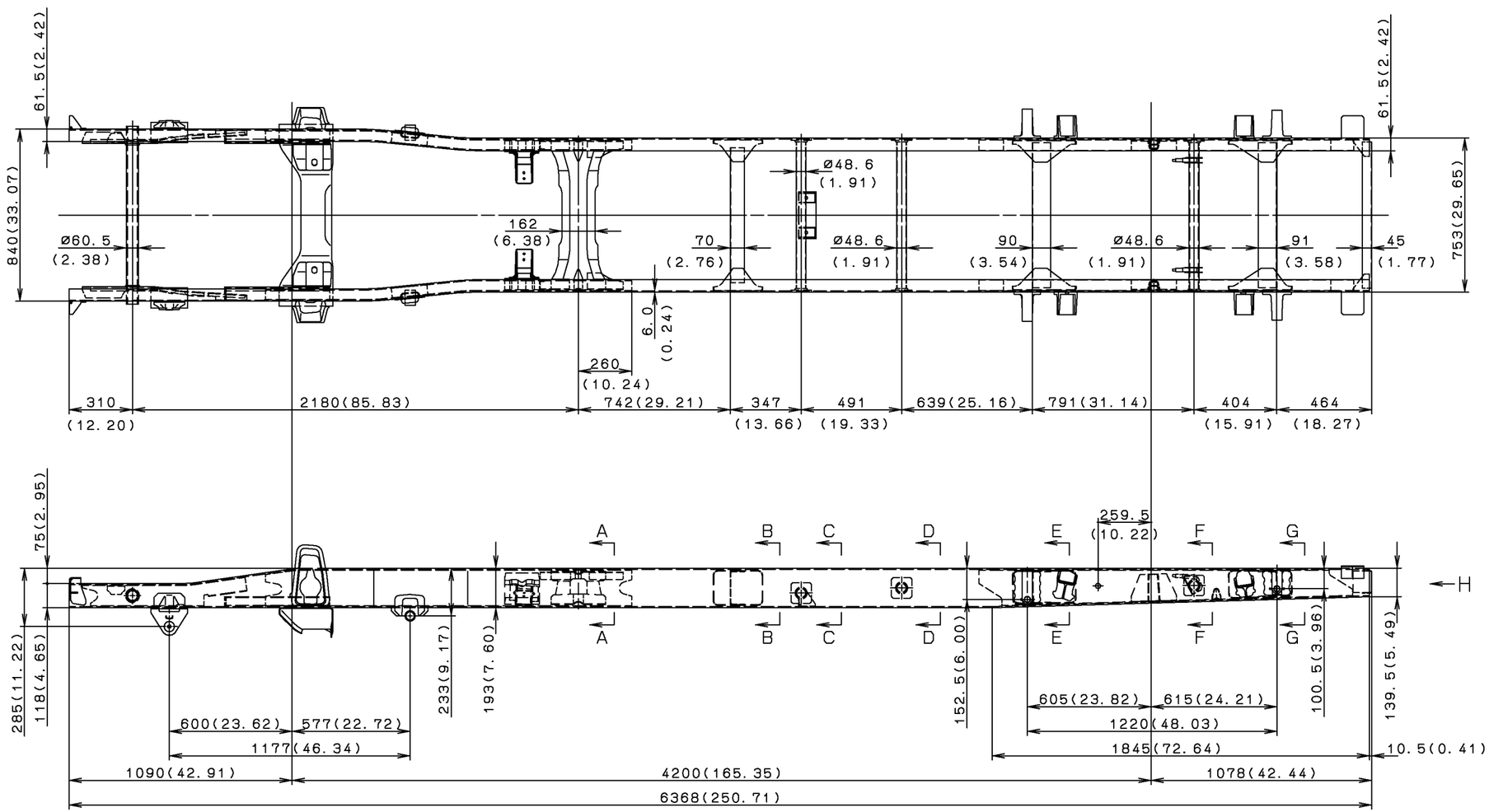

UNIT : mm (in.)
SCALE : 1/30

Return to Table of Contents

4.7 FG84DF6

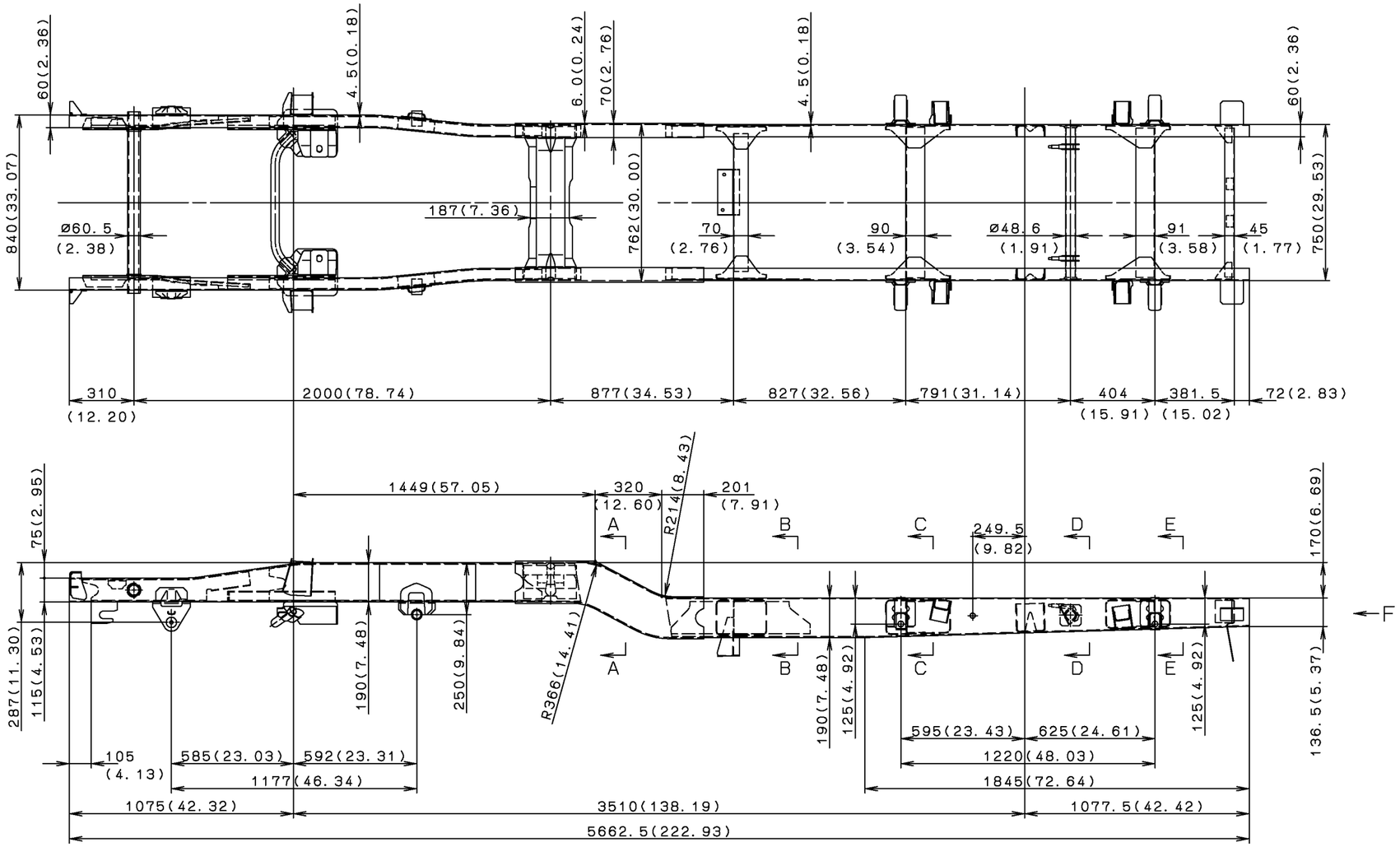

UNIT : mm (in.)
SCALE : 1/30

Return to Table of Contents

5. CROSSMEMBER REAR VIEW

5.1 FE Series (Except FE84DHW)

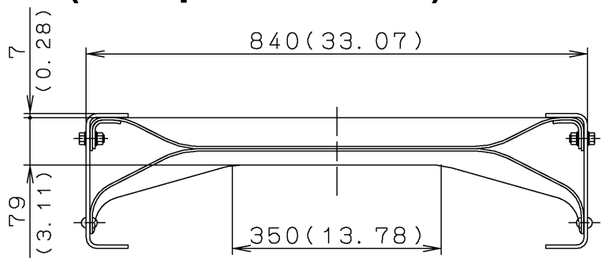

SECT A-A

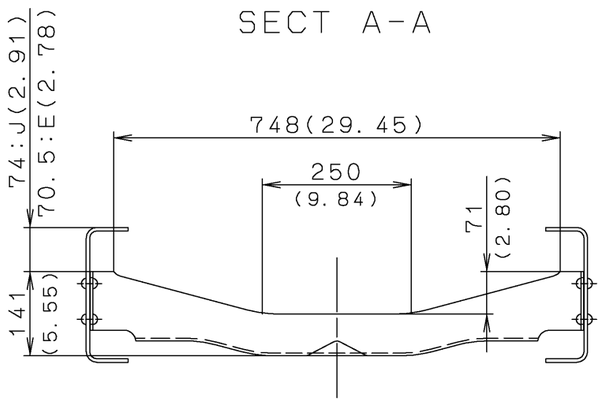

SECT B-B

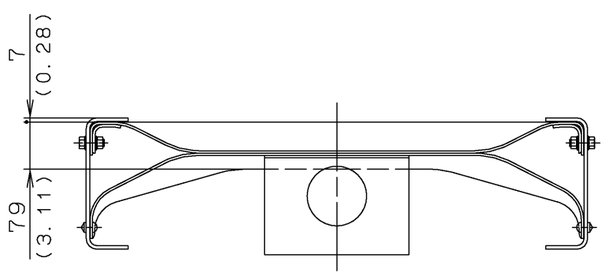

SECT C-C

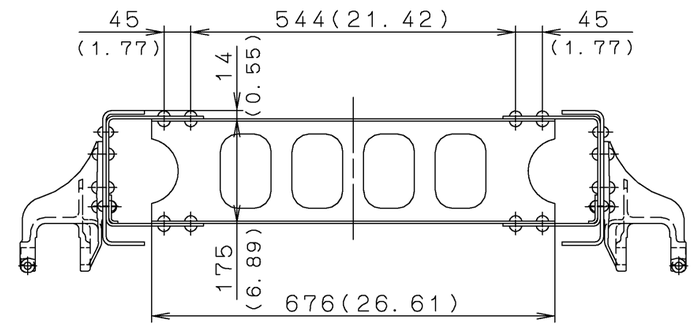

SECT D-D

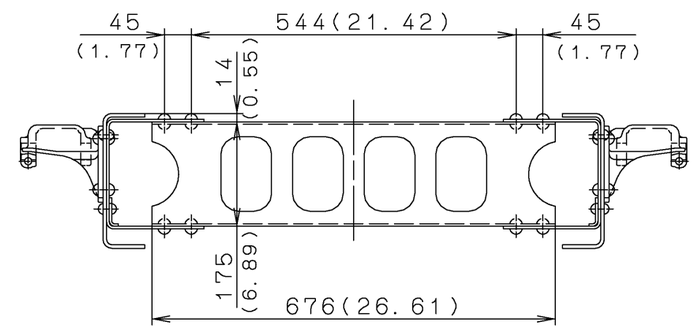

SECT E-E

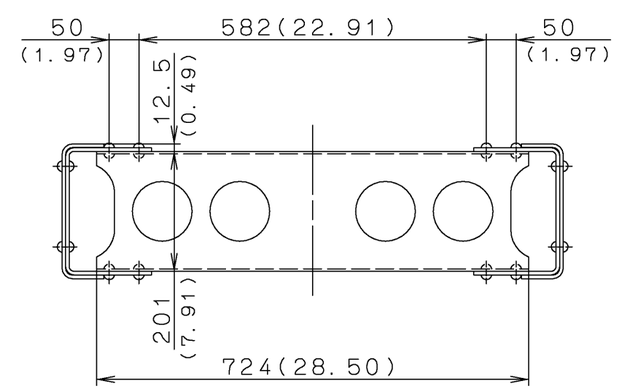

SECT F-F
G-G

UNIT:mm(in.)

Return to Table of Contents

5.2 FE84DHW

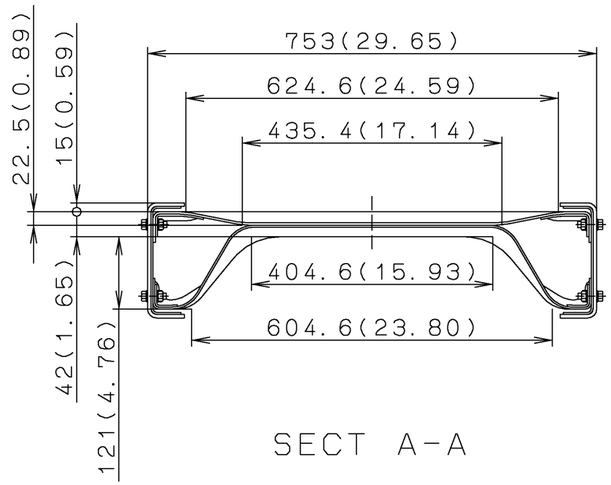

SECT A-A

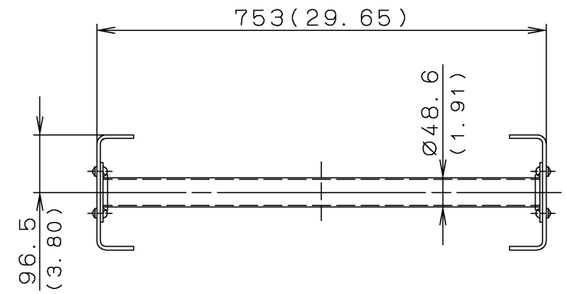

SECT D-D

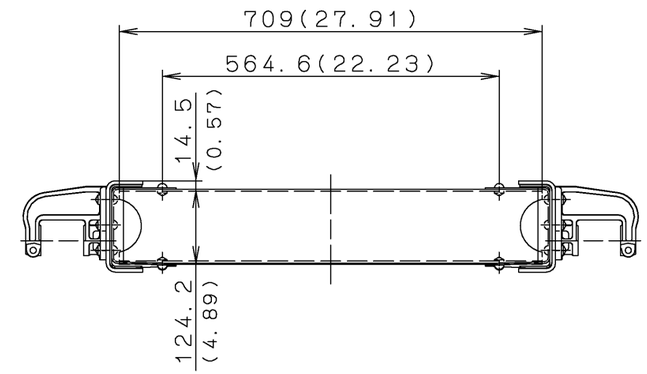

SECT G-G

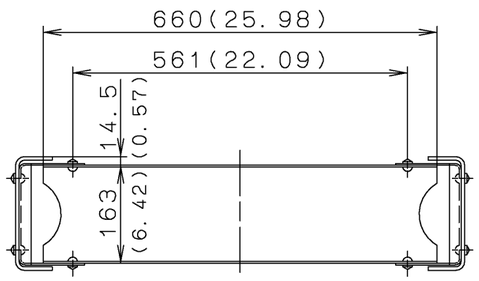

SECT B-B

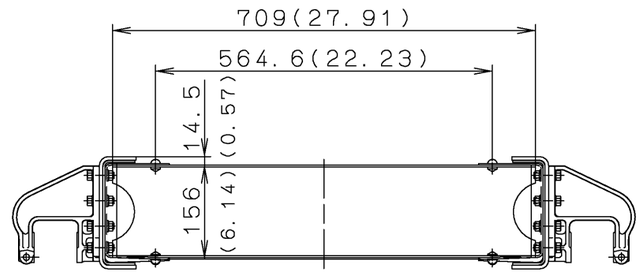

SECT E-E

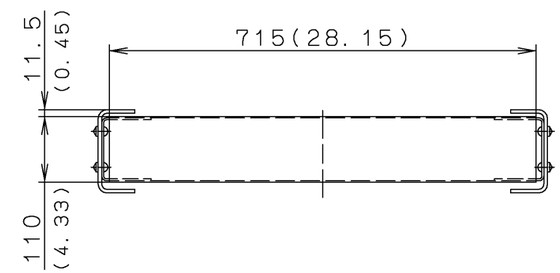

SECT H-H

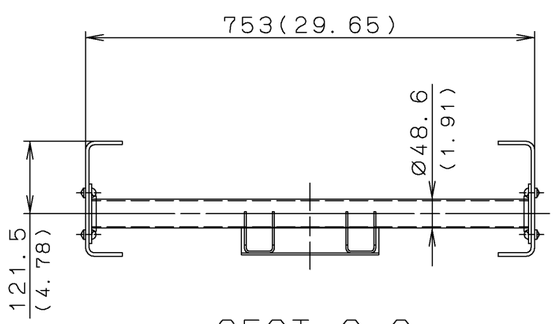

SECT C-C

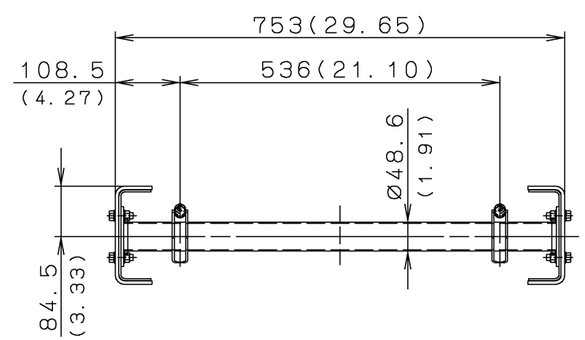

SECT F-F

UNIT:mm(in.)

Return to Table of Contents

5.3 FG Series

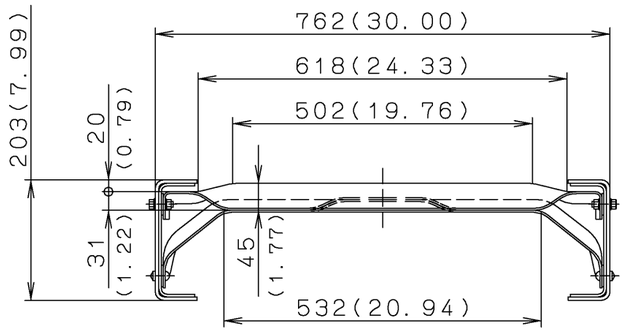

SECT A-A

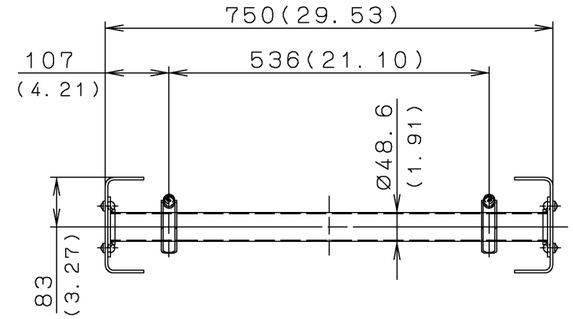

SECT D-D

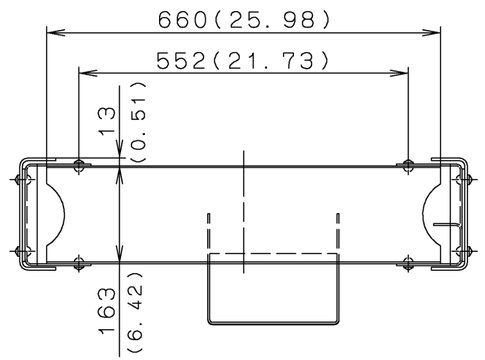

SECT B-B

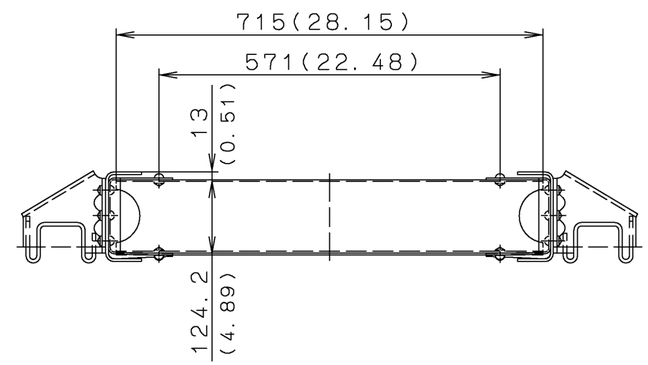

SECT E-E

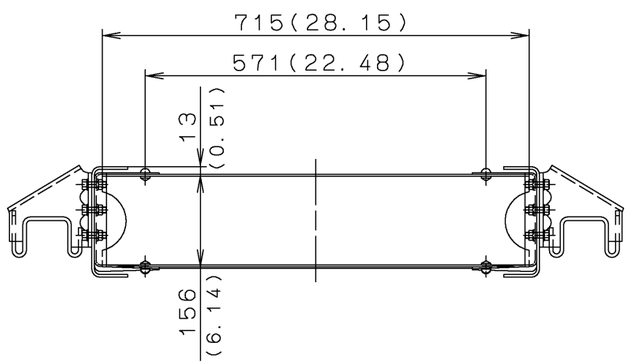

SECT C-C

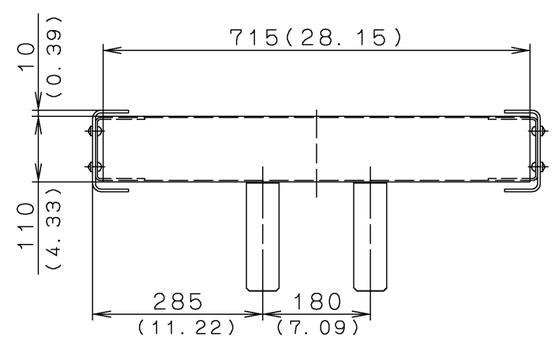

SECT F-F

UNIT:mm(in.)

Return to Table of Contents

https://truckmanualshub.com/

6. FRAME SECTION MODULUS DIAGRAMS

6.1 FE8□DDZ

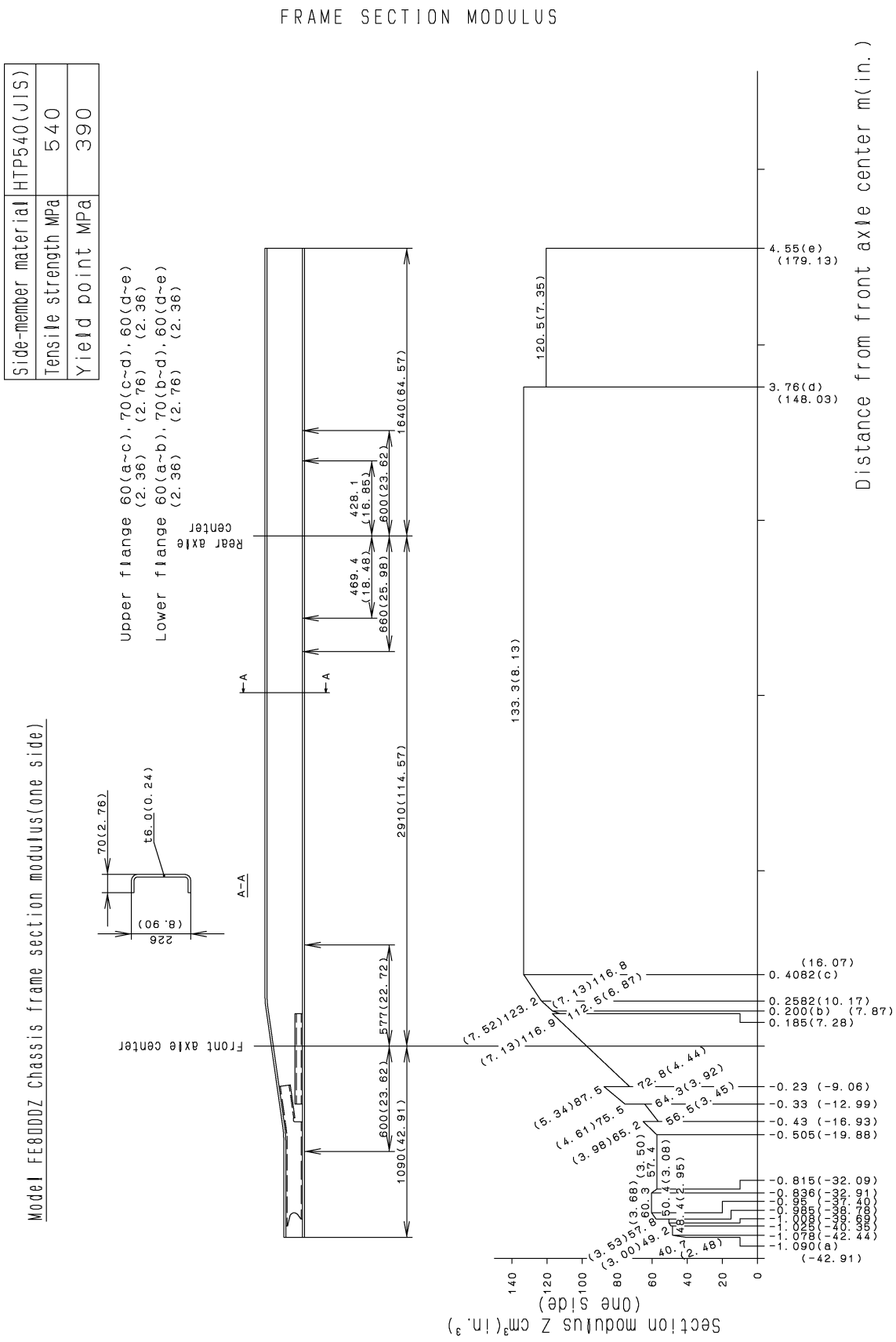

Return to Table of Contents

https://truckmanualshub.com/

6.2 FE8□DEZ

FRAME SECTION MODULUS

Model FE8□DEZ Chassis frame section modulus(one side)

Side-member material	HTP540(JIS)
Tensile strength MPa	540
Yield point MPa	390

Upper flange 60(a~c), 70(c~d), 60(d~e)
(2.36) (2.76) (2.36)

Lower flange 60(a~b), 70(b~d), 60(d~e)
(2.36) (2.76) (2.36)

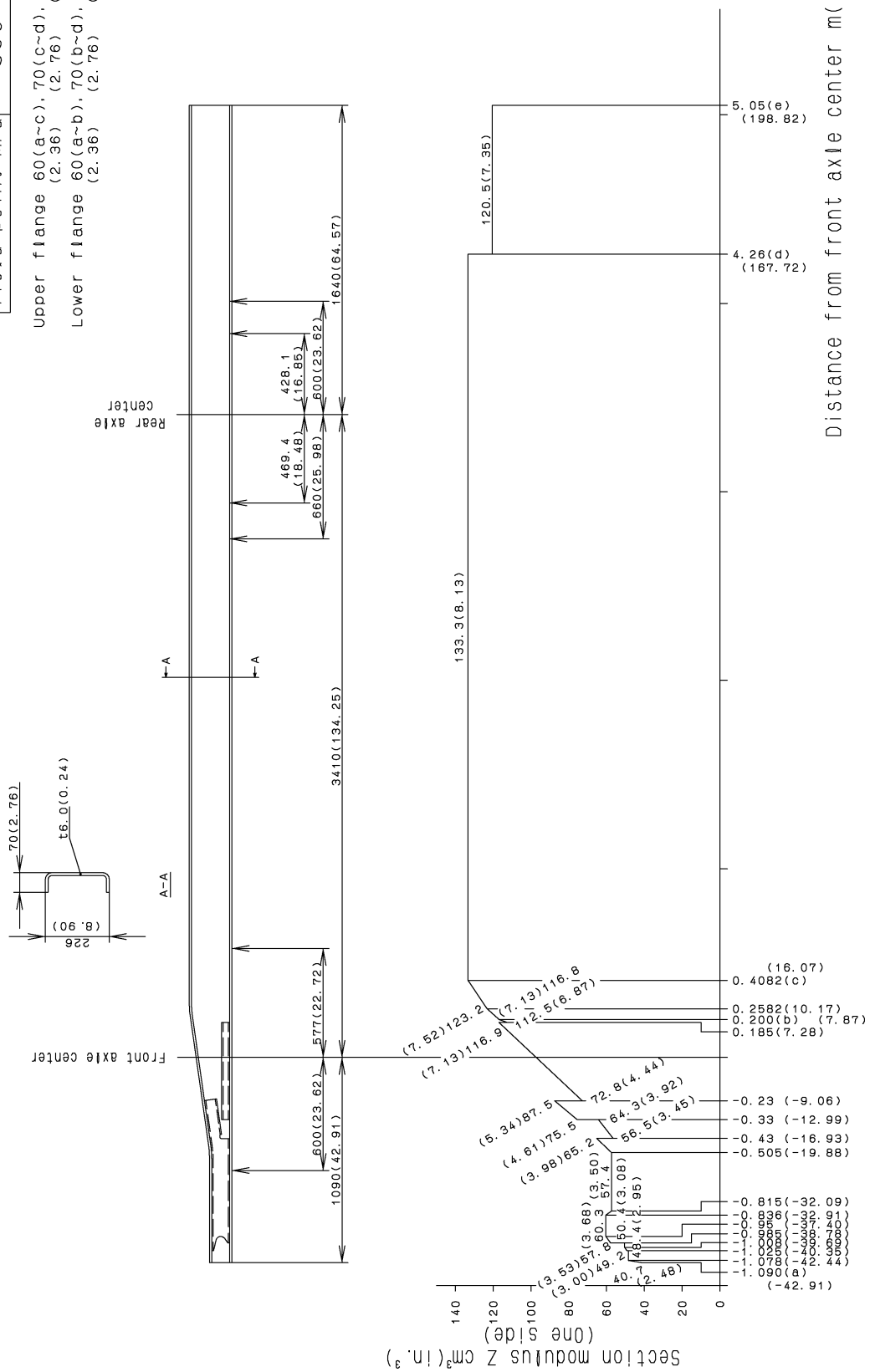

Return to Table of Contents

6.3 FE8□DGZ

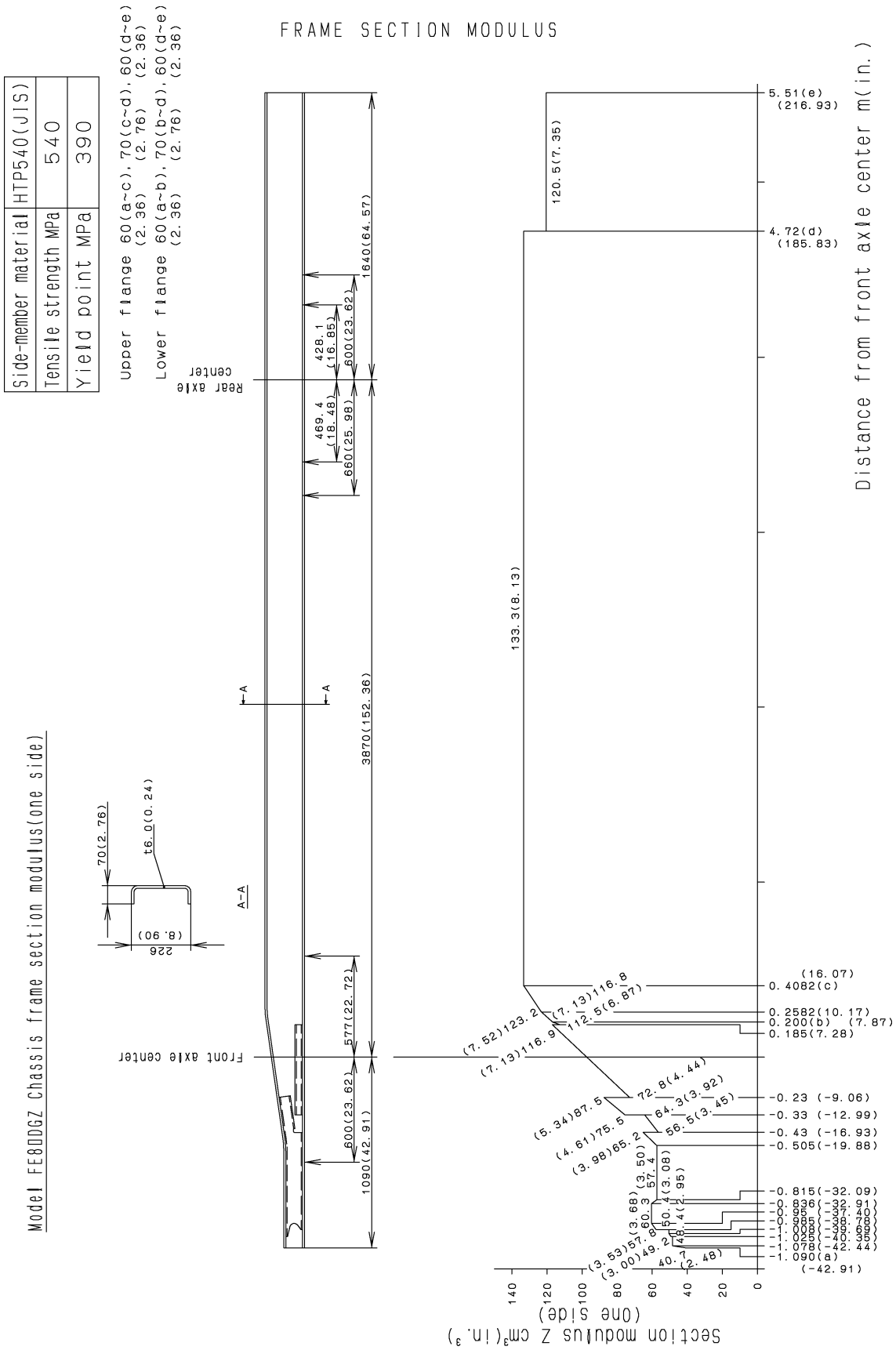

Return to Table of Contents

6.4 FE8□DJZ

Model FE8□DJZ Chassis frame section modulus(one side)

Side-member material	HTP540(JIS)
Tensile strength MPa	540
Yield point MPa	390

Upper flange 60(a~c), 70(c~d), 60(d~e)
(2.36) (2.76) (2.36)

Lower flange 60(a~b), 70(b~d), 60(d~e)
(2.36) (2.76) (2.36)

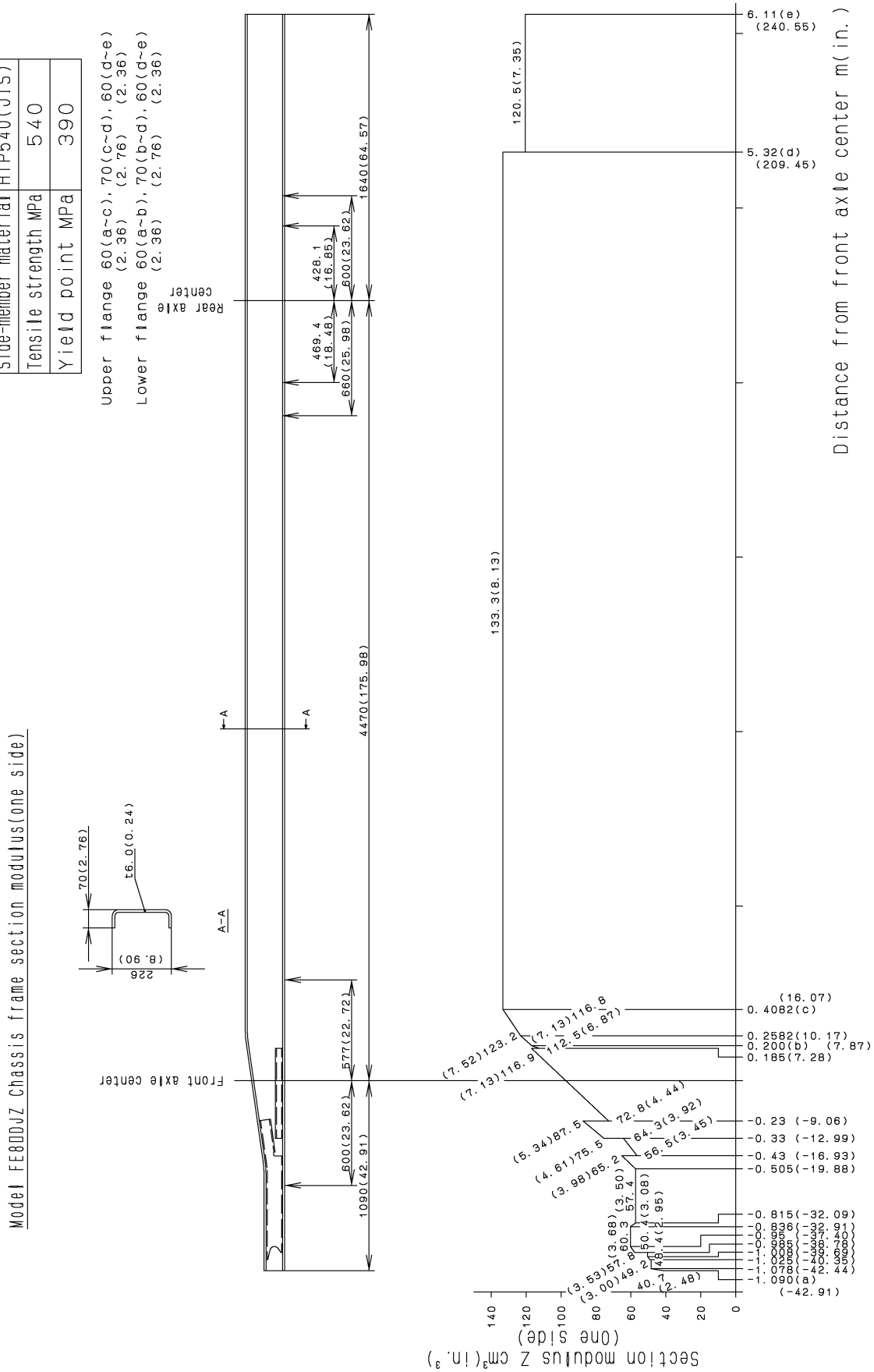

Return to Table of Contents

https://truckmanualshub.com/

6.5 FE85DKZ

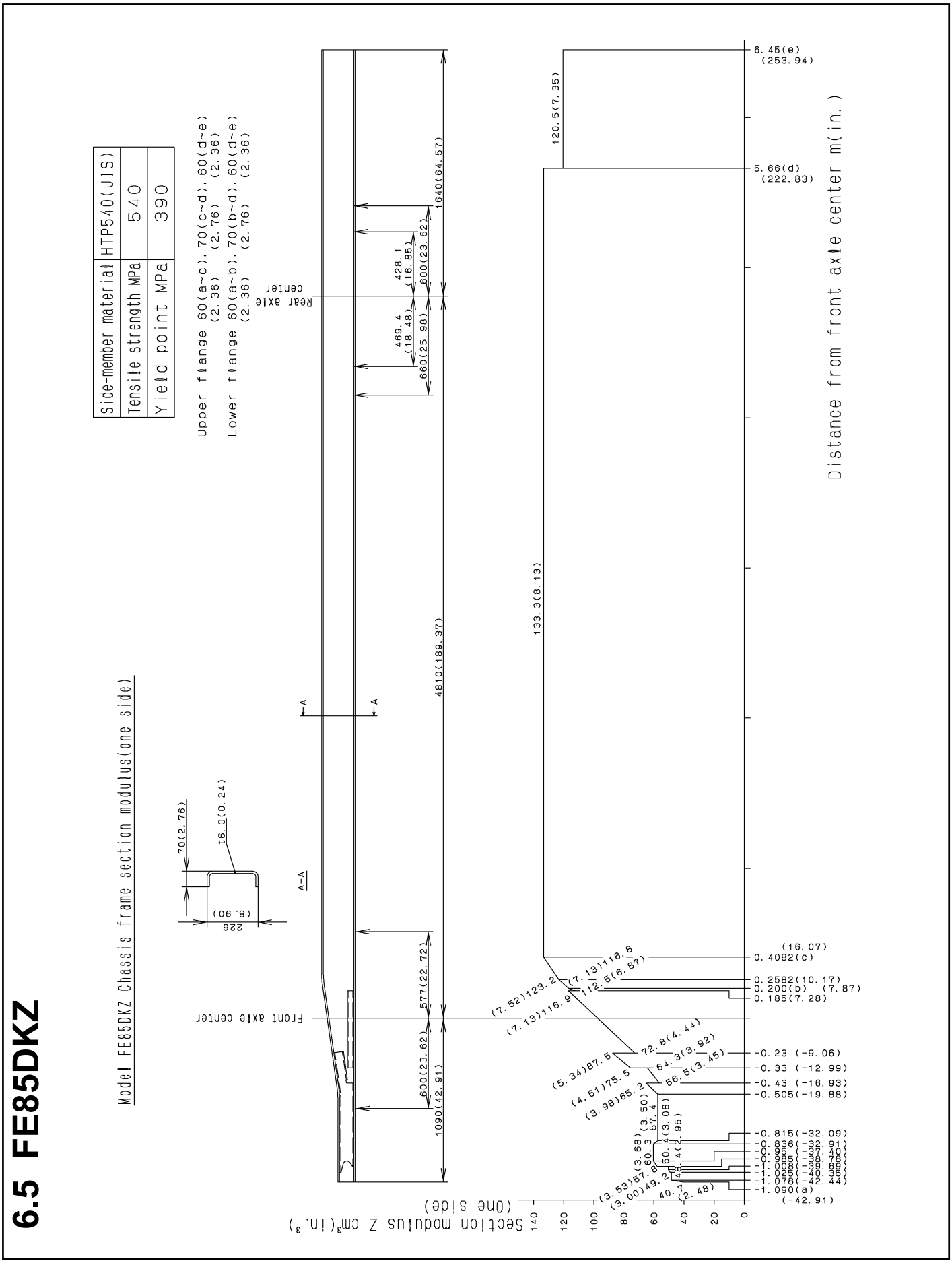

Return to Table of Contents

https://truckmanualshub.com/

6.6 FE84DHW

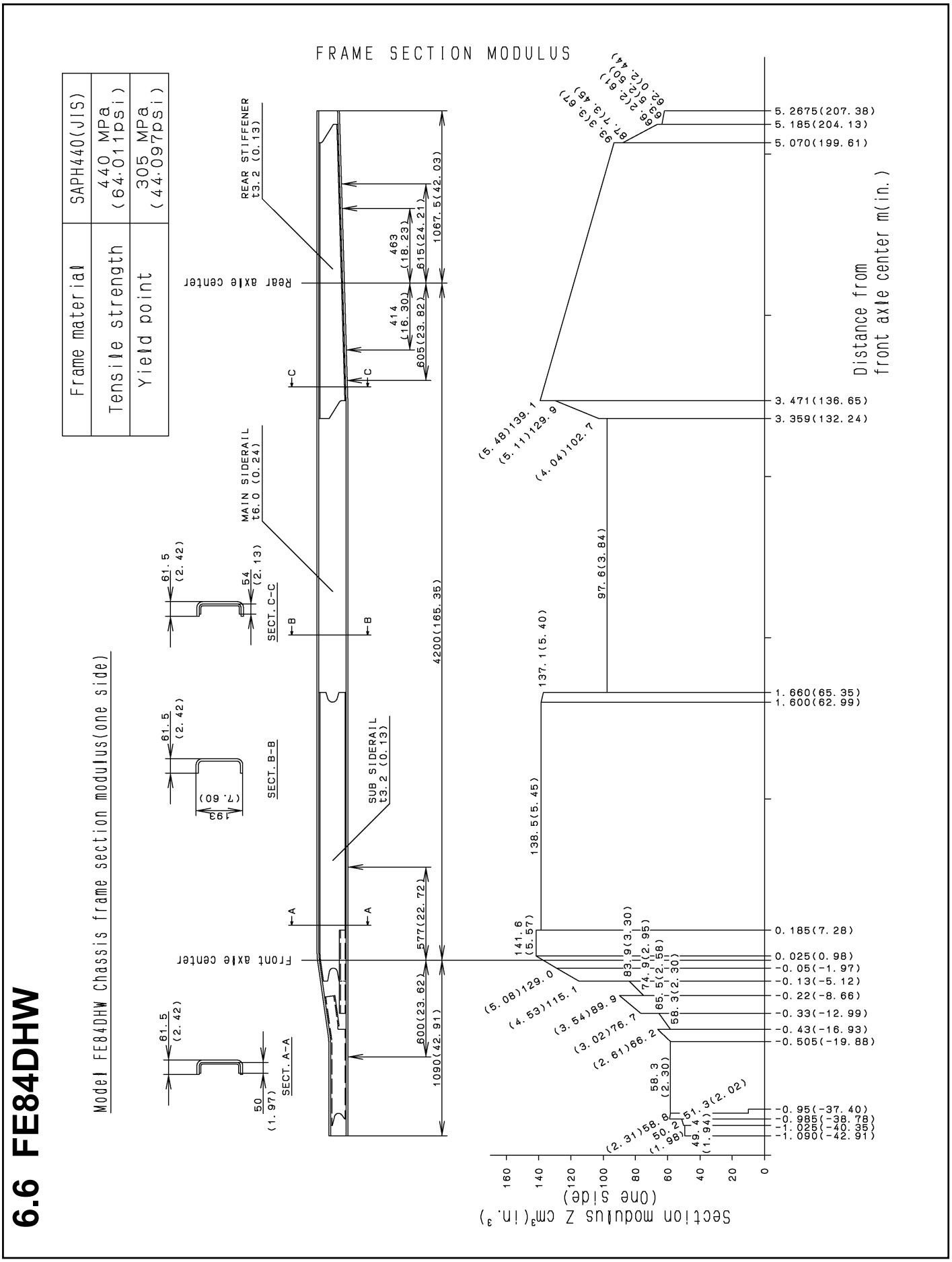

Return to Table of Contents

https://truckmanualshub.com/

6.7 FG84DF6

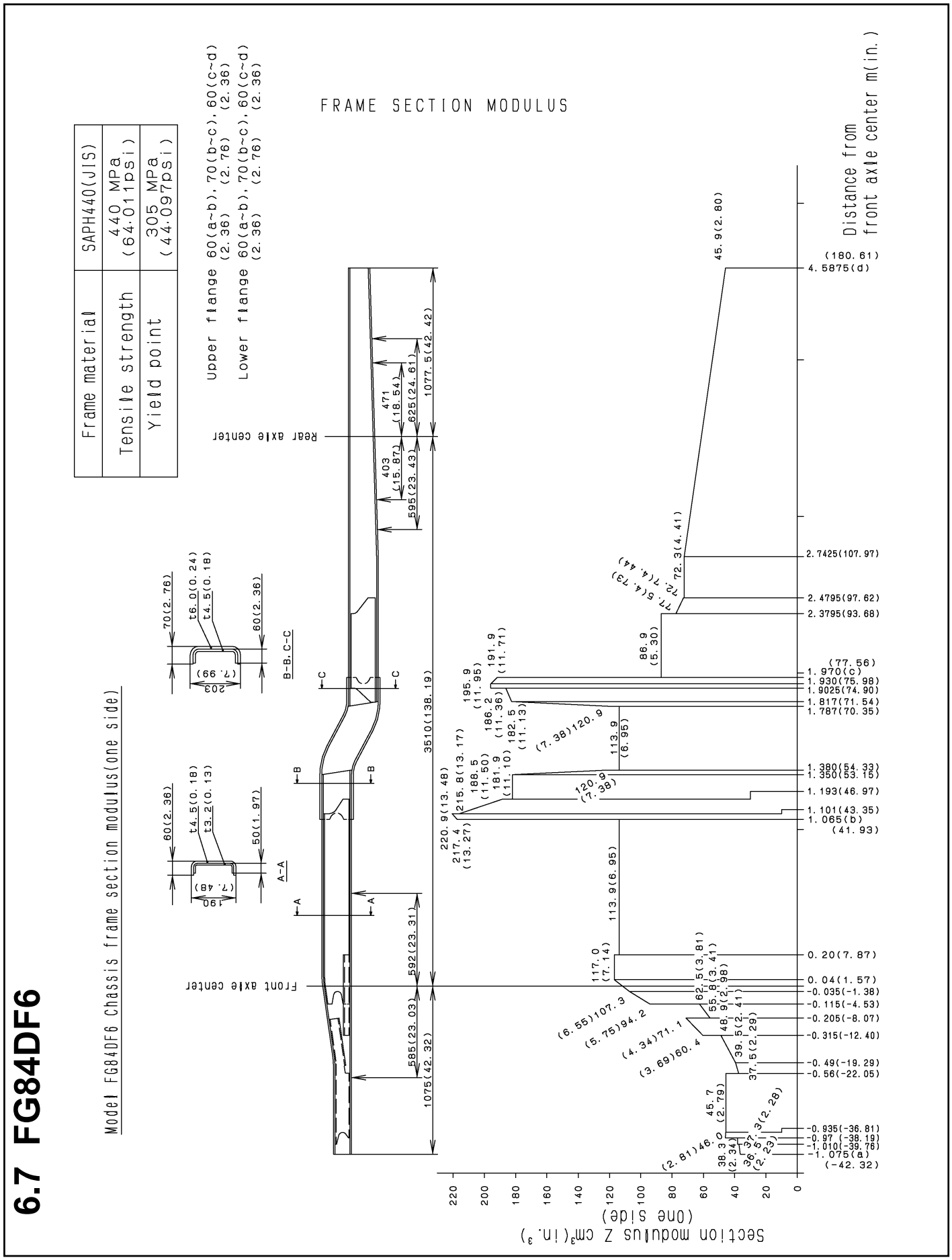

Return to Table of Contents

https://truckmanualshub.com/

7. FRAME HEIGHT

7.1 Tire radius

(Ground to top of Frame at Front & Rear Axle center)

Calculating the formulas

Hf = hf + Rf (Frame height, Front)

Hr = hr + Rr (Frame height, Rear)

hf : Distance from top to front wheel center (see section 9 : Front and Rear springs)

hr : Distance from top to rear wheel center (see section 9 : Front and Rear springs)

Rf, Rr : Tire radius (See following Tire chart following.)

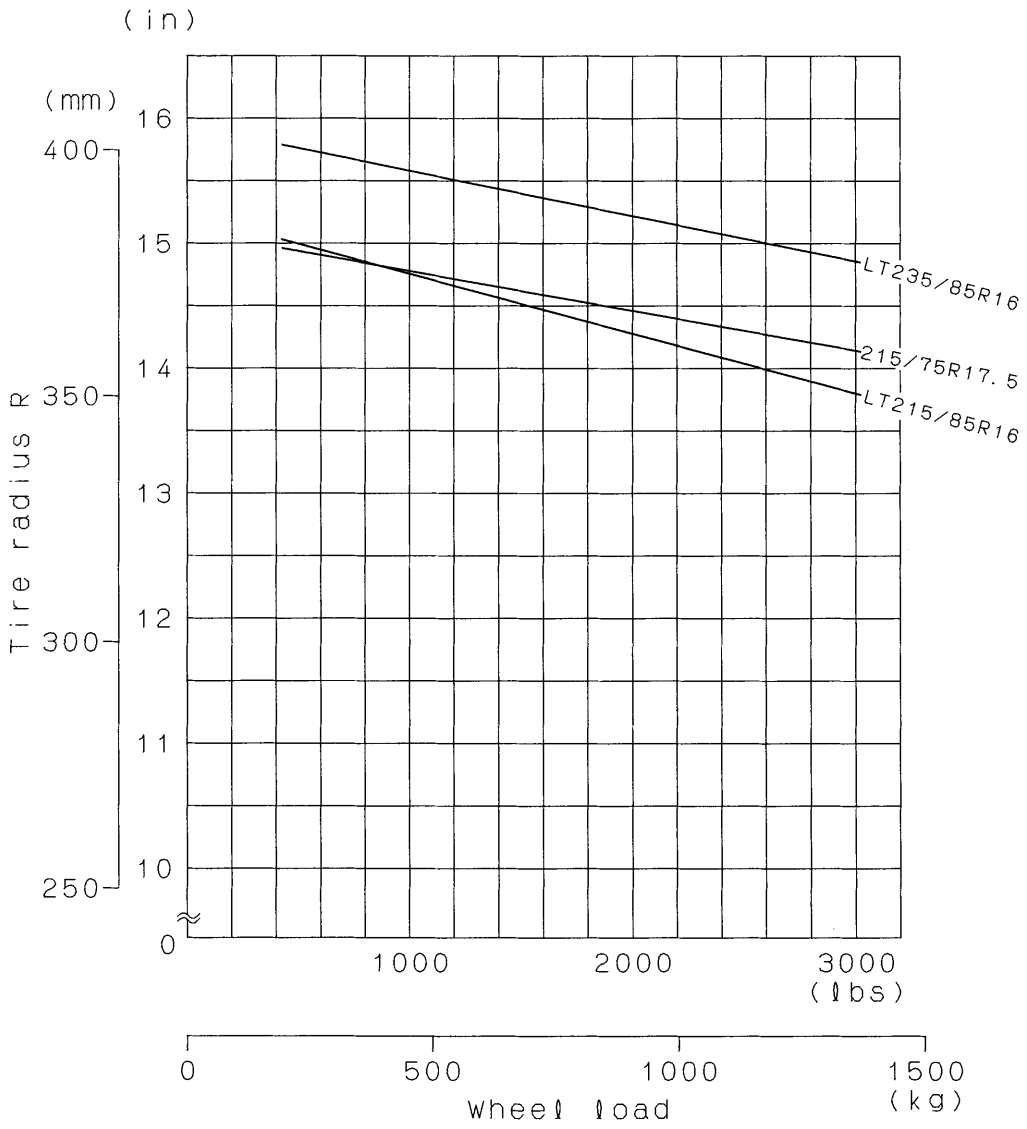

Return to Table of Contents

7.2 Front and rear springs

7.2.1 FE83

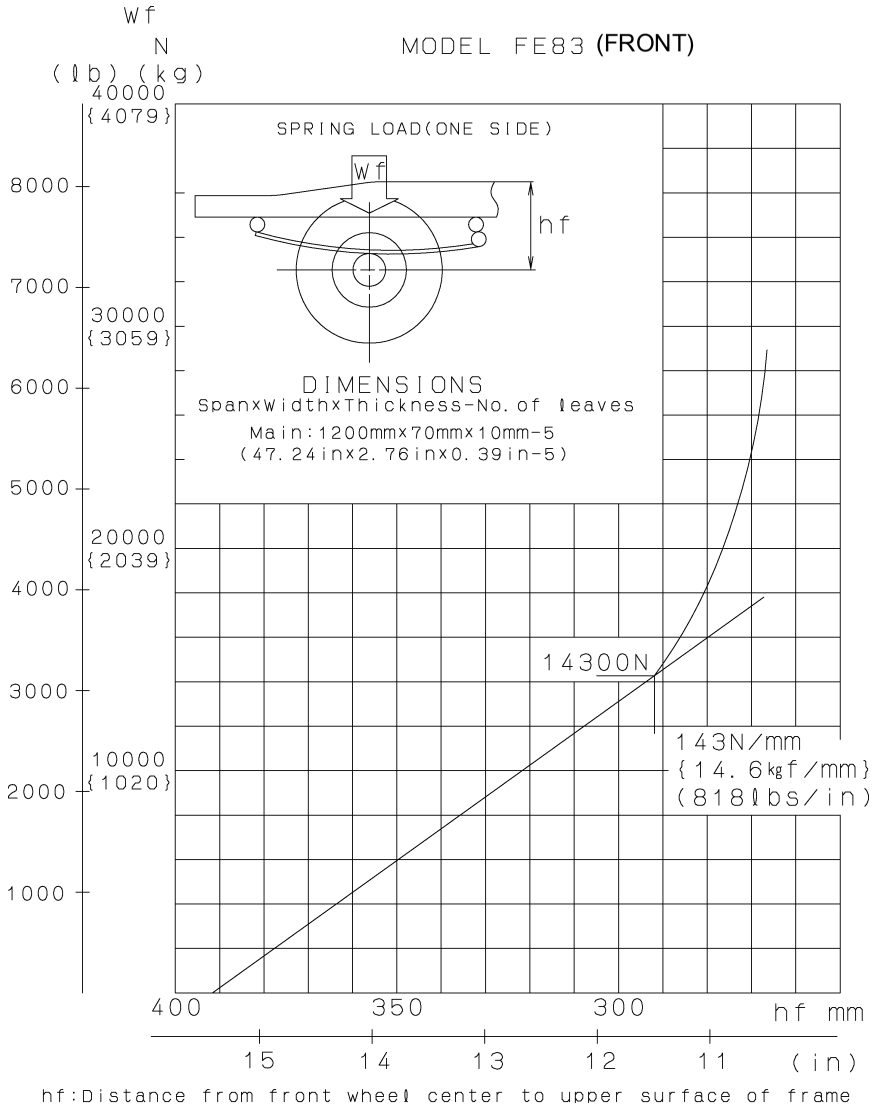

hf:Distance from front wheel center to upper surface of frame

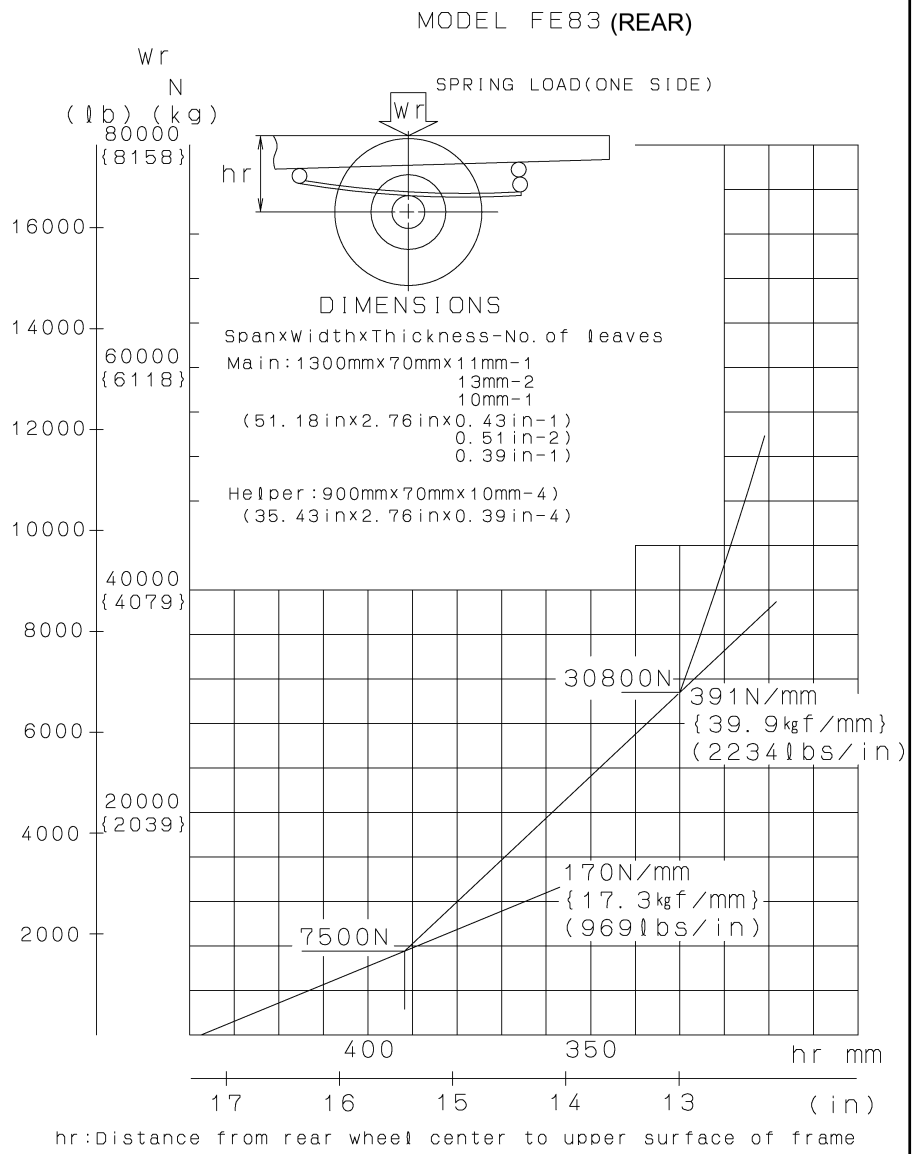

hr:Distance from rear wheel center to upper surface of frame

https://truckmanualshub.com/

Return to Table of Contents

7.2.2 FE84 (Except FE84DHW)

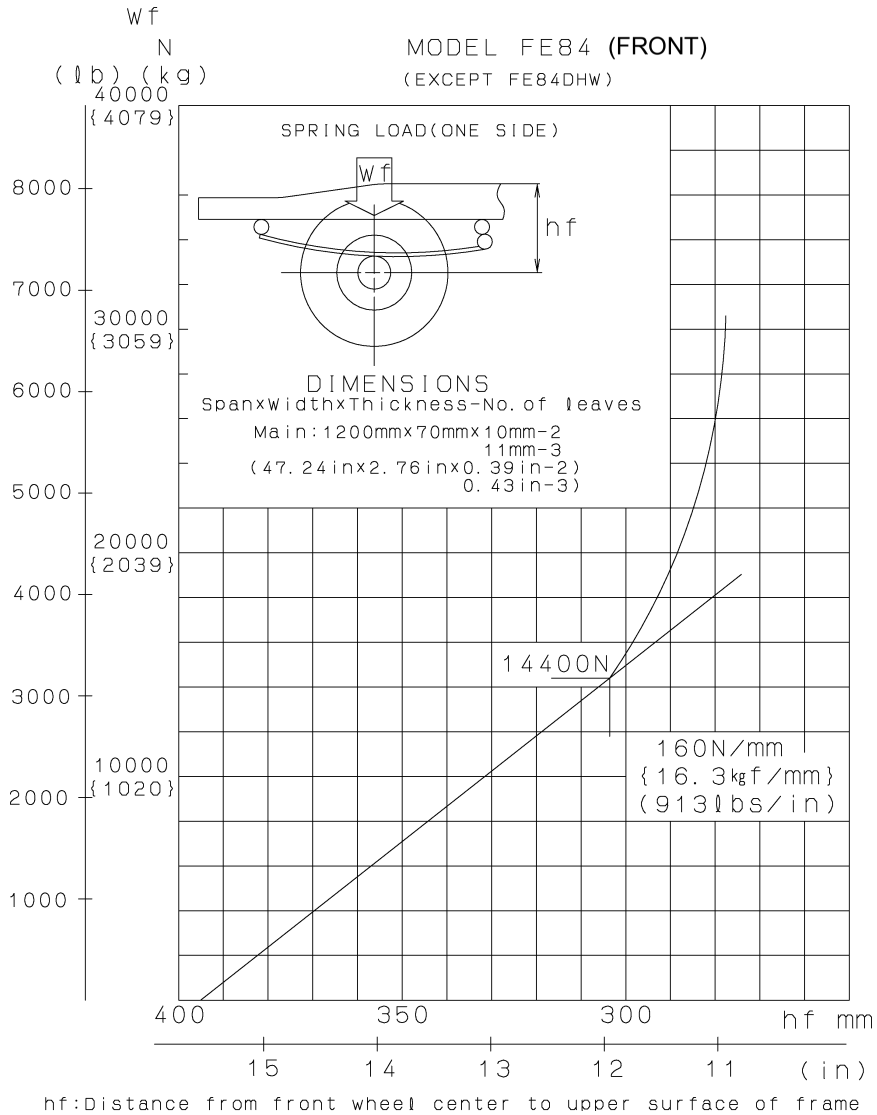

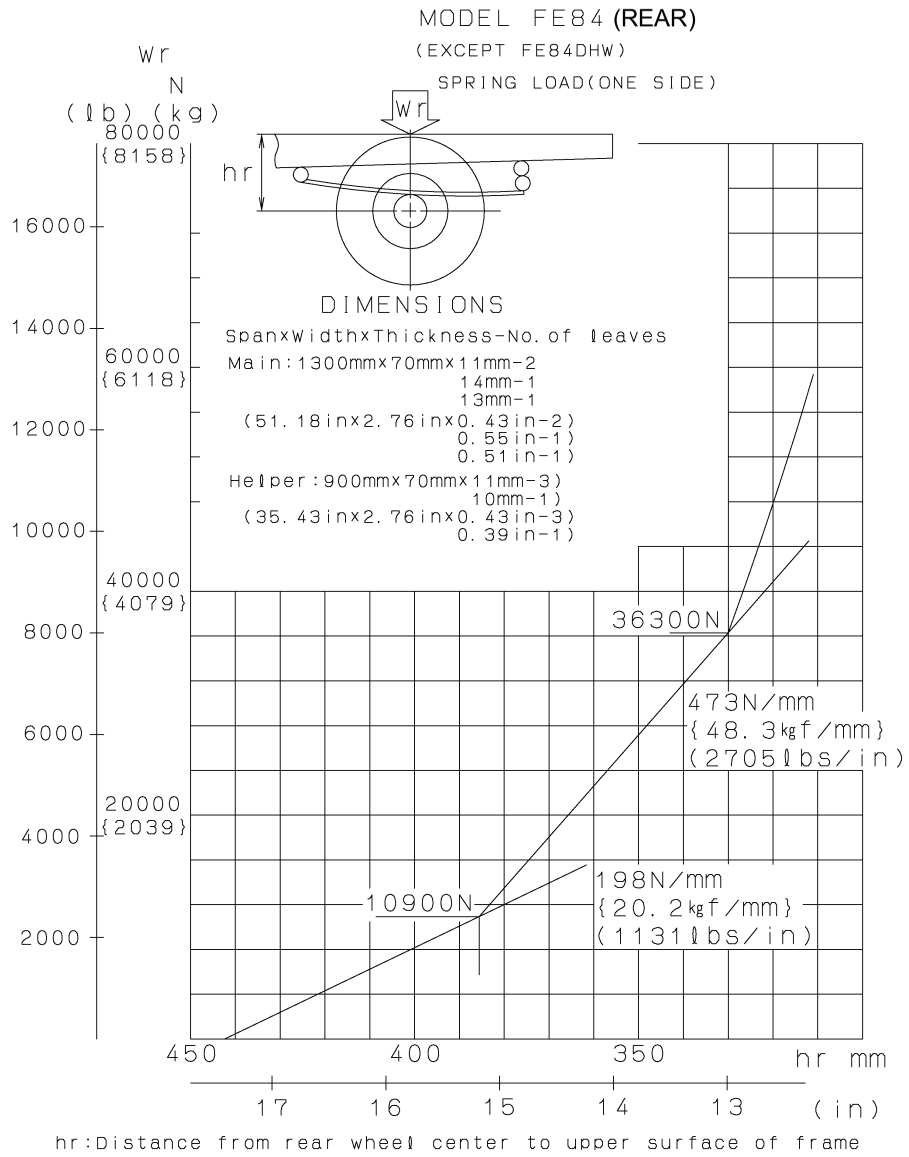

https://truckmanualshub.com/

Return to Table of Contents

7.2.3 FE84DHW

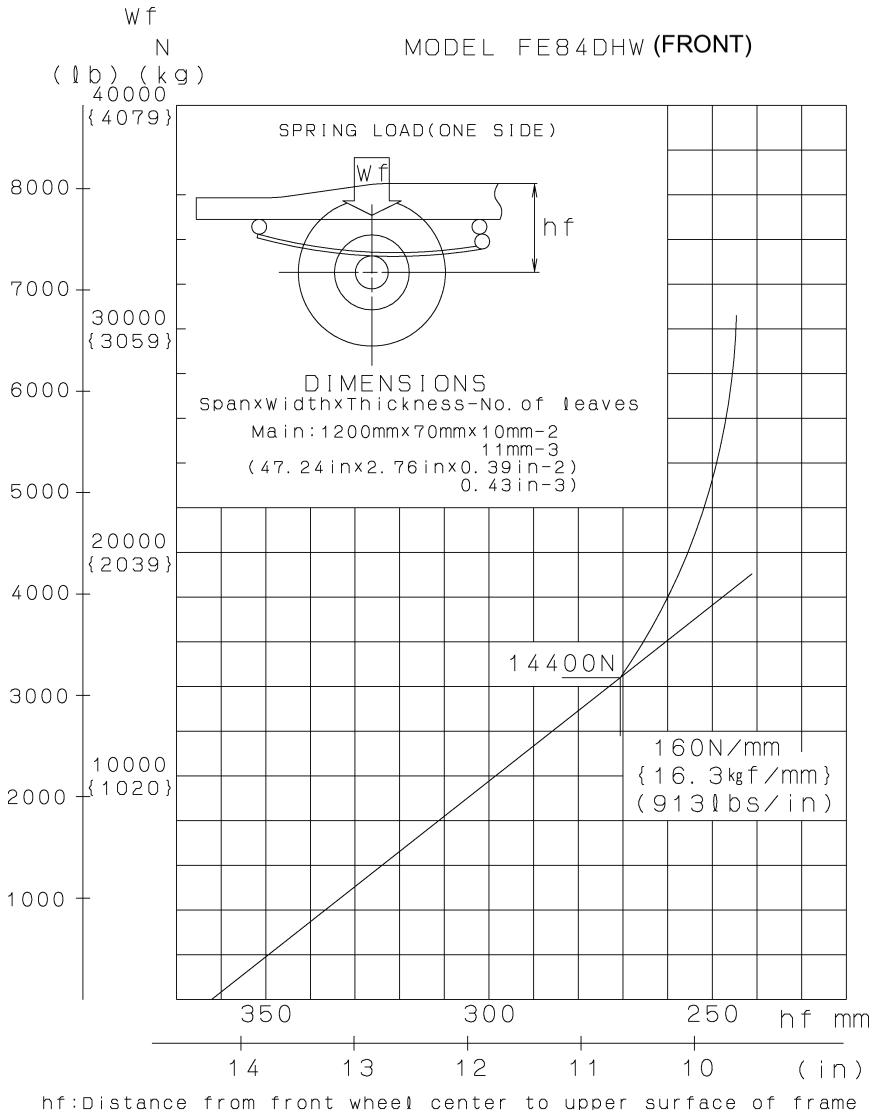

hf:Distance from front wheel center to upper surface of frame

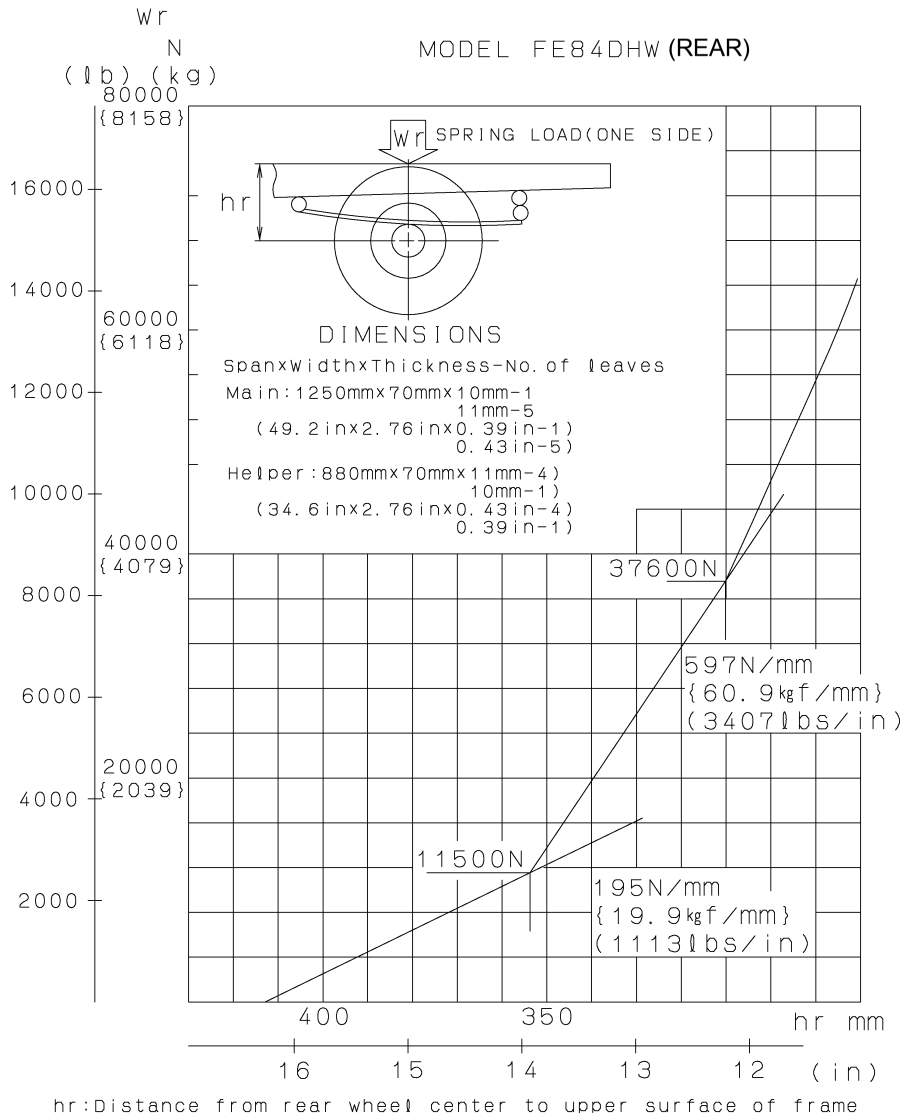

hr:Distance from rear wheel center to upper surface of frame

https://truckmanualshub.com/

Return to Table of Contents

7.2.4 FE85

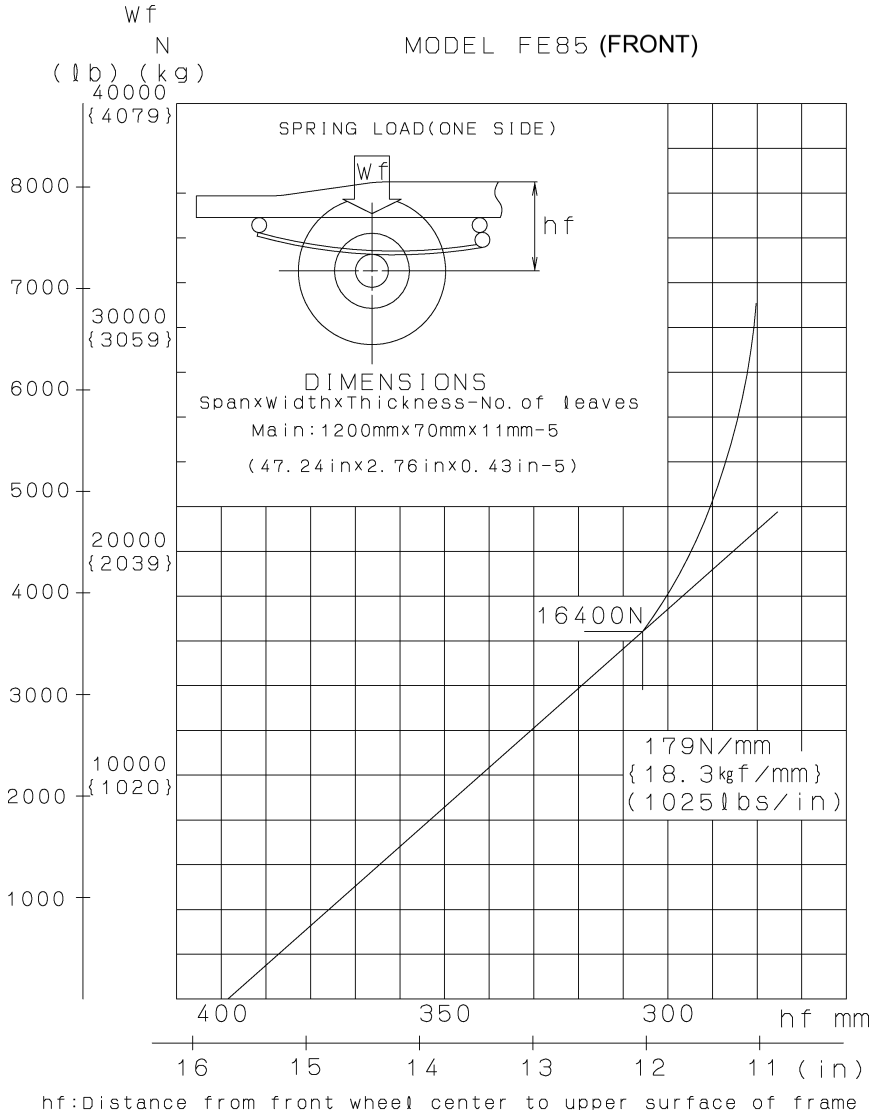

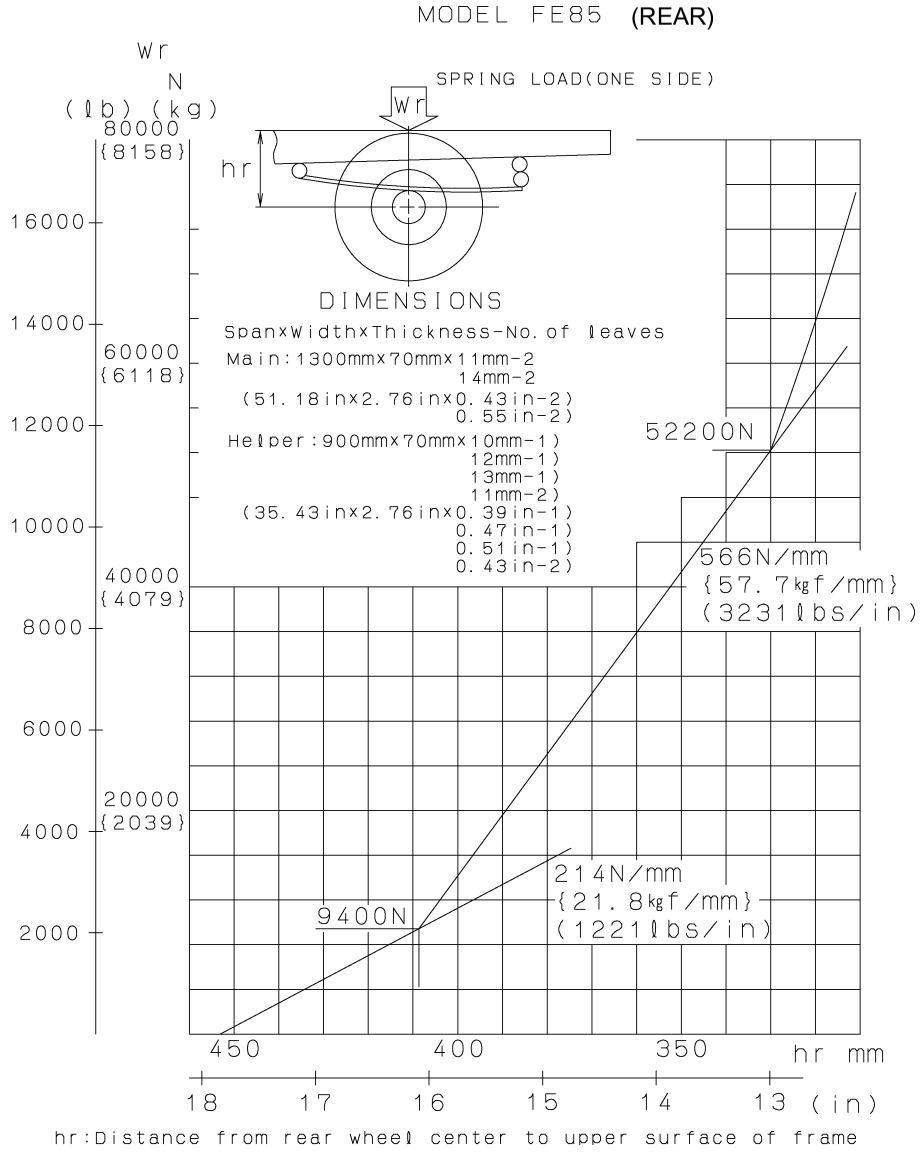

https://truckmanualshub.com/

Return to Table of Contents

7.2.5 FG84

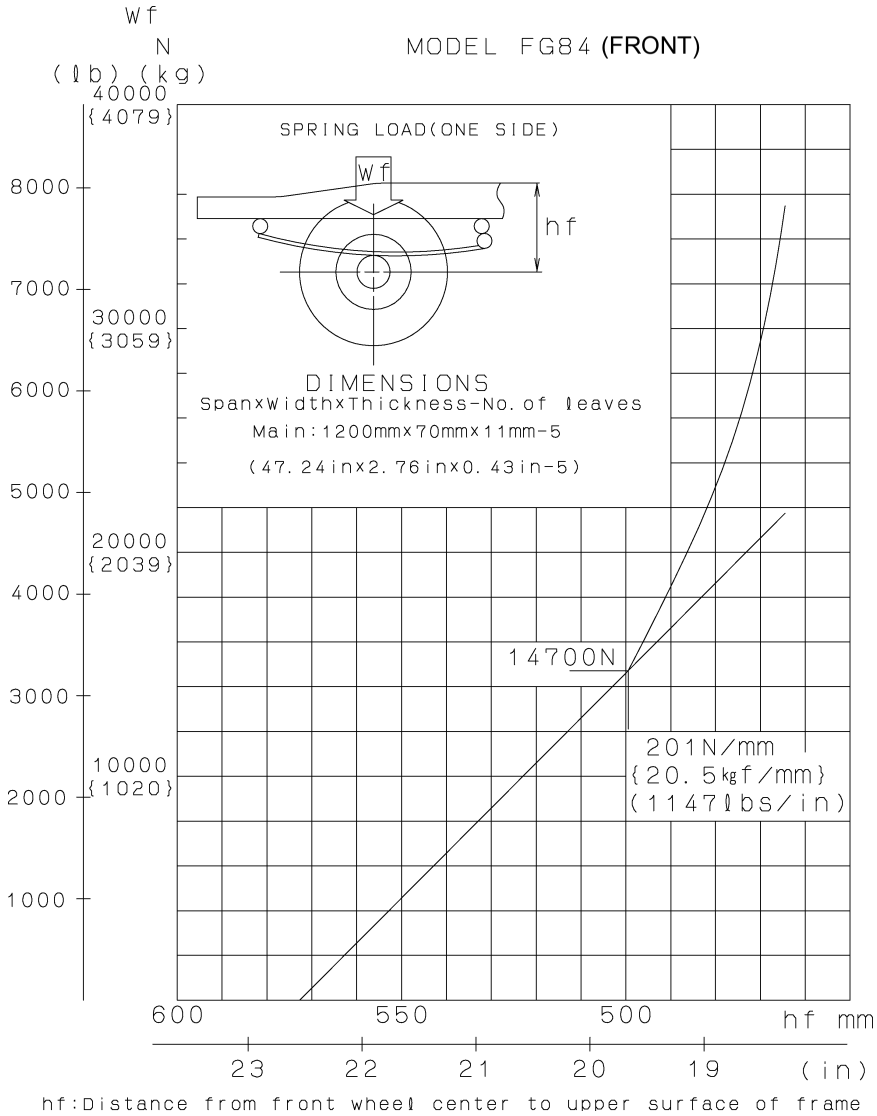

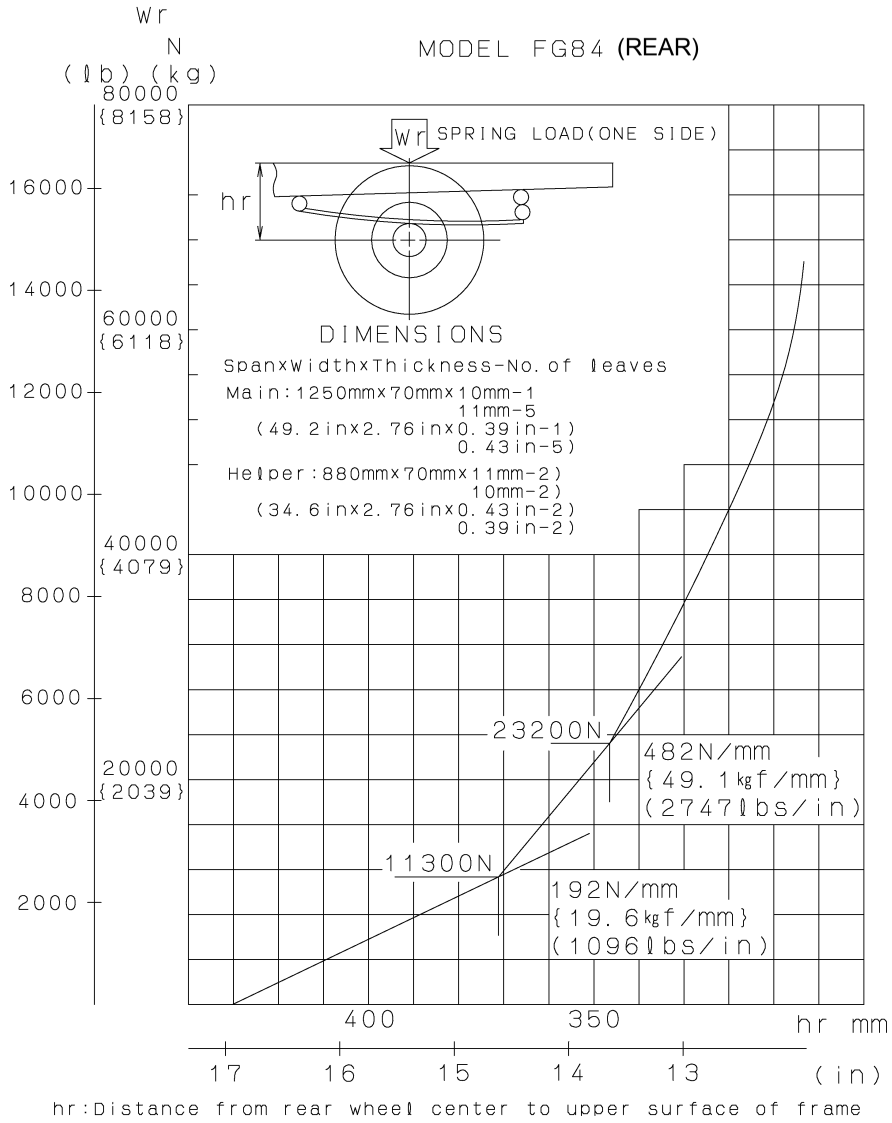

https://truckmanualshub.com/

Return to Table of Contents

https://truckmanualshub.com/

7.3 Vehicle's sprung weight

VEHICLE MODEL	SPRUNG WEIGHT kg (lbs)		
	FRONT	REAR	TOTAL
FE83DDZSLSUH FE84DDZSLSUH	1510 (3,330)	340 (750)	1850 (4,080)
FE83DEZSLSUH FE84DEZSLSUH	1550 (3,415)	315 (685)	1865 (4,100)
FE83DGZSLSUH FE84DGZSLSUH	1575 (3,470)	320 (710)	1895 (4,180)
FE84DHWSLSUH	1670 (3,680)	405 (895)	2075 (4,575)
FE84DJZSLSUH	1580 (3,485)	340 (750)	1920 (4,235)
FE85DDZSLSUG	1480 (3,265)	325 (715)	1805 (3,980)
FE85DEZSLSUG	1520 (3,350)	300 (660)	1820 (4,010)
FE85DGZSLSUG	1540 (3,395)	310 (685)	1850 (4,080)
FE85DJZSLSUG	1550 (3,415)	330 (730)	1880 (4,145)
FE85DKZSLSUG	1565 (3,450)	325 (720)	1890 (4,170)
FE85DDZSLSUH	1515 (3,340)	335 (740)	1850 (4,080)
FE85DEZSLSUH	1550 (3,415)	315 (695)	1865 (4,110)
FE85DGZSLSUH	1575 (3,470)	320 (710)	1895 (4,180)
FE85DJZSLSUH	1590 (3,505)	335 (740)	1925 (4,245)
FE85DKZSLSUH	1600 (3,525)	335 (740)	1935 (4,265)
FG84DF6SLSUJ	1535 (3,385)	300 (660)	1835 (4,045)

Return to Table of Contents

8. TIRE AND DISC WHEEL

TIRE

VEHICLE MODEL	TIRE SIZE	PLY RATING	LOAD RANGE	RIM WIDTH in.	TIRE DIMENSION		LOAD CAPACITY PER AXLE		MAXIMUM INFLATION PRESSURE kPa (psi)
					OVERALL DIAMETER mm (in.)	SECTION WIDTH mm (in.)	FRONT SINGLE kg (lbs.)	REAR DUAL kg (lbs.)	
FE83	LT215/85R16	10	E	6	772 (30.4)	216 (8.5)	2430 (5360)	4480 (9880)	550 (80)
FE84									
FE85	215/75R17.5	12	F		767 (30.2)	212 (8.3)	3200 (7055)	6200 (13669)	690 (100)
FG84	LT235/85R16	10	E		812 (32.0)	230 (9.1)	2760 (6084)	5040 (11112)	550 (80)

DISC WHEEL

VEHICLE MODEL	WHEEL SIZE	BOLT HOLES	BOLT CIRCUIT DIAMETER mm (in.)	OFFSET mm (in.)	THICKNESS OF DISC	RIM TYPE
FE83	16X6K	5	208 (8.2)	127 (5.0)	9 (0.4)	1 PIECE (DROP CENTER)
FE84		6	222.25 (8.75)			
FE85	17.5X6.00					
FG84	16X6K			135 (5.3)		

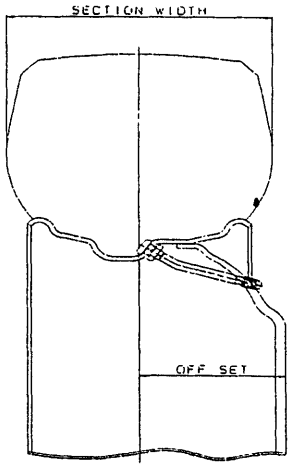

https://truckmanualshub.com/

Return to Table of Contents

9. FRONT AXLE

FE

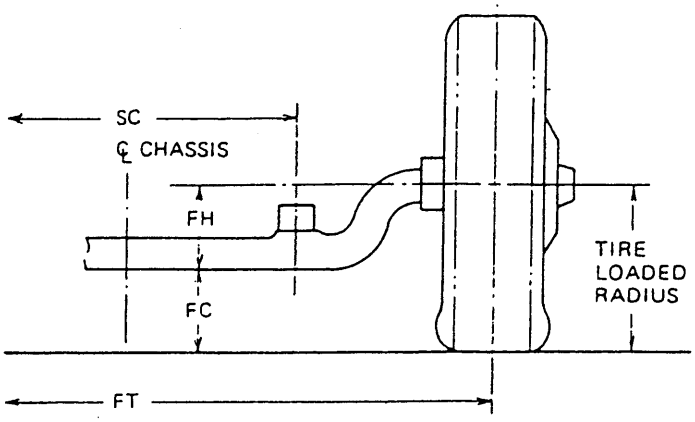

FG

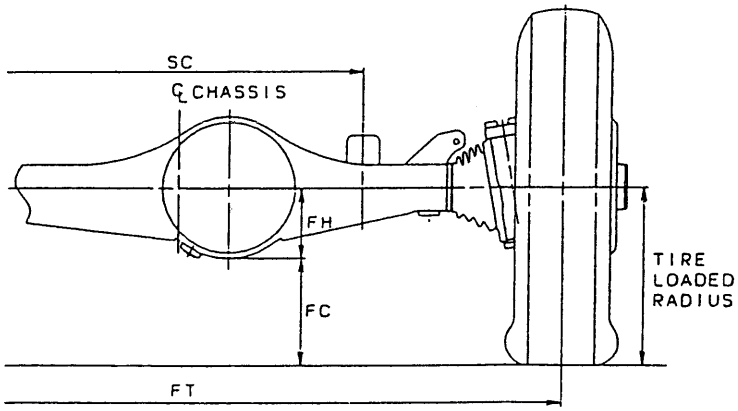

VEHICLE MODEL	FRONT AXLE		TIRE SIZE	FT mm (in.)	SC mm (in.)	FH mm (in.)
	MODEL	CAPACITY kg (lbs.)				
FE83	F200T	2400 (5290)	LT215/85R16 (16x6K)	1665 (65.55)	807 (31.77)	177 (6.97)
FE84	F300T	2500 (5510)				
FG84	F200TW	2600 (5730)	LT235/85R16 (16x6K)	1650 (65.00)	807 (31.77)	156.5 (6.16)
FE85	F350T	2900 (6390)	215/75R17.5 (17.5x6.00)	1665 (65.55)	807 (31.77)	177 (6.97)

DEFINITIONS

FT : Front tread

SC : Spring to spring distance

FH : Distance between the center line of tire and the bottom of front axle

FC : Front axle clearance
Minimum clearance between the front axle and the ground-line

TIRE LOADED RADIUS : See section 7: FRAME HEIGHT “Tire radius” (PAGE II-7-1)

Formula for calculating front axle clearance

FC = Tire loaded Radius – FH

Return to Table of Contents

https://truckmanualshub.com/

10. REAR AXLE

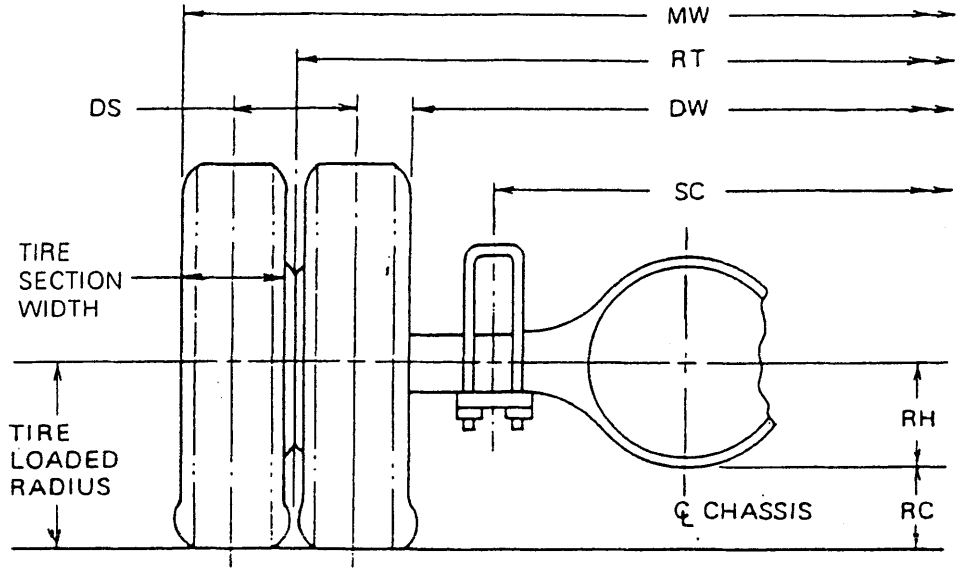

VEHICLE MODEL	REAR AXLE		TIRE SIZE	RT mm (in.)	SC mm (in.)	RH mm (in.)	DS mm (in.)
	MODEL	CAPACITY kg (lbs.)					
FE83	R033T	4500 (9920)	LT215/85R16 (16x6K)	1660 (65.35)	990 (38.98)	182.5 (7.19)	254 (10.00)
FE84							
FE84W				1560 (61.42)	900 (35.43)		
FE85	R035T	5760 (12700)	215/75R17.5 (17.5x6.00)	1660 (65.35)	990 (38.98)		
FG84	R033T	4300 (9480)	LT235/85R16 (16x6K)	1560 (61.42)	900 (35.43)		270 (10.63)

DEFINITIONS

RT : Rear tread
SC : Spring to spring distance
RH : Distance between the center line of tire and the bottom of rear axle
DS : Dual tire spacing
DW : Minimum distance between the inner surface of rear tires
MW : Overall width of vehicle
RC : Rear axle clearance
Minimum clearance between the rear axle and the ground-line

TIRE SECTION WIDTH : See section 8: “TIRE AND DISC WHEEL” (PAGE II-8-1)
TIRE LOADED RADIUS : See section 7: FRAME HEIGHT “Tire radius” (PAGE II-7-1)

Formula for calculating rear axle clearance

DW = RT – DS – TIRE SECTION WIDTH
MW = RT + DS + TIRE SECTION WIDTH
RC = TIRE LOADED RADIUS – RH

Return to Table of Contents

https://truckmanualshub.com/

11. REAR AXLE BOUNCE HEIGHT

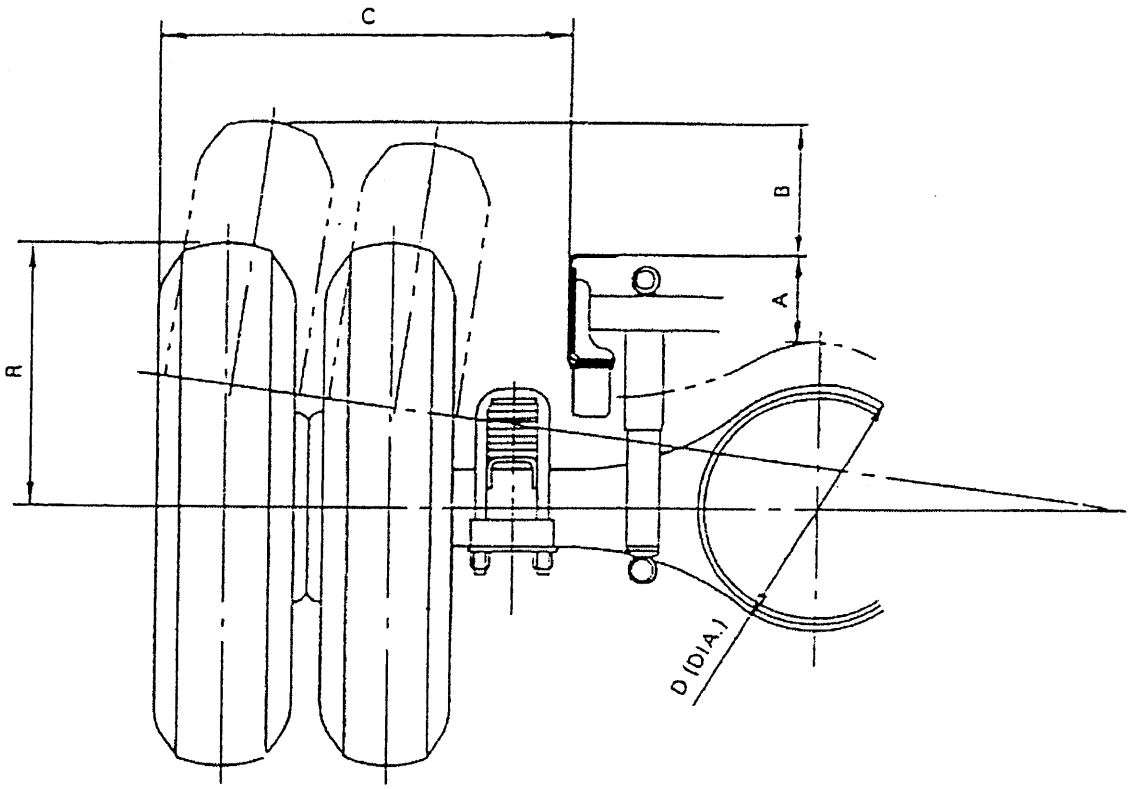

MODEL	TIRE SIZE	R	A(1)	B(2)	C(3)	D
		mm (in.)	mm (in.)	mm (in.)	mm (in.)	mm (in.)
FE83	LT215/85R16	396.5 (15.61)	180 (7.09)	105 (4.13)	645 (25.39)	365 (14.37)
Except FE84DHW	LT215/85R16	396.5 (15.61)	180 (7.09)	105 (4.13)	650 (25.59)	
FE84DHW	LT215/85R16	396.5 (15.61)	137 (5.39)	159 (6.26)	645 (25.39)	
FE85	LT215/75R17.5	393.5 (15.49)	180 (7.09)	105 (4.13)	648 (25.51)	
FG84	LT235/85R16	414 (16.30)	115 (4.53)	170 (6.69)	669 (26.30)	

NOTES:

(1) “A” indicates the distance between the top of rear axle and the upper face of frame in extreme bump position.

(2) “B” indicates the distance between the top of tire and the upper face of frame in bump position.

(3) “C” indicates the distance between the side wall of tire and the web face frame.

Return to Table of Contents

https://truckmanualshub.com/

12. FUEL TANK

12.1 FE Series

<Except FE84DHW>

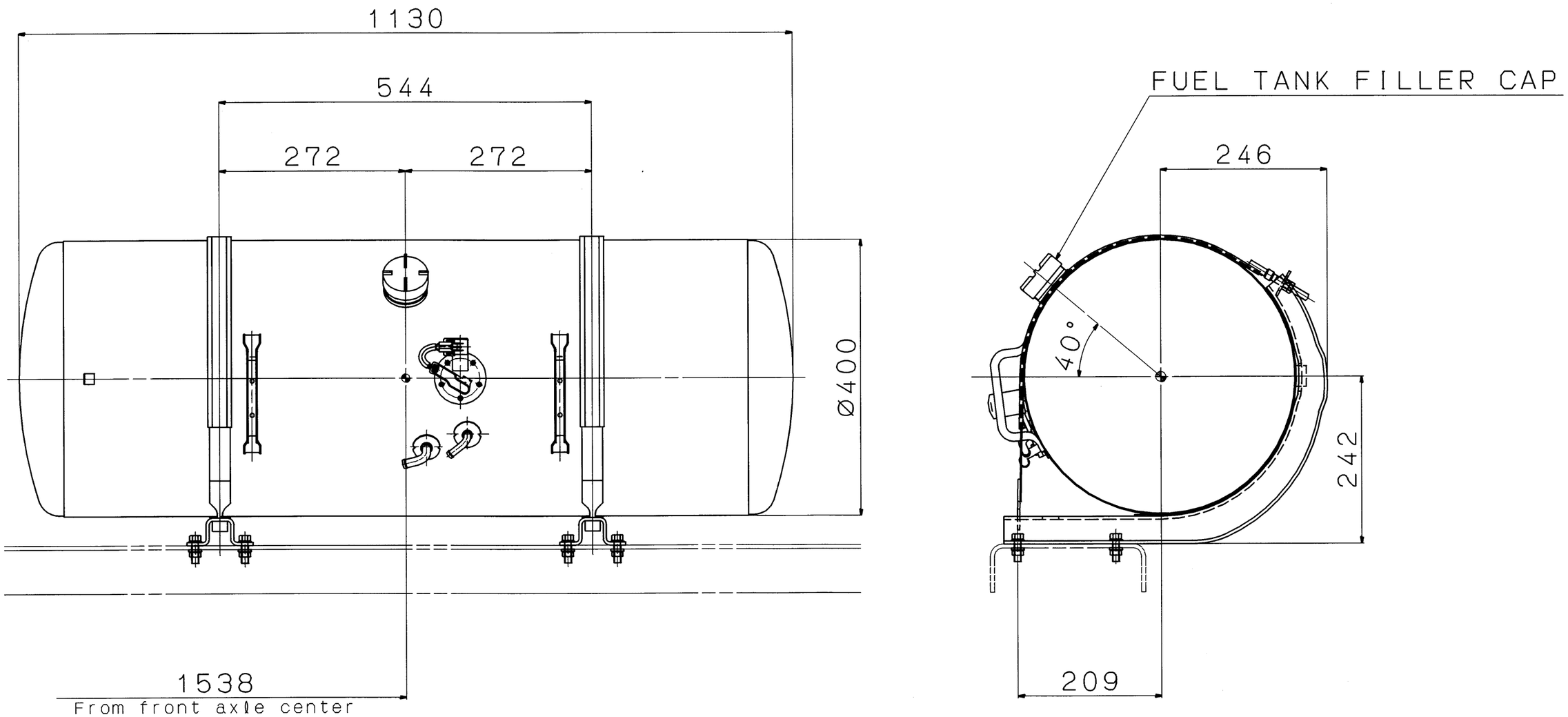

UNIT : mm

Return to Table of Contents

https://truckmanualshub.com/

<FE84DHW>

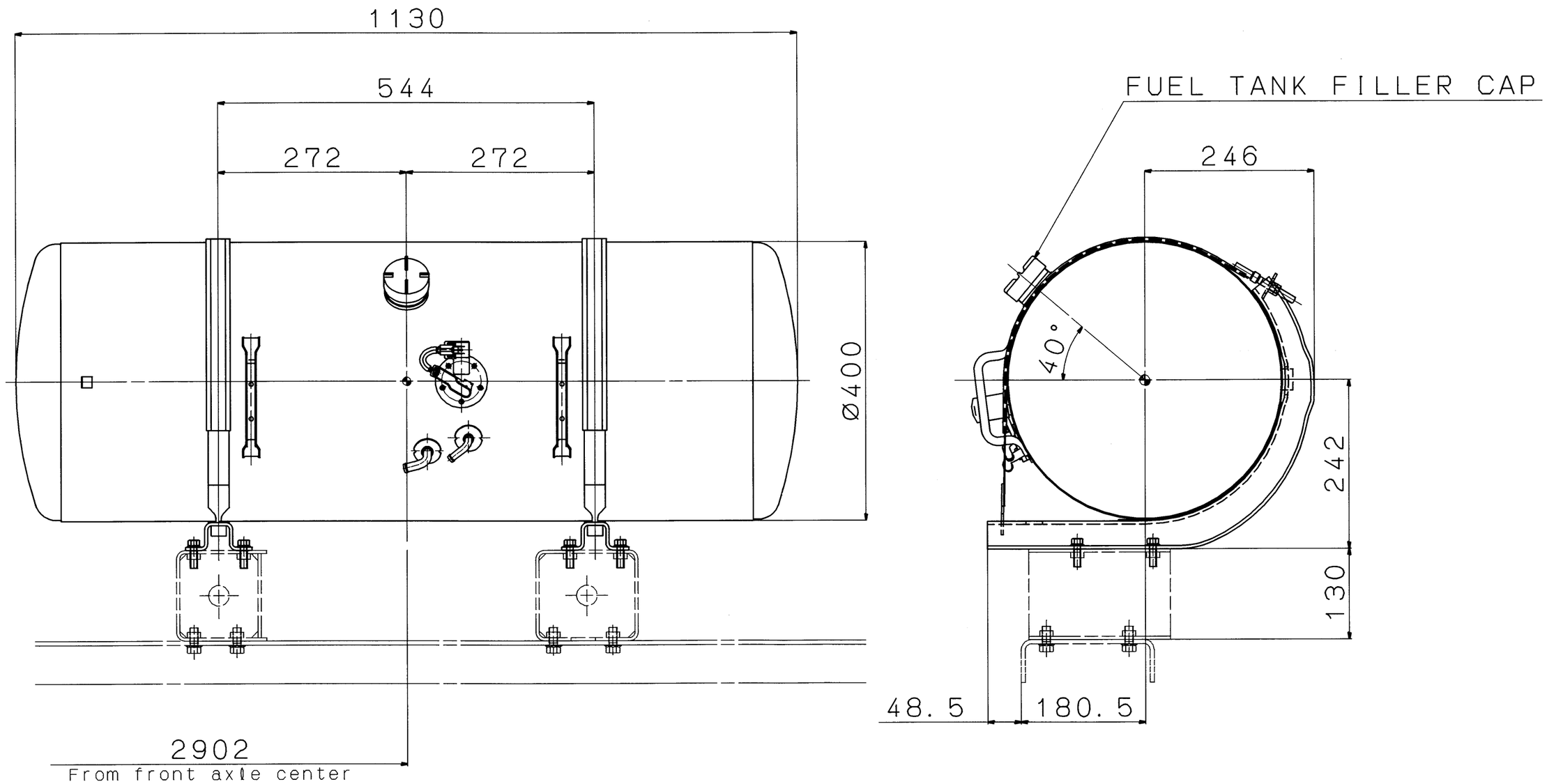

UNIT : mm

Return to Table of Contents

12.2 FE Series (Rear fuel tank)

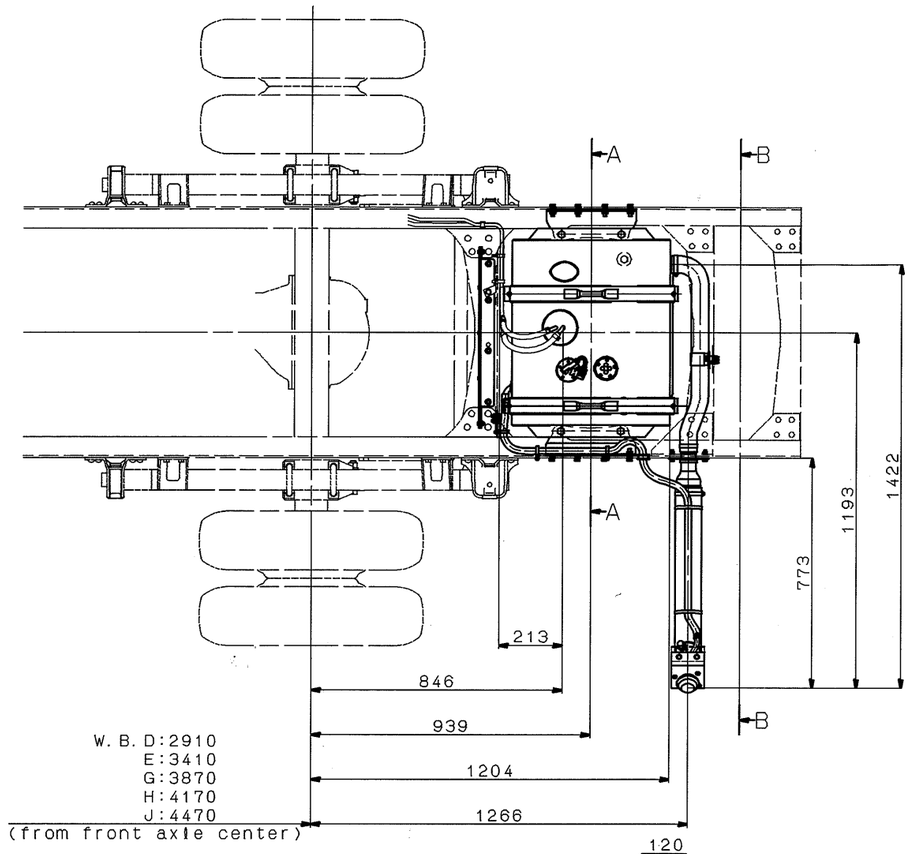

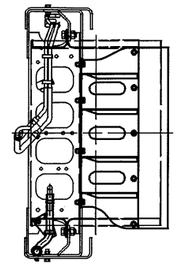

View A

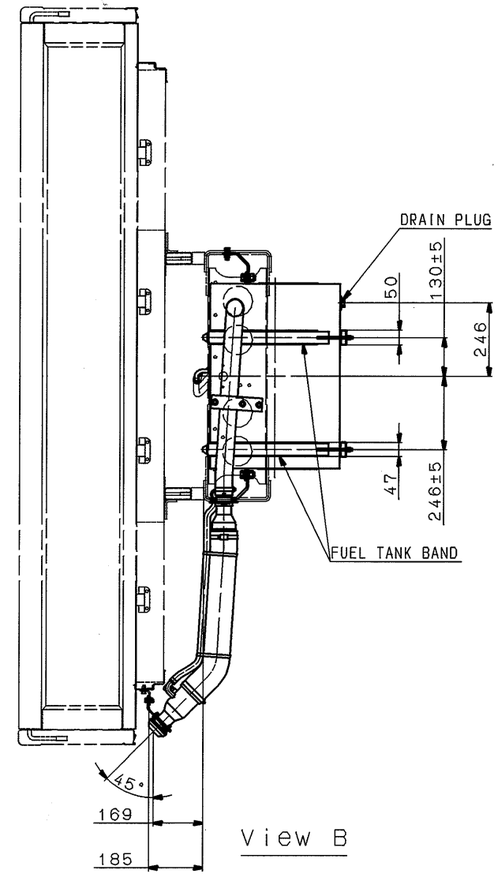

View B

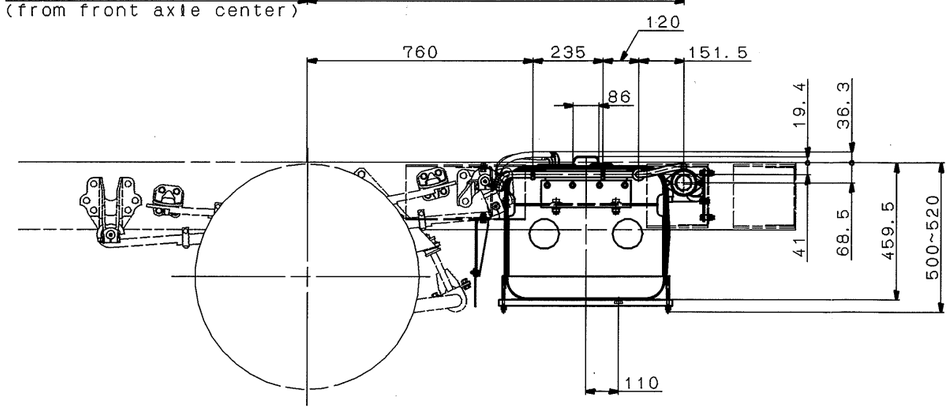

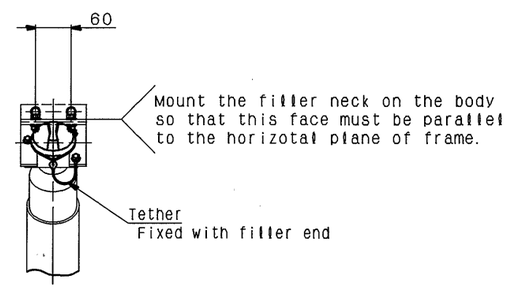

Detail Filler Opening

UNIT : mm

Return to Table of Contents

12.3 FE Series (Spare fuel tank)

FE8□DJZ

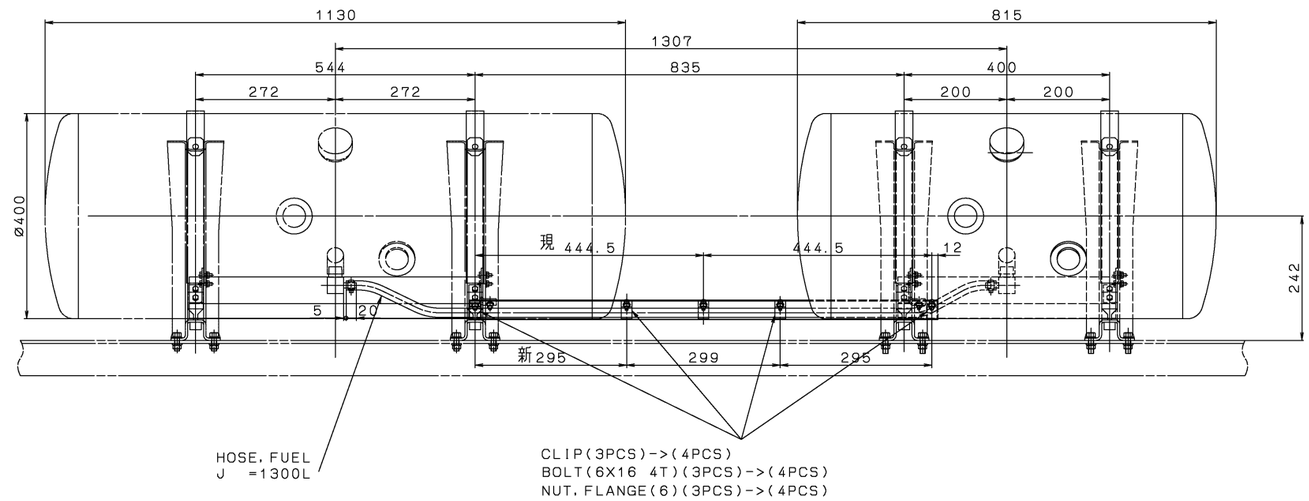

FE8□DGZ
FE8□DKZ

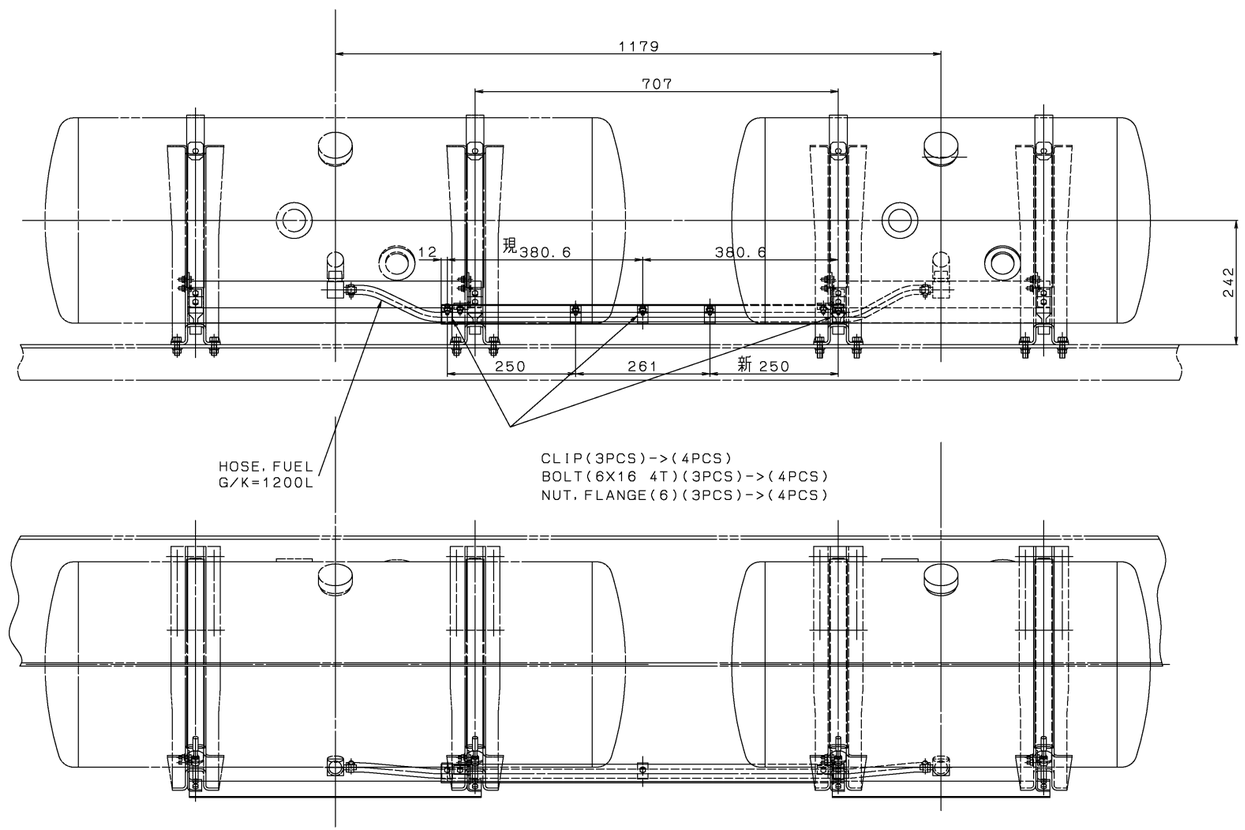

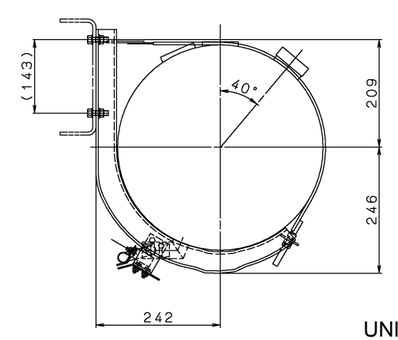

UNIT : mm

Return to Table of Contents

https://truckmanualshub.com/

12.4 FG Series

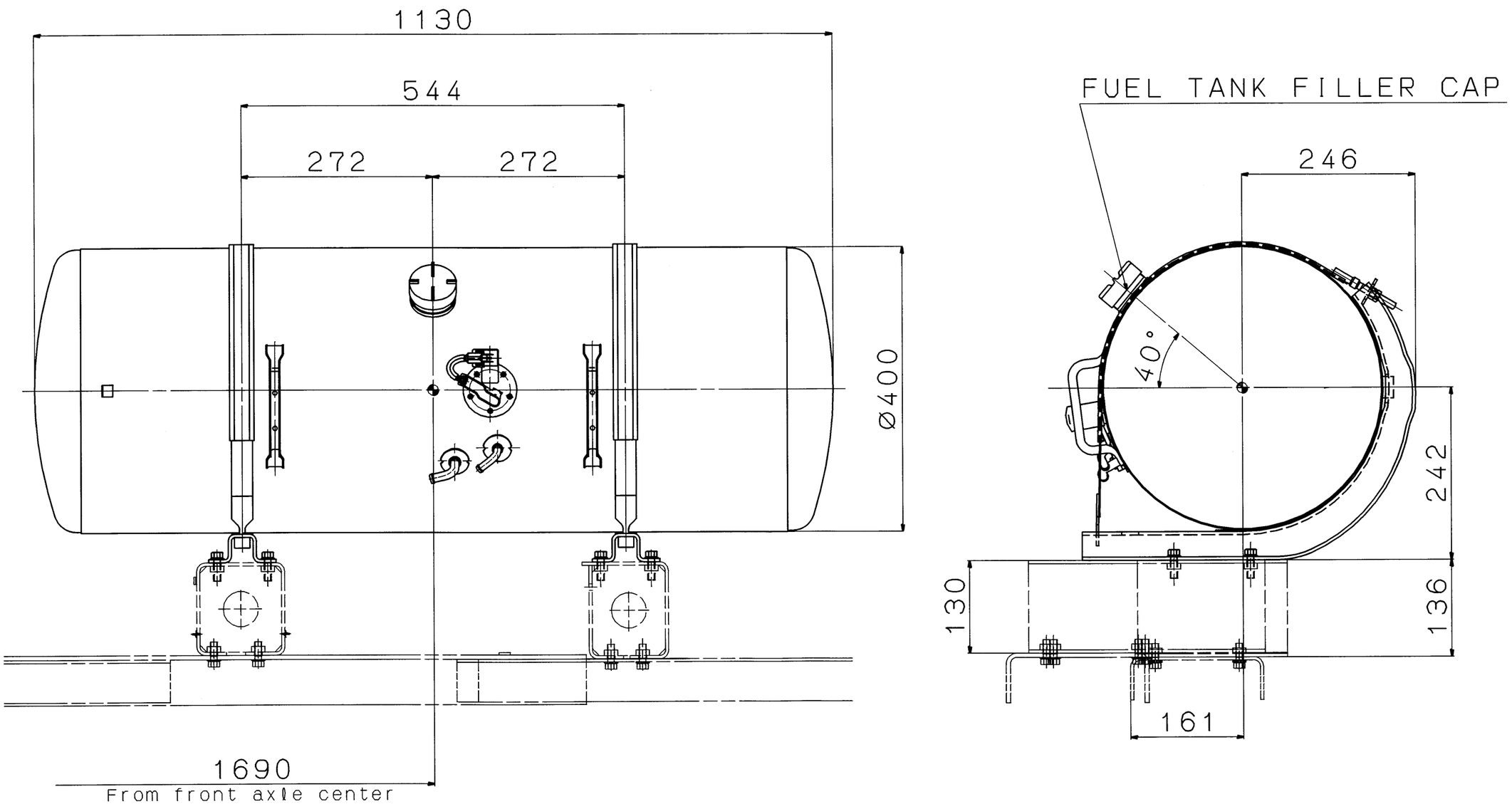

UNIT : mm

Return to Table of Contents

https://truckmanualshub.com/

13. BATTERY BOX

UNIT : mm (in.)

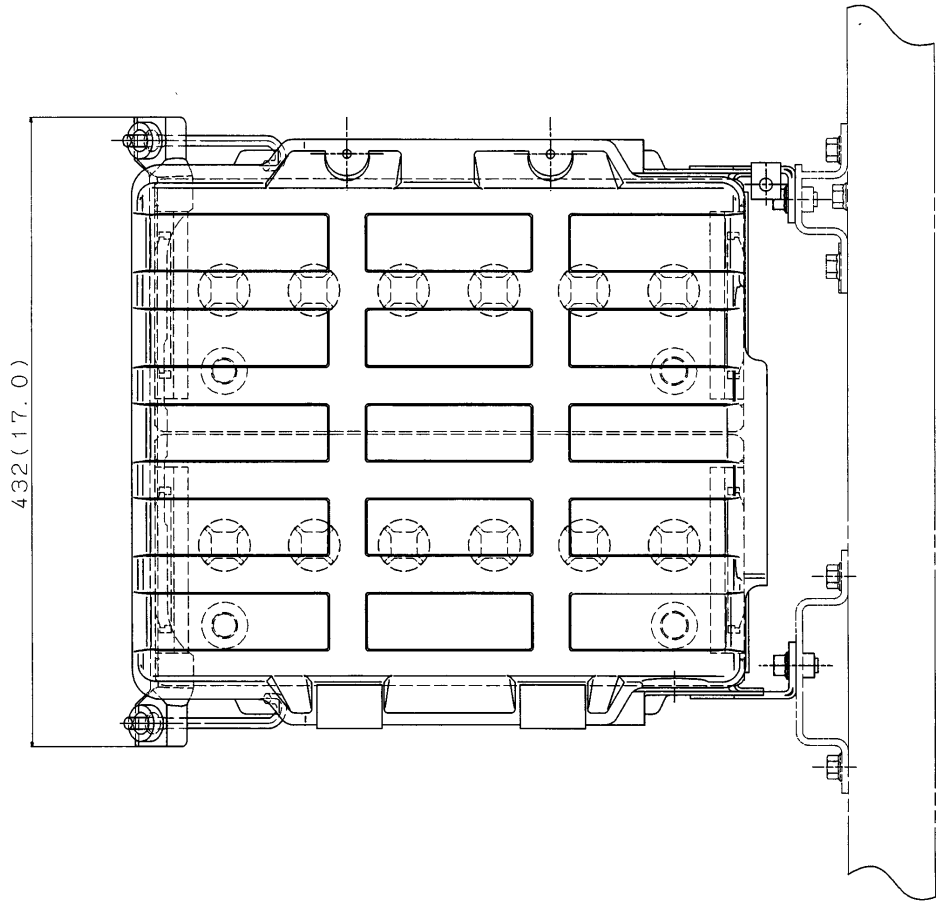

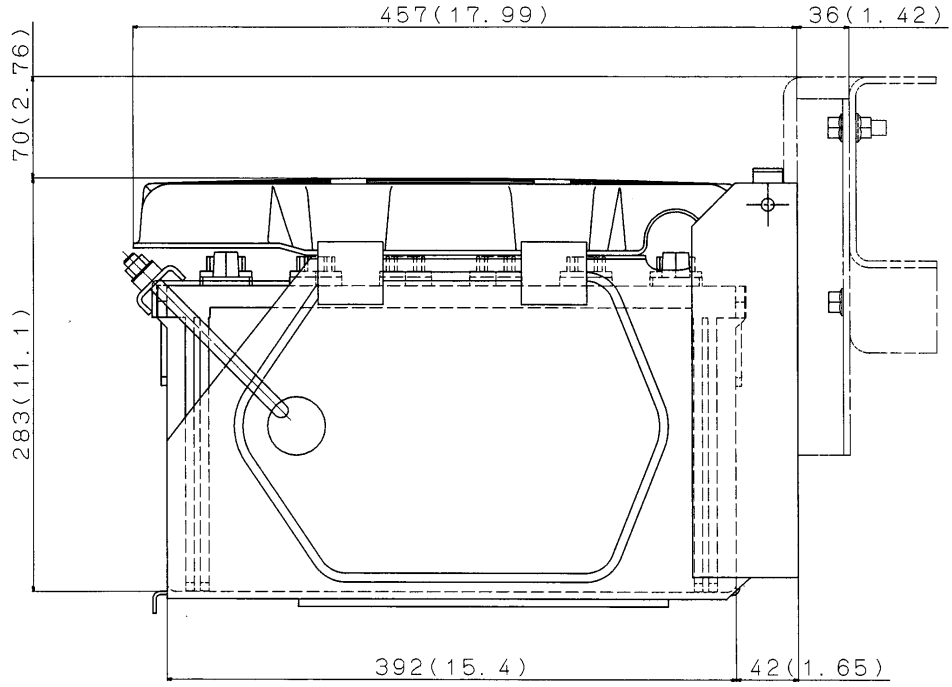

Return to Table of Contents

14. LICENSE PLATE LAMP

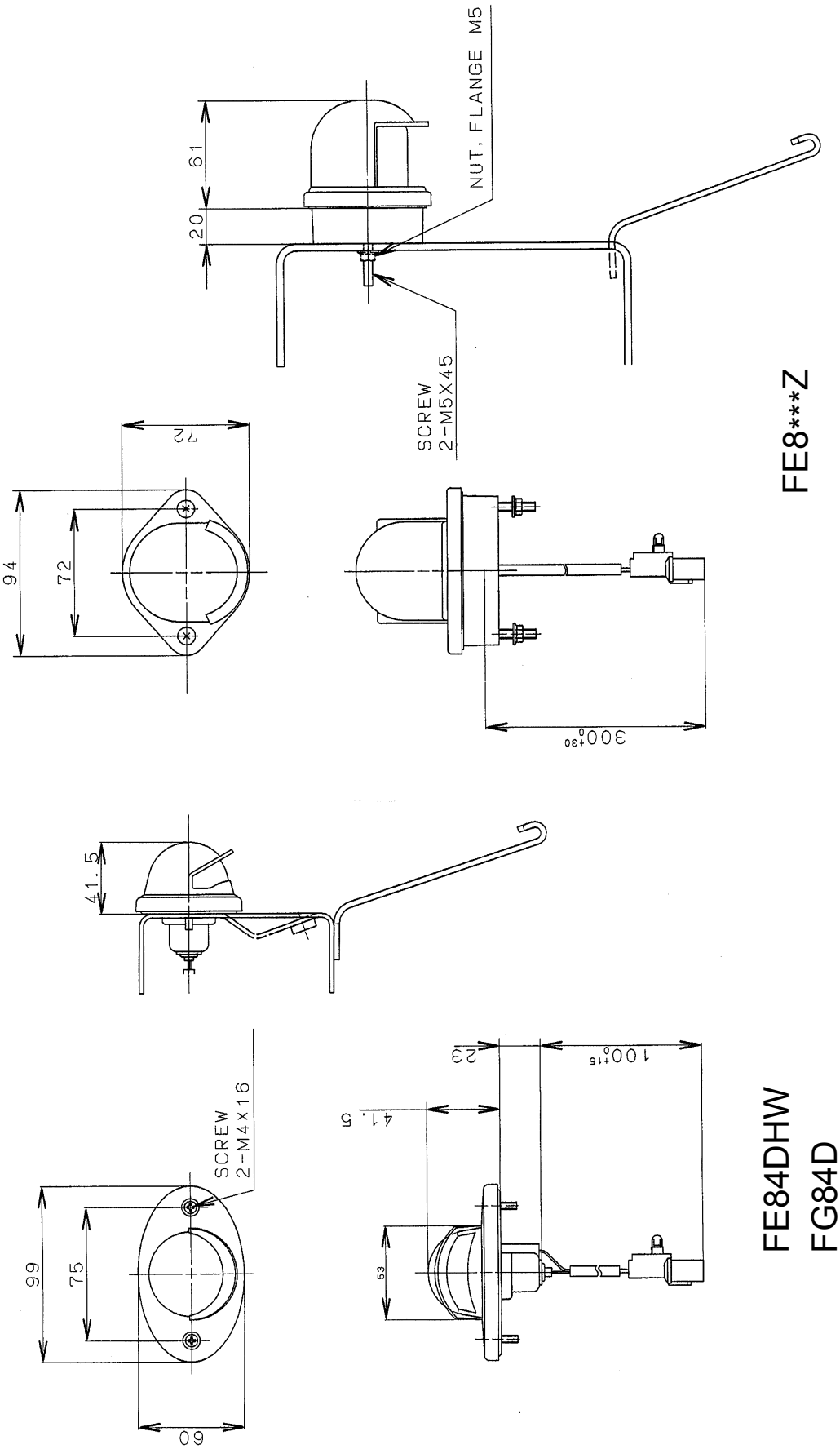

FE8***Z

FE84DHW
FG84D

Return to Table of Contents

https://truckmanualshub.com/

15. REAR COMBINATION LAMP

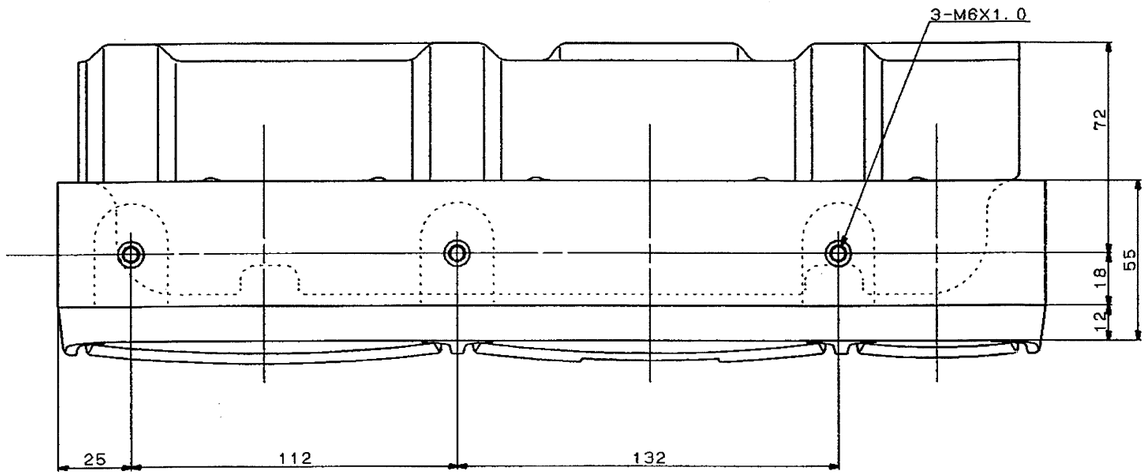

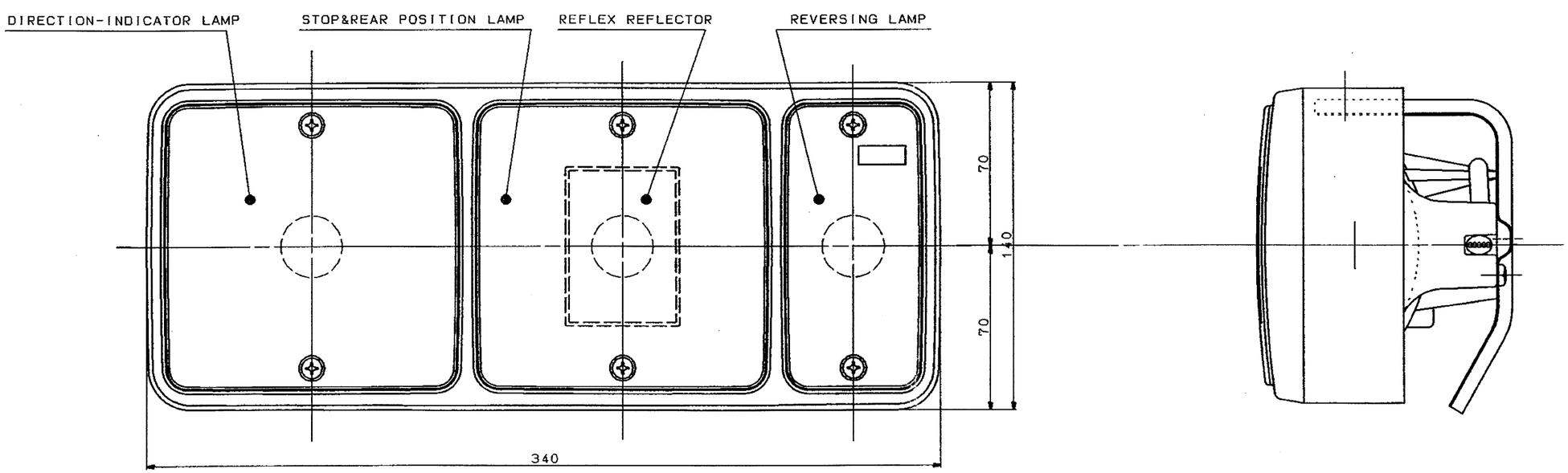

Return to Table of Contents

https://truckmanualshub.com/

16. BRAKES PIPING DIAGRAM
16.1 FE83D, FE84D

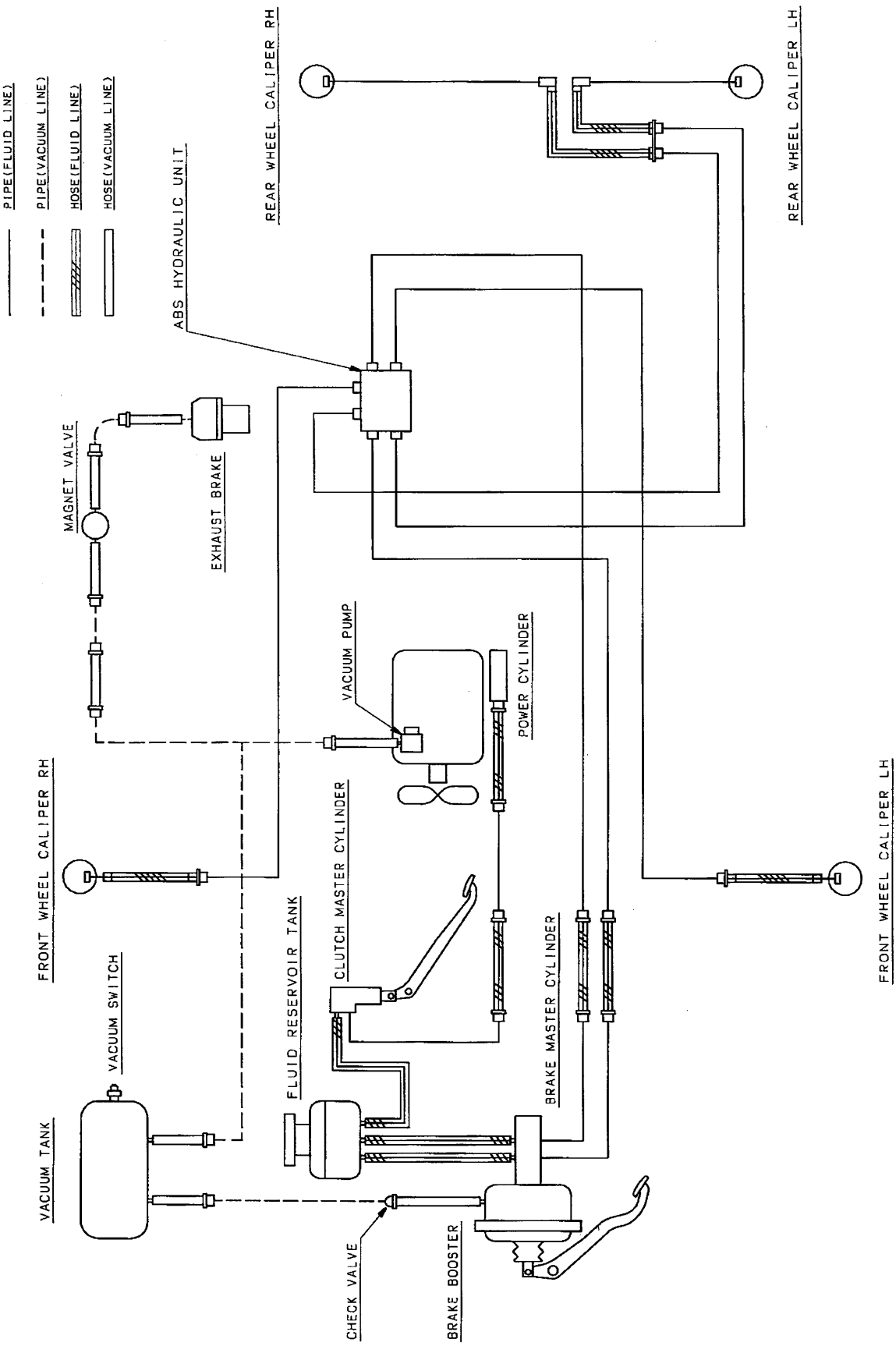

Return to Table of Contents

https://truckmanualshub.com/

16.2 FE85D

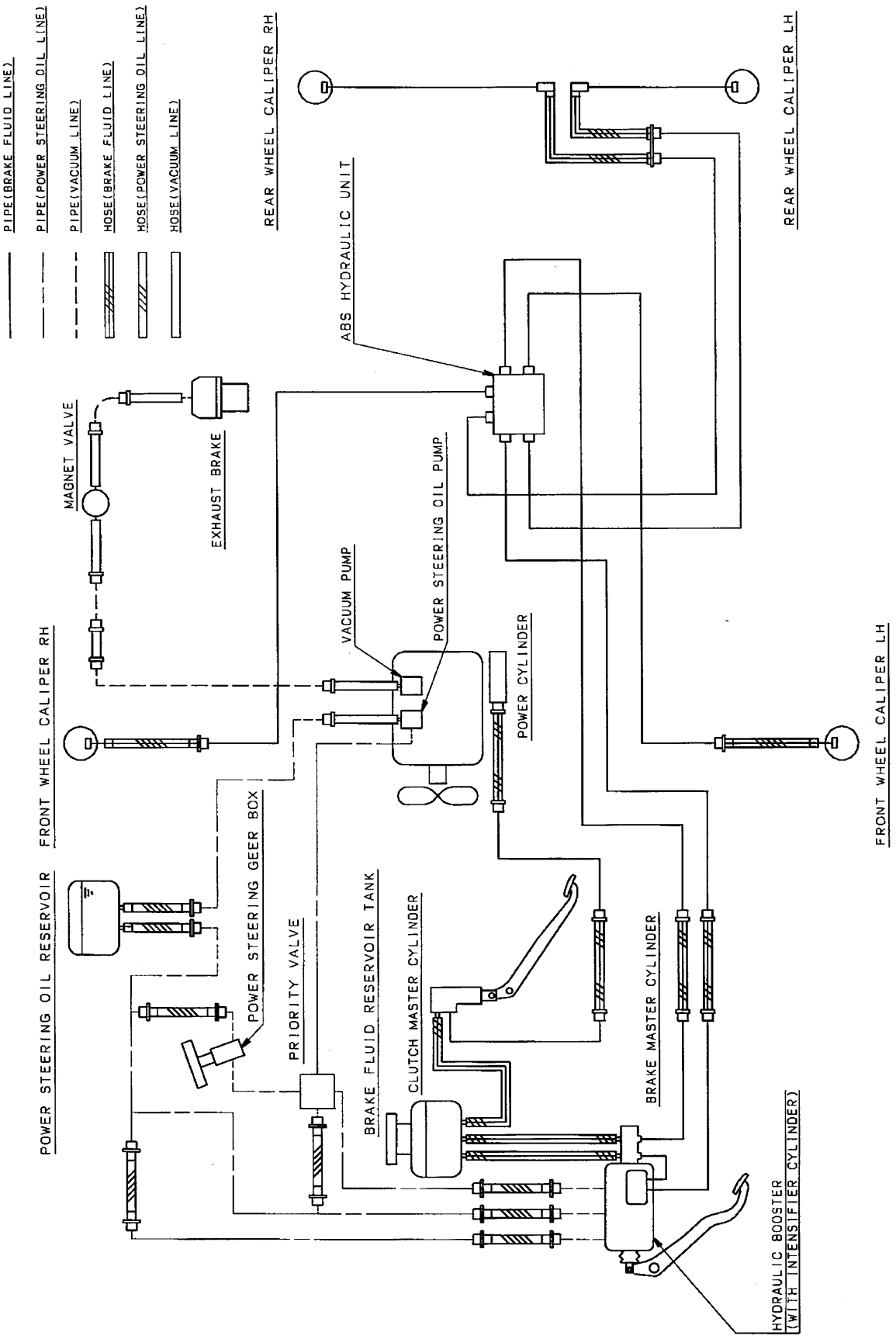

Return to Table of Contents

16.3 FG84DF6

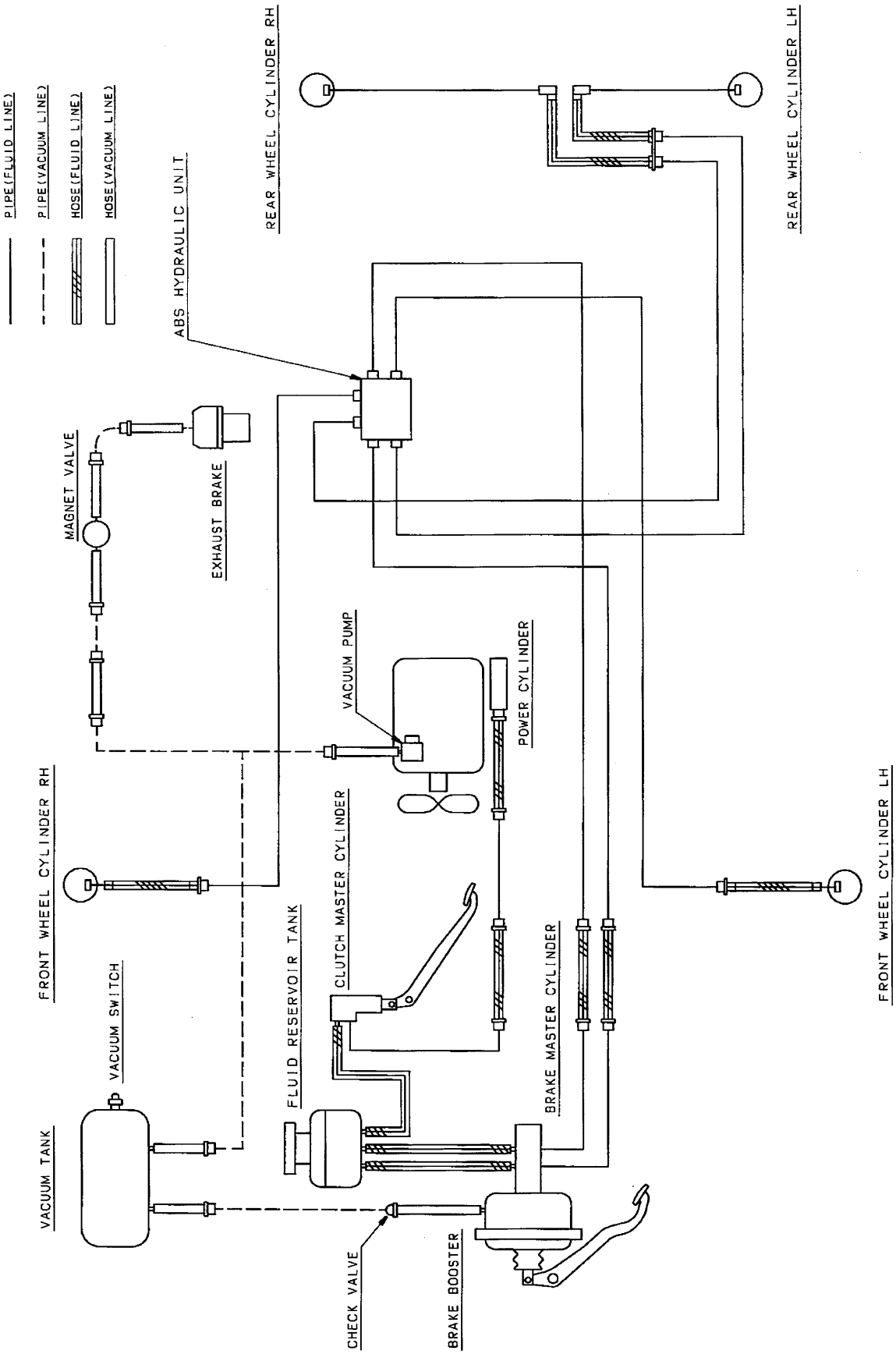

Return to Table of Contents

17. PROPELLER SHAFT

FE Series

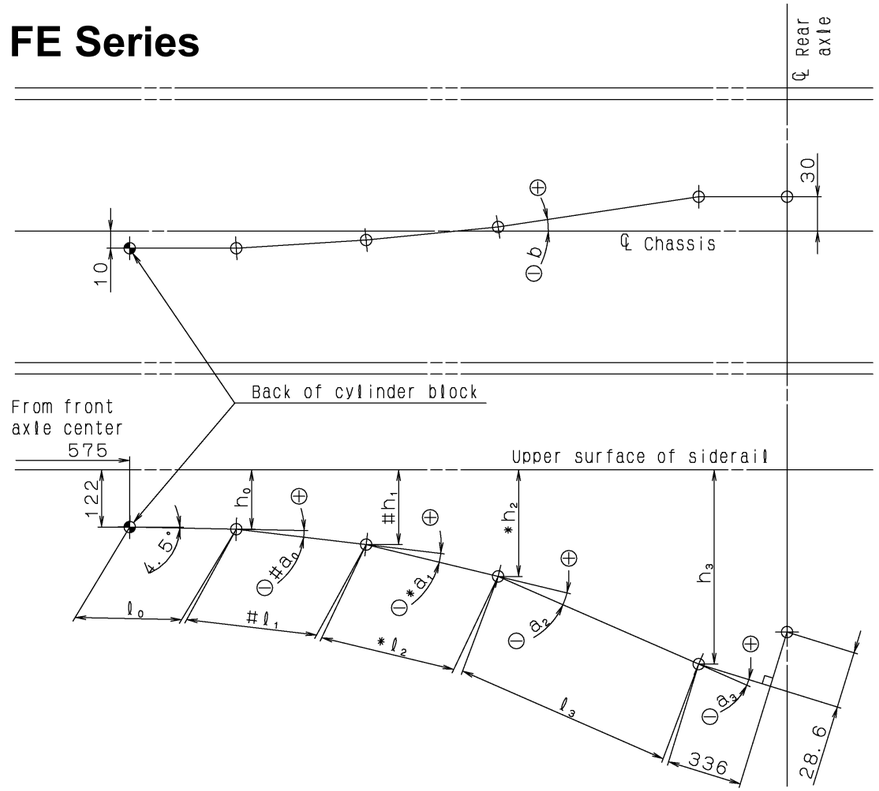

FG Series

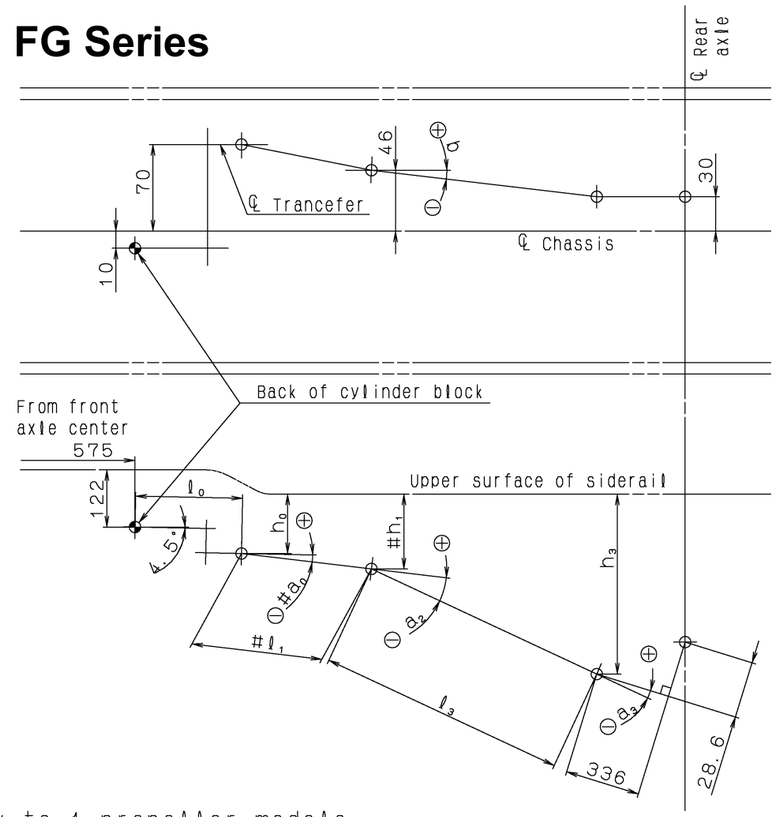

Note Dimension marked by # are not applicable only to 1-propeller models.
Dimension marked by * are applicable only to 3-propeller models.

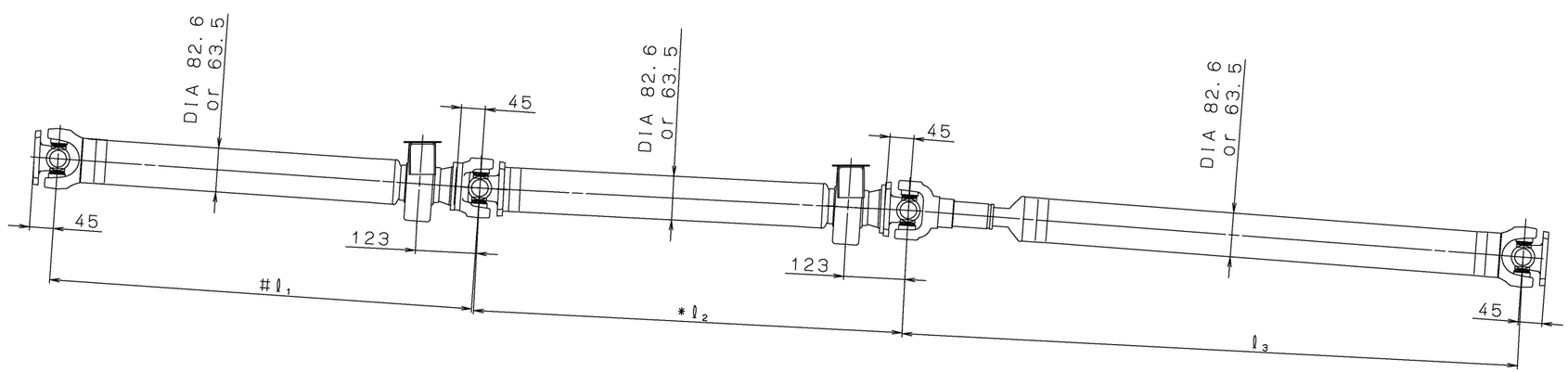

UNIT : mm

Return to Table of Contents

MODEL SERIES	VEHICLE MODEL (T/M MODEL)	ENG CTR TO JOINT (mm)	PROPELLER SHAFT TRUE LENGTH (mm)			JOINT POINT (mm)				JOINT ANGLE (Degree)				
		l_0	l_1	l_2	l_3*	h_0	h_1	h_2	h_3*	a_0	a_1	a_2*	a_3*	b
FE85D	FE85DDZ (T/M M036S6)	792	-	-	1164	253	-	-	324	-	-	1.0	0.1	2.0
	FE85DEZ (T/M M036S6)		678		986		302			0.4		2.8	-2.1	1.6
	FE85DGZ (T/M M036S6)		998		1126		319			0.7		3.5	-3.1	1.5
	FE85DJZ (T/M M036S6)		748	813	1164		305	347		0.5		4.1	-4.5	
	FE85DKZ (T/M M036S6)			1153				345			2.0	3.1	-4.4	
FE83D	FE83DDZ (T/M M036A6)	900	-	-	1057	262	-	-	324	-	-	1.1	0.0	2.2
	FE83DEZ (T/M M036A6)		568		988		301			0.5		2.7	-2.1	1.6
	FE83DGZ (T/M M036A6)		888		1128		318			0.8		3.4	-3.1	1.4
FE84D	FE84DDZ (T/M M036A6)	900	-	-	1057	262	-	-	324	-	-	1.1	0.0	2.2
	FE84DEZ (T/M M036A6)		568		988		301			0.5		2.7	-2.1	1.6
	FE84DGZ (T/M M036A6)		888		1128		318			0.8		3.4	-3.1	1.4
	FE84DJZ (T/M M036A6)		638	813	1166		305	347		0.6	0.9	4.1	-4.5	1.5
	FE84DHW (T/M M036A6)		1108	-	1258	229	278	-	279	2.0	-	2.5	1.1	1.3
FE85D	FE85DDZ (T/M M036A6)	900	-	-	1057	262	-	-	324	-	-	1.1	0.0	2.2
	FE85DEZ (T/M M036A6)		568		988		301			0.5		2.7	-2.1	1.6
	FE85DGZ (T/M M036A6)		888		1128		318			0.8		3.4	-3.1	1.4
	FE85DJZ (T/M M036A6)		638	813	1166		305	347		0.6	0.9	4.1	-4.5	1.5
	FE85DKZ (T/M M036A6)			1153				345			1.8	3.1	-4.4	
FG84D	FG84DF6 (T/M M036S5)	888	678	-	1021	514	535	-	479	2.8	-	4.8	0.3	-0.9

NOTE: *-marked is at the upper bounce limit (at the full-stroke).

Return to Table of Contents

https://truckmanualshub.com/

18. EXHAUST SYSTEM

18.1 FE8□DDZ

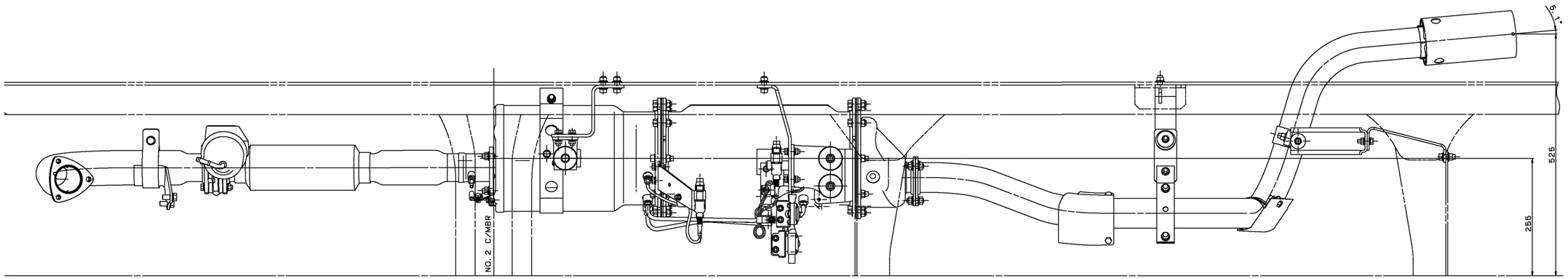

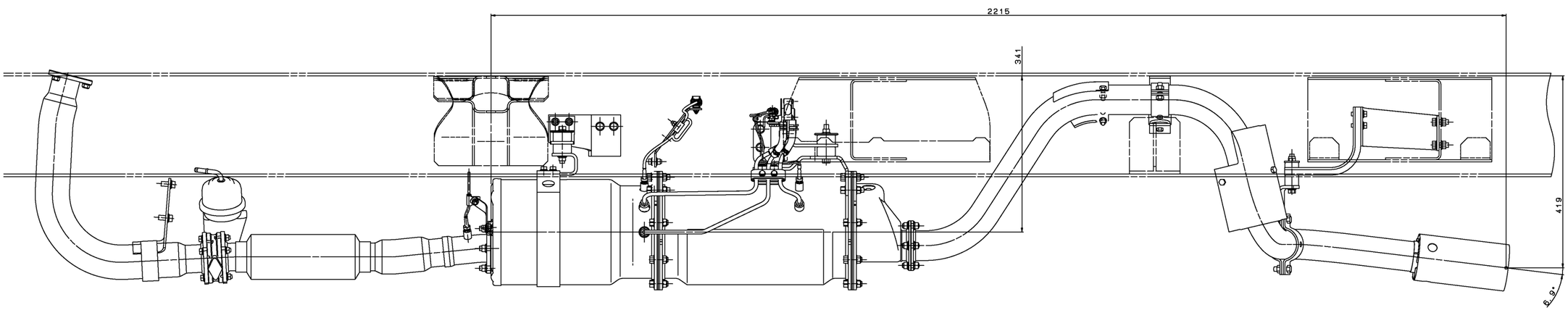

UNIT :mm

Return to Table of Contents

18.2 FE8□DEZ

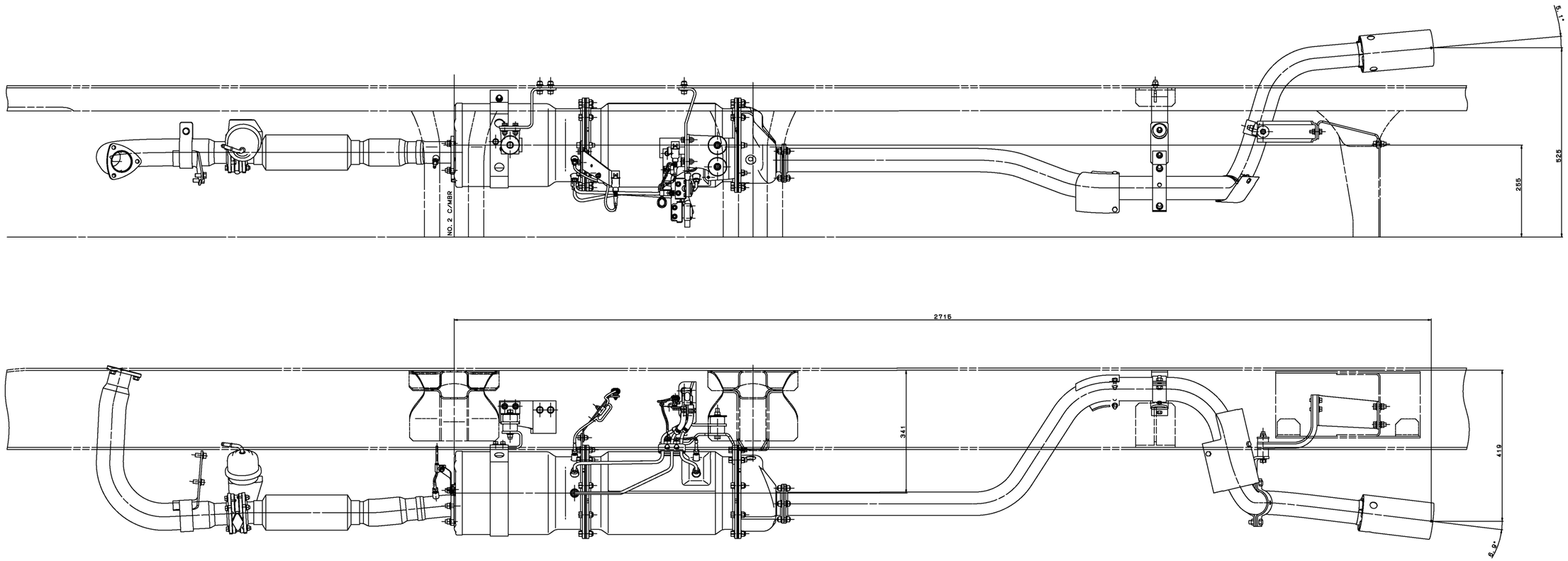

UNIT :mm

Return to Table of Contents

18.3 FE8□DGZ

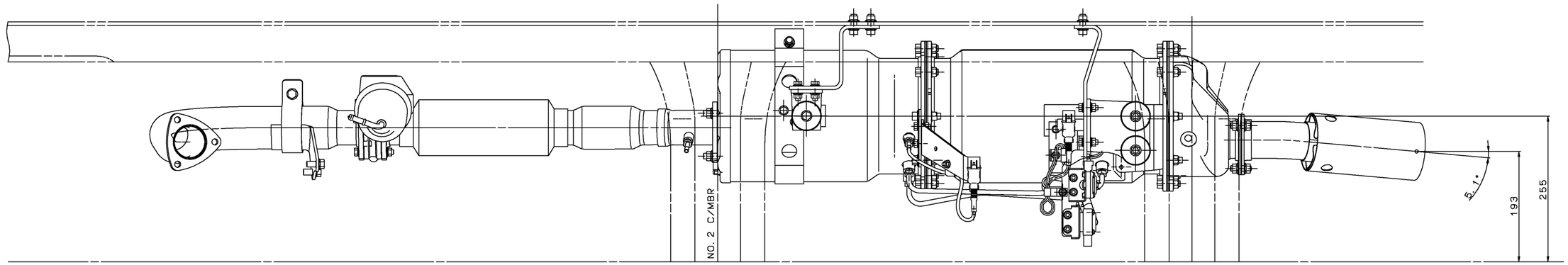

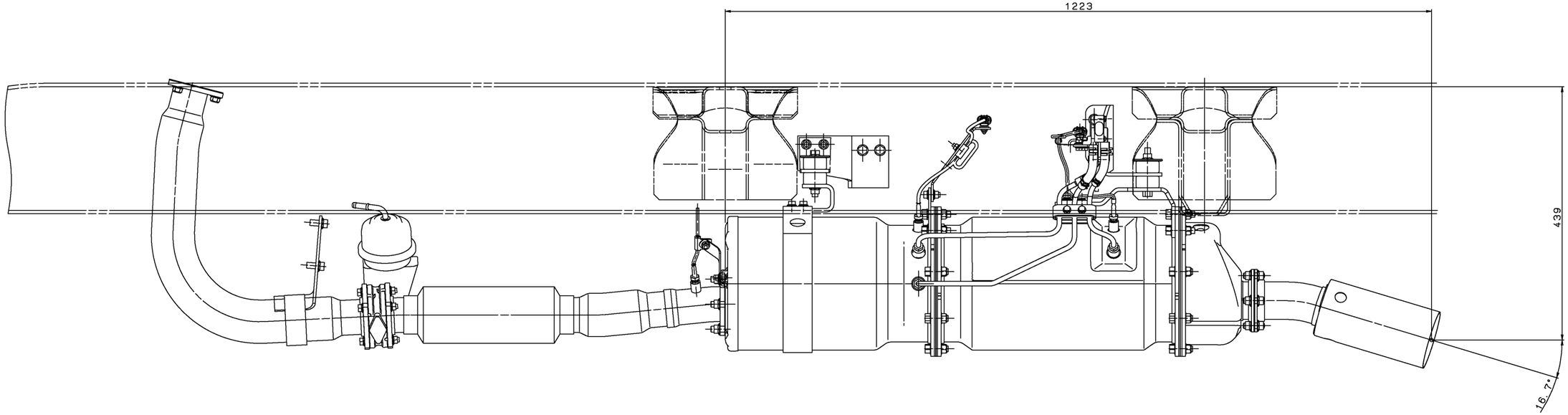

UNIT :mm

Return to Table of Contents

18.4 FE8□DJZ, FE85DKZ

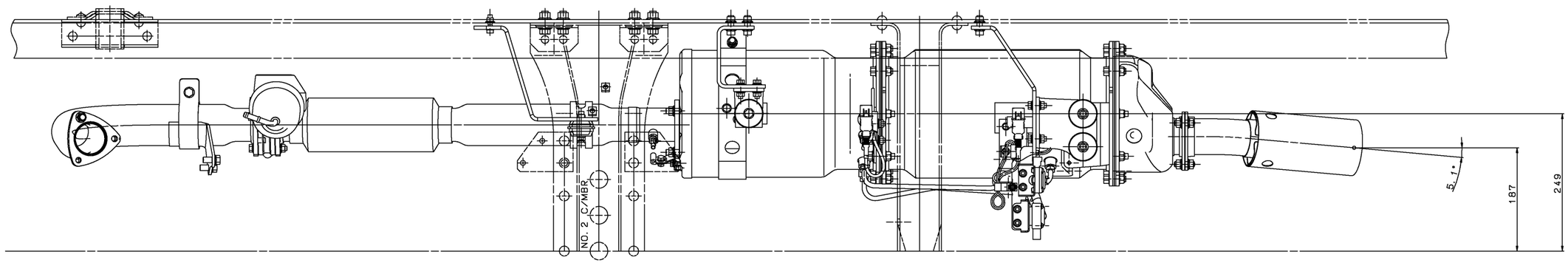

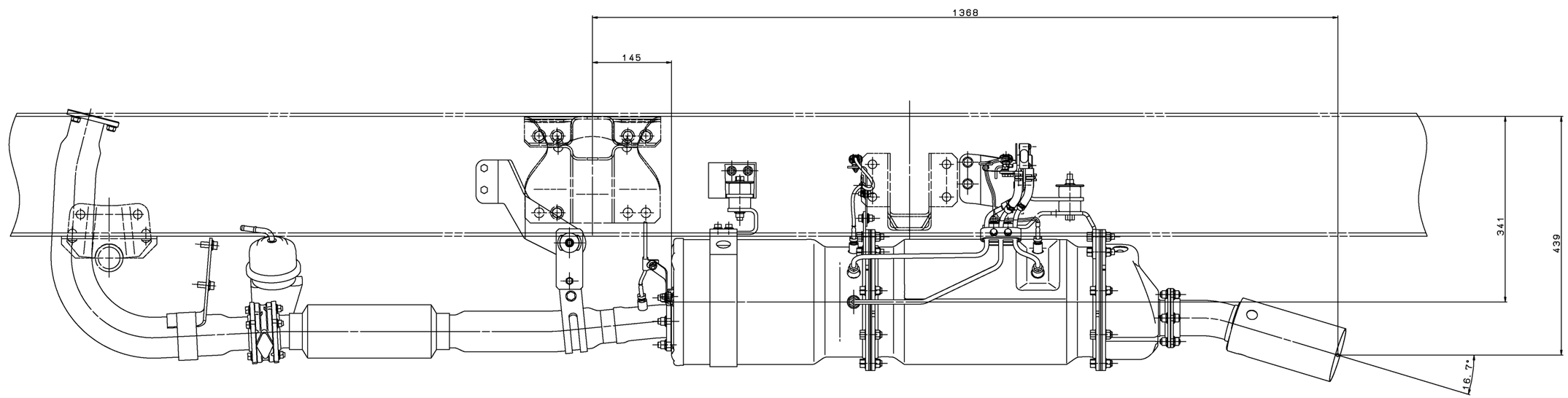

UNIT : mm

Return to Table of Contents

18.5 FE84DHW

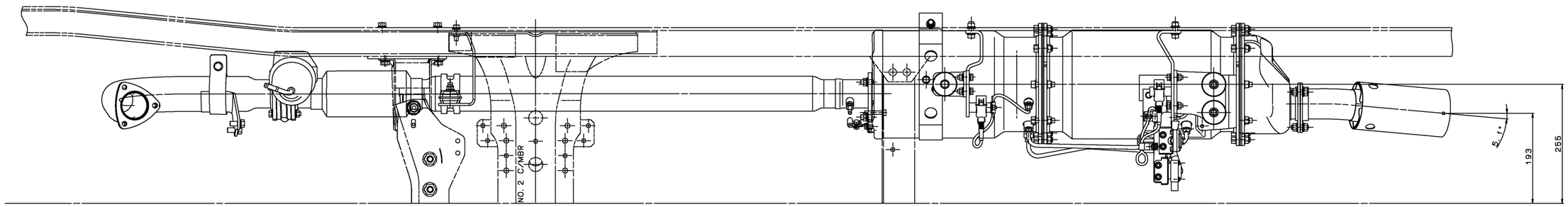

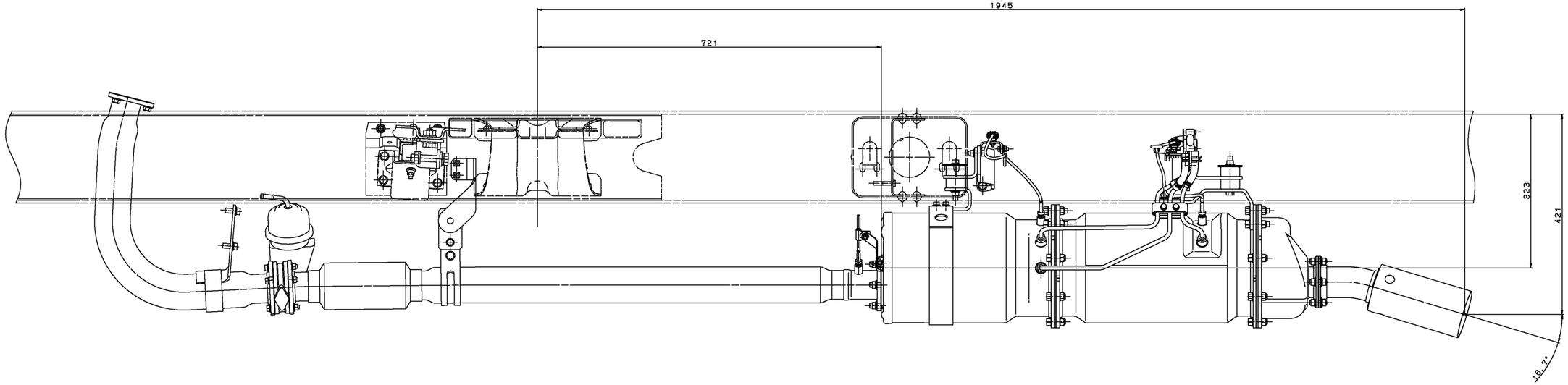

UNIT : mm

Return to Table of Contents

https://truckmanualshub.com/

18.6 FG84DF6

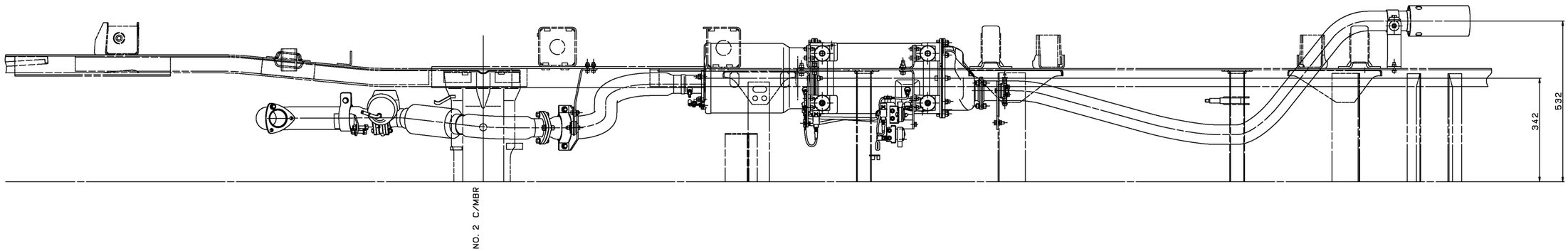

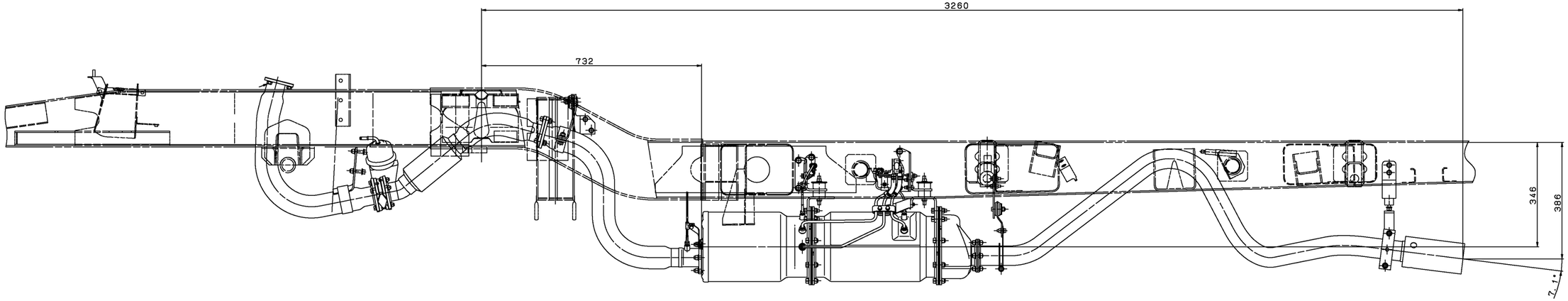

UNIT :mm

Return to Table of Contents

https://truckmanualshub.com/

19. ELECTRIC CIRCUIT DIAGRAM

19.1 POWER, CHARGE AND GROUND CIRCUIT

110 POWER CIRCUIT

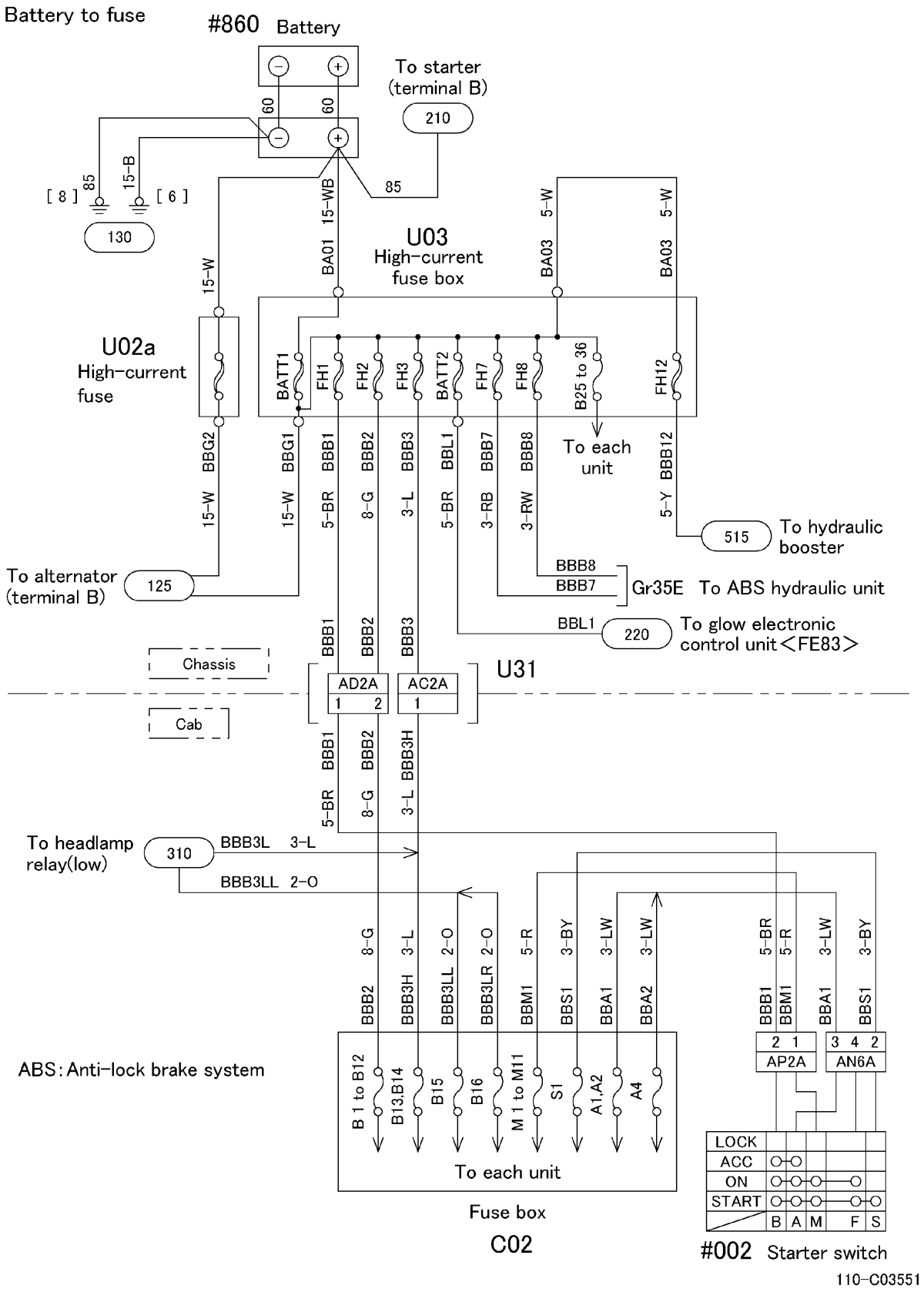

Return to Table of Contents

https://truckmanualshub.com/

110 POWER CIRCUIT

High-current fuse box
(Fuse B25)

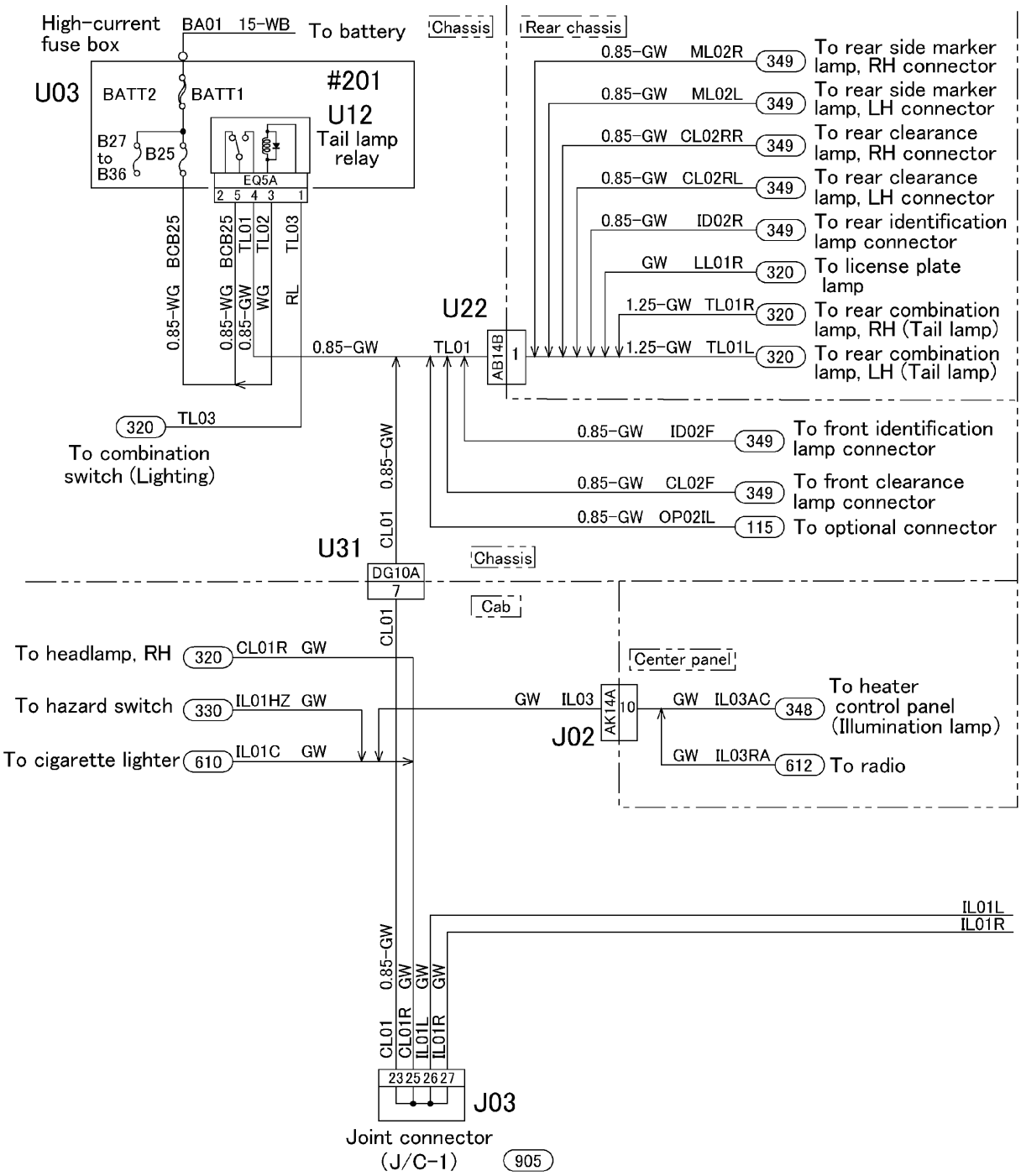

110-C03552-1

Return to Table of Contents

https://truckmanualshub.com/

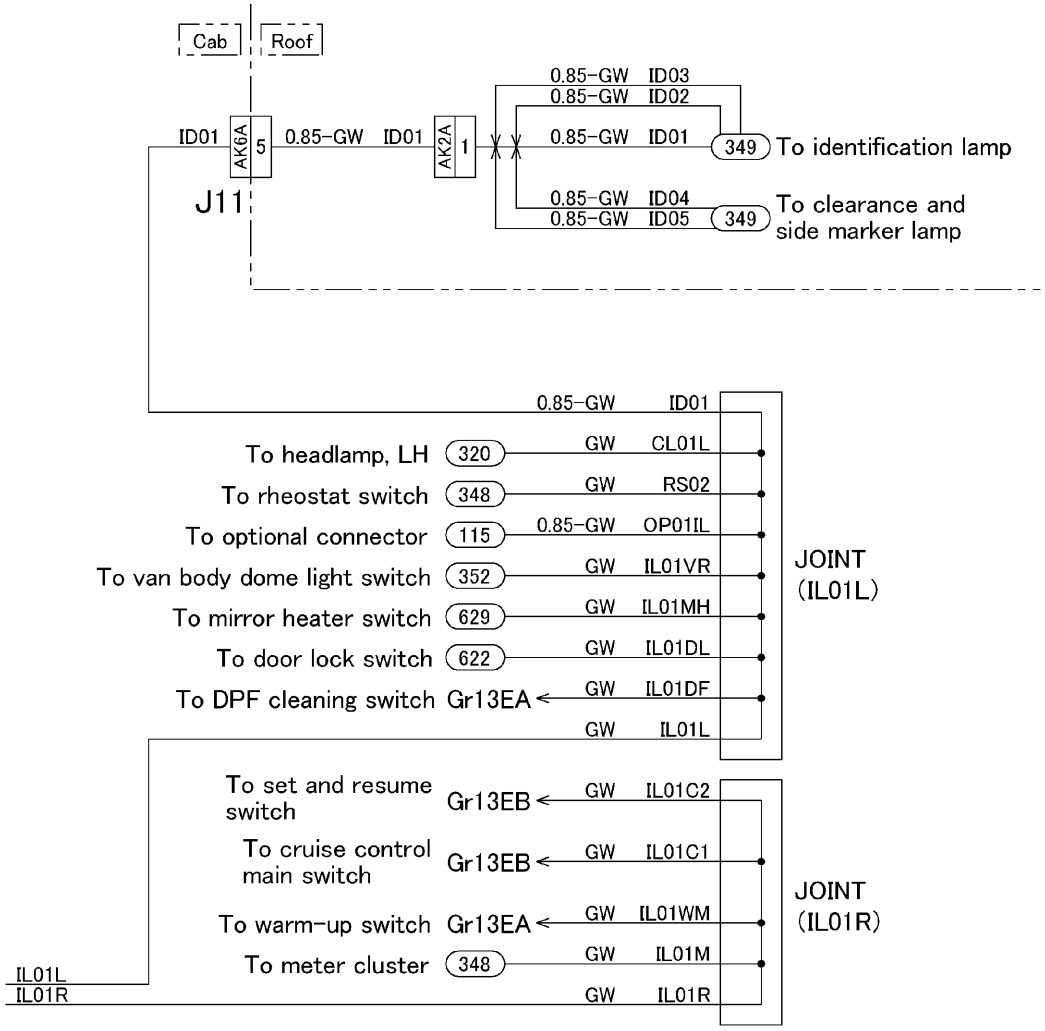

DPF : Diesel particulate filter

110-C03552-2

Return to Table of Contents

https://truckmanualshub.com/

High-current fuse box
(Fuse B27 to B36)

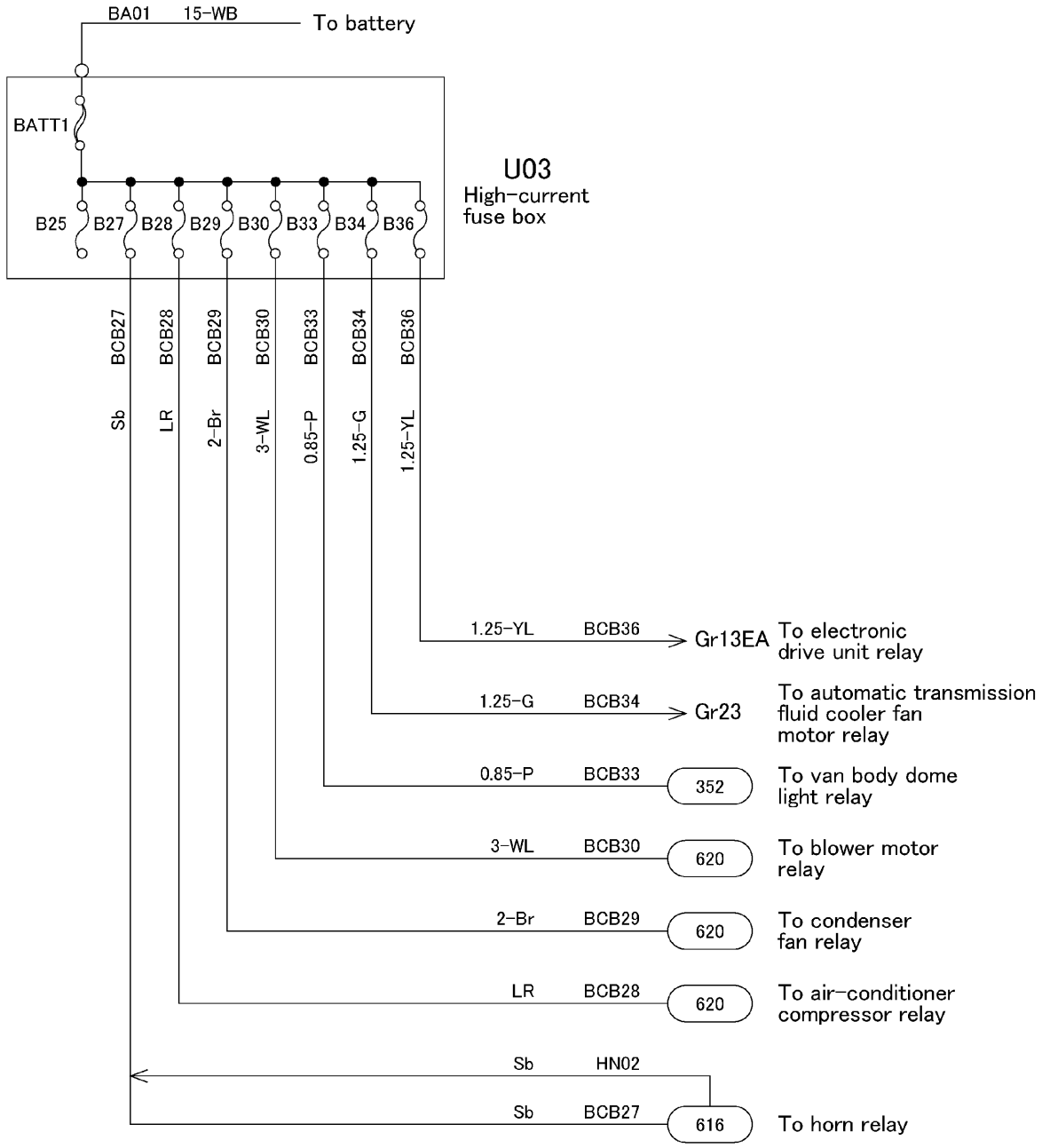

110-C03553

Return to Table of Contents

https://truckmanualshub.com/

110 POWER CIRCUIT

Fuse box
(Fuse A1 to A4)

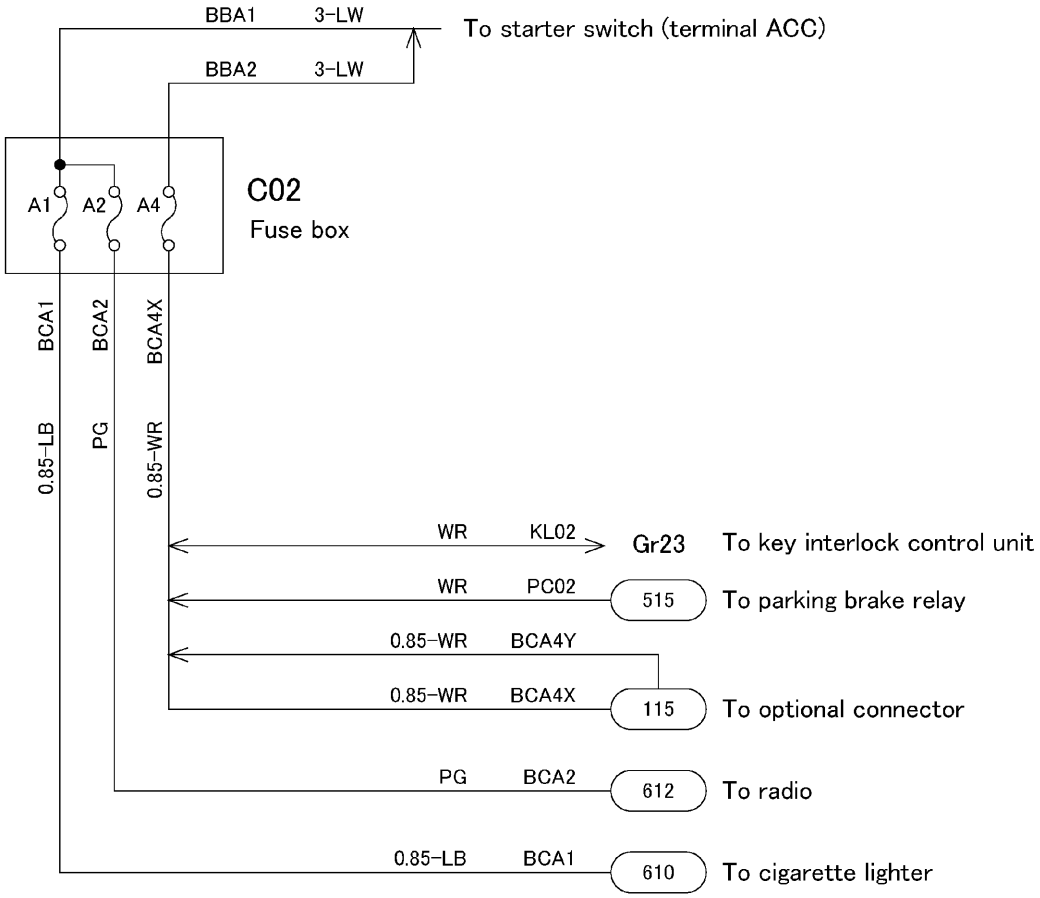

110-C03554

Return to Table of Contents

https://truckmanualshub.com/

110 POWER CIRCUIT

Fuse box
(Fuse B1 to B6)

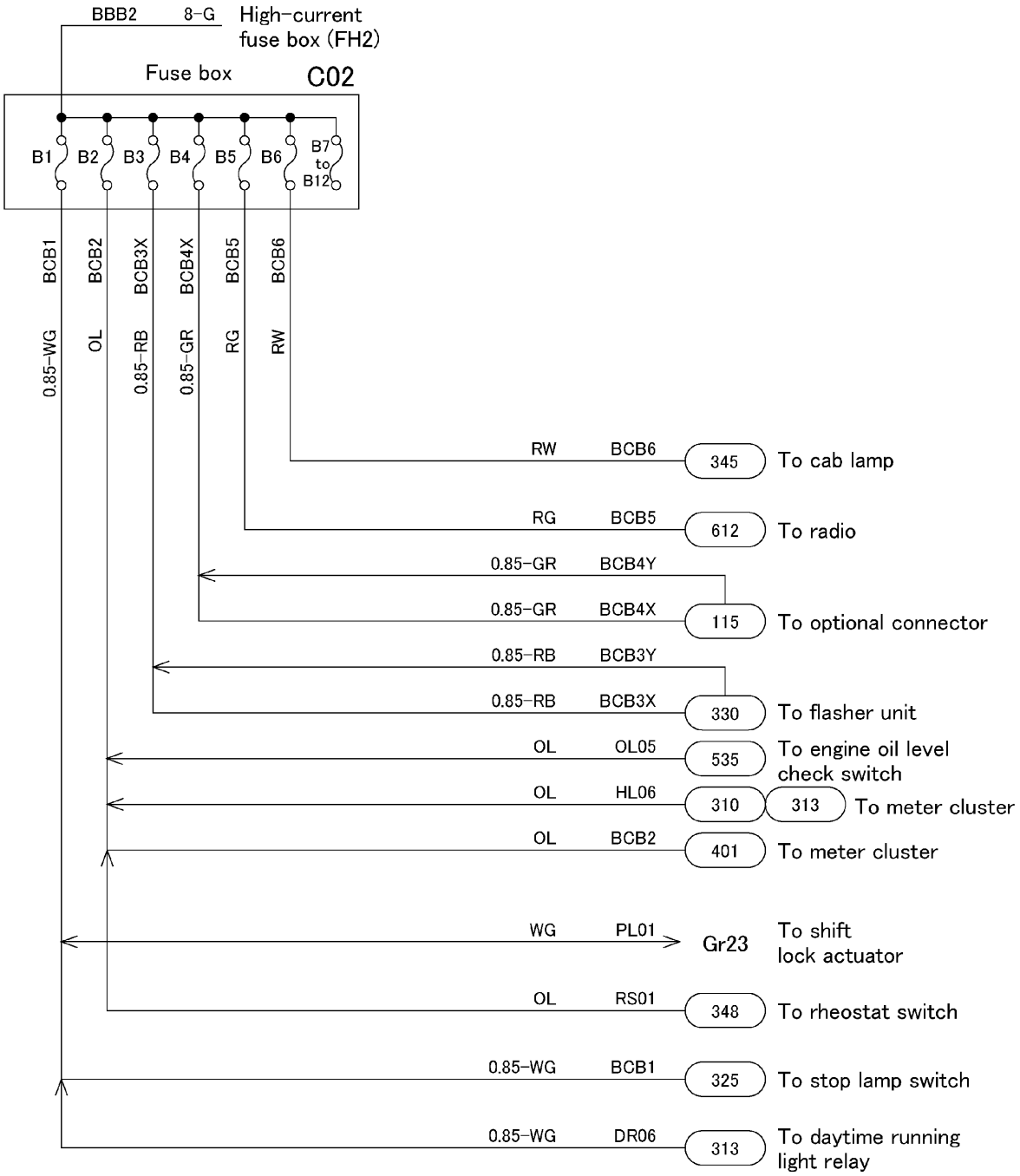

110-C03555

Return to Table of Contents

https://truckmanualshub.com/

110 POWER CIRCUIT

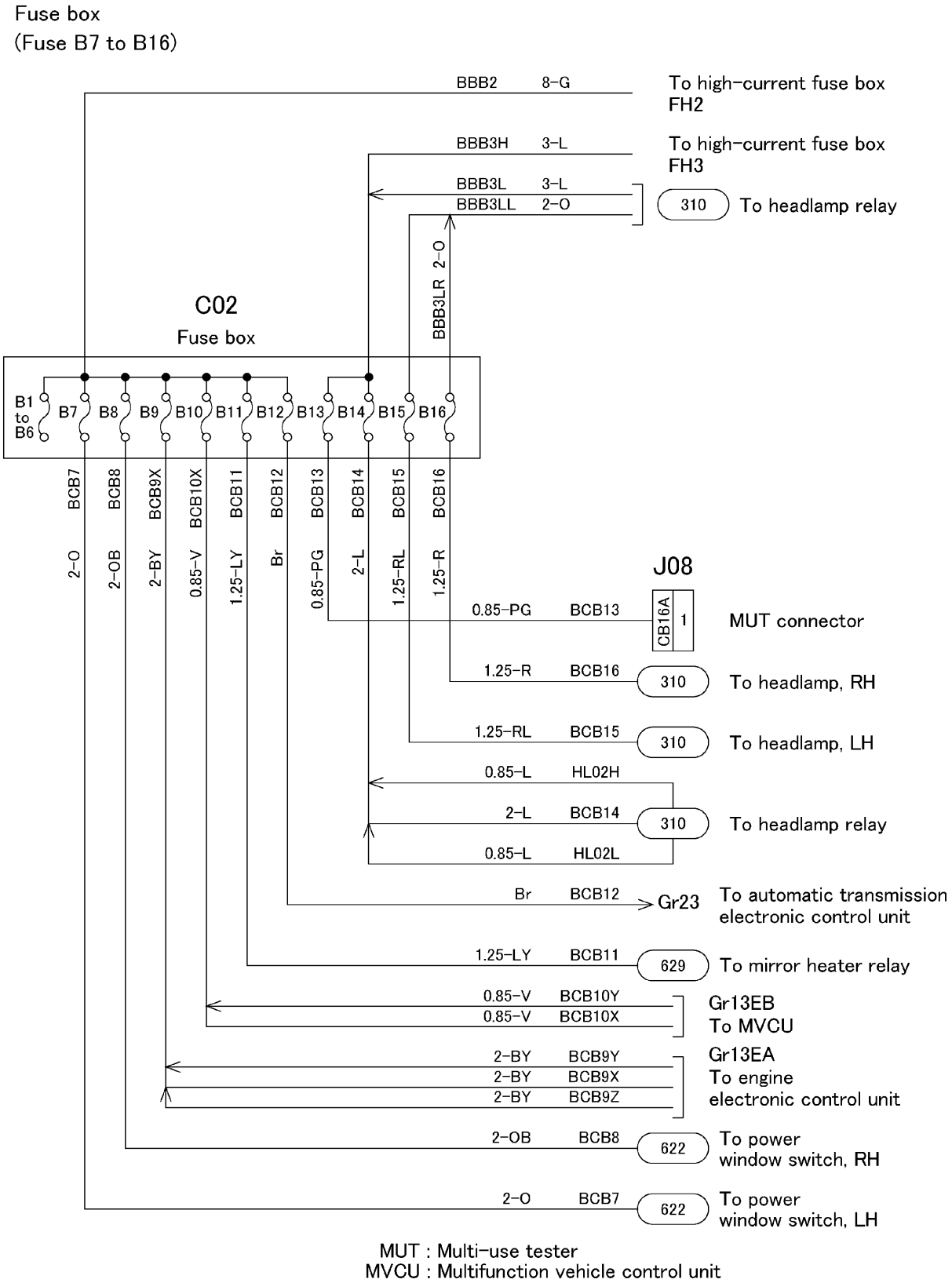

MUT : Multi-use tester
MVCU : Multifunction vehicle control unit

110-C03556

Return to Table of Contents

https://truckmanualshub.com/

110 POWER CIRCUIT

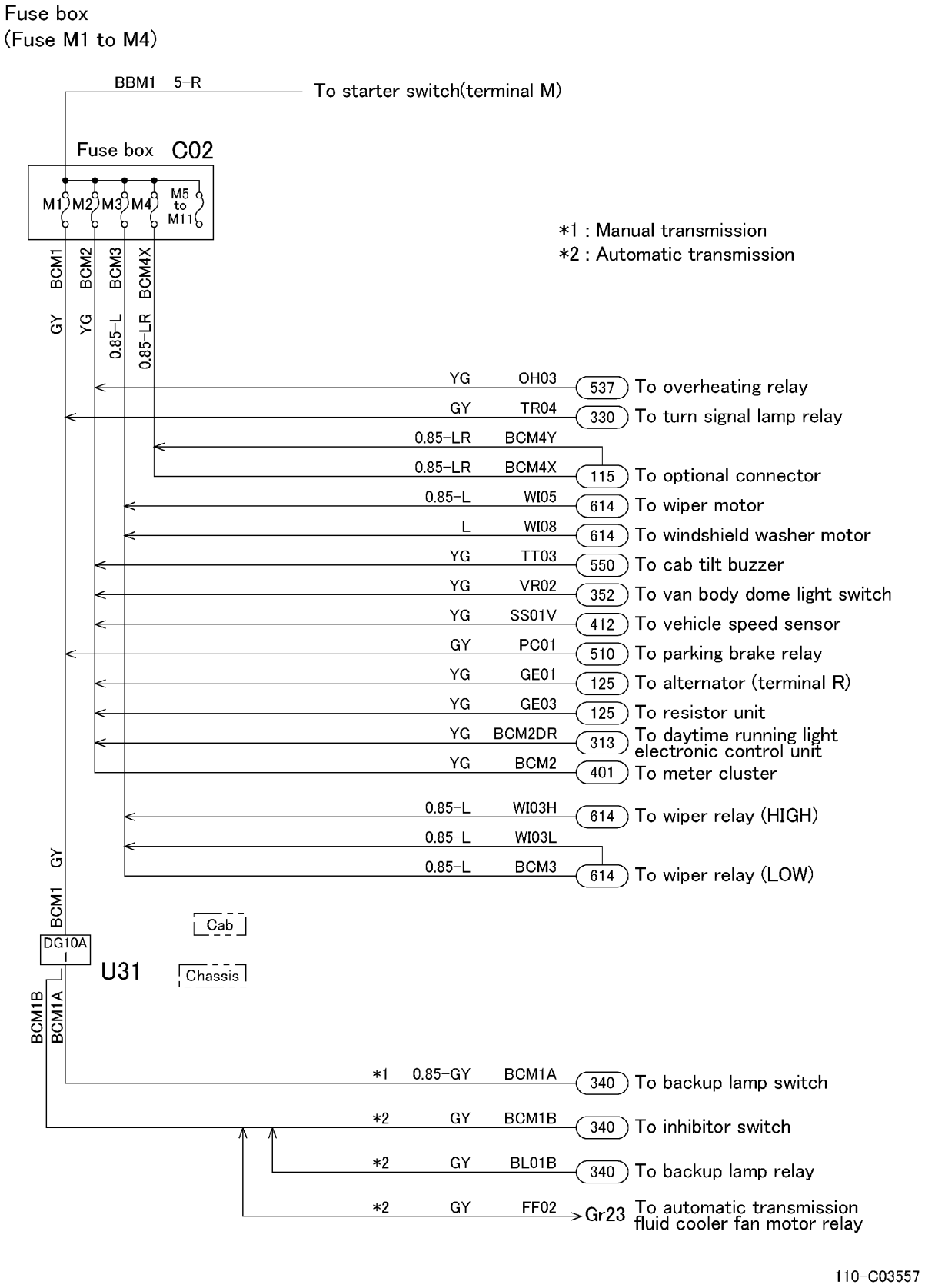

Return to Table of Contents

https://truckmanualshub.com/

110 POWER CIRCUIT

Fuse box
(Fuse M5, M6)

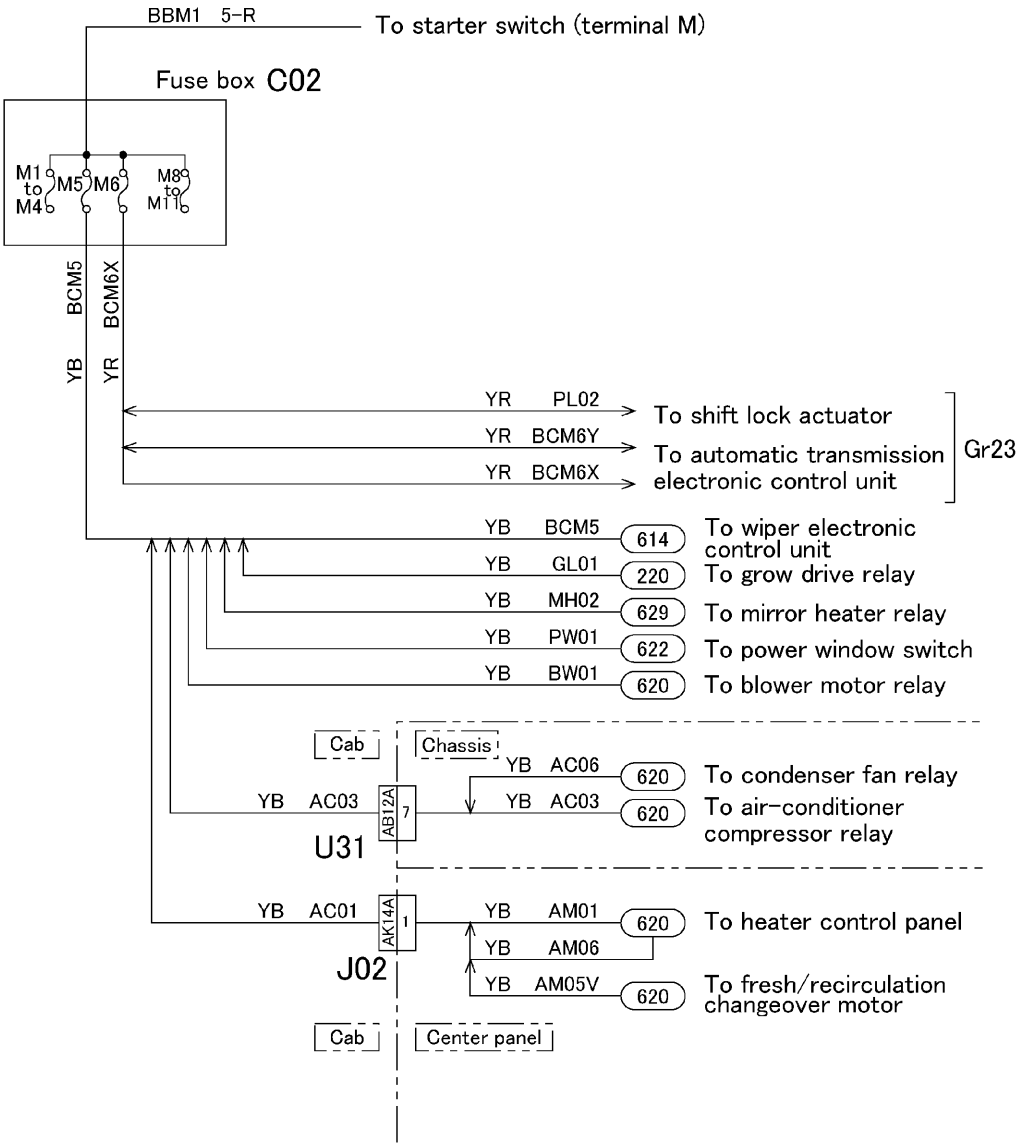

110-C03558

Return to Table of Contents

https://truckmanualshub.com/

110 POWER CIRCUIT

Fuse box
(Fuse M8)

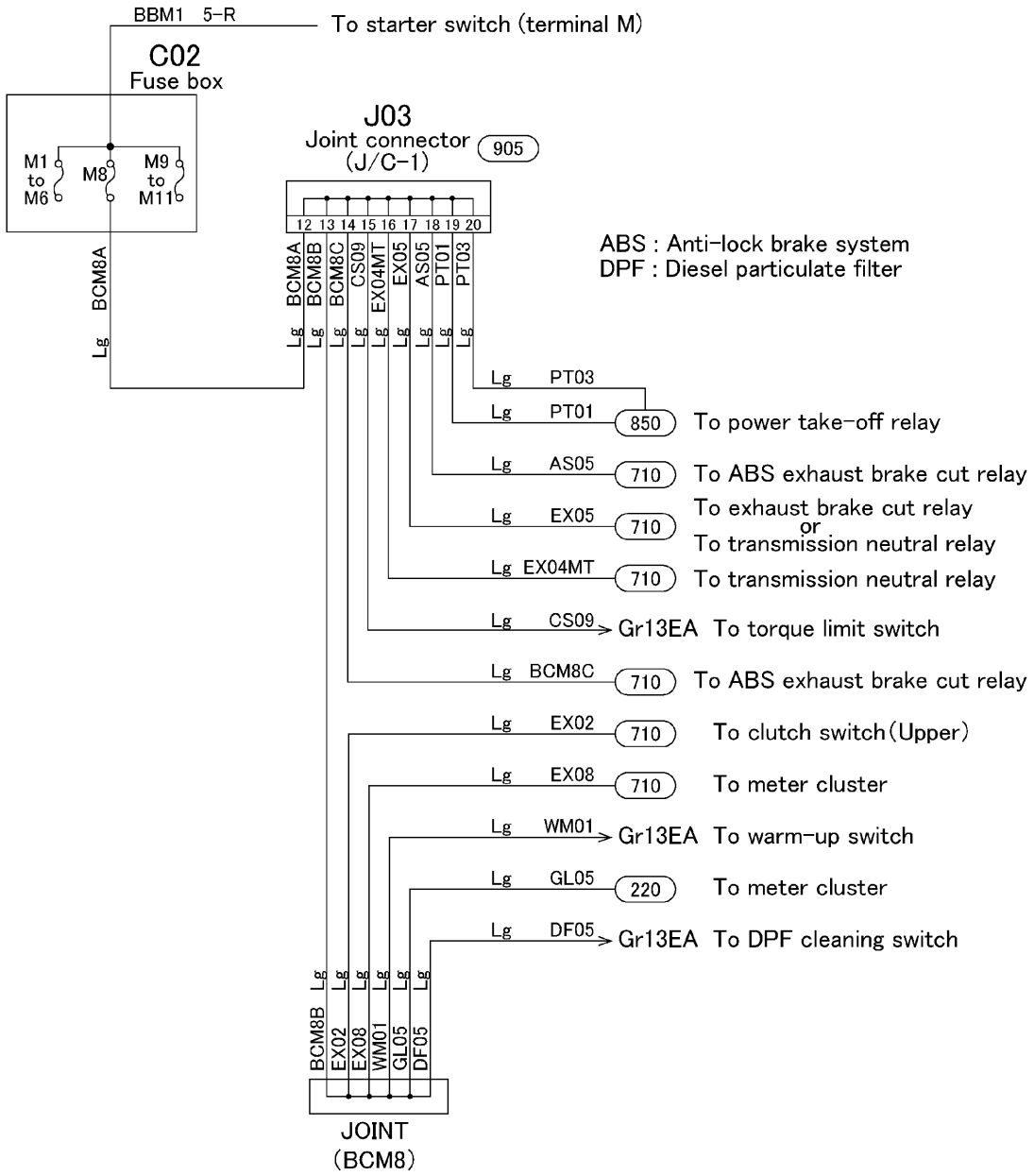

110-C03559

Return to Table of Contents

https://truckmanualshub.com/

Fuse box
(Fuse M9 to M11)

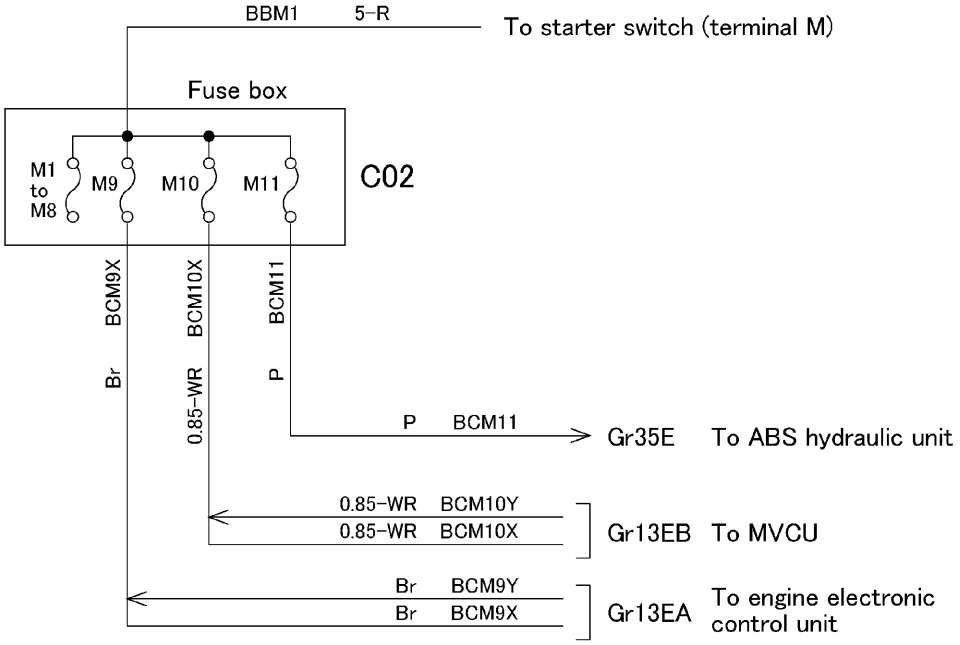

ABS : Anti-lock brake system
MVCU : Multifunction vehicle control unit

110-C03560

Return to Table of Contents

https://truckmanualshub.com/

Fuse box
(Fuse S1)

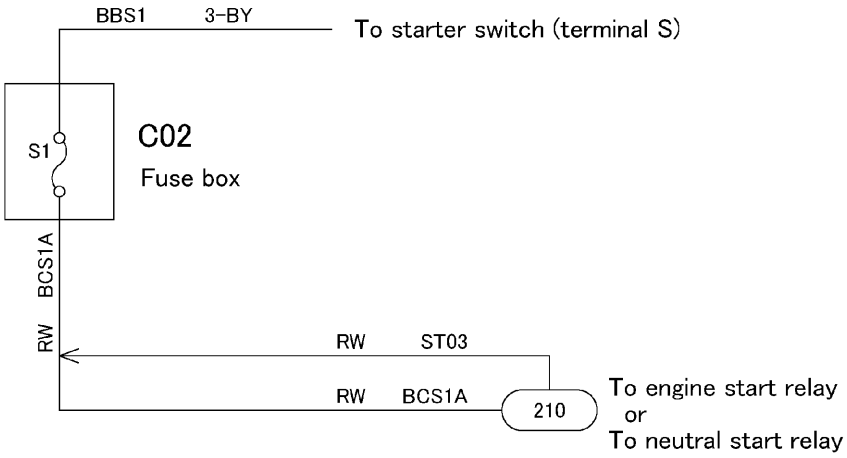

110-C03561

Return to Table of Contents

https://truckmanualshub.com/

115 RESERVE POWER CIRCUIT

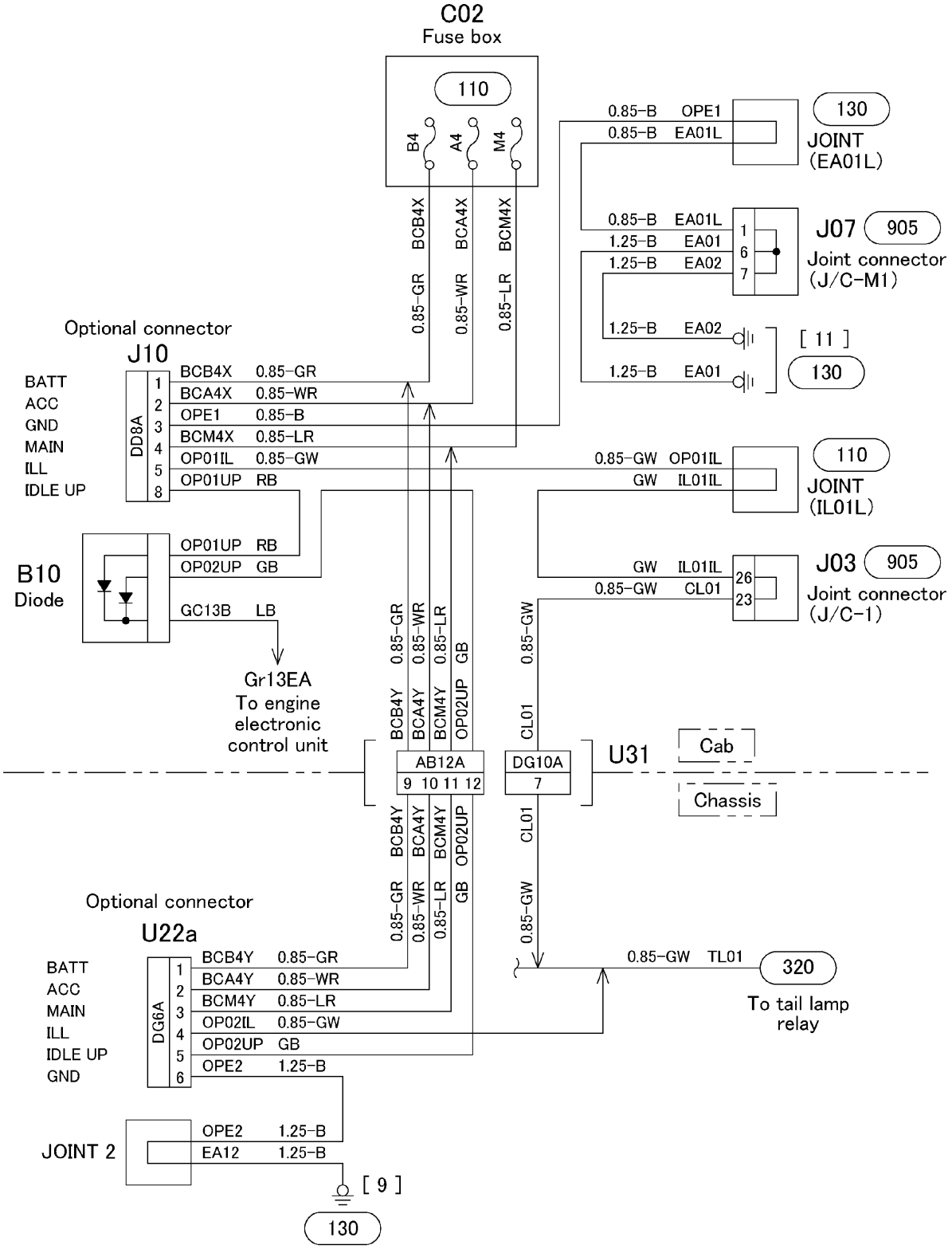

Return to Table of Contents

https://truckmanualshub.com/

125 BATTERY CHARGING CIRCUIT

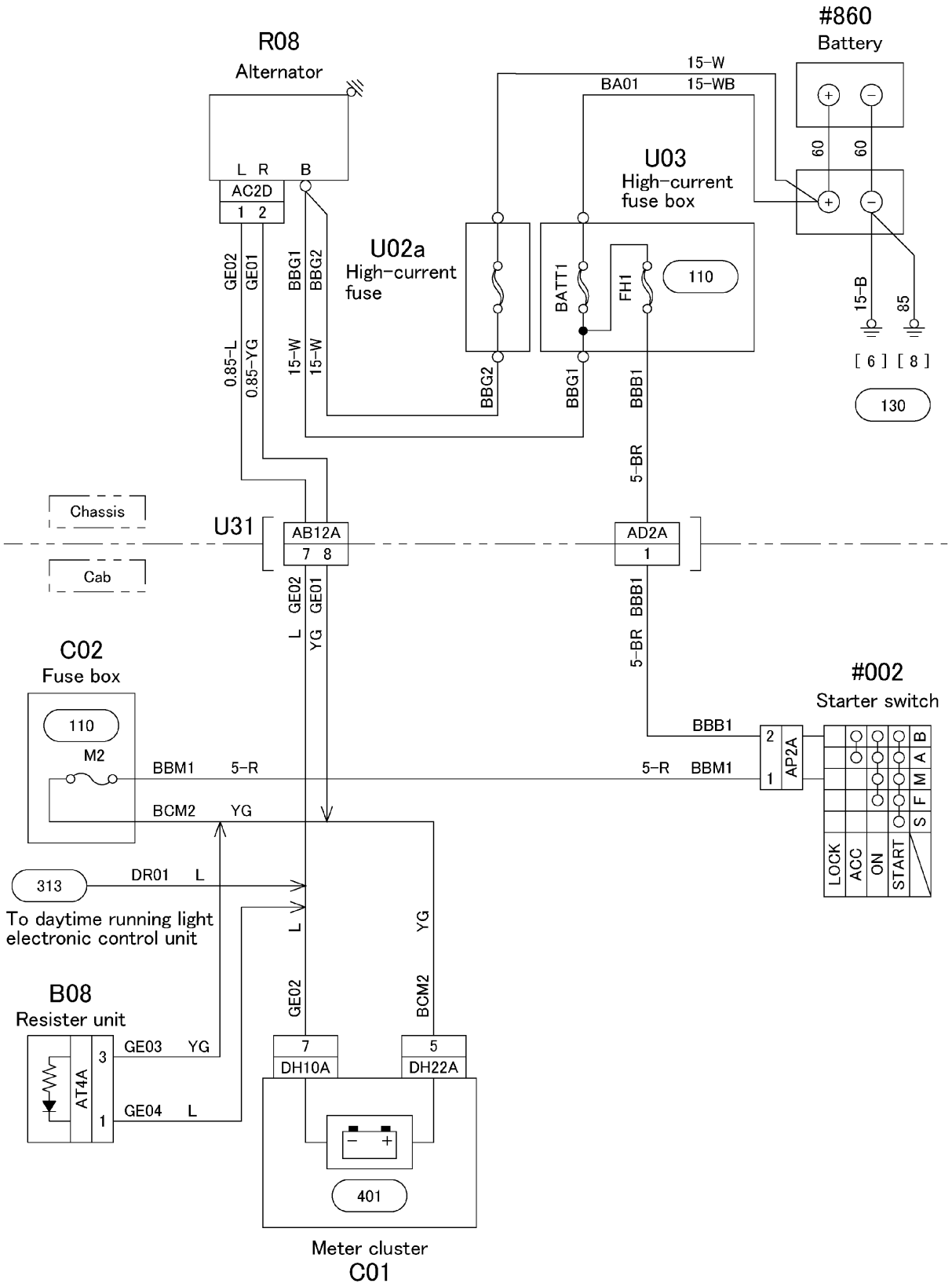

Return to Table of Contents

https://truckmanualshub.com/

[1] to [3] Cab ground

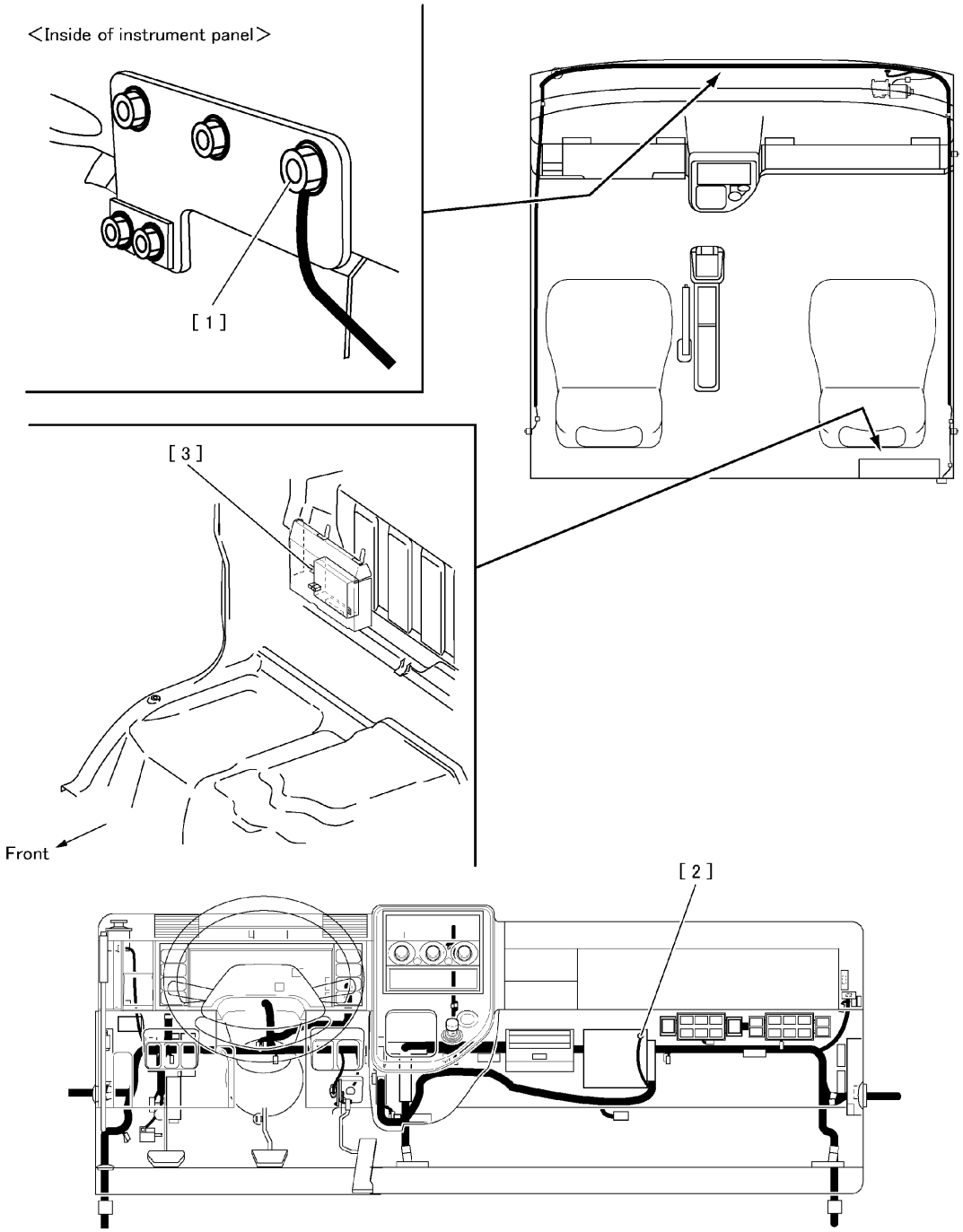

L02133

Return to Table of Contents

https://truckmanualshub.com/

130 GROUND

Location	Circuit No.	Wire diameter-wire color	Destination	Remarks
[1]	MVE3	B	MVCU case ground	–
	GCE5	B	Engine ECU case ground	–
[2]	EA10	5-B	Frame ground	–
	– (GCE5)	1.25-B	Cab ground	Engine ECU case ground
[3]	– (MVE3)	1.25-B	Cab ground	MVCU case ground

ECU: Electronic control unit

MVCU: Multifunction vehicle control unit

Return to Table of Contents

https://truckmanualshub.com/

[5] to [12] Chassis ground

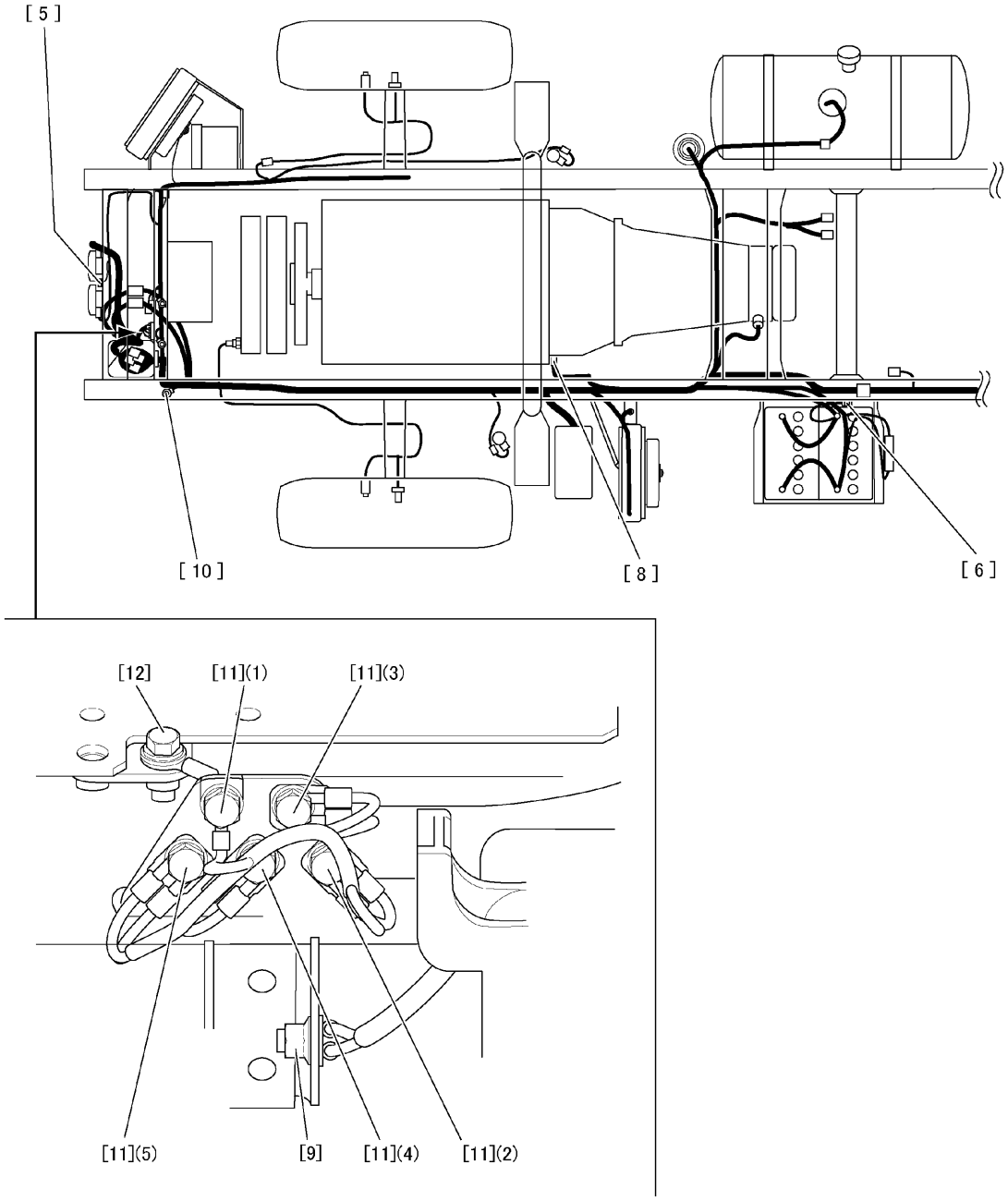

L02134

Return to Table of Contents

https://truckmanualshub.com/

130 GROUND

Location	Circuit No.	Wire diameter-wire color	Destination	Remarks
[5]	HNE1	1.25-B	Horn bracket	–
[6]	–	15-B	Battery	Battery ground
[8]	–	85	Engine	Engine ground
[9]	EA11	2-B	JOINT1	–
	EA12	1.25-B	JOINT2	–
[10]	ASE1	3-B	Hydraulic unit	–
	ASE2	3-B	Hydraulic unit	–
[11] (1)	BWE2	3-B	Center panel harness	–
[11] (2)	EA01	1.25-B	Joint connector (J/C-M1)	–
	EA03A	3-B	JOINT (EA03)	–
	EA04	B	Meter cluster	–
[11] (3)	EA07	0.85-B	Joint connector (J/C-1)	–
	GCE1	2-B	Engine electronic control unit	–
	GCE3	2-B	Engine electronic control unit	–
[11] (4)	EA08	0.85-B	Joint connector (J/C-1)	–
	GCE2	2-B	Engine electronic control unit	–
[11] (5)	EA02	1.25-B	Joint connector (J/C-M1)	–
	EA03B	3-B	JOINT (EA03)	–
	EA10	5-B	Cab ground	–
[12]	EA14	1.25-B	Rear chassis harness	–

Return to Table of Contents

https://truckmanualshub.com/

130 GROUND

Entire ground

- This diagram indicates grounding points.
- See the following pages for branching of grounding (wiring for ☆).
  (in circuit No. order)

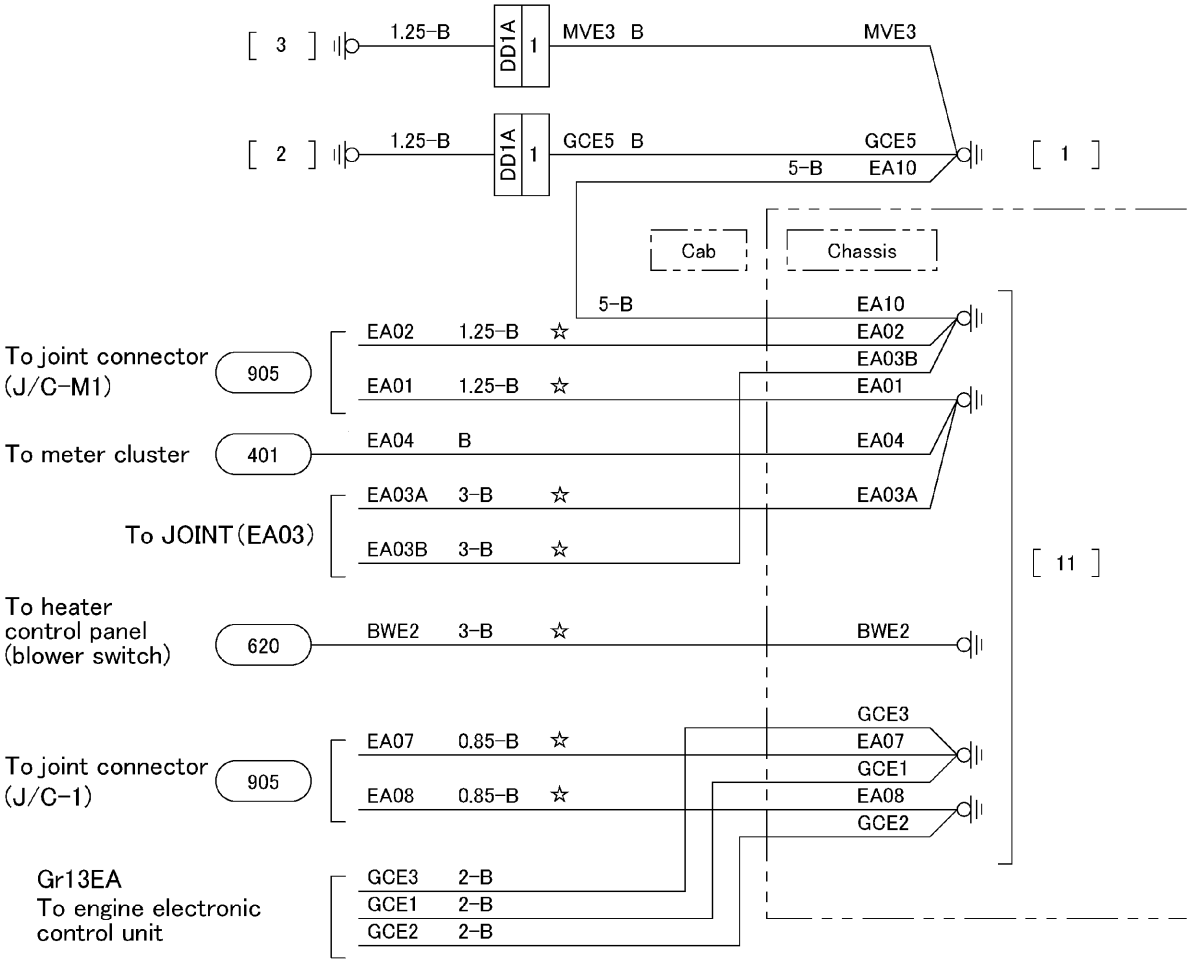

130-C03564-1

Return to Table of Contents

https://truckmanualshub.com/

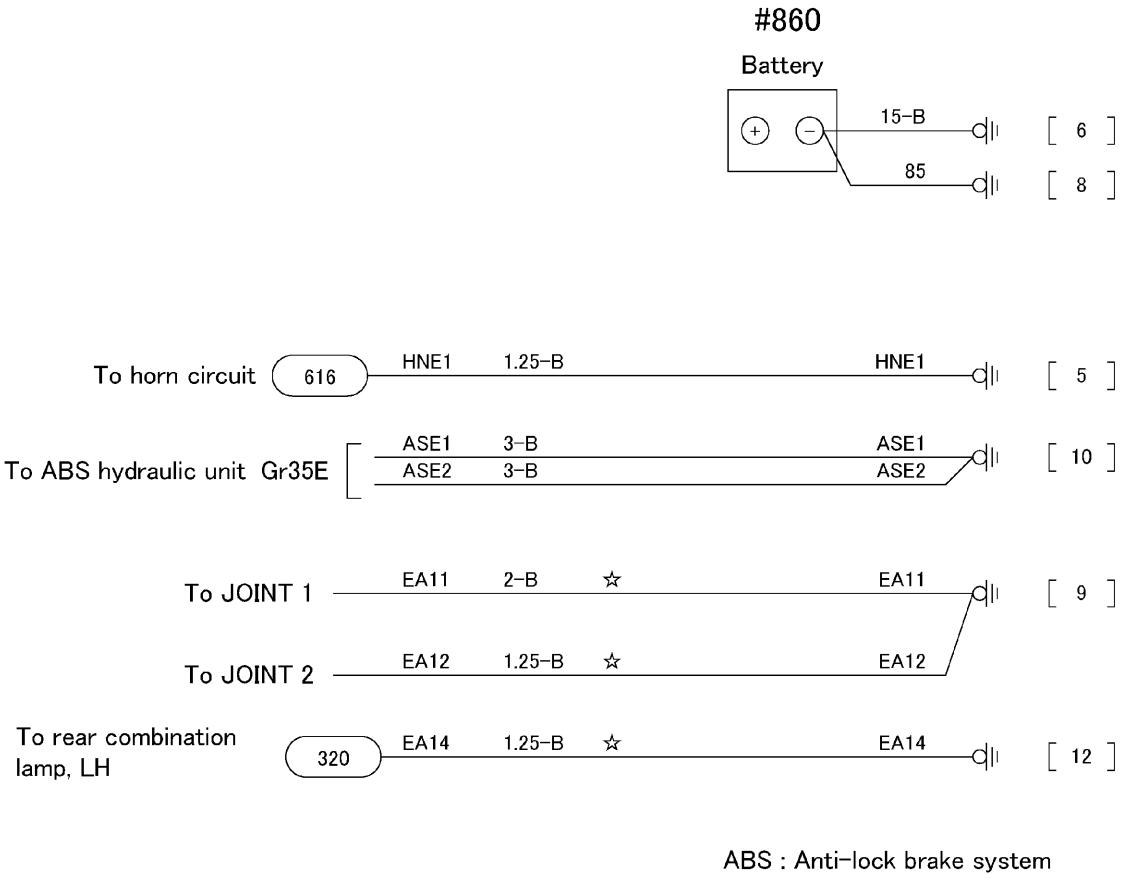

ABS : Anti-lock brake system

130-C03564-2

Return to Table of Contents

https://truckmanualshub.com/

Circuit No.BWE2 chassis ground

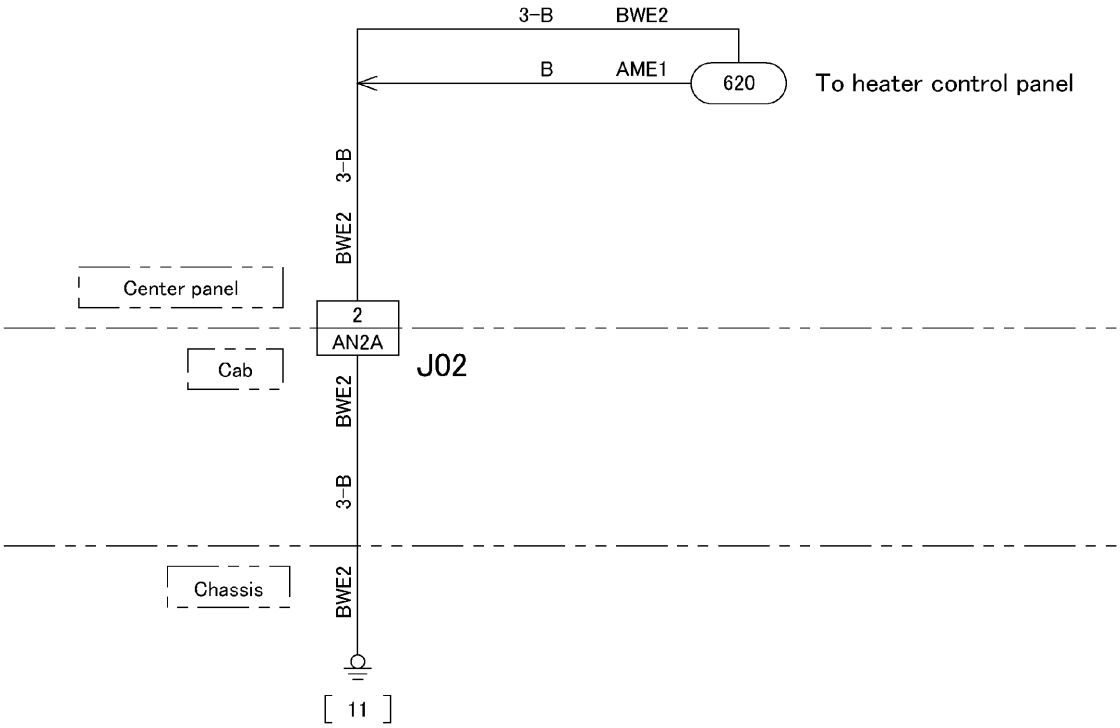

130-C03565

Return to Table of Contents

https://truckmanualshub.com/

Circuit No. EA01, EA02 chassis ground
<Main ground>

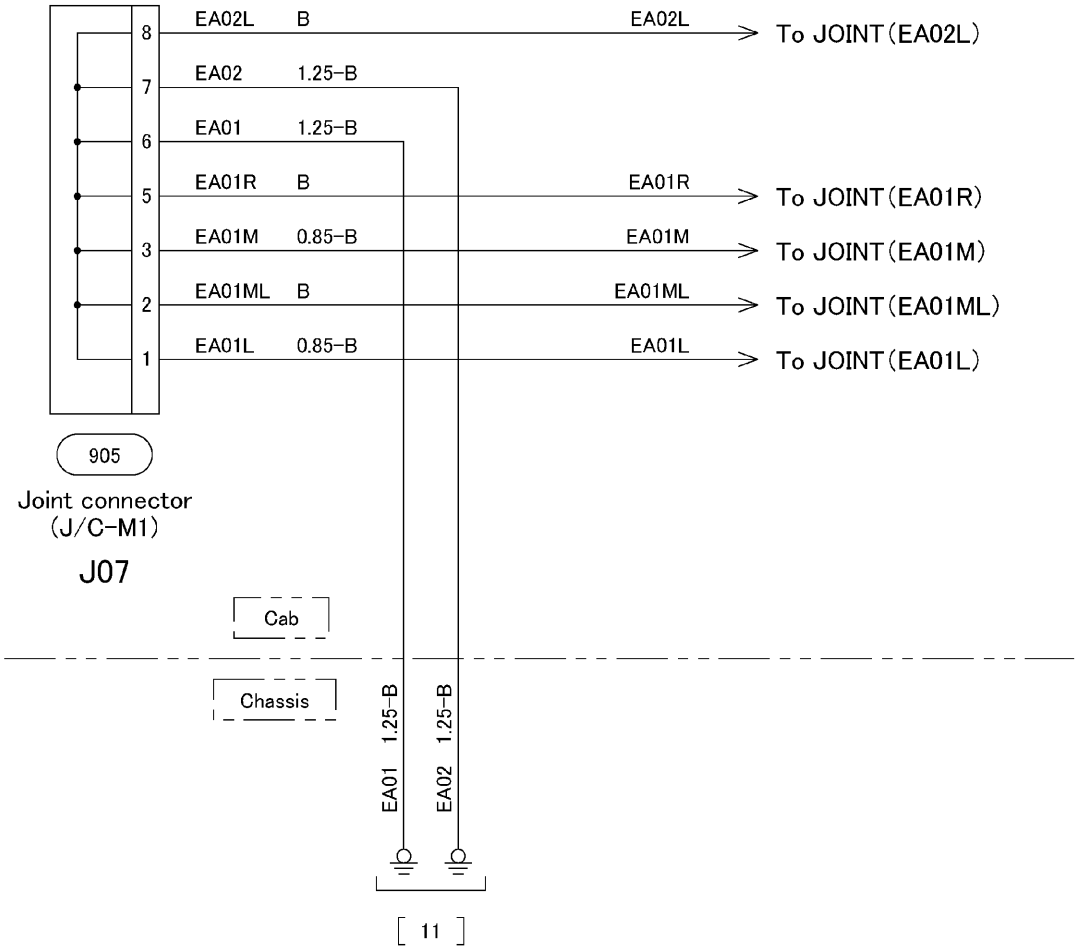

130-C03566

Return to Table of Contents

https://truckmanualshub.com/

Circuit No. EA01, EA02 chassis ground
<JOINT(EA01L)>

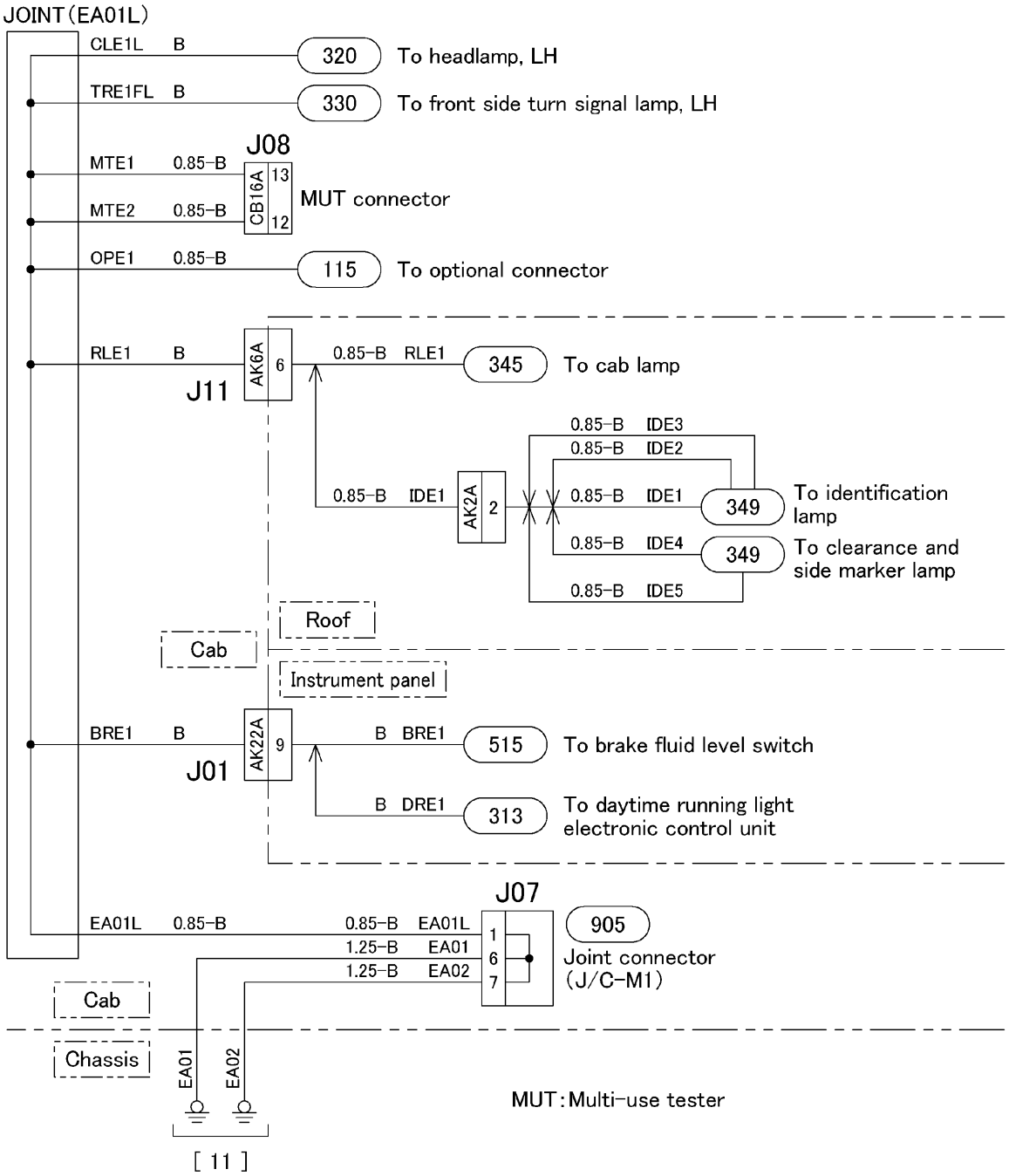

130-C03567

Return to Table of Contents

https://truckmanualshub.com/

Circuit No. EA01, EA02 chassis ground
<JOINT(EA01M)>

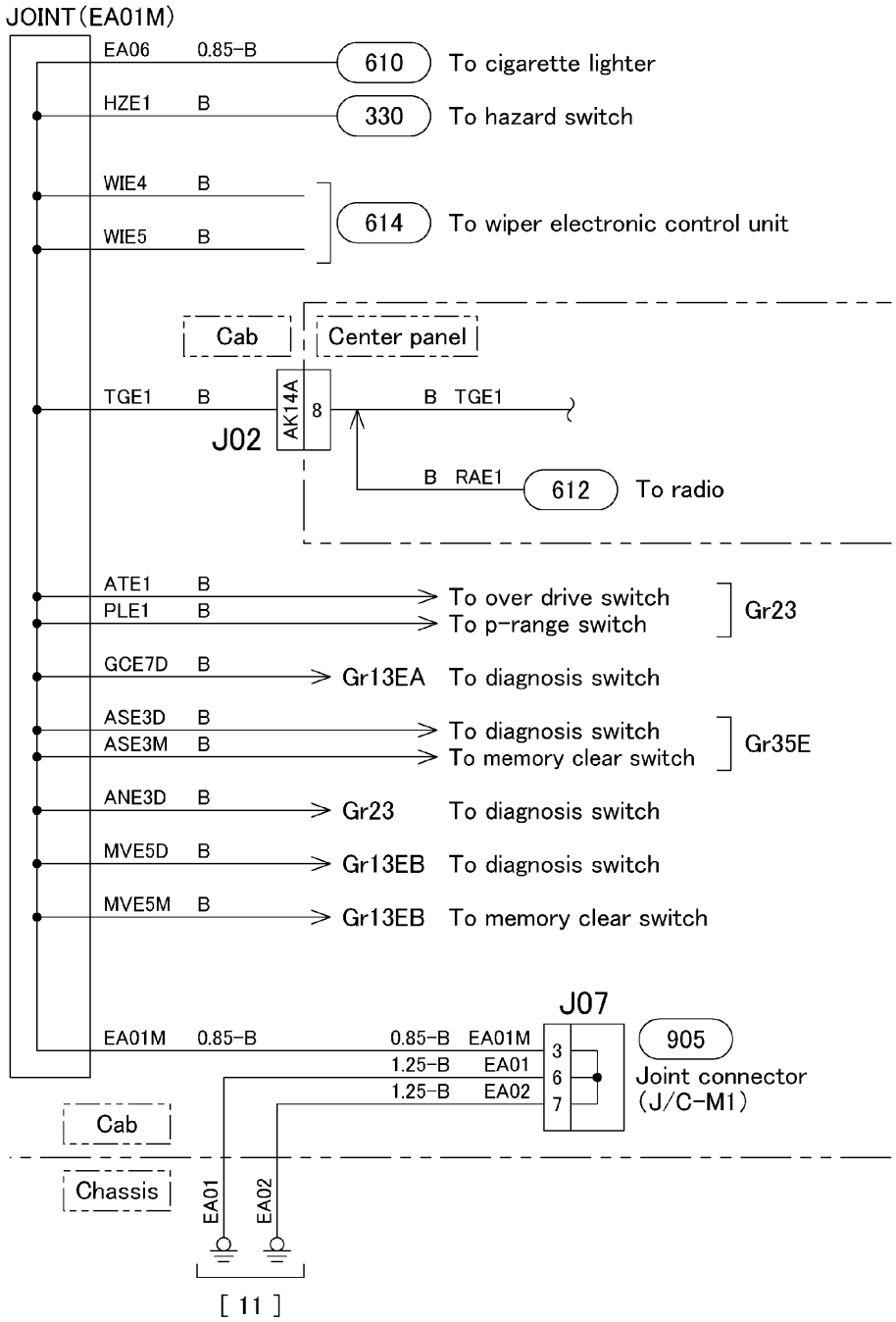

130-C03568

Return to Table of Contents

https://truckmanualshub.com/

Circuit No. EA01, EA02 chassis ground
<JOINT(EA01ML)>

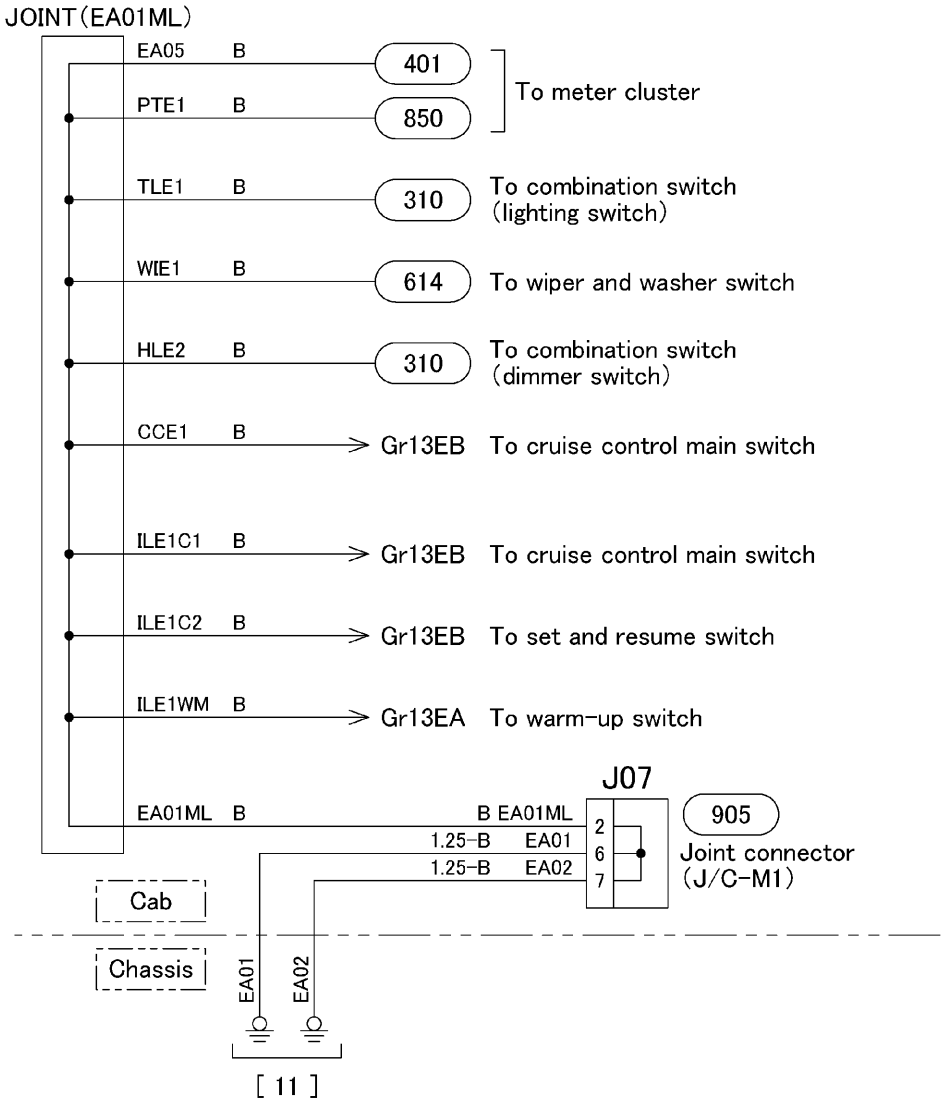

130-C03569

Return to Table of Contents

https://truckmanualshub.com/

Circuit No. EA01, EA02 chassis ground
<JOINT(EA01R)>

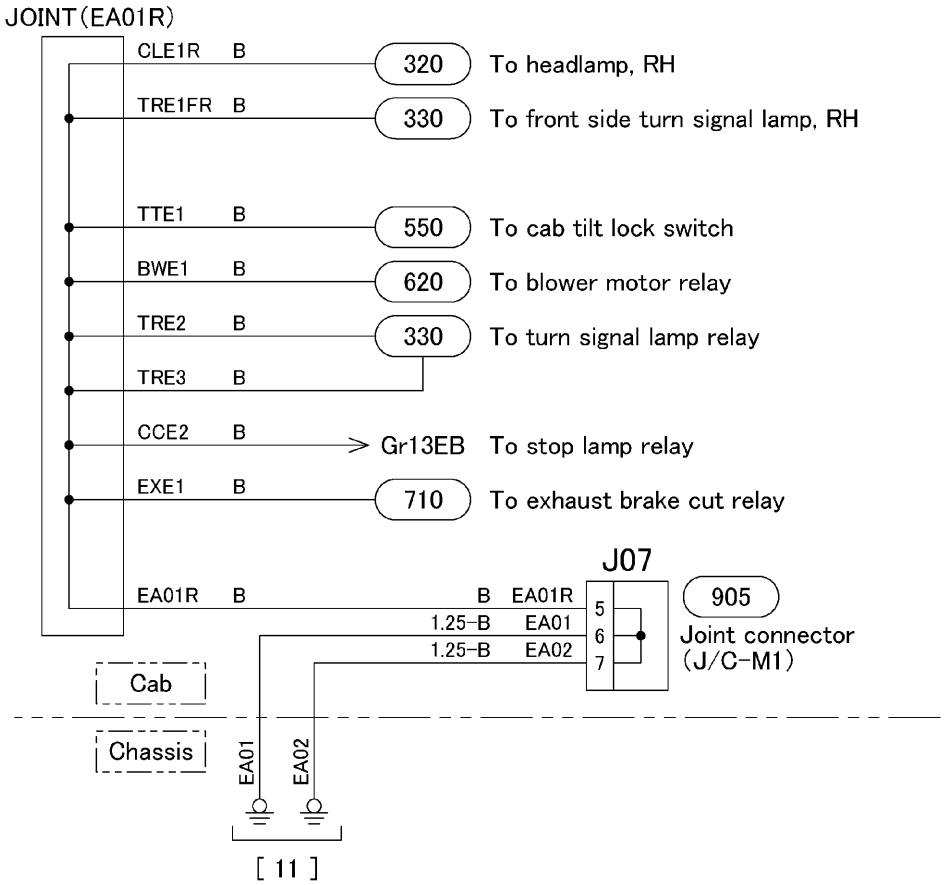

130-C03570

Return to Table of Contents

https://truckmanualshub.com/

Circuit No. EA01, EA02 chassis ground
＜JOINT(EA02L)＞

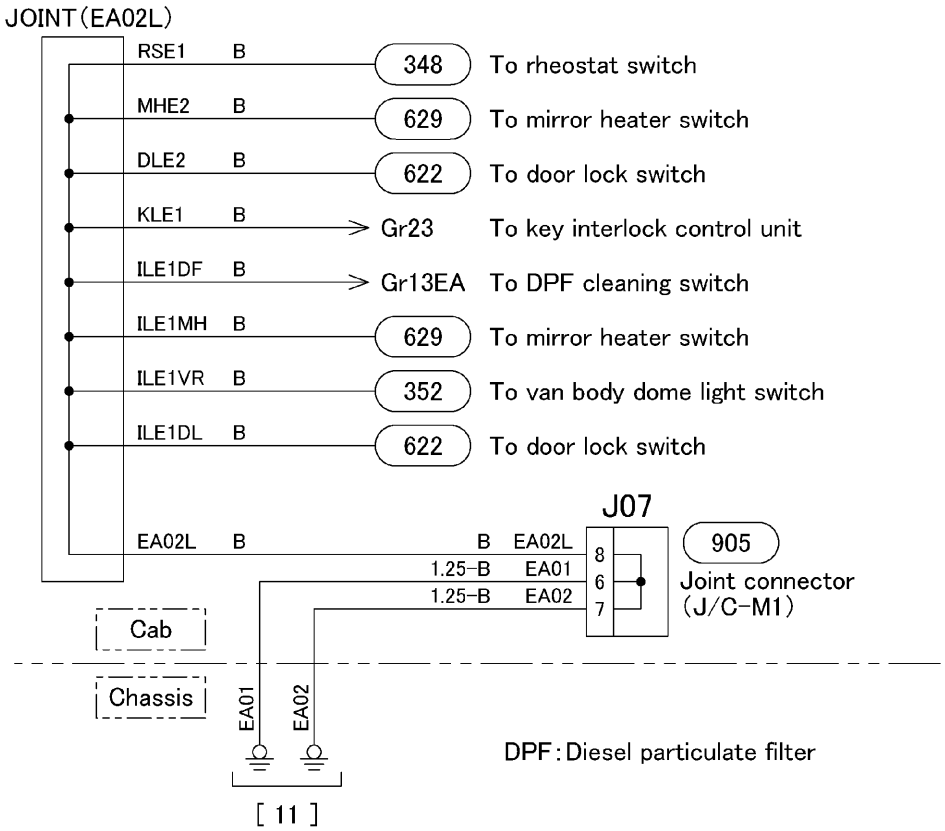

130-C03571

Return to Table of Contents

https://truckmanualshub.com/

Circuit No. EA03A, EA03B chassis ground

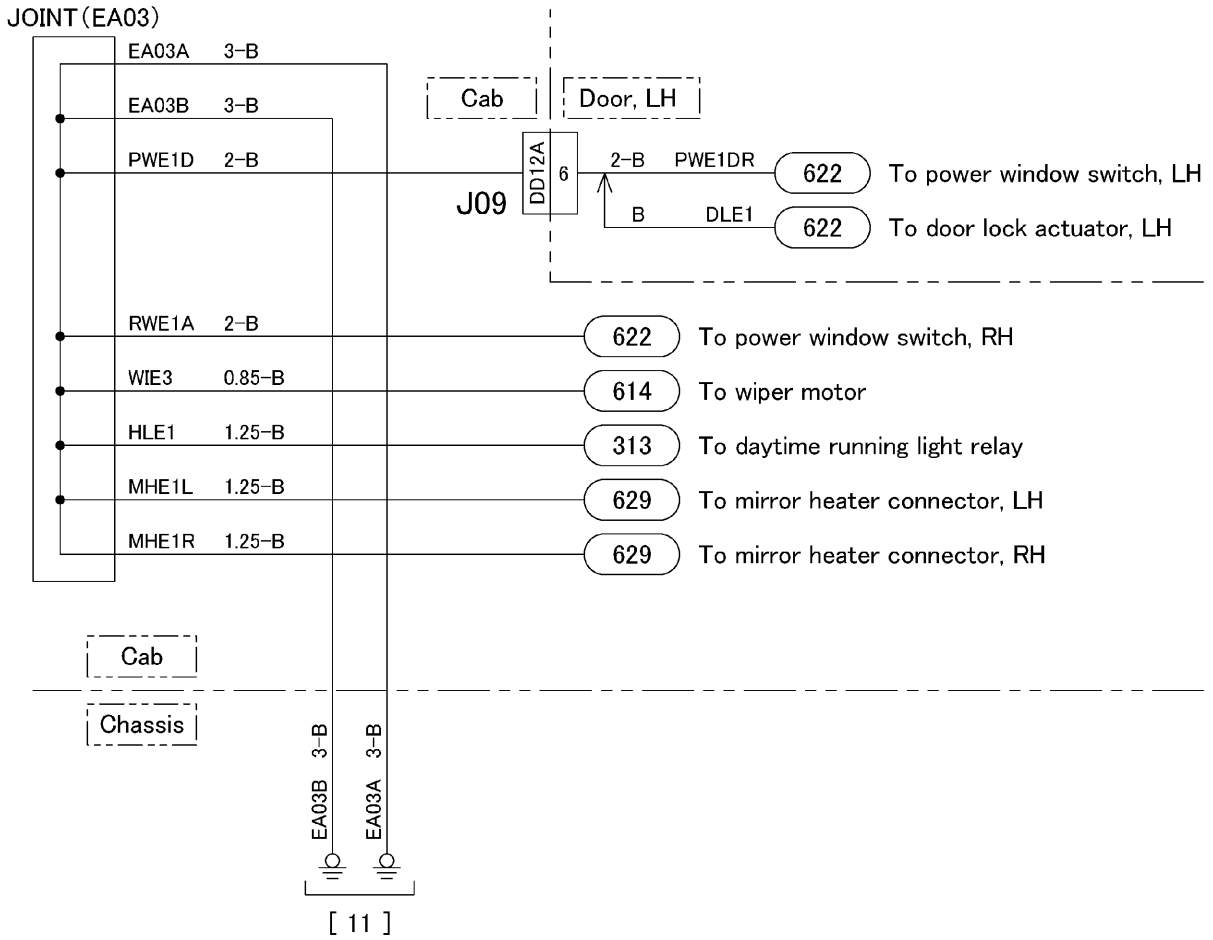

130-C03572

Return to Table of Contents

https://truckmanualshub.com/

Circuit No. EA07, EA08 chassis ground

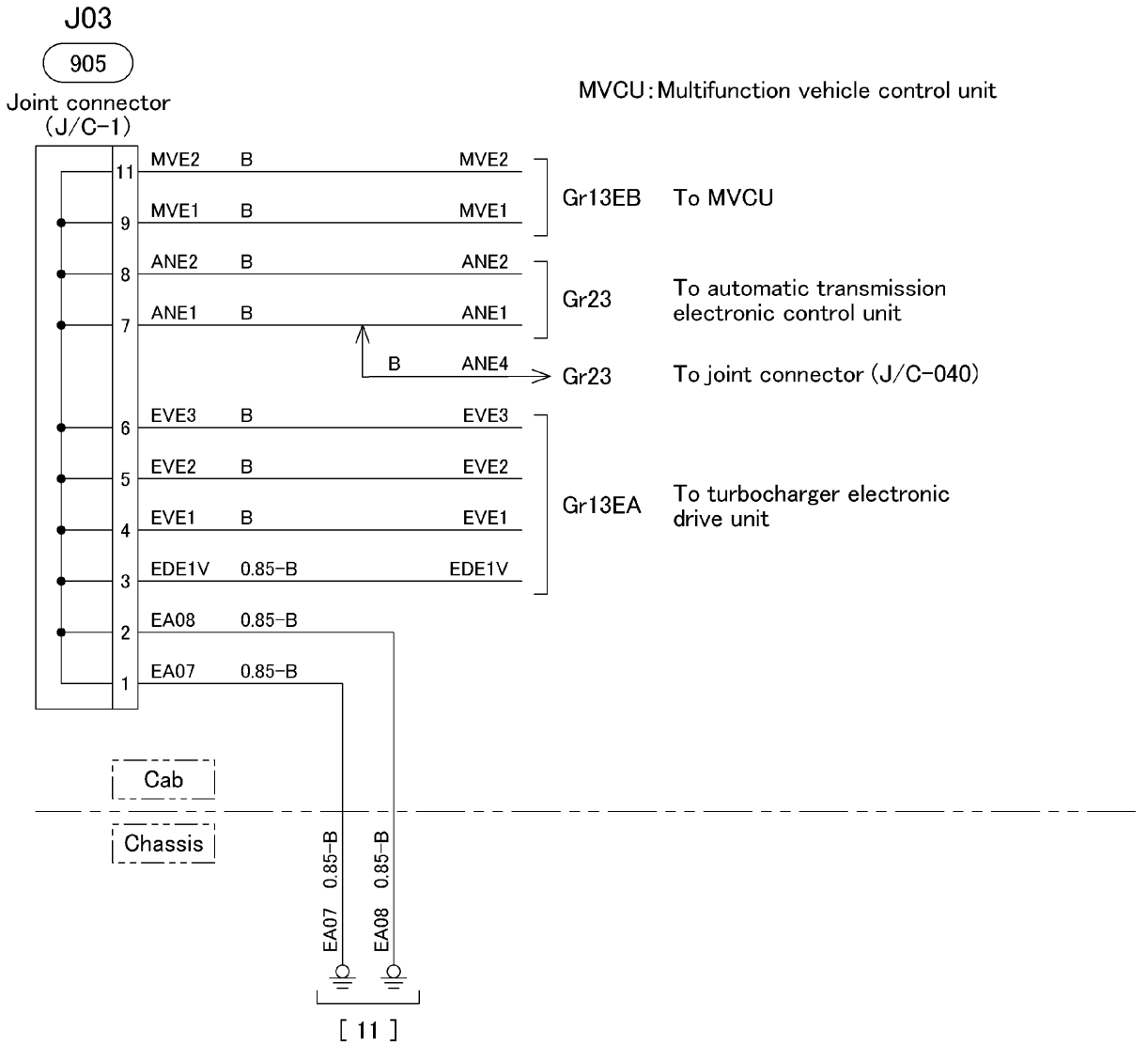

130-C03573

Return to Table of Contents

https://truckmanualshub.com/

Circuit No. EA11, EA12 chassis ground

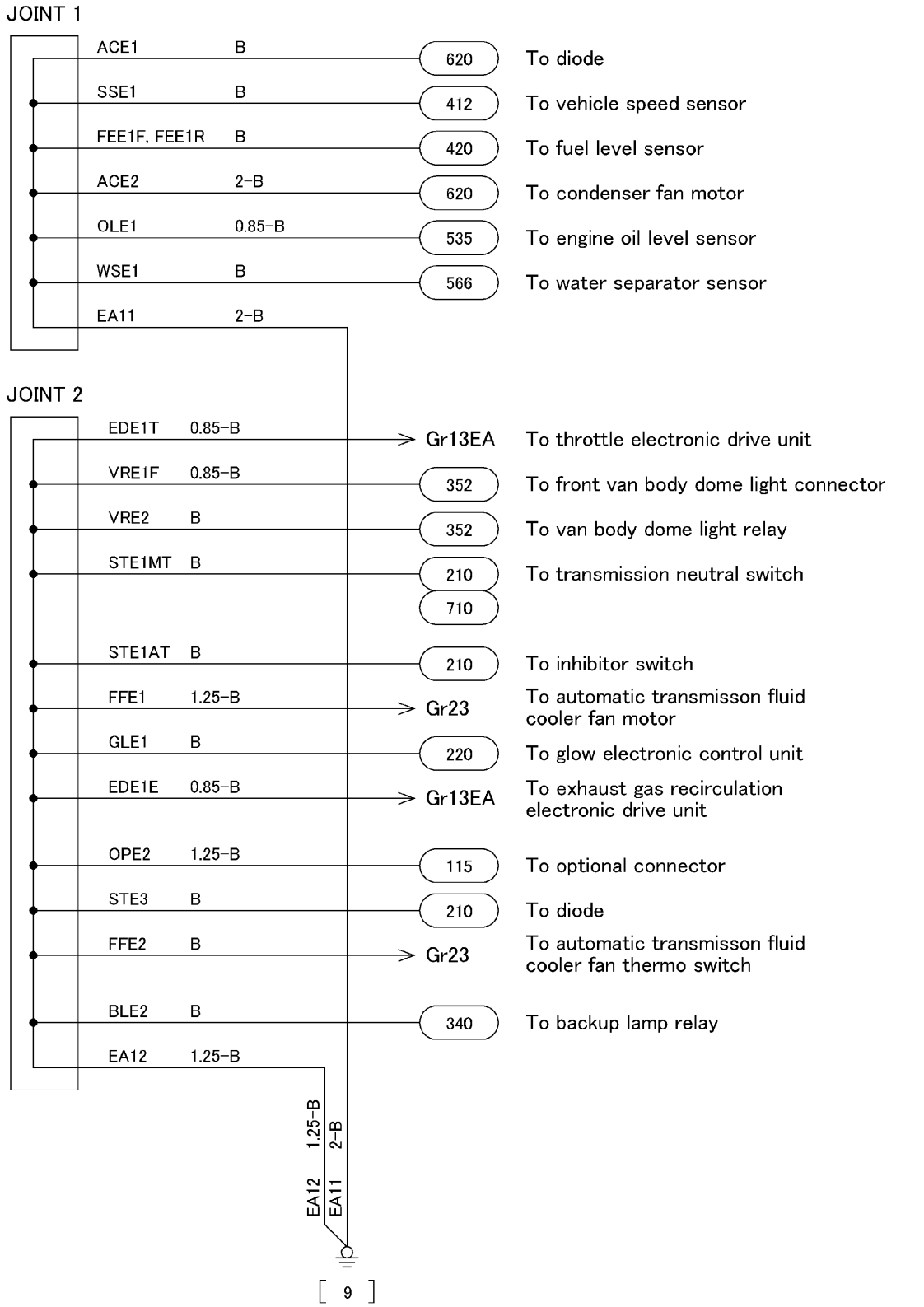

Return to Table of Contents

https://truckmanualshub.com/

Circuit No.EA14 chassis ground

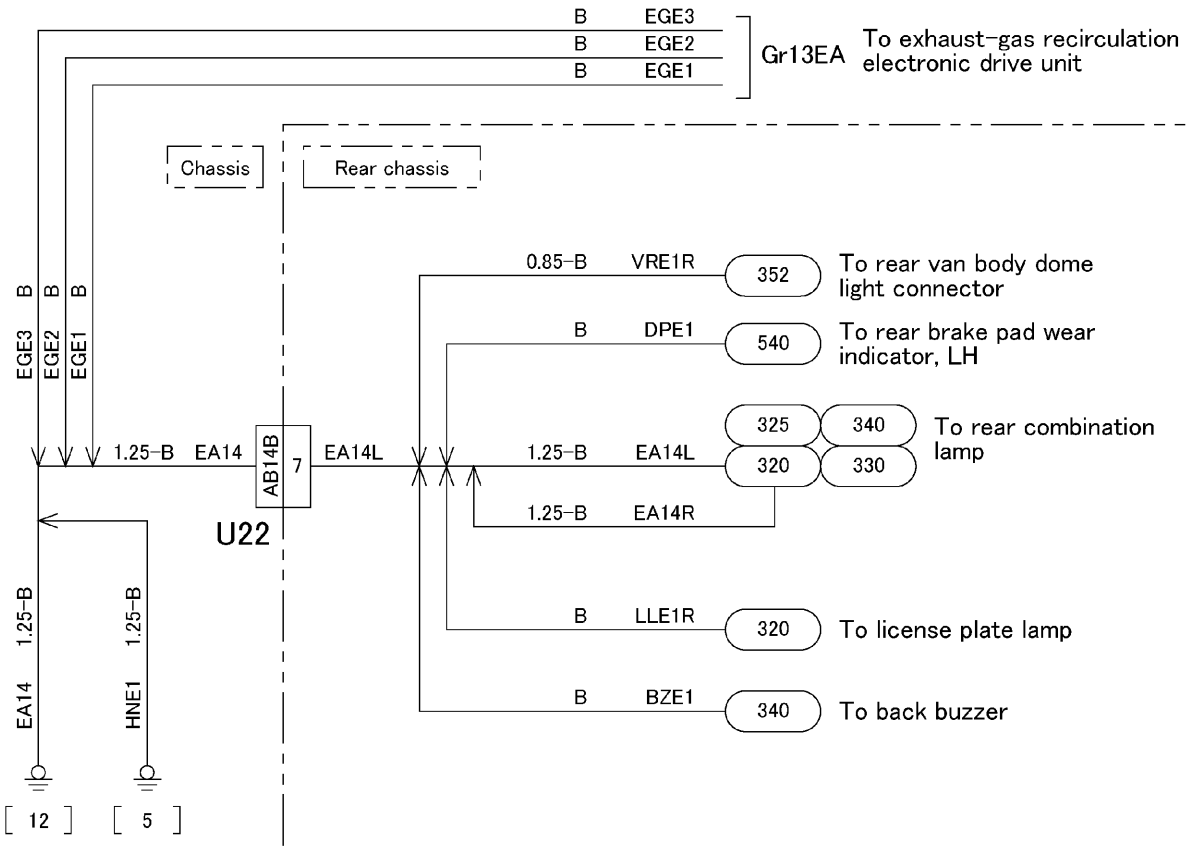

130-C03575

Return to Table of Contents

https://truckmanualshub.com/

19.2 STARTING CIRCUIT
210 ENGINE STARTING CIRCUIT

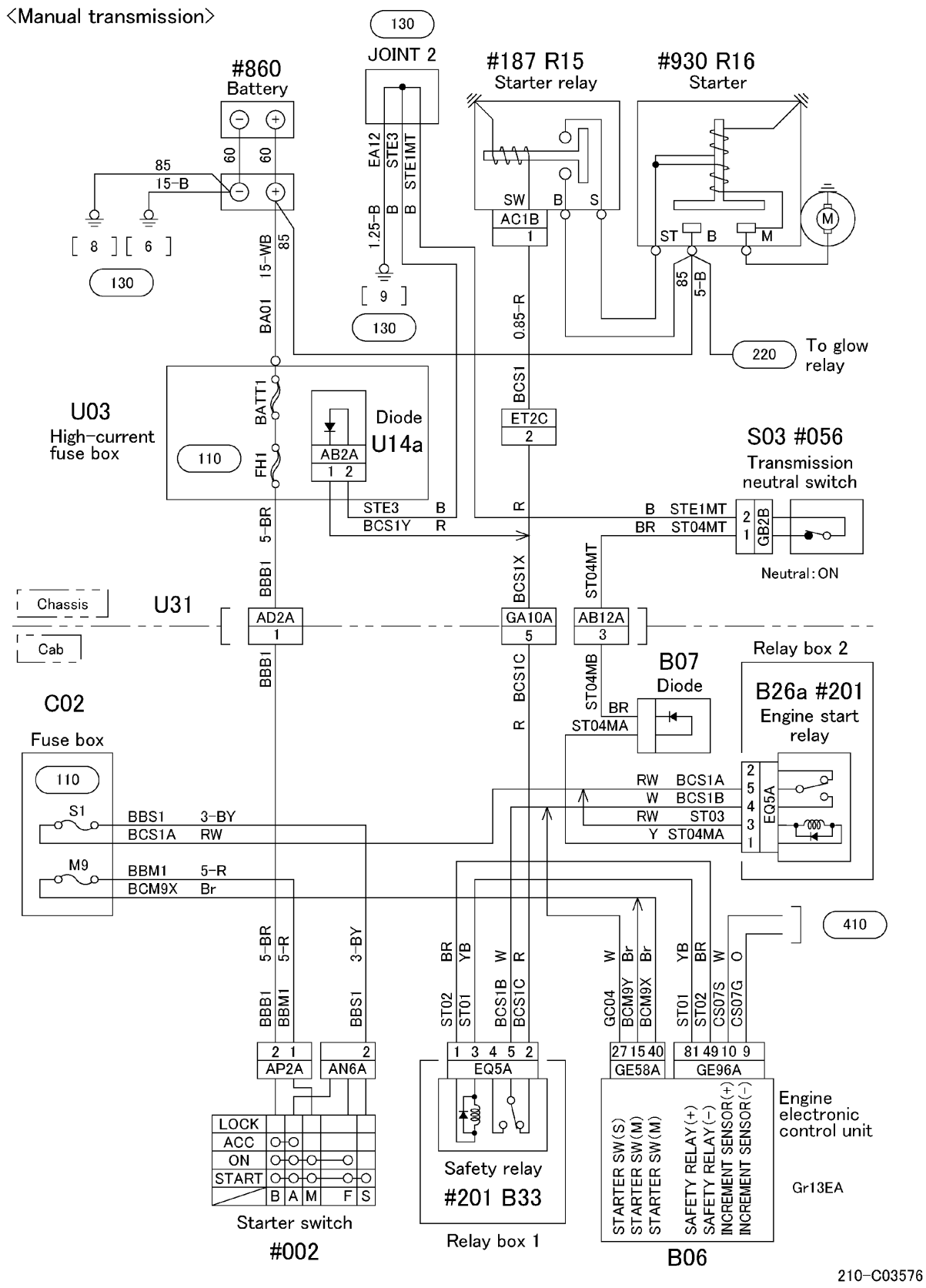

Return to Table of Contents

https://truckmanualshub.com/

210 ENGINE STARTING CIRCUIT

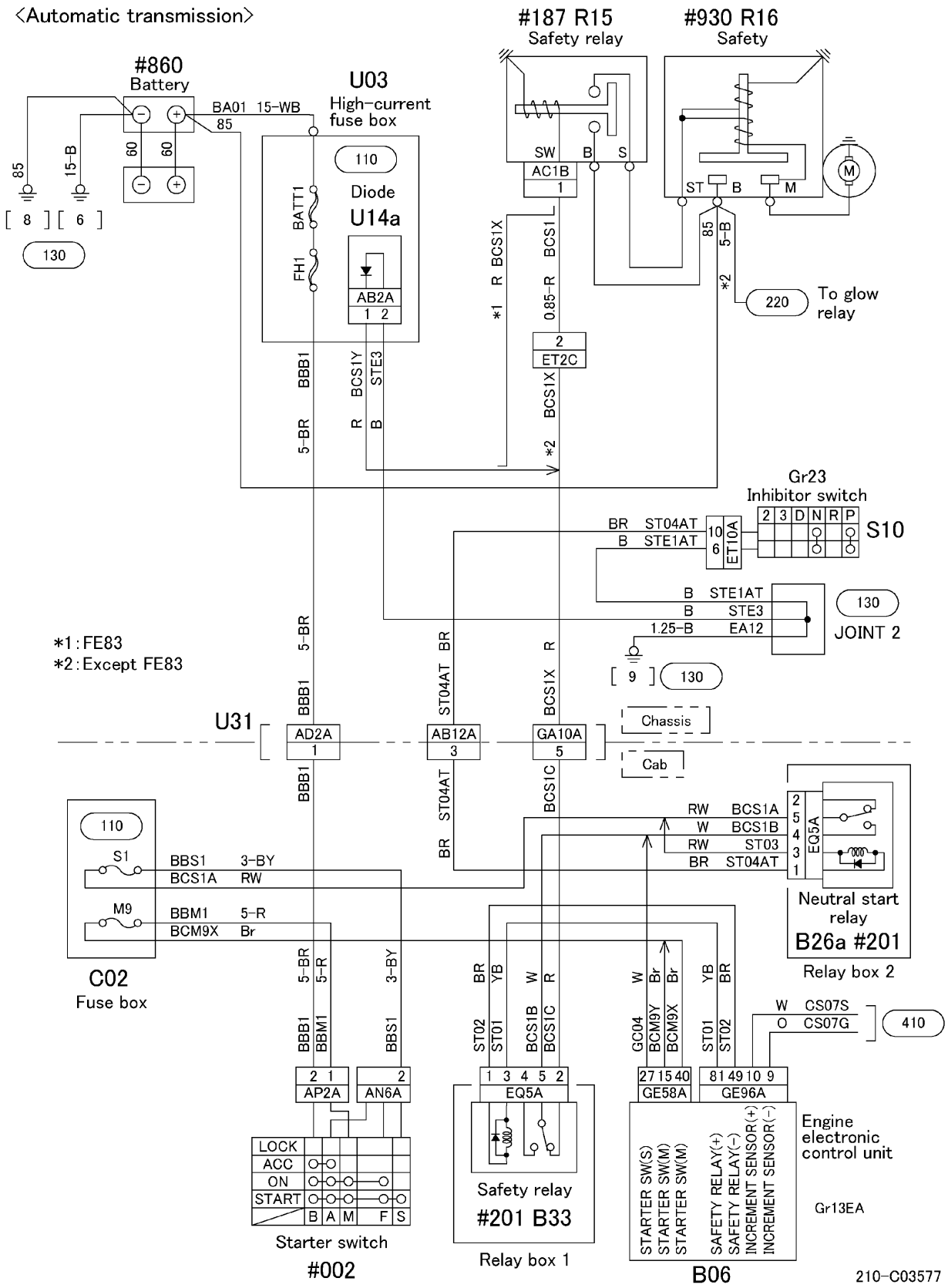

Return to Table of Contents

https://truckmanualshub.com/

220 ENGINE PREHEATING CIRCUIT

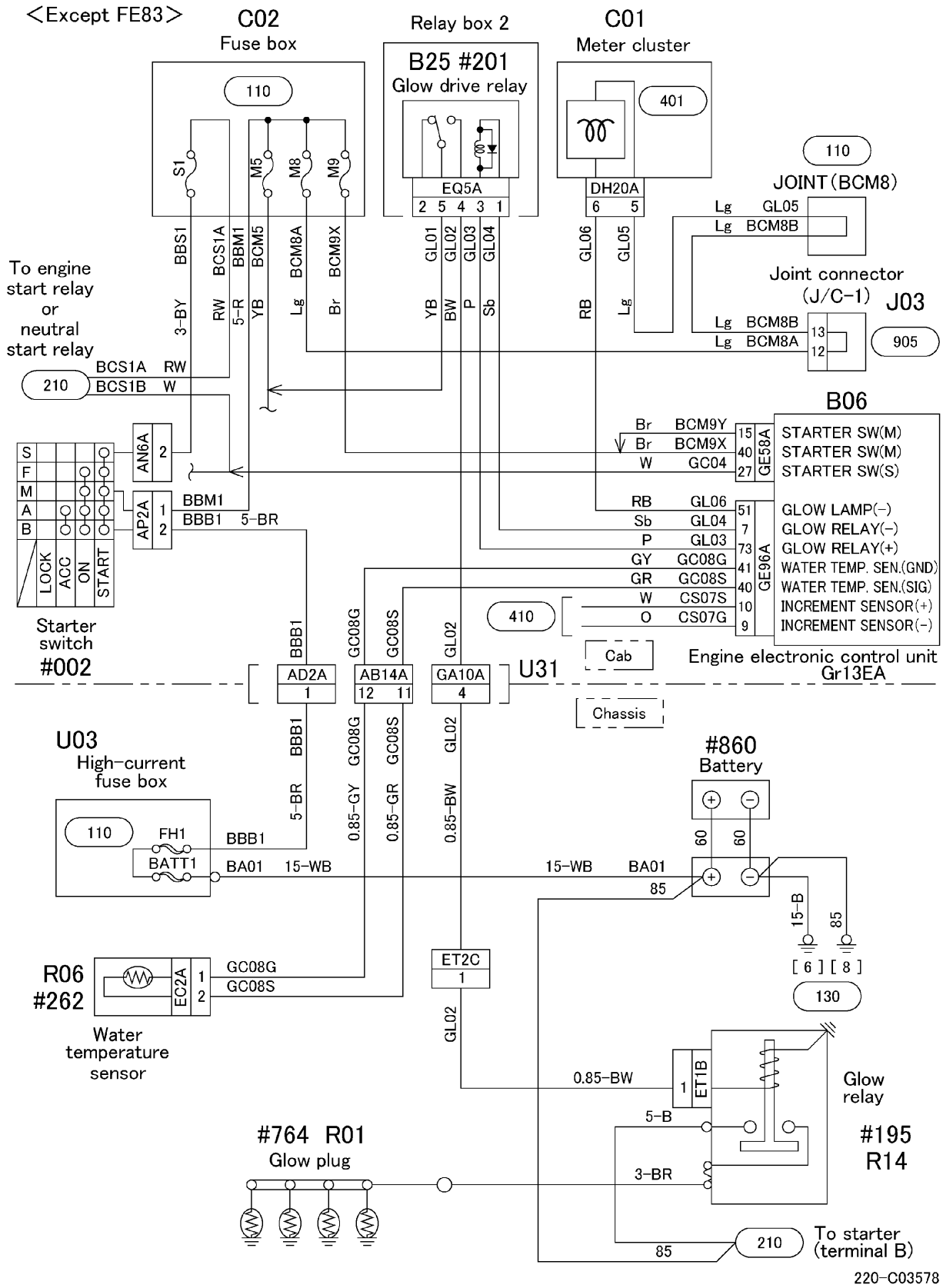

Return to Table of Contents

https://truckmanualshub.com/

220 ENGINE PREHEATING CIRCUIT

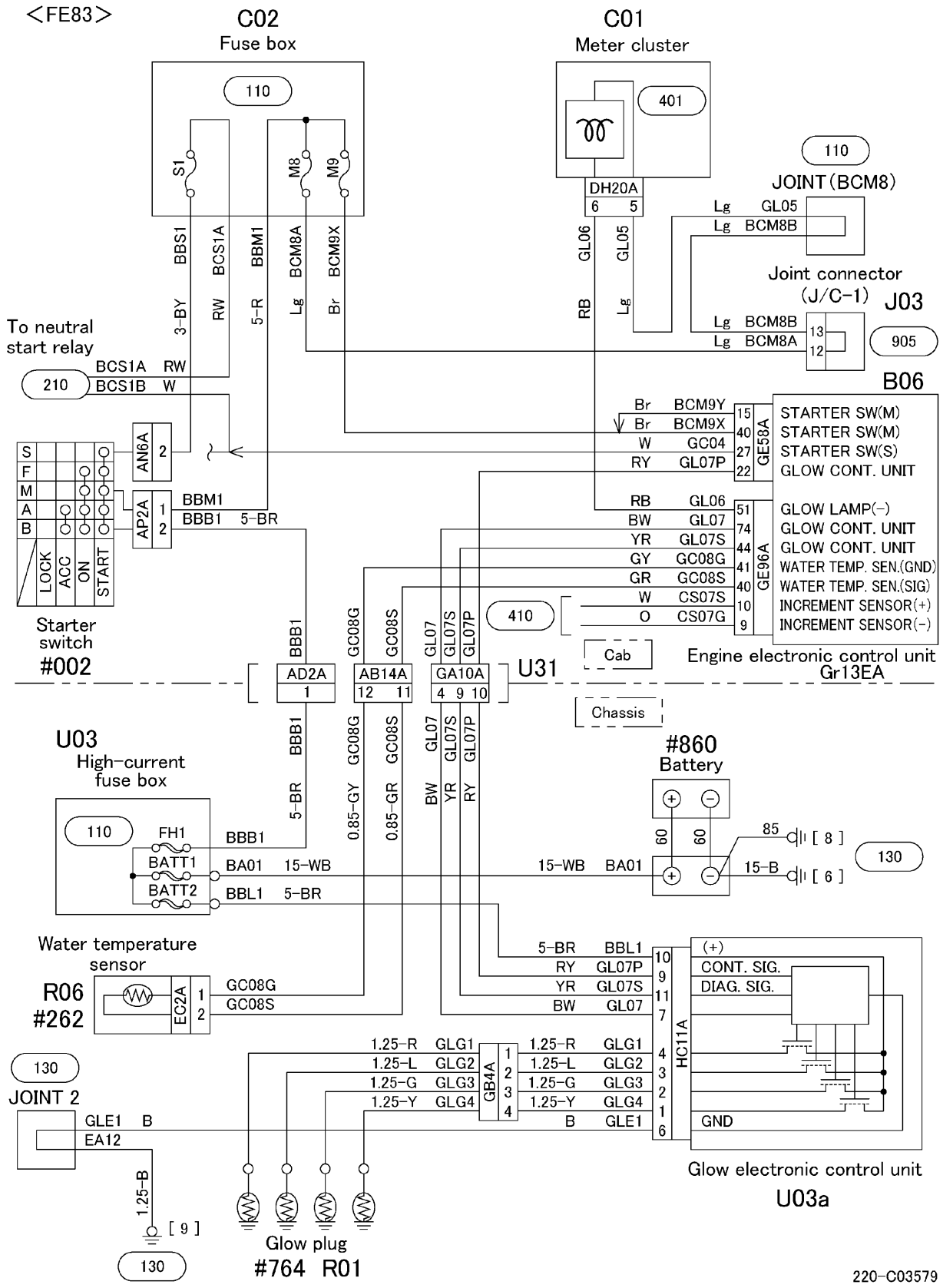

Return to Table of Contents

https://truckmanualshub.com/

19.3 LIGHTING CIRCUIT
310 HEADLAMP CIRCUIT

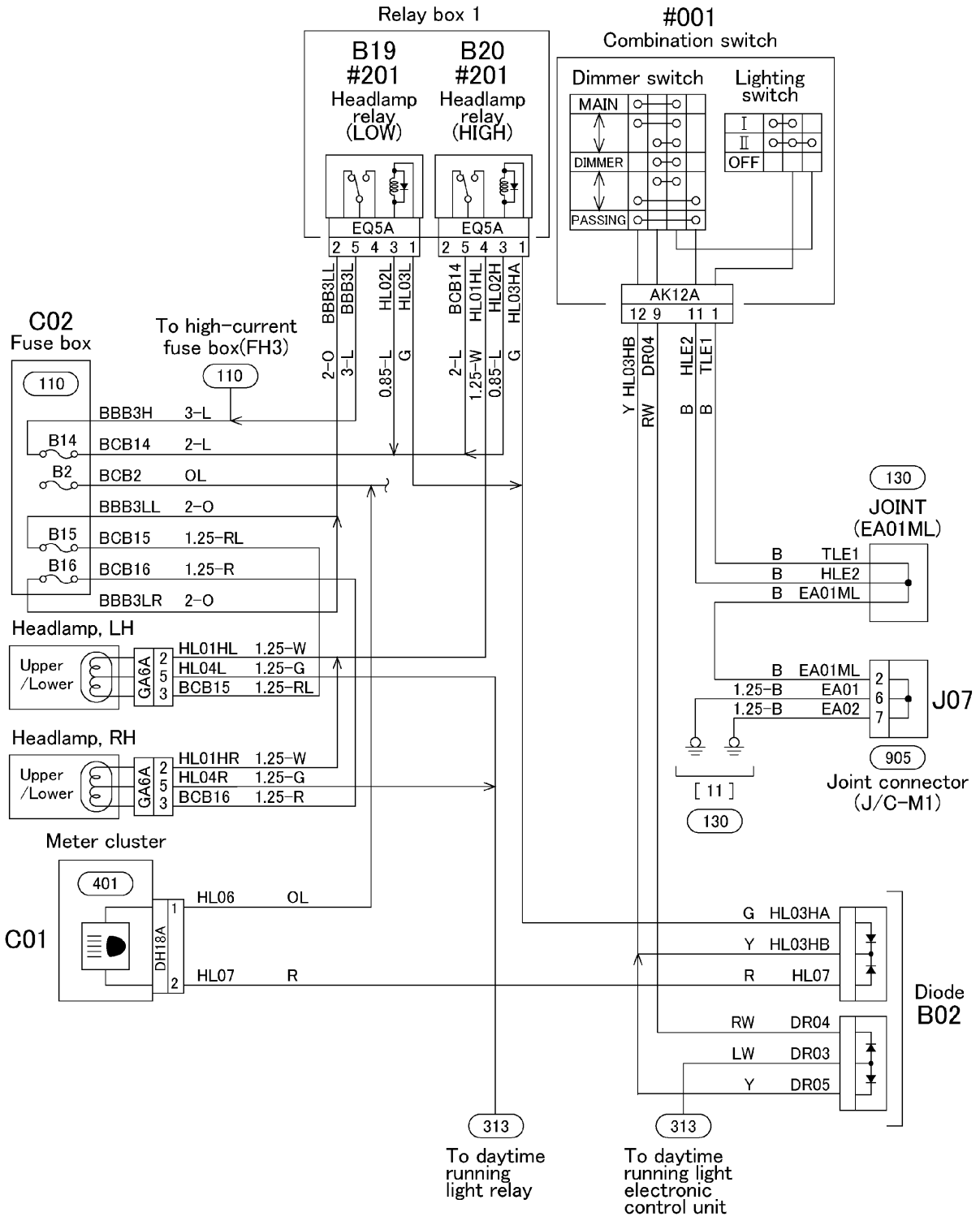

Return to Table of Contents

https://truckmanualshub.com/

313 DAYTIME RUNNING LIGHT CIRCUIT

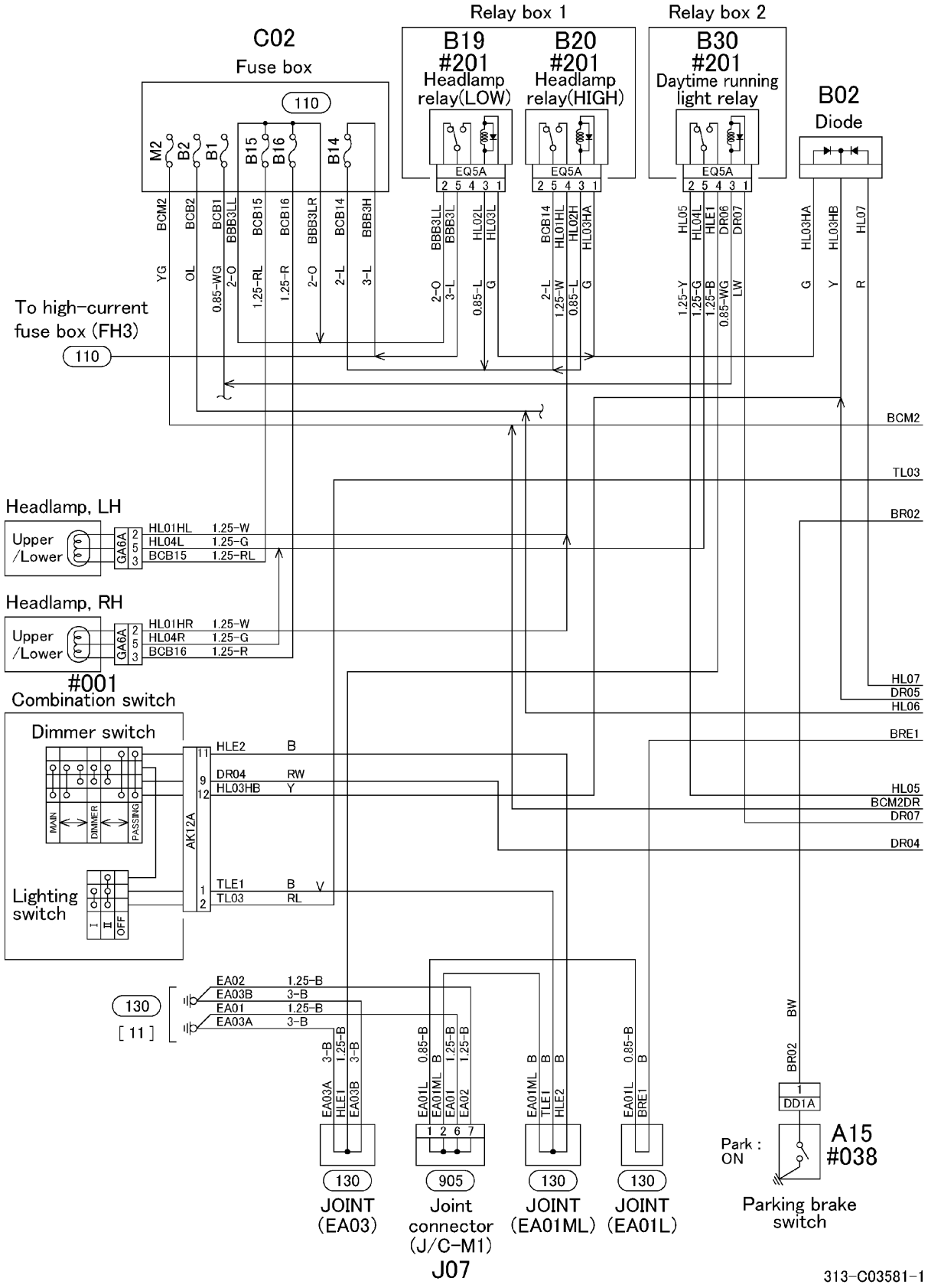

Return to Table of Contents

https://truckmanualshub.com/

313 DAYTIME RUNNING LIGHT CIRCUIT

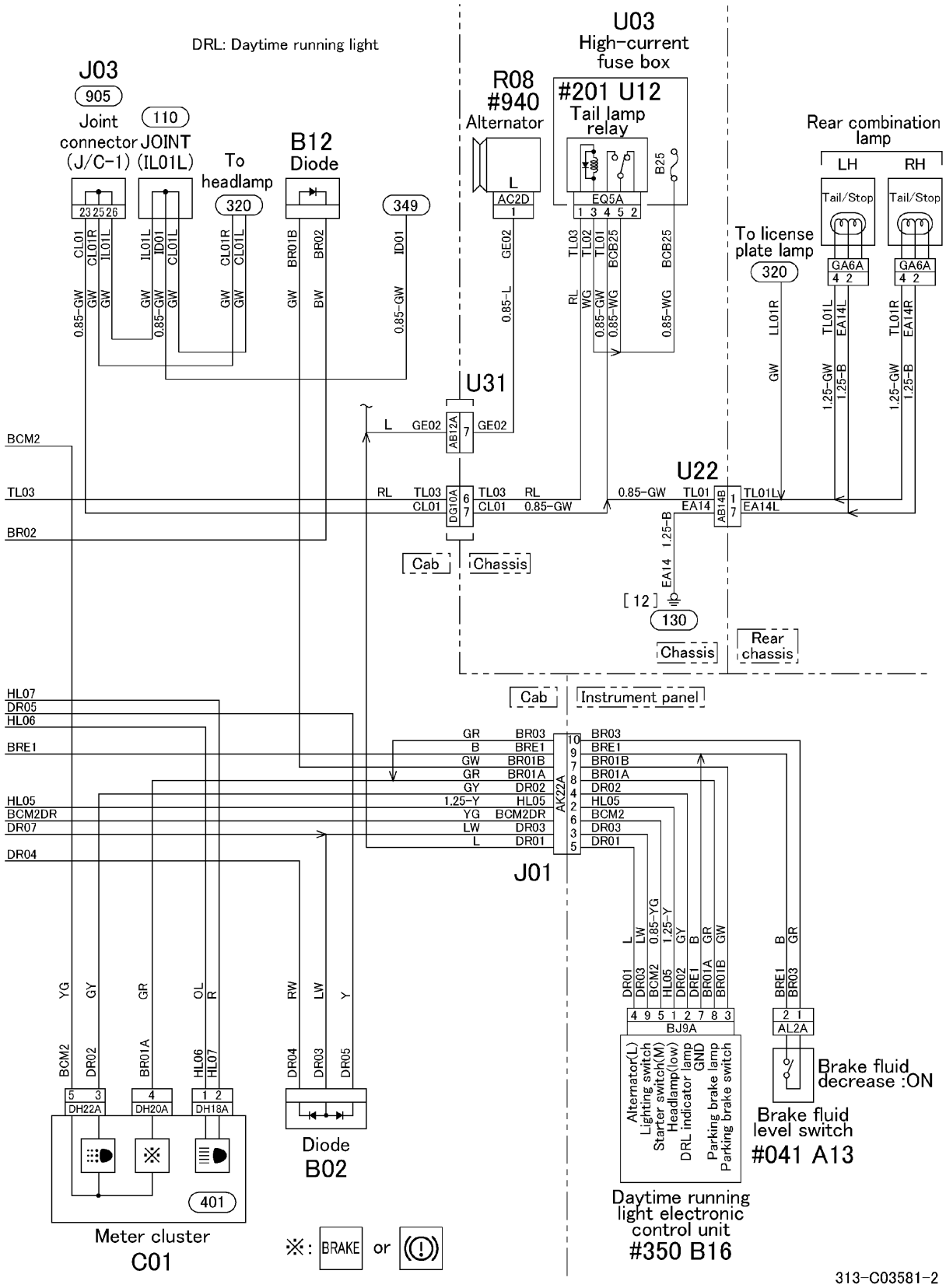

Return to Table of Contents

https://truckmanualshub.com/

320 TAIL, CLEARANCE AND LICENSE PLATE LAMPS CIRCUIT

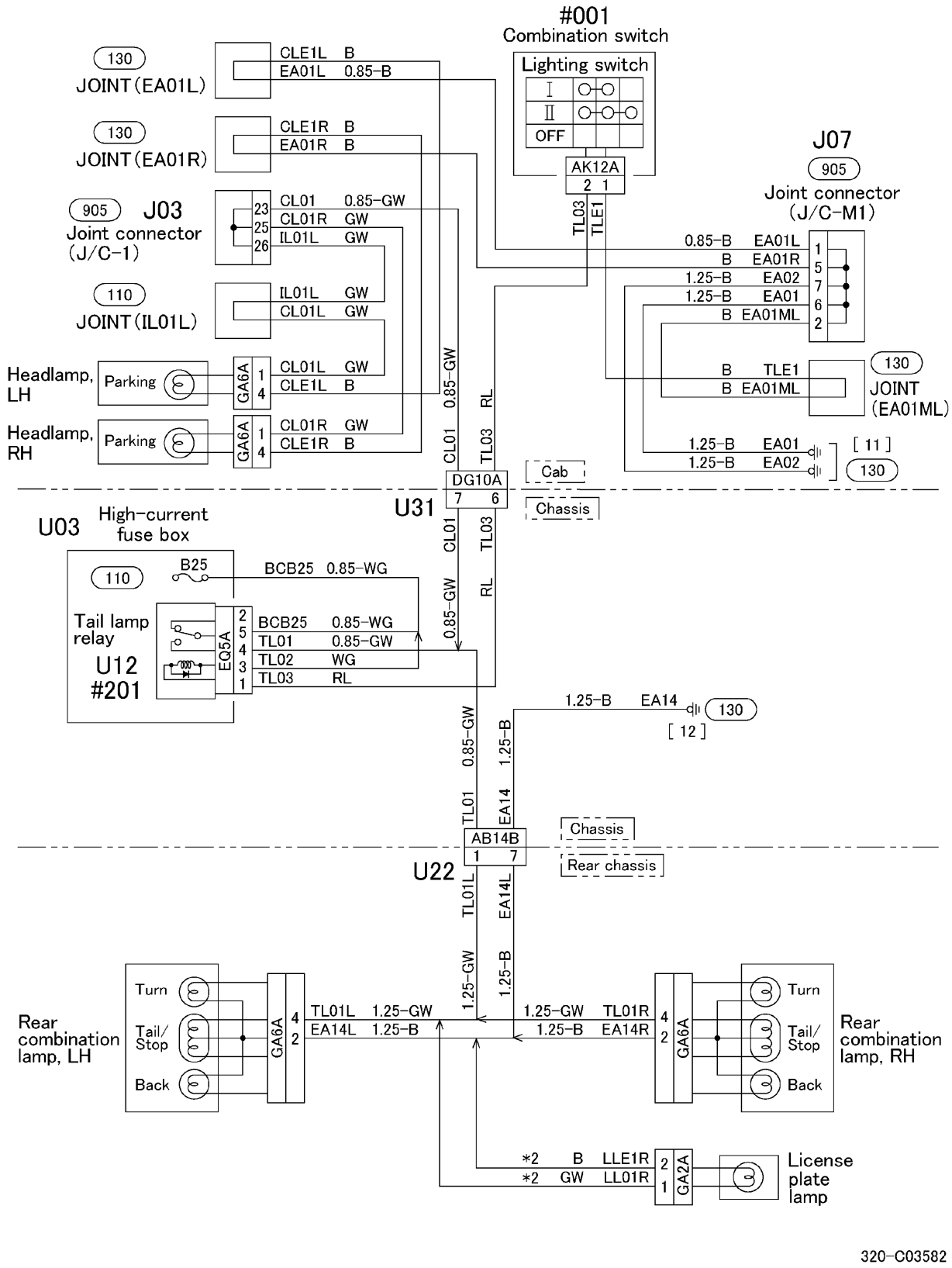

320-C03582

Return to Table of Contents

https://truckmanualshub.com/

325 STOP LAMP CIRCUIT

<Without auto cruise>

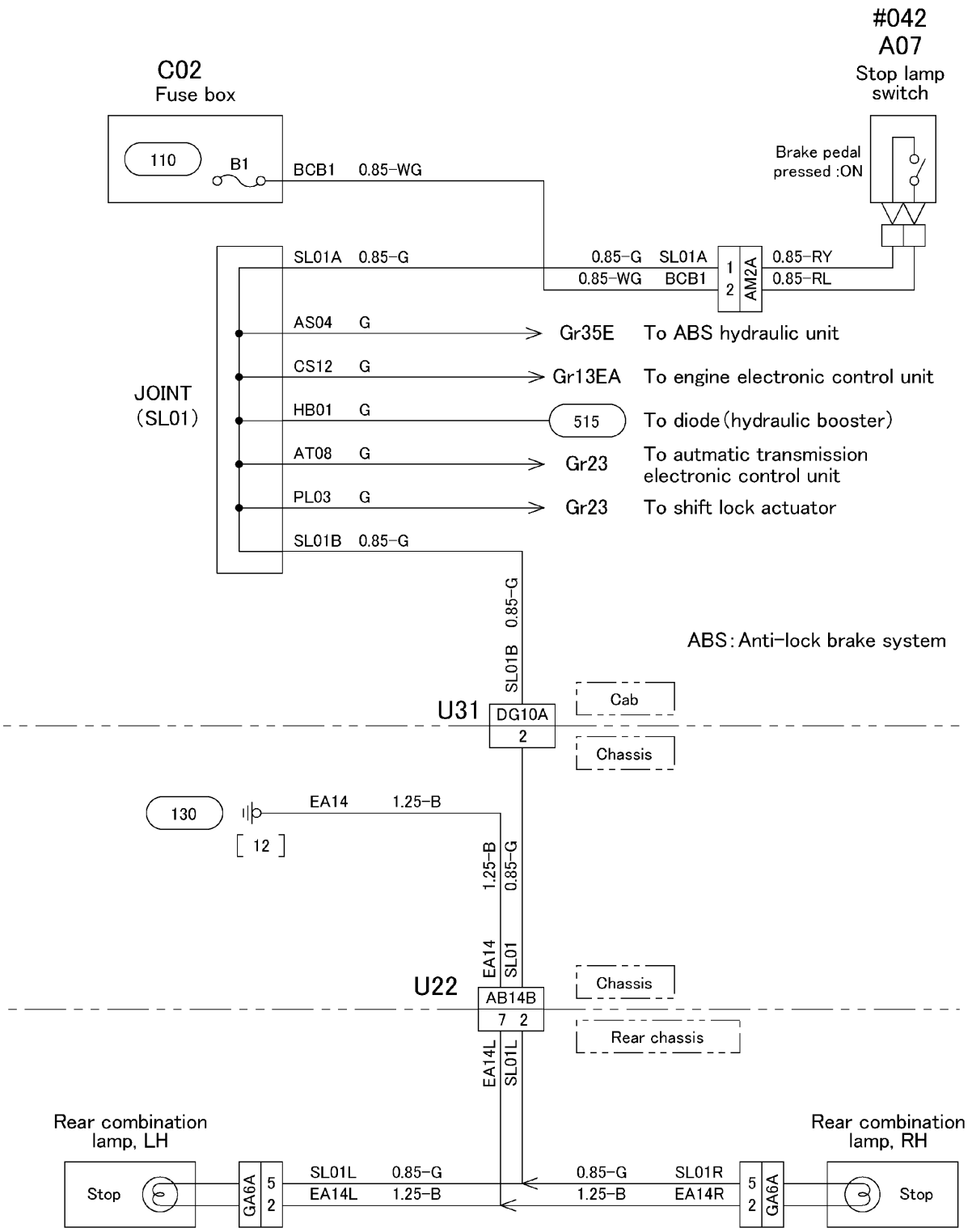

325-C03583

Return to Table of Contents

https://truckmanualshub.com/

325 STOP LAMP CIRCUIT

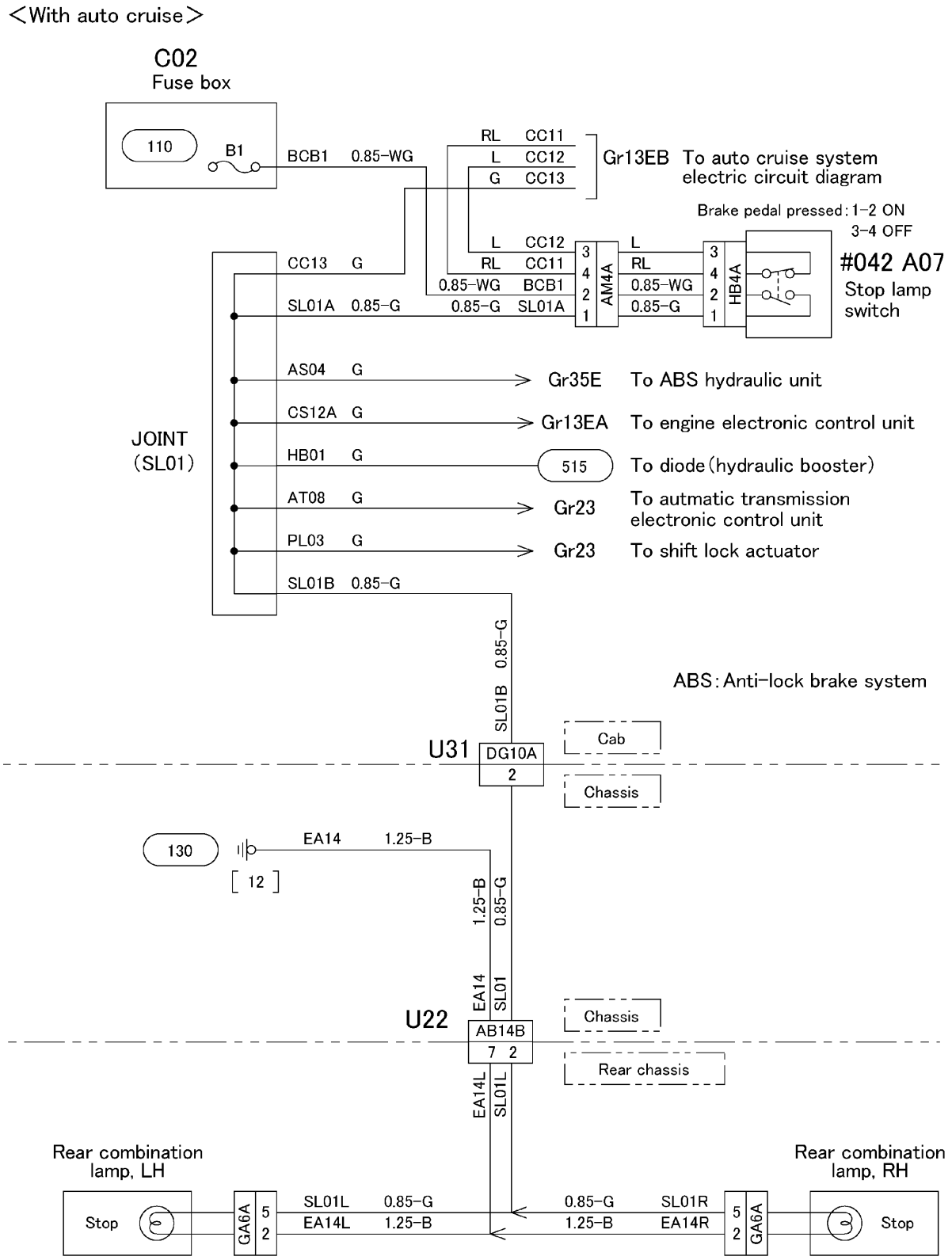

Return to Table of Contents

https://truckmanualshub.com/

330 TURN SIGNAL AND HAZARD LAMP CIRCUIT

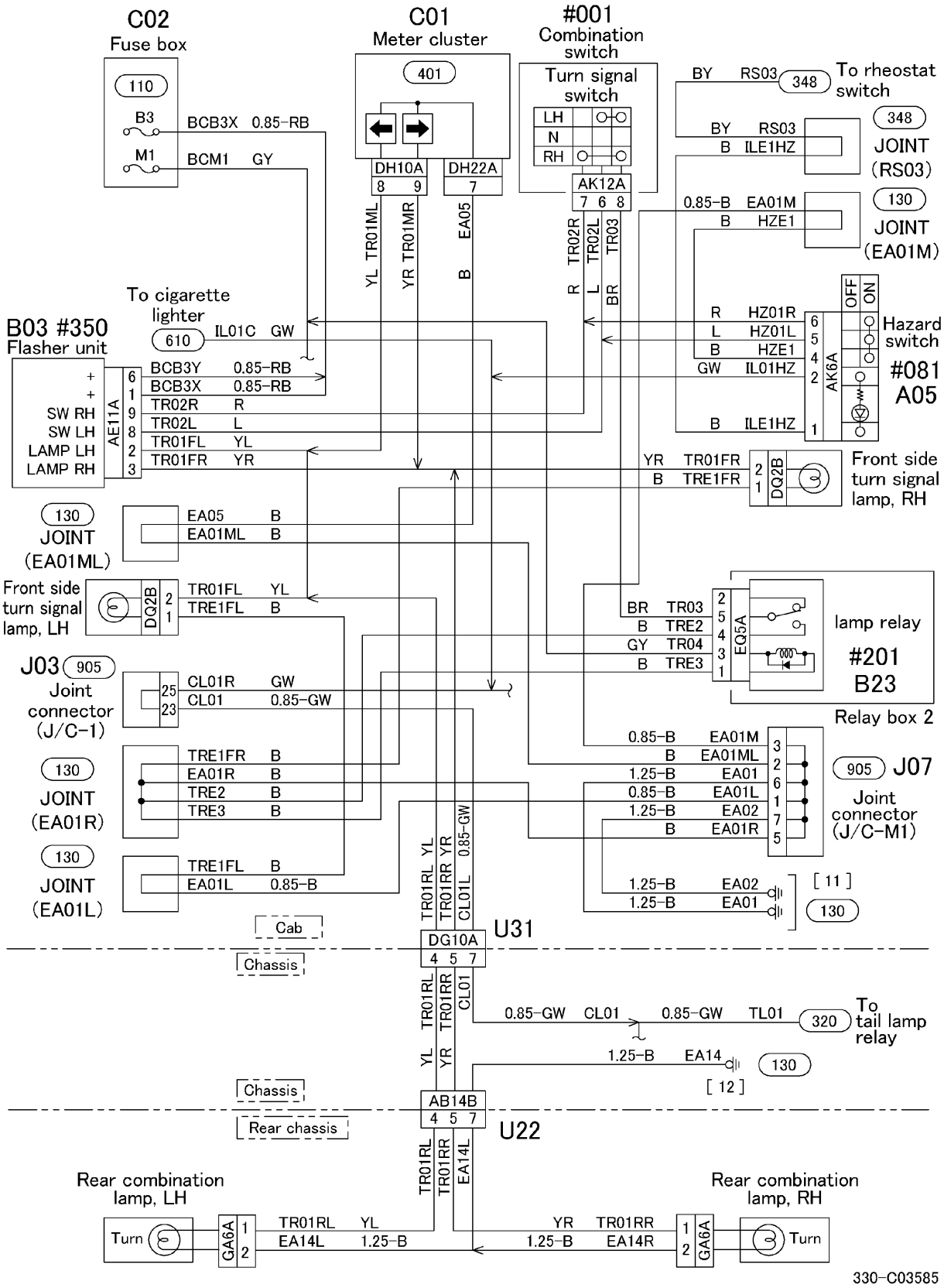

Return to Table of Contents

https://truckmanualshub.com/

340 BACKUP LAMP CIRCUIT

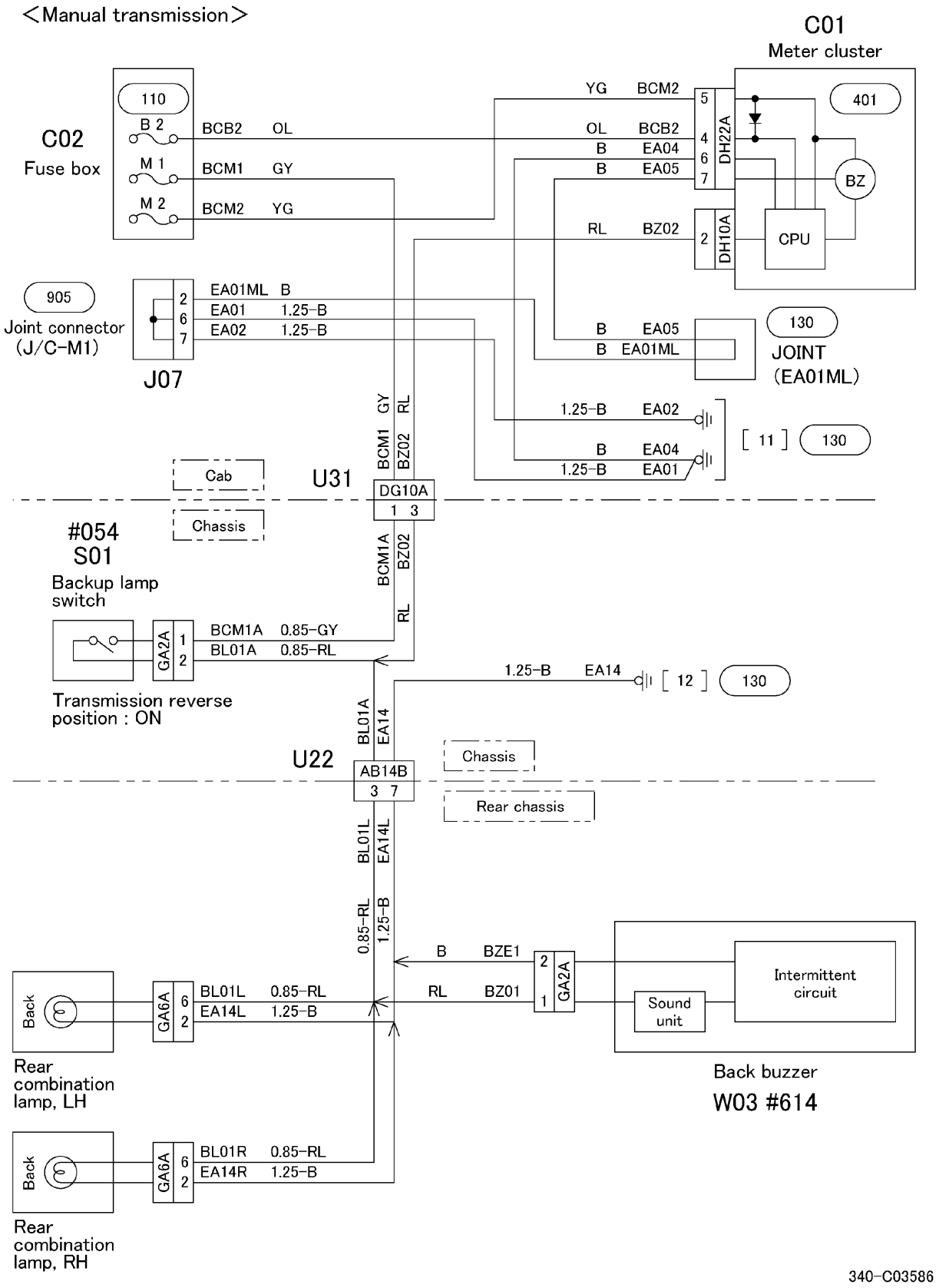

Return to Table of Contents

https://truckmanualshub.com/

340 BACKUP LAMP CIRCUIT

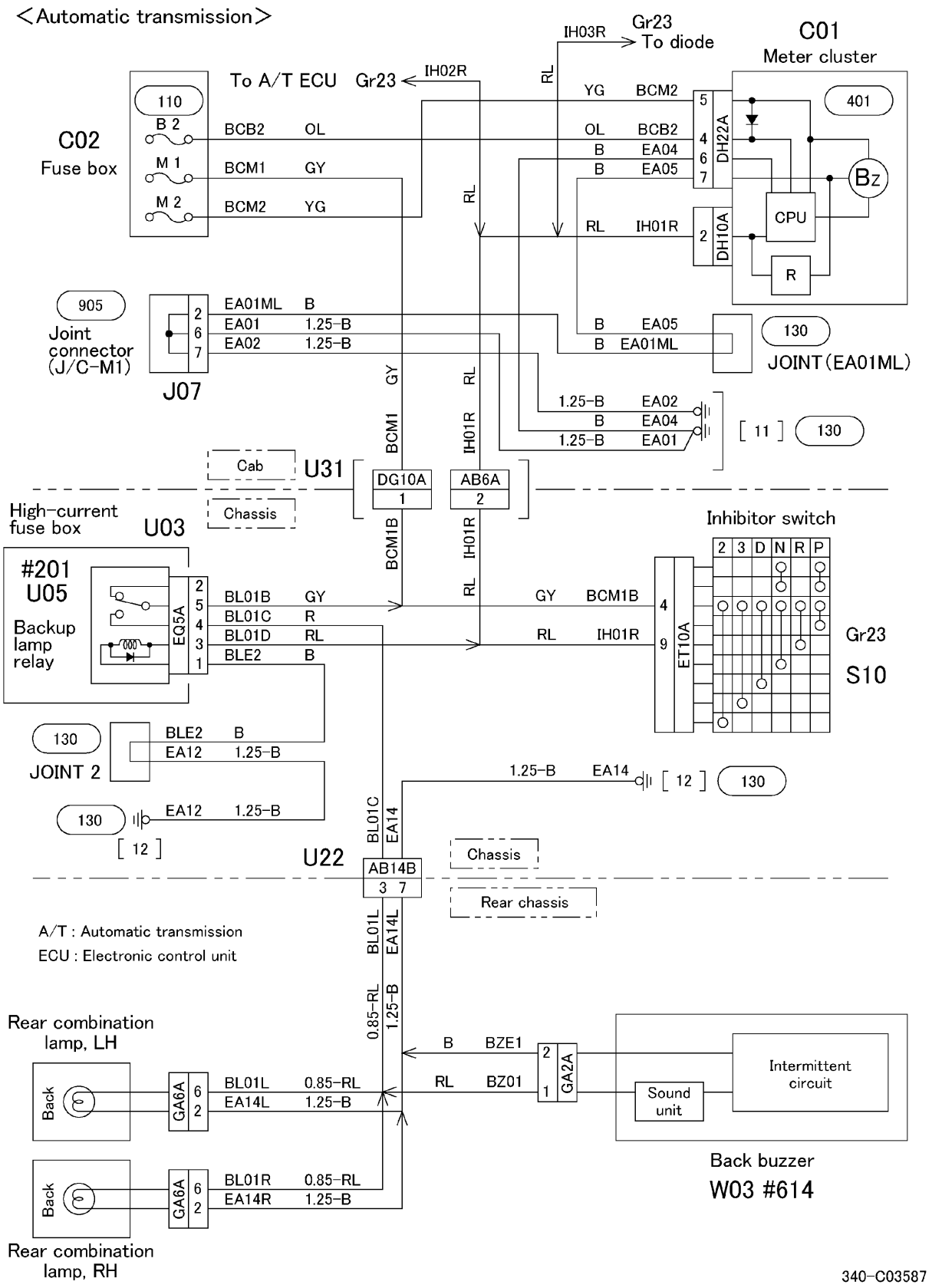

Return to Table of Contents

https://truckmanualshub.com/

345 CAB LAMP CIRCUIT

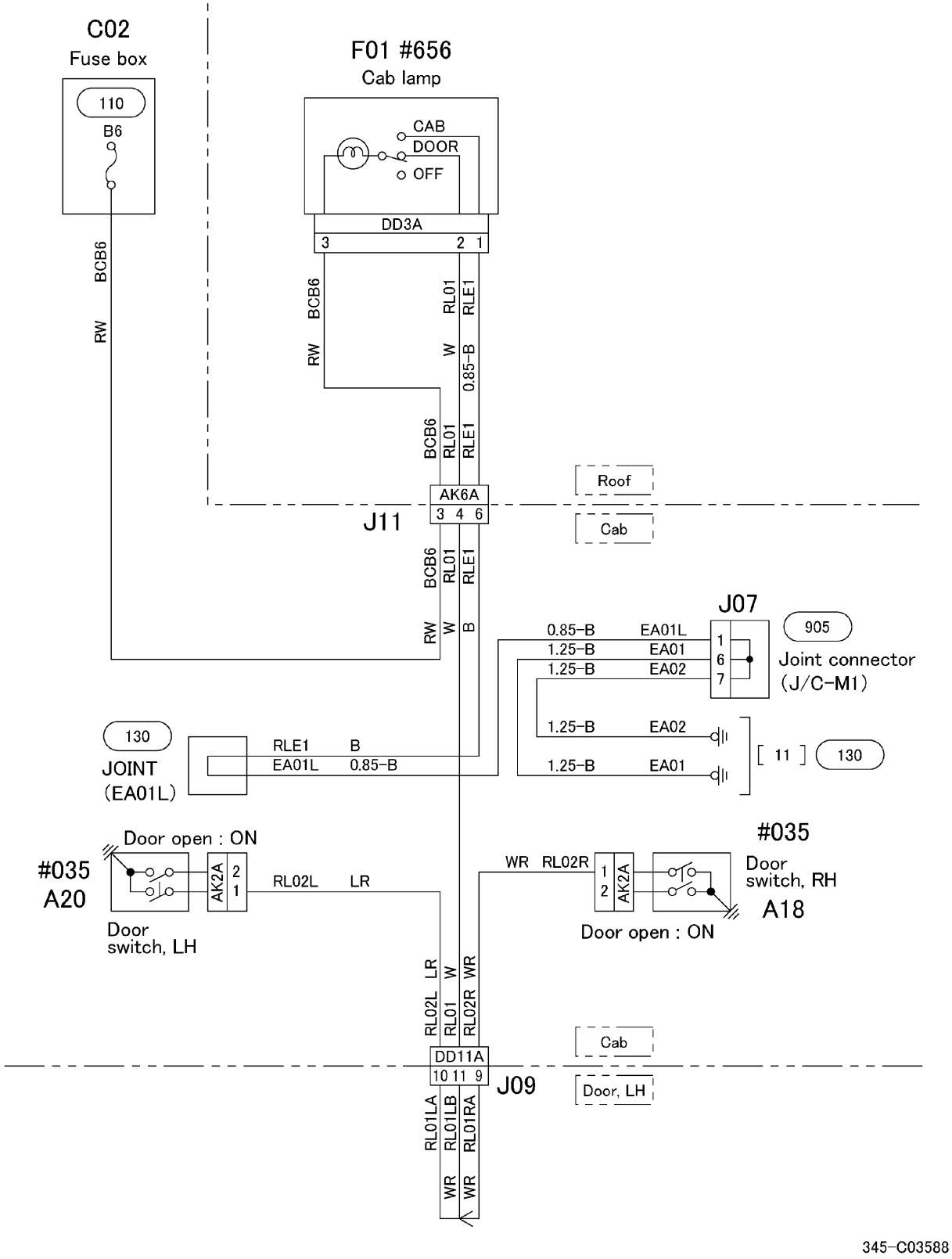

345-C03588

Return to Table of Contents

https://truckmanualshub.com/

348 ILLUMINATION LAMP CIRCUIT

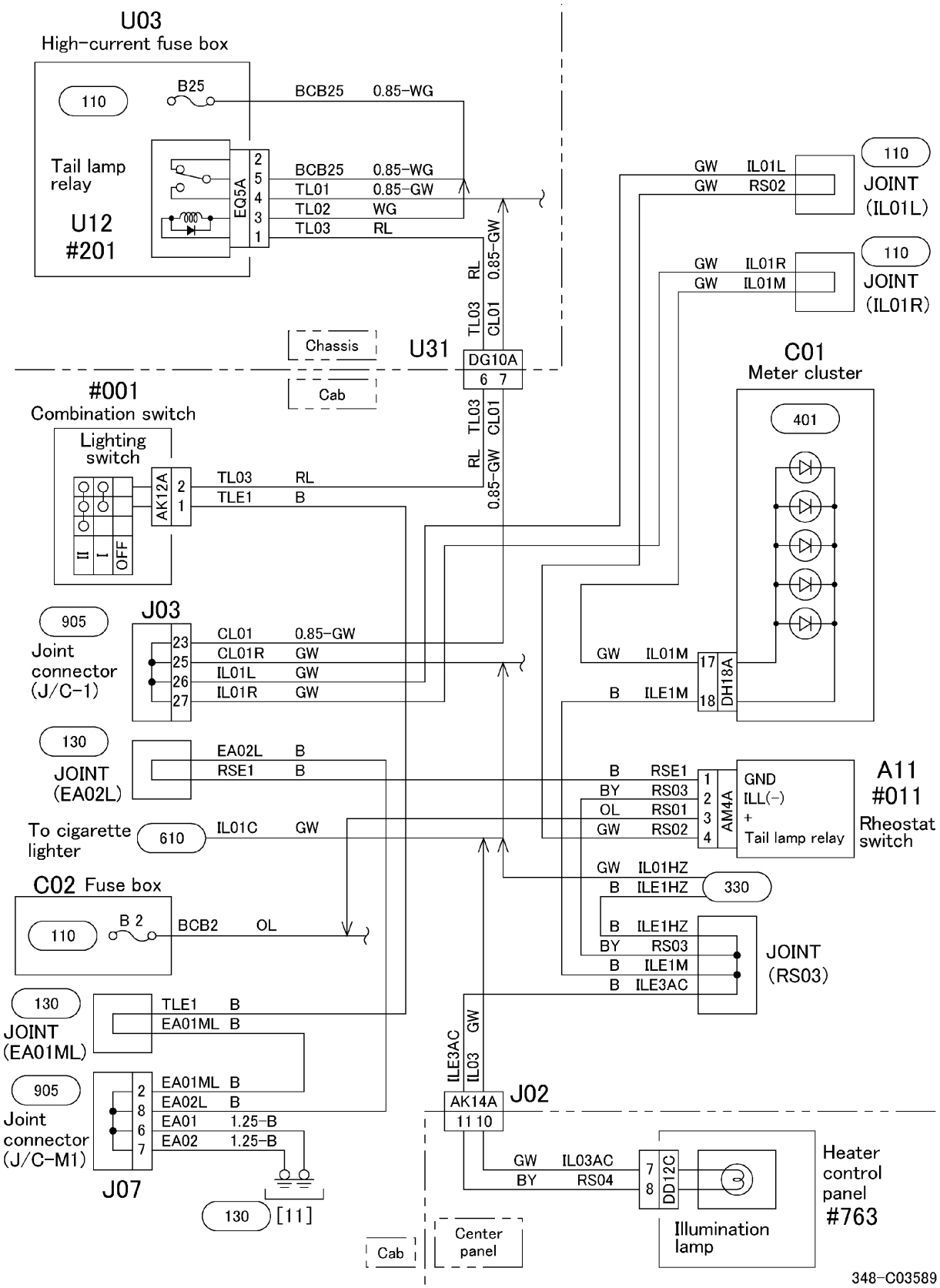

Return to Table of Contents

https://truckmanualshub.com/

349 IDENTIFICATION LAMP AND SIDE MARKER LAMP CIRCUIT

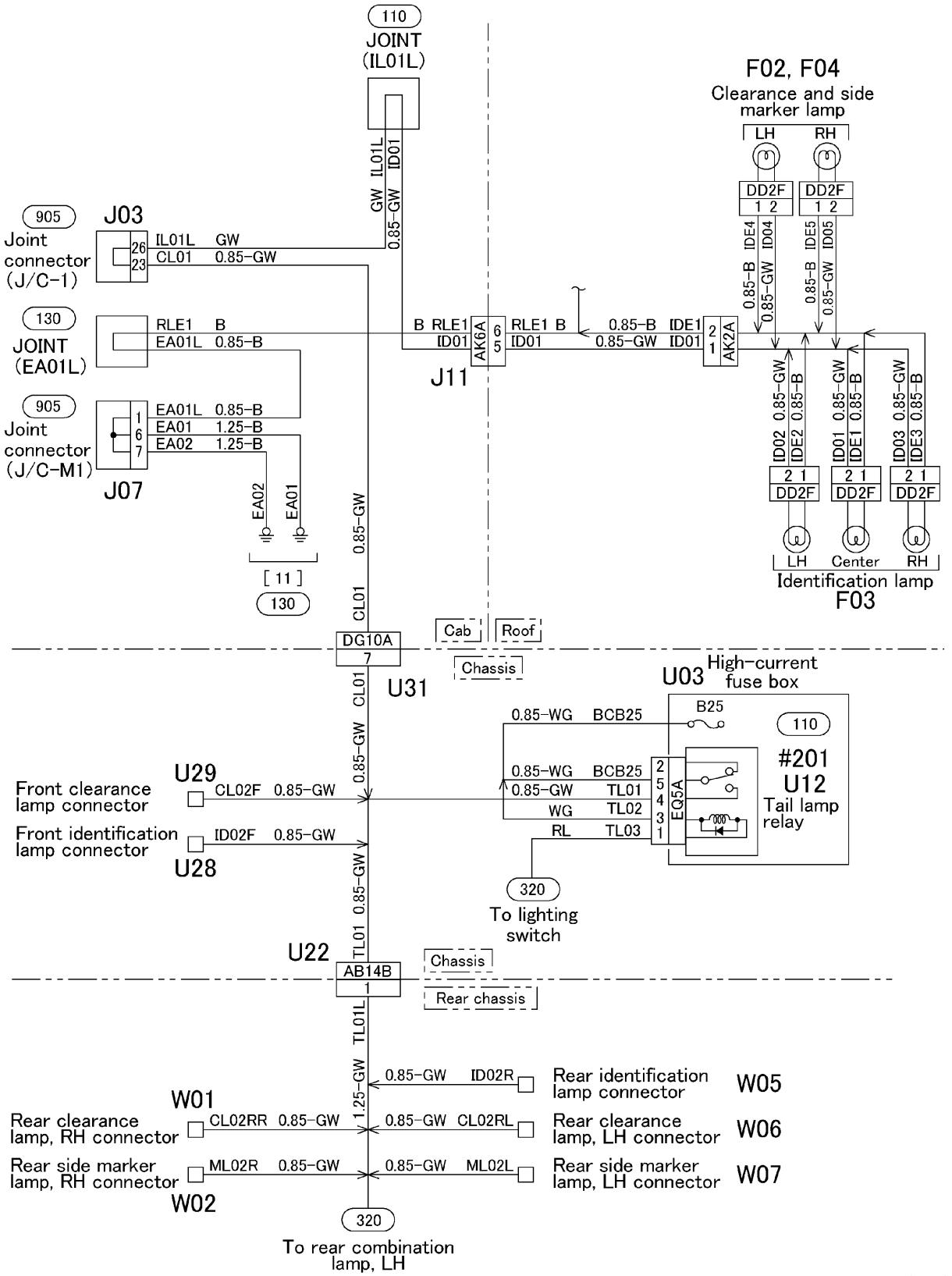

Return to Table of Contents

https://truckmanualshub.com/

352 VAN BODY DOME LIGHT CIRCUIT

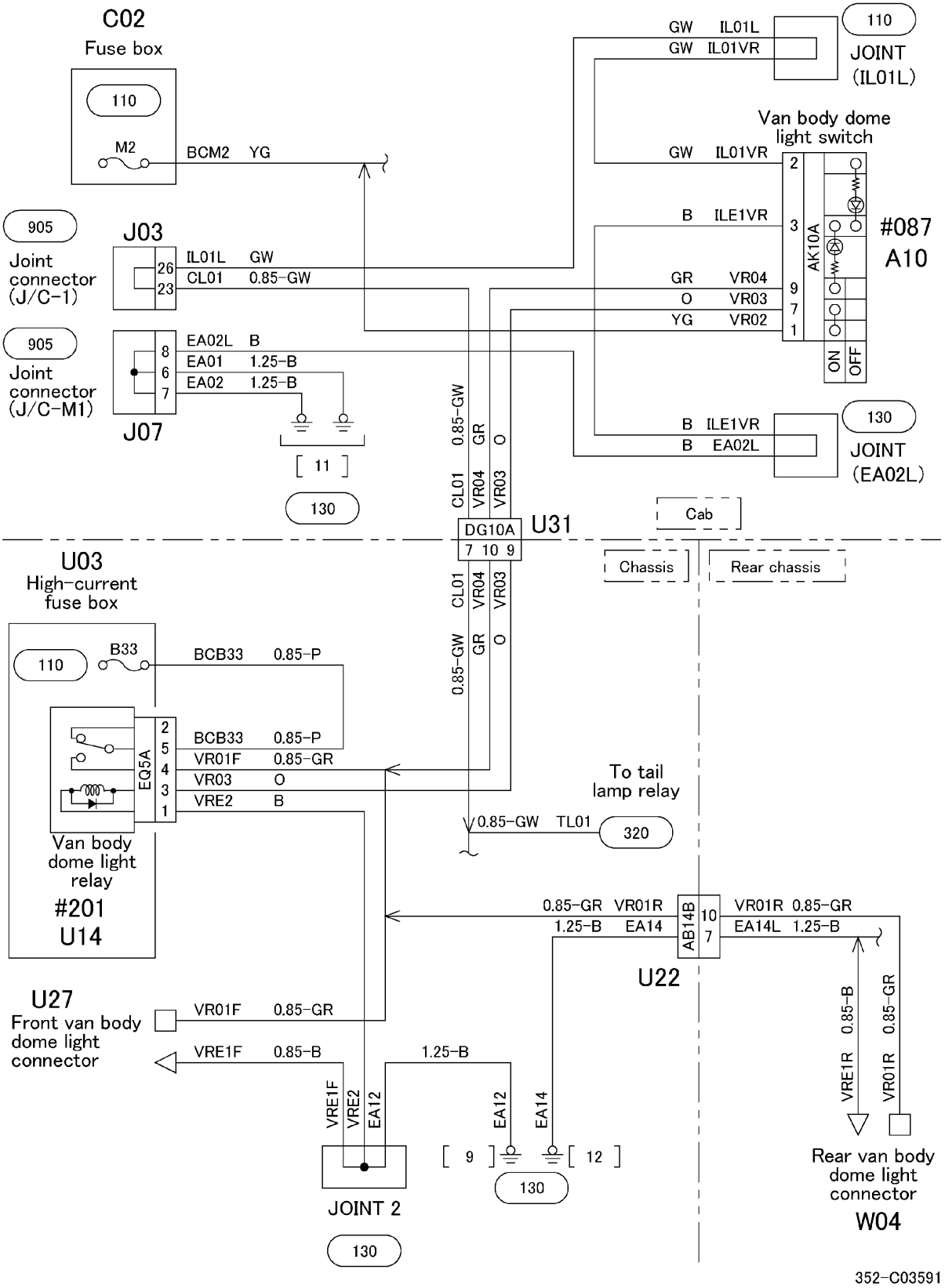

Return to Table of Contents

https://truckmanualshub.com/

19.4 METER CLUSTER
401 METER CLUSTER INTERNAL CIRCUIT

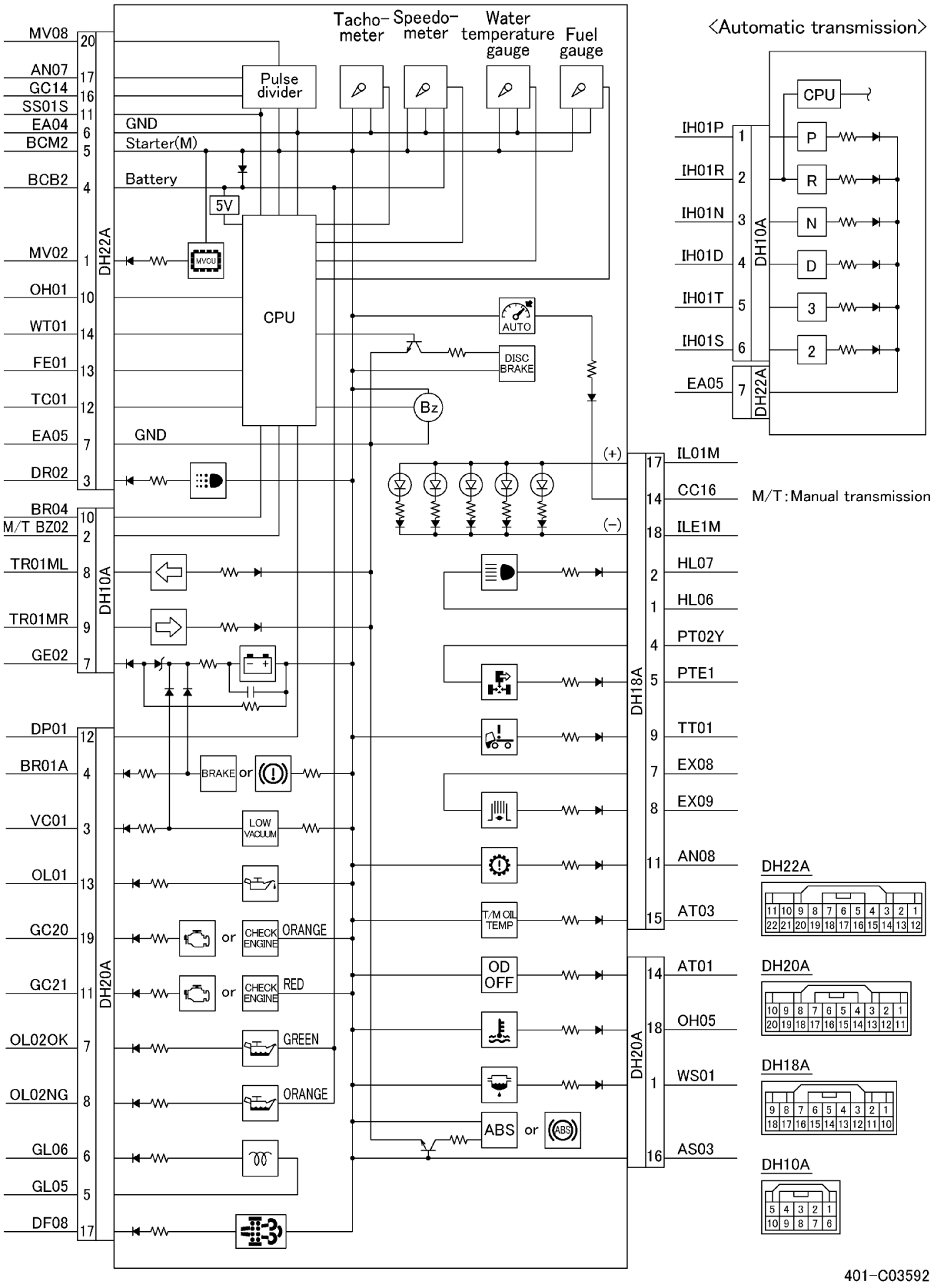

Return to Table of Contents

https://truckmanualshub.com/

401 METER CLUSTER INTERNAL CIRCUIT

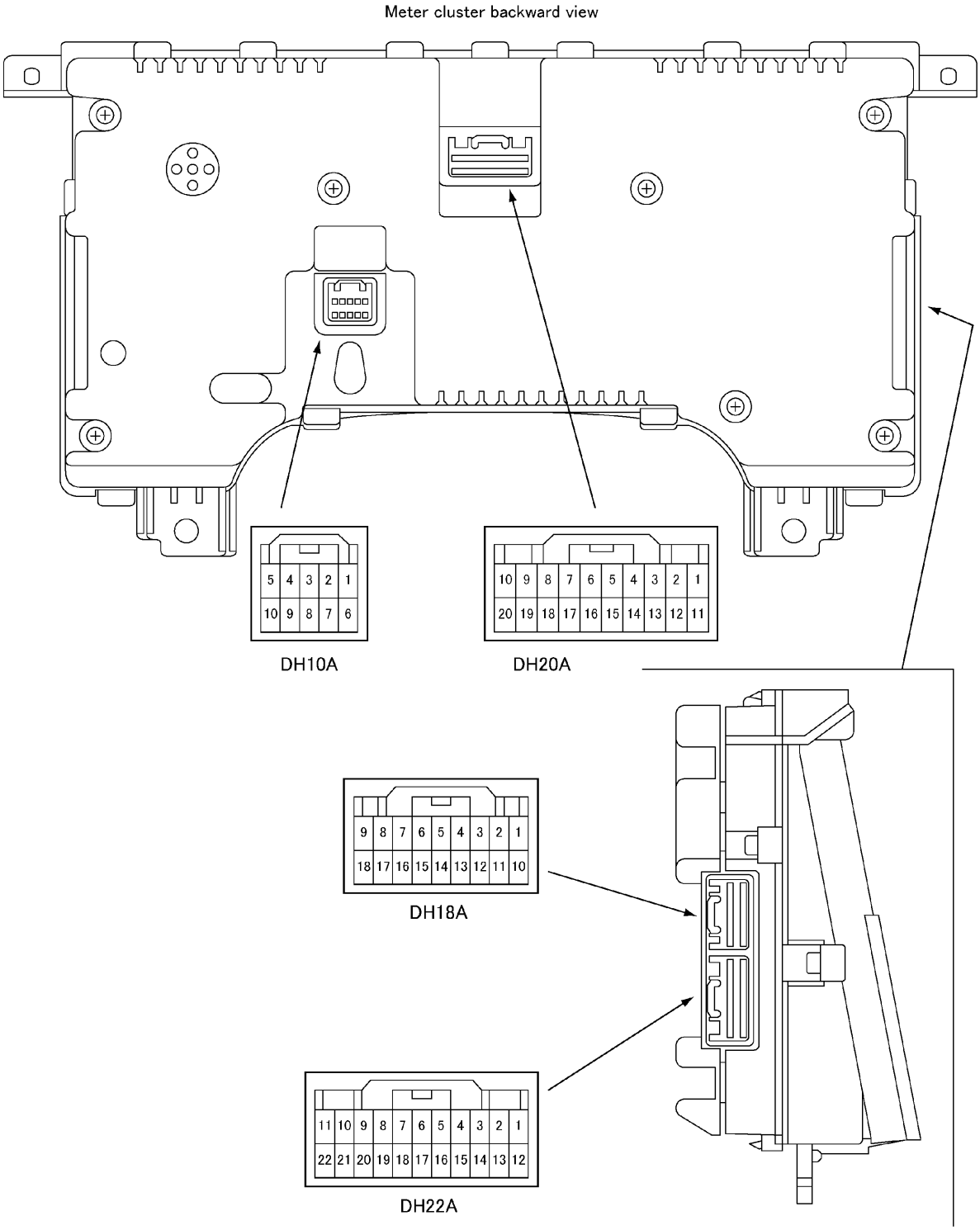

Because a CPU is built into the meter, the inner part of the meter body cannot be disassembled.

P50800N

Return to Table of Contents

https://truckmanualshub.com/

410 TACHOMETER CIRCUIT

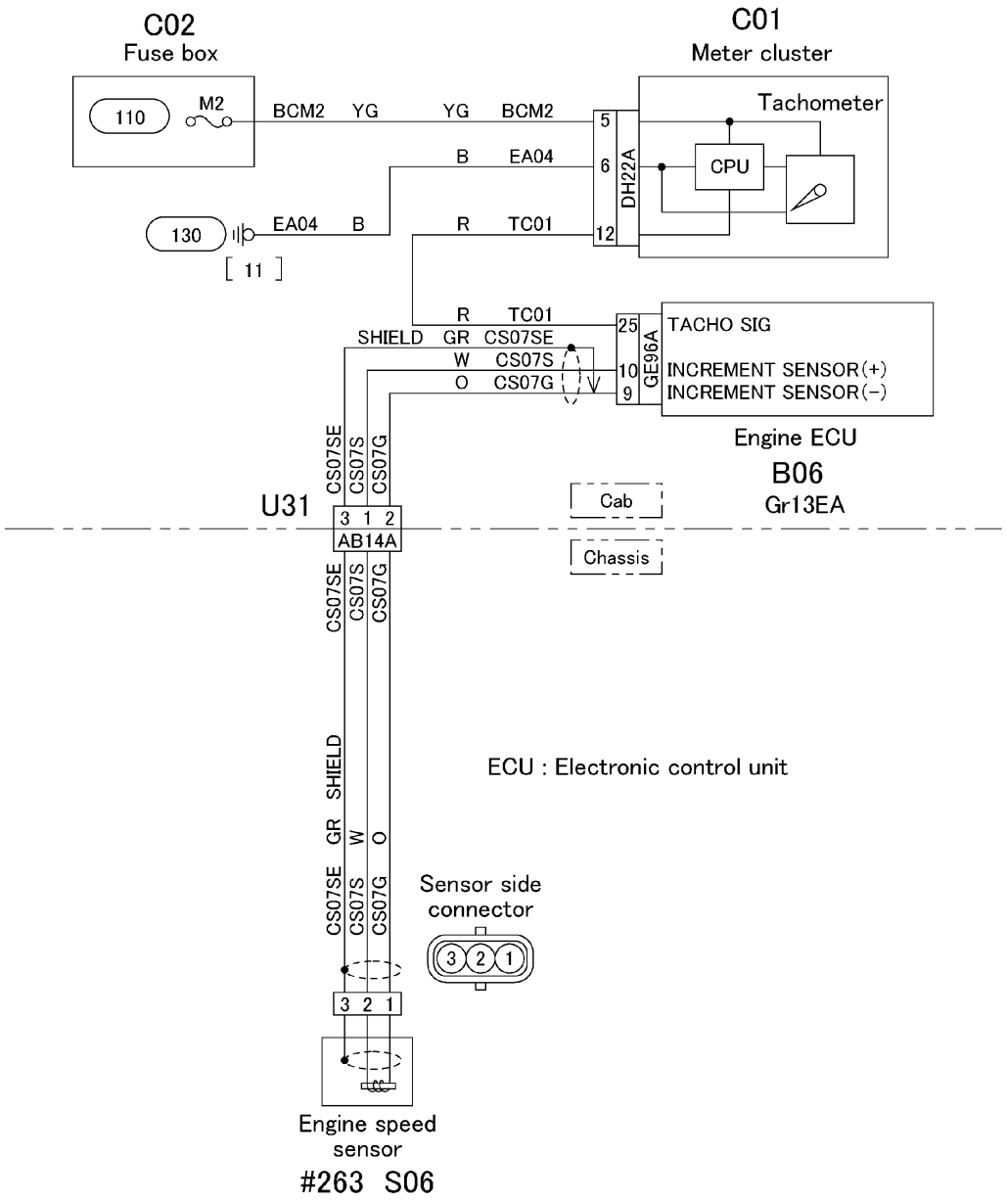

410-C03593

Return to Table of Contents

https://truckmanualshub.com/

412 SPEEDOMETER CIRCUIT

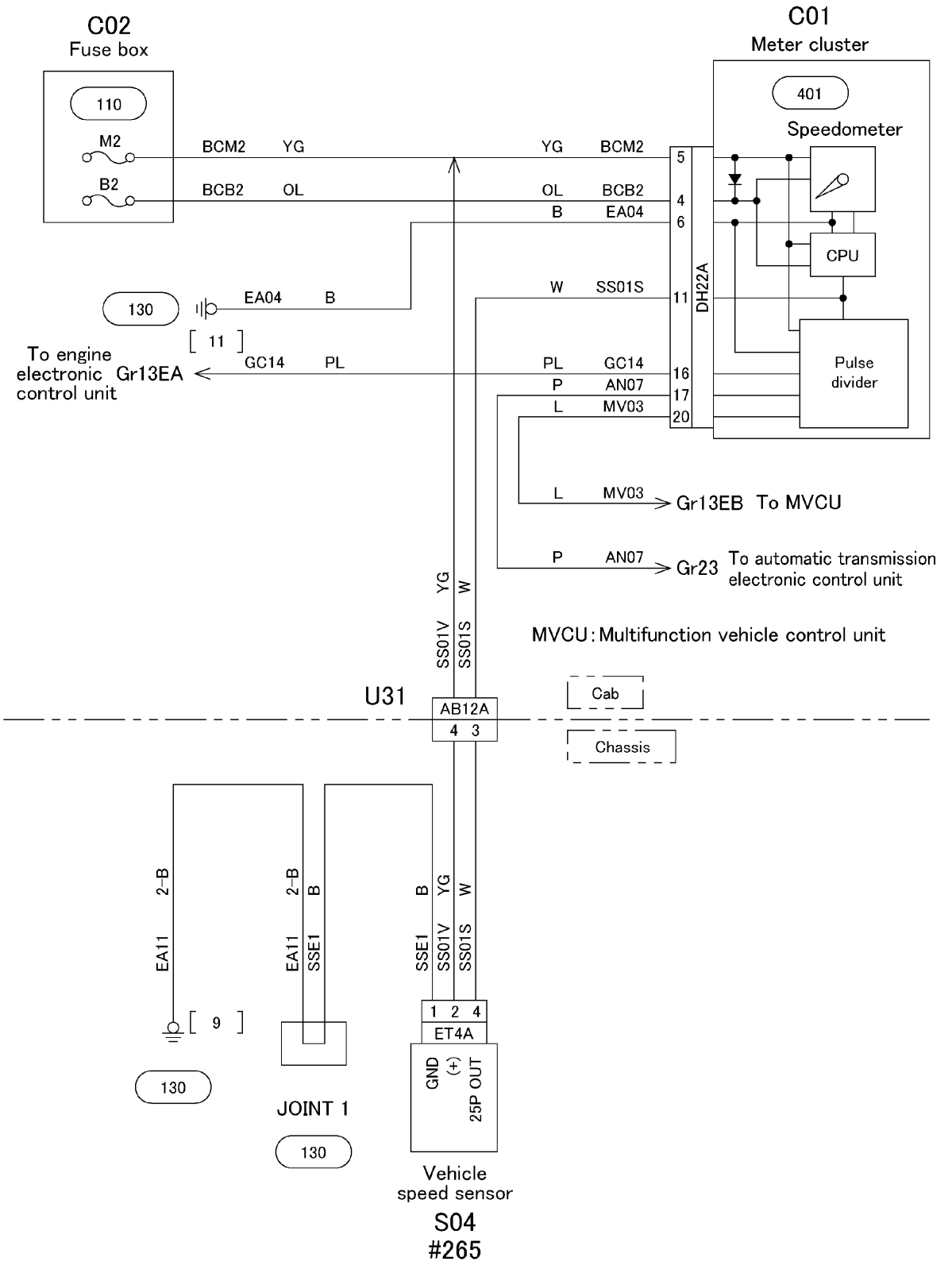

412-C03594

Return to Table of Contents

https://truckmanualshub.com/

420 FUEL GAUGE CIRCUIT

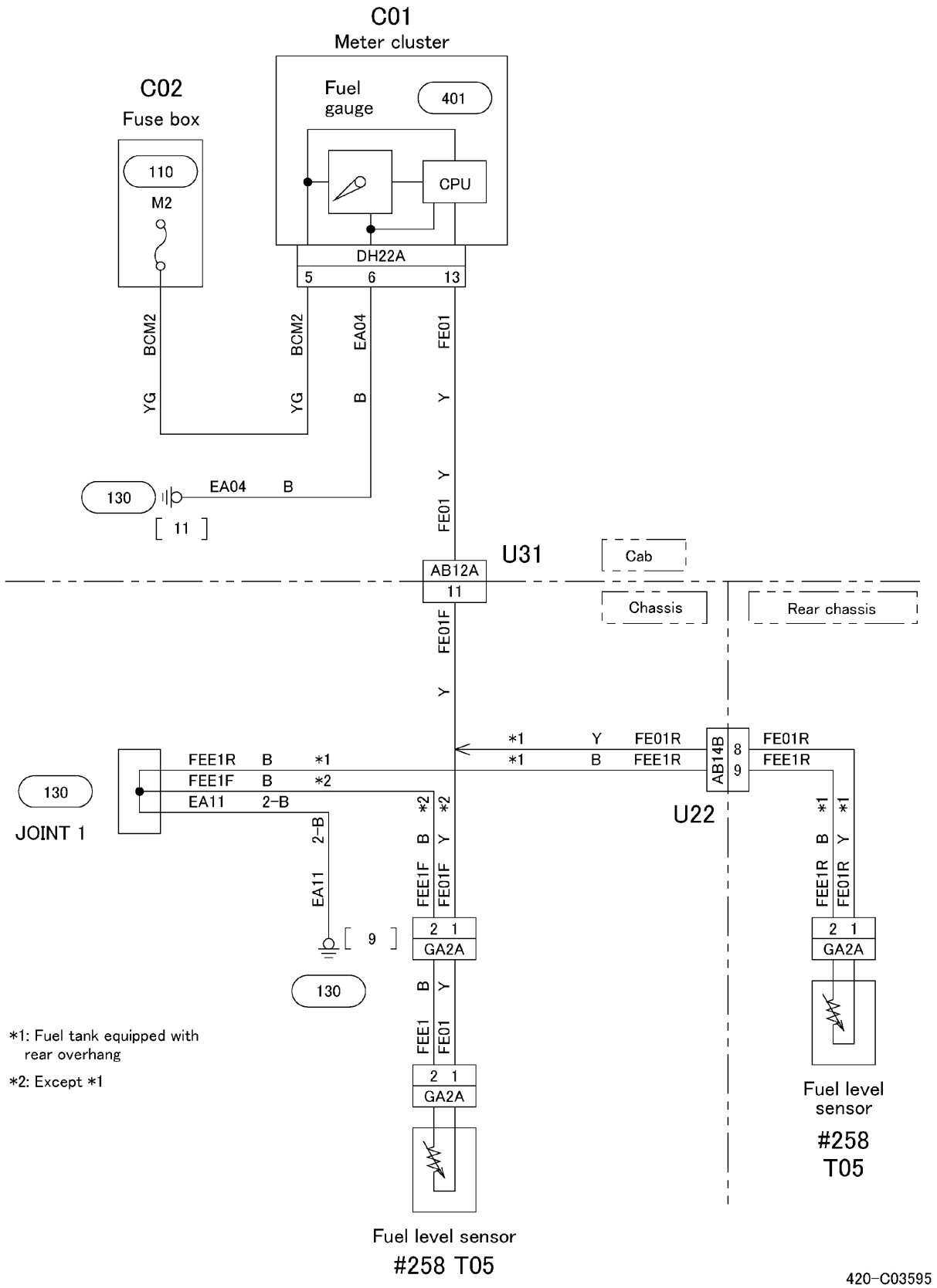

Return to Table of Contents

https://truckmanualshub.com/

425 WATER TEMPERATURE GAUGE CIRCUIT

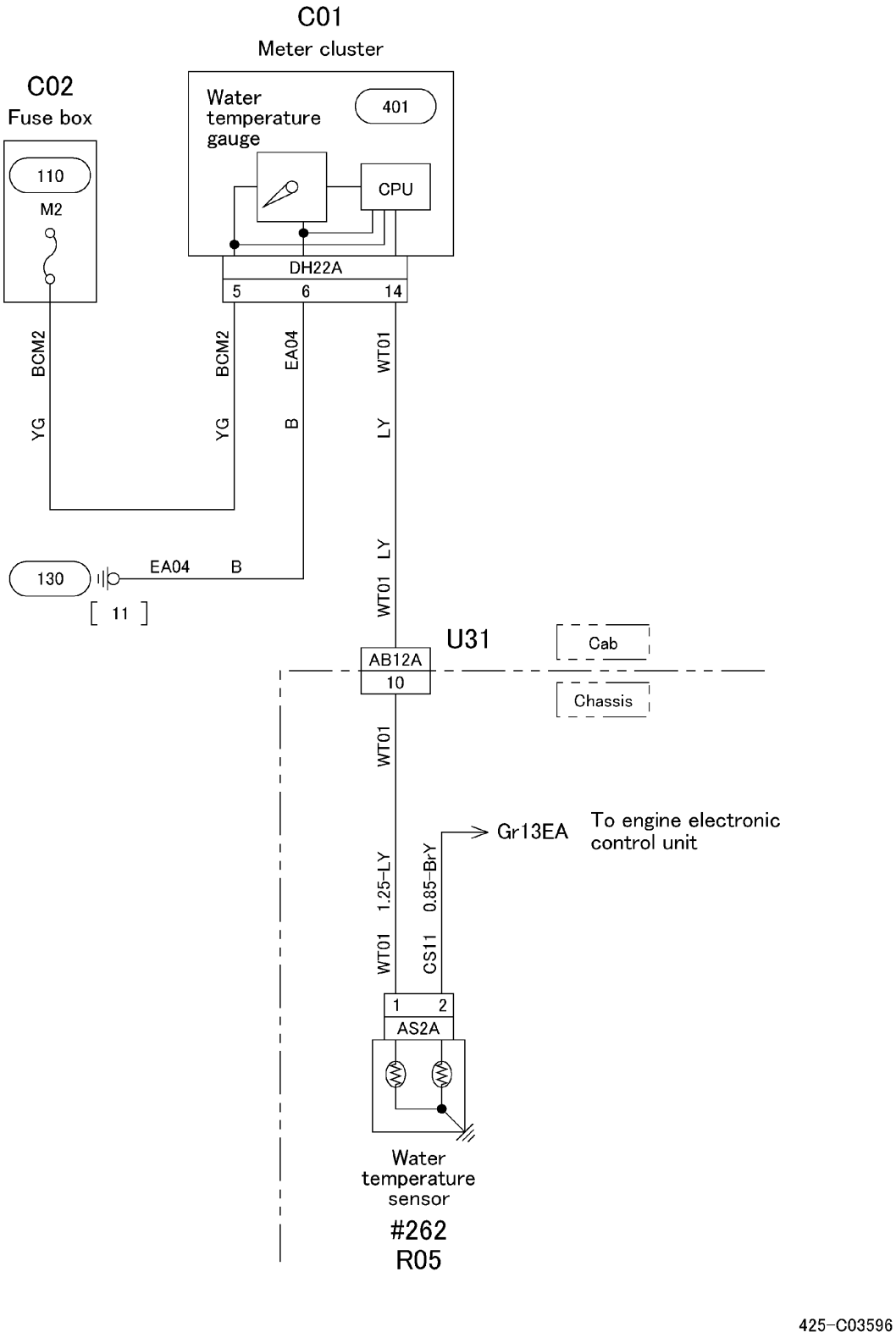

Return to Table of Contents

https://truckmanualshub.com/

19.5 INDICATOR AND WARNING LAMP CIRCUIT
510 PARKING BRAKE INDICATOR CIRCUIT

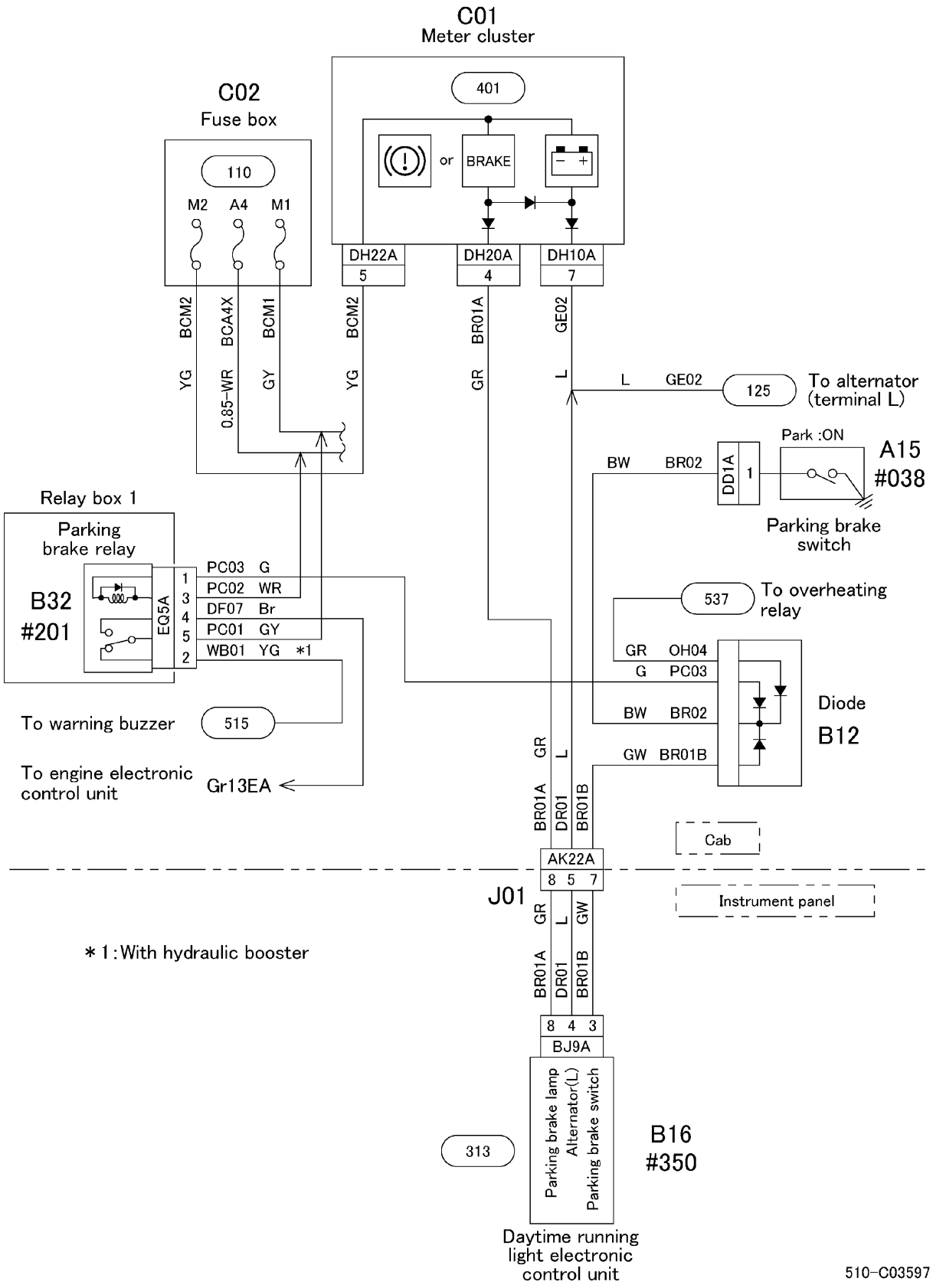

Return to Table of Contents

https://truckmanualshub.com/

515 BRAKE WARNING CIRCUIT

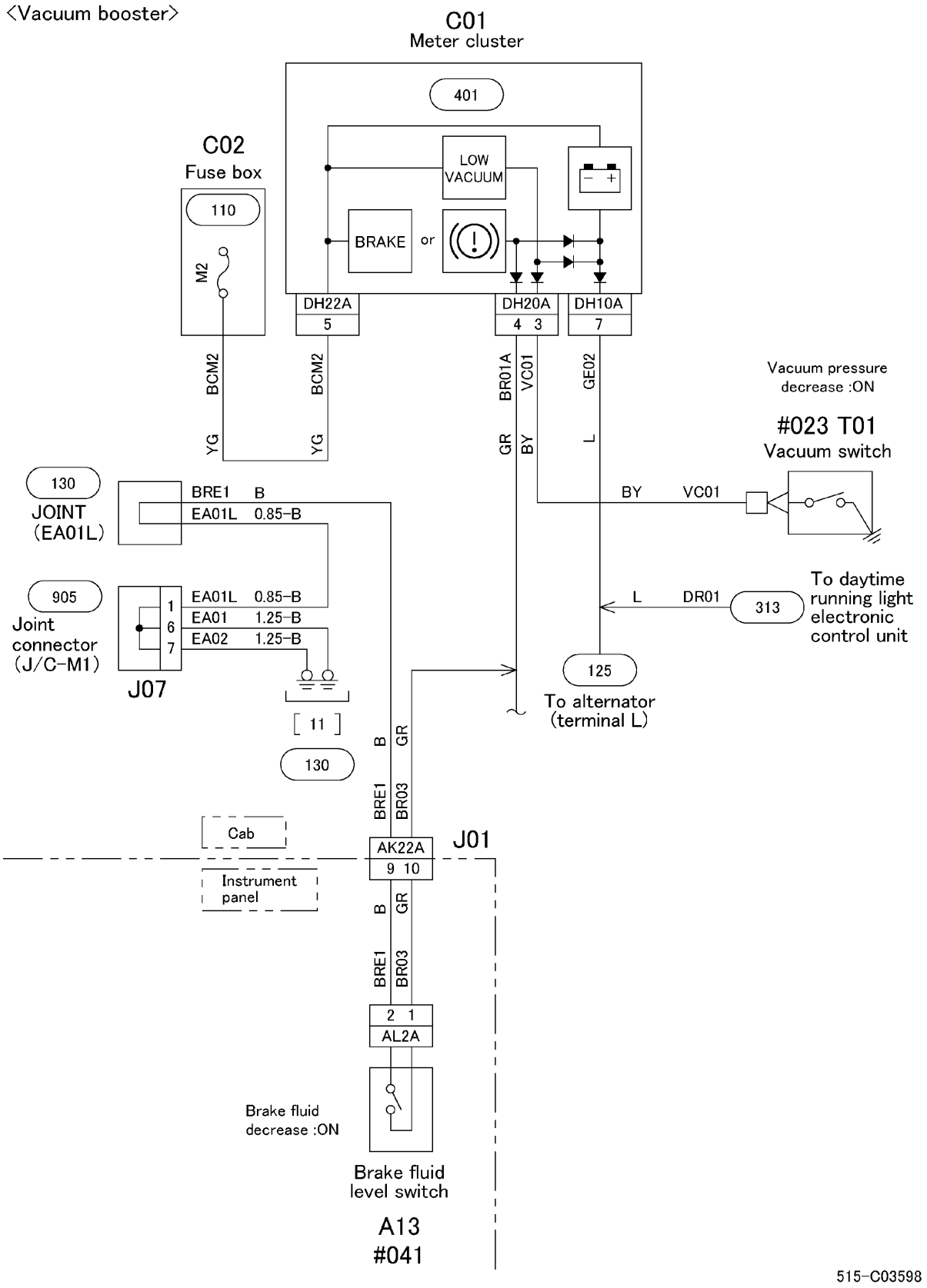

Return to Table of Contents

https://truckmanualshub.com/

515 BRAKE WARNING CIRCUIT

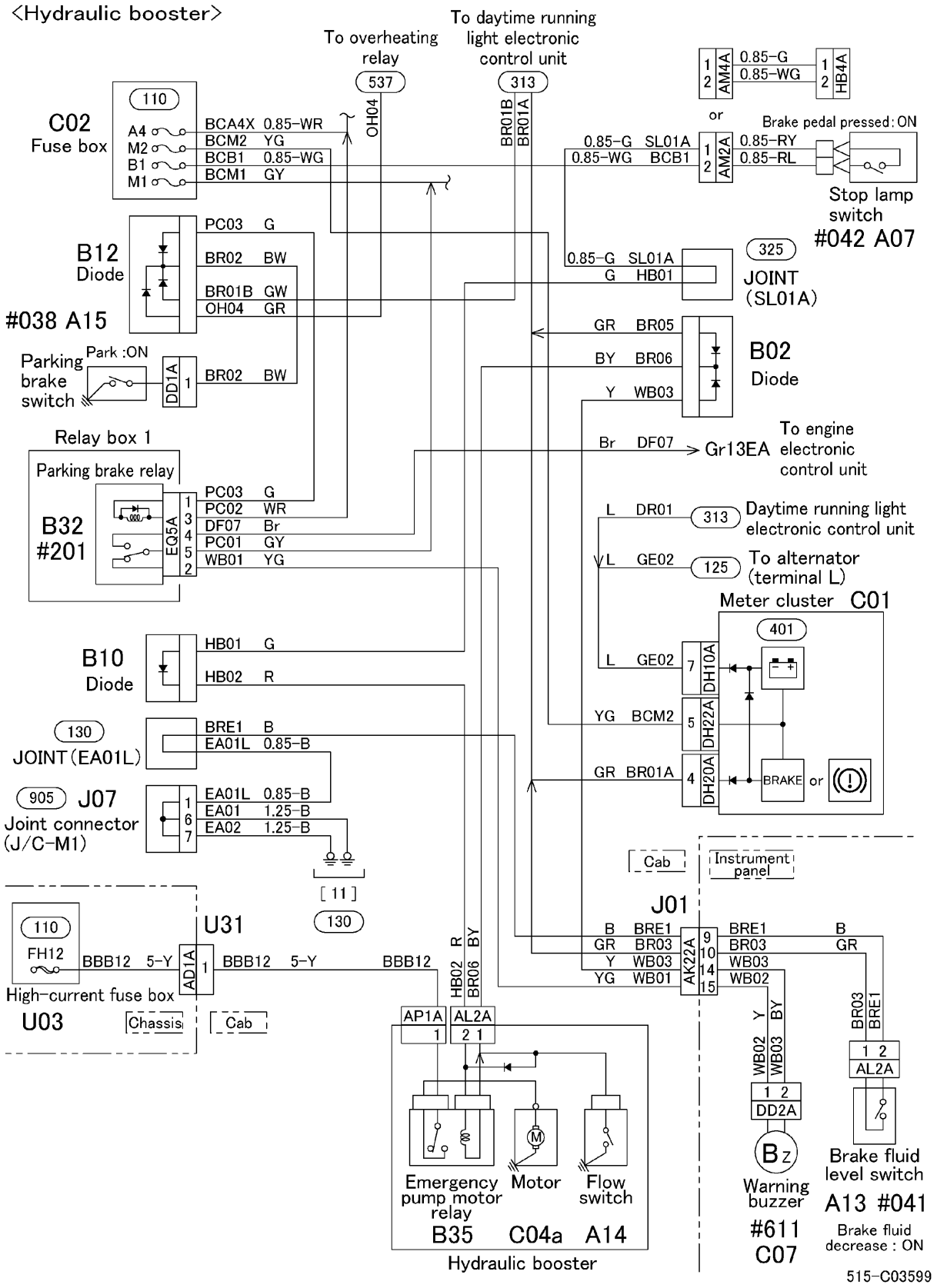

Return to Table of Contents

https://truckmanualshub.com/

535 ENGINE OIL LEVEL WARNING CIRCUIT

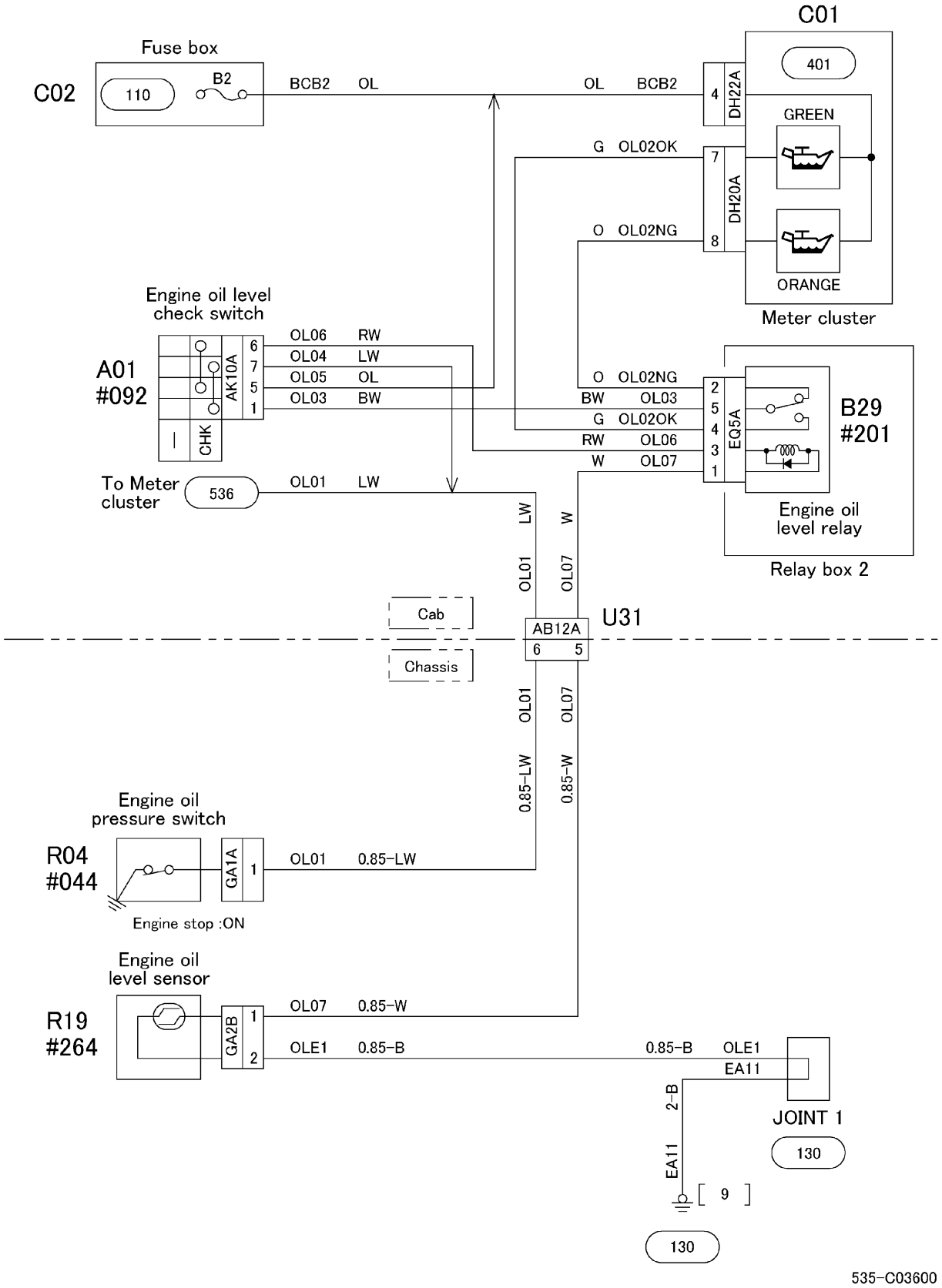

Return to Table of Contents

https://truckmanualshub.com/

536 ENGINE OIL PRESSURE WARNING CIRCUIT

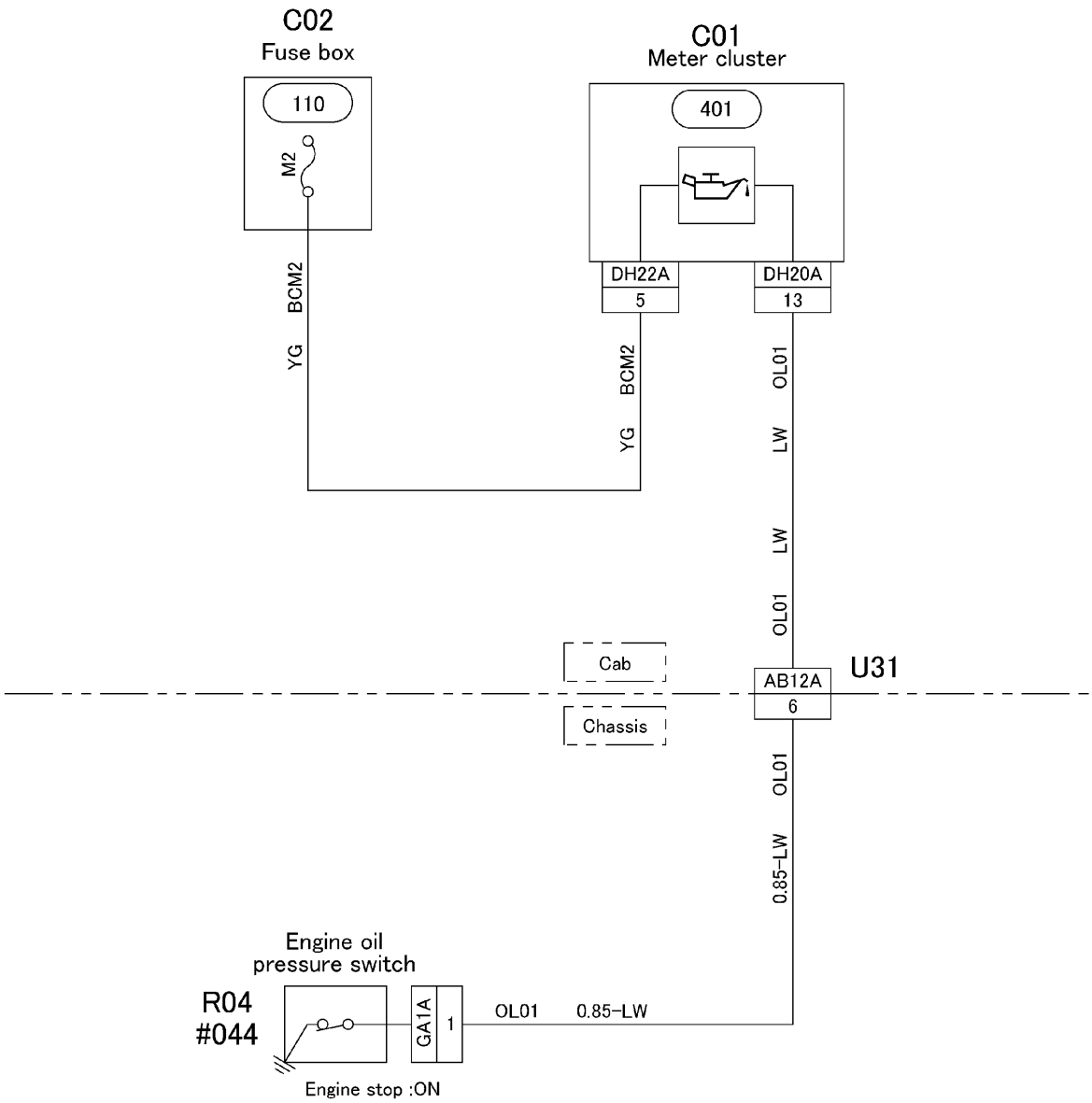

536-C03601

Return to Table of Contents

https://truckmanualshub.com/

537 OVERHEATING WARNING CIRCUIT

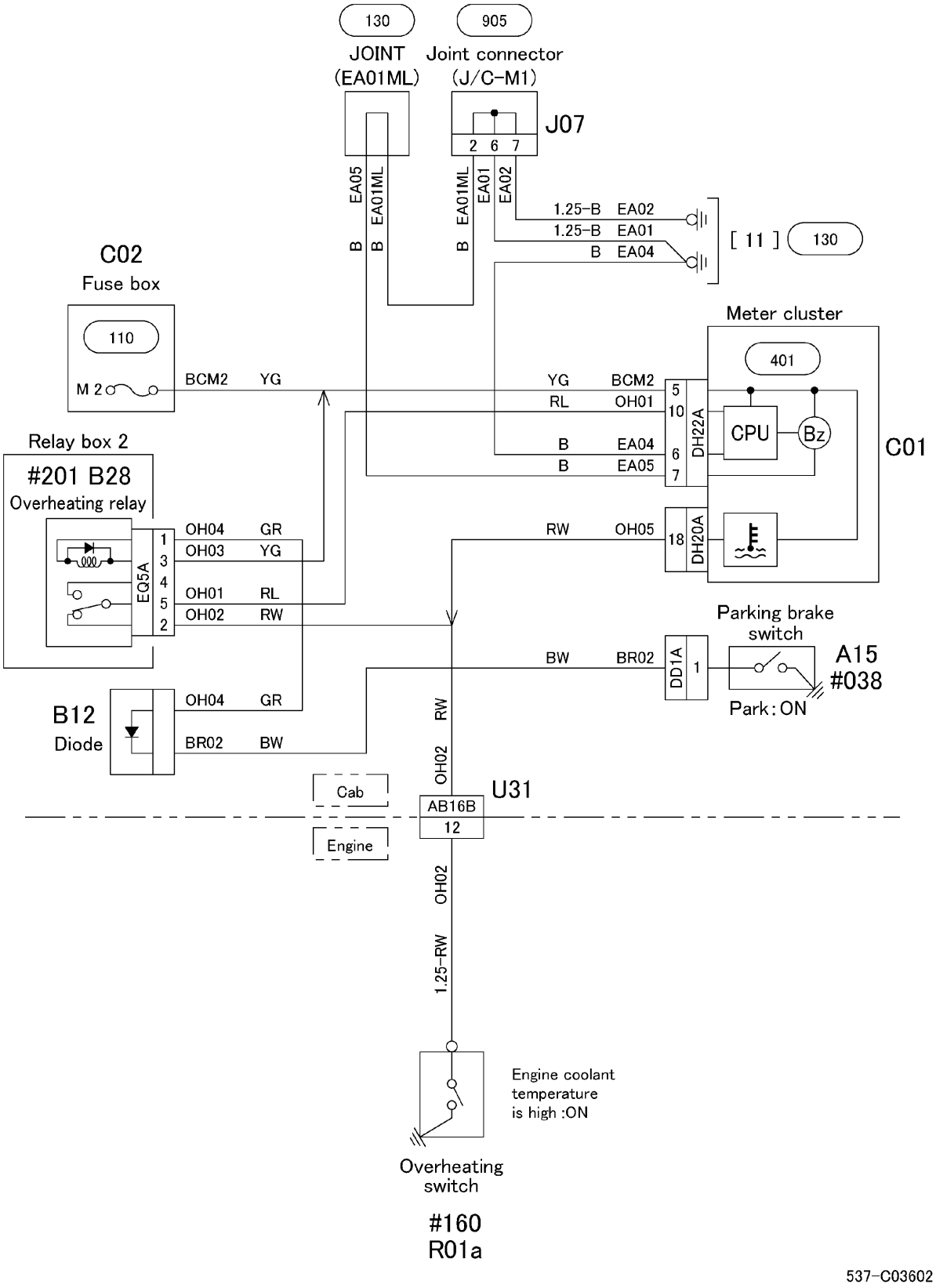

Return to Table of Contents

https://truckmanualshub.com/

540 BRAKE PAD WARNING CIRCUIT

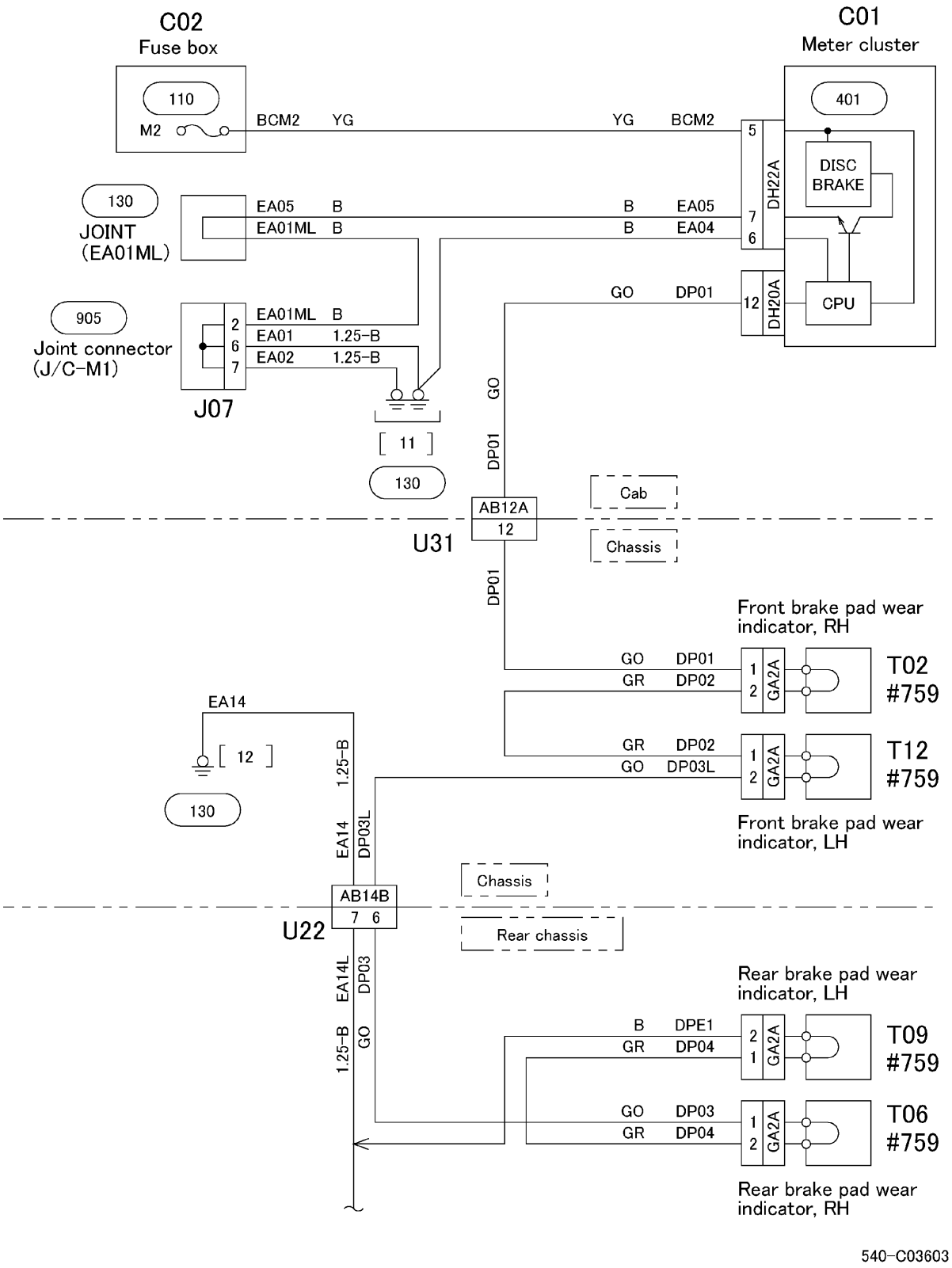

Return to Table of Contents

https://truckmanualshub.com/

550 CAB TILT WARNING CIRCUIT

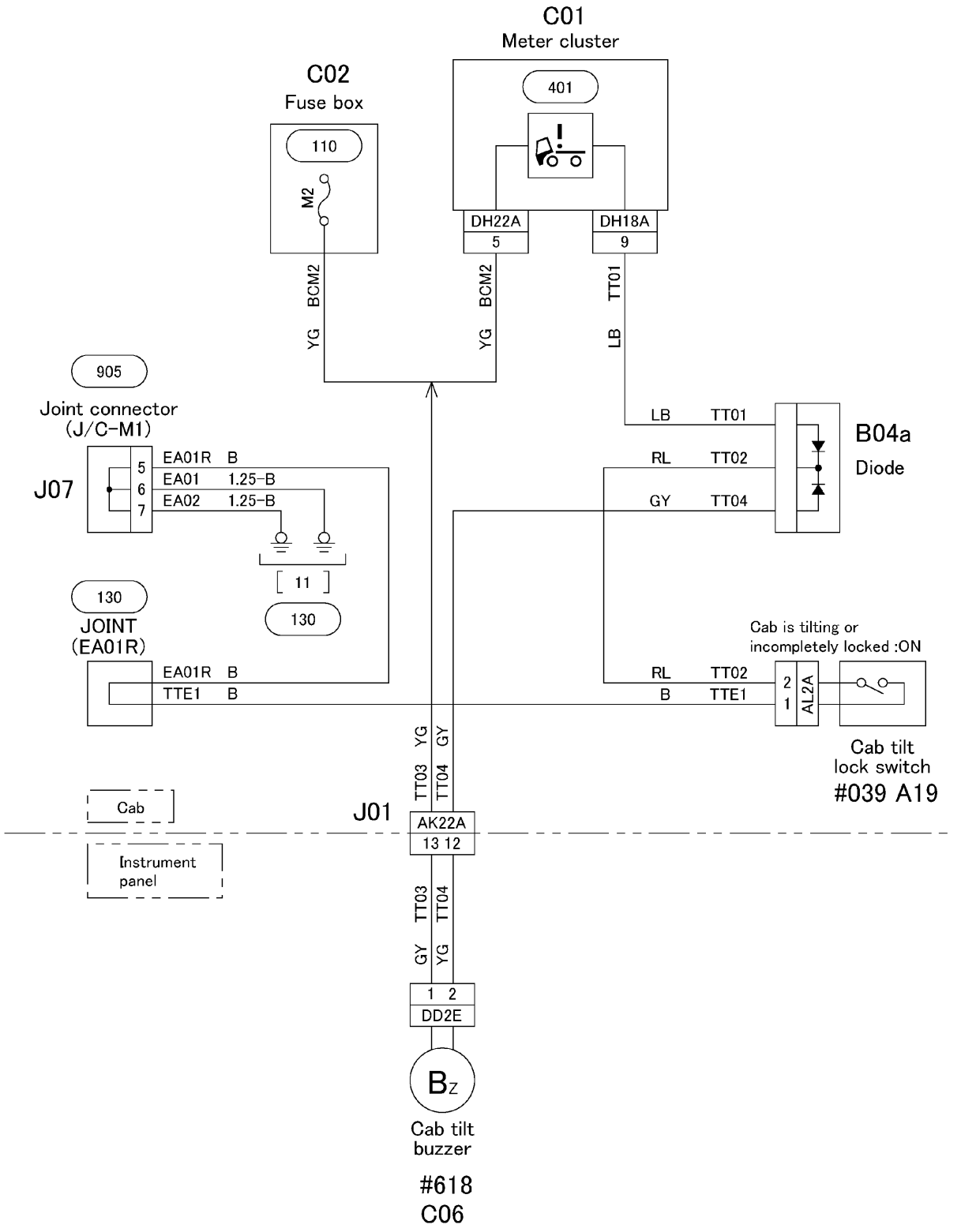

550-C03604

Return to Table of Contents

https://truckmanualshub.com/

566 FUEL FILTER WARNING CIRCUIT

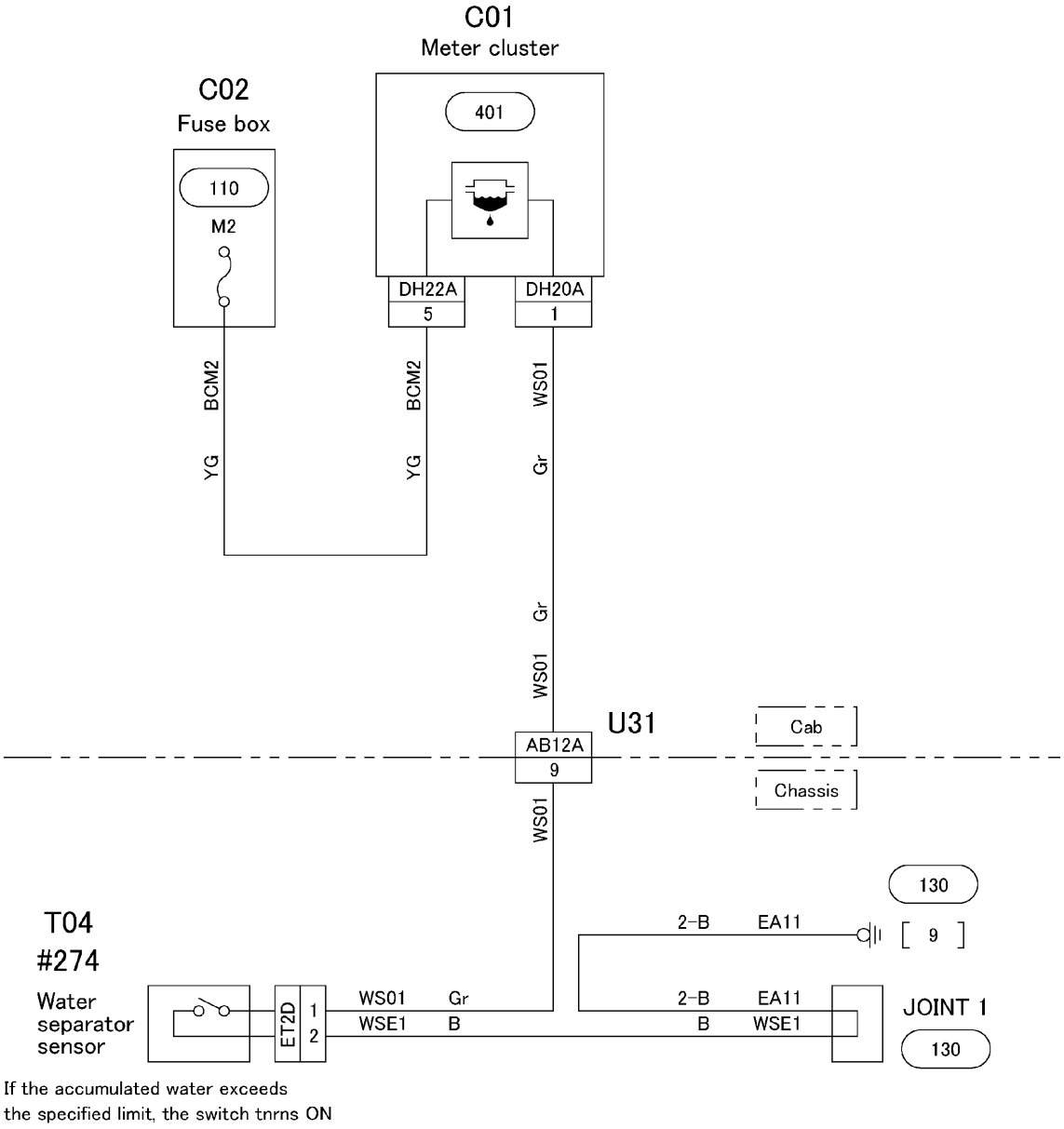

566-C03605

Return to Table of Contents

https://truckmanualshub.com/

19.6 CAB SIDE ELECTRICAL CIRCUIT
610 CIGARETTE LIGHTER CIRCUIT

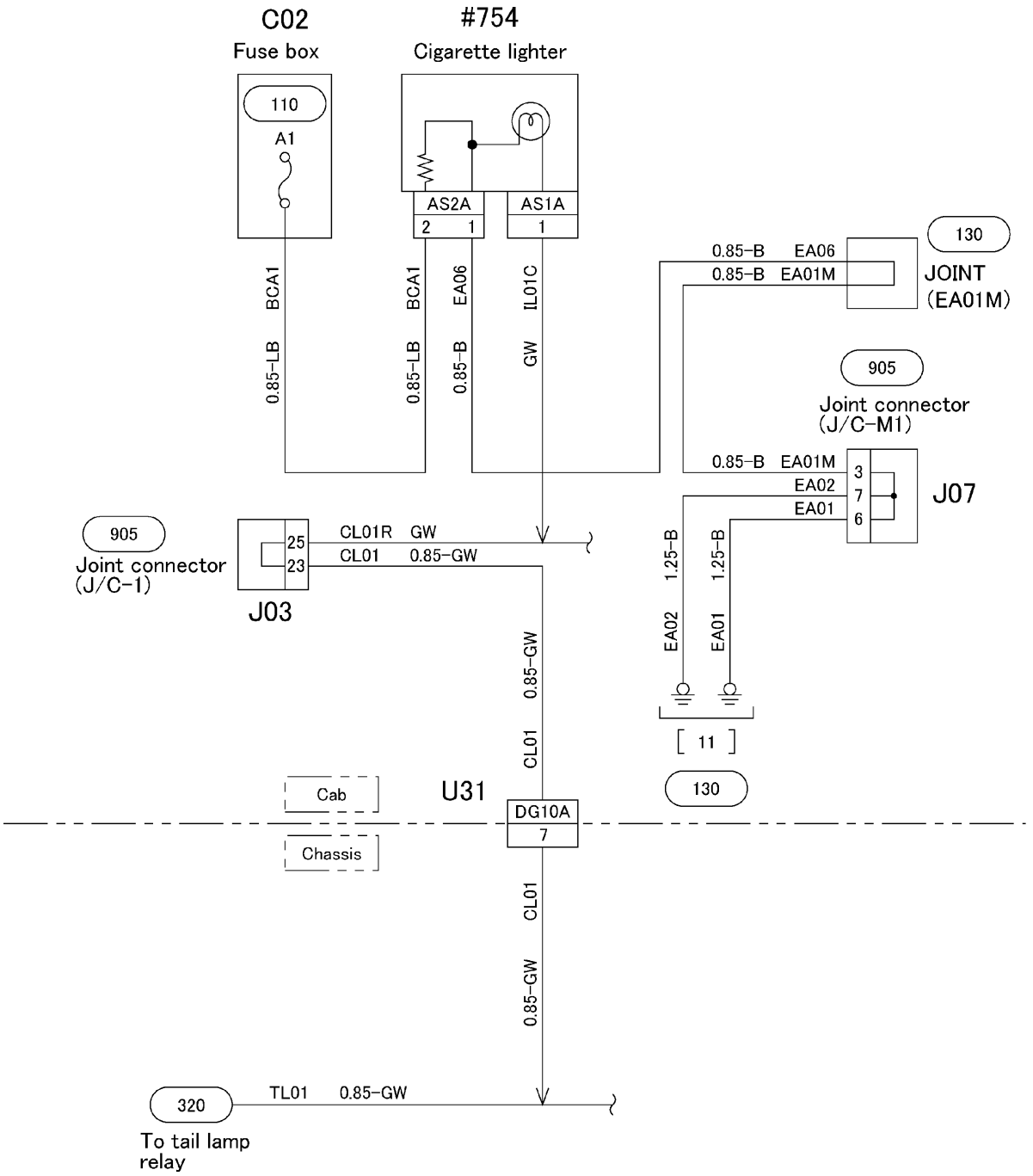

610-C03606

Return to Table of Contents

https://truckmanualshub.com/

612 AUDIO CIRCUIT

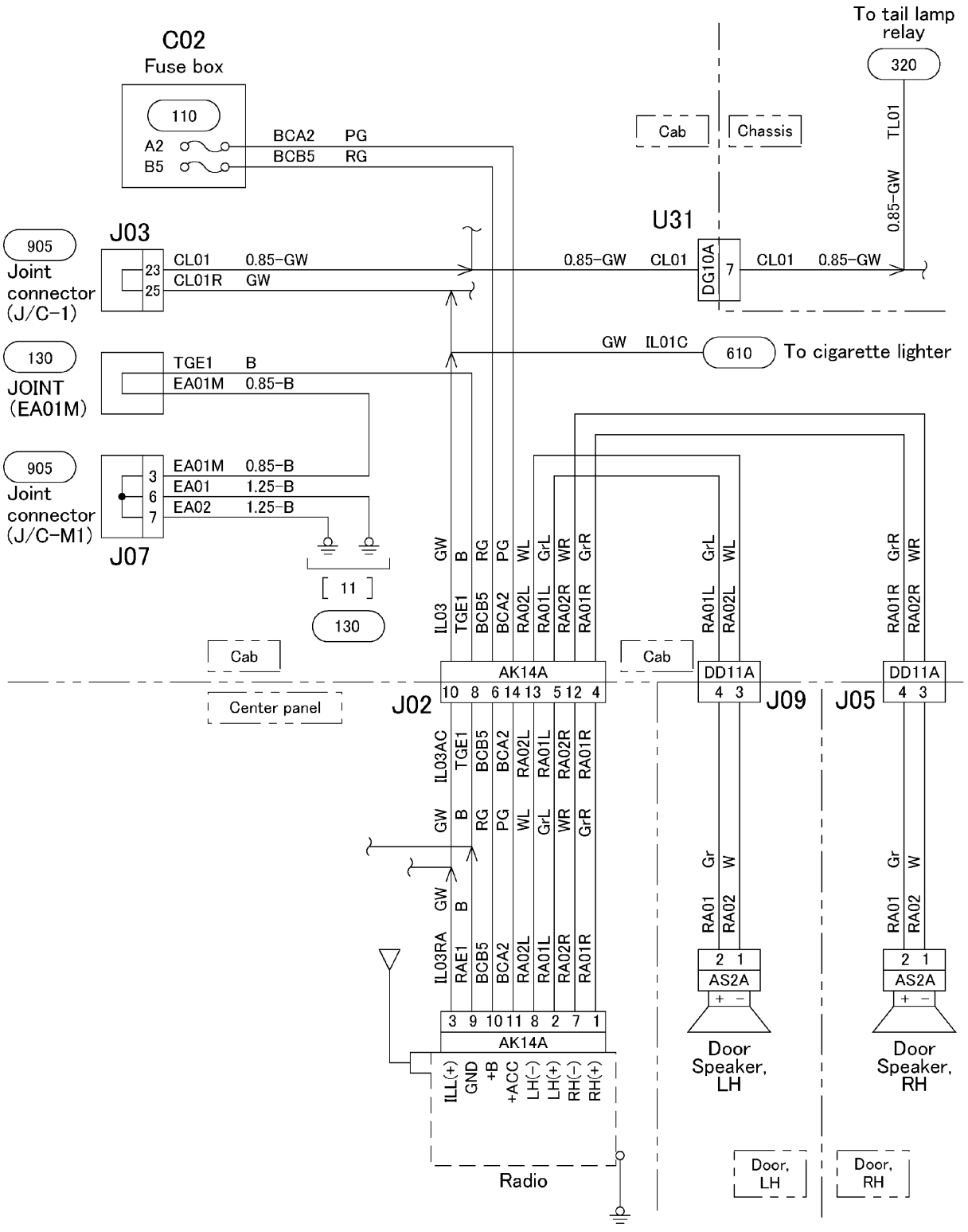

612-C03607

Return to Table of Contents

https://truckmanualshub.com/

614 WIPER AND WASHER CIRCUIT

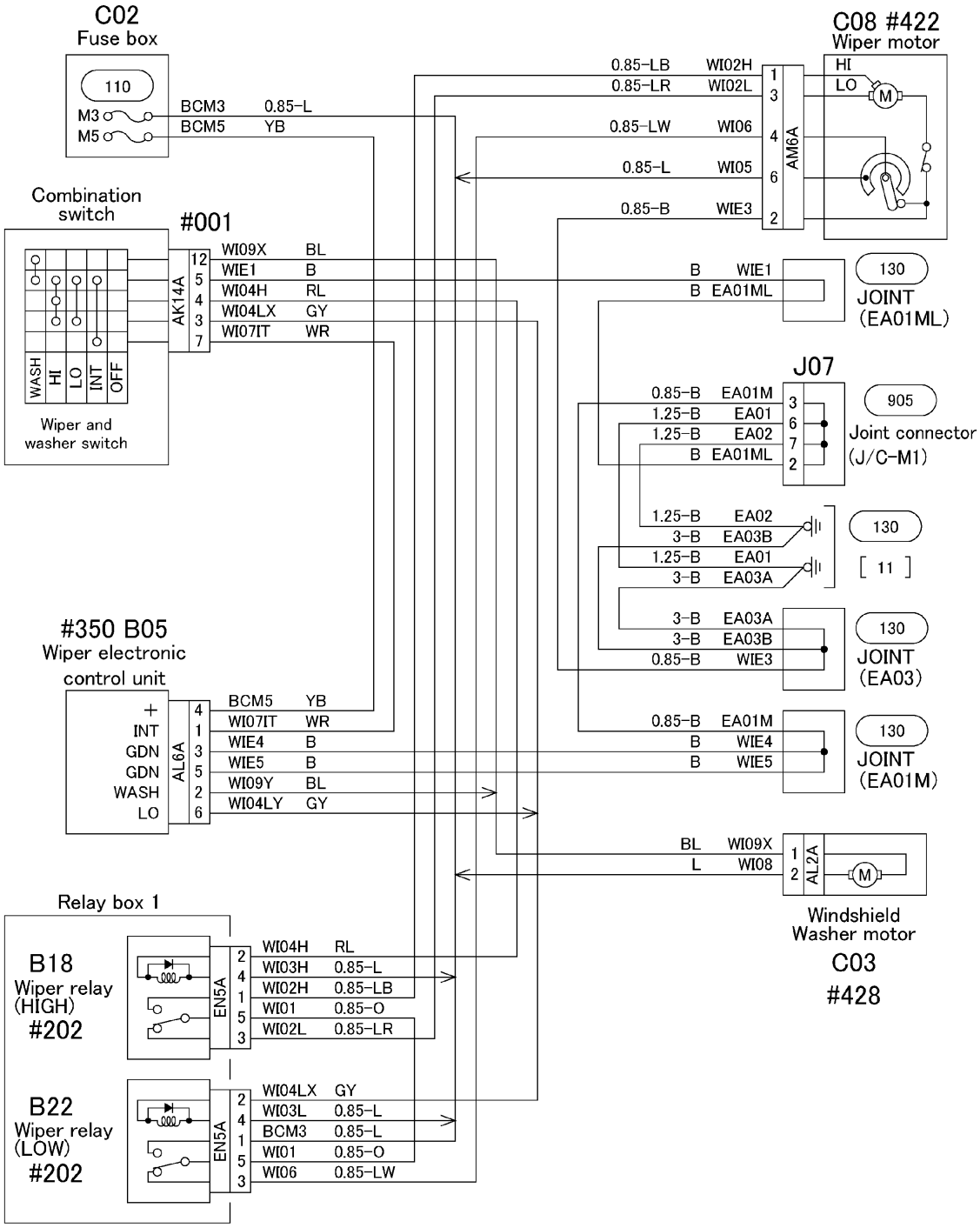

Return to Table of Contents

https://truckmanualshub.com/

616 HORN CIRCUIT

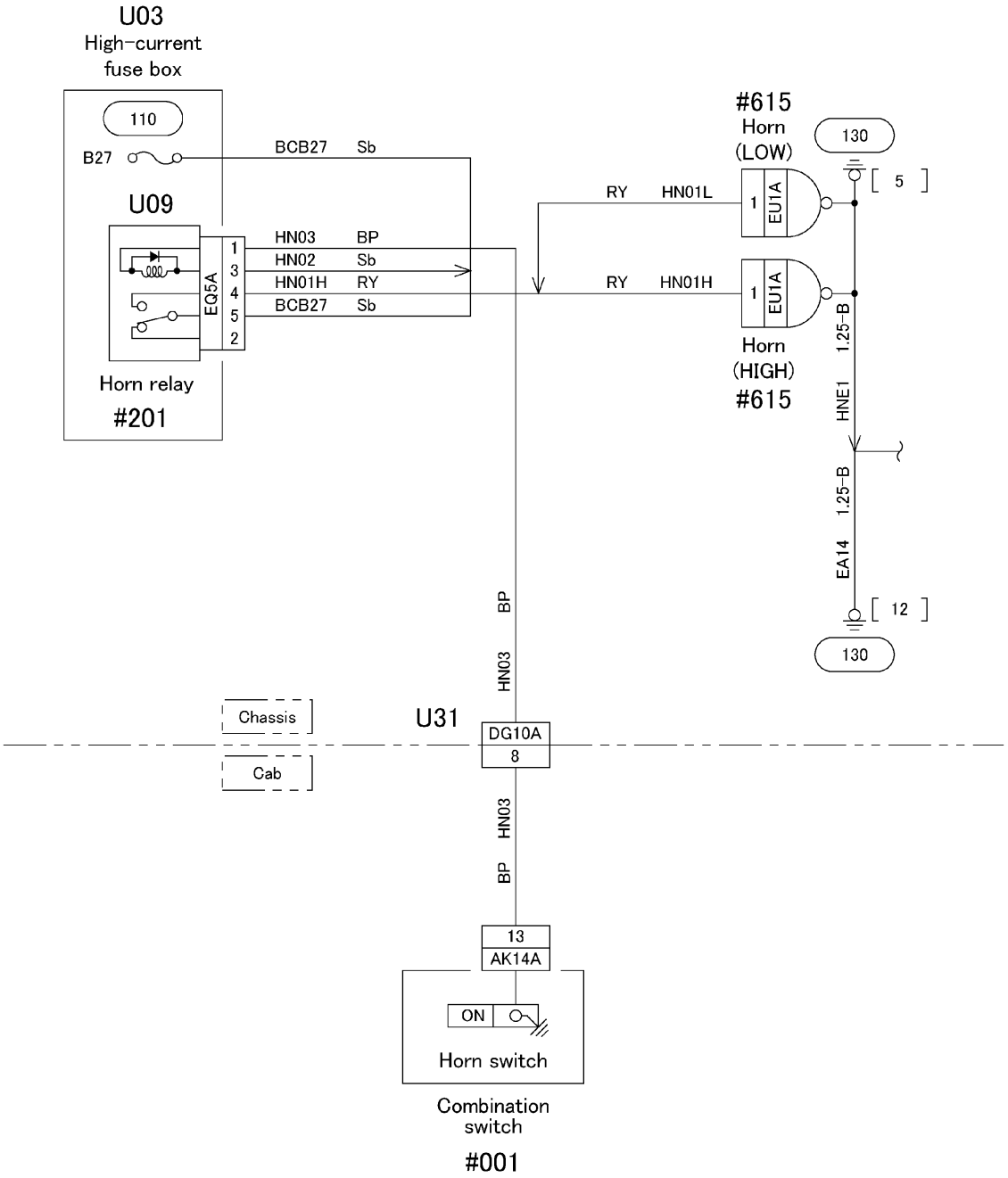

616-C03609

Return to Table of Contents

https://truckmanualshub.com/

620 AIR-CONDITIONER CIRCUIT

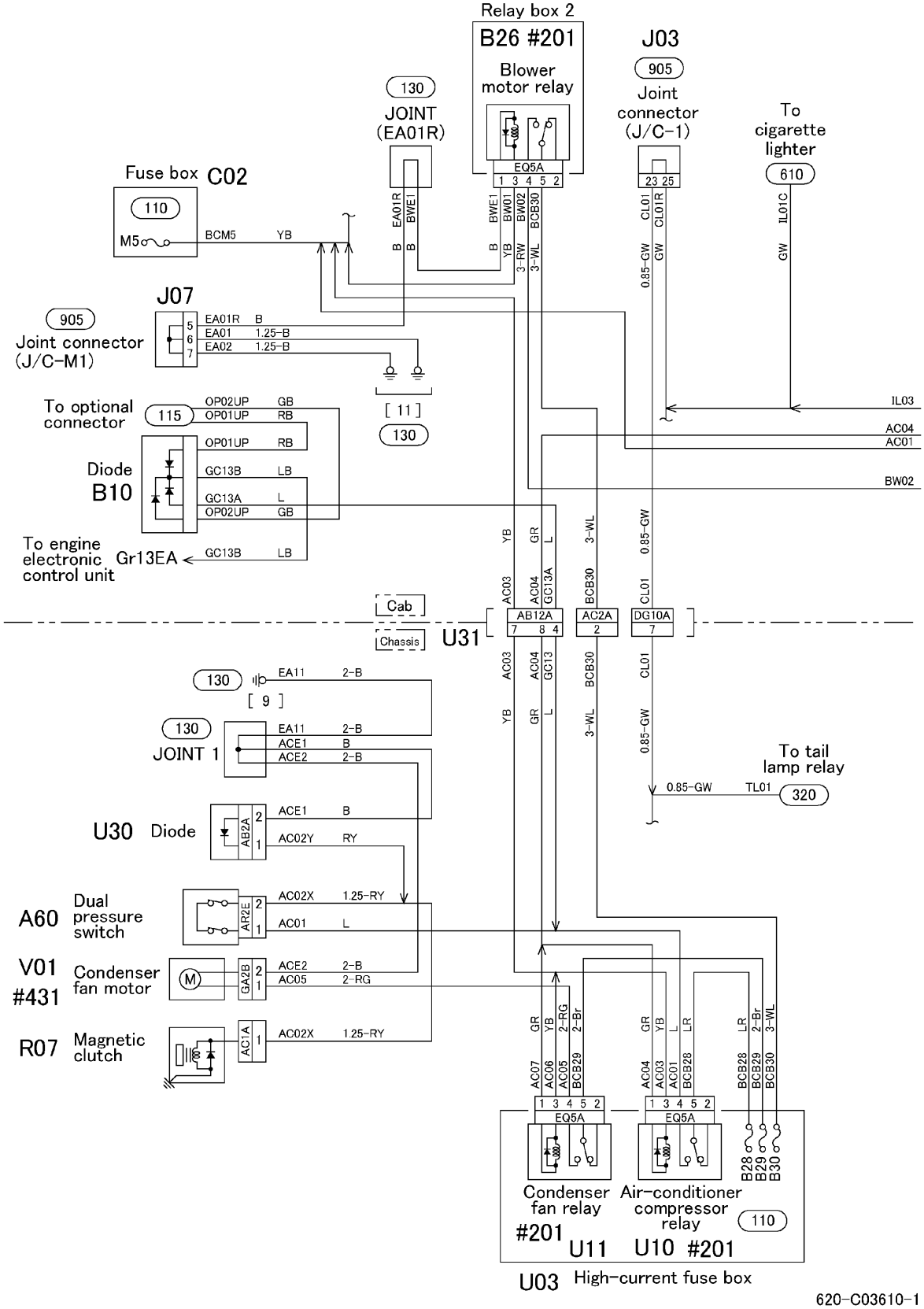

Return to Table of Contents

https://truckmanualshub.com/

620 AIR-CONDITIONER CIRCUIT

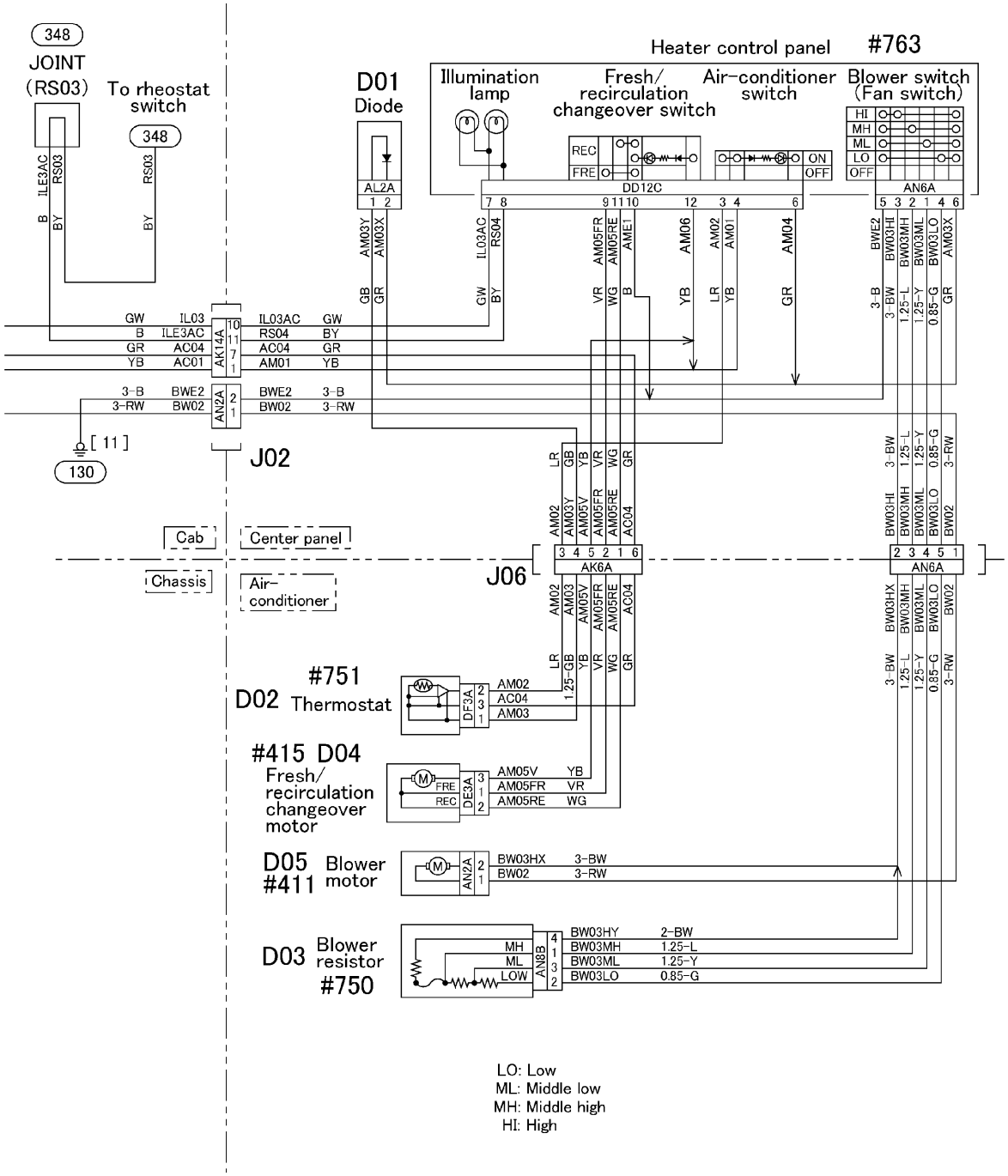

620-C03610-2

Return to Table of Contents

https://truckmanualshub.com/

622 POWER WINDOW AND CENTRAL DOOR LOCK CIRCUIT

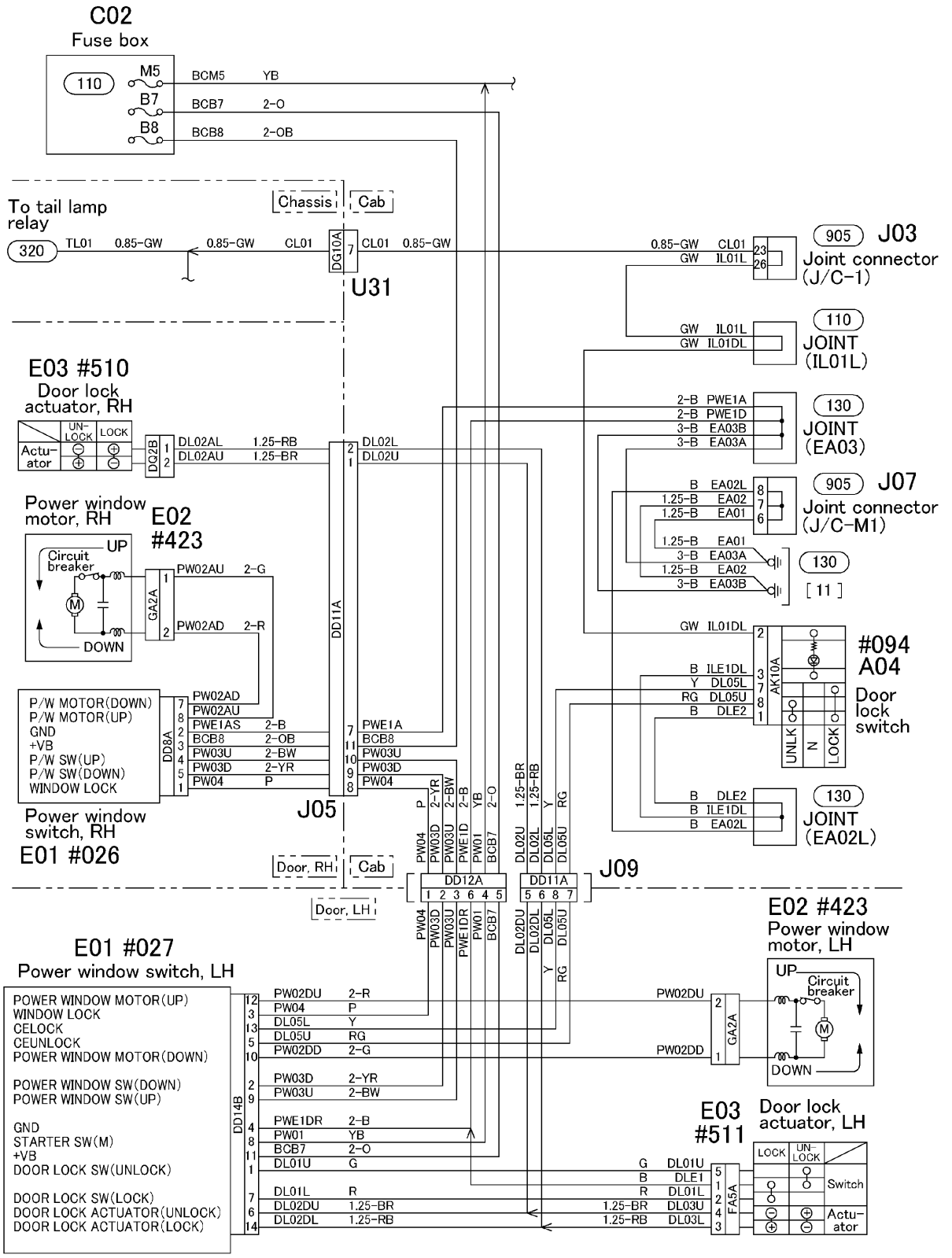

Return to Table of Contents

https://truckmanualshub.com/

629 MIRROR HEATER CIRCUIT

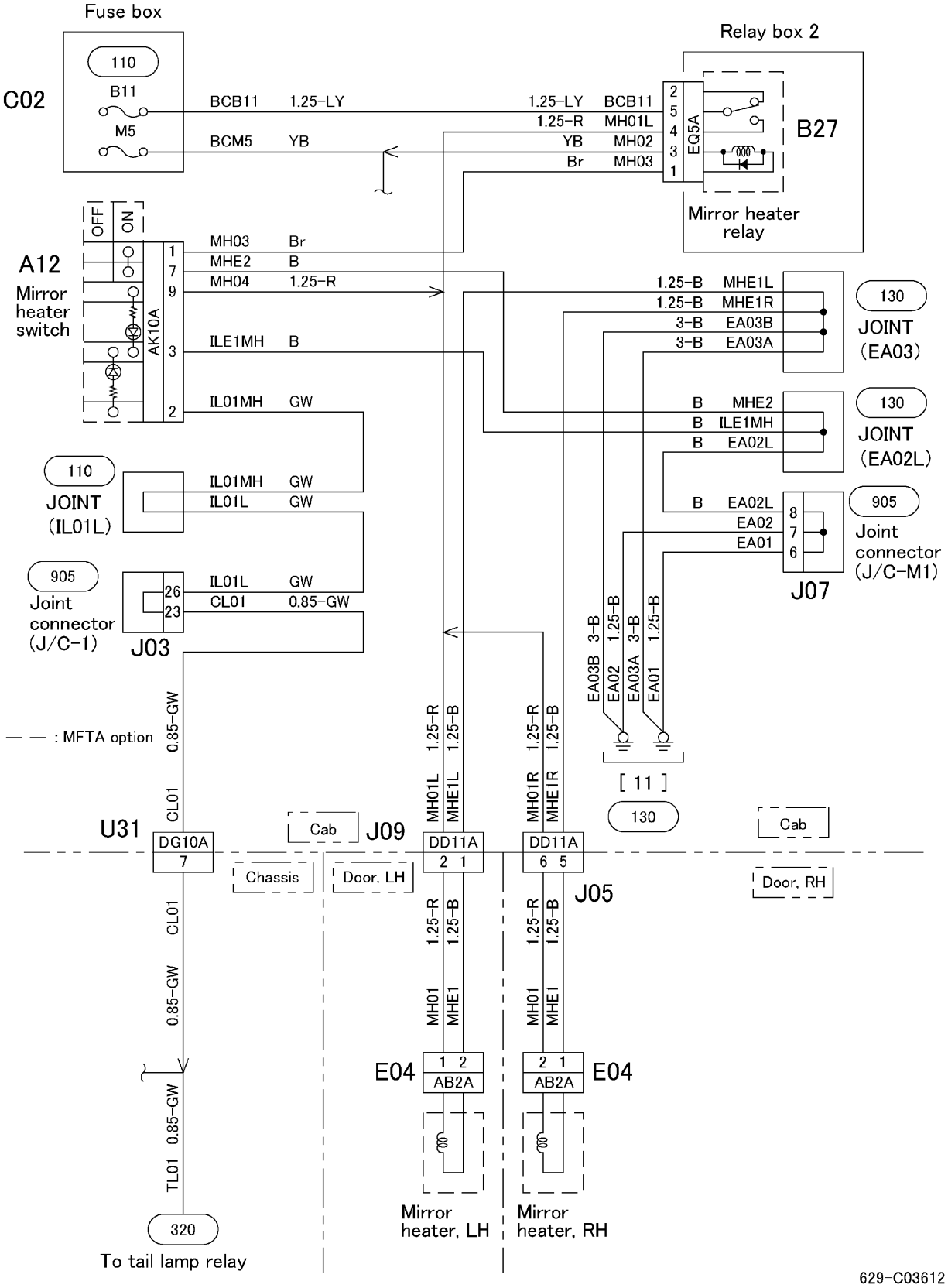

Return to Table of Contents

https://truckmanualshub.com/

19.7 CHASSIS SIDE ELECTRICAL CIRCUIT
(710) EXHAUST BRAKE CIRCUIT

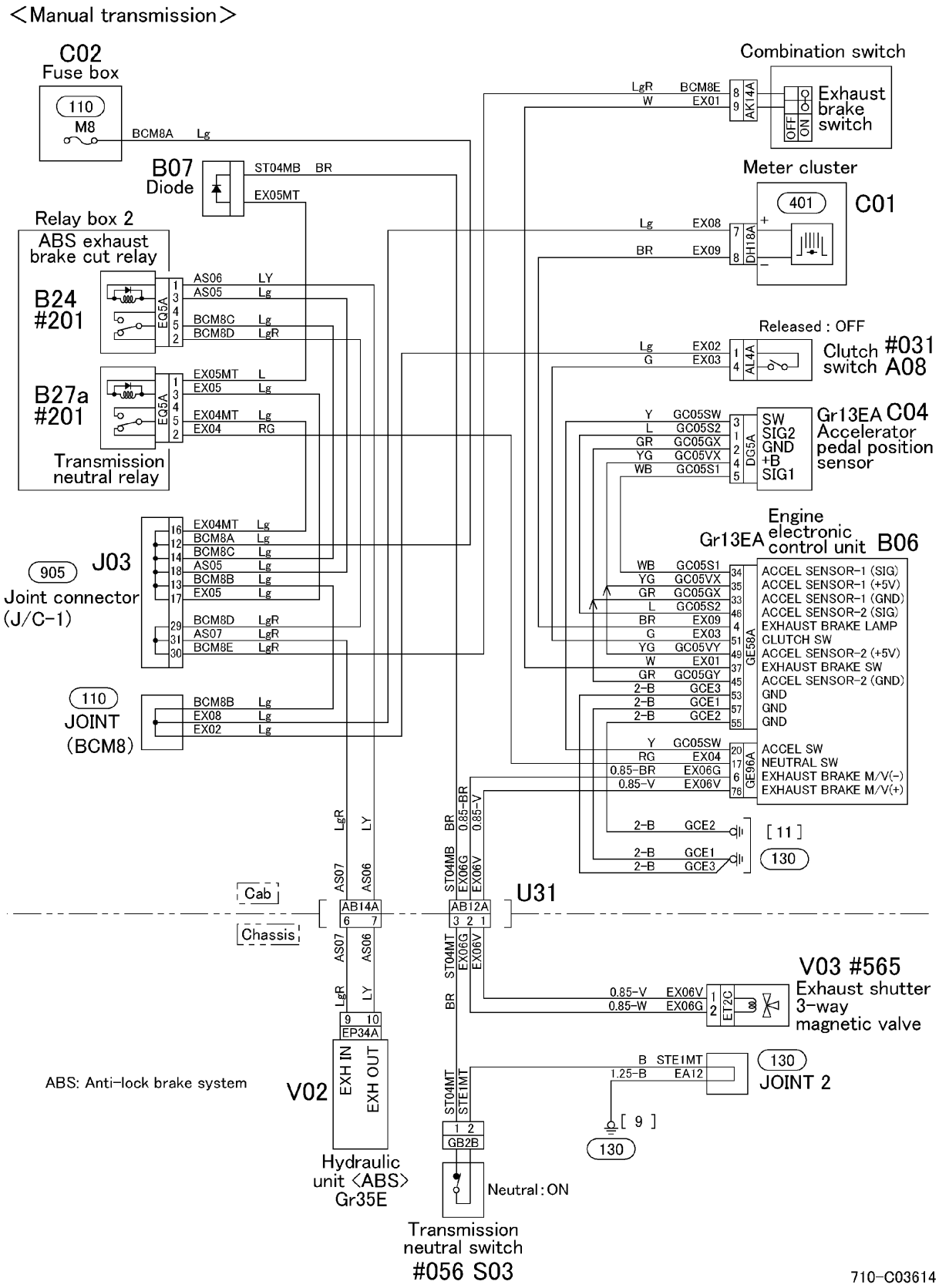

Return to Table of Contents

https://truckmanualshub.com/

710 EXHAUST BRAKE CIRCUIT

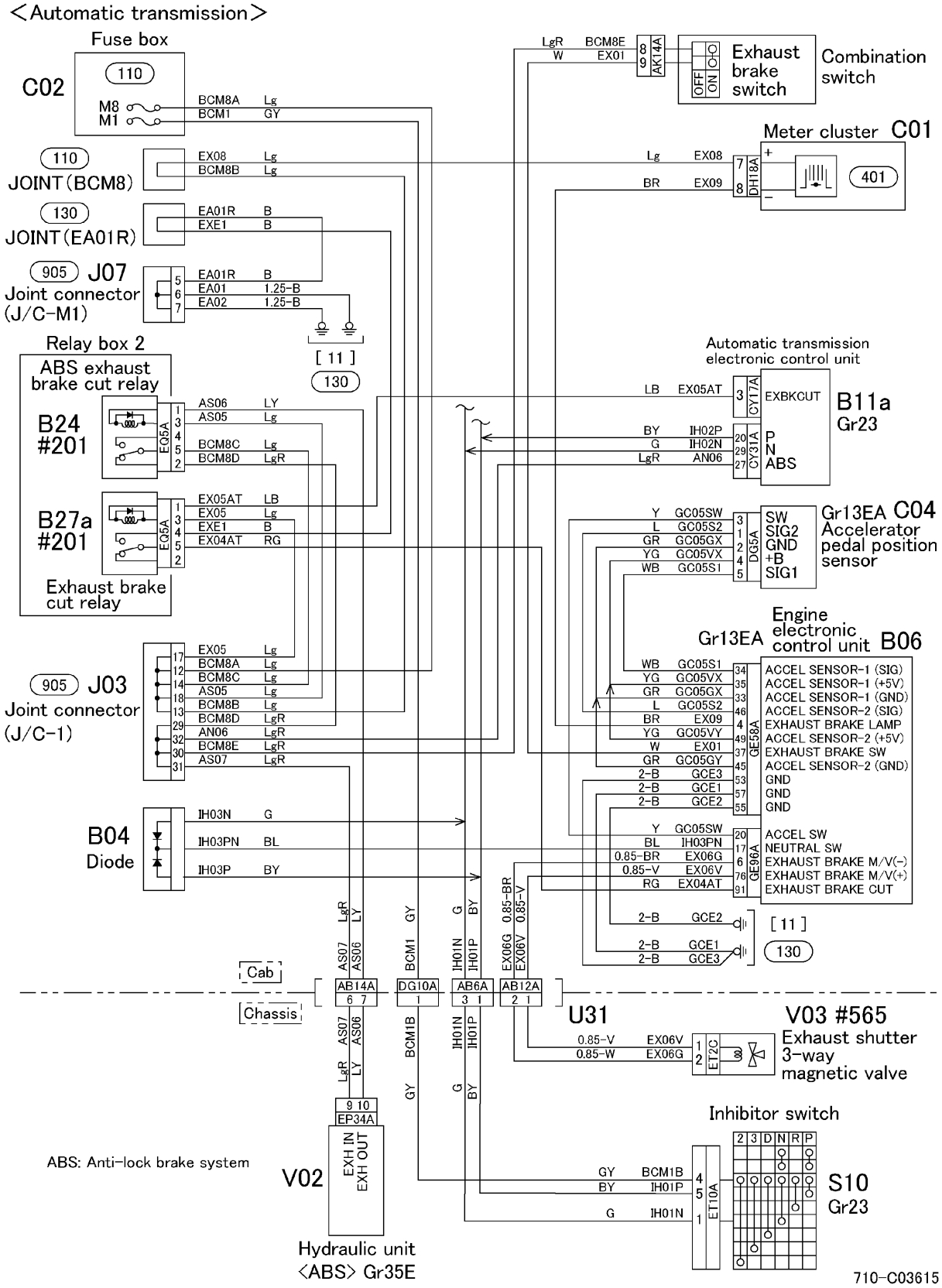

Return to Table of Contents

https://truckmanualshub.com/

19.8 ENGINE AND TRANSMISSION SIDE ELECTRICAL CIRCUIT
850 TRANSMISSION POWER TAKE-OFF CIRCUIT

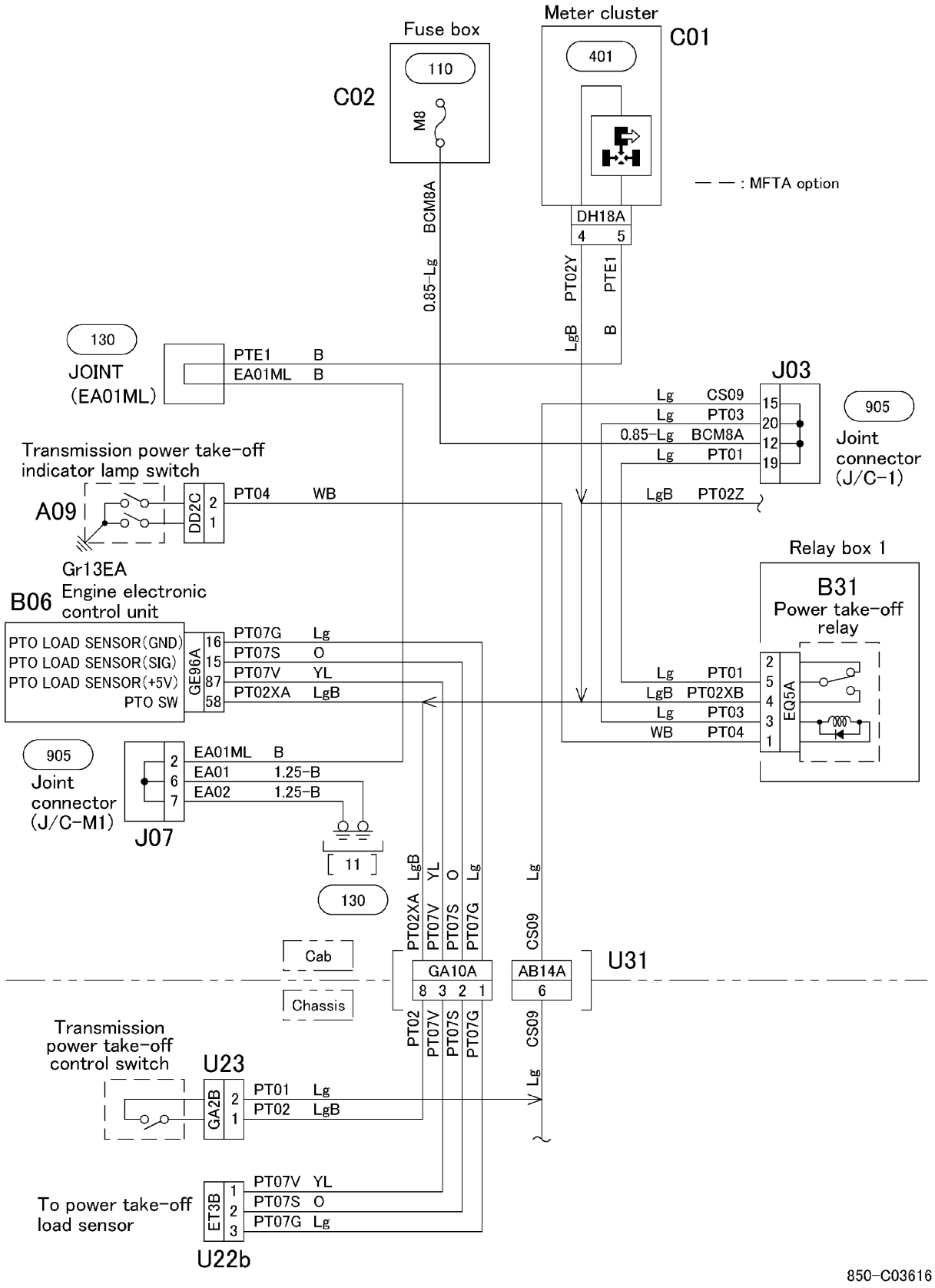

Return to Table of Contents

https://truckmanualshub.com/

19.9 OTHER CIRCUIT
905 JOINT CONNECTOR (J/C)

(J/C-1)

1	2	3	4	5	6	7	8	9	10	11
EA07	EA08	EDE1V	EVE1	EVE2	EVE3	ANE1	ANE2	MVE1		MVE2
12	13	14	15	16	17	18	19	20	21	22
BCM8A	BCM8B	BCM8C	CS09	EX04MT	EX05	AS05	PT01	PT03		—
23	24	25	26	27	28	29	30	31	32	33
CL01		CL01R	IL01L	IL01R	—	BCM8D	BCM8E	AS07	AN06	—

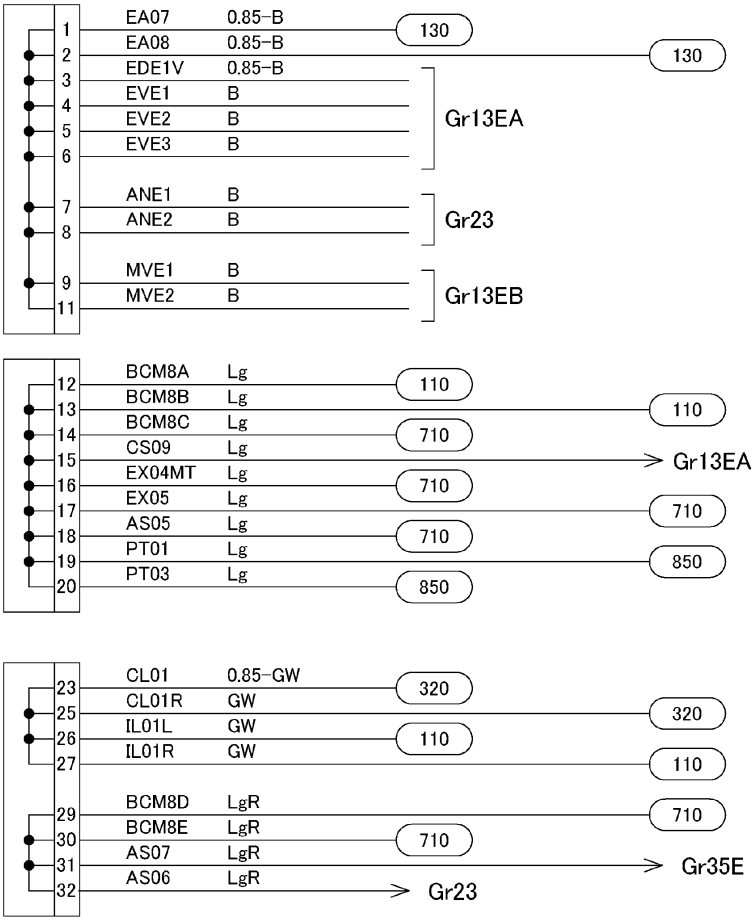

905-C03617

Return to Table of Contents

https://truckmanualshub.com/

905 JOINT CONNECTOR (J/C)

(J/C-2)

1	2	3	4	5	6	7	8	9	10	11
IJ01V	IJ01Vs	IJ02V	IJ02Vs	IJ03V	IJ03Vs	IJ04V	IJ04Vs		CS12A	CS12B

12	13	14	15	16	17	18	19	20	21	22
IJ01G	IJ01Gs	IJ02G	IJ02Gs	IJ03G	IJ03Gs	IJ04G	IJ04Gs		—	—

1	IJ01V	2-G
2	IJ01Vs	1.25-G
3	IJ02V	2-Y
4	IJ02Vs	1.25-Y
5	IJ03V	2-W
6	IJ03Vs	1.25-W
7	IJ04V	2-L
8	IJ04Vs	1.25-L
10	CS12A	G
11	CS12B	G

Gr13EA

12	IJ01G	2-WR
13	IJ01Gs	1.25-WR
14	IJ02G	2-WB
15	IJ02Gs	1.25-WB
16	IJ03G	2-RB
17	IJ03Gs	1.25-RB
18	IJ04G	2-RW
19	IJ04Gs	1.25-RW

Gr13EA

905-C03618

Return to Table of Contents

https://truckmanualshub.com/

905 JOINT CONNECTOR (J/C)

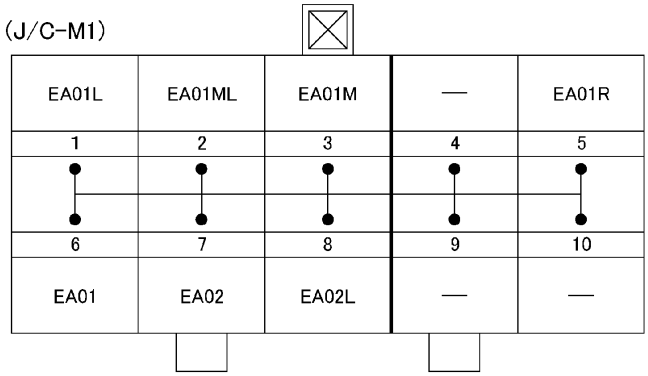

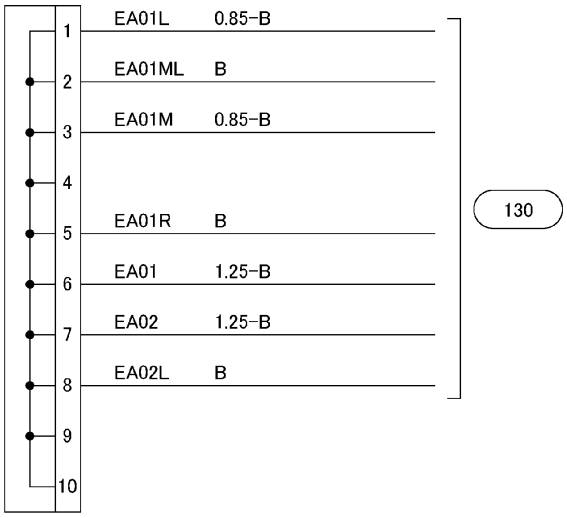

905-C03619

Return to Table of Contents

https://truckmanualshub.com/

905 JOINT CONNECTOR (J/C)

(J/C-040)

1	2	3	4
GC15H	GC16H	GC17H	MT01H

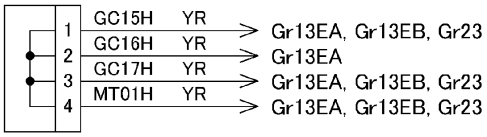

(J/C-040)

1	2	3	4
GC15L	GC16L	GC17L	MT01L

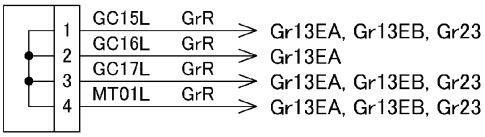

(J/C-040)

1	2	3	4
GC17H	—	GC19H	AT04H

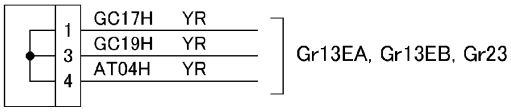

(J/C-040)

1	2	3	4
GC17L	—	GC19L	AT04L

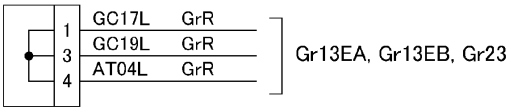

(J/C-040)

1	2	3	4
ANE4	AN02SE	AN04SE	AN05SE

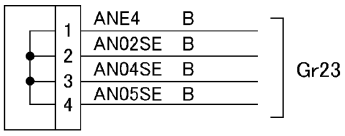

905-C03623

Return to Table of Contents

https://truckmanualshub.com/

907 DIAGNOSIS SWITCH AND MEMORY CLEAR SWITCH

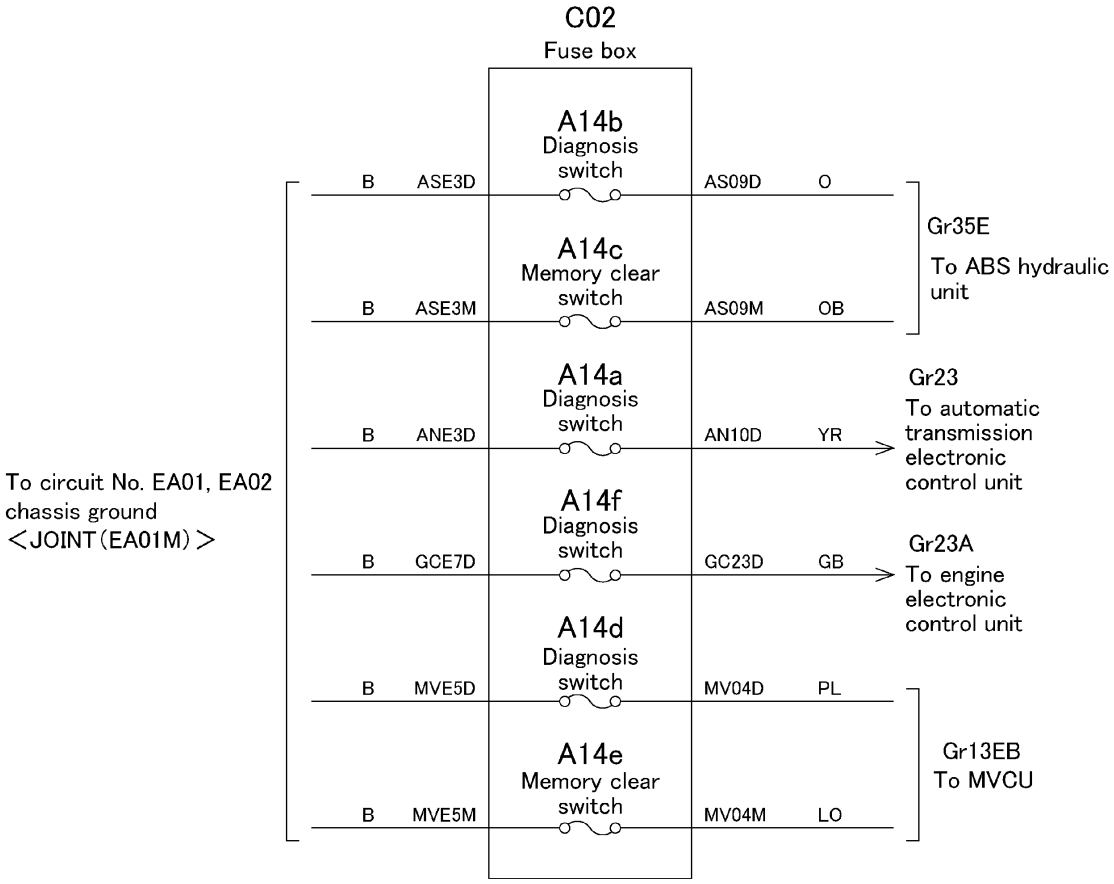

The fuse is substituted for
diagnosis switch and the memory clear switch.

MVCU : Multifunction vehicle control unit
ABS : Anti-lock brake system

907-C03620

Return to Table of Contents

https://truckmanualshub.com/

COMMONRAIL SYSTEM CIRCUIT

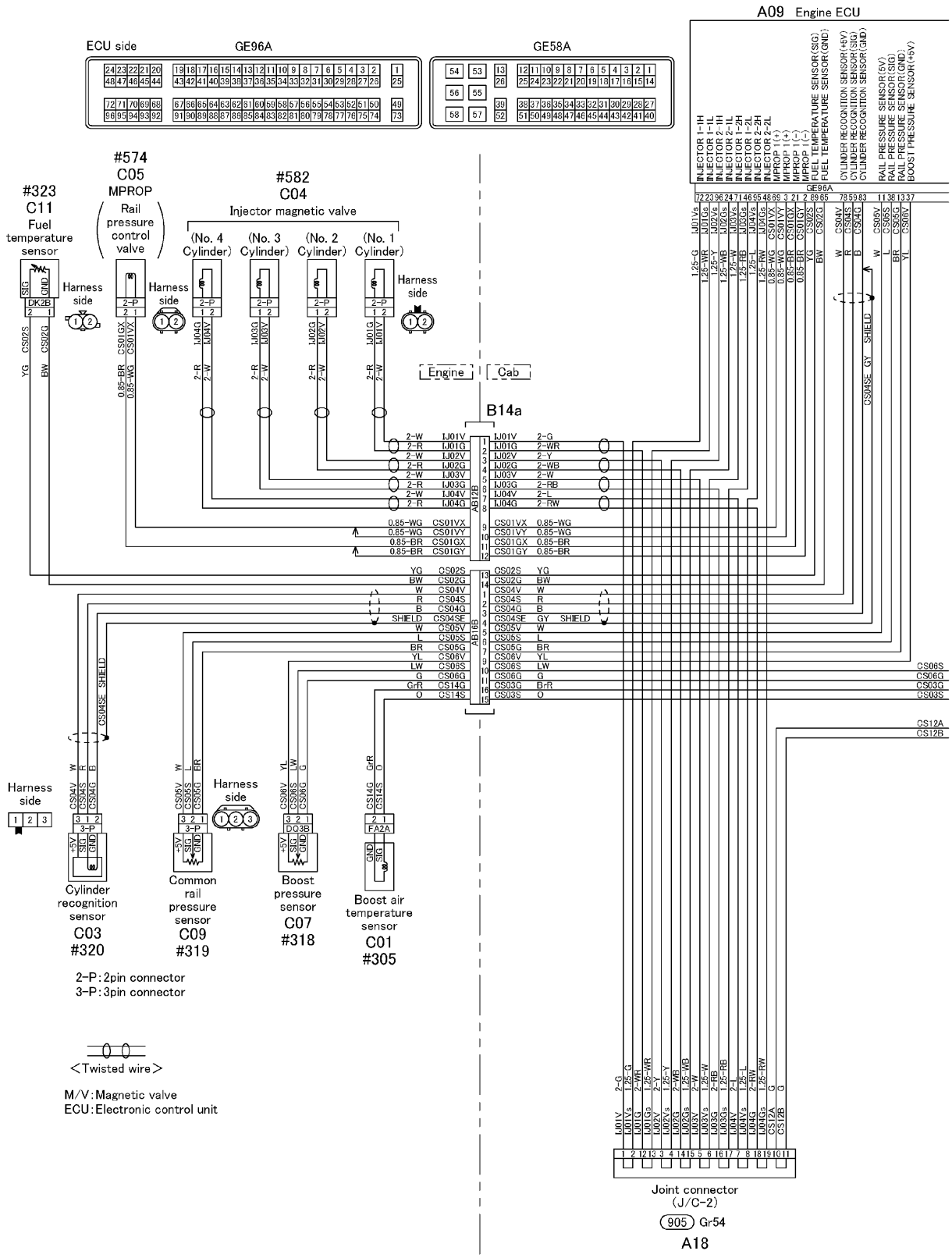

Return to Table of Contents

https://truckmanualshub.com/

COMMONRAIL SYSTEM CIRCUIT

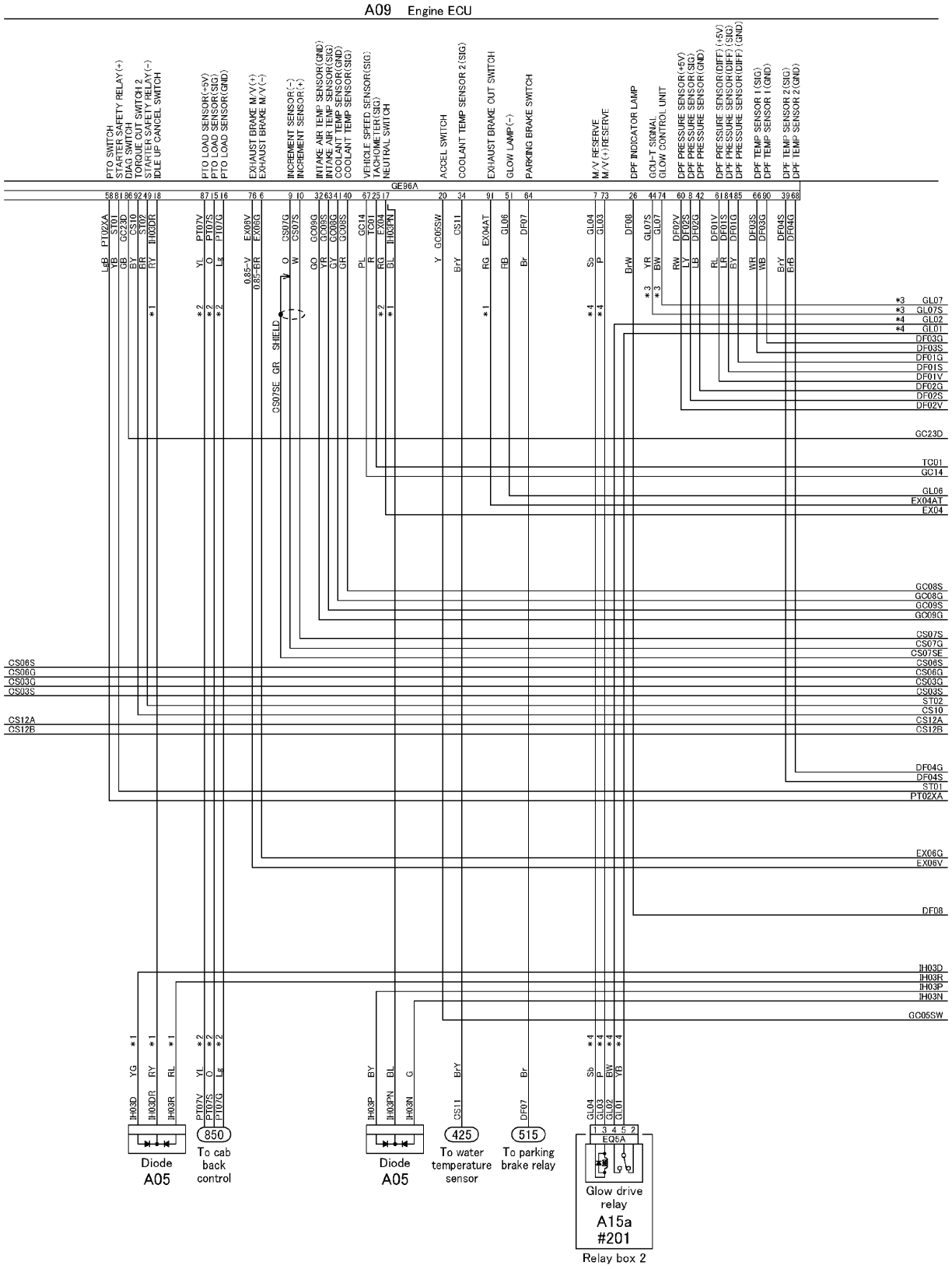

13E-C03546-2

Return to Table of Contents

https://truckmanualshub.com/

COMMONRAIL SYSTEM CIRCUIT

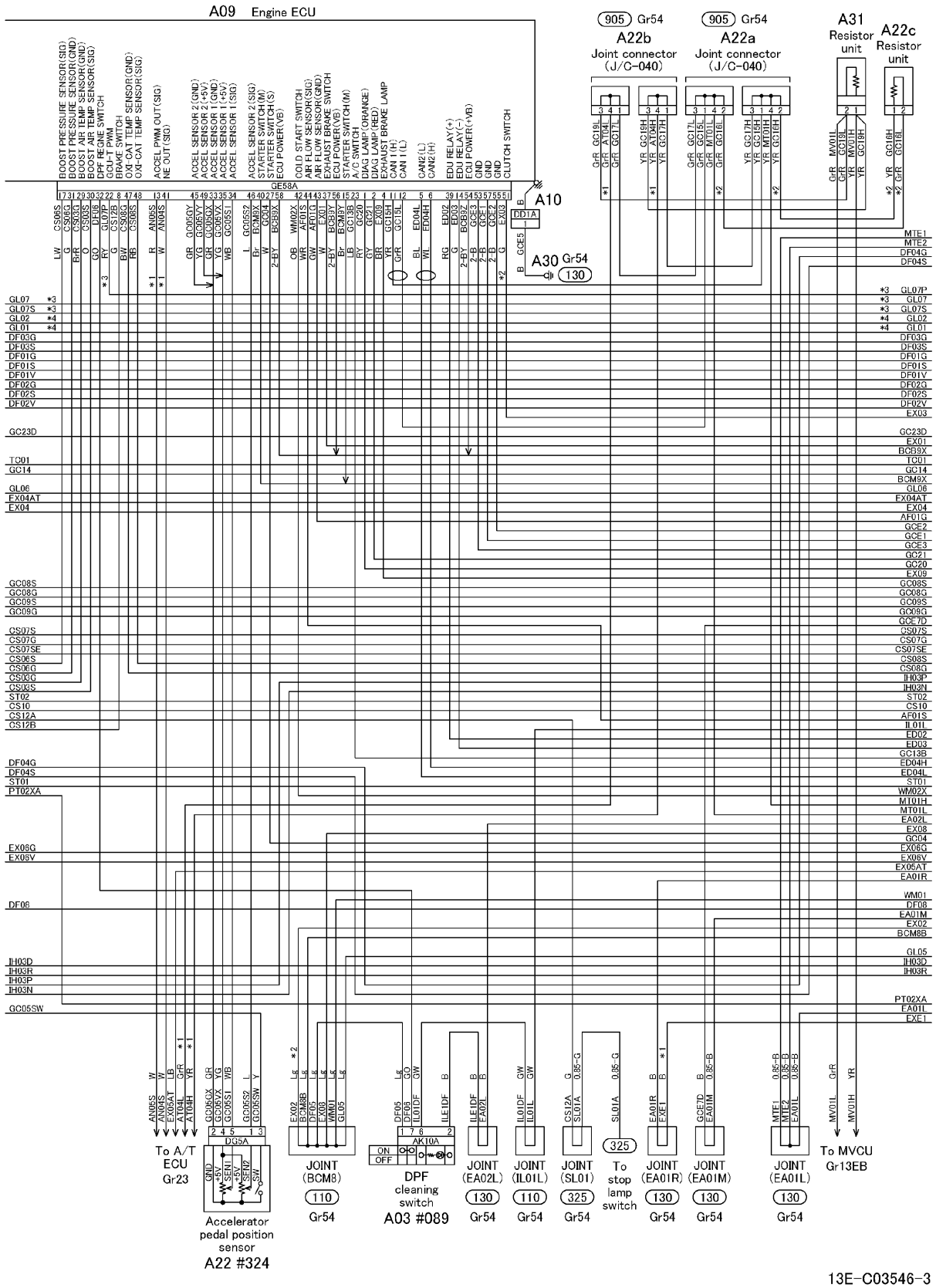

Return to Table of Contents

https://truckmanualshub.com/

COMMONRAIL SYSTEM CIRCUIT

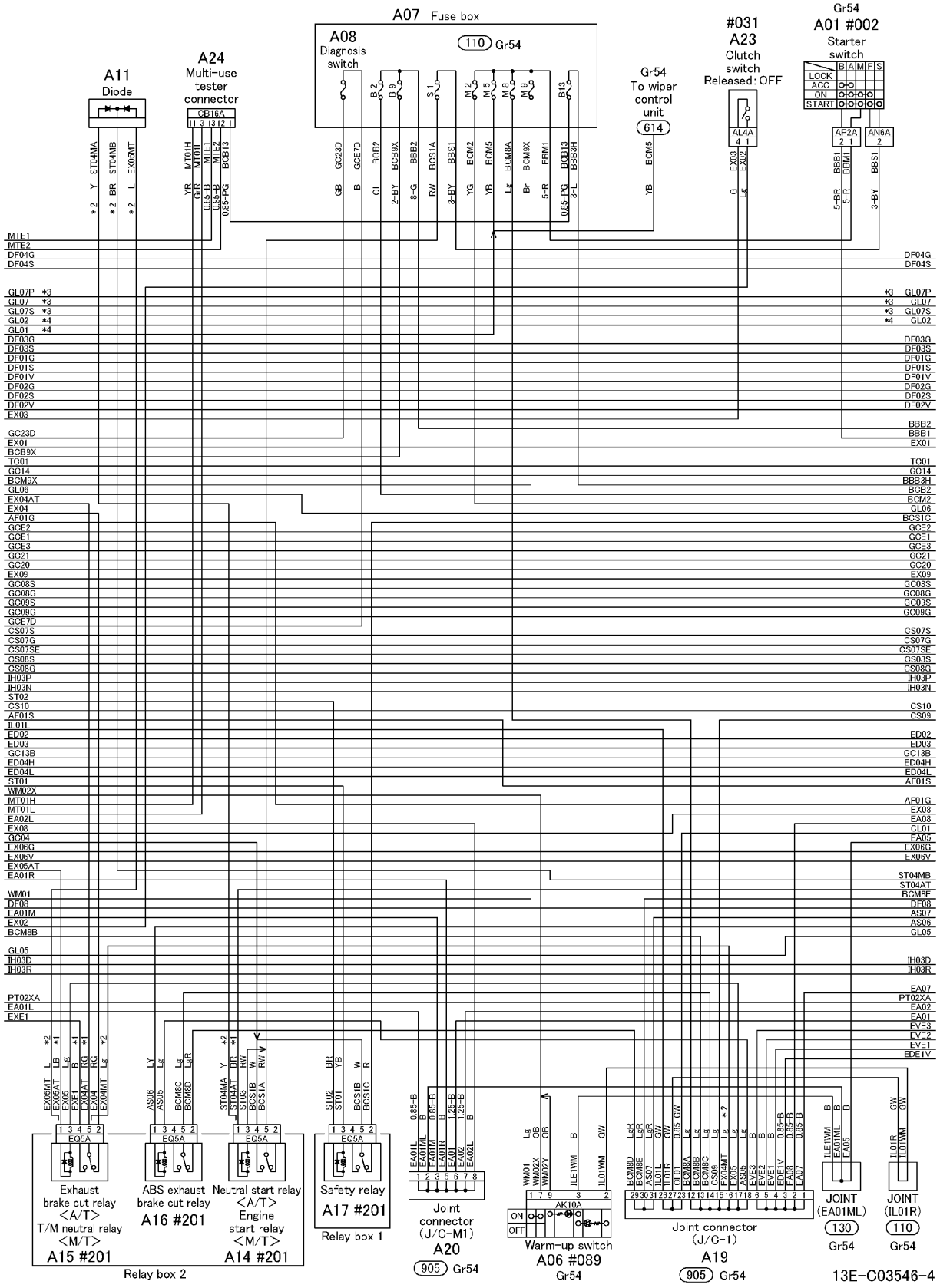

Return to Table of Contents

https://truckmanualshub.com/

COMMONRAIL SYSTEM CIRCUIT

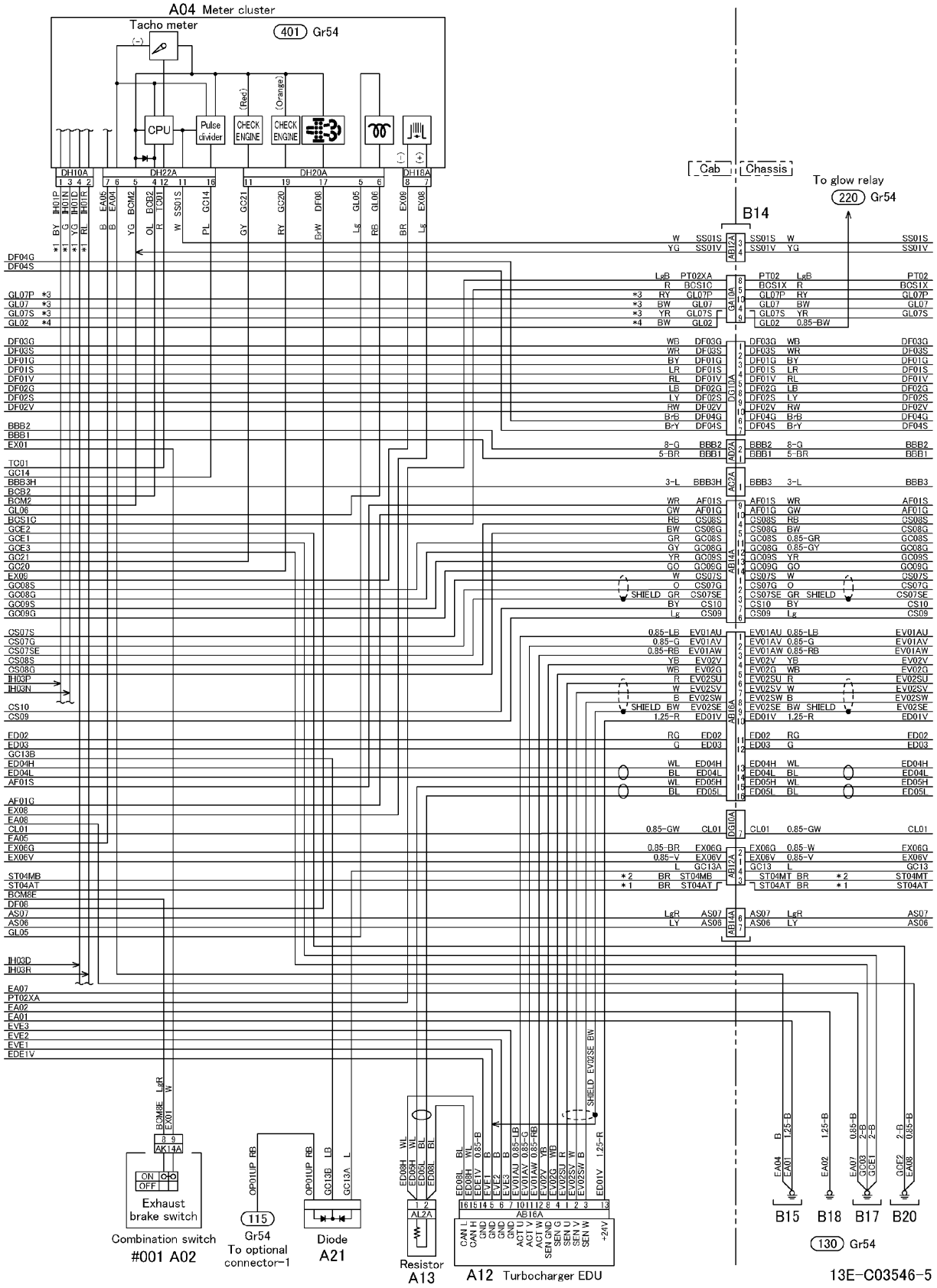

Return to Table of Contents

https://truckmanualshub.com/

COMMONRAIL SYSTEM CIRCUIT

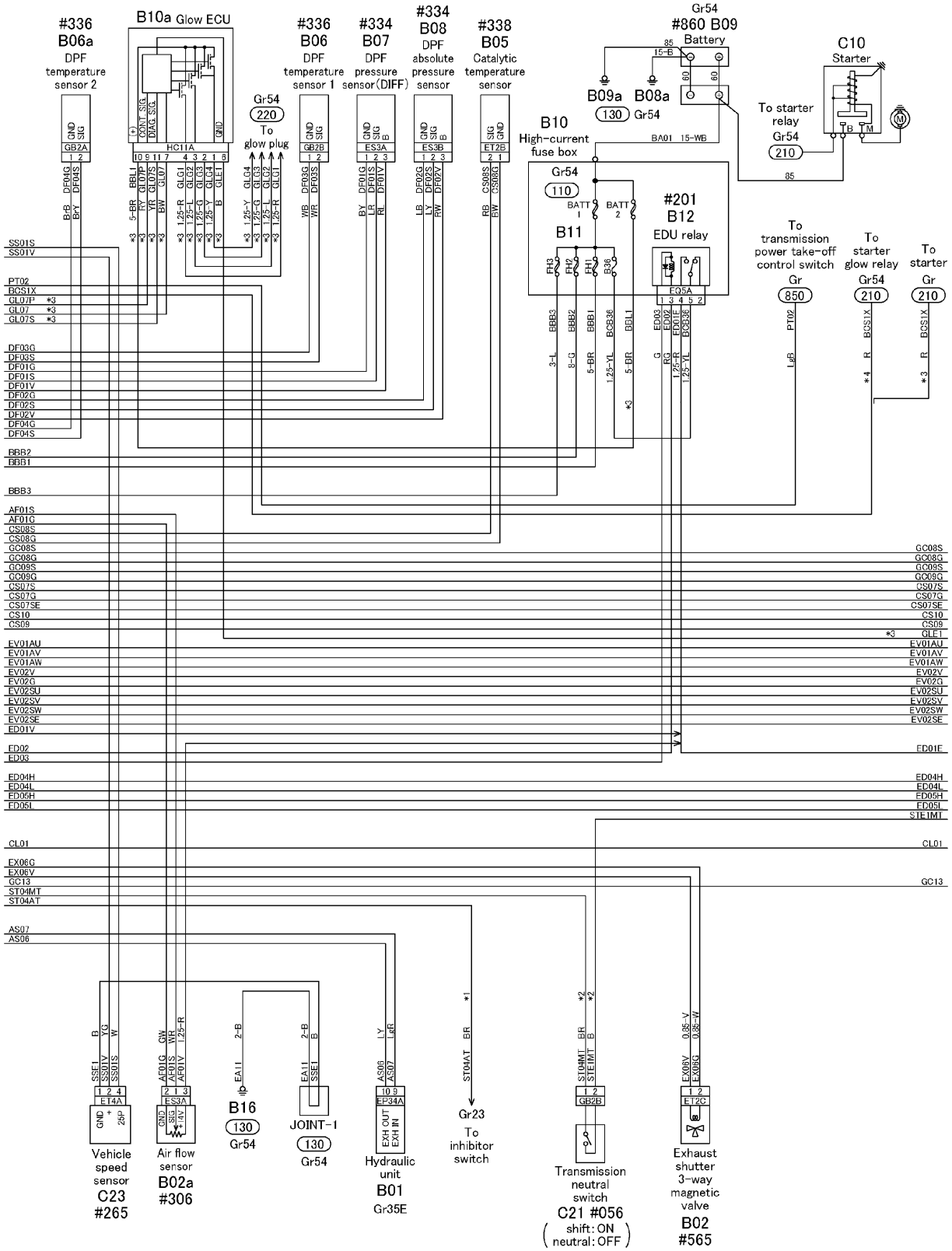

13E-C03546-6

Return to Table of Contents

https://truckmanualshub.com/

COMMONRAIL SYSTEM CIRCUIT

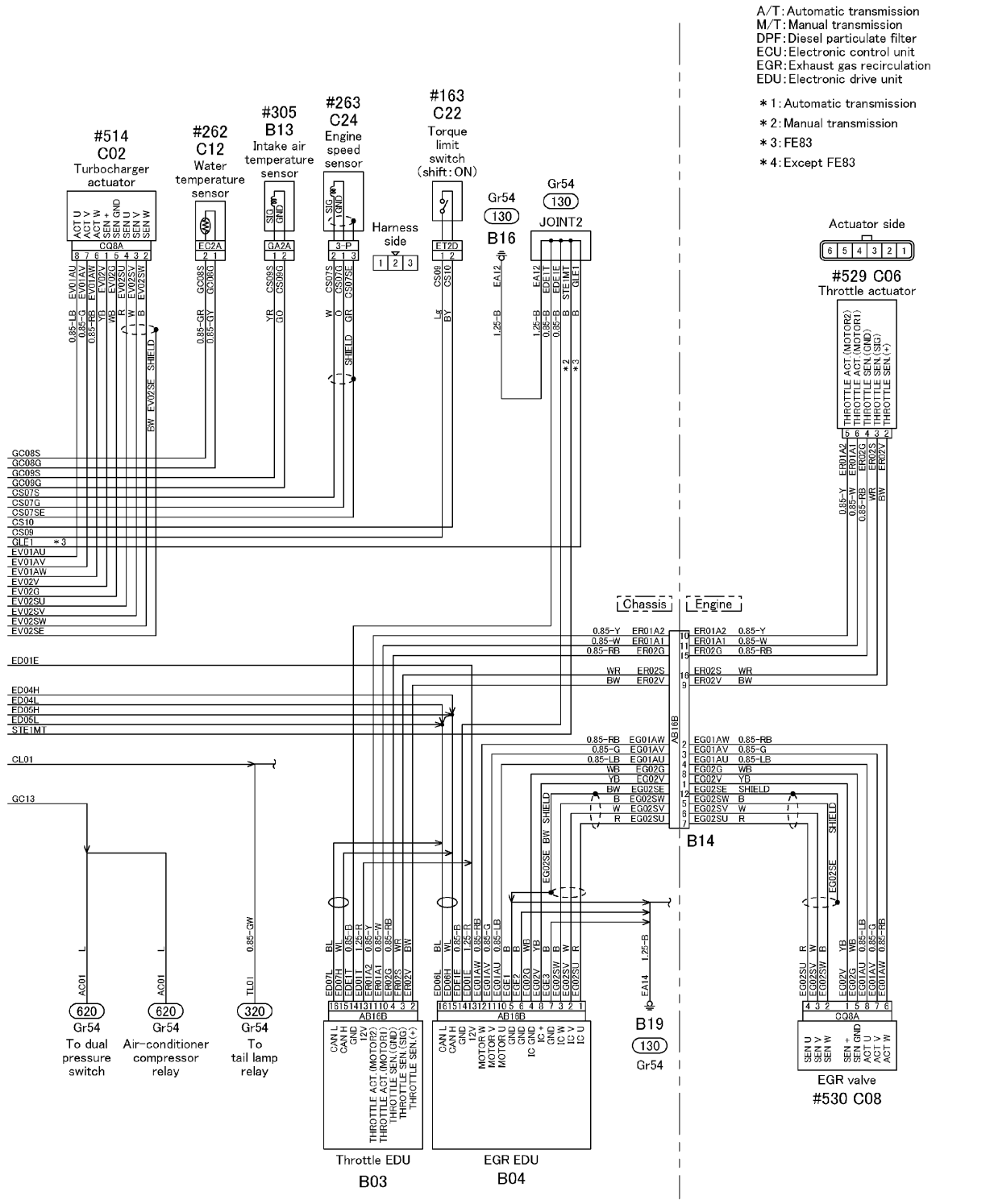

Return to Table of Contents

https://truckmanualshub.com/

AUTOCRUISE SYSTEM CIRCUIT

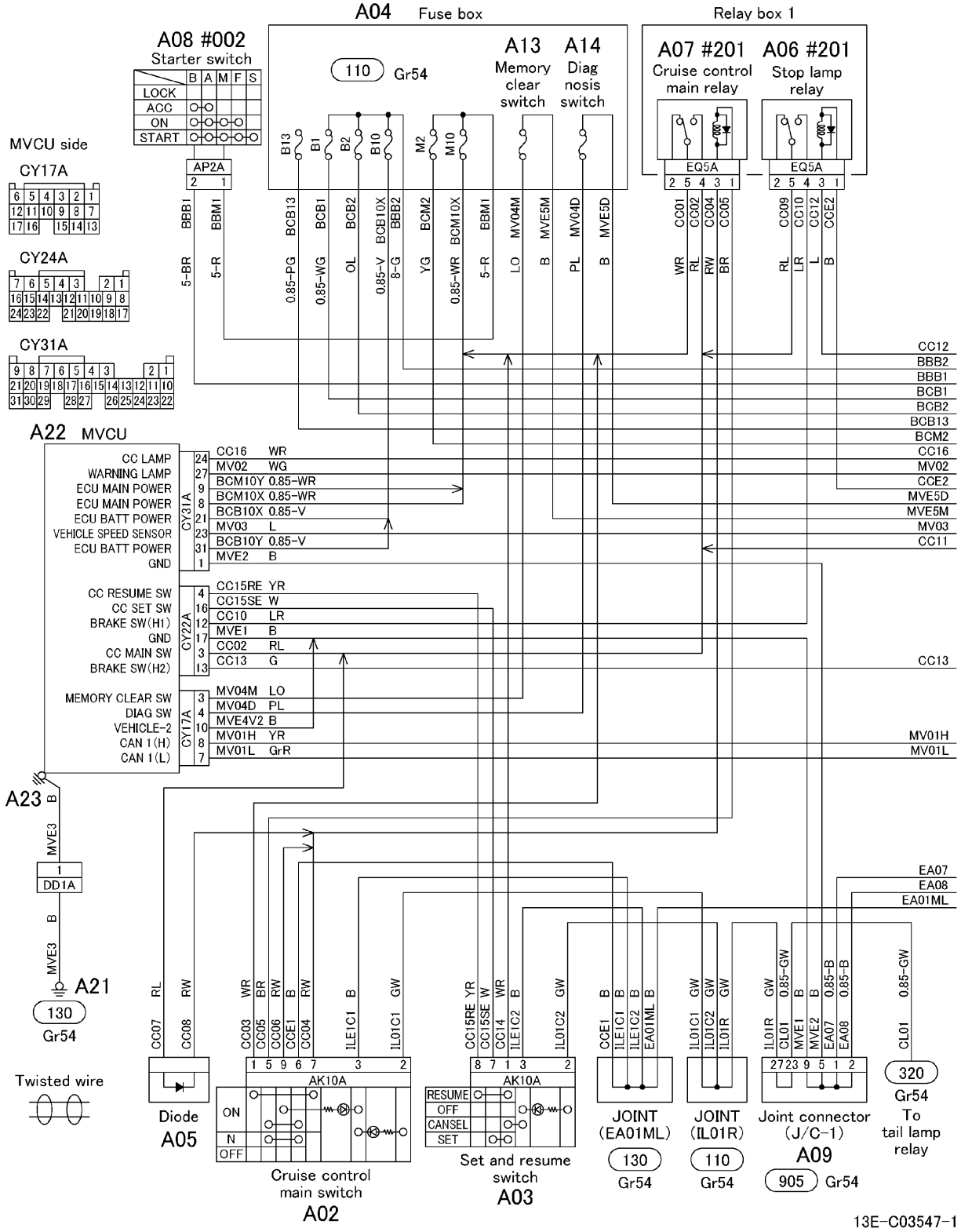

Return to Table of Contents

https://truckmanualshub.com/

AUTOCRUISE SYSTEM CIRCUIT

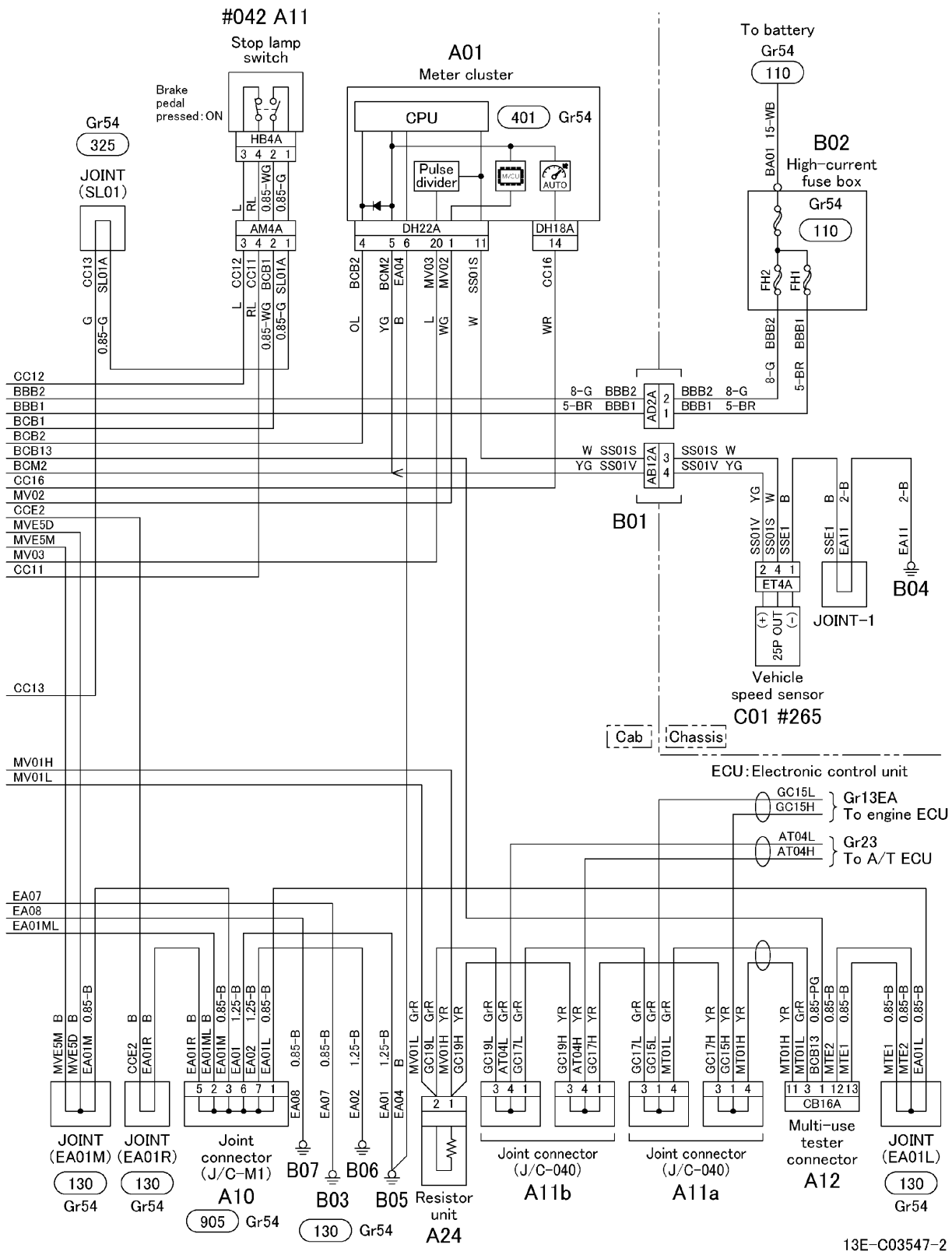

Return to Table of Contents

https://truckmanualshub.com/

AUTOMATIC TRANSMISSION CIRCUIT

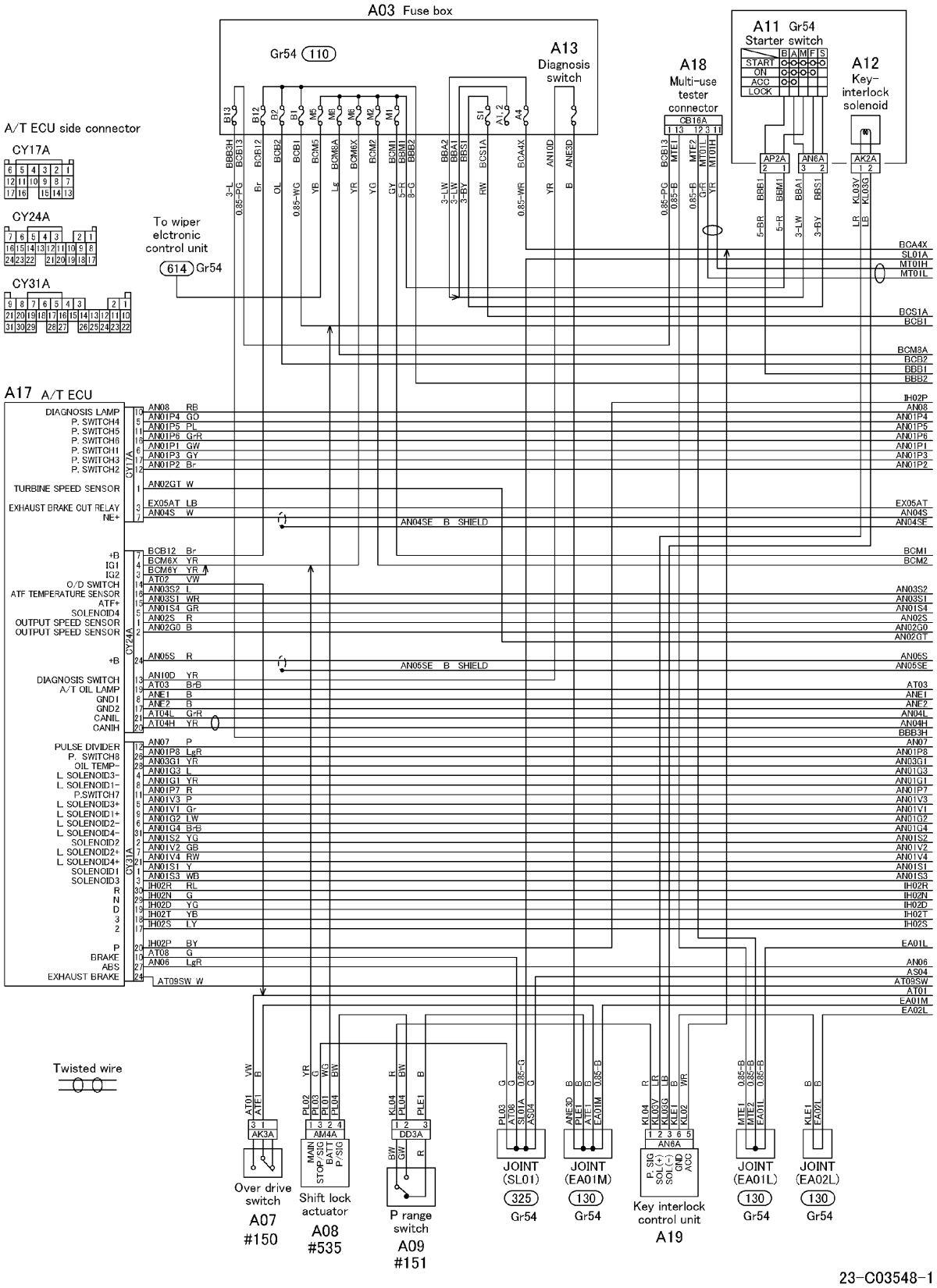

Return to Table of Contents

https://truckmanualshub.com/

AUTOMATIC TRANSMISSION CIRCUIT

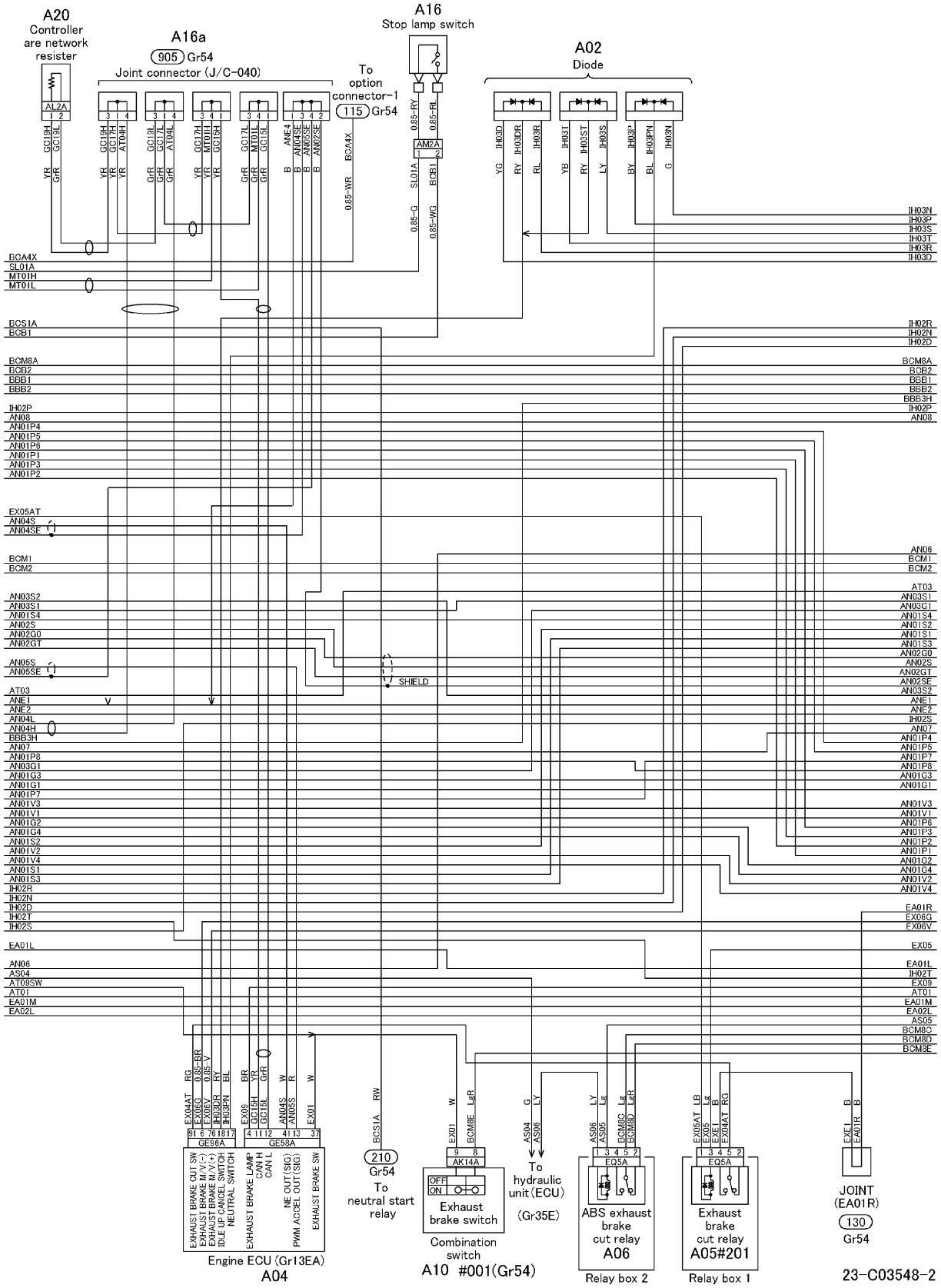

Return to Table of Contents

https://truckmanualshub.com/

AUTOMATIC TRANSMISSION CIRCUIT

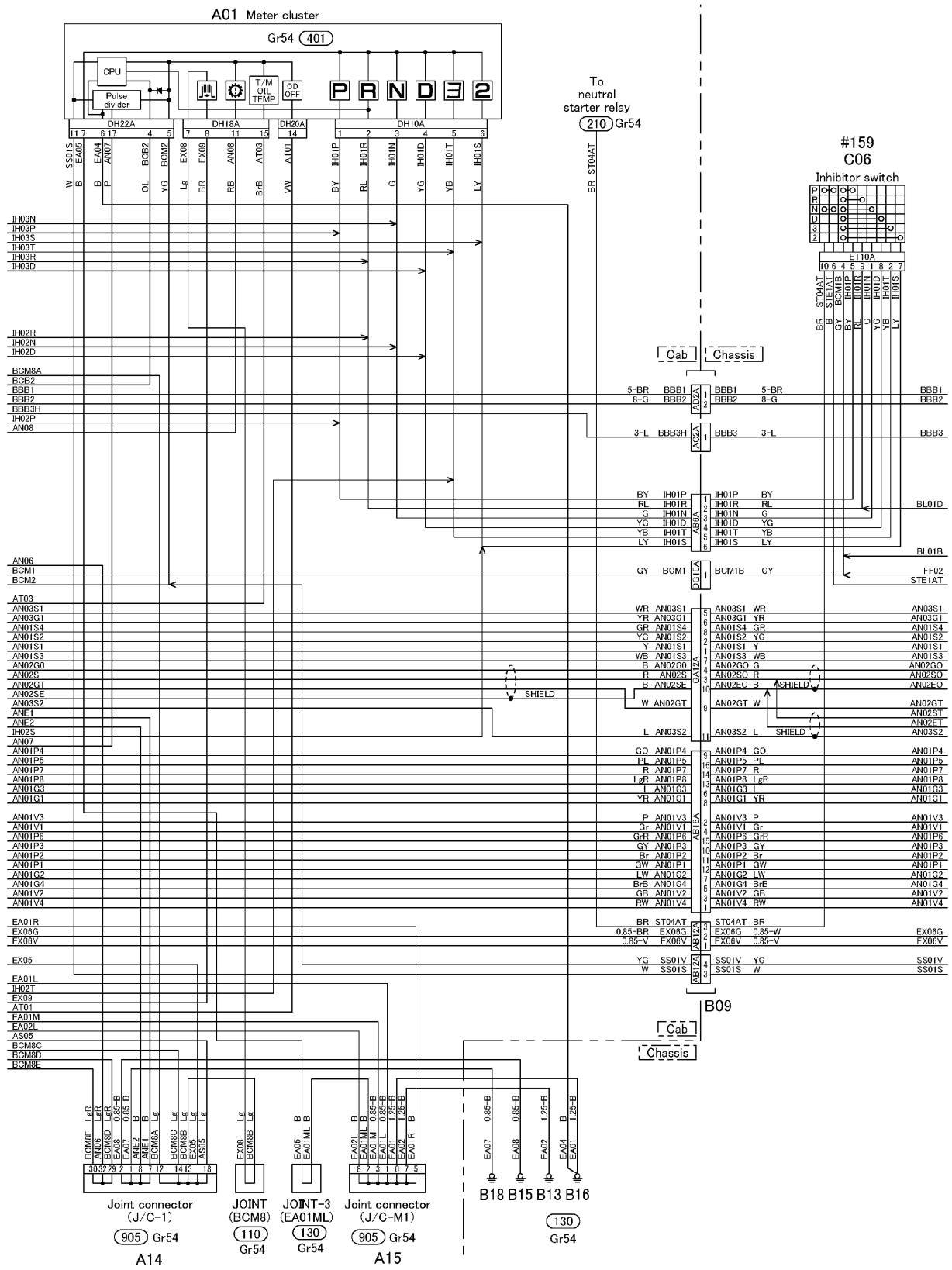

23-C03548-3

Return to Table of Contents

https://truckmanualshub.com/

AUTOMATIC TRANSMISSION CIRCUIT

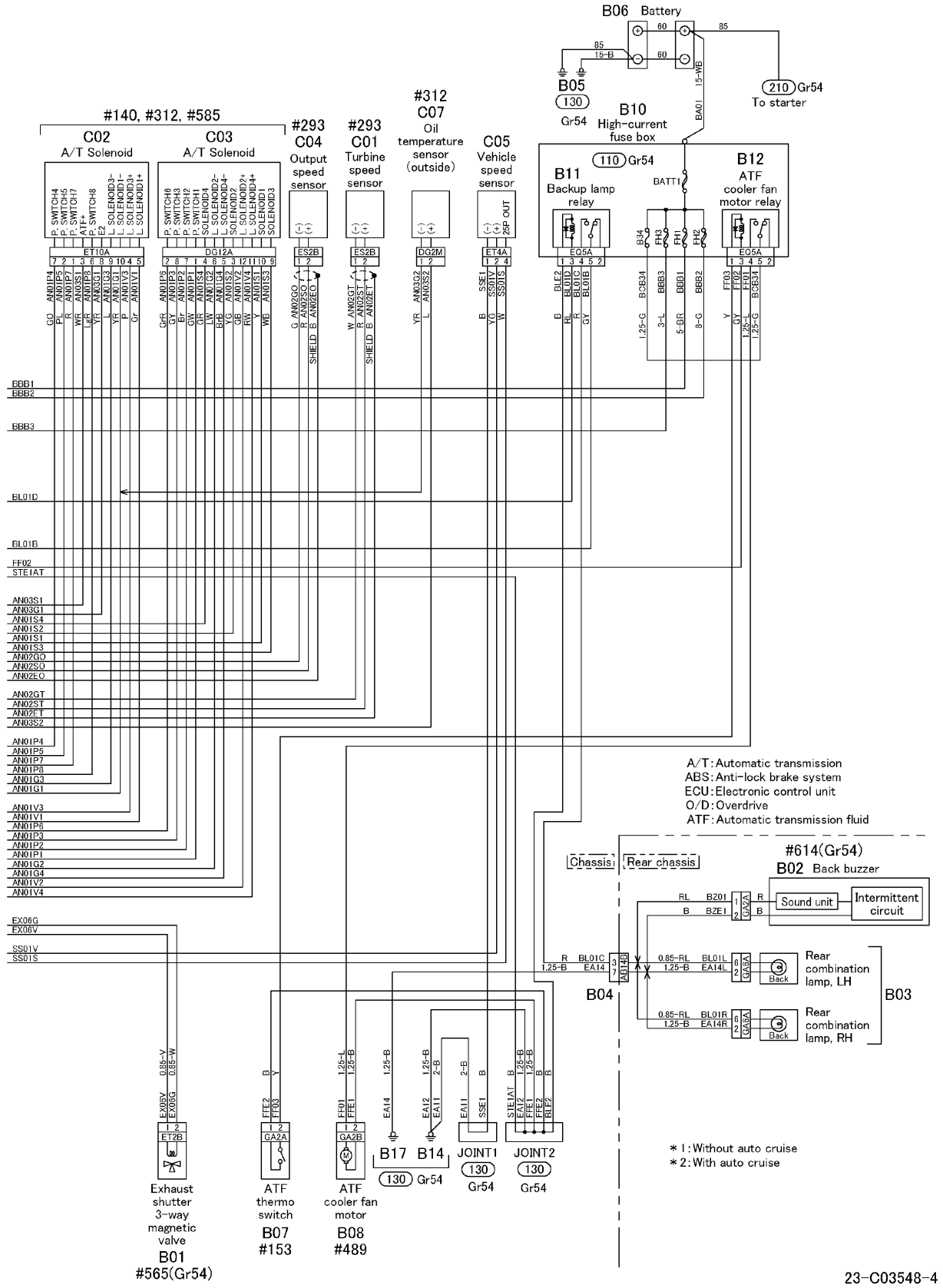

Return to Table of Contents

https://truckmanualshub.com/

ANTI-LOCK BRAKE SYSTEM CIRCUIT

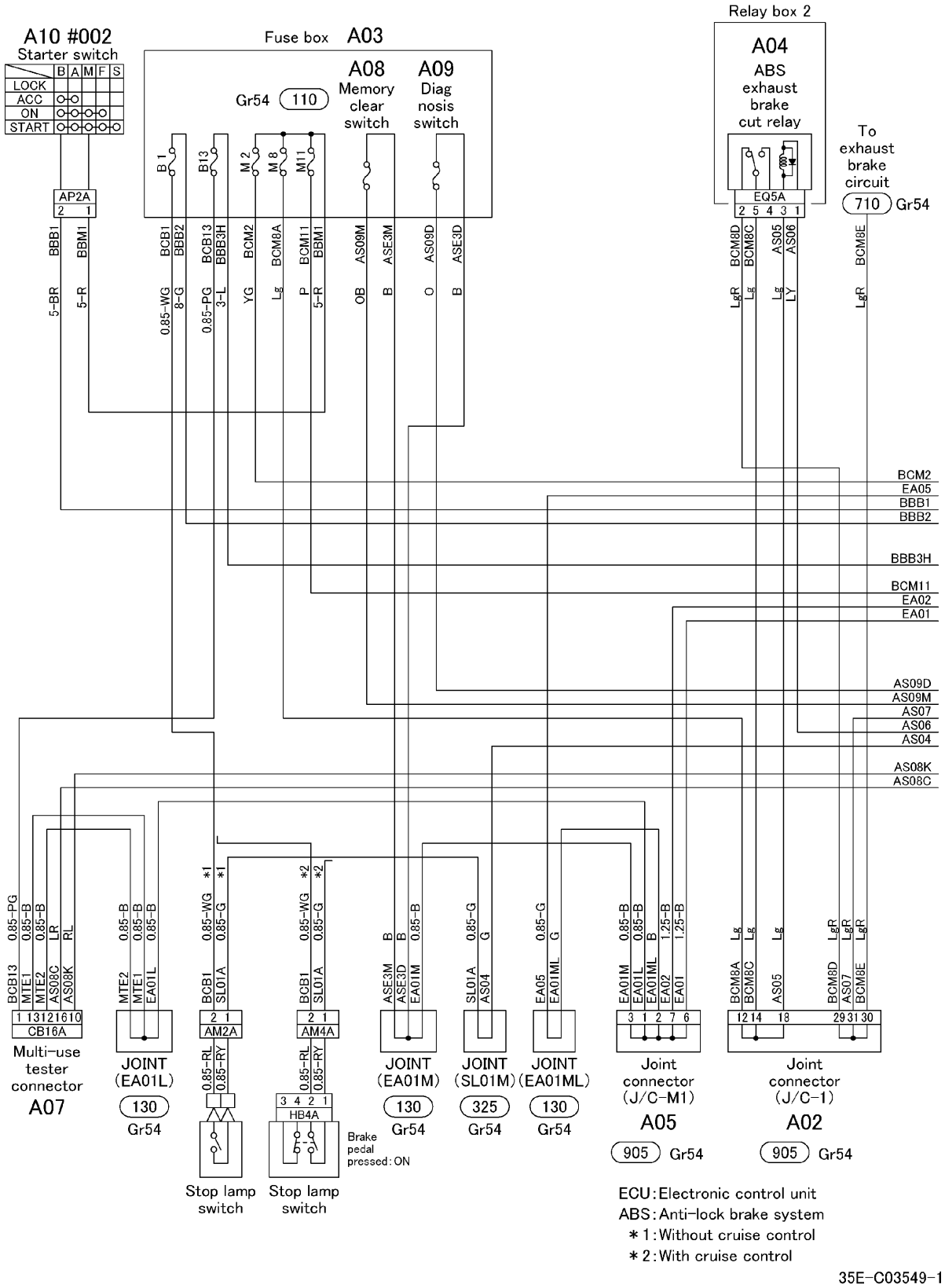

Return to Table of Contents

https://truckmanualshub.com/

ANTI-LOCK BRAKE SYSTEM CIRCUIT

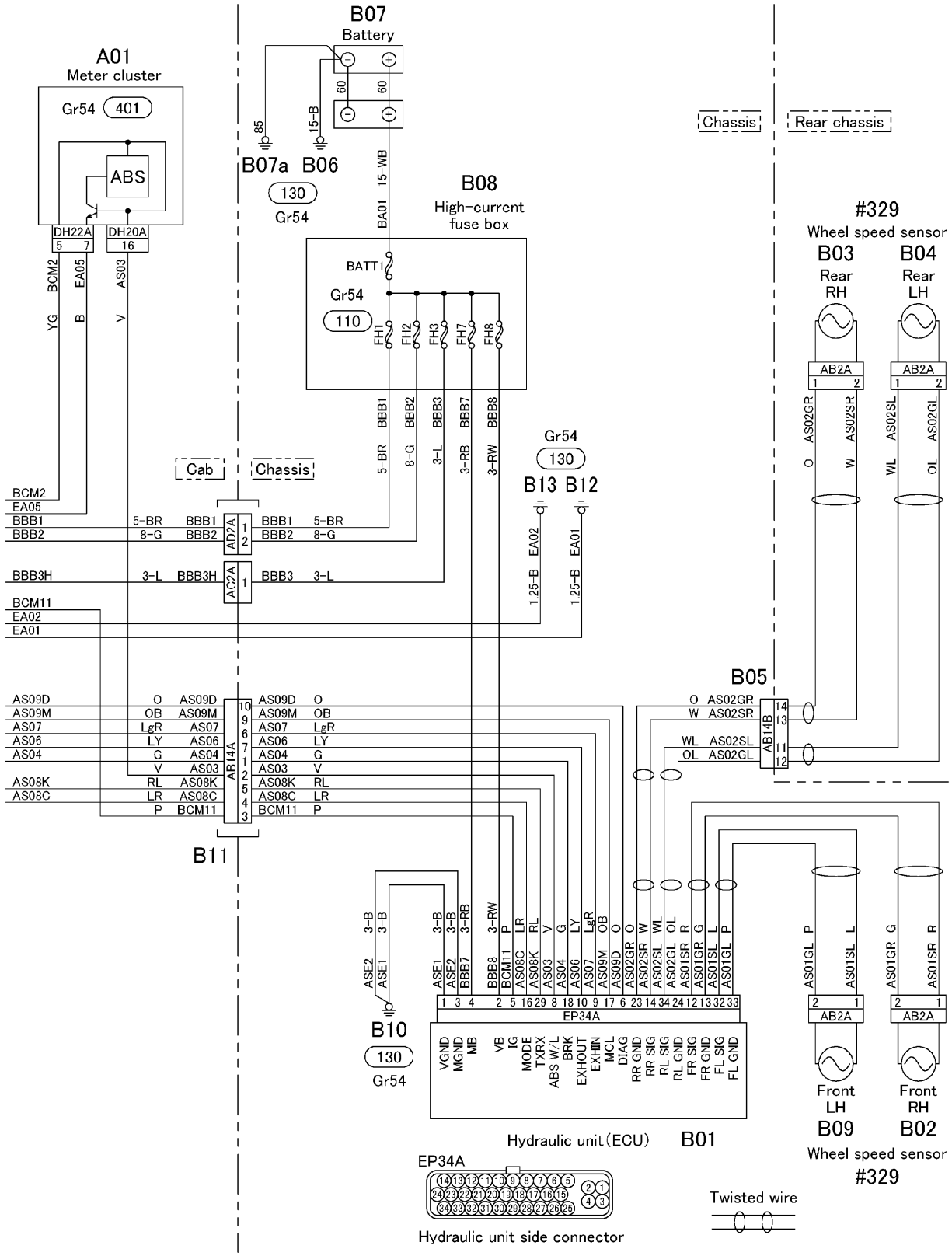

Return to Table of Contents

https://truckmanualshub.com/

BODY BUILDER'S DRAWINGS AND SUPPORTING DATA

FE.FG

MITSUBISHI FUSO TRUCK & BUS CORPORATION

SEP. 2007