List of "equipment" codes

Key to appliances

Code	Function name	Location
A001	Cab electrical distribution box	-
A002	Chassis-cab connection box	-
A004	Batteries	A01 / A20
A006	Electrically controlled master switch	A01
A009	Alternator	A01 / A20
A011	Voltage converter (24V / 12V) for information technology pack	I03
A013	Voltage converter (24V / 12V - 15A) for audio communication system	I20
A014	Power fuse box unit (FM1 to FM4)	A01 / A20
A021	Voltage converter (24 / 12V - 15A)	I03
A200	Available power supply (insulated cut wires)	J21
A201	Available power supply (vehicle earth)	H30 / J20 / J21
A204	Available power supply (after master switch)	J20 / J21
A205	Available power supply (after ignition)	J20 / J21
A206	Available power supply (CB +)	I20
A212	Available power supply (engine speed)	J21
A213	Available power supply (PTO N°1)	J20
A219	Available power supply (radio-telephone +)	I20
A220	Available power supply (radio-telephone -)	I20
A230	Available power supply (equipment in "road" position warning pictogram)	J20
A231	Available power supply (equipment in "working" position warning pictogram)	J20
A240	Available power supply (lighting)	H30 / J20
A245	Available power supply (lighting and side/parking lights)	H30
A246	Available power supply (PTO N°1 control)	J20
A247	Available power supply (alternator information, engine running)	J20
A248	Available power supply (alternator information, engine speed)	J20
A249	Available power supply (tachograph corrected speed information)	J20
A250	Available power supply (PTO 2 control)	J21
A251	Available power supply (PTO 2 warning light)	J21
A252	Available power supply (PTO 2 solenoid valve piloting)	J21

A253	**Available power supply (reversing information)**	**J20**
A254	**Available power supply (parking brake information)**	**J20**
A255	**Available power supply (gearbox neutral information)**	**J20**
A256	**Available power supply (chassis-mounted engine speed control actuation demand)**	**J20**
A257	**Available power supply (selection of engine speed N°1)**	**J20**
A258	**Available power supply (selection of engine speed N°2)**	**J20**
A259	**Available power supply (engine speed acceleration demand)**	**J20**
A260	**Available power supply (engine speed deceleration demand)**	**J20**
A270	**Available power supply (main engine speed automatic return)**	**J20**
A280	**Available power supply (low speed)**	**J20**
A281	**Available power supply (engine stop control)**	**J20**
A282	**Available power supply (engine start control)**	**J21**
A283	**Available power supply (engine starting information)**	**J21**
A284	**Available power supply (engine alert)**	**J21**
A285	**Available power supply (parameter definable frequency-related output)**	**J21**
A286	**Available power supply (PLC 2 min. output)**	**J21**
A287	**Available power supply (PLC 1 min. output)**	**J21**
A288	**Available power supply (PLC 1 min. input)**	**J21**
A289	**Available power supply (PLC 2 min. input)**	**J21**
A290	**Available power supply (high level CAN bus J1939)**	**J21**
A291	**Available power supply (low level CAN bus J1939)**	**J21**
A294	**Available power supply (LH rear marker light(s)**	**J21**
A295	**Available power supply (RH rear marker light(s)**	**J21**
A297	**Available power supply (night lighting)**	**J21**
A303	**Pre-arrangement for onboard management (ECU)**	**B60**
A308	**Pre-arrangement for onboard management (screen and keyboard)**	**J21**
A311	**Available power supply (PTO 1 engaged information)**	**J20**
A312	**Available power supply (equipment in dangerous position)**	**J20**
A313	**Available power supply (CAN bus disabling)**	**J21**
A314	**Available power supply (engine speed set-point validation)**	**J21**
A319	**Available power supply (suspension level control)**	**J20**
A320	**Available power supply (suspension level actuation control)**	**J20**
A321	**Available power supply (6 km/h limitation)**	**J20**
A323	**Available power supply (alarm stop)**	**J20**

A324	**Available power supply (rigid perimetric protection module)**	**J21**
B001	**Air suspension remote control**	**F01 / F02 / F03**
B026	**Automatic transmission gear selector**	**D01**
B103	**Key switch unit**	**A01 / A20**
B105	**Engine stop control**	**C02**
B106	**Hazard lights control**	**H04**
B111	**Horn control**	**H06**
B113	**Side/parking lights control**	**H05**
B116	**Doors locking control**	**G01**
B117	**Sun-roof opening / closing control (on dashboard)**	**I01**
B118	**Swivelling rearview mirrors and alarm siren adjustment control**	**I02**
B119	**Rearview mirrors and windscreen defrosting control**	**I02**
B120	**Passenger's electric curtain motor control (passenger side)**	**I01**
B121	**Passenger's electric curtain motor control (driver side)**	**I01**
B122	**Front curtain motor control (driver side)**	**I01**
B125	**Radio set control**	**B20**
B126	**Driver's window winder motor control (driver side)**	**I01**
B127	**Front passenger window winder motor control (front passenger side)**	**I01**
B130	**Front passenger window winder motor control (driver side)**	**I01**
B131	**Air conditioner control**	**I70**
B136	**Cruise control and engine speed regulator adjustment control**	**B03**
B137	**Windscreen wash control**	**H05**
B138	**Windscreen wipers control**	**H05**
B139	**Windscreen / headlamps wash/wipe control**	**H05**
B140	**Dipped beam headlights control**	**H05**
B141	**Main beam headlights control**	**H05**
B142	**Headlamps ride corrector control**	**H04**
B143	**Steering wheel fingertip controls N° 1**	**H04 / H05 / H06**
B144	**Long range driving lights control**	**H30**
B145	**Fog driving lights control**	**H05**
B146	**Fog lights control**	**H05**
B148	**Working lights control**	**H06**
B151	**Reversing buzzer inhibition control**	**H04**
B155	**Electric or hydraulic retarder control**	**B01**
B162	**Cab tilting control**	**B01**

B163	**Alarm anti-panic control**	**G20**
B164	**Rear wheels diff lock control**	**E01 / E03**
B165	**Second rear axle lift-up control**	**F02 / F03**
B167	**Cab add-on heater control**	**I40 / I42**
B168	**Traction control enabling control**	**E01 / E03**
B169	**Trailer brake holding enabling control**	**E01 / E03**
B170	**Cab emergency stop control**	**A21**
B171	**Chassis emergency stop control**	**A21**
B172	**Alarm siren sound level reduction control**	**G20**
B175	**Pre-arrangement for bodybuilder N° 1 control**	**J20**
B176	**Pre-arrangement for bodybuilder N° 2 control**	**J20**
B177	**PTO 1 engagement request control (in cab)**	**B01**
B178	**Cab interior lighting control (on dashboard)**	**H06**
B179	**Cab interior lighting control (in cab)**	**H06**
B180	**Sun-roof opening / closing control (on cab rear control console)**	**I01**
B181	**Direction indicator control**	**H04**
B182	**Auto/manual selection control**	**B01**
B184	**Axle load-shedding activation control**	**F02 / F03**
B185	**PTO 2 engagement request control (in cab)**	**J01**
B186	**Brake holding enabling control**	**E01**
B194	**Overhead lighting control (ambience)**	**H06**
B199	**Fast idling adjustment control**	**B03**
B200	**Cruise control / engine speed adjustment controls**	**B03**
B207	**Emergency flashing lights control**	**B63**
B219	**Driver’s side electric curtain motor control**	**I01**
B220	**Optiroll control**	**B01**
C001	**LH front wheel brake linings wear sensor**	**E01 / E03**
C002	**RH front wheel brake linings wear sensor**	**E01 / E03**
C003	**LH rear wheel brake linings wear sensor**	**E01 / E03**
C004	**RH rear wheel brake linings wear sensor**	**E01 / E03**
C005	**Lift-up axle or second rear axle LH wheel brake linings wear sensor**	**E01**
C006	**Lift-up axle or second rear axle RH wheel brake linings wear sensor**	**E01**
C007	**LH front wheel speed sensor**	**E01 / E03**
C008	**RH front wheel speed sensor**	**E01 / E03**
C009	**LH rear wheel speed sensor**	**E01 / E03**

C010	**RH rear wheel speed sensor**	**E01 / E03**
C011	**Lift-up axle or second rear axle LH wheel speed sensor**	**E01**
C012	**Lift-up axle or second rear axle RH wheel speed sensor**	**E01**
C013	**Driver's door open position information sensor**	**H05**
C014	**Passenger's front door open position information sensor**	**H05**
C019	**Boost air pressure and temperature sensor**	**C02**
C020	**Boost air temperature sensor**	**C02**
C021	**Boost air pressure sensor**	**C02**
C022	**Engine oil level sensor**	**C02**
C023	**Engine oil pressure sensor**	**C01**
C024	**Engine oil level and temperature sensor unit**	**C02**
C025	**3-level air conditioning pressure sensor**	**I70**
C027	**Low level air conditioning pressure sensor**	**I70**
C028	**High level air conditioning pressure sensor**	**I70**
C029	**Intermediate level air conditioning pressure sensor**	**I70**
C030	**Rear inter-axle diff lock engaged sensor**	**E01 / E03**
C035	**PTO 1 engaged position information sensor**	**B03**
C036	**PTO 2 engaged position information sensor**	**J01**
C038	**Drive axle suspension RH position sensor**	**F01 / F02 / F03**
C039	**Drive axle suspension LH position sensor**	**F02 / F03**
C045	**Internal temperature sensor**	**I42**
C046	**External temperature sensor**	**B20**
C048	**Engine cooling circuit temperature sensor**	**C01**
C051	**Fuel level sensor**	**B20**
C053	**Stop lights switch**	**E01 / E03**
C054	**Air filter clogging sensor**	**B20**
C056	**Tachograph speed sensor**	**B40**
C057	**Neutral position sensor**	**B03**
C058	**Reverse gear engaged position sensor**	**B03**
C059	**Retarder oil temperature sensor**	**D01 / D31**
C060	**Retarder coolant temperature sensor**	**D30 / D31**
C061	**Front axle suspension position sensor**	**F03**
C062	**Clutch position sensor**	**D01**
C064	**Retarder air pressure sensor**	**D01**
C066	**Retarder coolant temperature sensor**	**D01**

C067	**Flywheel speed sensor**	**C02**
C068	**Camshaft engine speed sensor**	**C02**
C071	**Alarm ultra-sonic transmitter sensor**	**G20**
C072	**Alarm ultra-sonic receiver sensor**	**G20**
C075	**AdBlue tank temperature and level sensors**	**C30**
C076	**Exhaust gases temperature sensor**	**C30**
C077	**Nitrogen oxides gases concentration sensor**	**C30**
C078	**Exhaust gases after catalytic converter temperature sensor**	**C30**
C079	**Trailer braking assistance pressure system sensor**	**E01 / E03**
C084	**Engine oil temperature sensor**	**C02**
C086	**Steering lockover angle sensor**	**E01 / E03**
C087	**Chassis lateral acceleration sensor**	**E01 / E03**
C088	**Engine coolant level sensor**	**C01**
C090	**Add-on heater temperature sensor**	**I40 / I42**
C096	**Range change selector pressure sensor**	**C02**
C109	**Water in fuel sensor**	**C01**
C110	**Parking brake indicator pressure sensor**	**E01 / E03**
C111	**Accelerator pedal position sensor**	**B01**
C112	**Accelerator pedal "rest" position sensor N° 2**	**B01**
C113	**Accelerator pedal rest position sensor**	**B01**
C114	**Accelerator pedal sensor unit**	**B01**
C115	**Lift-up air spring pressure sensor**	**F02 / F03**
C116	**Middle axle suspension air pressure sensor**	**F02 / F03**
C117	**Front air spring pressure sensor**	**F03**
C118	**Drive axle suspension LH pressure sensor**	**F02 / F03**
C119	**Drive axle suspension RH pressure sensor**	**F01 / F02 / F03**
C120	**Piloted axle oil level sensor**	**F20**
C121	**Piloted axle lockover angle sensor**	**F20**
C122	**Piloted axle lockover angle sensor**	**F20**
C130	**Clutch pedal position sensor**	**B01**
C132	**Engine boost pressure sensor**	**C01**
C133	**Engine cooling fan speed sensor**	**C02**
C134	**Brake pedal sensor unit**	**E01 / E03**
C135	**Brake pedal position copying sensor**	**E01 / E03**
C149	**Driver's seatbelt not buckled sensor**	**B20**

C150	**Engine block inside pressure sensor**	**C01**
C172	**Fifth wheel position sensors**	**B20**
C227	**Pistons cooling oil pressure sensor**	**C01**
C250	**Blown air temperature sensor**	**I70**
C260	**Evaporator temperature sensor**	**I70**
C261	**Air conditioning outside air temperature sensor**	**I70**
C263	**AdBlue internal temperature sensor**	**C30**
C264	**AdBlue internal pressure sensor**	**C30**
C268	**Hydraulic retarder oil pressure sensor**	**D31**
C269	**Temperature sensor on the autonomous heating system**	**I40 / I42**
C270	**Flame presence detector**	**I42**
C271	**Overheating sensor**	**I42**
C273	**Exhaust backpressure sensor**	**C01**
D001	**Principal information display**	**B20**
D004	**Tachograph**	**B40**
E007	**Bunk lower RH overhead light**	**H06**
E008	**Driver's side single overhead light**	**H06**
E009	**Bunk lower LH overhead light**	**H06**
E010	**Front passenger's side single overhead light**	**H06**
E012	**RH upper overhead lighting (door)**	**H06**
E025	**Driver's reading spotlight**	**H06**
E026	**Front passenger's reading spotlight**	**H06**
E027	**Cigar lighter light**	**I03**
E033	**LH upper overhead lighting (door)**	**H06**
E034	**LH overhead lighting (ambience)**	**H06**
E035	**RH overhead lighting (ambience)**	**H06**
E038	**Row 1 lighting**	**H06**
E039	**Row 2 lighting**	**H06**
E040	**Row 3 lighting**	**H06**
E041	**Row 4 lighting**	**H06**
E042	**Upper left-hand side overhead lamp lighting**	**H06**
E043	**Upper right-hand side overhead lamp lighting**	**H06**
E100	**RH front direction change indicator lights**	**H04**
E101	**LH front direction change indicator lights**	**H04**
E102	**Driver's side stepwell lighting**	**H06**

E103	**Front passenger's side stepwell lighting**	**H06**
E104	**Roof RH front direction change indicator lights**	**H04**
E105	**Roof LH front direction change indicator lights**	**H04**
E109	**RH rear direction change indicator lights**	**H04**
E110	**LH rear direction change indicator lights**	**H04**
E116	**RH rear fog light**	**H04**
E117	**LH rear fog light**	**H04**
E119	**LH stop lights**	**H04**
E120	**RH stop lights**	**H04**
E122	**RH clearance light N° 1**	**H04**
E123	**RH clearance light N° 2**	**H04**
E124	**LH front side/parking lights**	**H04**
E125	**RH front side/parking lights**	**H04**
E128	**LH clearance lights N° 3**	**H04**
E129	**LH clearance lights N° 4**	**H04**
E131	**RH clearance lights N° 3**	**H04**
E132	**RH clearance lights N° 4**	**H04**
E133	**LH clearance lights N° 1**	**H04**
E134	**LH clearance lights N° 2**	**H04**
E135	**LH tail lights unit**	**H04**
E136	**RH tail lights unit**	**H04**
E137	**RH rear side/parking lights**	**H04**
E138	**LH rear side/parking lights**	**H04**
E141	**LH reversing lights**	**H04**
E142	**RH reversing lights**	**H04**
E144	**Roof LH side/parking lights**	**H04 / H30**
E145	**Roof LH side/parking lights**	**H04 / H30**
E149	**Anti-glare strip-mounted LH marker lights**	**H30**
E150	**Anti-glare strip-mounted RH marker lights**	**H30**
E151	**Right-hand side marker lamp N° 5**	**H04**
E152	**Left-hand side marker lamp N° 5**	**H04**
E500	**RH dipped beam headlight**	**H04**
E501	**LH dipped beam headlight**	**H04**
E502	**RH main beam headlight**	**H04**
E503	**LH dipped beam headlight**	**H04**

E504	**RH headlamp insert**	**H04**
E505	**LH headlamp insert**	**H04**
E506	**LH fog driving light**	**H05**
E507	**RH fog driving light**	**H05**
E510	**Working spotlight**	**H06**
G001	**Vehicle management ECU**	**B01 / B03**
G002	**Engine management ECU**	**C01 / C02**
G003	**Bodybuilder pre-arrangement management ECU**	**J01**
G004	**Air suspension ECU**	**F01 / F02 / F03**
G005	**EBS braking management ECU**	**E01 / E03**
G006	**Vehicle power supply management ECU (ADR)**	**A21**
G007	**Front axle braking assistance modulator unit**	**E01 / E03**
G008	**Drive axle braking assistance modulator unit**	**E01 / E03**
G012	**Lighting and signalling management ECU**	**H04 / H05 / H06**
G016	**Second rear axle braking assistance modulator unit**	**E01**
G017	**Cab temperature regulation ECU**	**I42**
G018	**Onboard management interface ECU**	**B60 / B63**
G019	**Gear selector ECU**	**D01**
G020	**Automatic transmission ECU**	**D01**
G021	**Hydraulic retarder ECU**	**D30 / D31**
G025	**Engine immobilizer ECU**	**G01**
G026	**Alarm ECU**	**G20**
G027	**Piloted axle ECU**	**F20**
G028	**Doors central locking ECU**	**G01**
G030	**AdBlue supply management pump module**	**C30**
G051	**Air production management ECU**	**F40**
G053	**Air/air autonomous heating ECU**	**I40**
G100	**Datamax gateway ECU**	**B61**
G102	**Onboard management ECU**	**B61 / B63**
G103	**Positioning module ECU**	**B61**
G104	**Tyre pressures monitoring ECU**	**G60**
H001	**Engine immobilizer antenna**	**G01**
H005	**GPS satellite antenna**	**I20**
H011	**LH front loudspeaker**	**I20**
H012	**RH front loudspeaker**	**I20**

H014	**Radio set**	**I20**
H019	**Microphone**	**I20**
H020	**Sharp loudspeaker, LH side**	**I20**
H021	**Sharp loudspeaker, RH side**	**I20**
J001	**Cigar lighter**	**I03**
J002	**RH heated seat unit**	**I03**
J003	**LH heated seat unit**	**I03**
J006	**Refrigerated compartment**	**I03**
J007	**Refrigerator**	**I03**
K001	**Air/water add-on heater**	**I42**
K002	**Air/air add-on heater**	**I40**
K003	**Air conditioning ECU**	**I70**
L004	**External horn**	**H04**
L006	**Horn - Alarm siren**	**G20**
L008	**Electric horn**	**H06**
M002	**Starter**	**A01 / A20**
M020	**Windscreen wipers drive motor**	**H05**
M021	**Windscreen wash pump motor**	**H05**
M022	**Headlamps wash pump motor**	**H05**
M023	**LH headlamp ride correction motor**	**H04**
M024	**RH headlamp ride correction motor**	**H04**
M027	**Windscreen wash motor / headlamps wash motor unit**	**H05**
M050	**Front passenger's sun visor motor**	**I01**
M051	**Driver's sun visor motor**	**I01**
M052	**Front sun visor motor**	**I01**
M056	**Driver's door window winder motor**	**I01**
M057	**Front passenger's door window winder motor**	**I01**
M060	**Electric roof air vent motor**	**I01**
M061	**Air recycling motor**	**I70**
M064	**Air mixing flap motor**	**I70**
M080	**RH rearview mirror horizontal swivelling motor**	**I02**
M081	**RH rearview mirror vertical swivelling motor**	**I02**
M082	**LH rearview mirror horizontal swivelling motor**	**I02**
M083	**LH rearview mirror vertical swivelling motor**	**I02**
M101	**Add-on heater fan motor**	**I40 / I42**

M102	**Cab tilting motor**	**B01**
M107	**Air/water autonomous heating water pump**	**I42**
M200	**Air conditioning compressor electric clutch**	**I70**
M202	**Driving position fan-coil heater motor**	**I70**
M203	**Add-on heater fuel pump motor**	**I40 / I42**
M205	**Water pump electromagnetic clutch**	**C02**
N001	**Fuel heater resistor N° 2**	**C01**
N004	**Air preheating resistor**	**C01**
N008	**LH defrosting rearview mirror resistor**	**I02**
N009	**RH defrosting rearview mirror resistor**	**I02**
N015	**AdBlue heating resistor (in tank to pump module circuit)**	**C30**
N016	**AdBlue heating resistor (in pump module to tank circuit)**	**C30**
N017	**AdBlue heating resistor (in pump module to metering solenoid valve circuit)**	**C30**
N018	**AdBlue heating resistor (in metering solenoid valve to pump module circuit)**	**C30**
N019	**AdBlue heating resistor (in filter on pump)**	**C30**
N027	**Fan/coil heater pilot-control resistors assembly**	**I70**
N034	**Autonomous heating system heating element**	**I40 / I42**
S001	**After ignition power supply relay N°1**	**A40**
S002	**After ignition power supply relay N°2**	**A41**
S003	**After ignition power supply relay N° 3**	**A41**
S004	**Accessories power supply relay N° 1**	**A42**
S005	**Accessories power supply relay N° 2**	**A42**
S020	**Starting relay**	**A41**
S021	**Alternator circuit earthing relay (ADR)**	**A20 / A40**
S022	**Alternator controlled power supply relay (engine running)**	**A20 / A40**
S100	**Stop lights power supply relay**	**A40**
S101	**Rear fog lights power supply relay**	**A42**
S102	**Main beam headlights power supply relay**	**A42**
S103	**Fog driving lights power supply relay**	**A42**
S104	**Reversing lights power supply relay**	**A41**
S105	**RH and LH side/parking and marker lights power supply relay**	**A44**
S106	**Switches night lighting power supply relay**	**A45**
S107	**RH and LH side/parking and marker lights power supply relay (trailer and bodybuilder)**	**A44**

S109	**Long range driving lights power supply relay**	**H30**
S200	**Automatic transmission management ECU power supply relay**	**A42**
S201	**Vehicle and engine ECUs power supply relay**	**A41**
S202	**Air suspension power supply relay**	**A43**
S300	**Cab tilting safety and authorization relay**	**A40**
S400	**Windscreen wipers motor time-delay relay**	**A41**
S401	**Headlamps wash pump motor power supply relay**	**H05**
S451	**Air conditioning compressor clutch power supply relay**	**A43**
S452	**Air conditioning fan piloting relay**	**I70**
S453	**Add-on heater power supply relay**	**A43**
S500	**Heated and swivelling rearview mirror power supply relay**	**A41**
S501	**Air preheating relay**	**C01**
S600	**Cab tilting motor power supply relay**	**B01**
V002	**Rear wheels diff lock electrovalve**	**E01 / E03**
V003	**LH roadwheel ABS electrovalve**	**E01 / E03**
V004	**Front RH wheel ABS solenoid valve**	**E01 / E03**
V005	**Axle piloting solenoid valve unit**	**F20**
V006	**Locking solenoid valve**	**F20**
V007	**LH steer control solenoid valve**	**F20**
V008	**RH steer control solenoid valve**	**F20**
V010	**PTO engagement electrovalve N° 1**	**B01 / D01**
V011	**High speed disengagement solenoid valve**	**D01**
V012	**High speed engagement solenoid valve**	**D01**
V013	**Low speed engagement solenoid valve**	**D01**
V014	**Low speed disengagement solenoid valve**	**D01**
V015	**Retarder proportional electrovalve**	**D01 / D30**
V016	**Retarder accumulation electrovalve**	**D30**
V018	**PTO engagement electrovalve N° 2**	**D01 / J01**
V020	**Exhaust brake solenoid valve unit**	**C01**
V021	**Engine brake N° 1 solenoid valve**	**C01**
V023	**Exhaust brake solenoid valve**	**C01**
V030	**Drive axle suspension control solenoid valve unit**	**F01 / F02 / F03**
V031	**Drive axle rear suspension main electrovalve**	**F01 / F02 / F03**
V032	**Drive axle rear suspension (RH side) electrovalve**	**F01 / F02 / F03**
V033	**Drive axle rear suspension (LH side) electrovalve**	**F02 / F03**

V034	**Rear axle suspension control solenoid valve unit**	**F02 / F03**
V035	**Rear axle suspension main electrovalve**	**F02 / F03**
V036	**Rear axle suspension electrovalve**	**F02 / F03**
V037	**Lift-up air spring control electrovalve**	**F02 / F03**
V038	**Front suspension electrovalve**	**F03**
V050	**Braking auxiliary electrovalve**	**E01 / E03**
V051	**Trailer braking inlet/exhaust electrovalve**	**E01 / E03**
V052	**Range change electrovalve**	**C01**
V053	**Splitter control electrovalve**	**C01**
V054	**Splitter and range change control unit**	**C01**
V055	**Engine water circuit by-pass solenoid valve**	**C30**
V056	**AdBlue supply metering solenoid valve**	**C30**
V101	**Cylinder injector solenoid valve N° 1**	**C02**
V102	**Cylinder injector solenoid valve N° 2**	**C02**
V103	**Cylinder injector solenoid valve N° 3**	**C02**
V104	**Cylinder injector solenoid valve N° 4**	**C02**
V105	**Cylinder injector solenoid valve N° 5**	**C02**
V106	**Cylinder injector solenoid valve N° 6**	**C02**
V107	**Air horn**	**H06**
V108	**Air dryer bleeding solenoid valve**	**C01**
V109	**Engine cooling fan speed regulation solenoid valve**	**C01**
V126	**Pistons cooling solenoid valve**	**C01**
V127	**Engine oil cooling solenoid valve**	**C01**
V140	**Cab heating engine coolant circuit by-pass solenoid valve**	**I70**
V141	**AdBlue cooling electrovalve**	**C30**
V142	**Hydraulic retarder oil pump control solenoid valve**	**D31**
V143	**Hydraulic retarder main oil flow circuit control solenoid valve**	**D31**
W100	**Alternator circuit draw resistor**	**A40**
W500	**Diode(s)**	**A40 / A42 / A43 / A44 / H06**
W502	**Diode on after ignition information circuit for vehicle management box**	**A40 / B03**
W503	**Diode on engine running information relay power supply circuit**	**A01 / A20 / A40 / B20**
W504	**Diode on alternator earthing relay power supply circuit**	**A40**
W505	**Diode on alternator earthing relay power supply circuit**	**A40**
W506	**Doors central locking diode**	**A43**
W507	**Vehicle alarm sounding diode**	**G20**

X001	**Electrical connection terminal**	**A01 / A20**
X200	**Available power supplies connector**	**J20 / J21**
X203	**CAN bus grouping connector**	**K21**
X207	**Audio auxiliary connector**	**I20**
X208	**Audio USB connector**	**I20**
X900	**15-pin trailer socket**	**J40**
X902	**24 Volts power supply socket**	**I03**
X906	**ABS/EBS trailer socket**	**J40**
X907	**Ground receptacle**	**A01**
X908	**12 Volts power supply socket**	**I03**
X909	**Extra 24 Volts power supply socket**	**I03**
X913	**Vehicle diagnostic socket**	**K01**
Z001	**Fuel heating unit**	**C01**
Z003	**Fan speed regulator unit**	**C01 / C02**
Z004	**Retarder unit**	**D01**
Z005	**Automatic transmission unit**	**D01**
Z008	**Driver's swivelling defrosting rearview mirror**	**I02**
Z009	**Passenger's swivelling defrosting rearview mirror**	**I02**
Z010	**Front passenger's door locking striker unit**	**G01**
Z011	**Driver's door locking striker unit**	**G01**
Z014	**Trailer brake control EBS modulator unit**	**E01 / E03**
Z021	**Adblue pump module assembly**	**C30**

Summary of diagrams

Energy production (except ADR)
Diagram plate: **A01**
See page

Energy production ADR
Diagram plate: **A20**
See page

Control ECU ADR
Diagram plate: **A21**
See page

Electrical distribution (1/6)
Diagram plate: **A40**
See page

Electrical distribution (2/6)
Diagram plate: **A41**
See page

Electrical distribution (3/6)
Diagram plate: **A42**
See page

Electrical distribution (4/6)
Diagram plate: **A43**
See page

Electrical distribution (5/6)
Diagram plate: **A44**
See page

Electrical distribution (6/6)
Diagram plate: **A45**
See page

Vehicle electronic management (1/2)
Diagram plate: **B01**
See page

Vehicle electronic management (2/2)
Diagram plate: **B03**
See page

Principal information display
Diagram plate: **B20**
See page

Tachograph
Diagram plate: **B40**
See page

Onboard management FMS
Diagram plate: **B60**
See page

Onboard management DATAMAX
Diagram plate: **B61**
See page

Onboard management OPTIFLEET
Diagram plate: **B63**
See page

Engine electronic management (1/2)
Diagram plate: **C01**
See page

Engine electronic management (2/2)
Diagram plate: **C02**
See page

Urea inflow management
Diagram plate: **C30**
See page

Automatic gearbox
Diagram plate: **D01**
See page

Hydraulic retarder ECOSPLIT 2

Diagram plate: **D30**
See page

Hydraulic retarder ECOSPLIT 4
Diagram plate: **D31**
See page

EBS 6x2 equipment
Diagram plate: **E01**
See page

EBS 4x2 equipment
Diagram plate: **E03**
See page

Electronic air suspension - Tractors4x2 (1 sensor)
Diagram plate: **F01**
See page

Rear air suspension - 4x2 / 6x2 (2 sensors)
Diagram plate: **F02**
See page

Integral electronic air suspension - 4x2 / 6x2 (2 sensors)
Diagram plate: **F03**
See page

Steered axle
Diagram plate: **F20**
See page

Air production management
Diagram plate: **F40**
See page

Doors / engine immobilizer controls
Diagram plate: **G01**
See page

Alarm
Diagram plate: **G20**

See page

Checking tyre pressures
Diagram plate: **G60**
See page

Lighting and signalling management (1/3)
Diagram plate: **H04**
See page

Lighting and signalling management (2/3)
Diagram plate: **H05**
See page

Lighting and signalling management (3/3)
Diagram plate: **H06**
See page

Side, marker, identification and parking lights
Diagram plate: **H30**
See page

Electric window winder, sun-roof
Diagram plate: **I01**
See page

Swivelling defrosting rearview mirrors
Diagram plate: **I02**
See page

Comfort accessories
Diagram plate: **I03**
See page

Radio
Diagram plate: **I20**
See page

Independent (add-on) heating AT2000 ST
Diagram plate: **I40**
See page

Independent (add-on) heating THERMO 90ST
Diagram plate: **I42**
See page

Air conditioning
Diagram plate: **I70**
See page

Bodybuilder pre-arrangement management
Diagram plate: **J01**
See page

Available power supplies (1/2)
Diagram plate: **J20**
See page

Available power supplies (2/2)
Diagram plate: **J21**
See page

Trailer sockets
Diagram plate: **J40**
See page

Diagnostic socket
Diagram plate: **K01**
See page

BUS J1587-1 transfer zone
Diagram plate: **K20**
See page

CAN BUS transfer zone J1939-1
Diagram plate: **K21**
See page

CAN BUS transfer zone J1939-2
Diagram plate: **K22**
See page

CAN BUS transfer zone J1939-ENG

Diagram plate: **K23**

https://truckmanualshub.com/

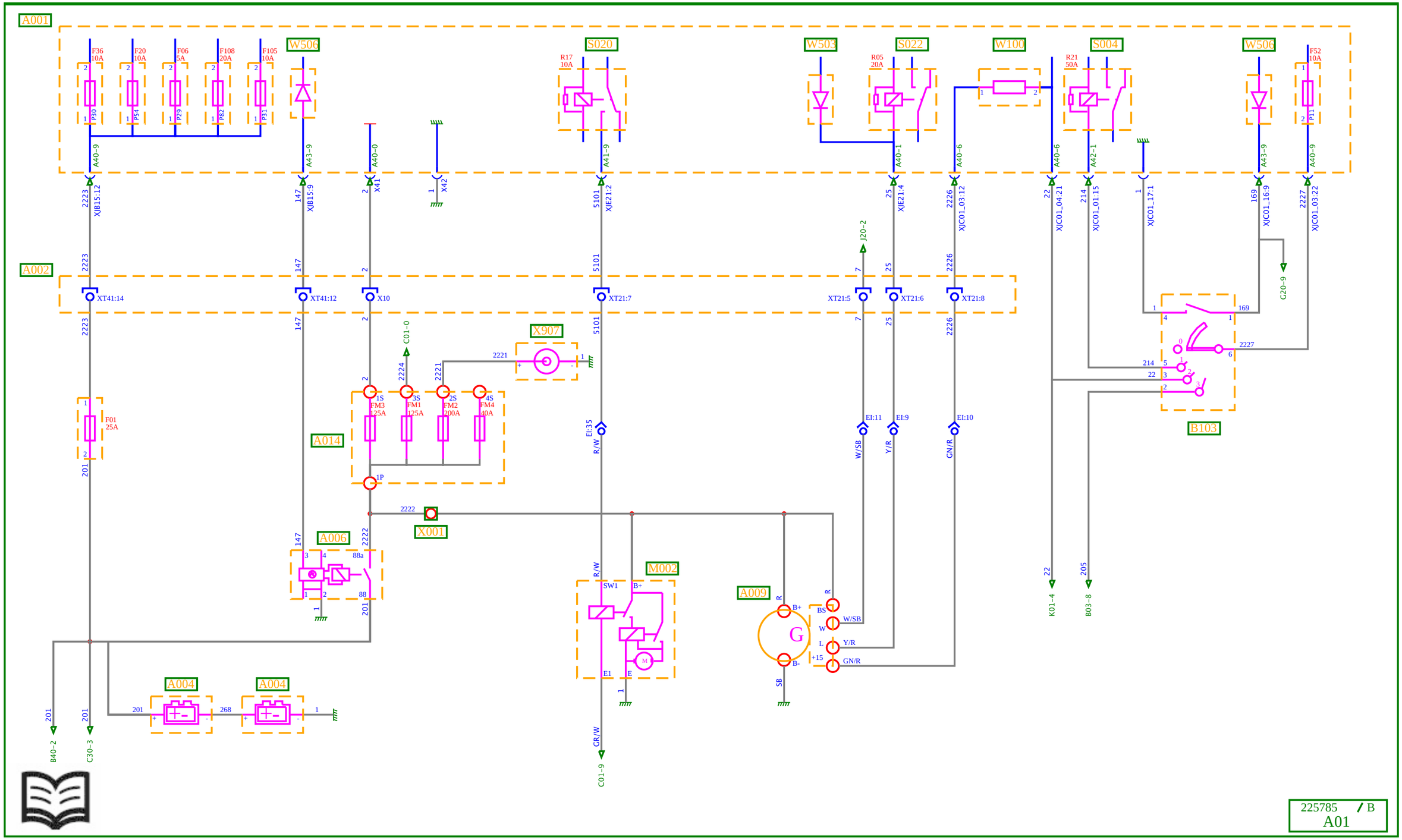

Energy production (except ADR)

Key to appliances

Code	Function	Location
A001	Cab electrical distribution box	B2c
A002	Chassis-cab connection box	B2c
A004	Batteries	C4d
A006	Electrically controlled master switch	C4d
A009	Alternator	B3c
A014	Power fuse box unit (FM1 to FM4)	C4d
B103	Key switch unit	C2c
M002	Starter	A3c
S004	Accessories power supply relay N° 1	B2c
S020	Starting relay	B2c
S022	Alternator controlled power supply relay (engine running)	B2c
W100	Alternator circuit draw resistor	B2c
W503	Diode on engine running information relay power supply circuit	B2c
W506	Doors central locking diode	B2c
X001	Electrical connection terminal	B4d
X907	Ground receptacle	C5d

Energy production (except ADR)

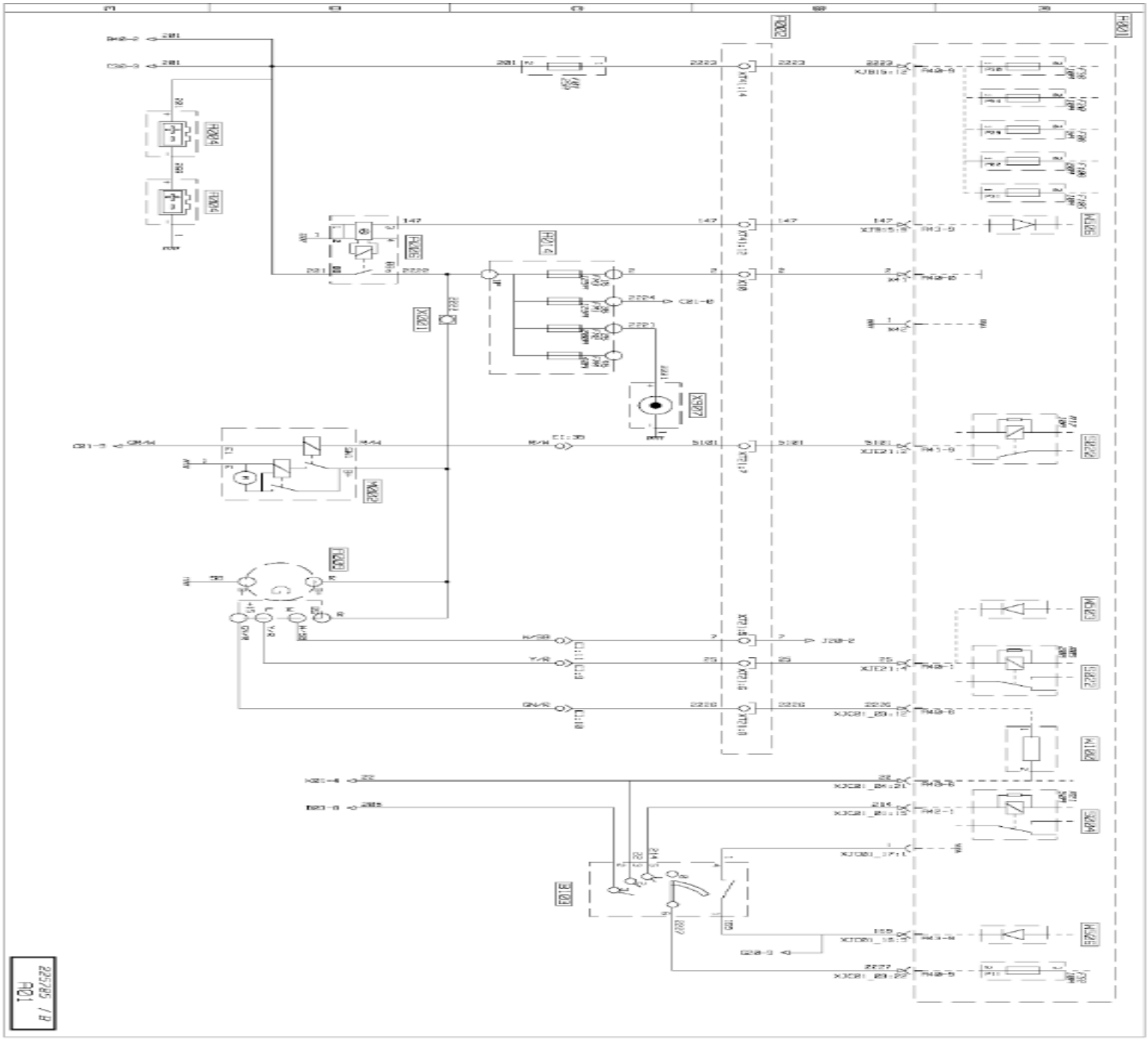

https://truckmanualshub.com/

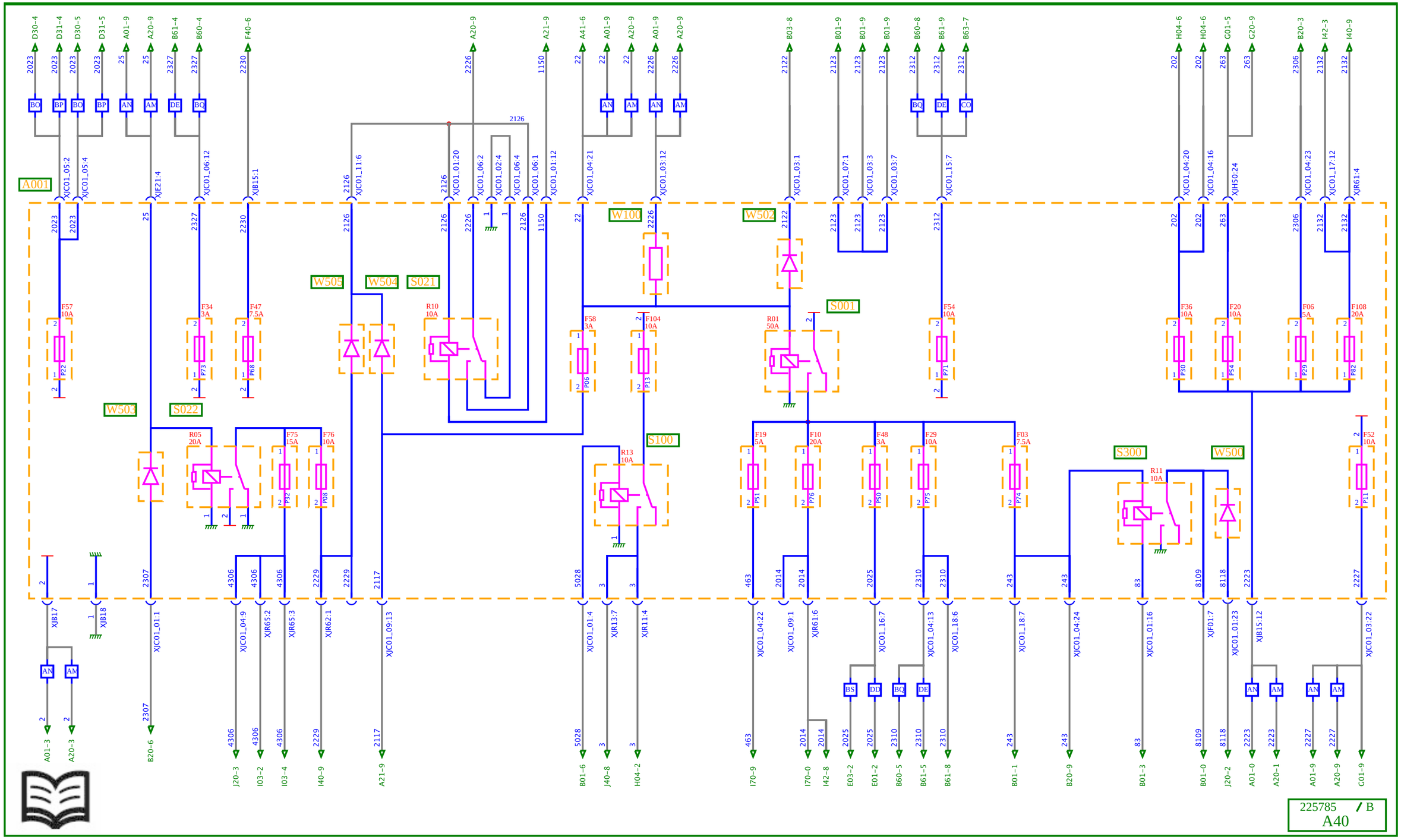

Electrical distribution (1/6)

Key to appliances

Code	Function	Location
A001	**Cab electrical distribution box**	**B2c**
S001	**After ignition power supply relay N°1**	**B2c**
S021	**Alternator circuit earthing relay (ADR)**	**B2c**
S022	**Alternator controlled power supply relay (engine running)**	**B2c**
S100	**Stop lights power supply relay**	**B2c**
S300	**Cab tilting safety and authorization relay**	**B2c**
W100	**Alternator circuit draw resistor**	**B2c**
W500	**Diode(s)**	**B2c**
W502	**Diode on after ignition information circuit for vehicle management box**	**B2c**
W503	**Diode on engine running information relay power supply circuit**	**B2c**
W504	**Diode on alternator earthing relay power supply circuit**	**B2c**
W505	**Diode on alternator earthing relay power supply circuit**	**B2c**

AM: with ADR equipment
AN: without ADR equipment
BO: with **ECOSPLIT 2** hydraulic retarder
BP: with **ECOSPLIT 4** hydraulic retarder
BS: **4x2** vehicles
DD: **6x2** vehicles
BQ: with **FMS** equipment
CO: with **OPTIFLEET** equipment
DE: with **DATAMAX** equipment

Electrical distribution (1/6)

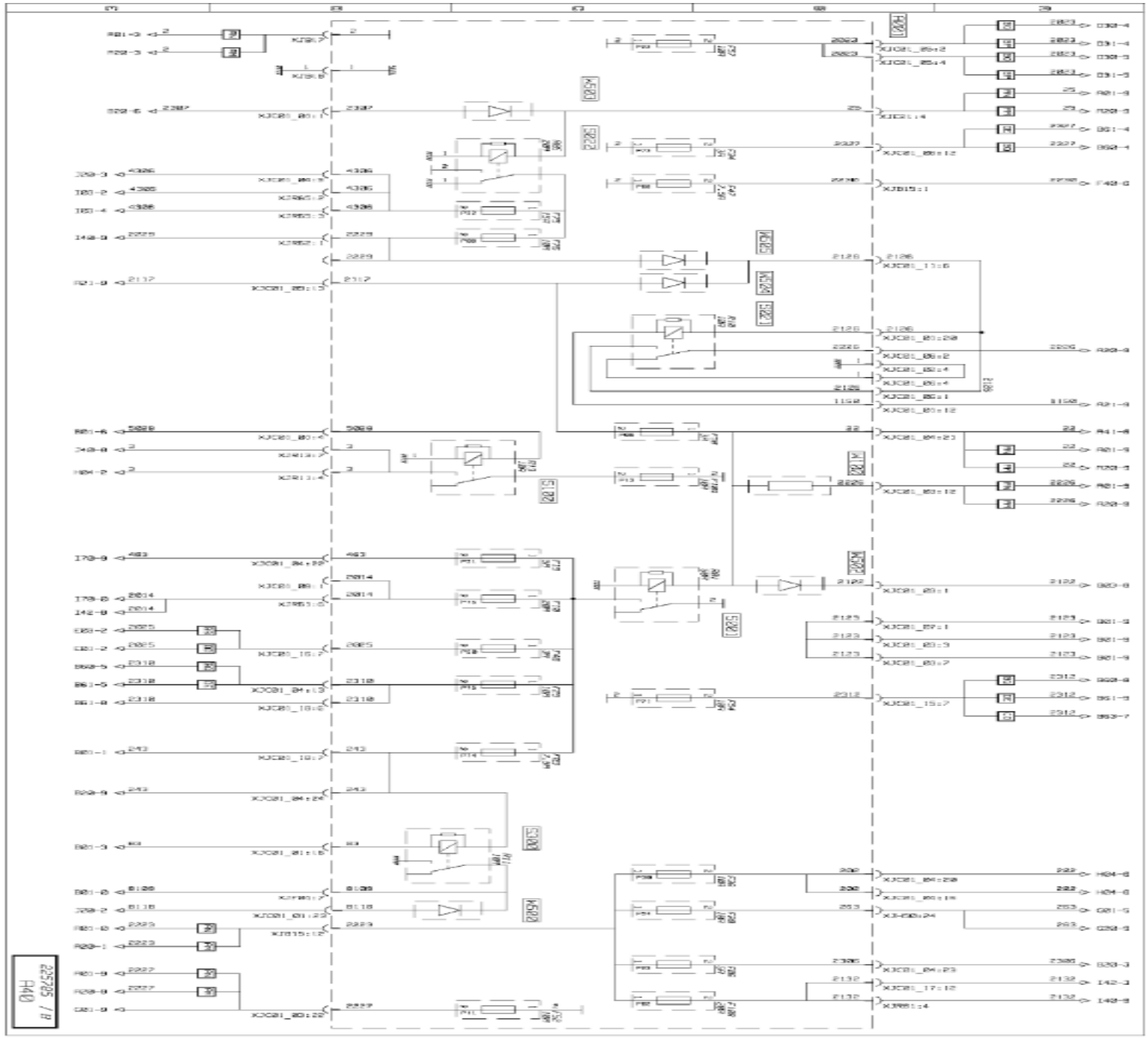

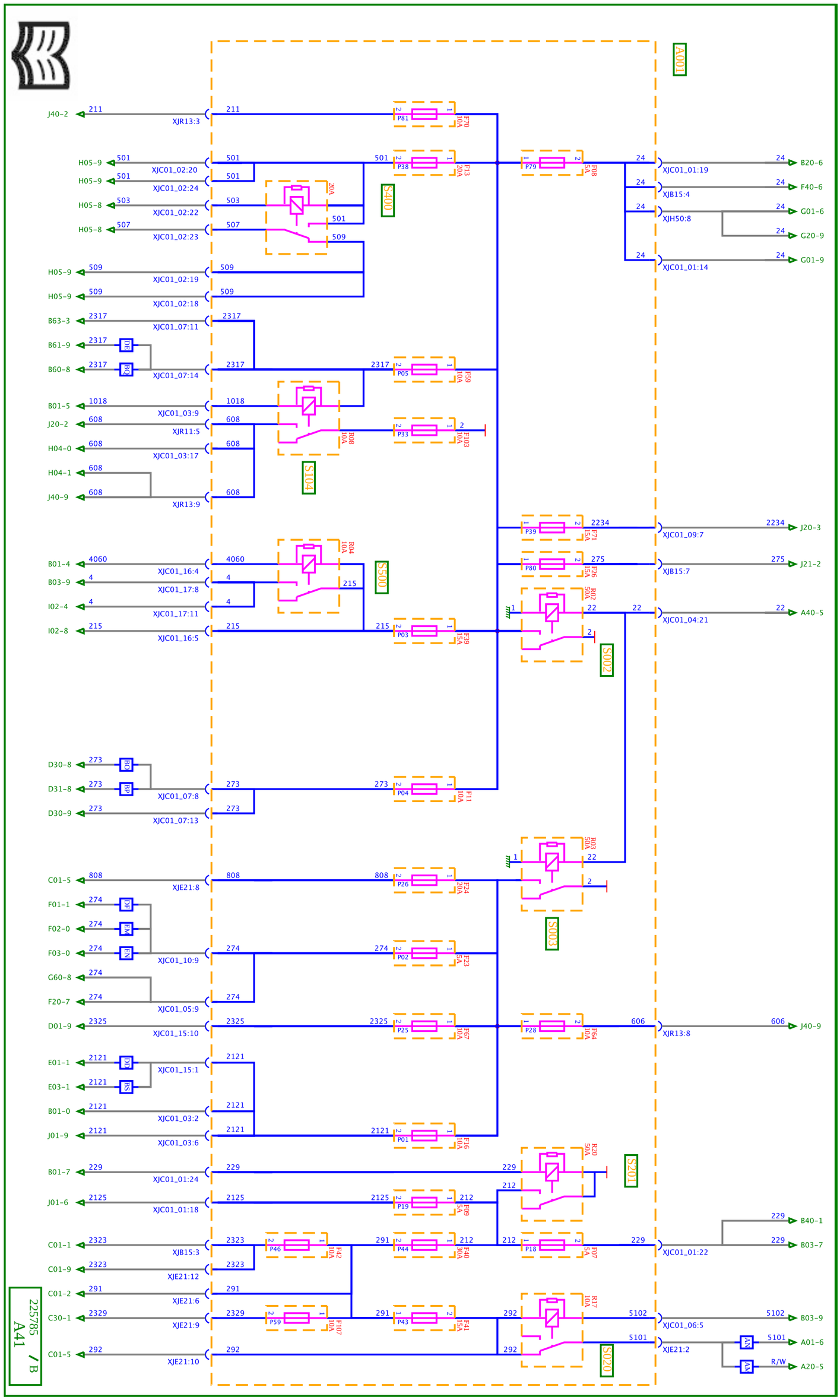

https://trucknanualshub.com/

Electrical distribution (2/6)

Key to appliances

Code	Function	Location
A001	**Cab electrical distribution box**	**B2c**
S002	**After ignition power supply relay N°2**	**B2c**
S003	**After ignition power supply relay N° 3**	**B2c**
S020	**Starting relay**	**B2c**
S104	**Reversing lights power supply relay**	**B2c**
S201	**Vehicle and engine ECUs power supply relay**	**B2c**
S400	**Windscreen wipers motor time-delay relay**	**B2c**
S500	**Heated and swivelling rearview mirror power supply relay**	**B2c**

AM: with ADR equipment
AN: without ADR equipment
BO: with **ECOSPLIT 2** hydraulic retarder
BP: with **ECOSPLIT 4** hydraulic retarder
BS: **4x2** vehicles
DD: **6x2** vehicles
BQ: with **FMS** equipment
DE: with **DATAMAX** equipment
DF: with electronic air suspension tractor vehicle **4x2**
EM: with **4x2 - 6x2** vehicle rear electronic air suspension
EN: with **4x2 - 6x2** vehicle integral electronic air suspension

Electrical distribution (2/6)

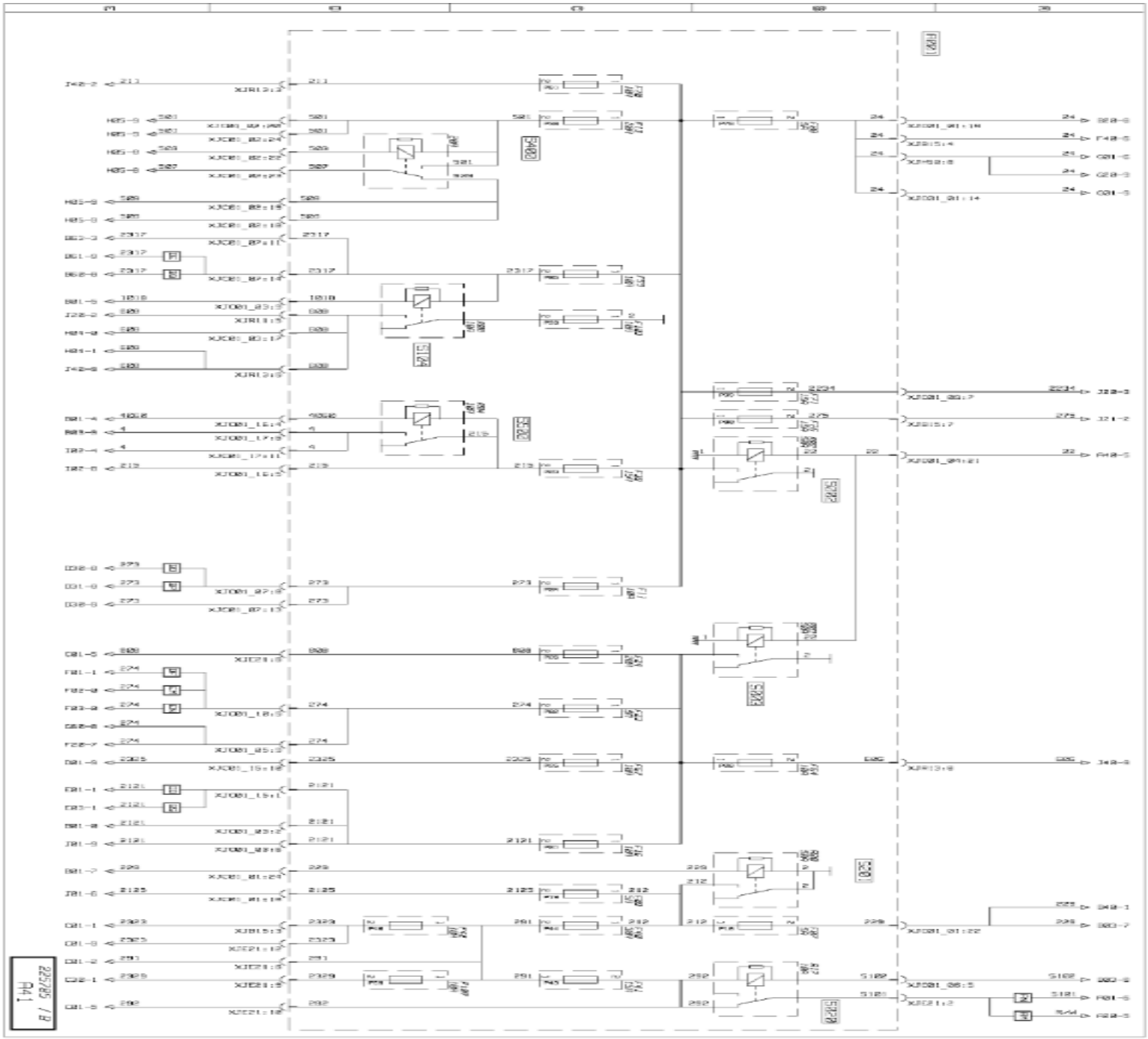

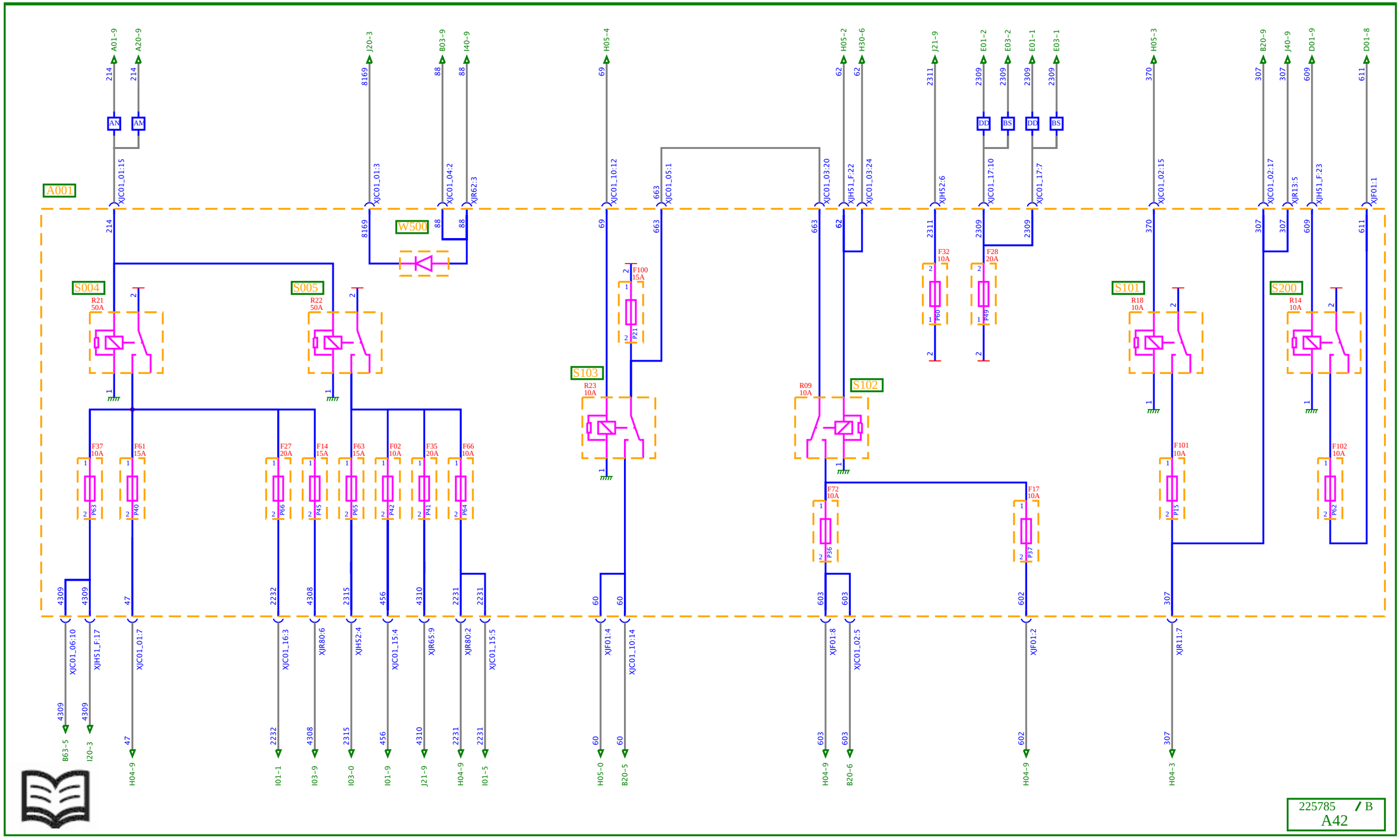
A001
W500
S004
S005
S103
S102
S101
S200
R21 50A
R22 50A
R23 10A
R09 10A
R18 10A
R14 10A
F100 15A
F32 10A
F28 20A
F37 10A
F61 15A
F27 20A
F14 15A
F63 15A
F02 10A
F35 20A
F66 10A
F72 10A
F17 10A
F101 10A
F102 10A
225785 / B
A42

Electrical distribution (3/6)

Key to appliances

Code	Function	Location
A001	**Cab electrical distribution box**	**B2c**
S004	**Accessories power supply relay N° 1**	**B2c**
S005	**Accessories power supply relay N° 2**	**B2c**
S101	**Rear fog lights power supply relay**	**B2c**
S102	**Main beam headlights power supply relay**	**B2c**
S103	**Fog driving lights power supply relay**	**B2c**
S200	**Automatic transmission management ECU power supply relay**	**B2c**
W500	**Diode(s)**	**B2c**

AM: with ADR equipment
AN: without ADR equipment
BS: **4x2** vehicles
DD: **6x2** vehicles

Electrical distribution (3/6)

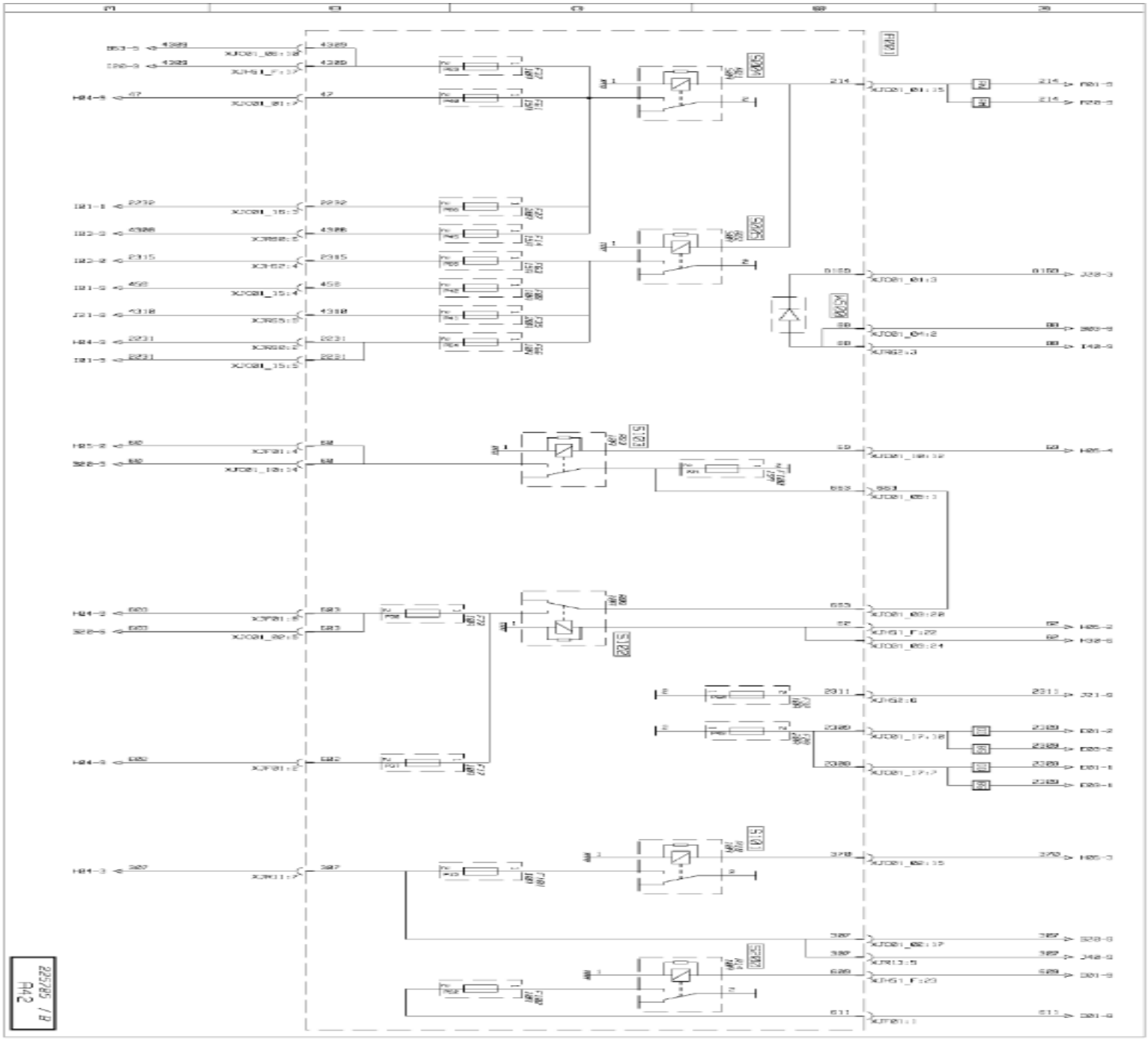

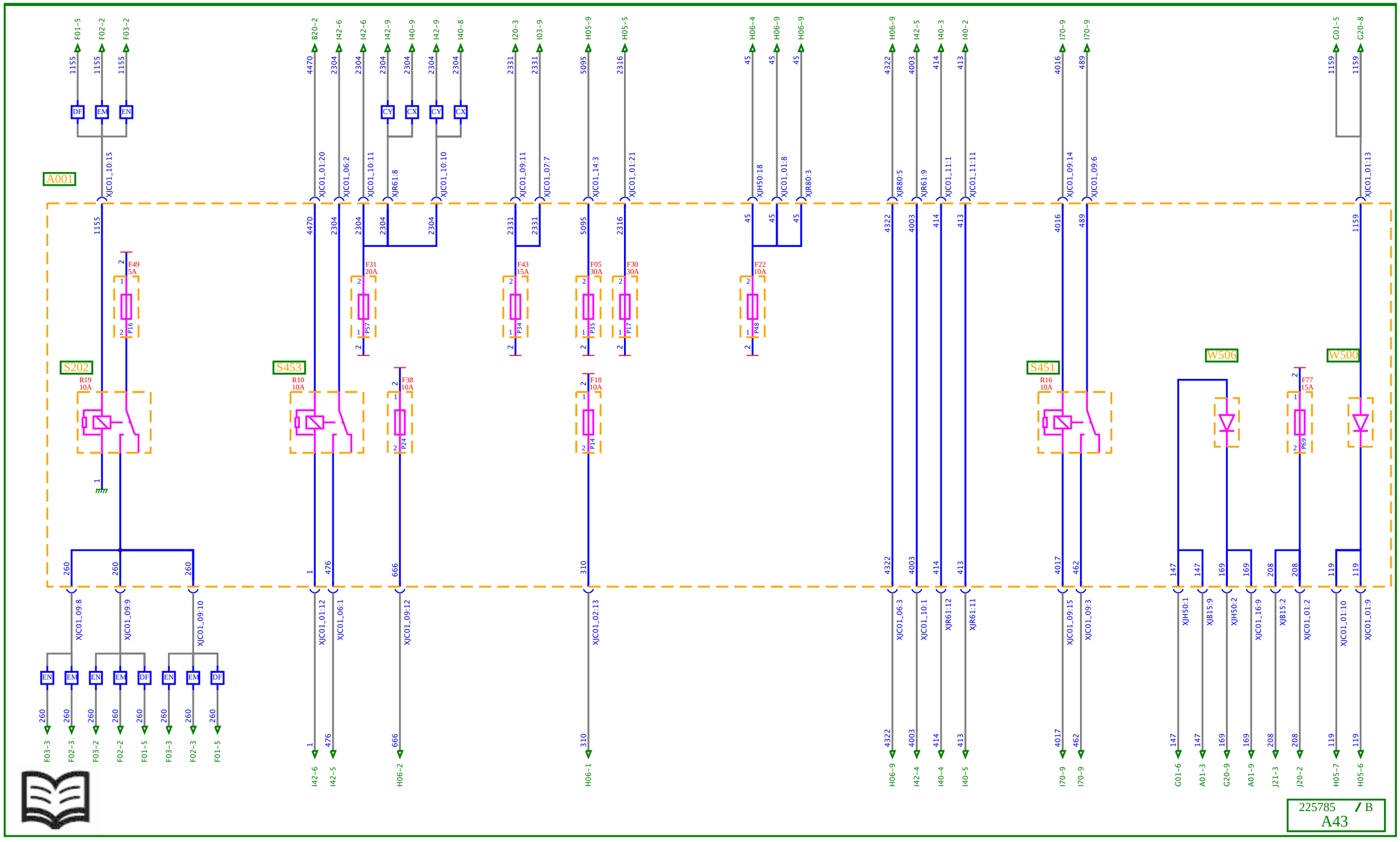
A001
S202
S453
S451
W506
W500
F49 5A
F31 20A
F43 15A
F05 30A
F30 30A
F22 10A
F38 10A
F18 10A
F77 15A
R19 10A
R10 10A
R16 10A
225785 / B
A43

Electrical distribution (4/6)

Key to appliances

Code	Function	Location
A001	**Cab electrical distribution box**	**B2c**
S202	**Air suspension power supply relay**	**B2c**
S451	**Air conditioning compressor clutch power supply relay**	**B2c**
S453	**Add-on heater power supply relay**	**B2c**
W500	**Diode(s)**	**B2c**
W506	**Doors central locking diode**	**B2c**

CX: Without air / air independent heating
CY: Without air / water independent heating
DF: with electronic air suspension tractor vehicle **4x2**
EM: with **4x2 - 6x2** vehicle rear electronic air suspension
EN: with **4x2 - 6x2** vehicle integral electronic air suspension

Electrical distribution (4/6)

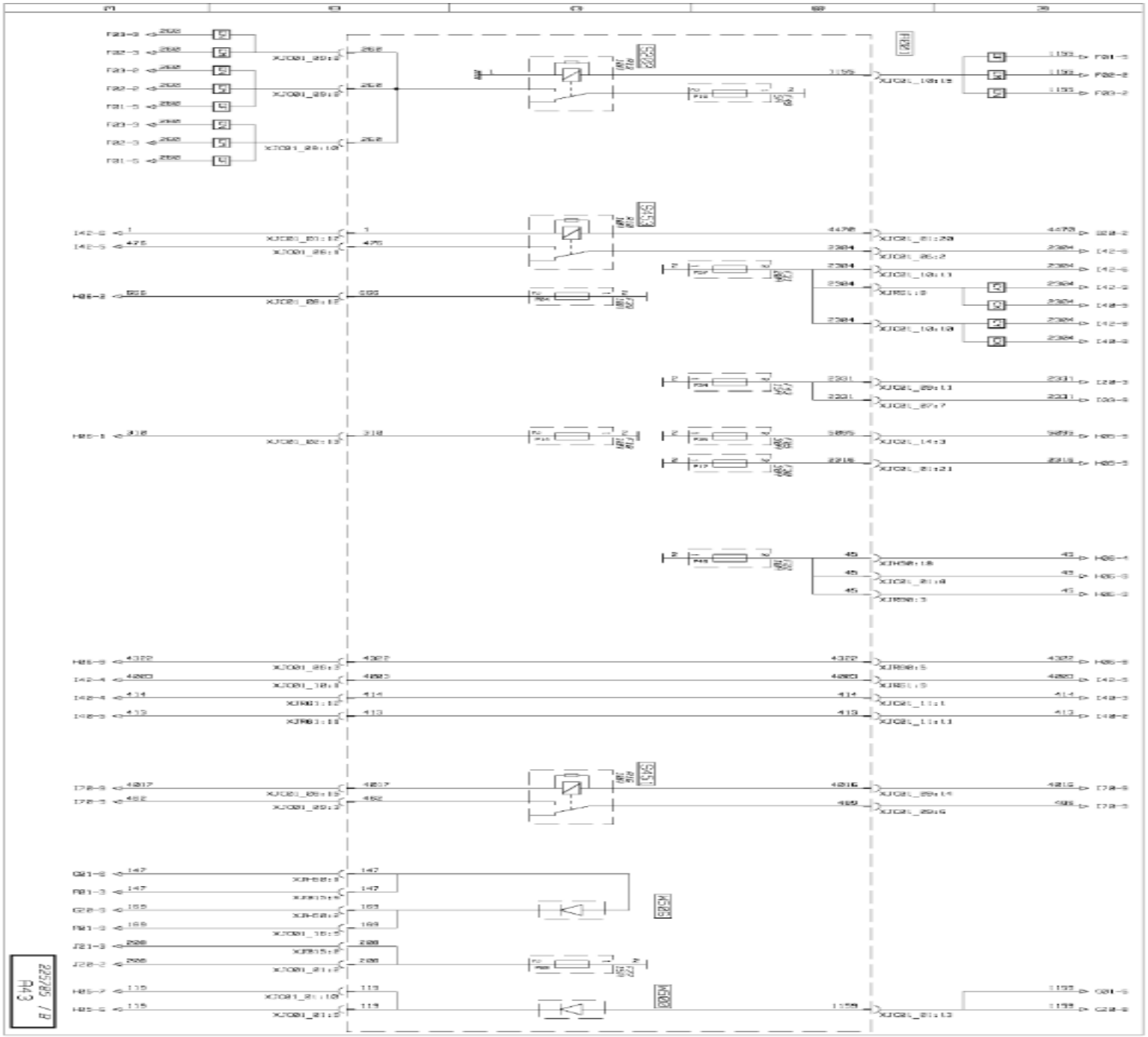

https://truckmanualshub.com/

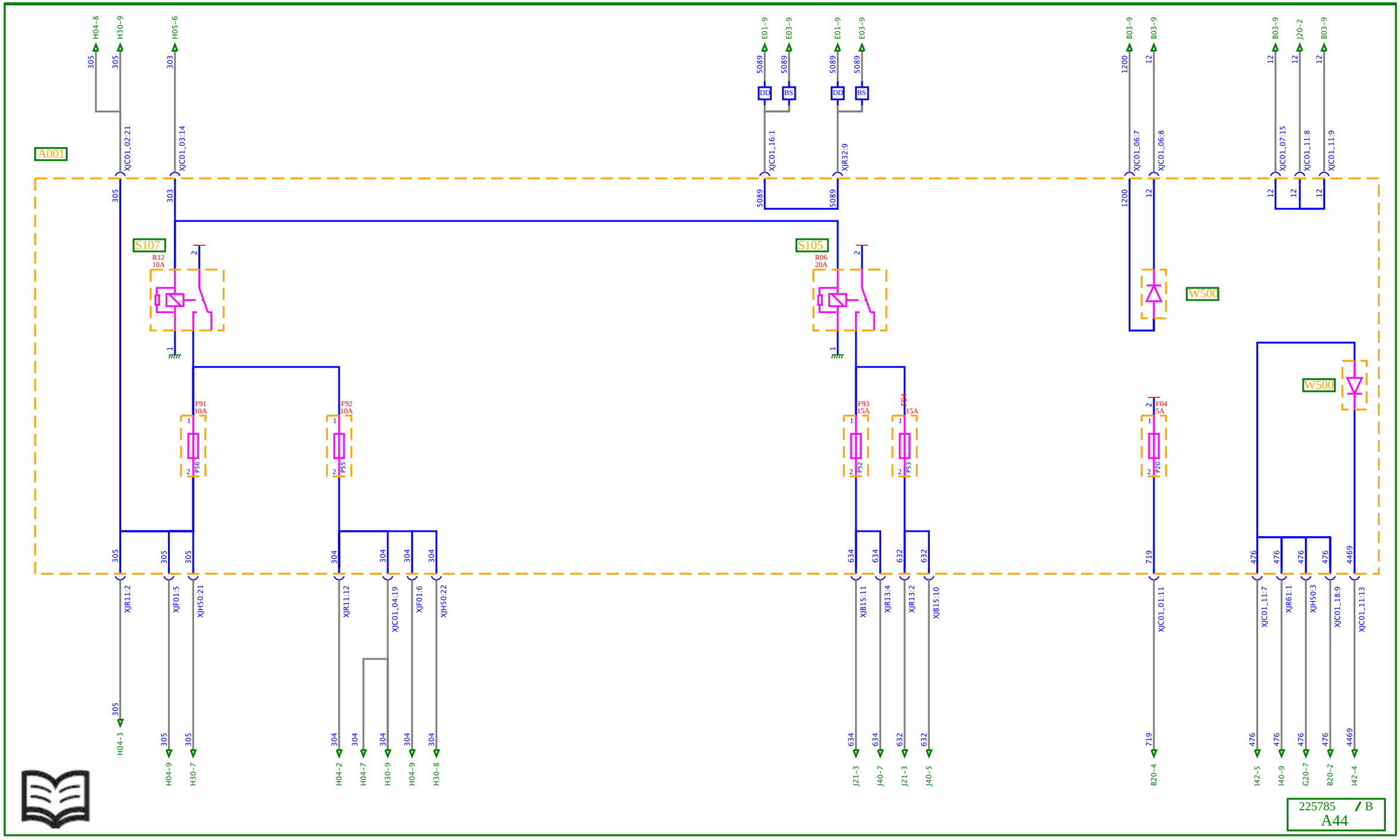

Electrical distribution (5/6)

Key to appliances

Code	Function	Location
A001	**Cab electrical distribution box**	**B2c**
S105	**RH and LH side/parking and marker lights power supply relay**	**B2c**
S107	**RH and LH side/parking and marker lights power supply relay (trailer and bodybuilder)**	**B2c**
W500	**Diode(s)**	**B2c**

BS: **4x2** vehicles
DD: **6x2** vehicles

Electrical distribution (5/6)

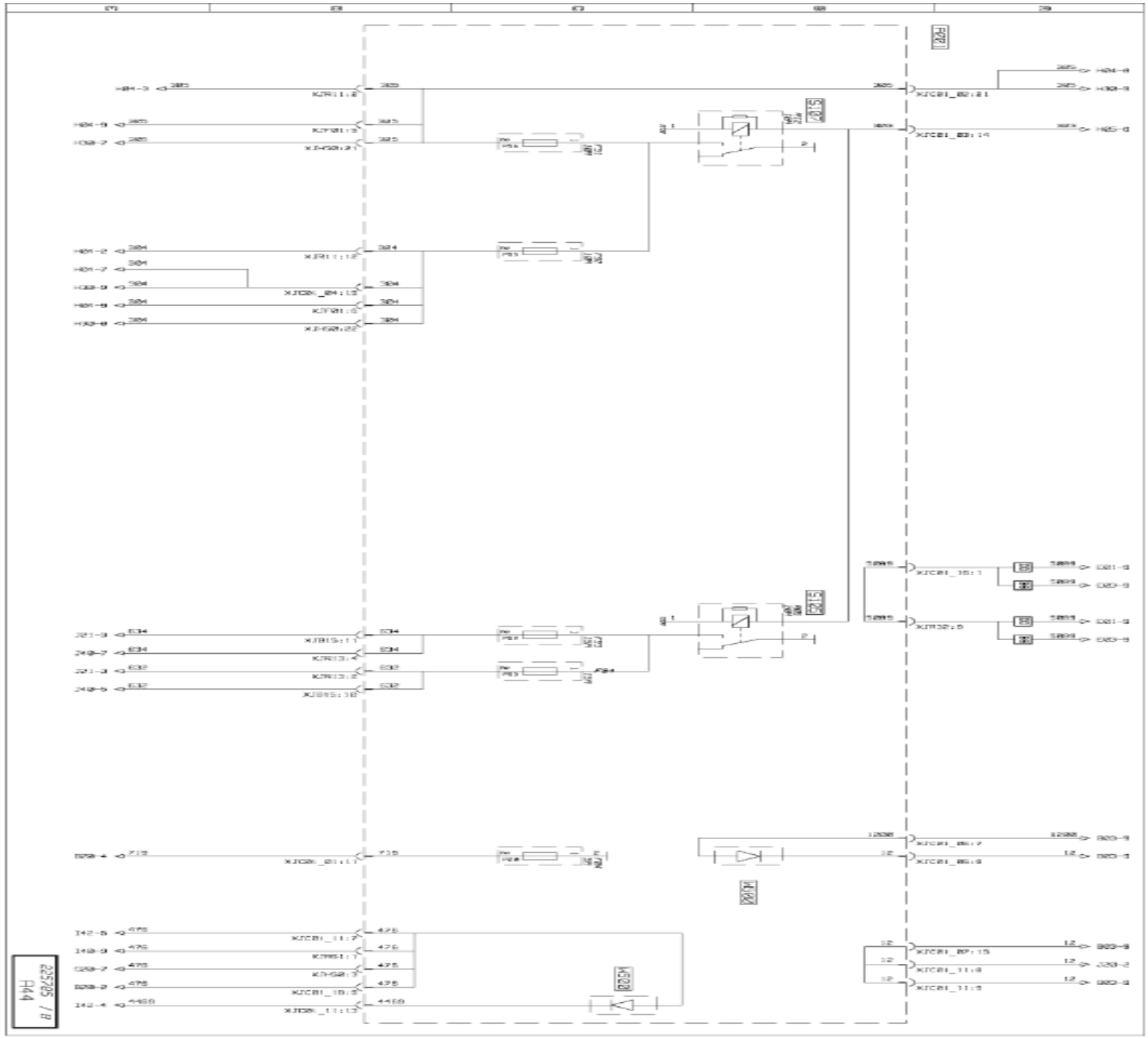

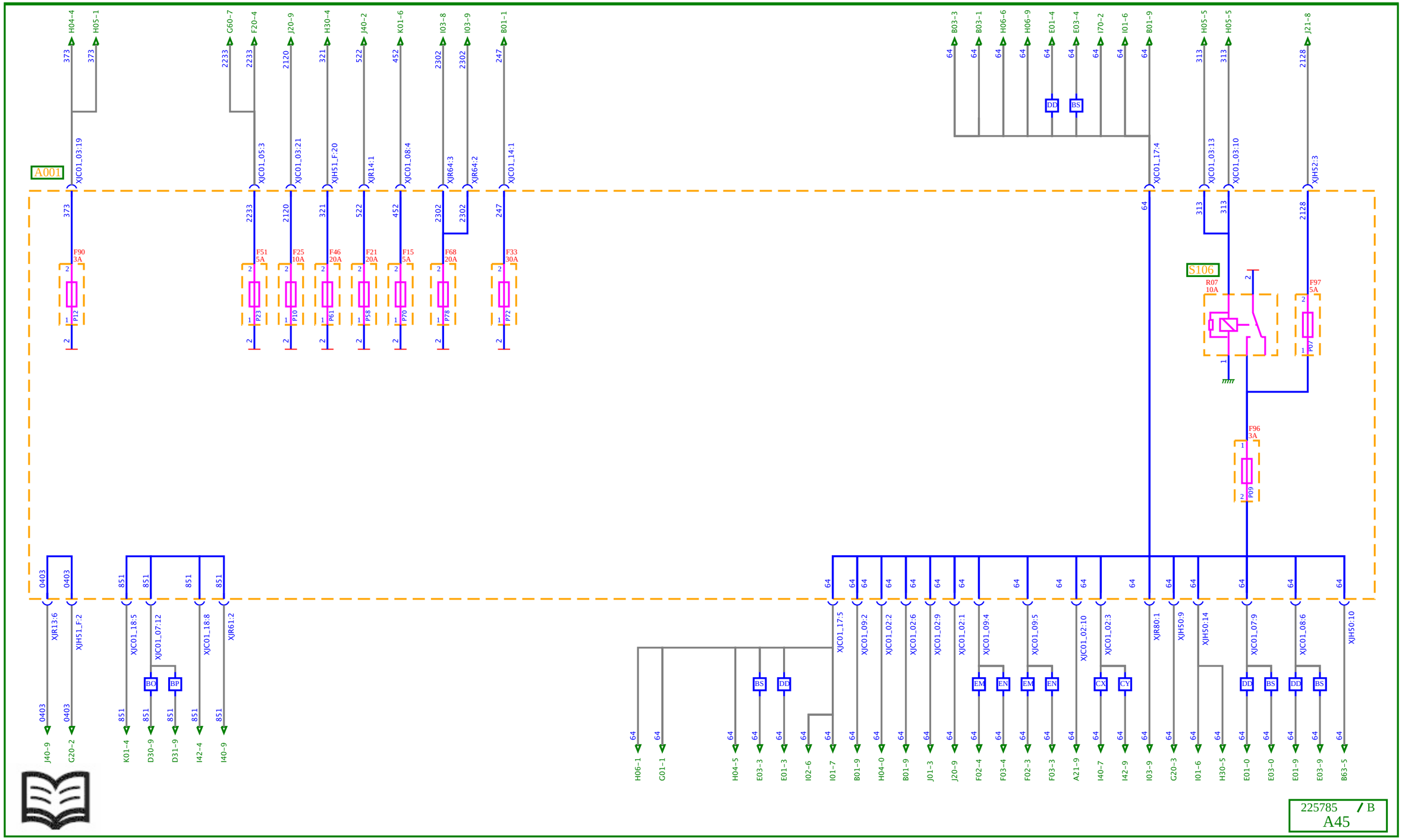
A001
S106
F90 3A
F51 5A
F25 10A
F46 20A
F21 20A
F15 5A
F68 20A
F33 30A
R07 10A
F97 5A
F96 3A
225785 / B
A45

Electrical distribution (6/6)

Key to appliances

Code	Function	Location
A001	**Cab electrical distribution box**	**B2c**
S106	**Switches night lighting power supply relay**	**B2c**

BO: with **ECOSPLIT 2** hydraulic retarder
BP: with **ECOSPLIT 4** hydraulic retarder
BS: **4x2** vehicles
DD: **6x2** vehicles
CX: Without air / air independent heating
CY: Without air / water independent heating
EM: with **4x2 - 6x2** vehicle rear electronic air suspension
EN: with **4x2 - 6x2** vehicle integral electronic air suspension

Electrical distribution (6/6)

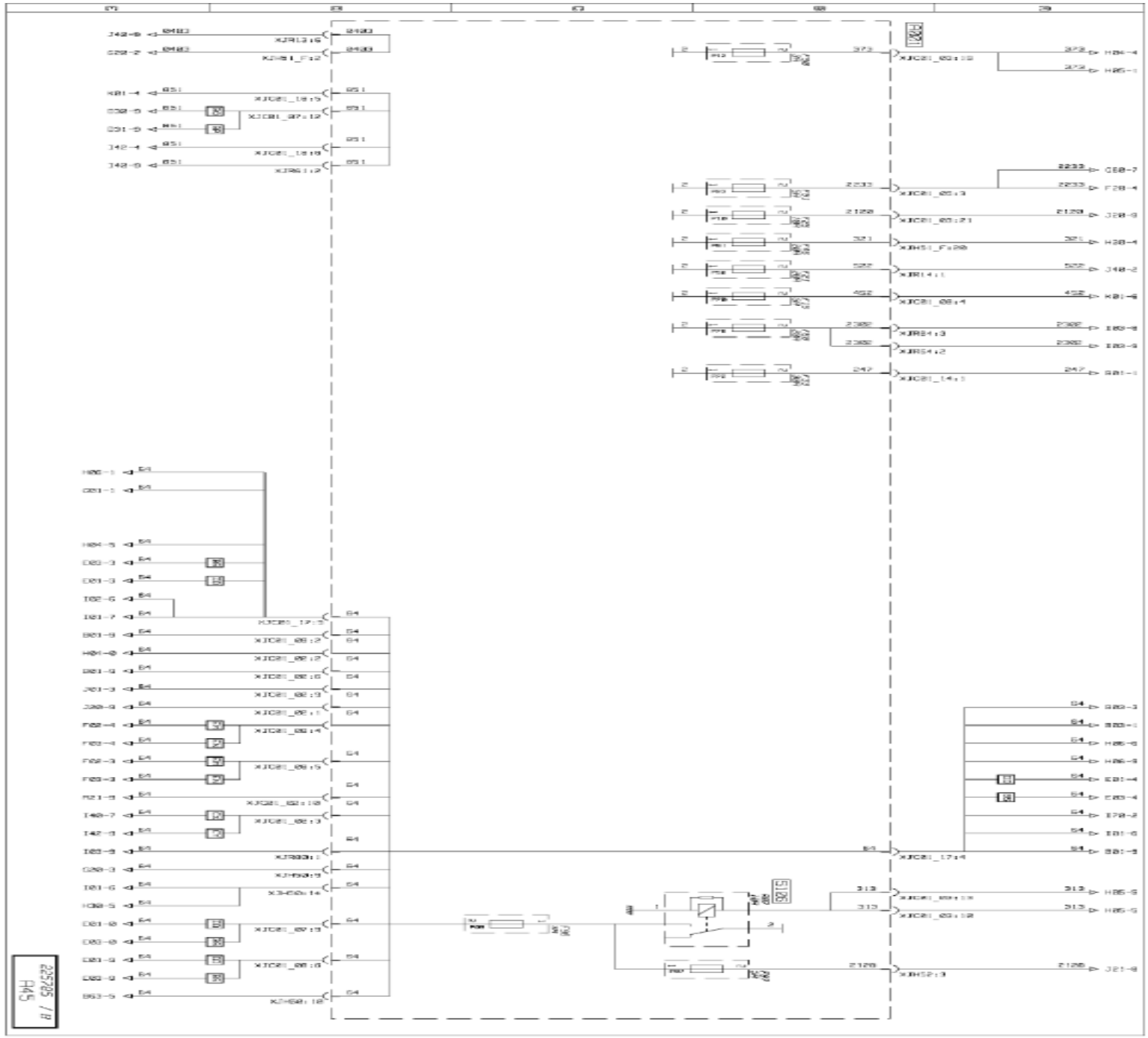

https://truckmanualshub.com/

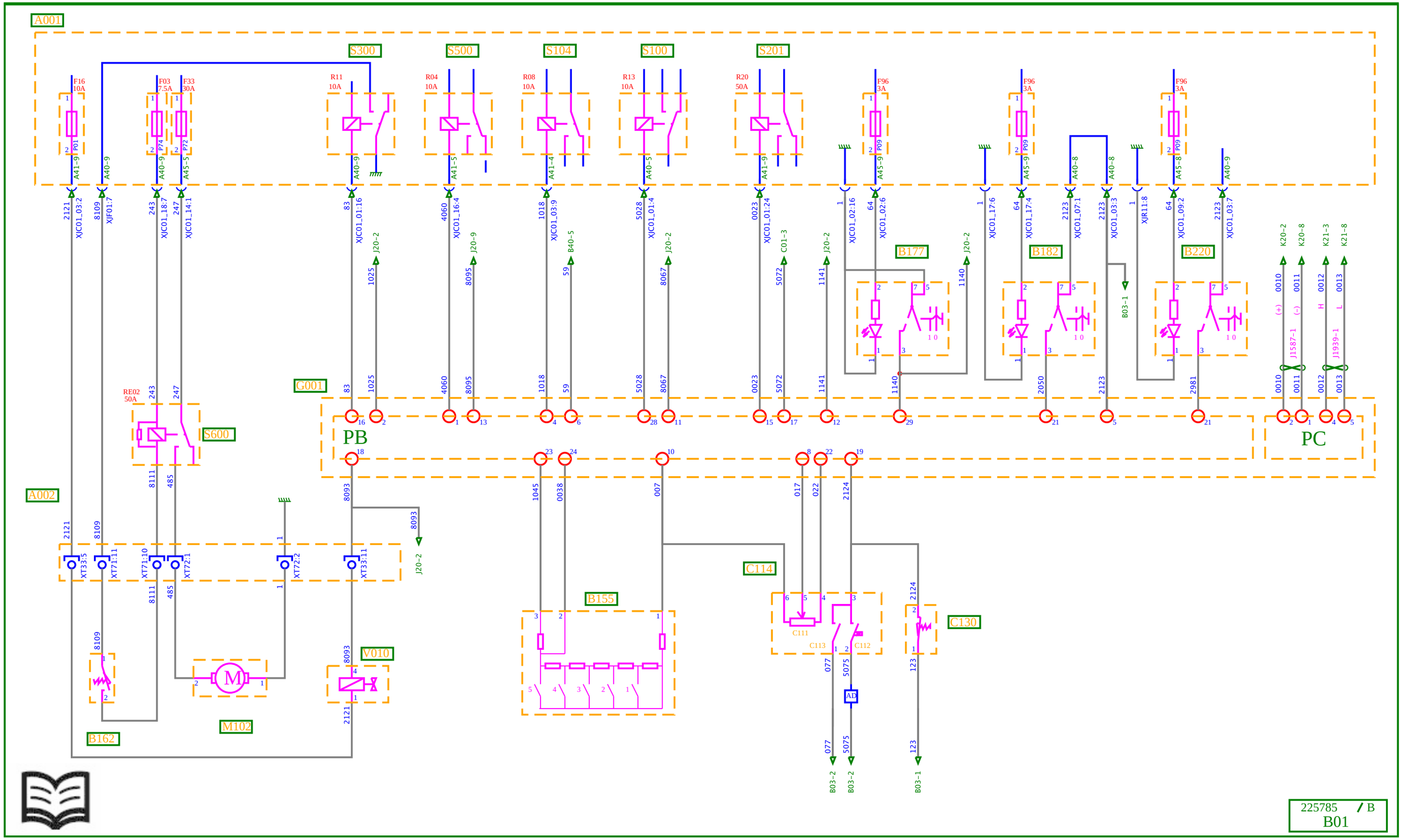

Vehicle electronic management (1/2)

Key to appliances

Code	Function	Location
A001	Cab electrical distribution box	B2c
A002	Chassis-cab connection box	B2c
B155	Electric or hydraulic retarder control	C2c
B162	Cab tilting control	A4d
B177	PTO 1 engagement request control (in cab)	C2b
B182	Auto/manual selection control	C2b
B220	Optiroll control	B2c
C111	Accelerator pedal position sensor	C1c
C112	Accelerator pedal "rest" position sensor N° 2	C1c
C113	Accelerator pedal rest position sensor	C1c
C114	Accelerator pedal sensor unit	C1c
C130	Clutch pedal position sensor	C1c
G001	Vehicle management ECU	B2b
M102	Cab tilting motor	A4c
S100	Stop lights power supply relay	B2c
S104	Reversing lights power supply relay	B2c
S201	Vehicle and engine ECUs power supply relay	B2c
S300	Cab tilting safety and authorization relay	B2c
S500	Heated and swivelling rearview mirror power supply relay	B2c
S600	Cab tilting motor power supply relay	B2b
V010	PTO engagement electrovalve N° 1	B4d

AD: with automatic gearbox

Vehicle electronic management (1/2)

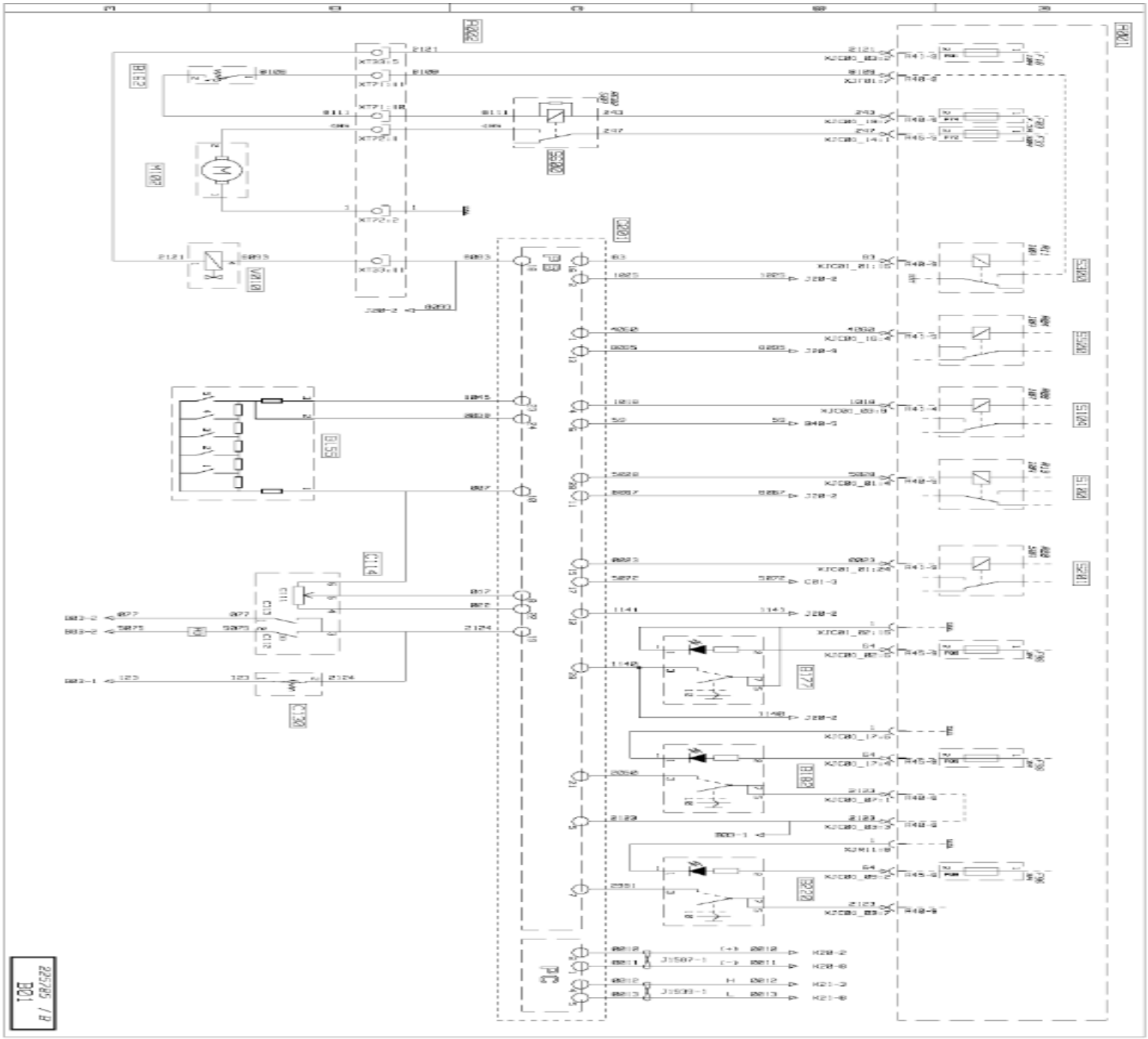

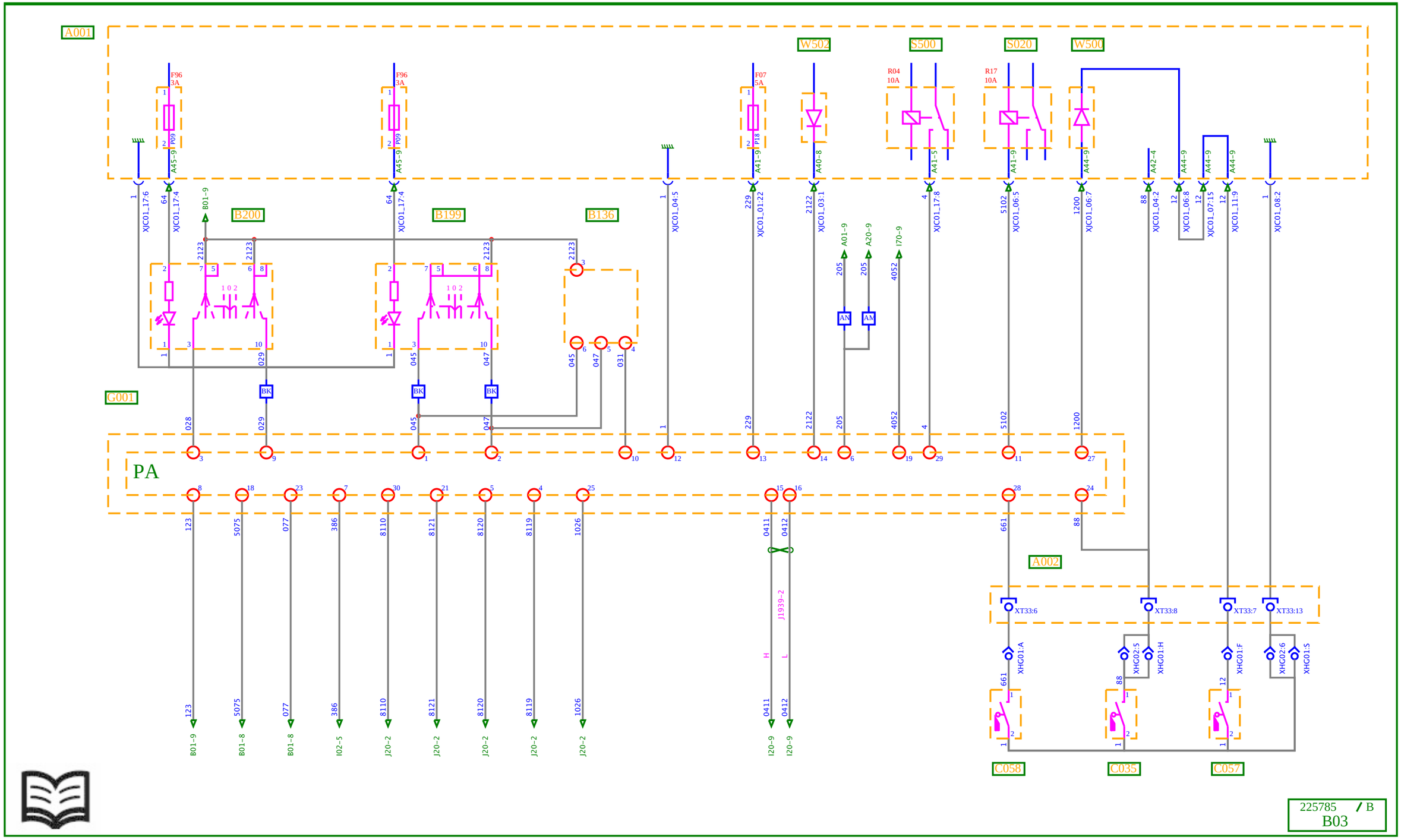
A001
W502
S500
S020
W500
F96
3A
F07
5A
R04
10A
R17
10A
B200
B199
B136
G001
PA
A002
C058
C035
C057
XT33:6
XT33:8
XT33:7
XT33:13
XHG01:A
XHG02:5
XHG01:H
XHG01:F
XHG02:6
XHG01:S
J1939-2
225785 / B
B03

Vehicle electronic management (2/2)

Key to appliances

Code	Function	Location
A001	**Cab electrical distribution box**	**B2c**
A002	**Chassis-cab connection box**	**B2c**
B136	**Cruise control and engine speed regulator adjustment control**	**C2c**
B199	**Fast idling adjustment control**	**C2c**
B200	**Cruise control / engine speed adjustment controls**	**C2c**
C035	**PTO 1 engaged position information sensor**	**B4c**
C057	**Neutral position sensor**	**B4c**
C058	**Reverse gear engaged position sensor**	**B4c**
G001	**Vehicle management ECU**	**B2b**
S020	**Starting relay**	**B2c**
S500	**Heated and swivelling rearview mirror power supply relay**	**B2c**
W500	**Diode(s)**	**B2C**
W502	**Diode on after ignition information circuit for vehicle management box**	**B2c**

AM: with ADR equipment
AN: without ADR equipment
BK: with engine speed regulation and steering wheel operated Cruise Control

Vehicle electronic management (2/2)

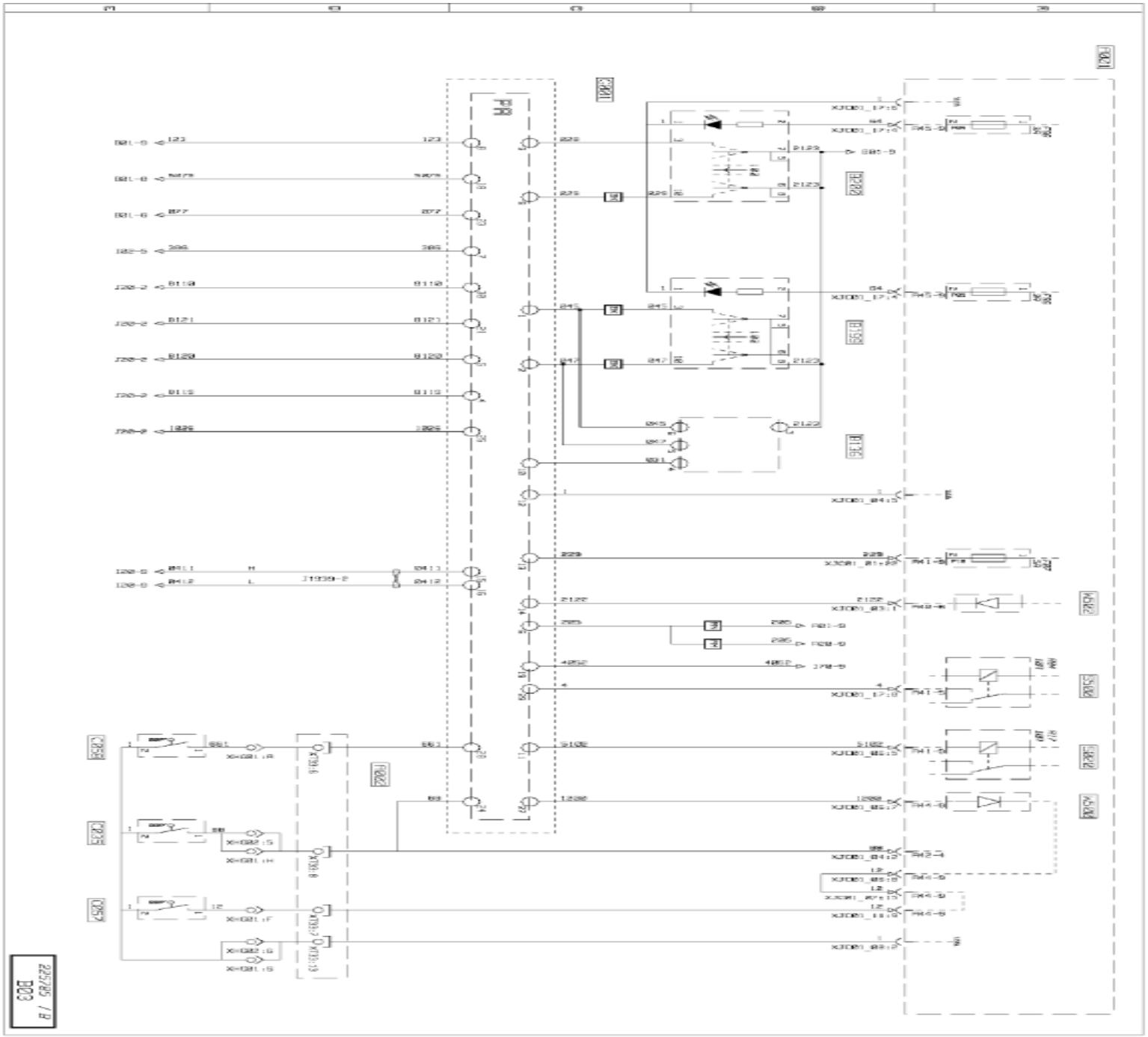

https://truckmanualshub.com/

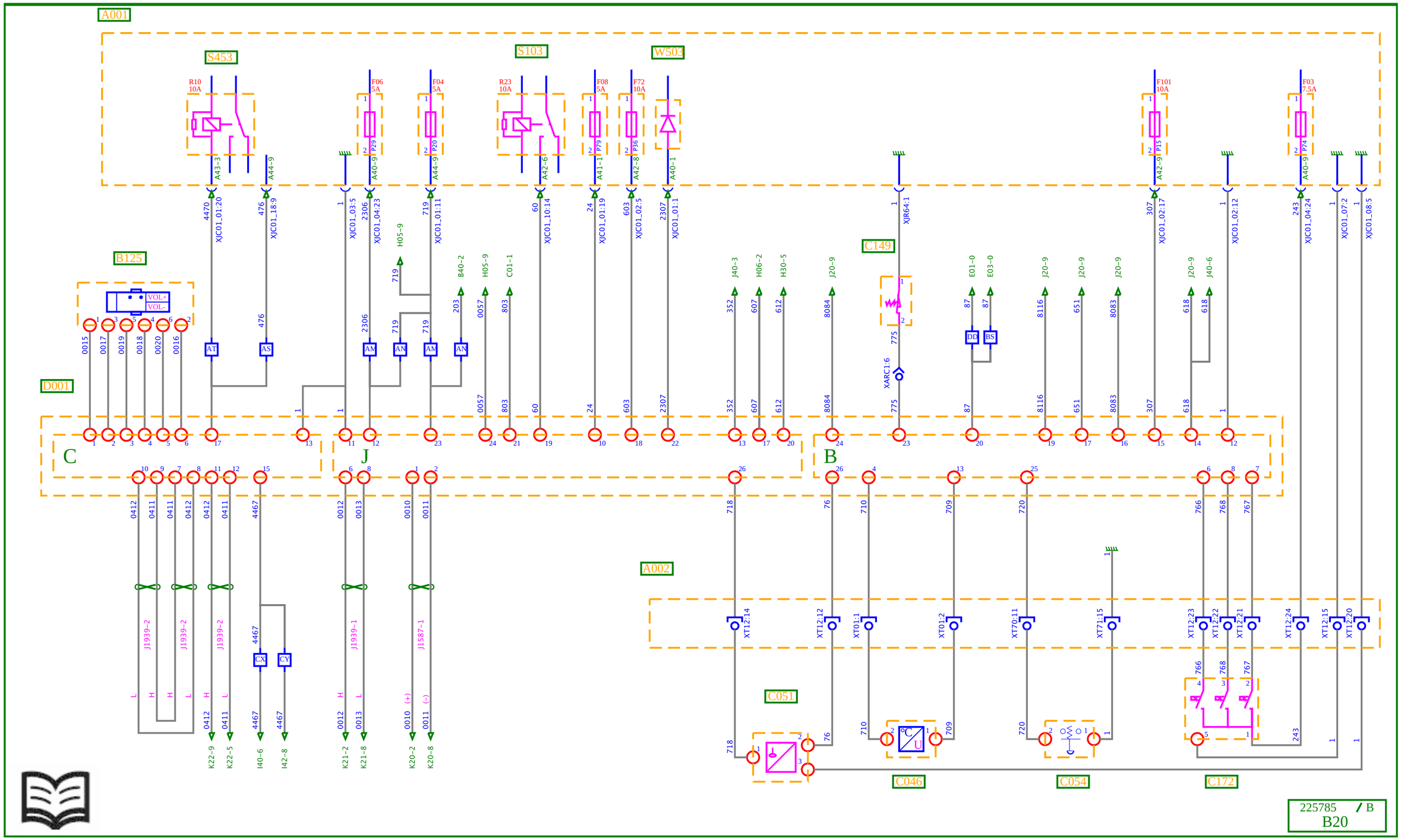

Principal information display

Key to appliances

Code	Function	Location
A001	**Cab electrical distribution box**	**B2c**
A002	**Chassis-cab connection box**	**B2c**
B125	**Radio set control**	**C2b**
C046	**External temperature sensor**	**C2c**
C051	**Fuel level sensor**	**A5d**
C054	**Air filter clogging sensor**	**C5d**
C149	**Driver's seatbelt not buckled sensor**	**C3c**
C172	**Fifth wheel position sensors**	**B6c**
D001	**Principal information display**	**C2b**
S103	**Fog driving lights power supply relay**	**B2c**
S453	**Add-on heater power supply relay**	**B2c**
W503	**Diode on engine running information relay power supply circuit**	**B2c**

AM: with ADR equipment
AN: without ADR equipment
AS: With air / air independent heating
AT: With air / water independent heating
BS: **4x2** vehicles
DD: **6x2** vehicles
CX: Without air / air independent heating
CY: Without air / water independent heating

Principal information display

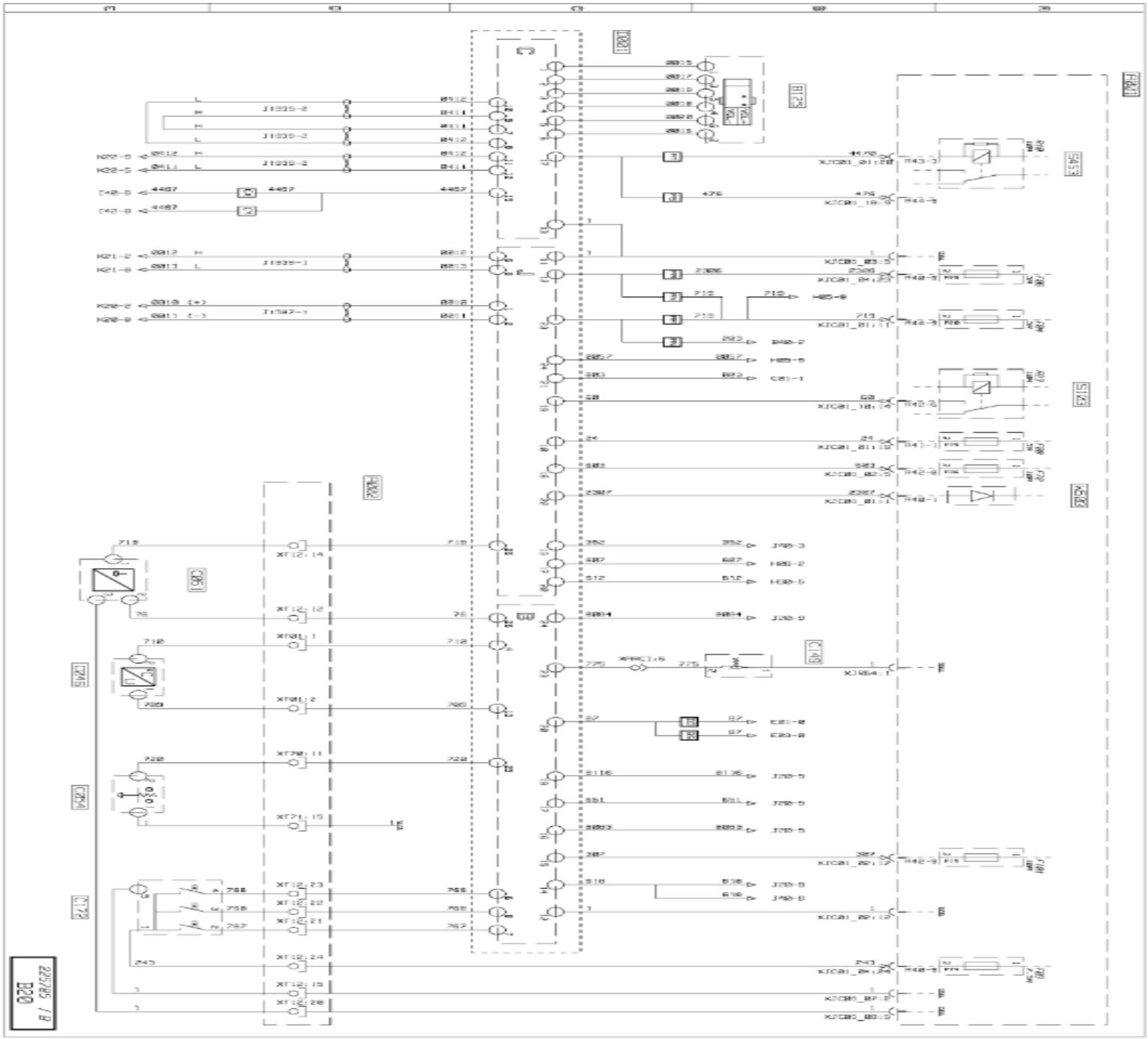

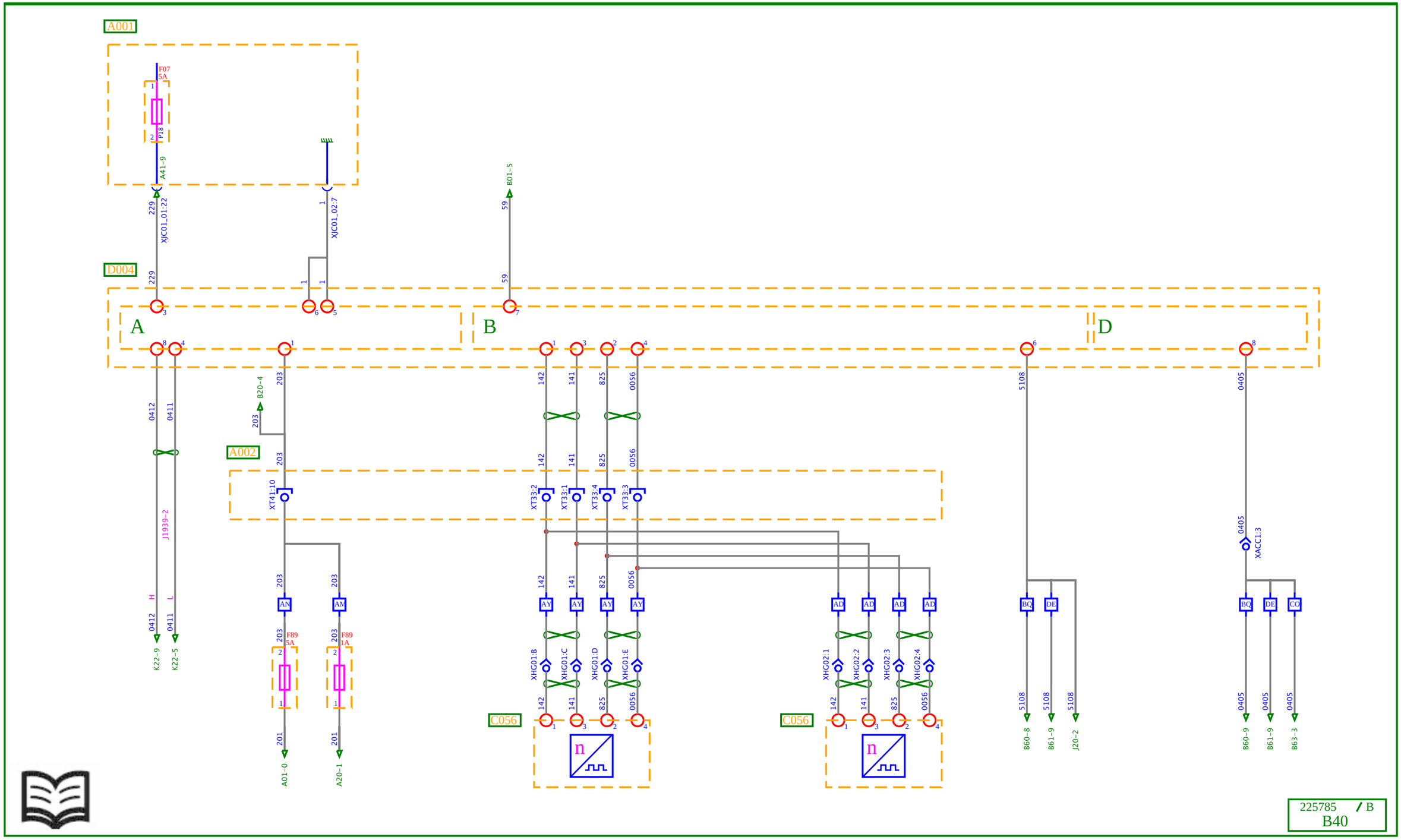
A001
F07
5A
P18
A41-9
229
XJC01_01:22
XJC01_02:7
B01-5
59
D004
A
B
D
0412
0411
203
B20-4
A002
XT41:10
142
141
825
0056
XT33:2
XT33:1
XT33:4
XT33:3
5108
0405
XACC1.3
J1939-2
H
L
K22-9
K22-5
AN
AM
AY
AD
BQ
DE
CO
F89
5A
1A
201
A01-0
A20-1
XHG01:B
XHG01:C
XHG01:D
XHG01:E
XHG02:1
XHG02:2
XHG02:3
XHG02:4
C056
B60-8
B61-9
J20-2
B60-9
B61-9
B63-3
225785 / B
B40

Tachograph

Key to appliances

Code	Function	Location
A001	**Cab electrical distribution box**	**B2c**
A002	**Chassis-cab connection box**	**B2c**
C056	**Tachograph speed sensor**	**B3c**
D004	**Tachograph**	**C2c**

AD: with automatic gearbox
AY: with manual gearbox
AM: with ADR equipment
AN: without ADR equipment
BQ: with **FMS** equipment
CO: with **OPTIFLEET** equipment
DE: with **DATAMAX** equipment

Tachograph

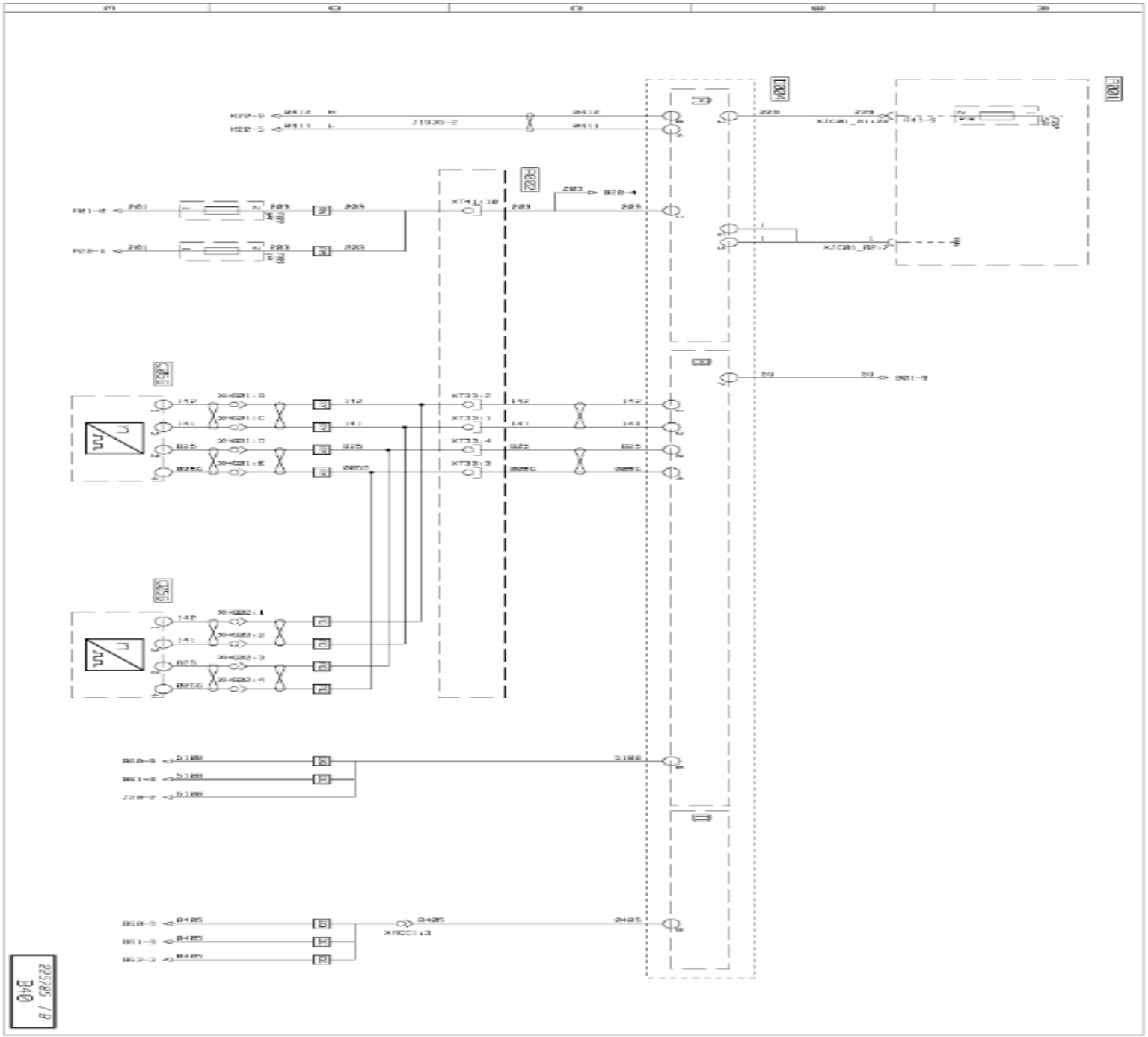

Onboard management DATAMAX

Key to appliances

Code	Function	Location
A001	**Cab electrical distribution box**	**B2c**
G100	**Datamax gateway ECU**	**B2c**
G102	**Onboard management ECU**	**B2c**
G103	**Positioning module ECU**	**B2c**

Onboard management DATAMAX

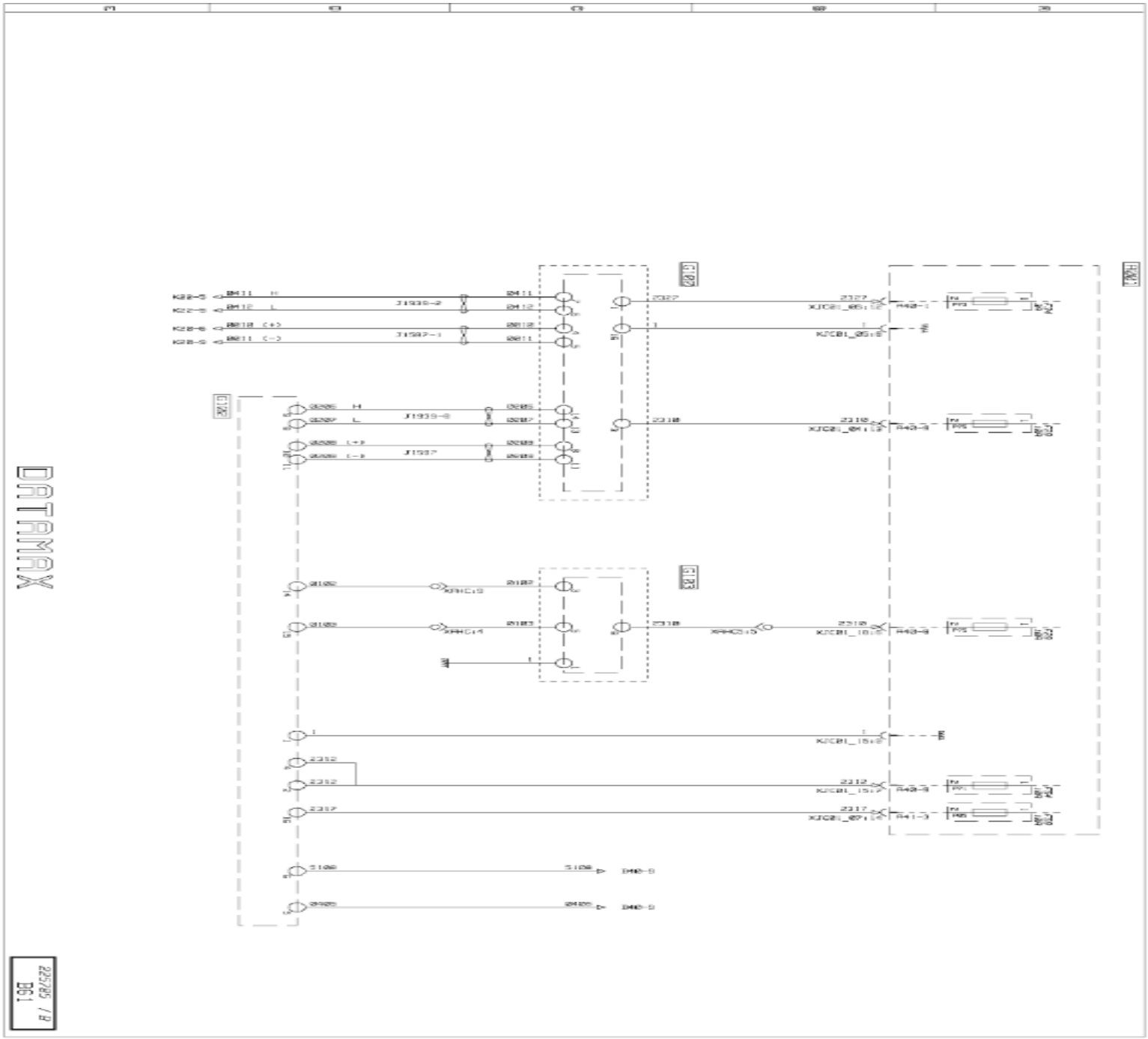
DATAMAX
22/25 / B
DG1

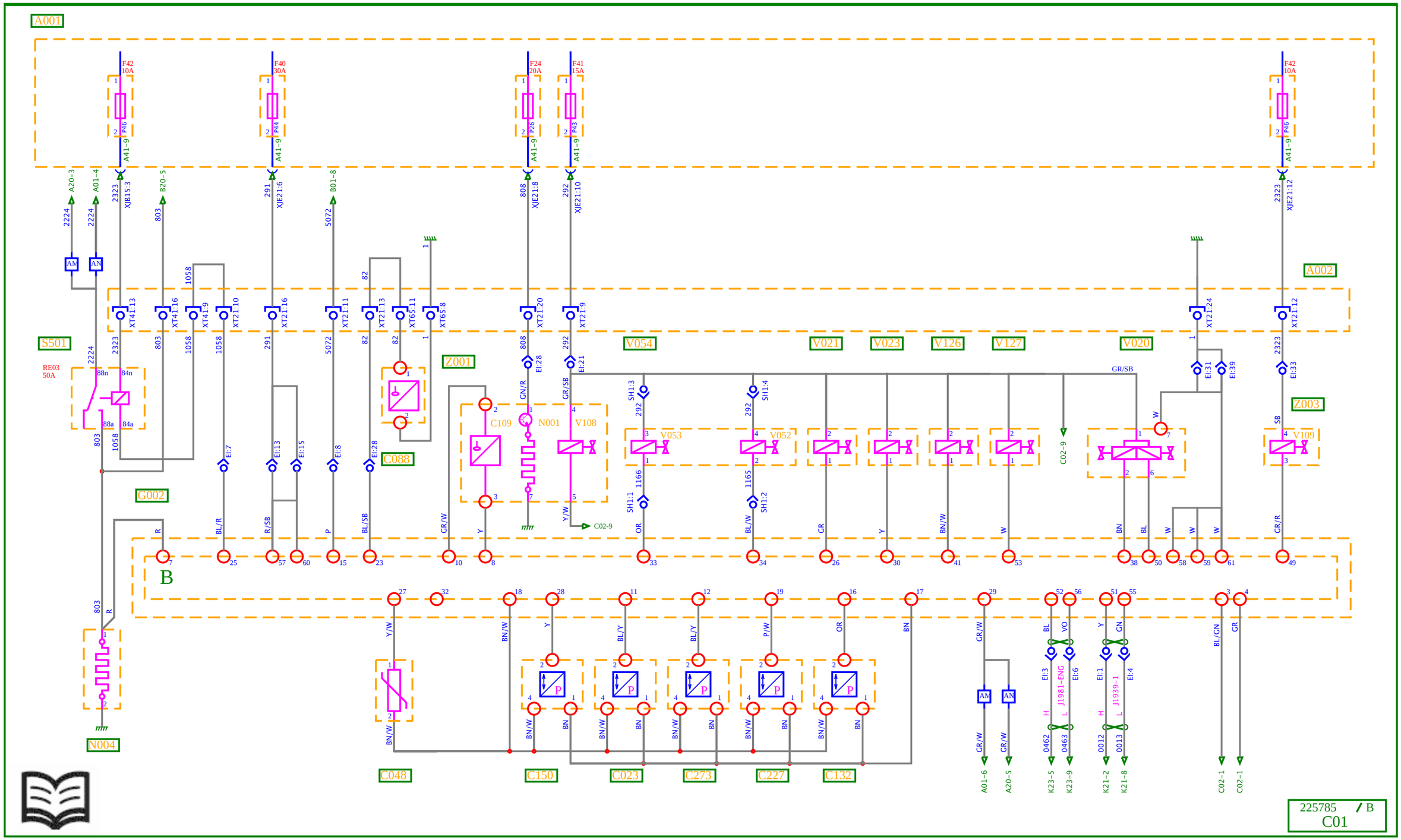
A001
F42 10A
F40 30A
F24 20A
F41 15A
F42 10A
A41-9 P46
A41-9 P44
A41-9 P26
A41-9 P43
A41-9 P46
A20-3
A01-4
2224
2323
XJB15:3
803
B20-5
291
XJE21:6
5072
B01-8
808
XJE21:8
292
XJE21:10
2323
XJE21:12
AM
AN
A002
XT4I:13
XT4I:16
XT4I:9
XT2I:10
XT2I:16
XT2I:11
XT2I:13
XT6I:11
XT6I:8
XT2I:20
XT2I:9
XT2I:24
XT2I:12
S501
RE03 50A
88n
84n
88a
84a
Z001
V054
V021
V023
V126
V127
V020
EI:28
EI:21
EI:31
EI:39
EI:33
Z003
EI:7
EI:13
EI:15
EI:8
EI:28
C088
C109
N001
V108
SH1:3
SH1:4
V053
V052
SH1:1
SH1:2
V109
G002
C02-9
B
N004
C048
C150
C023
C273
C227
C132
A01-6
A20-5
K23-5
K23-9
K21-2
K21-8
C02-1
C02-1
225785 / B
C01

Engine electronic management (1/2)

Key to appliances

Code	Function	Location
A001	Cab electrical distribution box	B2c
A002	Chassis-cab connection box	B2c
C023	Engine oil pressure sensor	B3b
C048	Engine cooling circuit temperature sensor	B3b
C088	Engine coolant level sensor	B3b
C109	Water in fuel sensor	B3b
C132	Engine boost pressure sensor	B3b
C150	Engine block inside pressure sensor	B3b
C227	Pistons cooling oil pressure sensor	B3b
C273	Exhaust backpressure sensor	B3b
G002	Engine management ECU	B3b
N001	Fuel heater resistor N° 2	B3b
N004	Air preheating resistor	B3b
S501	Air preheating relay	C4d
V020	Exhaust brake solenoid valve unit	B3b
V021	Engine brake N° 1 solenoid valve	B3c
V023	Exhaust brake solenoid valve	B3c
V052	Range change electrovalve	B4c
V053	Splitter control electrovalve	B4c
V054	Splitter and range change control unit	B4c
V108	Air dryer bleeding solenoid valve	B3b
V109	Engine cooling fan speed regulation solenoid valve	B3c
V126	Pistons cooling solenoid valve	B3b
V127	Engine oil cooling solenoid valve	B3b
Z001	Fuel heating unit	B3b
Z003	Fan speed regulator unit	B3c

AM: with ADR equipment
AN: without ADR equipment

Engine electronic management (1/2)

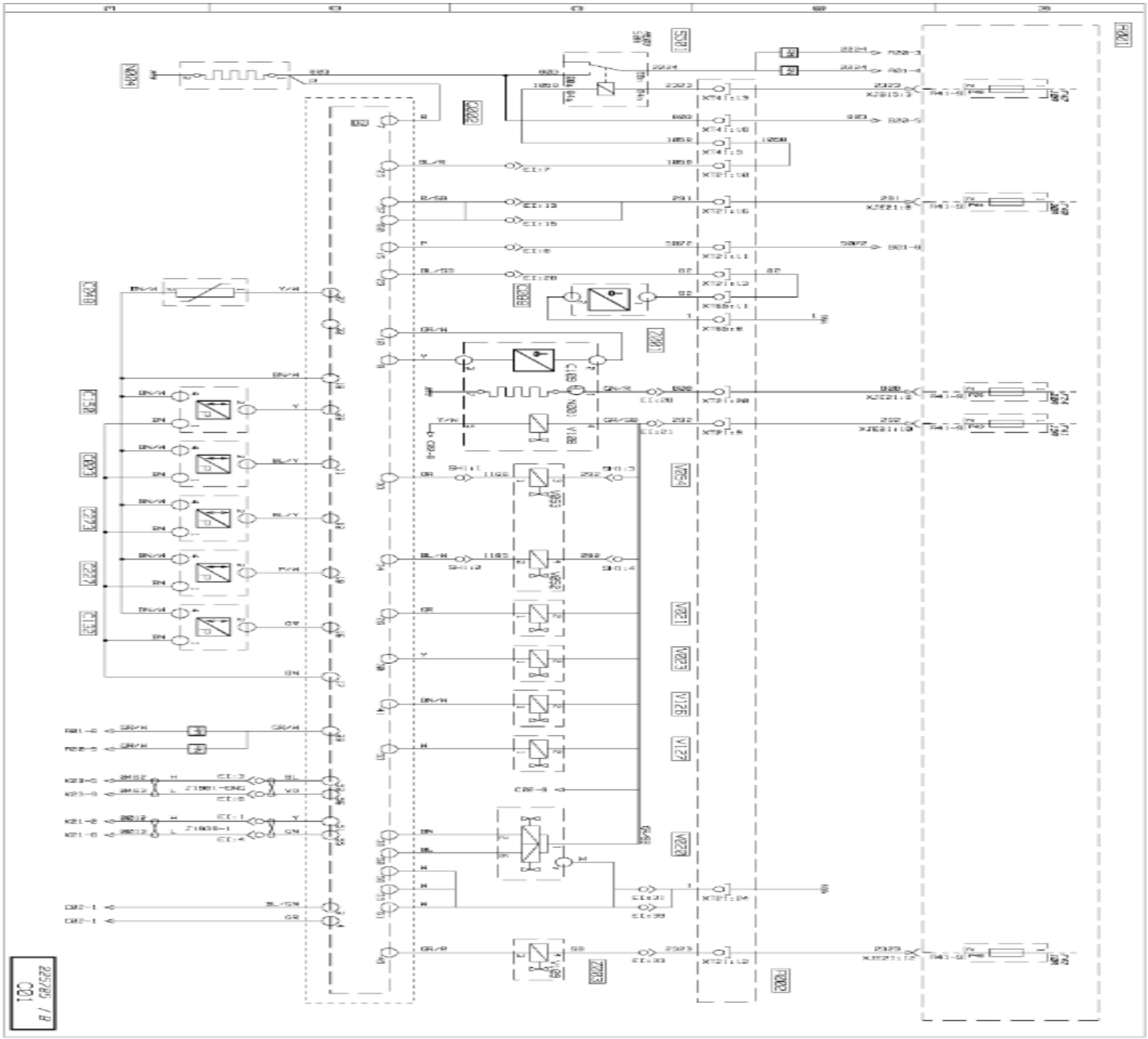

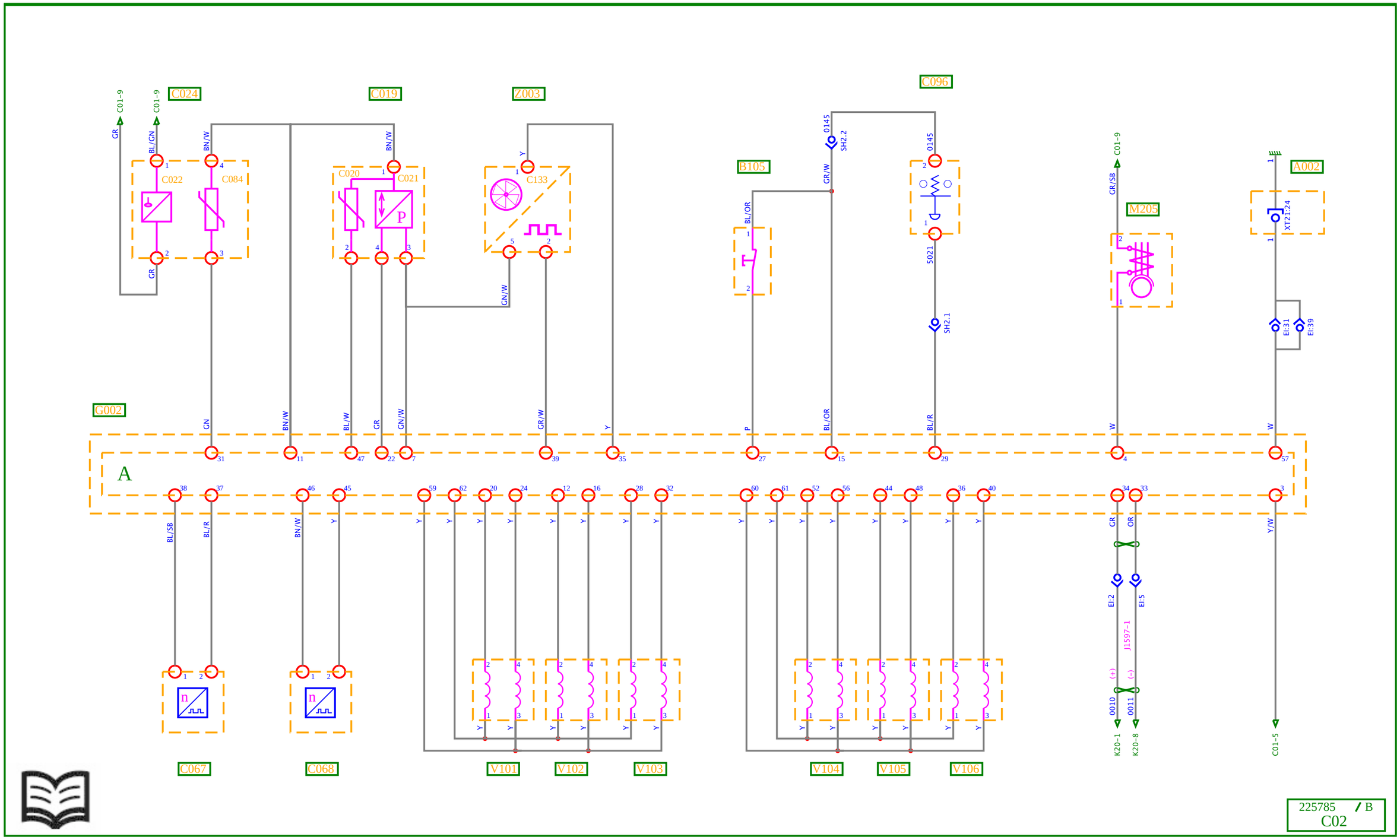
C024
C019
Z003
C096
B105
M205
A002
G002
C022
C084
C020
C021
C133
S021
XT21:24
EI:31
EI:39
EI:2
EI:5
J1597-1
0010
0011
K20-1
K20-8
C01-9
C067
C068
V101
V102
V103
V104
V105
V106
225785 / B
C02

Engine electronic management (2/2)

Key to appliances

Code	Function	Location
A002	Chassis-cab connection box	B2c
B105	Engine stop control	B3c
C019	Boost air pressure and temperature sensor	B3c
C020	Boost air temperature sensor	B3c
C021	Boost air pressure sensor	B3c
C022	Engine oil level sensor	B3c
C024	Engine oil level and temperature sensor unit	B3c
C067	Flywheel speed sensor	B2c
C068	Camshaft engine speed sensor	B3c
C084	Engine oil temperature sensor	B3c
C096	Range change selector pressure sensor	B4d
C133	Engine cooling fan speed sensor	B3c
G002	Engine management ECU	B3b
M205	Water pump electromagnetic clutch	B3c
V101	Cylinder injector solenoid valve N° 1	B3c
V102	Cylinder injector solenoid valve N° 2	B3c
V103	Cylinder injector solenoid valve N° 3	B3c
V104	Cylinder injector solenoid valve N° 4	B3c
V105	Cylinder injector solenoid valve N° 5	B3c
V106	Cylinder injector solenoid valve N° 6	B3c
Z003	Fan speed regulator unit	B3c

Engine electronic management (2/2)

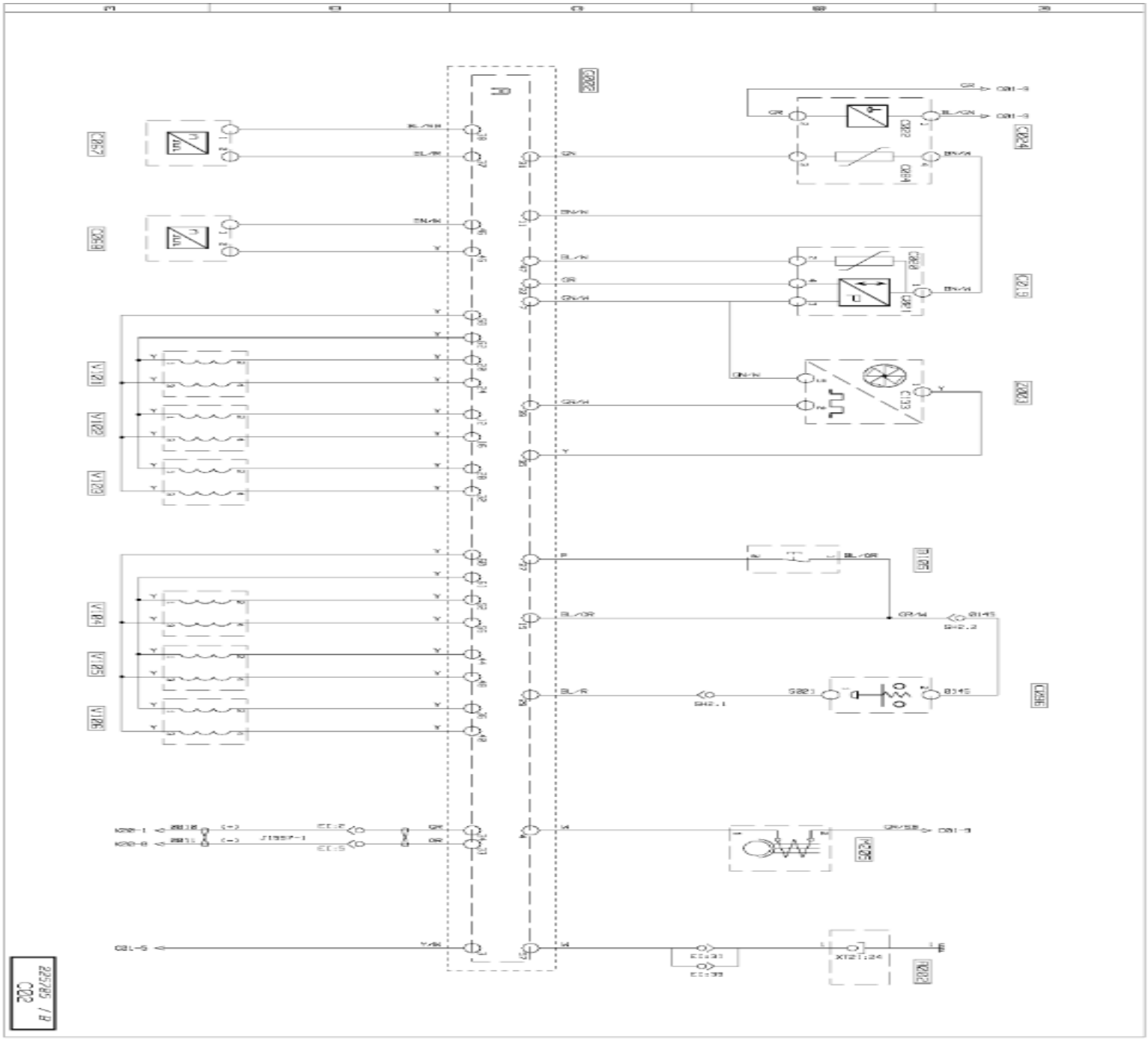
22/25 / B
C02

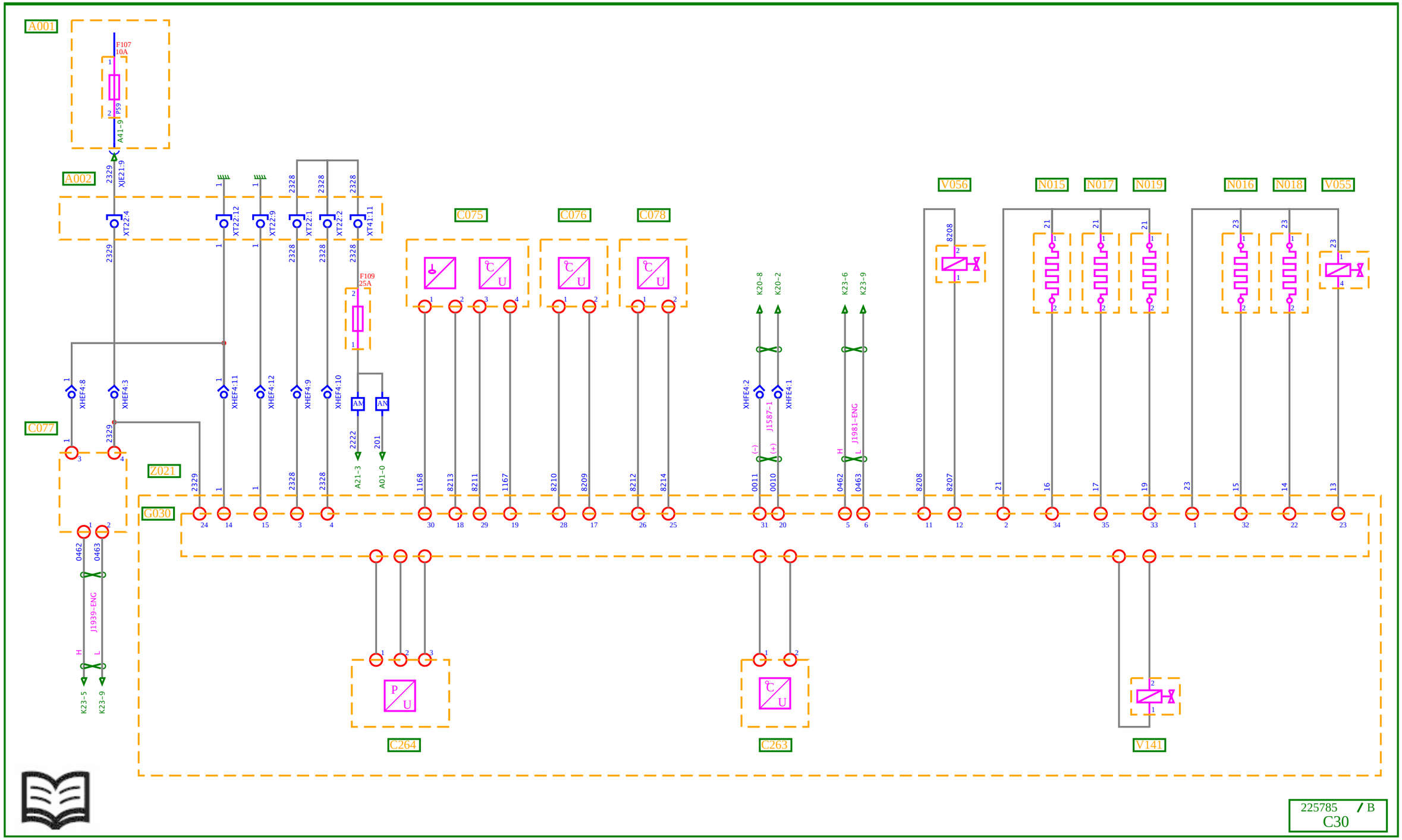
A001
F107
10A
P59
A41-9
XJE21:9
A002
XT22:4
XT22:12
XT22:9
XT22:1
XT22:2
XT41:11
F109
25A
C075
C076
C078
XHEF4:8
XHEF4:3
XHEF4:11
XHEF4:12
XHEF4:9
XHEF4:10
C077
Z021
G030
A21-3
A01-0
K20-8
K20-2
XHFE4:2
XHFE4:1
J1587-1
K23-6
K23-9
J1981-ENG
V056
8208
N015
N017
N019
N016
N018
V055
K23-5
J1939-ENG
C264
C263
V141

225785 / B
C30

Urea inflow management

Key to appliances

Code	Function	Location
A001	**Cab electrical distribution box**	**B2c**
A002	**Chassis-cab connection box**	**B2c**
C075	**AdBlue tank temperature and level sensors**	**A4d**
C076	**Exhaust gases temperature sensor**	**C4d**
C077	**Nitrogen oxides gases concentration sensor**	**C4d**
C078	**Exhaust gases after catalytic converter temperature sensor**	**C4d**
C263	**AdBlue internal temperature sensor**	**C4d**
C264	**AdBlue internal pressure sensor**	**C4d**
G030	**AdBlue supply management pump module**	**C4d**
N015	**AdBlue heating resistor (in tank to pump module circuit)**	**A4d**
N016	**AdBlue heating resistor (in pump module to tank circuit)**	**A4d**
N017	**AdBlue heating resistor (in pump module to metering solenoid valve circuit)**	**A4d**
N018	**AdBlue heating resistor (in metering solenoid valve to pump module circuit)**	**A4d**
N019	**AdBlue heating resistor (in filter on pump)**	**A4d**
V055	**Engine water circuit by-pass solenoid valve**	**C4d**
V056	**AdBlue supply metering solenoid valve**	**C4d**
V141	**AdBlue cooling electrovalve**	**C4d**
Z021	**Adblue pump module assembly**	**C4d**

AM: with ADR equipment
AN: without ADR equipment

Urea inflow management

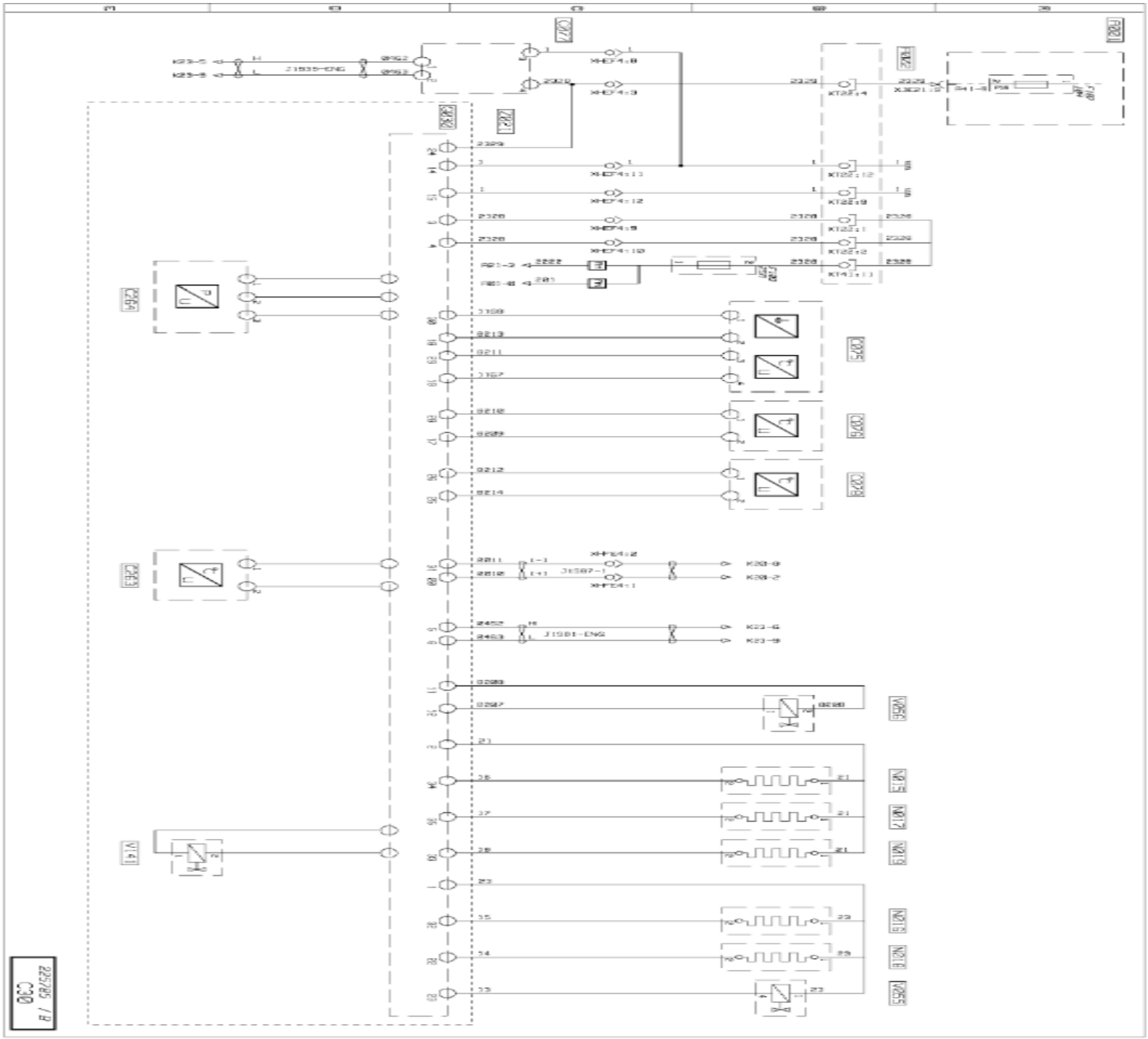

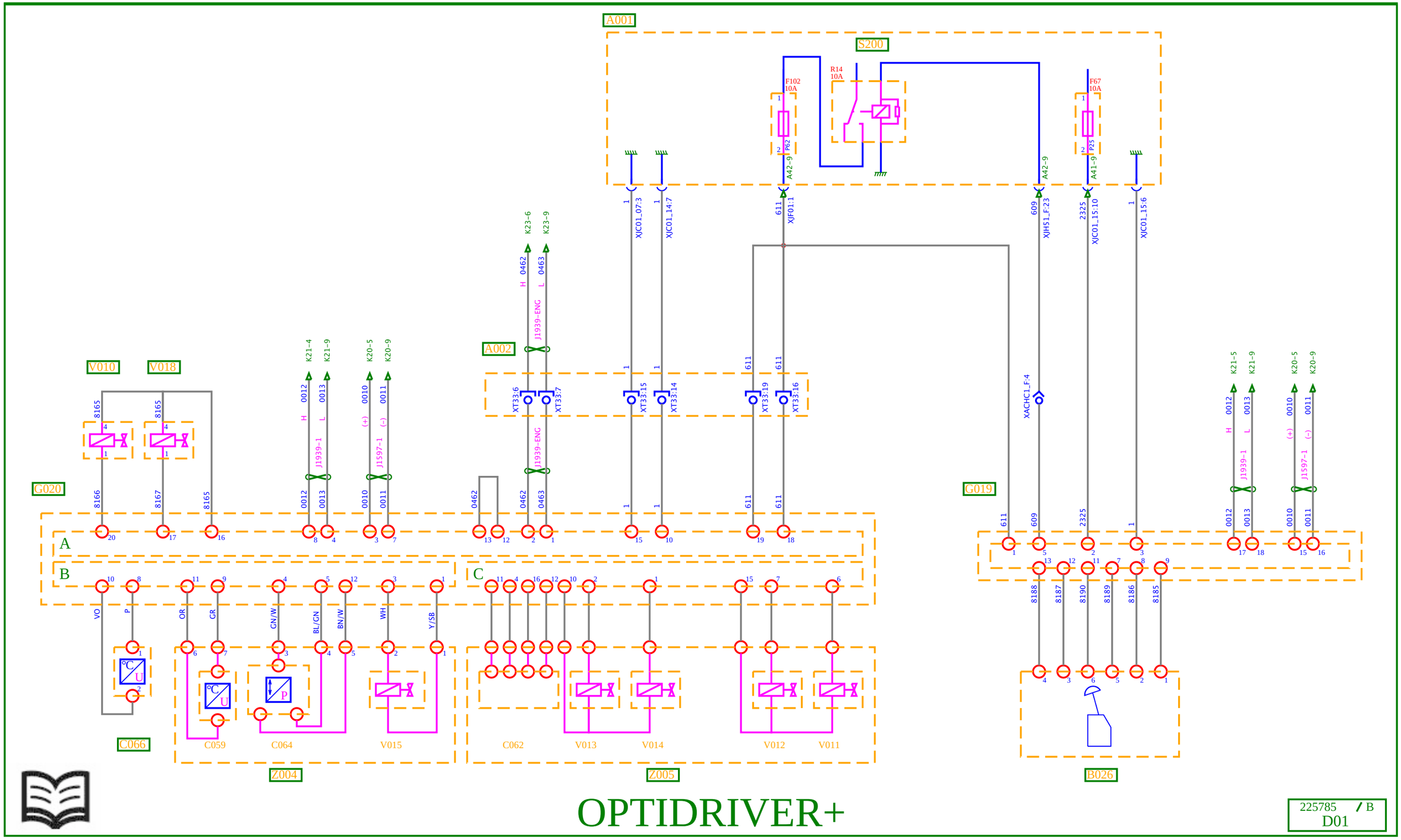
A001
S200
F102
10A
R14
10A
F67
10A
A42-9
A41-9
XJC01_07:3
XJC01_14:7
XJF01:1
XJH51_F:23
XJC01_15:10
XJC01_15:6
K23-6
K23-9
J1939-ENG
A002
XT33:6
XT33:7
XT33:15
XT33:14
XT33:19
XT33:16
V010
V018
K21-4
K21-9
K20-5
K20-9
J1939-1
J1597-1
G020
A
B
C
VO
P
OR
GR
GN/W
BL/GN
BN/W
WH
Y/SB
C066
C059
C064
V015
C062
V013
V014
V012
V011
Z004
Z005
XACHC1_F:4
G019
B026
OPTIDRIVER+
225785 / B
D01

Automatic gearbox

Key to appliances

Code	Function	Location
A001	Cab electrical distribution box	B2c
A002	Chassis-cab connection box	B2c
B026	Automatic transmission gear selector	B2b
C059	Retarder oil temperature sensor	B4d
C062	Clutch position sensor	B4d
C064	Retarder air pressure sensor	B4d
C066	Retarder coolant temperature sensor	B4d
G019	Gear selector ECU	B2b
G020	Automatic transmission ECU	B2b
S200	Automatic transmission management ECU power supply relay	B2b
V010	PTO engagement electrovalve N° 1	B4d
V011	High speed disengagement solenoid valve	B4d
V012	High speed engagement solenoid valve	B4d
V013	Low speed engagement solenoid valve	B4d
V014	Low speed disengagement solenoid valve	B4d
V015	Retarder proportional electrovalve	B4d
V018	PTO engagement electrovalve N° 2	B4d
Z004	Retarder unit	B4d
Z005	Automatic transmission unit	B4d

Automatic gearbox

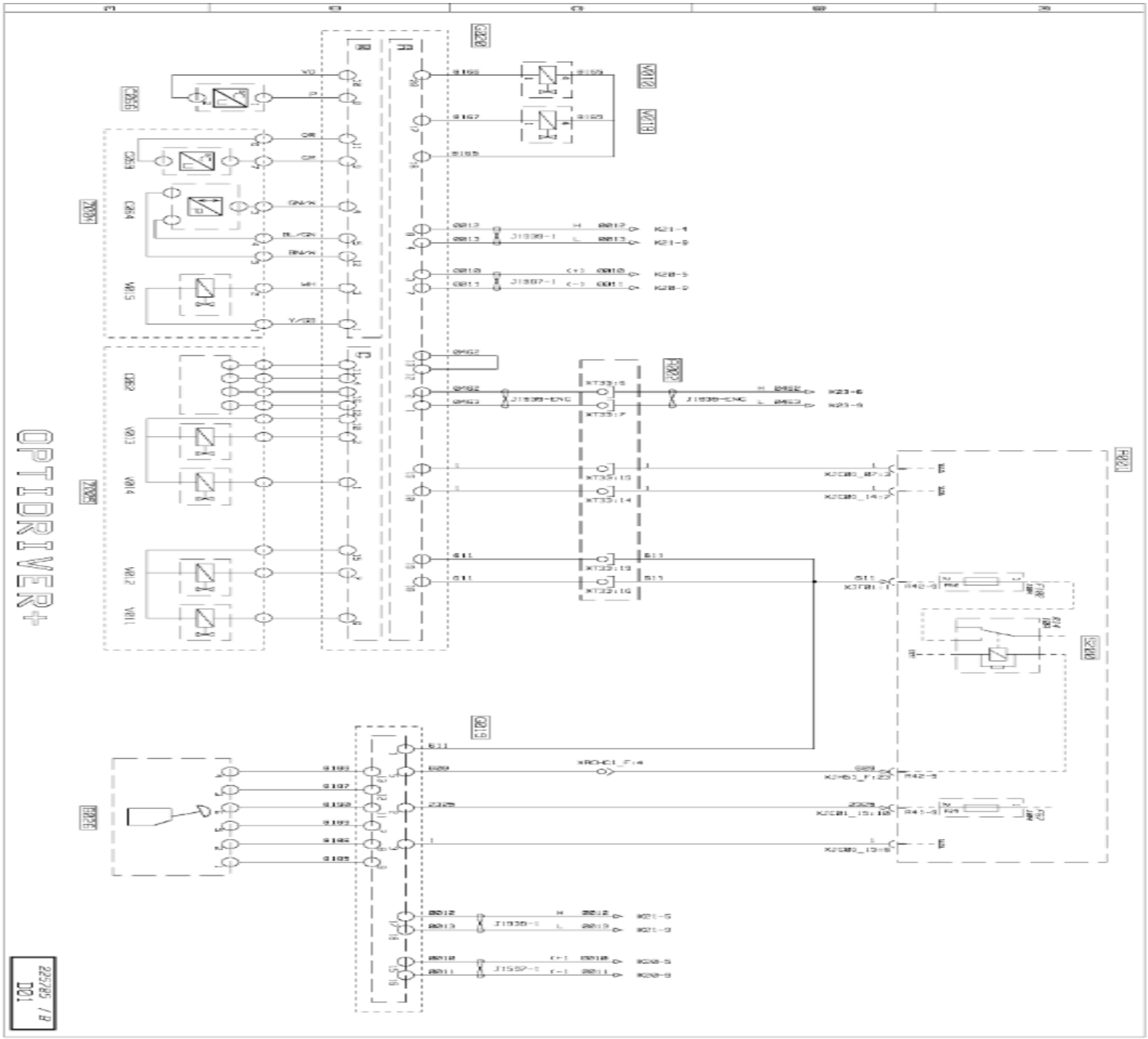
OPTIDRIVER+
DD1
22/23 / B

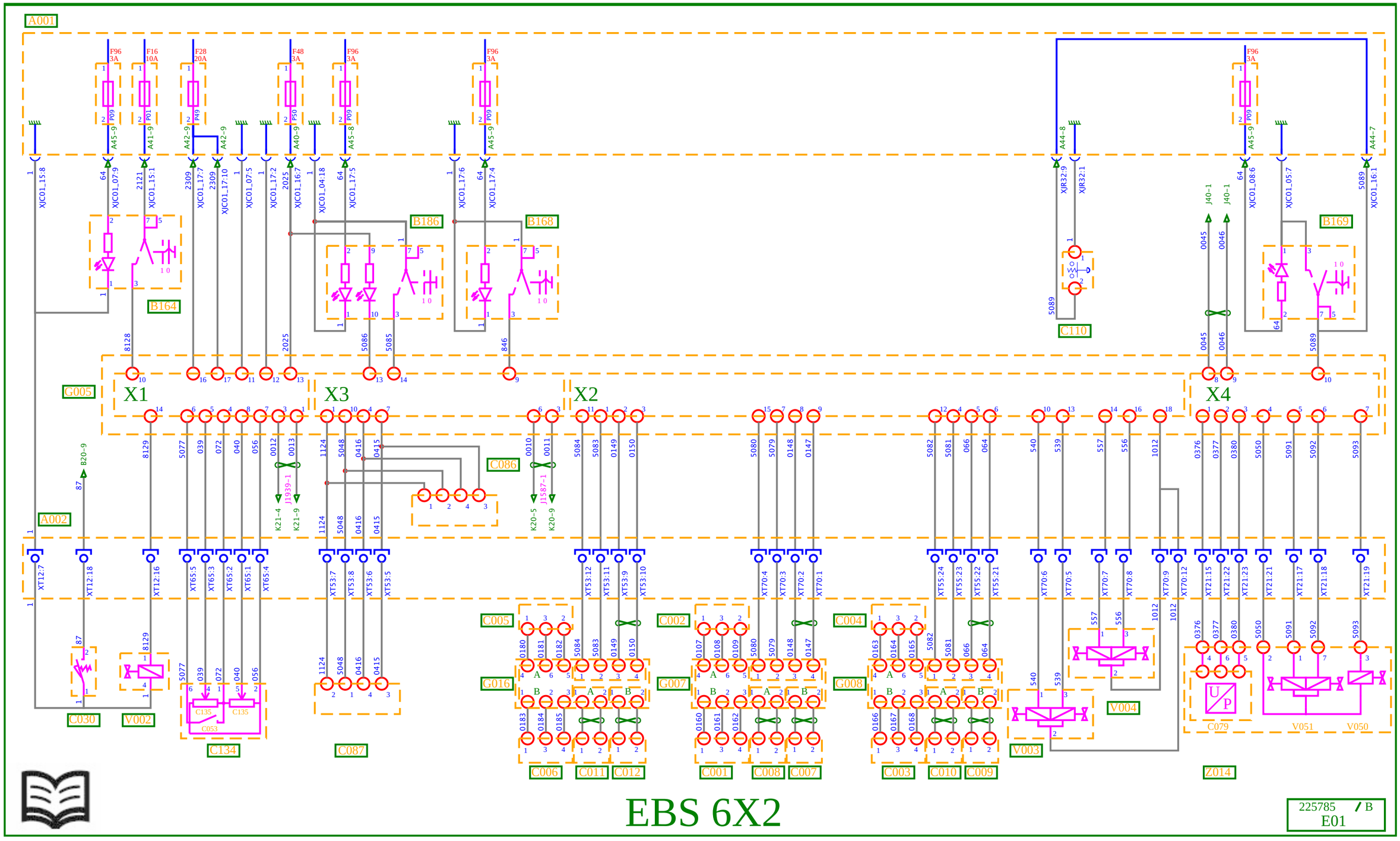
A001
A002
G005
X1
X3
X2
X4
C086
B164
B186
B168
B169
C110
C030
V002
C134
C087
C005
G016
C006
C011
C012
C002
G007
C001
C008
C007
C004
G008
C003
C010
C009
V003
V004
C079
V051
V050
Z014
EBS 6X2
225785 / B
E01

EBS 6x2 equipment

Key to appliances

Code	Function	Location
A001	Cab electrical distribution box	B2c
A002	Chassis-cab connection box	B2c
B164	Rear wheels diff lock control	C2b
B168	Traction control enabling control	C2c
B169	Trailer brake holding enabling control	C2c
B186	Brake holding enabling control	C2c
C001	LH front wheel brake linings wear sensor	C3d
C002	RH front wheel brake linings wear sensor	A3d
C003	LH rear wheel brake linings wear sensor	C7d
C004	RH rear wheel brake linings wear sensor	A7d
C005	Lift-up axle or second rear axle LH wheel brake linings wear sensor	C8d
C006	Lift-up axle or second rear axle RH wheel brake linings wear sensor	A8d
C007	LH front wheel speed sensor	C3d
C008	RH front wheel speed sensor	A3d
C009	LH rear wheel speed sensor	C7d
C010	RH rear wheel speed sensor	A7d
C011	Lift-up axle or second rear axle LH wheel speed sensor	C8d
C012	Lift-up axle or second rear axle RH wheel speed sensor	A8d
C030	Rear inter-axle diff lock engaged sensor	B7d
C053	Stop lights switch	C2c
C079	Trailer braking assistance pressure system sensor	B7d
C086	Steering lockover angle sensor	C2c
C087	Chassis lateral acceleration sensor	B6d
C110	Parking brake indicator pressure sensor	B6d
C134	Brake pedal sensor unit	C2c
C135	Brake pedal position copying sensor	C2c
G005	EBS braking management ECU	B2b
G007	Front axle braking assistance modulator unit	B3d
G008	Drive axle braking assistance modulator unit	B7d
G016	Second rear axle braking assistance modulator unit	B7d
V002	Rear wheels diff lock electrovalve	B7d

V003	**LH roadwheel ABS electrovalve**	**C3d**
V004	**Front RH wheel ABS solenoid valve**	**A3d**
V050	**Braking auxiliary electrovalve**	**B7d**
V051	**Trailer braking inlet/exhaust electrovalve**	**B7d**
Z014	**Trailer brake control EBS modulator unit**	**B7d**

EBS 6x2 equipment

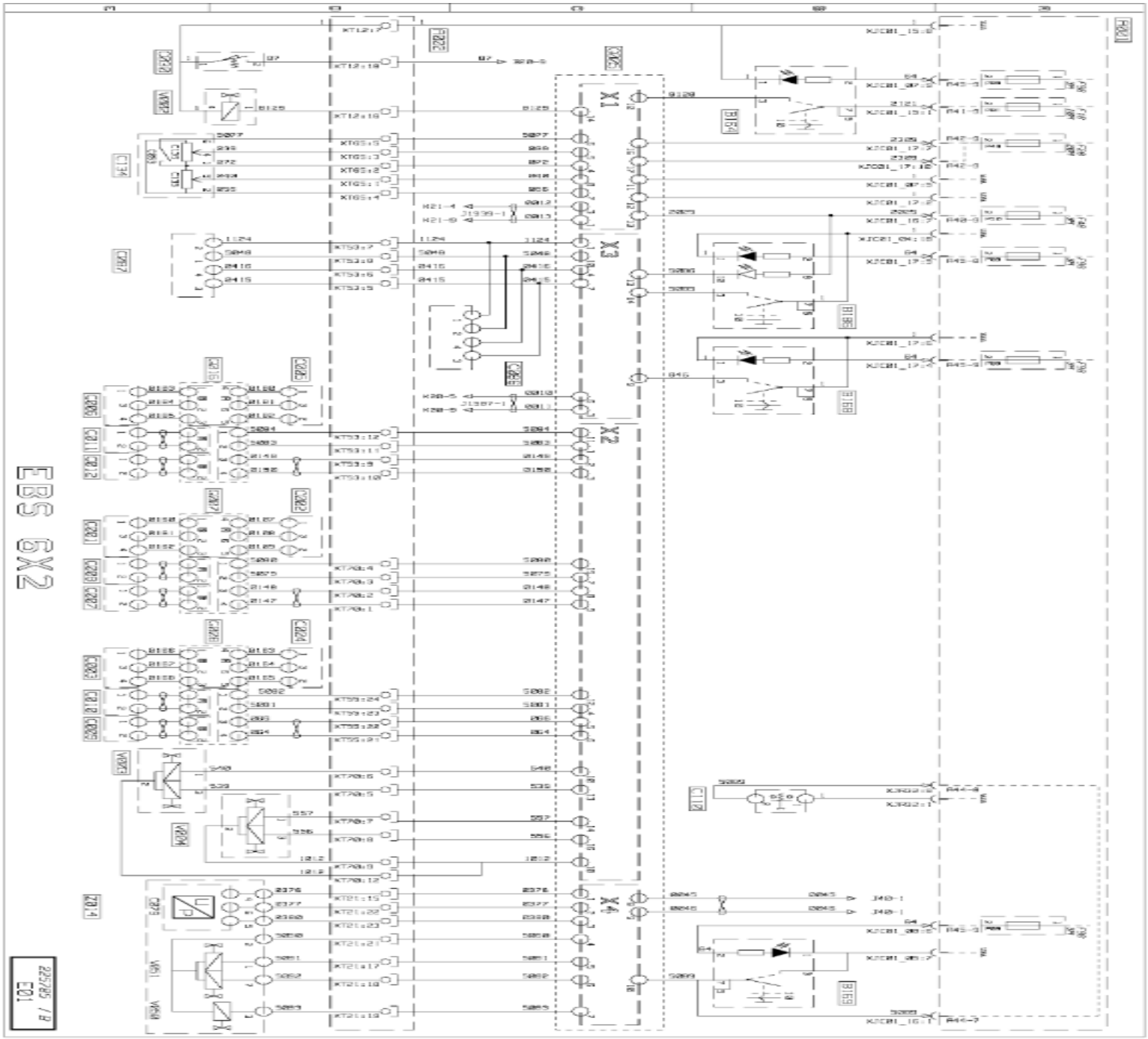
FBS 6X2
X1
X2
X3
X4
B150
B165
B166
B168
B169
C112
C135
C136
C214
C215
C216
C217
C218
C219
C220
C221
C222
C223
C224
C225
C226
C227
C228
C229
C230
C231
C232
C233
C234
C235
C236
C237
C238
C239
C240
C241
C242
C243
C244
C245
C246
C247
C248
C249
C250
C251
C252
C253

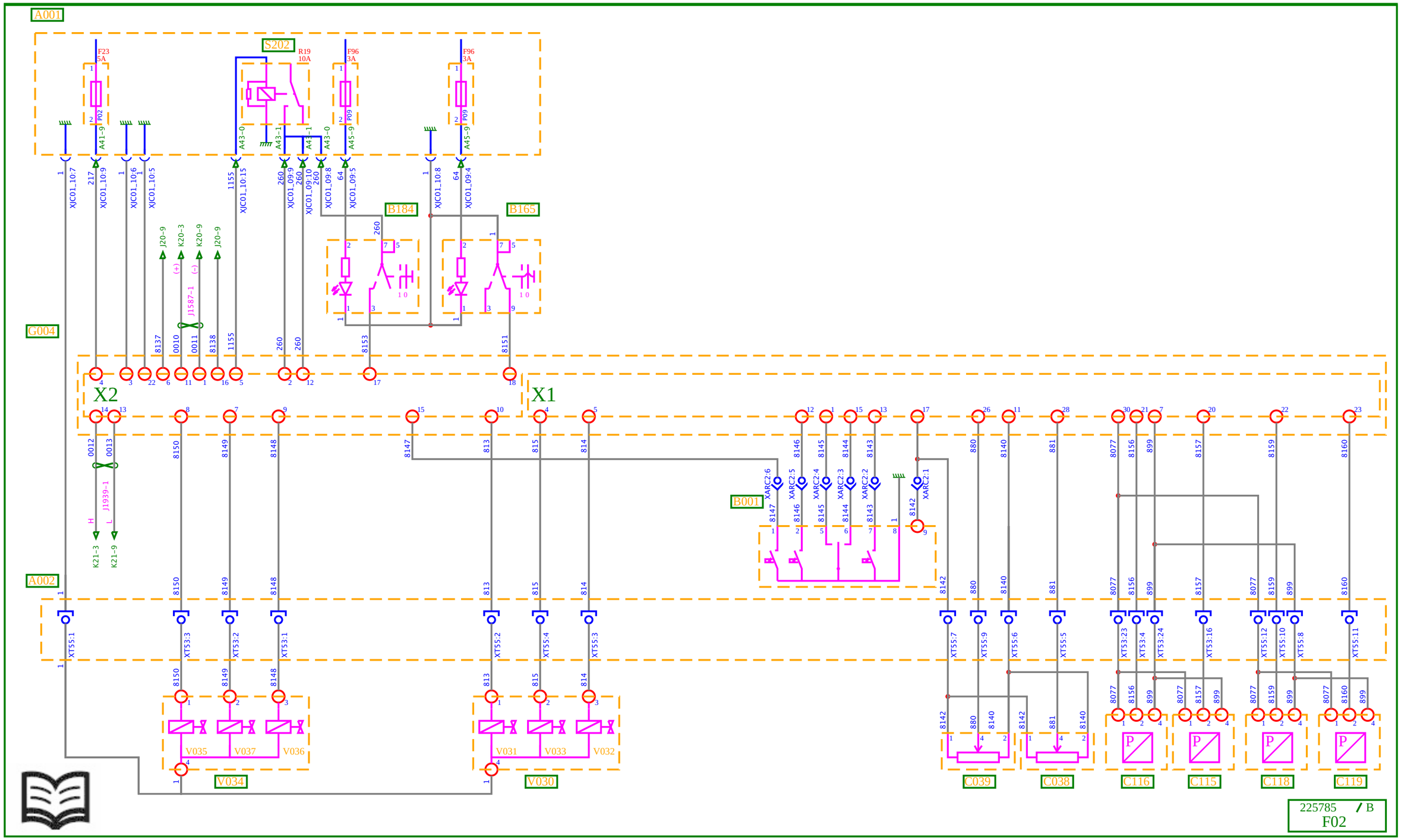
A001
S202
F23
5A
R19
10A
F96
3A
B184
B165
G004
X2
X1
B001
A002
V035
V037
V036
V034
V031
V033
V032
V030
C039
C038
C116
C115
C118
C119
225785 / B
F02

Rear air suspension - 4x2 / 6x2 (2 sensors)

Key to appliances

Code	Function	Location
A001	Cab electrical distribution box	B2c
A002	Chassis-cab connection box	B2c
B001	Air suspension remote control	C4c
B165	Second rear axle lift-up control	B2b
B184	Axle load-shedding activation control	B2b
C038	Drive axle suspension RH position sensor	A7d
C039	Drive axle suspension LH position sensor	C7d
C115	Lift-up air spring pressure sensor	A8d
C116	Middle axle suspension air pressure sensor	A8d
C118	Drive axle suspension LH pressure sensor	C7d
C119	Drive axle suspension RH pressure sensor	A7d
G004	Air suspension ECU	B2b
S202	Air suspension power supply relay	B2c
V030	Drive axle suspension control solenoid valve unit	B7d
V031	Drive axle rear suspension main electrovalve	B7d
V032	Drive axle rear suspension (RH side) electrovalve	B7d
V033	Drive axle rear suspension (LH side) electrovalve	B7d
V034	Rear axle suspension control solenoid valve unit	B7d
V035	Rear axle suspension main electrovalve	B7d
V036	Rear axle suspension electrovalve	B7d
V037	Lift-up air spring control electrovalve	B7d

Rear air suspension - 4x2 / 6x2 (2 sensors)

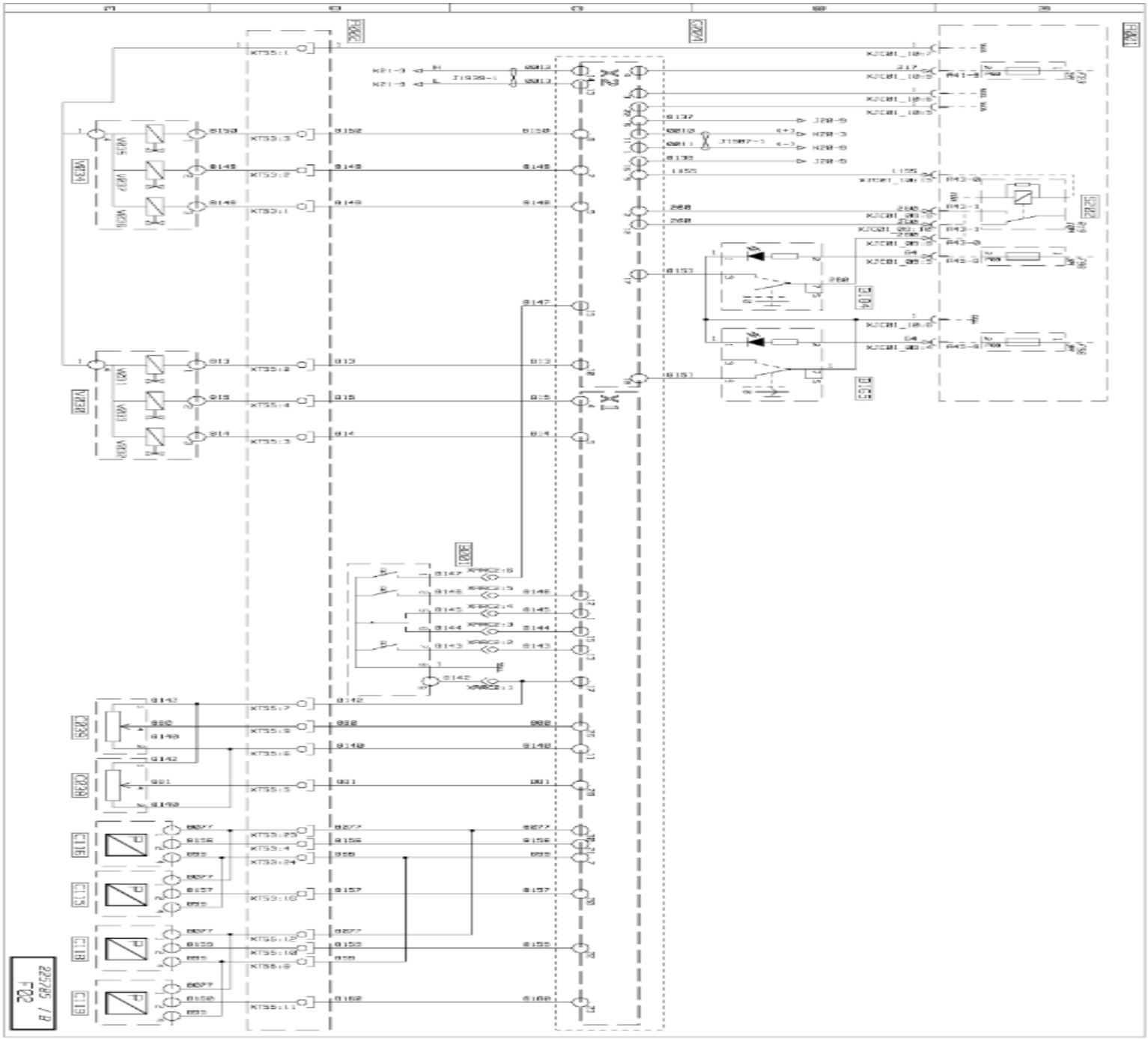

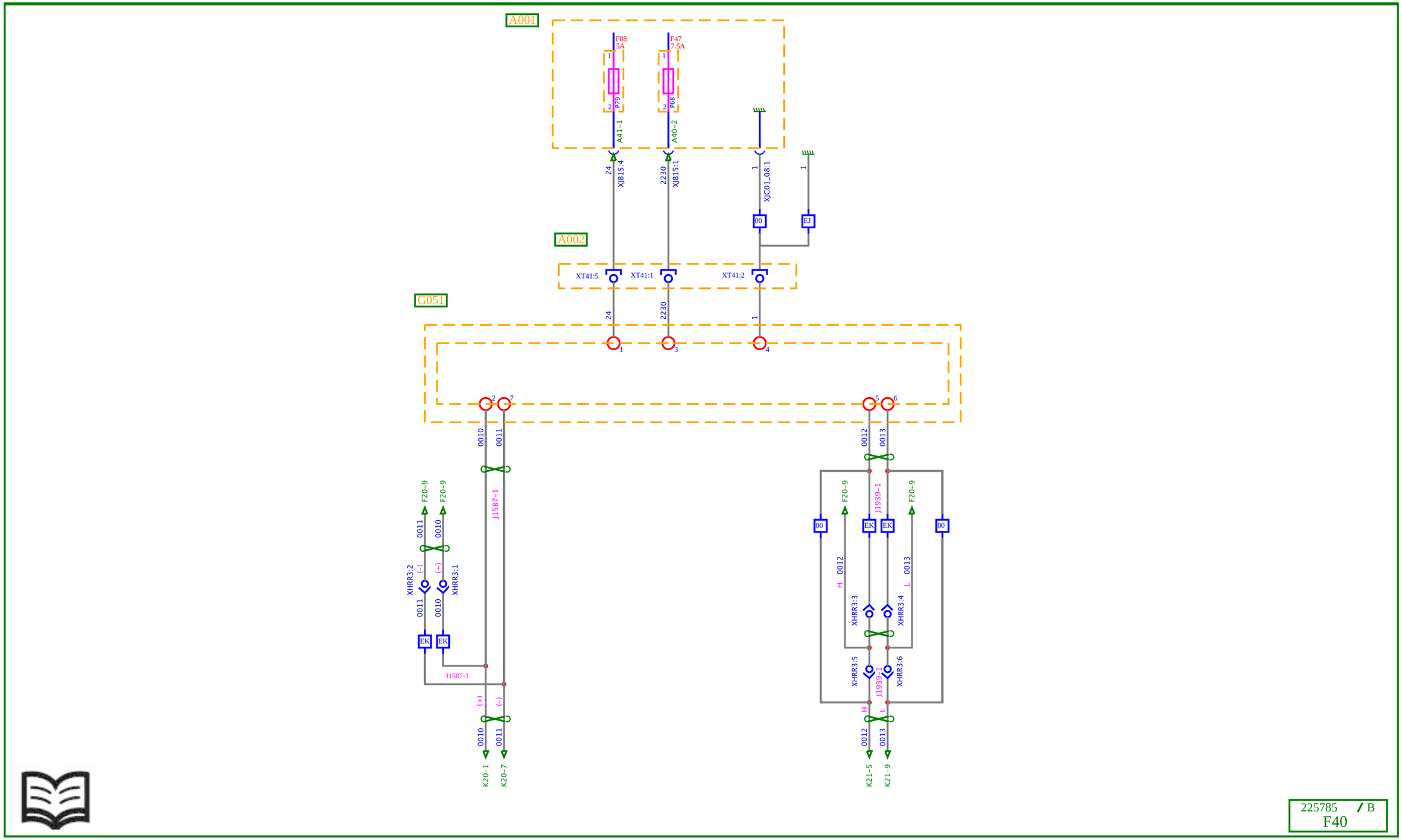
A001
F08
5A
F47
7.5A
P79
P68
A41-1
A40-2
XJB15:4
XJB15:1
XJC01_08:1
00
EJ
A002
XT41:5
XT41:1
XT41:2
G051
24
2230
1
0010
0011
0012
0013
J1587-1
J1939-1
F20-9
XHRR3:1
XHRR3:2
XHRR3:3
XHRR3:4
XHRR3:5
XHRR3:6
EK
K20-1
K20-7
K21-5
K21-9
225785 / B
F40

Air production management

Key to appliances

Code	Function	Location
A001	**Cab electrical distribution box**	**B2c**
A002	**Chassis-cab connection box**	**B2c**
G051	**Air production management ECU**	**C4d**

EJ: with battery box on the right
EK: with rear steering axle
00: other cases of use

Air production management

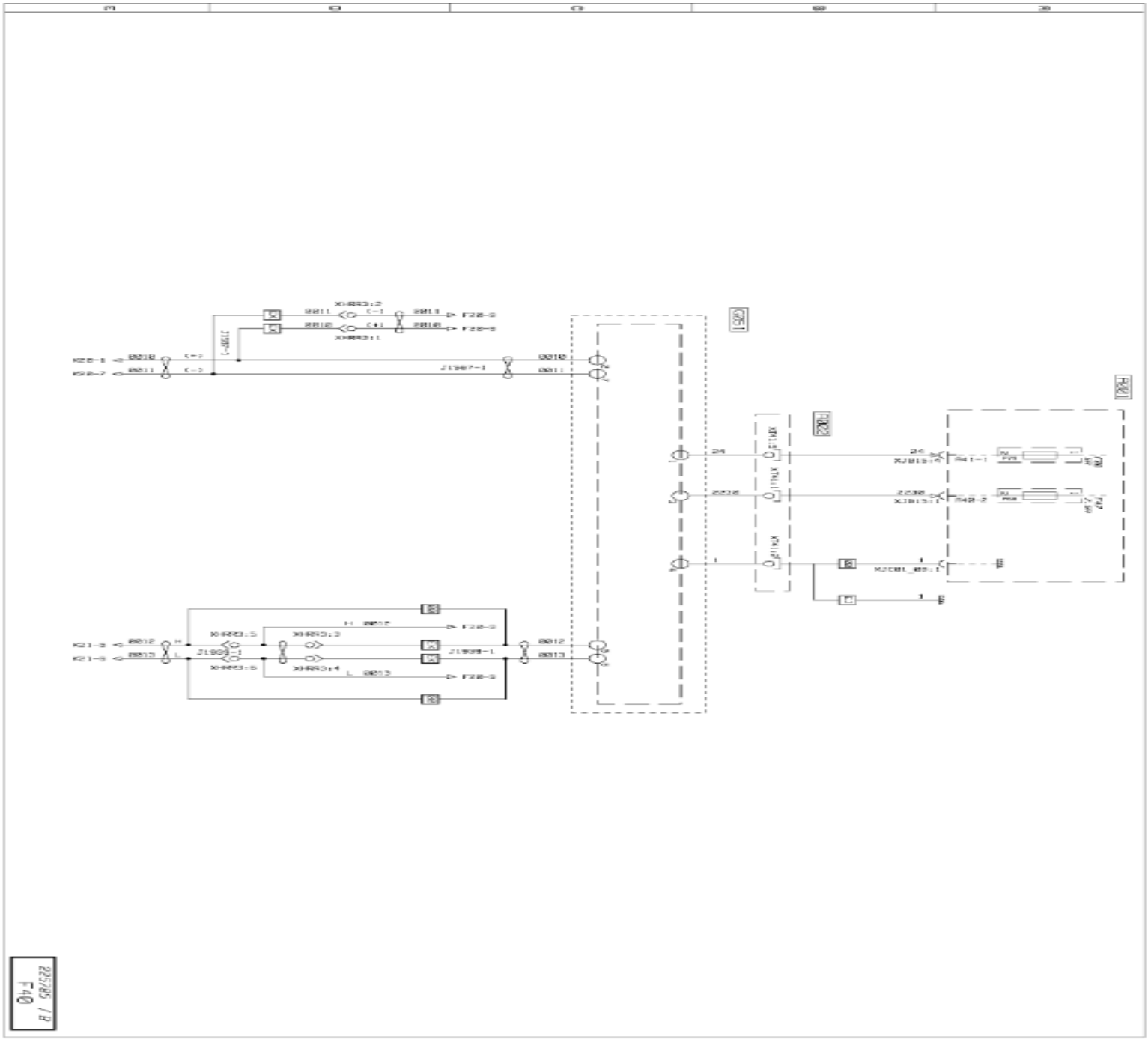

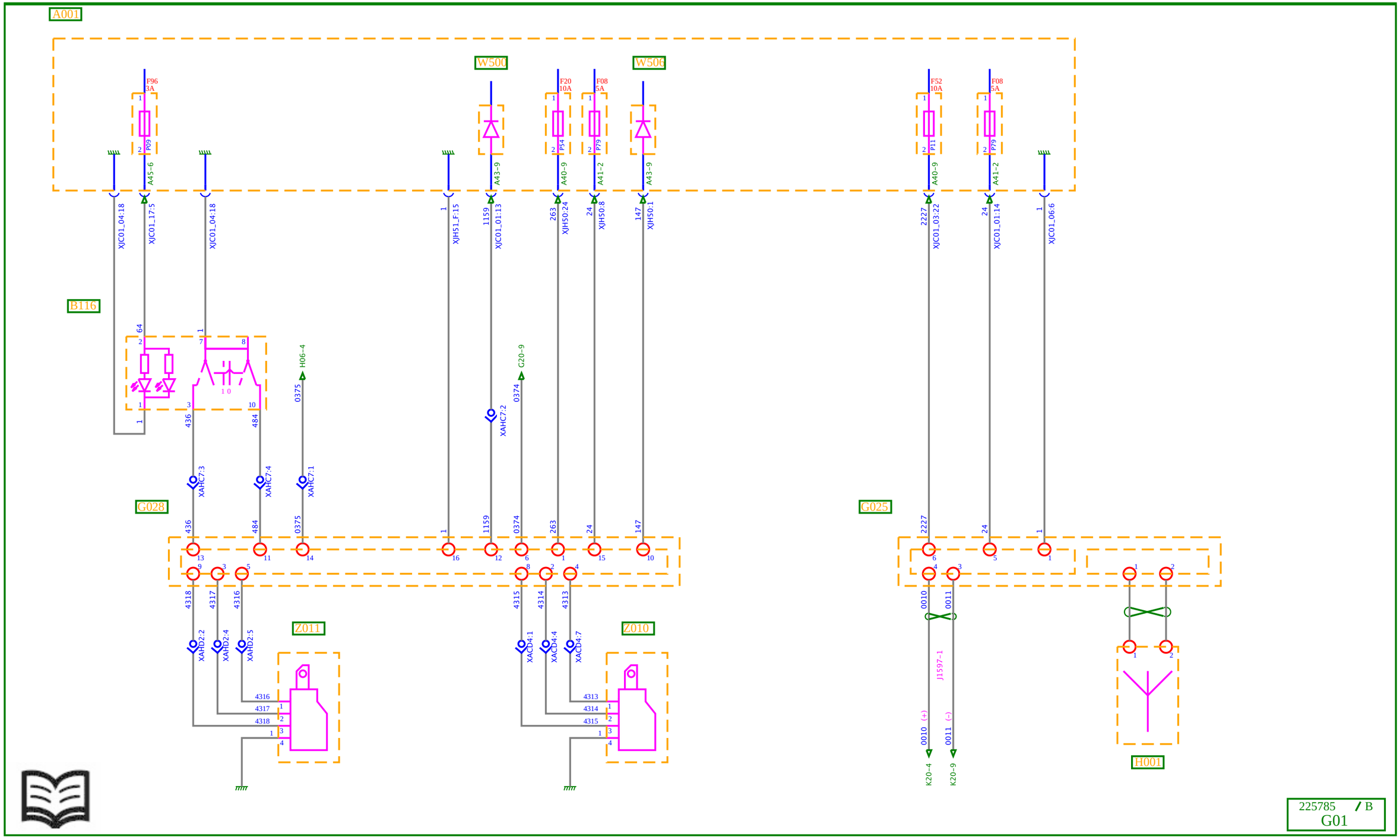
A001
W500
W500
F96
3A
F09
F20
10A
F54
F08
5A
F79
F52
10A
P11
F08
5A
F79
A45-6
A43-9
A40-9
A41-2
A43-9
A40-9
A41-2
XJC01_04:18
XJC01_17:5
XJC01_04:18
XJH51_F:15
XJC01_01:13
XJH50:24
XJH50:8
XJH50:1
XJC01_03:22
XJC01_01:14
XJC01_06:6
B116
H06-4
G20-9
XAHC7:2
XAHC7:3
XAHC7:4
XAHC7:1
G028
G025
XAHD2:2
XAHD2:4
XAHD2:5
XACD4:1
XACD4:4
XACD4:7
Z011
Z010
J1597-1
0010 (+)
0011 (-)
K20-4
K20-9
H001
225785 / B
G01

Doors / engine immobilizer controls

Key to appliances

Code	Function	Location
A001	**Cab electrical distribution box**	**B2c**
B116	**Doors locking control**	**B2b**
G025	**Engine immobilizer ECU**	**C2c**
G028	**Doors central locking ECU**	**A2c**
H001	**Engine immobilizer antenna**	**C2c**
W500	**Diode(s)**	**B2c**
W506	**Doors central locking diode**	**B2c**
Z010	**Front passenger's door locking striker unit**	**A3c**
Z011	**Driver's door locking striker unit**	**C3c**

Doors / engine immobilizer controls

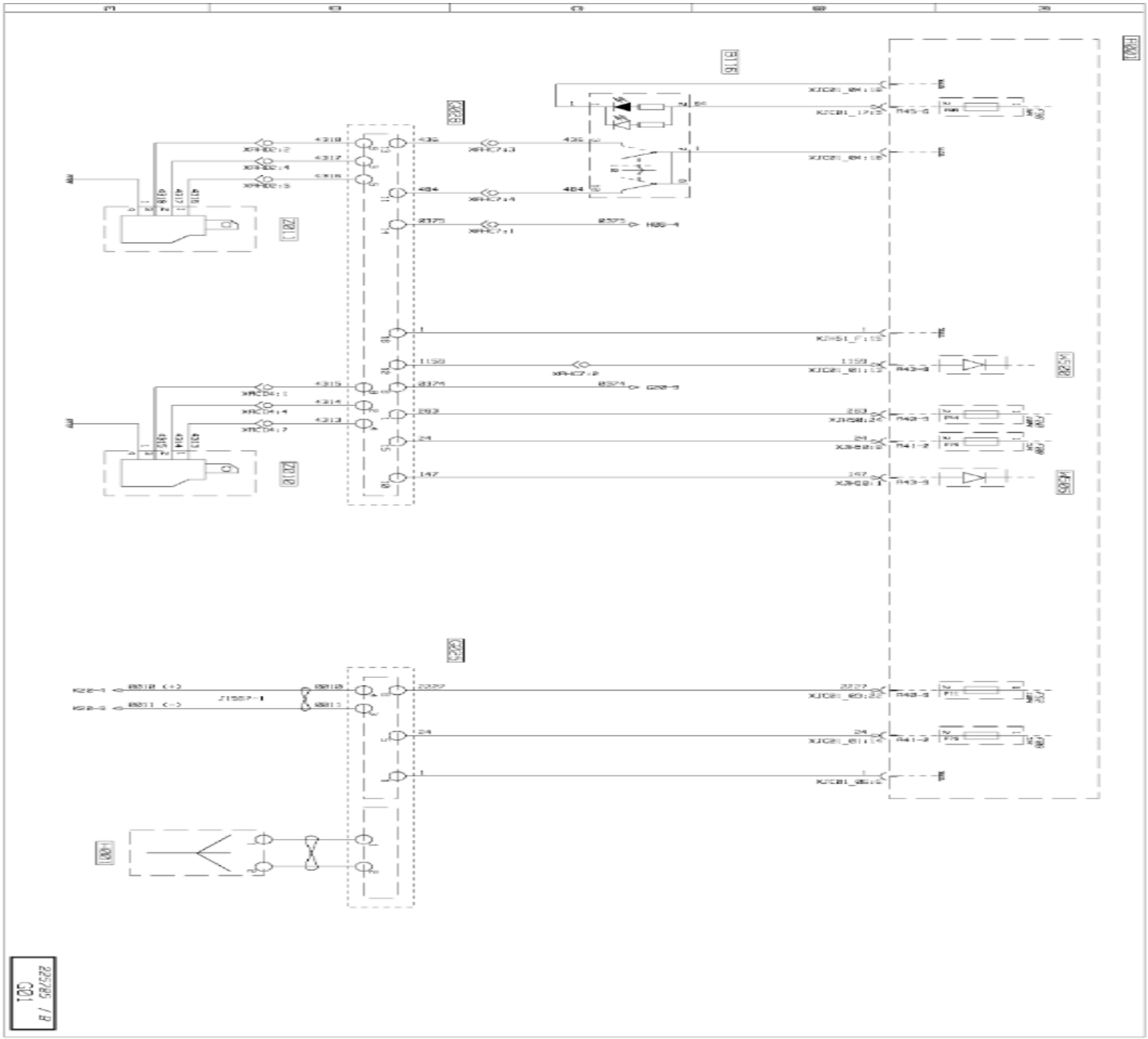

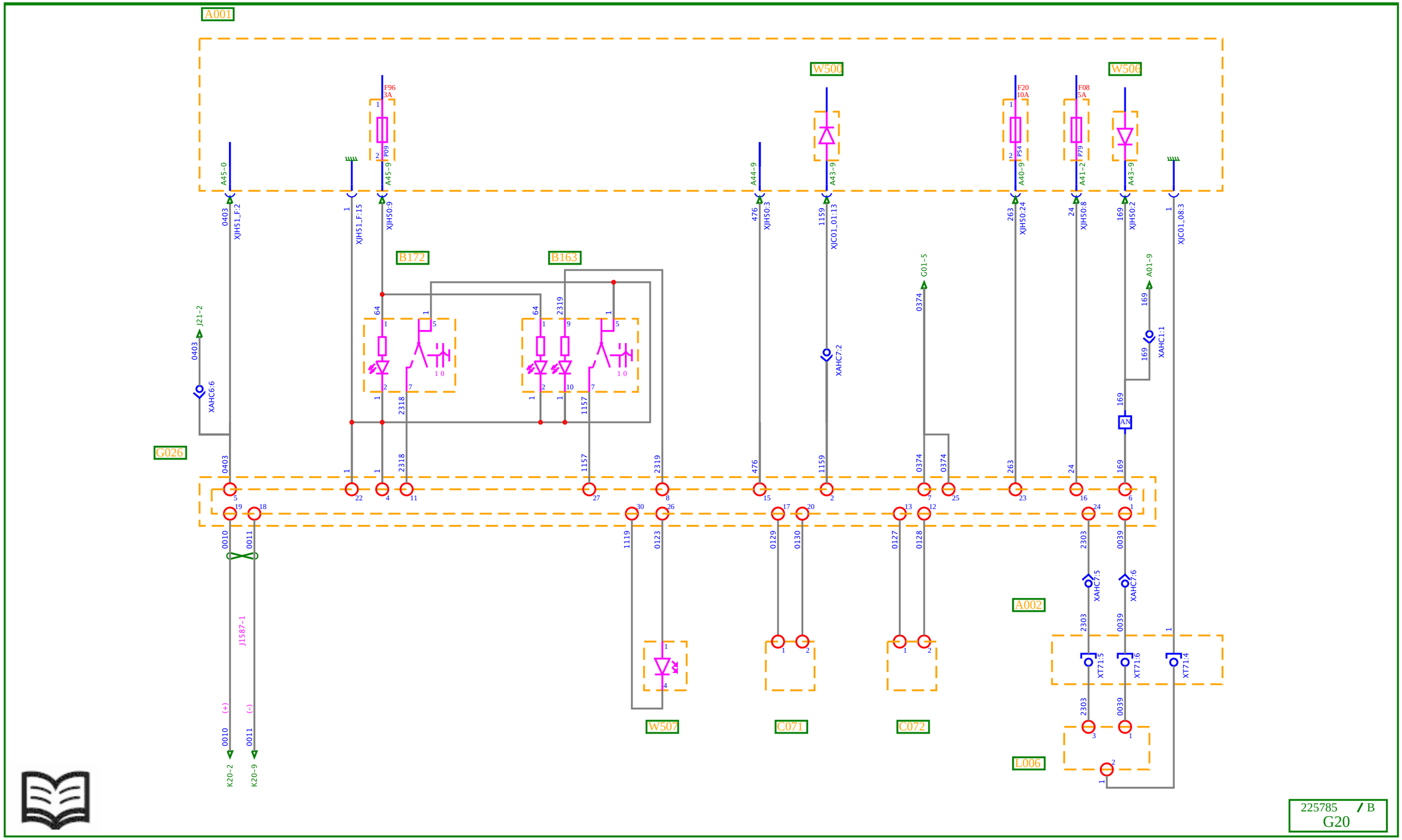
A001
W500
W506
F96
3A
F20
10A
F08
5A
A45-0
A45-9
A44-9
A43-9
A40-9
A41-2
A43-9
0403
XJH51_F:2
XJH51_F:15
XJH50:9
476
XJH50:3
1159
XJC01_01:13
263
XJH50:24
24
XJH50:8
169
XJH50:2
XJC01_08:3
B172
B163
0374
G01-5
A01-9
J21-2
XAHC6:6
XAHC7:2
XAHC1:1
AN
G026
2318
1157
2319
0010
0011
J1587-1
(+)
(-)
K20-2
K20-9
1119
0123
0129
0130
0127
0128
2303
0039
XAHC7:5
XAHC7:6
A002
XT71:5
XT71:6
XT71:4
W507
C071
C072
L006
225785 / B
G20

Alarm

Key to appliances

Code	Function	Location
A001	**Cab electrical distribution box**	**B2c**
A002	**Chassis-cab connection box**	**B2c**
B163	**Alarm anti-panic control**	**B2b**
B172	**Alarm siren sound level reduction control**	**B2b**
C071	**Alarm ultra-sonic transmitter sensor**	**C2c**
C072	**Alarm ultra-sonic receiver sensor**	**A2c**
G026	**Alarm ECU**	**A2a**
L006	**Horn - Alarm siren**	**C2d**
W500	**Diode(s)**	**B2c**
W506	**Doors central locking diode**	**B2c**
W507	**Vehicle alarm sounding diode**	**B2a**

AN: without ADR equipment

Alarm

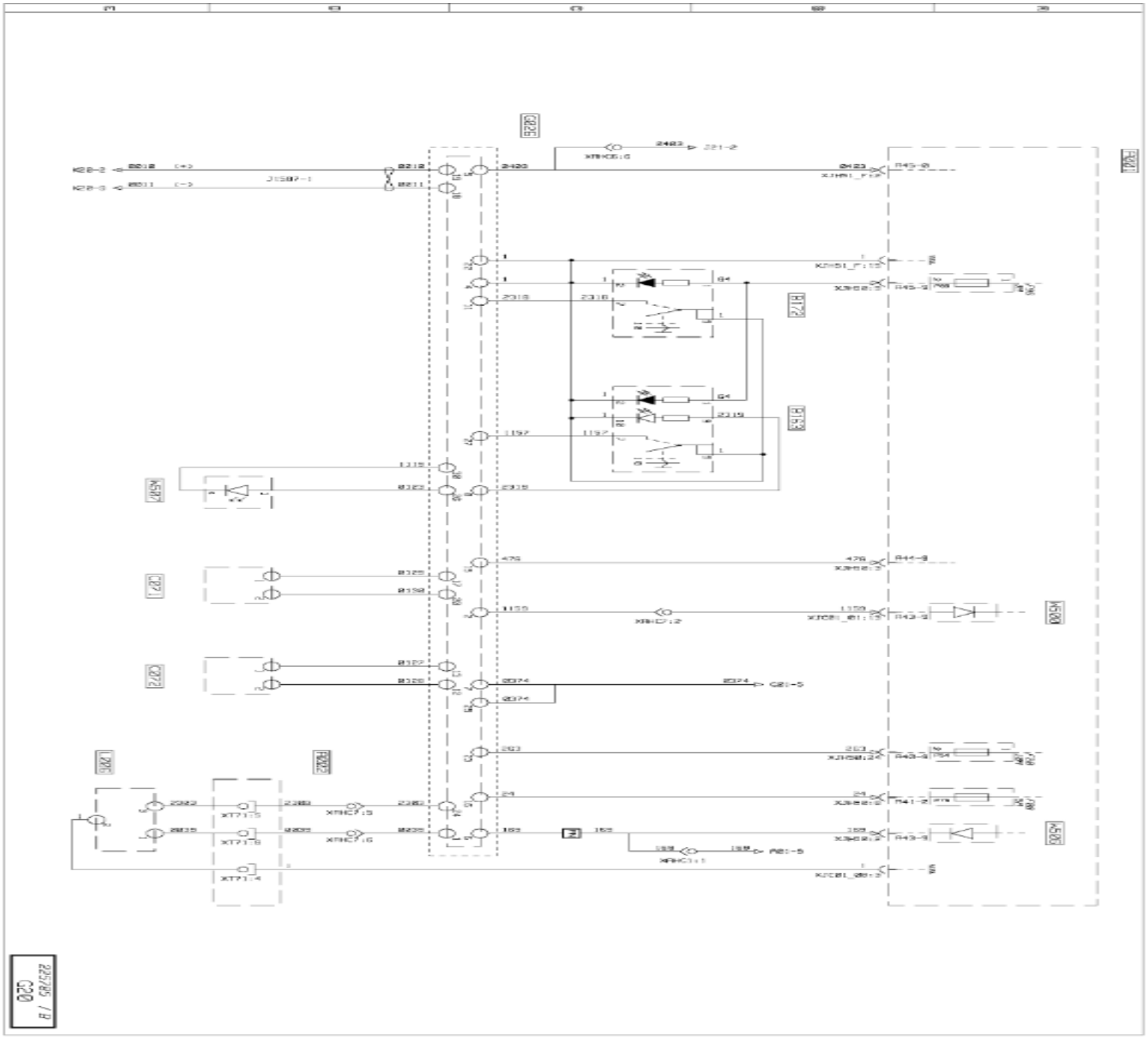

https://truckmanualshub.com/

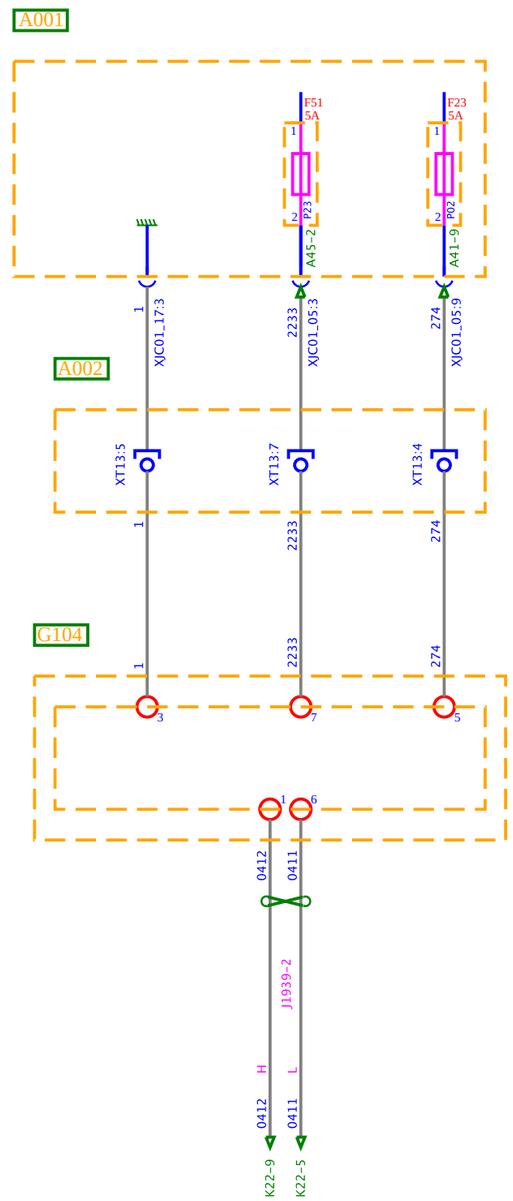

225785 / B
G60

Checking tyre pressures

Key to appliances

Code	Function	Location
A001	**Cab electrical distribution box**	**B2c**
A002	**Chassis-cab connection box**	**B2c**
G104	**Tyre pressures monitoring ECU**	**B7d**

Checking tyre pressures

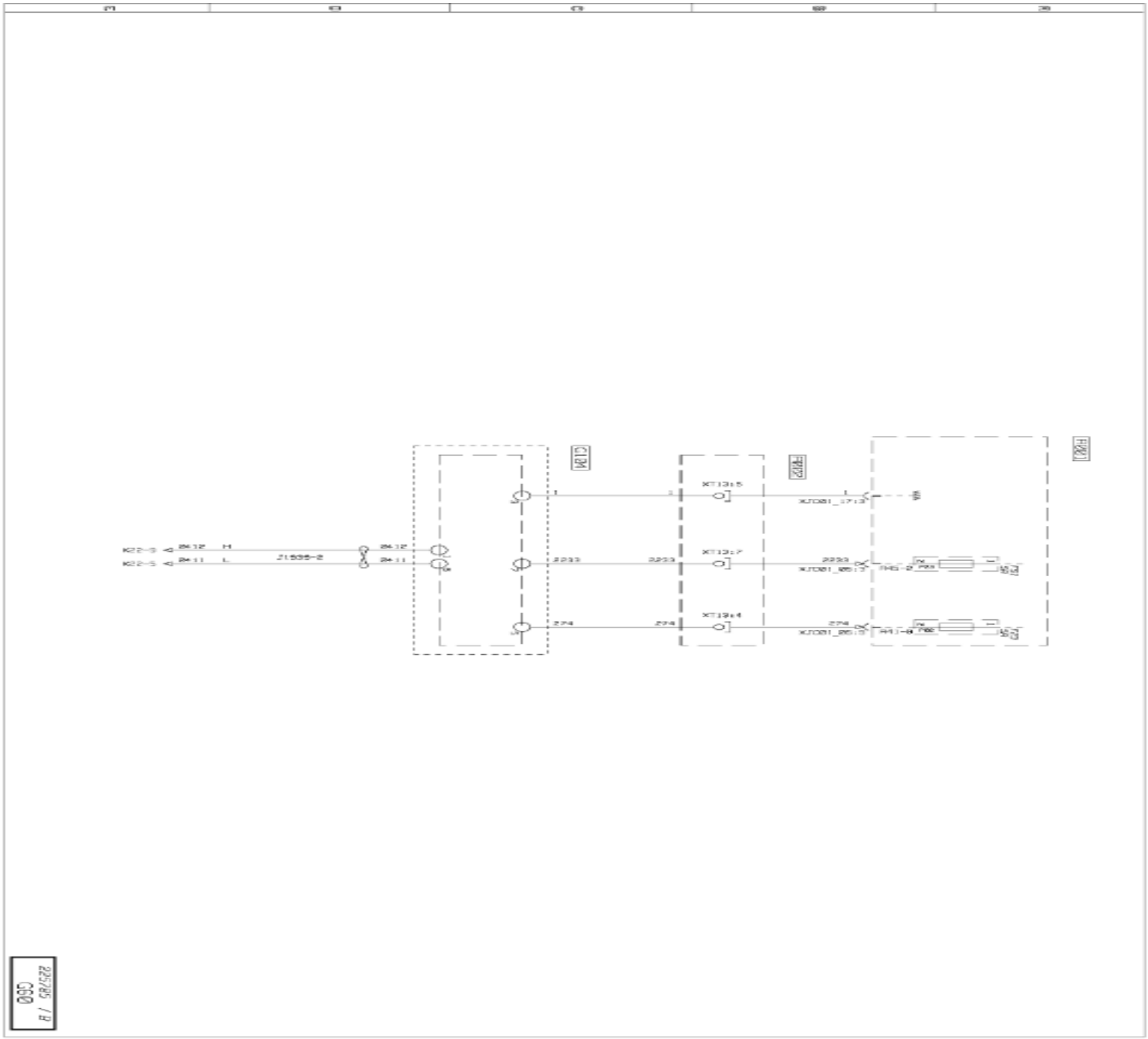
K27-5 A
K27-5 A
2412 H
2411 L
71595-2
2412
2411
CLIM
1
2233
274
XT13:5
XT13:7
XT13:4
1
2233
274
FUSE
HVAC
2233
274
F45-2 7.5A
F46-2 7.5A
22/03/08
G60
B

https://truckmanualshub.com/

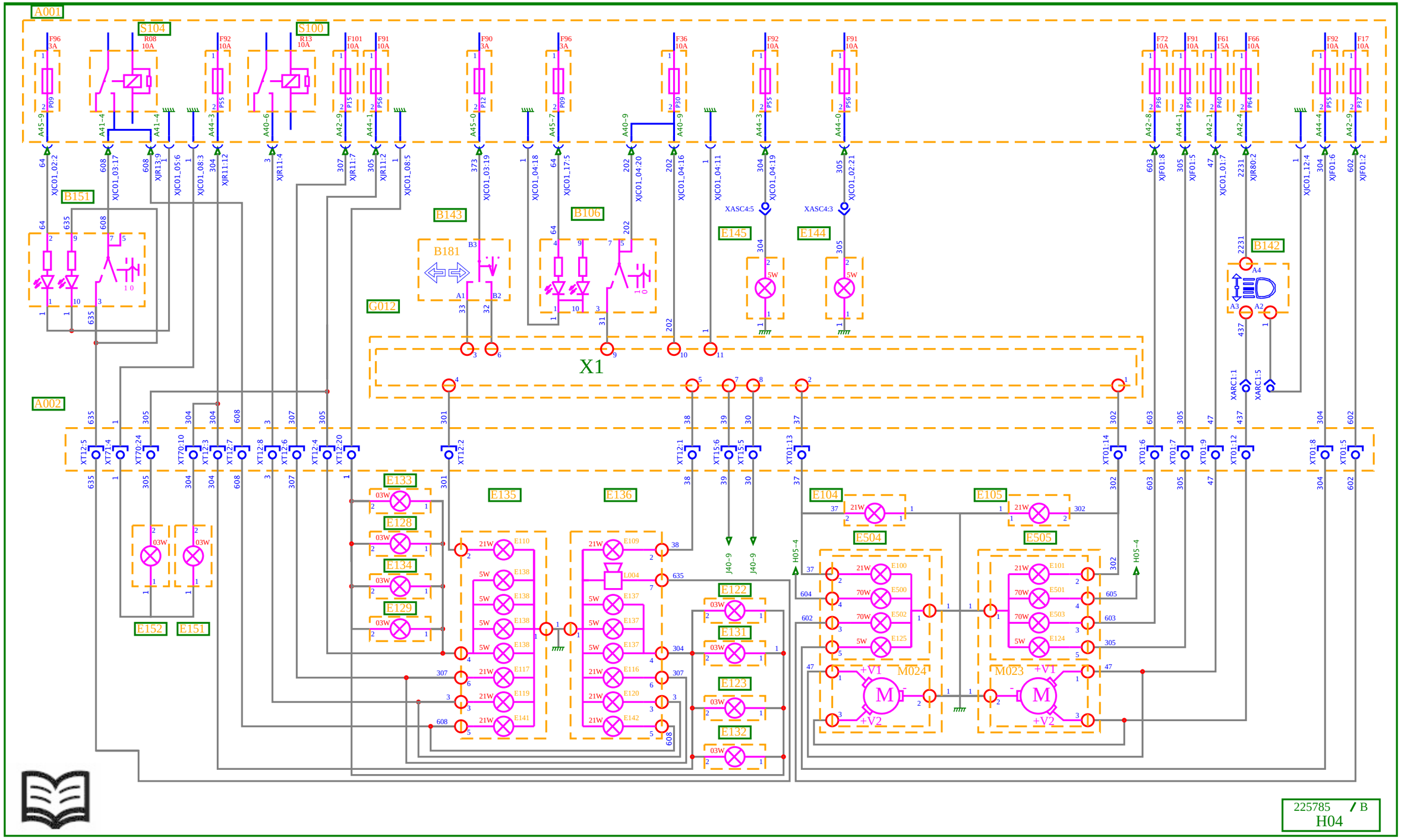

Lighting and signalling management (1/3)

Key to appliances

Code	Function	Location
A001	Cab electrical distribution box	B2c
A002	Chassis-cab connection box	B2c
B106	Hazard lights control	C2b
B142	Headlamps ride corrector control	C2b
B143	Steering wheel fingertip controls N° 1	C2b
B151	Reversing buzzer inhibition control	C2b
B181	Direction indicator control	C2b
E100	RH front direction change indicator lights	A1d
E101	LH front direction change indicator lights	C1d
E104	Roof RH front direction change indicator lights	A2a
E105	Roof LH front direction change indicator lights	C2a
E109	RH rear direction change indicator lights	A9d
E110	LH rear direction change indicator lights	C9d
E116	RH rear fog light	A9d
E117	LH rear fog light	C9d
E119	LH stop lights	C9d
E120	RH stop lights	A9d
E122	RH clearance light N° 1	A2d
E123	RH clearance light N° 2	A4d
E124	LH front side/parking lights	C1d
E125	RH front side/parking lights	A1d
E128	LH clearance lights N° 3	C2d
E129	LH clearance lights N° 4	C4d
E131	RH clearance lights N° 3	A6d
E132	RH clearance lights N° 4	A8d
E133	LH clearance lights N° 1	C6d
E134	LH clearance lights N° 2	C8d
E135	LH tail lights unit	C9d
E136	RH tail lights unit	A9d
E137	RH rear side/parking lights	A9d
E138	LH rear side/parking lights	C9d

E141	**LH reversing lights**	**C9d**
E142	**RH reversing lights**	**A9d**
E144	**Roof LH side/parking lights**	**C2a**
E145	**Roof LH side/parking lights**	**A2a**
E151	**Right-hand side marker lamp N° 5**	**A8d**
E152	**Left-hand side marker lamp N° 5**	**A8d**
E500	**RH dipped beam headlight**	**A1d**
E501	**LH dipped beam headlight**	**C1d**
E502	**RH main beam headlight**	**A1d**
E503	**LH dipped beam headlight**	**C1d**
E504	**RH headlamp insert**	**A1d**
E505	**LH headlamp insert**	**C1d**
G012	**Lighting and signalling management ECU**	**B2c**
L004	**External horn**	**A9d**
M023	**LH headlamp ride correction motor**	**C1d**
M024	**RH headlamp ride correction motor**	**A1d**
S100	**Stop lights power supply relay**	**B2c**
S104	**Reversing lights power supply relay**	**B2c**

Lighting and signalling management (1/3)

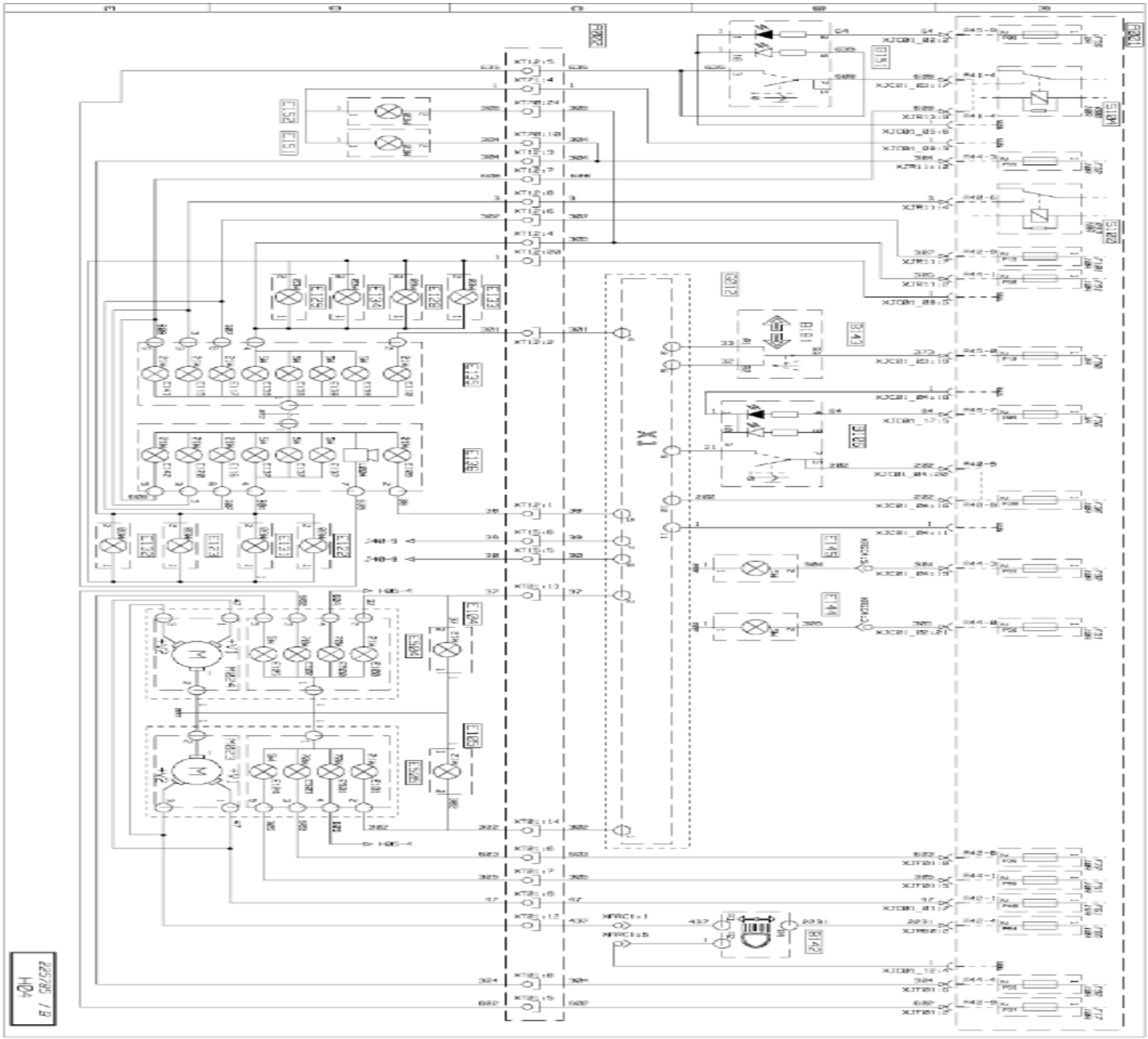

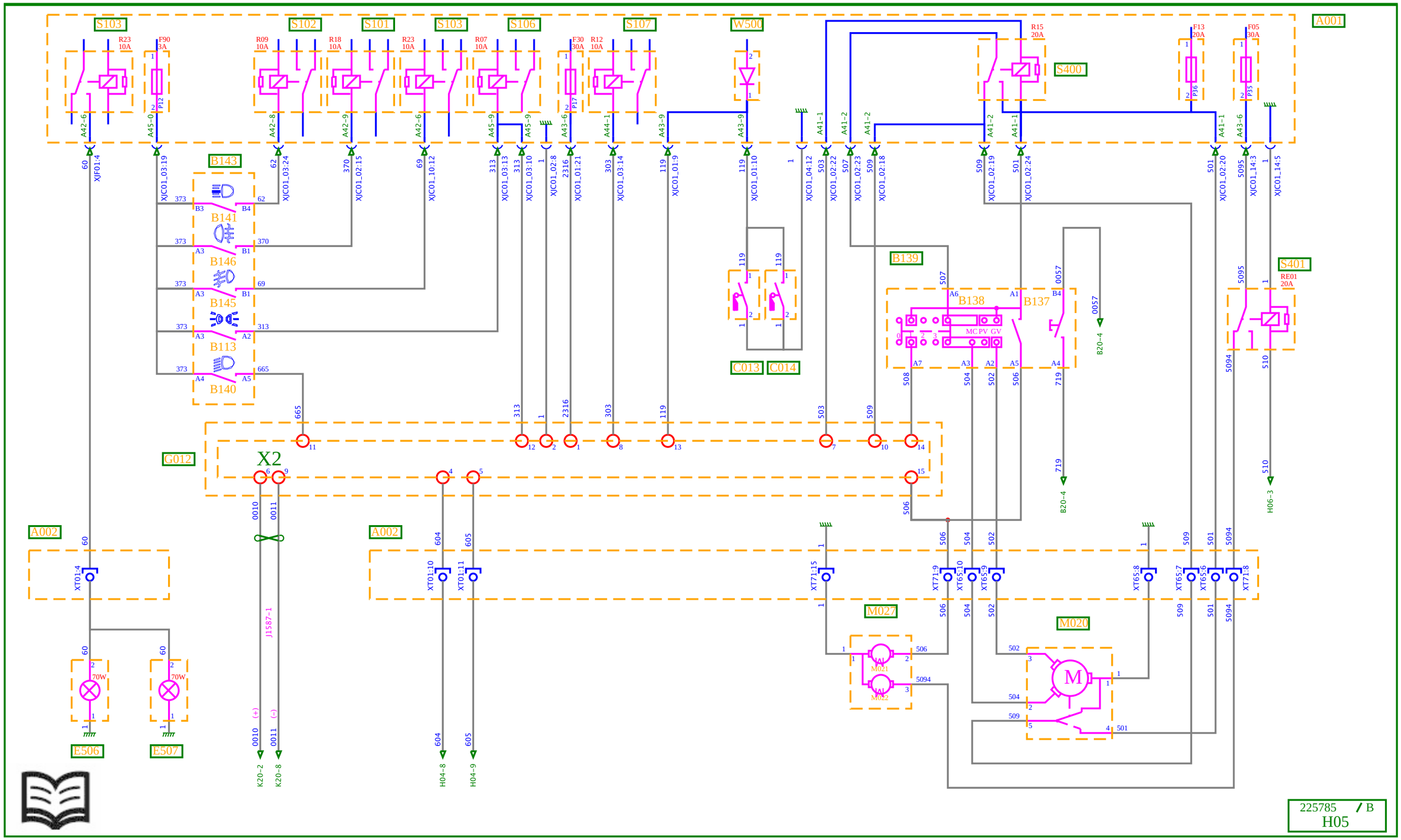
A001
S103
S102
S101
S106
S107
W500
S400
S401
B143
B141
B146
B145
B113
B140
B139
B138
B137
C013
C014
G012
X2
A002
E506
E507
M027
M021
M022
M020
M
J1587-1
K20-2
K20-8
H04-8
H04-9
B20-4
H06-3
225785 / B
H05

Lighting and signalling management (2/3)

Key to appliances

Code	Function	Location
A001	Cab electrical distribution box	B2c
A002	Chassis-cab connection box	B2c
B113	Side/parking lights control	C2b
B137	Windscreen wash control	C2b
B138	Windscreen wipers control	C2b
B139	Windscreen / headlamps wash/wipe control	C2b
B140	Dipped beam headlights control	C2b
B141	Main beam headlights control	C2b
B143	Steering wheel fingertip controls N° 1	C2b
B145	Fog driving lights control	C2b
B146	Fog lights control	C2b
C013	Driver's door open position information sensor	C2c
C014	Passenger's front door open position information sensor	A2c
E506	LH fog driving light	C1d
E507	RH fog driving light	A1d
G012	Lighting and signalling management ECU	B2c
M020	Windscreen wipers drive motor	B1c
M021	Windscreen wash pump motor	B1c
M022	Headlamps wash pump motor	B1c
M027	Windscreen wash motor / headlamps wash motor unit	C4c
S101	Rear fog lights power supply relay	B2c
S102	Main beam headlights power supply relay	B2c
S103	Fog driving lights power supply relay	B2c
S106	Switches night lighting power supply relay	B2c
S107	RH and LH side/parking and marker lights power supply relay (trailer and bodybuilder)	B2c
S400	Windscreen wipers motor time-delay relay	B2c
S401	Headlamps wash pump motor power supply relay	B2c
W500	Diode(s)	B2c

Lighting and signalling management (2/3)

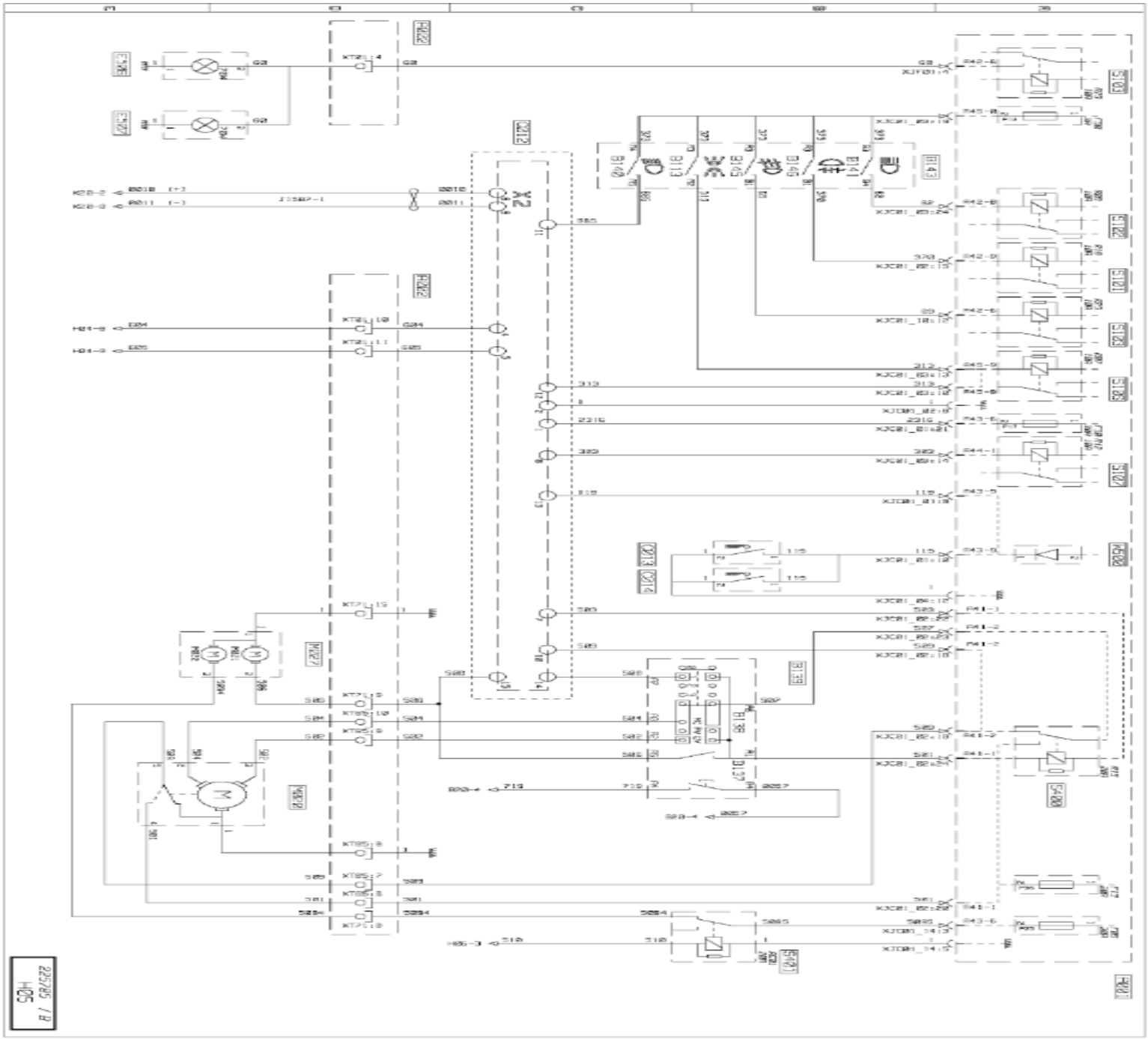
X2
H25
22/25 / B

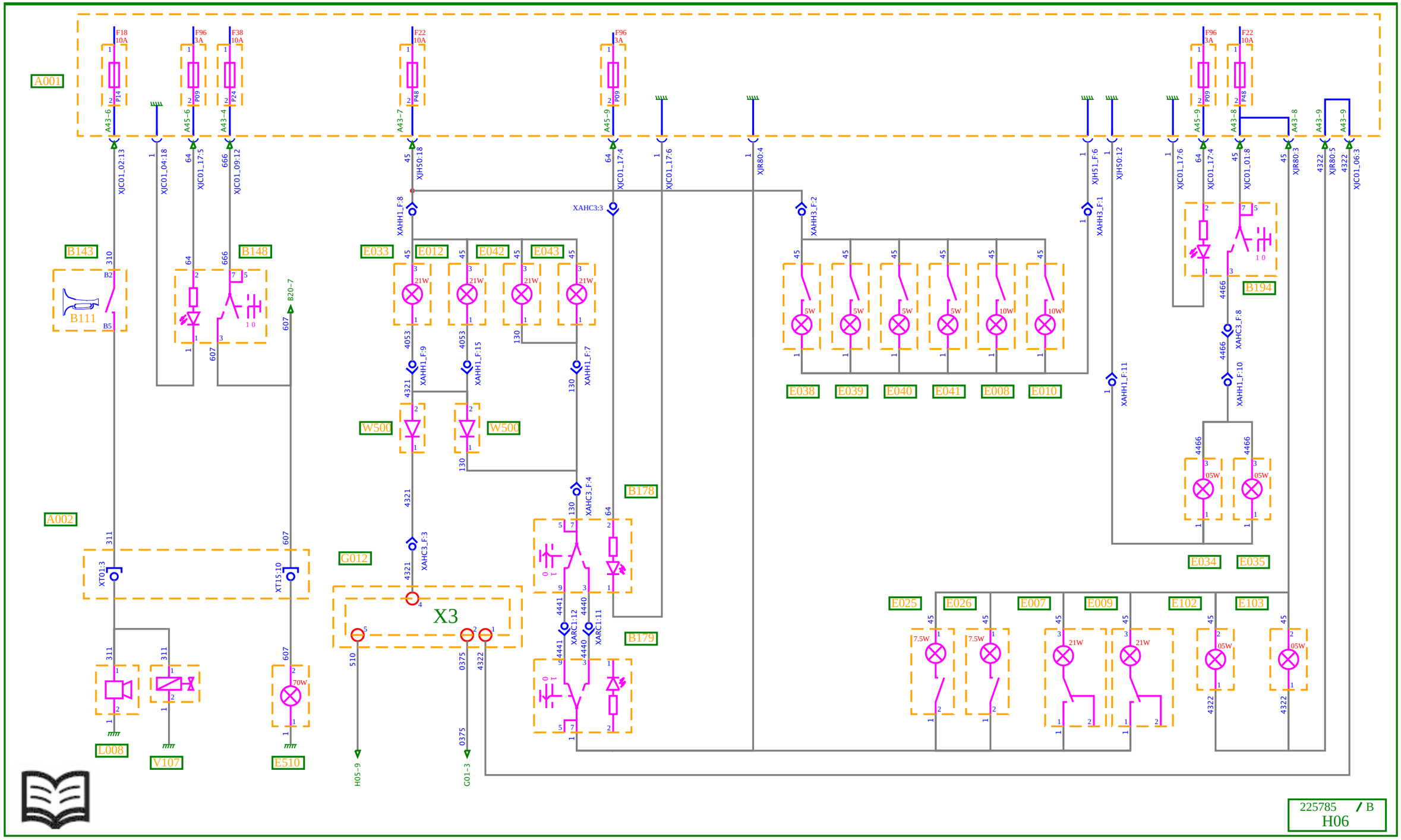
A001
F18 10A
F96 3A
F38 10A
F22 10A
F96 3A
F96 3A
F22 10A
A43-6
A45-6
A43-4
A43-7
A45-9
A45-9
A43-8
A43-8
A43-9
A43-9
XJC01_02:13
XJC01_04:18
XJC01_17:5
XJC01_09:12
XJH50:18
XJC01_17:4
XJC01_17:6
XJR80:4
XJH51_F:6
XJH50:12
XJC01_17:6
XJC01_17:4
XJC01_01:8
XJR80:3
4322
XJR80:5
4322
XJC01_06:3
B143
B111
B148
B194
XAHH1_F:8
XAHC3:3
XAHH3_F:2
XAHH3_F:1
E033
E012
E042
E043
E038
E039
E040
E041
E008
E010
XAHH1_F:9
XAHH1_F:15
XAHH1_F:7
XAHH1_F:11
XAHC3_F:8
XAHH1_F:10
W500
W500
B178
B179
A002
XAHC3_F:4
XAHC3_F:3
XT01:3
XT15:10
G012
X3
XARC1:12
XARC1:11
E034
E035
E025
E026
E007
E009
E102
E103
L008
V107
E510
H05-9
G01-3
225785 / B
H06

Lighting and signalling management (3/3)

Key to appliances

Code	Function	Location
A001	Cab electrical distribution box	B2c
A002	Chassis-cab connection box	B2c
B111	Horn control	C2b
B143	Steering wheel fingertip controls N° 1	C2b
B148	Working lights control	C2b
B178	Cab interior lighting control (on dashboard)	C2b
B179	Cab interior lighting control (in cab)	B4b
B194	Overhead lighting control (ambience)	C2b
E007	Bunk lower RH overhead light	C4c
E008	Driver's side single overhead light	C2a
E009	Bunk lower LH overhead light	C4c
E010	Front passenger's side single overhead light	A2a
E012	RH upper overhead lighting (door)	A3a
E025	Driver's reading spotlight	C2a
E026	Front passenger's reading spotlight	A2a
E033	LH upper overhead lighting (door)	C3a
E034	LH overhead lighting (ambience)	C3a
E035	RH overhead lighting (ambience)	A3a
E038	Row 1 lighting	B2a
E039	Row 2 lighting	C2a
E040	Row 3 lighting	A2a
E041	Row 4 lighting	A2a
E042	Upper left-hand side overhead lamp lighting	C2a
E043	Upper right-hand side overhead lamp lighting	A2a
E102	Driver's side stepwell lighting	C2d
E103	Front passenger's side stepwell lighting	A2d
E510	Working spotlight	B4d
G012	Lighting and signalling management ECU	B2c
L008	Electric horn	C2d
V107	Air horn	C2d
W500	Diode(s)	B2c

Lighting and signalling management (3/3)

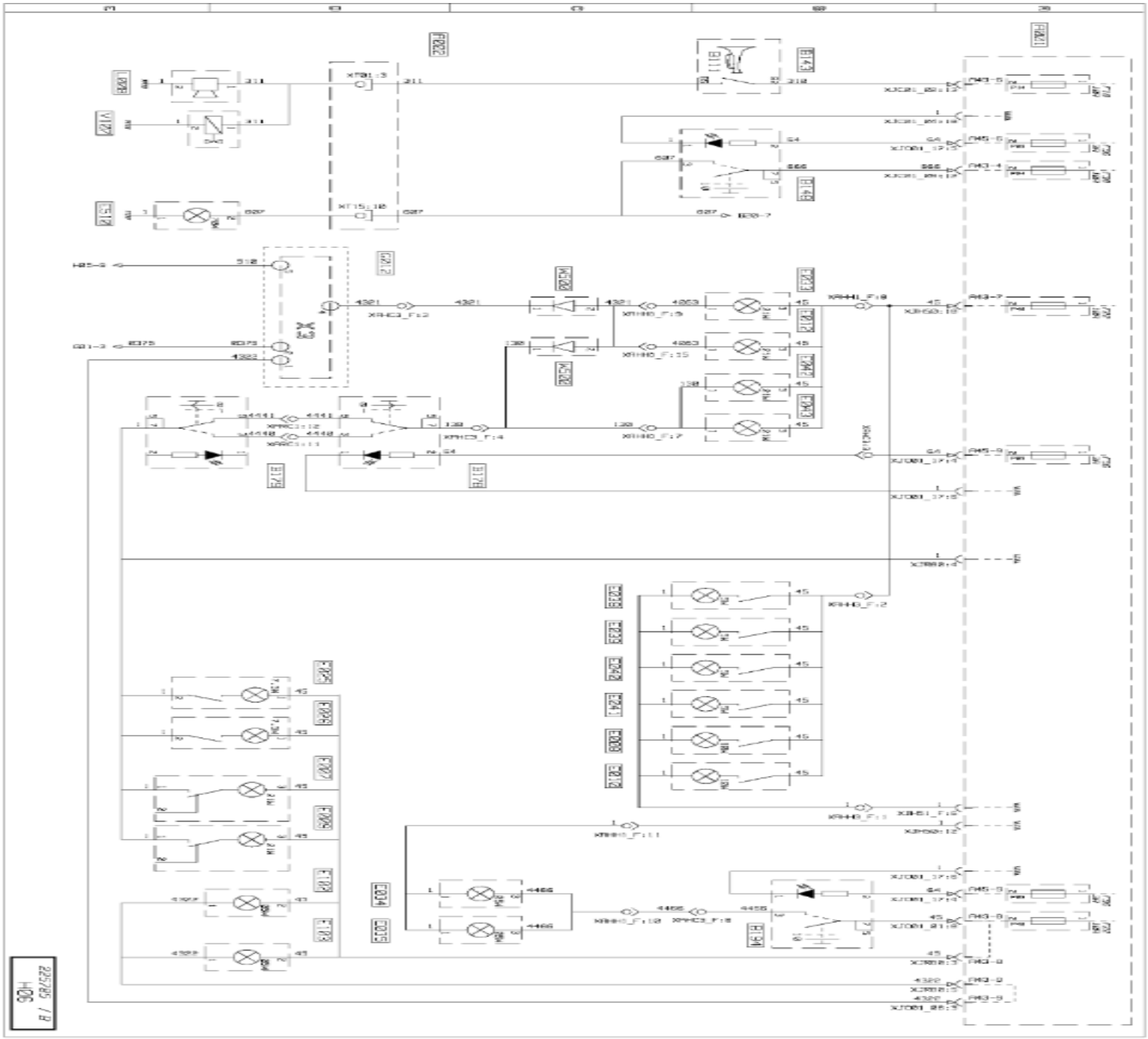

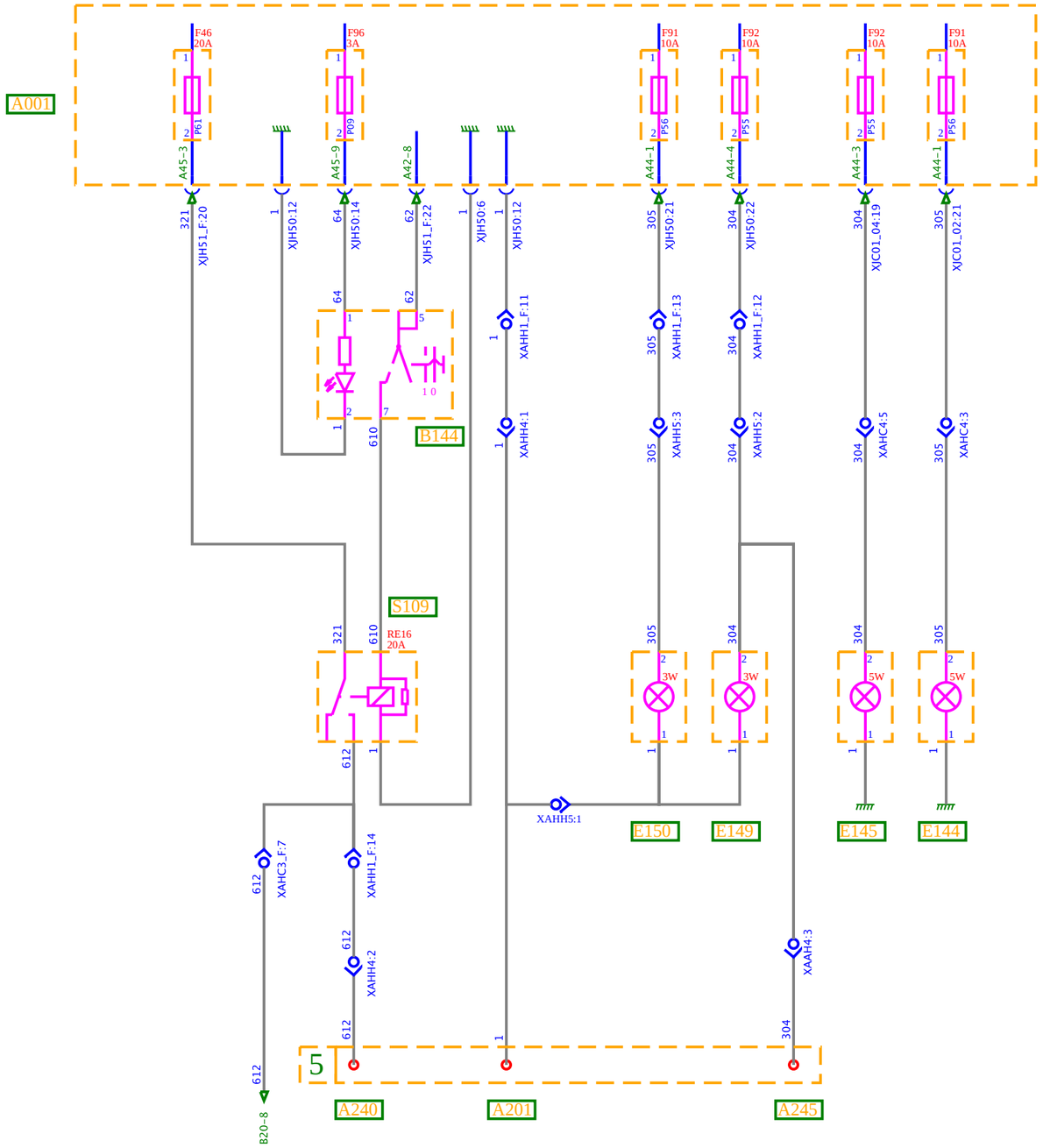
A001
F46
20A
F96
3A
F91
10A
F92
10A
F92
10A
F91
10A
P61
P09
P56
P55
P55
P56
A45-3
A45-9
A42-8
A44-1
A44-4
A44-3
A44-1
321
XJH51_F:20
XJH50:12
64
XJH50:14
62
XJH51_F:22
XJH50:6
XJH50:12
305
XJH50:21
304
XJH50:22
304
XJC01_04:19
305
XJC01_02:21
XAHH1_F:11
XAHH1_F:13
XAHH1_F:12
XAHH4:1
XAHH5:3
XAHH5:2
XAHC4:5
XAHC4:3
B144
610
S109
RE16
20A
612
XAHH5:1
3W
3W
5W
5W
E150
E149
E145
E144
XAHC3_F:7
XAHH1_F:14
XAHH4:2
XAAH4:3
5
A240
A201
A245
B20-8

225785 / B
H30

Side, marker, identification and parking lights

Key to appliances

Code	Function	Location
A001	Cab electrical distribution box	B2c
A201	Available power supply (vehicle earth)	B2a
A240	Available power supply (lighting)	B2a
A245	Available power supply (lighting and side/parking lights)	B2a
B144	Long range driving lights control	C2b
E144	Roof LH side/parking lights	C2a
E145	Roof LH side/parking lights	A2a
E149	Anti-glare strip-mounted LH marker lights	C2a
E150	Anti-glare strip-mounted RH marker lights	A2a
S109	Long range driving lights power supply relay	B2c

Side, marker, identification and parking lights

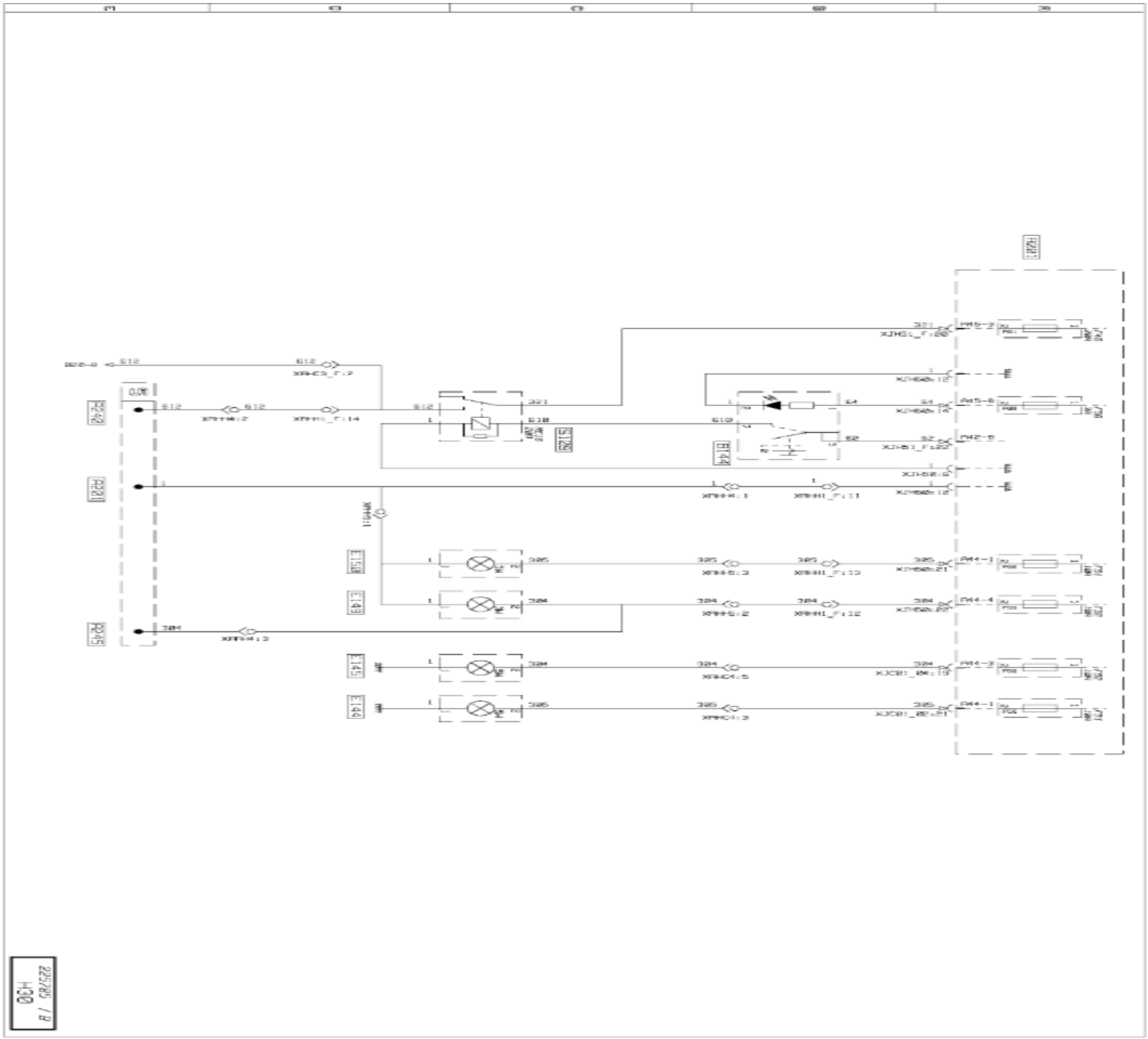
H90
22/25 / 8

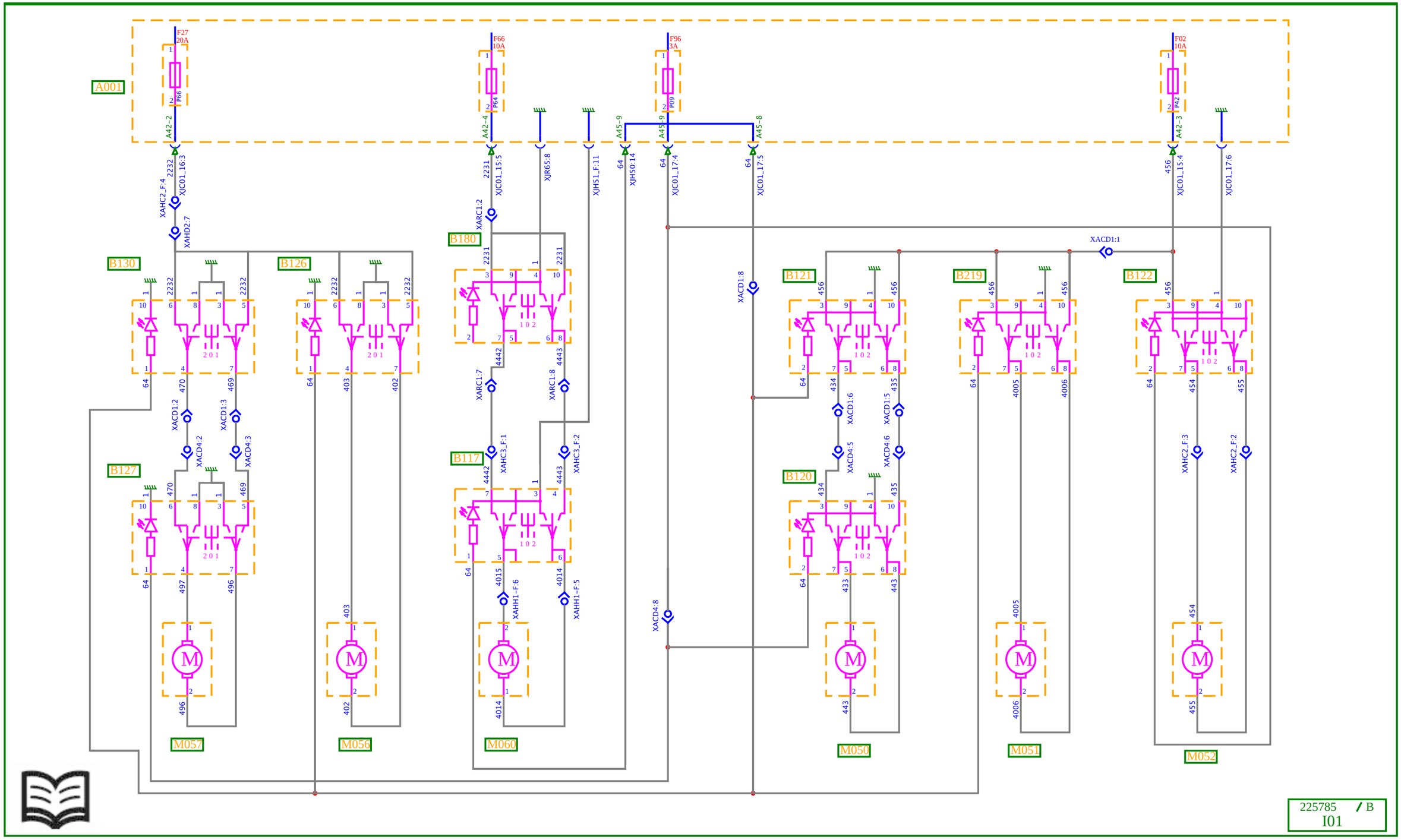
A001
F27
20A
F66
10A
F96
3A
F02
10A
B130
B126
B180
B121
B219
B122
B127
B117
B120
M057
M056
M060
M050
M051
M052
XACD1:1
225785 / B
I01

Electric window winder, sun-roof

Key to appliances

Code	Function	Location
A001	Cab electrical distribution box	B2c
B117	Sun-roof opening / closing control (on dashboard)	B2b
B120	Passenger's electric curtain motor control (passenger side)	A3c
B121	Passenger's electric curtain motor control (driver side)	C3c
B122	Front curtain motor control (driver side)	C3c
B126	Driver's window winder motor control (driver side)	C2b
B127	Front passenger window winder motor control (front passenger side)	A2b
B130	Front passenger window winder motor control (driver side)	C2b
B180	Sun-roof opening / closing control (on cab rear control console)	B4b
B219	Driver’s side electric curtain motor control	C3c
M050	Front passenger's sun visor motor	A3a
M051	Driver's sun visor motor	C3a
M052	Front sun visor motor	C3a
M056	Driver's door window winder motor	C3c
M057	Front passenger's door window winder motor	A3c
M060	Electric roof air vent motor	B3a

Electric window winder, sun-roof

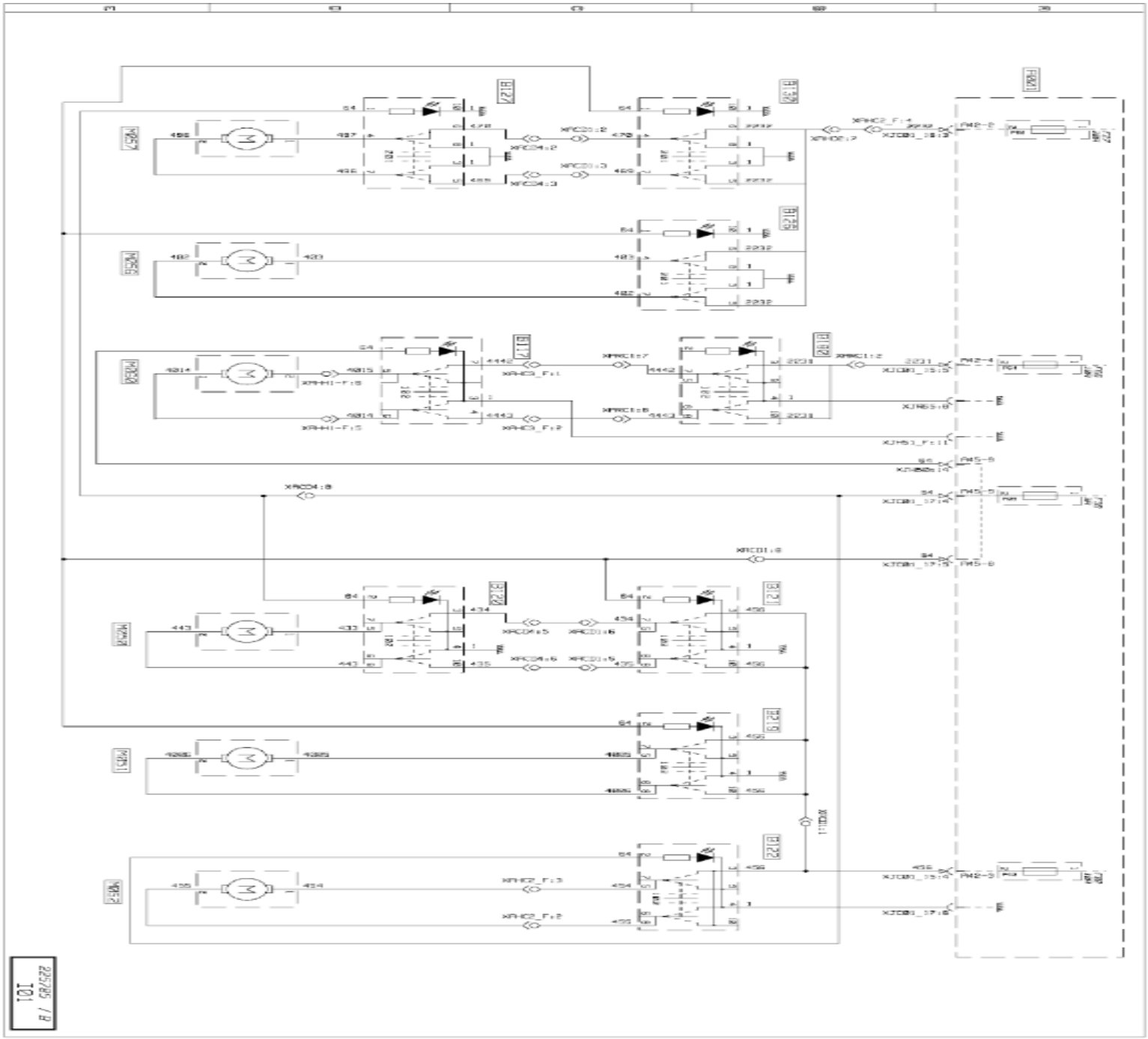
B127
B128
B129
B130
B131
B132
B133
B134
B135
B136
M257
M258
M259
M260
M261
M262
F42
F43
F44
F45
F46
F47
F48
F49
F50
F51
F52
F53
F54
F55
F56
F57
F58
F59
F60
F61
F62
F63
F64
F65
F66
F67
F68
F69
F70
F71
F72
F73
F74
F75
F76
F77
F78
F79
F80
F81

https://truckmanualshub.com/

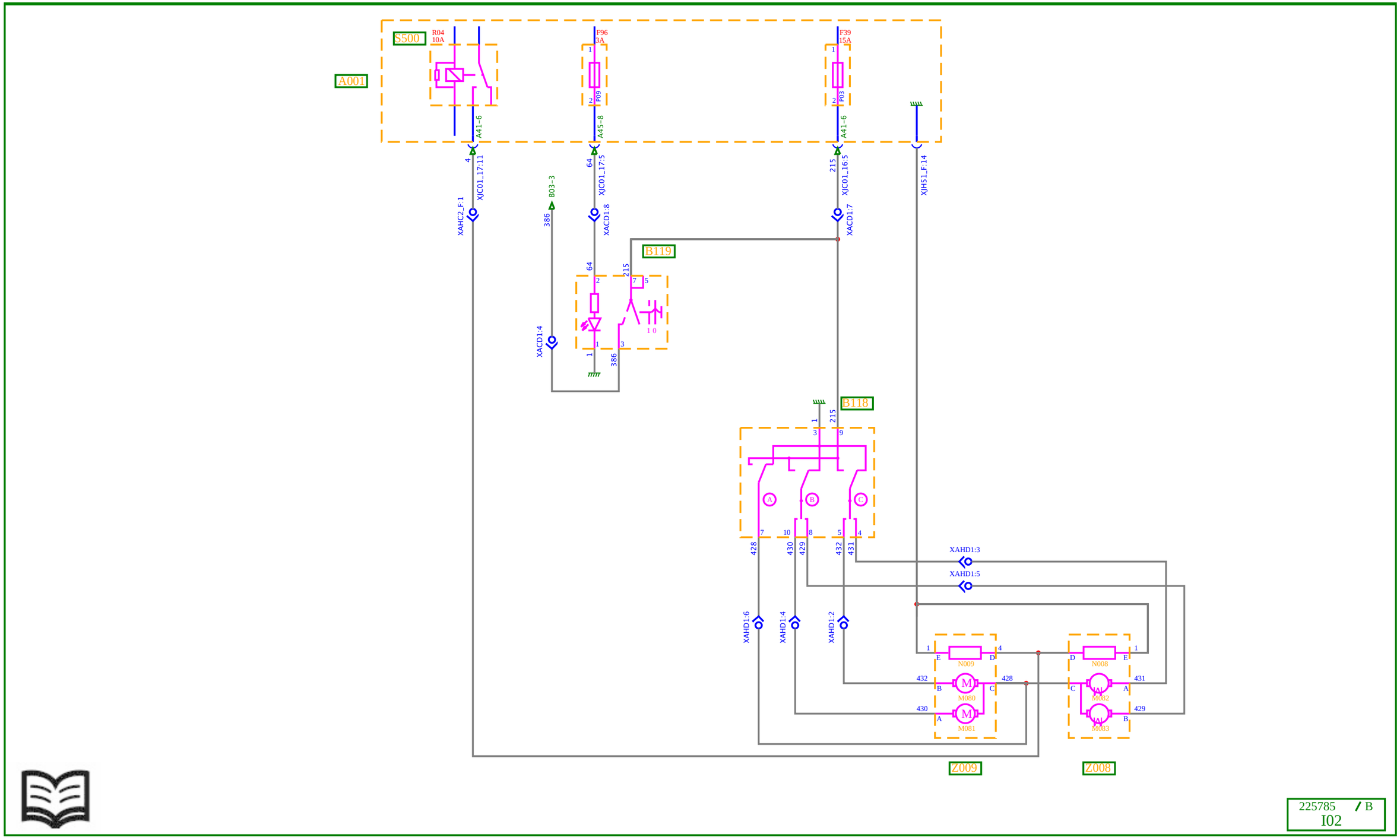

225785 / B
I02

Swivelling defrosting rearview mirrors

Key to appliances

Code	Function	Location
A001	Cab electrical distribution box	B2c
B118	Swivelling rearview mirrors and alarm siren adjustment control	C2b
B119	Rearview mirrors and windscreen defrosting control	C2b
M080	RH rearview mirror horizontal swivelling motor	A2a
M081	RH rearview mirror vertical swivelling motor	A2a
M082	LH rearview mirror horizontal swivelling motor	C2a
M083	LH rearview mirror vertical swivelling motor	C2a
N008	LH defrosting rearview mirror resistor	C2a
N009	RH defrosting rearview mirror resistor	A2a
S500	Heated and swivelling rearview mirror power supply relay	B2c
Z008	Driver's swivelling defrosting rearview mirror	C2a
Z009	Passenger's swivelling defrosting rearview mirror	A2a

Swivelling defrosting rearview mirrors

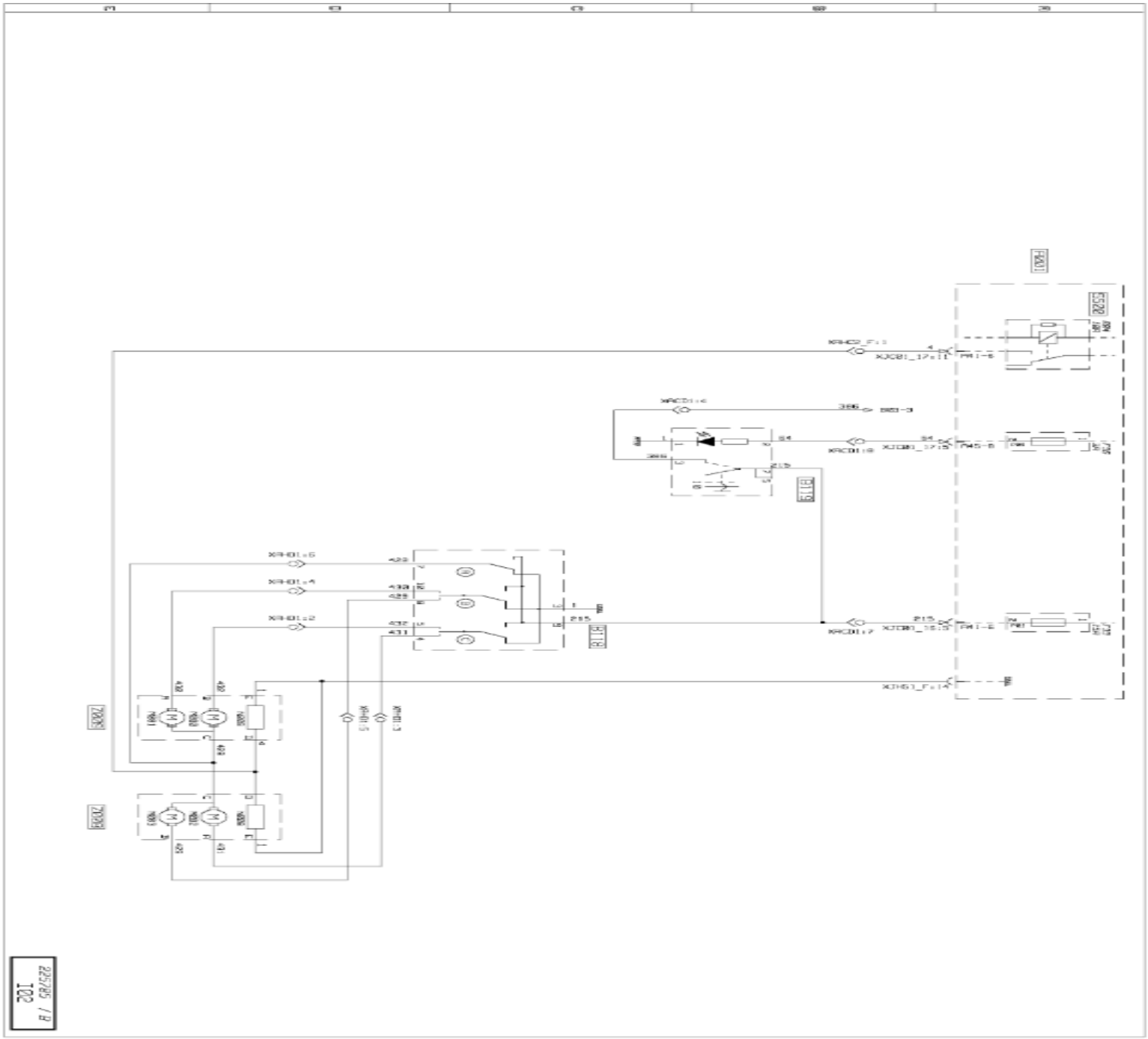
PA1
E528
B16
R18
E807
E808
XHO1:5
XHO1:3
XHS1_F:4
XACD1:7
XACD1:9
XACD1:4
XACD1:2
XACD1:6
XACD1:4
XACD1:2
XACD1:1
XACD1:3
XACD1:5
XACD1:7
XACD1:9
XACD1:11
XACD1:13
XACD1:15
XACD1:17
XACD1:19
XACD1:21
XACD1:23
XACD1:25
XACD1:27
XACD1:29
XACD1:31
XACD1:33
XACD1:35
XACD1:37
XACD1:39
XACD1:41
XACD1:43
XACD1:45
XACD1:47
XACD1:49
XACD1:51
XACD1:53
XACD1:55
XACD1:57
XACD1:59
XACD1:61
XACD1:63
XACD1:65
XACD1:67
XACD1:69
XACD1:71
XACD1:73
XACD1:75
XACD1:77
XACD1:79

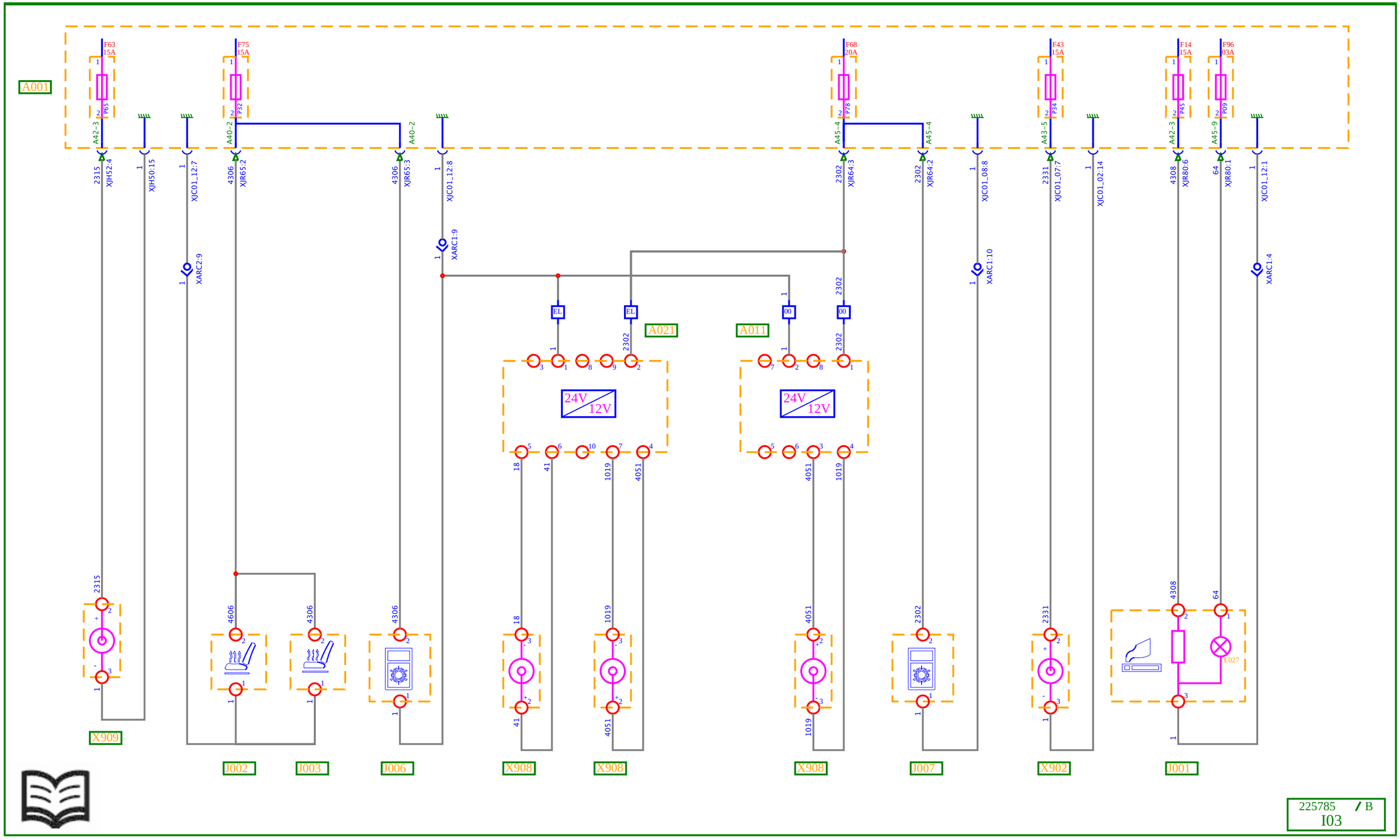
A001
F63
15A
F65
F75
15A
F32
F68
20A
F78
F43
15A
F34
F14
15A
F45
F96
03A
F09
A42-3
A40-2
A45-4
A43-5
2315
XJH52:4
XJH50:15
XJC01_12:7
XARC2:9
4306
XJR65:2
XJR65:3
XJC01_12:8
XARC1:9
2302
XJR64:3
XJR64:2
XJC01_08:8
XARC1:10
2331
XJC01_07:7
XJC01_02:14
4308
XJR80:6
64
XJR80:1
XJC01_12:1
XARC1:4
EL
00
A021
A011
24V
12V
18
41
1019
4051
4606
E027
X909
J002
J003
J006
X908
J007
X902
J001
225785 / B
I03

Comfort accessories

Key to appliances

Code	Function	Location
A001	**Cab electrical distribution box**	**B2c**
A011	**Voltage converter (24V / 12V) for information technology pack**	**C4c**
A021	**Voltage converter (24 / 12V - 15A)**	**C4c**
E027	**Cigar lighter light**	**B2b**
J001	**Cigar lighter**	**B2b**
J002	**RH heated seat unit**	**A3b**
J003	**LH heated seat unit**	**C3b**
J006	**Refrigerated compartment**	**B3c**
J007	**Refrigerator**	**B3c**
X902	**24 Volts power supply socket**	**B2b**
X908	**12 Volts power supply socket**	**B2b**
X909	**Extra 24 Volts power supply socket**	**B2a**

EL: with **MULTIPASS**
00: other cases of use

Comfort accessories

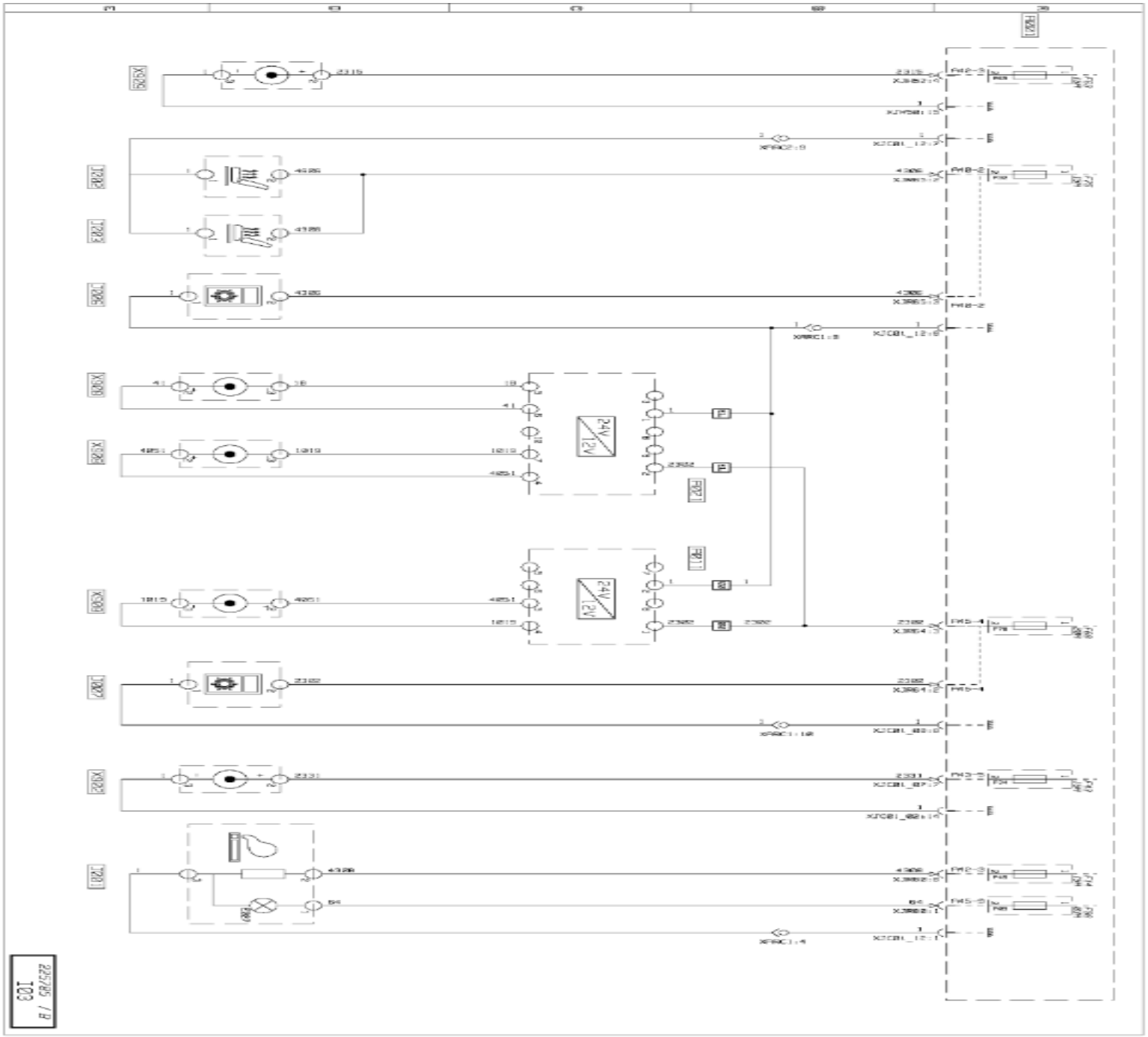
24V
12V
22/25 / B
103

https://truckmanualshub.com/

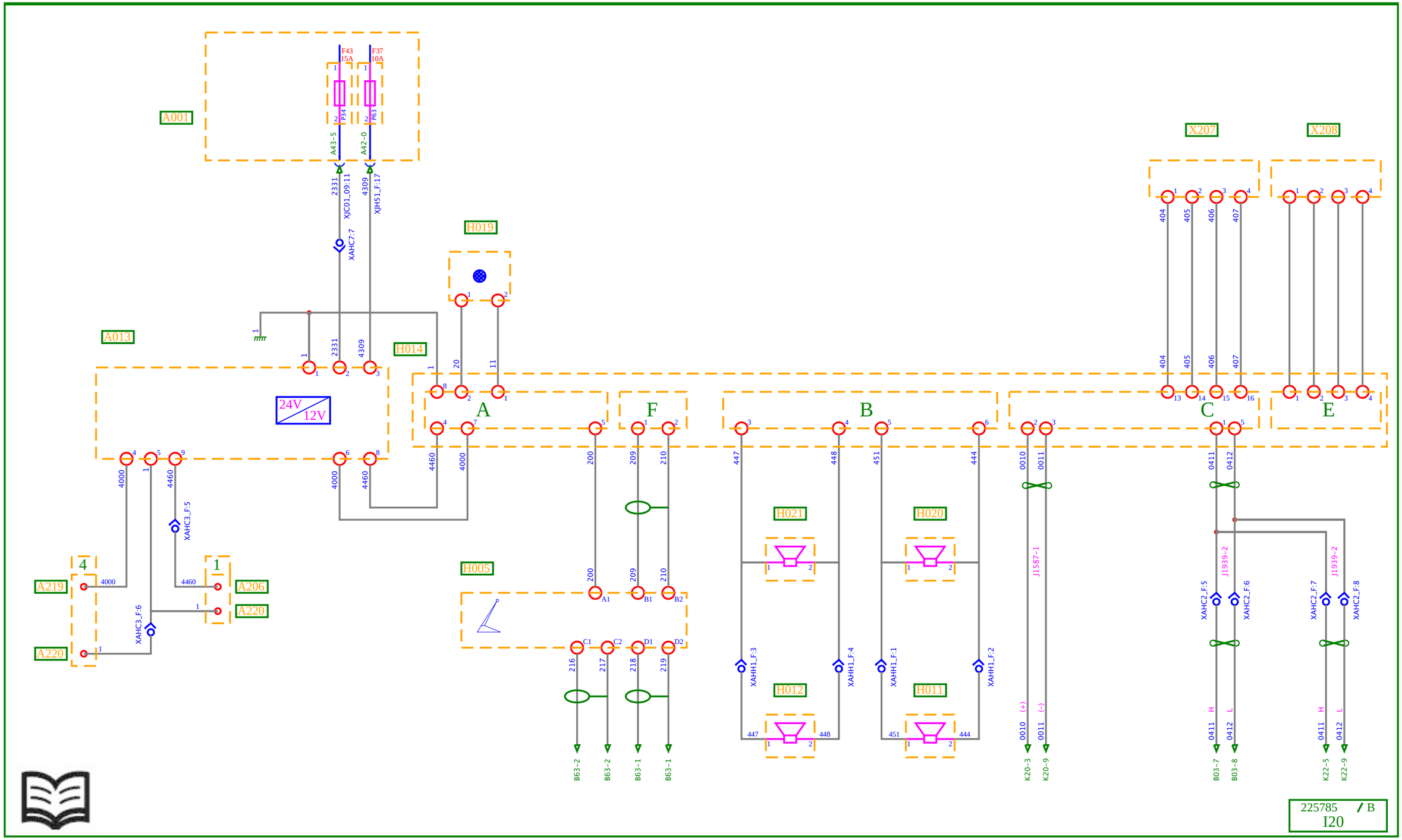

Radio

Key to appliances

Code	Function	Location
A001	Cab electrical distribution box	B2c
A013	Voltage converter (24V / 12V - 15A) for audio communication system	B2a
A206	Available power supply (CB +)	C2a
A219	Available power supply (radio-telephone +)	B2b
A220	Available power supply (radio-telephone -)	B2b
H005	GPS satellite antenna	C2a
H011	LH front loudspeaker	C2a
H012	RH front loudspeaker	A2a
H014	Radio set	C2a
H019	Microphone	C2a
H020	Sharp loudspeaker, LH side	C2a
H021	Sharp loudspeaker, RH side	A2a
X207	Audio auxiliary connector	C2a
X208	Audio USB connector	C2a

Radio

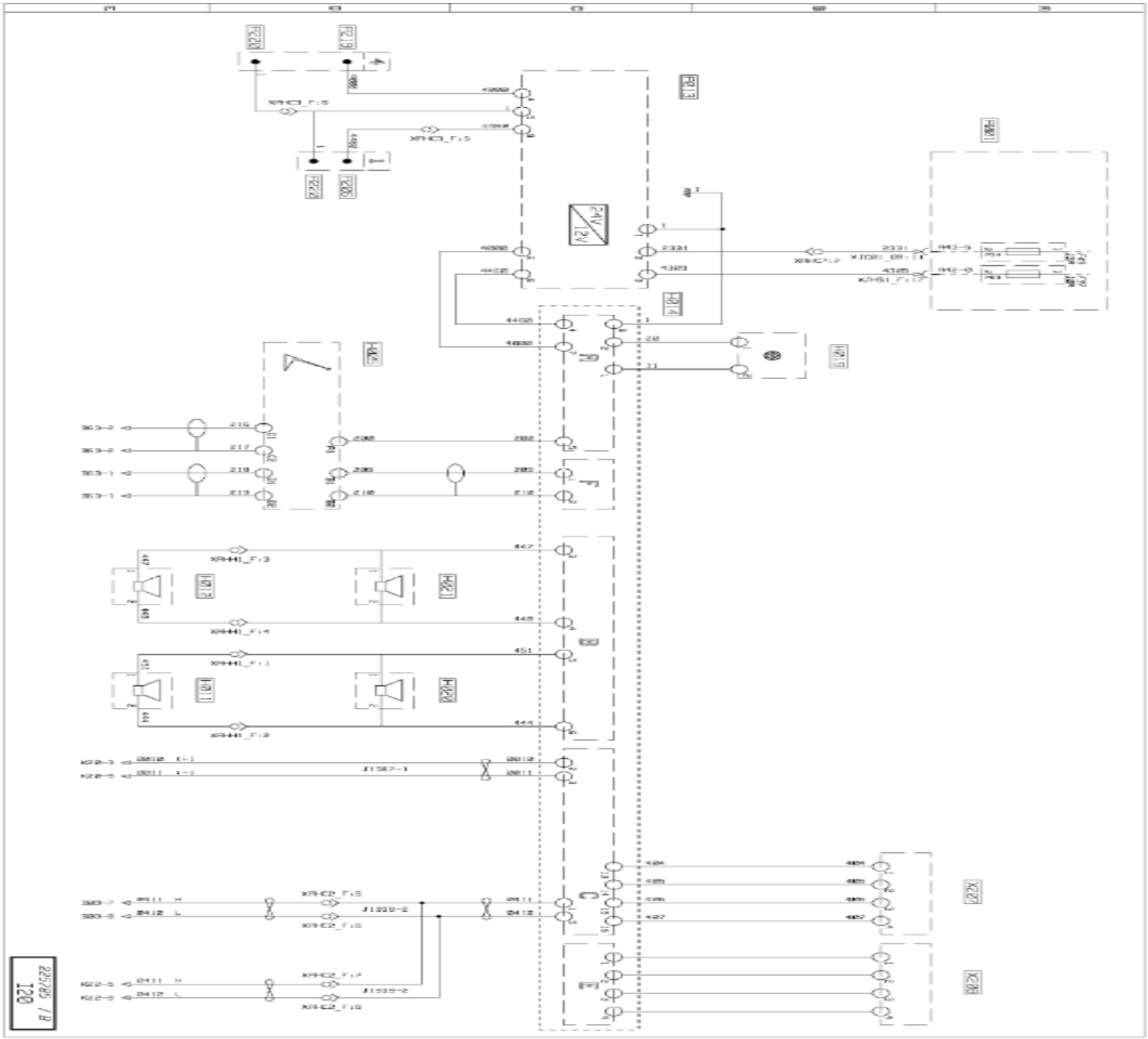
24V
12V
H214
H215
H202
H212
H211
H221
H220
X27
X28
22/25/28 / B
120

https://truckmanualshub.com/

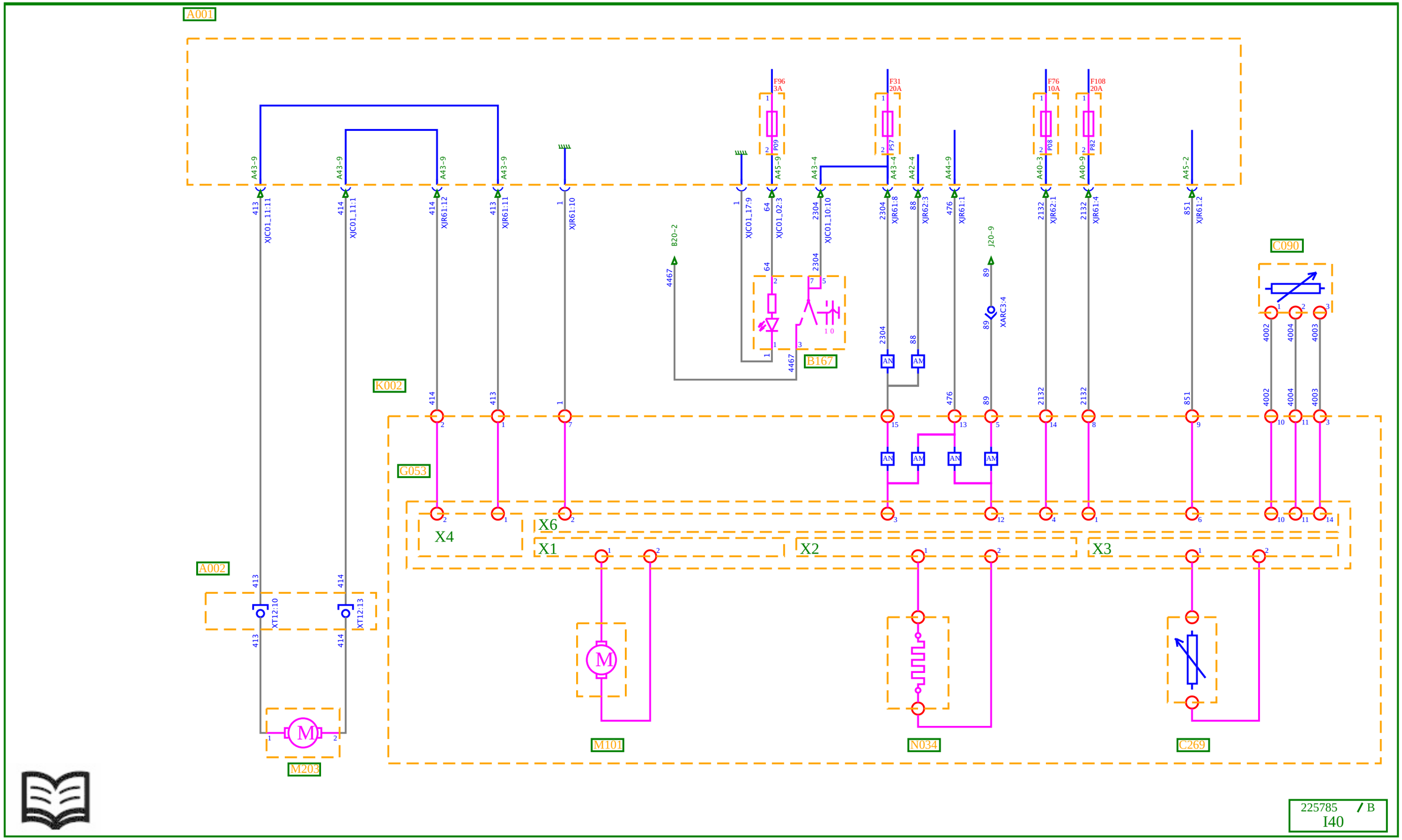

Independent (add-on) heating AT2000 ST

Key to appliances

Code	Function	Location
A001	**Cab electrical distribution box**	**B2c**
A002	**Chassis-cab connection box**	**B2c**
B167	**Cab add-on heater control**	**C3a**
C090	**Add-on heater temperature sensor**	**B4b**
C269	**Temperature sensor on the autonomous heating system**	**B2b**
G053	**Air/air autonomous heating ECU**	**B2b**
K002	**Air/air add-on heater**	**B2b**
M101	**Add-on heater fan motor**	**B2b**
M203	**Add-on heater fuel pump motor**	**C4d**
N034	**Autonomous heating system heating element**	**B2b**

AM: with ADR equipment
AN: without ADR equipment

Independent (add-on) heating AT2000 ST

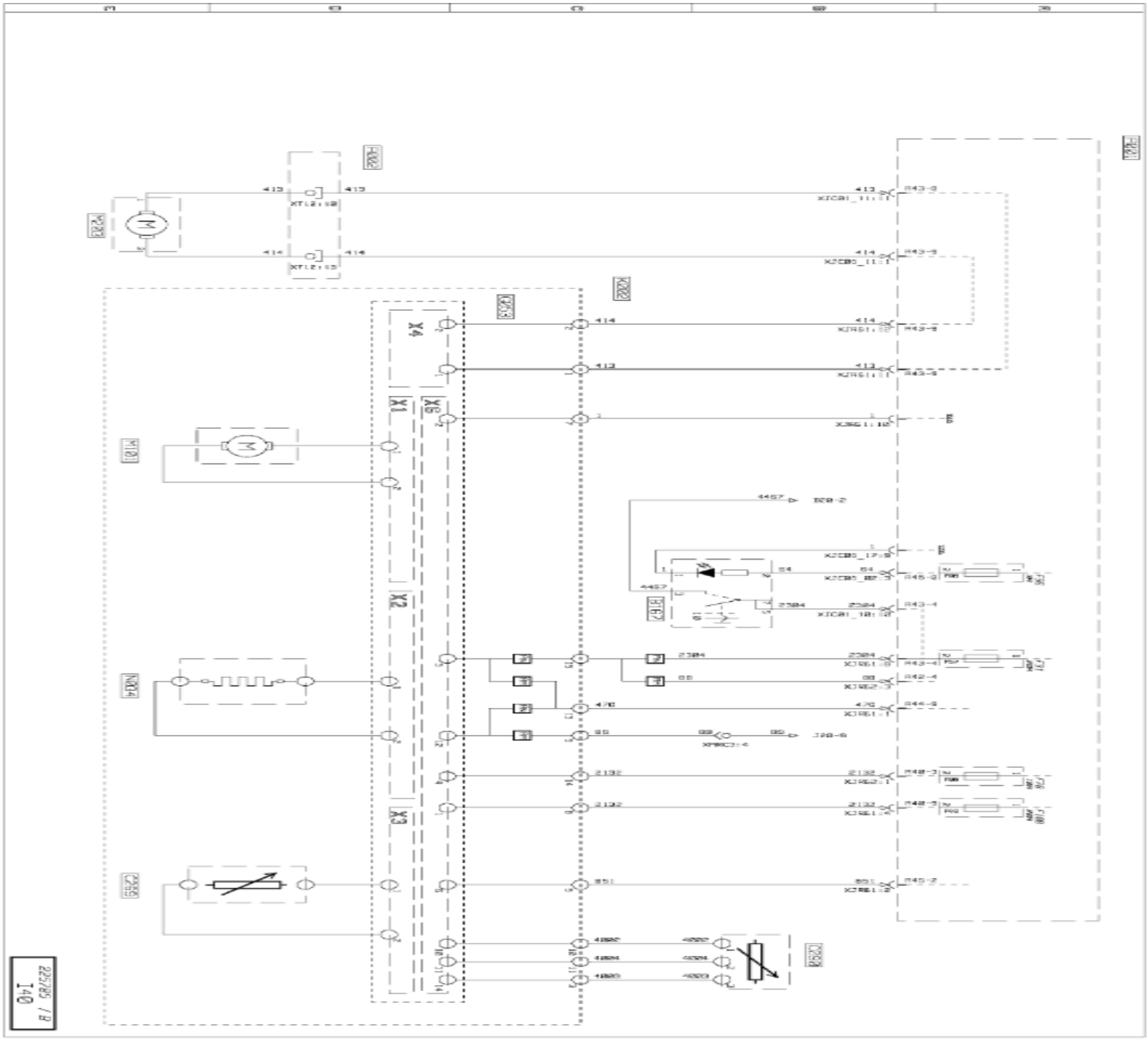
X1
X2
X3
X4
X6
K10
K23
K24
K25
K26
K27
K28
K29
K30
K31
K32
K33
K34
K35
K36
K37
K38
K39
K40
K41
K42
K43
K44
K45
K46
K47
K48
K49
K50
K51
K52
K53
K54
K55
K56
K57
K58
K59
K60
K61
K62
K63
K64
K65
K66
K67
K68
K69
K70
K71
K72
K73
K74
K75
K76
K77
K78
K79
K80
K81
K82
K83
K84
K85
K86
K87
K88
K89
K90
K91
K92
K93
K94
K95
K96
K97
K98
K99
K100
K101
K102
K103
K104
K105
K106
K107
K108
K109
K110
K111
K112
K113
K114
K115
K116
K117
K118
K119
K120
K121
K122
K123
K124
K125
K126
K127
K128
K129
K130
K131
K132
K133
K134
K135
K136
K137
K138
K139
K140
22C285 / B

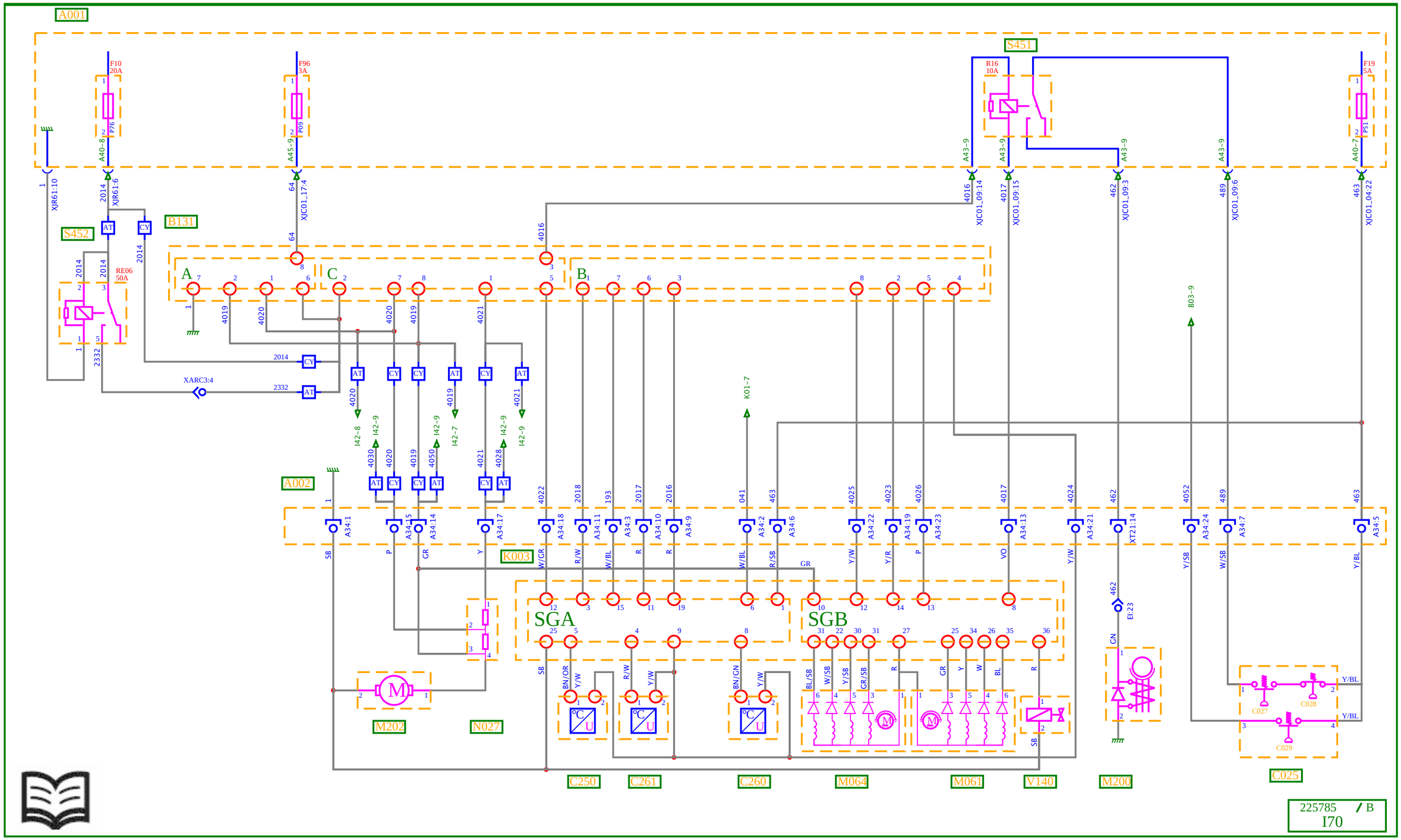
A001
S451
S452
B131
A002
K003
SGA
SGB
M202
N027
C250
C261
C260
M064
M061
V140
M200
C025
F10
20A
F96
3A
R16
10A
F19
5A
RE06
50A
XARC3:4
225785 / B
I70

Air conditioning

Key to appliances

Code	Function	Location
A001	**Cab electrical distribution box**	**B2c**
A002	**Chassis-cab connection box**	**B2c**
B131	**Air conditioner control**	**B2b**
C025	**3-level air conditioning pressure sensor**	**B2b**
C027	**Low level air conditioning pressure sensor**	**B2b**
C028	**High level air conditioning pressure sensor**	**B2b**
C029	**Intermediate level air conditioning pressure sensor**	**B2b**
C250	**Blown air temperature sensor**	**B2b**
C260	**Evaporator temperature sensor**	**B2b**
C261	**Air conditioning outside air temperature sensor**	**B2b**
K003	**Air conditioning ECU**	**B2b**
M061	**Air recycling motor**	**B2b**
M064	**Air mixing flap motor**	**B2b**
M200	**Air conditioning compressor electric clutch**	**B3d**
M202	**Driving position fan-coil heater motor**	**B2b**
N027	**Fan/coil heater pilot-control resistors assembly**	**B2b**
S451	**Air conditioning compressor clutch power supply relay**	**B3c**
S452	**Air conditioning fan piloting relay**	**B2c**
V140	**Cab heating engine coolant circuit by-pass solenoid valve**	**B2b**

AT: With air / water independent heating
CY: Without air / water independent heating

Air conditioning

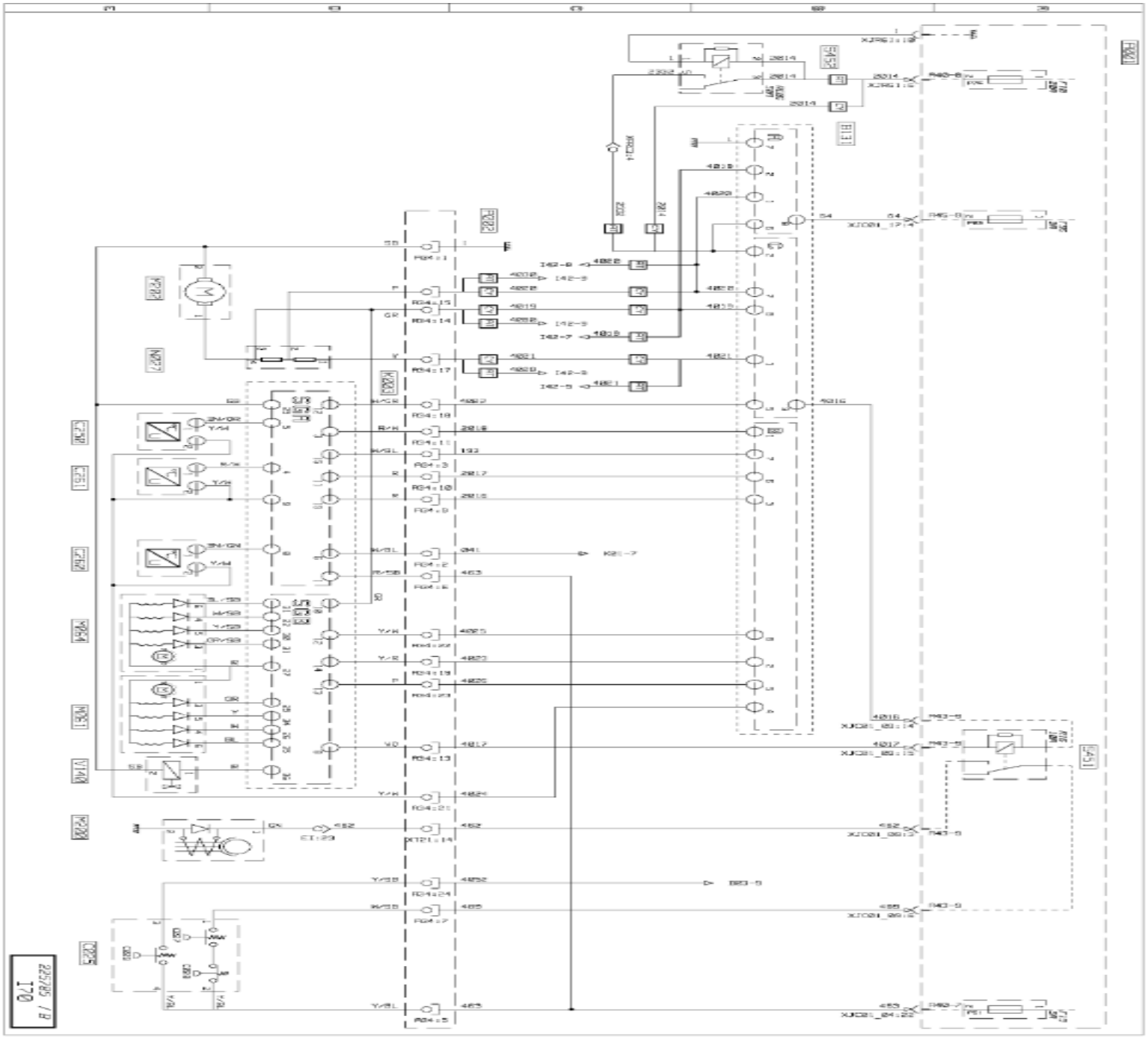

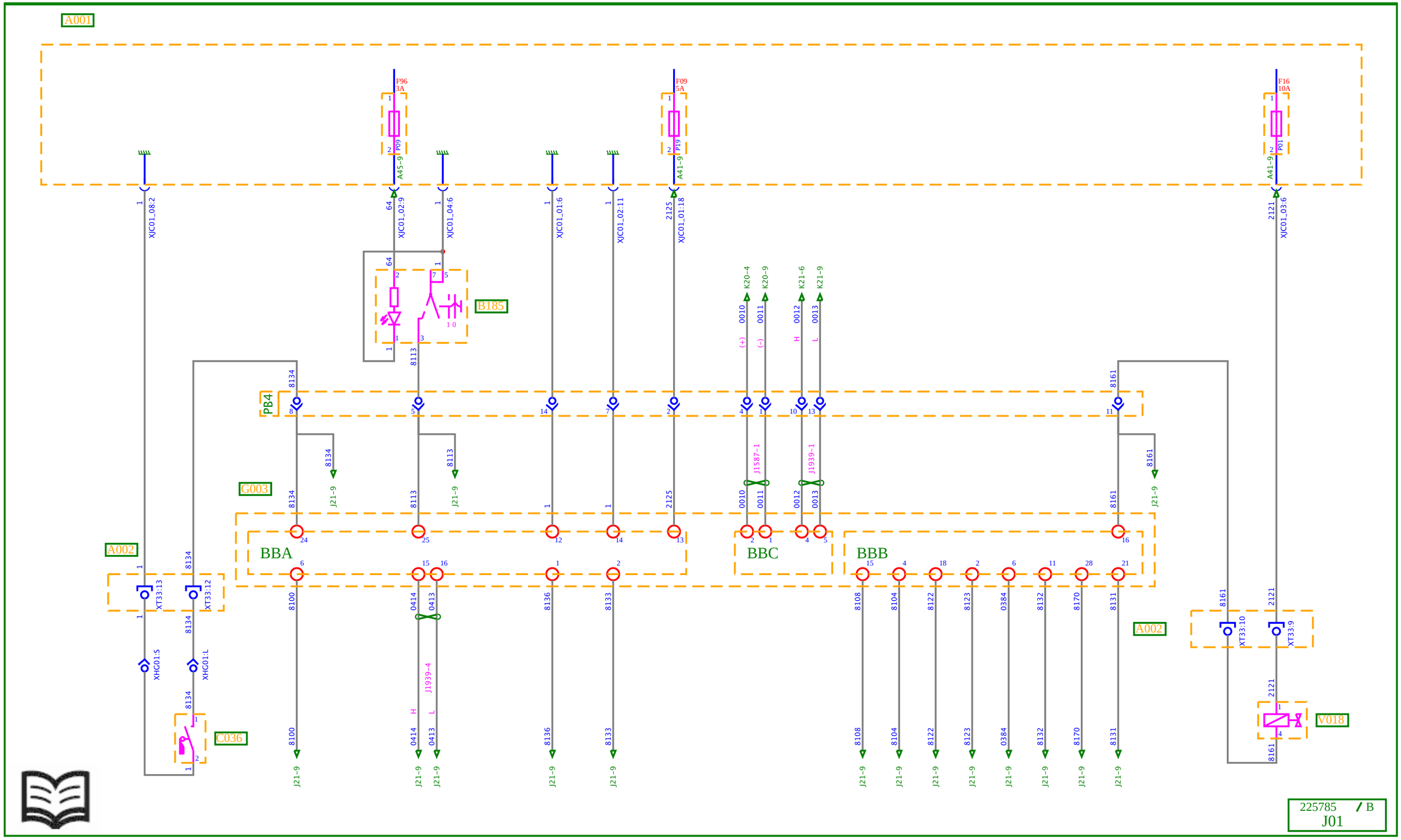
A001
F96
3A
F09
5A
F16
10A
A45-9
A41-9
XJC01_08:2
XJC01_02:9
XJC01_04:6
XJC01_01:6
XJC01_02:11
XJC01_01:18
XJC01_03:6
B185
K20-4
K20-9
K21-6
K21-9
PB4
J1587-1
J1939-1
G003
BBA
BBC
BBB
A002
XT33:13
XT33:12
XHG01:S
XHG01:L
C036
XT33:10
XT33:9
V018
J21-9
J1939-4
225785 / B
J01

Bodybuilder pre-arrangement management

Key to appliances

Code	Function	Location
A001	**Cab electrical distribution box**	**B2c**
A002	**Chassis-cab connection box**	**B2c**
B185	**PTO 2 engagement request control (in cab)**	**C2c**
C036	**PTO 2 engaged position information sensor**	**B4d**
G003	**Bodybuilder pre-arrangement management ECU**	**B2b**
V018	**PTO engagement electrovalve N° 2**	**B4d**

Bodybuilder pre-arrangement management

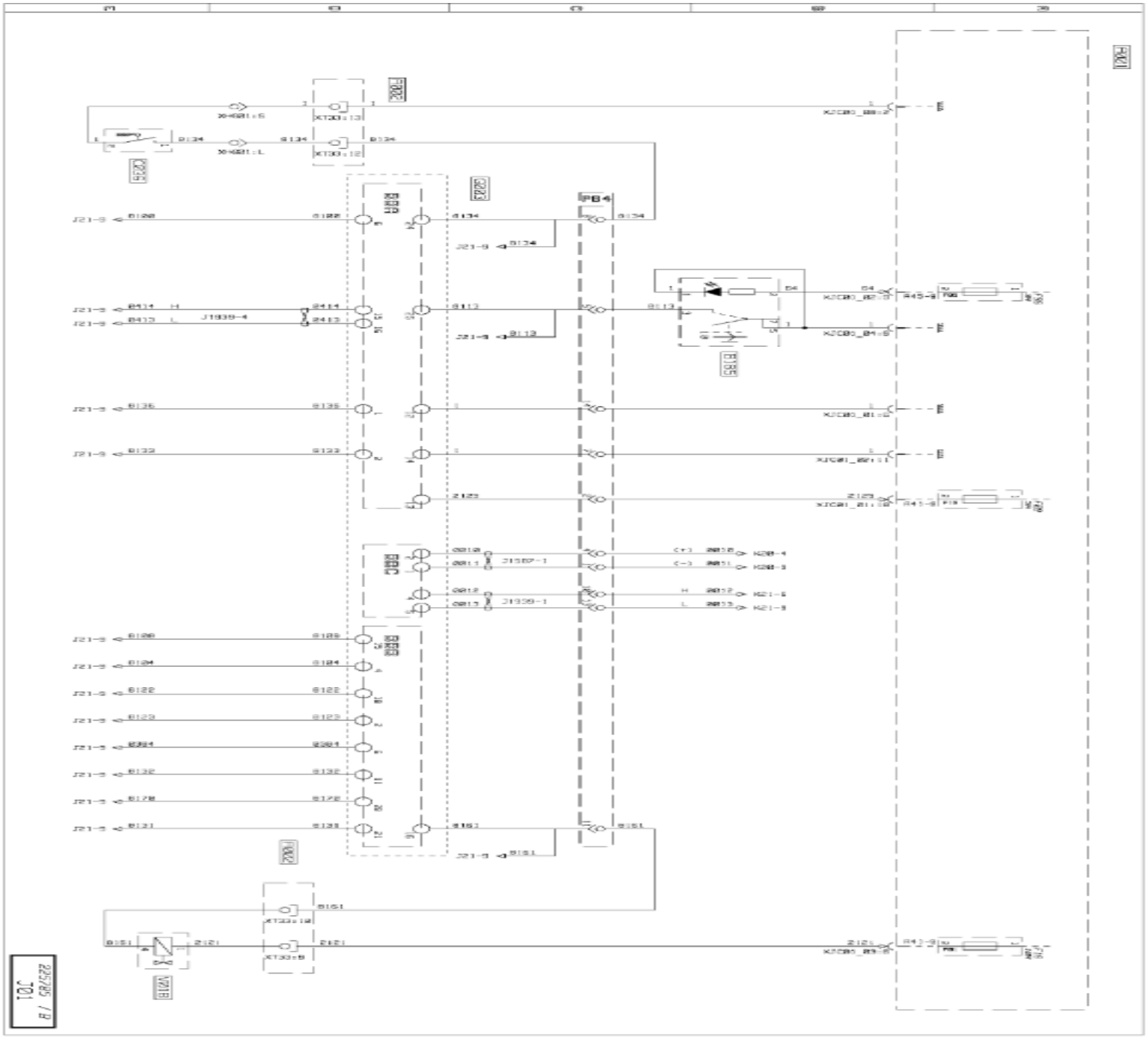

https://truckmanualshub.com/

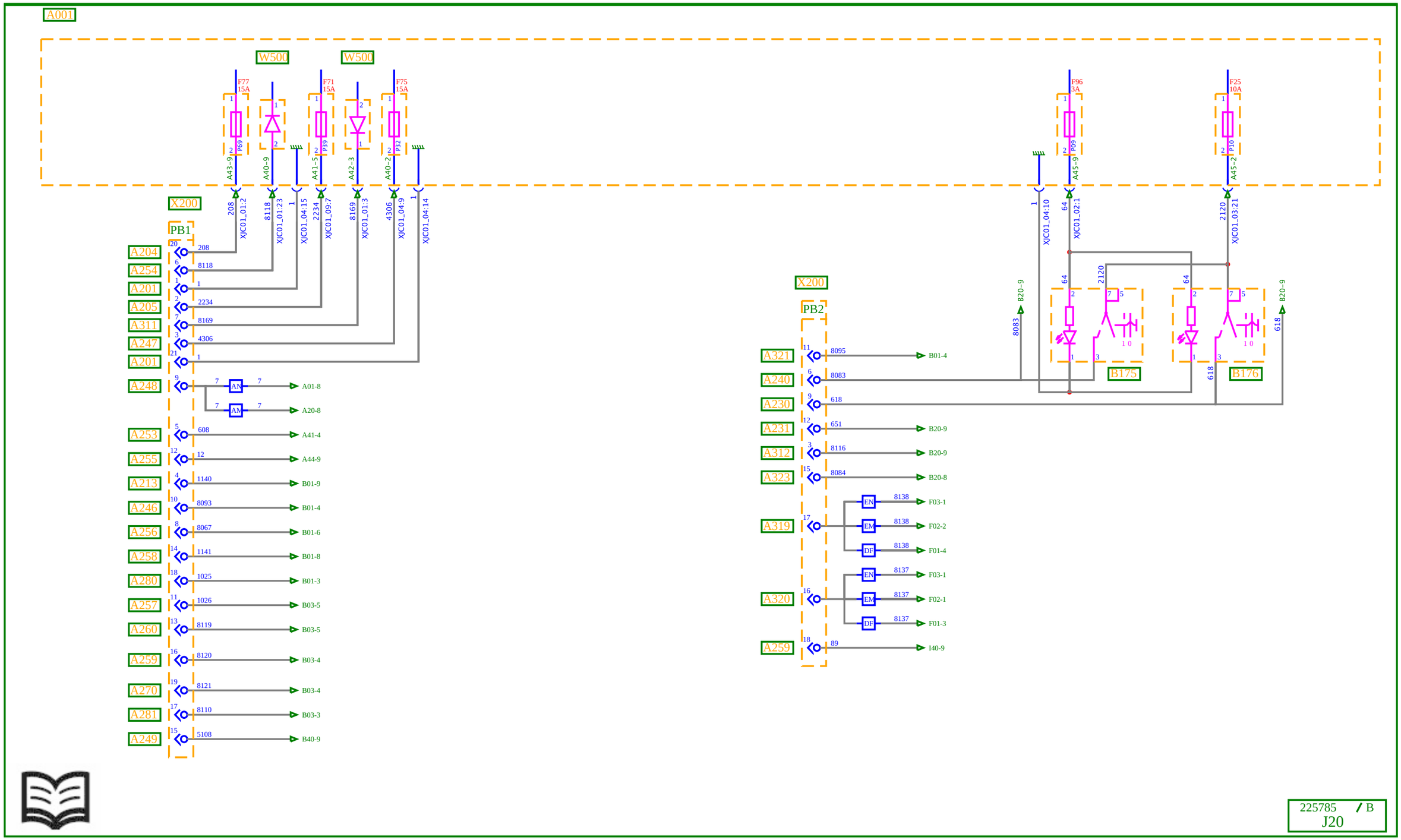

Available power supplies (1/2)

Key to appliances

Code	Function	Location
A001	Cab electrical distribution box	B2c
A201	Available power supply (vehicle earth)	B2c / C5d
A204	Available power supply (after master switch)	B2c / C5d
A205	Available power supply (after ignition)	C5d
A213	Available power supply (PTO N°1)	B2c
A230	Available power supply (equipment in "road" position warning pictogram)	B2c
A231	Available power supply (equipment in "working" position warning pictogram)	B2c
A240	Available power supply (lighting)	B2c
A246	Available power supply (PTO N°1 control)	B2c
A247	Available power supply (alternator information, engine running)	B2c
A248	Available power supply (alternator information, engine speed)	B2c
A249	Available power supply (tachograph corrected speed information)	B2c
A253	Available power supply (reversing information)	B2c
A254	Available power supply (parking brake information)	B2c
A255	Available power supply (gearbox neutral information)	B2c
A256	Available power supply (chassis-mounted engine speed control actuation demand)	B2c
A257	Available power supply (selection of engine speed N°1)	B2c
A258	Available power supply (selection of engine speed N°2)	B2c
A259	Available power supply (engine speed acceleration demand)	B2c
A260	Available power supply (engine speed deceleration demand)	B2c
A270	Available power supply (main engine speed automatic return)	B2c
A280	Available power supply (low speed)	B2c
A281	Available power supply (engine stop control)	B2c
A311	Available power supply (PTO 1 engaged information)	B2c
A312	Available power supply (equipment in dangerous position)	B2c
A319	Available power supply (suspension level control)	B2c
A320	Available power supply (suspension level actuation control)	B2c
A321	Available power supply (6 km/h limitation)	B2c
A323	Available power supply (alarm stop)	B2c

B175	**Pre-arrangement for bodybuilder N° 1 control**	**C2b**
B176	**Pre-arrangement for bodybuilder N° 2 control**	**C2b**
W500	**Diode(s)**	**B2c**
X200	**Available power supplies connector**	**B2c**

AM: with ADR equipment
AN: without ADR equipment
DF: with electronic air suspension tractor vehicle **4x2**
EM: with **4x2 - 6x2** vehicle rear electronic air suspension
EN: with **4x2 - 6x2** vehicle integral electronic air suspension

Available power supplies (1/2)

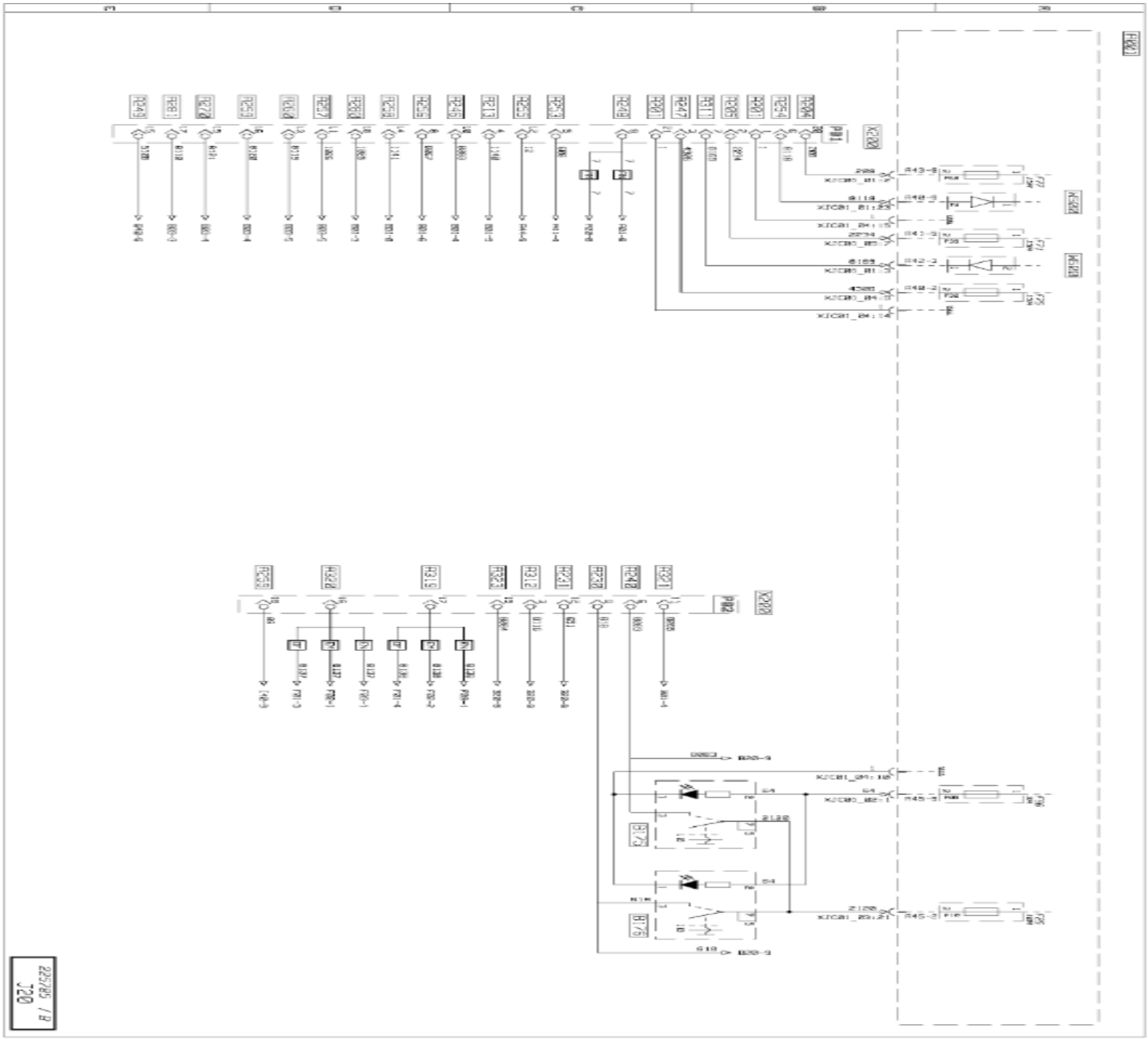

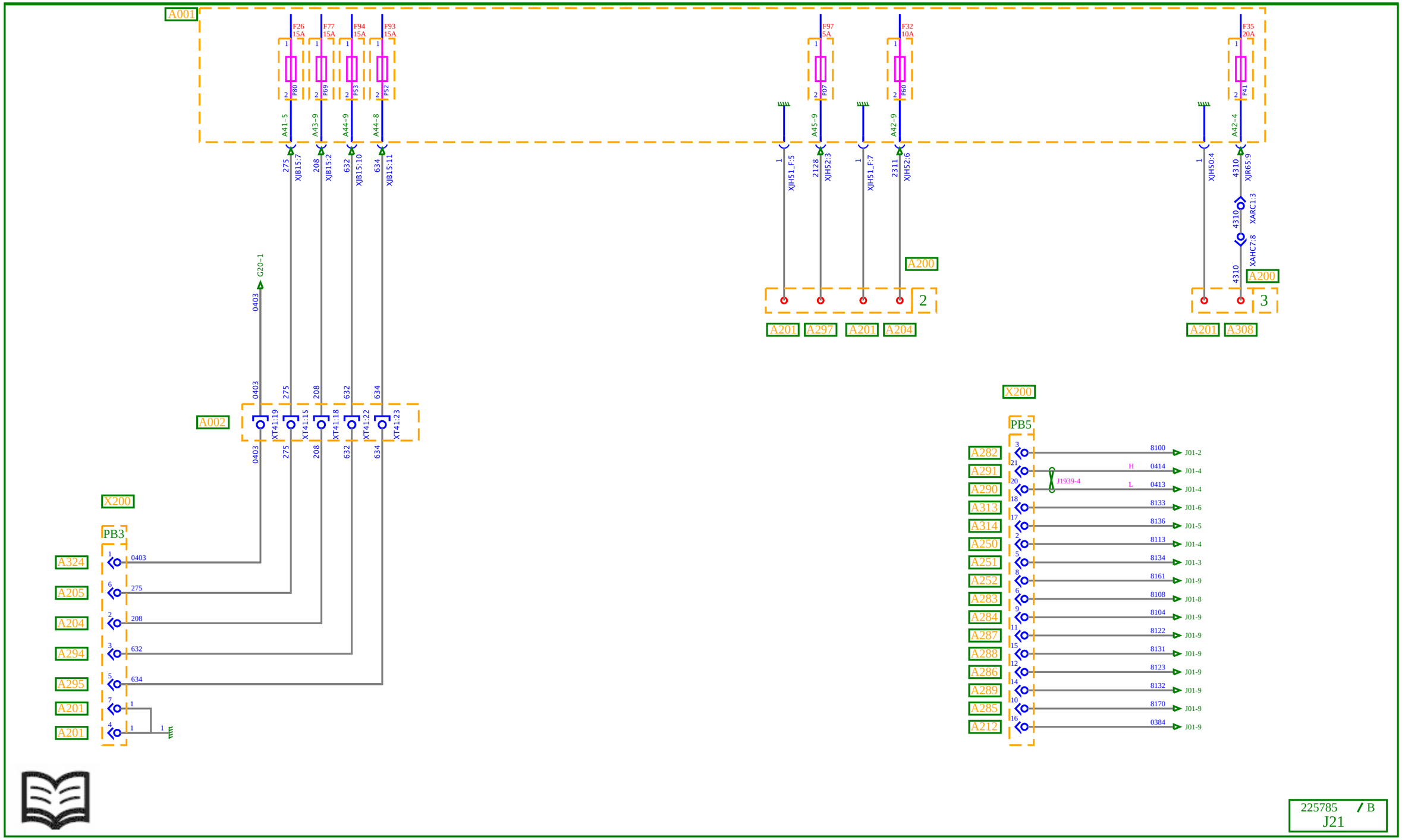
A001
F26 15A
F77 15A
F94 15A
F93 15A
F97 5A
F32 10A
F35 20A
P80
P69
P53
P52
P07
P60
P41
A41-5
A43-9
A44-9
A44-8
A45-9
A42-9
A42-4
275 XJB15:7
208 XJB15:2
632 XJB15:10
634 XJB15:11
XJH51_F:5
2128 XJH52:3
XJH51_F:7
2311 XJH52:6
XJH50:4
4310 XJR65:9
4310 XARC1:3
XAHC7:8
A200
2
3
A201
A297
A204
A308
G20-1
0403
A002
XT41:19
XT41:15
XT41:18
XT41:22
XT41:23
X200
PB3
A324
A205
A294
A295
PB5
A282
A291
A290
A313
A314
A250
A251
A252
A283
A284
A287
A288
A286
A289
A285
A212
J1939-4
8100 J01-2
H 0414 J01-4
L 0413 J01-4
8133 J01-6
8136 J01-5
8113 J01-4
8134 J01-3
8161 J01-9
8108 J01-8
8104 J01-9
8122 J01-9
8131 J01-9
8123 J01-9
8132 J01-9
8170 J01-9
0384 J01-9
225785 / B
J21

Available power supplies (2/2)

Key to appliances

Code	Function	Location
A001	Cab electrical distribution box	B2c
A002	Chassis-cab connection box	B2c
A200	Available power supply (insulated cut wires)	B2c
A201	Available power supply (vehicle earth)	B2c
A204	Available power supply (after master switch)	B2c
A205	Available power supply (after ignition)	C5d
A212	Available power supply (engine speed)	B2c
A250	Available power supply (PTO 2 control)	B2c
A251	Available power supply (PTO 2 warning light)	B2c
A252	Available power supply (PTO 2 solenoid valve piloting)	B2c
A282	Available power supply (engine start control)	B2c
A283	Available power supply (engine starting information)	B2c
A284	Available power supply (engine alert)	B2c
A285	Available power supply (parameter definable frequency-related output)	B2c
A286	Available power supply (PLC 2 min. output)	B2c
A287	Available power supply (PLC 1 min. output)	B2c
A288	Available power supply (PLC 1 min. input)	B2c
A289	Available power supply (PLC 2 min. input)	B2c
A290	Available power supply (high level CAN bus J1939)	B2c
A291	Available power supply (low level CAN bus J1939)	B2c
A294	Available power supply (LH rear marker light(s)	C5d
A295	Available power supply (RH rear marker light(s)	C5d
A297	Available power supply (night lighting)	B2c
A308	Pre-arrangement for onboard management (screen and keyboard)	C2a
A313	Available power supply (CAN bus disabling)	B2c
A314	Available power supply (engine speed set-point validation)	B2c
A324	Available power supply (rigid perimetric protection module)	C5d
X200	Available power supplies connector	B2c

Available power supplies (2/2)

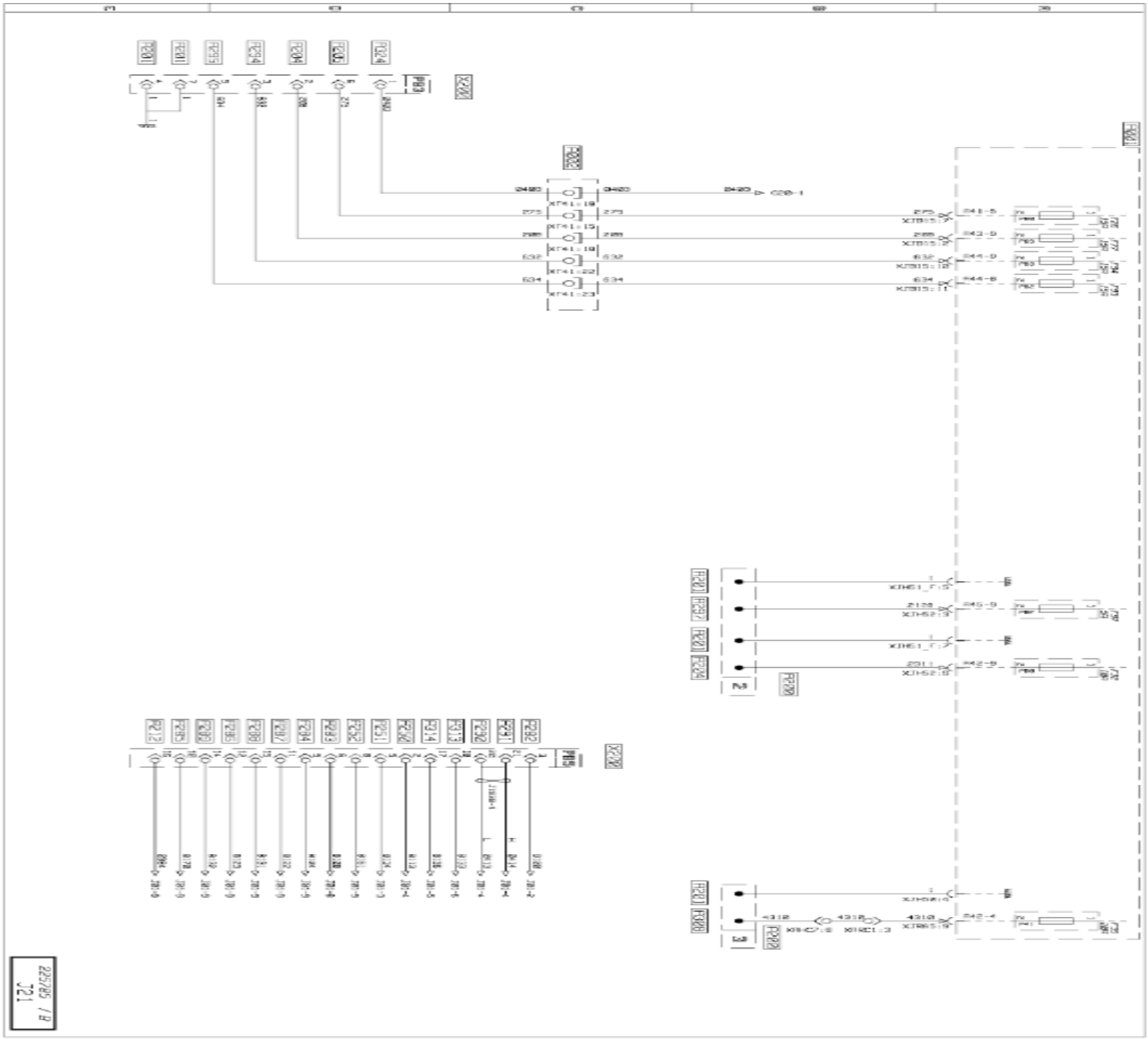

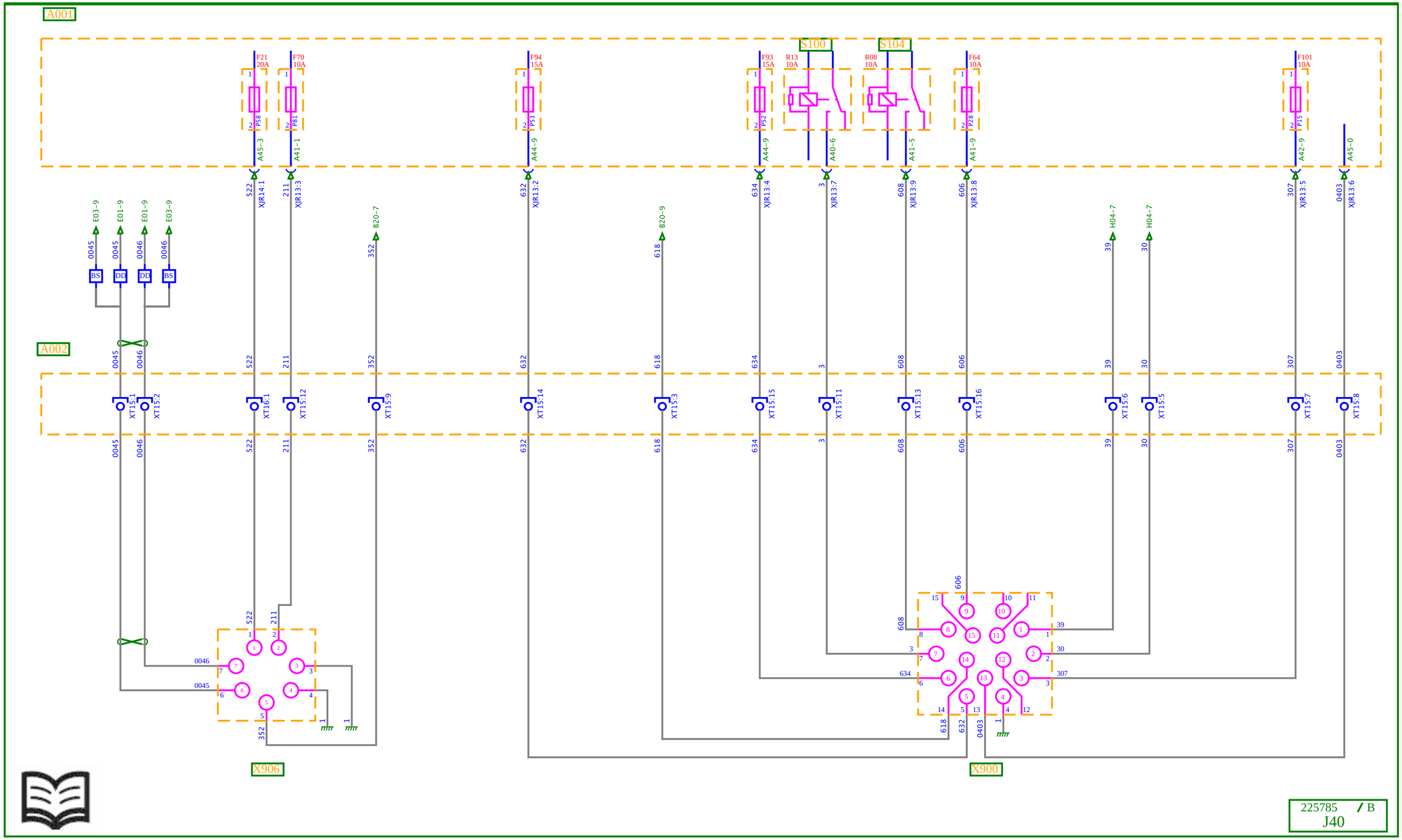
A001
A002
S100
S104
F21 20A
F70 10A
F94 15A
F93 15A
R13 10A
R08 10A
F64 10A
F101 10A
P58
P81
P53
P52
P28
P15
A45-3
A41-1
A44-9
A44-9
A40-6
A41-5
A41-9
A42-9
A45-0
XJR14:1
XJR13:3
XJR13:2
XJR13:4
XJR13:7
XJR13:9
XJR13:8
XJR13:5
XJR13:6
E03-9
E01-9
E01-9
E03-9
BS
DD
DD
BS
B20-7
B20-9
H04-7
H04-7
XT15:1
XT15:2
XT16:1
XT15:12
XT15:9
XT15:14
XT15:3
XT15:15
XT15:11
XT15:13
XT15:16
XT15:6
XT15:5
XT15:7
XT15:8
X906
X900
225785 / B
J40

Trailer sockets

Key to appliances

Code	Function	Location
A001	**Cab electrical distribution box**	**B2c**
A002	**Chassis-cab connection box**	**B2c**
S100	**Stop lights power supply relay**	**B2c**
S104	**Reversing lights power supply relay**	**B2c**
X900	**15-pin trailer socket**	**B4b**
X906	**ABS/EBS trailer socket**	**B4b**

BS: **4x2** vehicles
DD: **6x2** vehicles

Trailer sockets

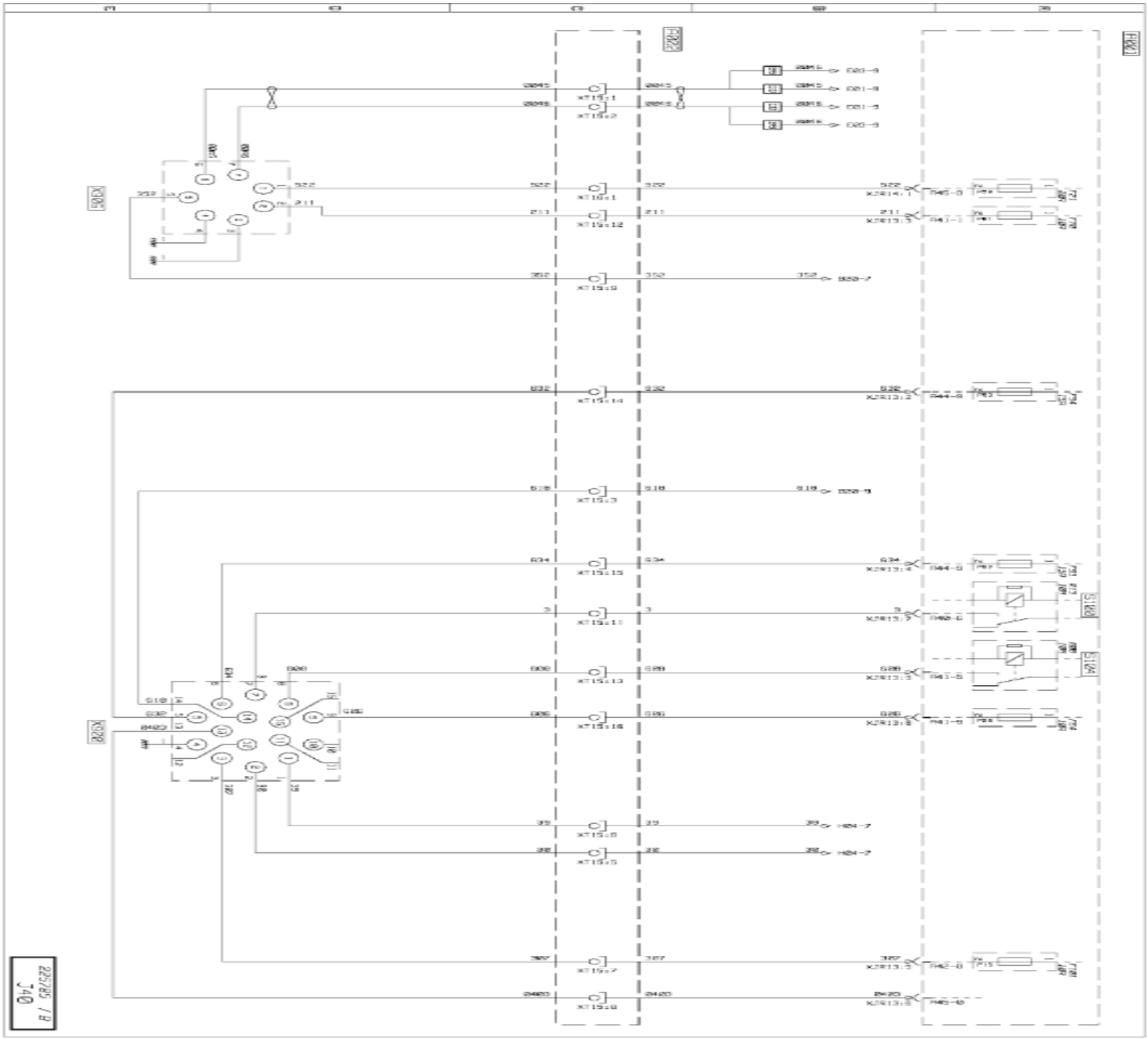

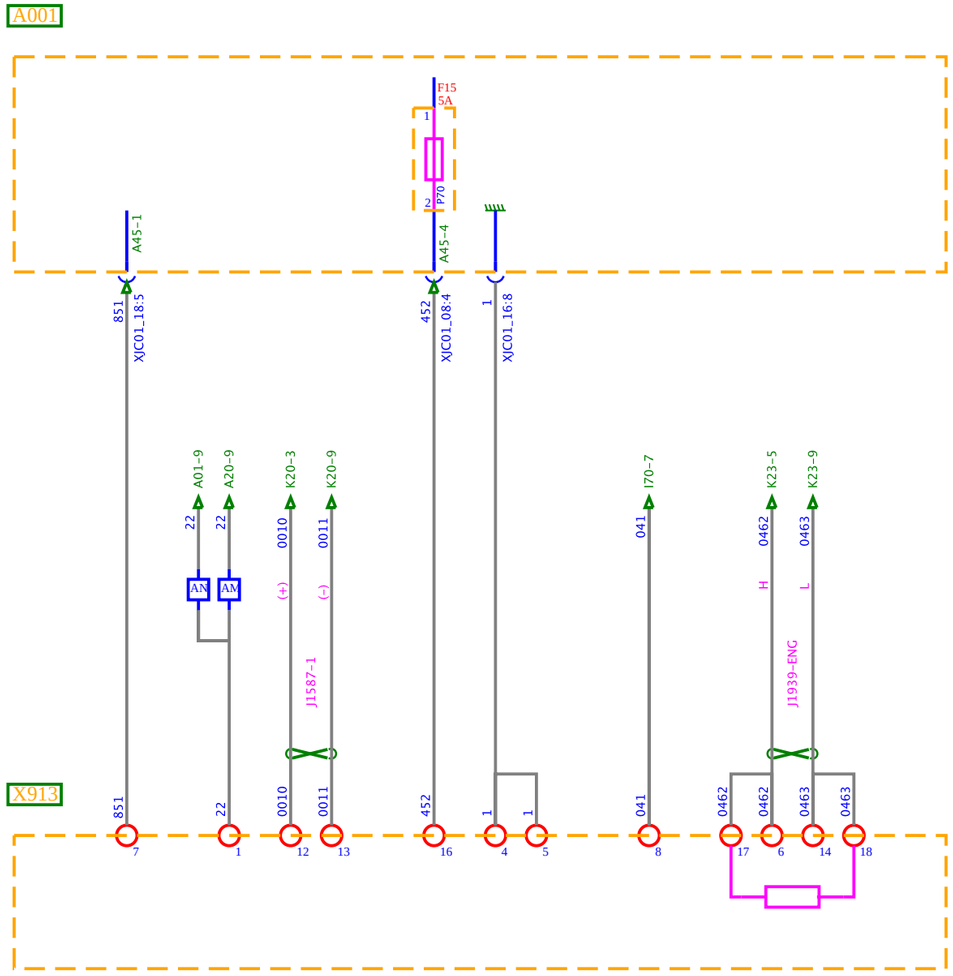
A001
F15
5A
1
2
P70
A45-1
A45-4
851
X1C01_18:5
452
X1C01_08:4
1
X1C01_16:8
A01-9
A20-9
K20-3
K20-9
I70-7
K23-5
K23-9
22
22
0010
0011
041
0462
0463
AN
AM
(+)
(-)
H
L
J1587-1
J1939-ENG
X913
851
22
0010
0011
452
1
1
041
0462
0462
0463
0463
7
1
12
13
16
4
5
8
17
6
14
18

225785 / B
K01

Diagnostic socket

Key to appliances

Code	Function	Location
A001	**Cab electrical distribution box**	**B2c**
X913	**Vehicle diagnostic socket**	**C3c**

AM: with ADR equipment
AN: without ADR equipment

Diagnostic socket

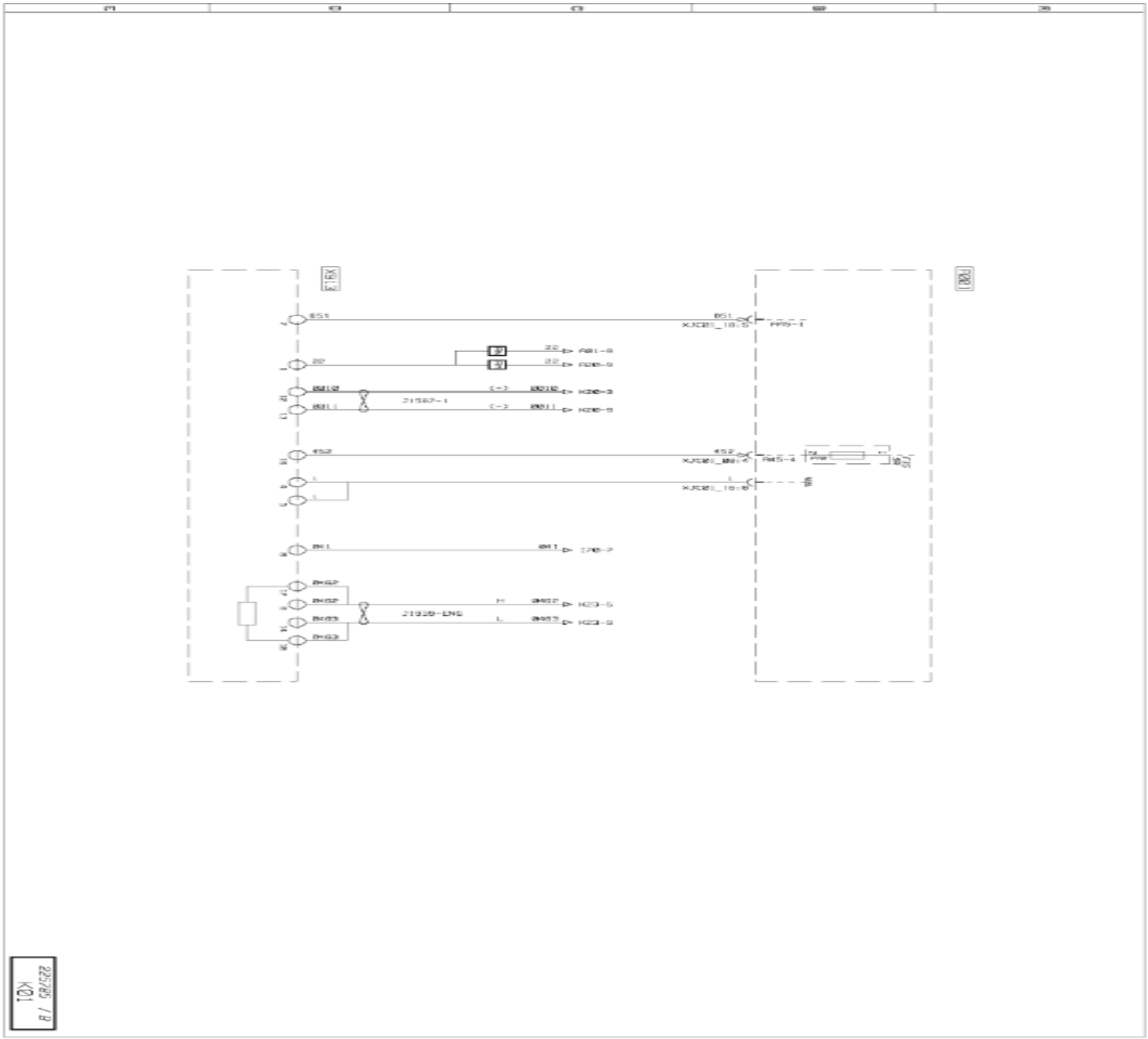
K01
22/305 / 8
K13
F001
851
22
8010
8011
452
841
8402
8403
8403
J1587-1
J1939-ENG
851
XJC20_18:5
PM9-1
22
F01-9
F06-9
8010
K06-3
8011
K06-5
452
XJC20_18:4
PM5-4
PWR
SIG
L
XJC20_18:8
841
F06-7
8402
K03-5
8403
K03-9

J1587-1

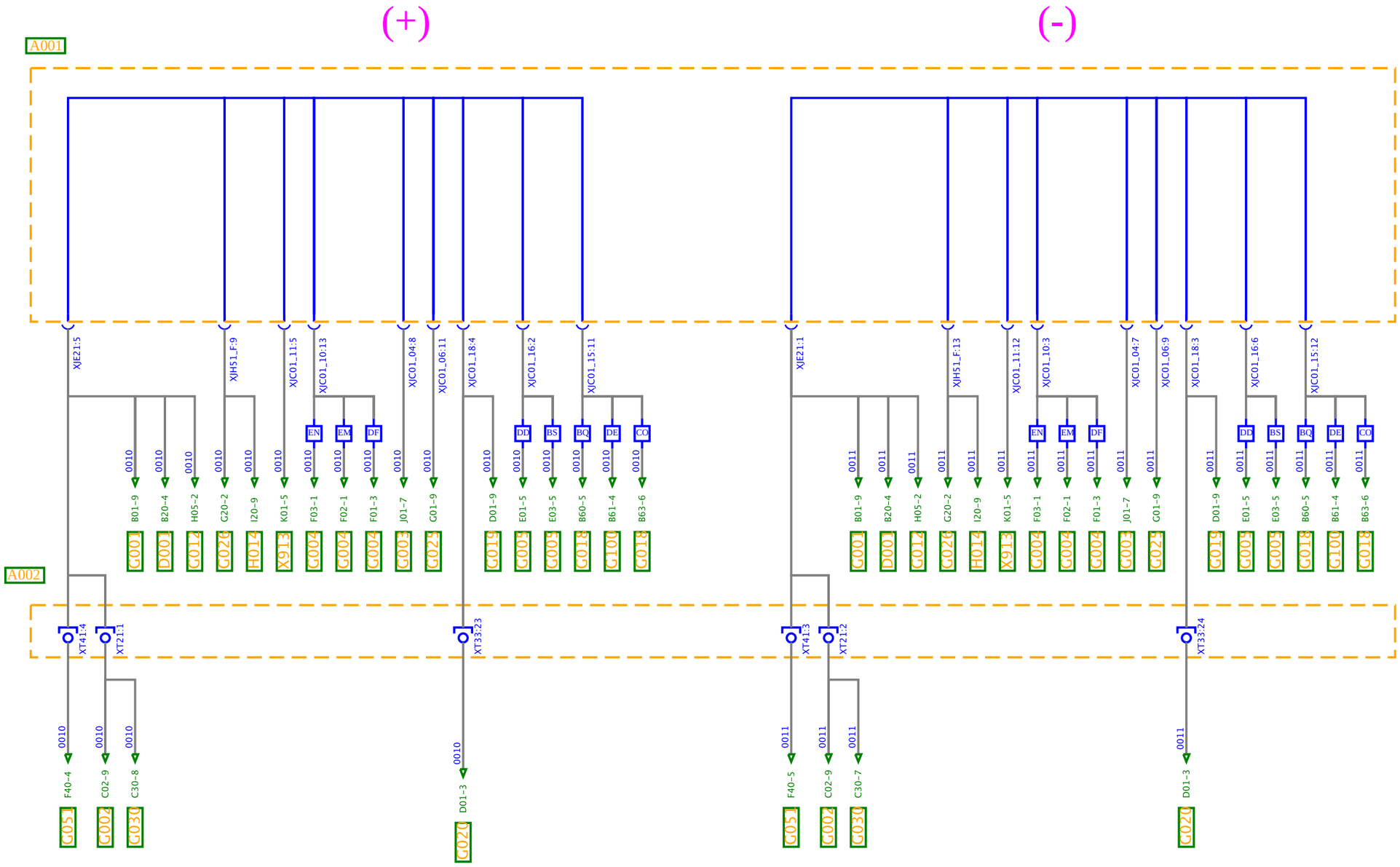

225785 / B
K20

CAN BUS transfer zone J1587-1

Key to appliances

Code	Function	Location
A001	**Cab electrical distribution box**	**B2c**
A002	**Chassis-cab connection box**	**B2c**
D001	**Principal information display**	**C2b**
G001	**Vehicle management ECU**	**B2c**
G002	**Engine management ECU**	**B3c**
G003	**Bodybuilder pre-arrangement management ECU**	**B2c**
G004	**Air suspension ECU**	**B2b**
G005	**EBS braking management ECU**	**B2b**
G012	**Lighting and signalling management ECU**	**B2c**
G018	**Onboard management interface ECU**	**B2b**
G019	**Gear selector ECU**	**C2b**
G020	**Automatic transmission ECU**	**C4d**
G025	**Engine immobilizer ECU**	**C2c**
G026	**Alarm ECU**	**C1a**
G030	**AdBlue supply management pump module**	**C4d**
G051	**Air production management ECU**	**C4d**
G100	**Datamax gateway ECU**	**C2b**
H014	**Radio set**	**C2a**
X913	**Vehicle diagnostic socket**	**C2c**

BQ: with **FMS** equipment
CO: with **OPTIFLEET** equipment
DE: with **DATAMAX** equipment
BS: **4x2** vehicles
DD: **6x2** vehicles
DF: with electronic air suspension tractor vehicle **4x2**
EM: with **4x2 - 6x2** vehicle rear electronic air suspension
EN: with **4x2 - 6x2** vehicle integral electronic air suspension

CAN BUS transfer zone J1587-1

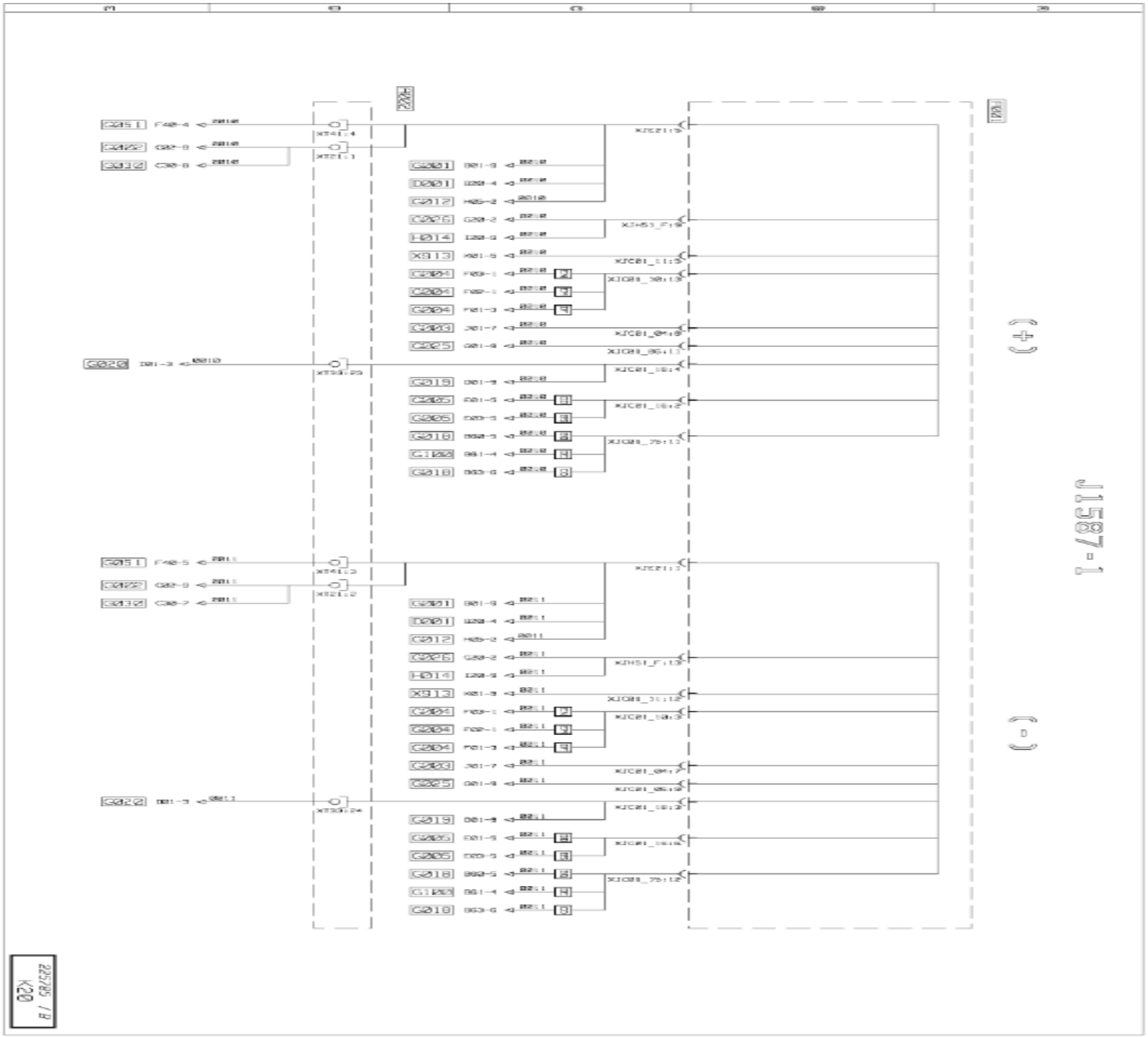
1587-1
(+)
(-)
G051
G022
G012
G020
G001
D001
H014
X913
G004
G003
G025
G015
G005
G006
G018
G100
G010
XT41:4
XT21:1
XT41:3
XT21:2
XT39:29
XT39:24
XT21:3
XH51_F:13
XJ01_31:12
XJ01_75:12
22/03 / 8
K20

CAN J1939-1

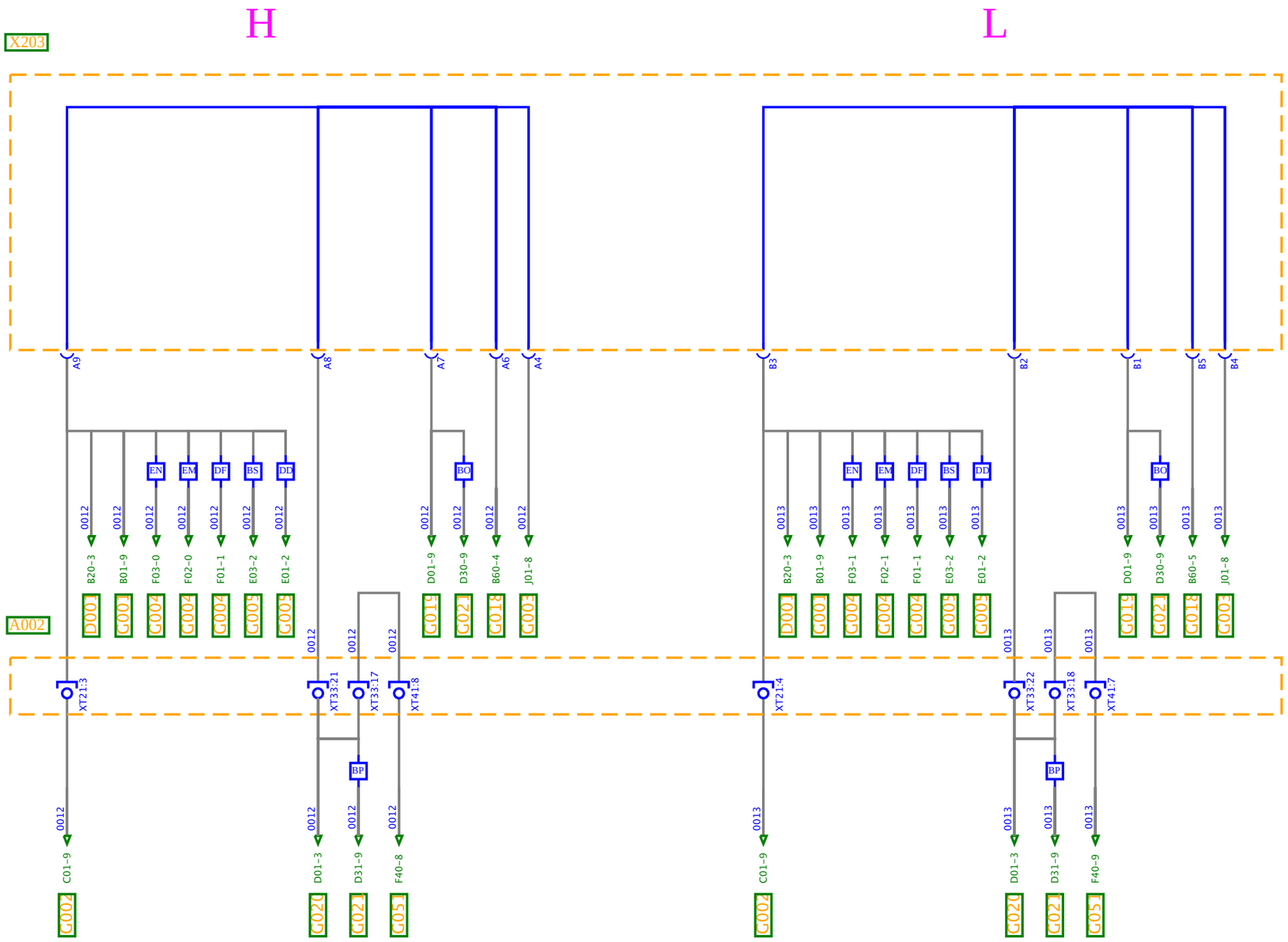

225785 / B
K21

CAN BUS transfer zone J1939-1

Key to appliances

Code	Function	Location
A002	**Chassis-cab connection box**	**B2c**
D001	**Principal information display**	**C2b**
G001	**Vehicle management ECU**	**B2c**
G002	**Engine management ECU**	**B3c**
G003	**Bodybuilder pre-arrangement management ECU**	**B2c**
G004	**Air suspension ECU**	**B2b**
G005	**EBS braking management ECU**	**B2b**
G018	**Onboard management interface ECU**	**B2b**
G019	**Gear selector ECU**	**C2b**
G020	**Automatic transmission ECU**	**C4d**
G021	**Hydraulic retarder ECU**	**B2c**
G051	**Air production management ECU**	**C4d**
X203	**CAN bus grouping connector**	**B2c**

BO: with **ECOSPLIT 2** hydraulic retarder
BP: with **ECOSPLIT 4** hydraulic retarder
BS: **4x2** vehicles
DD: **6x2** vehicles
DF: with electronic air suspension tractor vehicle **4x2**
EM: with **4x2 - 6x2** vehicle rear electronic air suspension
EN: with **4x2 - 6x2** vehicle integral electronic air suspension

CAN BUS transfer zone J1939-1

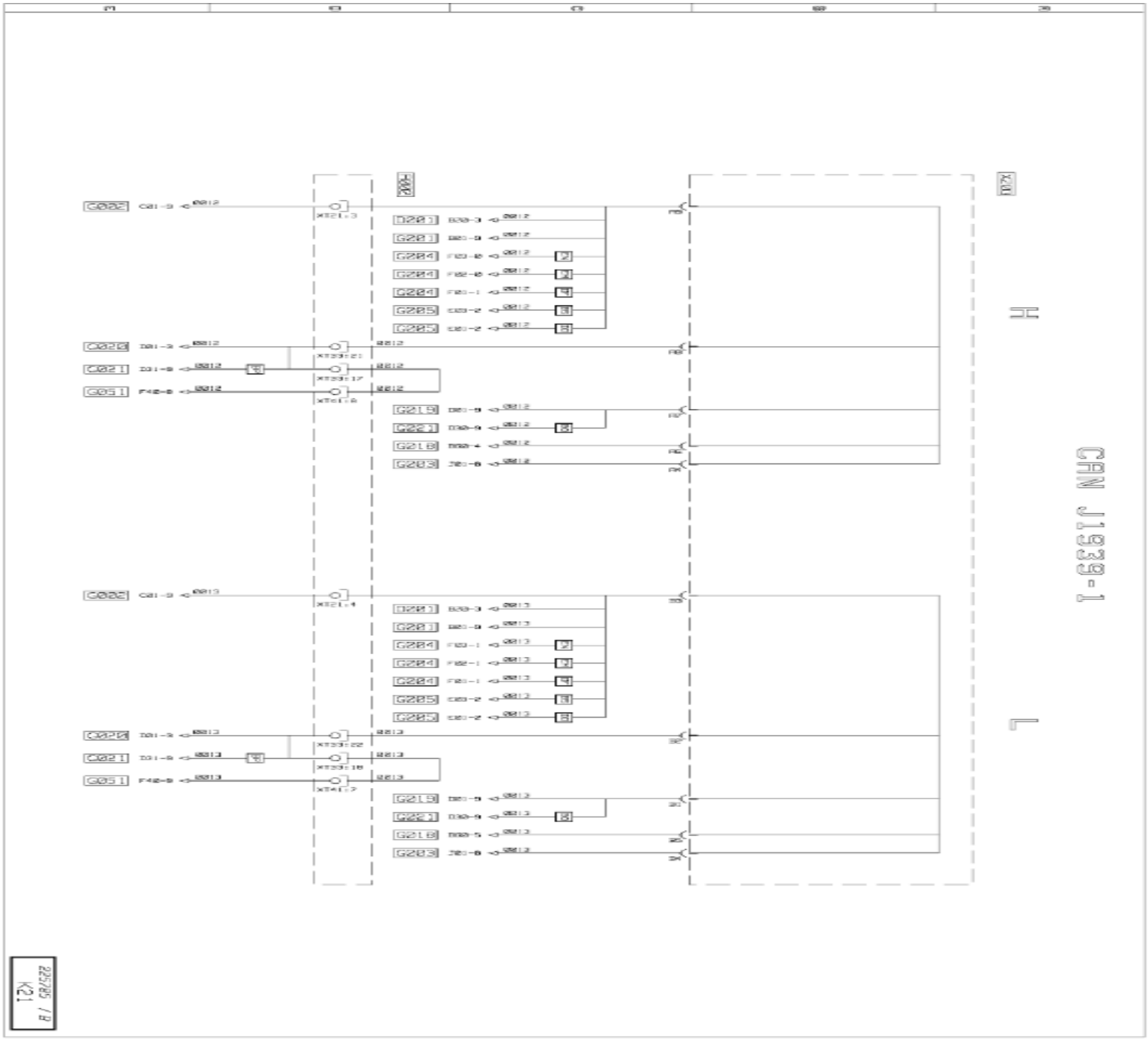
CAN J1939-1
H
L
G002
G020
G021
G051
D201
G201
G204
G205
G215
G222
G218
G203
X21.3
X21.4
X33:21
X33:17
X33:22
X33:18
X61:6
X41:7
0012
0013
22/05/08
K21

CAN J1939-2

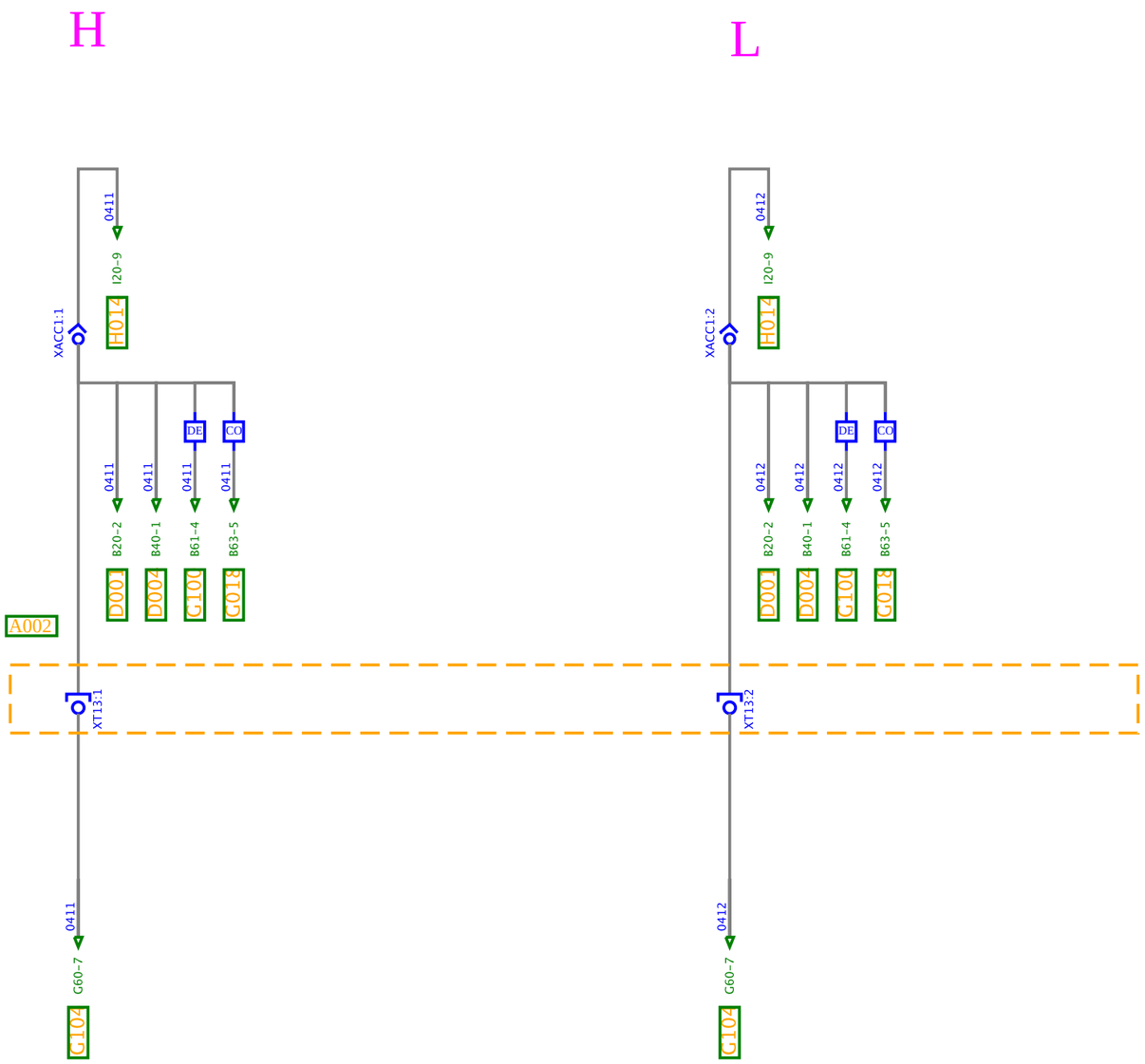

225785 / B
K22

CAN BUS transfer zone J1939-2

Key to appliances

Code	Function	Location
A002	**Chassis-cab connection box**	**B2c**
D001	**Principal information display**	**C2b**
D004	**Tachograph**	**C2b**
G018	**Onboard management interface ECU**	**B2b**
G100	**Datamax gateway ECU**	**C2b**
G104	**Tyre pressures monitoring ECU**	**B7d**
H014	**Radio set**	**C2a**

CO: with **OPTIFLEET** equipment
DE: with **DATAMAX** equipment

CAN BUS transfer zone J1939-2

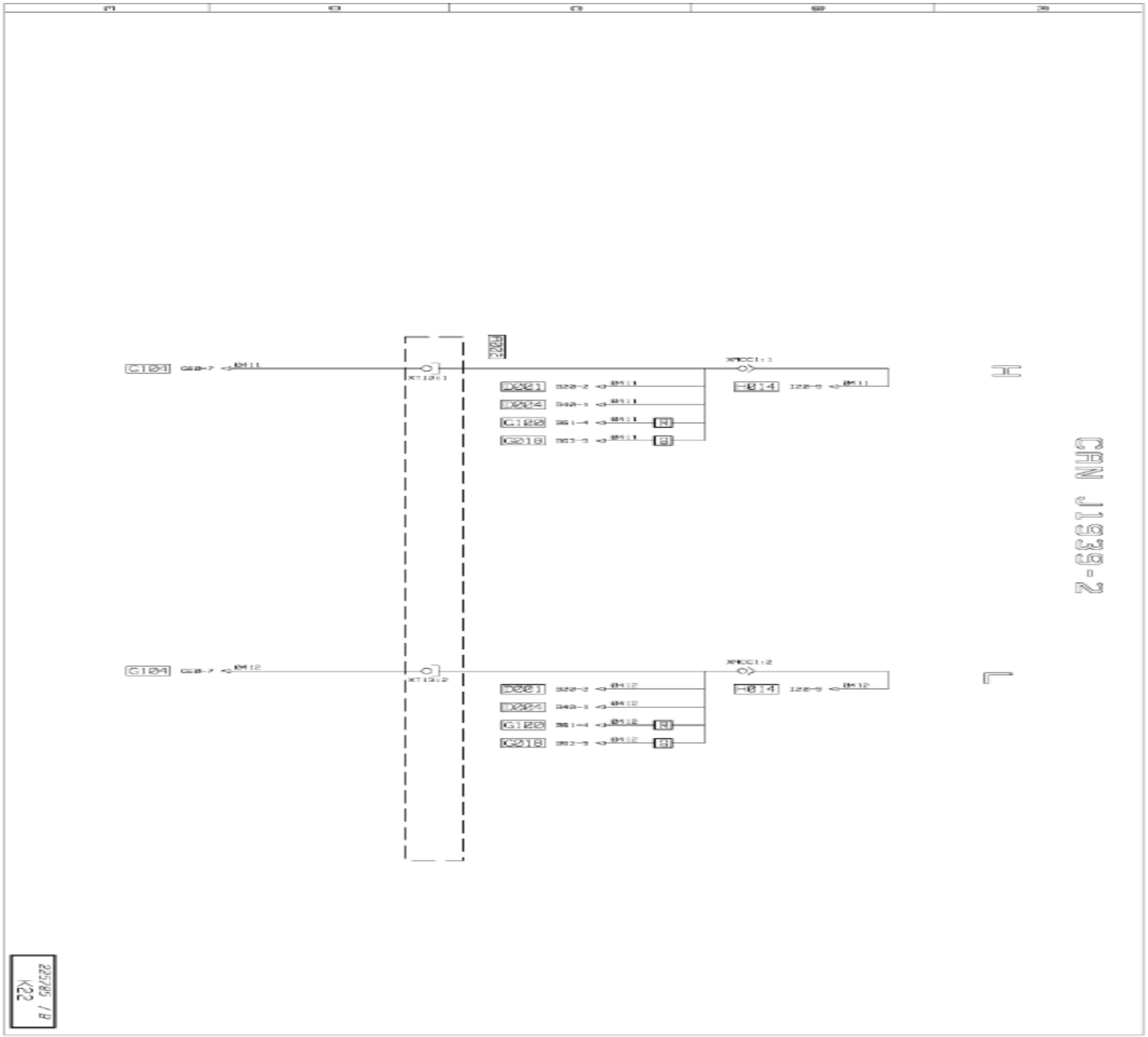
CAN J1939-2
H
L
C104
G104
D001
D004
C100
G100
G218
H014
X112:1
X112:2
X10C1:1
X10C1:2
0411
0412
H
B
22C285 / B
K22

https://truckmanualshub.com/

CAN J1939-ENG

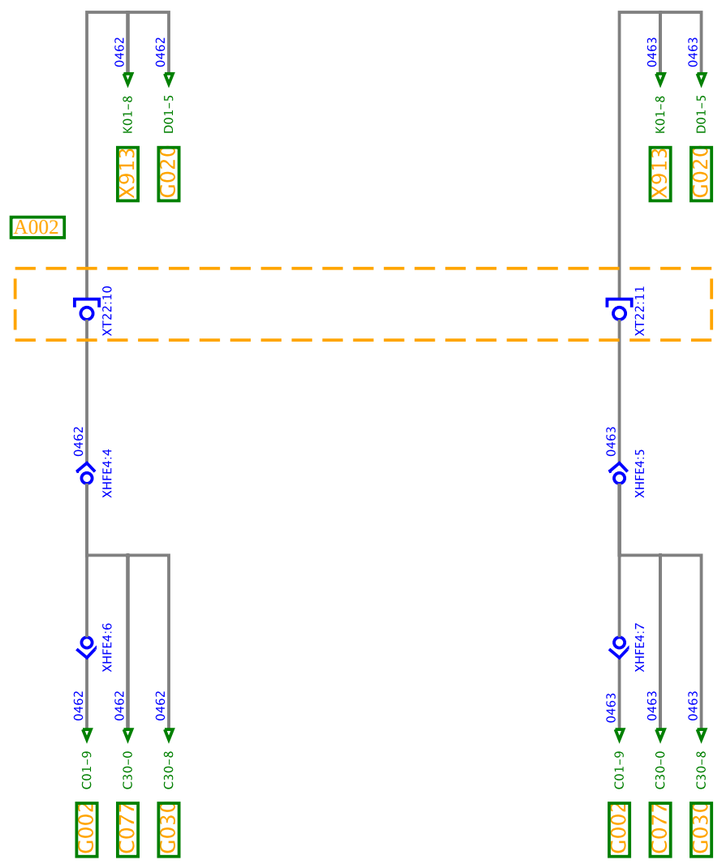

225785 / B
K23

CAN BUS transfer zone J1939-ENG

Key to appliances

Code	Function	Location
A002	**Chassis-cab connection box**	**B2c**
C077	**Nitrogen oxides gases concentration sensor**	**C4d**
G002	**Engine management ECU**	**B3c**
G020	**Automatic transmission ECU**	**B3d**
G030	**AdBlue supply management pump module**	**C4d**
X913	**Vehicle diagnostic socket**	**C2c**

CAN BUS transfer zone J1939-ENG

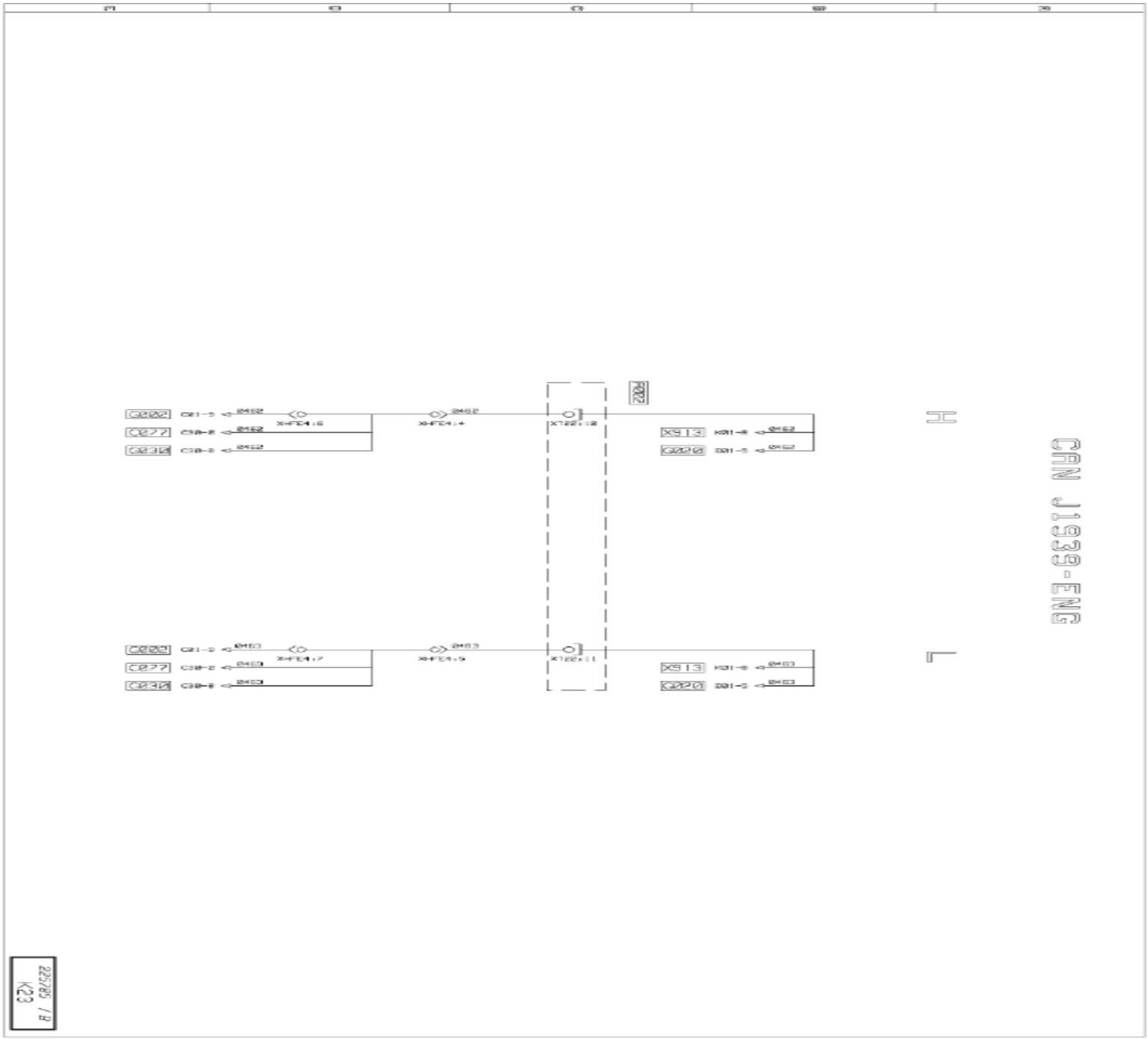
CAN J1939-ENG
H
L
X913
X913
X1221:8
X1221:11
X-FE4:4
X-FE4:5
X-FE4:6
X-FE4:7
2002
22/05/ B
K23