https://truckmanualshub.com/

Service Manual
Trucks

Group **37**

Release **02**

Wiring diagram

FM9, FM12, FH12 VERSION2

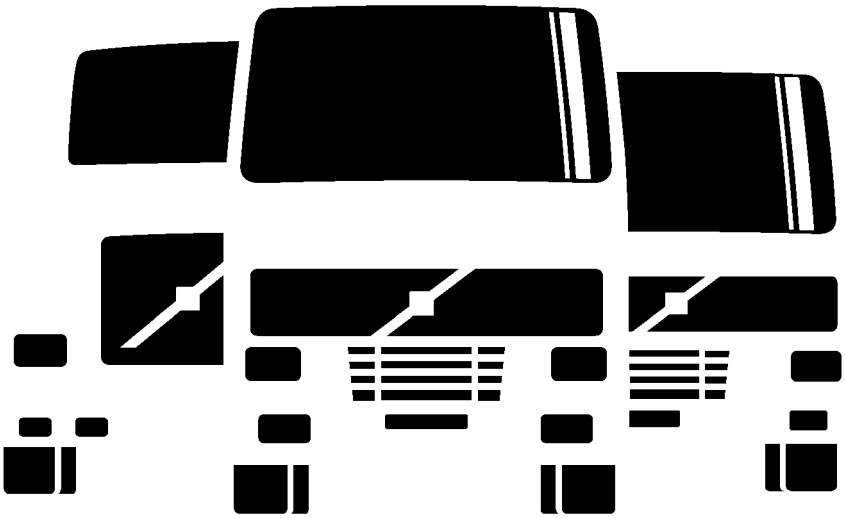

TSP175664

VOLVO

Foreword

https://truckmanualshub.com/

The descriptions and service procedures contained in this manual are based on designs and methods studies carried out up to August 02.

The products are under continuous development. Vehicles and components produced after the above date may therefore have different specifications and repair methods. When this is judged to have a significant bearing on this manual, supplementary service bulletins will be issued to cover the changes.

The new edition of this manual will update the changes.

In service procedures where the title incorporates an operation number, this is a reference to V.S.T. (Volvo Standard Times).

Service procedures which do not include an operation number in the title are for general information and no reference is made to V.S.T.

The following levels of observations, cautions and warnings are used in this Service Documentation:

Note: Indicates a procedure, practice, or condition that must be followed in order to have the vehicle or component function in the manner intended.

Caution: Indicates an unsafe practice where damage to the product could occur.

Warning: Indicates an unsafe practice where personal injury or severe damage to the product could occur.

Danger: Indicates an unsafe practice where serious personal injury or death could occur.

Volvo Truck Corporation
Göteborg, Sweden

The following information will be superseded by this manual:			
SM	Group	37	TSP 169444

Order number: TSP175664

© 02 Volvo Truck Corporation, Göteborg, Sweden

All rights reserved. No part of this publication may be reproduced, stored in retrieval system, or transmitted in any forms by any means, electronic, mechanical, photocopying, recording or otherwise, without the prior written permission of Volvo Truck Corporation.

ENG11869

Contents

https://truckmanualshub.com/

Example of wiring diagram 2

Component wiring diagram index 5

Component wiring diagrams 8

Illustrations index 76

Illustrations 77

Fuses 137

Relays 139

Wiring harness illustration index 141

Earth connections 144

List of earth connections 146

List of connectors 147

List of components 154

Abbreviations 160

Cable colour code 161

Feedback

Example of wiring diagram

https://truckmanualshub.com/

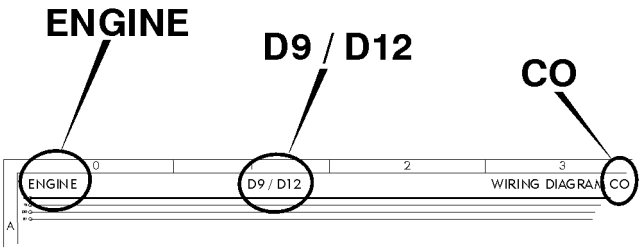

Component wiring diagram title, variant/subtitle and symbol.

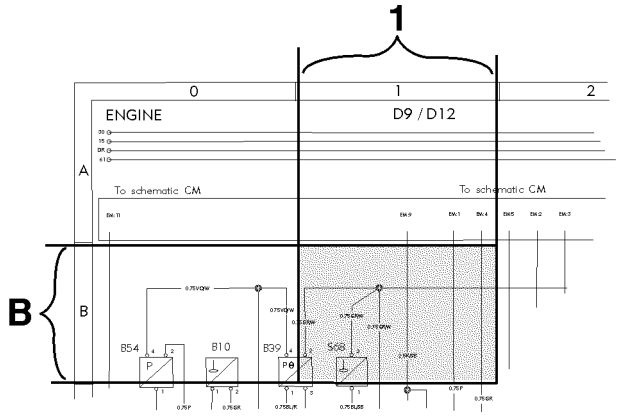

Coordinates (B 1).

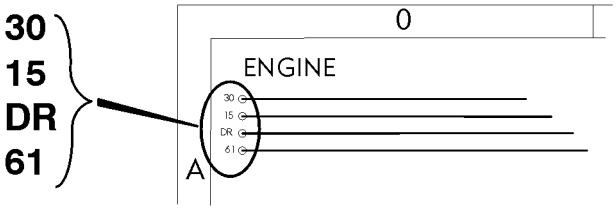

30 Voltage battery, kl.30.
15 Voltage with starter key in drive position, kl.15.
DR Voltage with starter key in drive position, preheat position and start position, kl.DR.
61 Voltage when alternator charges, kl.61.

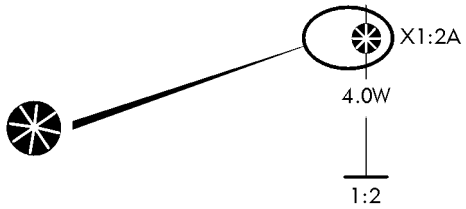

Splice.

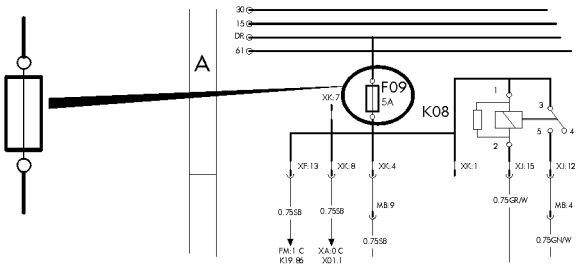

Fuse.

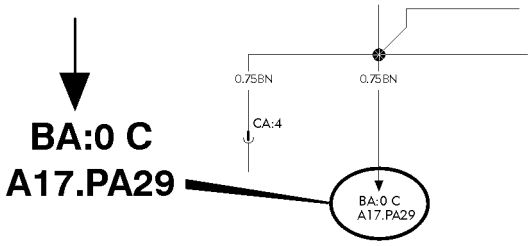

Reference arrow, for diagram BA, coordinates 0 C, component A17, connector PA pin 29.

https://truckmanualshub.com/

The maximum of variants are drawn, think about that all wires and components are not standard for all markets or vehicle models.

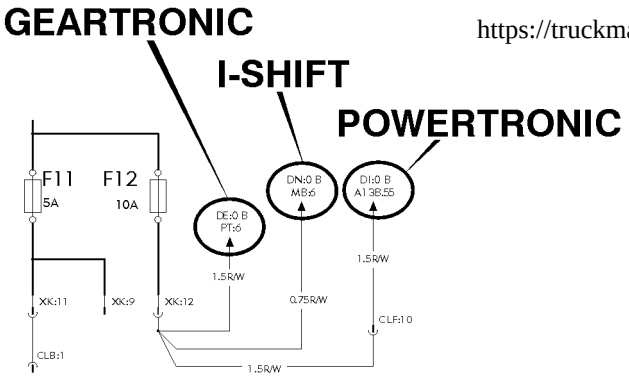

Switch.

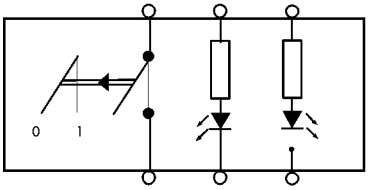

Relay.

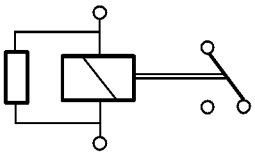

Conductor on circuit card.

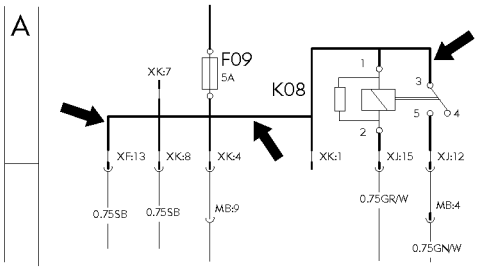

Connector MB terminal 9.

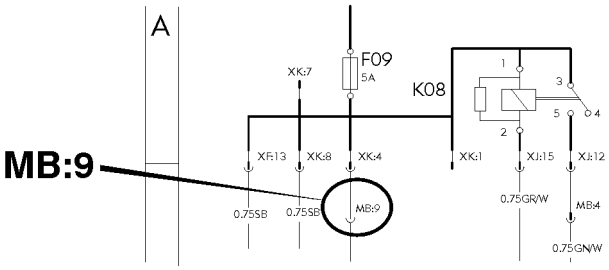

Wire area and colour.

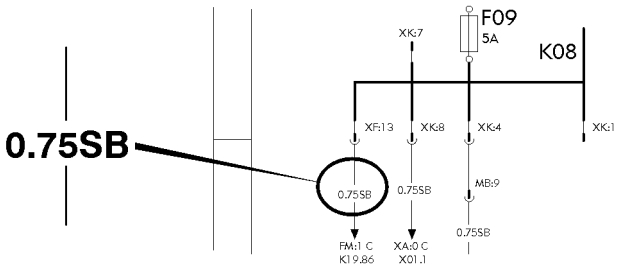

Thin lines, wires.

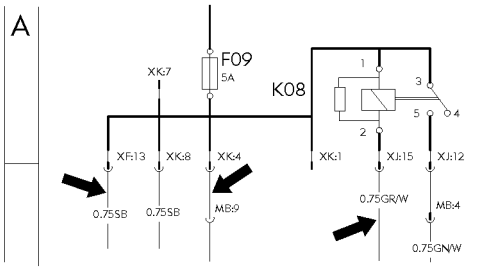

https://truckmanualshub.com/

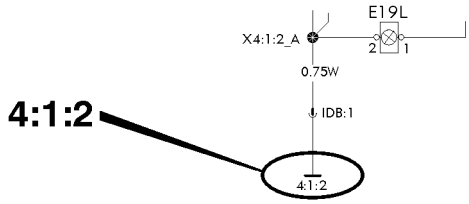

Earth connection point 4, earth connection 1 and wire 2.

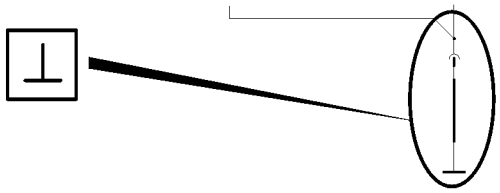

Earth connection to circuit card.

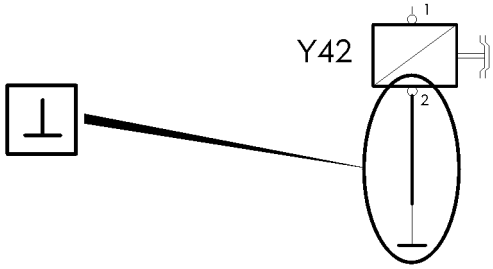

Earth connection without wire.

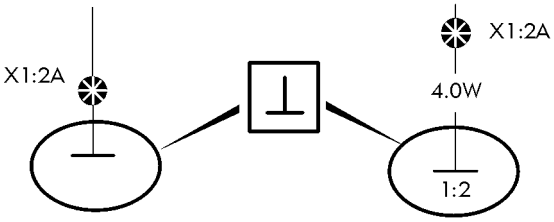

Same splice can be drawn on several diagrams. The wire from the splice to the earth connection point will only be drawn and coded on one diagram. On the other diagrams will only the earth connection point be written besides the splice.

Component wiring diagram index

https://www.manualshub.com/

AA	Power supply, starting system	page 8
AE	ADR, main switch	page 9
BA	Vehicle ECU	page 10
BI	Instrument cluster	page 11
BM	Tachograph in dash	page 12
BN	Tachograph in shelf	page 13
BU	Dynafleet	page 14
CM	Engine interface	page 15
CO	Engine (D9/D12)	page 16
CP	ISX functions, 12V trailer ABS converter (AUS only)	page 17
CS	Engine ISX (AUS only)	page 18
CU	Fuel filter water drain	page 19
DB	Gear selector ECU	page 20
DE	Geartronic automatic gearshift	page 21
DI	Powertronic	page 22
DM	Retarder manual gearshift	page 23
DN	I-shift	page 24
DQ	Power take off	page 25
DU	Diff-lock	page 26
EC	Trailer ABS/EBS supply	page 27
EE	ABS basic, D-version	page 28
EI	ABS/ASR D-version	page 29
EM	EBS ECU	page 30
EN	EBS modulators	page 31
EQ	ESP	page 32
FA	Air-suspension	page 33
FG	Load indikator	page 34
FK	Bogie lift A-ride	page 35
FM	Axle lock, self steered axle	page 36
FP	Hydraulic steered axle	page 37
FQ	Air dryer	page 38
FU	Central lubrication system	page 39
GA	LCM head lights	page 40

GB LCM trailer, HL-HID ..... page 41

https://truckmanualshub.com/

GC LCM rear lights ..... page 42

GK Trailer connections (AUS only) ..... page 43

GM Wiper, washer ..... page 44

GQ Horn ..... page 45

GU Headlights adjust ..... page 46

HG Climate unit, CU,-BAS,-MCC,-ECC ..... page 47

HI Air heater ..... page 48

HM Water heater ..... page 49

HP Short stop cabheater ..... page 50

HY Climat unit, CU,-HEAT,-ACMAN,-ACAUT. ..... page 51

IA El. heated/adj. seat ..... page 52

IE El. heat/adj. mirrors, El. window winders ..... page 53

IF Foldable mirror bracket ..... page 54

IH Interior light ..... page 55

IM Central locking, immobiliser ..... page 56

IQ El. sunroof, cig. lighter, refrigerator ..... page 57

IR 12V power supply ..... page 58

IS SWM, SRS. Air-bag ..... page 59

IU Radio ..... page 60

IX Intergrated telephone ..... page 61

IZ Backup camera ..... page 62

KA Cab tilt ..... page 63

KE Load light, 5:th wheel lamp ..... page 64

KI Light sign ..... page 65

KM Beacon warning light ..... page 66

ME Extra fuse block, key switch relay ..... page 67

NA Body builder (BB), auxsw-6 and swapbody ..... page 68

NC Body builder (BB), ELCE-CK, BBM, PTO2 ..... page 69

NI Extra spotlamps front/roof, max 4x70W ..... page 70

NK Burglar alarm ..... page 71

NR Body builder (BB), tipper tractor ”HYDRKIT” ..... page 72

NU Body builder (BB), DUAL-SPEED ..... page 73

XA Bus J1708/J1587 ..... page 74

XB Bus J1939 ..... page 75

Component wiring diagrams

www.truckwiringdiagrams.com

https://truckmanualshub.com/

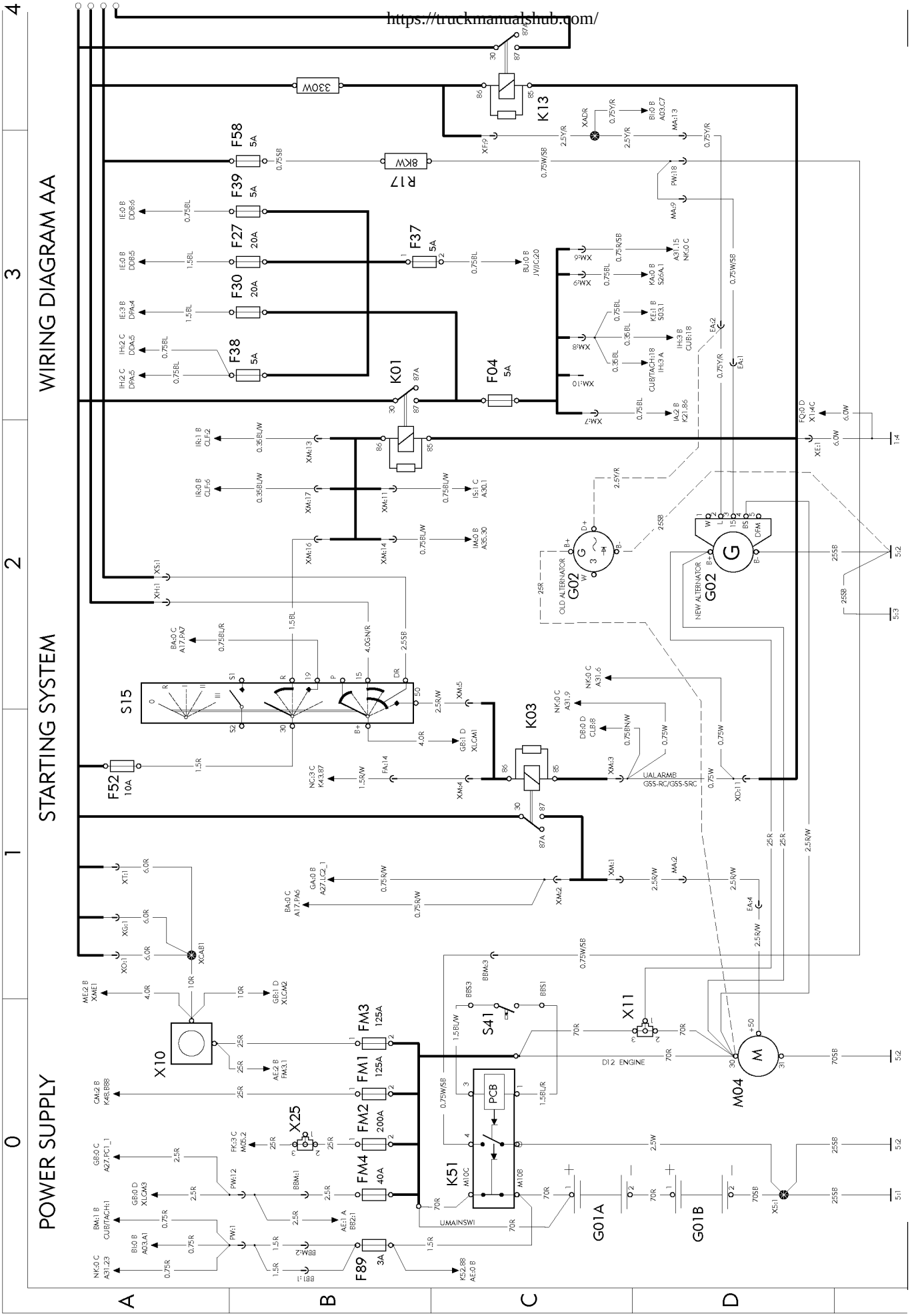

https://truckmanualshub.com/

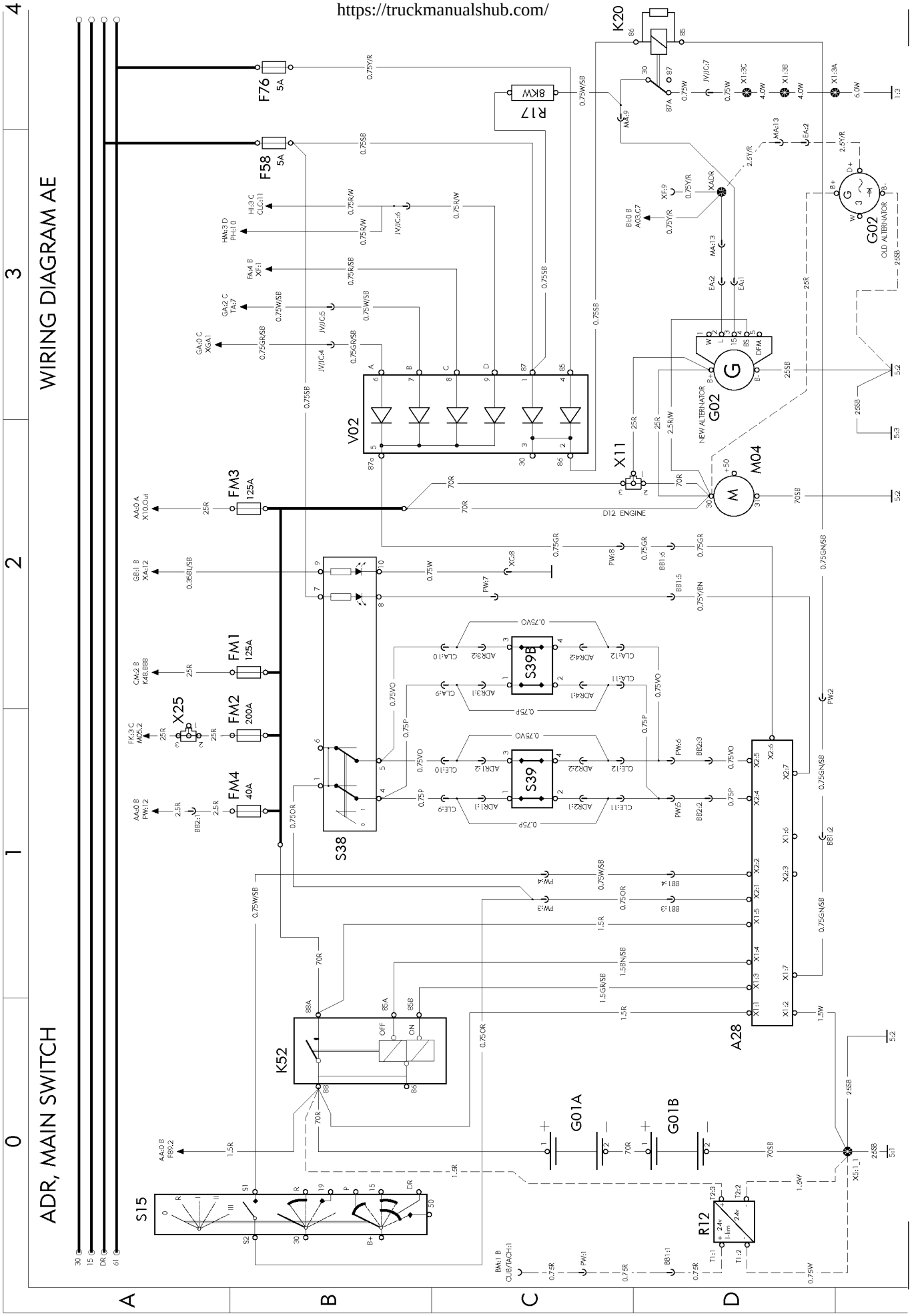

https://truckmanualshub.com/

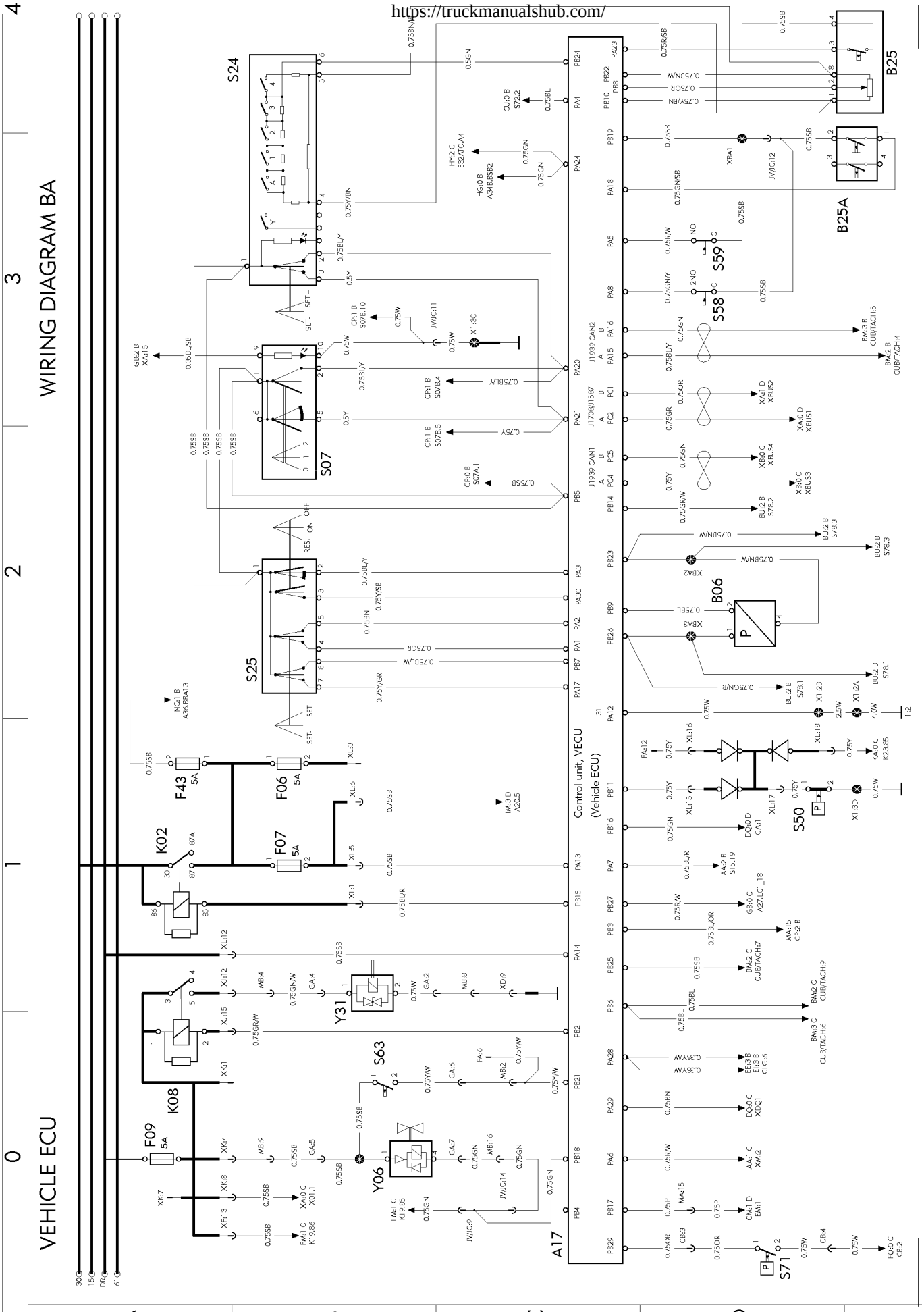

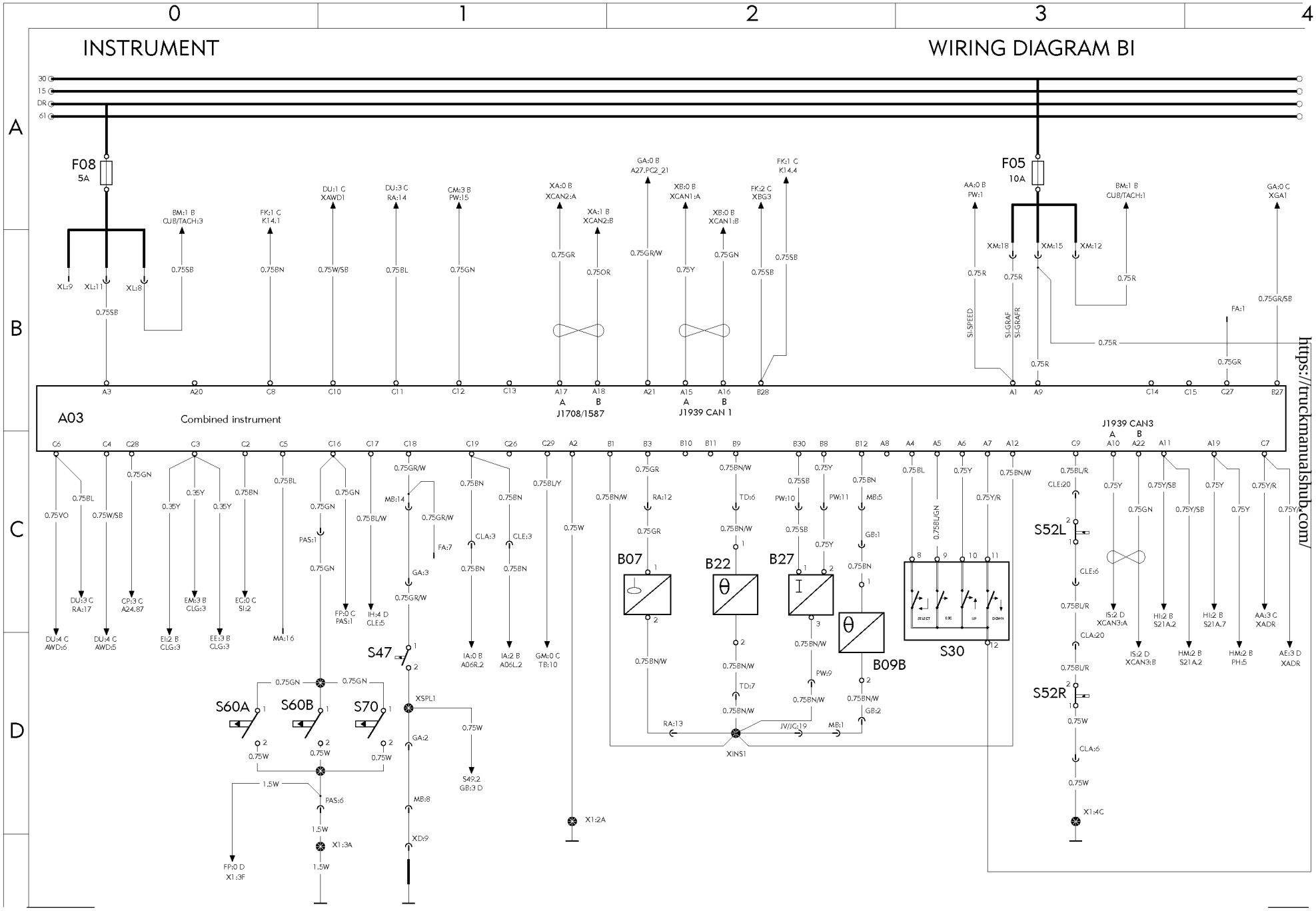
INSTRUMENT
WIRING DIAGRAM BI
30
15
DR
61
F08
5A
F05
10A
A03
Combined instrument
J1708/1587
J1939 CAN 1
J1939 CAN3
B07
B22
B27
B09B
S30
S52L
S52R
S47
S60A
S60B
S70
XINS1
XSPL1
X1:2A
X1:3A
X1:4C
https://truckmanualshub.com/
T301634

https://truckmanualshub.com/

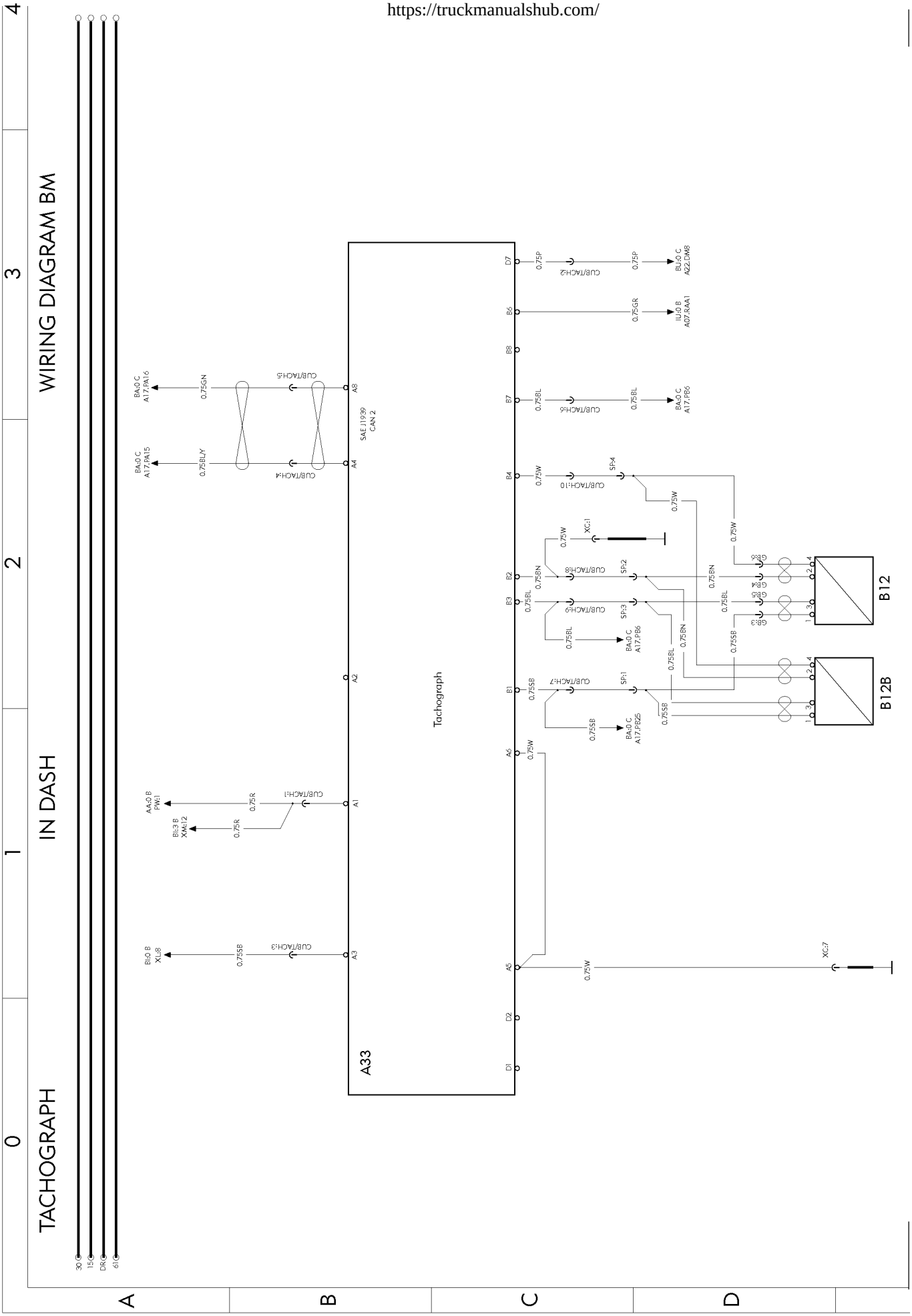

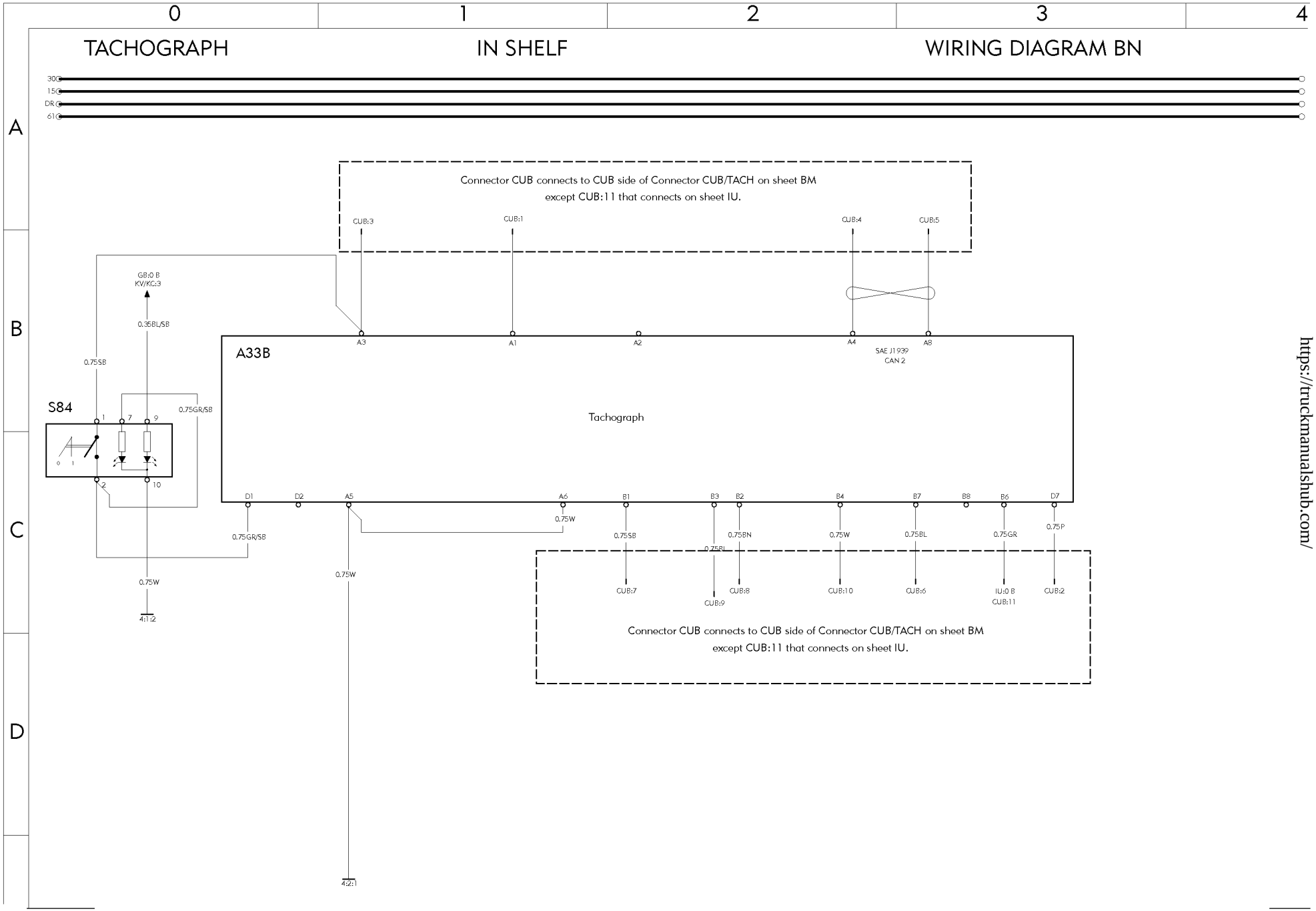

https://truckmanualshub.com/

https://truckmanualshub.com/

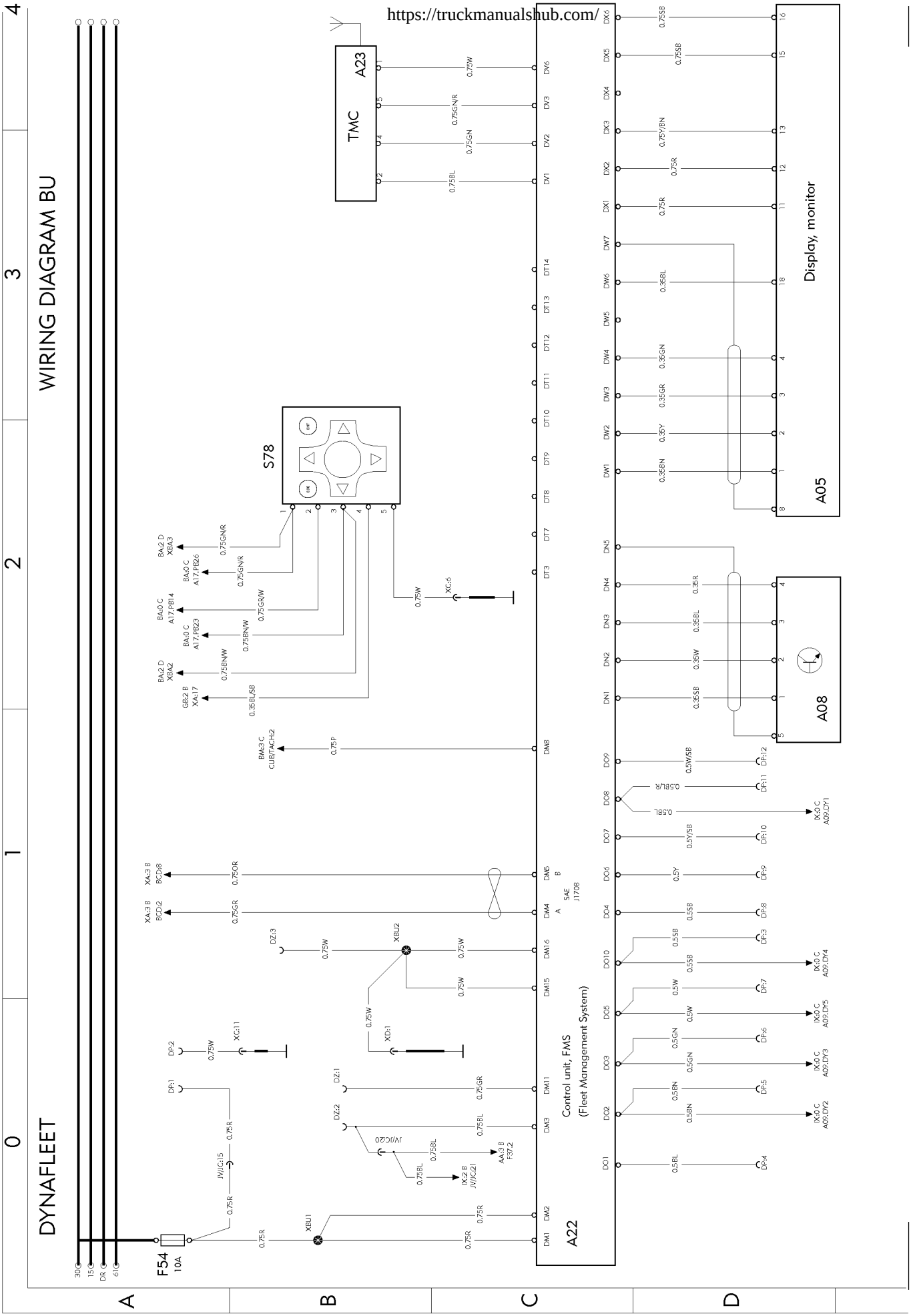

T3016257

https://truckmanualshub.com/

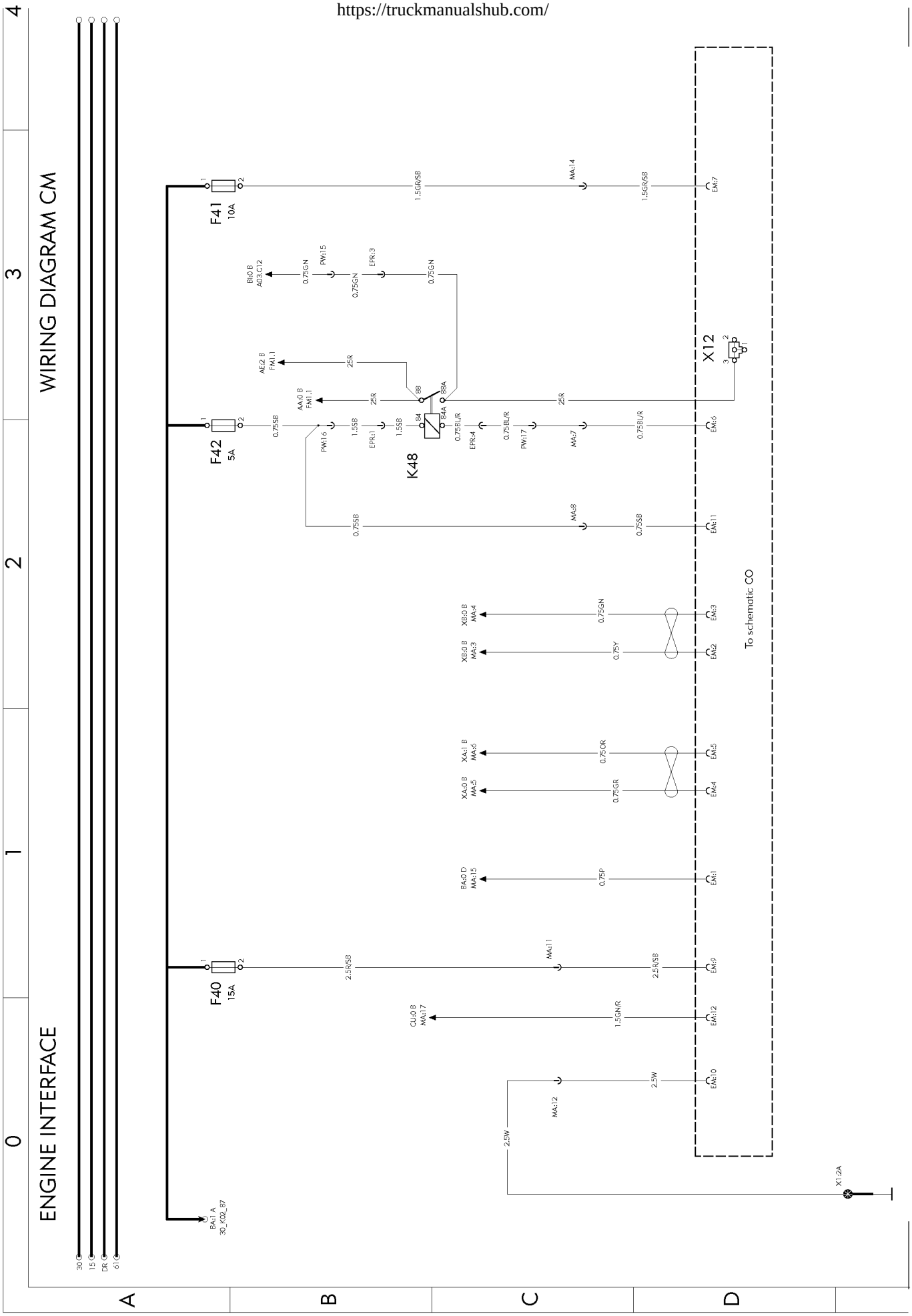

https://truckmanualshub.com/

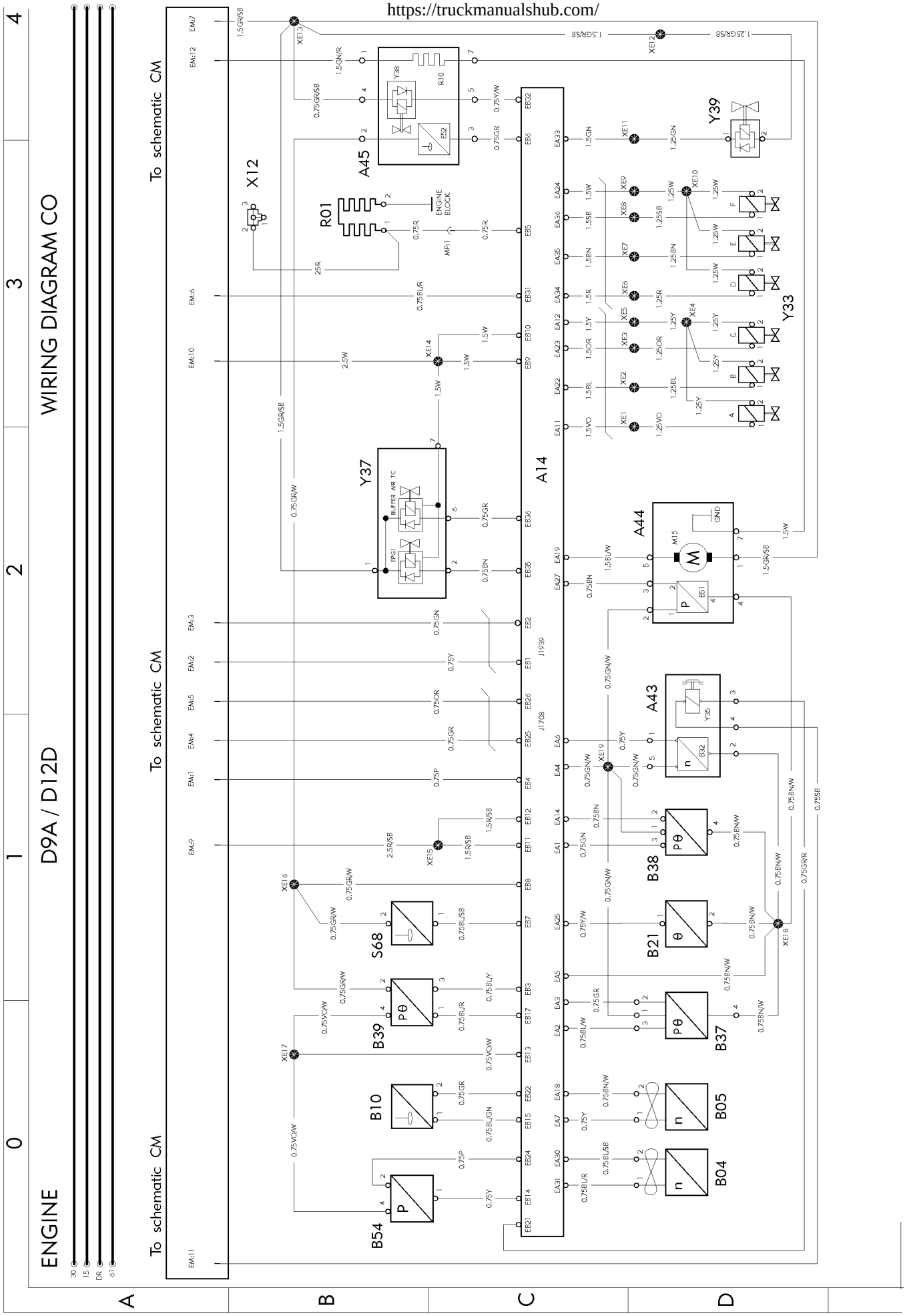

T3016259

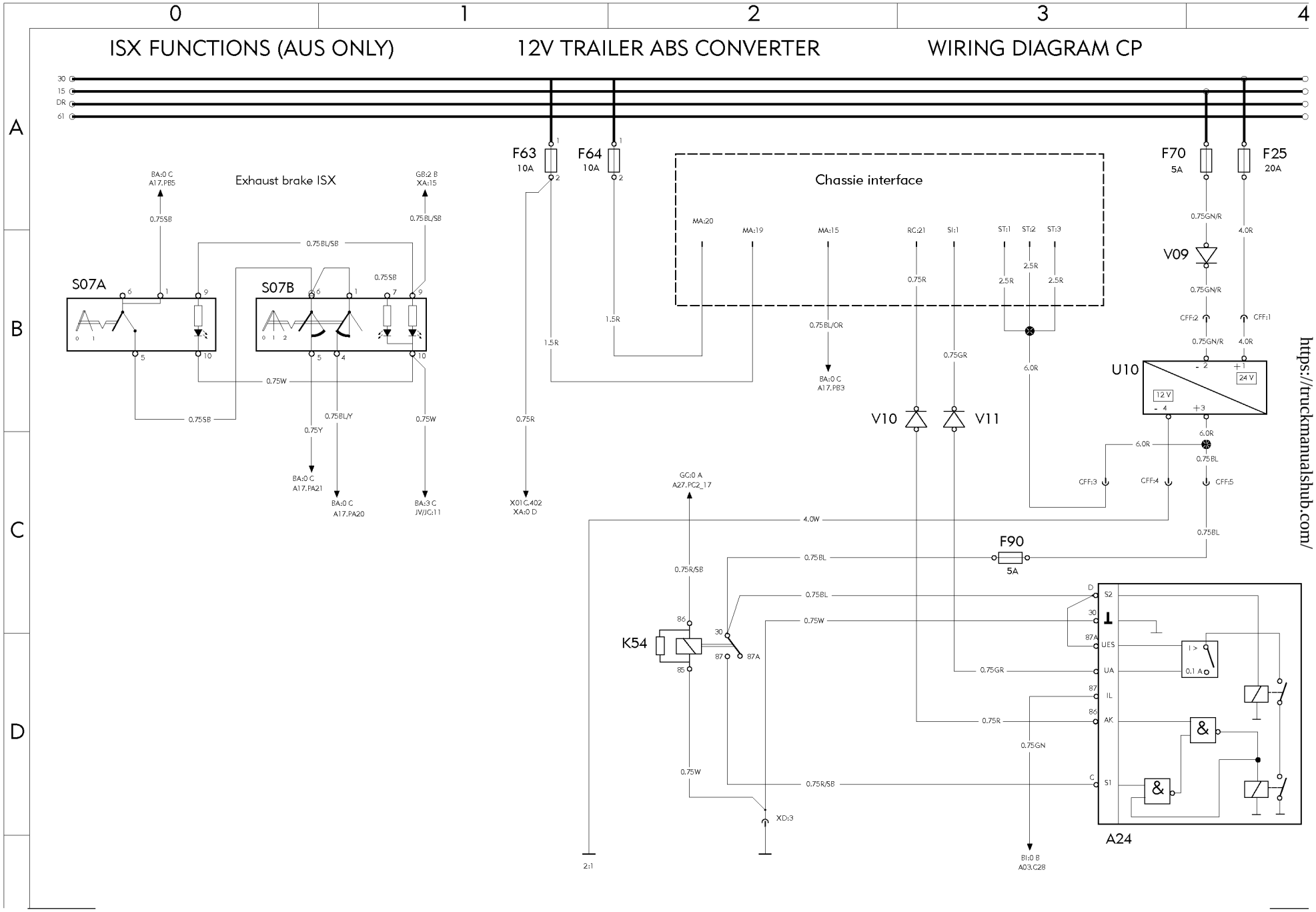

https://truckmanualshub.com/

https://truckmanualshub.com/

WIRING DIAGRAM CS

ENGINE ISX (AUS ONLY)

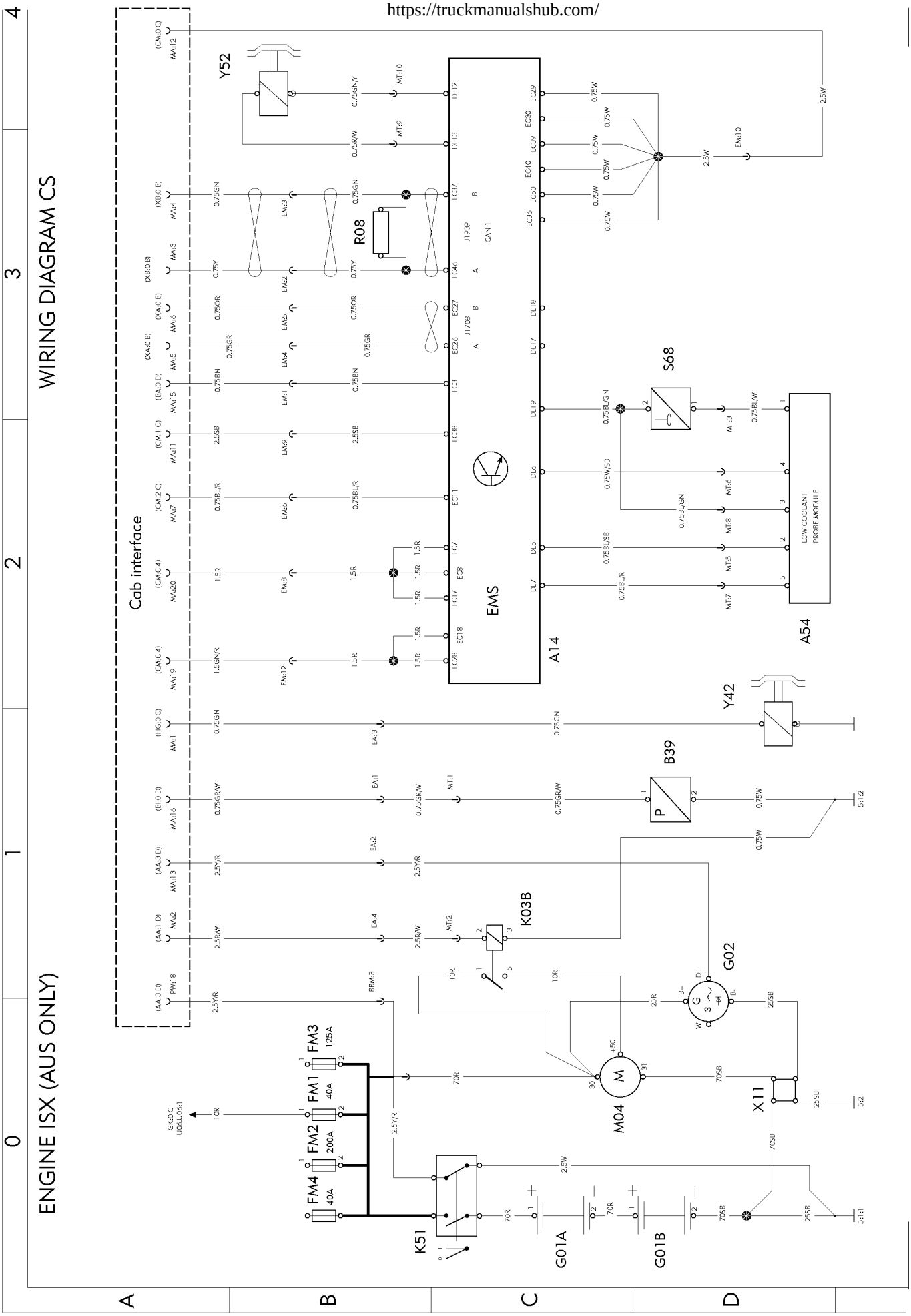

FUEL FILTER WATER DRAIN

WIRING DIAGRAM CU

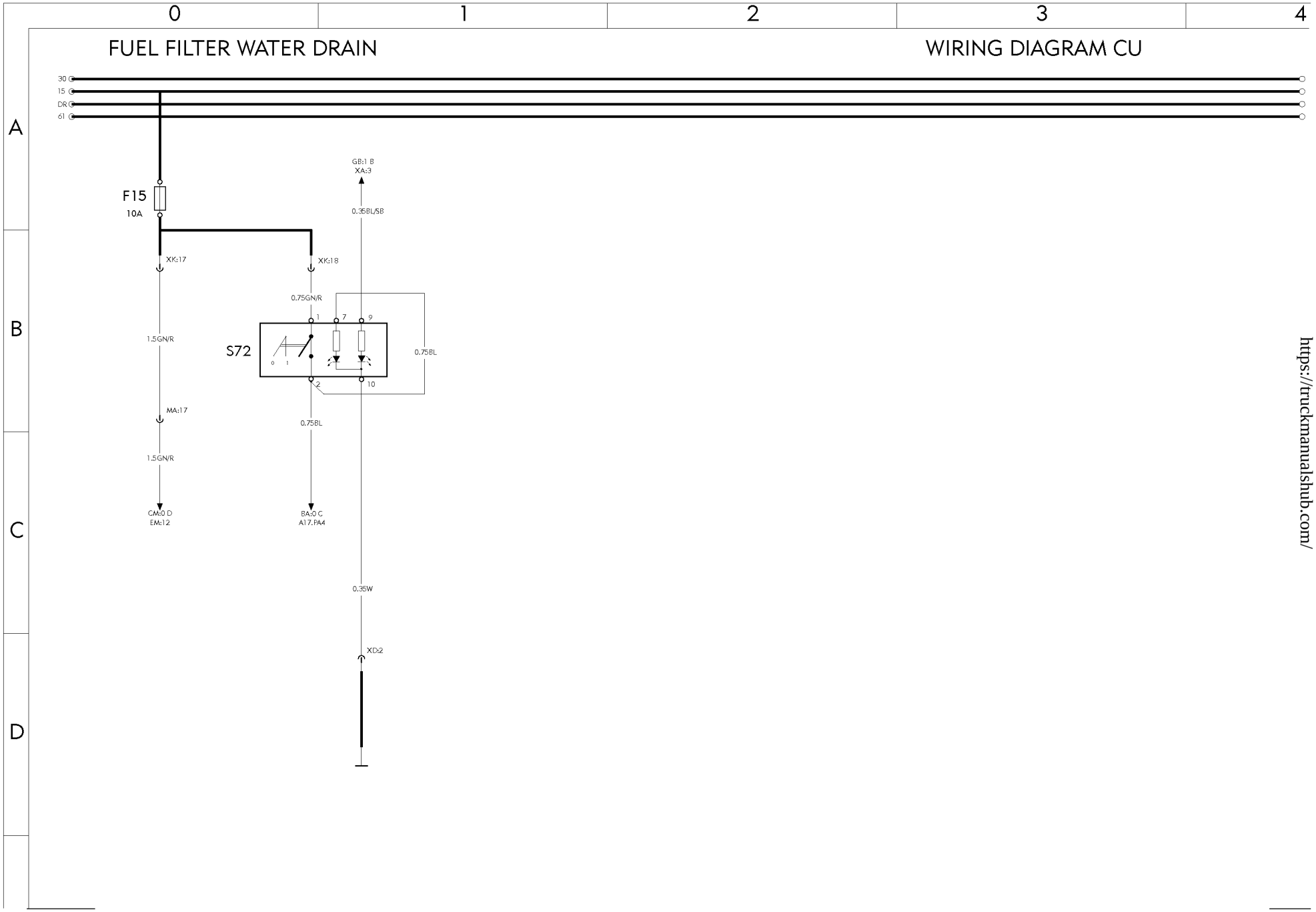

https://truckmanualshub.com/

WIRING DIAGRAM DB

GEAR SELECTOR ECU

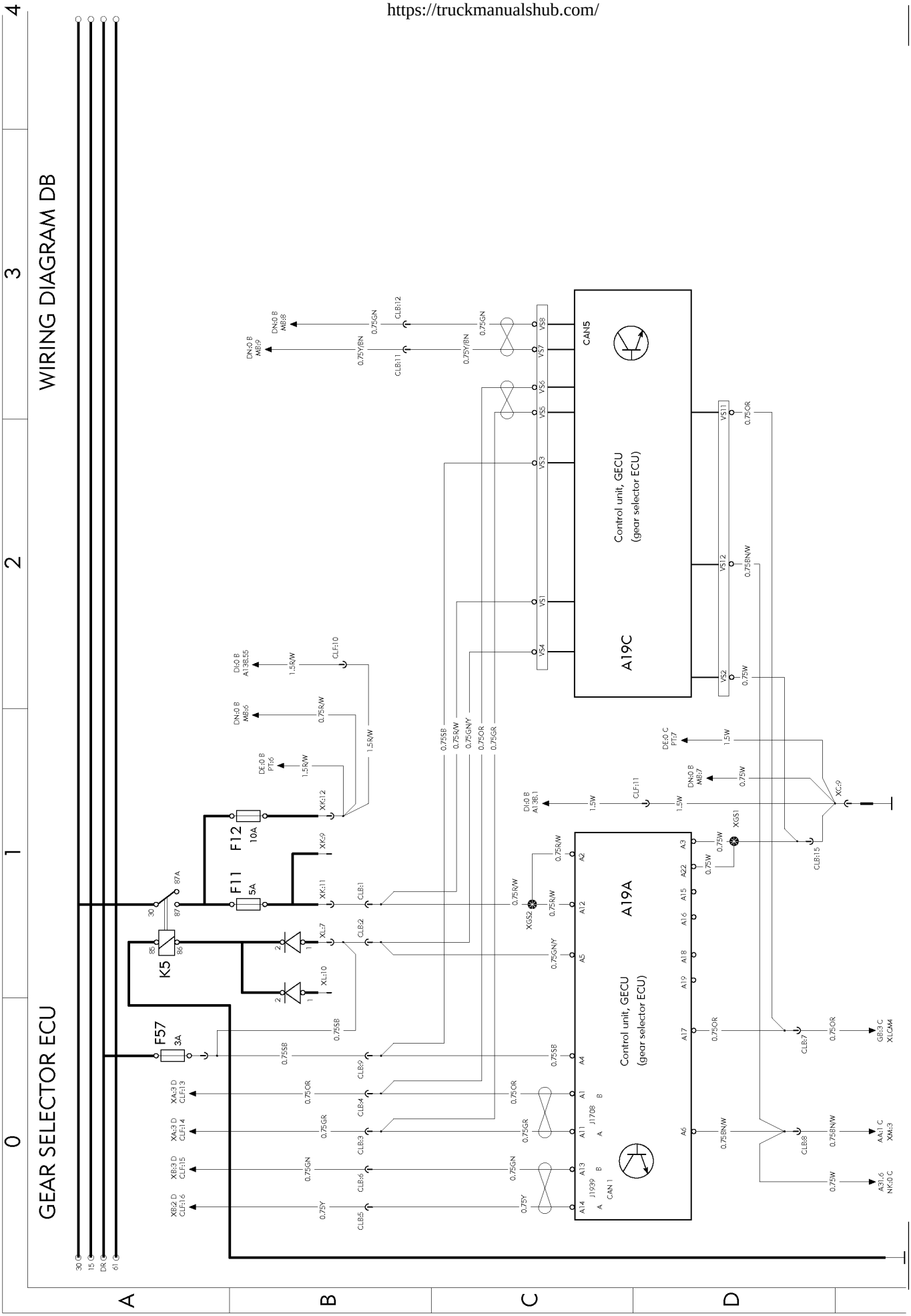

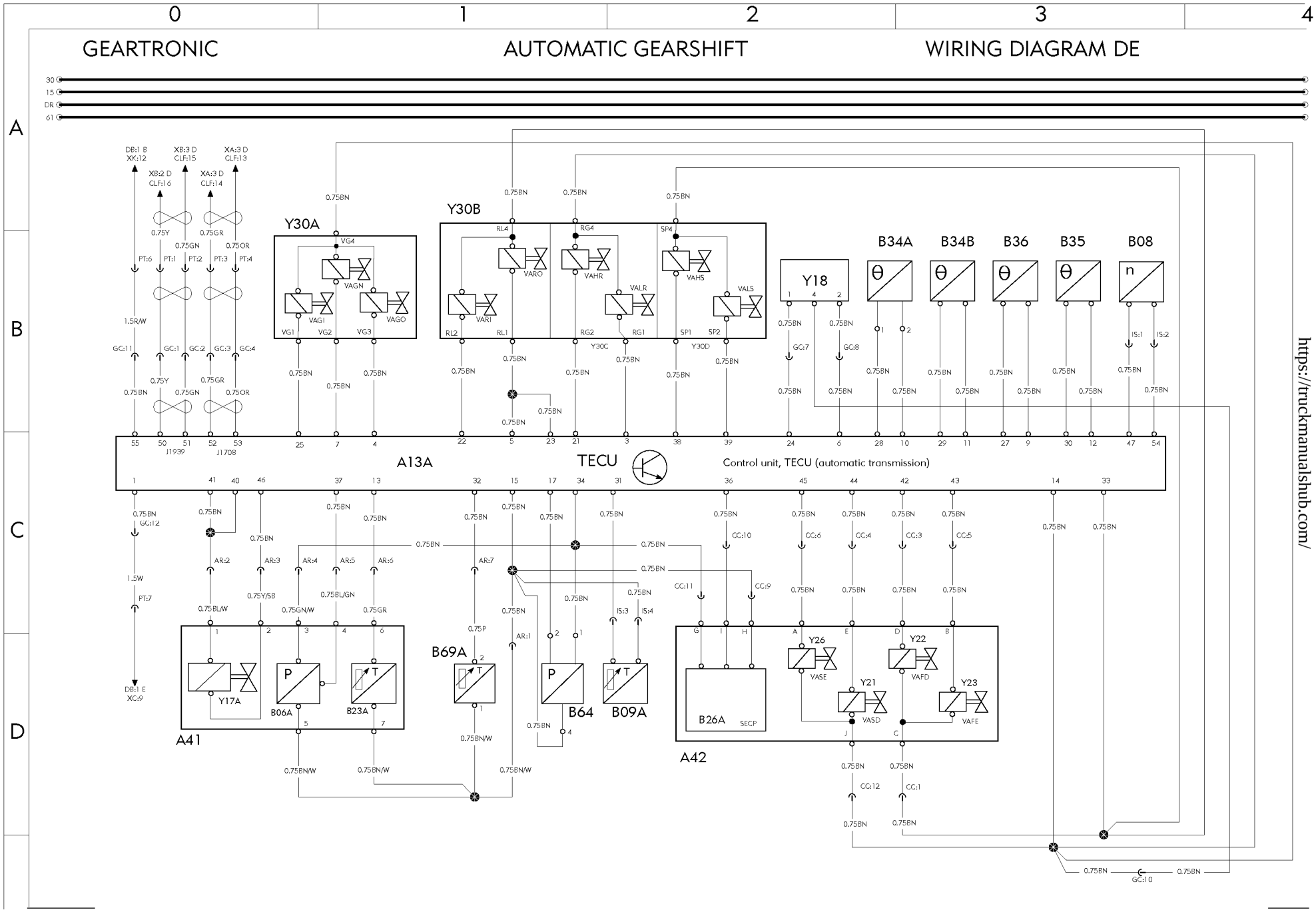

https://truckmanualshub.com/

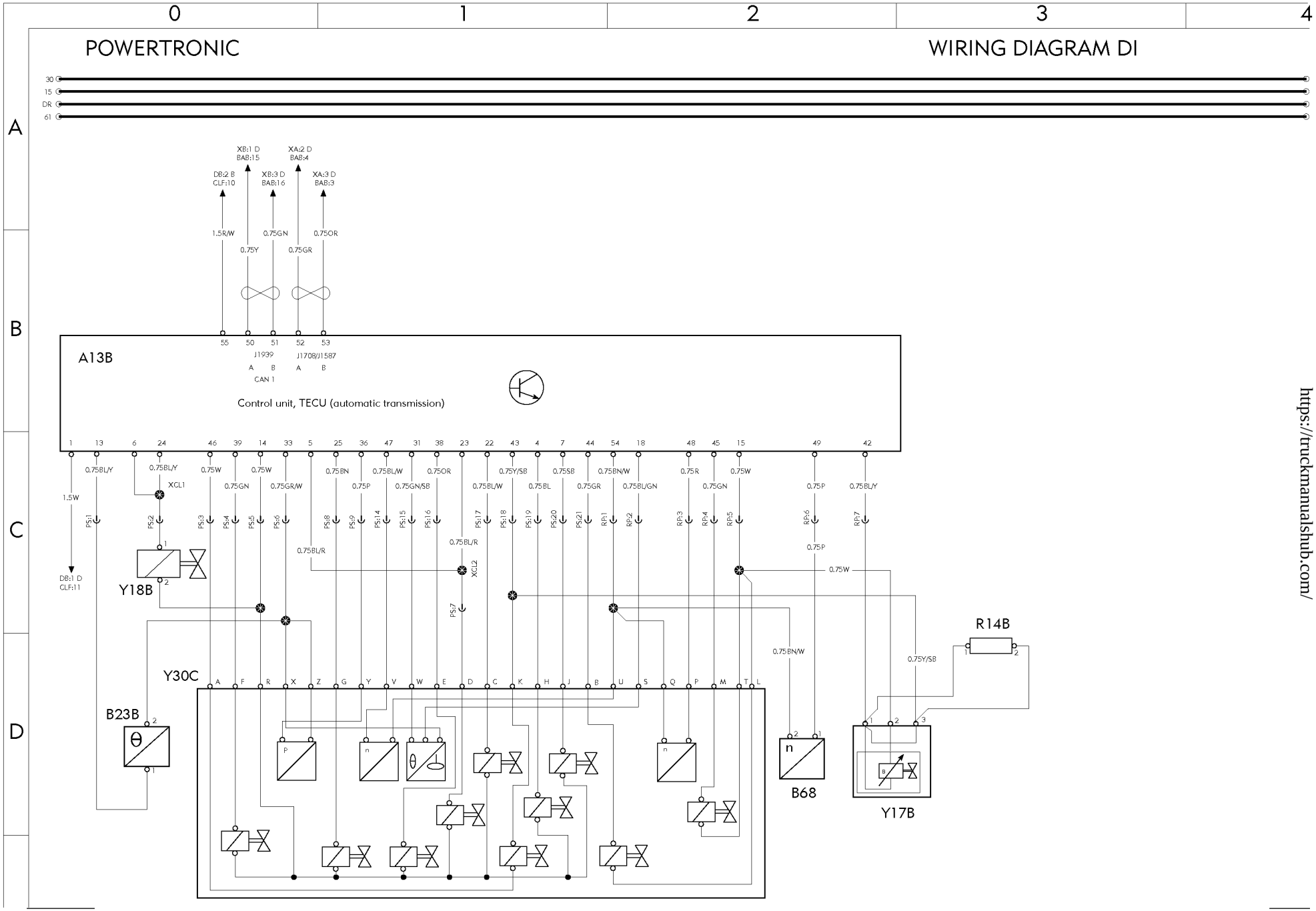

https://truckmanualshub.com/

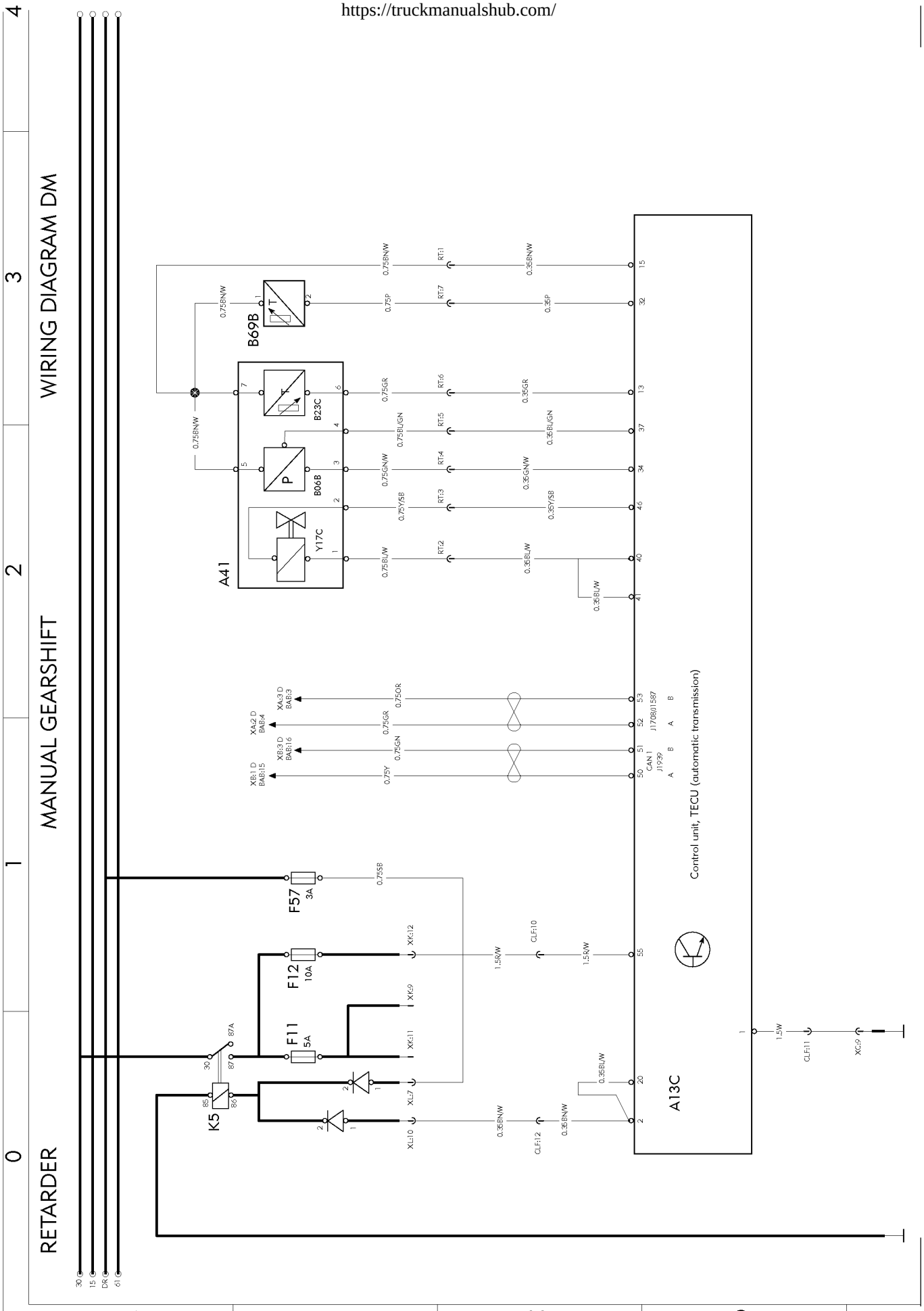
RETARDER
MANUAL GEARSHIFT
WIRING DIAGRAM DM
A41
Y17C
B06B
B23C
B69B
K5
F11
5A
F12
10A
F57
3A
A13C
Control unit, TECU (automatic transmission)
CAN 1
J1939
J1708/J1587
30
15
DR
61

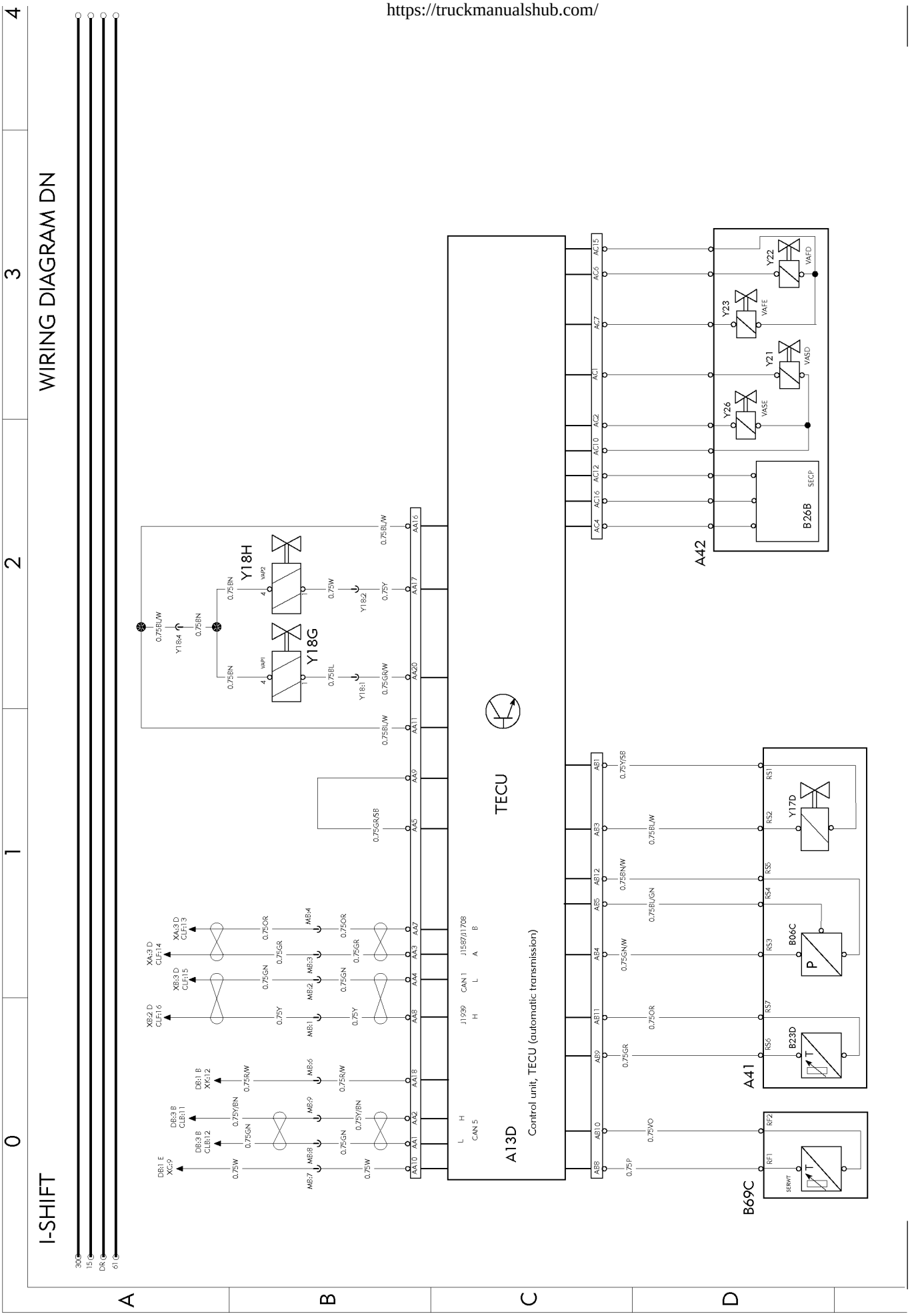
I-SHIFT
WIRING DIAGRAM DN
TECU
A13D
Control unit, TECU (automatic transmission)
A42
B26B
SECP
Y22
VAFD
Y23
VAFE
Y21
VASD
Y26
VASE
Y18H
Y18G
A41
B23D
B06C
Y17D
B69C
SERVIT
J1939
CAN 1
J1587/J1708
CAN 5

POWER TAKE OFF

WIRING DIAGRAM DQ

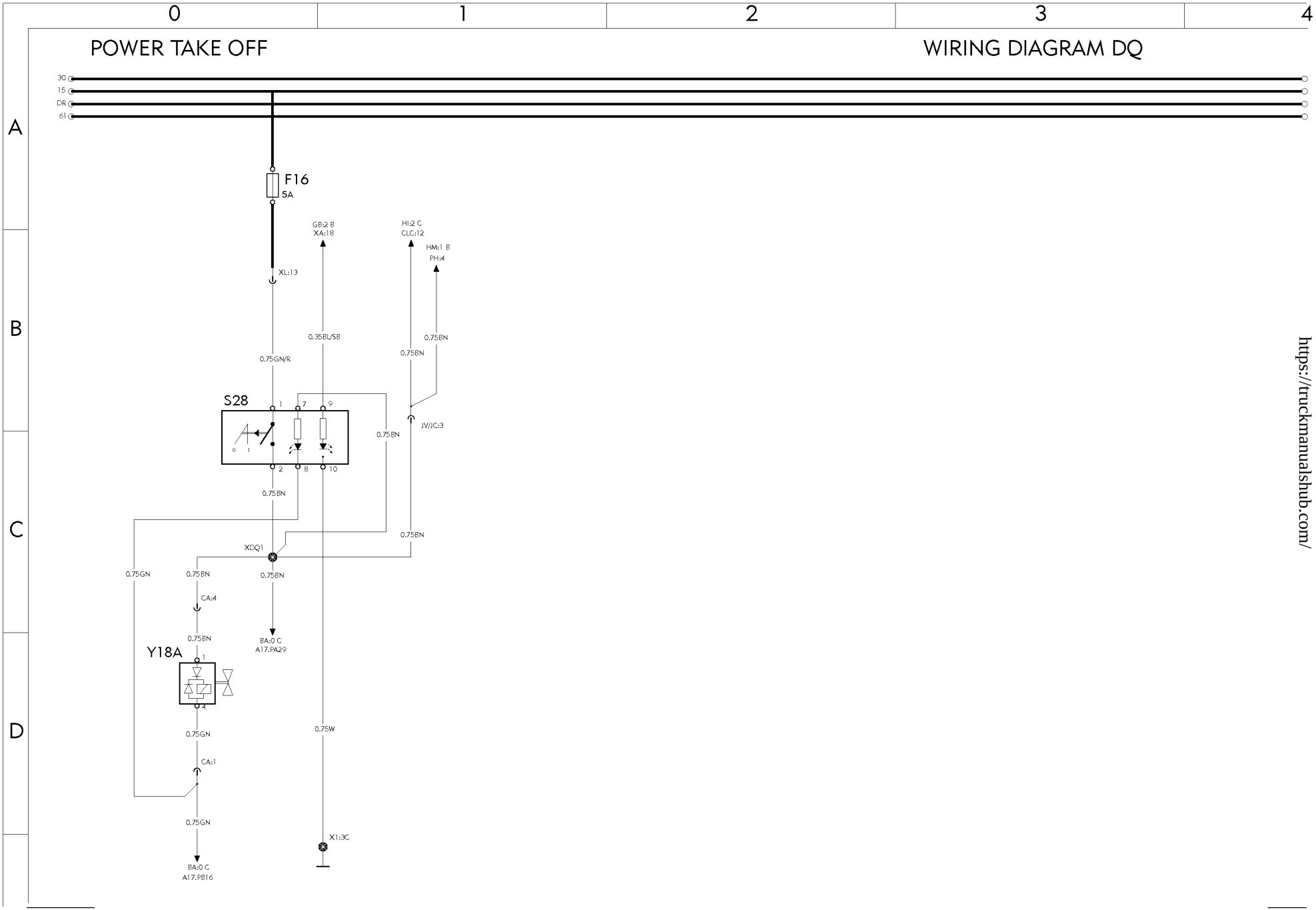

https://truckmanualshub.com/

https://truckmanualshub.com

WIRING DIAGRAM DU

4x2,6x2,6x4,8x2,8x4,AWD

DIFF.-LOCK

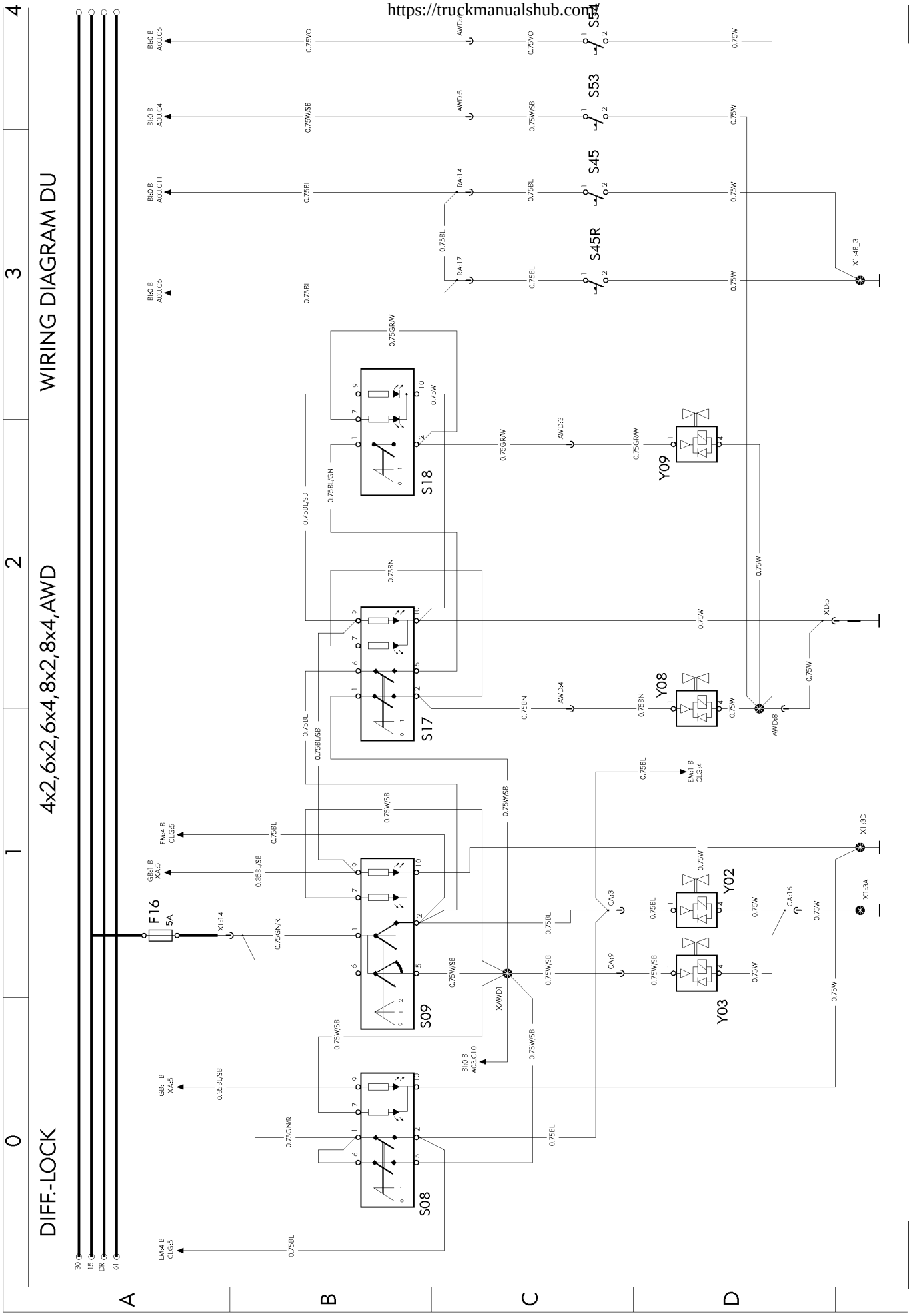

T3016269

TRAILER ABS/EBS SUPPLY

WIRING DIAGRAM EC

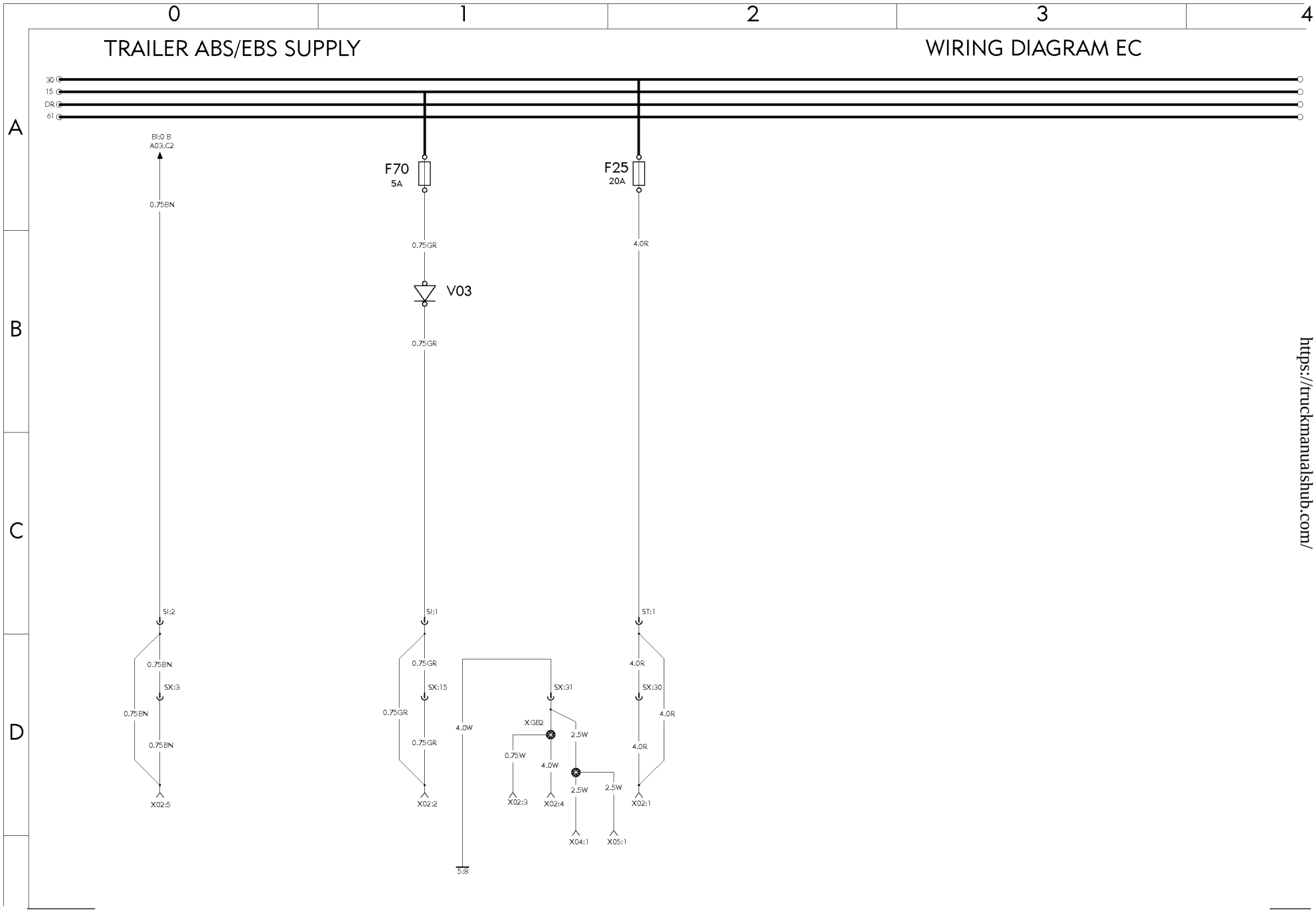

https://truckmanualshub.com/

https://truckmanualshub.com/

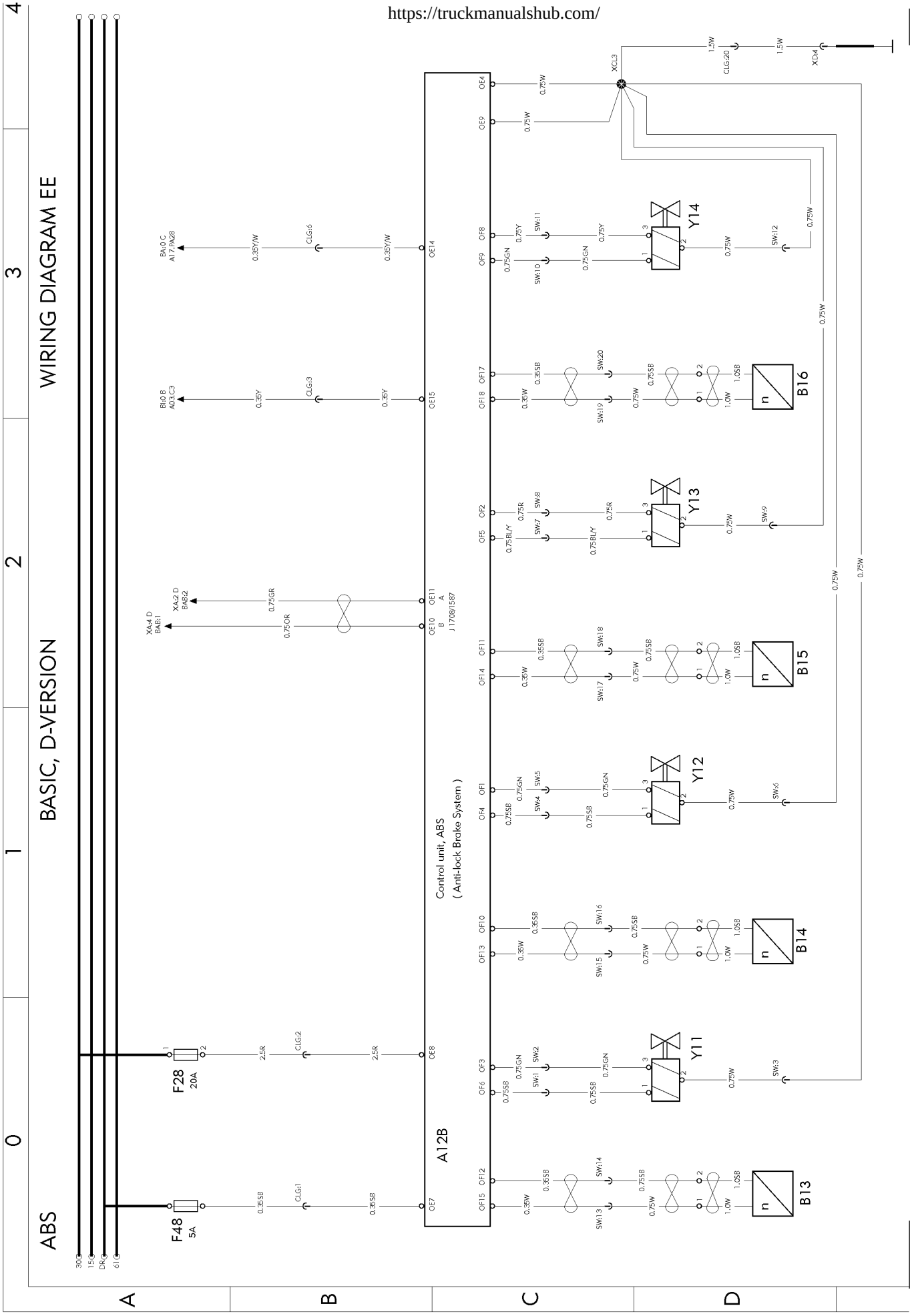

T3016271

https://truckmanualshub.com/

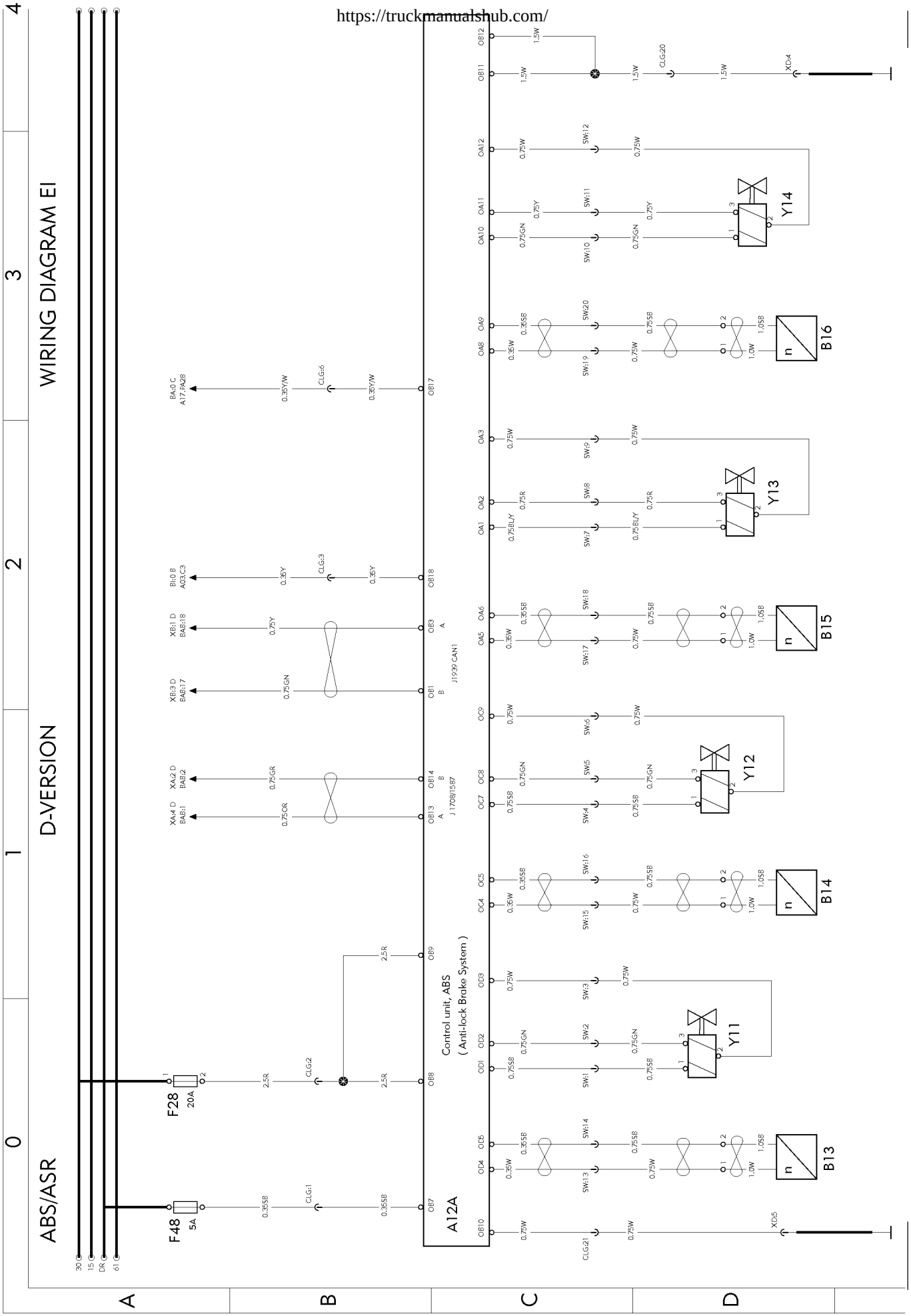

https://truckmanualshub.com/

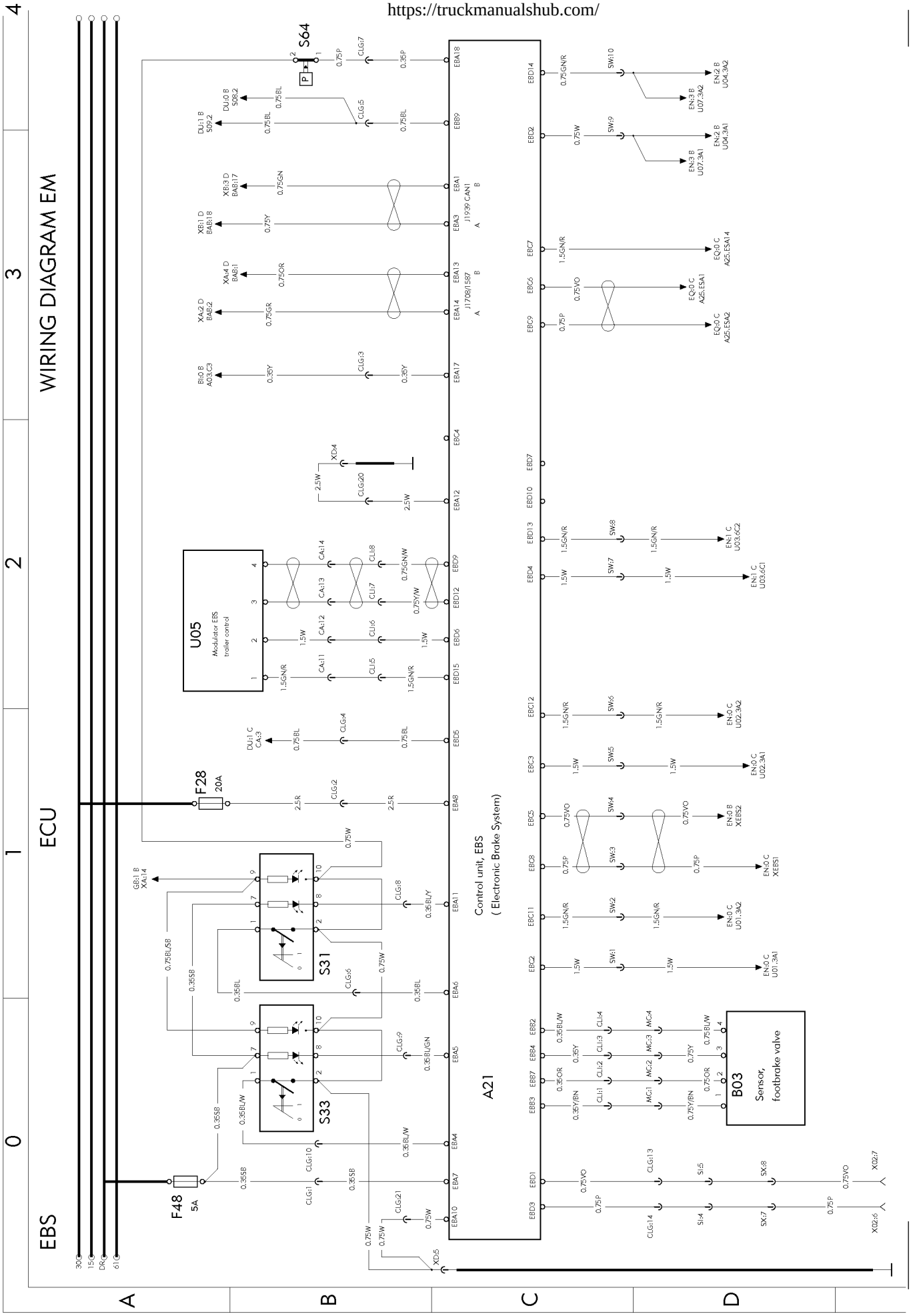

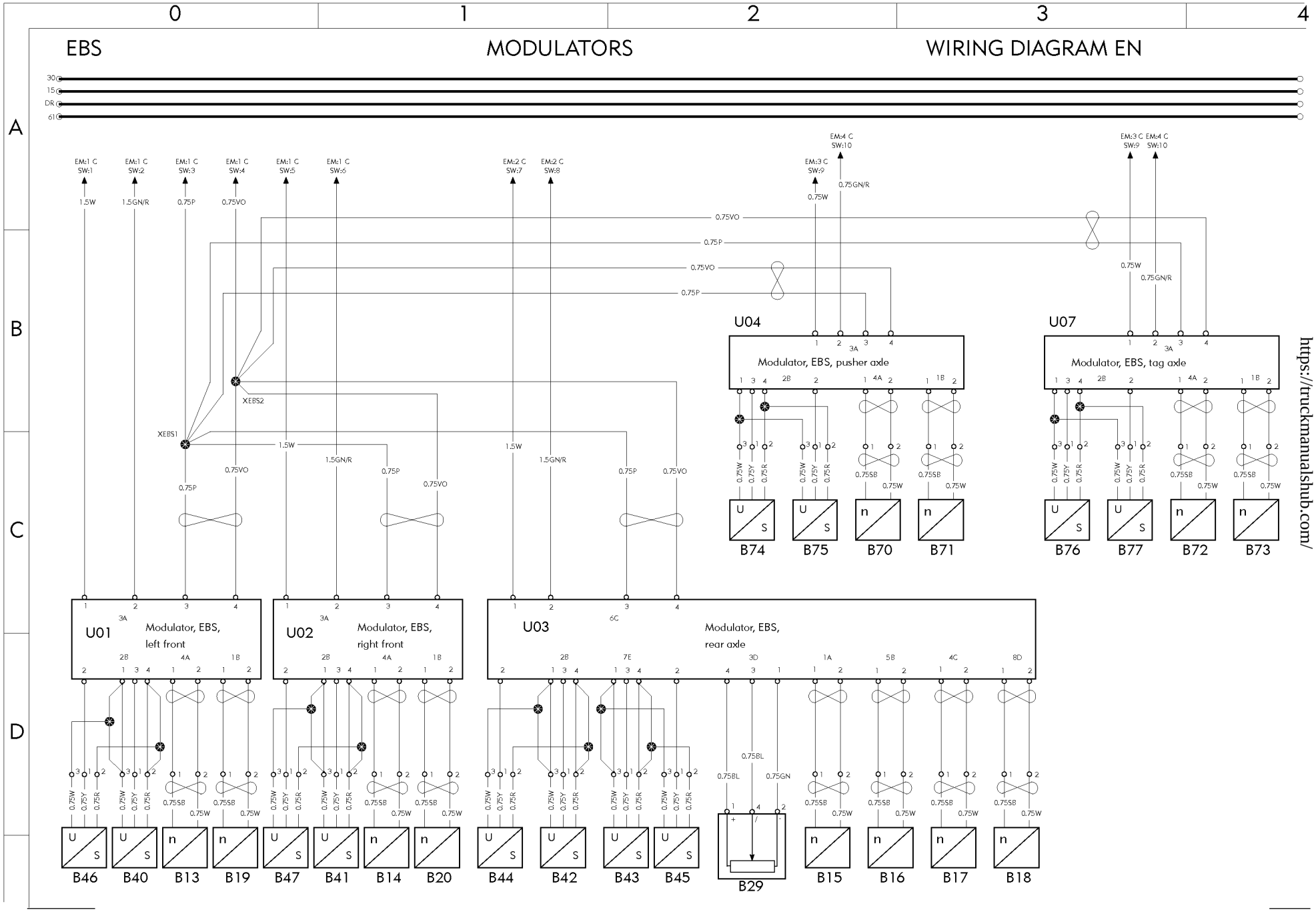

https://trucknanualshub.com/

https://truckmanualshub.com/

WIRING DIAGRAM EQ

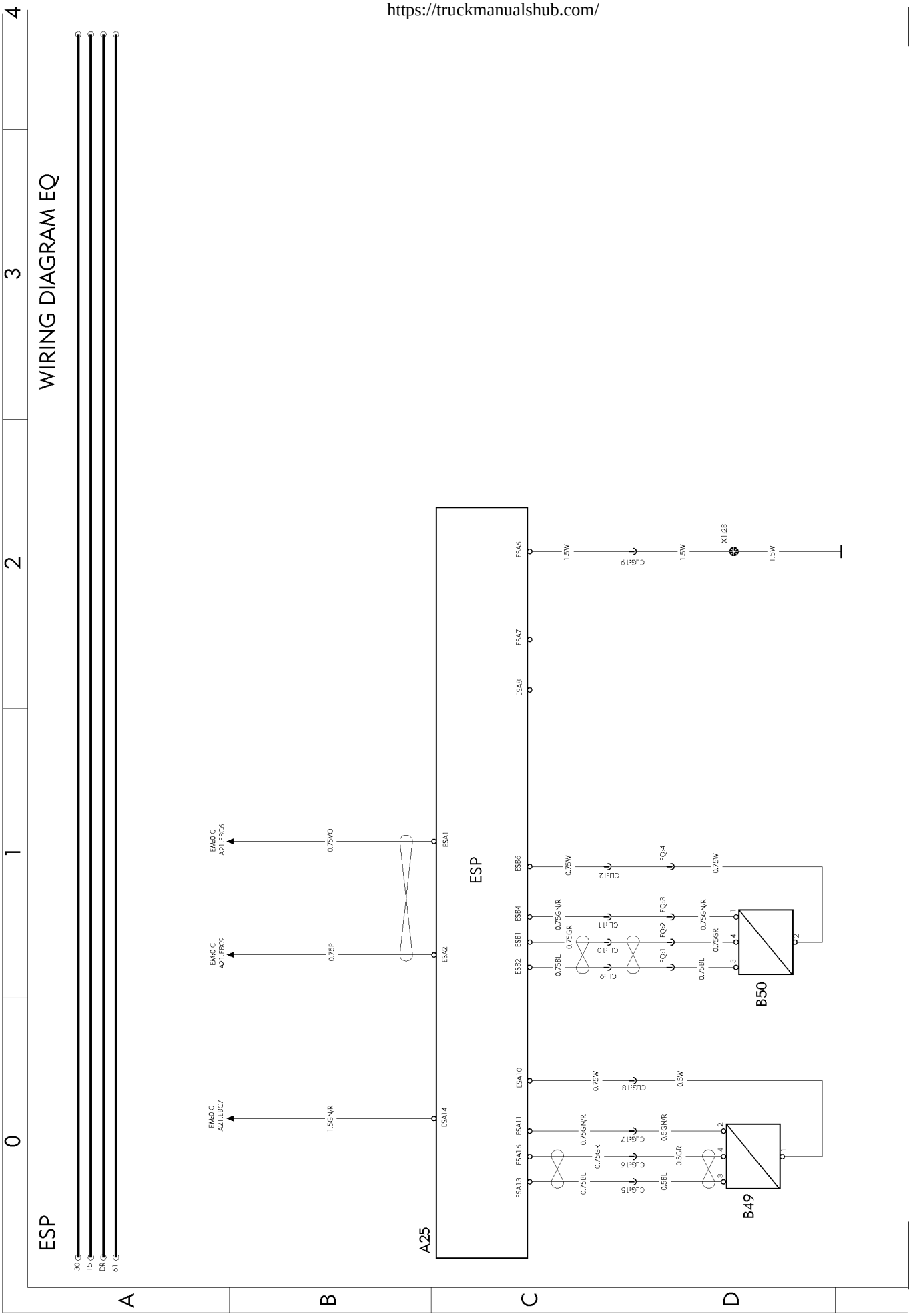

AIR-SUSPENSION WIRING DIAGRAM FA

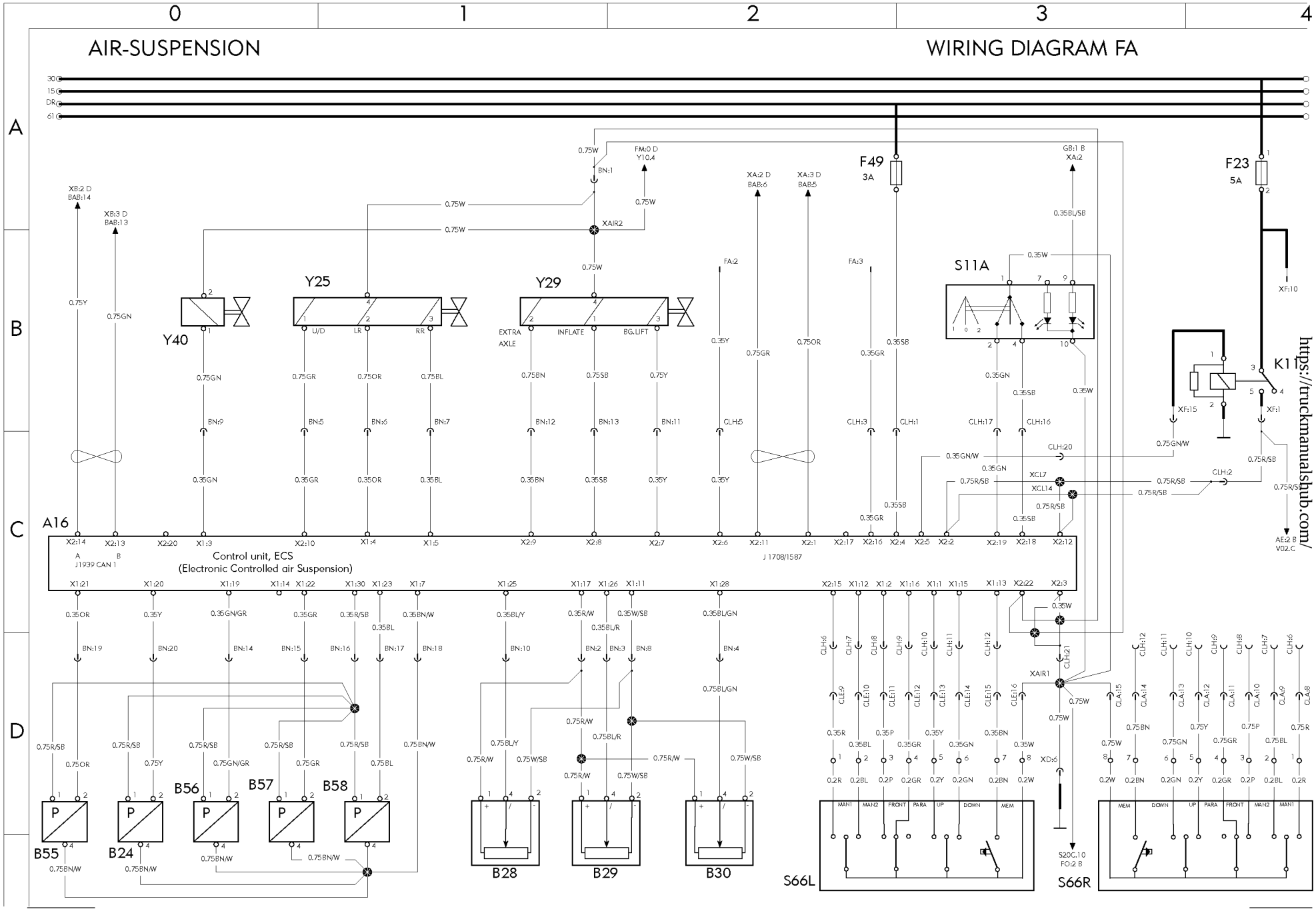

LOAD INDICATOR

WIRING DIAGRAM FG

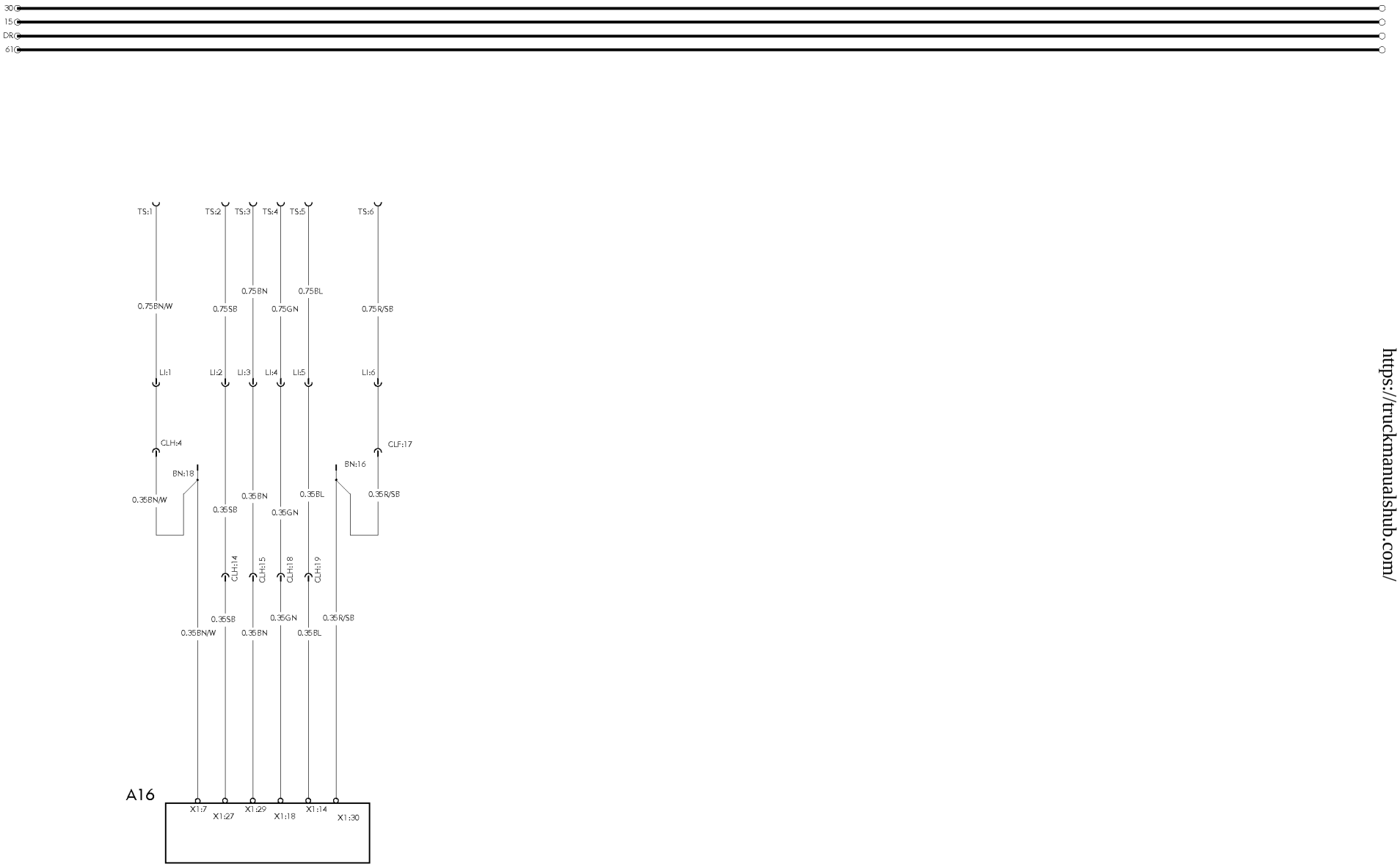

https://truckmanualshub.com/

https://truckmanualshub.com/

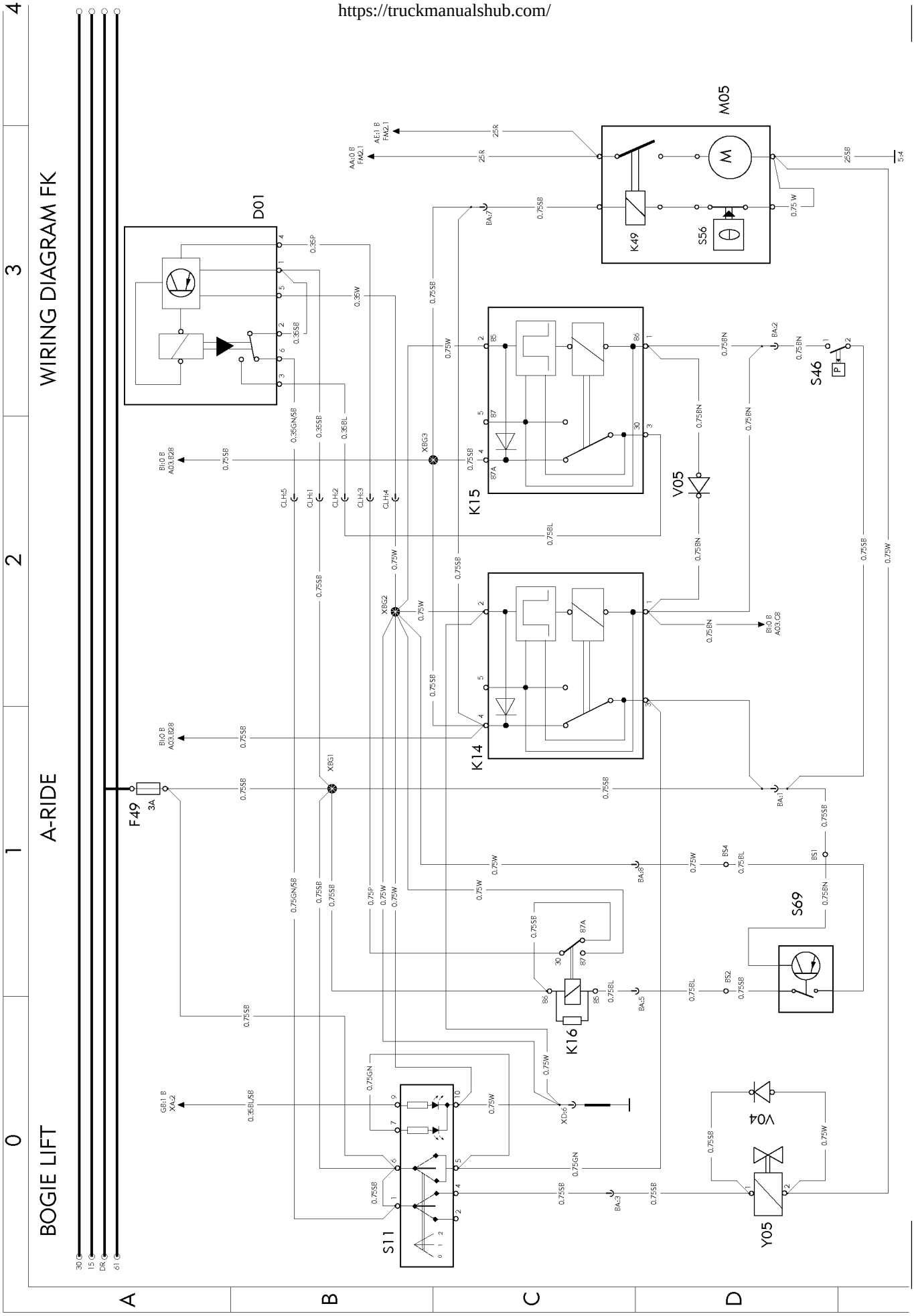

https://truckmanualshub.com/

AXLE LOCK

SELF STEERED AXLE

WIRING DIAGRAM FM

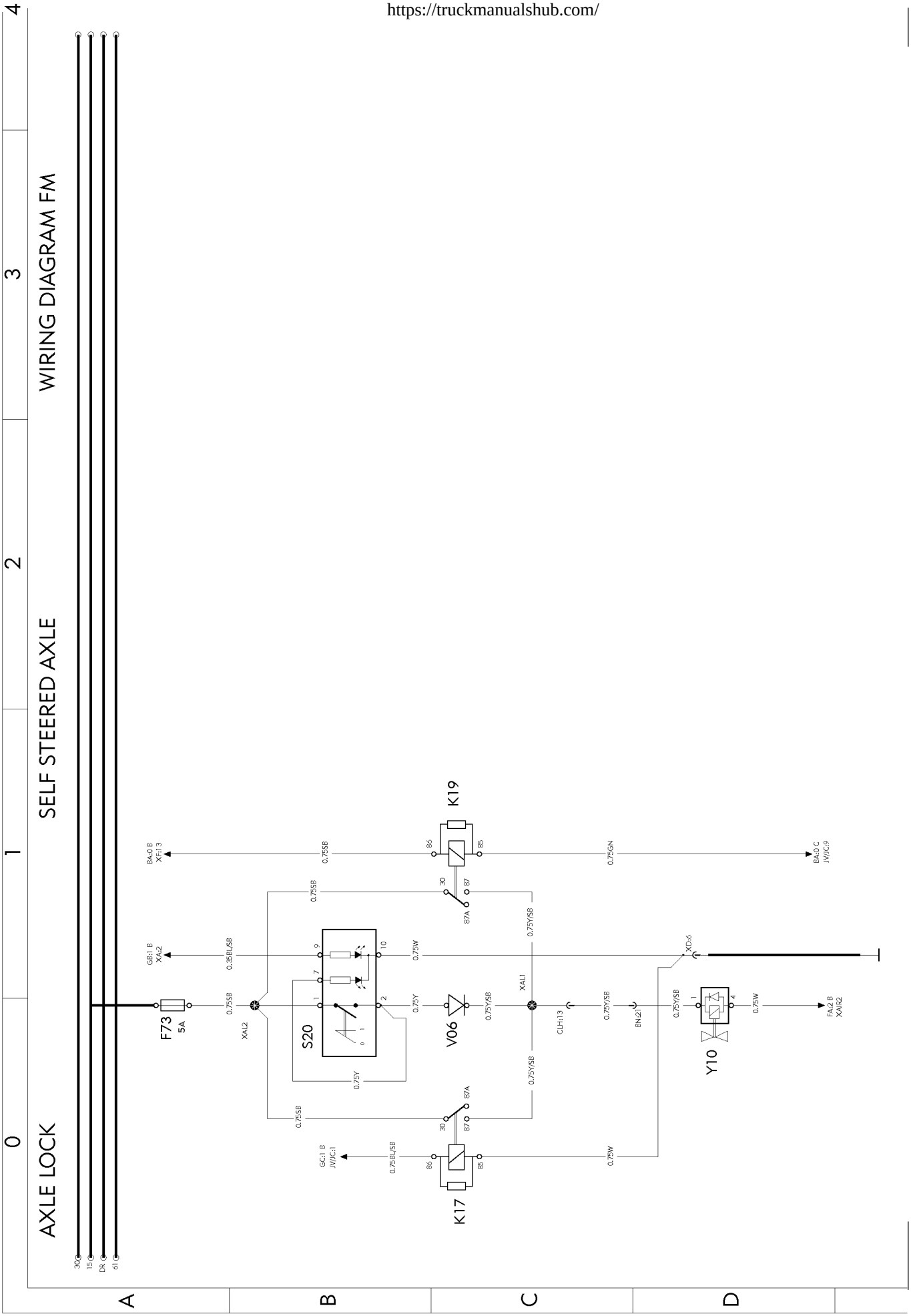

T3016279

HYDRAULIC STEERED AXLE

WIRING DIAGRAM FP

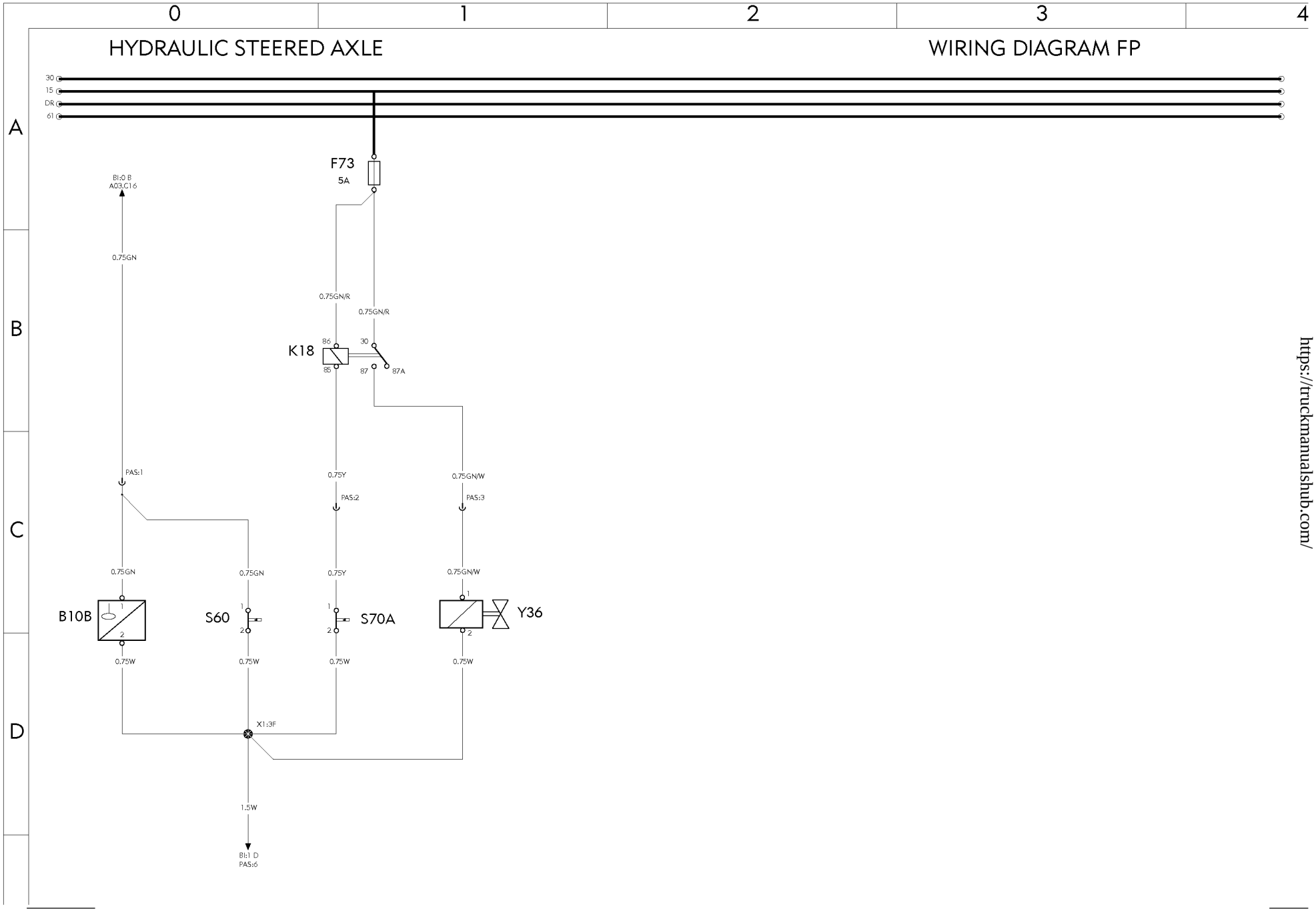

https://truckmanualshub.com/

https://truckmanualshub.com/

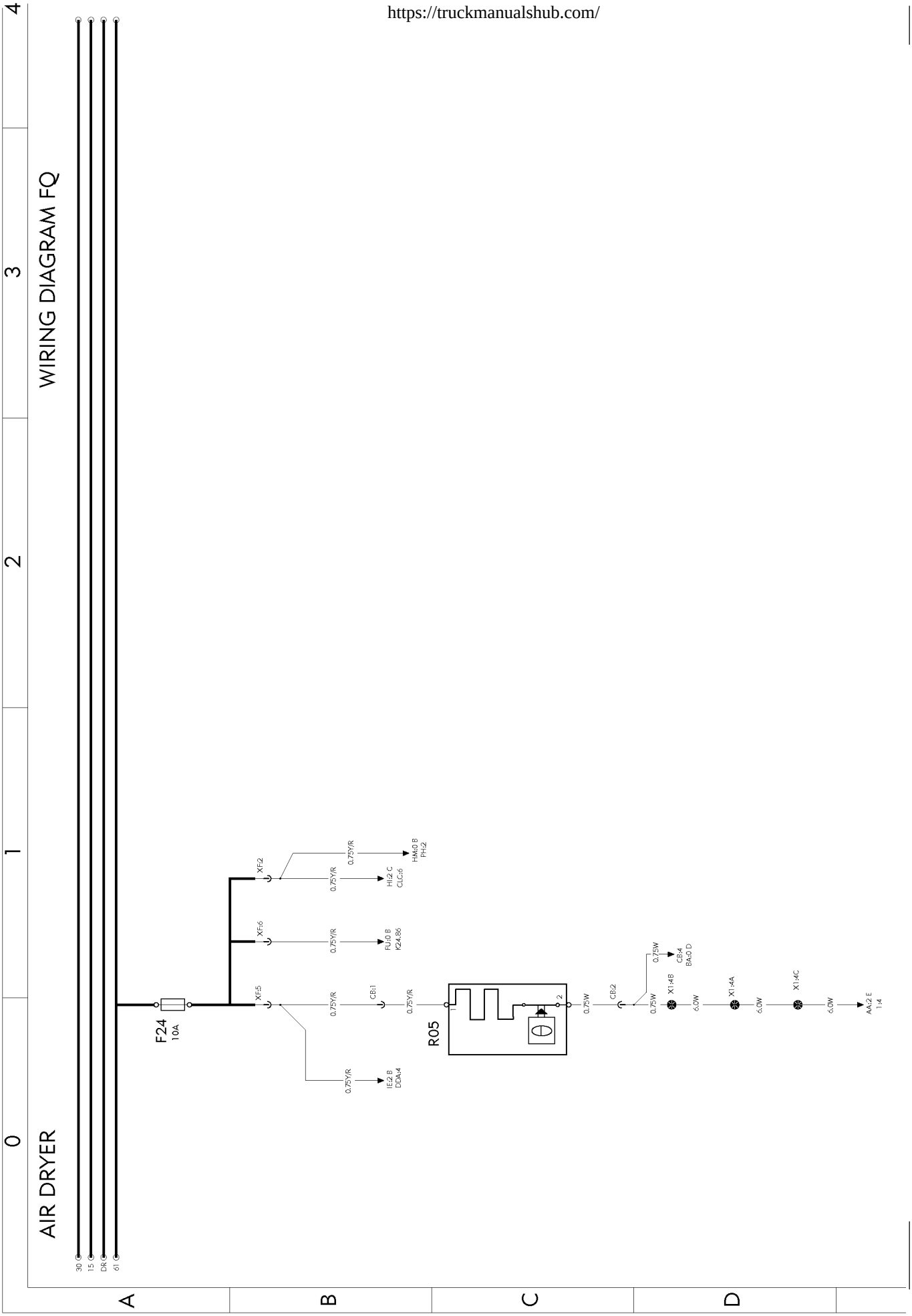

T3016282

CENTRAL LUBRICATION SYSTEM

WIRING DIAGRAM FU

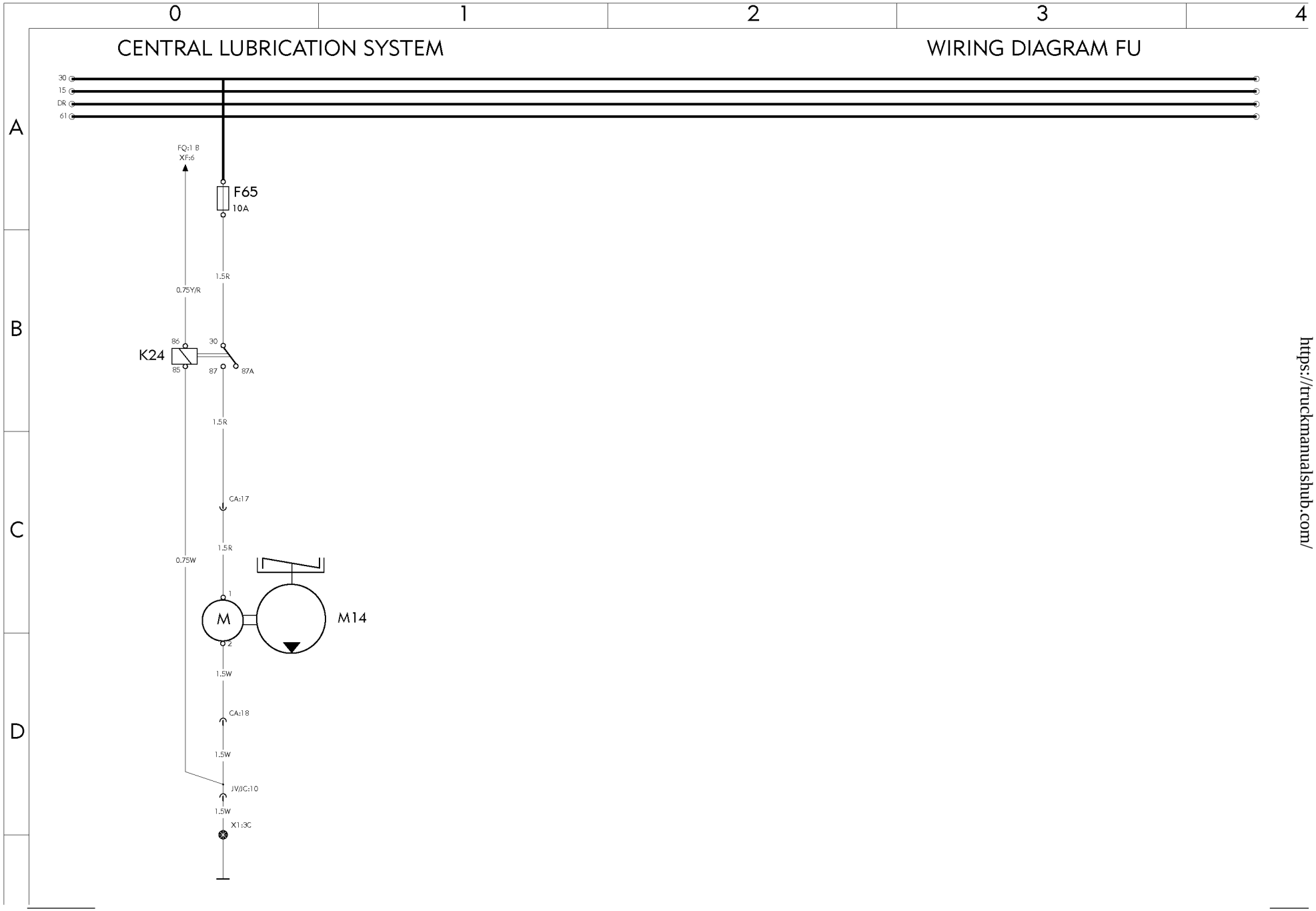

https://truckmanualshub.com/

https://truckmanualshub.com/

WIRING DIAGRAM GA

HEADLIGHTS

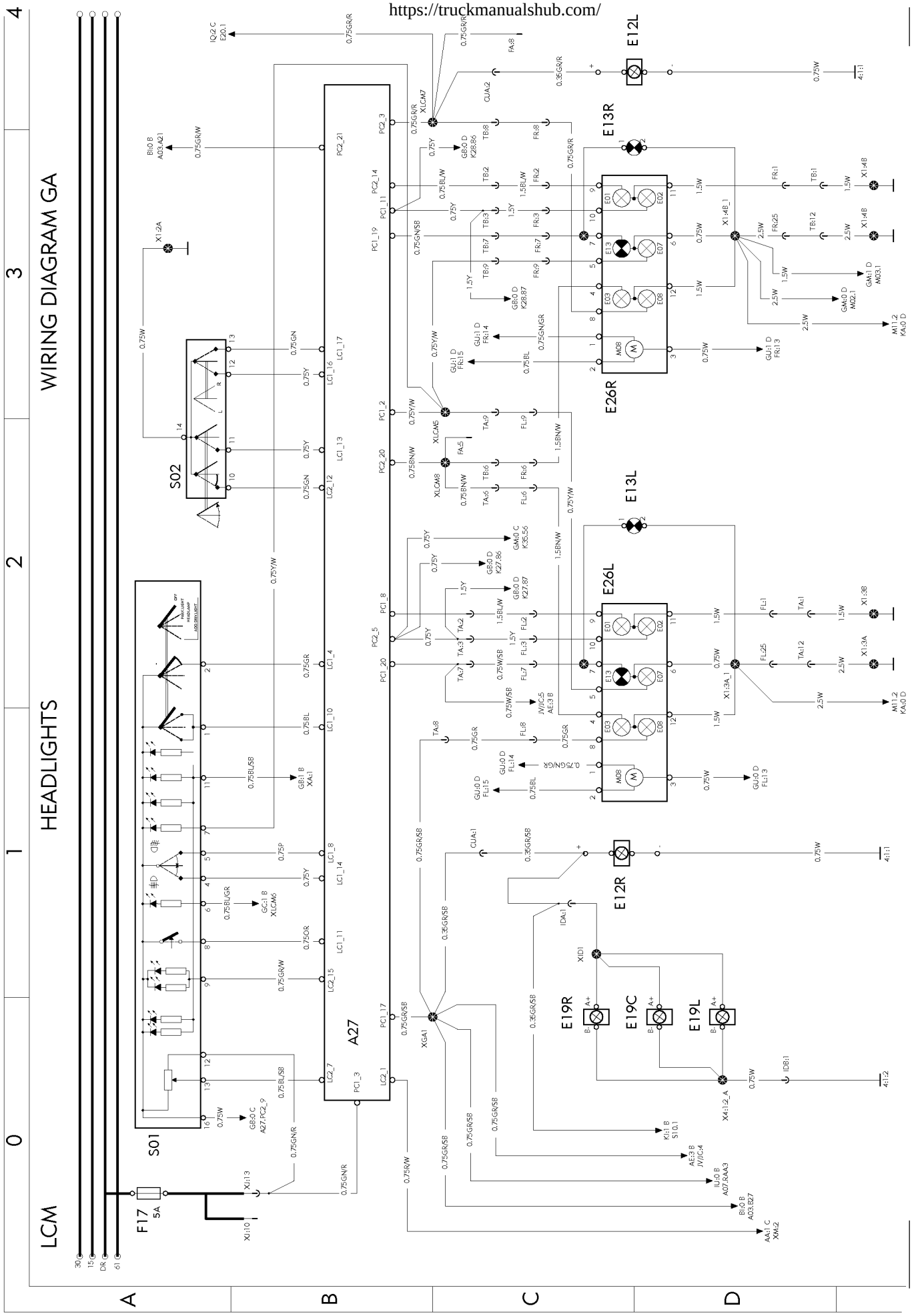

T3016284

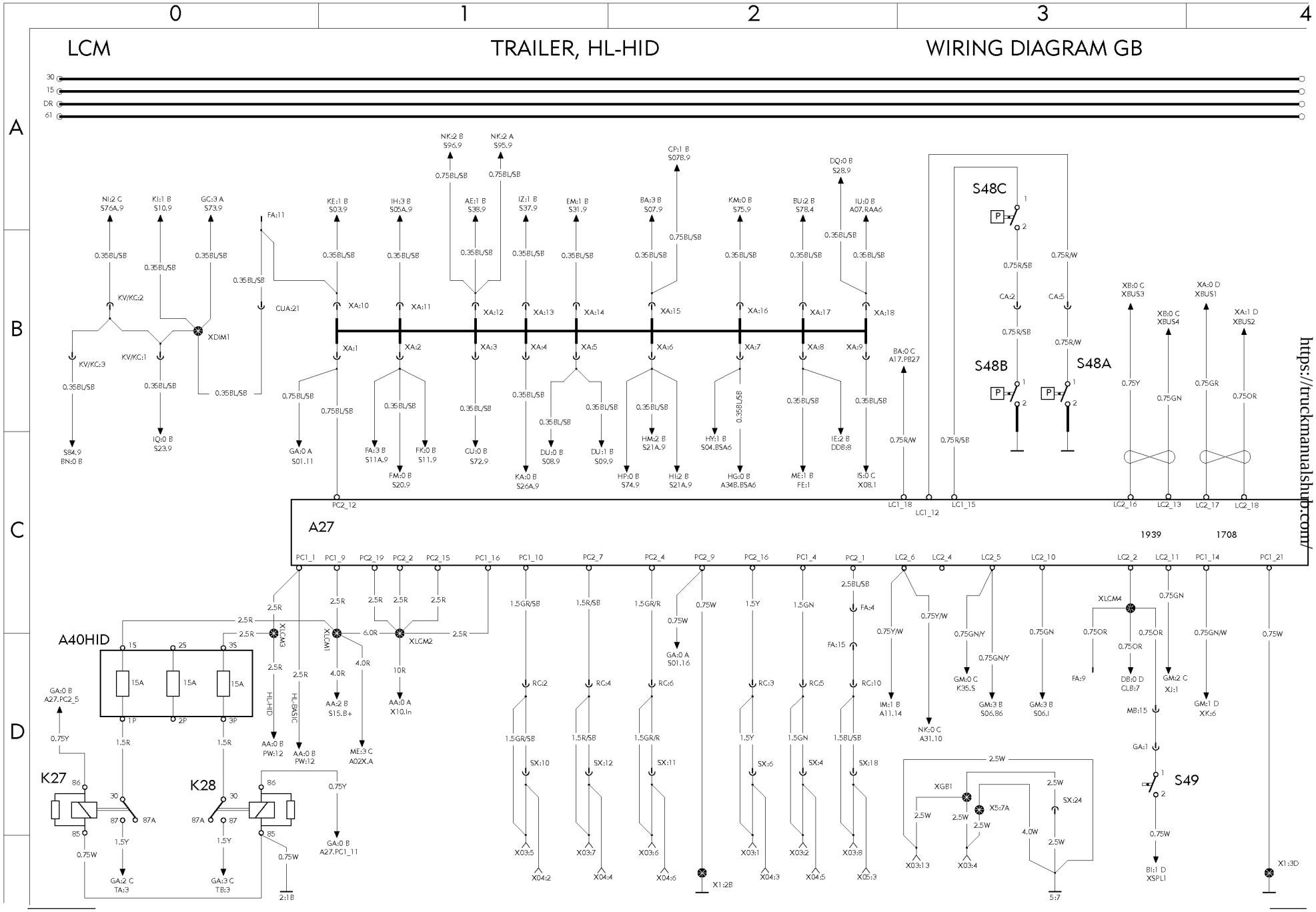

https://truckmanualshub.com/

https://truckmanualshub.com/

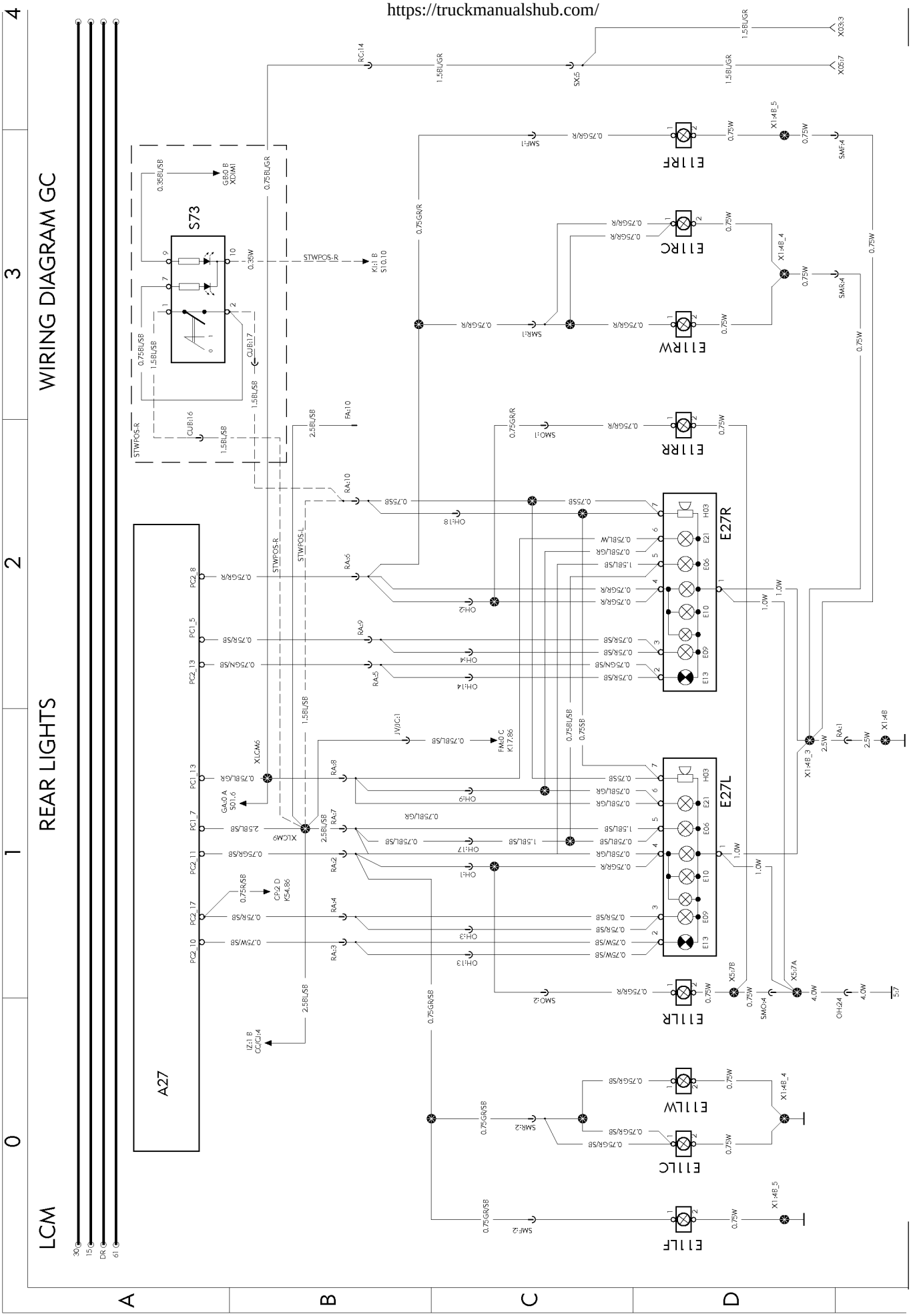

T3016286

WIRING DIAGRAM GK

TRAILER CONNECTIONS (AUS ONLY)

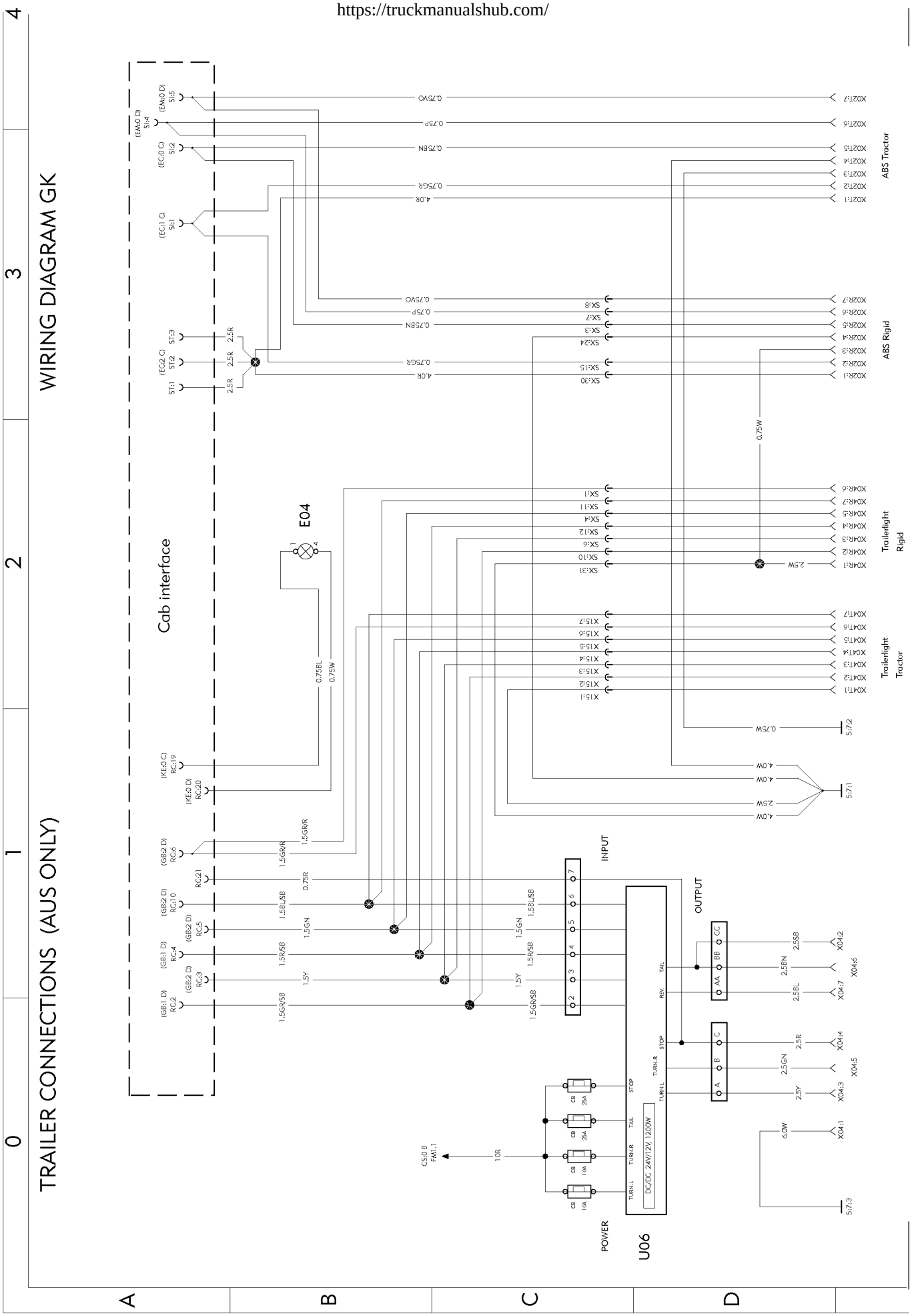

https://truckmanualshub.com/

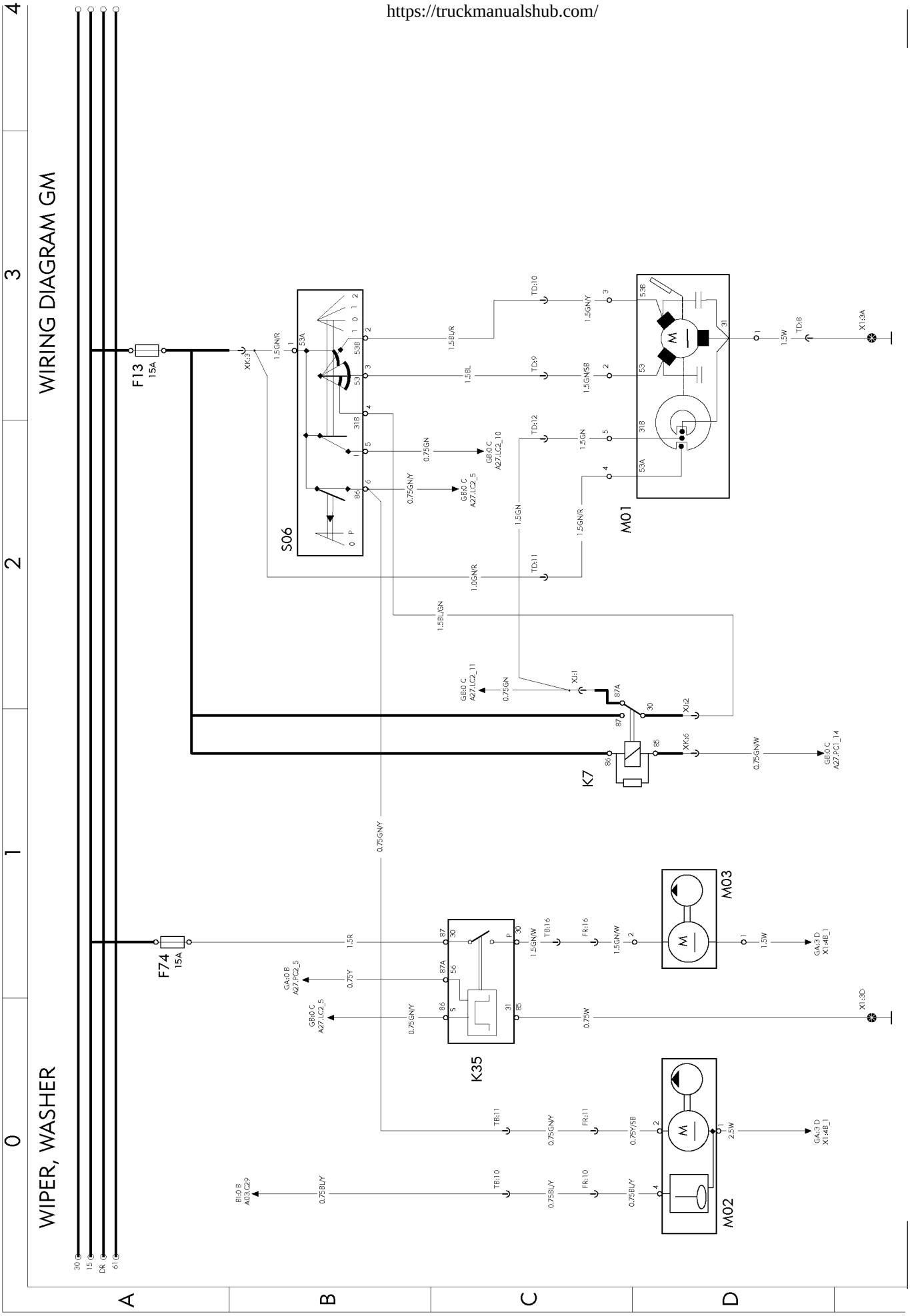

T3016288

https://truckmanualshub.com/

HORN

WIRING DIAGRAM GQ

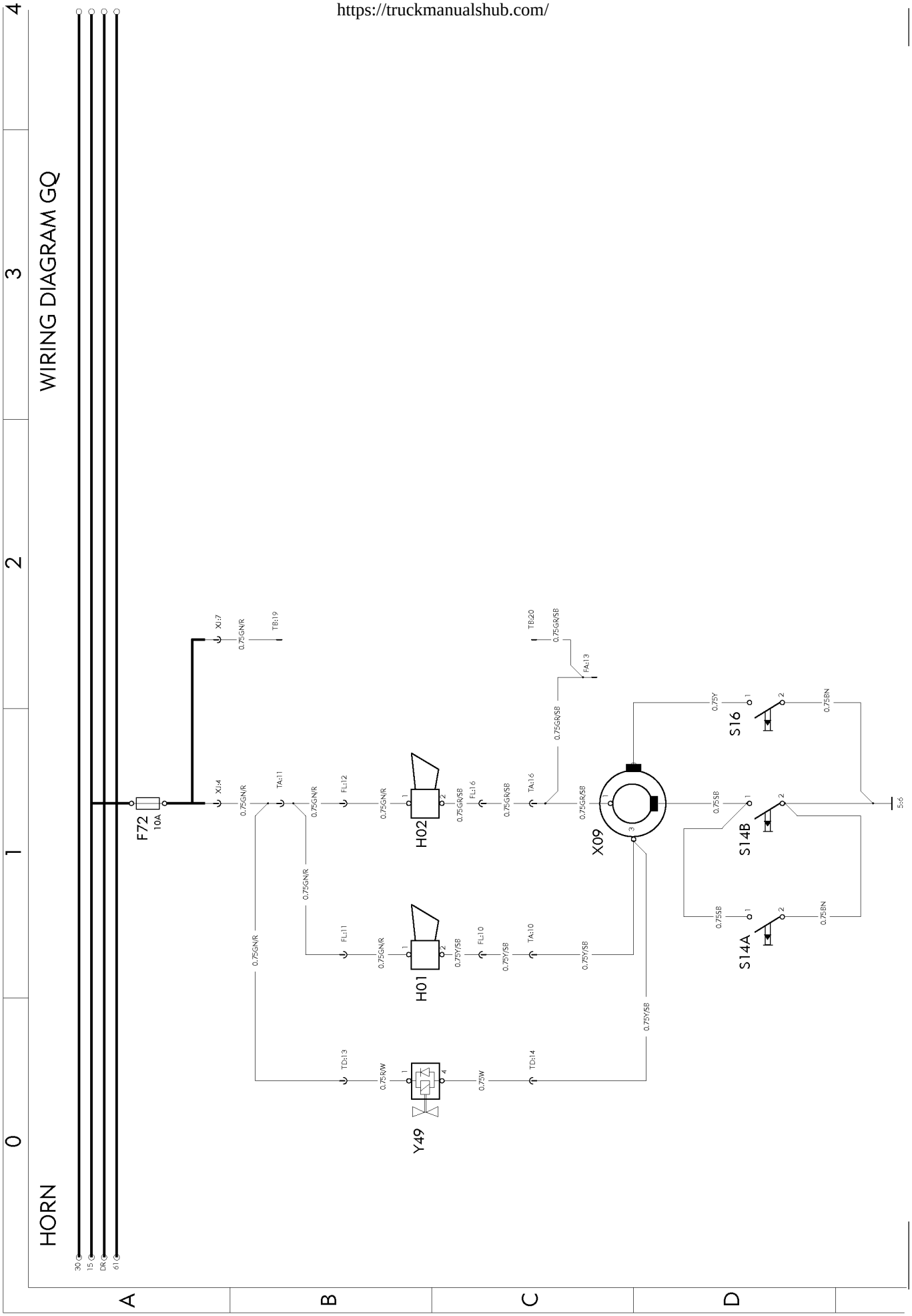

https://truckmanualshub.com/

WIRING DIAGRAM GU

HEADLIGHT ADJUST

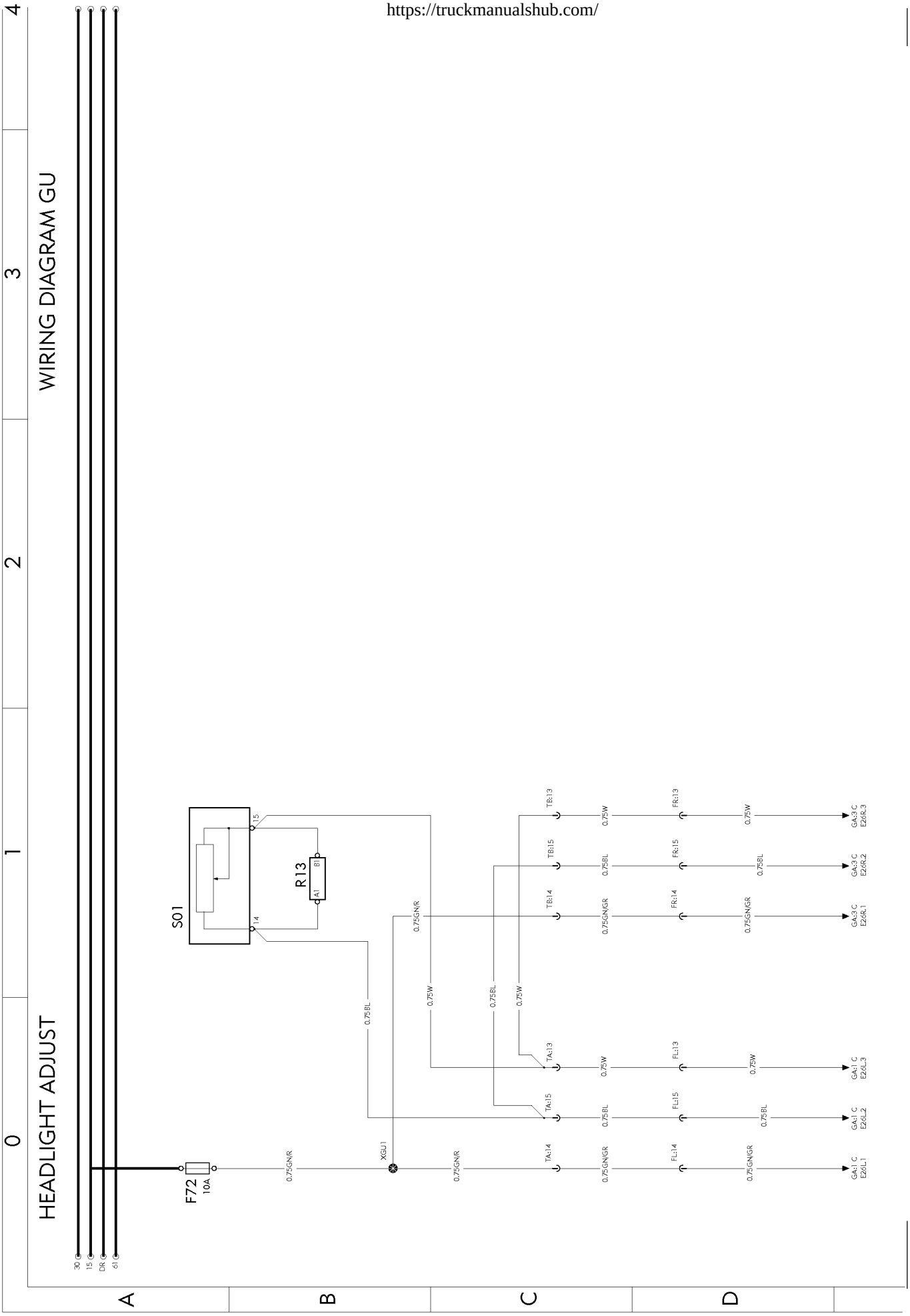

T3016290

https://truckmanualshub.com/

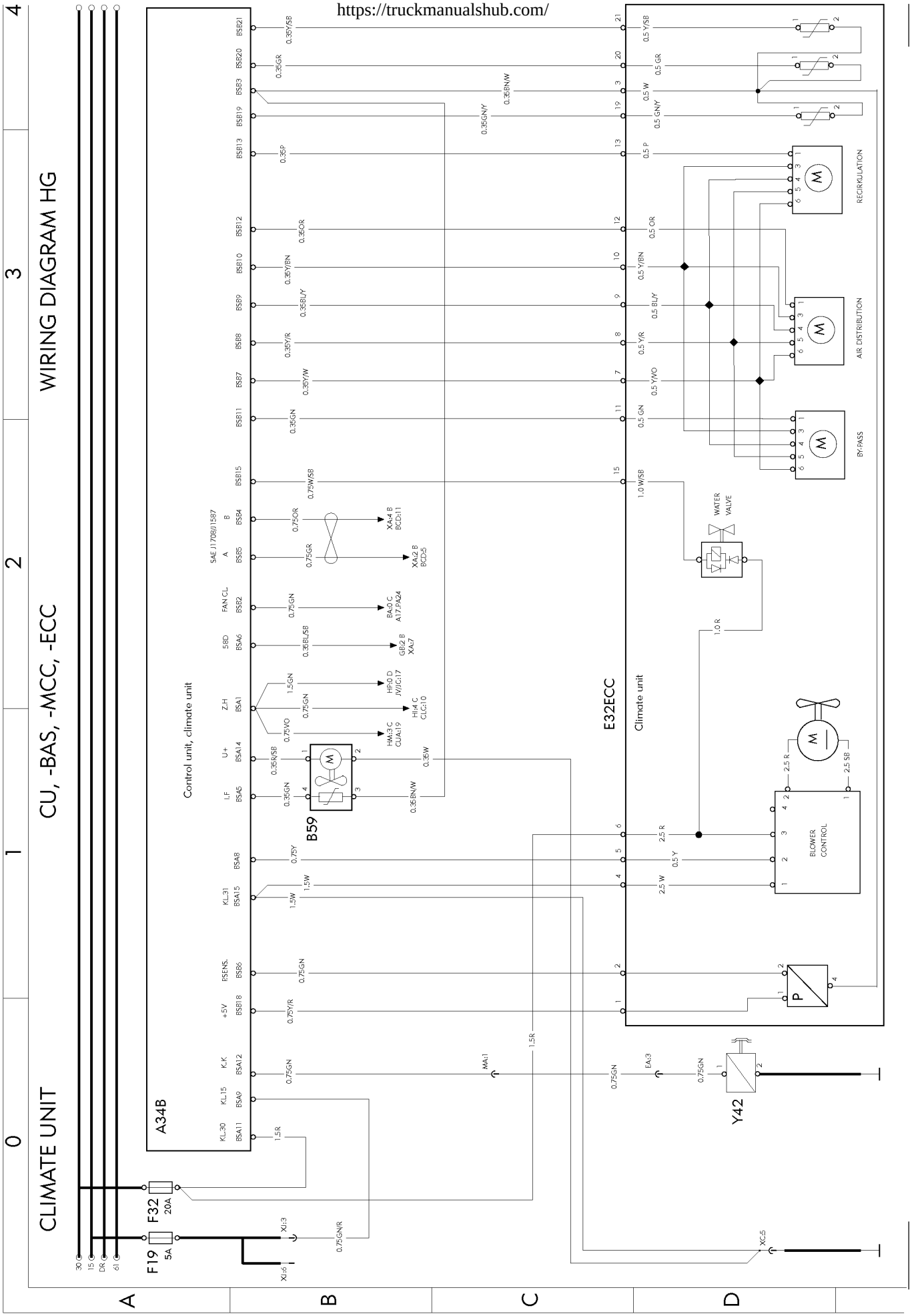

https://truckmanualshub.com/

WIRING DIAGRAM HI

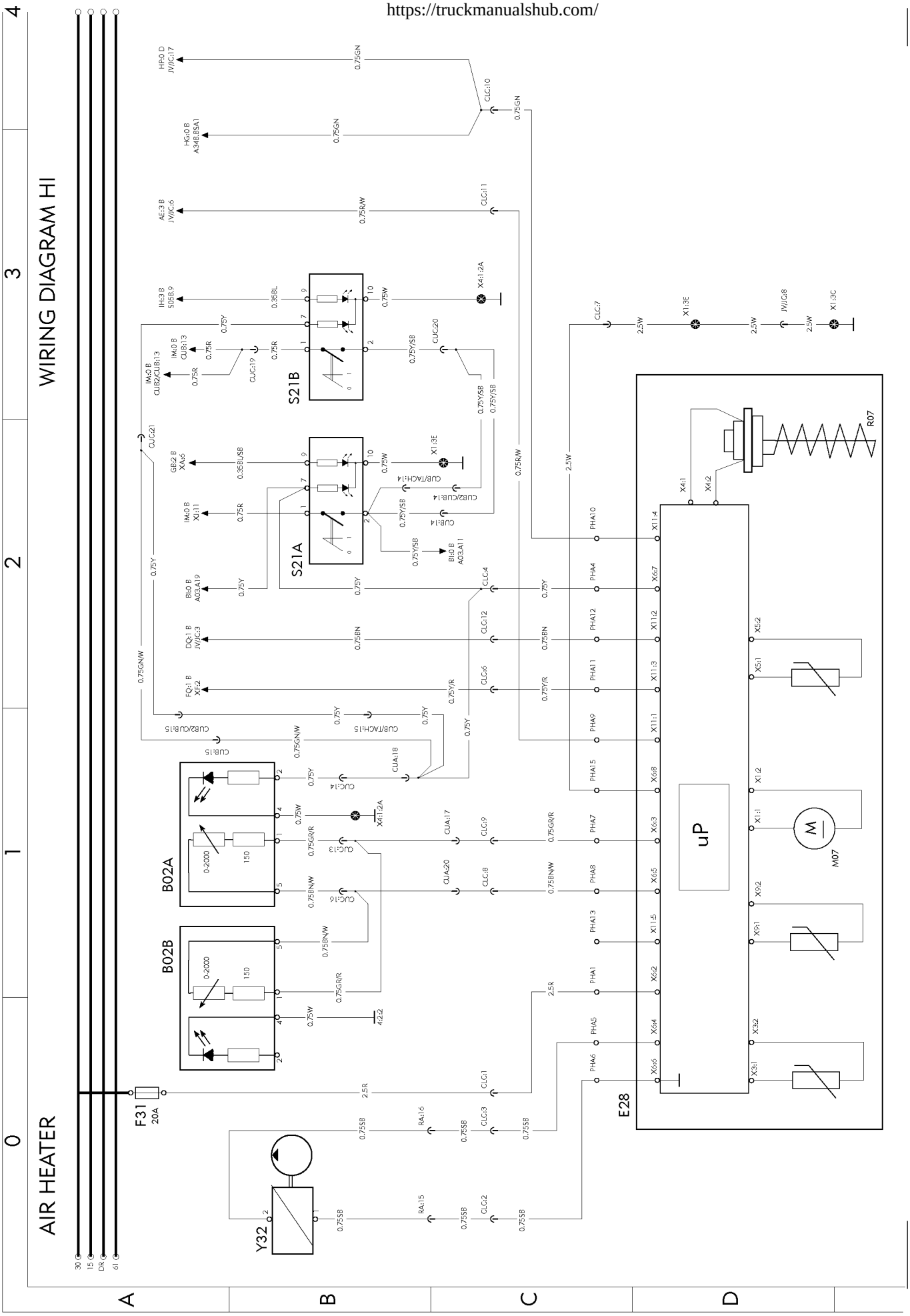

T3016292

https://truckmanualshub.com/

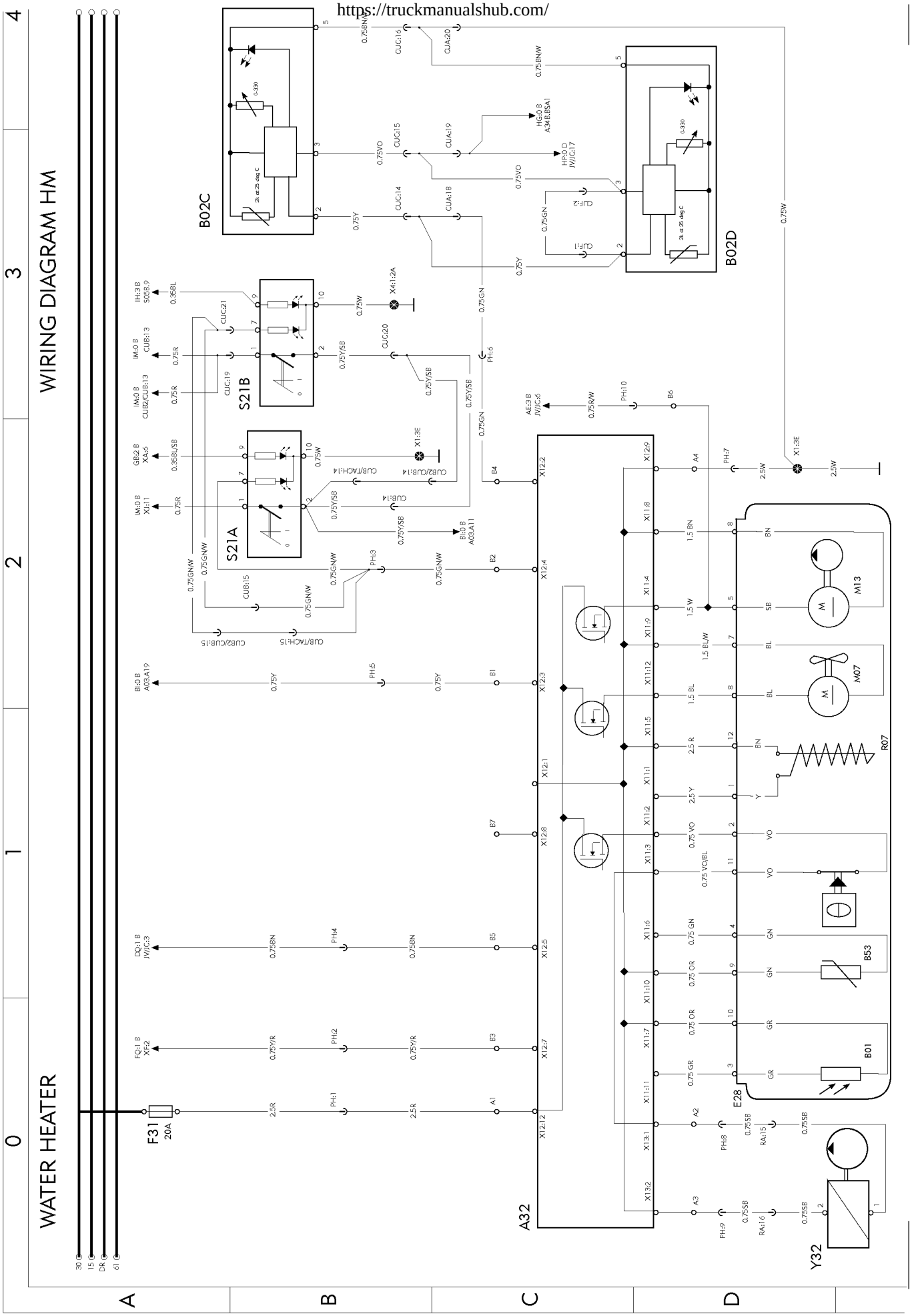

https://truckmanualshub.com/

WIRING DIAGRAM HP

SHORT STOP CAB HEATER

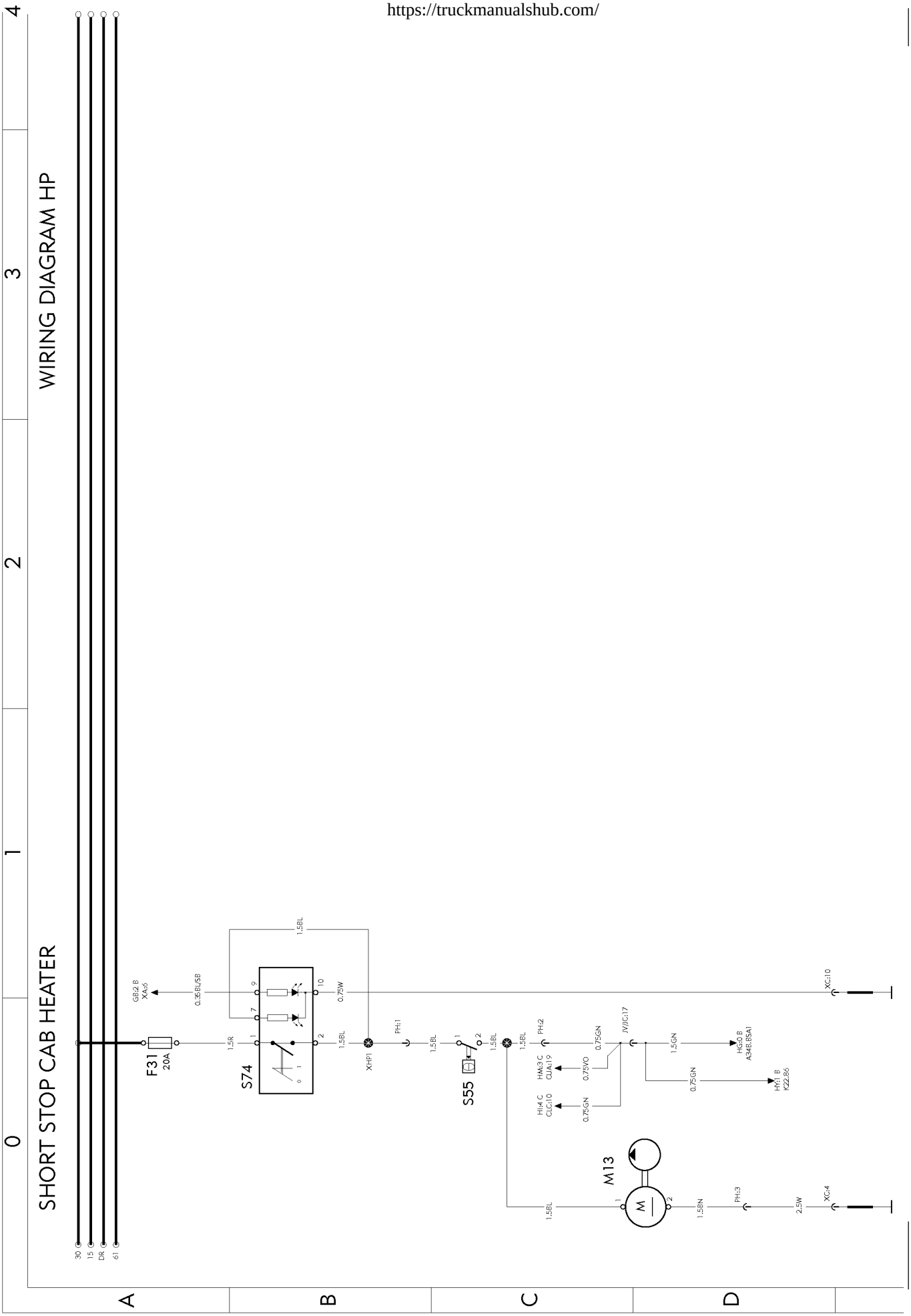

T3016294

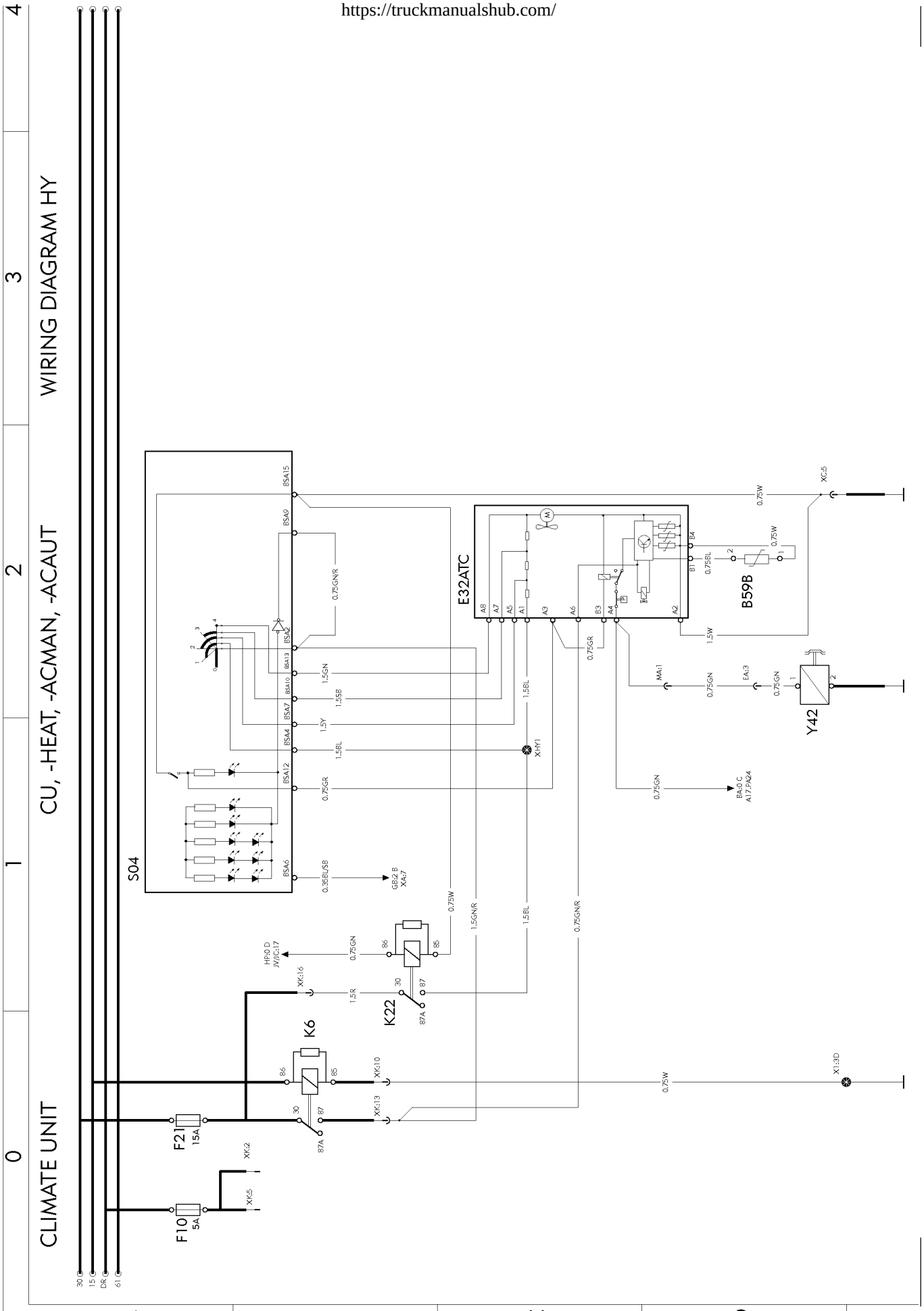
WIRING DIAGRAM HY
CU, -HEAT, -ACMAN, -ACAUT
CLIMATE UNIT
S04
E32ATC
B59B
Y42
K6
K22
F21
15A
F10
5A
30
15
DR
61
BSA15
BSA9
BSA2
BSA13
BSA10
BSA7
BSA4
BSA12
BSA6
0.75GN/R
1.5GN
1.5B
1.5Y
1.5BL
0.75GR
0.35BL/SB
GB:2.B
XA:7
0.75W
1.5GN/R
1.5BL
0.75GN/R
HP:0.D
JV/B:C17
XK:16
0.75GN
1.5R
XK:10
XK:13
XK:2
XK:5
XH:Y1
XC:5
X1:3D
MA:1
EA:3
BA:0.C
A17.PA24
A8
A7
A5
A1
A3
A6
B3
A4
A2
B4
B1
0.75BL
0.75W
1.5W
0.75GR
0.75GN
0.75W
0.75GN
0.75GN
0.75GN
0.75W
0.75W
0.75W
86
85
30
87
87A

https://truckmanualshub.com/

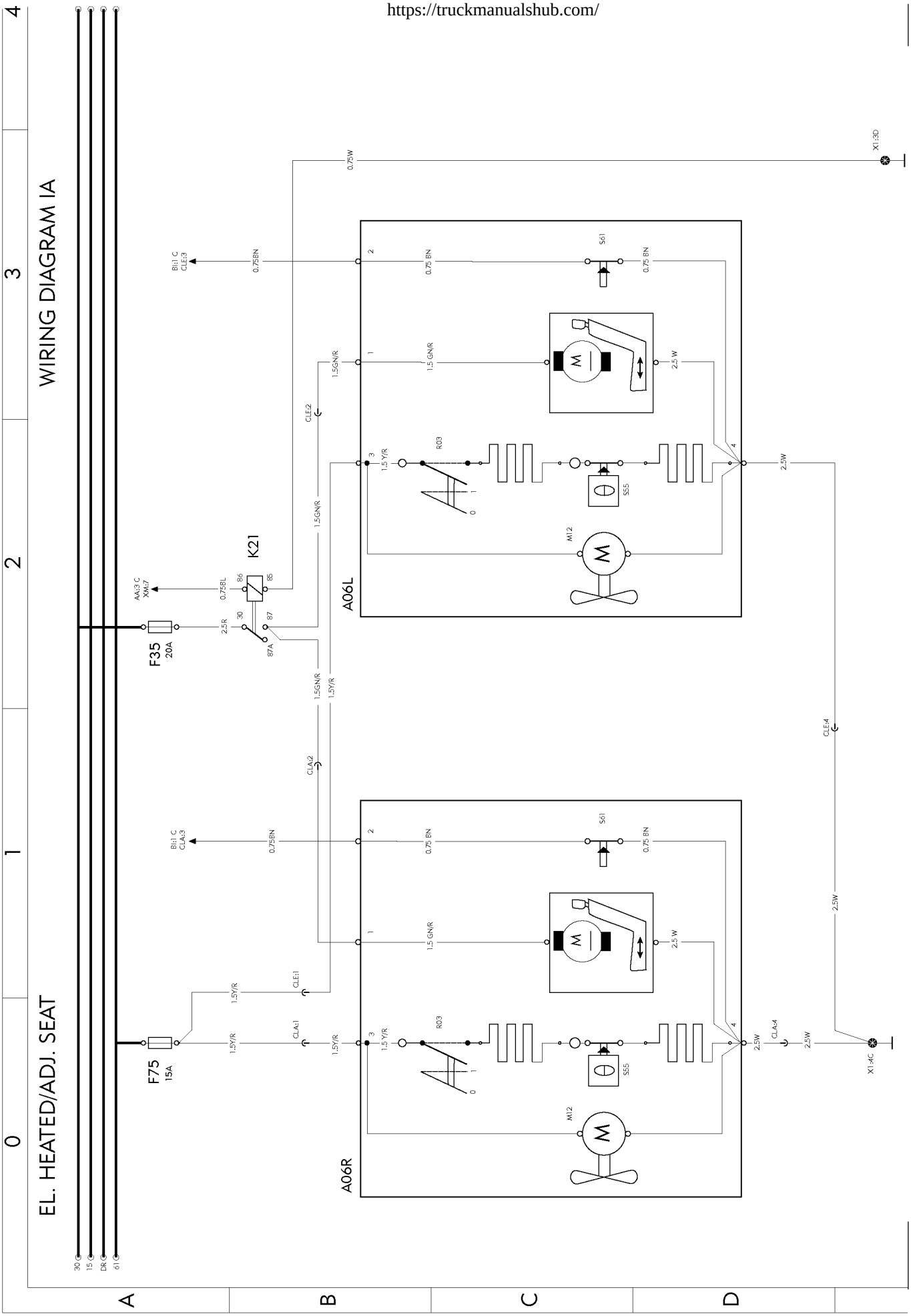

EL. HEAT/ADJ. MIRRORS EL. WINDOW WINDERS WIRING DIAGRAM IE

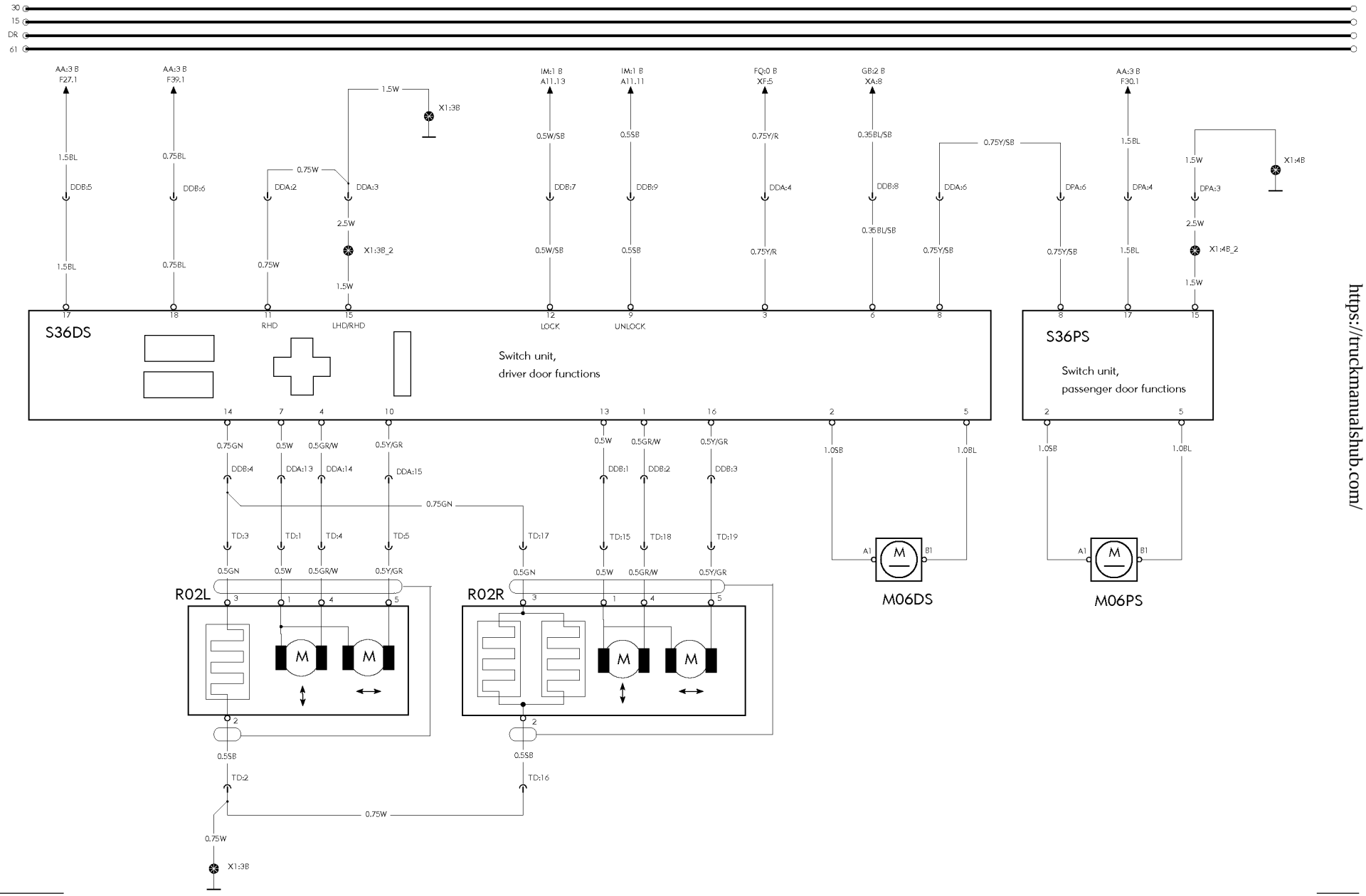

https://truckmanualshub.com/

https://truckmanualshub.com/

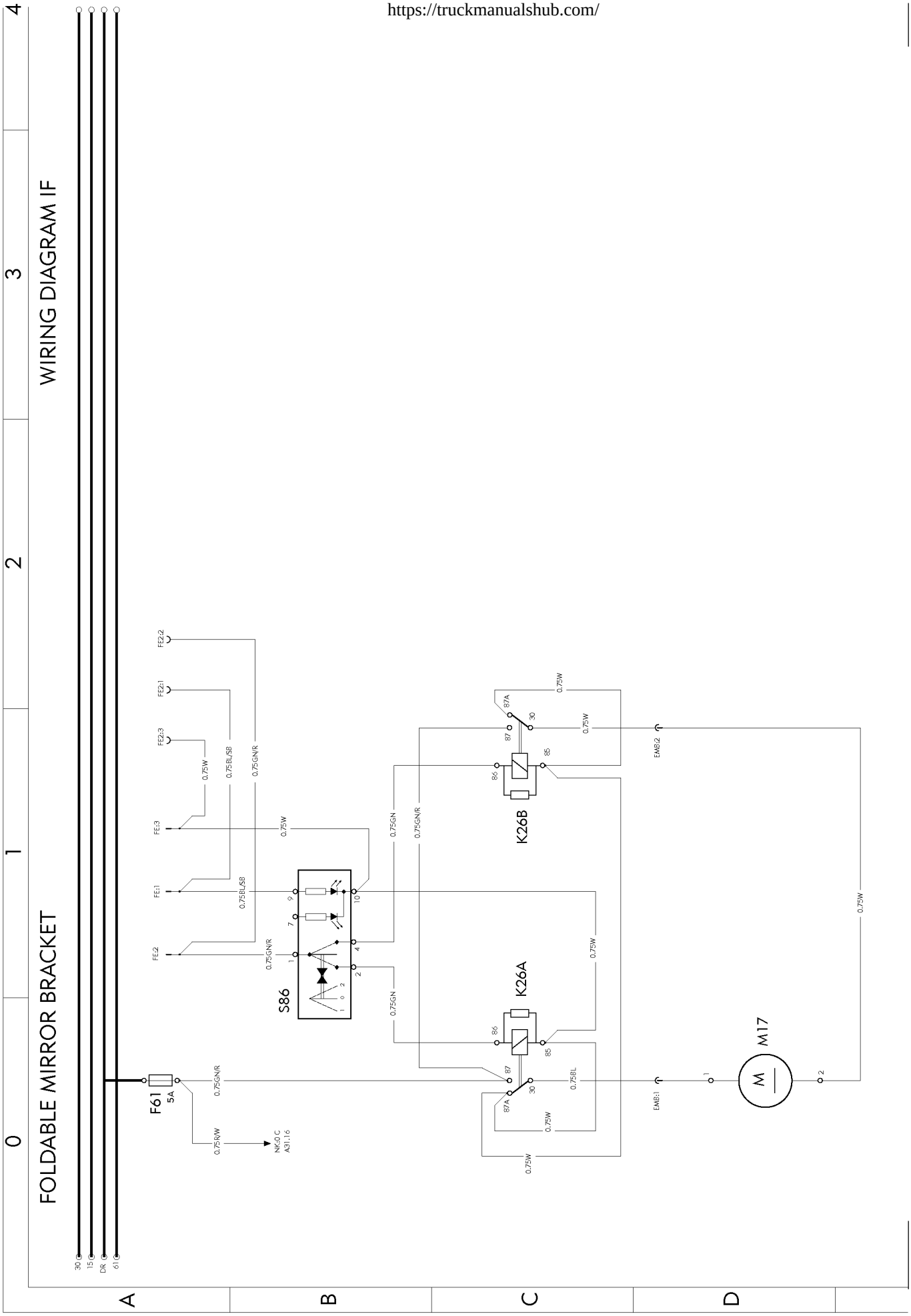

T3016298

https://truckmanualshub.com/

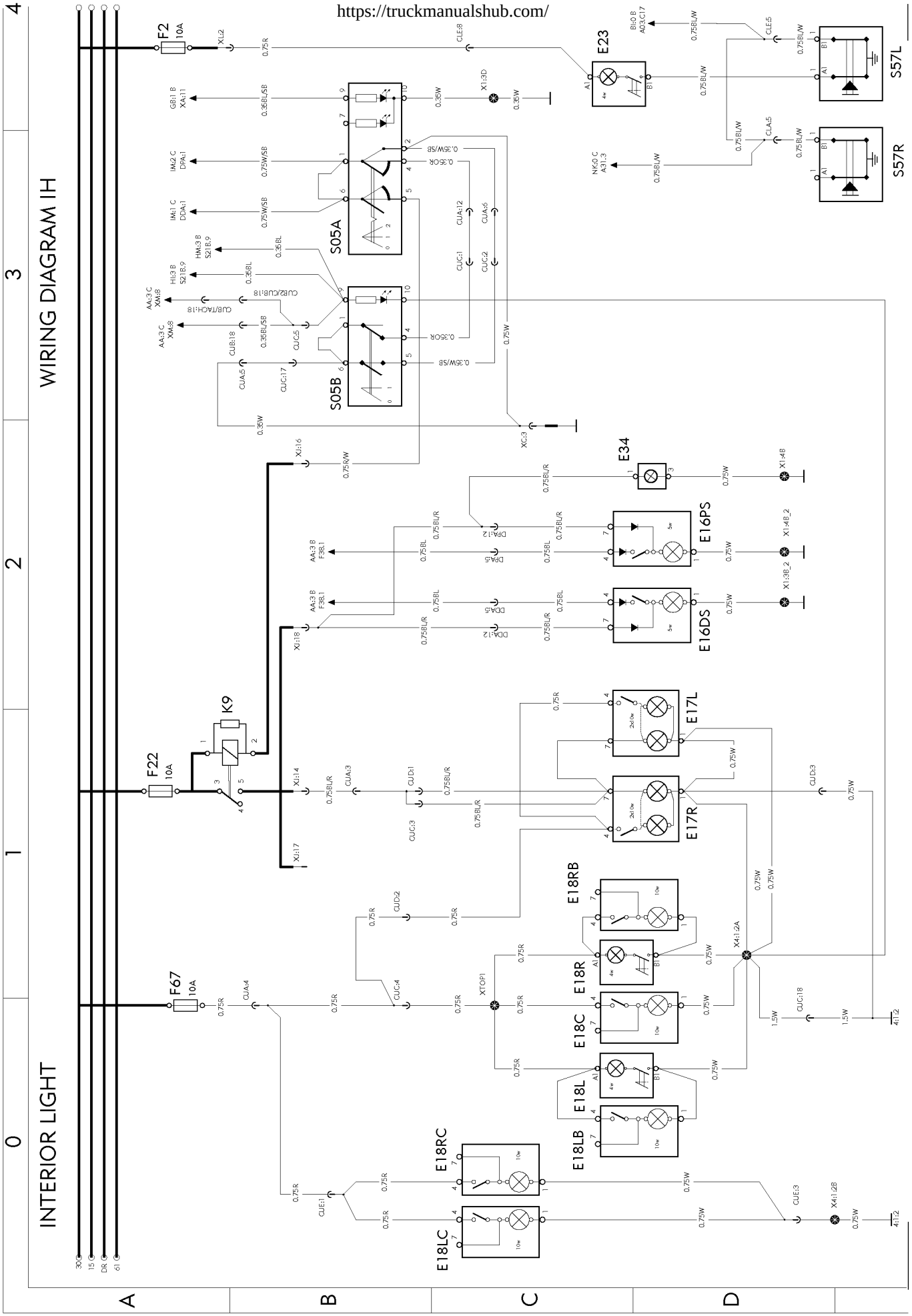

https://truckmanualshub.com/

WIRING DIAGRAM IM

CENTRAL LOCKING, IMMOBILISER

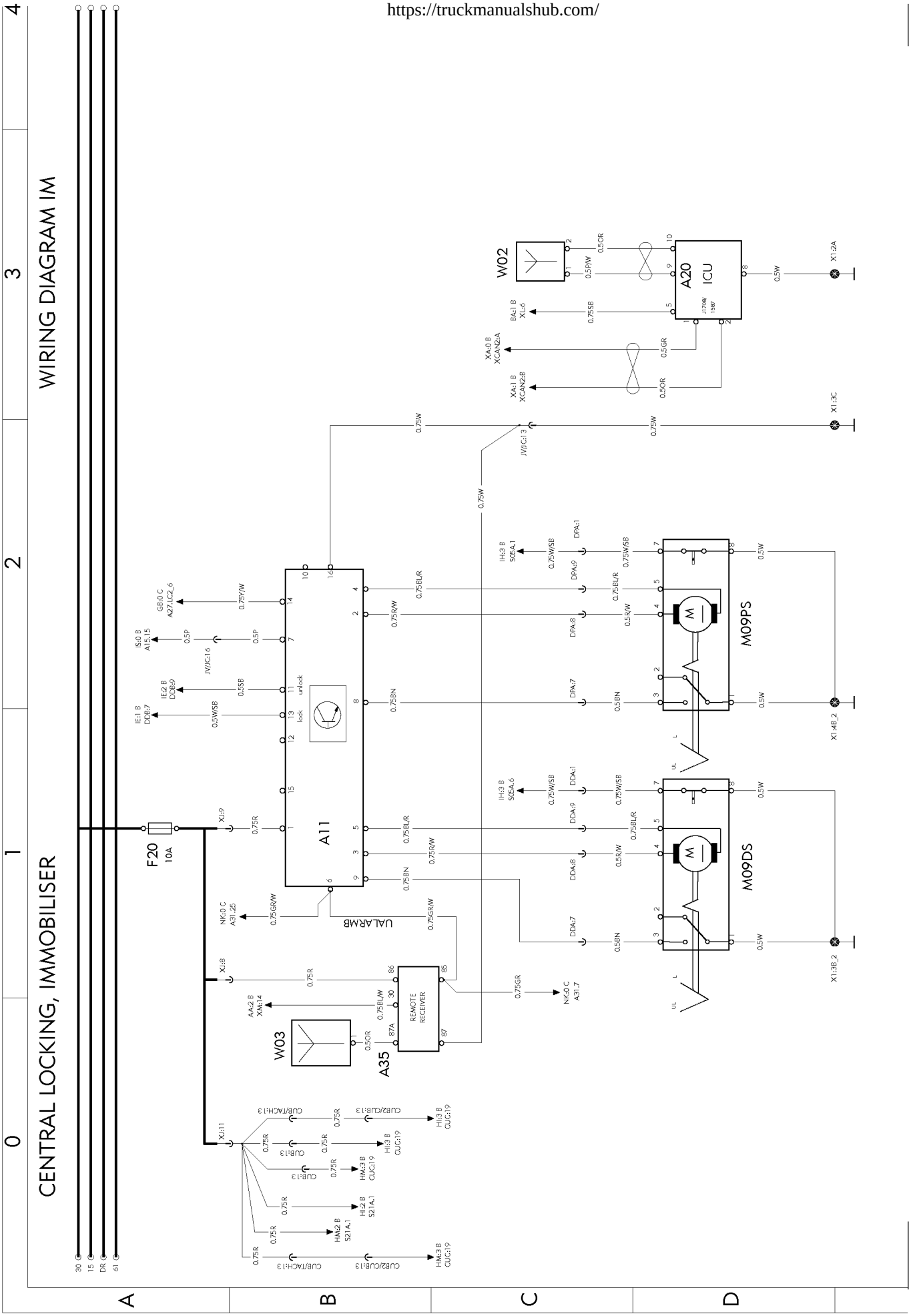

https://truckmanualshub.com/

WIRING DIAGRAM IQ

REFRIGERATOR

EL. SUNROOF, CIG. LIGTER

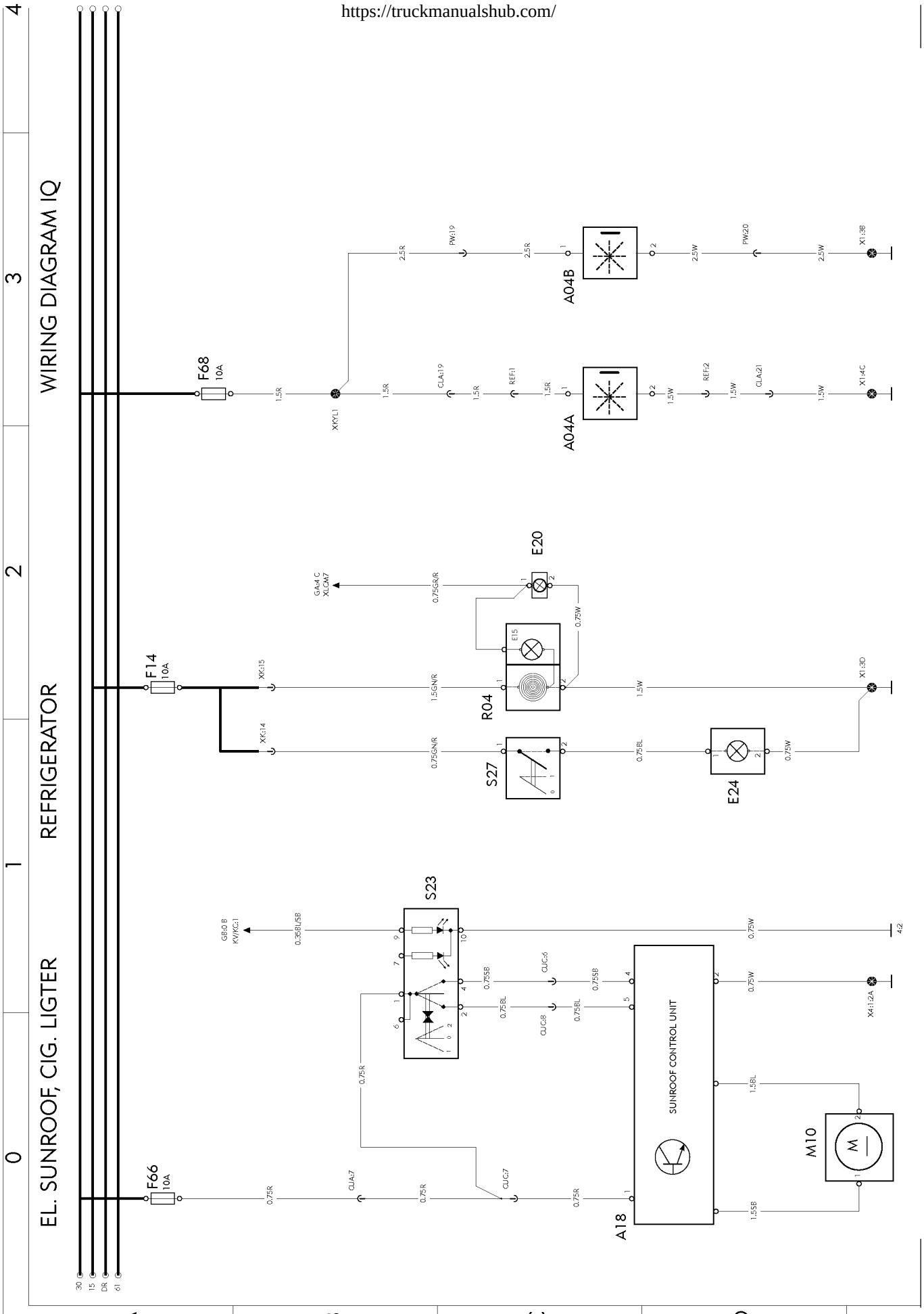

https://truckmanualshub.com/

WIRING DIAGRAM IR

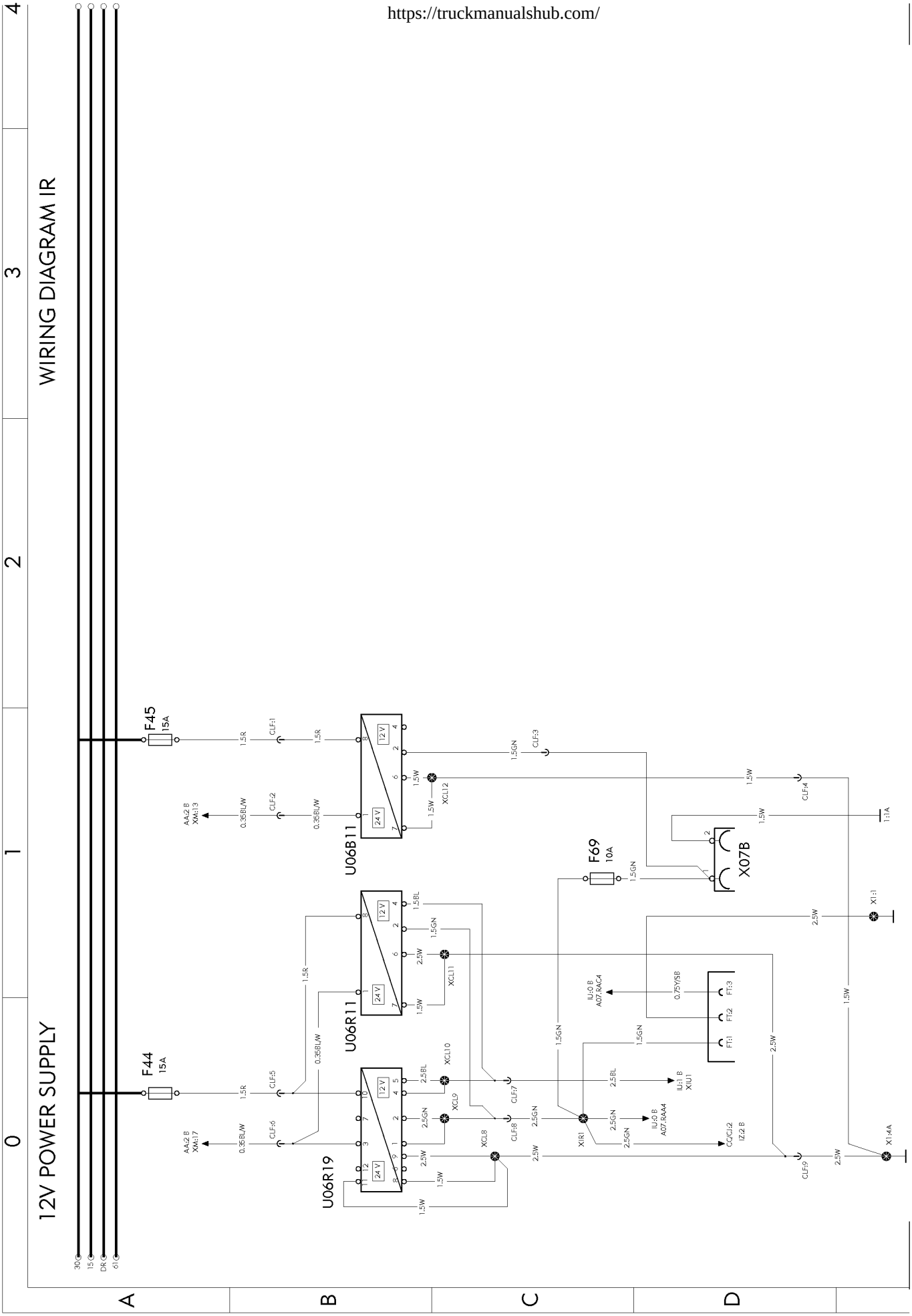

T3016302

WIRING DIAGRAM IS

SWM, SRS. AIR-BAG

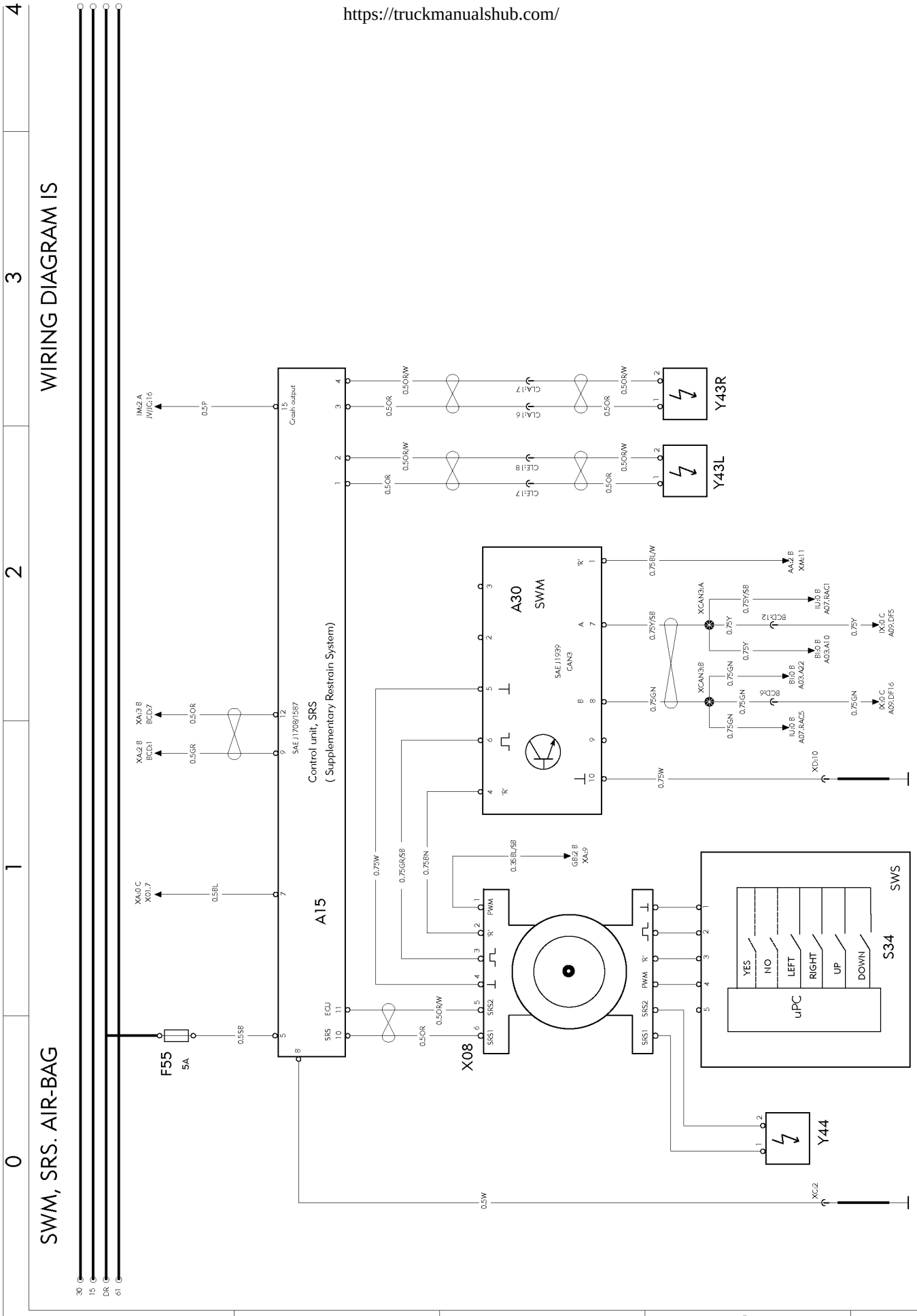

RADIO WIRING DIAGRAM IU

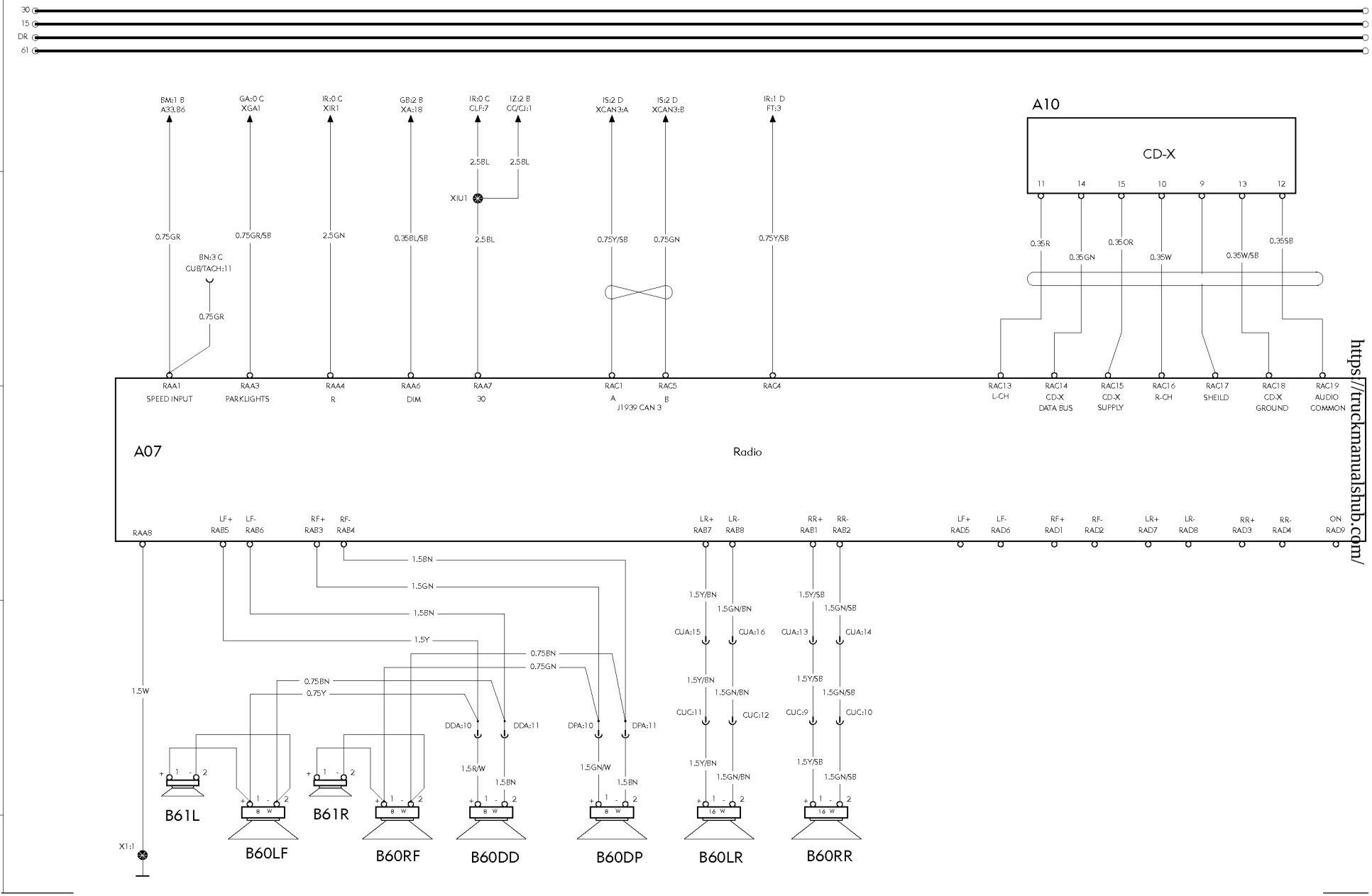

https://truckmanualshub.com/

INTEGRATED TELEPHONE

WIRING DIAGRAM IX

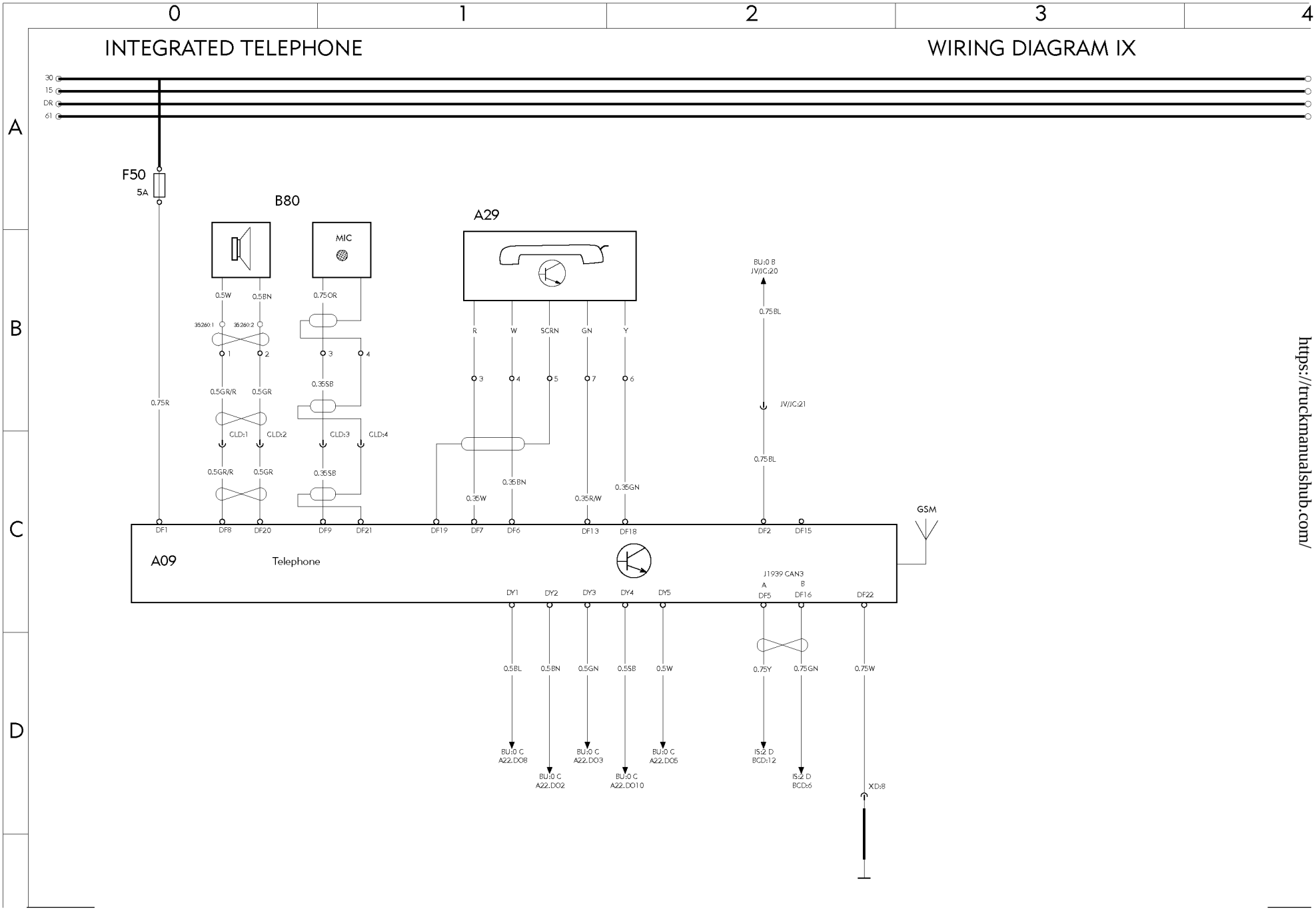

https://truckmanualshub.com/

https://truckmanualshub.com/

WIRING DIAGRAM IZ

W. ACCESSORY KIT

BACKUP CAMERA

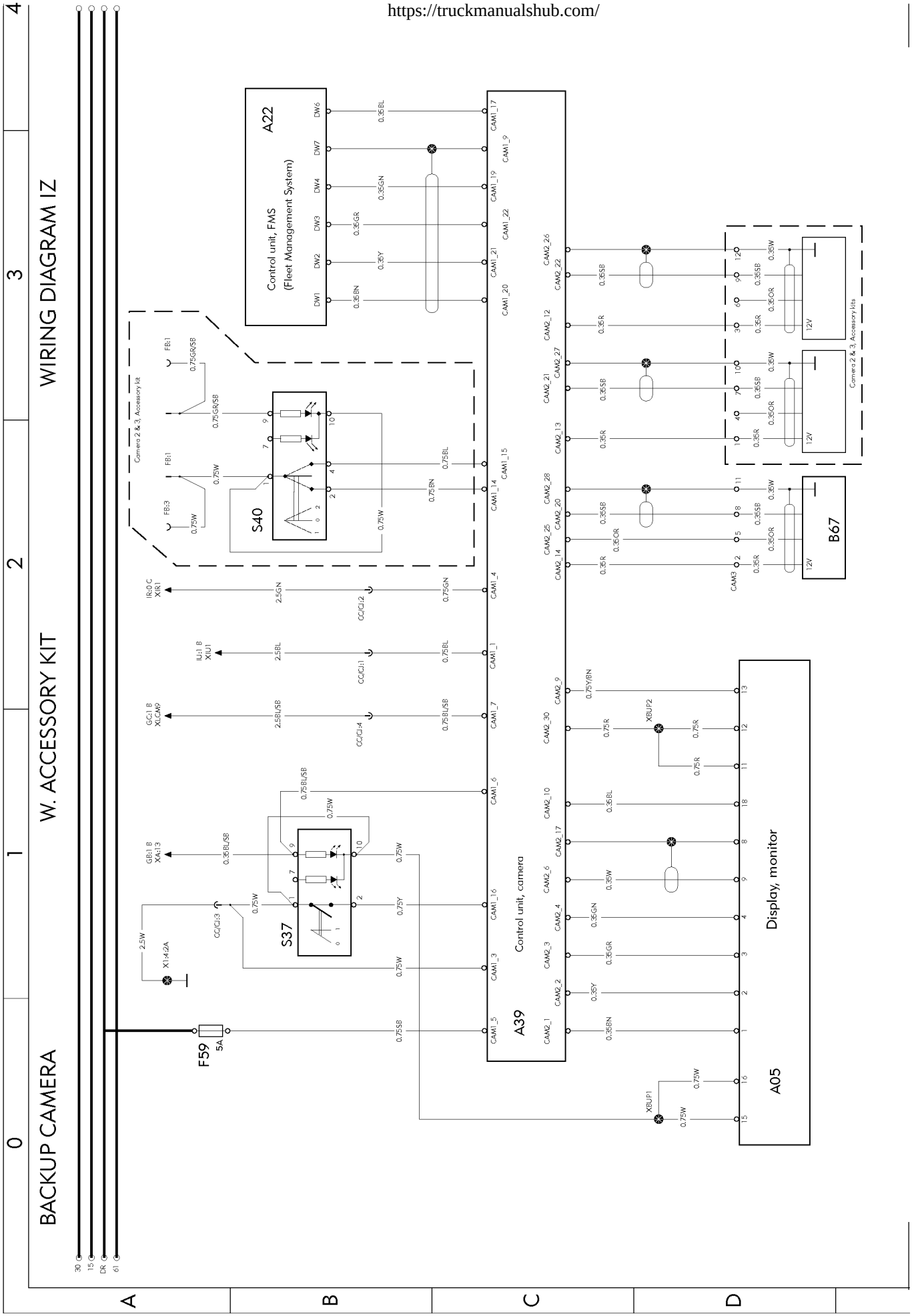

T3016306

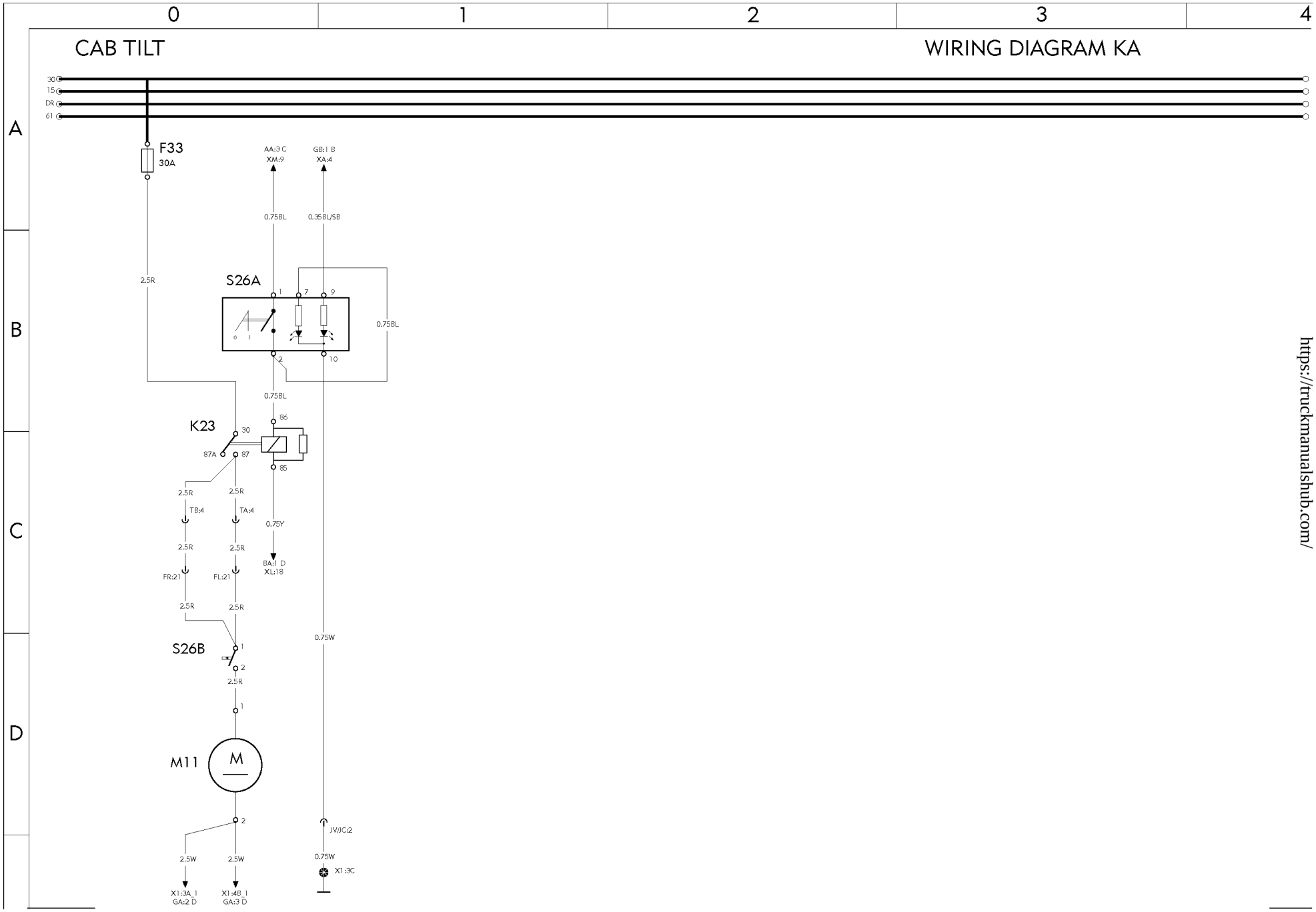

https://truckmanualshub.com/

https://truckmanualshub.com/

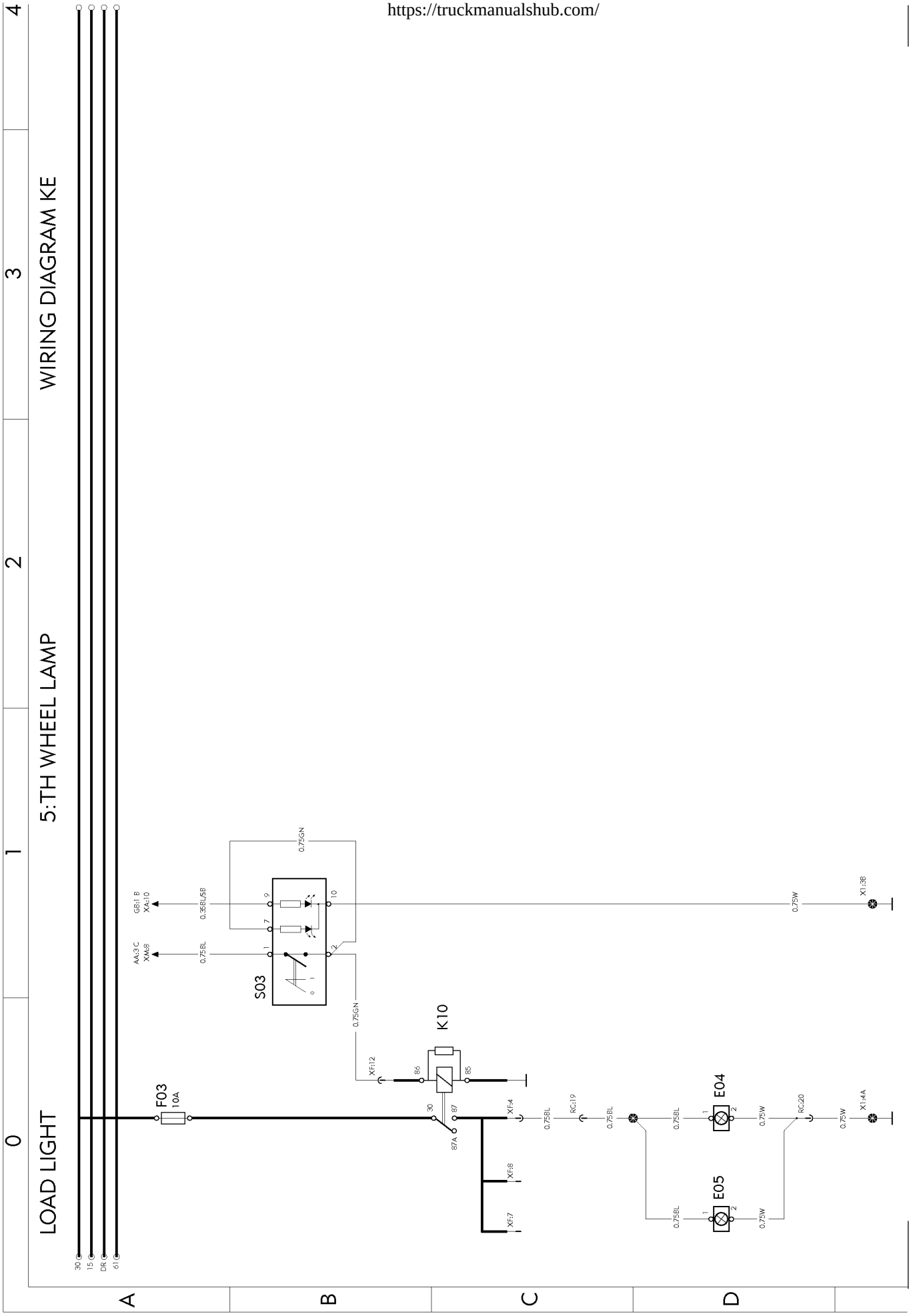

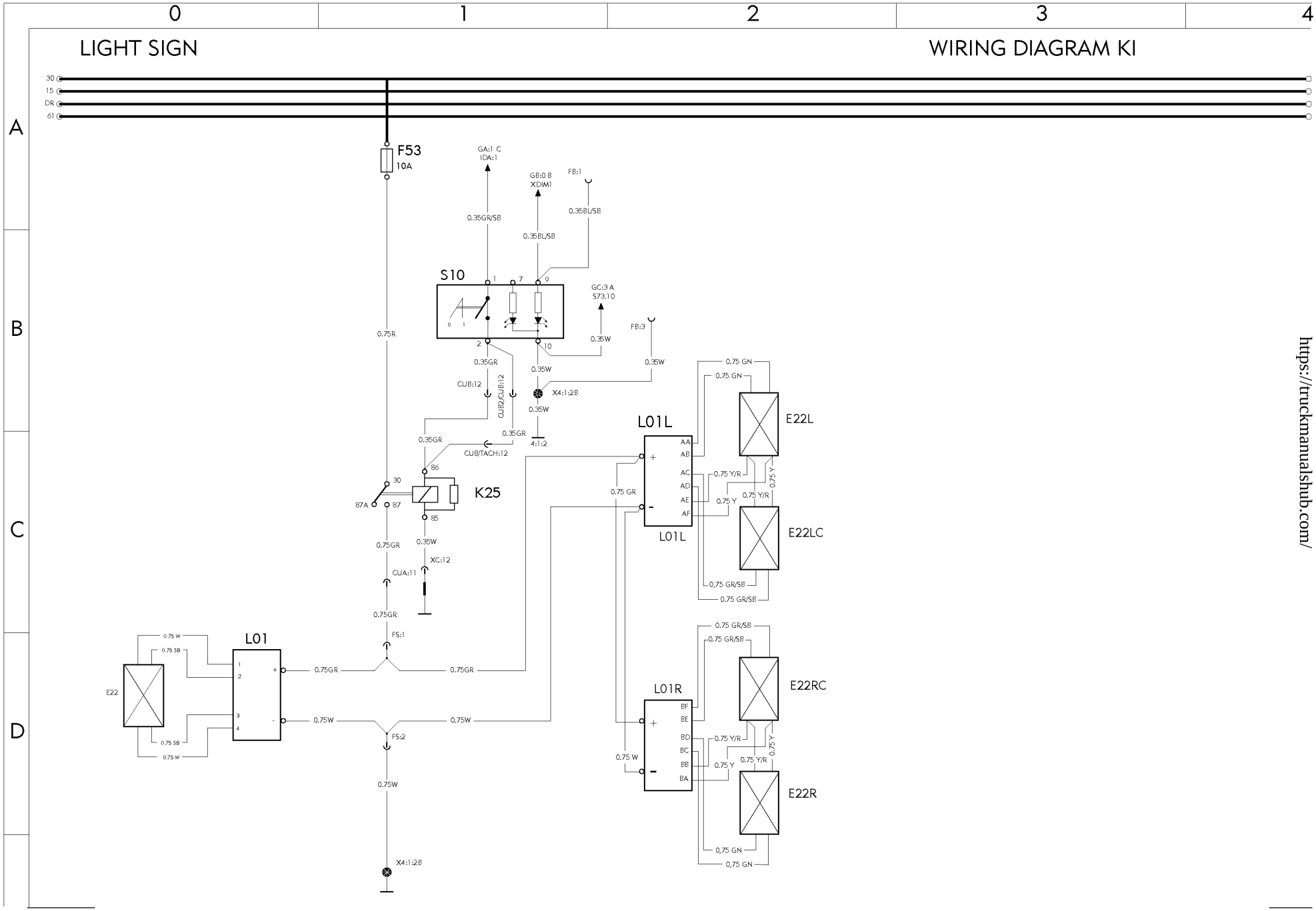

https://truckmanualshub.com/

https://truckmanualshub.com/

BEACON WARNING LIGHT

WIRING DIAGRAM KM

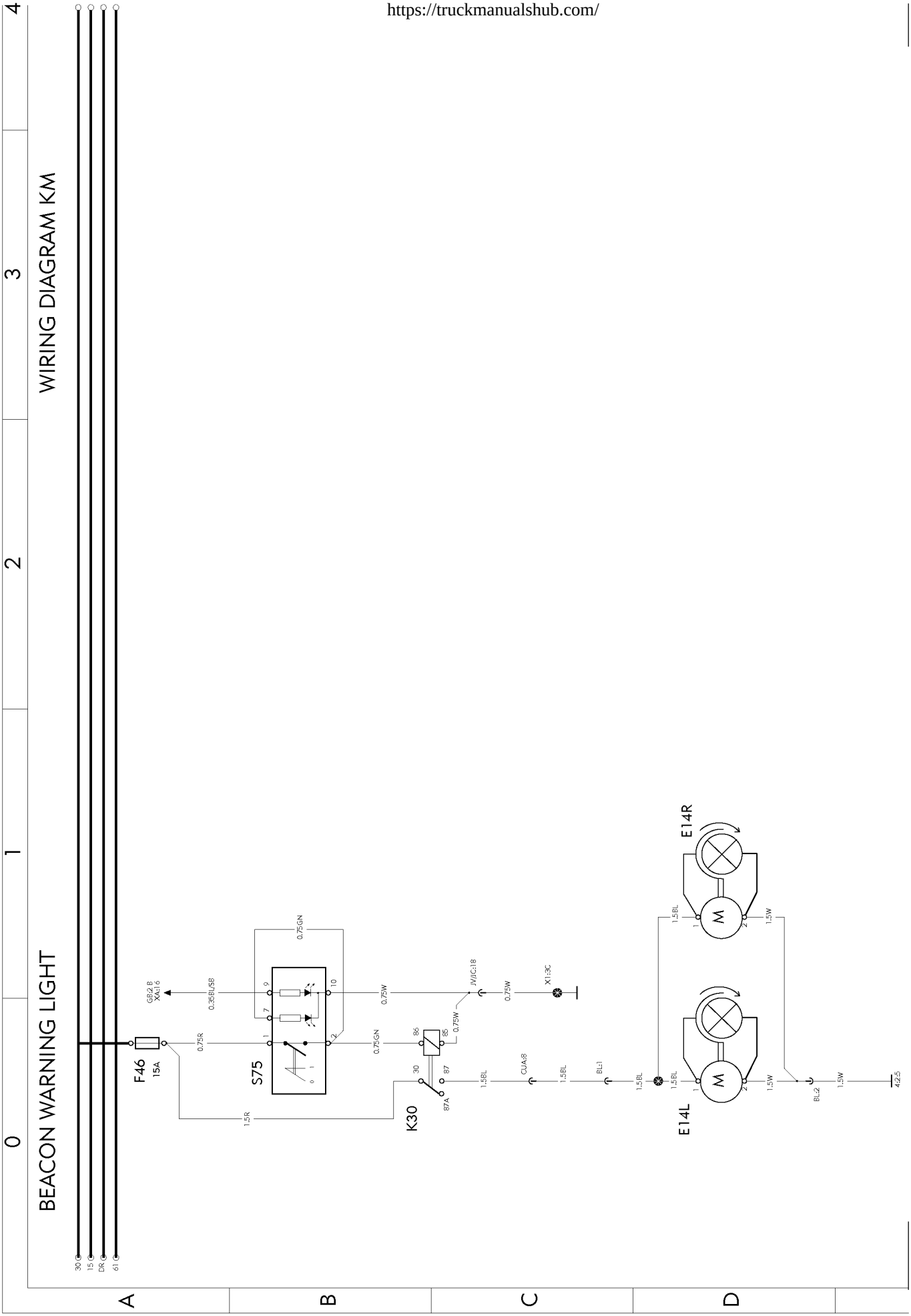

https://truckmanualshub.com/

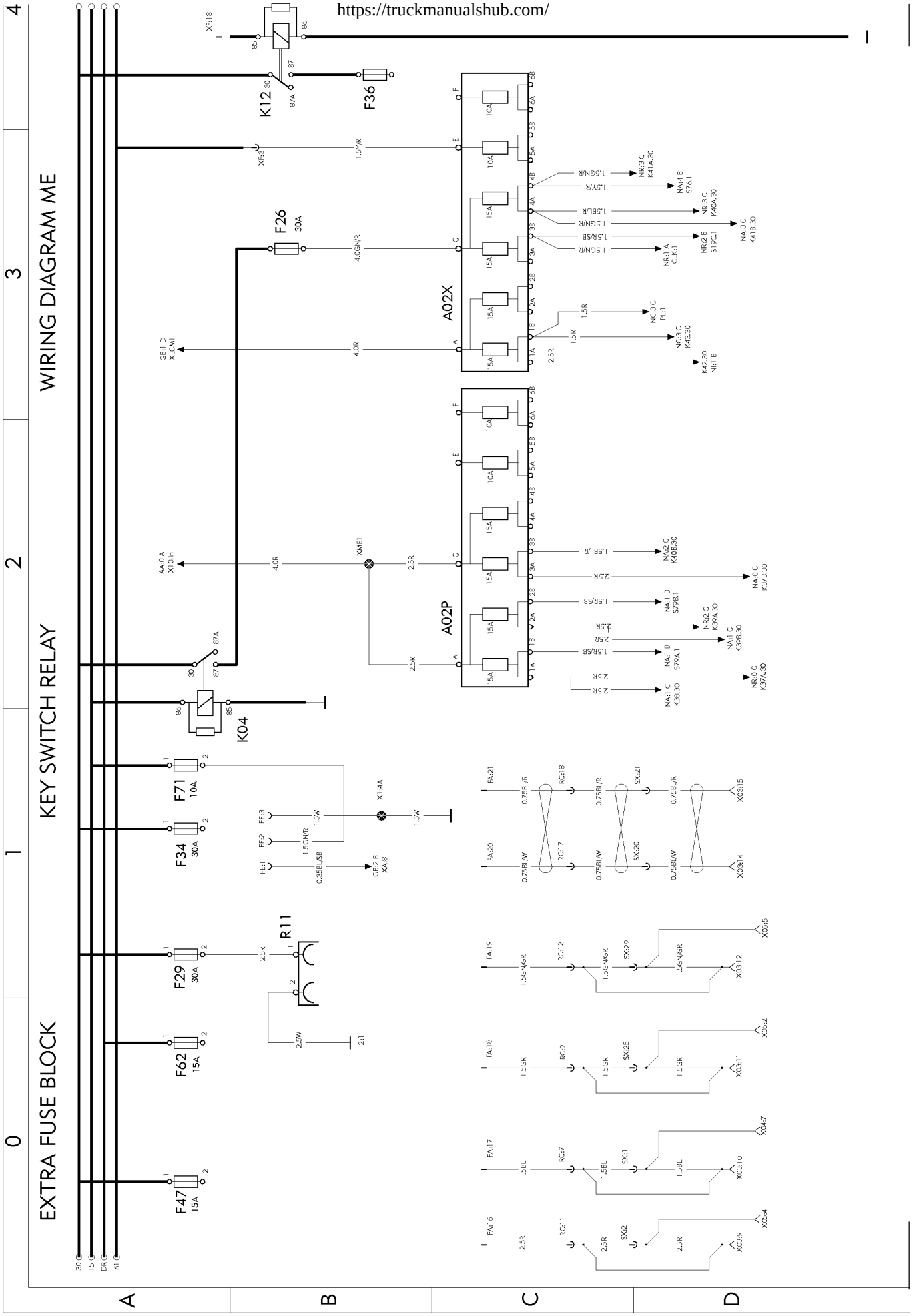

https://truckmanualshub.com/

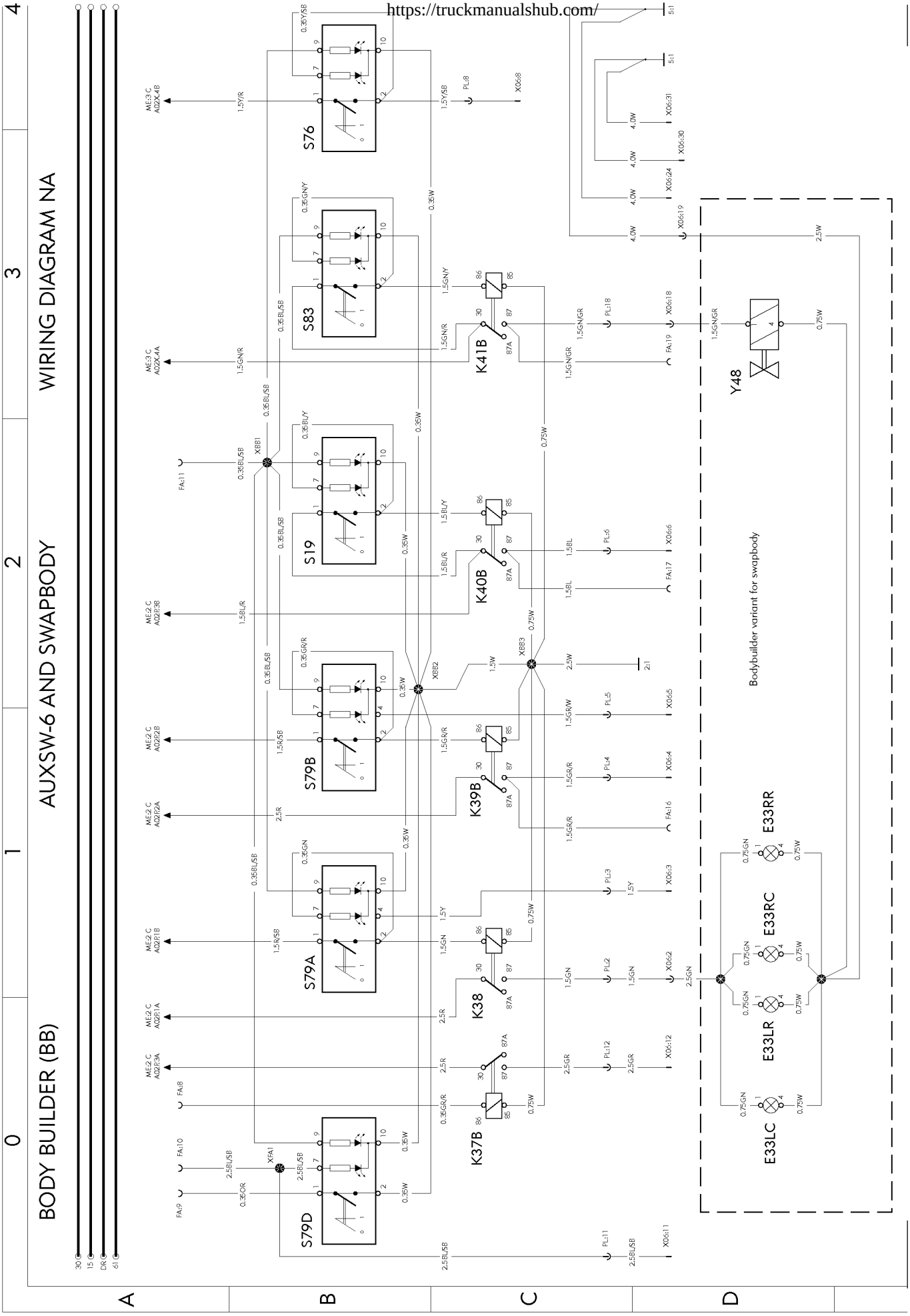

https://truckmanualshub.com/

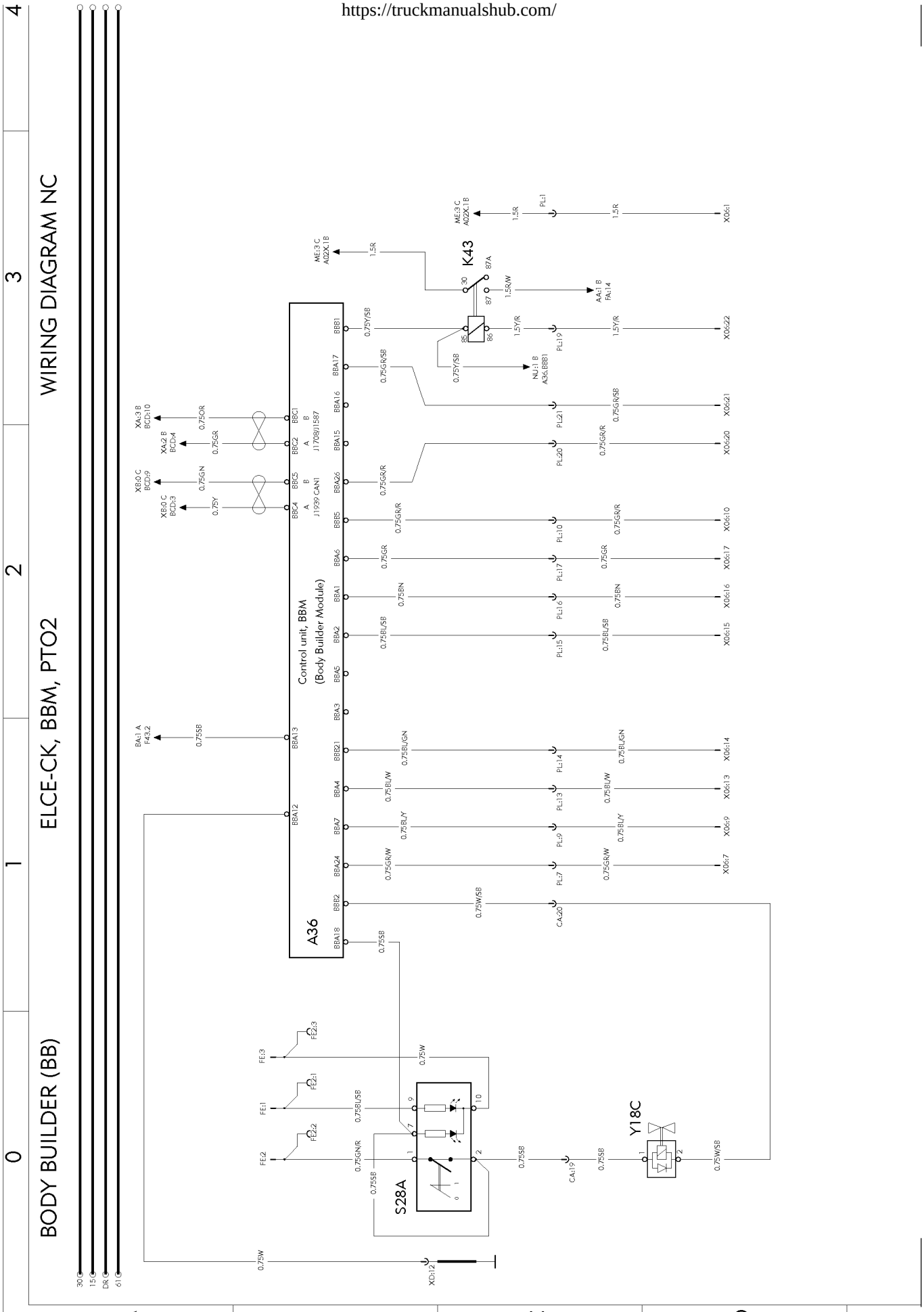

EXTRA SPOTLAMPS FRONT/ROOF, MAX 4X70W WIRING DIAGRAM NI

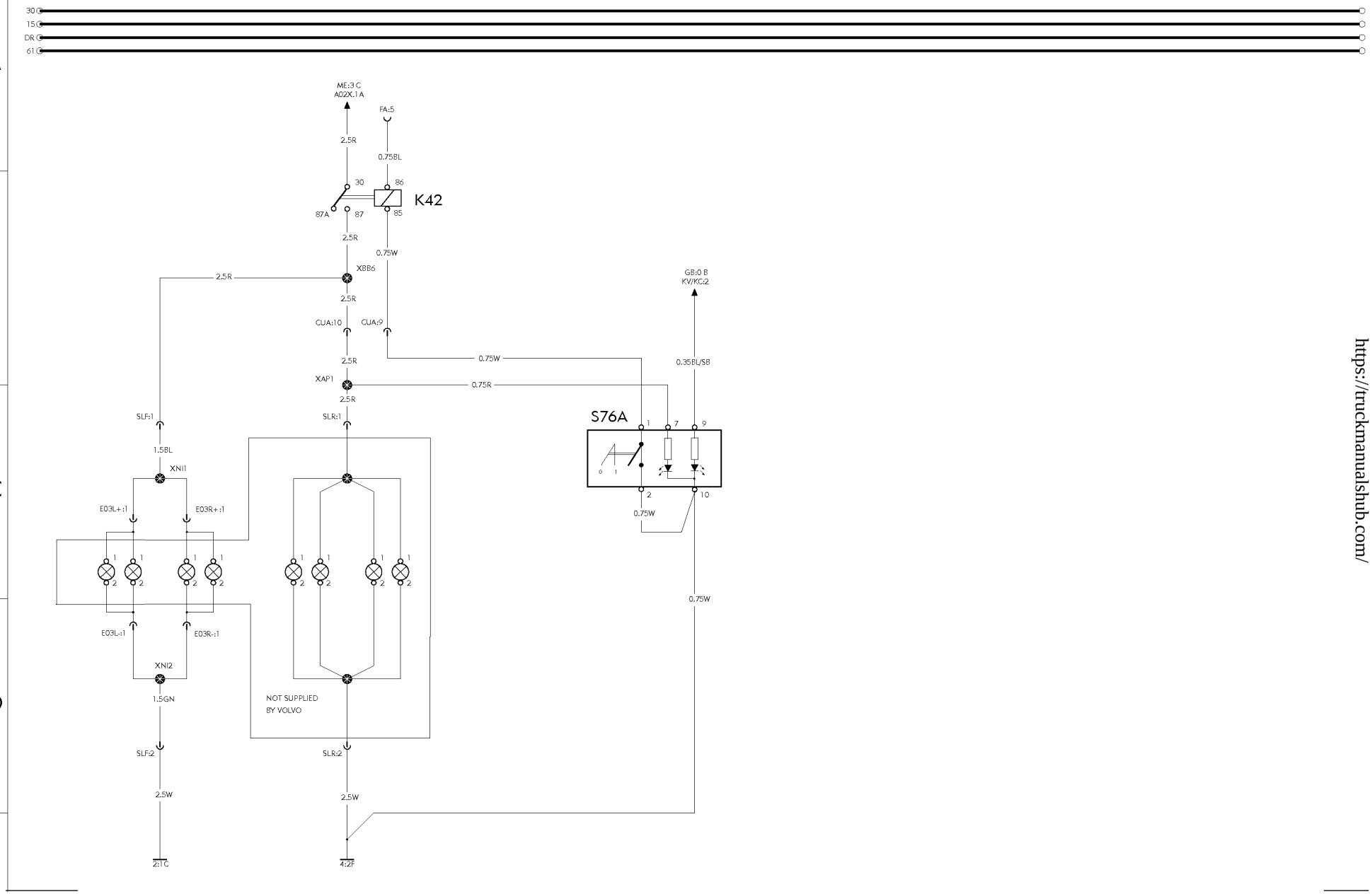

https://truckmanualshub.com/

https://truckmanualshub.com/

WIRING DIAGRAM NK

BURGLAR ALARM

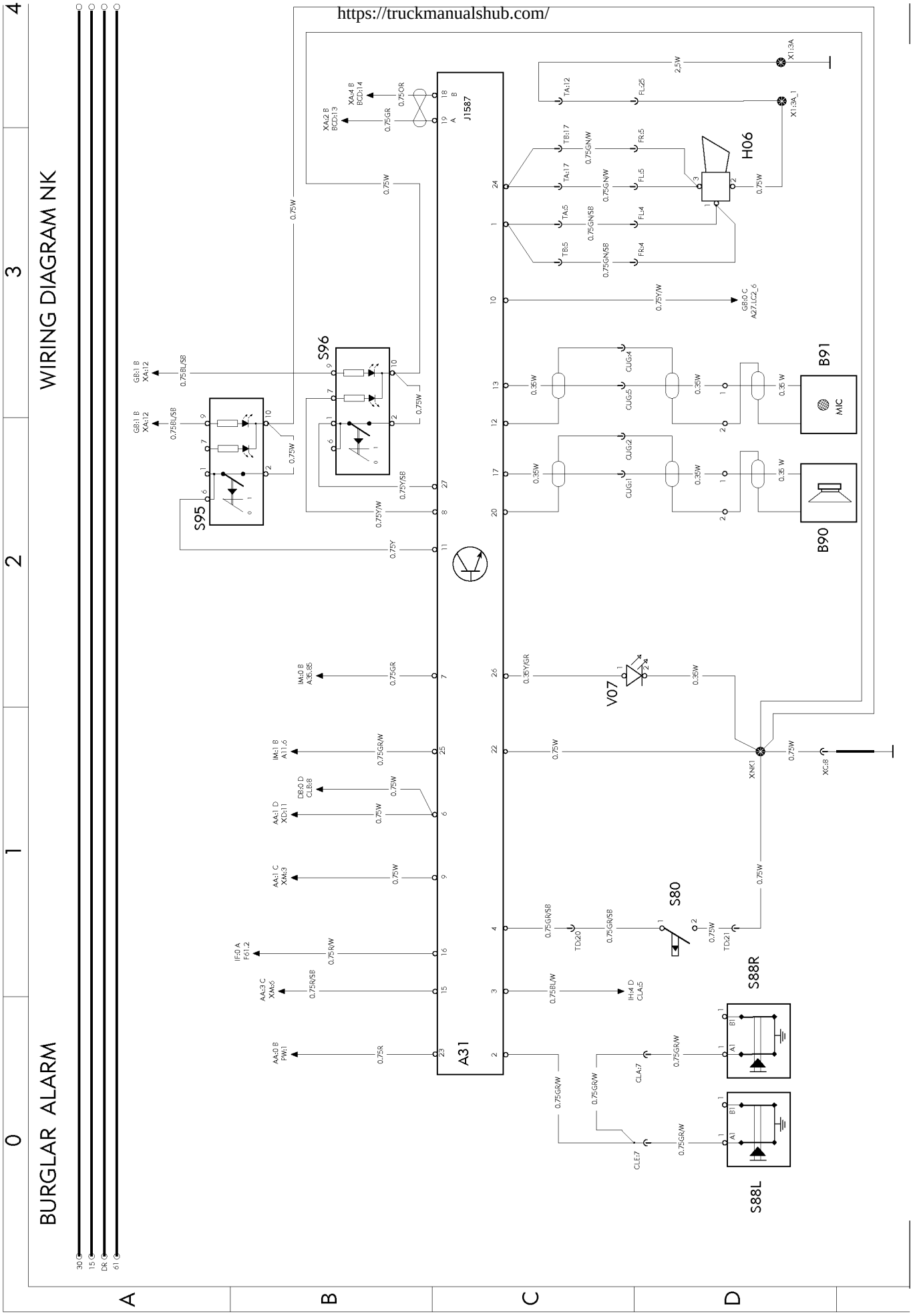

BODY BUILDER (BB) TIPPER TRACTOR "HYDRKIT" WIRING DIAGRAM NR

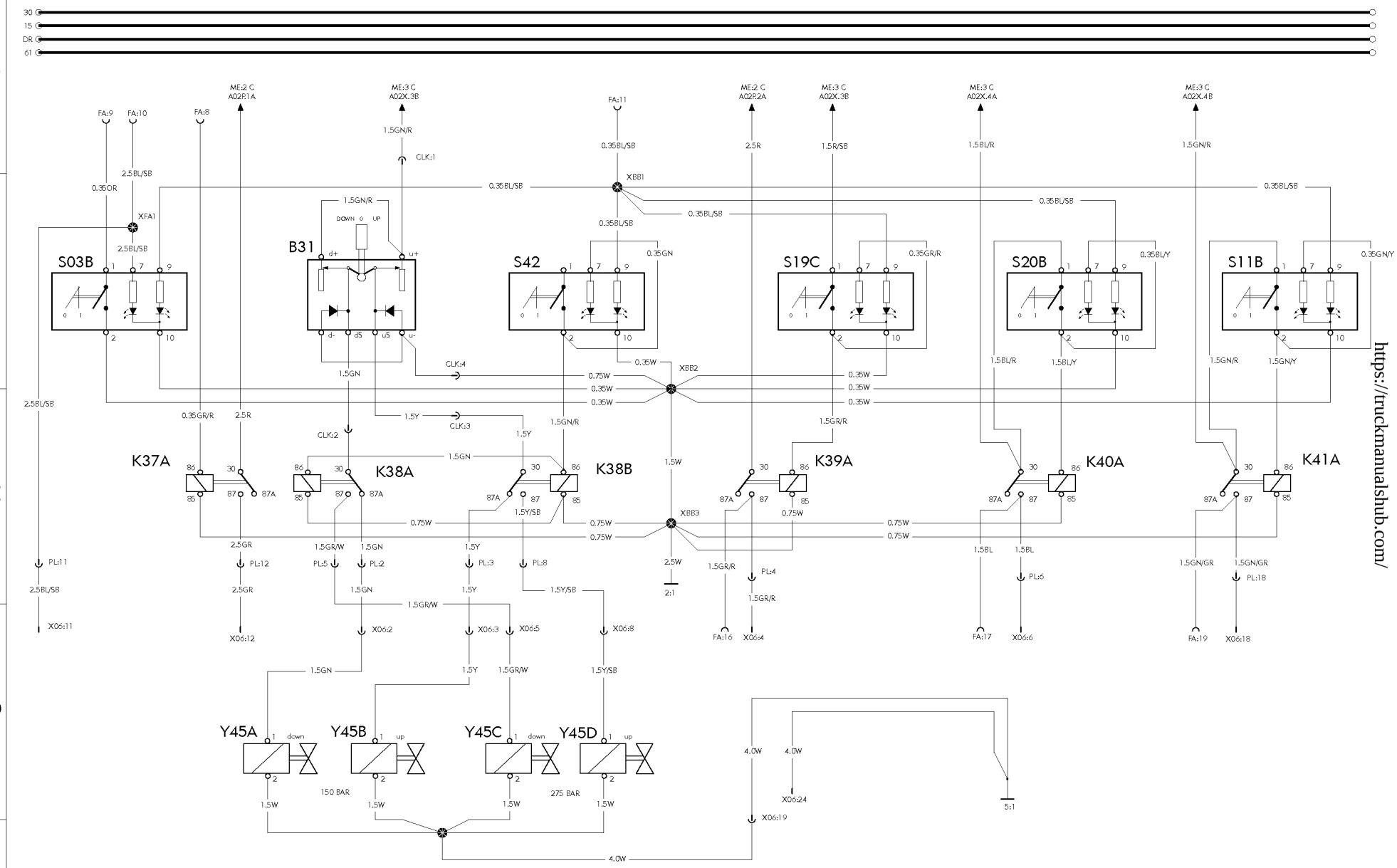

https://truckmanualshub.com/

BODY BUILDER (BB) DUAL SPEED WIRING DIAGRAM NU

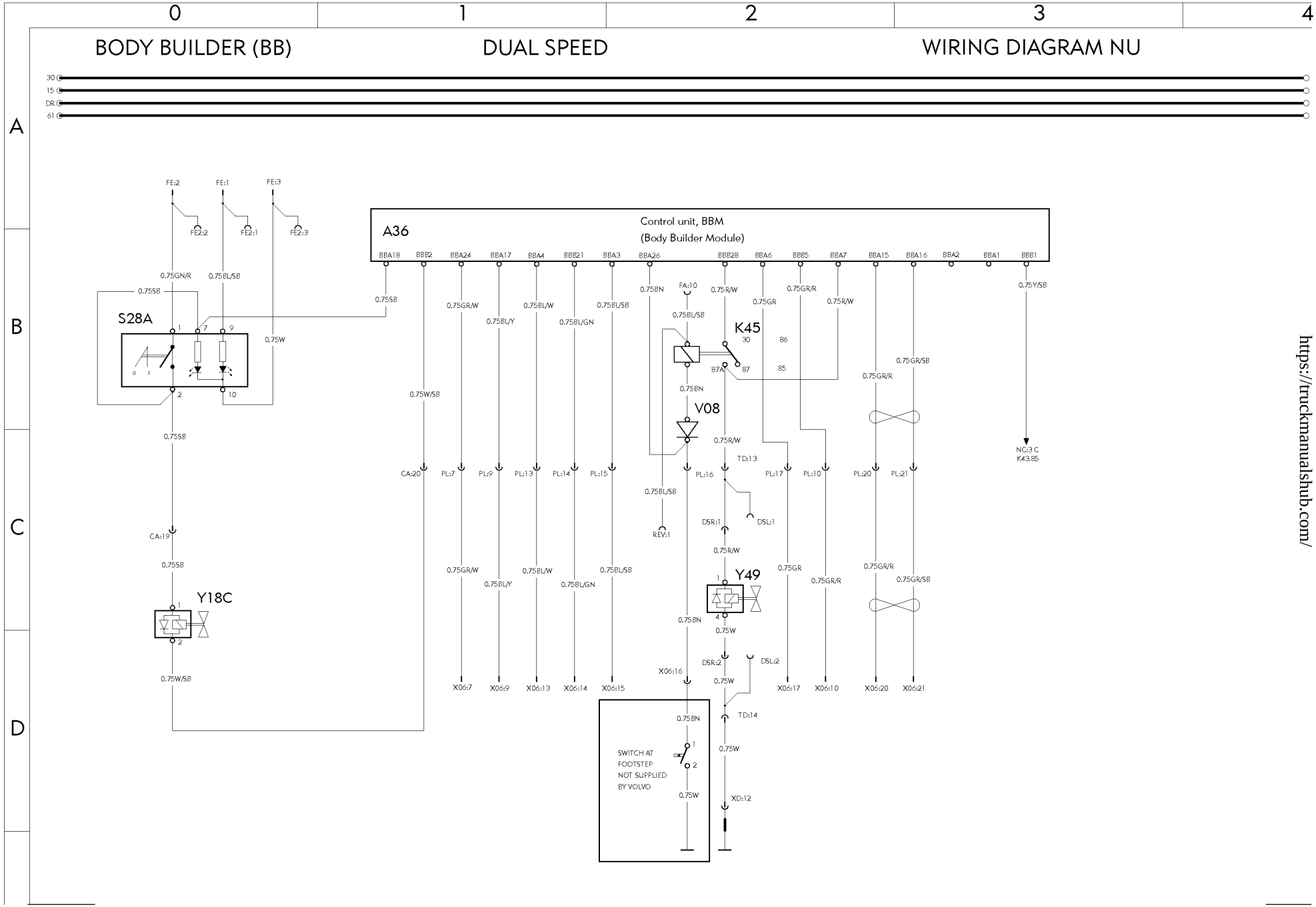

https://truckmanualshub.com/

https://truckmanualshub.com/

WIRING DIAGRAM XA

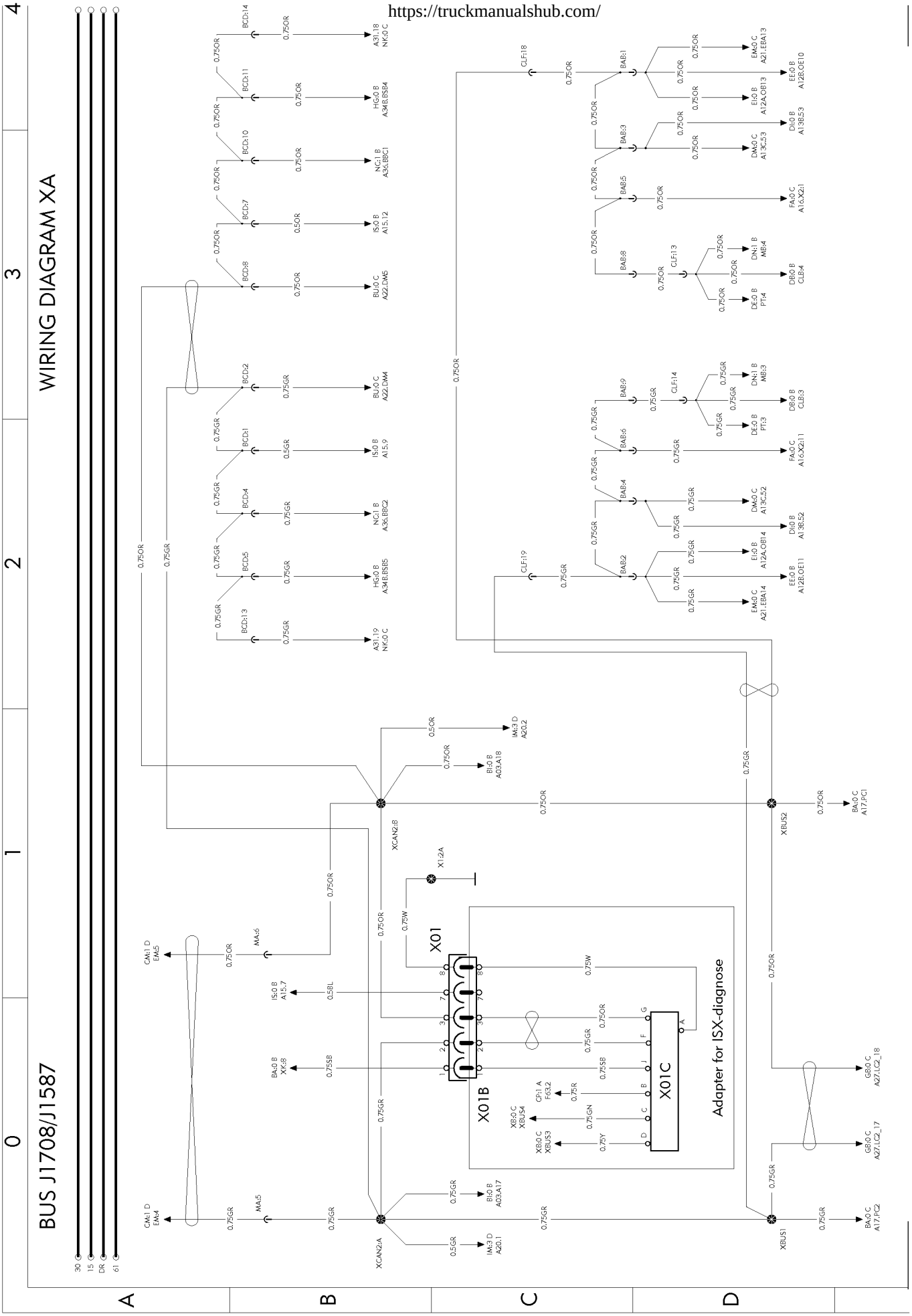

BUS J1939

WIRING DIAGRAM XB

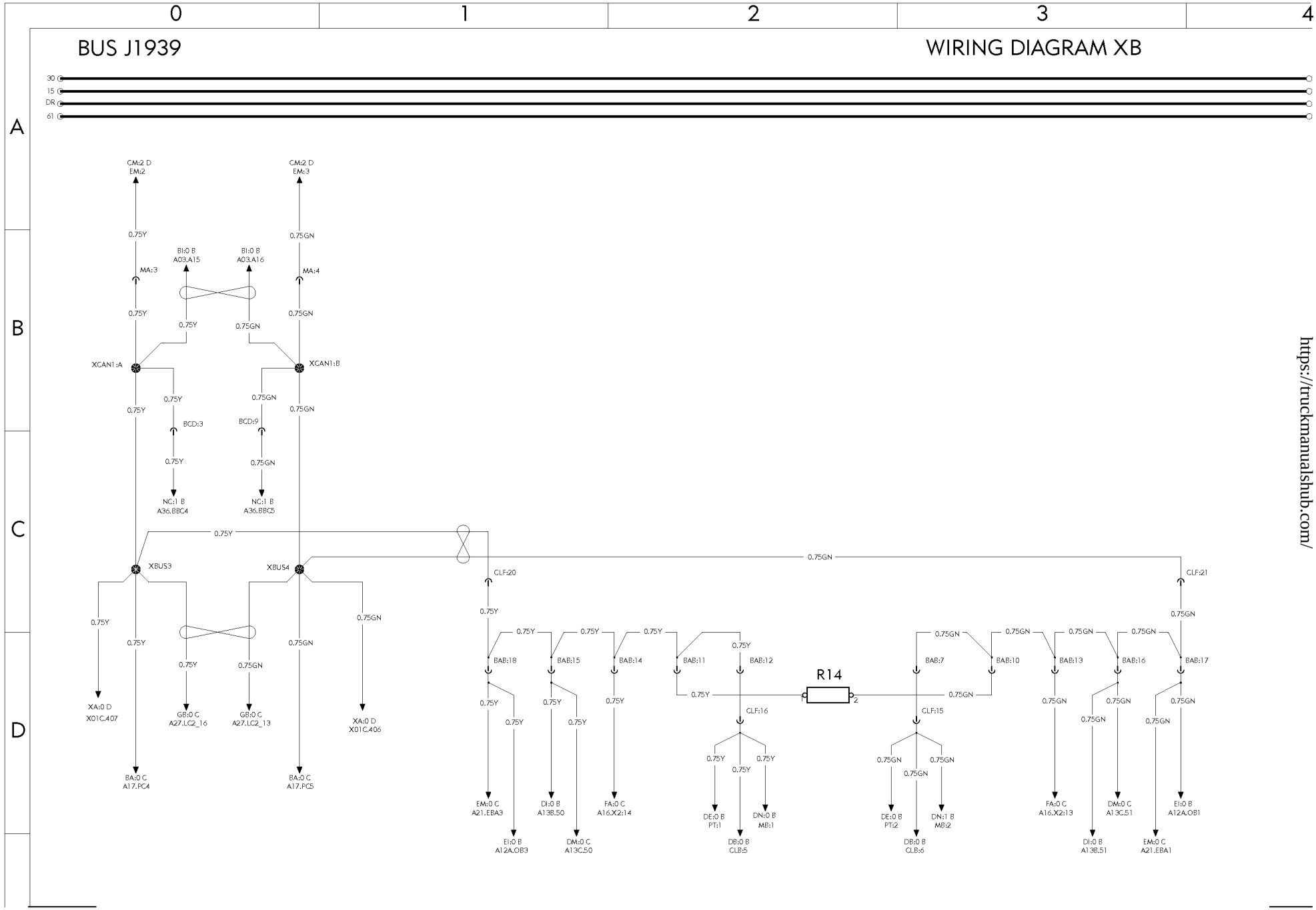

https://truckmanualshub.com/

Illustrations index

mas/truckmanual.nl.com

-	Aerial	page 77
-	Battery cables	page 79
-	Switches	page 80
1000	Wiring harness, instruments	page 82
1006	Wiring harness, roof	page 91
1007	Wiring harness, floor	page 95
1025	Wiring harness, engine-chassi	page 101
1030	Wiring harness, engine	page 103
1037	Wiring harness, bogie lift	page 105
1040	Wiring harness, frame	page 106
1047	Wiring harness, roof beacon light	page 107
1056	Wiring harness, air dryer	page 109
1062	Wiring harness, parking heater, frame	page 109
1063	Wiring harness, trailer connections	page 110
1072	Wiring harness, air suspension chassi	page 111
1077	Wiring harness, side marking lamps	page 112
1083	Wiring harness, door	page 113
1086	Wiring harness, ABS chassi	page 115
1401	Wiring harness, solenoid valves	page 118
1403	Wiring harness, retarder	page 119
1435	Wiring harness, main switch	page 120
1436	Wiring harness, roof sign lighting	page 107
1458	Wiring harness, front wheel drive	page 122
1460	Wiring harness, cab-battery box	page 120
1470	Wiring harness, el.operated mirror arch	page 133
1472	Wiring harness, load indicator	page 123
1476	Wiring harness, cab-engine	page 101
1484	Wiring harness, floor gear shift selector	page 124
1493	Wiring harness, power steering	page 126
1494	Wiring harness, gearbox	page 127
1499	Wiring harness, cab-gearbox	page 127
1501	Wiring harness, upper front	page 131
1502	Wiring harness, lower front left	page 131
1503	Wiring harness, lower front right	page 132
1504	Wiring harness, firewall	page 133
1505	Wiring harness, body builder connections	page 134
1506	Wiring harness, demountable (swap-body)	page 134
1507	Wiring harness, ESP chassi	page 136

http://vehicleinformation.com

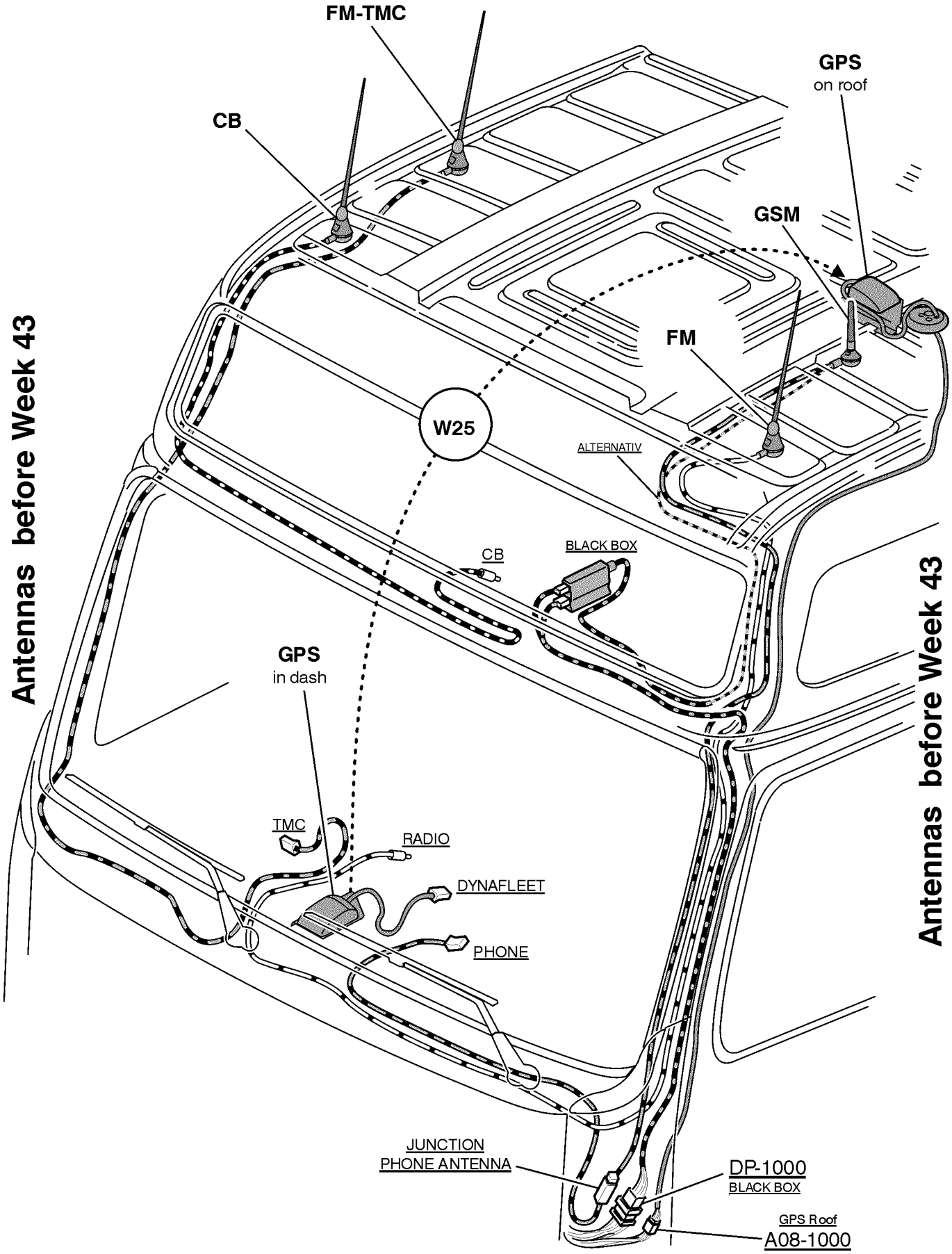

T3016444

https://truckmanualshub.com/

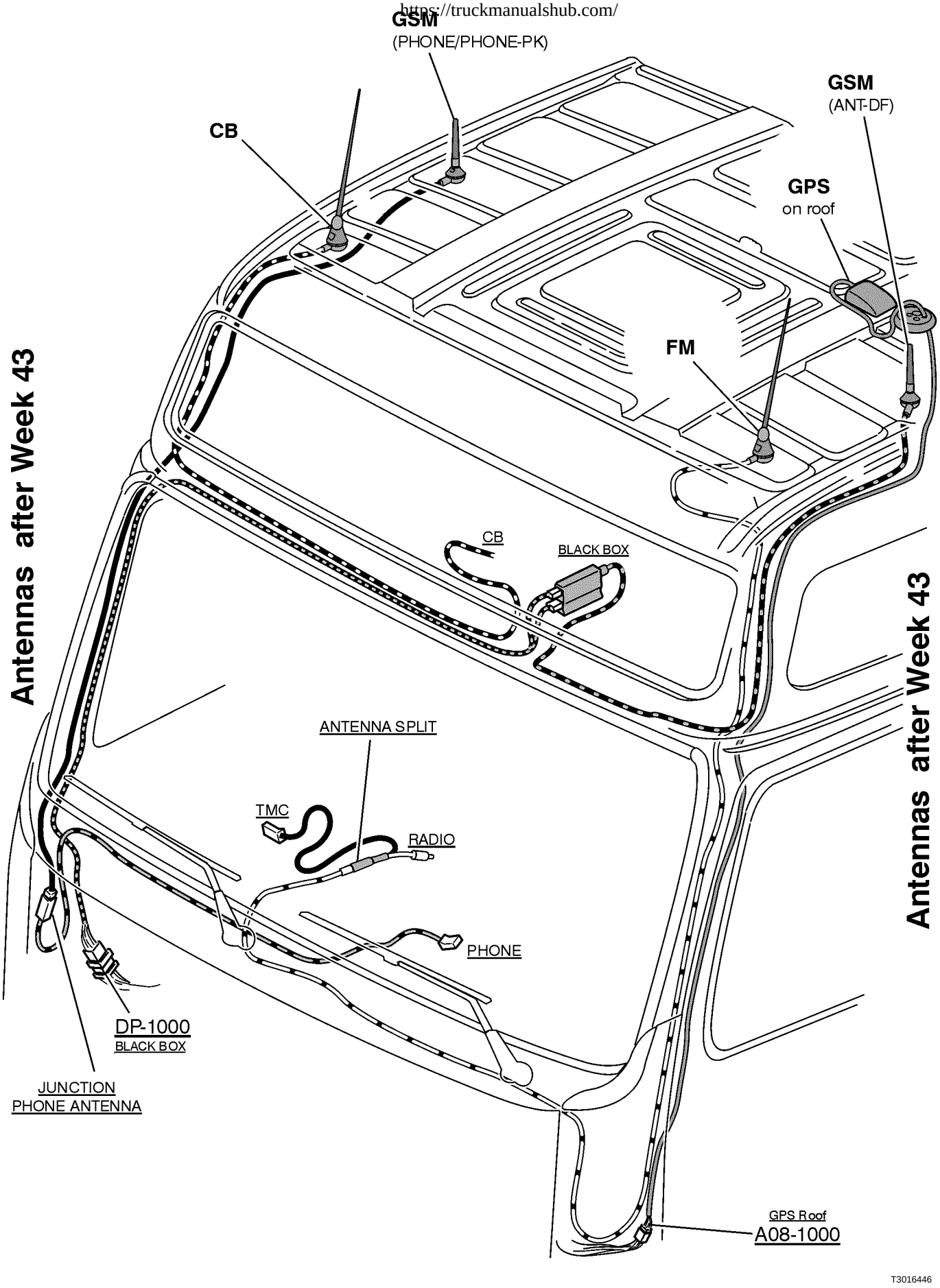

Battery Connections

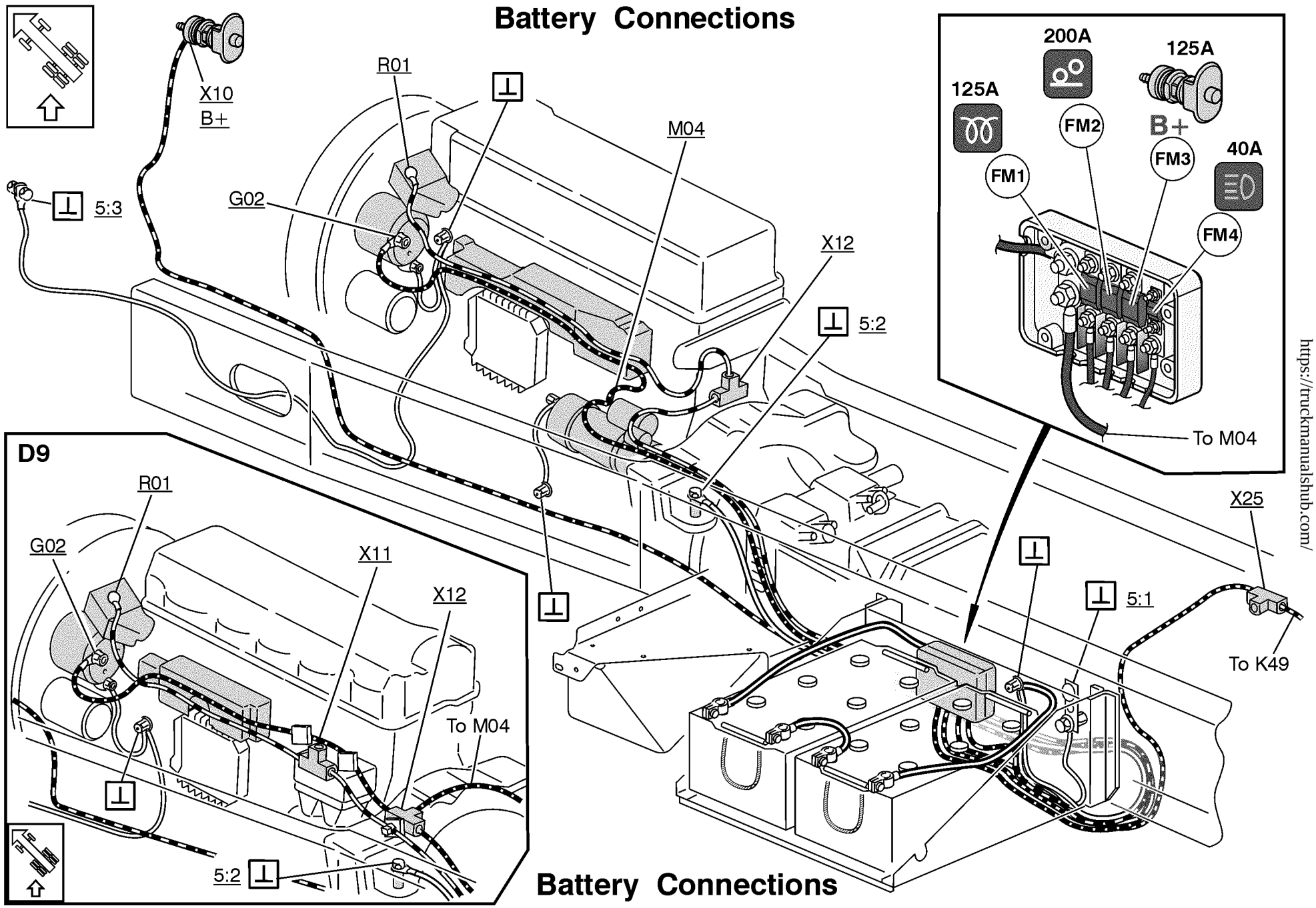

Battery Connections

https://truckmanualshub.com/

https://truckmanualshub.com/

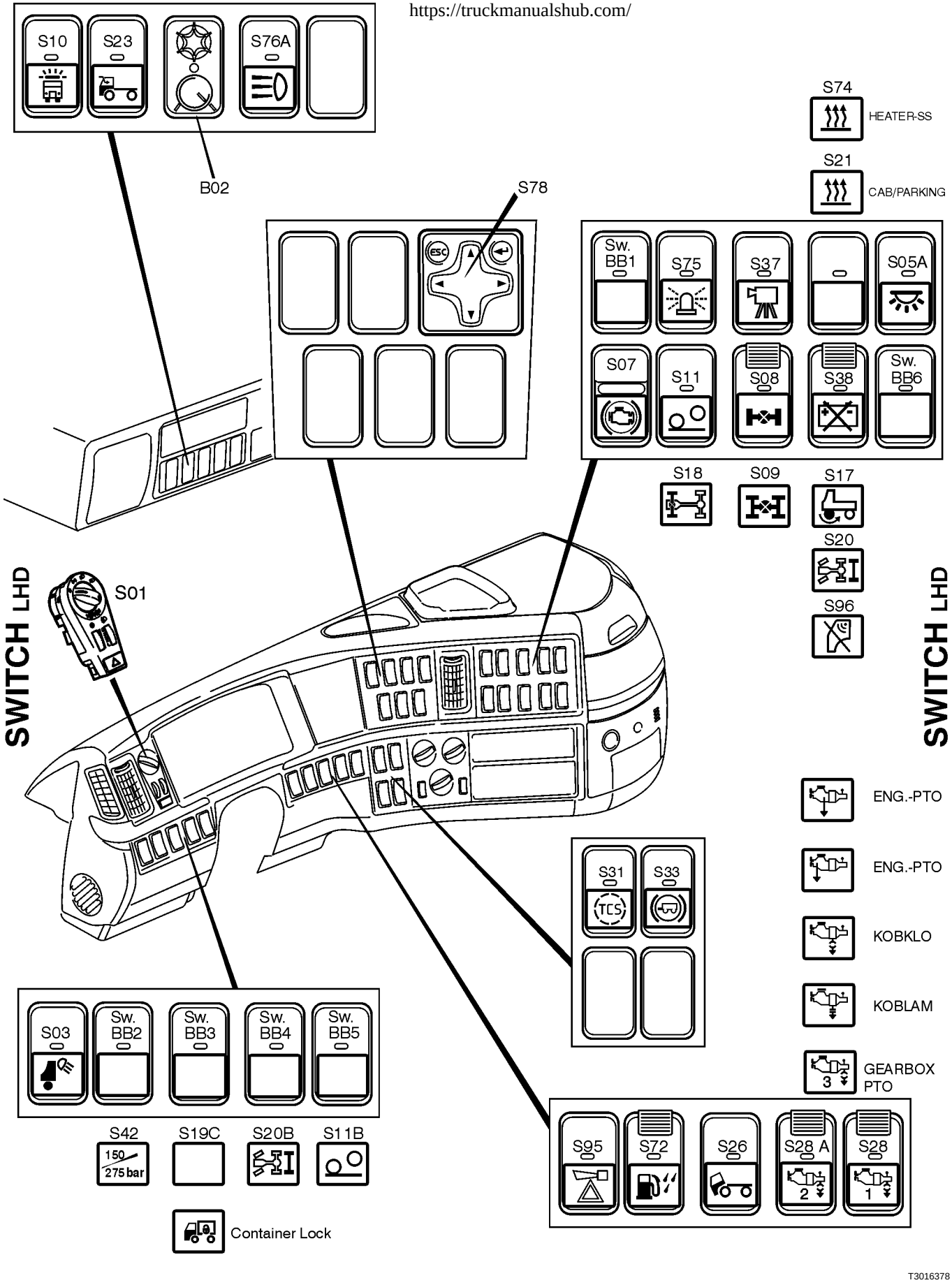

https://truckmanualshub.com/

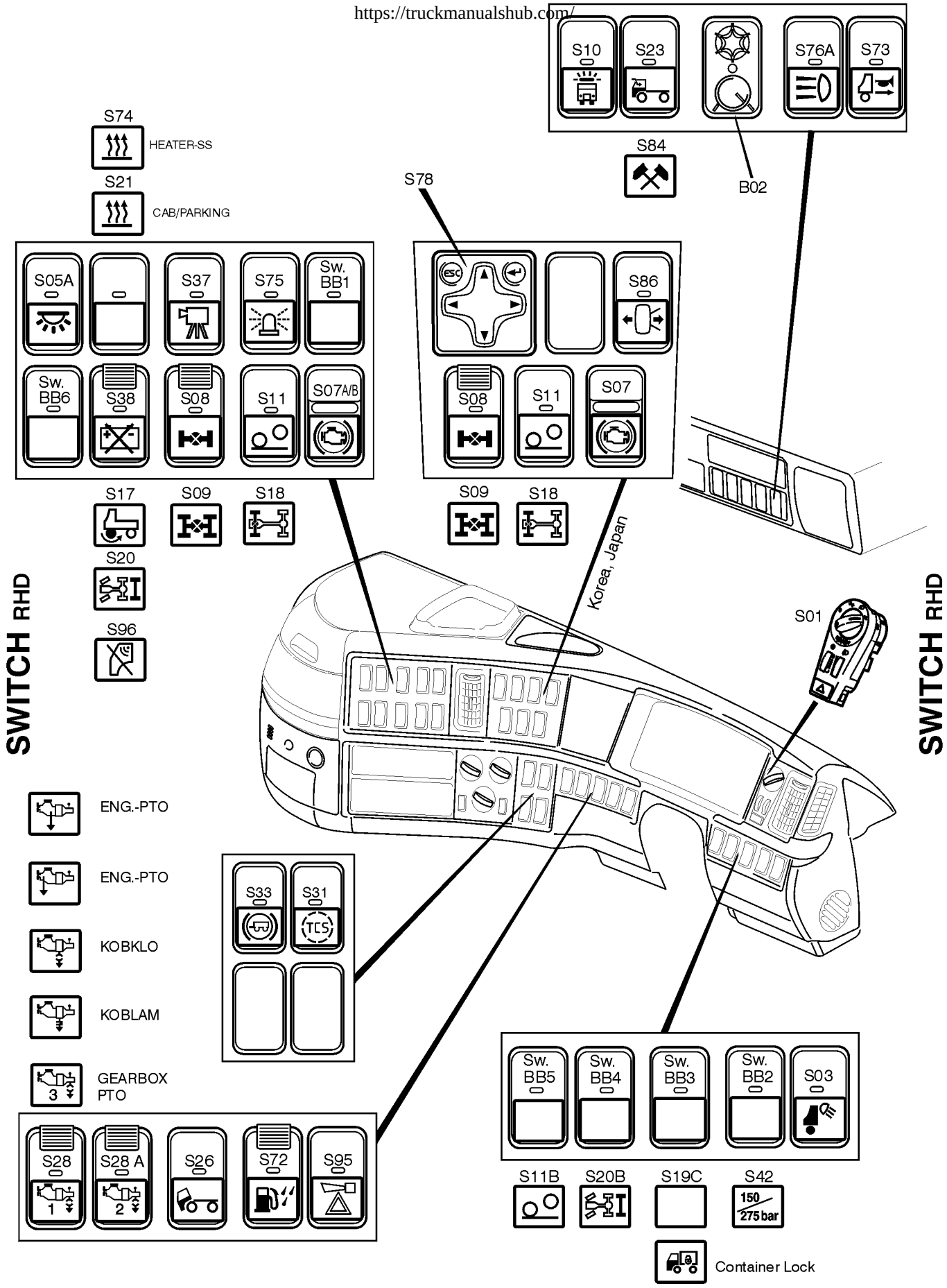

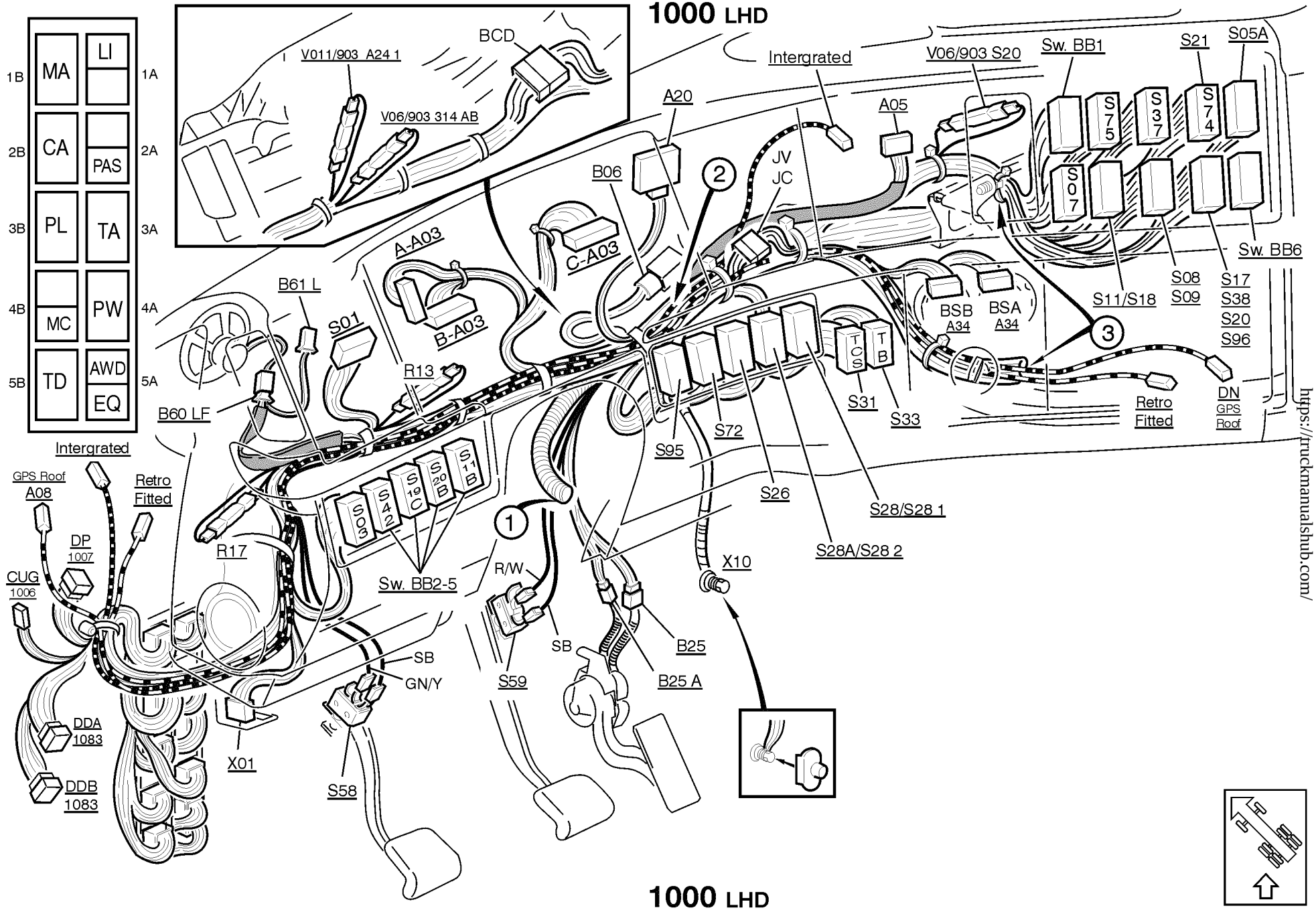

https://truckmanualshub.com/

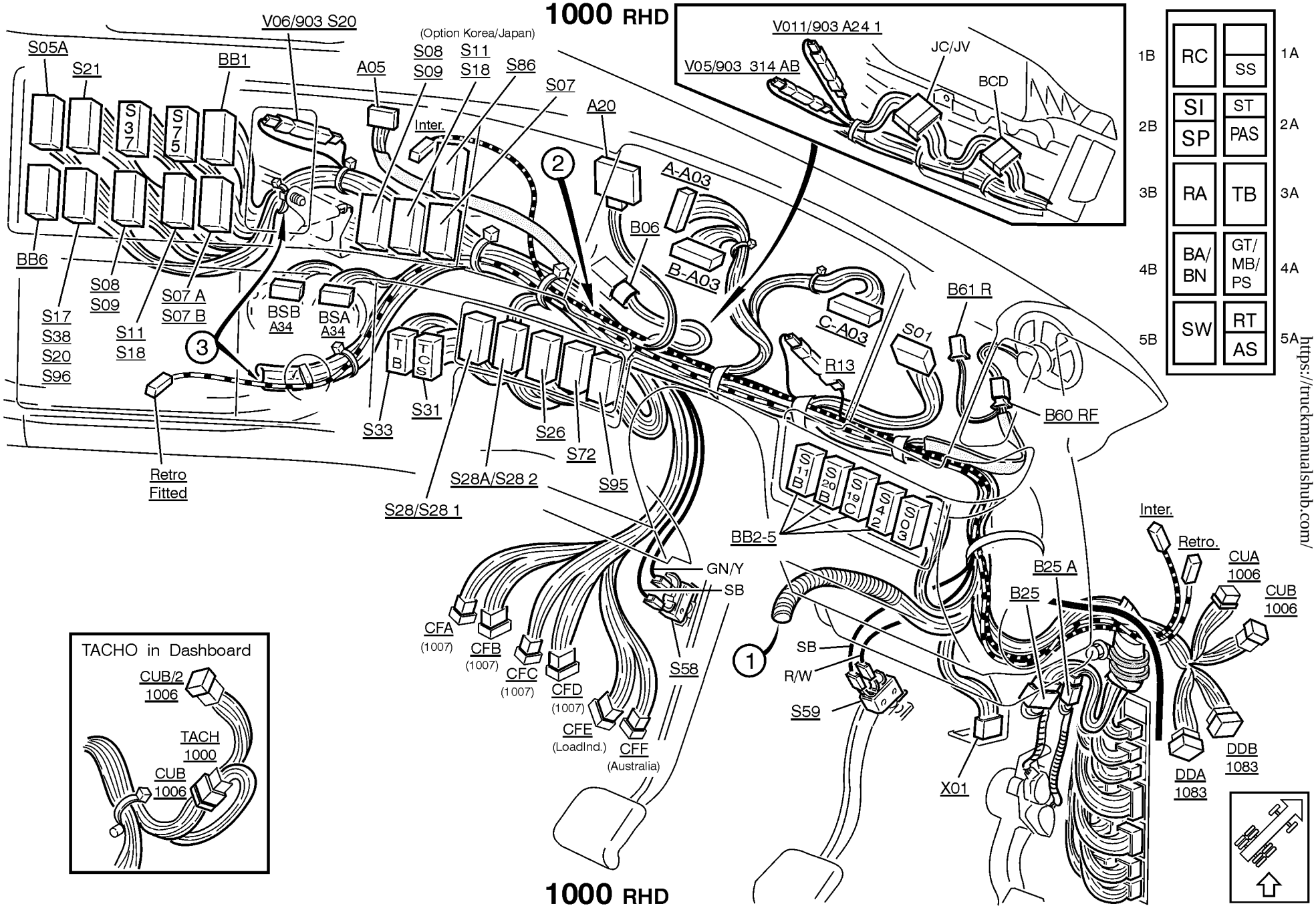

https://truckmanualshub.com/

https://truckmanualshub.com/

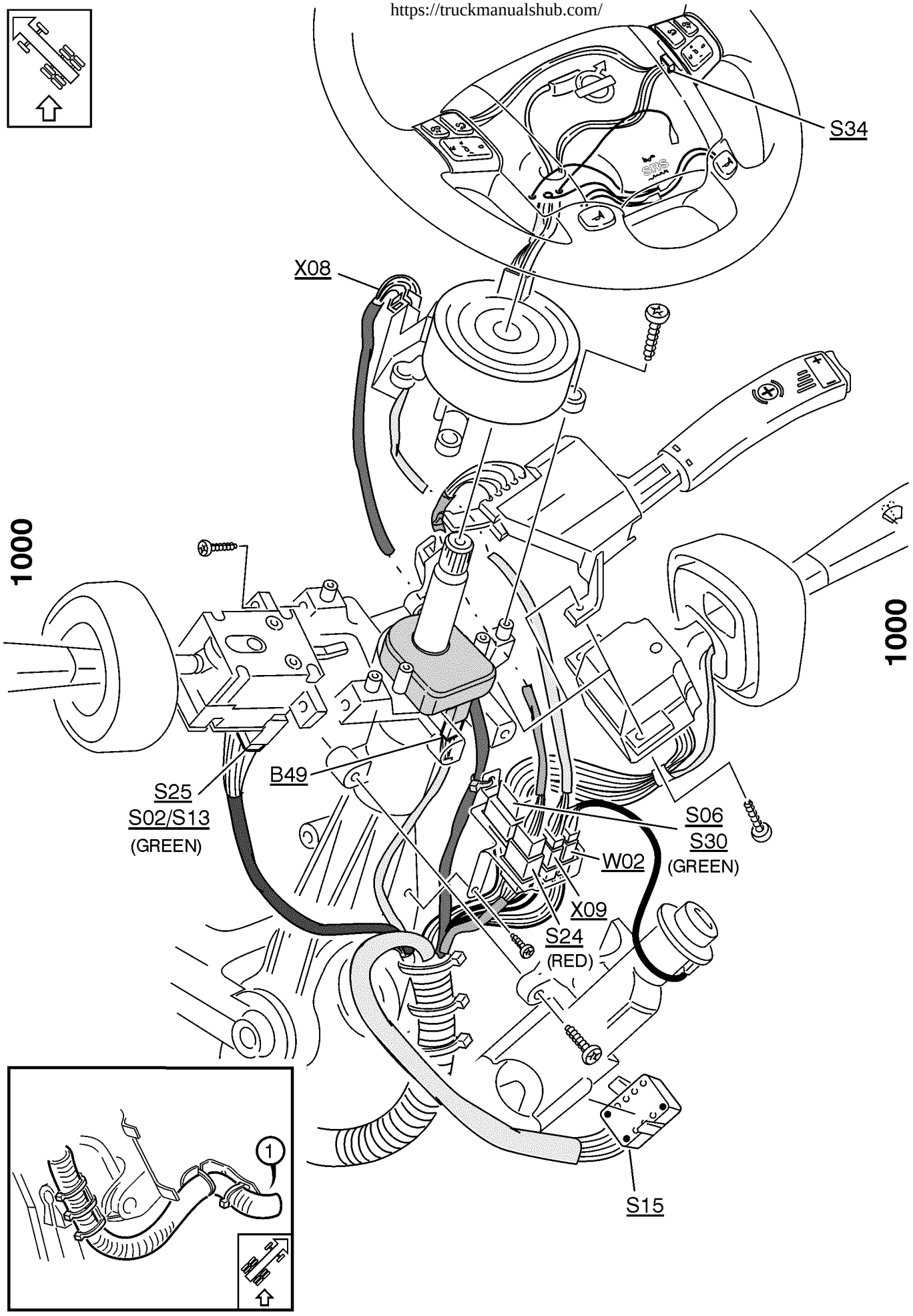

T3016384

https://truckmanualshub.com/

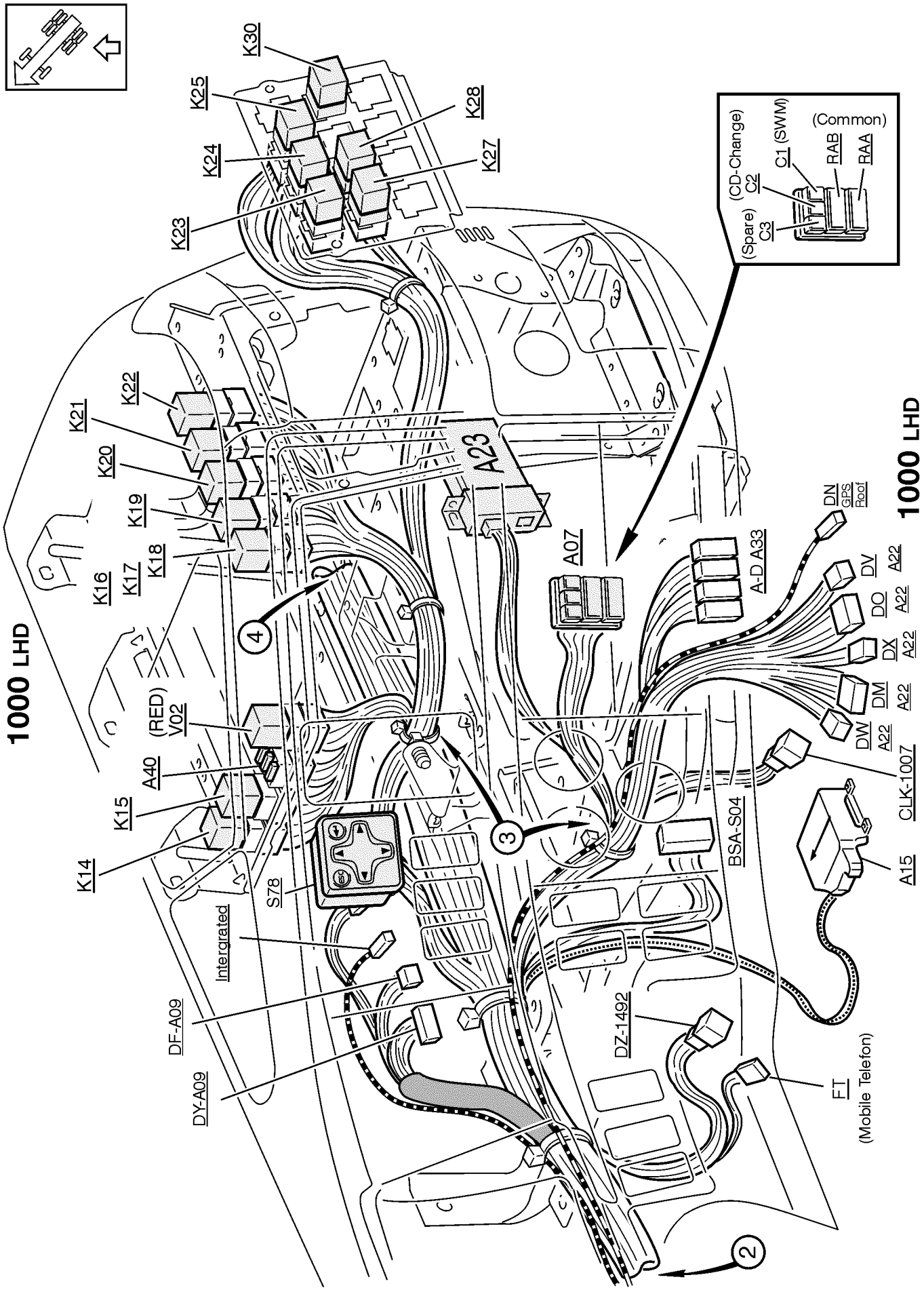

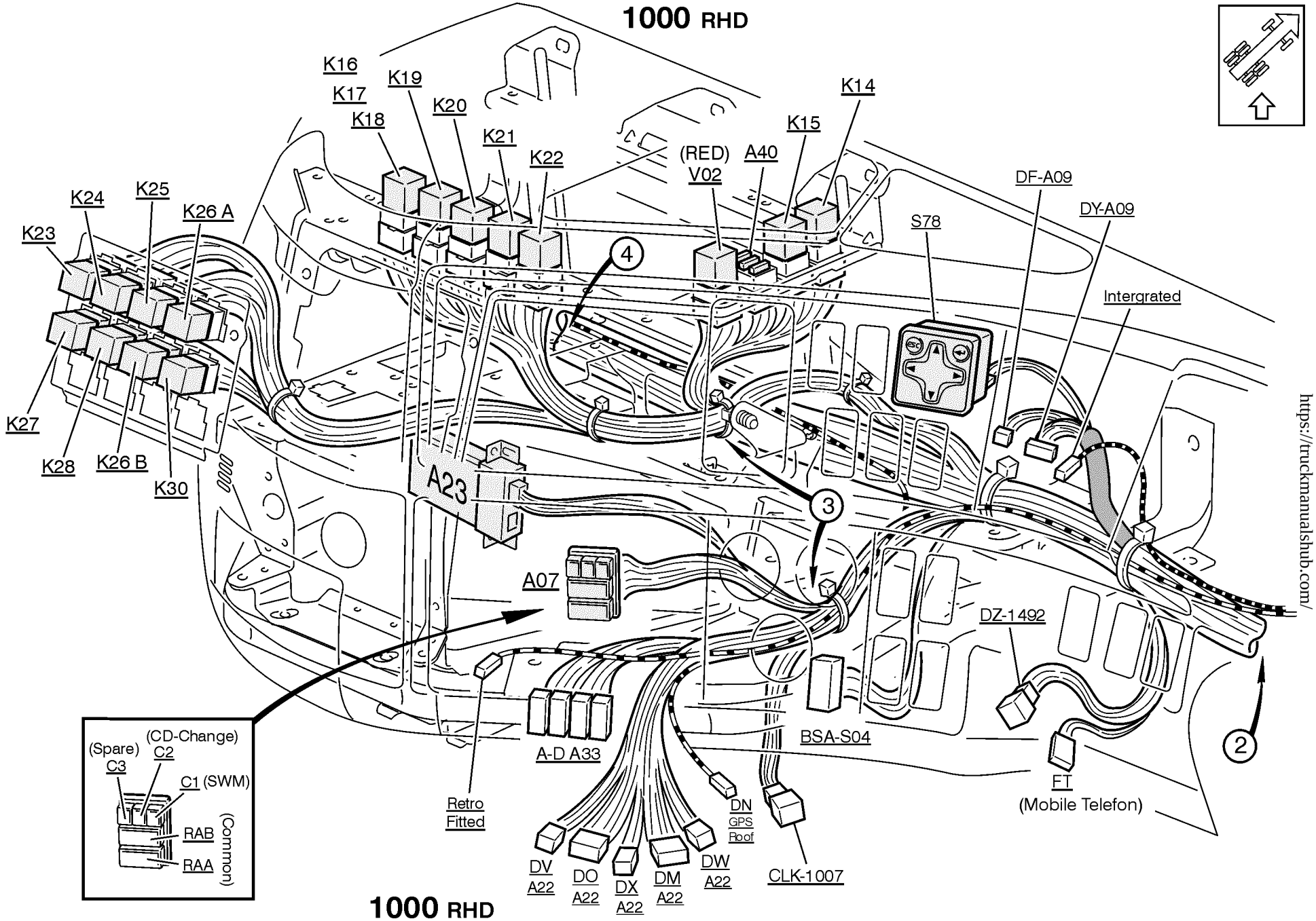

https://truckmanualshub.com/

https://truckmanualshub.com/

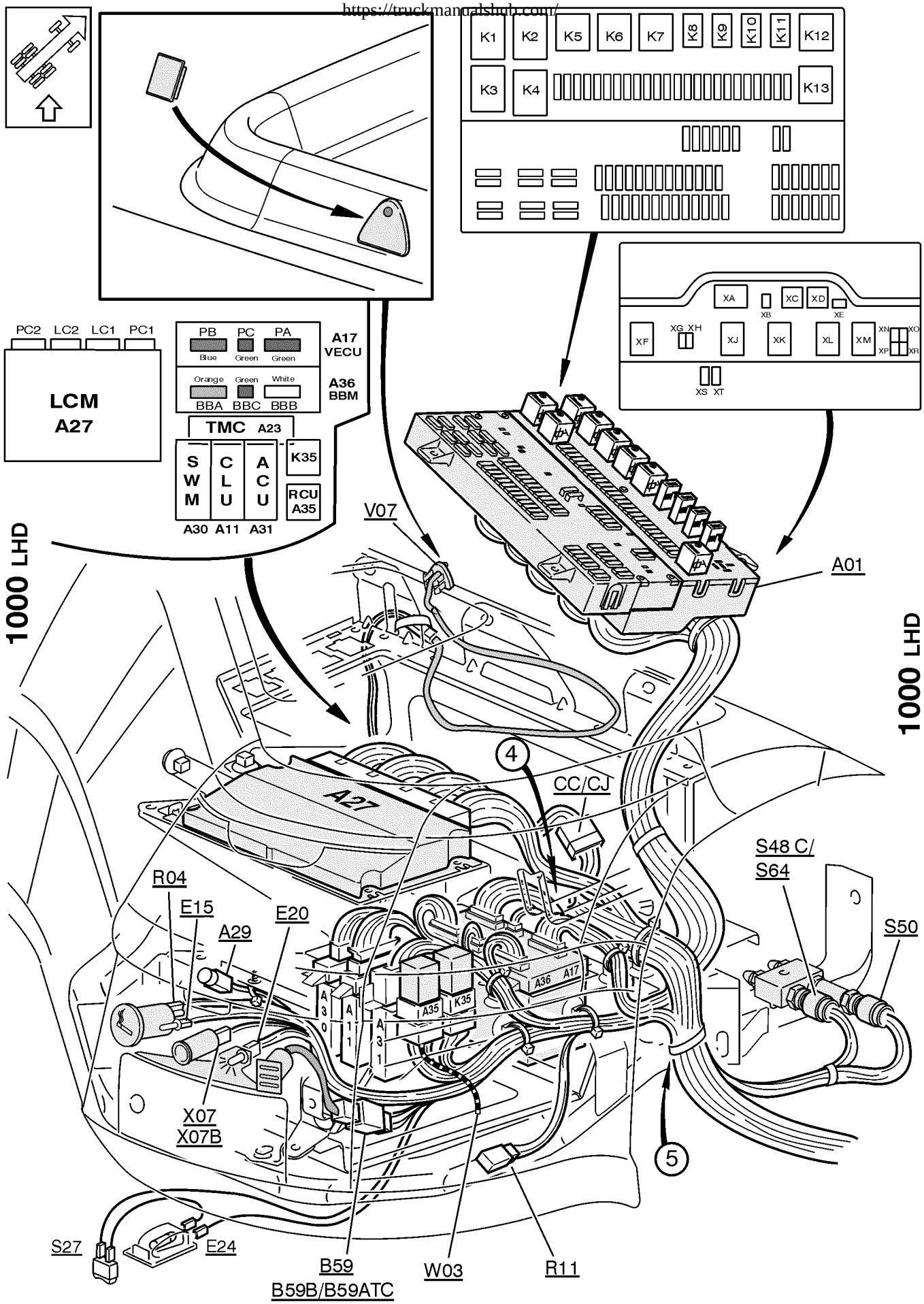

https://truckmanualshub.com/

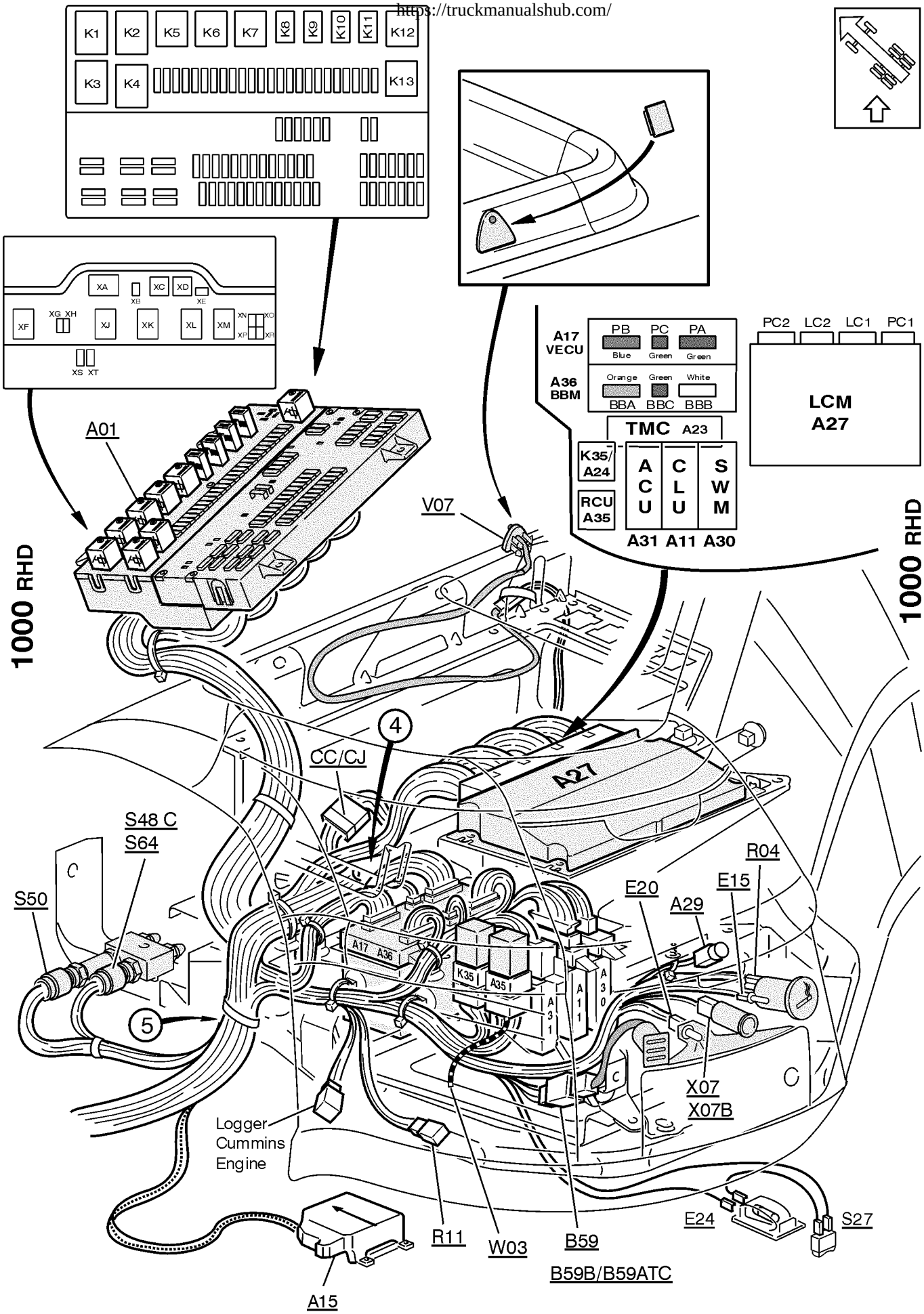

T3016388

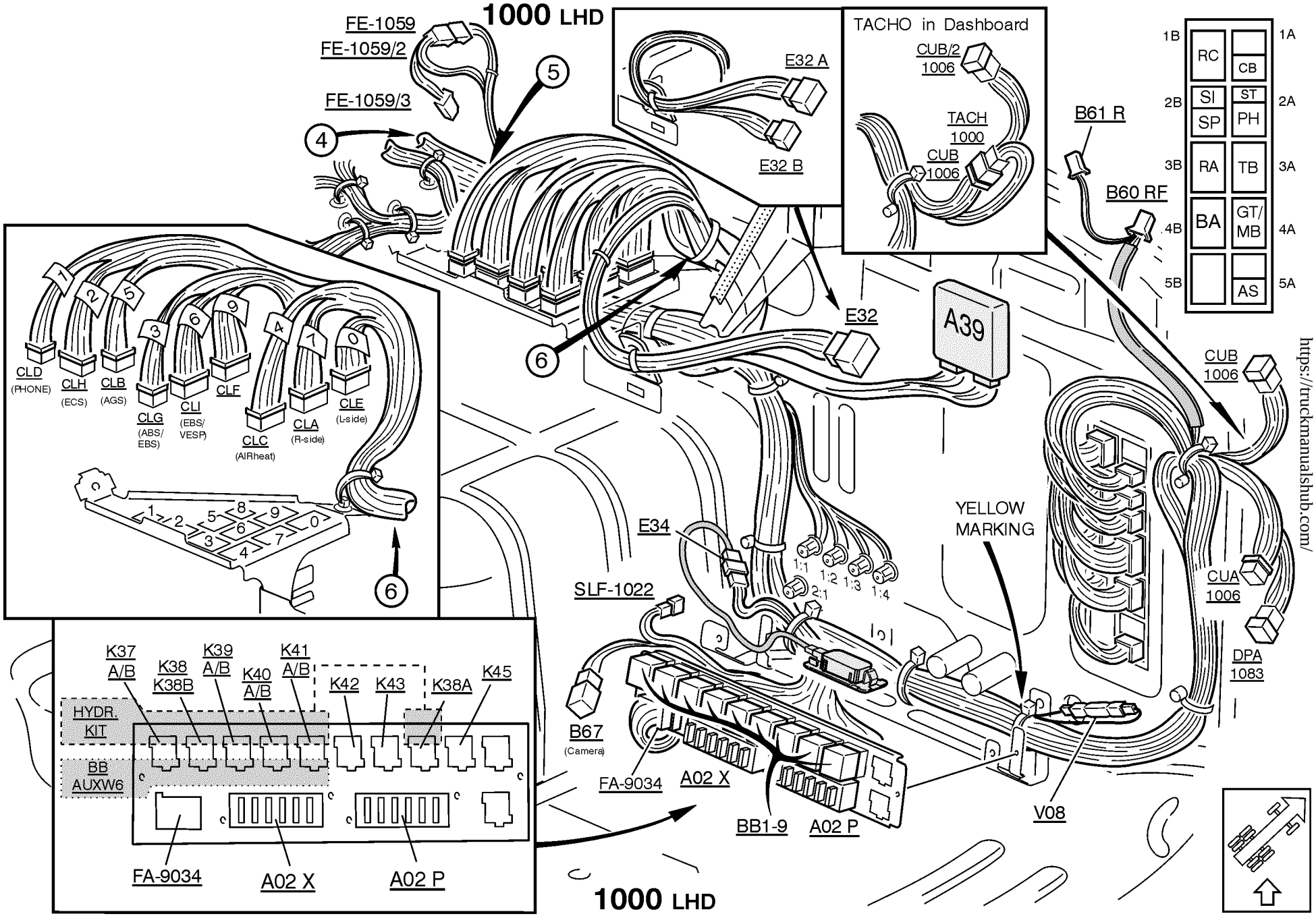

https://truckmanualshub.com/

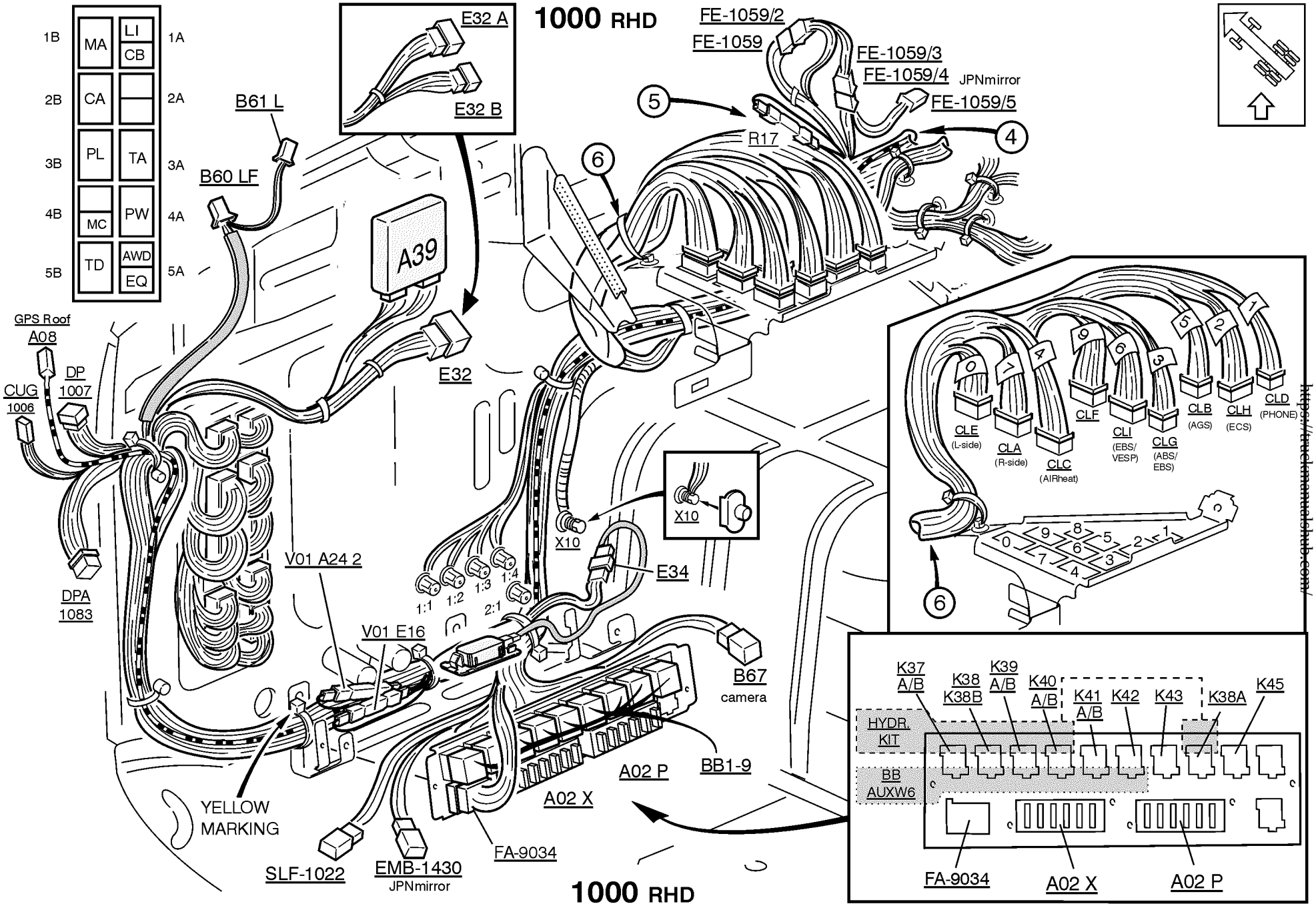

https://truckmanualshub.com/

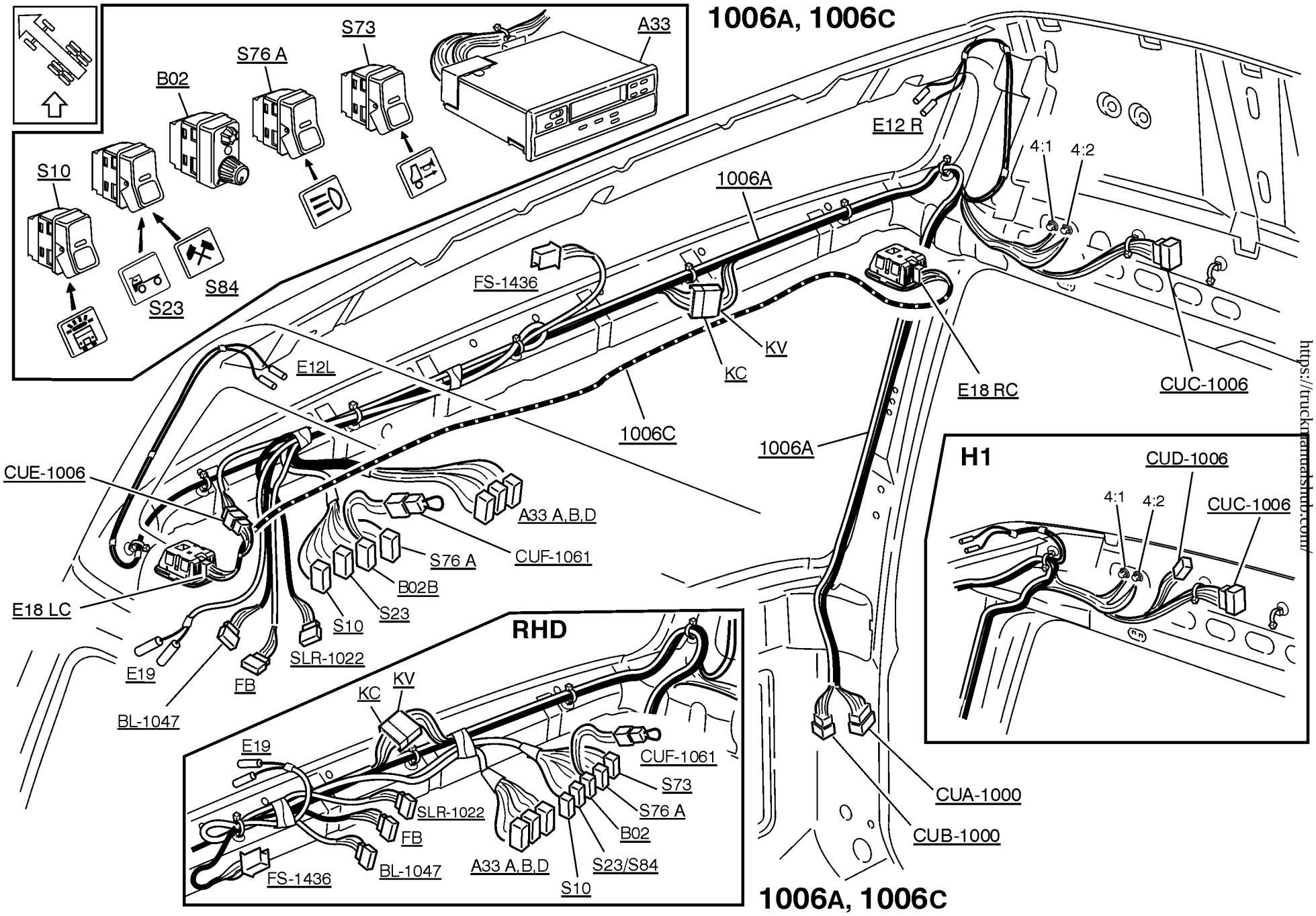

https://truckmanualshub.com/

https://truckmanualshub.com/

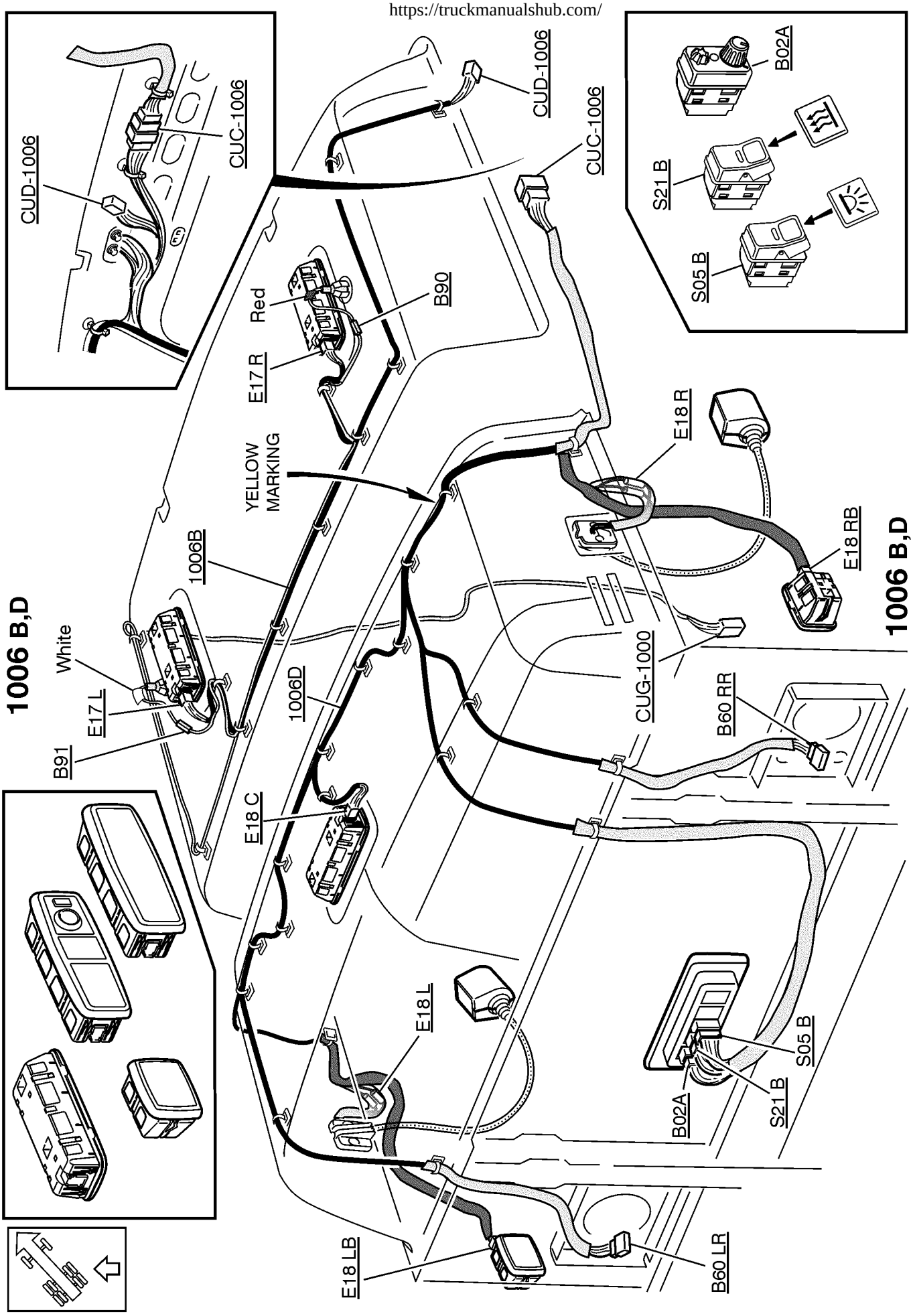

T3016392

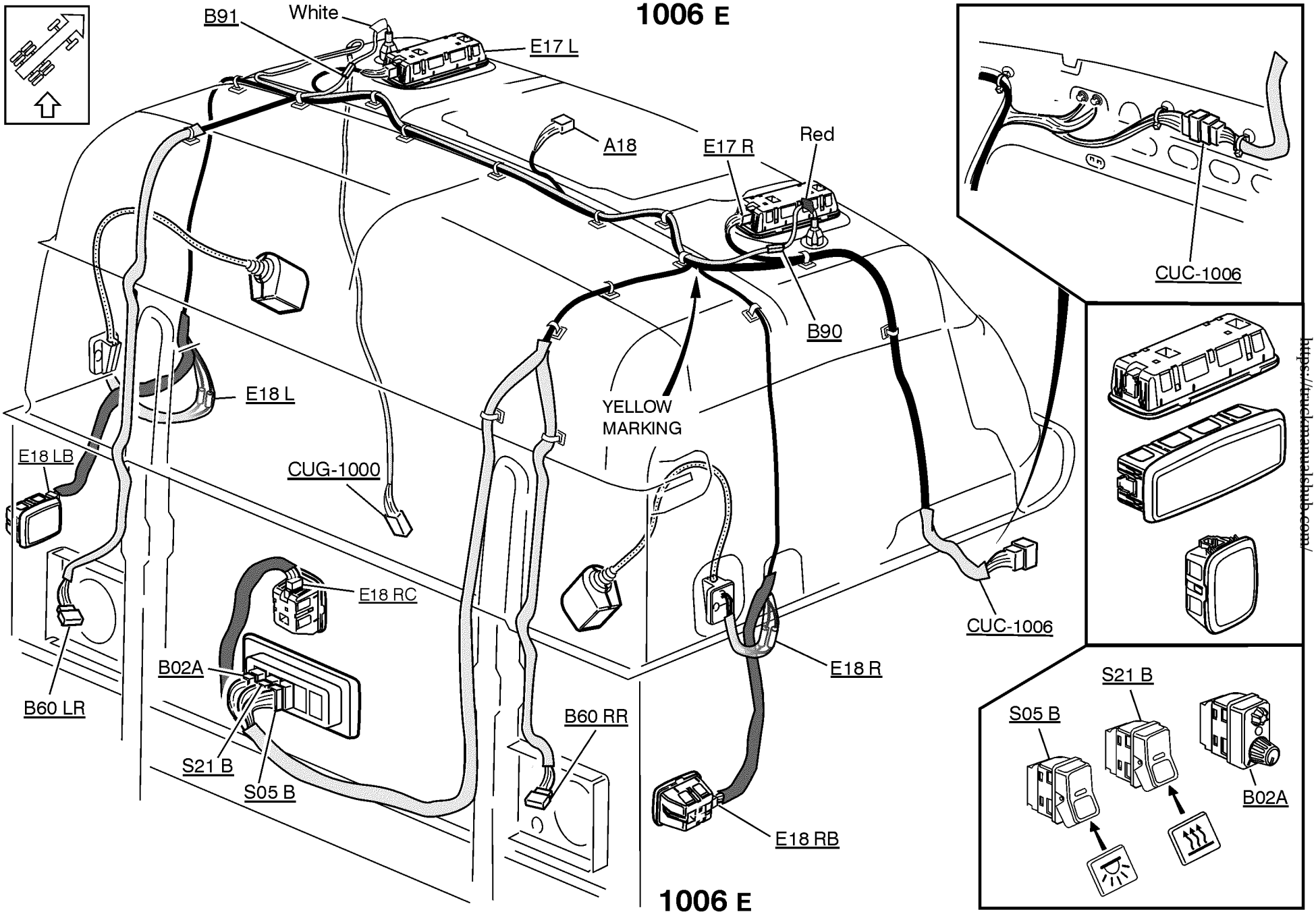

https://truckmanualshub.com/

https://truckmanualshub.com/

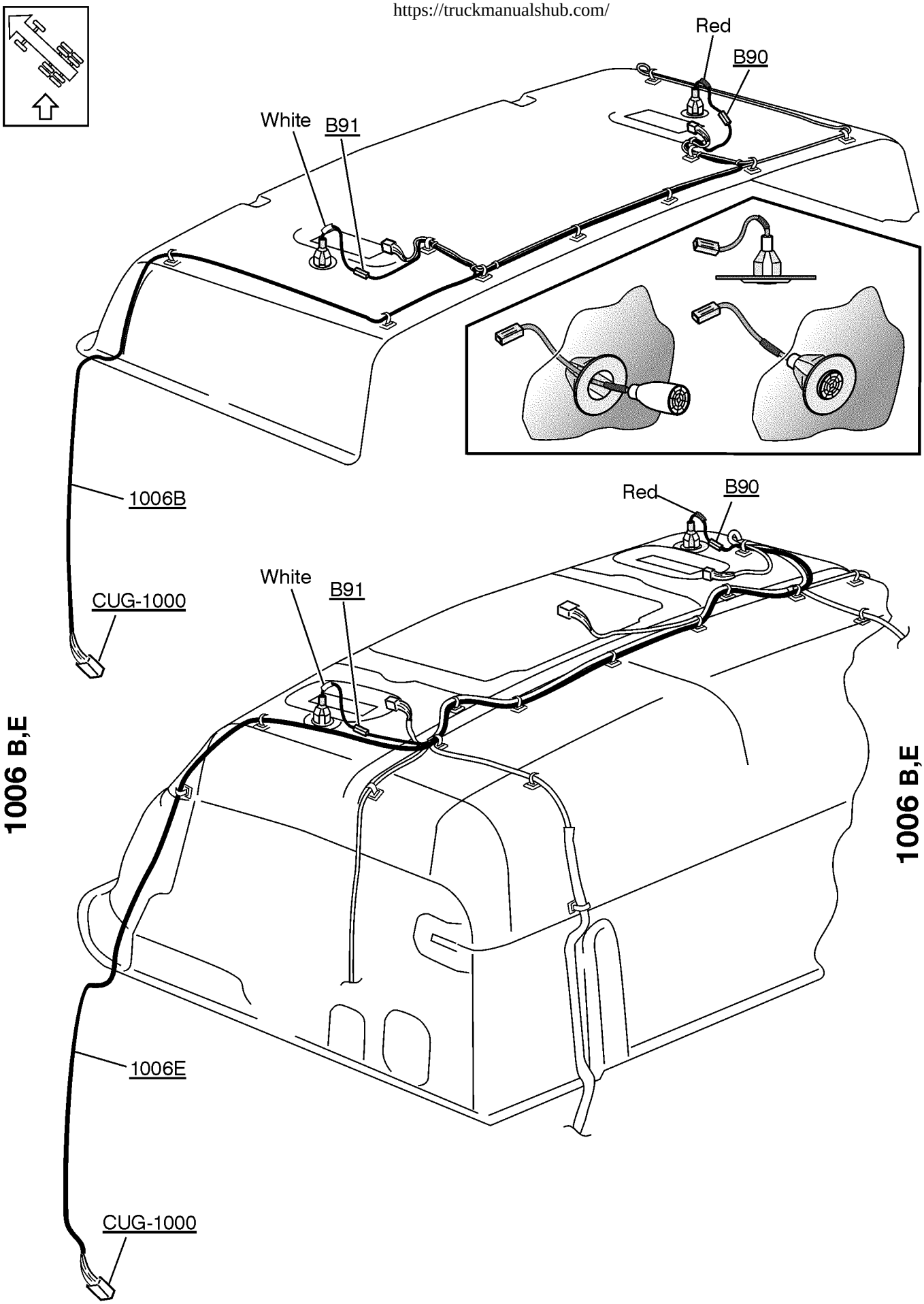

T3016394

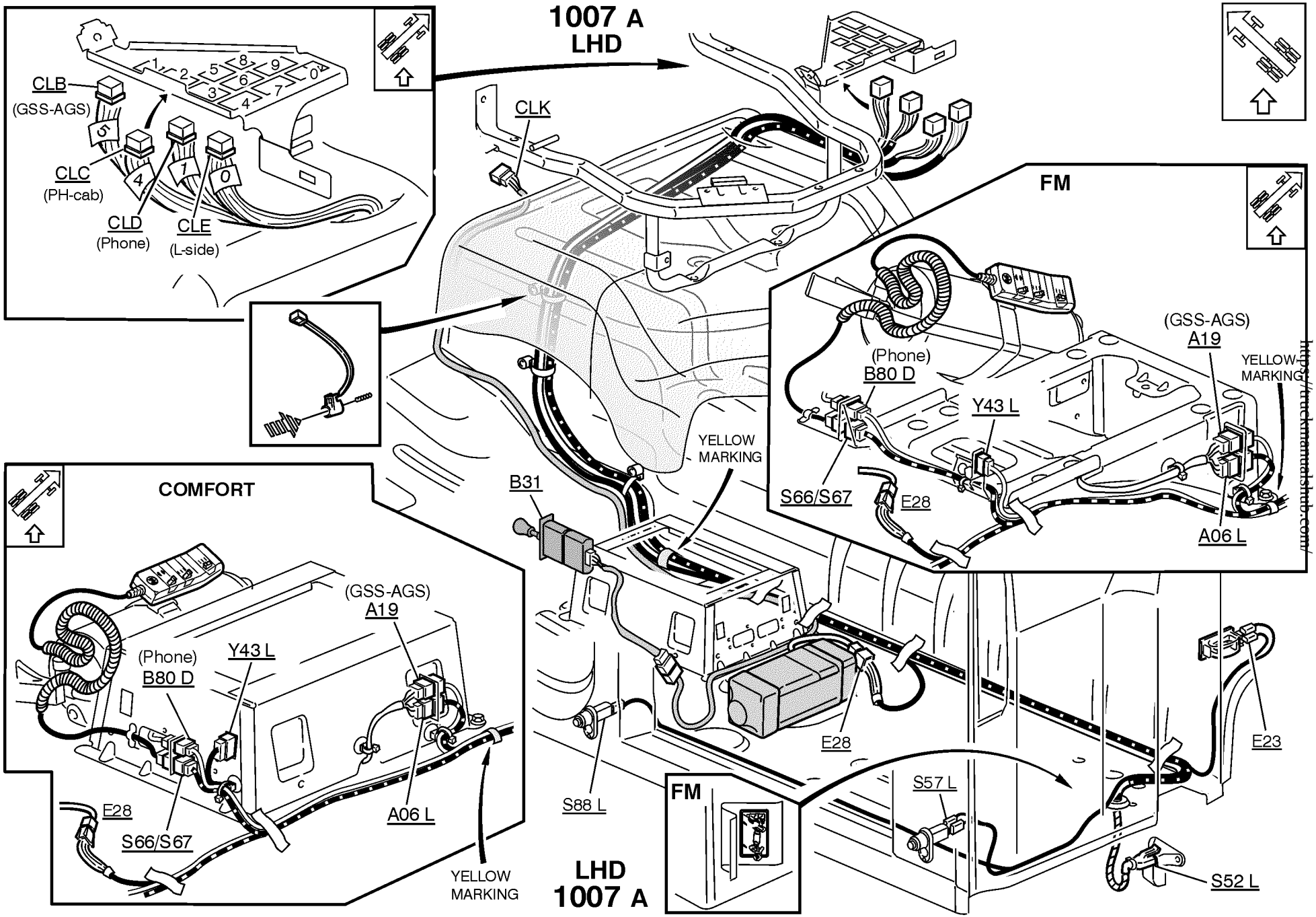

http://truckmanualshub.com/

https://truckmanualshub.com/

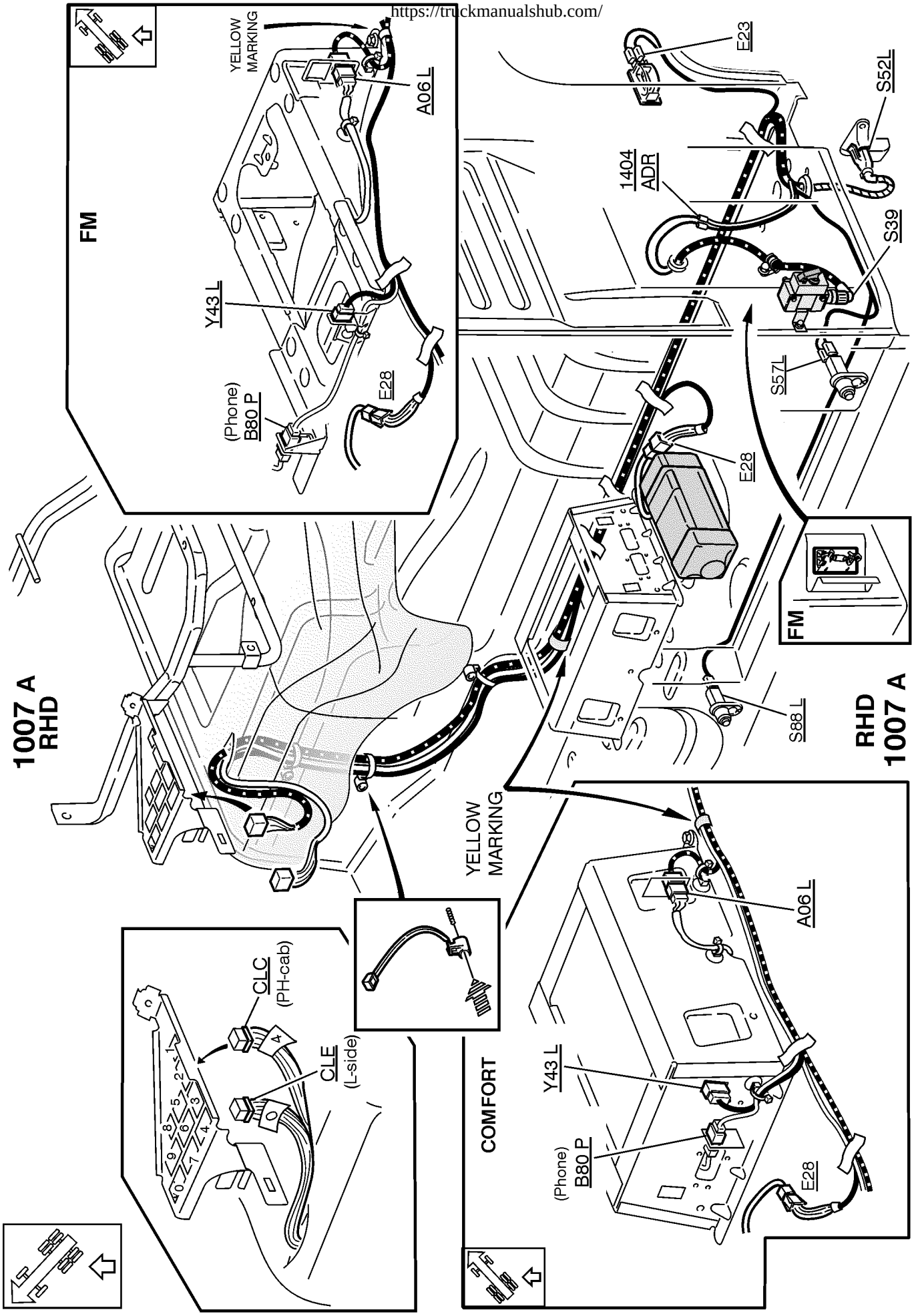

T3016396

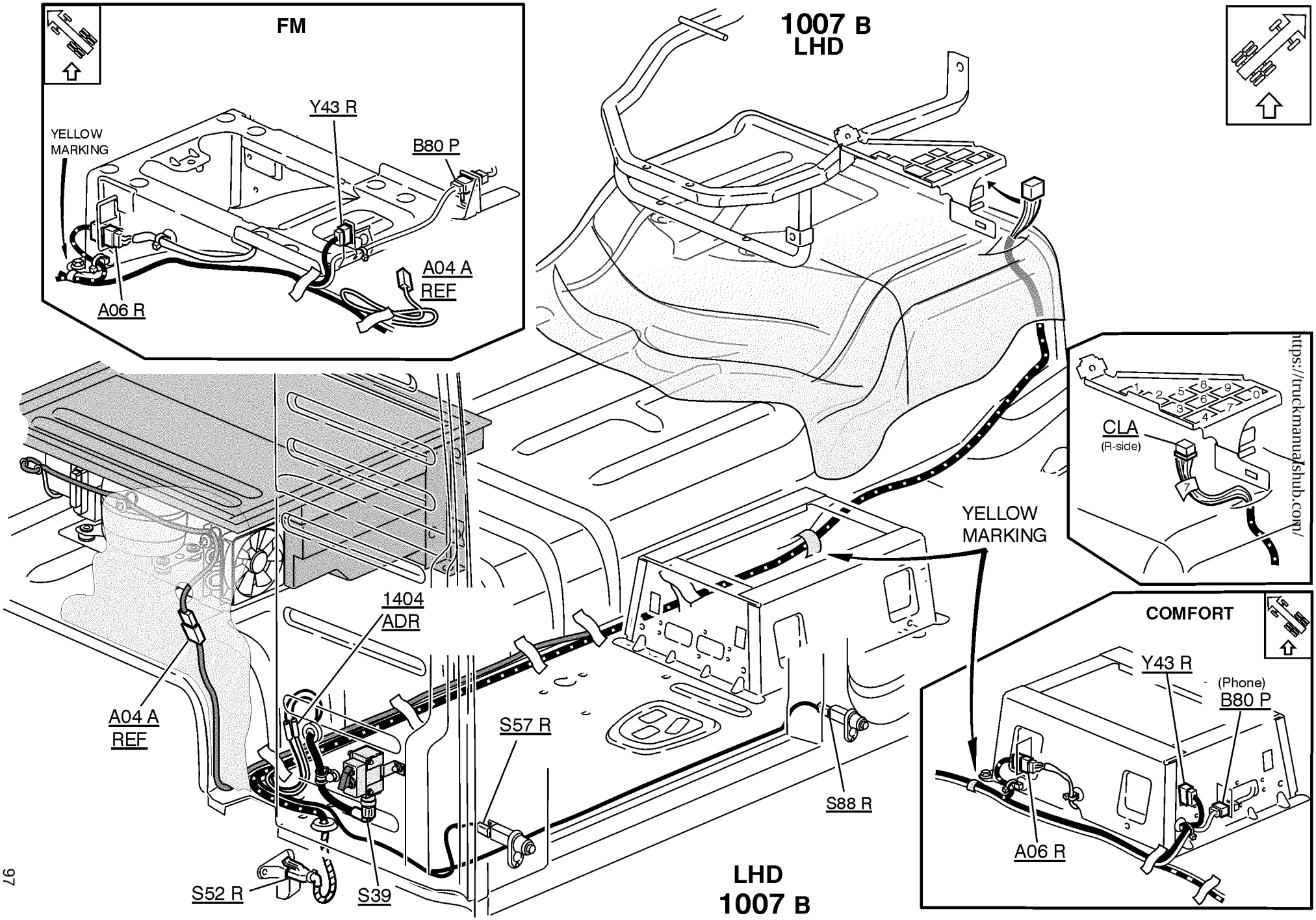

https://truckmanualshub.com/

T3016397

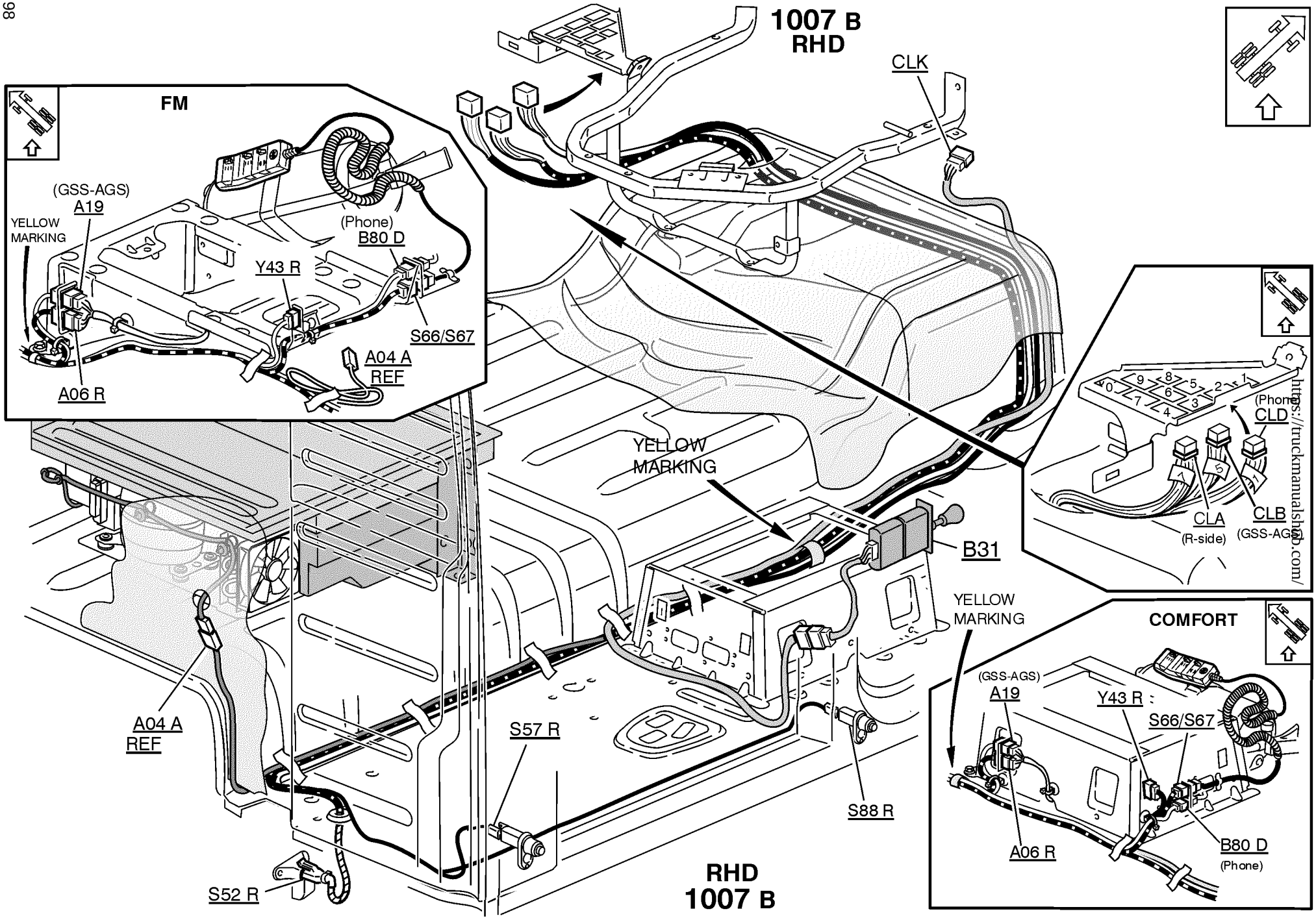

https://truckmanualshop.com/

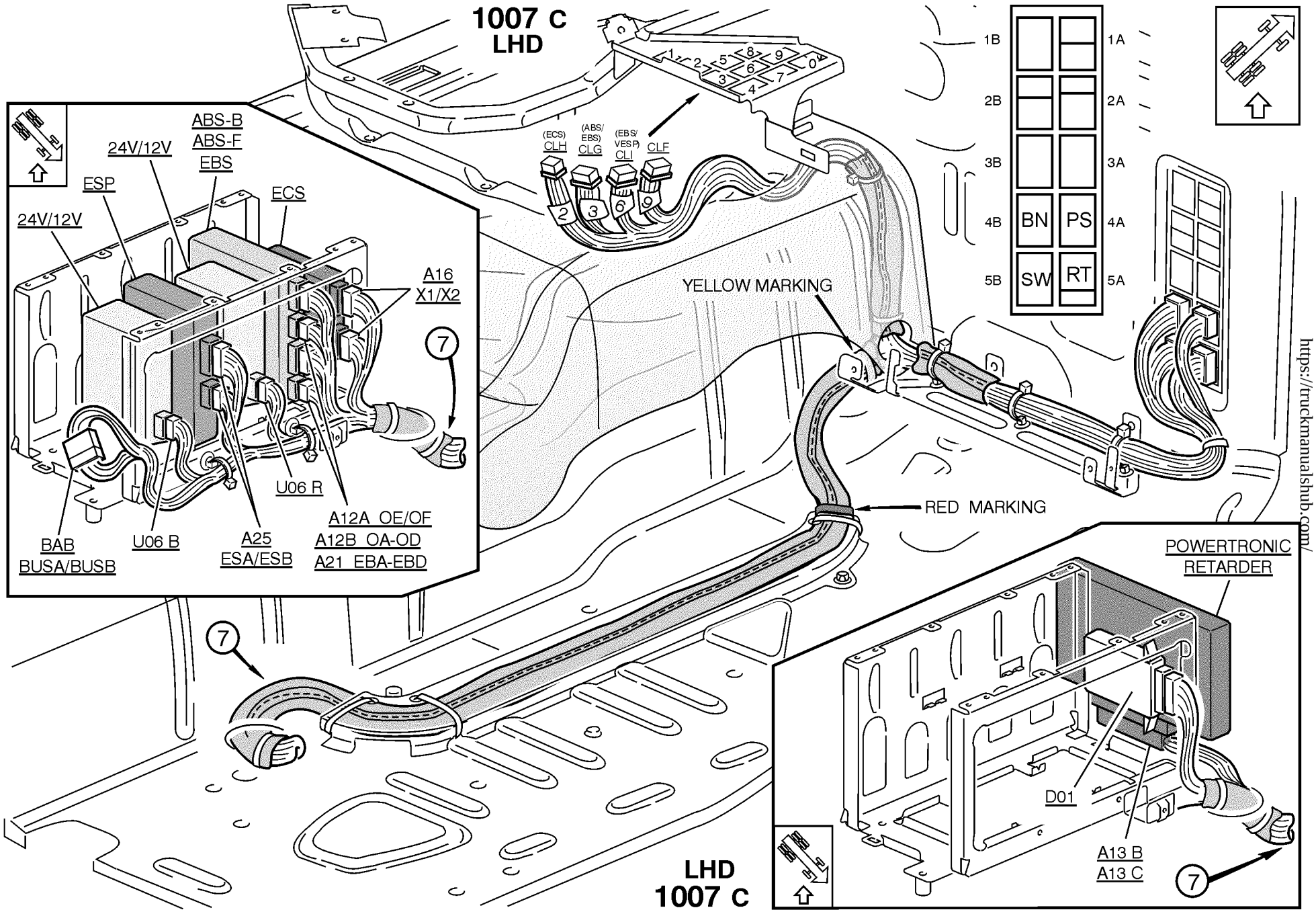

https://truckmanualshub.com/

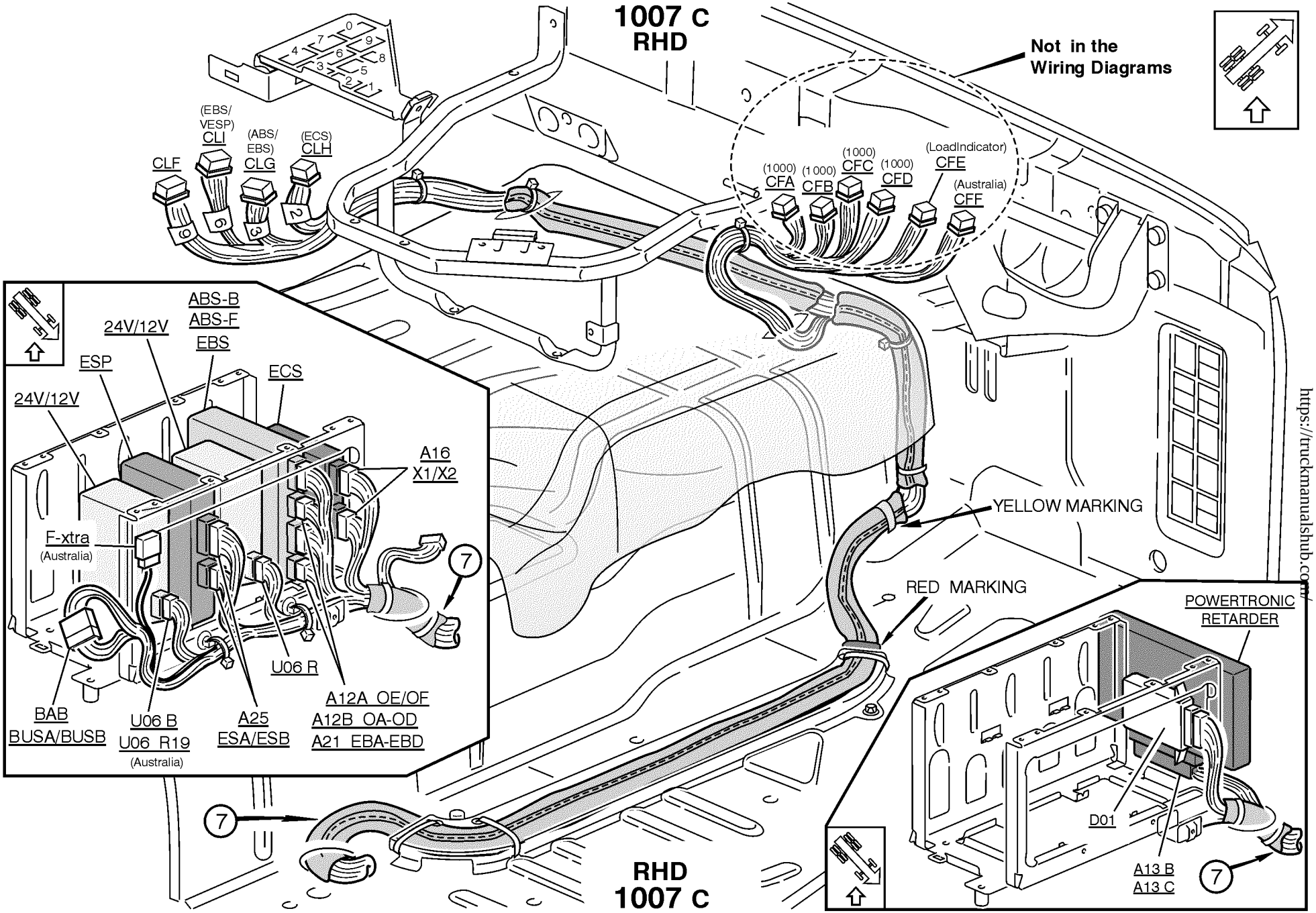

https://truckmanualshub.com/

https://truckmanualshub.com/

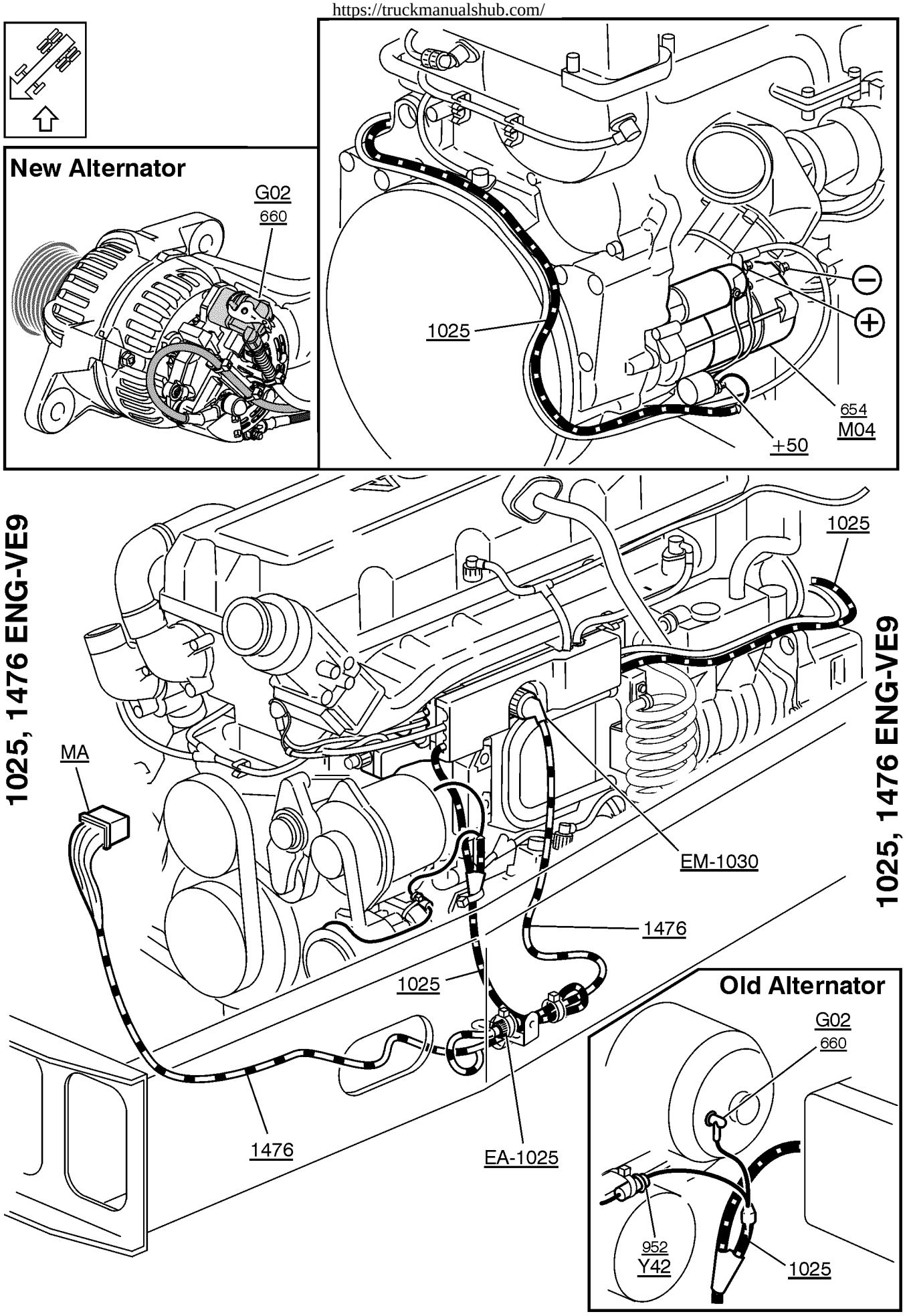

T3016401

https://truckmanualshub.com/

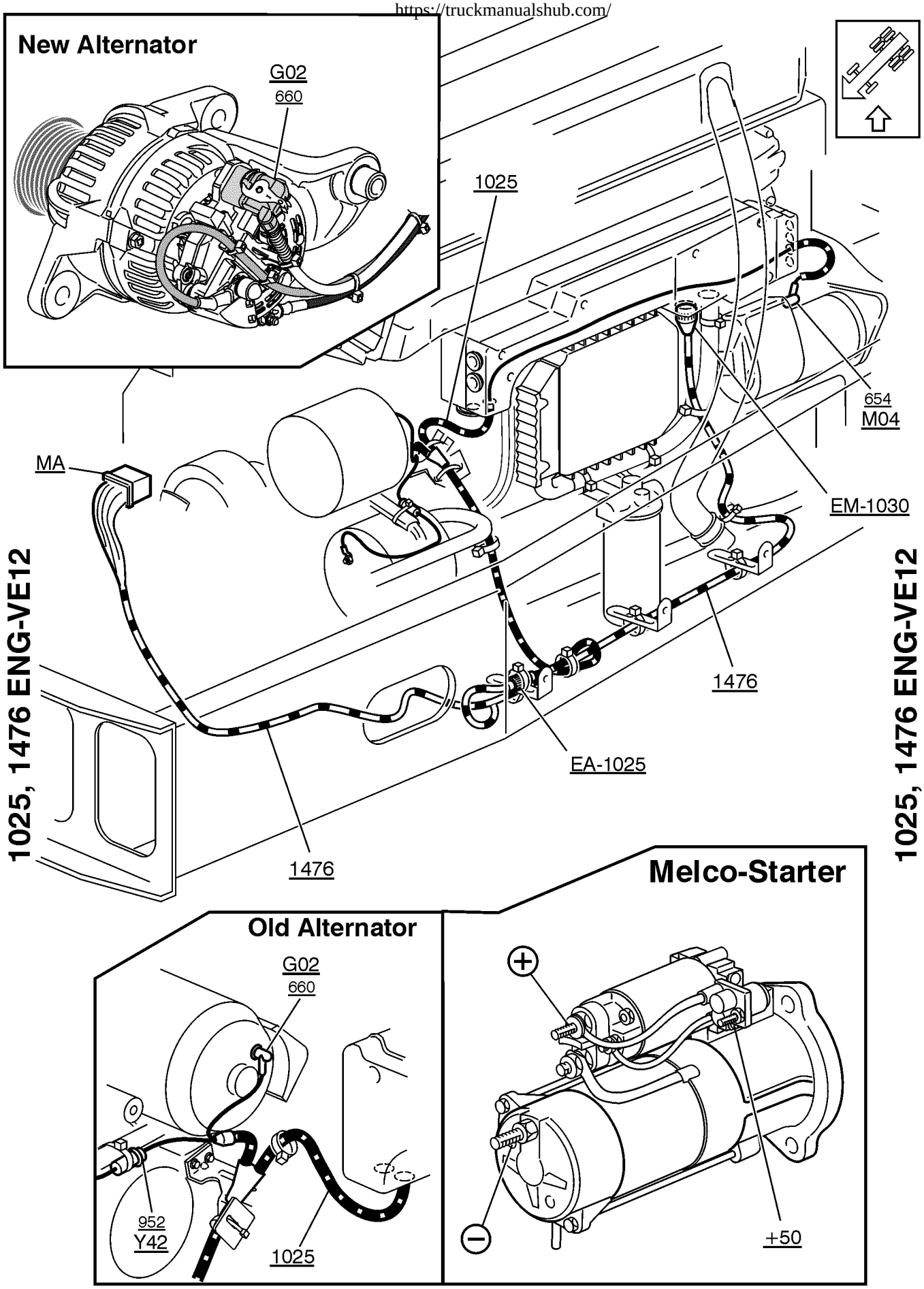

T3016402

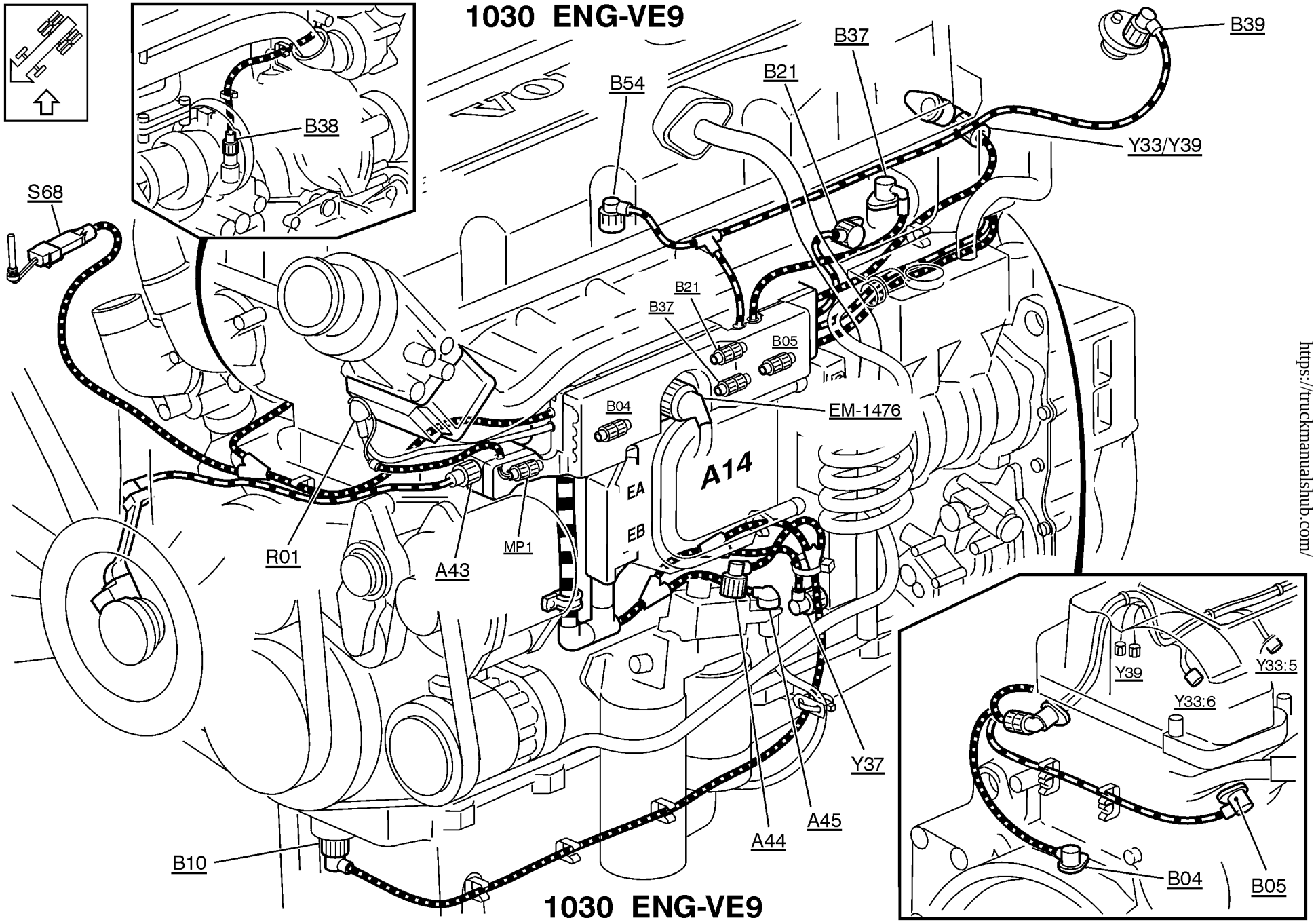

https://truckmanualshub.com/

https://truckmanualshub.com/

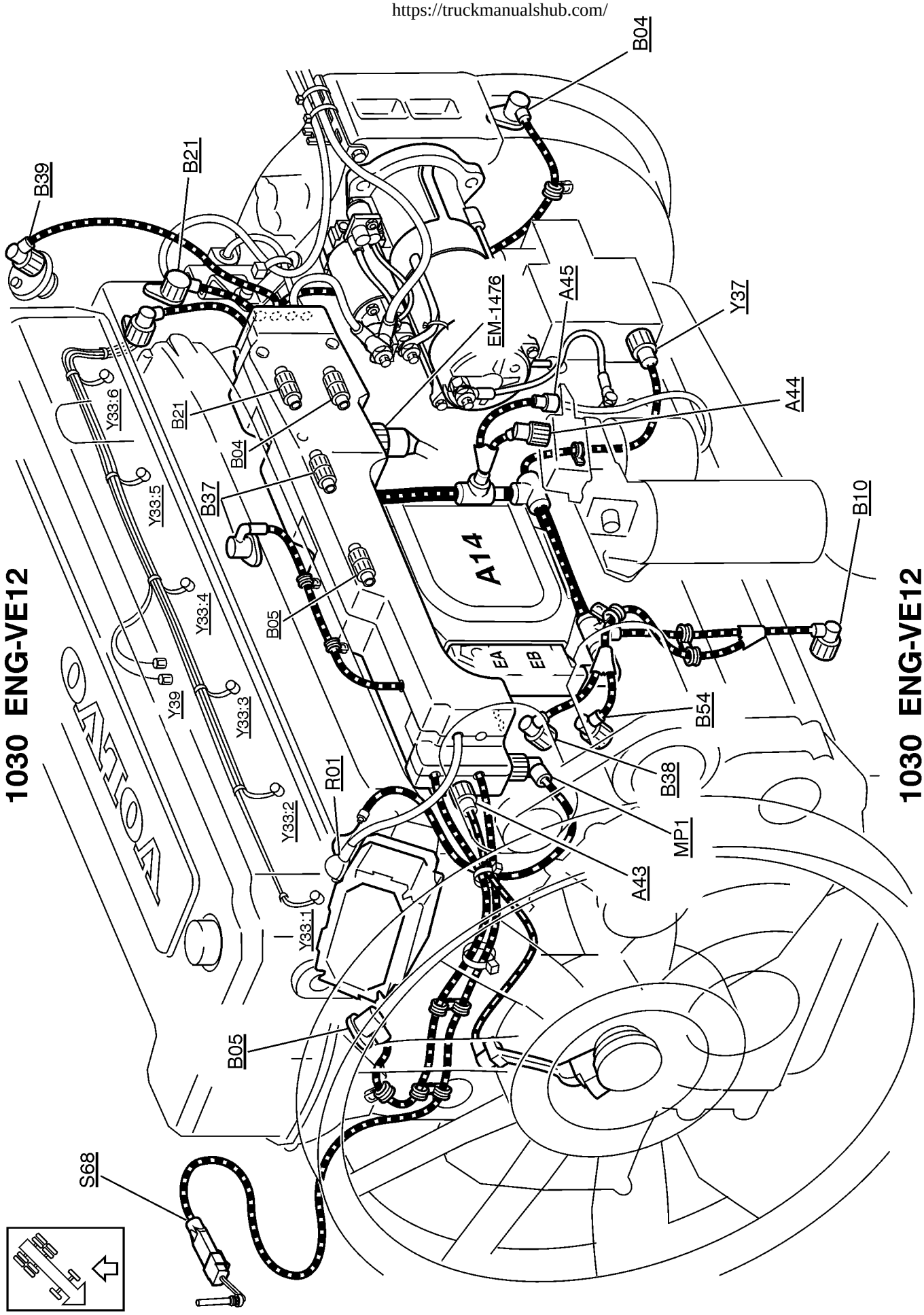

T3016404

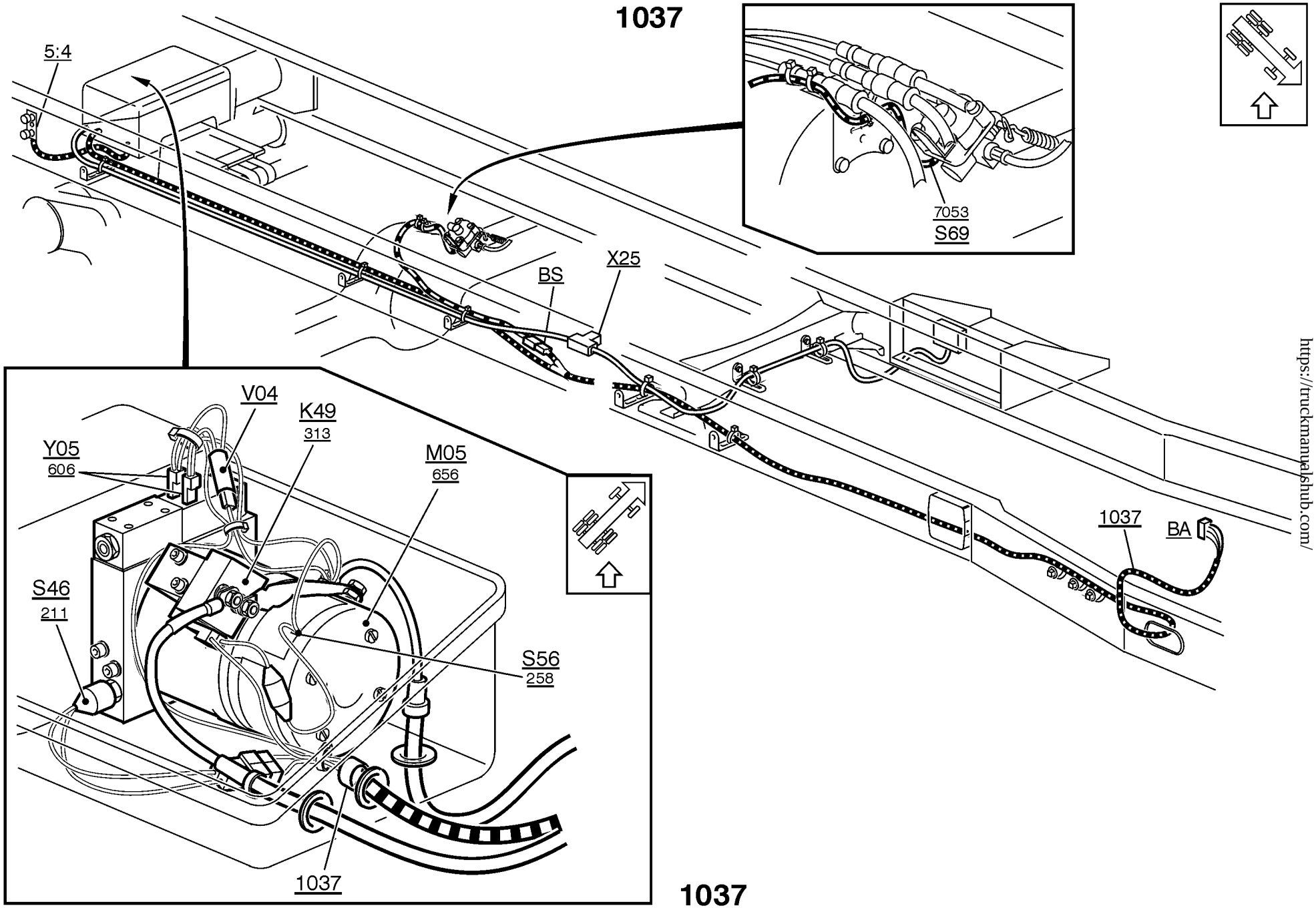

https://truckmanualshub.com/

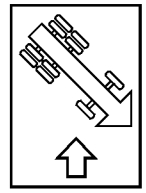

1040

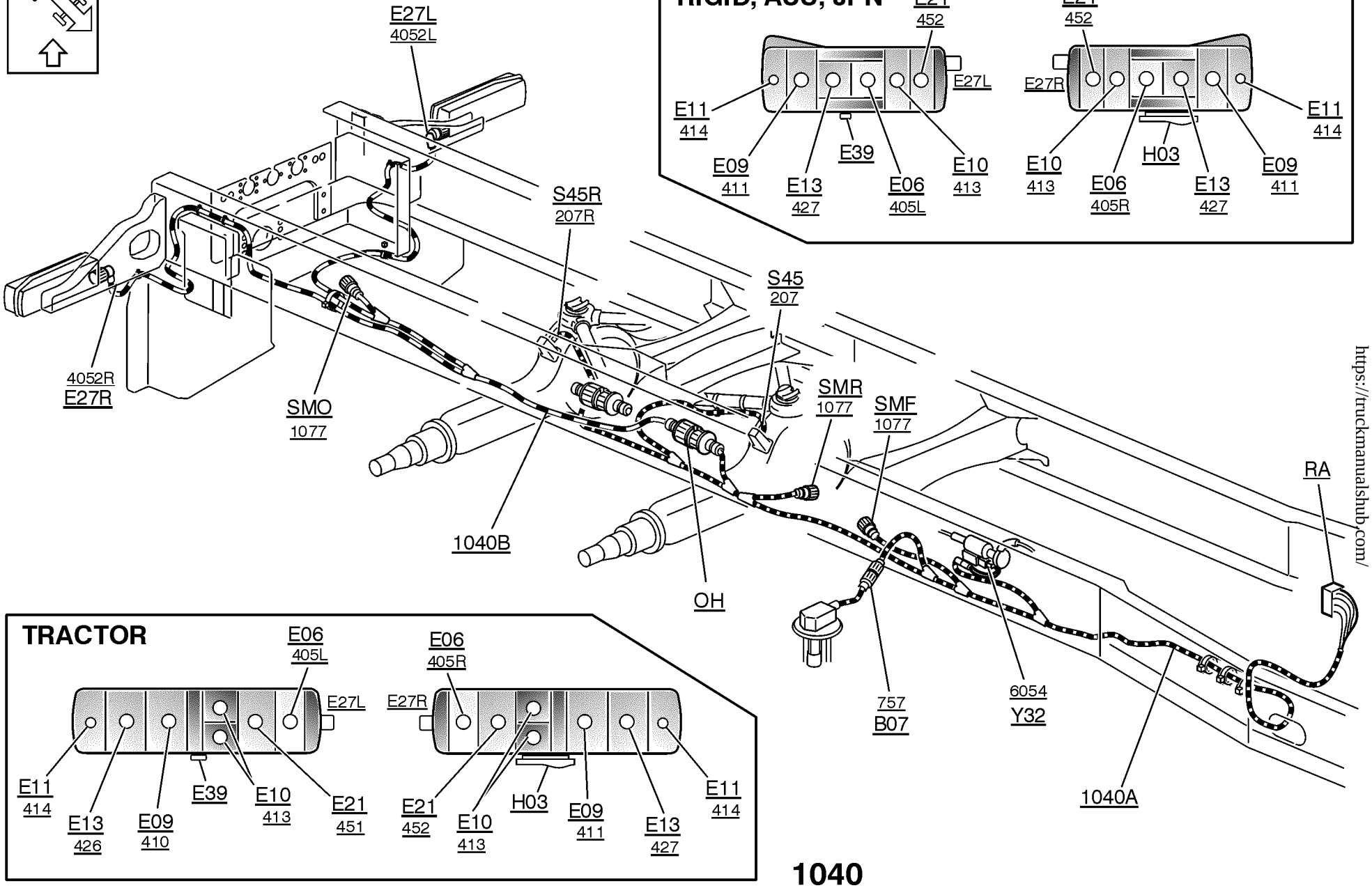

1040

https://truckmanualshub.com/

https://truckmanualshub.com/

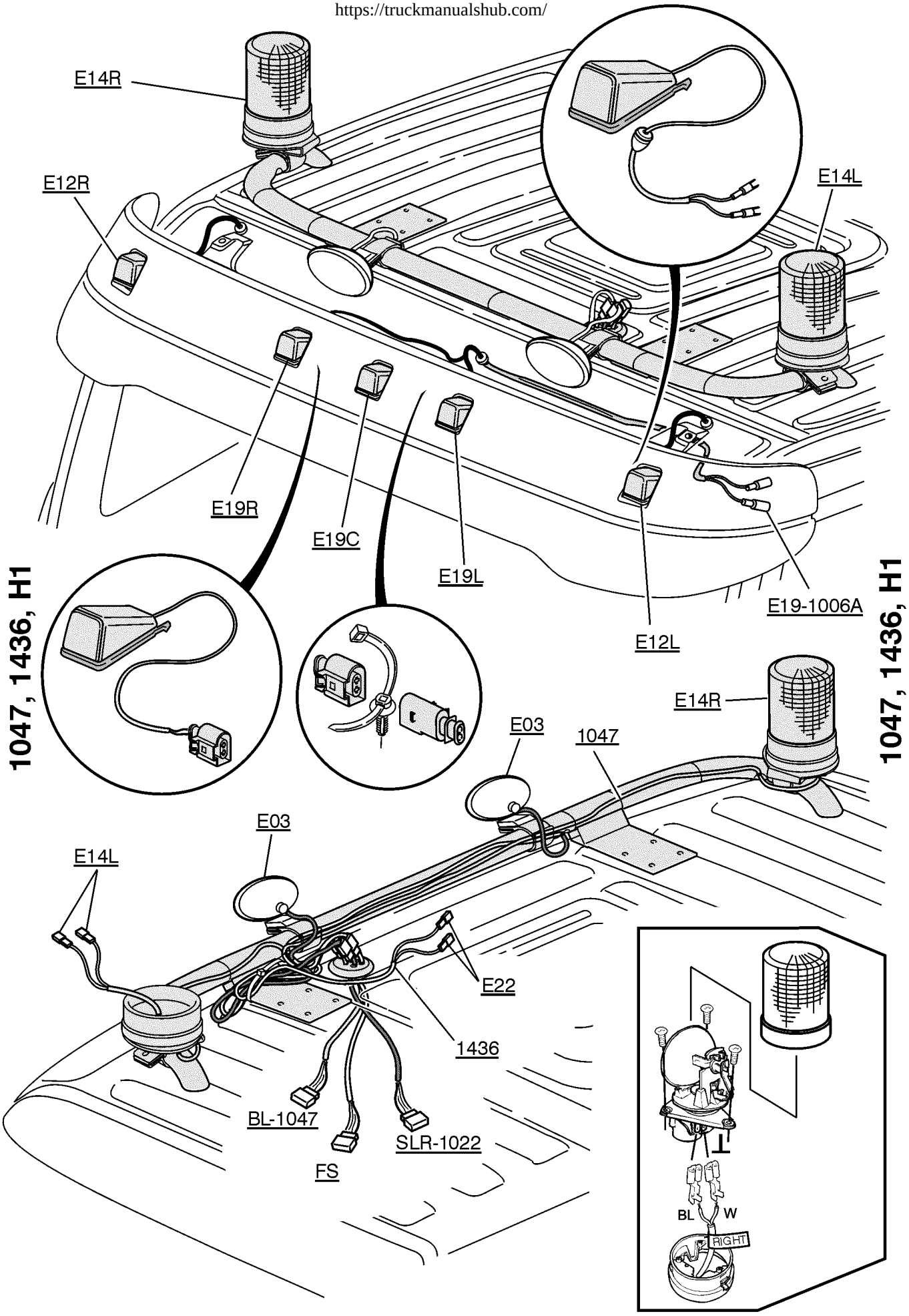

https://truckmanualshub.com/

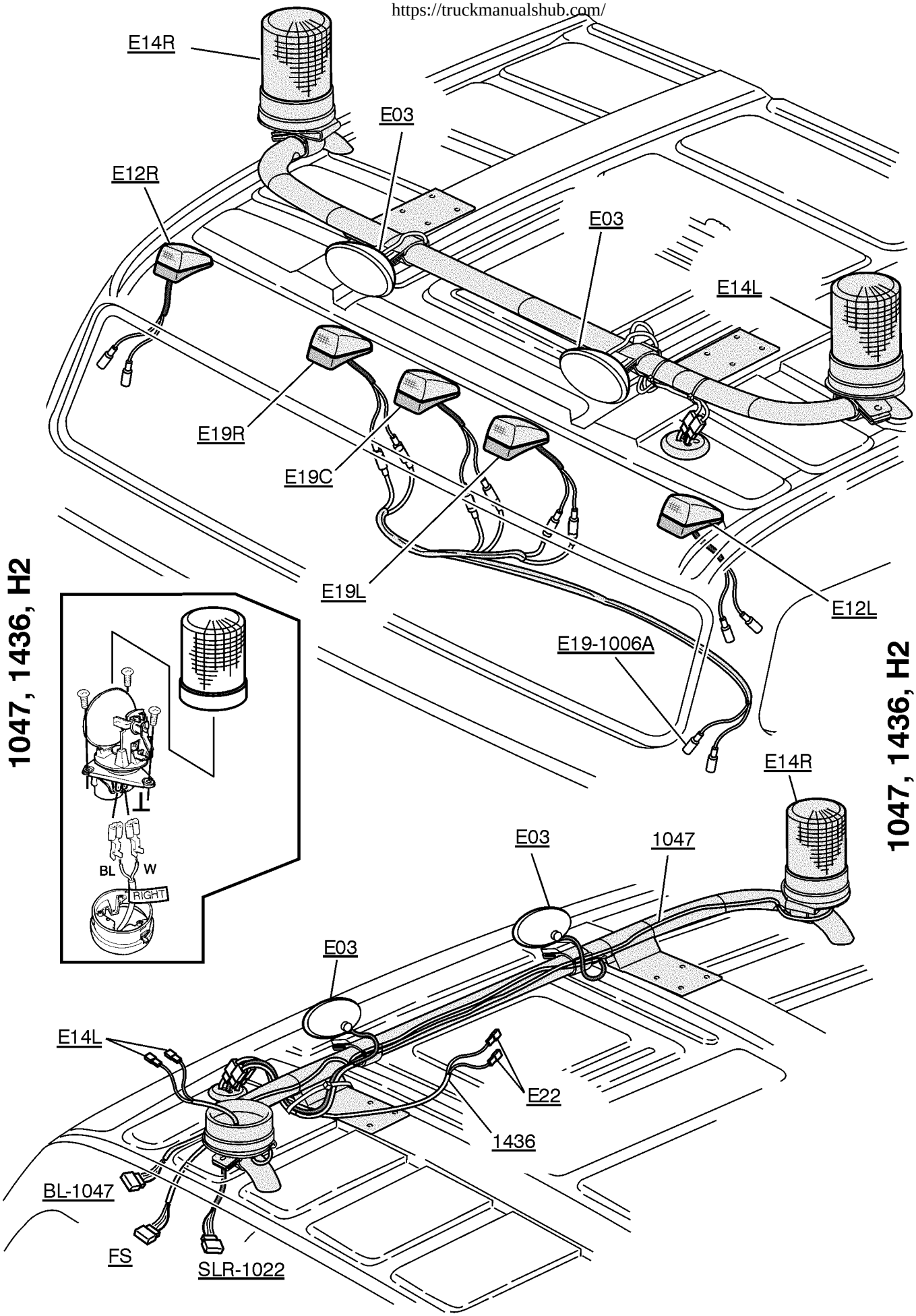

T3016406

https://truckmanualshub.com/

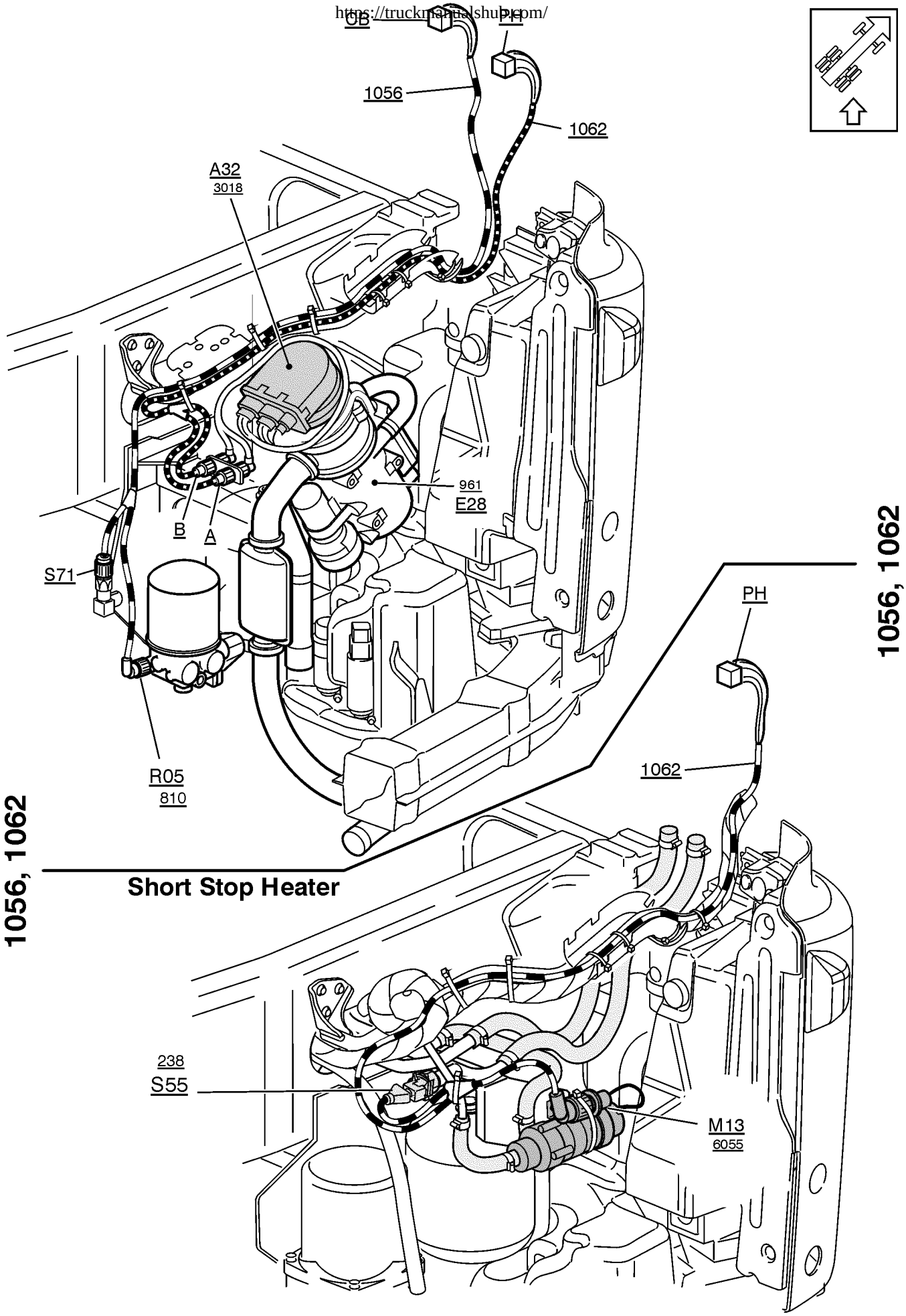

1063

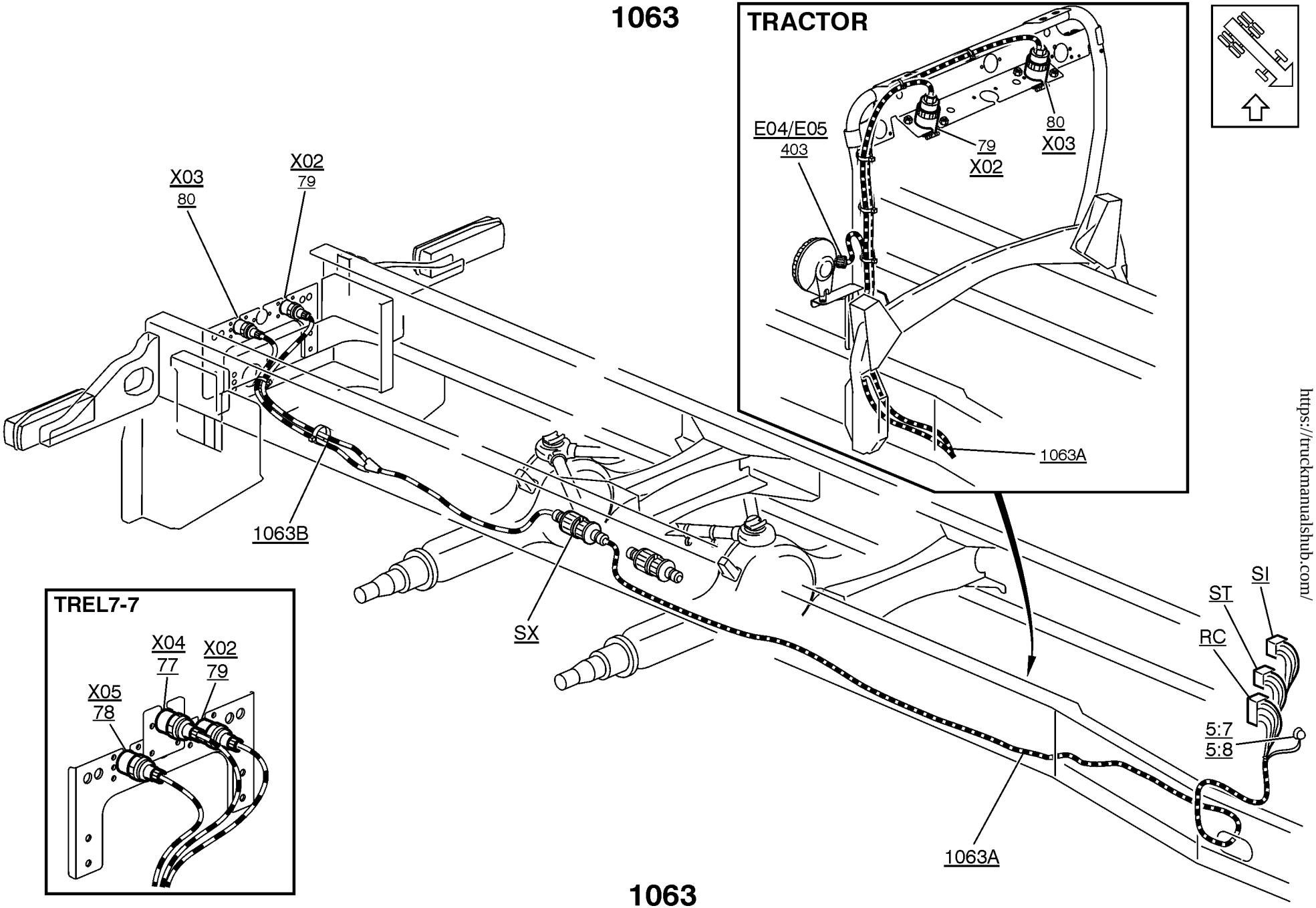

1063

https://truckmanualshub.com/

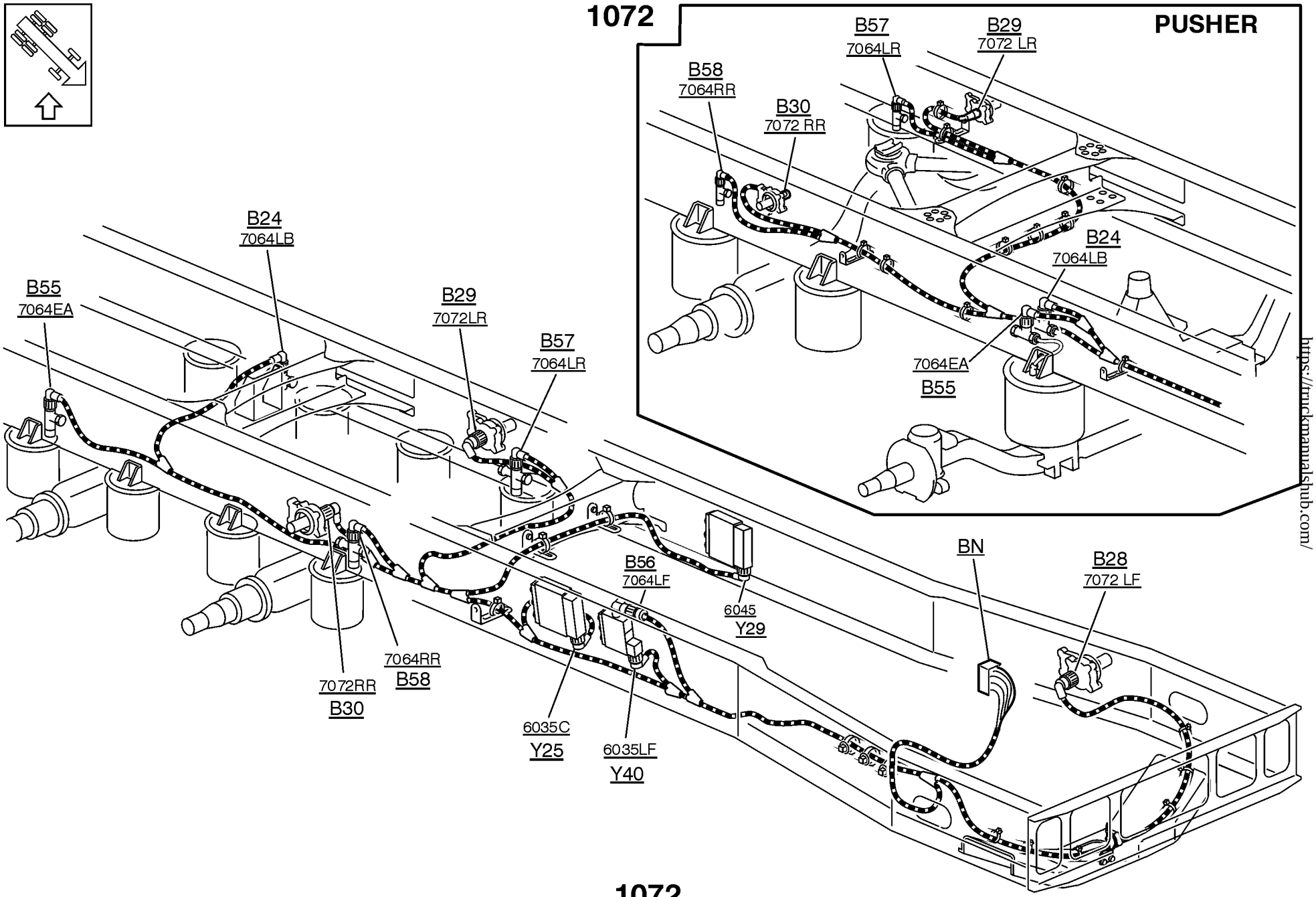

https://truckmanualshub.com/

1077

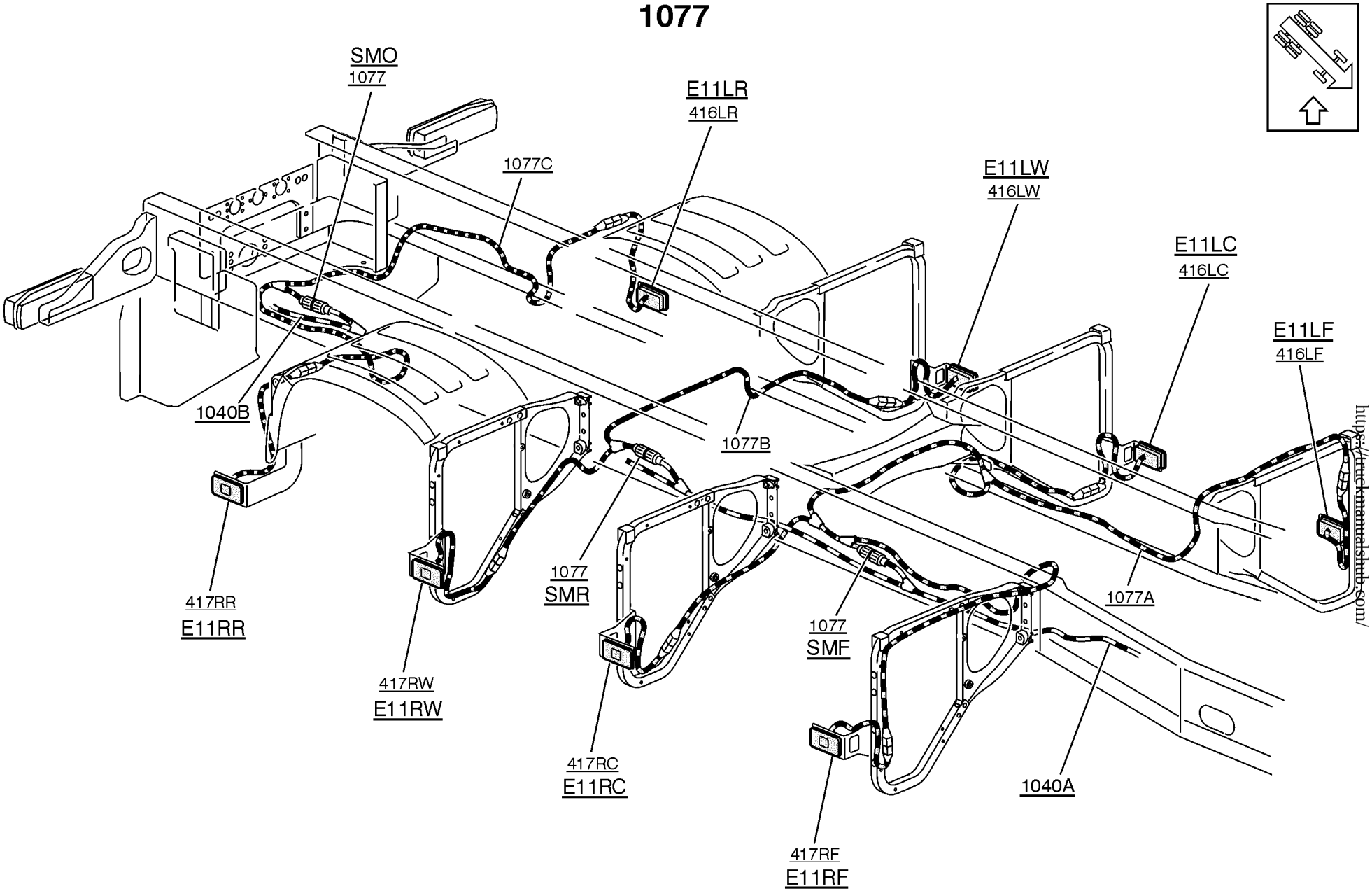

https://truckmanualshub.com/

1077

https://truckmanualshub.com/

STWPOS-L DRAWN
STWPOS-R MIRROR IMAGE MOUNTED

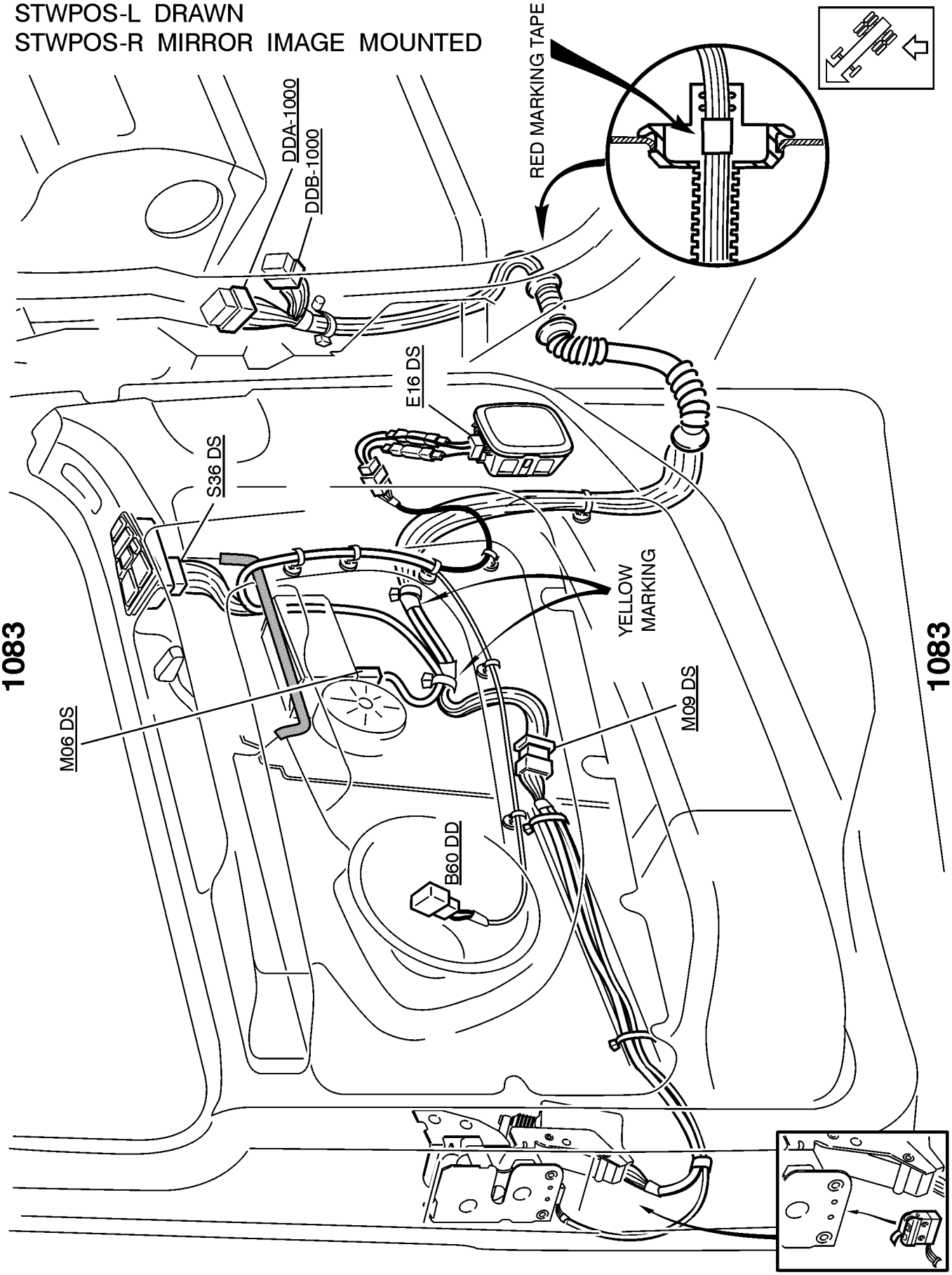

https://truckmanualshub.com/

STWPOS-L DRAWN
STWPOS-R MIRROR IMAGE MOUNTED

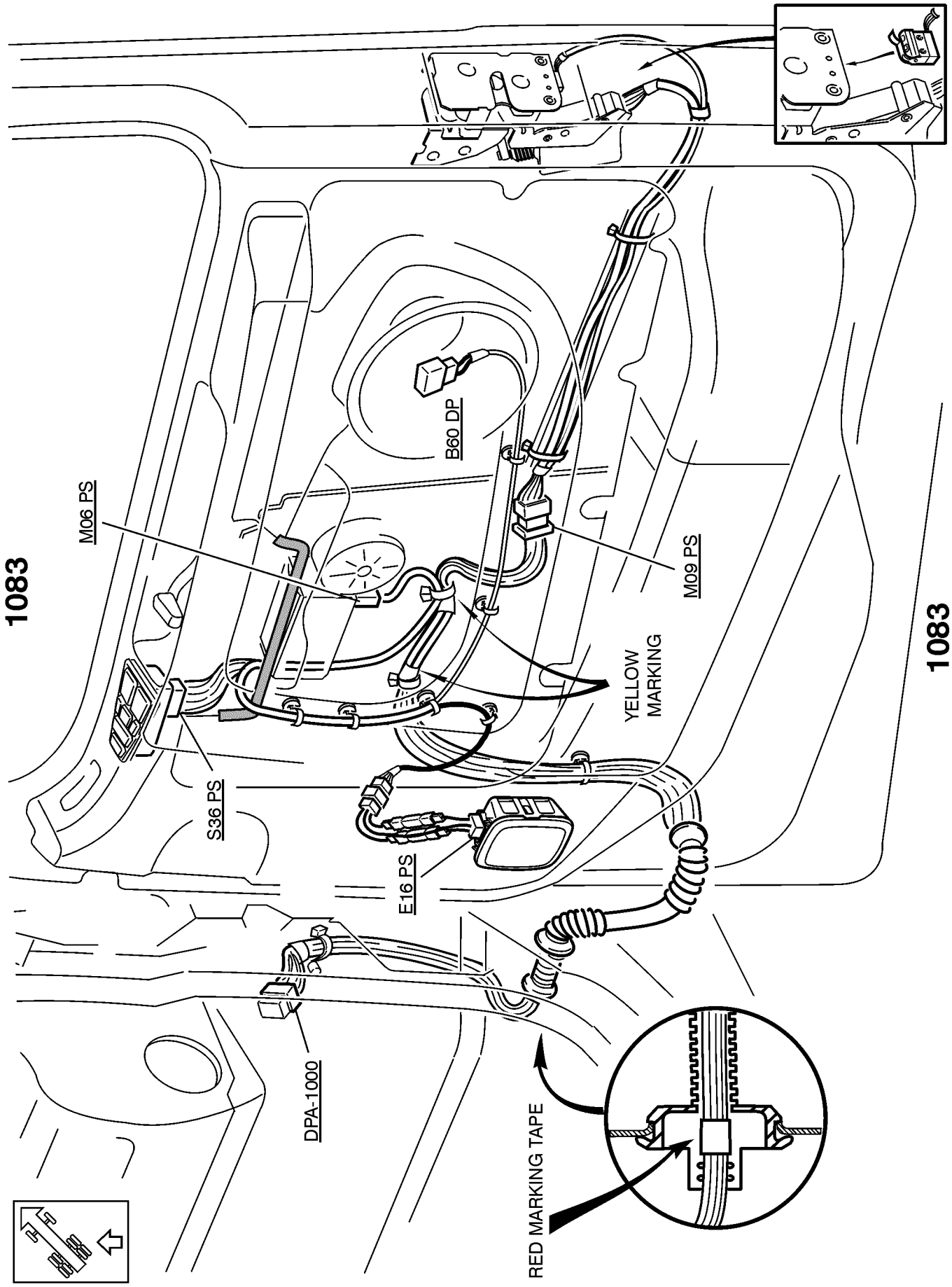

T3015880

1086 ABS

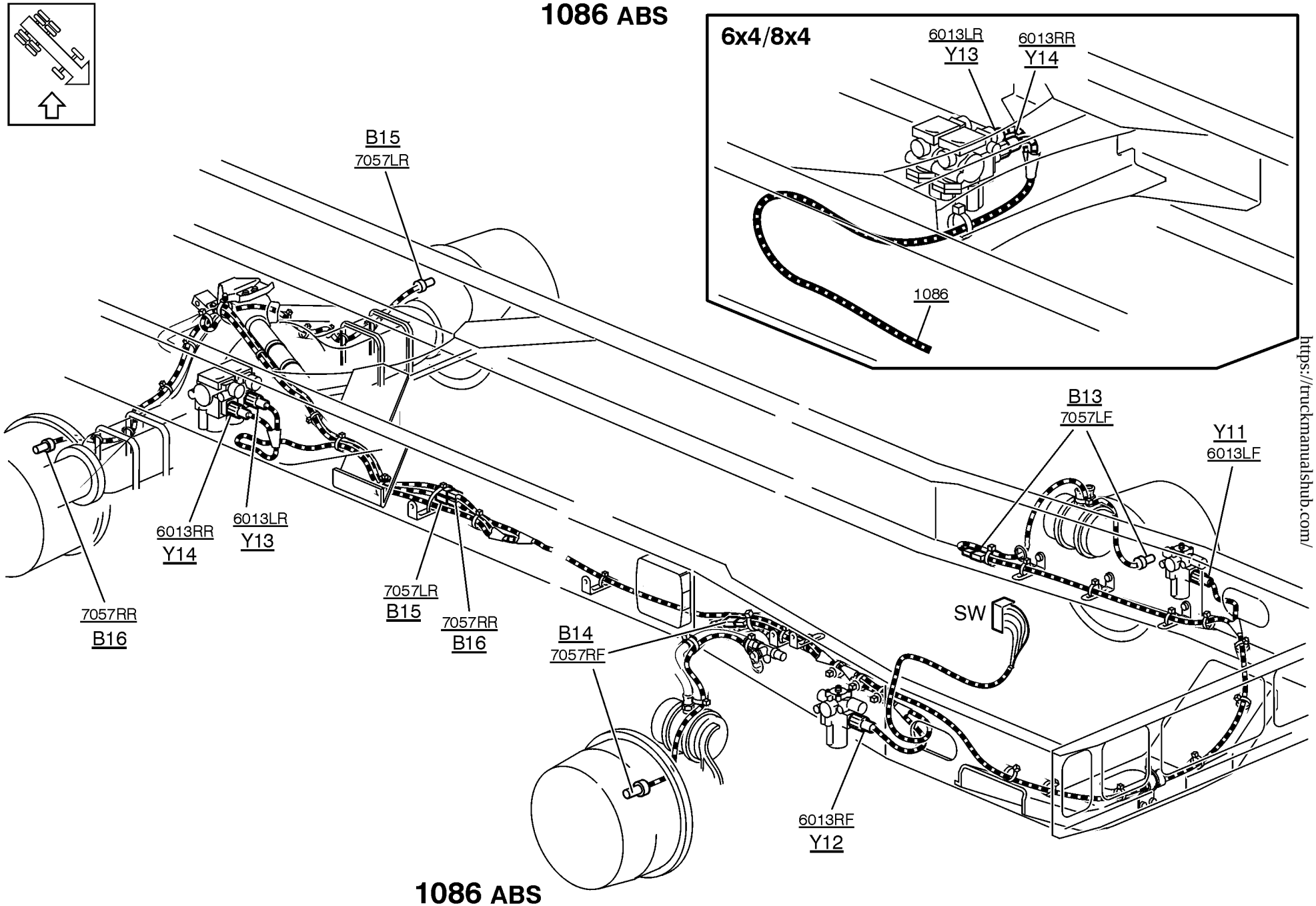

1086 ABS

https://truckmanualshub.com/

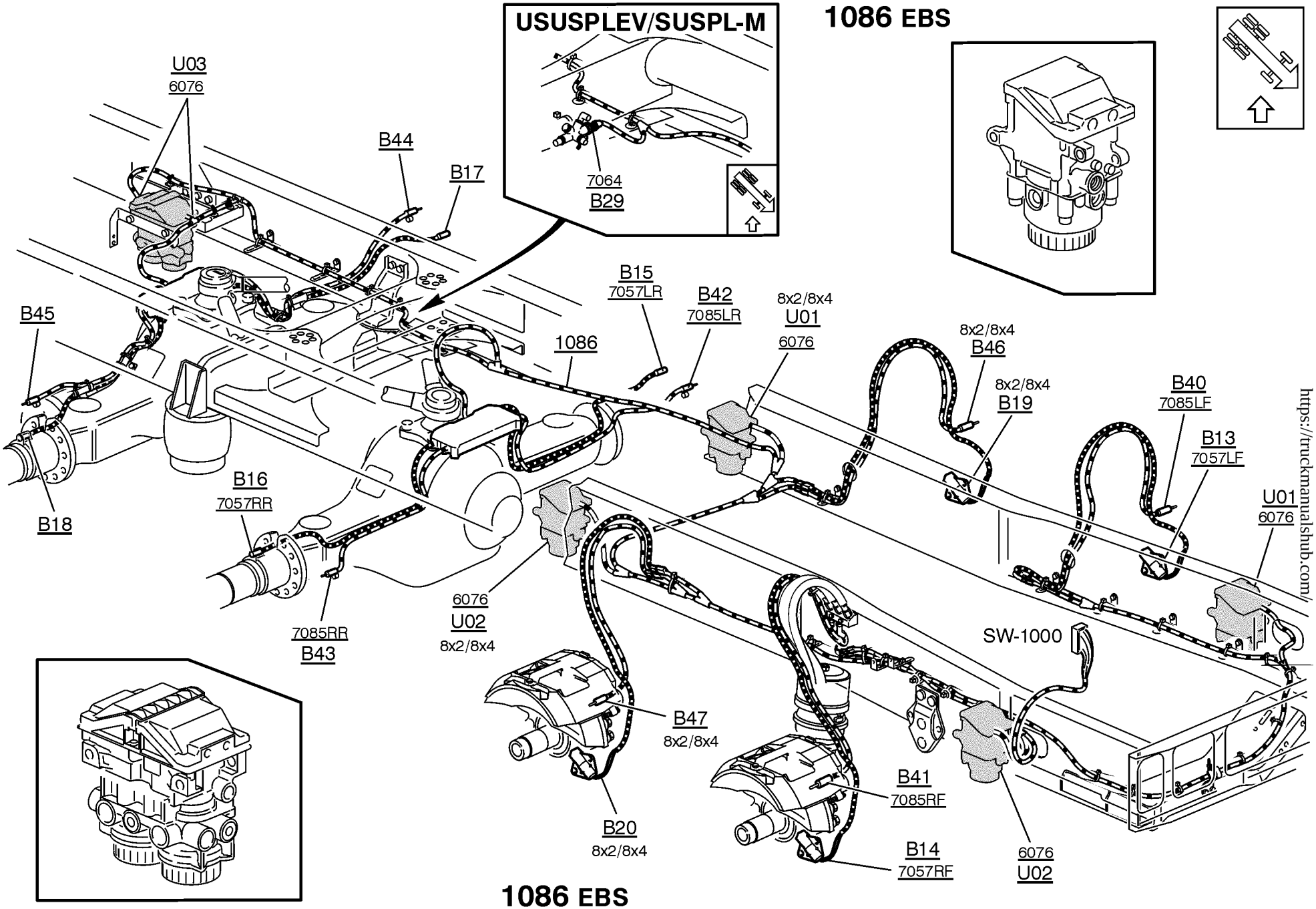

https://truckmanualshub.com/

https://truckmanualshub.com/

PUSHER

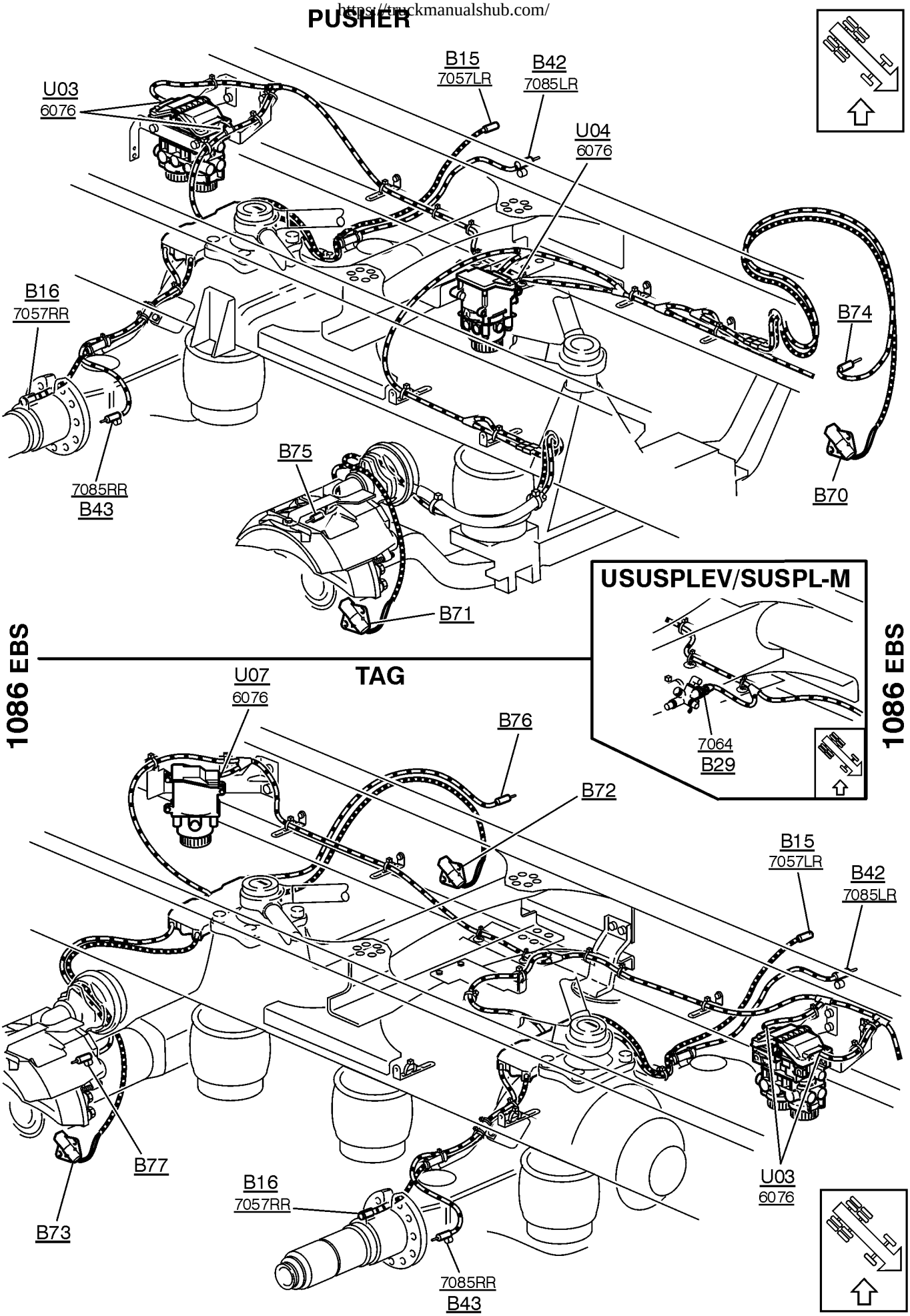

https://truckmanualshub.com/

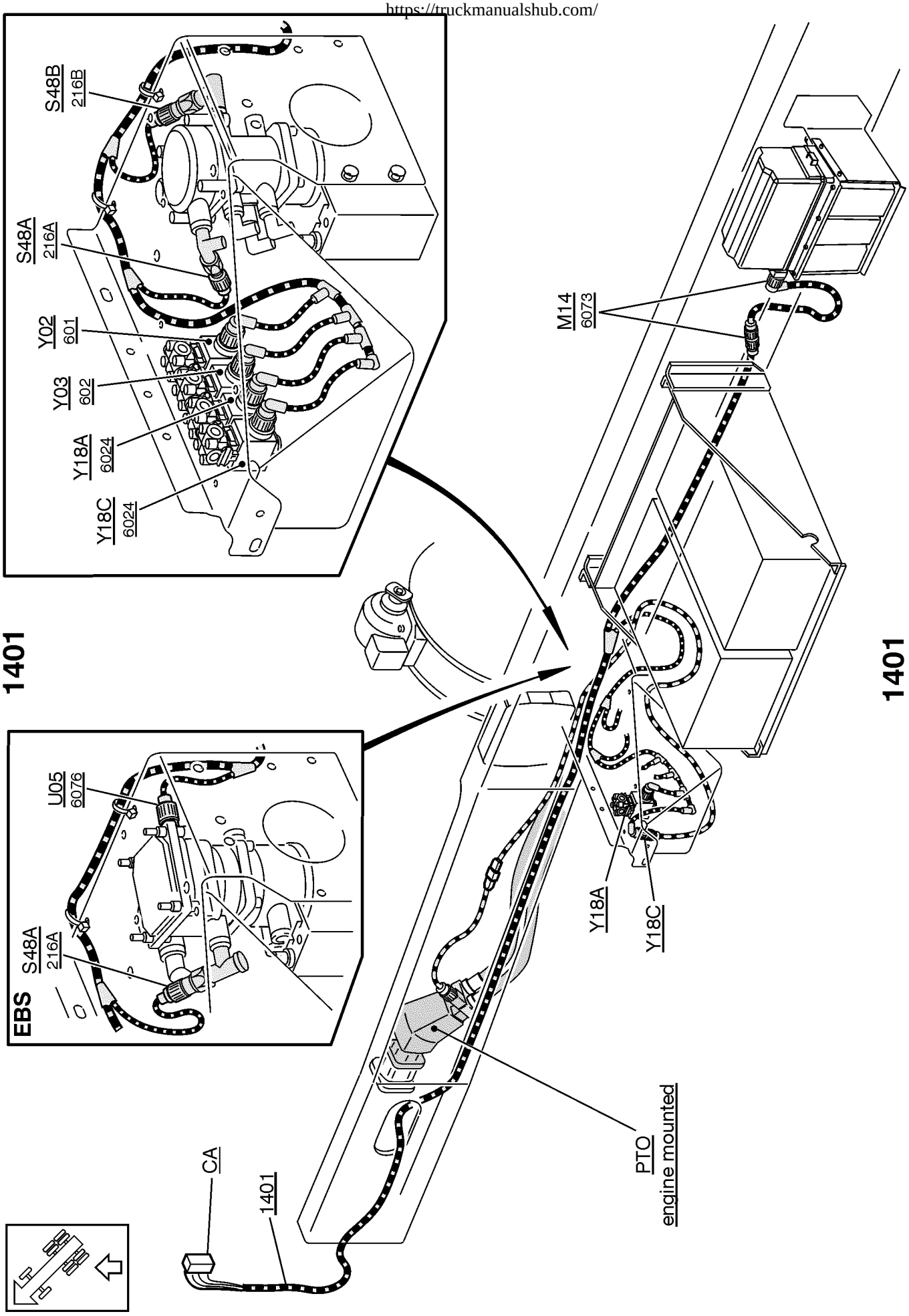

T3016251

https://truckmanualshub.com/

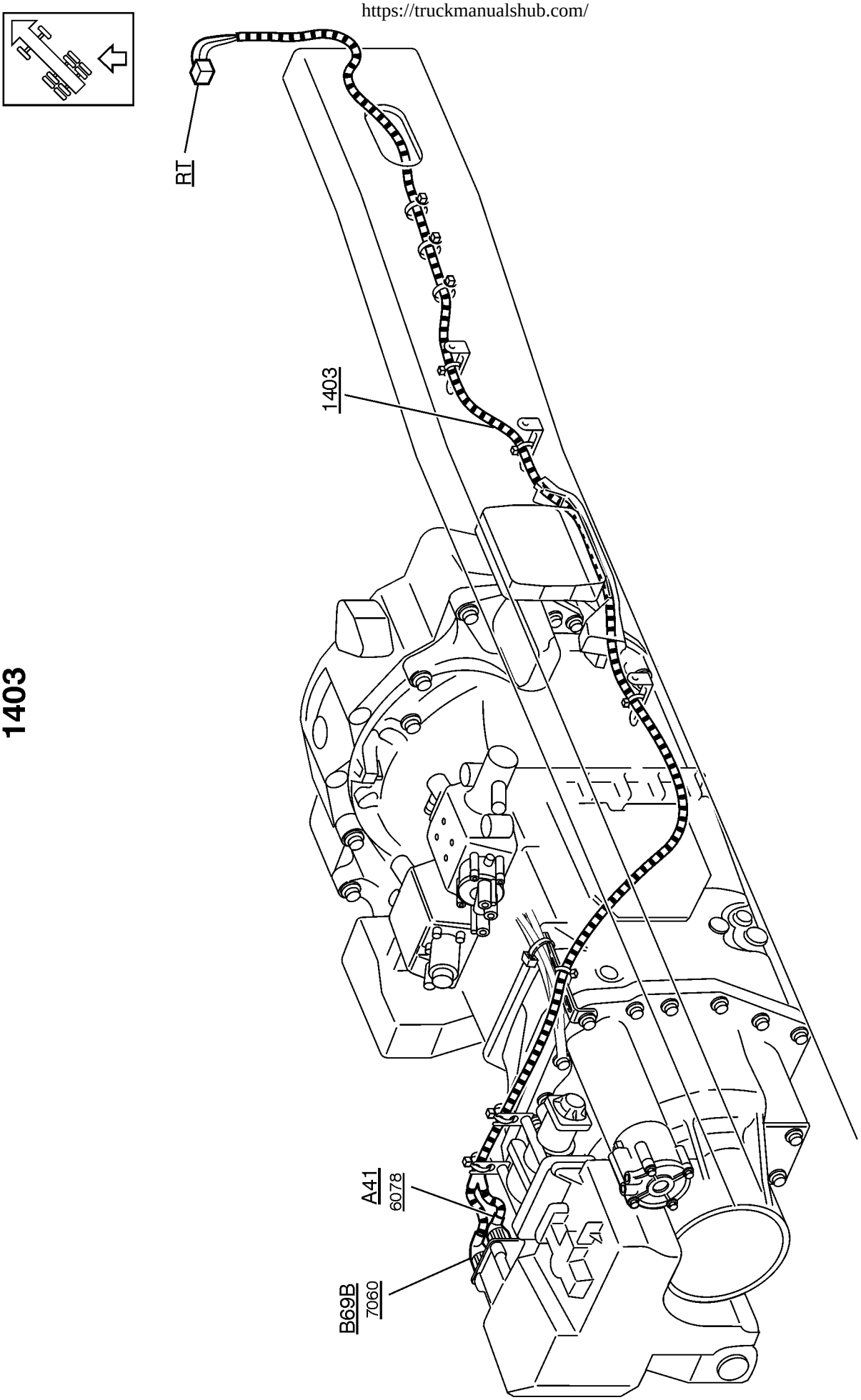

1403

https://truckmanualshub.com/

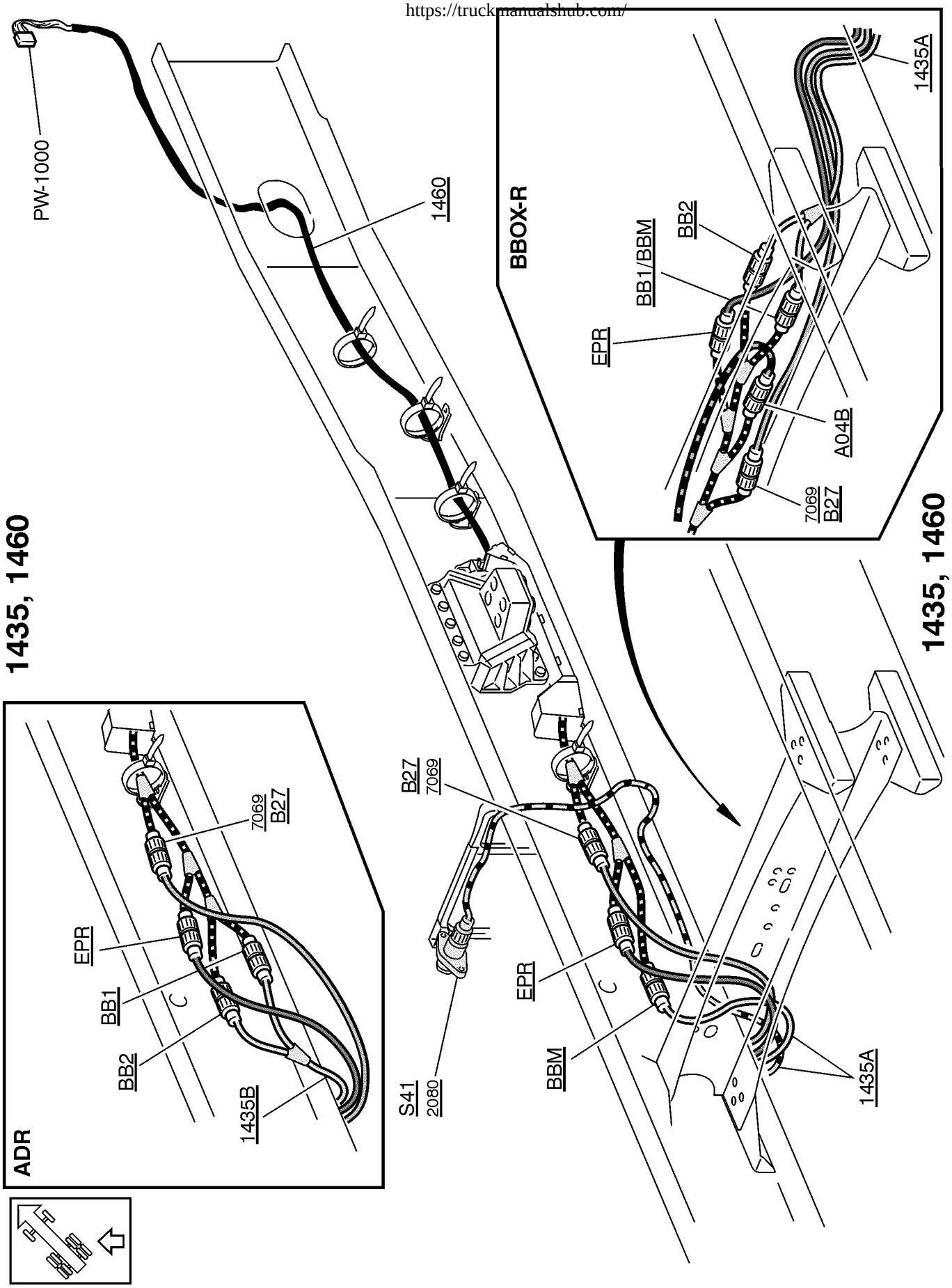

T3016411

https://truckmanualshub.com/

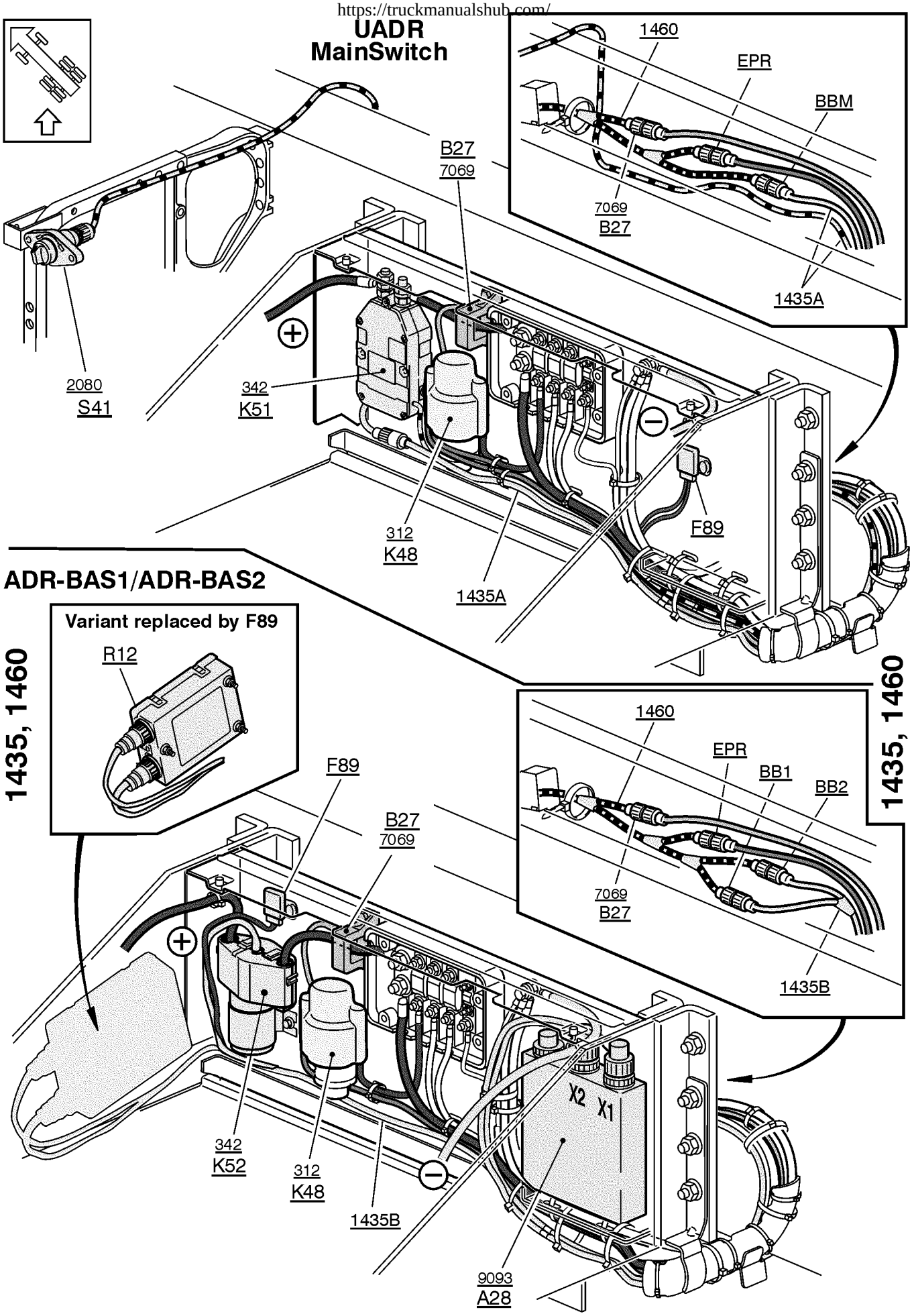

T3016412

https://truckmanualshub.com/

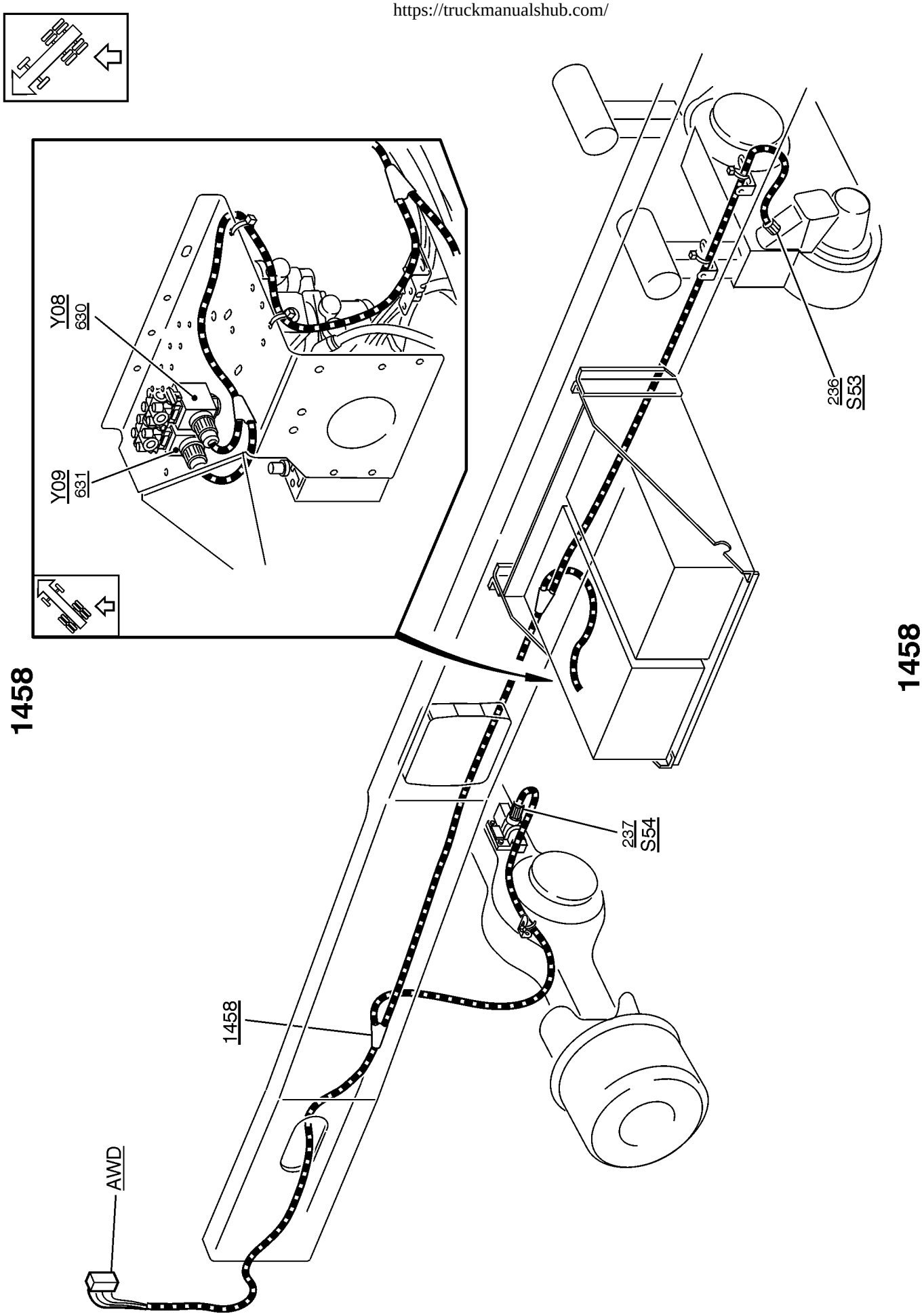

T3015890

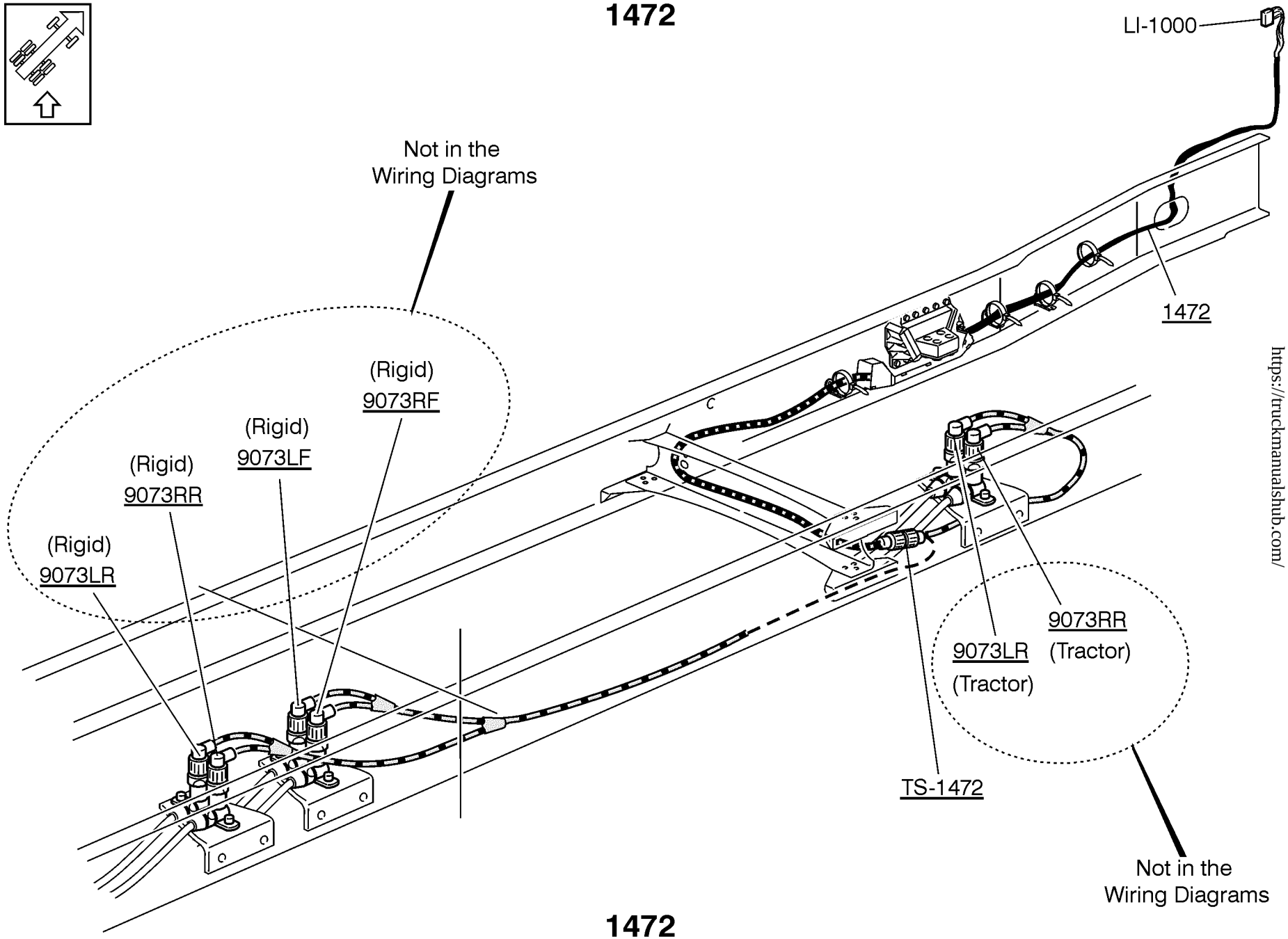

T3016441

https://truckmanualshub.com/

https://truckmanualshub.com/

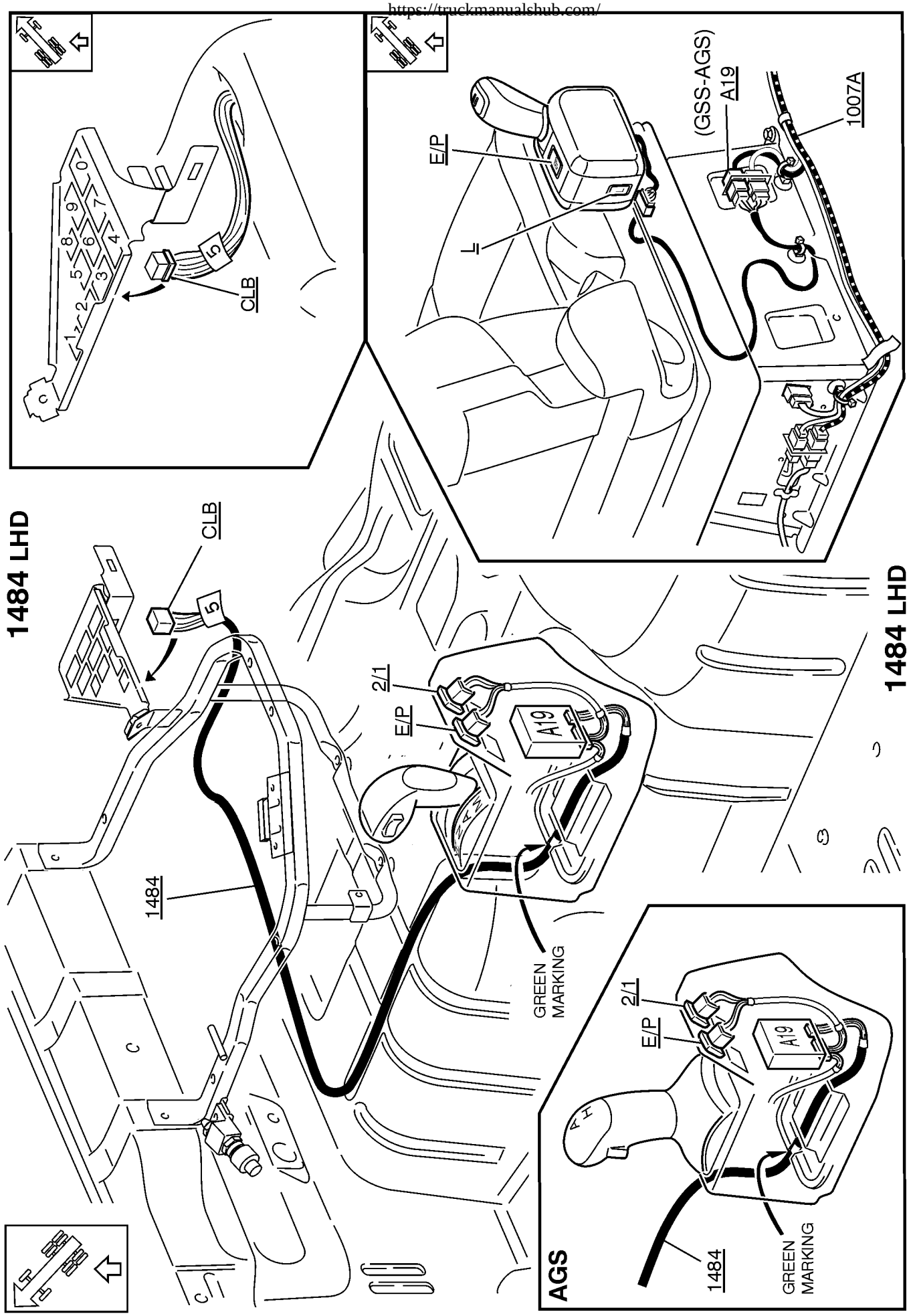

T3015891

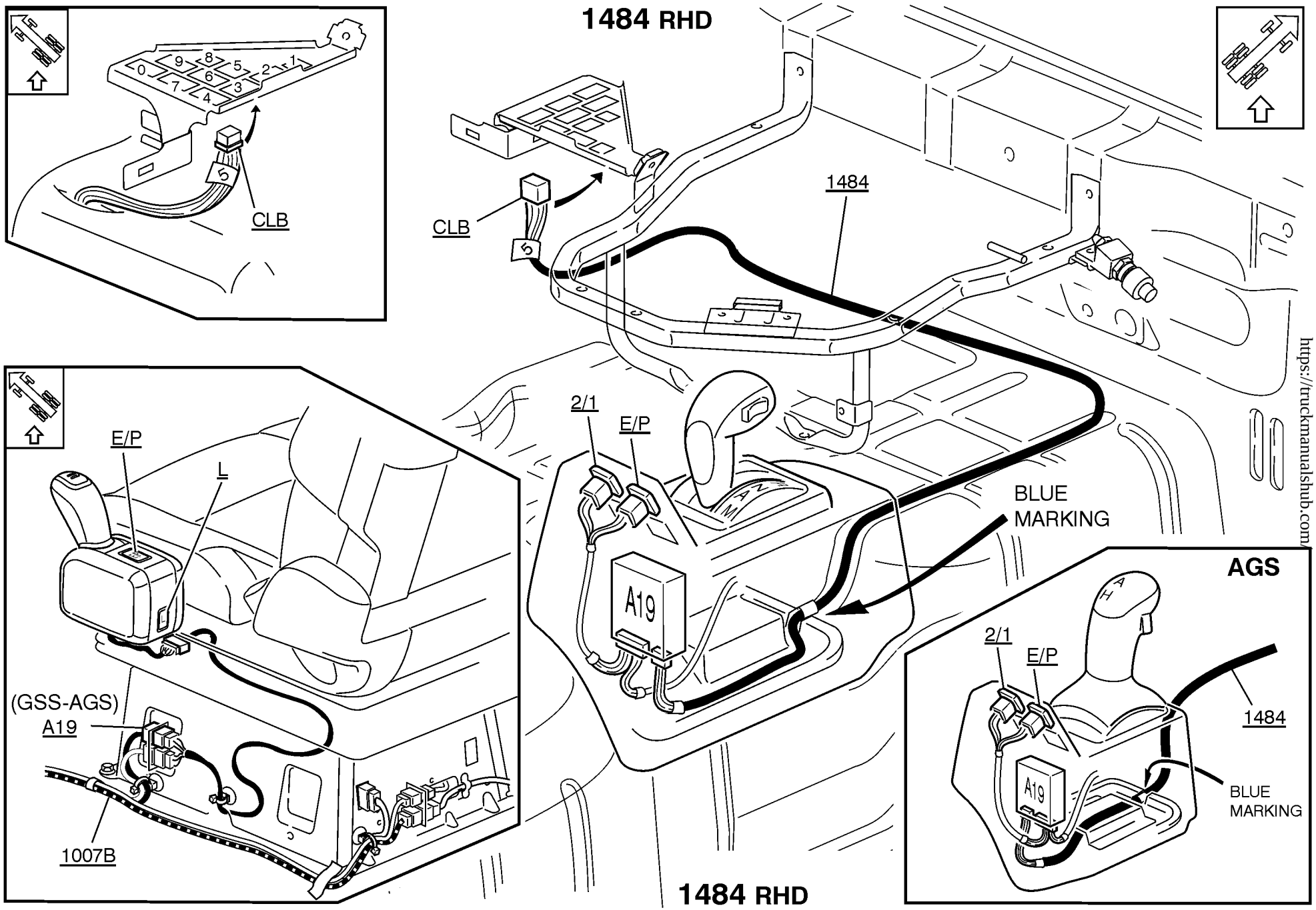

https://truckmanualshub.com/

https://truckmanualshub.com/

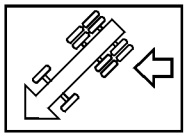

1493 LHD

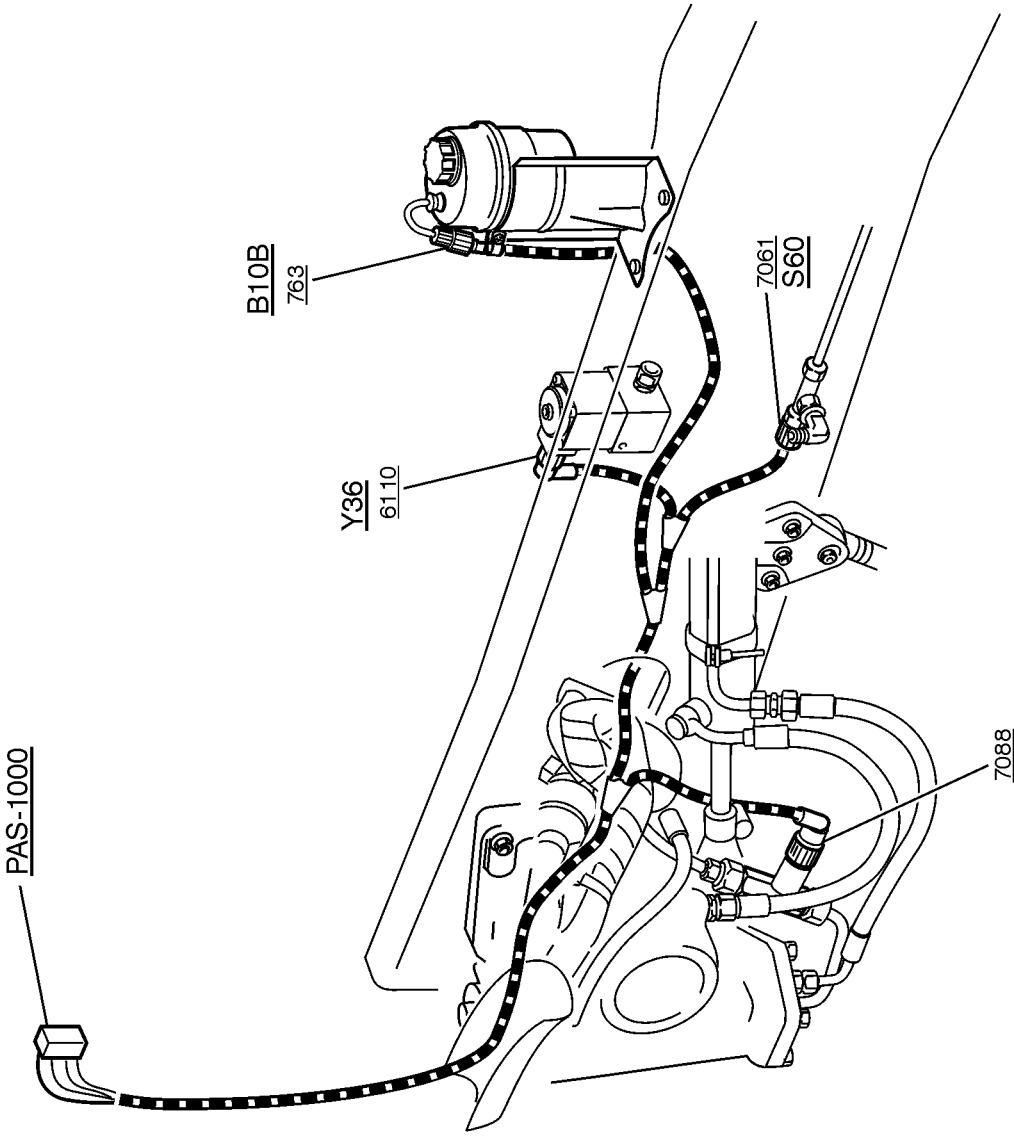

1493 LHD

PSS-DUAL

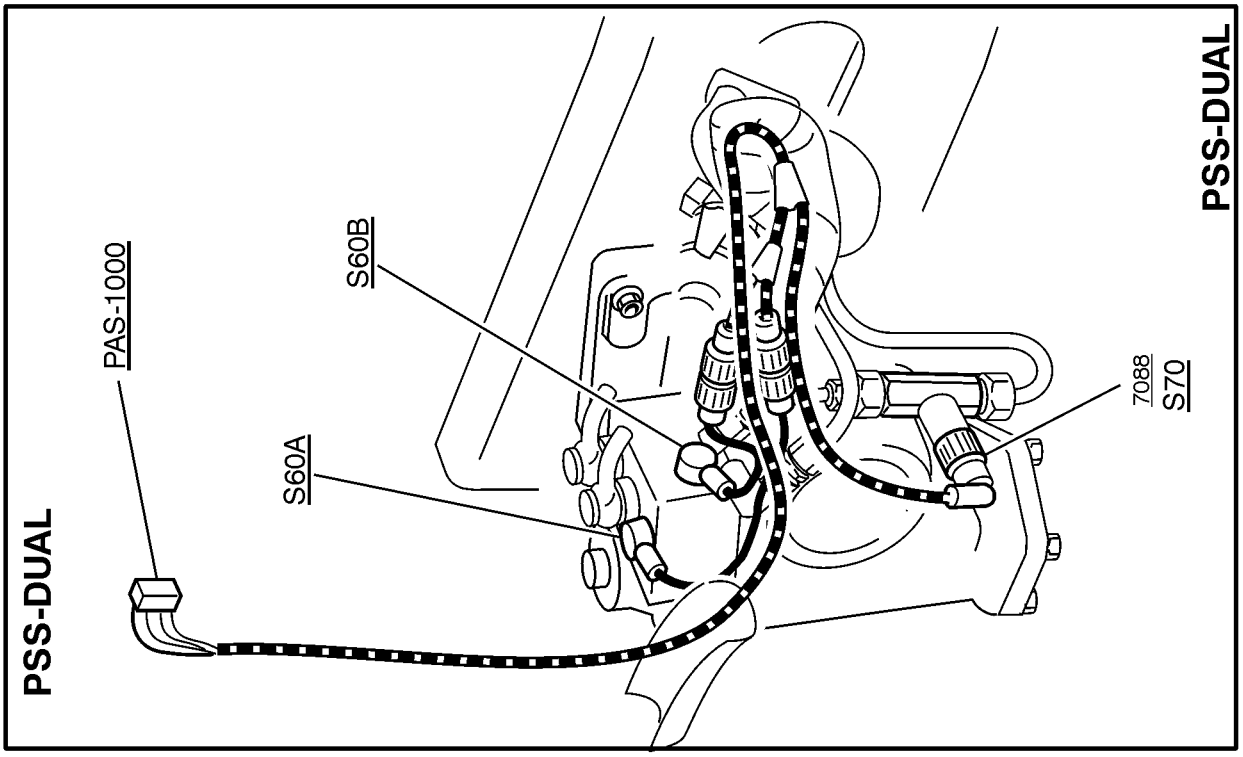

PSS-DUAL

T3016442

1494, 1499 MECHTRAN

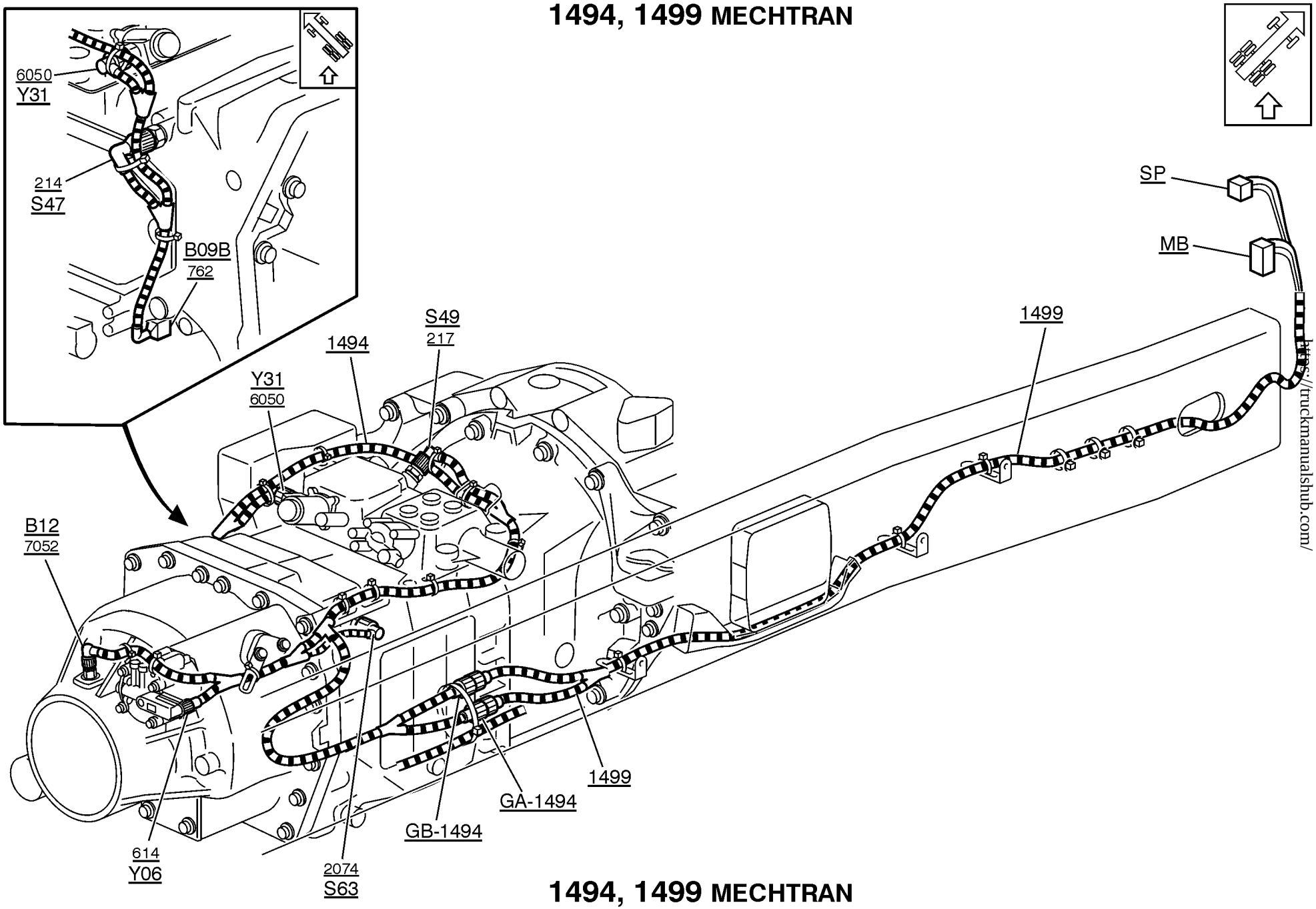

1494, 1499 MECHTRAN

https://truckmanualshub.com/

https://truckmanualshub.com/

1494 Powertronic

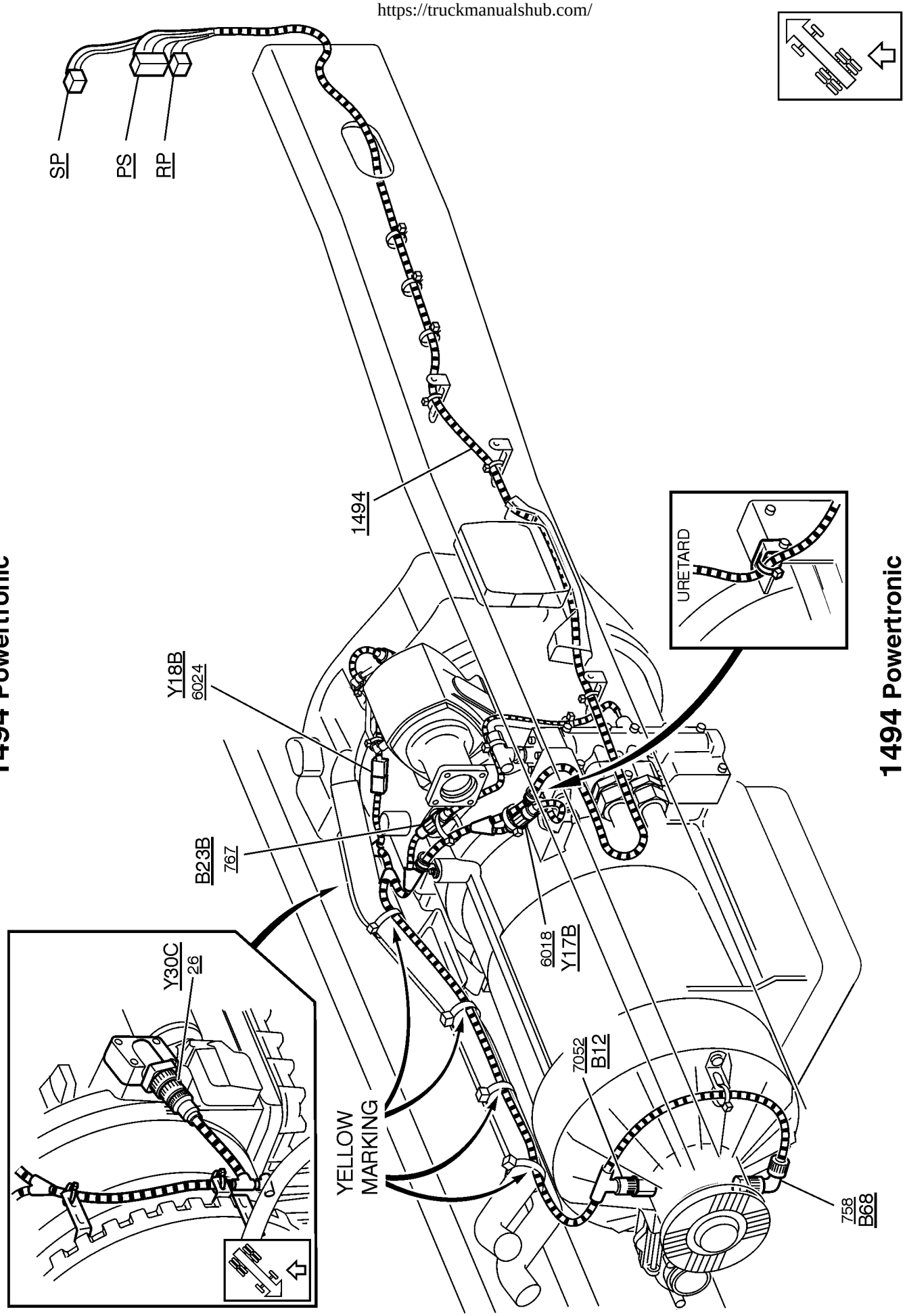

1494 Powertronic

T3015898

1499 Geartronic

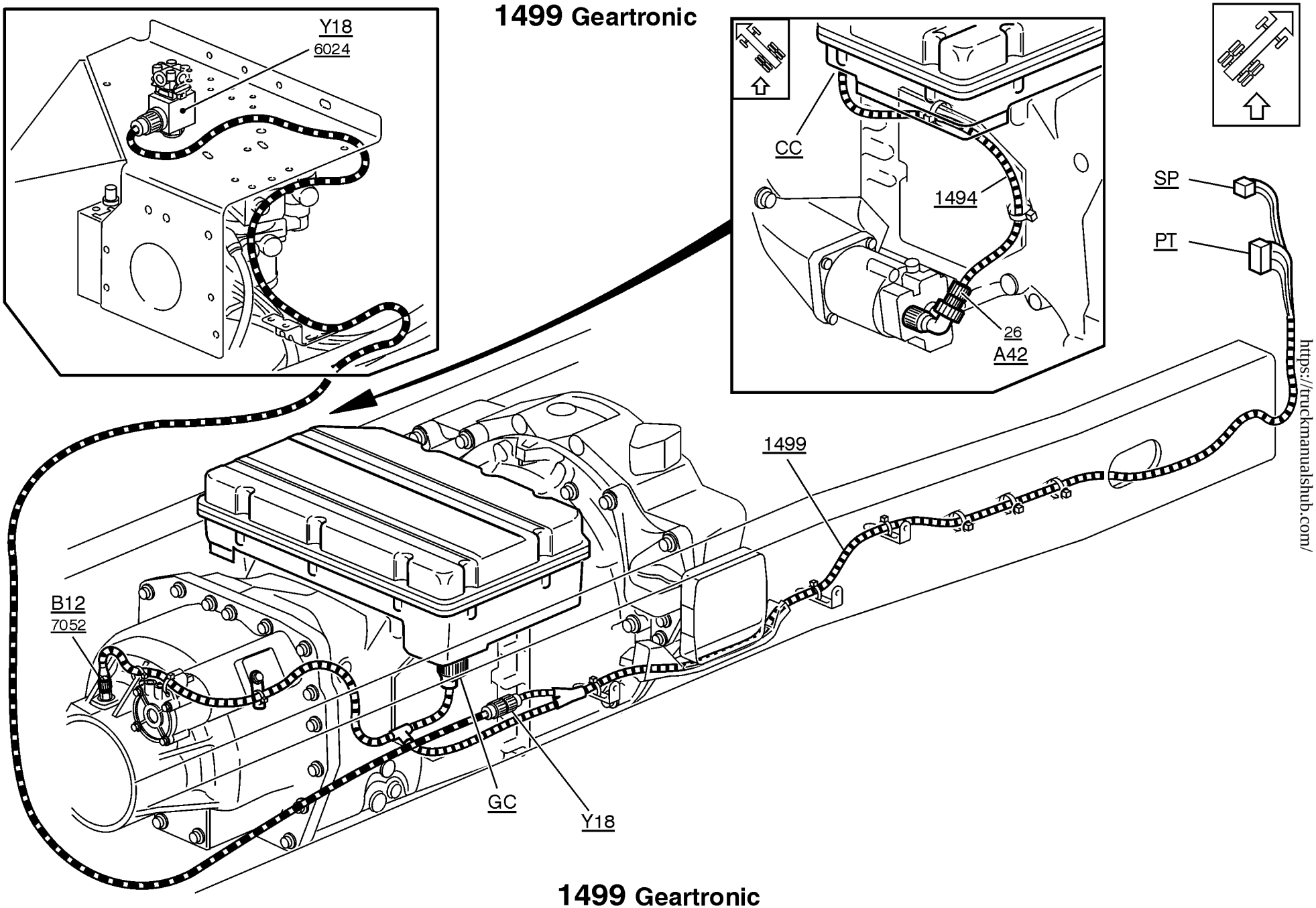

1499 Geartronic

https://truckmanualshub.com/

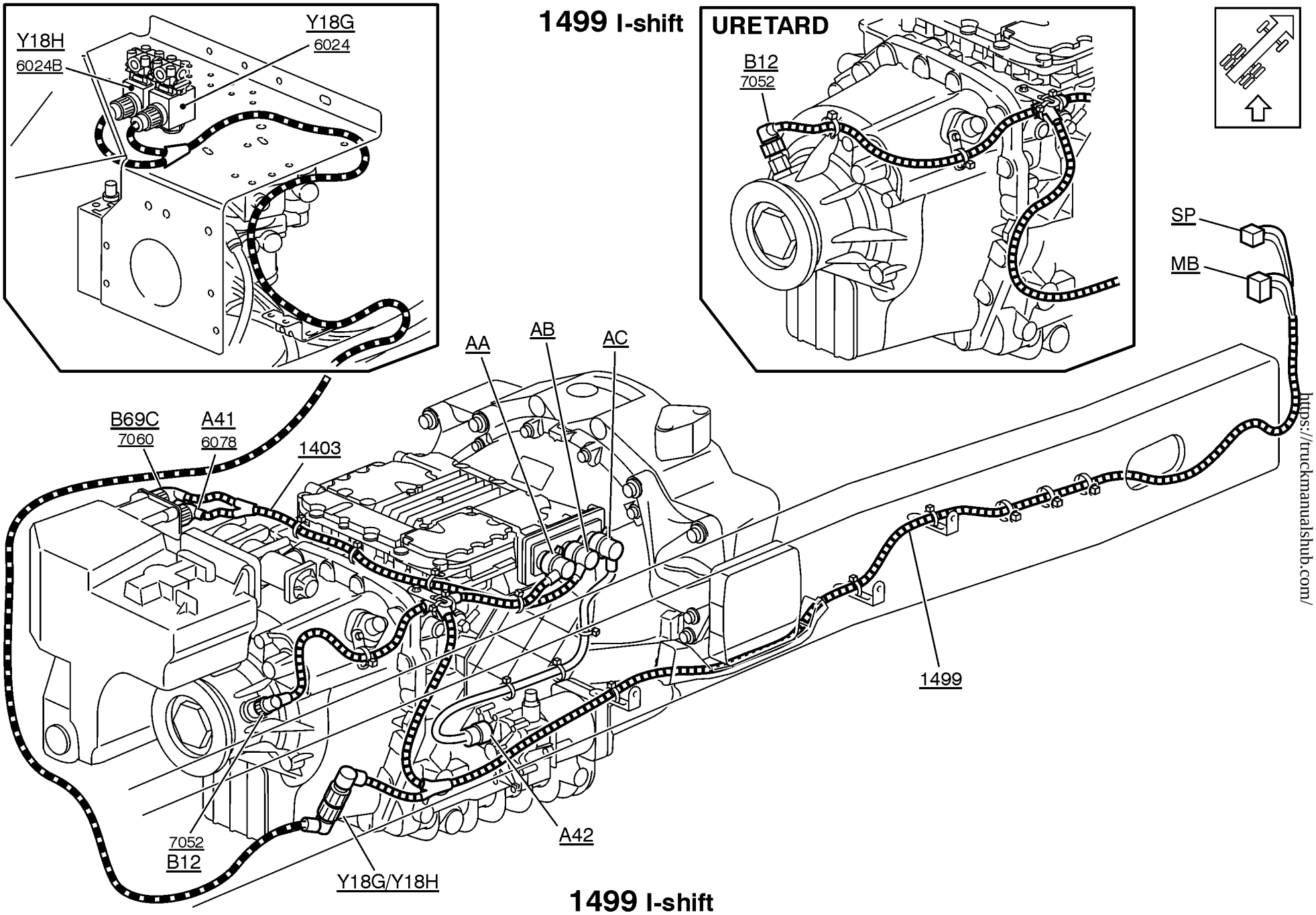

https://truckmanualshub.com/

https://truckmanualshub.com/

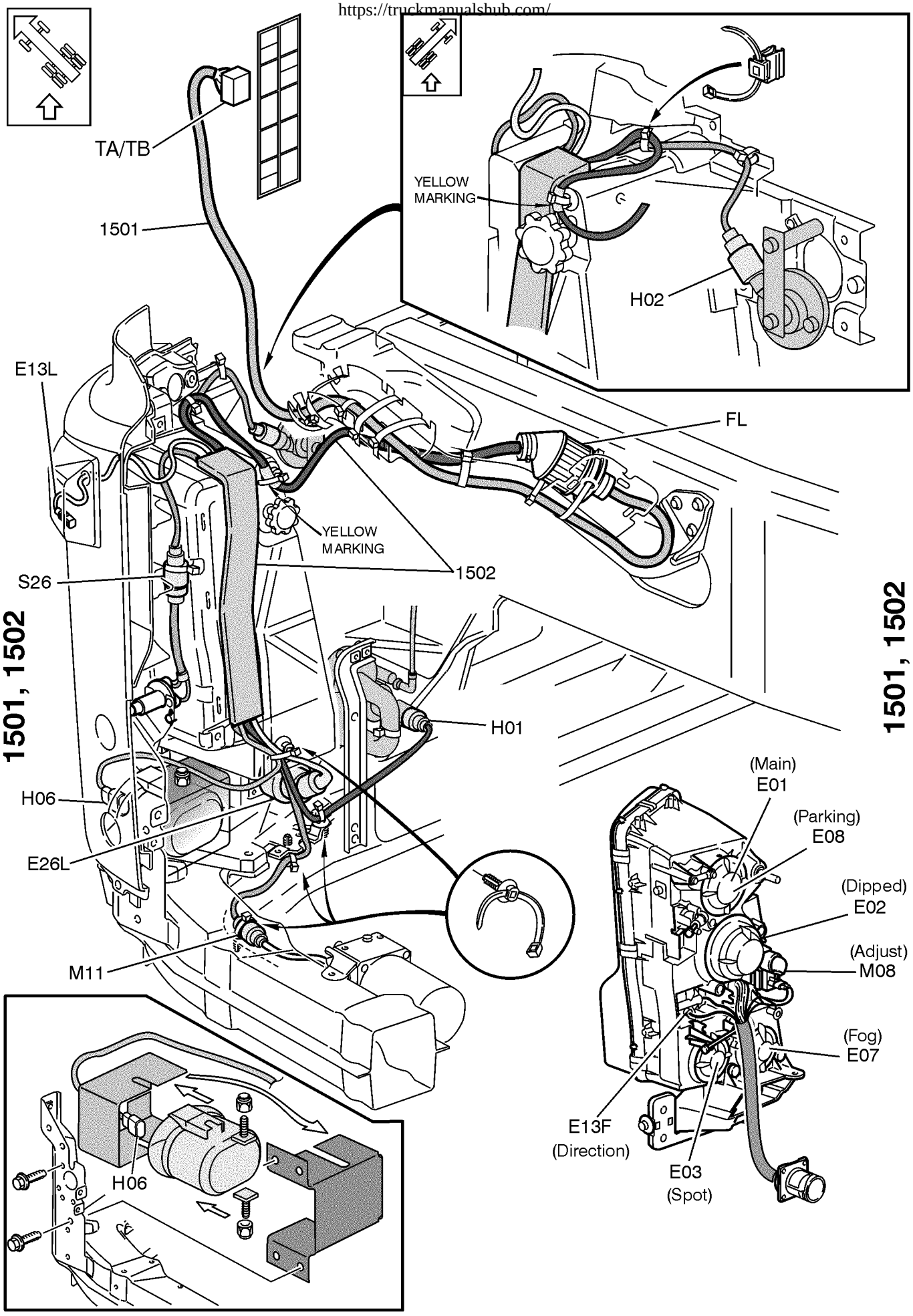

https://truckmanualshub.com/

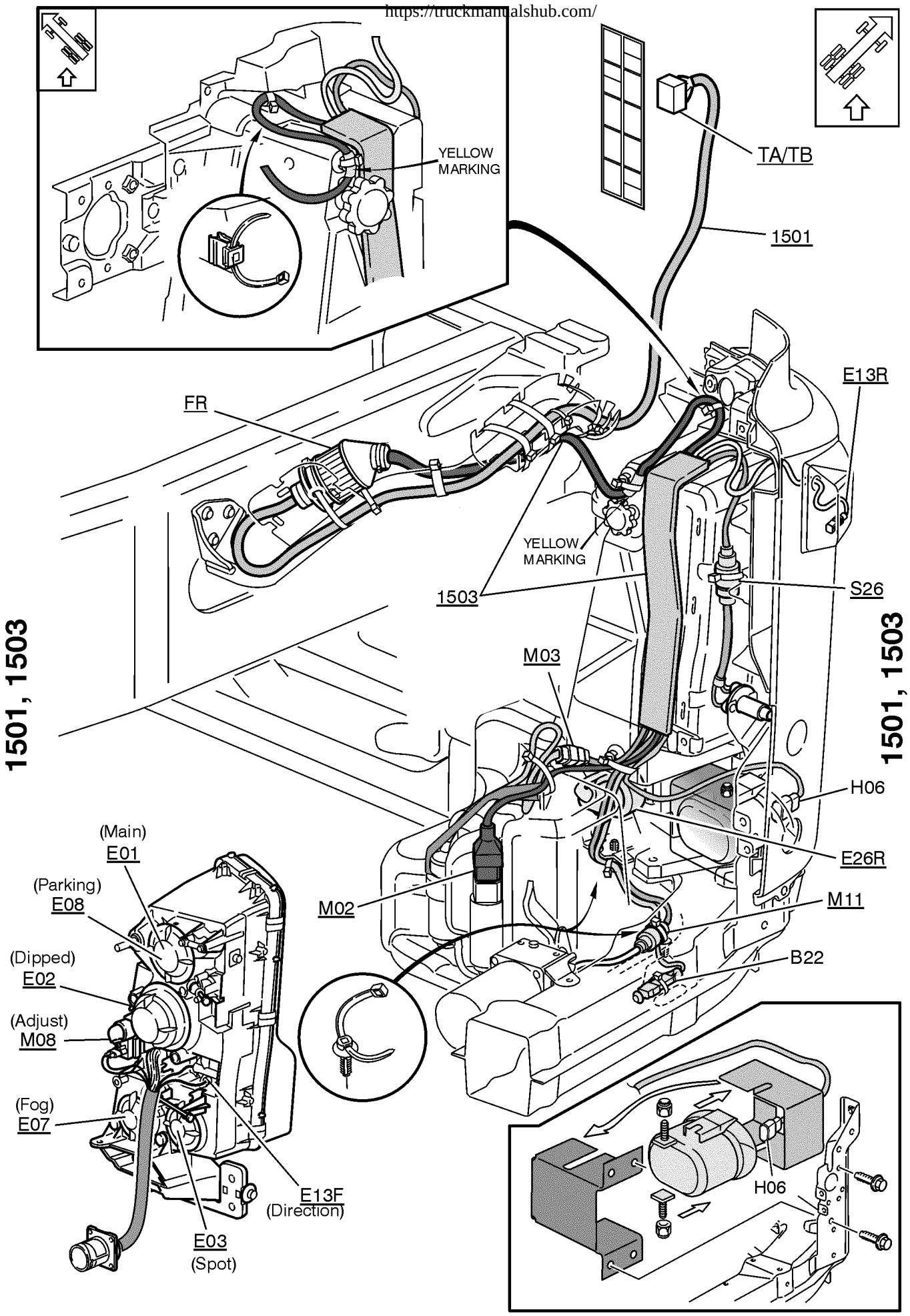

T3016418

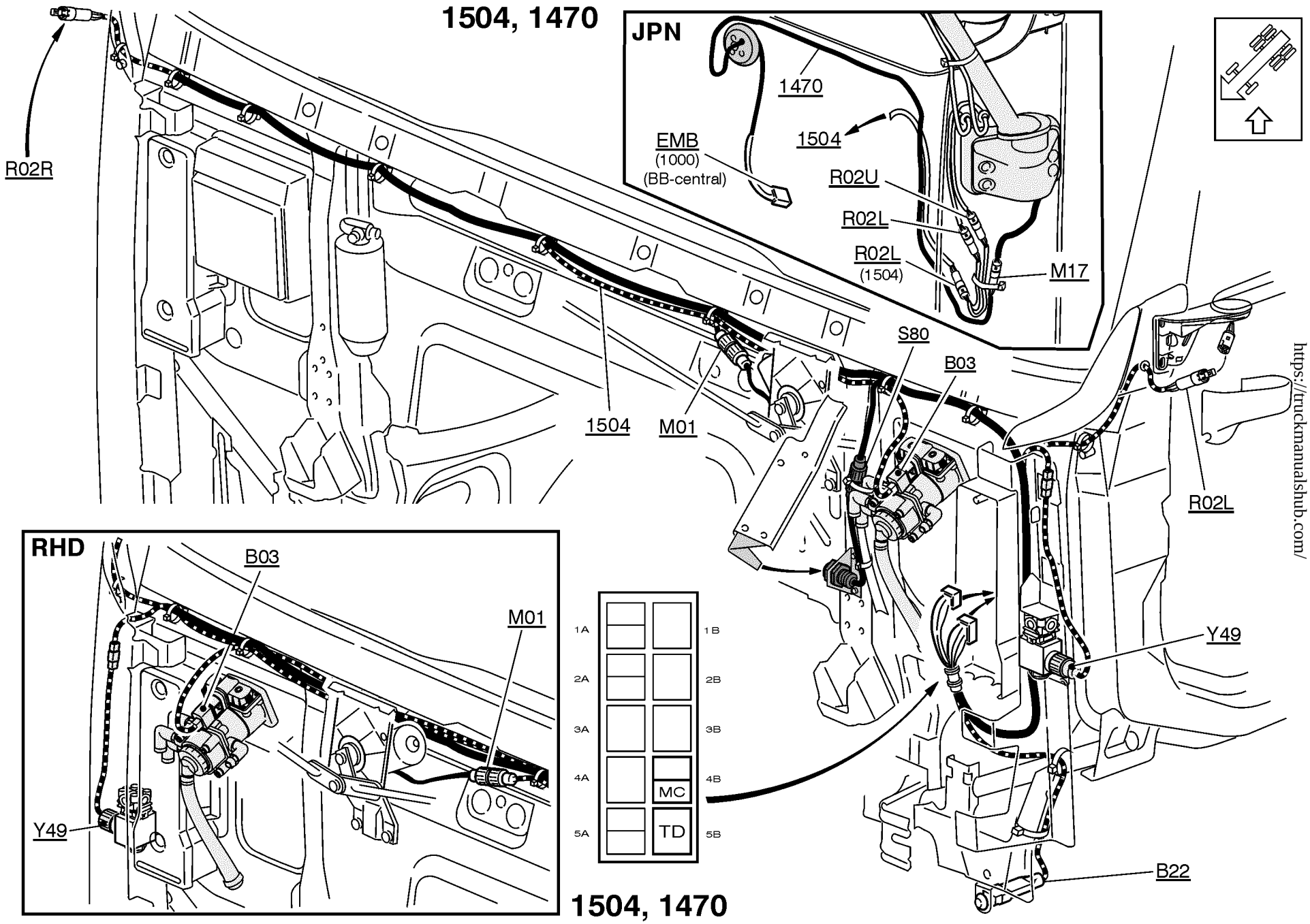

https://truckmanualshub.com/

https://truckmanualshub.com/

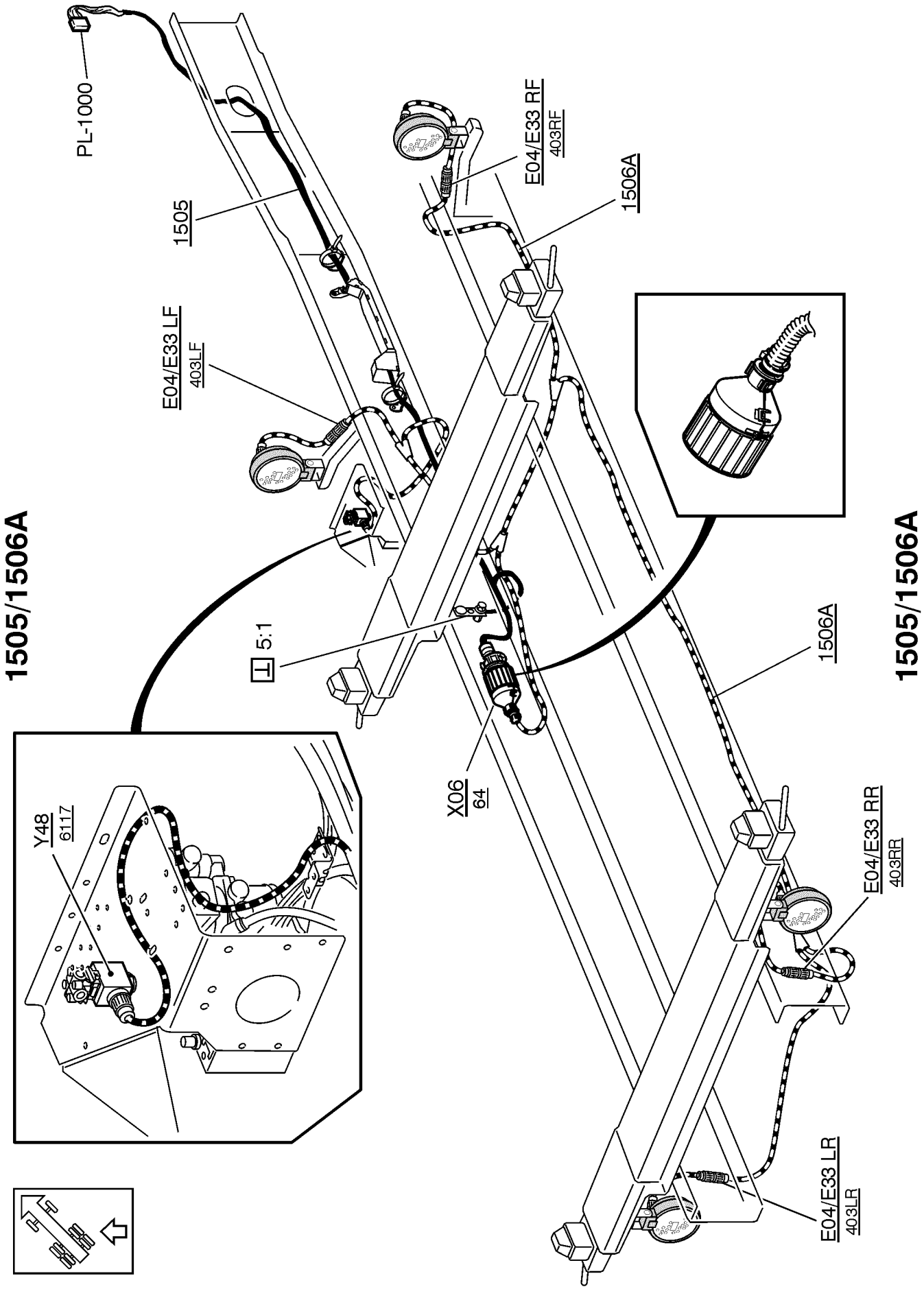

T3016420

https://truckmanualshub.com/

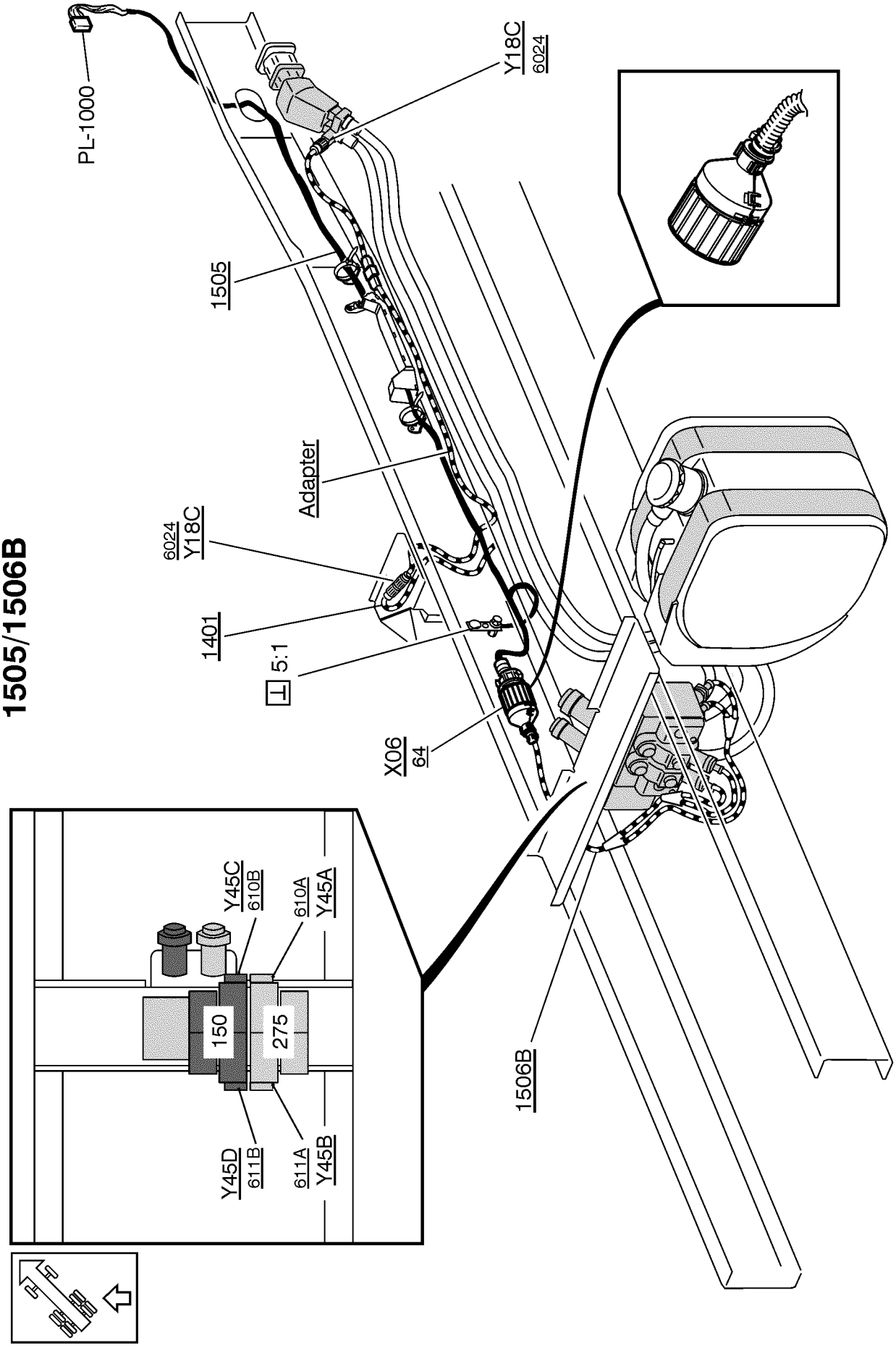

https://truckmanualshub.com/

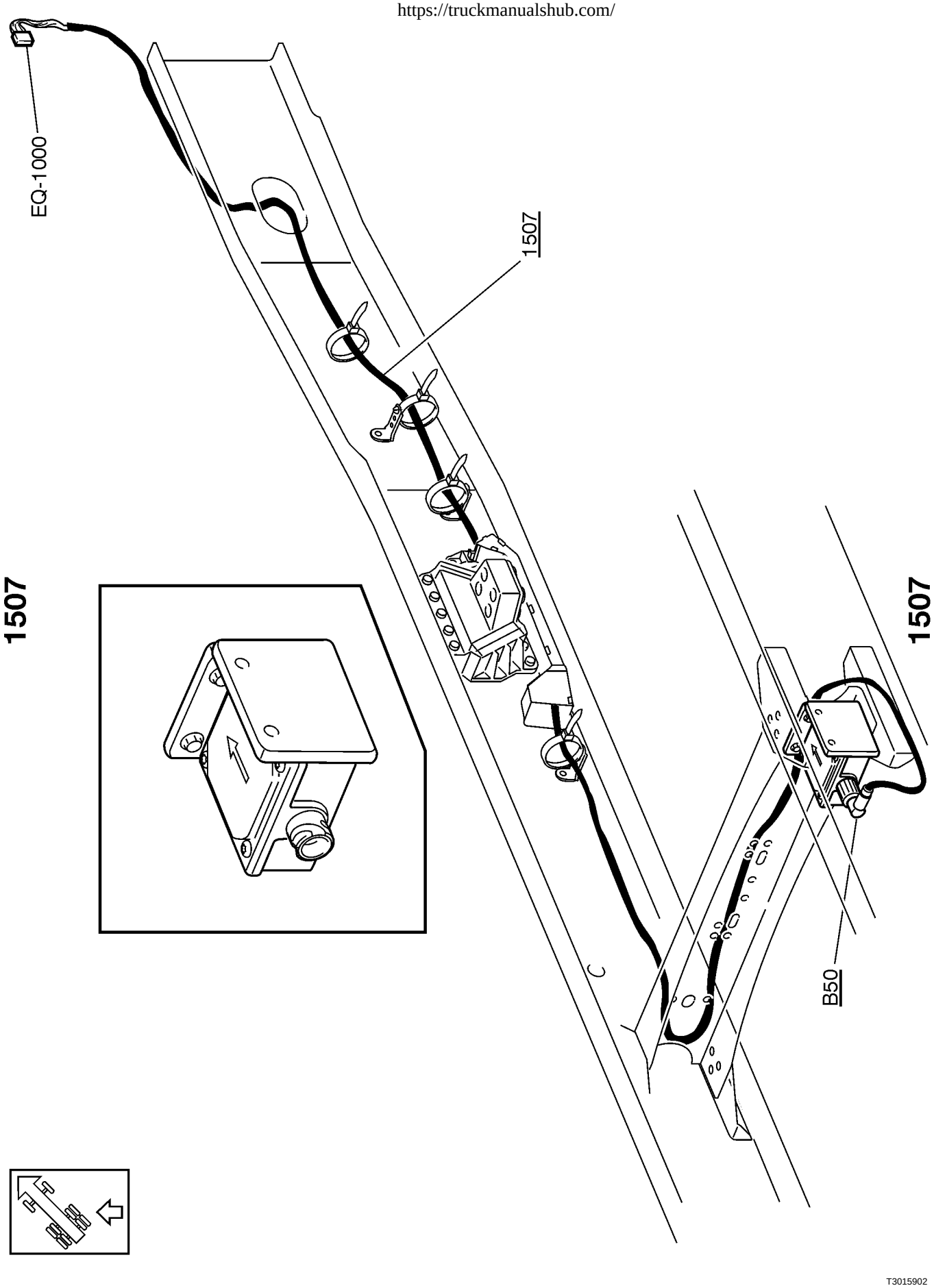

https://truckmanualshub.com/

Fuses

F2	Luggage compartment illumination	(IH:4 A)
F3	Loadlight, 5:th wheel lamp	(KE:0 A)
F4	Key switch, radiopos.	(AA:3 C)
F5	Instrumentation, (kl.30)	(BI:3 A)
F6	Free	(BA:1 B)
F7	Vehicle ECU, immobiliser	(BA:1 B)
F8	Instrumentation, (kl.DR)	(BI:0 A)
F9	Range-, area-inhibitors	(BA:0 A)
F10	Free	(HY:0 A)
F11	Gearselector ECU	(DB:1 B/ DM:0 B)
F12	Transmission ECU	(DB:1 B/ DM:1 B)
F13	Windscreen wiper	(GM:3 A)
F14	Cigarette lighter, centre section storage lamp	(IQ:2 A)
F15	Water separator, heater and water drain	(CU:0 A)
F16	Differential lock, power take off	(DQ:0 A/ DU:1 A)
F17	LCM control	(GA:0 A)
F19	Climate unit	(HG:0 A)
F20	Central door lock	(IM:1 A)
F21	Fan, climate unit	(HY:0 A)
F22	Interial lamps	(IH:1 A)
F23	Air suspension	(FA:4 A)
F24	El. heated airdryer, parking heater ADR/TRS	(FQ:0 A)
F25	Supply ABS/EBS trailer	(EC:2 A/ CP:4 A)
F26	Bodybuilder fusebox	(ME:3 B)
F27	El. window winder lhs, el. heated mirrors	(AA:3 B)
F28	Supply ABS/EBS truck	(EE:0 A/ EI:0 A/ EM:1 A)
F29	Coffee maker	(ME:1 A)
F30	El. window winder, rhs	(AA:3 B)
F31	Parking heater	(HI:0 A/ HM:0 A/ HP:0 A)
F32	ECC climate unit	(HG:0 A)
F33	El. cab tilt	(KA:0 A)
F34	Free	(ME:1 A)
F35	El. adjustable seat	(IA:2 A)
F36	Free	(ME:4 B)
F37	Dynafleet	(AA:3 B)
F38	Instep lamps	(AA:3 B)
F39	El. adjustable rearview mirrors	(AA:3 B)
F40	Engine ECU	(CM:1 A)
F41	Engine solenoid valves, el. fuel pump	(CM:3 A)
F42	Engine preheating relay, cooling fan clutch	(CM:2 A)
F43	BBM (body builder module)	(BA:1 A)
F44	Voltage converter for radio	(IR:0 A)
F45	Supplementary voltage converter	(IR:1 A)
F46	Beacon warning light	(KM:0 A)
F47	Free	(ME:0 A)
F48	ABS/EBS, EBS switches	(EE:0 A/ EI:0 A/ EM:0 A)
F49	Air suspension/A-ride/tag axle	(FA:3 A/ FK:1 A)
F50	Telephone	(IX:0 A)
F52	Control circuit engine preheating, radio position relay	(AA:1 A)
F53	Light sign	(KI:1 A)
F54	Dynafleet	(BU:0 A)
F55	SRS airbag, safety belt tensioner	(IS:0 A)
F57	Gear selector ECU	(DB:0 A/ DM:1 B)
F58	ADR/TRS, D+ short circuit relay	(AA:3 B/ AE:4 B)
F59	Rear view camera	(IZ:0 A)
F61	Foldable rearview mirror arm, Japan, burglar alarm	(IF:0 A)
F62	Free	(ME:0 A)
F63	Free/ISX-functions (AUS only)	(CP:1 A)
F64	Free/ISX-functions (AUS only)	(CP:2 A)
F65	Central lubrication system	(FU:0 A)
F66	Roof hatch	(IQ:0 A)
F67	Reading lamps, bedlamps	(IH:0 A)
F68	Refrigerator	(IQ:3 A)
F69	12-volt outlet	(IR:1 C)

https://truckmanualshub.com/

F70	Trailer ABS/EBS, (kl. 15)	(EC:1 A/ CP:4 A)
F71	Extra equipment	(ME:1 A)
F72	Headlamp level regulation system	(GQ:1 A/ GU:0 A)
F73	Hydraulic steered axle	(FM:0 A/ FP:1 A)
F74	Headlamp high-pressure washer	(GM:1 A)
F75	El. heated seat	(IA:0 A)
F76	ADR/TRS, D+ short circuit relay	(AE:4 B)
F89	Tachograph	(AA:0 B) (1435)
F90	12V converter, ABS trailer/info-module	(CP:3 C)
FM1	Fuse, main, preheating	(AA:0 B/ AE:2 B)
FM2	Fuse, main, bogie lift/extra equipment	(AA:0 B/ AE:1 B)
FM3	Fuse, main, cab and chassis	(AA:0 B/ AE:2 B)
FM4	Fuse, main, light, back-up	(AA:0 B/ AE:1 B)

https://truckmanuals.com/

Relays

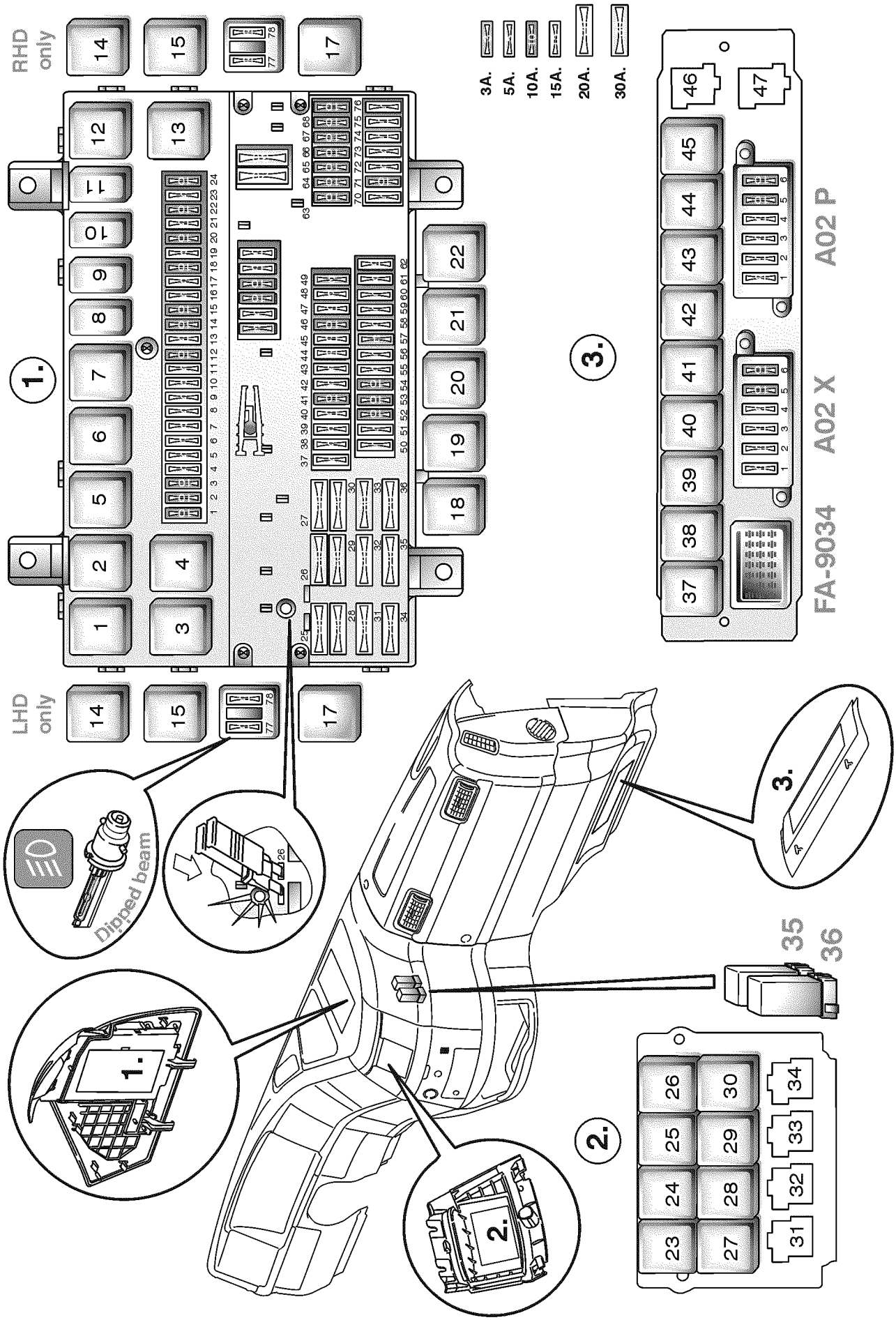

T3016485

https://truckmanualshub.com/

K1	Relay, starting switch, radio position	(AA:3 B)
K2	Relay, EMS (Engine Management System)	(BA:1 A)
K3	Relay, starter motor	(AA:1 C)
K3B	Relay, starter motor, Cummins	(CS:1 C)
K4	Relay, bodybuilder fuse box (kl.15)	(ME:2 A)
K5	Relay, automatic transmission	(DB:1 A/ DM:0 A)
K6	Relay, fan climate unit	(HY:0 B)
K7	Relay, intermittent wiper	(GM:1 C)
K8	Relay, gearbox area inhibitor	(BA:1 A)
K9	Relay, interior lamps	(IH:1 A)
K10	Relay, fifth wheel-, working-light	(KE:0 C)
K11	Relay, air suspension	(FA:4 B)
K12	Not used	(ME:4 B)
K13	Relay, alternator controled	(AA:4 C)
K14	Time delay relay, bogie lift, A-ride	(FK:1 C)
K15	Time delay relay, bogie lift, A-ride, with axle load limiter	(FK:2 C)
K16	Relay, bogie lift, A-ride, with axle load limiter	(FK:1 C)
K17	Relay, 3:rd axle lock, self steered axle	(FM:0 C)
K18	Relay, hydraulic steered axle	(FP:1 B)
K19	Relay, 3:rd axle lock, self steered axle	(FM:1 C)
K20	Relay, D+ short-circuit, (ADR-trucks only)	(AE:4 D)
K21	Relay, el. adjustable seat	(IA:2 B)
K22	Relay, climate fan, 1:st speed (by parking heater)	(HY:1 B)
K23	Relay, cab tilt	(KA:0 C)
K24	Relay, central lubrication	(FU:0 B)
K25	Relay, light sign	(KI:1 C)
K26A	Relay, foldable rearview mirror arm, Japan	(IF:0 C)
K26B	Relay, foldable rearview mirror arm, Japan	(IF:1 C)
K27	Relay, gas discharge lamp, dipped beam, lhs	(GB:0 D)
K28	Relay, gas discharge lamp, dipped beam, rhs	(GB:0 D)
K30	Relay, beacon warning light	(KM:0 B)
K35	Relay, headlamp high pressure wash	(GM:0 C)
K37A	Relay, parking light	(NR:0 C)
K37B	Relay, parking light	(NA:0 C)
K38	Relay, pressure selection, tipper trailer	(NA:1 C)
K38A	Relay, pressure selection, tipper trailer	(NR:1 C)
K38B	Relay, pressure selection, tipper trailer	(NR:1 C)
K39A	Relay, prepared wirings for body-builder (auxsw-6) A	(NA:1 C)
K39B	Relay, prepared wirings for body-builder (auxsw-6) A	(NA:1 C)
K40A	Relay, prepared wirings for body-builder (auxsw-6) B	(NR:3 C)
K40B	Relay, prepared wirings for body-builder (auxsw-6) B	(NA:2 C)
K41A	Relay, prepared wirings for body-builder (auxsw-6) C	(NR:3 C)
K41B	Relay, prepared wirings for body-builder (auxsw-6) C	(NA:3 C)
K42	Relay, spotlights	(NI:1 B)
K43	Relay, external engine start	(NC:3 C)
K45	Relay, prepared wirings for body-builder	(NU:2 B)
K48	Power relay, engine preheating	(CM:2 B)
K51	Power relay, battery main switch	(AA:0 C/ CS:0 C)
K52	Power relay, ADR battery main switch	(AE:0 B)
K54	Relay, 12V ABS Trailer	(CP:2 D)

Wiring harness illustration index

https://manualsnet.com

1000	Wiring harness, instruments	page 82
1006	Wiring harness, roof	page 91
1007	Wiring harness, floor	page 95
1025	Wiring harness, engine-chassi	page 101
1030	Wiring harness, engine	page 103
1037	Wiring harness, bogie lift	page 105
1040	Wiring harness, frame	page 106
1047	Wiring harness, roof beacon light	page 107
1056	Wiring harness, air dryer	page 109
1062	Wiring harness, parking heater, frame	page 109
1063	Wiring harness, trailer connections	page 110
1072	Wiring harness, air suspension chassi	page 111
1077	Wiring harness, side marking lamps	page 112
1083	Wiring harness, door	page 113
1086	Wiring harness, ABS chassi	page 115
1401	Wiring harness, solenoid valves	page 118
1403	Wiring harness, retarder	page 119
1435	Wiring harness, main switch	page 120
1436	Wiring harness, roof sign lighting	page 107
1458	Wiring harness, front wheel drive	page 122
1460	Wiring harness, cab-battery box	page 120
1470	Wiring harness, el.operated mirror arch	page 133
1472	Wiring harness, load indicator	page 123
1476	Wiring harness, cab-engine	page 101
1484	Wiring harness, floor gear shift selector	page 124
1493	Wiring harness, power steering	page 126
1494	Wiring harness, gearbox	page 127
1499	Wiring harness, cab-gearbox	page 127
1501	Wiring harness, upper front	page 131
1502	Wiring harness, lower front left	page 131
1503	Wiring harness, lower front right	page 132
1504	Wiring harness, firewall	page 133
1505	Wiring harness, body builder connections	page 134
1506	Wiring harness, demountable (swap-body)	page 134
1507	Wiring harness, ESP chassi	page 136

https://truckmanualshub.com/

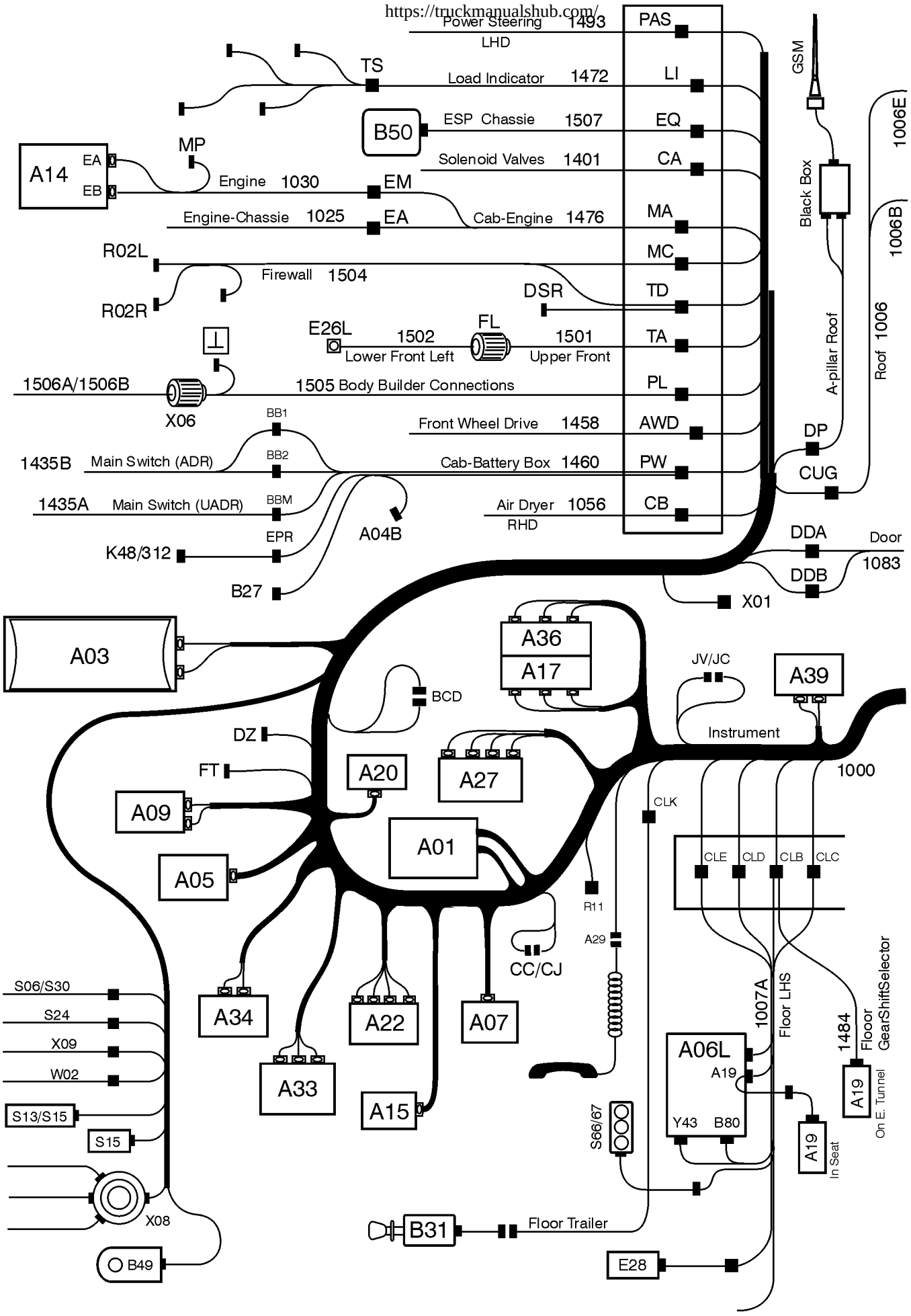

https://truckmanualshub.com/

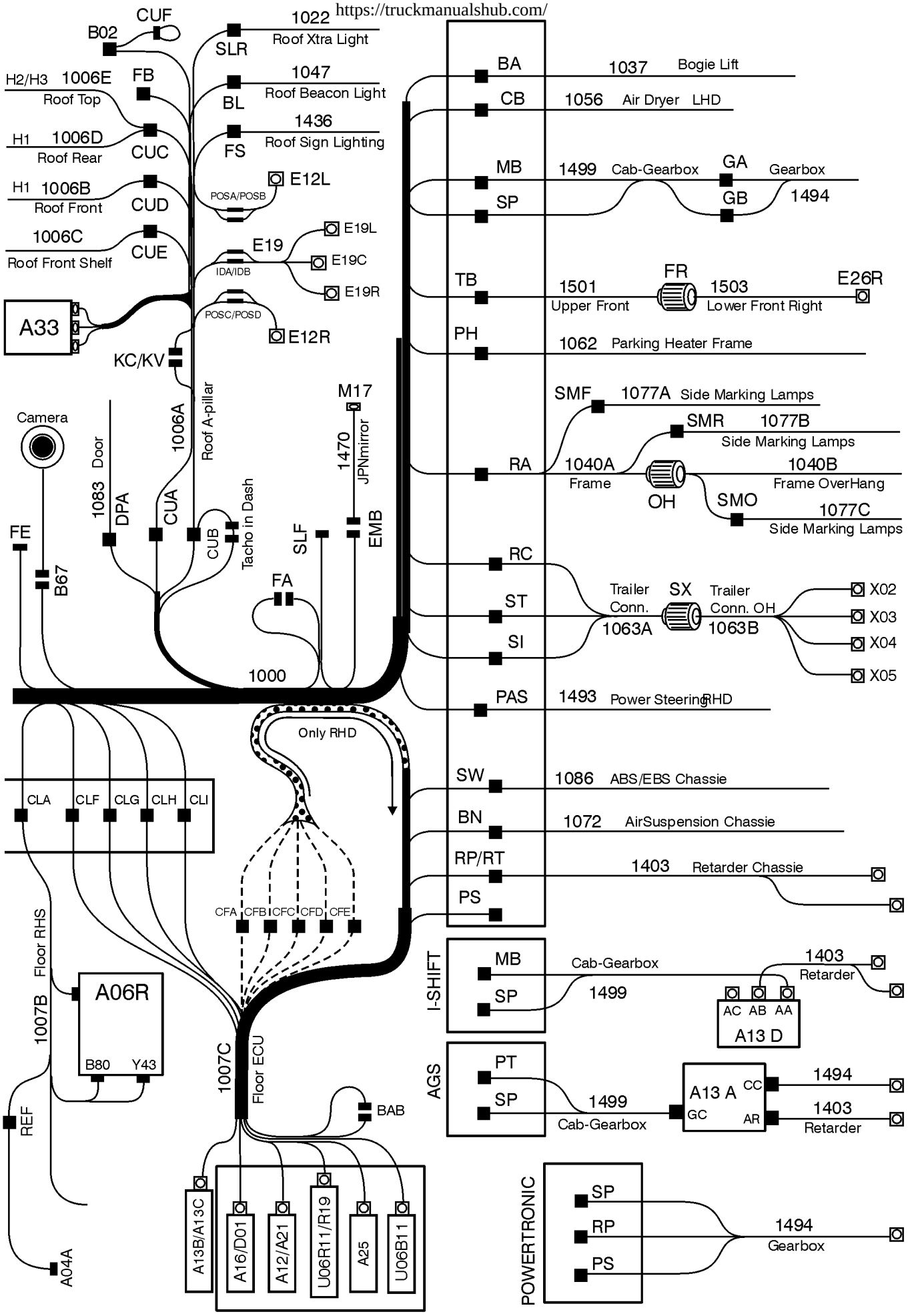

Earth connections

https://truckmanualshub.com/

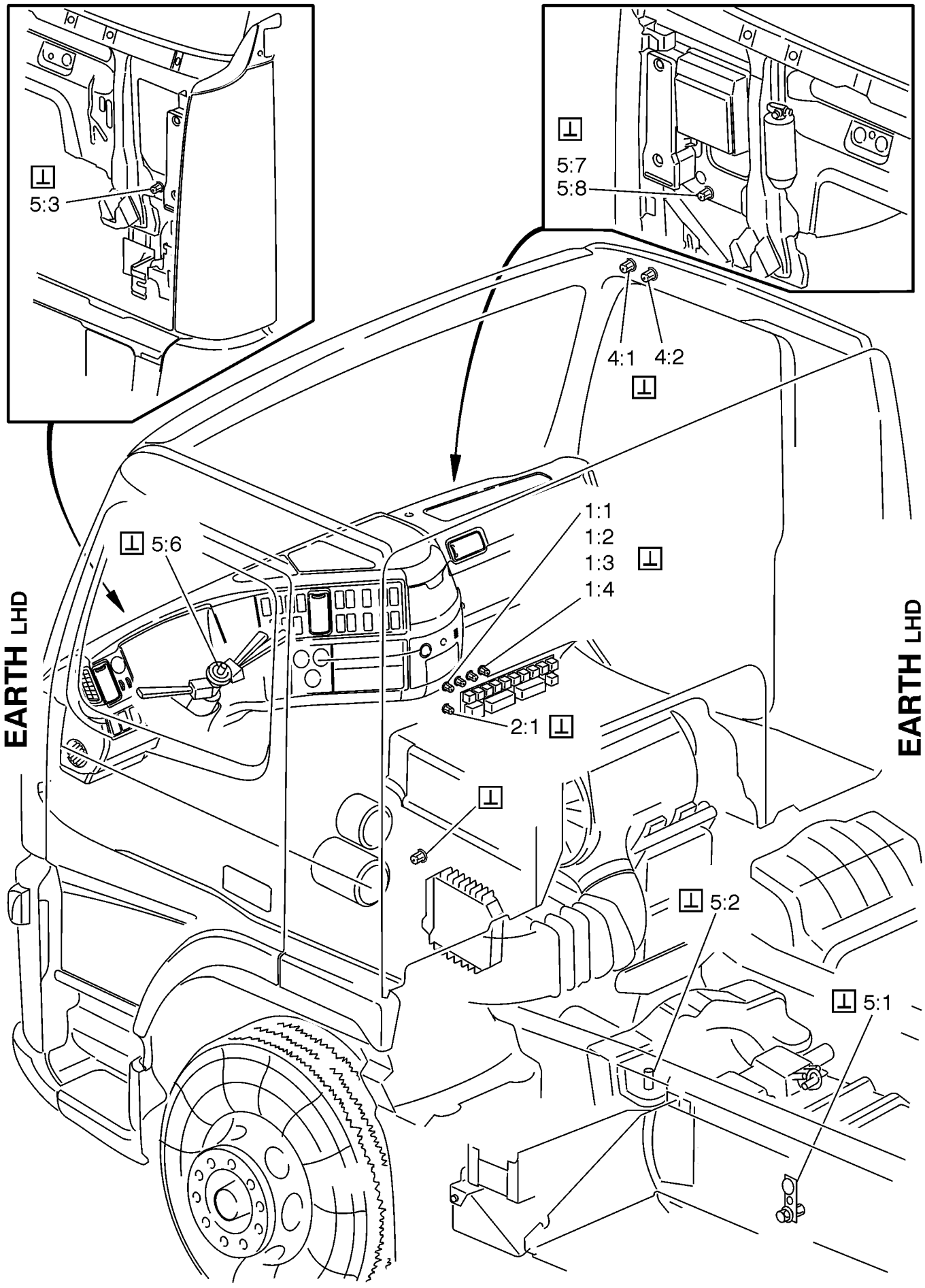

https://truckmanualshub.com/

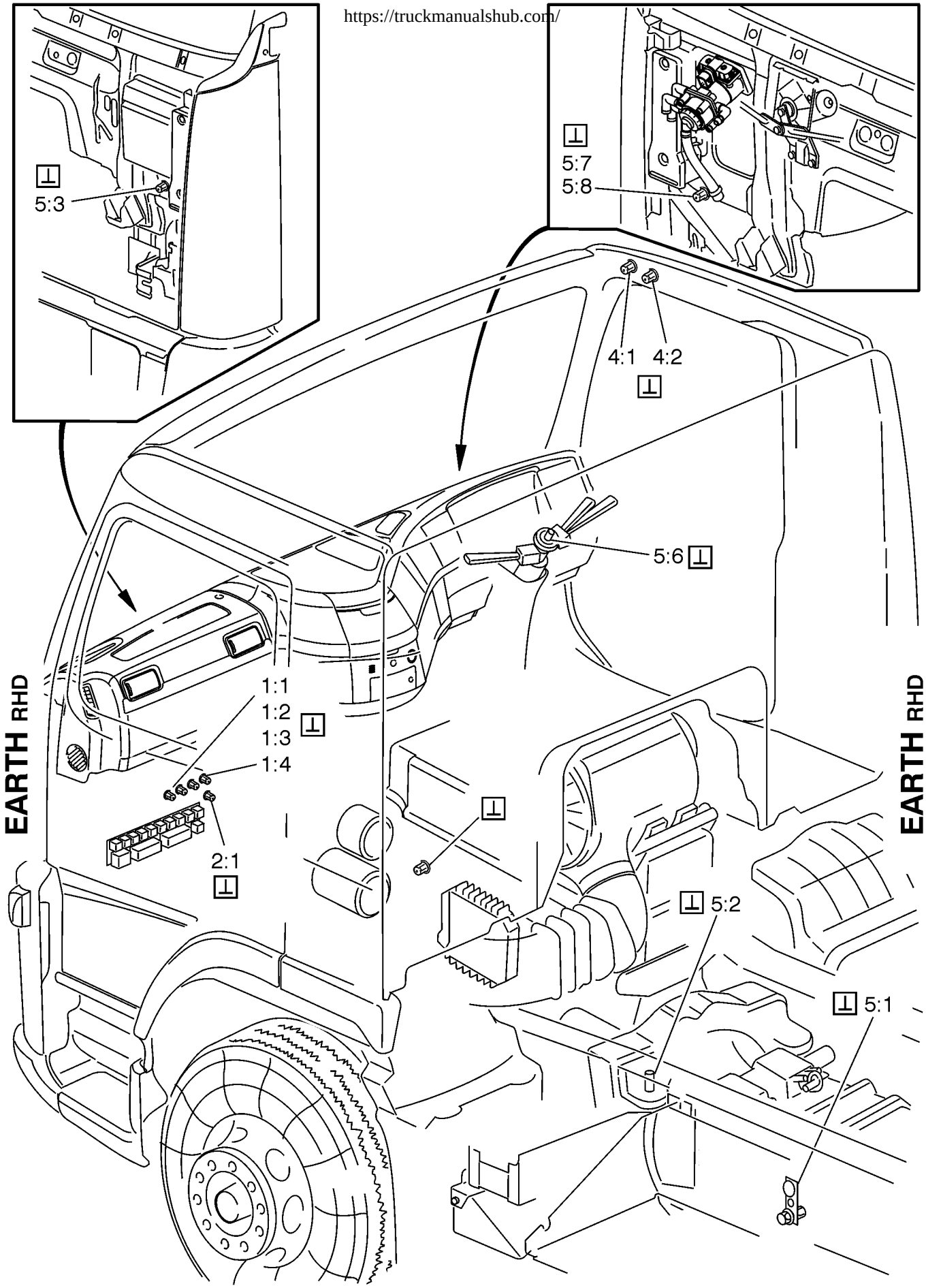

List of earth connections

https://truckmanualshub.com/

1:2	(BA:2 E)
1:3	(AE:4 E)
1:4	(AA:2 E)
2:1	(CP:1 E)
2:1	(ME:0 B)
2:1	(NA:2 C)
2:1	(NR:2 C)
2:1B	(GB:0 E)
2:1C	(NI:0 E)
4:1:1	(GA:1 E)
4:1:1	(GA:4 E)
4:1:2	(BN:0 C)
4:1:2	(GA:0 E)
4:1:2	(IH:0 E)
4:1:2	(KI:1 B)
4:2	(IQ:1 E)
4:2:2	(HI:0 B)
4:2:5	(KM:0 E)
4:1F	(NI:1 E)
5:1	(AA:0 E)
5:1	(NA:4 D)
5:1	(NR:3 D)
5:2	(AA:0 E)
5:2	(AA:2 E)
5:2	(AE:2 E)
5:2	(AE:3 E)
5:3	(AA:2 D)
5:4	(FK:3 E)
5:6	(GQ:1 E)
5:7	(GB:3 E)
5:7	(GC:1 E)
5:8	(EC:1 E)

List of connectors

https://truckmanualshub.com/

ADR1:1	(AE:1 C)
ADR1:2	(AE:1 C)
ADR2:1	(AE:1 C)
ADR2:2	(AE:2 C)
ADR3:1	(AE:1 C)
ADR3:2	(AE:2 C)
ADR4:1	(AE:2 C)
ADR4:2	(AE:2 C)
AR:1	(DE:1 D)
AR:2	(DE:0 C)
AR:3	(DE:0 C)
AR:4	(DE:0 C)
AR:5	(DE:1 C)
AR:6	(DE:1 C)
AR:7	(DE:1 C)
AWD:3	(DU:2 C)
AWD:4	(DU:2 C)
AWD:5	(DU:4 C)
AWD:6	(DU:4 C)
AWD:8	(DU:2 D)
BA:1	(FK:1 D)
BA:2	(FK:3 D)
BA:3	(FK:0 C)
BA:5	(FK:1 D)
BA:7	(FK:3 C)
BA:8	(FK:1 D)
BAB:1	(XA:4 D)
BAB:2	(XA:2 D)
BAB:3	(XA:3 D)
BAB:4	(XA:2 D)
BAB:5	(XA:3 D)
BAB:6	(XA:2 D)
BAB:7	(XB:3 D)
BAB:8	(XA:3 D)
BAB:9	(XA:3 D)
BAB:10	(XB:3 D)
BAB:11	(XB:2 D)
BAB:12	(XB:2 D)
BAB:13	(XB:3 D)
BAB:14	(XB:2 D)
BAB:15	(XB:1 D)
BAB:16	(XB:3 D)
BAB:17	(XB:3 D)
BAB:18	(XB:1 D)
BB1:1	(AA:0 B)
BB1:2	(AE:1 D)
BB1:3	(AE:1 D)
BB1:4	(AE:1 D)
BB1:5	(AE:2 D)
BB1:6	(AE:2 D)
BB2:1	(AE:1 A)
BB2:2	(AE:1 D)
BB2:3	(AE:1 D)
BBM:1	(AA:0 B)
BBM:2	(AA:0 B)
BBM:3	(AA:1 C)
BCD:1	(XA:2 B)
BCD:2	(XA:3 B)
BCD:3	(XB:0 C)
BCD:4	(XA:2 B)
BCD:5	(XA:2 B)
BCD:6	(IS:2 D)
BCD:7	(XA:3 B)
BCD:8	(XA:3 B)
BCD:9	(XB:0 C)
BCD:10	(XA:3 B)
BCD:11	(XA:4 B)
BCD:12	(IS:2 D)
BCD:13	(XA:2 B)
BCD:14	(XA:4 B)
BL:1	(KM:0 C)
BL:2	(KM:0 D)
BN:1	(FA:2 A)
BN:2	(FA:1 D)
BN:3	(FA:2 D)
BN:4	(FA:2 D)
BN:5	(FA:1 C)
BN:6	(FA:1 C)
BN:7	(FA:1 C)
BN:8	(FA:2 D)
BN:9	(FA:0 C)
BN:10	(FA:1 D)
BN:11	(FA:2 C)
BN:12	(FA:1 C)
BN:13	(FA:2 C)
BN:14	(FA:0 D)
BN:15	(FA:1 D)
BN:16	(FA:1 D)
BN:16	(FG:1 C)
BN:17	(FA:1 D)
BN:18	(FA:1 D)
BN:18	(FG:0 C)
BN:19	(FA:0 D)
BN:20	(FA:0 D)
BN:21	(FM:0 D)
CA:1	(DQ:0 D)
CA:2	(GB:3 B)
CA:3	(DU:1 C)
CA:4	(DQ:0 C)
CA:5	(GB:3 B)
CA:9	(DU:1 C)
CA:11	(EM:2 B)
CA:12	(EM:2 B)
CA:13	(EM:2 B)
CA:14	(EM:2 B)
CA:16	(DU:1 D)
CA:17	(FU:0 C)
CA:18	(FU:0 D)
CA:19	(NC:0 C)
CA:19	(NU:0 C)
CA:20	(NC:1 C)
CA:20	(NU:1 C)
CB:1	(FQ:0 B)
CB:2	(FQ:0 C)
CB:3	(BA:0 D)
CB:4	(BA:0 D)
CC/CJ:1	(IZ:2 B)
CC/CJ:2	(IZ:2 B)
CC/CJ:3	(IZ:1 A)
CC/CJ:4	(IZ:1 B)
CC:1	(DE:3 D)
CC:3	(DE:3 C)
CC:4	(DE:2 C)
CC:5	(DE:3 C)
CC:6	(DE:2 C)
CC:9	(DE:2 C)
CC:10	(DE:2 C)
CC:11	(DE:2 C)
CC:12	(DE:2 D)
CFF:1	(CP:4 B)
CFF:2	(CP:4 B)
CFF:3	(CP:3 C)
CFF:4	(CP:3 C)
CFF:5	(CP:4 C)
CLA:1	(IA:0 B)
CLA:2	(IA:1 B)
CLA:3	(BI:1 C)
CLA:4	(IA:0 D)
CLA:5	(IH:4 D)
CLA:6	(BI:3 D)
CLA:7	(NK:0 D)
CLA:8	(FA:4 D)
CLA:9	(AE:2 C)
CLA:9	(FA:4 D)
CLA:10	(AE:2 C)
CLA:10	(FA:4 D)
CLA:11	(AE:2 C)
CLA:11	(FA:4 D)
CLA:12	(AE:2 C)
CLA:12	(FA:4 D)
CLA:13	(FA:4 D)
CLA:14	(FA:3 D)
CLA:15	(FA:3 D)
CLA:16	(IS:3 C)
CLA:17	(IS:3 C)
CLA:19	(IQ:3 C)
CLA:20	(BI:3 D)
CLA:21	(IQ:3 D)
CLB:1	(DB:1 B)
CLB:2	(DB:1 B)
CLB:3	(DB:0 B)
CLB:4	(DB:0 B)
CLB:5	(DB:0 B)
CLB:6	(DB:0 B)
CLB:7	(DB:0 D)
CLB:8	(DB:0 D)
CLB:9	(DB:0 B)
CLB:11	(DB:3 B)
CLB:12	(DB:3 B)
CLB:15	(DB:1 D)
CLC:1	(HI:0 C)
CLC:2	(HI:0 C)
CLC:3	(HI:0 C)
CLC:4	(HI:2 C)
CLC:6	(HI:2 C)
CLC:7	(HI:3 C)
CLC:8	(HI:1 C)
CLC:9	(HI:1 C)
CLC:10	(HI:4 C)
CLC:11	(HI:3 C)
CLC:12	(HI:2 C)
CLD:1	(IX:0 C)
CLD:2	(IX:0 C)
CLD:3	(IX:1 C)
CLD:4	(IX:1 C)
CLE:1	(IA:1 B)
CLE:2	(IA:3 B)
CLE:3	(BI:1 C)
CLE:4	(IA:1 E)
CLE:5	(IH:4 D)
CLE:6	(BI:3 C)
CLE:7	(NK:0 D)
CLE:8	(IH:4 C)
CLE:9	(AE:1 C)
CLE:9	(FA:2 D)

https://truckmanualshub.com/

CLE:10	(AE:1 C)
CLE:10	(FA:2 D)
CLE:11	(AE:1 C)
CLE:11	(FA:3 D)
CLE:12	(AE:1 C)
CLE:12	(FA:3 D)
CLE:13	(FA:3 D)
CLE:14	(FA:3 D)
CLE:15	(FA:3 D)
CLE:16	(FA:3 D)
CLE:17	(IS:2 C)
CLE:18	(IS:2 C)
CLE:20	(BI:3 C)
CLF:1	(IR:1 B)
CLF:2	(IR:1 B)
CLF:3	(IR:1 C)
CLF:4	(IR:1 D)
CLF:5	(IR:0 B)
CLF:6	(IR:0 B)
CLF:7	(IR:0 C)
CLF:8	(IR:0 C)
CLF:9	(IR:0 D)
CLF:10	(DB:2 B)
CLF:10	(DM:1 C)
CLF:11	(DB:1 D)
CLF:11	(DM:0 D)
CLF:12	(DM:0 C)
CLF:13	(XA:3 D)
CLF:14	(XA:3 D)
CLF:15	(XB:3 D)
CLF:16	(XB:2 D)
CLF:17	(FG:1 C)
CLF:18	(XA:4 C)
CLF:19	(XA:2 C)
CLF:20	(XB:1 C)
CLF:21	(XB:3 C)
CLG:1	(EE:0 B)
CLG:1	(EI:0 B)
CLG:1	(EM:0 B)
CLG:2	(EE:0 B)
CLG:2	(EI:0 B)
CLG:2	(EM:0 B)
CLG:3	(EE:3 B)
CLG:3	(EI:2 B)
CLG:3	(EM:3 B)
CLG:4	(EM:1 B)
CLG:5	(EM:4 B)
CLG:6	(EE:3 B)
CLG:6	(EI:3 B)
CLG:6	(EM:1 B)
CLG:7	(EM:4 B)
CLG:8	(EM:1 B)
CLG:9	(EM:0 B)
CLG:10	(EM:0 B)
CLG:13	(EM:0 D)
CLG:14	(EM:0 D)
CLG:15	(EQ:0 D)
CLG:16	(EQ:0 D)
CLG:17	(EQ:0 D)
CLG:18	(EQ:0 D)
CLG:19	(EQ:2 D)
CLG:20	(EE:4 D)
CLG:20	(EI:4 D)
CLG:20	(EM:2 B)
CLG:21	(EI:0 C)
CLG:21	(EM:0 B)
CLH:1	(FA:3 C)
CLH:1	(FK:2 B)
CLH:2	(FA:4 C)
CLH:2	(FK:2 B)
CLH:3	(FA:2 C)
CLH:3	(FK:2 B)
CLH:4	(FG:0 C)
CLH:4	(FK:2 B)
CLH:5	(FA:2 C)
CLH:5	(FK:2 B)
CLH:6	(FA:4 D)
CLH:6	(FA:2 D)
CLH:7	(FA:2 D)
CLH:7	(FA:4 D)
CLH:8	(FA:3 D)
CLH:8	(FA:4 D)
CLH:9	(FA:3 D)
CLH:9	(FA:4 D)
CLH:10	(FA:3 D)
CLH:10	(FA:4 D)
CLH:11	(FA:3 D)
CLH:11	(FA:4 D)
CLH:12	(FA:3 D)
CLH:13	(FM:0 C)
CLH:14	(FG:0 C)
CLH:15	(FG:0 C)
CLH:16	(FA:3 C)
CLH:17	(FA:3 C)
CLH:18	(FG:0 C)
CLH:19	(FG:1 C)
CLH:20	(FA:3 C)
CLH:21	(FA:3 D)
CLI:1	(EM:0 C)
CLI:2	(EM:0 C)
CLI:3	(EM:0 C)
CLI:4	(EM:0 C)
CLI:5	(EM:2 B)
CLI:6	(EM:2 B)
CLI:7	(EM:2.B)
CLI:8	(EM:2 B)
CLI:9	(EQ:1 C)
CLI:10	(EQ:1 C)
CLI:11	(EQ:1 C)
CLI:12	(EQ:1 C)
CLK:1	(NR:1 A)
CLK:2	(NR:1 C)
CLK:3	(NR:1 C)
CLK:4	(NR:1 B)
CUA:1	(GA:1 C)
CUA:2	(GA:4 C)
CUA:3	(IH:1 B)
CUA:4	(IH:0 B)
CUA:5	(IH:3 B)
CUA:6	(IH:3 C)
CUA:7	(IQ:0 B)
CUA:8	(KM:0 C)
CUA:9	(NI:1 B)
CUA:10	(NI:1 B)
CUA:11	(KI:1 C)
CUA:12	(IH:3 C)
CUA:13	(IU:2 D)
CUA:14	(IU:2 D)
CUA:15	(IU:2 D)
CUA:16	(IU:2 D)
CUA:17	(HI:1 C)
CUA:18	(HI:1 B)
CUA:18	(HM:3 C)
CUA:19	(HM:3 C)
CUA:20	(HI:1 C)
CUA:20	(HM:4 C)
CUA:21	(GB:0 B)
CUB/TACH:1	(BM:1 B)
CUB/TACH:2	(BM:3 C)
CUB/TACH:3	(BM:1 B)
CUB/TACH:4	(BM:2 B)
CUB/TACH:5	(BM:3 B)
CUB/TACH:6	(BM:3 C)
CUB/TACH:7	(BM:2 C)
CUB/TACH:8	(BM:2 C)
CUB/TACH:9	(BM:2 C)
CUB/TACH:10	(BM:2 C)
CUB/TACH:11	(IU:0 B)
CUB/TACH:12	(KI:1 C)
CUB/TACH:13	(IM:0 B)
CUB/TACH:14	(HI:2 B)
CUB/TACH:14	(HM:2 B)
CUB/TACH:15	(HI:1 B)
CUB/TACH:15	(HM:2 B)
CUB/TACH:18	(IH:3 A)
CUB:1	(BN:1 A)
CUB:2	(BN:3 C)
CUB:3	(BN:1 A)
CUB:4	(BN:2 A)
CUB:5	(BN:3 A)
CUB:6	(BN:3 C)
CUB:7	(BN:2 C)
CUB:8	(BN:2 C)
CUB:9	(BN:2 C)
CUB:10	(BN:2 C)
CUB:11	(BN:3 C)
CUB:12	(KI:1 B)
CUB:13	(IM:0 B)
CUB:14	(HI:2 C)
CUB:14	(HM:2 B)
CUB:15	(HI:1 A)
CUB:15	(HM:2 B)
CUB:16	(GC:2 A)
CUB:17	(GC:3 B)
CUB:18	(IH:3 B)
CUB2/CUB:11	(BN:3 C)
CUB2/CUB:12	(KI:1 B)
CUB2/CUB:13	(IM:0 B)
CUB2/CUB:14	(HI:2 C)
CUB2/CUB:14	(HMI:2 C)
CUB2/CUB:15	(HI:1 A)
CUB2/CUB:15	(HM:2 A)
CUB2/CUB:18	(IH:3 B)
CUC:1	(IH:3 C)
CUC:2	(IH:3 C)
CUC:3	(IH:1 B)
CUC:4	(IH:0 B)
CUC:5	(IH:3 B)
CUC:6	(IQ:1 C)
CUC:7	(IQ:0 C)
CUC:8	(IQ:1 C)
CUC:9	(IU:2 D)
CUC:10	(IU:2 D)
CUC:11	(IU:2 D)
CUC:12	(IU:2 D)
CUC:13	(HI:1 B)
CUC:14	(HI:1 B)
CUC:14	(HM:3 B)
CUC:15	(HM:3 B)
CUC:16	(HI:1 B)
CUC:16	(HM:4 B)

https://truckmanualshub.com/

CUC:17	(IH:3 B)
CUC:18	(HI:0 D)
CUC:19	(HI:3 B)
CUC:19	(HMI:3 B)
CUC:20	(HI:3 C)
CUC:20	(HM:3 B)
CUC:21	(HI:2 A)
CUC:21	(HM:3 B)
CUD:1	(IH:1 B)
CUD:2	(IH:1 B)
CUD:3	(IH:1 D)
CUE:1	(IH:0 B)
CUE:3	(IH:0 D)
CUF:1	(HM:3 C)
CUF:2	(HM:3 C)
CUG:1	(NK:2 C)
CUG:2	(NK:2 C)
CUG:4	(NK:3 C)
CUG:5	(NK:3 C)
DDA:1	(IM:1 C)
DDA:2	(IE:0 B)
DDA:3	(IE:1 B)
DDA:4	(IE:2 B)
DDA:5	(IH:2 C)
DDA:6	(IE:3 B)
DDA:7	(IM:1 C)
DDA:8	(IM:1 C)
DDA:9	(IM:1 C)
DDA:10	(IU:1 D)
DDA:11	(IU:1 D)
DDA:12	(IH:2 C)
DDA:13	(IE:0 C)
DDA:14	(IE:1 C)
DDA:15	(IE:1 C)
DDB:1	(IE:1 C)
DDB:2	(IE:2 C)
DDB:3	(IE:2 C)
DDB:4	(IE:0 C)
DDB:5	(IE:0 B)
DDB:6	(IE:0 B)
DDB:7	(IE:1 B)
DDB:8	(IE:2 B)
DDB:9	(IE:2 B)
DP:1	(BU:0 A)
DP:2	(BU:0 A)
DP:3	(BU:1 D)
DP:4	(BU:0 D)
DP:5	(BU:0 D)
DP:6	(BU:0 D)
DP:7	(BU:1 D)
DP:8	(BU:1 D)
DP:9	(BU:1 D)
DP:10	(BU:1 D)
DP:11	(BU:1 D)
DP:12	(BU:1 D)
DPA:1	(IM:2 C)
DPA:3	(IE:3 B)
DPA:4	(IE:3 B)
DPA:5	(IH:2 C)
DPA:6	(IE:3 B)
DPA:7	(IM:2 C)
DPA:8	(IM:2 C)
DPA:9	(IM:2 C)
DPA:10	(IU:1 D)
DPA:11	(IU:2 D)
DPA:12	(IH:2 C)
DSL:1	(NU:2 C)
DSL:2	(NU:2 D)
DSR:1	(NU:2 C)
DSR:2	(NU:2 D)
DZ:1	(BU:0 B)
DZ:2	(BU:0 B)
DZ:3	(BU:1 B)
E03L-:1	(NI:0 D)
E03L+:1	(NI:0 C)
E03R-:1	(NI:0 D)
E03R+:1	(NI:0 C)
EA:1	(AA:3 D)
EA:1	(AE:3 D)
EA:1	(CS:1 B)
EA:2	(AA:3 D)
EA:2	(AE:3 D)
EA:2	(CS:1 B)
EA:3	(CS:2 B)
EA:3	(HG:0 D)
EA:3	(HY:2 D)
EA:4	(AA:1 D)
EA:4	(CS:1 B)
EM:1	(CM:1 D)
EM:1	(CO:1 B)
EM:1	(CS:3 B)
EM:2	(CM:2 D)
EM:2	(CO:2 B)
EM:2	(CS:3 B)
EM:3	(CM:2 D)
EM:3	(CO:2 B)
EM:3	(CS:3 B)
EM:4	(CM:1 D)
EM:4	(CO:1 B)
EM:4	(CS:3 B)
EM:5	(CM:1 D)
EM:5	(CO:2 B)
EM:5	(CS:3 B)
EM:6	(CM:2 D)
EM:6	(CO:3 B)
EM:6	(CS:2 B)
EM:7	(CM:3 D)
EM:7	(CO:4 B)
EM:8	(CS:2 B)
EM:9	(CM:1 D)
EM:9	(CO:1 B)
EM:9	(CS:3 B)
EM:10	(CM:0 D)
EM:10	(CO:3 B)
EM:10	(CS:3 D)
EM:11	(CM:2 D)
EM:11	(CO:0 B)
EM:12	(CM:0 D)
EM:12	(CO:4 B)
EM:12	(CS:2 B)
EMB:1	(IF:0 D)
EMB:2	(IF:1 D)
EPR:1	(CM:2 B)
EPR:3	(CM:3 B)
EPR:4	(CM:2 C)
EQ:1	(EQ:1 D)
EQ:2	(EQ:1 D)
EQ:3	(EQ:1 D)
EQ:4	(EQ:1 D)
FA:1	(BI:4 B)
FA:2	(FA:2 B)
FA:3	(FA:2 B)
FA:4	(GB:2 C)
FA:5	(GA:2 C)
FA:5	(NI:1 A)
FA:6	(BA:0 C)
FA:7	(BI:1 C)
FA:8	(GA:4 C)
FA:8	(NA:0 A)
FA:8	(NR:0 A)
FA:9	(GB:3 D)
FA:9	(NA:0 A)
FA:9	(NR:0 A)
FA:10	(GC:2 B)
FA:10	(NA:0 A)
FA:10	(NR:0 A)
FA:10	(NU:2 B)
FA:11	(GB:0 A)
FA:11	(NA:2 A)
FA:11	(NR:1 A)
FA:12	(BA:12 D)
FA:13	(GQ:2 C)
FA:14	(AA:1 B)
FA:15	(GB:2 D)
FA:16	(ME:0 C)
FA:16	(NA:1 D)
FA:16	(NR:2 D)
FA:17	(ME:0 C)
FA:17	(NA:2 D)
FA:17	(NR:3 D)
FA:18	(ME:0 C)
FA:19	(ME:1 C)
FA:19	(NA:3 D)
FA:19	(NR:3 D)
FA:20	(MA:1 C)
FA:21	(MA:1 C)
FB:1	(KI:1 A)
FB:3	(IZ:2 A)
FE:1	(IF:1 A)
FE:1	(ME:1 B)
FE:1	(NC:0 B)
FE:1	(NU:0 A)
FE:2	(IF:1 A)
FE:2	(ME:1 B)
FE:2	(NC:0 B)
FE:2	(NU:0 A)
FE:3	(IF:1 A)
FE:3	(ME:1 B)
FE:3	(NC:0 B)
FE:3	(NU:0 A)
FE2:1	(IF:2 A)
FE2:1	(NC:0 B)
FE2:1	(NU:0 B)
FE2:2	(IF:2 A)
FE2:2	(NC:0 B)
FE2:2	(NU:0 B)
FE2:3	(IF:1 A)
FE2:3	(NC:0 B)
FE2:3	(NU:0 B)
FL:1	(GA:2 D)
FL:2	(GA:2 C)
FL:3	(GA:2 C)
FL:4	(NK:3 D)
FL:5	(NK:3 D)
FL:6	(GA:2 C)
FL:7	(GA:2 C)
FL:8	(GA:1 C)
FL:9	(GA:3 C)
FL:10	(GQ:1 C)
FL:11	(GQ:1 B)
FL:12	(GQ:1 B)

https://truckmanualshub.com/

FL:13	(GU:0 D)
FL:14	(GU:0 D)
FL:15	(GU:0 D)
FL:16	(GQ:1 C)
FL:21	(KA:0 C)
FL:25	(GA:2 D)
FR:1	(GA:3 D)
FR:2	(GA:3 C)
FR:3	(GA:3 C)
FR:4	(NK:3 D)
FR:5	(NK:4 D)
FR:6	(GA:2 C)
FR:7	(GA:3 C)
FR:8	(GA:4 C)
FR:9	(GA:3 C)
FR:10	(GM:0 C)
FR:11	(GM:0 C)
FR:13	(GU:1 D)
FR:14	(GU:1 D)
FR:15	(GU:1 D)
FR:16	(GM:1 C)
FR:21	(KA:0 C)
FR:25	(GA:3 D)
FS:1	(KI:1 D)
FS:2	(KI:1 D)
FT:1	(IR:0 D)
FT:2	(IR:0 D)
FT:3	(IR:1 D)
GA:1	(GB:3 D)
GA:2	(BA:1 C)
GA:2	(BI:1 D)
GA:3	(BI:1 C)
GA:4	(BA:1 B)
GA:5	(BA:0 B)
GA:6	(BA:0 C)
GA:7	(BA:0 C)
GB:1	(BI:2 C)
GB:2	(BI:2 D)
GB:3	(BM:2 D)
GB:4	(BM:2 D)
GB:5	(BM:2 D)
GB:6	(BM:2 D)
GC:1	(DE:0 B)
GC:2	(DE:0 B)
GC:3	(DE:0 B)
GC:4	(DE:0 B)
GC:7	(DE:2 B)
GC:8	(DE:2 B)
GC:10	(DE:3 E)
GC:11	(DE:0 B)
GC:12	(DE:0 C)
IDA:1	(GA:1 C)
IDB:1	(GA:0 D)
IS:1	(DE:3 B)
IS:2	(DE:3 B)
IS:3	(DE:2 C)
IS:4	(DE:2 C)
JV/JC:1	(GC:1 B)
JV/JC:2	(KA:1 D)
JV/JC:3	(DQ:1 B)
JV/JC:4	(AE:3 B)
JV/JC:5	(AE:3 B)
JV/JC:6	(AE:3 B)
JV/JC:7	(AE:3 D)
JV/JC:8	(HI:3 D)
JV/JC:9	(BA:0 C)
JV/JC:10	(FU:0 D)
JV/JC:11	(BA:3 C)
JV/JC:12	(BA:3 D)
JV/JC:13	(IM:2 C)
JV/JC:14	(BA:0 C)
JV/JC:15	(BU:0 B)
JV/JC:16	(IM:2 A)
JV/JC:17	(HP:0 D)
JV/JC:18	(KM:1 C)
JV/JC:19	(BI:2 D)
JV/JC:20	(BU:0 B)
JV/JC:21	(IX:2 B)
KV/KC:1	(GB:0 B)
KV/KC:2	(GB:0 B)
KV/KC:3	(GB:0 B)
LI:1	(FG:0 B)
LI:2	(FG:0 B)
LI:3	(FG:0 B)
LI:4	(FG:0 B)
LI:5	(FG:1 B)
LI:6	(FG:1 B)
MA:1	(CS:2 A)
MA:1	(HG:0 C)
MA:1	(HY:2 D)
MA:2	(AA:1 D)
MA:2	(CS:1 A)
MA:3	(CS:3 A)
MA:3	(XB:0 B)
MA:4	(CS:3 A)
MA:4	(XB:0 B)
MA:5	(CS:3 A)
MA:5	(XA:0 B)
MA:6	(CS:3 A)
MA:6	(XA:1 B)
MA:7	(CM:2 C)
MA:7	(CS:2 A)
MA:8	(CM:2 C)
MA:9	(AA:3 D)
MA:9	(AE:3 D)
MA:11	(CM:1 C)
MA:11	(CS:3 A)
MA:12	(CM:0 C)
MA:12	(CS:4 A)
MA:13	(AA:3 D)
MA:13	(AE:4 C)
MA:13	(CS:1 A)
MA:14	(CM:3 C)
MA:15	(BA:0 D)
MA:15	(CP:2 B)
MA:15	(CS:3 A)
MA:16	(BI:0 D)
MA:16	(CS:1 A)
MA:17	(CU:0 B)
MA:19	(CP:2 B)
MA:19	(CS:2 B)
MA:20	(CP:2 B)
MA:20	(CS:2 A)
MB:1	(DN:0 B)
MB:1	(BI:2 D)
MB:2	(BA:0 C)
MB:2	(DN:1 B)
MB:3	(DN:1 B)
MB:4	(BA:1 B)
MB:4	(DN:1 B)
MB:5	(BI:2 C)
MB:6	(DN:0 B)
MB:7	(DN:0 B)
MB:8	(BA:1 C)
MB:8	(BI:1 D)
MB:8	(DN:0 B)
MB:9	(BA:0 B)
MB:9	(DN:0 B)
MB:14	(BI:1 C)
MB:15	(GB:3 D)
MB:16	(BA:0 C)
MC:1	(EM:0 D)
MC:2	(EM:0 D)
MC:3	(EM:0 D)
MC:4	(EM:0 D)
MP:1	(CO:3 C)
MT:1	(CS:1 C)
MT:2	(CS:1 C)
MT:3	(CS:3 D)
MT:5	(CS:2 D)
MT:6	(CS:2 D)
MT:7	(CS:2 D)
MT:8	(CS:2 D)
MT:9	(CS:4 B)
MT:10	(CS:4 B)
OH:1	(GC:1 C)
OH:2	(GC:2 C)
OH:3	(GC:1 C)
OH:4	(GC:2 C)
OH:9	(GC:1 C)
OH:13	(GC:1 C)
OH:14	(GC:2 C)
OH:17	(GC:1 C)
OH:18	(GC:2 C)
OH:24	(GC:1 E)
PAS:1	(BI:1 C)
PAS:1	(FP:0 C)
PAS:2	(FP:1 C)
PAS:3	(FP:1 C)
PAS:6	(BI:1 D)
PH:1	(HM:0 B)
PH:1	(HP:0 B)
PH:2	(HM:0 B)
PH:2	(HP:0 C)
PH:3	(HM:2 B)
PH:3	(HP:0 D)
PH:4	(HM:1 B)
PH:5	(HM:2 B)
PH:6	(HM:3 C)
PH:7	(HM:2 D)
PH:8	(HM:0 D)
PH:9	(HM:0 D)
PH:10	(HM:3 D)
PL:1	(NC:3 C)
PL:2	(NA:1 C)
PL:2	(NR:1 C)
PL:3	(NA:1 C)
PL:3	(NR:1 C)
PL:4	(NA:1 C)
PL:4	(NR:2 C)
PL:5	(NA:1 C)
PL:5	(NR:1 C)
PL:6	(NA:2 C)
PL:6	(NR:3 C)
PL:7	(NC:1 C)
PL:7	(NU:1 C)
PL:8	(NA:4 C)
PL:8	(NR:1 C)
PL:9	(NC:1 C)
PL:9	(NU:1 C)
PL:10	(NC:2 C)

https://truckmanualshub.com/

PL:10	(NU:2 C)
PL:11	(NA:0 C)
PL:11	(NR:0 C)
PL:12	(NA:0 C)
PL:12	(NR:0 C)
PL:13	(NC:1 C)
PL:13	(NU:1 C)
PL:14	(NC:1 C)
PL:14	(NU:1 C)
PL:15	(NC:2 C)
PL:15	(NU:2 C)
PL:16	(NC:2 C)
PL:16	(NU:2 C)
PL:17	(NC:2 C)
PL:17	(NU:2 C)
PL:18	(NA:3 C)
PL:18	(NR:3 C)
PL:19	(NC:3 C)
PL:20	(NC:2 C)
PL:20	(NU:2 C)
PL:21	(NC:3 C)
PL:21	(NU:3 C)
PS:1	(DI:0 C)
PS:2	(DI:0 C)
PS:3	(DI:0 C)
PS:4	(DI:0 C)
PS:5	(DI:0 C)
PS:6	(DI:0 C)
PS:7	(DI:1 C)
PS:8	(DI:1 C)
PS:9	(DI:1 C)
PS:14	(DI:1 C)
PS:15	(DI:1 C)
PS:16	(DI:1 C)
PS:17	(DI:1 C)
PS:18	(DI:1 C)
PS:19	(DI:1 C)
PS:20	(DI:1 C)
PS:21	(DI:1 C)
PS:1	(DI:0 C)
PS:2	(DI:0 C)
PS:3	(DI:0 C)
PS:4	(DI:0 C)
PS:5	(DI:0 C)
PS:6	(DI:0 C)
PS:7	(DI:1 C)
PS:8	(DI:1 C)
PS:9	(DI:1 C)
PS:14	(DI:1 C)
PS:15	(DI:1 C
PS:16	(DI:1 C)
PS:17	(DI:1 C)
PS:18	(DI:1 C)
PS:19	(DI:1 C)
PS:20	(DI:1 C)
PS:21	(DI:1 C)
PT:1	(DE:0 B)
PT:2	(DE:0 B)
PT:3	(DE:0 B)
PT:4	(DE:0 B)
PT:6	(DE:0 B)
PT:7	(DE:0 C)
PW:1	(AA:0 B)
PW:2	(AE:2 D)
PW:3	(AE:1 C)
PW:4	(AE:1 C)
PW:5	(AE:1 D)
PW:6	(AE:1 D)
PW:7	(AE:2 C)
PW:8	(AE:2 C)
PW:9	(BI:2 D)
PW:10	(BI:2 C)
PW:11	(BI:2 C)
PW:12	(AA:0 B)
PW:15	(CM:3 B)
PW:16	(CM:2 B)
PW:17	(CM:2 C)
PW:18	(AA:3 D)
PW:19	(IQ:3 C)
PW:20	(IQ:3 D)
RA:1	(GC:1 E)
RA:2	(GC:1 B)
RA:3	(GC:1 B)
RA:4	(GC:1 B)
RA:5	(GC:2 B)
RA:6	(GC:2 B)
RA:7	(GC:1 B)
RA:8	(GC:1 B)
RA:9	(GC:2 B)
RA:10	(GC:2 B)
RA:12	(BI:2 C)
RA:13	(BI:2 D)
RA:14	(DU:3 C)
RA:15	(HI:0 C)
RA:15	(HM:0 D)
RA:16	(HI:0 C)
RA:16	(HM:0 D)
RA:17	(DU:3 C)
RC:2	(GB:1 D)
RC:2	(GK:0 A)
RC:3	(GB:2 D)
RC:3	(GK:1 A)
RC:4	(GB:1 D)
RC:4	(GK:1 A)
RC:5	(GB:2 D)
RC:5	(GK:1 A)
RC:6	(GB:2 D)
RC:6	(GK:1 A)
RC:7	(ME:0 C)
RC:9	(ME:0 C)
RC:10	(GB:2 D)
RC:10	(GK:1 A)
RC:11	(ME:0 C)
RC:12	(ME:1 C)
RC:14	(GC:4 B)
RC:17	(ME:1 C)
RC:18	(ME:1 C)
RC:19	(GK:1 A)
RC:19	(KE:0 C)
RC:20	(GK:1 A)
RC:20	(KE:0 D)
RC:21	(CP:3 B)
RC:21	(GK:1 A)
REF:1	(IQ:3 C)
REF:2	(IQ:3 D)
REV:1	(NU:2 C)
RP:1	(DI:2 C)
RP:2	(DI:2 C)
RP:3	(DI:2 C)
RP:4	(DI:2 C)
RP:5	(DI:2 C)
RP:6	(DI:2 C)
RP:7	(DI:2 C)
RT:1	(DM:3 C)
RT:2	(DM:2 C)
RT:3	(DM:2 C)
RT:4	(DM:2 C)
RT:5	(DM:2 C)
RT:6	(DM:3 C)
RT:7	(DM:3 C)
SI:1	(CP:3 B)
SI:1	(EC:1 C)
SI:1	(GK:3 A)
SI:2	(EC:0 C)
SI:2	(GK:3 A)
SI:4	(EM:0 D)
SI:4	(GK:4 A)
SI:5	(EM:0 D)
SI:5	(GK:4 A)
SLF:1	(NI:0 C)
SLF:2	(NI:0 D)
SLR:1	(NI:1 C)
SLR:2	(NI:1 D)
SMF:1	(GC:3 C)
SMF:2	(GC:0 C)
SMF:4	(GC:3 E)
SMO:1	(GC:2 C)
SMO:2	(GC:1 C)
SMO:4	(GC:1 D)
SMR:1	(GC:3 C)
SMR:2	(GC:0 C)
SMR:4	(GC:3 E)
SP:1	(BM:2 D)
SP:2	(BM:2 D)
SP:3	(BM:2 D)
SP:4	(BM:2 C)
ST:1	(CP:3 B)
ST:1	(EC:2 C)
ST:1	(GK:3 A)
ST:2	(CP:3 B)
ST:3	(CP:3 B)
SW:1	(EE:0 C)
SW:1	(EI:0 C)
SW:1	(EM:1 C)
SW:2	(EE:0 C)
SW:2	(EI:0 C)
SW:2	(EM:1 C)
SW:3	(EE:0 D)
SW:3	(EI:1 C)
SW:3	(EM:1 C)
SW:4	(EE:1 C)
SW:4	(EI:1 C)
SW:4	(EM:1 C)
SW:5	(EE:1 C)
SW:5	(EI:1 C)
SW:5	(EM:1 C)
SW:6	(EE:1 D)
SW:6	(EI:1 C)
SW:6	(EM:1 C)
SW:7	(EE:2 C)
SW:7	(EI:2 C)
SW:7	(EM:2 C)
SW:8	(EE:2 C)
SW:8	(EI:2 C)
SW:8	(EM:2 C)
SW:9	(EE:2 D)
SW:9	(EI:2 C)
SW:9	(EM:3 C)
SW:10	(EE:3 C)
SW:10	(EI:3 C)
SW:10	(EM:4 C)

https://truckmanualshub.com/

SW:11	(EE:3 C)
SW:11	(EI:3 C)
SW:12	(EE:3 D)
SW:12	(EI:3 C)
SW:13	(EE:0 C)
SW:13	(EI:0 C)
SW:14	(EE:0 C)
SW:14	(EI:0 C)
SW:15	(EE:1 C)
SW:15	(EI:1 C)
SW:16	(EE:1 C)
SW:16	(EI:1 C)
SW:17	(EE:2 C)
SW:17	(EI:2 C)
SW:18	(EE:2 C)
SW:18	(EI:2 C)
SW:19	(EE:3 C)
SW:19	(EI:3 C)
SW:20	(EE:3 C)
SW:20	(EI:3 C)
SX:1	(GK:2 C)
SX:1	(ME:0 D)
SX:2	(ME:0 D)
SX:3	(EC:0 D)
SX:3	(GK:3 C)
SX:4	(GB:2 D)
SX:4	(GK:2 C)
SX:5	(GC:4 C)
SX:6	(GB:2 D)
SX:6	(GK:2 C)
SX:7	(EM:0 D)
SX:7	(GK:3 C)
SX:8	(EM:0 D)
SX:8	(GK:3 C)
SX:10	(GB:1 D)
SX:10	(GK:2 C)
SX:11	(GB:2 D)
SX:11	(GK:2 C)
SX:12	(GB:1 D)
SX:12	(GK:2 C)
SX:15	(EC:1 D)
SX:15	(GK:3 C)
SX:18	(GB:2 D)
SX:20	(ME:1 D)
SX:21	(ME:1 D)
SX:24	(GB:3 D)
SX:24	(GK:3 C)
SX:25	(ME:0 D)
SX:29	(ME:1 D)
SX:30	(EC:2 D)
SX:30	(GK:3 C)
SX:31	(EC:1 D)
SX:31	(GK:2 C)
TA:1	(GA:2 D)
TA:2	(GA:2 C)
TA:3	(GA:2 C)
TA:4	(KA:0 C)
TA:5	(NK:3 C)
TA:6	(GA:2 C)
TA:7	(GA:2 C)
TA:8	(GA:1 C)
TA:9	(GA:3 C)
TA:10	(GQ:1 C)
TA:11	(GQ:1 B)
TA:12	(GA:2 D)
TA:13	(GU:0 C)
TA:14	(GU:0 C)
TA:15	(GU:0 C)
TA:16	(GQ:1 C)
TA:17	(NK:3 C)
TB:1	(GA:3 D)
TB:2	(GA:3 C)
TB:3	(GA:3 C)
TB:4	(KA:0 C)
TB:5	(NK:3 C)
TB:6	(GA:2 C)
TB:7	(GA:3 C)
TB:8	(GA:4 C)
TB:9	(GA:3 C)
TB:10	(GM:0 C)
TB:11	(GM:0 C)
TB:12	(GA:3 D)
TB:13	(GU:1 C)
TB:14	(GU:1 C)
TB:15	(GU:1 C)
TB:16	(GM:1 C)
TB:17	(NK:4 C)
TB:19	(GQ:2 B)
TB:20	(GQ:2 C)
TD:1	(IE:0 C)
TD:2	(IE:0 D)
TD:3	(IE:0 C)
TD:4	(IE:1 C)
TD:5	(IE:1 C)
TD:6	(BI:2 C)
TD:7	(BI:2 D)
TD:8	(GM:3 D)
TD:9	(GM:3 C)
TD:10	(GM:3 C)
TD:11	(GM:2 C)
TD:12	(GM:2 C)
TD:13	(GQ:0 B)
TD:13	(NU:2 C)
TD:14	(GQ:0 C)
TD:14	(NU:2 D)
TD:15	(IE:1 C)
TD:16	(IE:1 D)
TD:17	(IE:1 C)
TD:18	(IE:2 C)
TD:19	(IE:2 C)
TS:1	(FG:0 B)
TS:2	(FG:0 B)
TS:3	(FG:0 B)
TS:4	(FG:0 B)
TS:5	(FG:1 B)
TS:6	(FG:1 B)
X02:1	(EC:2 D)
X02:1	(GK:3 E)
X02:2	(EC:1 D)
X02:2	(GK:3 E)
X02:3	(EC:1 D)
X02:3	(GK:3 E)
X02:4	(EC:1 D)
X02:4	(GK:3 E)
X02:5	(EC:0 D)
X02:5	(GK:3 E)
X02:6	(EM:0 E)
X02:6	(GK:3 E)
X02:7	(EM:0 E)
X02:7	(GK:3 E)
X03:1	(GB:2 E)
X03:2	(GB:2 E)
X03:3	(GC:4 E)
X03:4	(GB:3 E)
X03:5	(GB:1 E)
X03:6	(GB:2 E)
X03:7	(GB:1 E)
X03:8	(GB:2 E)
X03:9	(ME:0 D)
X03:10	(ME:0 D)
X03:11	(ME:0 D)
X03:12	(ME:1 D)
X03:13	(GB:3 E)
X03:14	(ME:1 D)
X03:15	(ME:1 D)
X04:1	(EC:1 E)
X04:1	(GK:2 E)
X04:2	(GB:1 E)
X04:2	(GK:2 E)
X04:3	(GB:2 E)
X04:3	(GK:2 E)
X04:4	(GB:1 E)
X04:4	(GK:2 E)
X04:5	(GB:2 E)
X04:5	(GK:2 E)
X04:6	(GB:2 E)
X04:6	(GK:2 E)
X04:7	(GK:2 E)
X04:7	(ME:0 D)
X05:1	(EC:2 E)
X05:2	(ME:0 D)
X05:3	(GB:2 E)
X05:4	(ME:0 D)
X05:5	(ME:1 D)
X05:7	(GC:4 E)
X06:1	(NC:3 D)
X06:2	(NA:1 D)
X06:2	(NR:1 D)
X06:3	(NA:1 D)
X06:3	(NR:1 D)
X06:4	(NA:1 D)
X06:4	(NR:2 D)
X06:5	(NA:1 D)
X06:5	(NR:1 D)
X06:6	(NA:2 D)
X06:6	(NR:3 D)
X06:7	(NC:1 D)
X06:7	(NU:1 D)
X06:8	(NA:4 C)
X06:8	(NR:1 D)
X06:9	(NC:1 D)
X06:9	(NU:1 D)
X06:10	(NC:2 D)
X06:10	(NU:2 D)
X06:11	(NA:0 D)
X06:11	(NR:0 D)
X06:12	(NA:0 D)
X06:12	(NR:0 D)
X06:13	(NC:1 D)
X06:13	(NU:1 D)
X06:14	(NC:1 D)
X06:14	(NU:1 D)
X06:15	(NC:2 D)
X06:15	(NU:2 D)
X06:16	(NC:2 D)
X06:16	(NU:2 D)
X06:17	(NC:2 D)
X06:17	(NU:2 D)
X06:18	(NA:3 D)
X06:18	(NR:3 D)
X06:19	(NA:3 D)

https://truckmanualshub.com/

X06:19	(NR:2 E)
X06:20	(NC:2 D)
X06:20	(NU:2 D)
X06:21	(NC:3 D)
X06:21	(NU:3 D)
X06:22	(NC:3 D)
X06:24	(NA:3 D)
X06:24	(NR:2 D)
X06:30	(NA:3 D)
X06:31	(NA:4 D)
X15:1	(GK:2 C)
X15:2	(GK:2 C)
X15:3	(GK:2 C)
X15:4	(GK:2 C)
X15:5	(GK:2 C)
X15:6	(GK:2 C)
X15:7	(GK:2 C)
XA:1	(GB:1 B)
XA:2	(GB:1 B)
XA:3	(GB:1 B)
XA:4	(GB:1 B)
XA:5	(GB:1 B)
XA:6	(GB:2 B)
XA:7	(GB:2 B)
XA:8	(GB:2 B)
XA:9	(GB:2 B)
XA:10	(GB:1 B)
XA:11	(GB:1 B)
XA:12	(GB:1 B)
XA:13	(GB:1 B)
XA:14	(GB:1 B)
XA:15	(GB:2 B)
XA:16	(GB:2 B)
XA:17	(GB:2 B)
XA:18	(GB:2 B)
XC:1	(BM:2 C)
XC:2	(IS:0 D)
XC:3	(IH:2 C)
XC:4	(HP:0 E)
XC:5	(HG:0 D)
XC:5	(HY:2 D)
XC:6	(BU:2 C)
XC:7	(BM:1 E)
XC:8	(AE:2 C)
XC:8	(NK:1 D)
XC:9	(DB:1 E)
XC:9	(DM:0 E)
XC:10	(HP:1 E)
XC:11	(BU:0 B)
XC:12	(KI:1 C)
XD:1	(BU:0 B)
XD:2	(CU:1 D)
XD:4	(EE:4 D)
XD:4	(EI:4 D)
XD:4	(EM:2 B)
XD:5	(DU:2 E)
XD:5	(EI:0 D)
XD:5	(EM:0 C)
XD:6	(FA:3 D)
XD:6	(FK:0 C)
XD:6	(FM:1 D)
XD:8	(IX:2 D)
XD:9	(BA:1 C)
XD:9	(BI:1 E)
XD:10	(IS:1 D)
XD:11	(AA:1 D)
XD:12	(NC:0 B)
XD:12	(NU:2 D)
XE:1	(AA:2 D)
XF:1	(FA:4 B)
XF:2	(FQ:1 B)
XF:3	(ME:3 B)
XF:4	(KE:0 C)
XF:5	(FQ:0 B)
XF:6	(FQ:1 B)
XF:7	(KE:0 C)
XF:8	(KE:0 C)
XF:9	(AA:3 C)
XF:9	(AE:3 D)
XF:10	(FA:4 B)
XF:12	(KE:0 B)
XF:13	(BA:0 B)
XF:15	(FA:4 B)
XF:18	(ME:4 A)
XG:1	(AA:1 A)
XH:1	(AA:2 A)
XJ:1	(GM:2 C)
XJ:2	(GM:1 D)
XJ:3	(HG:0 B)
XJ:4	(GQ:1 A)
XJ:6	(HG:0 B)
XJ:7	(GQ:2 A)
XJ:8	(IM:1 B)
XJ:9	(IM:1 B)
XJ:10	(GA:0 B)
XJ:11	(IM:0 B)
XJ:12	(BA:1 B)
XJ:13	(GA:0 B)
XJ:14	(IH:1 B)
XJ:15	(BA:0 B)
XJ:16	(IH:2 B)
XJ:17	(IH:1 B)
XJ:18	(IH:2 B)
XK:1	(BA:0 B)
XK:2	(HY:0 B)
XK:3	(GM:3 B)
XK:4	(BA:0 B)
XK:5	(HY:0 B)
XK:6	(GM:1 D)
XK:7	(BA:0 A)
XK:8	(BA:0 B)
XK:9	(DB:1 B)
XK:9	(DM:1 B)
XK:10	(HY:0 B)
XK:11	(DB:1 B)
XK:11	(DM:0 B)
XK:12	(DB:1 B)
XK:12	(DM:1 B)
XK:13	(HY:0 B)
XK:14	(IQ:1 B)
XK:15	(IQ:2 B)
XK:16	(HY:1 B)
XK:17	(CU:0 B)
XK:18	(CU:0 B)
XL:1	(BA:1 B)
XL:2	(IH:4 B)
XL:3	(BA:1 B)
XL:5	(BA:1 B)
XL:6	(BA:1 B)
XL:7	(DB:0 B)
XL:7	(DM:0 B)
XL:8	(BI:0 B)
XL:9	(BI:0 B)
XL:10	(DB:1 B)
XL:10	(DM:0 B)
XL:11	(BI:0 B)
XL:12	(BA:1 B)
XL:13	(DQ:0 B)
XL:14	(DU:1 B)
XL:15	(BA:1 D)
XL:16	(BA:1 D)
XL:17	(BA:1 D)
XL:18	(BA:1 D)
XM:1	(AA:1 C)
XM:2	(AA:1 C)
XM:3	(AA:1 C)
XM:4	(AA:1 C)
XM:5	(AA:2 C)
XM:6	(AA:3 C)
XM:7	(AA:3 C)
XM:8	(AA:3 C)
XM:9	(AA:3 C)
XM:10	(AA:3 C)
XM:11	(AA:2 B)
XM:12	(BI:3 B)
XM:13	(AA:2 B)
XM:14	(AA:2 B)
XM:15	(BI:3 B)
XM:16	(AA:2 B)
XM:17	(AA:2 B)
XM:18	(BI:3 B)
XO:1	(AA:1 A)
XS:1	(AA:2 A)
XT:1	(AA:1 A)

List of components

https://truckmanualshub.com/

A01	Fuse and Relay Centre (1000)
A02P	Fuse holder, 6–fuses (ME:2 C) (1000)
A02x	Fuse holder, 6–fuses (ME:3 C) (1000)
A03	Instrument cluster (BI:0 B) (1000)
A04A	Refrigerator (IQ:3 C) (1007B)
A04B	Refrigerator (IQ:3 C) (1460)
A05	Display, FMS (Fleet Management System) (BU:2 D/IZ:0 D) (1000)
A06L	El. adjustable seat (IA:2 B) (1007A)
A06R	El. adjustable seat (IA:0 B) (1007B)
A07	Radio (IU:0 B) (1000)
A08	Control unit, GPS receiver (Global Positioning System) (BU:2 D) (1000)
A09	Telephone (IX:0 C) (1000)
A10	CD player (IU:3 B)
A11	Control unit, door lock (IM:1 B) (1000)
A12A	Control unit, ABS (Anti-lock Brake System) (EI:0 B) (1007C)
A12B	Control unit, ABS (Anti-lock Brake System) (EE:0 B) (1007C)
A13A	Control unit, TECU (automatic transmission) (DE:0 C)
A13B	Control unit, TECU (automatic transmission) (DI:0 B) (1007C)
A13C	Control unit, TECU (automatic transmission) (DM:0 C) (1007C)
A13D	Control unit, TECU (automatic transmission) (DN:0 B)
A14	Control unit, EMS (Engine Management System) (CO:0 C/CS:2 C) (1030)
A15	Control unit, SRS (Supplementary Restrain System) (IS:0 B) (1000)
A16	Control unit, ECS (Electronic Controlled air Suspension) (FA:0 C/FG:0 D) (1007C)
A17	Control unit, VECU (Vehicle ECU) (BA:0 C) (1000)
A18	Control unit, roof hatch (IQ:0 C) (1006E)
A19A	Control unit, GECU (gear selector ECU) (DB:1 C) (1007A/1007B/1484)
A19C	Control unit, GECU (gear selector ECU) (DB:2 C) (1007A/1007B/1484)
A20	Control unit, Immobiliser (IM:3 D) (1000)
A21	Control unit, EBS (Electronic Brake System) (EM:0 C) (1007C)
A22	Control unit, FMS (Fleet Management System) (BU:0 C/IZ:3 B) (1000)
A23	Control unit, FMS, TMC (Traffic Message Channel) (BU:3 B) (1000)
A24	Control unit, information module trailer without ABS (CP:3 C) (1000)
A25	Control unit, ESP (Electronic Stability Program) (EQ:0 C) (1007C)
A27	Control unit, LCM (Light Control Module) (GB:0 C/GC:0 A/GA:0 B) (1000)
A28	Control unit, ADR/TRS battery main switch (AE:0 D) (1435B)
A29	Telephone handset, secrecy reciever (IX:1 B) (1000/1007A/1007B)
A30	Control unit, SWM (Steering Wheel Module) (IS:1 C) (1000)
A31	Control unit, burglar alarm (NK:0 C) (1000)
A32	Control unit, parking heater (HM:0 C) (1062)
A33	Tachograph (BM:1 B) (1000)
A33B	Tachograph (/BN:1 B) (1006)
A34B	Control unit, climate unit (HG:0 B) (1000)
A35	Control unit, remote receiver, door lock (IM:0 B) (1000)
A36	Control unit, BBM (Body Builder Module) (NC:1 B/NU:1 B) (1000)
A39	Control unit, camera (IZ:0 C) (1000)
A40 HID	Fuse holder, 3–fuses (GB:0 D) (1000)
A41	Component group transmission. Contains B23, B06 and Y17 (DN:0 D/DE:0 C/DM:2 B) (1403/1499)
A42	Component group transmission. Contains B26, Y21, Y22, Y23 and Y26 (DN:2 D/DE:2 C) (1494/1499)
A43	Electric fan control (B32 fan speed sensor, Y35 visco clutch) (CO:1 D) (1030)
A44	Fuel filter bracket (B51 fuel pressure sensor, M15 priming pump) (CO:2 D) (1030)
A45	Fuel pre filter (B52 water level sensor, R10 heater, Y38 water drain solenoid (CO:3 B) (1030)
A54	Control unit, Coolant level (CS:2 D)
B02A	Thermostat, parking heater (HI:1 B) (1006A/1006E)
B02B	Thermostat, parking heater (HI:1 B) (1006A/1006E)
B02C	Thermostat, parking heater (HM:3 B) (1006A/1006E)
B02D	Thermostat, parking heater (HM:3 C) (1006A/1006E)
B03	Sensor, footbrake valve (EM:0 D) (1504)
B04	Sensor, engine speed, crankshaft (CO:0 D) (1030)
B05	Sensor, engine speed, camshaft (CO:0 D) (1030)
B06	Sensor, air pressure, air tank (BA:2 D) (1000)
B06A	Sensor, air pressure, air tank (DE:0 D) (1000)
B07	Sensor, fuel level (BI:2 C) (1040)
B08	Sensor, input shaft speed, gearbox (DE:3 B)
B09A	Sensor, oil temperature, gearbox (DE:2 D)
B09B	Sensor, oil temperature, gearbox (BI:2 C) (1494)
B10	Sensor, oil level (CO:0 C) (1030)
B10B	Sensor, oil level (FP:0 C) (1493)
B12	Sensor, tachograph/speedometer (BM:2 D) (1494)
B12B	Sensor, tachograph/speedometer (BM:2 D) (1494)
B13	Sensor, wheel speed, lhs. 1:st front axle (EI:0 D/EE:0 D/EN:0 D) (1086)
B14	Sensor, wheel speed, rhs. 1:st front axle (EI:1 D/EE:1 D/EN:1 D) (1086)
B15	Sensor, wheel speed, lhs. 1:st driven rear axle (EI:2 D/EE:2 D/EN:2 D) (1086)
B16	Sensor, wheel speed, rhs. 1:st driven rear axle (EI:3 D/EE:3 D/EN:2 D) (1086)
B17	Sensor, wheel speed, lhs. 2:nd driven rear axle (EN:3 D) (1086)
B18	Sensor, wheel speed, rhs. 2:nd driven rear axle (EN:3 D) (1086)
B19	Sensor, wheel speed, lhs. 2:nd front axle (EN:0 D) (1086)
B20	Sensor, wheel speed, rhs. 2:nd front axle (EN:1 D) (1086)
B21	Sensor, coolant temperature, engine (CO:1 D) (1030)
B22	Sensor, outdoor temperature (BI:2 C) (1504)
B23A	Sensor, oil temperature, retarder (DE:1 D)
B23B	Sensor, oil temperature, retarder (DI:0 D) (1494)

https://truckmanualshub.com/

B24	Sensor, air pressure, bogie lift bellow (FA:0 D) (1072)
B25	Sensor, accelerator pedal (BA:4 D) (1000)
B25A	Sensor, accelerator pedal (BA:3 D) (1000)
B26A	Sensor, clutch postion (DE:2 D)
B27	Sensor, battery charging (BI:2 C) (1435A/1435B)
B28	Sensor, chassi level, front axle (FA:1 D) (1072)
B29	Sensor, chassi level, lhs. rear axle (FA:1 D/EN:2 D) (1072)
B30	Sensor, chassi level, rhs. rear axle (FA:2 D) (1072)
B31	Sensor, control lever unit, tipper (NR:1 B) (1007A/1007B)
B34A	Sensor, gear position (DE:2 B)
B34B	Sensor, gear position (DE:3 B)
B35	Sensor, range gear position (DE:3 B)
B36	Sensor, split gear position (DE:3 B)
B37	Sensor, boost pressure and boost temperature (CO:0 D) (1030)
B38	Sensor, oil pressure and oil temperature (CO:1 D) (1030)
B39	Sensor, air filter pressure and air filter temperature (CO:1 B/CS:1 D) (1030)
B40	Sensor, brake lining wear indicator, lhs. 1:st front axle (EN:0 D) (1086)
B41	Sensor, brake lining wear indicator, rhs. 1:st front axle (EN:1 D) (1086)
B42	Sensor, brake lining wear indicator, lhs. 1:st driven rear axle (EN:1 D) (1086)
B43	Sensor, brake lining wear indicator, rhs. 1:st driven rear axle (EN:2 D) (1086)
B44	Sensor, brake lining wear indicator, lhs. 2:nd driven rear axle (EN:1 D) (1086)
B45	Sensor, brake lining wear indicator, rhs. 2:nd driven rear axle (EN:2 D) (1086)
B46	Sensor, brake lining wear indicator, lhs. 2:nd front axle (EN:0 D) (1086)
B47	Sensor, brake lining wear indicator, rhs. 2:nd front axle (EN:0 D) (1086)
B49	Sensor, steering angle (EQ:0 D) (1000)
B50	Sensor, yaw-rate (EQ:1 D) (1507)
B54	Sensor, crank case pressure (CO:0 B) (1030)
B55	Sensor, air pressure, suspension bellows, 3:th axle (FA:0 D) (1072)
B56	Sensor, air pressure, suspension bellows, front axle (FA:0 D) (1072)
B57	Sensor, air pressure, suspension bellows, lhs. rear (FA:0 D) (1072)
B58	Sensor, air pressure, suspension bellows, rhs. rear (FA:1 D) (1072)
B59	Sensor, indoor temperature (HG:1 B) (1000)
B59B	Sensor, indoor temperature (HY:2 D) (1000)
B60DD	Loudspeaker (IU:1 D) (1083)
B60DP	Loudspeaker (IU:1 D) (1083)
B60LF	Loudspeaker (IU:0 D) (1000)
B60LR	Loudspeaker (IU:2 D) (1006D/1006E)
B60RF	Loudspeaker (IU:1 D) (1000)
B60RR	Loudspeaker (IU:2 D) (1006D/1006E)
B61L	Loudspeaker, treble (IU:0 D) (1000)
B61R	Loudspeaker, treble (IU:1 D) (1000)
B64	Sensor, air pressure, valve unit gearbox (DE:1 D)
B67	Rear view camera (IZ:2 D) (1000)
B68	Sensor, output shaft speed, gearbox (DI:2 D) (1494)
B69A	Sensor, coolant temperature, retarder (DE:1 D)
B69B	Sensor, coolant temperature, retarder (DM:3 B) (1403)
B69C	Sensor, coolant temperature, retarder (DN:0 D) (1403)
B70	Sensor, wheel speed, lhs., pusher axle (EN:2 C) (1086)
B71	Sensor, wheel speed, rhs., pusher axle (EN:3 C) (1086)
B72	Sensor, wheel speed, lhs., tag axle (EN:3 C) 1086)
B73	Sensor, wheel speed, rhs., tag axle (EN:4 C) (1086)
B74	Sensor, brake lining wear indicator, lhs., pusher axle (EN:2 C) (1086)
B75	Sensor, brake lining wear indicator, rhs., pusher axle (EN:2 C) (1086)
B76	Sensor, brake lining wear indicator, lhs., tag axle (EN:3 C) (1086)
B77	Sensor, brake lining wear indicator, rhs., tag axle (EN:3 C) (1086)
B80	Handsfree, Loudspeaker, Microphone (IX:0 B)
B90	Transmitter, movement sensor (NK:2 D) (1006B/1006E)
B91	Reciever, movement sensor (NK:3 D) (1006B/1006E)
D01	Time delay relay, bogie lift, axle load limiter (FK:3 B) (1007B)
E01	Lamp, full beams (GA:2 C/GA:3 C) (1502/1503)
E02	Lamp, dipped beams (GA:2 D/GA:3 D) (1502/1503)
E03	Lamp, spot light (GA:1 C/GA:3 C) (1502/1503)
E04	Lamp, loading light (KE:0 D/GK:2 B) (1063)
E05	Lamp, 5:th wheel light (KE:0 D) (1063)
E06	Lamp, reversing light (GC:1 D/GC:2 D) (1040)
E07	Lamp, fog light (GA:1 C/GA:3 C) (1502/1503)
E08	Lamp, parking light, front (GA:1 D/GA:3 D) (1502/1503)
E09	Lamp, brake light (GC:1 D/GC:2 D) (1040)
E10	Lamp, tail light (GC:1 D/GC:2 D) (1040)
E11LC	Lamp, side marker light (GC:0 D) (1077)
E11LF	Lamp, side marker light (GC:0 D) (1077)
E11LR	Lamp, side marker light (GC:1 D) (1077)
E11LW	Lamp, side marker light (GC:0 D) (1077)
E11RC	Lamp, side marker light (GC:3 D) (1077)
E11RF	Lamp, side marker light (GC:3 D) (1077)
E11RR	Lamp, side marker light (GC:2 D) (1077)
E11RW	Lamp, side marker light (GC:3 D) (1077)
E12L	Lamp, roof position light (GA:4 C) (1006A)
E12R	Lamp, roof position light (GA:1 C) (1006A)
E13	Lamp, direction indicator (GC:1 D/GC:2 D) (1040)
E13F	Lamp, direction indicator (GA:2 C/GA:3 C) (1502/1503)
E13L	Lamp, direction indicator (GA:2 C) (1502)
E13R	Lamp, direction indicator (GA:3 C) (1503)
E14L	Lamp, beacon warning lamp (KM:0 D) (1047)
E14R	Lamp, beacon warning lamp (KM:1 D) (1047)
E15	Lamp, cigarette lighter illumination (IQ:2 C) (1000)
E16DS	Lamp, instep light (IH:2 C) (1083)
E16PS	Lamp, instep light (IH:2 C) (1083)
E17L	Lamp, interior light (IH:1 C) (1006B/1006E)
E17R	Lamp, interior light (IH:1 C) (1006B/1006E)
E18C	Lamp, reading light (IH:0 C) (1006D)
E18L	Lamp, reading light (IH:0 C) (1006D/1006E)
E18LB	Lamp, reading light (IH:0 C) (1006D/1006E)
E18LC	Lamp, reading light (IH:0 C) (1006C/1006E)
E18R	Lamp, reading light (IH:1 C) (1006D/1006E)
E18RB	Lamp, reading light (IH:1 C) (1006D/1006E)
E18RC	Lamp, reading light (IH:0 C) (1006C)

https://truckmanualshub.com/

E19C	Lamp, identification light, roof (GA:0 D) (1006A/1436)
E19L	Lamp, identification light, roof (GA:0 D) (1006A/1436)
E19R	Lamp, identification light, roof (GA:0 C) (1006A/1436)
E20	Lamp, ashtray illumination (IQ:2 C) (1000)
E21	Lamp, rear fog light (GC:1 D/GC:2 D) (1040)
E22	Lamp, roof sign illumination (KI:0 D) (1436)
E23	Lamp, luggage compartment illumination (IH:4 C) (1007A
E24	Lamp, storage tray illumination (IQ:1 D) (1000)
E26L	Headlight module (GA:1 C) (1502)
E26R	Headlight module (GA:3 C) (1503)
E27L	Tail lamp module (GC:1 D) (1040)
E27R	Tail lamp module (GC:2 D) (1040)
E28	Parking heater (HI:0 C/HM:0 D) (1007A/1062)
E32ATC	Climate unit (HY:2 C) (1000)
E32ECC	Climate unit (HG:1 C) (1000)
E33LC	Lamp, additional load lamps (revers lamps) (NA:0 D) (1506A)
E33LR	Lamp, additional load lamps (revers lamps) (NA:0 D) (1506A)
E33RC	Lamp, additional load lamps (revers lamps) (NA:1 D) (1506A)
E33RR	Lamp, additional load lamps (revers lamps) (NA:1 D) (1506A)
E34	Lamp, bodybuilder-centre light (IH:2 D) (1000)
G01A	Battery (AA:0 C/AE:0 C/CS:0 C)
G01B	Battery (AA:0 D/AE:0 D/CS:0 D)
G02	Alternator (AA:2 D/AE:3 D/CS:1 D) (1025)
H01	Horn, air-operated (GQ:0 B) (1502)
H02	Horn (GQ:1 B) (1502)
H03	Reverse warner, acoustic (GC:1 D/GC:2 D) (1040)
H06	Siren (NK:3 D) (1502/1503)
K1	Relay, starting switch, radio position (AA:3 B) (1000)
K2	Relay, EMS (Engine Management System) (BA:1 A) (1000)
K3	Relay, starter motor (AA:1 C) (1000)
K3B	Relay, starter motor, Cummins (CS:1 C)
K4	Relay, bodybuilder fuse box (kl.15) (ME:2 A) (1000)
K5	Relay, automatic transmission (DB:1 A/DM:0 A) (1000)
K6	Relay, fan climate unit (HY:0 B) (1000)
K7	Relay, intermittent wiper (GM:1 C) (1000)
K8	Relay, gearbox area inhibitor (BA:1 A) (1000)
K9	Relay, interior lamps (IH:1 A) (1000)
K10	Relay, fifth wheel-, working-light (KE:0 C) (1000)
K11	Relay, air suspension (FA:4 B) (1000)
K12	Not used (ME:4 B) (1000)
K13	Relay, alternator controled (AA:4 C) (1000)
K14	Time delay relay, bogie lift, A-ride (FK:1 C) (1000)
K15	Time delay relay, bogie lift, A-ride, with axle load limiter (FK:2 C) (1000)
K16	Relay, bogie lift, A-ride, with axle load limiter (FK:1 C) (1000)
K17	Relay, 3:rd axle lock, self steered axle (FM:0 C) (1000)
K18	Relay, hydraulic steered axle (FP:1 B) (1000)
K19	Relay, 3:rd axle lock, self steered axle (FM:1 C) (1000)
K20	Relay, D+ short-circuit, (ADR-trucks only) (AE:4 D) (1000)
K21	Relay, el. adjustable seat (IA:2 B) (1000)
K22	Relay, climate fan, 1:st speed (by parking heater) (HY:1 B) (1000)
K23	Relay, cab tilt (KA:0 C) (1000)
K24	Relay, central lubrication (FU:0 B) (1000)
K25	Relay, light sign (KI:1 C) (1000)
K26A	Relay, foldable rearview mirror arm, Japan (IF:0 C) (1000)
K26B	Relay, foldable rearview mirror arm, Japan (IF:1 C) (1000)
K27	Relay, gas discharge lamp, dipped beam, lhs (GB:0 D) (1000)
K28	Relay, gas discharge lamp, dipped beam, rhs (GB:0 D) (1000)
K30	Relay, beacon warning light (KM:0 B) (1000)
K35	Relay, headlamp high pressure wash (GM:0 C) (1000)
K37A	Relay, parking light (NR:0 C)
K37B	Relay, parking light (NA:0 C)
K38	Relay, pressure selection, tipper trailer (NA:1 C)
K38A	Relay, pressure selection, tipper trailer (NR:1 C) (1000)
K38B	Relay, pressure selection, tipper trailer (NR:1 C) (1000)
K39A	Relay, prepared wirings for body-builder (auxsw-6) A (NR:2 C)
K39B	Relay, prepared wirings for body-builder (auxsw-6) A (NA:1 C)
K40A	Relay, prepared wirings for body-builder (auxsw-6) B (NR:3 C)
K40B	Relay, prepared wirings for body-builder (auxsw-6) B (NA:2 C)
K41A	Relay, prepared wirings for body-builder (auxsw-6) C (NR:3 C)
K41B	Relay, prepared wirings for body-builder (auxsw-6) C (NA:3 C)
K42	Relay, spotlights (NI:1 B) (1000)
K43	Relay, external engine start (NC:3 C) (1000)
K45	Relay, prepared wirings for body-builder (NU:2 B) (1000)
K48	Power relay, engine preheating (CM:2 B) (1435A/1435B)
K49	Power relay, bogie lift motor (FK:3 D) (1037)
K51	Power relay, battery main switch (AA:0 C/CS:0 C) (1435A)
K52	Power relay, ADR battery main switch (AE:0 B) (1435B)
K54	Relay, 12V ABS Trailer (CP:2 D) (1435B)
L01	Reactor, light sign illumination (KI:0 D)
L01L	Reactor, light sign illumination (KI:2 C)
L01R	Reactor, light sign illumination (KI:2 D)
M01	Motor, windscreen wiper (GM:2 C) (1504)
M02	Motor, windscreen washer pump (GM:0 D) (1503)
M03	Motor, headlamp high pressure washer pump (GM:1 D) (1503)
M04	Motor, starter motor (AA:0 D/AE:2 D/CS:0 C) (1025)
M05	Motor, hydraulic bogie lift pump unit (FK:3 C) (1037)
M06DS	Motor, window winder (IE:2 C) (1083)
M06PS	Motor, window winder (IE:3 C) (1083)
M08	Motor, levelling control, headlights (GA:1 C/GA:3 C) (1502/1503)
M09DS	Motor, door lock (IM:1 D) (1083)
M09PS	Motor, door lock (IM:2 D) (1083)

https://truckmanualshub.com/

M10	Motor, roof hatch (IQ:0 E)
M11	Motor, cab tilt pump (KA:0 D) (1502/1503)
M13	Motor, coolant pump, parking heater (HP:0 C) (1062)
M14	Motor, central lubrication pump (FU:0 C) (1401)
M17	Motor, foldable rearview mirror arm, Japan (IF:0 D) (1470)
R01	Heater, engine preheat (CO:3 B) (1030)
R02L	Heater, rear-view mirror (IE:0 D) (1504)
R02R	Heater, rear-view mirror (IE:1 D) (1504)
R04	Cigarette lighter (IQ:2 C) (1000)
R05	Heater, air dryer (FQ:0 C) (1056)
R08	Termination resistor, CAN-bus (XB:2 D/CS:3 B)
R11	Heater, coffee maker (ME:1 B) (1000)
R12	Current limiter, tachograph (AE:0 D) (1435B)
R13	Resistor, LCP headlight adjust (GU:1 B) (1000)
R14B	Termination resistor (DI:3 D)
R17	Resistor (AA:3 C/AE:3 D) (1000)
S01	Switch, main lighting, selector type (GA:0 A/GU:1 B) (1000)
S02	Stalk switch, full-/dipped beam, direction indicator (GA:2 B) (1000)
S03	Switch, loading lamps/working lamps (KE:1 B) (1000)
S03B	Switch, loading lamps/working lamps (NR:0 B)
S04	Switch unit, climate fan (HY:1 B) (1000)
S05A	Switch, interior light, selector type (IH:3 B) (1000)
S05B	Switch, interior light, selector type (IH:3 B) (1006D/1006E)
S06	Stalk switch, windscreen wiper, selector type (GM:3 B) (1000)
S07	Switch, engine brake, selector type (BA:3 B) (1000)
S07A	Switch, engine brake, selector type (CP:0 B) (1000)
S07B	Switch, engine brake, selector type (CP:1 B) (1000)
S08	Switch, differential gear lock, rear wheels (DU:0 B) (1000)
S09	Switch, differential gear locks, inter axles and rear wheels, selector type (DU:1 B) (1000)
S10	Switch, sign light, roof (KI:1 B) (1006A)
S11	Switch, bogie lift, selector type (FK:0 B) (1000)
S11A	Switch, bogie lift, selector type (FA:3 B) (1000)
S11B	Switch, bogie lift, selector type (NR:4 B) (1000)
S14A	Switch, push button, horn (GQ:1 D)
S14B	Switch, push button, horn (GQ:1 D)
S15	Switch, ignition, selector type (AA:2 B/AE:0 B) (1000)
S16	Switch, push button, air horn (GQ:21 D)
S17	Switch, front wheel drive (DU:2 B) (1000)
S18	Switch, differential gear lock, front (DU:2 B) (1000)
S19	Switch, extra (NA:2 B)
S19C	Switch, extra (NR:2 B) (1000)
S20	Switch, 3:rd axle lock (FM:0 B) (1000)
S20B	Switch, 3:rd axle lock (NR:3 B) (1000)
S21A	Switch, parking heater (HI:2 B/HM:2 B) (1000)
S21B	Switch, parking heater (HI:3 B/HM:3 B) (1006D/1006E)
S23	Switch, roof hatch, selector type (IQ:0 B) (1006A)
S24	Stalk switch, retarder, selector type (BA:3 B) (1000)
S25	Switch unit, cruise control (BA:2 B) (1000)
S26A	Switch, cab tilt pump (KA:0 B) (1000)
S26B	Switch, cab tilt pump (KA:0 D) (1502/1503)
S27	Switch, storage tray illumination (IQ:1 C) (1000)
S28	Switch, power take off (DQ:0 B) (1000)
S28A	Switch, power take off (NC:0 B/NU:0 B) (1000)
S30	Switch unit, multi-function display (BI:3 C) (1000)
S31	Switch, TCS (Traction Control System) (EM:1 B) (1000)
S33	Switch, trailer brake (EM:0 B) (1000)
S34	Switch unit, steering wheel push buttons (IS:1 D) (1000)
S36DS	Switch unit, door functions (IE:0 B) (1083)
S36PS	Switch unit, door functions (IE:3 B) (1083)
S37	Switch, rear view camera, camera activation (IZ:1 B) (1000)
S38	Switch, ADR, emergency switch, cab (AE:1 B) (1000)
S39	Switch, ADR, emergency switch, exterior (AE:1 C) (1007A/1007B)
S39B	Switch, ADR, emergency switch, exterior (AE:2 C)
S40	Switch, rear view camera, camera selection (IZ:2 B)
S41	Switch, battery main switch control (AA:0 C) (1435A)
S42	Switch, pressure selector, power take off (NR:1 B) (1000)
S45	Position switch, differential gear lock indicator, rear wheels, NC. or NO. (DU:3 C) (1040)
S45R	Position switch, differential gear lock indicator, rear wheels, NC. or NO. (DU:3 C) (1040)
S46	Pressure switch, bogie lift indicator, NO. (FK:3 E) (1037)
S47	Position switch, low split indicator, NO. (BI:1 D) (1494)
S48A	Pressure switch, brake light, NO. (GB:3 B) (1401)
S48B	Pressure switch, brake light, NO. (GB:3 B) (1401)
S48C	Pressure switch, brake light, NO. (GB:3 A) (1000)
S49	Position switch, reverse lamps, NO (GB:3 D) (1494)
S50	Pressure switch, exhaust pressure governor, NC. (BA:1 D) (1000)
S52L	Proximity switch, cab lock, NO. (BI:3 C) (1007A)
S52R	Proximity switch, cab lock, NO. (BI:3 D) (1007B)
S53	Position switch, front-wheel drive indication, NO. (DU:4 C) (1458)
S54	Position switch, differential gear lock, front-wheels, NO. (DU:4 C) (1458)
S55	Thermal switch (HP:0 C) (1062)
S56	Thermal switch, bogie lift, NC (FK:3 D) (1037)
S57L	Position switch, luggage compartment lighting, NC. (IH:4 D) (1007A)
S57R	Position switch, luggage compartment lighting, NC. (IH:3 D) (1007B)
S58	Position switch, clutch pedal, NO. (BA:3 D) (1000)
S59	Position switch, brake pedal, NO. (BA:3 D) (1000)
S60	Pressure switch, oil, power steering, NC. (FP:0 C) (1493)
S60A	Pressure switch, oil, power steering, NC. (BI:0 D) (1493)
S60B	Pressure switch, oil, power steering, NC. (BI:1 D) (1493)
S63	Position switch, low range gear (BA:0 B) (1494)
S64	Pressure switch, air pressure, parking brake tank, NC. (EM:4 B) (1000)
S66L	Switch unit, ECS (electronic controlled susp.), full air suspension (FA:2 D) (1007A/1007B)

https://truckmanualshub.com/

S66R	Switch unit, ECS (electronic controlled susp.), full air suspension (FA:4 D) (1007A/1007B)
S68	Sensor, coolant level (CO:1 C/CS:3 D) (1030)
S69	Proximity switch, bogie lift position, NO. (FK:1 D) (1037)
S70	Position switch, flow sensor, power-steering, NC. (BI:1 D) (1493)
S70A	Position switch, flow sensor, power-steering, NC. (FP:1 C) (1493)
S71	Pressure switch, compressor charging, NO. (BA:0 D) (1056)
S72	Switch, water separator draining (CU:0 B) (1000)
S73	Switch, acoustic reverse warning (GC:3 A) (1006A)
S74	Switch, short stop cab heater (HP:0 B) (1000)
S75	Switch, beacon warning light (KM:0 B) (1000)
S76	Switch, spotlights (NA:4 B)
S76A	Switch, spotlights (NI:2 C) (1006A)
S78	Switch unit, TIS (Trafic Information System) (BU:2 B) (1000)
S79A	Switch, additional work lamps (revers lamps), manual turn on (NA:1 B)
S79B	Switch, additional work lamps (revers lamps), manual turn on (NA:1 B)
S79D	Switch, additional work lamps (revers lamps), manual turn on (NA:01 B)
S80	Position switch, front hatch (NK:1 D) (1504)
S83	Switch, container lock (NA:3 B)
S84	Switch, tachograph mode (BN:0 C) (1006)
S86	Switch, foldable rearview mirror arm, Japan (IF:1 B) (1000)
S88L	Position switch, door, NC (NK:0 D) (1007A)
S88R	Position switch, door, NC (NK:0 D) (1007B)
S95	Switch, Panic alarm (NK:2 A) (1000)
S96	Switch, Reduced set, Alarm (NK:2 B) (1000)
U01	Modulator, EBS, left front (EN:0 C) (1086)
U02	Modulator, EBS, right front (EN:0 C) (1086)
U03	Modulator, EBS, rear axle (EN:1 C) (1086)
U04	Modulator, EBS, pusher axle (EN:2 B) (1086)
U05	Modulator, EBS, trailer (EM:2 B) (1401)
U06	Voltage converter (CS:0 C)
U06B11	Voltage converter (IR:1 B) (1007C)
U06R11	Voltage converter (IR:1 B) (1007C)
U06R19	Voltage converter (IR:0 B) (1007C)
U07	Modulator, EBS, tag axle (EN:3 B) (1086)
U10	Voltage converter, 12V ABS Trailer (CP:4 B)
V02	Diode module (AE:2 B) (1000)
V03	Diode (EC:1 B)
V04	Diode (FK:0 D) (1037)
V05	Diode (FK:2 D)
V06	Diode (FM:0 C)
V07	LED, indicator, Alarm (NK:2 C) (1000)
V08	Diode (NU:2 B) (1000)
V09	Diode (CP:4 B)
V10	Diode (CP:3 C)
V11	Diode (CP:3 C)
W02	Antenna, immobiliser (IM:3 C) (1000)
W03	Antenna, remote door lock (IM:0 B) (1000)
X01	Connector, vehicle diagnostics (XA:0 C) (1000)
X01B	Connector, vehicle diagnostics (XA:0 C)
X01C	Connector, vehicle diagnostics (XA:0 D)
X02	Trailer connection, ABS/EBS (1063)
X03	Trailer connection, 15–pole unit (1063)
X04	Trailer connection, 7–pole unit, 24 N (1063)
X05	Trailer connection, 7–pole unit, 24 S (1063)
X06	Connector, 31–pole, in lhs. frame side, for body builder preparations (1505)
X07B	Socket, 12V (IR:1 D) (1000)
X08	Contact reel, air bag (IS:0 C) (1000)
X09	Slip contact, horn (GQ:1 C) (1000)
X10	B+ pass through, cab (AA:0 A) (1000)
X11	Power connector, engine (AA:0 D/AE:2 C/CS:0 D)
X12	Power connector (CO:3 B/CM:3 C)
X14	B+ connector, Engine ISX (CS:1 B)
X25	Power connector, bogie lift/extra equipment (AA:0 B)
Y02	Solenoid valve, differential lock, rear wheels (DU:1 D) (1401)
Y03	Solenoid valve, differential lock, inter axles, rear (DU:1 D) (1401)
Y05	Solenoid valve, bogie lift (FK:0 D) (1037)
Y06	Solenoid valve, range inhibitor (BA:0 B) (1494)
Y08	Solenoid valve, front-wheel drive (DU:2 D) (1458)
Y09	Solenoid valve, differential lock, front axle (DU:2 D) (1458)
Y10	Solenoid valve, 3:rd axle lock (FM:0 D)
Y11	Solenoid valve unit, ABS, lhs. front (EE:0 D/EI:0 D) (1086)
Y12	Solenoid valve unit, ABS, rhs. front (EE:1 D/EI:1 D) (1086)
Y13	Solenoid valve unit, ABS, lhs. rear (EE:2 D/EI:2 D) (1086)
Y14	Solenoid valve unit, ABS, rhs. rear (EE:3 D/EI:3 D) (1086)
Y17A	Solenoid valve, retarder (DE:0 D)
Y17B	Solenoid valve, retarder (DI:2 D) (1494)
Y18	Solenoid valve, PTO (Power Take Off) (DE:2 B) (1499)
Y18A	Solenoid valve, PTO (Power Take Off) (DQ:0 D) (1401)
Y18B	Solenoid valve, PTO (Power Take Off) (DI:0 C) (1494)
Y18C	Solenoid valve, PTO (Power Take Off) (NC:0 D/NU:0 D)
Y18G	Solenoid valve, PTO (Power Take Off) (DN:2 B) (1499)
Y18H	Solenoid valve, PTO (Power Take Off) (DN:2 B) (1499)
Y21	Solenoid valve, slow clutch disengage (DE:2 D)
Y22	Solenoid valve, fast clutch disengage (DE:3 D)
Y23	Solenoid valve, fast clutch engage (DE:3 D)
Y25	Solenoid valve unit, level control, air suspension (FA:1 B) (1072)
Y26	Solenoid valve, slow clutch control (DE:2 D)
Y29	Solenoid valve unit, trailing axle (FA:2 B) (1072)
Y30A	Solenoid valve unit, gearbox (DE:0 B)
Y30B	Solenoid valve unit, gearbox (DE:1 B)
Y30C	Solenoid valve unit, gearbox (DI:0 D) (1494)
Y31	Solenoid valve, area inhibitor (BA:1 B) (1494)
Y32	Fuel dosing pump, parking heater (HI:0 B/HM:0 D) (1040)
Y33	Solenoid valve, UI (Unit Injectors) (CO:2 D) (1030)
Y36	Solenoid valve, steerable axle (FP:1 C) (1493)
Y37	Solenoid valve unit, AVU (CO:2 B) (1030)
Y39	Solenoid valve, VCB (CO:3 D) (1030)
Y40	Solenoid valve unit, front axle, air suspension (FA:0 B) (1072)
Y42	Clutch, magnetic, air conditioning compressor (HG:0 D/HY:2 D/CS:2 D) (1025)
Y43L	Seat belt tensioner, pyrotechnical (IS:2 D) (1007A)
Y43R	Seat belt tensioner, pyrotechnical (IS:3 D) (1007B)
Y44	Air-bag, pyrotechnical (IS:0 D)

Y45A	Solenoid valve unit, tipper body (NR:0 D) (1506B)
Y45B	Solenoid valve unit, tipper body (NR:1 D) (1506B)
Y45C	Solenoid valve unit, tipper body (NR:1 D) (1506B)
Y45D	Solenoid valve unit, tipper body (NR:1 D) (1506B)
Y48	Solenoid valve, container lock (NA:3 D) (1506A)
Y49	Solenoid valve, parking brake (GQ:0 B/NU:2 C) (1504)
Y52	Clutch, magnetic, engine fan (CS:4 B)

https://truckmanualshub.com/

Abbreviations

https://truckmanualshub.com/

ABS	Antilock brake system
ACU	Alarm control unit
ADR-BAS1	ADR adaption, 1 switch
ADR-BAS2	ADR adaption, 2 switches
ATC	Automatic temperature control
AUS	Australia
AUXSW-6	Wiring for six auxiliary switches for body building
AWD	All wheel drive
BBM	Body builder module
BBOX-R	Battery box right hand side
CLU	Central locking unit
CU-ACAUT	Air condition, automatic
CU-ACMAN	Air condition, manual
CU-BAS	Basic version with stepper motor without air condition
CU-ECC	Electronic controlled climate control air condition
CU-HEAT	Heater unit
CU-MCC	Manual controlled climate control air condition
EBS	Electronic brake system
ECS	Electronic controlled air suspension
ELCE-CK	Electrical complete kit for body builder
ENG-VE9	Volvo engine 9 liter
ENG-VE12	Volvo engine 12 liter
ESP	Electronic stability program
GECU	Gear selector electronic control unit
GSS-AGS	Automatic gear shifting system
HL-BASIC	Basic headlamps
HL-HID	High intencity discharged headlamps
HYDRKIT	Hydraulic kit
ISX	Engine variant (Australia only)
LCM	Light control module
L1H1	Short cab
L2H1	Long cab
L2H2	Long high cab (Globetrotter)
LF	Left front
LHD	Left hand drive
LHS	Left hand side
LR	Left rear
MECHTRAN	Mechanical transmission
PA-HYDRS	Hydraulic steered pusher axle
PCB	Printed circuit board
PH-CAB	Cab parking heater
PH-ENGCA	Engine and cab parking heater
PSS-DUAL	Power steering system dual
PTO	Power take off
RADT-AR	6x2, leaf spring (A-ride)
RCU	Remote control unit
RF	Right front
RHD	Right hand drive
RHS	Right hand side
RIGID	Plattform or tipper truck
RR	Right rear
SI-GRAF	Tachograph
SI-GRAFR	Tachograph
SI-SPEED	Speedometer
SPEED-DU	Dual speed limiter
SRS	Supplementary restrain system
STWPOS-L	Steering wheel position left hand side
STWPOS-R	Steering wheel position right right hand side
SUSPL-EC	Air suspension, electronic control system levelling device
SUSPL-M	Air suspension, manual regulation levelling device
SWAPBODY	Swap body
SWM	Steering wheel module
TA-HYDRS	Hydraulic steered tag axle
TECU	Transmission electronic control unit
TMC	Traffic message channel
TRACTOR	Semi-trailer tractor
TREL7-7	Trailer connectors 2x7-unit
UADR	Without ADR adaption
URETARD	Without retarder
USUSPLEV	Without air suspension levelling device
VECU	Vehicle electronic control unit

Cable colour code

https://truckmanualstuff.com/

BL	Blue
BN	Brown
GN	Green
GR	Grey
OR	Orange
P	Pink
R	Red
SB	Black
VO	Violet
W	White
Y	Yellow

Note: If a wire have two colours, this is written out like the following example: Y/R = Yellow/Red.

Feedback

https://manualshub.com/

One of our objectives is that workshop personnel should have access to correct and appropriate service manuals where it concerns fault tracing, repairs and maintenance of Volvo vehicles.
In order to maintain the high standards of our literature, your opinions and experience when using this manual would be greatly appreciated.
If you have any comments or suggestions, make a copy of this page, write down your comments and send them to us, either via telefax or mailing directly to the address listed below.

To	**From**
Volvo Parts Corporation	.....
Dept. Market Support 31100	.....
S-405 08 GÖTEBORG	.....
SWEDEN	.....
	.....
Fax +46 31 661060	.....
Fax +46 31 661055	.....

Comments/proposals

.....
.....
.....
.....
.....
.....
.....
.....
.....
.....
.....
.....
.....
.....
.....

Concerns Service Manual: .....

https://truckmanualshub.com/

https://truckmanualshub.com/

VOLVO

Volvo Truck Corporation

Göteborg, Sweden

TSP175664 English 3500.9.02