https://truckmanualshub.com/

Service Manual Trucks

Group **37**

Release **01**

Wiring diagram

FM9, FM12, FH12, FH16, NH12 VERSION2

FM, FH CHID A610059–

FM, FH CHID B411901–

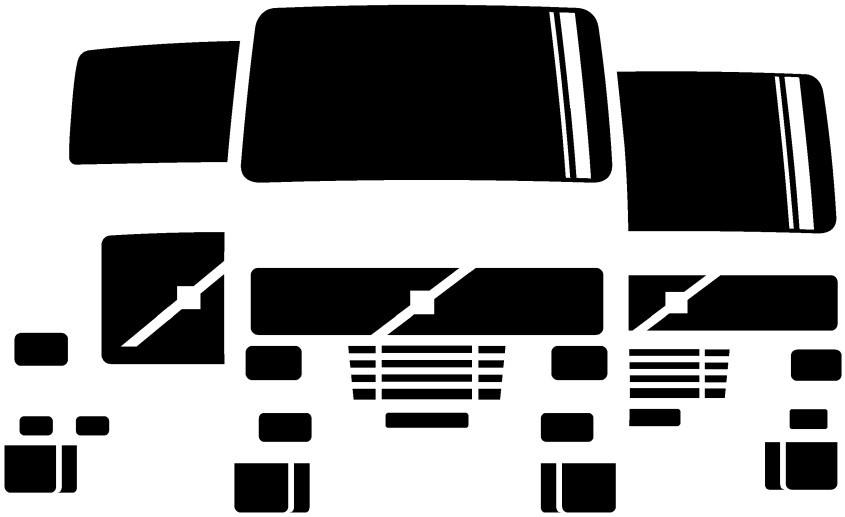

20 037631

VOLVO

https://truckmanualshub.com/

Foreword

The descriptions and service procedures contained in this manual are based on designs and methods studies carried out up to September 05.

The products are under continuous development. Vehicles and components produced after the above date may therefore have different specifications and repair methods. When this is judged to have a significant bearing on this manual, supplementary service bulletins will be issued to cover the changes.

The new edition of this manual will update the changes.

In service procedures where the title incorporates an operation number, this is a reference to V.S.T. (Volvo Standard Times).

Service procedures which do not include an operation number in the title are for general information and no reference is made to V.S.T.

The following levels of observations, cautions and warnings are used in this Service Documentation:

Note: Indicates a procedure, practice, or condition that must be followed in order to have the vehicle or component function in the manner intended.

Caution: Indicates an unsafe practice where damage to the product could occur.

Warning: Indicates an unsafe practice where personal injury or severe damage to the product could occur.

Danger: Indicates an unsafe practice where serious personal injury or death could occur.

Volvo Truck Corporation
Göteborg, Sweden

Order number: 20 037631

© 05 Volvo Truck Corporation, Göteborg, Sweden

All rights reserved. No part of this publication may be reproduced, stored in retrieval system, or transmitted in any forms by any means, electronic, mechanical, photocopying, recording or otherwise, without the prior written permission of Volvo Truck Corporation.

ENG18353

https://truckmanualshub.com/

Contents

Example of wiring diagram 2

Component wiring diagram index 5

Component wiring diagrams 8

Illustrations index 90

Illustrations 91

Fuses 171

Relays 173

Wiring harness illustration index 175

Earth connections 178
List of earth connections 180

List of connectors 181

List of components 189

Abbreviations 195

Cable colour code 197

Feedback

Example of wiring diagram

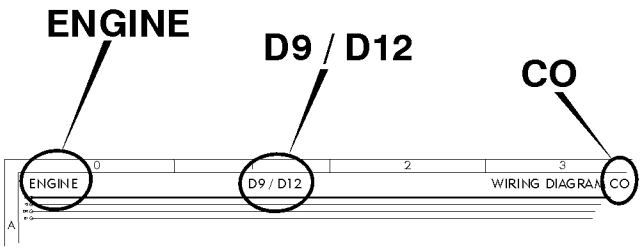

Component wiring diagram title, variant/subtitle and symbol.

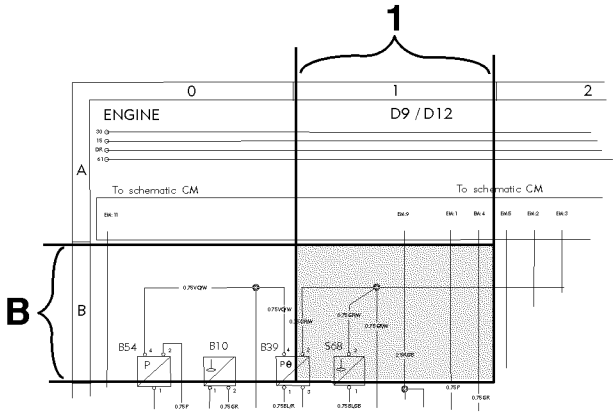

Coordinates (B 1).

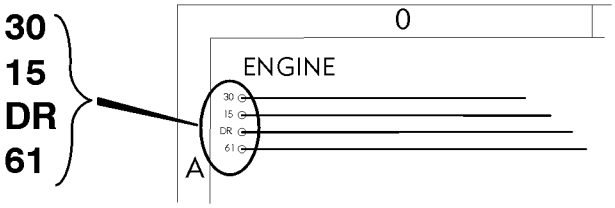

30 Voltage battery, kl.30.
15 Voltage with starter key in drive position, kl.15.
DR Voltage with starter key in drive position, preheat position and start position, kl.DR.
61 Voltage when alternator charges, kl.61.

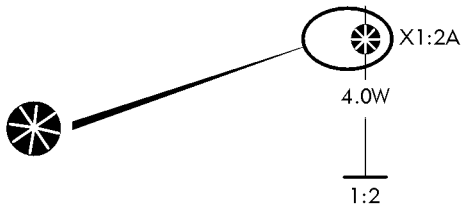

Splice.

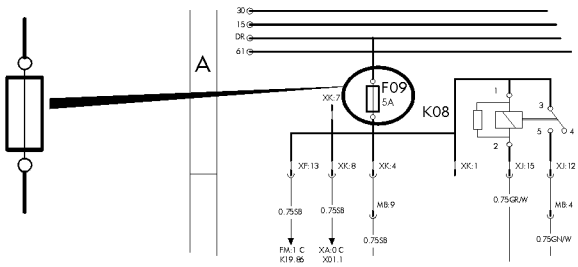

Fuse.

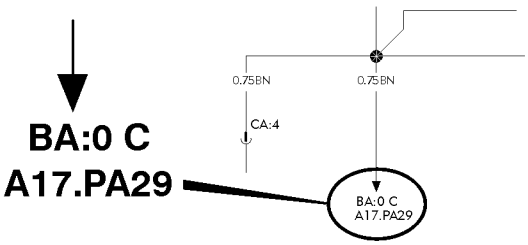

Reference arrow, for diagram BA, coordinates 0 C, component A17, connector PA pin 29.

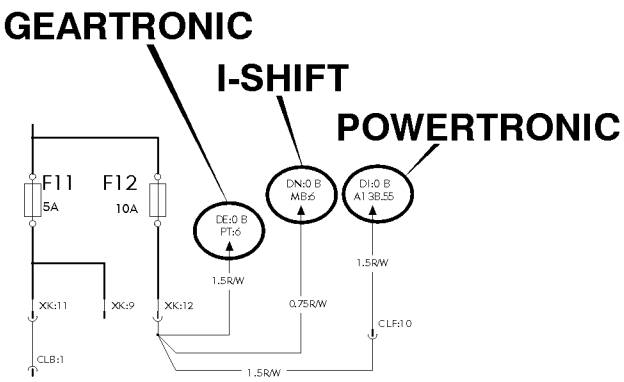

The maximum of variants are drawn, think about that all wires and components are not standard for all markets or vehicle models.

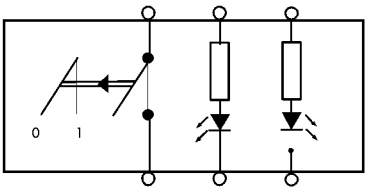

Switch.

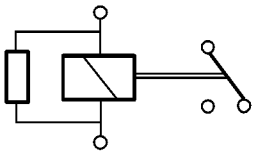

Relay.

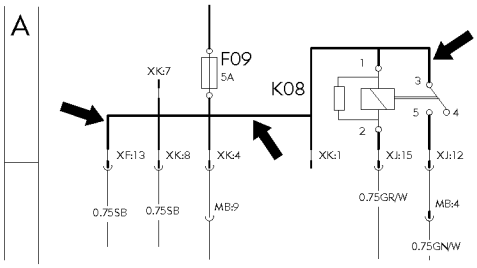

Conductor on circuit card.

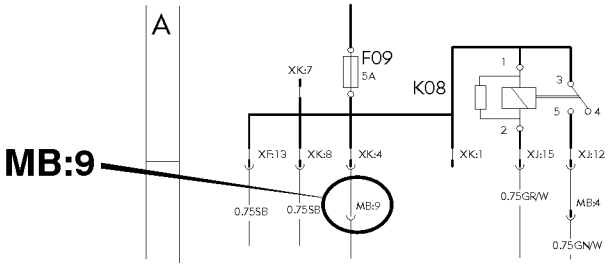

Connector MB terminal 9.

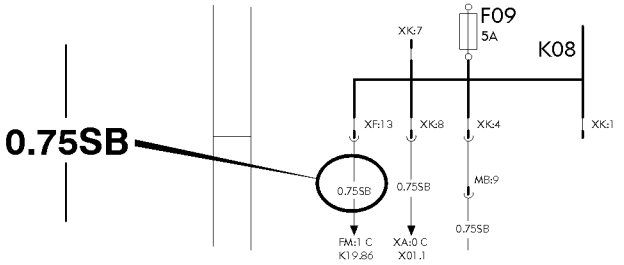

Wire area and colour.

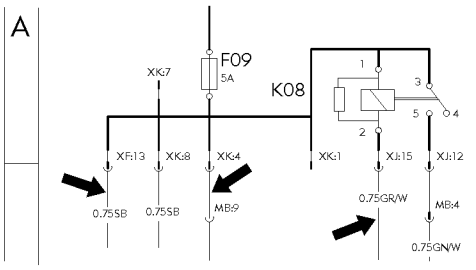

Thin lines, wires.

https://truckmanualshub.com/

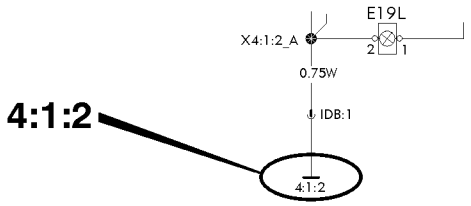

Earth connection point 4, earth connection 1 and wire 2.

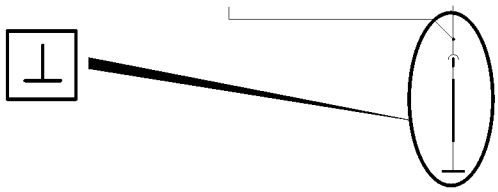

Earth connection to circuit card.

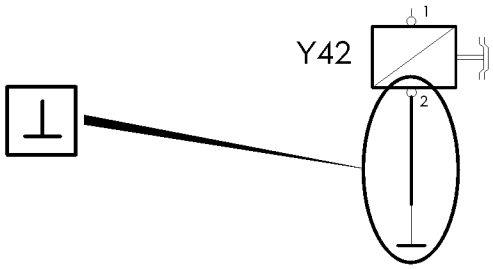

Earth connection without wire.

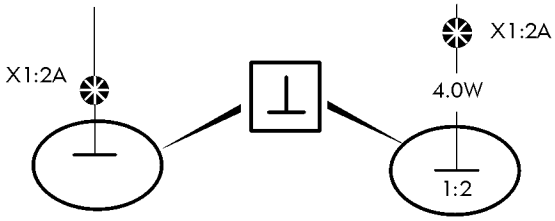

Same splice can be drawn on several diagrams. The wire from the splice to the earth connection point will only be drawn and coded on one diagram. On the other diagrams will only the earth connection point be written besides the splice.

https://truckmanualshub.com/

Component wiring diagram index

AA	Power supply, starting system	page 8
AB	Remote main switch	page 9
AC	Power distribution	page 10
AE	ADR, main switch	page 11
BA	Vehicle ECU	page 12
BE	ACC Adaptive cruise control	page 13
BI	Instrument cluster	page 14
BM	Tachograph in dash	page 15
BN	Tachograph in shelf	page 16
BU	Dynafleet	page 17
BX	FMS Gateway	page 18
BY	Volvo link (VERS-SAM)	page 19
CM	Engine interface	page 20
CO	Engine D9	page 21
	Engine D12	page 22
	Engine D16	page 23
CP	ISX functions, 12V trailer ABS converter (AUS only)	page 24
CS	Engine ISX (AUS only)	page 25
DB	Gear selector ECU (GEARTRONIC)	page 26
DC	Gear selector ECU (I-SHIFT/POWERTRONIC)	page 27
DE	Geartronic automatic gearshift	page 28
DI	Powertronic	page 29
DM	Retarder manual gearshift	page 30
DN	I-shift	page 31
DQ	Power take off	page 32
DU	Diff-lock	page 33
EE	ABS basic, D-version	page 34
EI	ABS/ASR D-version	page 35
EO	EBS ECU	page 36
EP	EBS modulators	page 37
FA	Air-suspension	page 38
FG	Load indikator	page 39
FI	Bogie lift A-ride	page 40
FK	Bogie lift A-ride with axle load limiter	page 41
FM	Axle lock, self steered axle	page 42
FO	Electronic steered axle	page 43
FP	Hydraulic steered axle	page 44

https://truckmanualshub.com/

FQ	Air dryer	page 45
FU	Central lubrication system	page 46
GA	LCM head lights	page 47
GB	LCM trailer	page 48
GC	LCM rear lights	page 49
GD	HID lamps	page 50
GE	Rear lights overhang	page 51
GF	Rear lights, India/Korea	page 52
GG	Trailer connections, RIGID	page 53
GH	Trailer connections, TRACTOR	page 54
GI	LCM head lights (VERS-SAM TYPE-N)	page 55
GK	Trailer connections (AUS only)	page 56
GM	Wiper, washer	page 57
GQ	Horn	page 58
GU	Headlights adjust	page 59
HG	Climate unit, CU,-BAS,-MCC,-ECC	page 60
HI	Air heater	page 61
HM	Water heater	page 62
HP	Short stop cab heater	page 63
HY	Climat unit, CU,-HEAT,-ACMAN,-ACAUT.	page 64
HZ	Air cooler, Brazil	page 65
IA	El. heated/adj. seat	page 66
IE	El. heat/adj. mirrors, El. window winders	page 67
IF	Foldable mirror bracket	page 68
IH	Interior light	page 69
IM	Central locking, immobiliser	page 70
IQ	El. sunroof, cig. lighter, refrigerator	page 71
IR	12V power supply	page 72
IS	SWM, SRS. Air-bag	page 73
IU	Radio	page 74
IX	Integrated telephone	page 75
IZ	Backup camera	page 76
KA	Cab tilt	page 77
KE	Load light, 5:th wheel lamp	page 78
KI	Light sign	page 79
KM	Beacon warning light	page 80
ME	Extra fuse block, key switch relay	page 81
NA	Body builder (BB), auxsw-6 and swapbody	page 82

https://truckmanualshub.com/

NC Body builder (BB), ELCE-CK, BBM, PTO2 ..... page 83
NI Extra spotlamps front/roof, max 4x70W ..... page 84
NK Burglar alarm ..... page 85
NU Body builder (BB), DUAL-SPEED ..... page 86
OA Tyre pressure monitoring (TPM) ..... page 87
XA Bus J1708/J1587 ..... page 88
XB Bus J1939 ..... page 89

Component wiring diagrams

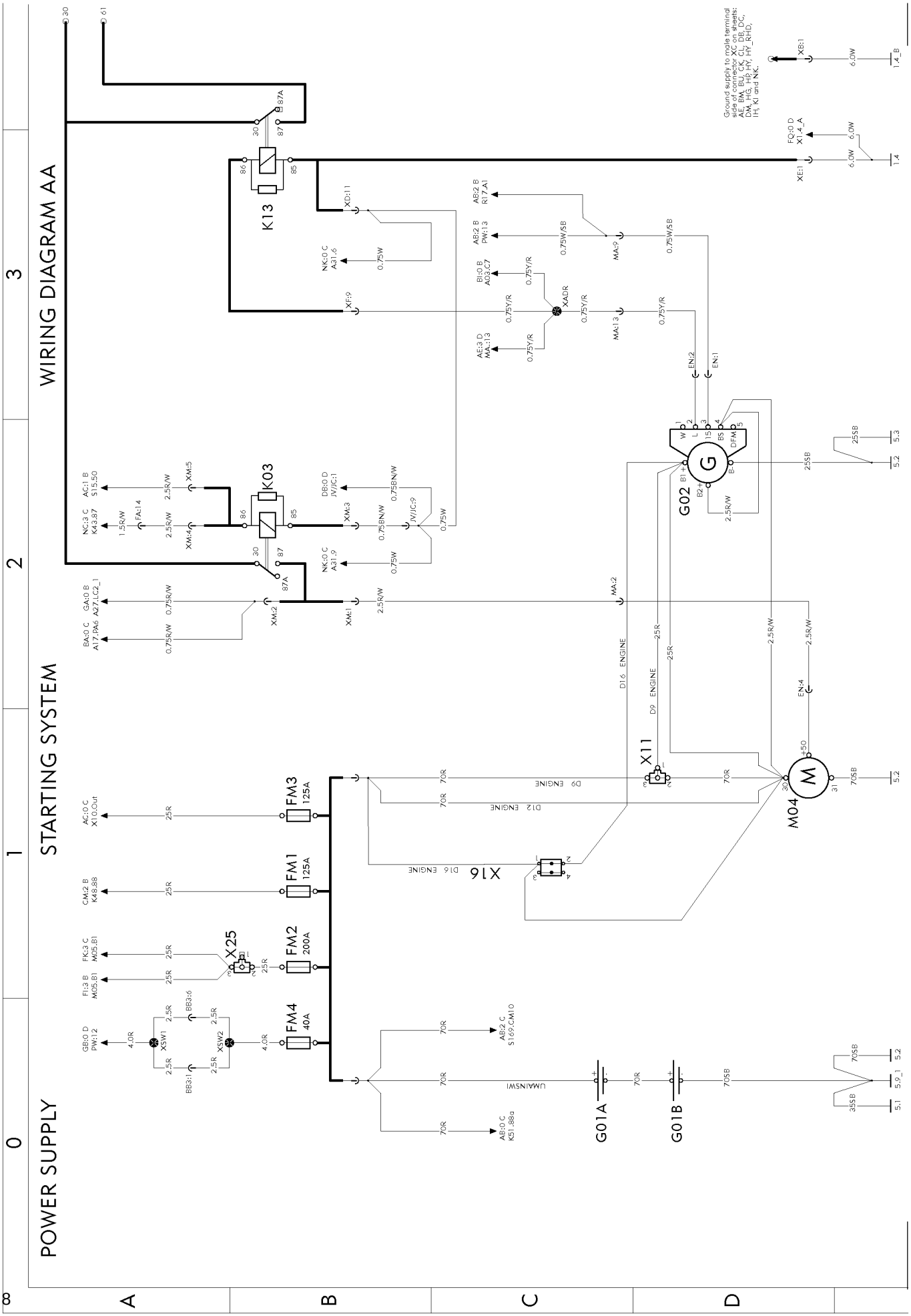

https://truckmanualshub.com/

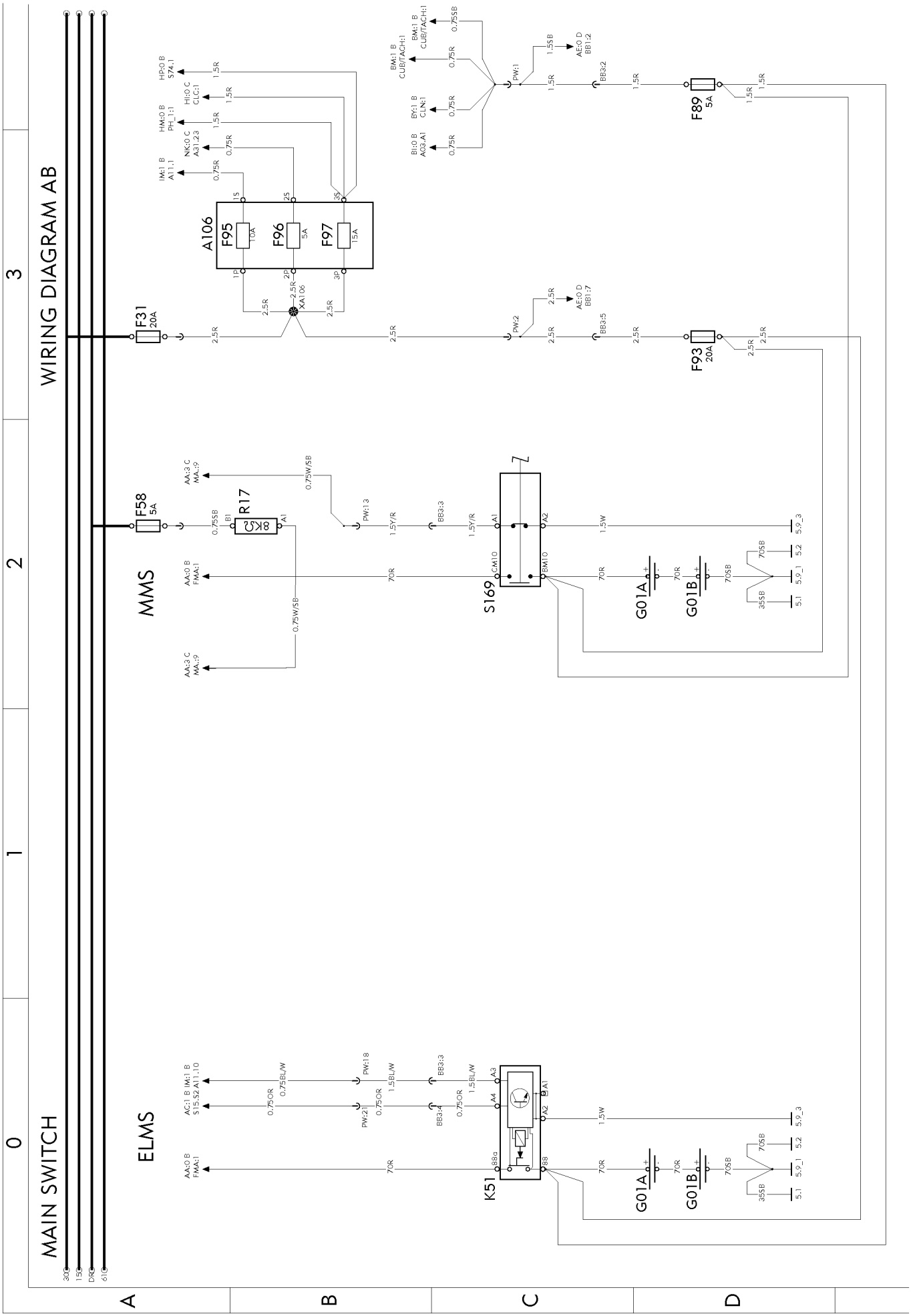

https://truckmanualshub.com/

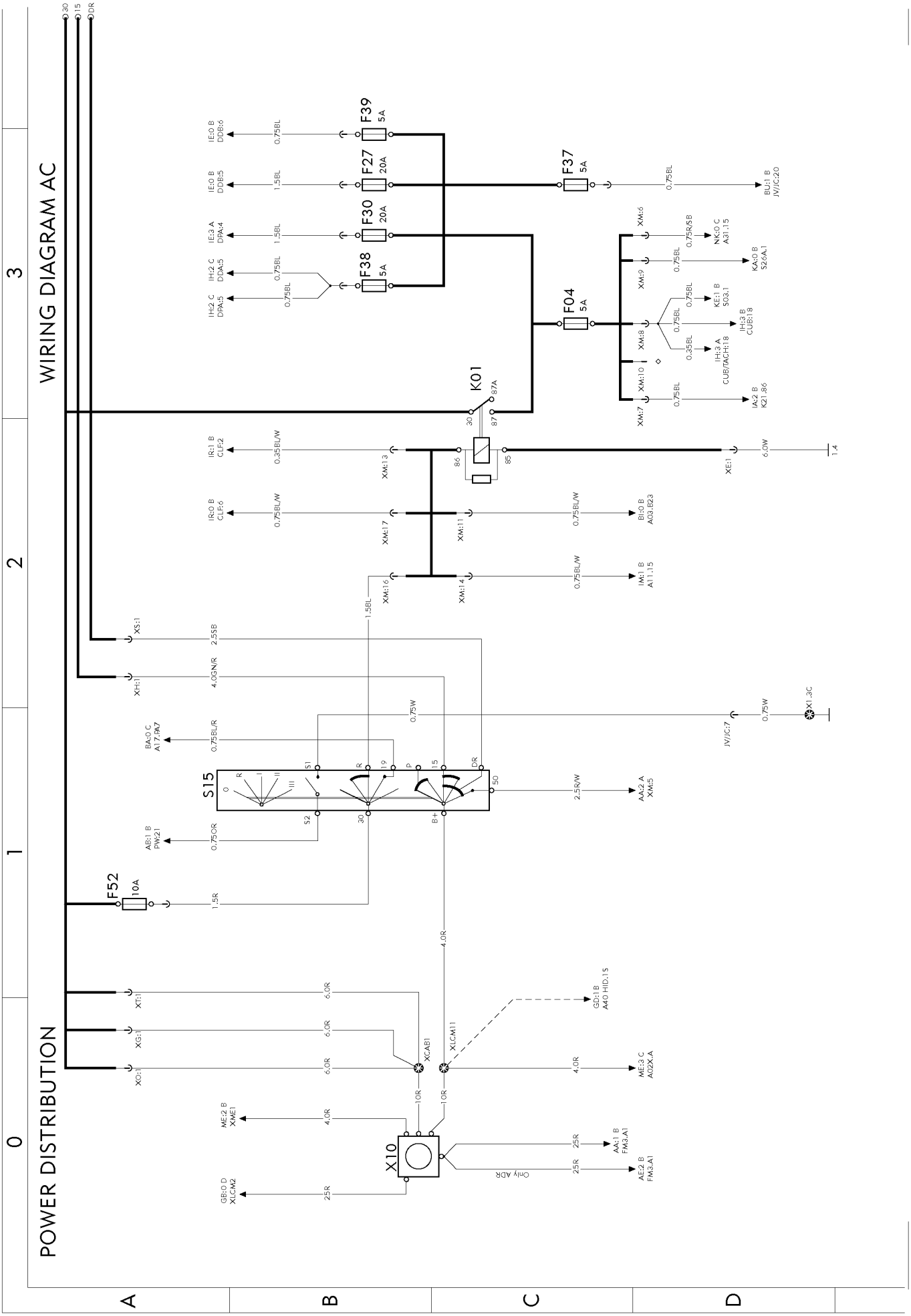

T3018703

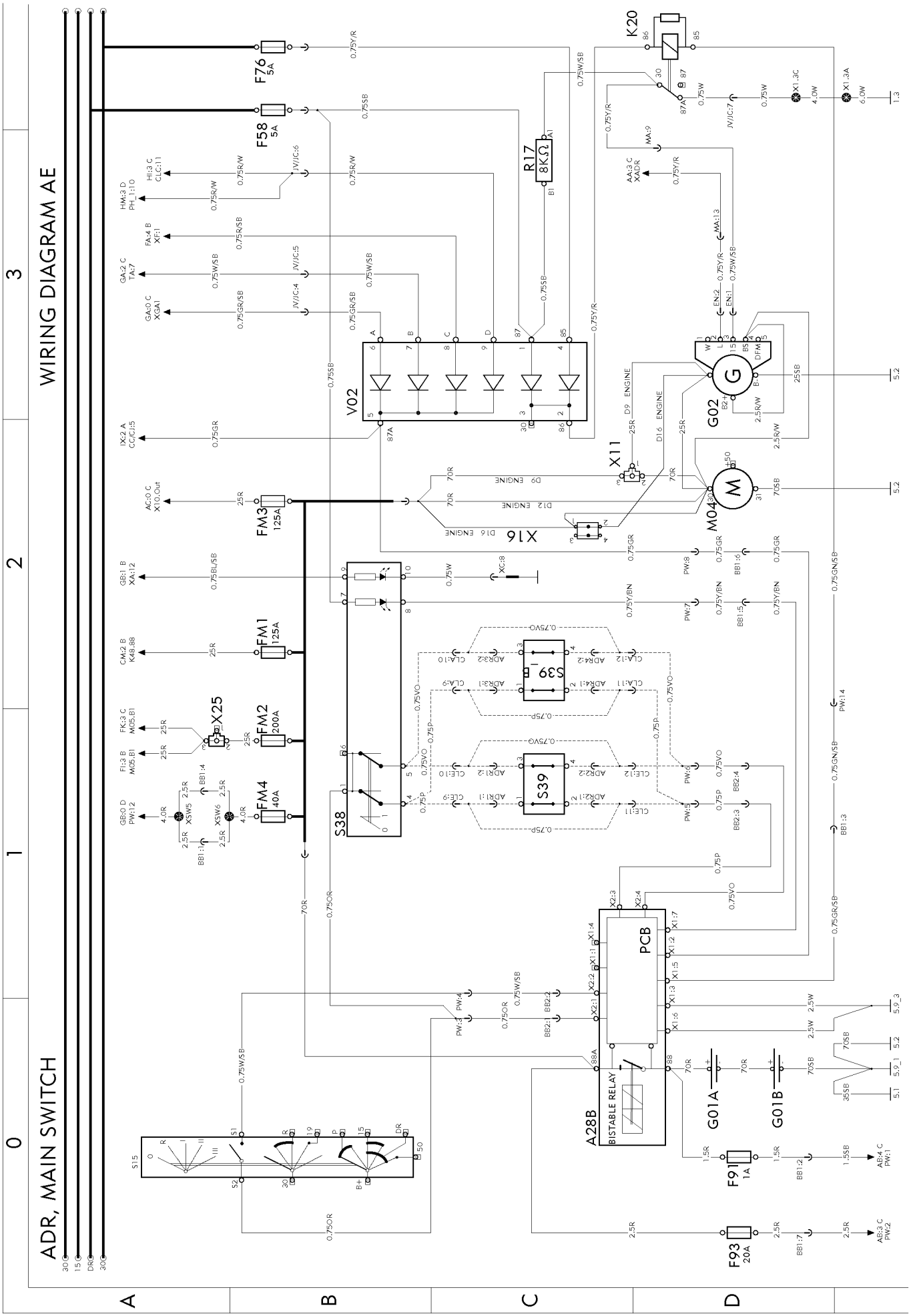
WIRING DIAGRAM AE
ADR, MAIN SWITCH
F76 5A
F58 5A
K20
R17 8KΩ
V02
G02
M04
X11
X16
FM3 125A
FM1 125A
FM2 200A
FM4 40A
X25
S38
S39
PCB
A28B
BISTABLE RELAY
G01A
G01B
F91 1A
F93 20A
S15

https://truckmanualshub.com/

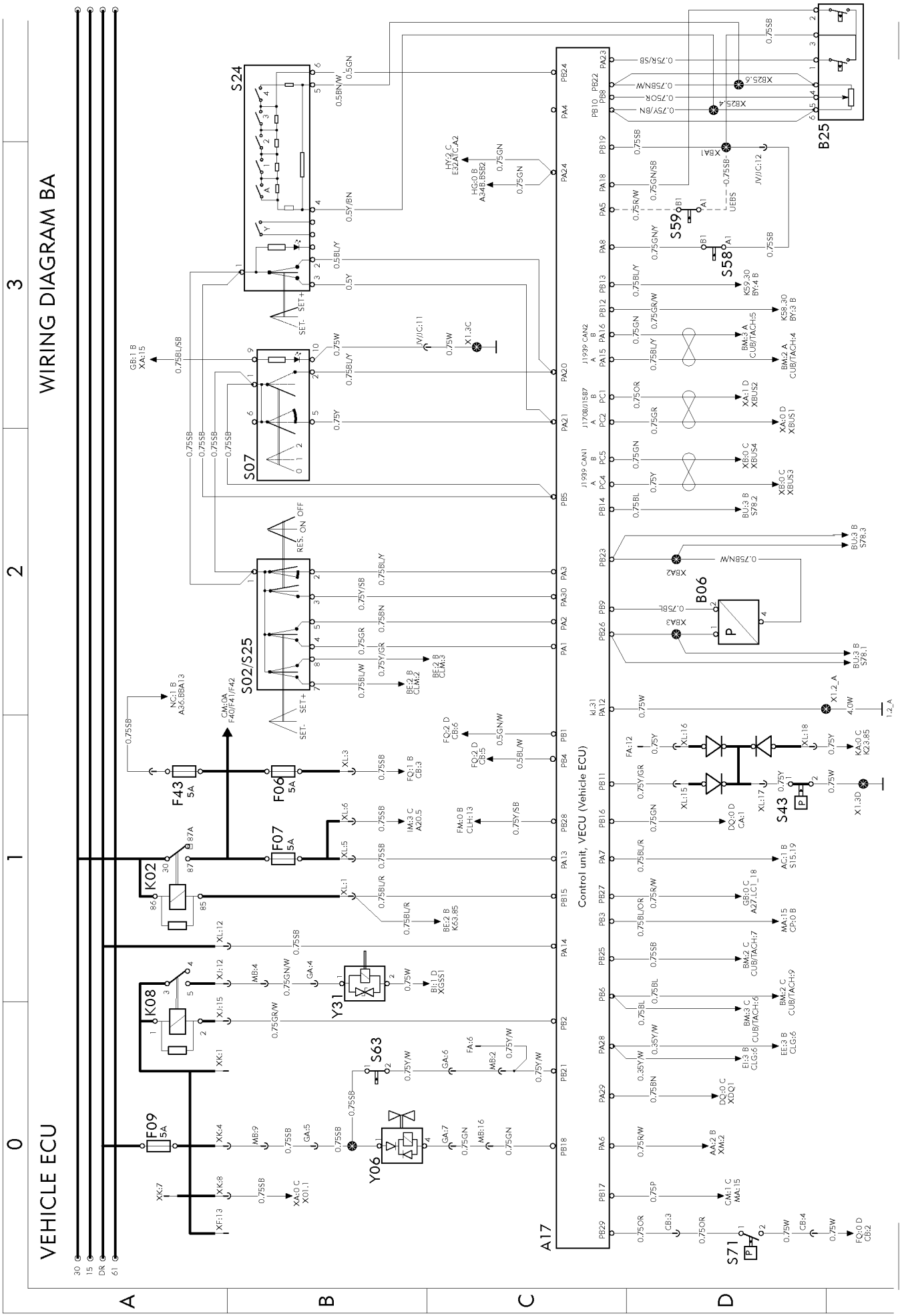

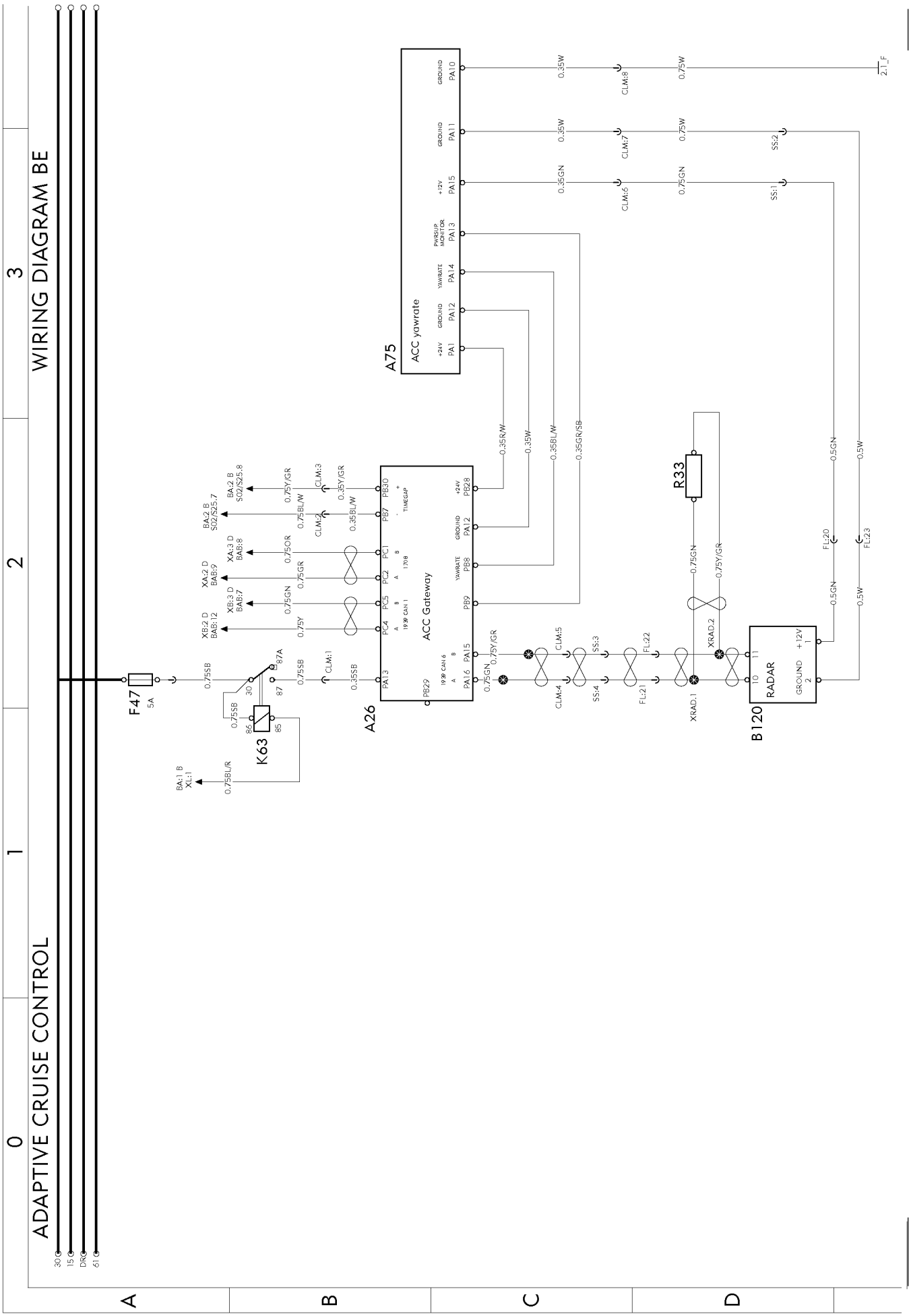
ADAPTIVE CRUISE CONTROL
WIRING DIAGRAM BE
0
1
2
3
A
B
C
D
30
15
DR
61
F47
5A
K63
A26
ACC Gateway
A75
ACC yawrate
B120
RADAR
R33
BA:1 B
XL:1
0.75BL/R
BA:2 B
SO2/S25.7
BA:2 B
SO2/S25.8
XA:2 D
BAB:9
XA:3 D
BAB:8
XB:2 D
BAB:12
XB:3 D
BAB:7
0.75SB
0.75SB
0.35SB
0.75SB
0.75SB
0.75SB
0.75OR
0.75GR
0.75GN
0.75Y
0.75Y/GR
0.75BL/W
0.35BL/W
0.35Y/GR
CLM:1
CLM:2
CLM:3
0.35R/W
0.35W
0.35BL/W
0.35GR/SB
0.75Y/GR
0.75GN
CLM:4
CLM:5
SS:3
SS:4
FL:21
FL:22
XRAD.1
XRAD.2
0.75GN
0.75Y/GR
0.5GN
0.5W
FL:20
FL:23
0.35W
0.35W
0.35GN
0.75W
0.75W
0.75GN
CLM:8
CLM:7
CLM:6
SS:2
SS:1
2.1_F

https://truckmanualshub.com/

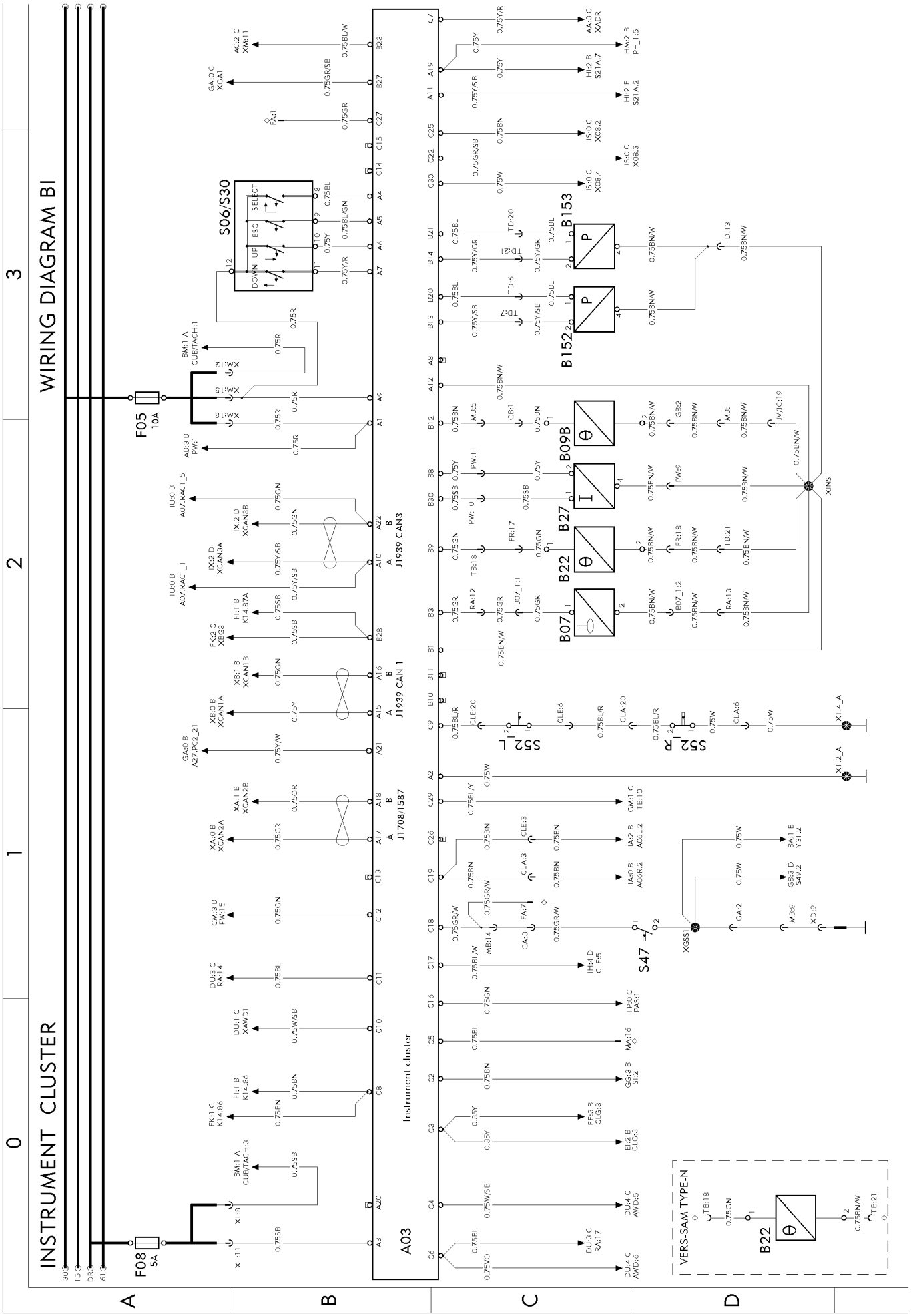

T3018706

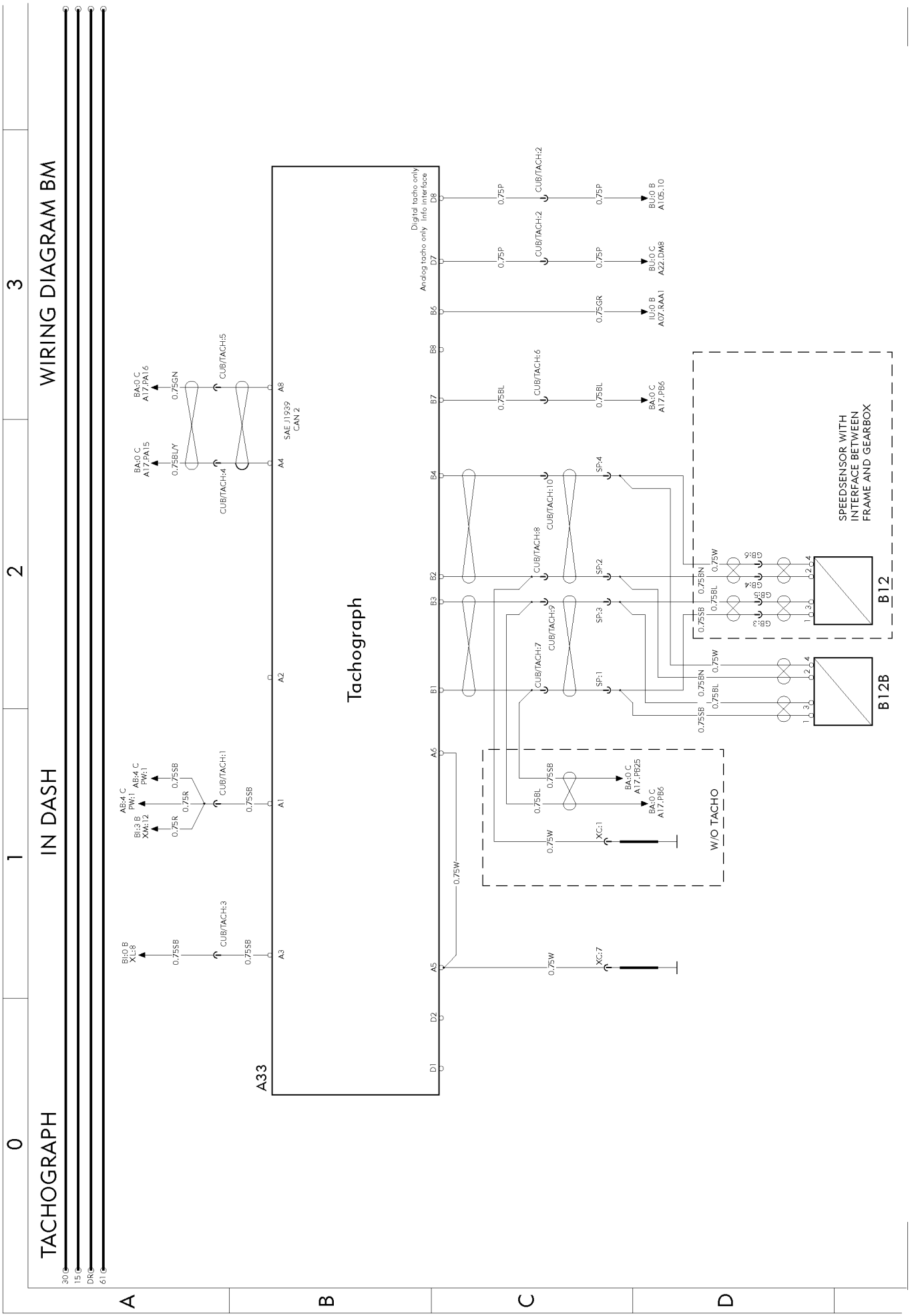
TACHOGRAPH
IN DASH
WIRING DIAGRAM BM
30
15
DR
61
A33
Tachograph
Digital tacho only
Analog tacho only
Info interface
SAE J1939
CAN 2
SPEEDSENSOR WITH
INTERFACE BETWEEN
FRAME AND GEARBOX
B12
B12B
W/O TACHO
BI:0 B
XL:8
BI:3 B
XM:12
AB:4 C
PW:1
BA:0 C
A17.PA15
BA:0 C
A17.PA16
BA:0 C
A17.PB6
BA:0 C
A17.PB25
BU:0 B
A1.05.10
BU:0 C
A22.DM8
IU:0 B
A07.RAA1
XC:1
XC:7
SP:1
SP:2
SP:3
SP:4
CUB/TACH:1
CUB/TACH:2
CUB/TACH:3
CUB/TACH:4
CUB/TACH:5
CUB/TACH:6
CUB/TACH:7
CUB/TACH:8
CUB/TACH:9
CUB/TACH:10
0.75SB
0.75R
0.75SN
0.75BLY
0.75P
0.75GR
0.75BL
0.75W
0.75BN
A1
A2
A3
A4
A5
A6
A8
B1
B2
B3
B4
B5
B7
B8
D1
D2
D7
D8
0
1
2
3
A
B
C
D

https://truckmanualshub.com/

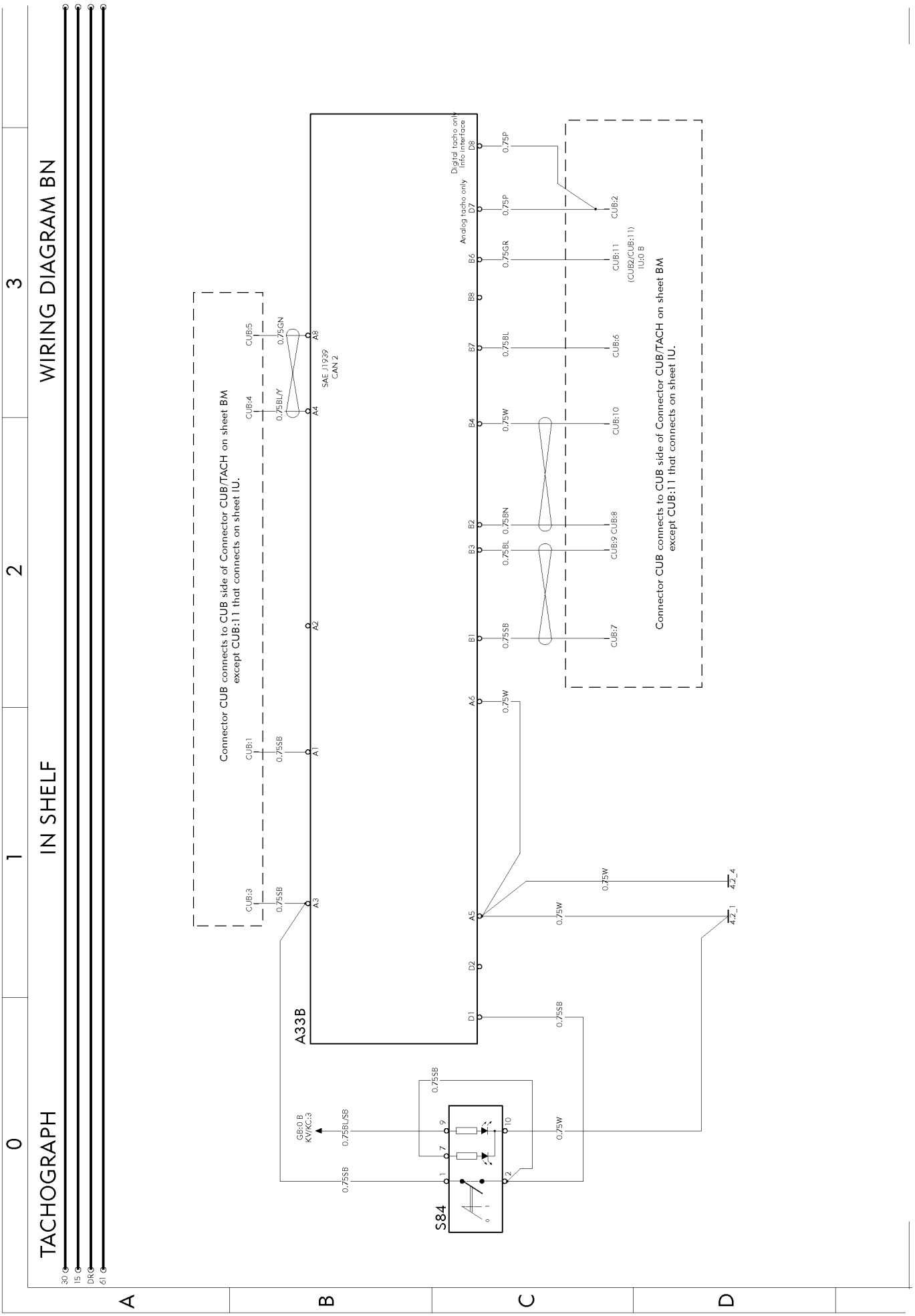

T3018707

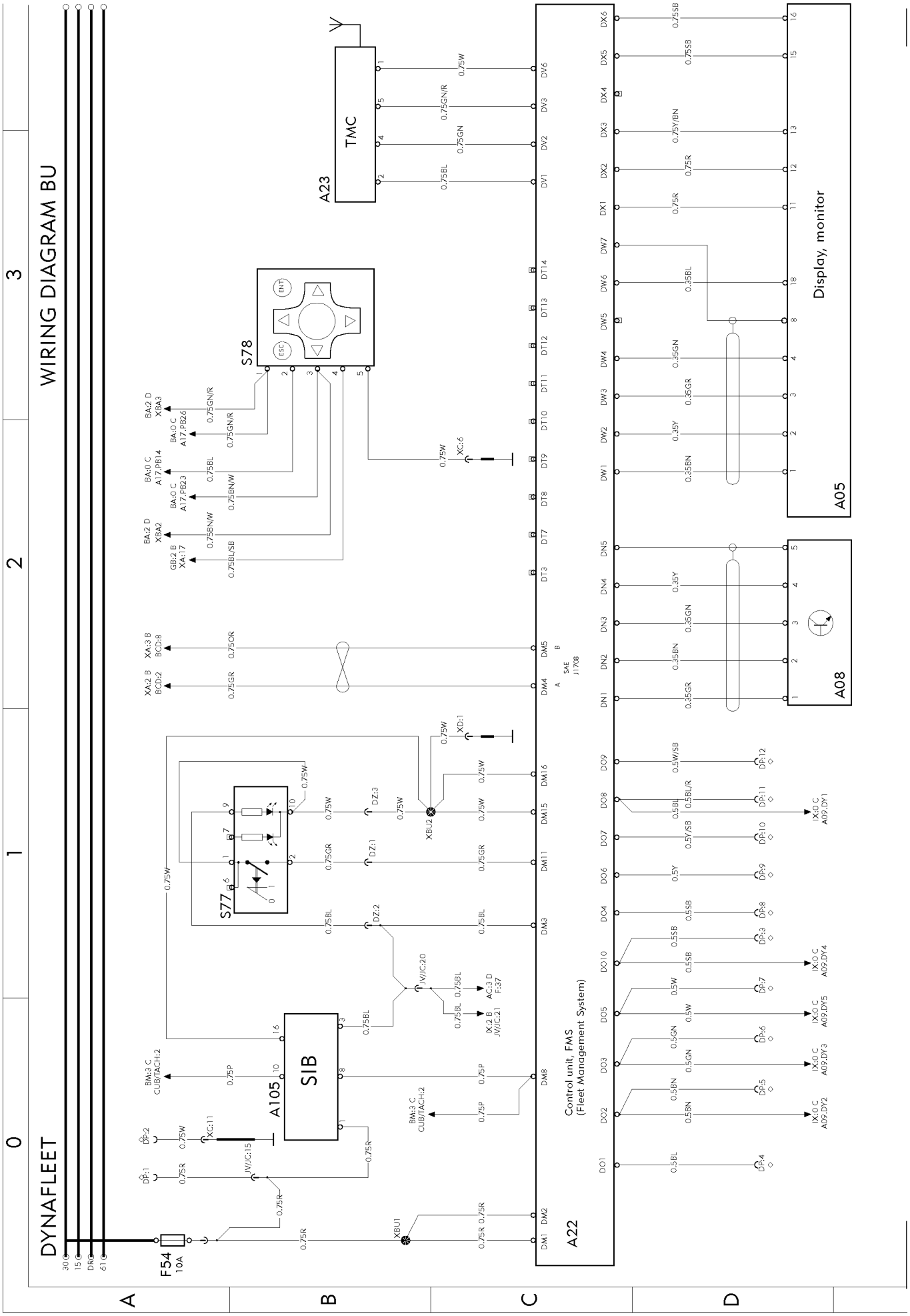
WIRING DIAGRAM BU
DYNAFLEET
A23
TMC
S78
ESC
ENT
S77
A105
SIB
A22
Control unit, FMS
(Fleet Management System)
A05
Display, monitor
A08
F54
10A
30
15
DR
61
SAE
J1708

https://truckmanualshub.com/

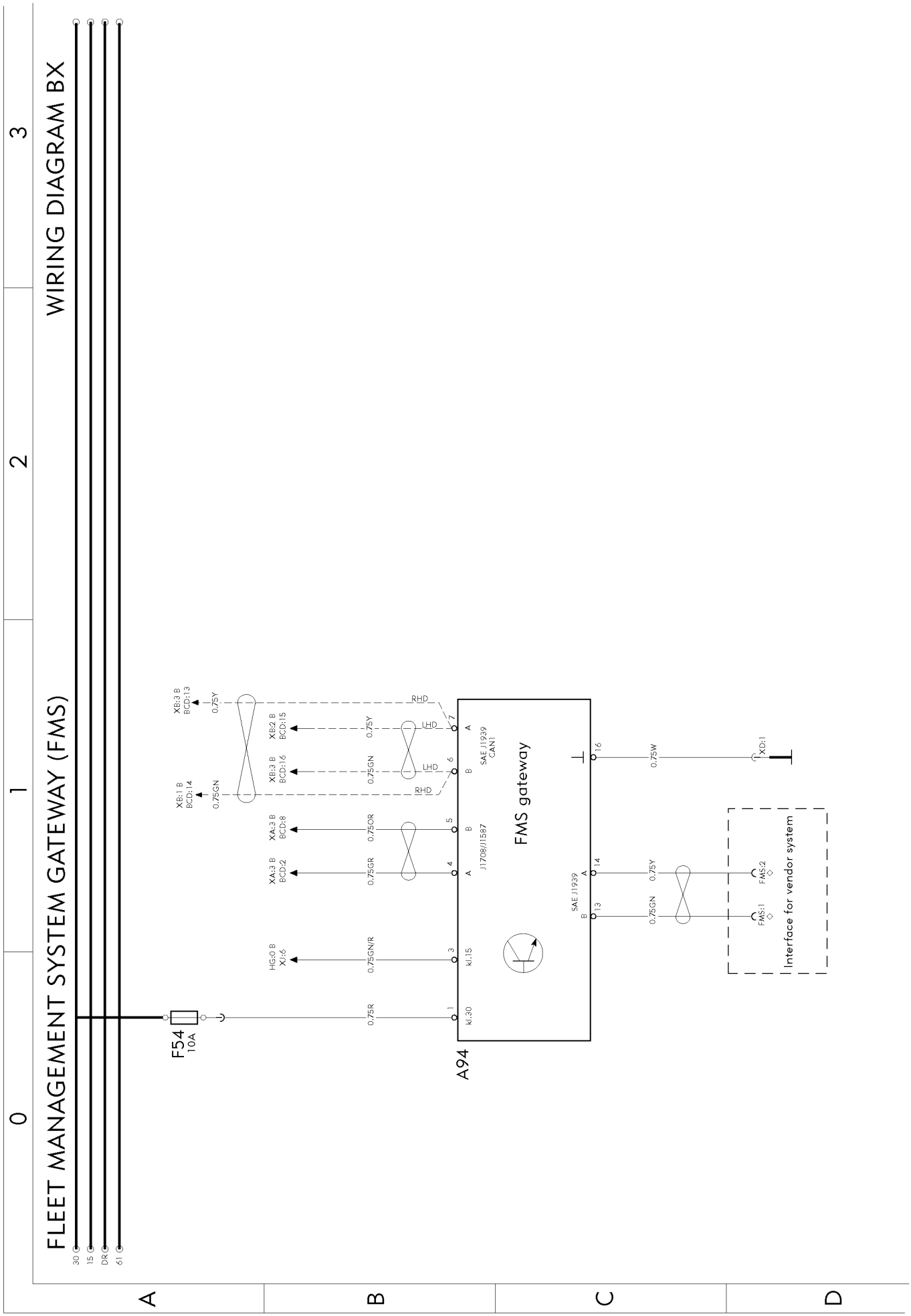

T3017639

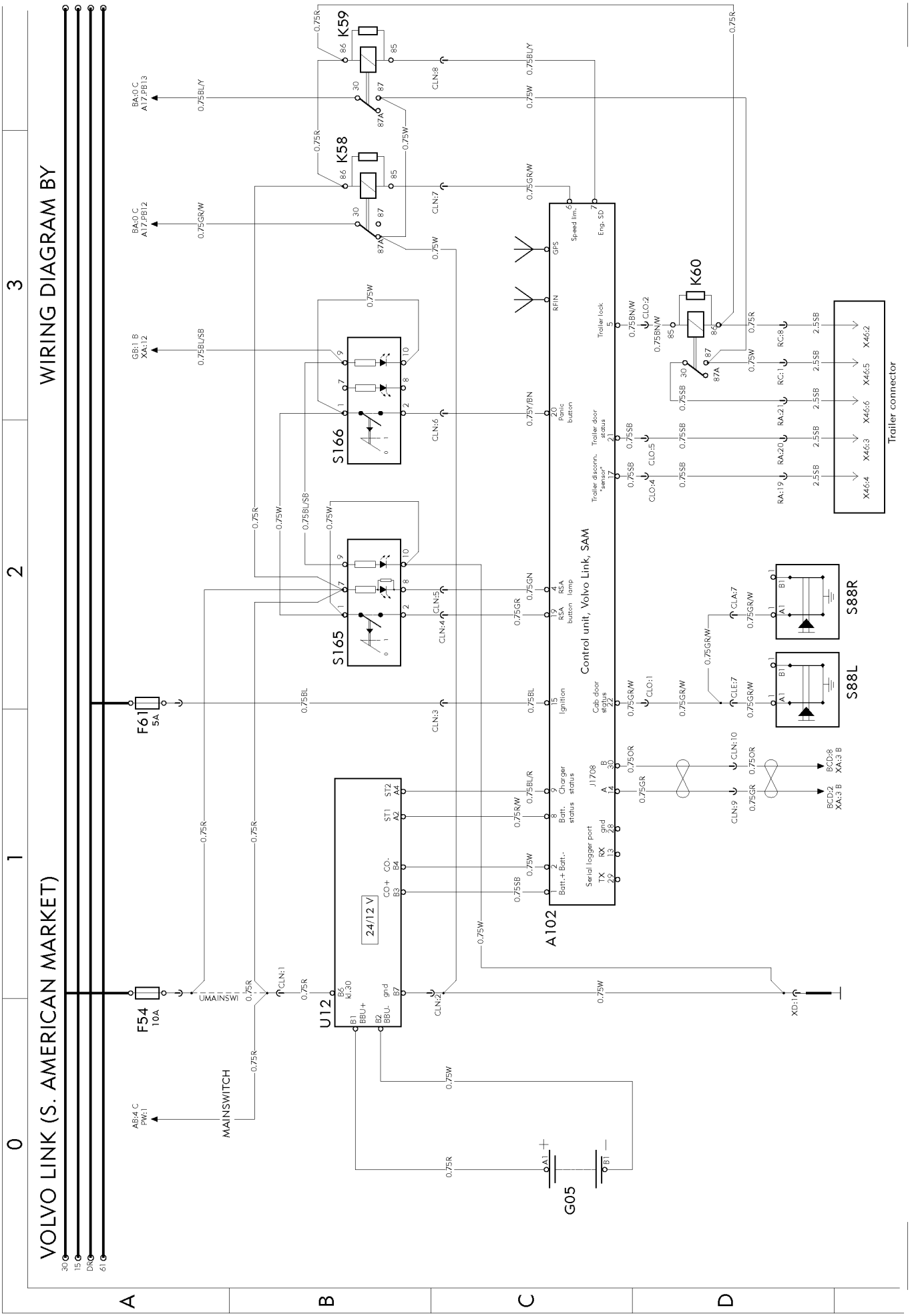
VOLVO LINK (S. AMERICAN MARKET)
WIRING DIAGRAM BY
Control unit, Volvo Link, SAM
A102
U12
24/12 V
F54
10A
F61
5A
MAINSWITCH
UMAINSWI
G05
S165
S166
K58
K59
K60
S88L
S88R
Trailer connector
Trailer lock
Trailer door status
Trailer disconn. "sensor"
Panic button
RSA button
RSA lamp
Ignition
Cab door status
Charger status
Batt. status
Speed lim.
Eng. SD
GPS
RFIN
Serial logger port
J1708
Batt.+
Batt.-
TX
RX
gnd
CO+
CO-
ST1
ST2
BBU+
BBU-
kl.30
gnd
BA:0 C
A17:PB13
BA:0 C
A17:PB12
GB:1 B
XA:12
AB:4 C
PW:1
BCD:8
XA:3 B
BCD:2
XA:3 B
XD:1
X46:2
X46:5
X46:6
X46:3
X46:4
RC:8
RC:1
RA:2
RA:20
RA:19
CLO:2
CLO:5
CLO:4
CLO:1
CLA:7
CLE:7
CLN:10
CLN:9
CLN:8
CLN:7
CLN:6
CLN:5
CLN:4
CLN:3
CLN:2
CLN:1
0.75R
0.75W
0.75BL/Y
0.75GR/W
0.75BL/SB
0.75V/BN
0.75GN
0.75GR
0.75BL
0.75BL/R
0.75SB
0.75OR
0.75BN/W
30
15
DR
61
A
B
C
D
0
1
2
3

https://truckmanualshub.com/

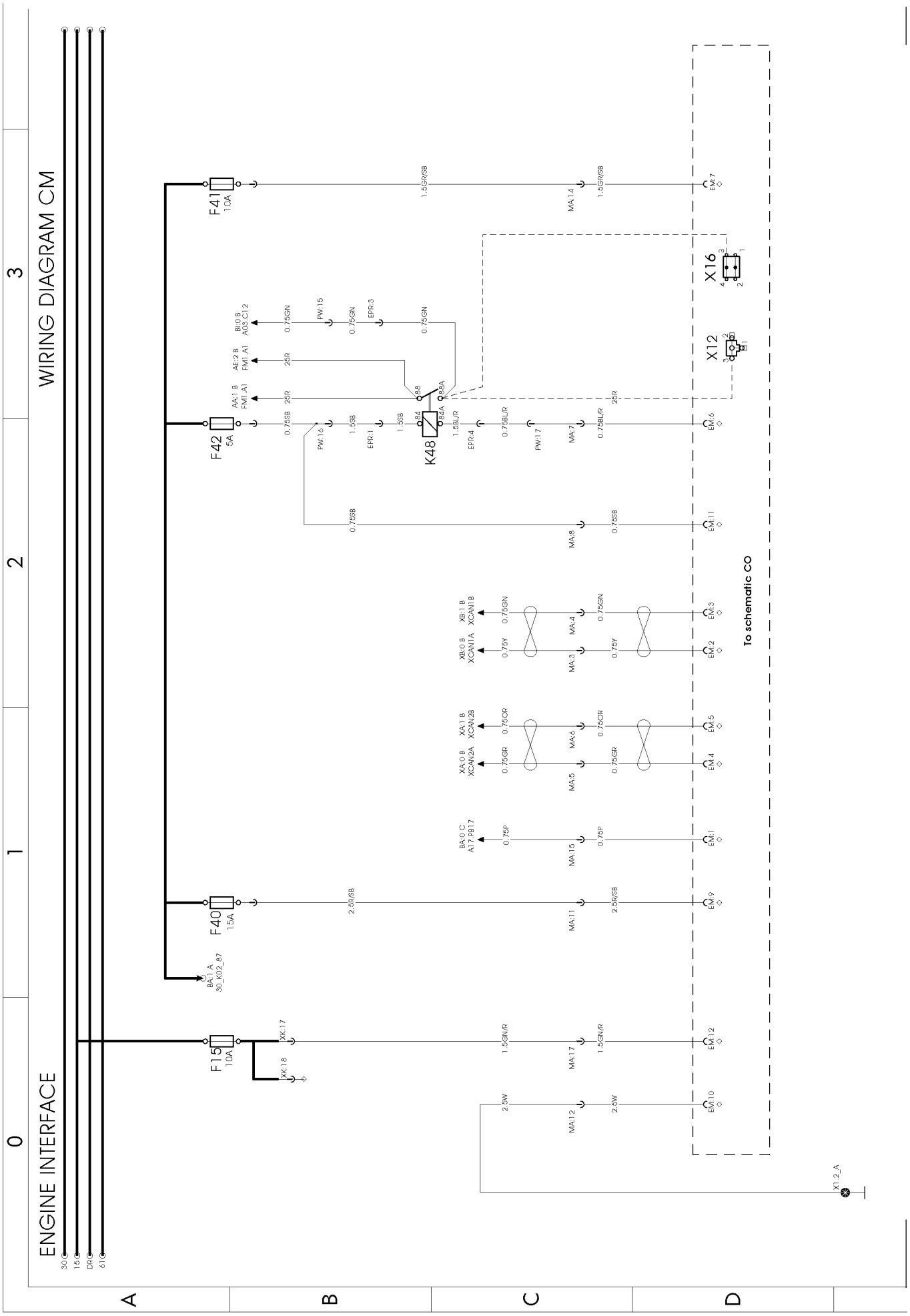

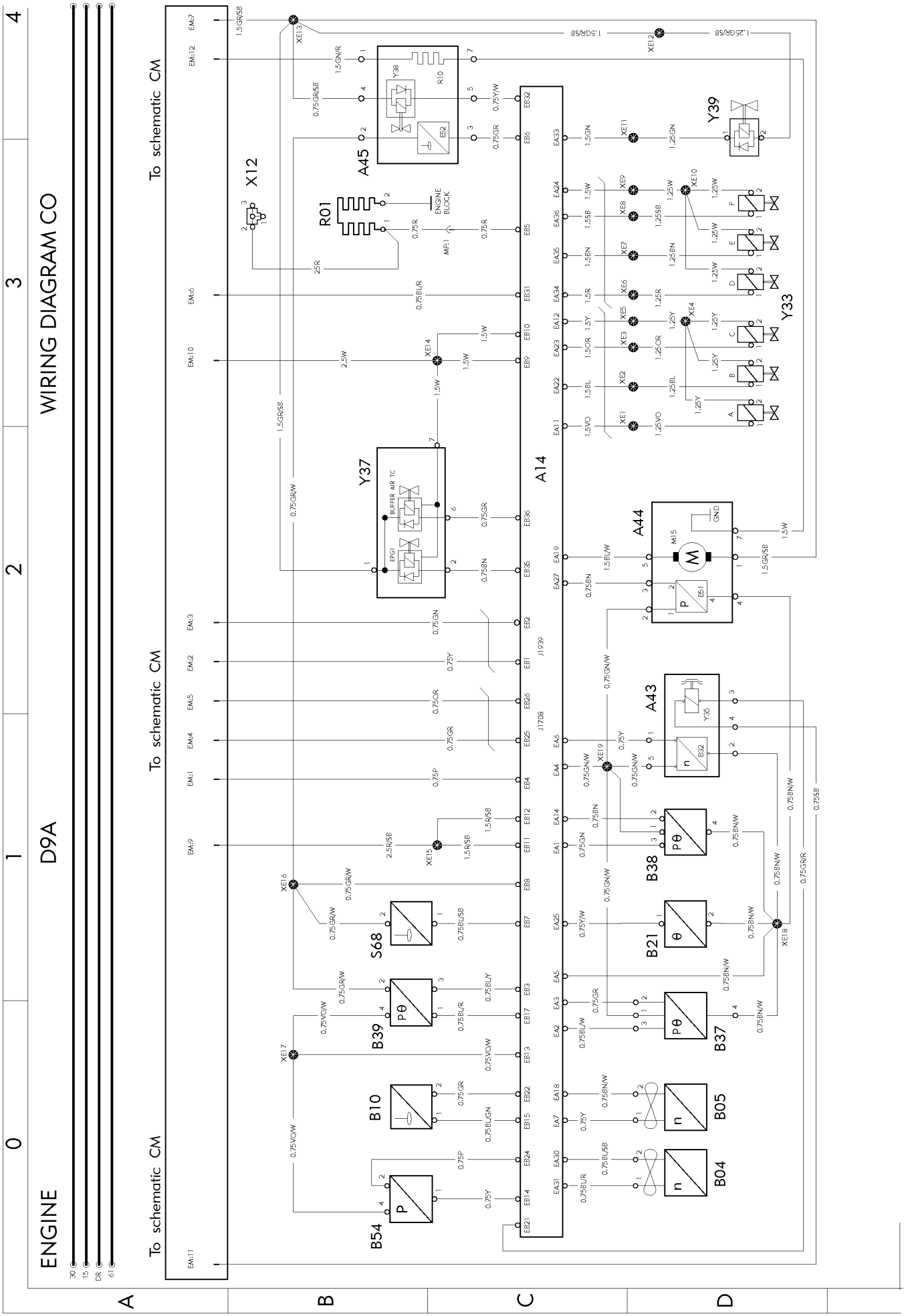
ENGINE
D9A
WIRING DIAGRAM CO
To schematic CM
A45
A14
A44
A43
Y37
Y39
Y33
X12
R01
B54
B10
B39
S68
B38
B21
B37
B05
B04

https://truckmanualshub.com/

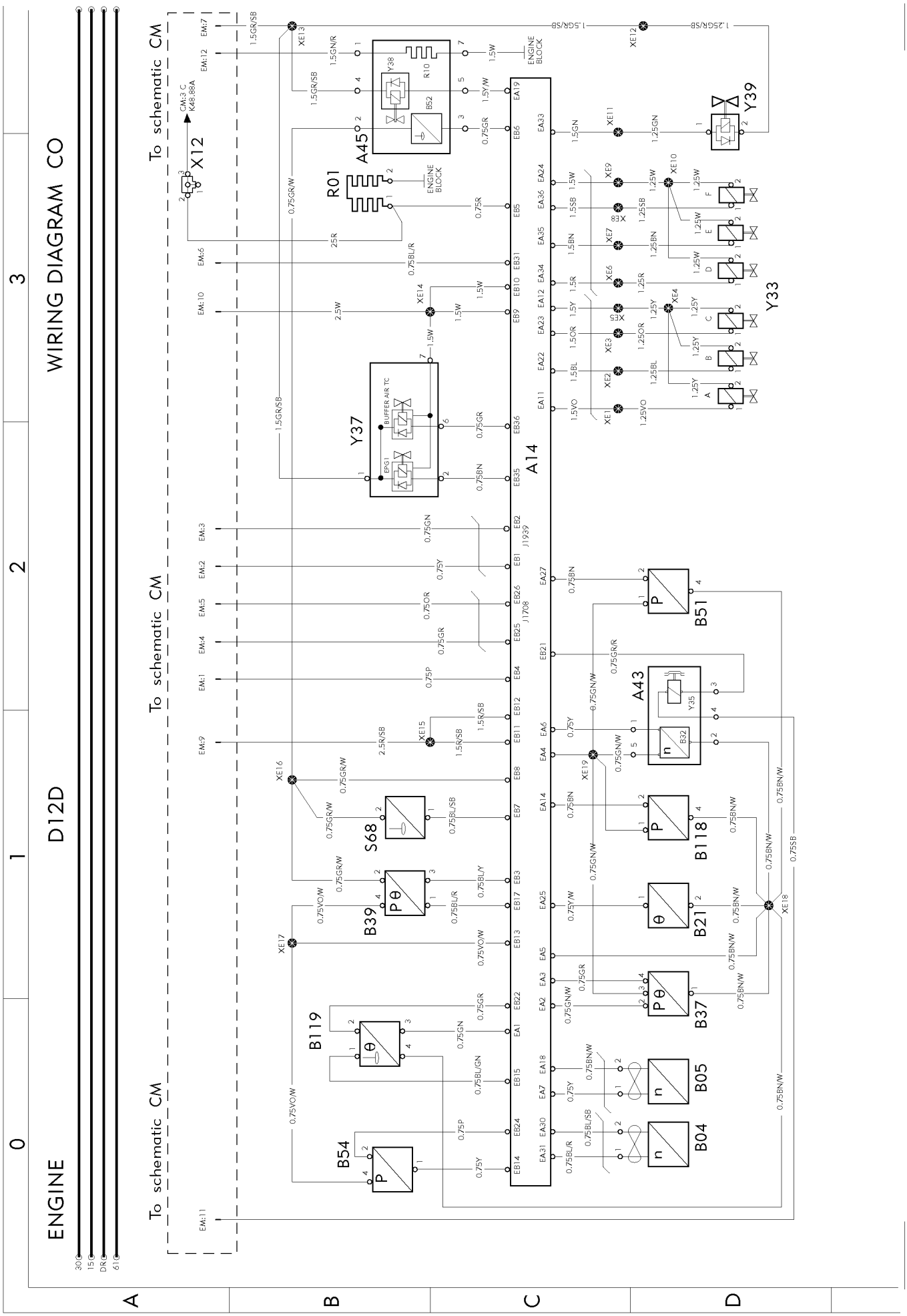

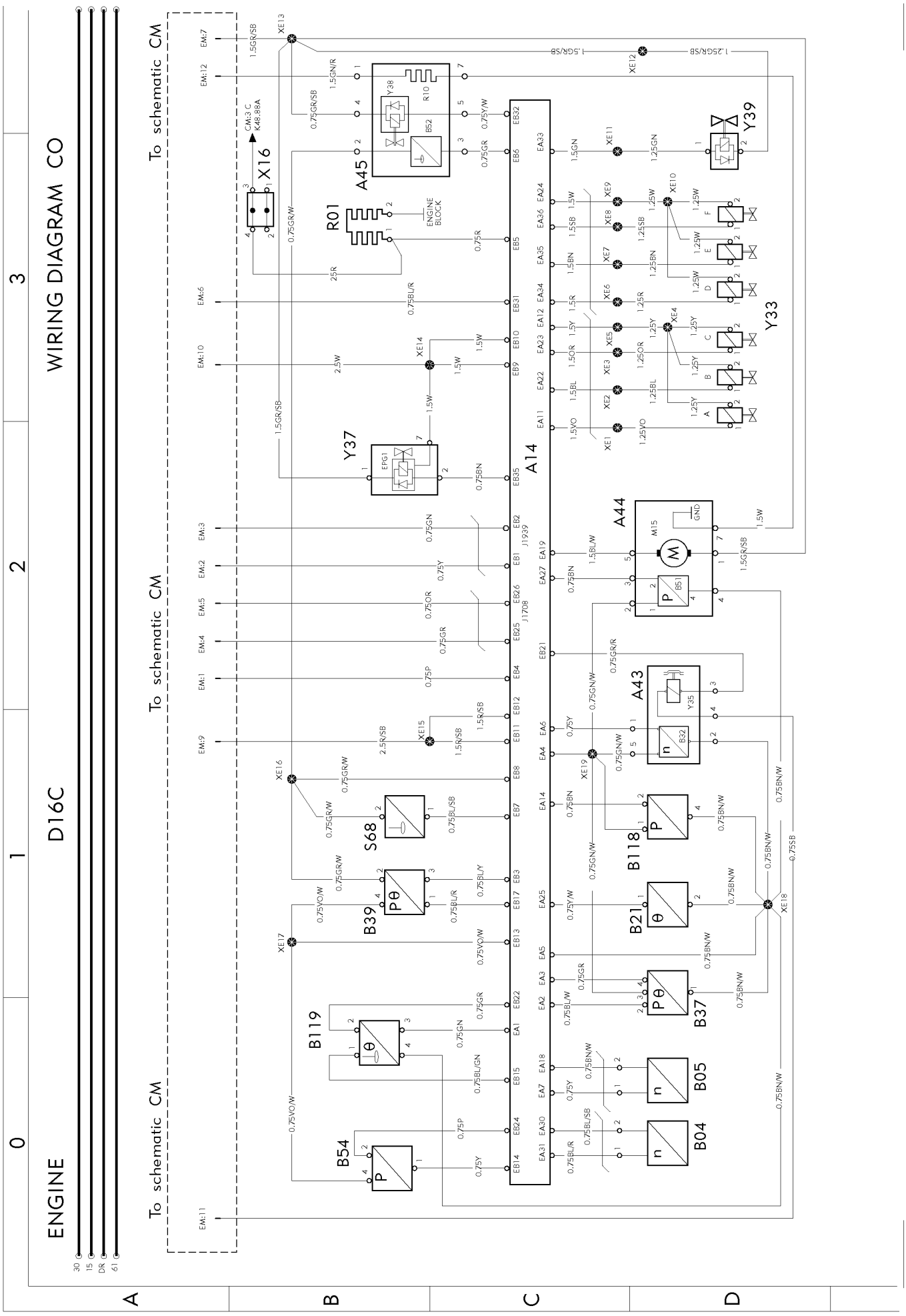
ENGINE
D16C
WIRING DIAGRAM CO
To schematic CM
A14
A45
A44
A43
X16
Y37
Y38
Y39
Y33
R01
ENGINE BLOCK
B54
B119
B39
S68
B118
B21
B37
B05
B04

https://truckmanualshub.com/

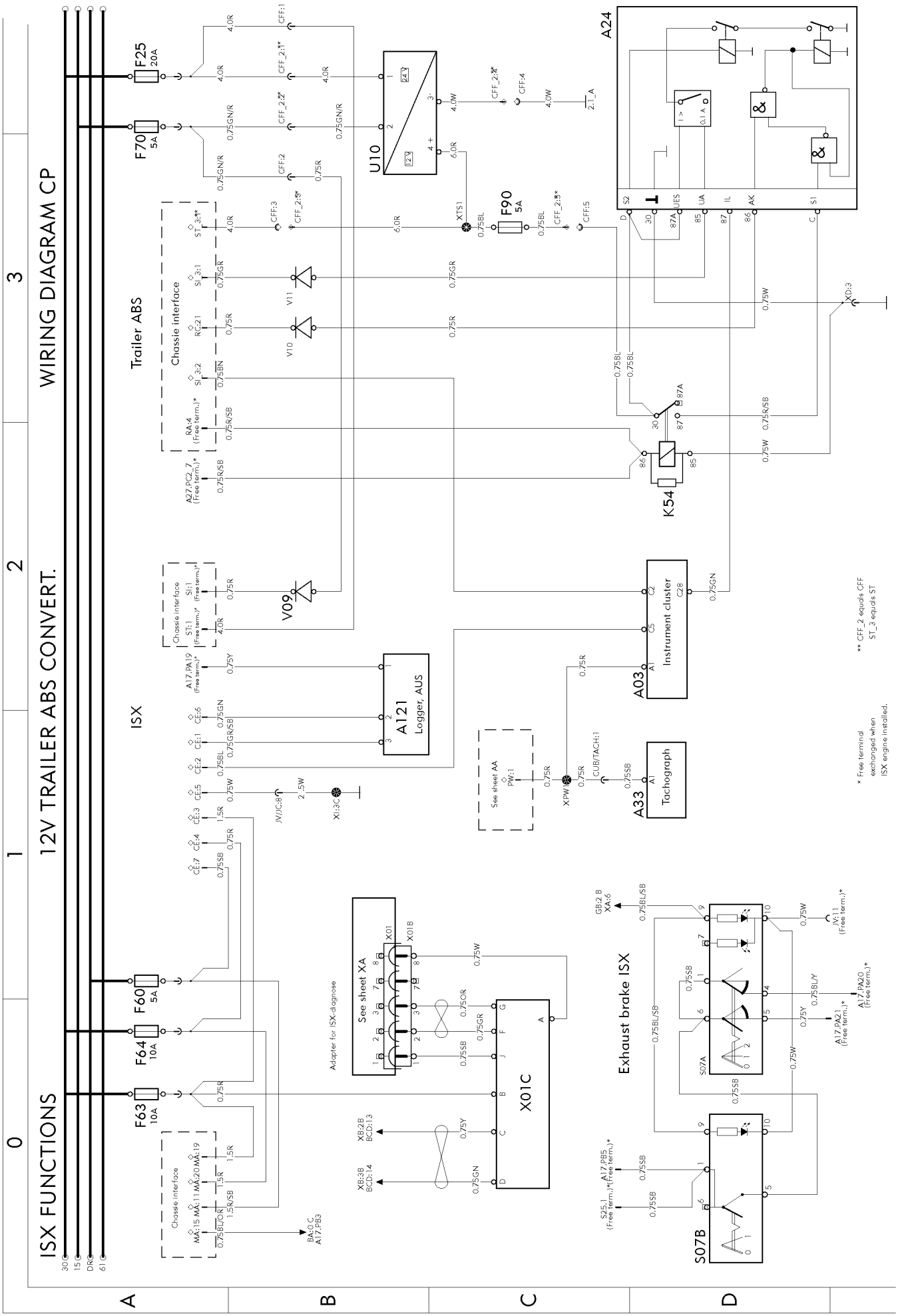

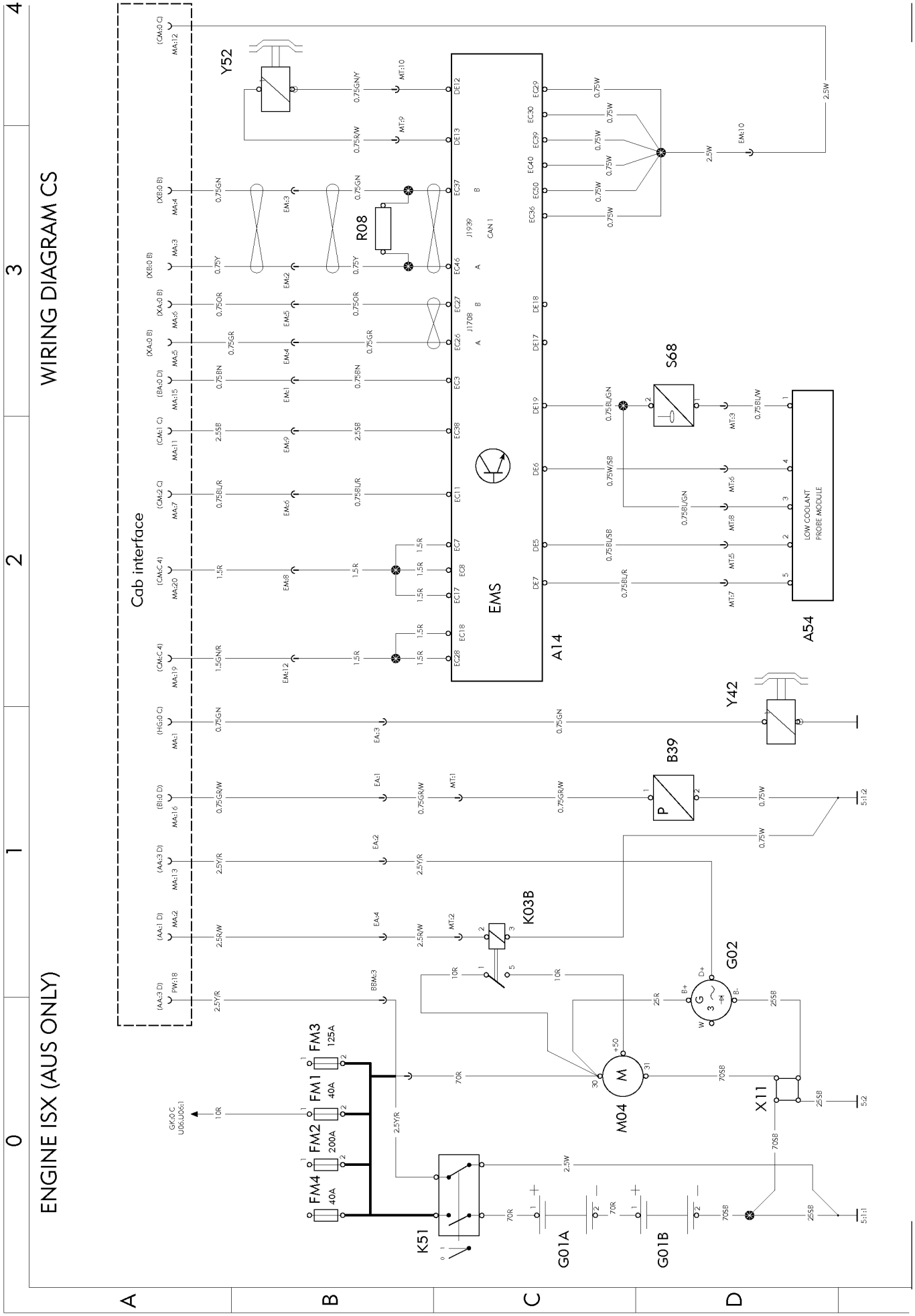
WIRING DIAGRAM CS
ENGINE ISX (AUS ONLY)
Cab interface
EMS
A14
Y52
R08
S68
A54
LOW COOLANT PROBE MODULE
Y42
B39
K03B
G02
M04
X11
K51
G01A
G01B
FM4 40A
FM2 200A
FM1 40A
FM3 125A
J1939
J1708
CAN 1

https://truckmanualshub.com/

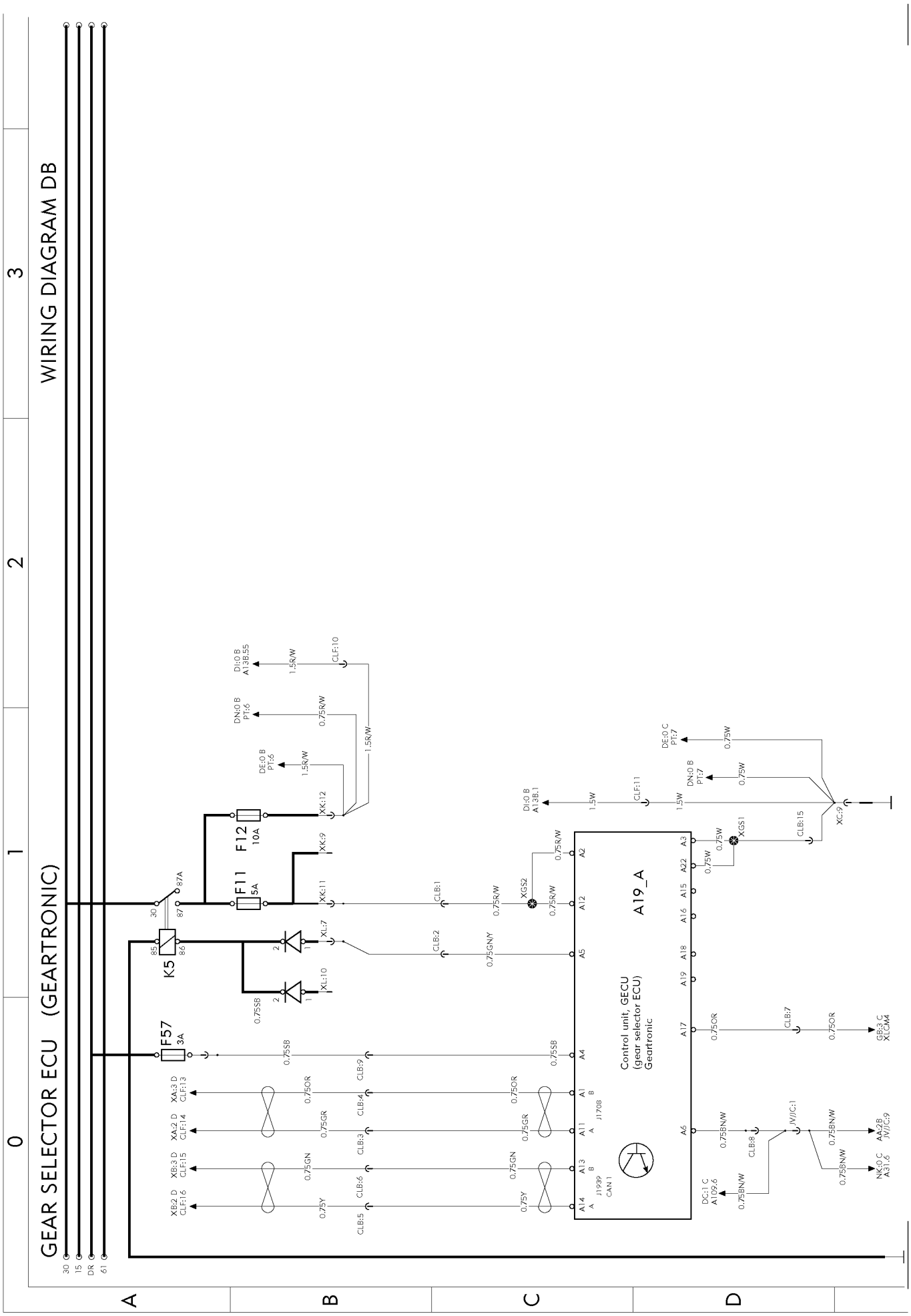

T3018709

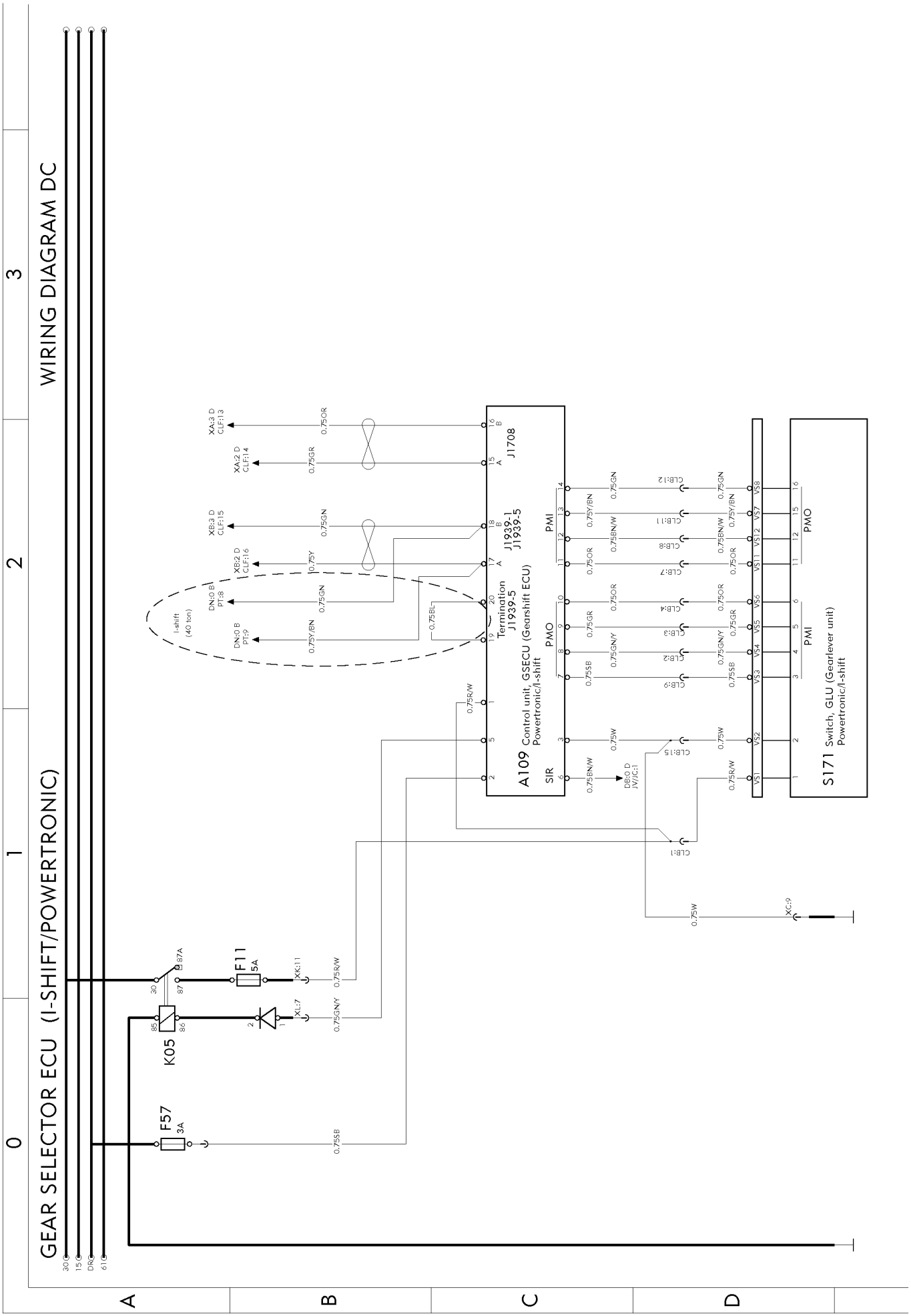
WIRING DIAGRAM DC
GEAR SELECTOR ECU (I-SHIFT/POWERTRONIC)
A109 Control unit, GSECU (Gearshift ECU)
Powertronic/I-shift
J1708
J1939-1
J1939-5
Termination
J1939-5
S171 Switch, GLU (Gearlever unit)
Powertronic/I-shift
F57
3A
K05
F11
5A
I-shift
(40 ton)
PMI
PMO
SIR

https://truckmanualshub.com/

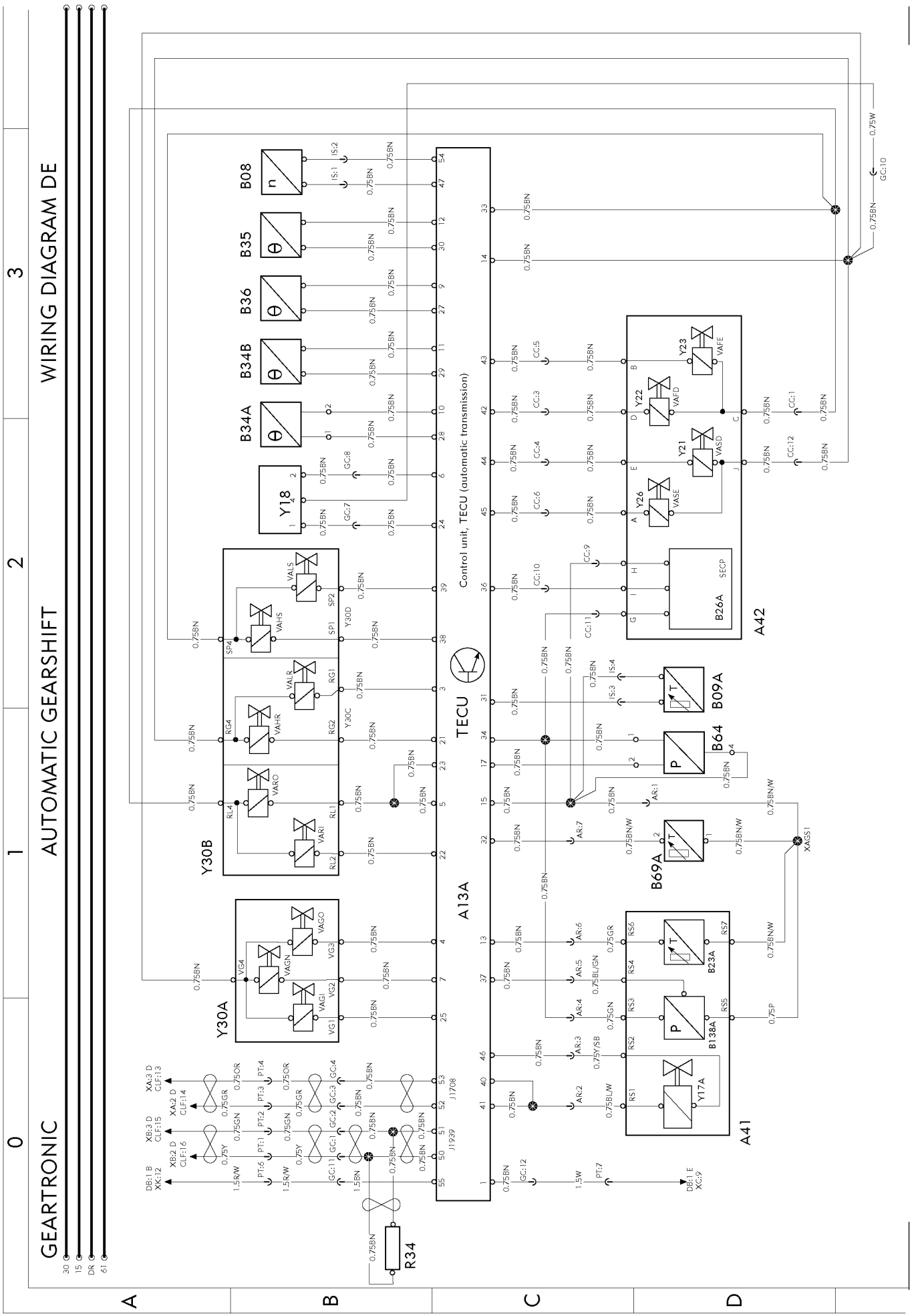

https://truckmanualshub.com/

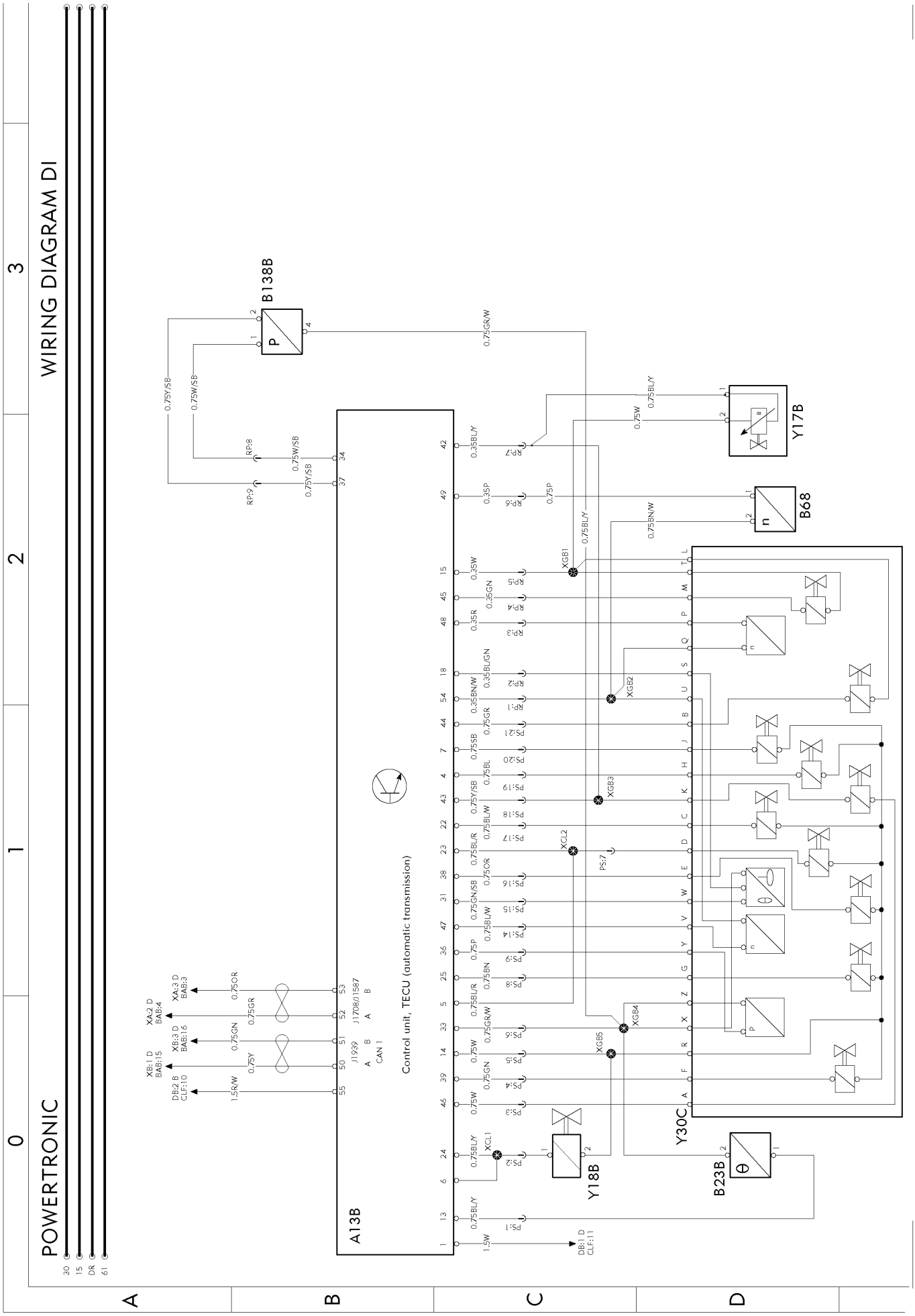

https://truckmanualshub.com/

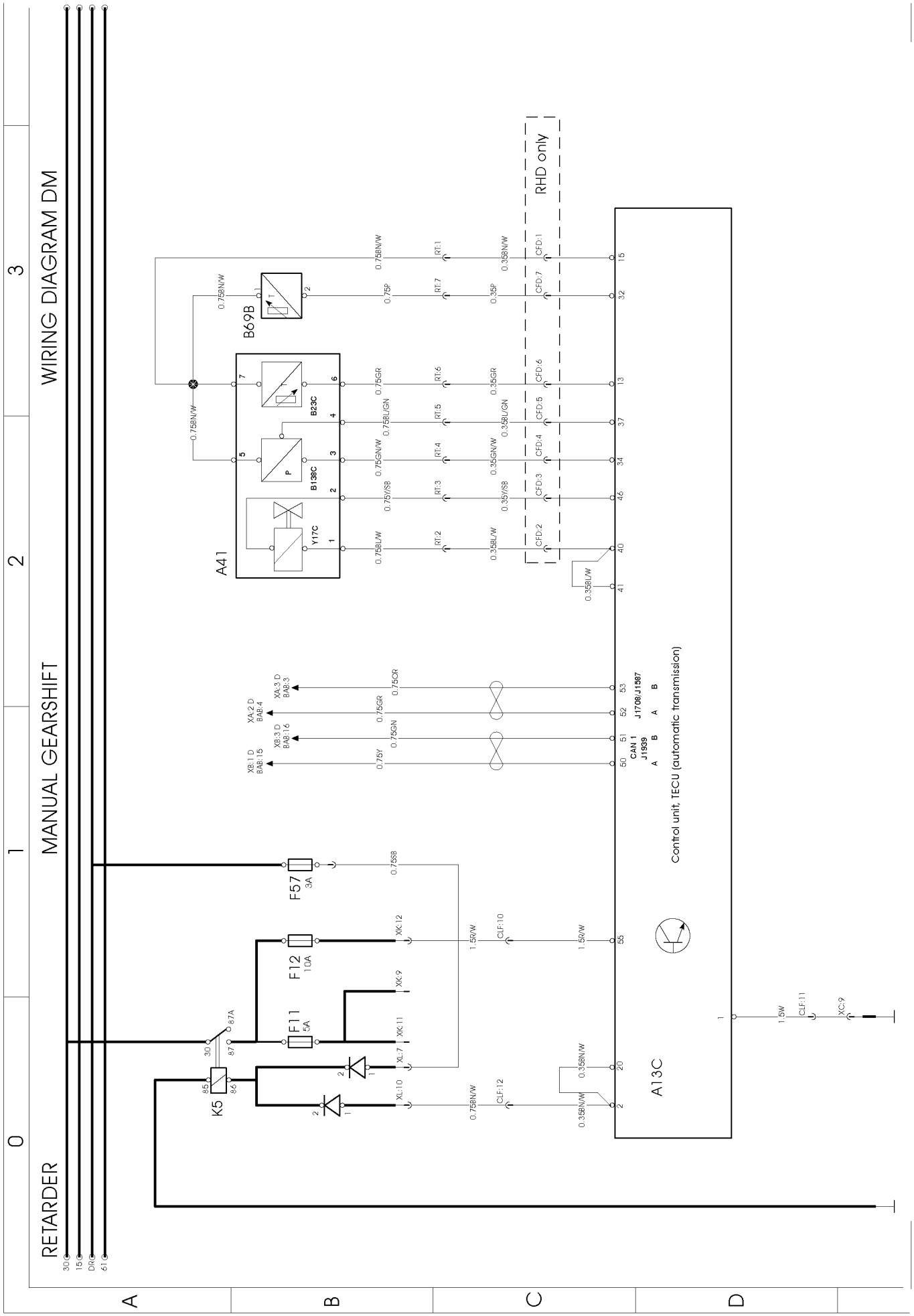

T3017651

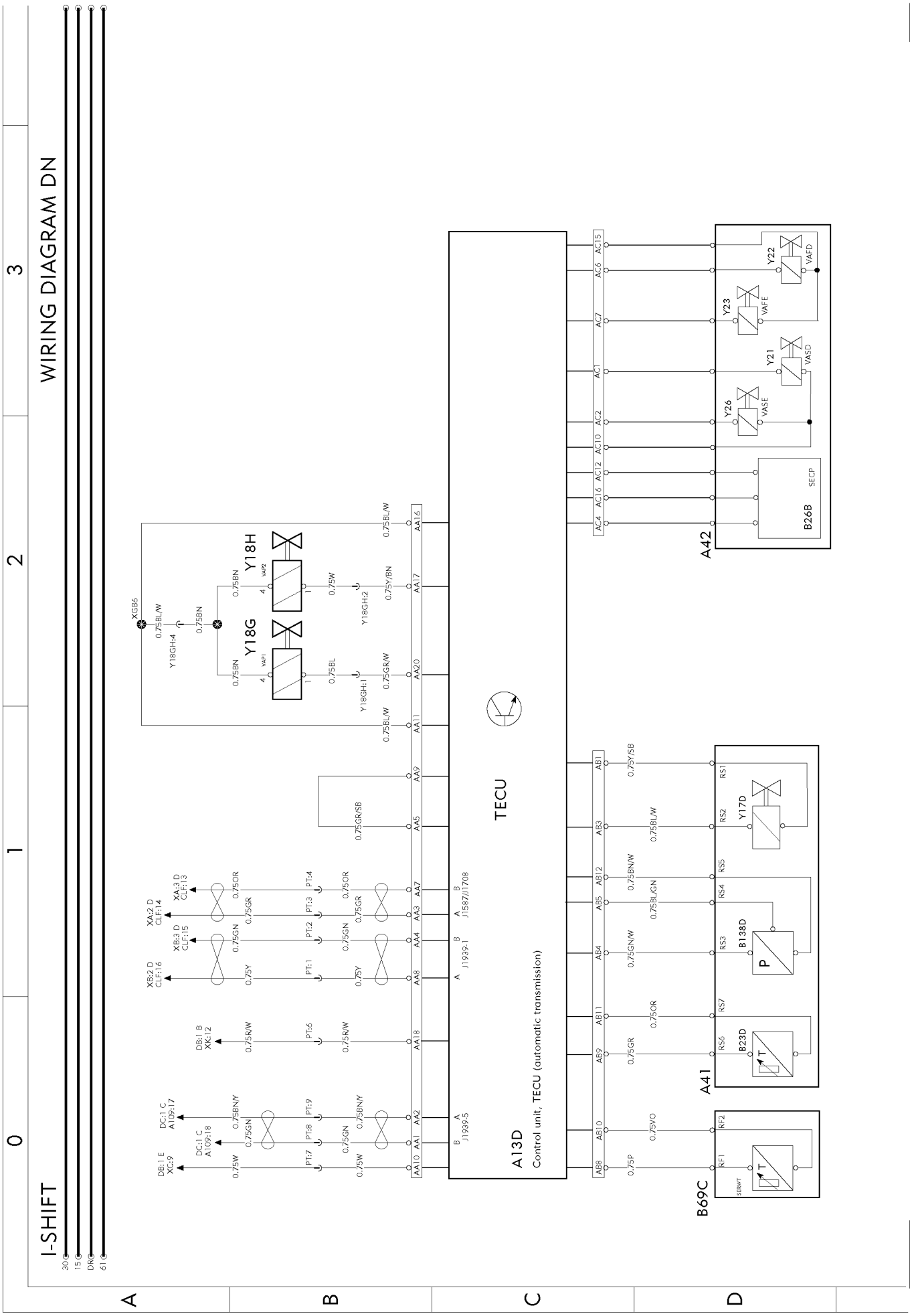
I-SHIFT
WIRING DIAGRAM DN
30
15
DR
61
A13D
Control unit, TECU (automatic transmission)
TECU
A42
B26B
SECP
Y26
VASE
Y21
VASD
Y23
VAFE
Y22
VAFD
A41
B23D
B138D
Y17D
B69C
Y18G
Y18H
XG56
Y18GH:4
Y18GH:1
Y18GH:2
DB:1 E
XG:9
DC:1 C
A109:18
DC:1 G
A109:17
DB:1 B
XK:12
XB:2 D
CLF:16
XB:3 D
CLF:15
XA:2 D
CLF:14
XA:3 D
CLF:13
J1939-5
J1939-1
J1587/J1708
A
B
0
1
2
3

https://truckmanualshub.com/

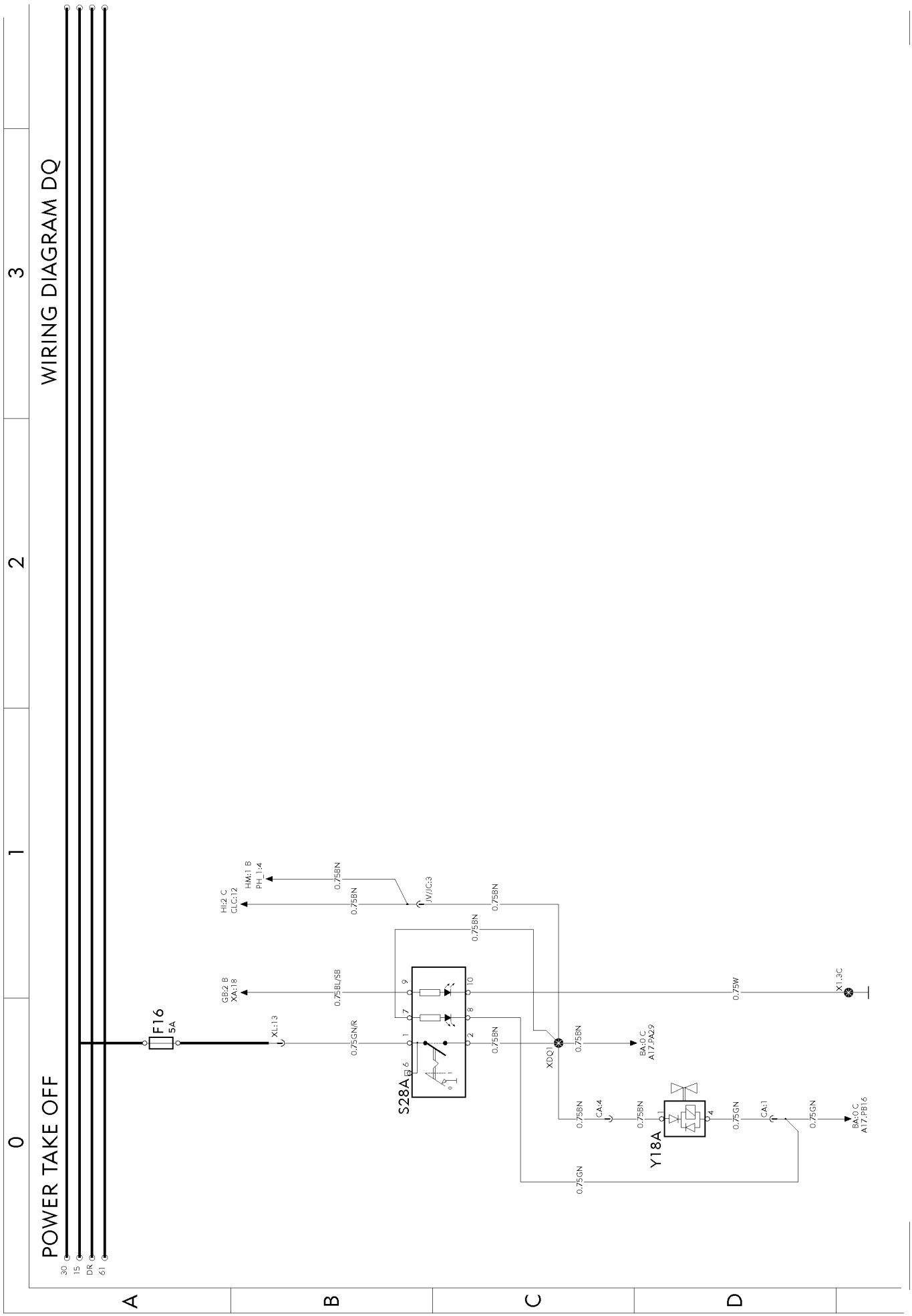

T3018713

https://truckmanualshub.com/

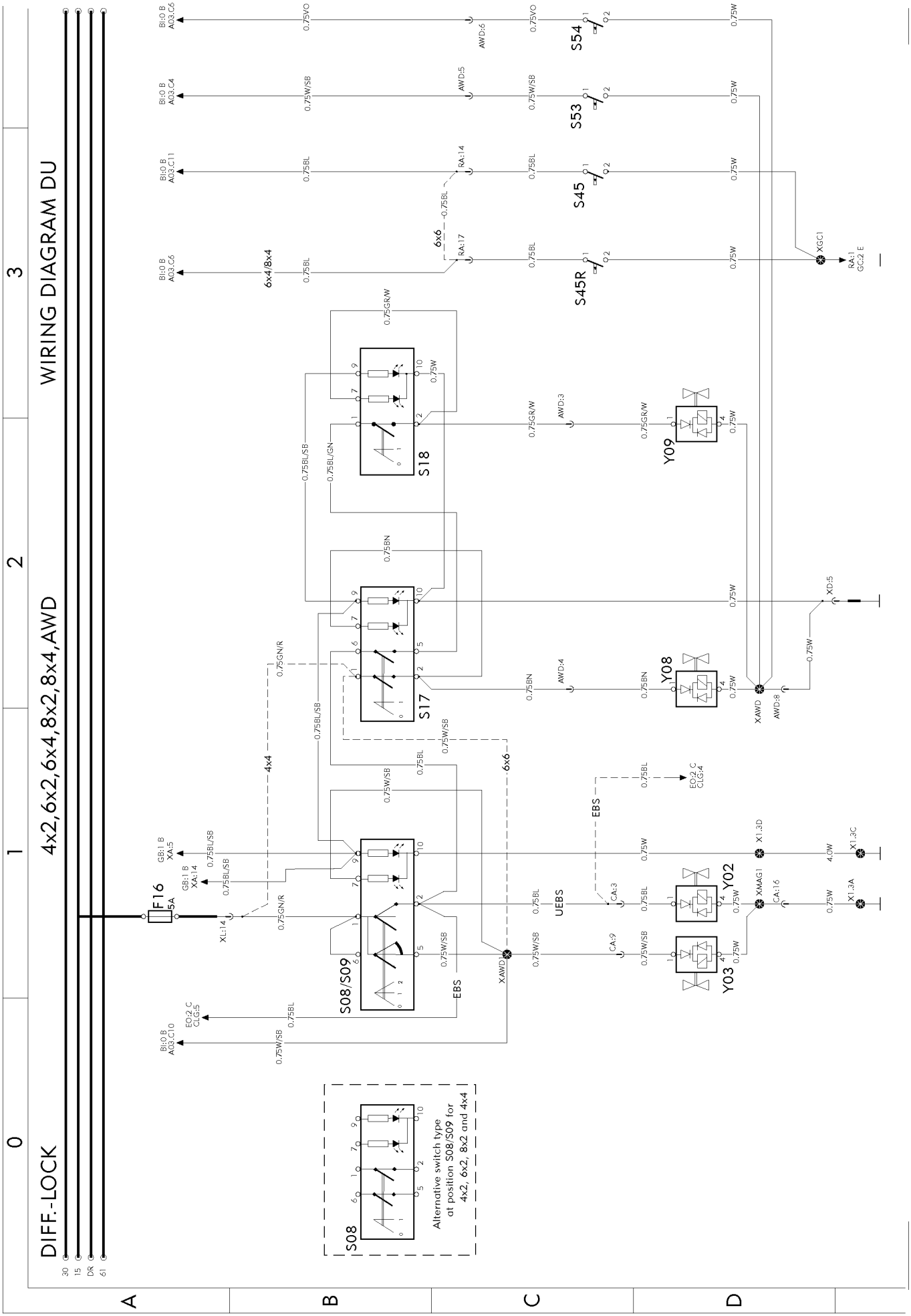

https://truckmanualshub.com/

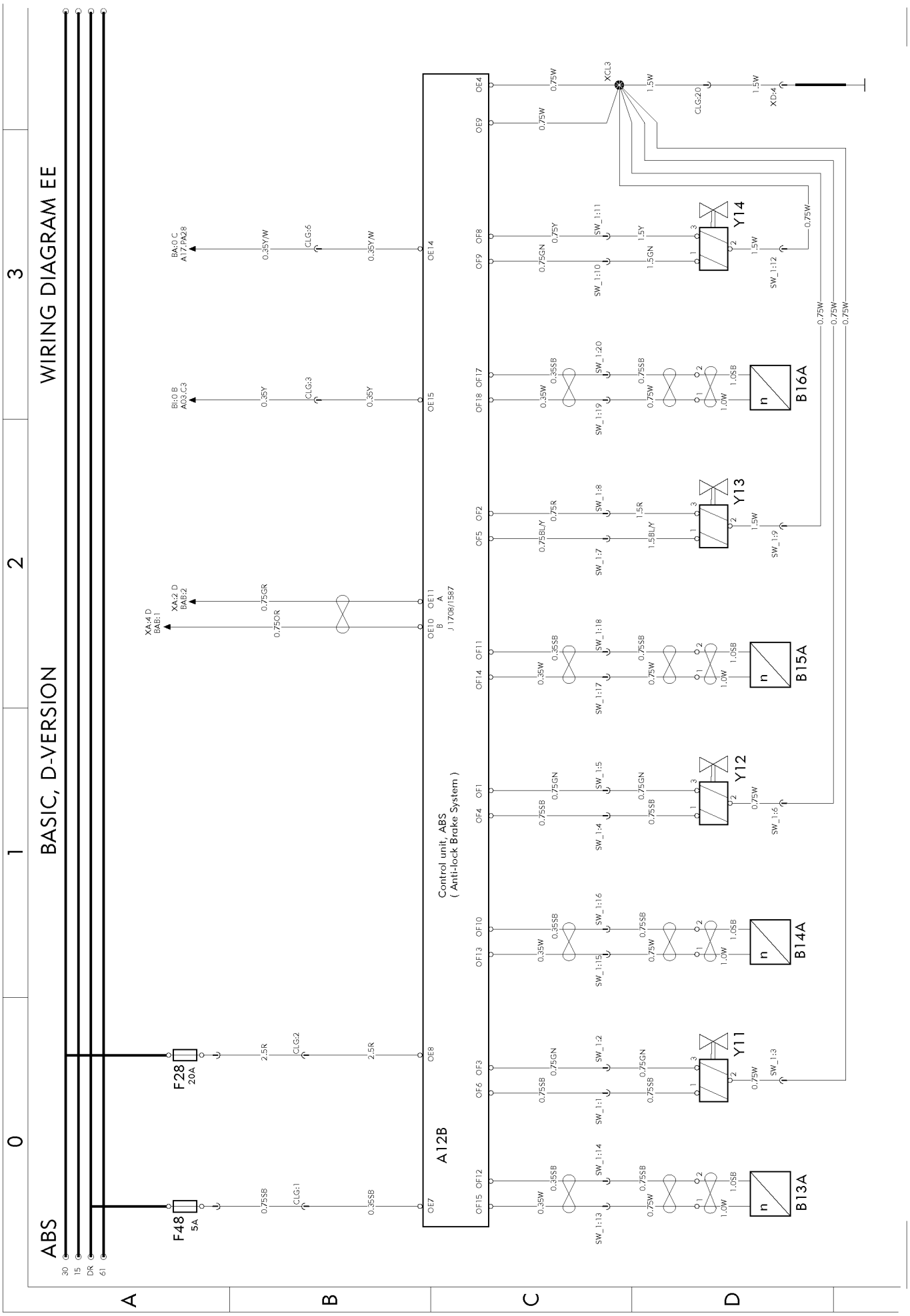

T3017655

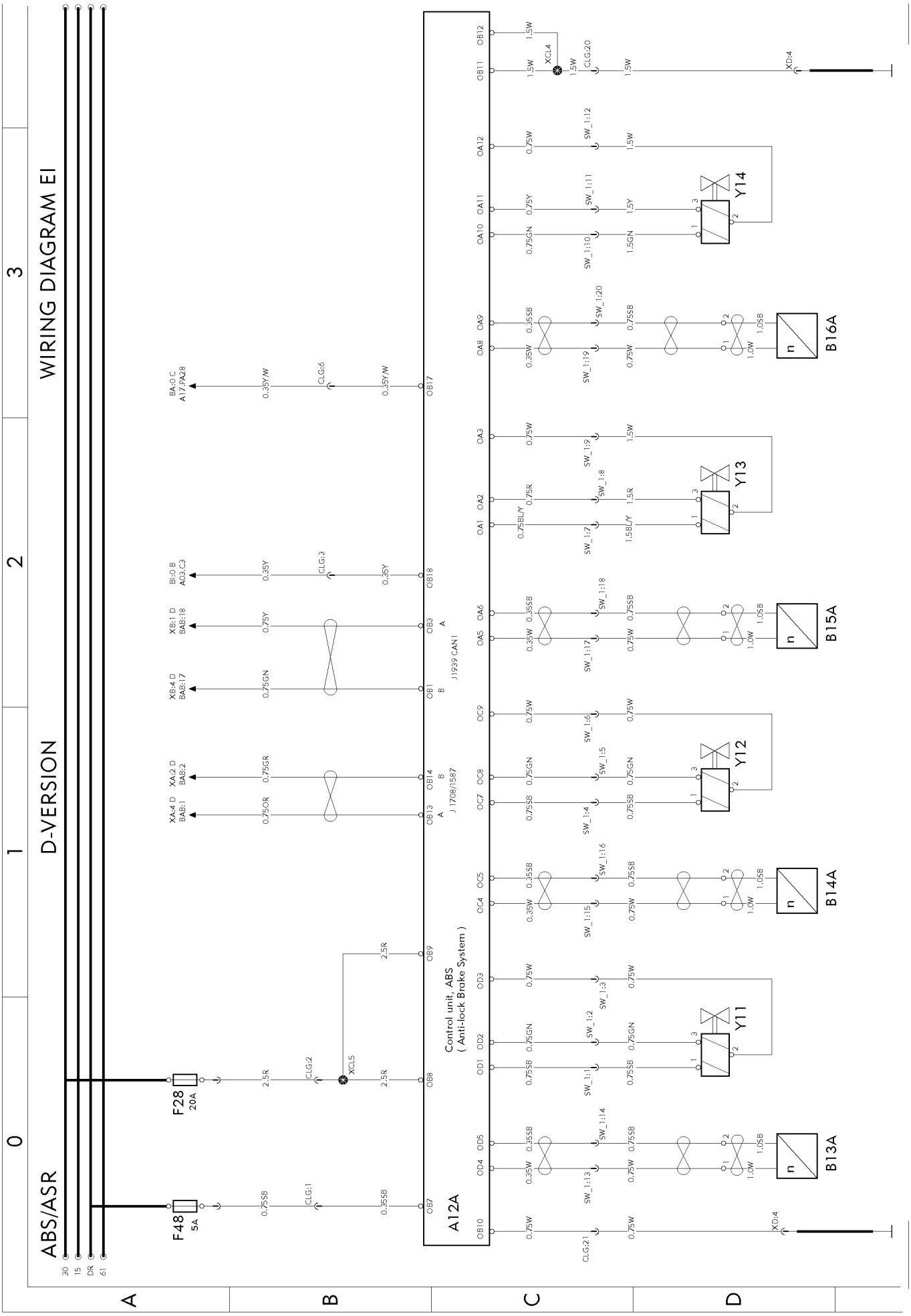
ABS/ASR
D-VERSION
WIRING DIAGRAM EI
30
15
DR
61
F48
5A
F28
20A
A12A
Control unit, ABS
(Anti-lock Brake System)
J 1708/1587
J1939 CAN1
Y11
Y12
Y13
Y14
B13A
B14A
B15A
B16A
XCL4
XCL5
XD:4

https://truckmanualshub.com/

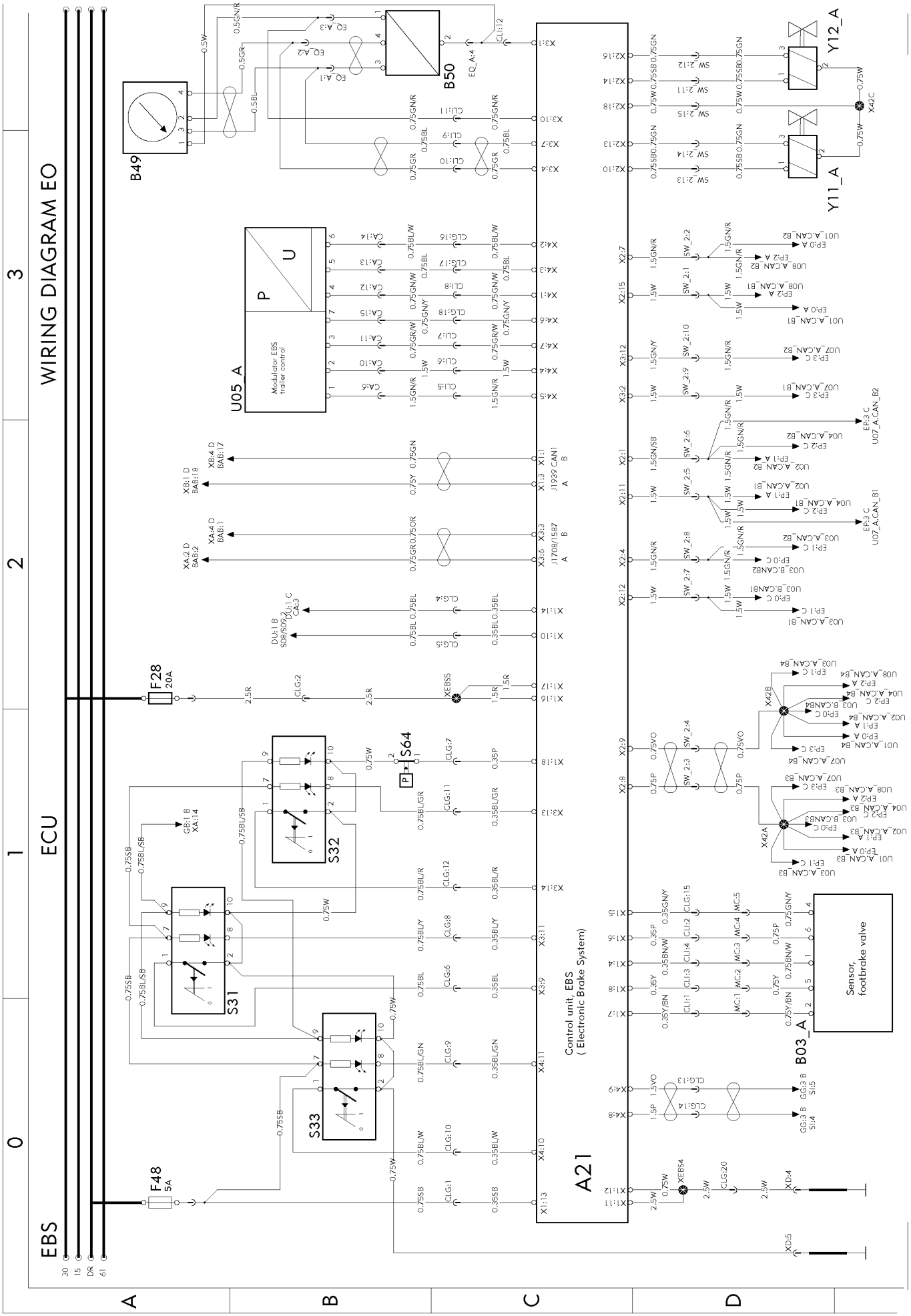

https://truckmanualshub.com/

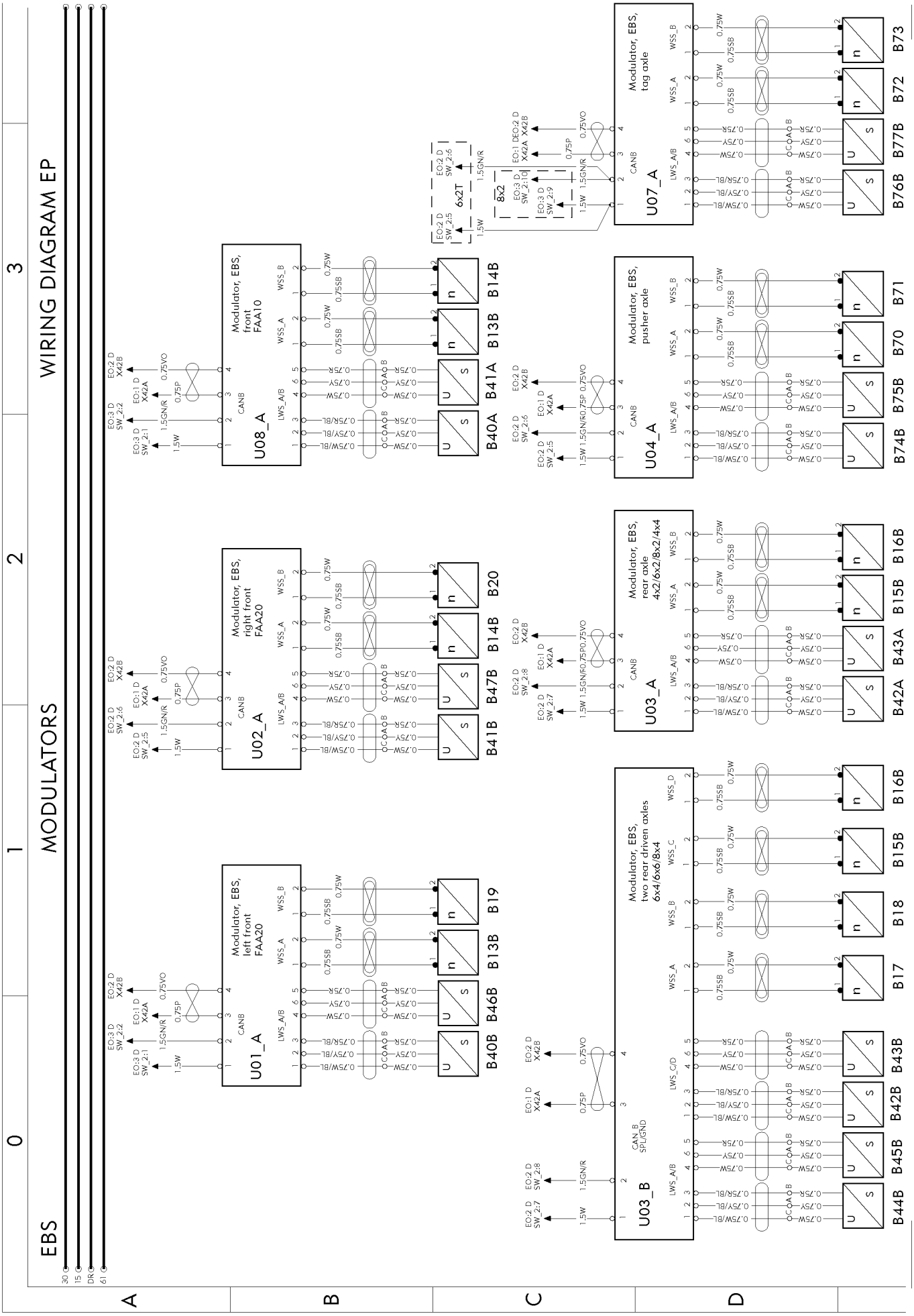

https://truckmanualshub.com/

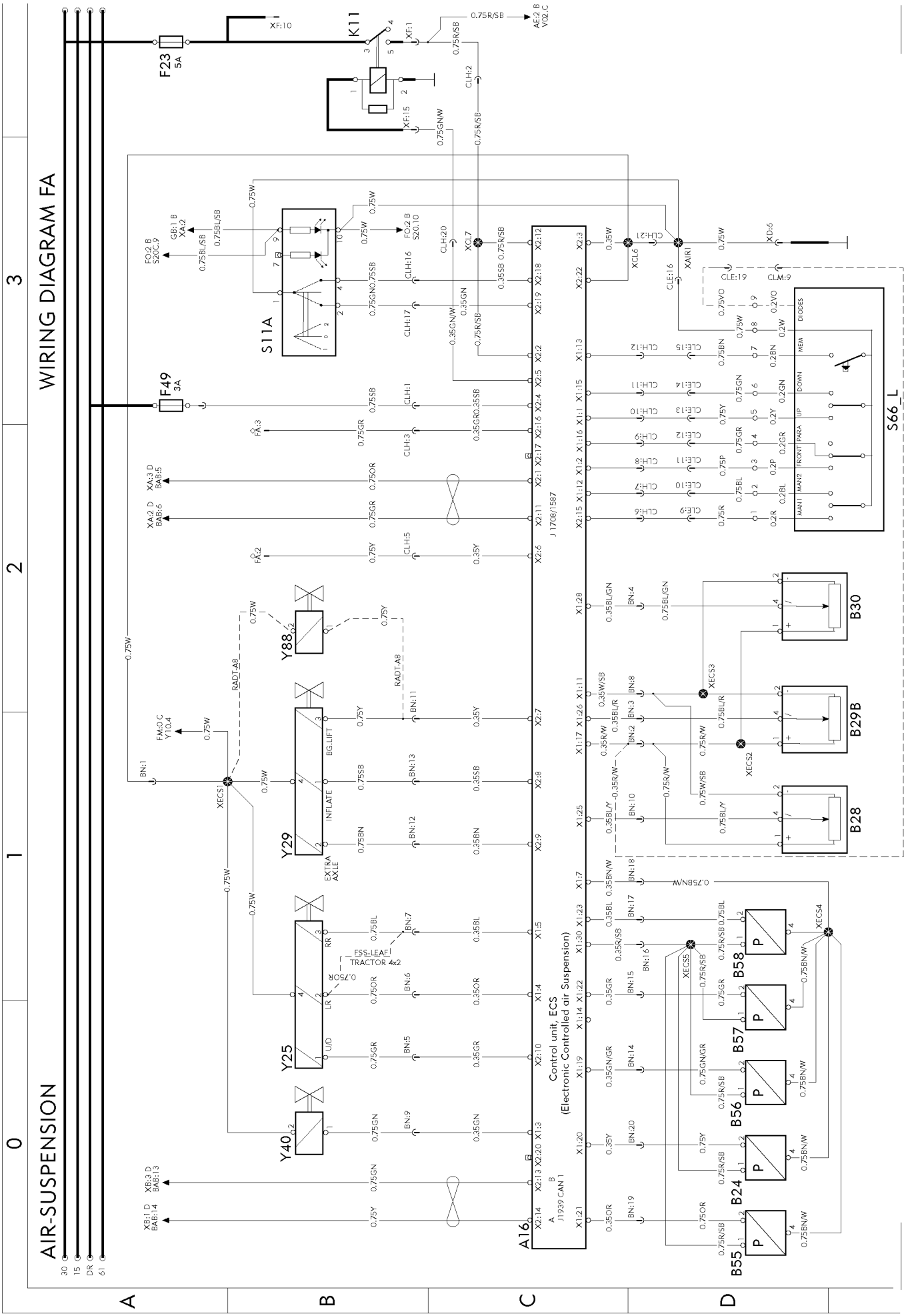

T3018715

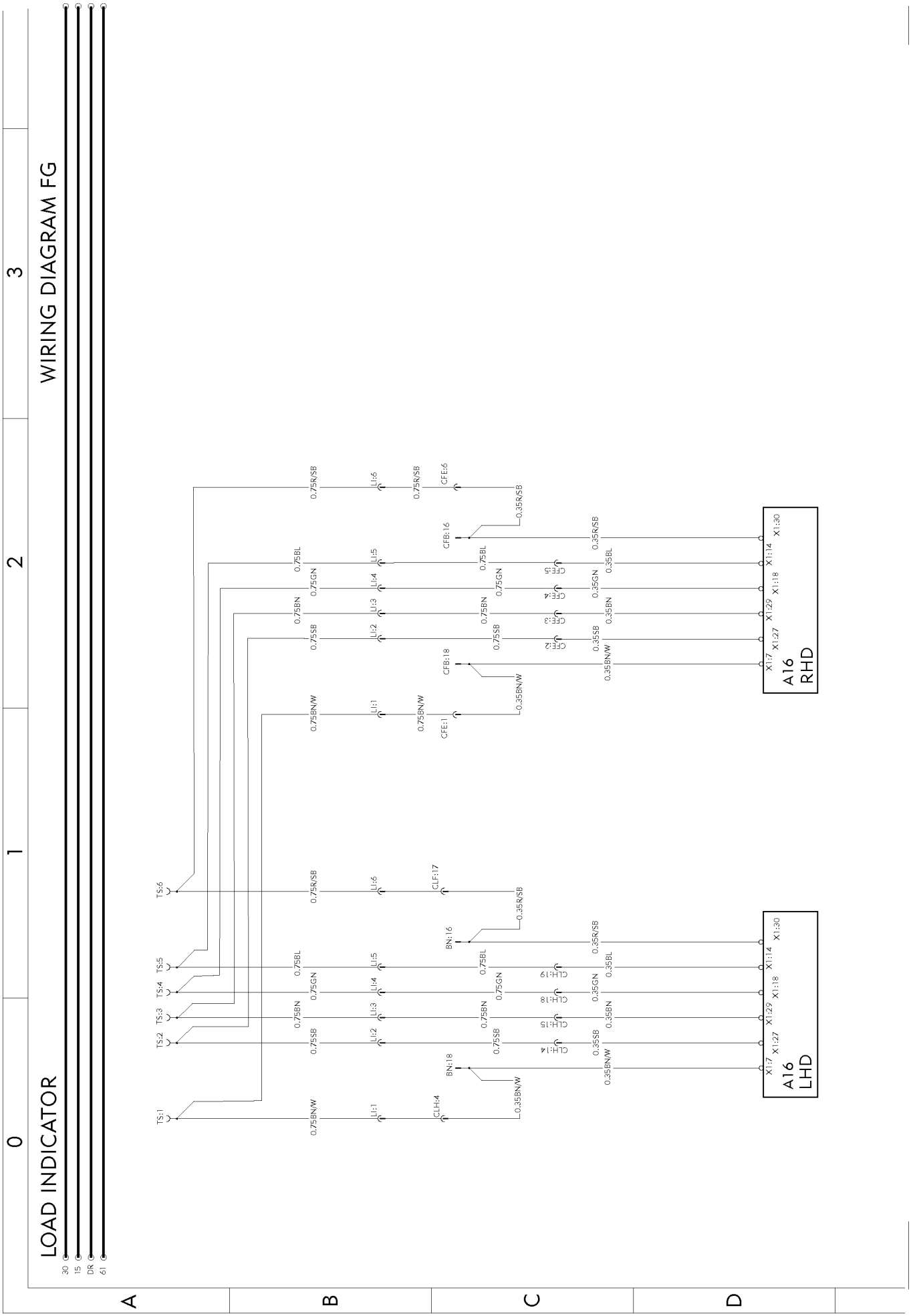
LOAD INDICATOR
WIRING DIAGRAM FG
30
15
DR
61
TS:1
TS:2
TS:3
TS:4
TS:5
TS:6
0.75BN/W
0.75SB
0.75BN
0.75GN
0.75BL
0.75R/SB
LI:1
LI:2
LI:3
LI:4
LI:5
LI:6
CLH:4
CLH:14
CLH:15
CLH:18
CLH:19
CLF:17
BN:18
BN:16
0.35BN/W
0.35SB
0.35BN
0.35GN
0.35BL
0.35R/SB
CFE:1
CFE:2
CFE:3
CFE:4
CFE:5
CFE:6
CFB:18
CFB:16
A16
LHD
A16
RHD
X1:7
X1:27
X1:29
X1:18
X1:14
X1:30
A
B
C
D

https://truckmanualshub.com/

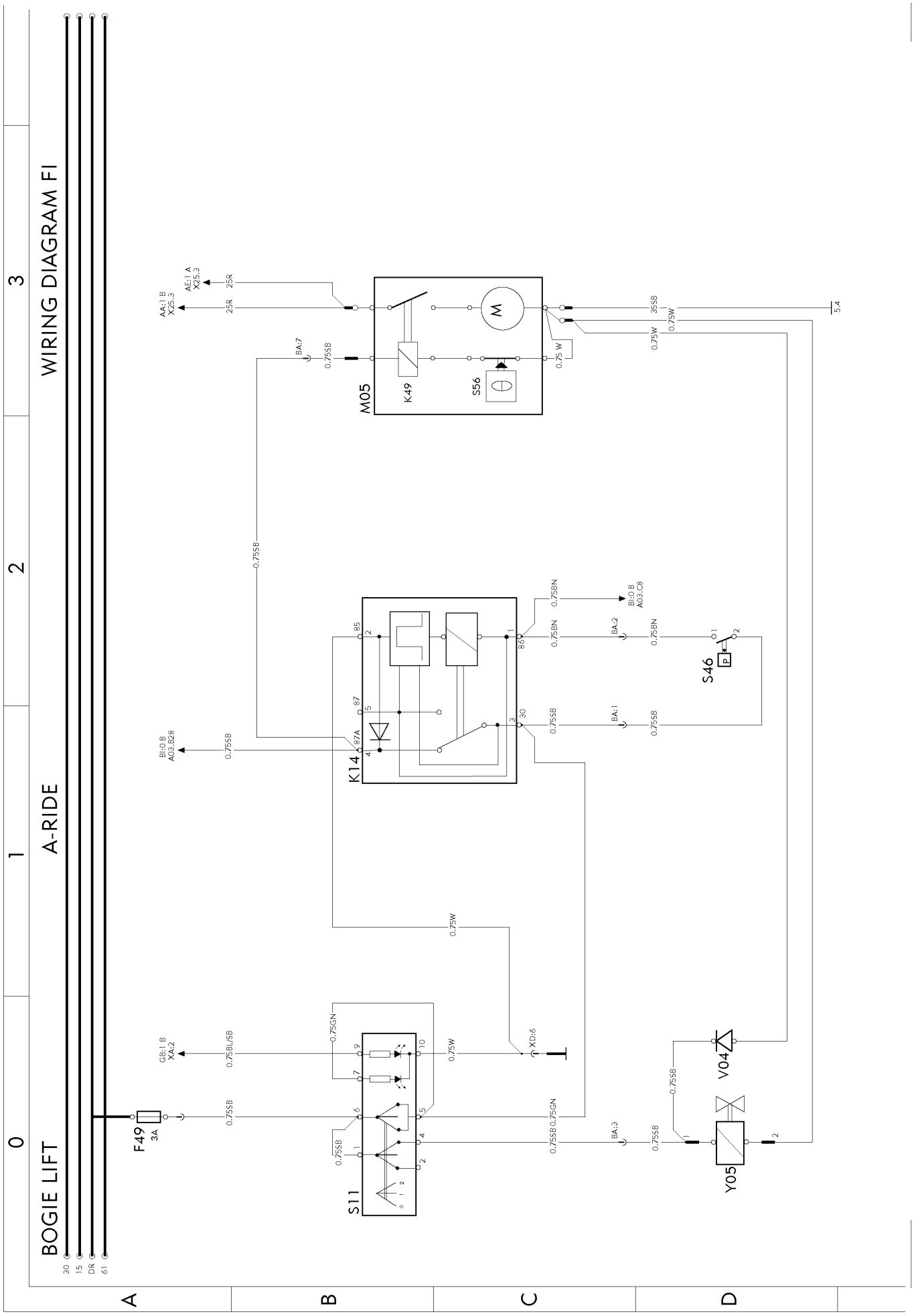

T3018263

https://truckmanualshub.com/

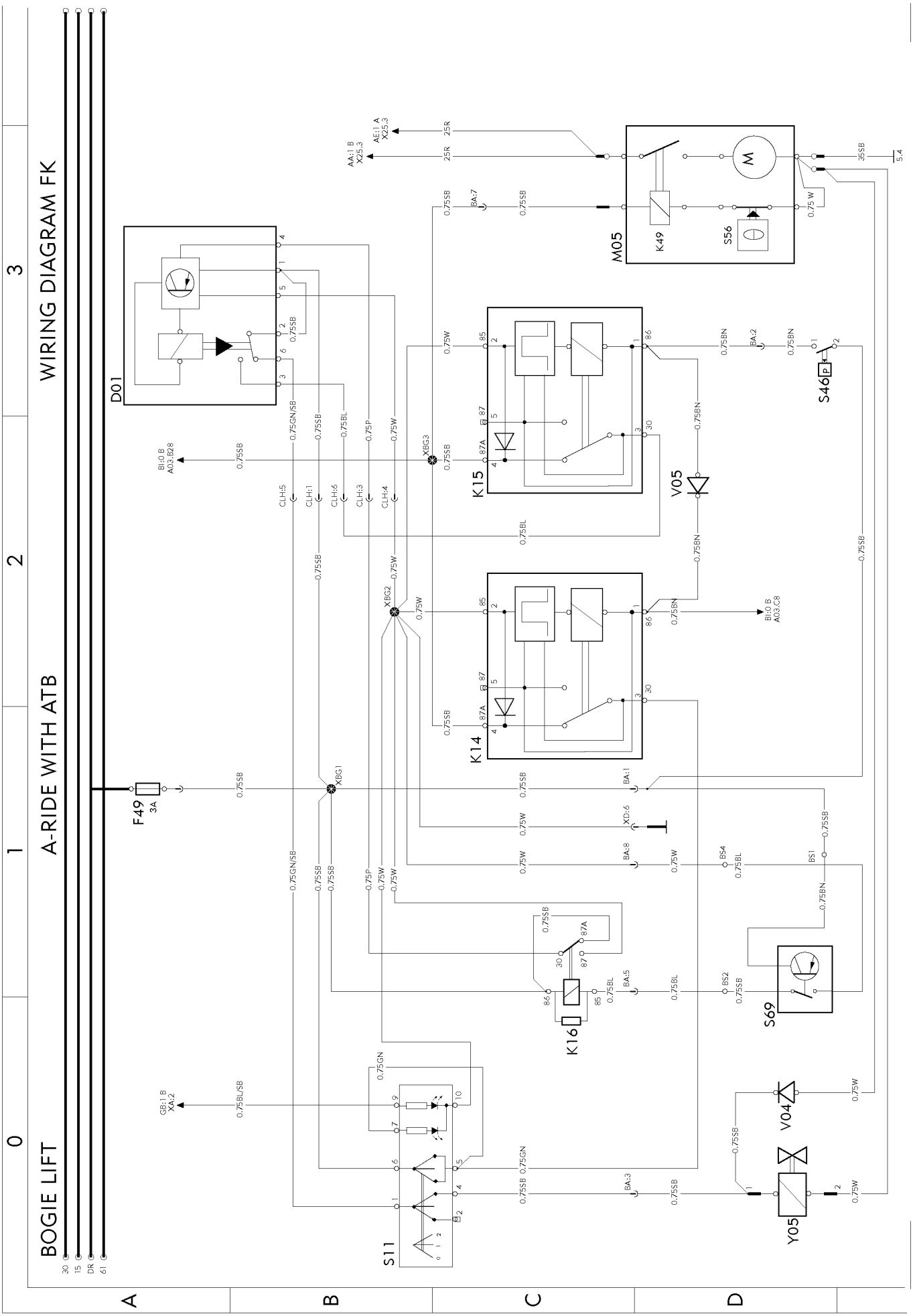

https://truckmanualshub.com/

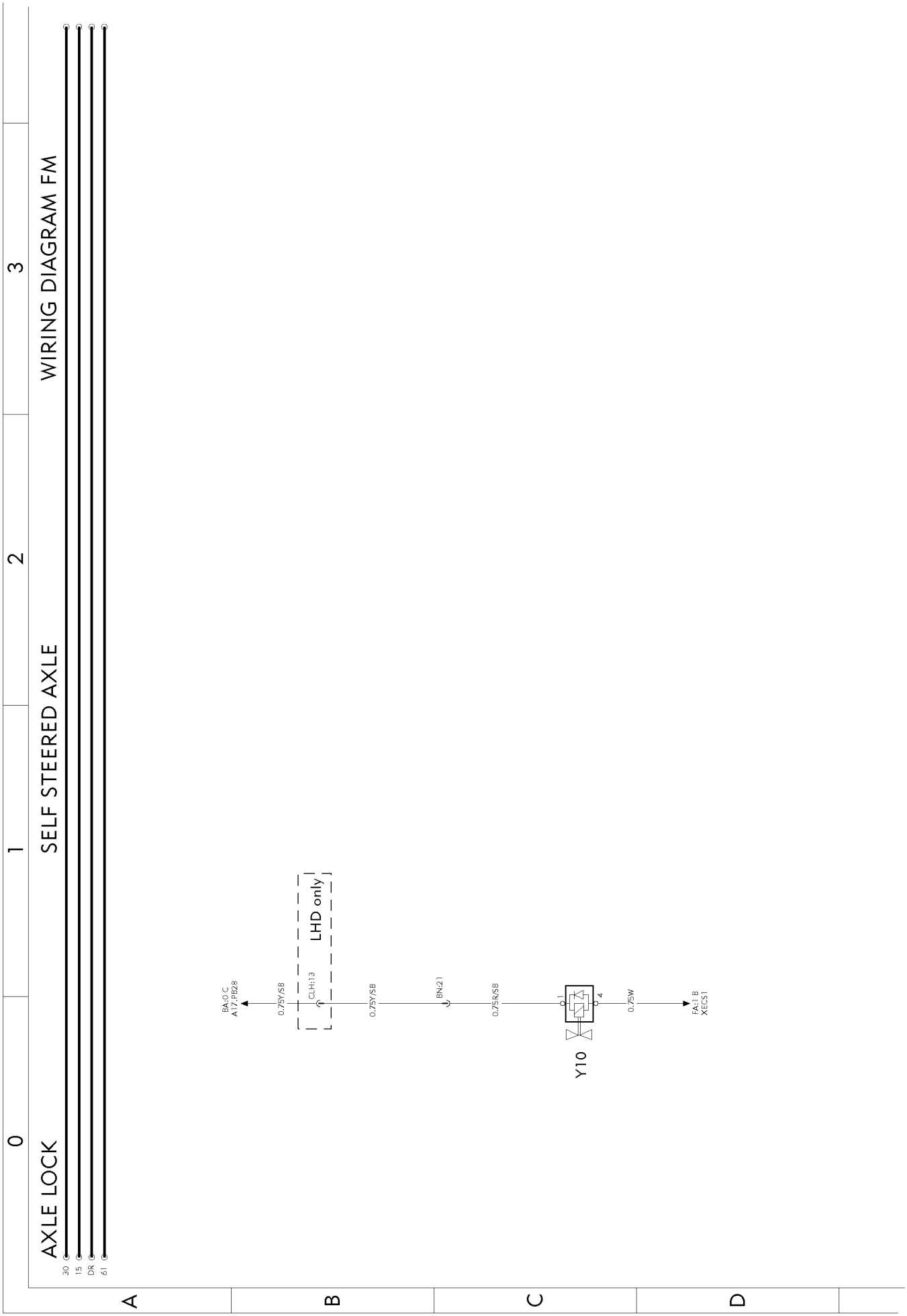

T3018265

https://truckmanualshub.com/

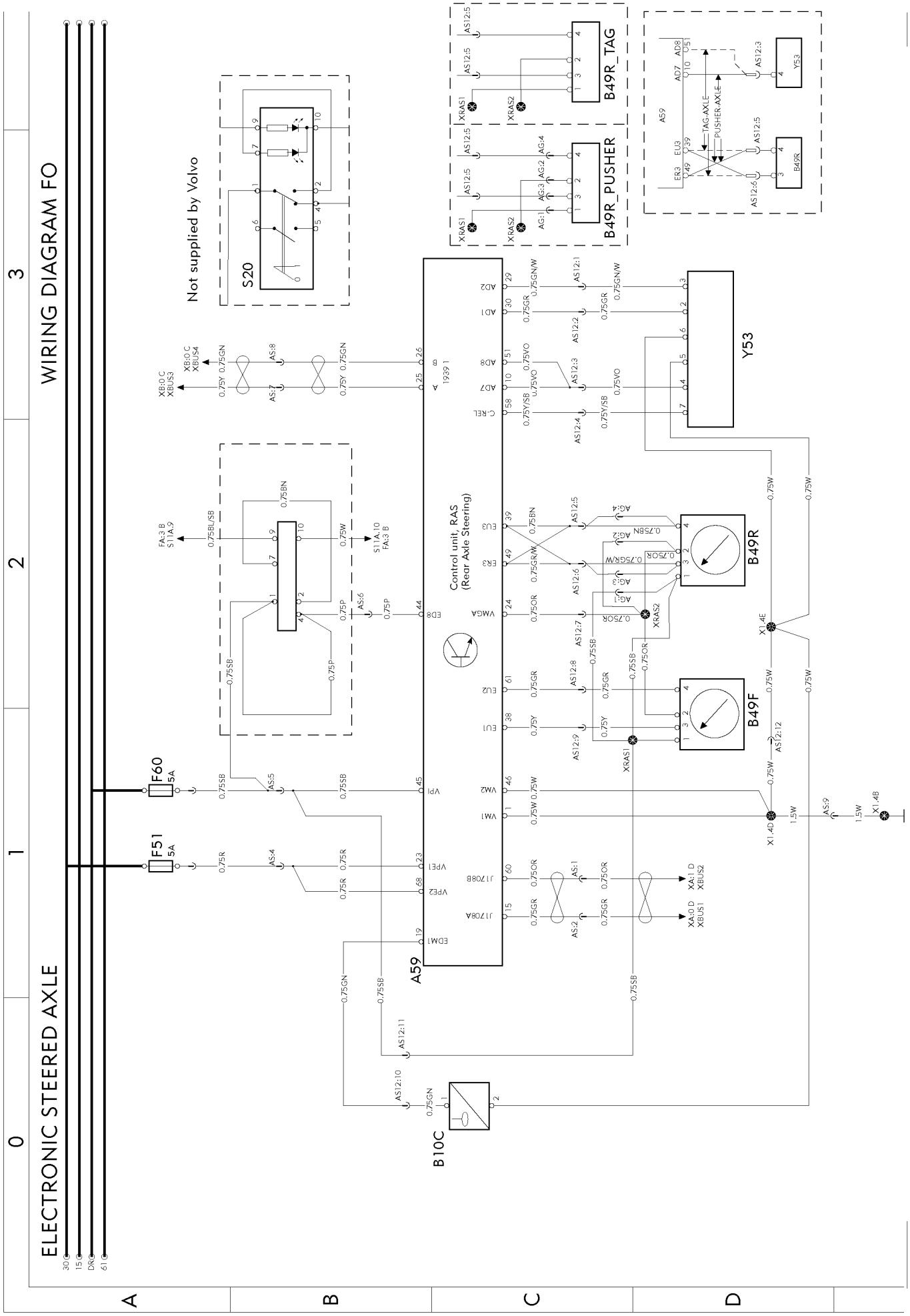

https://truckmanualshub.com/

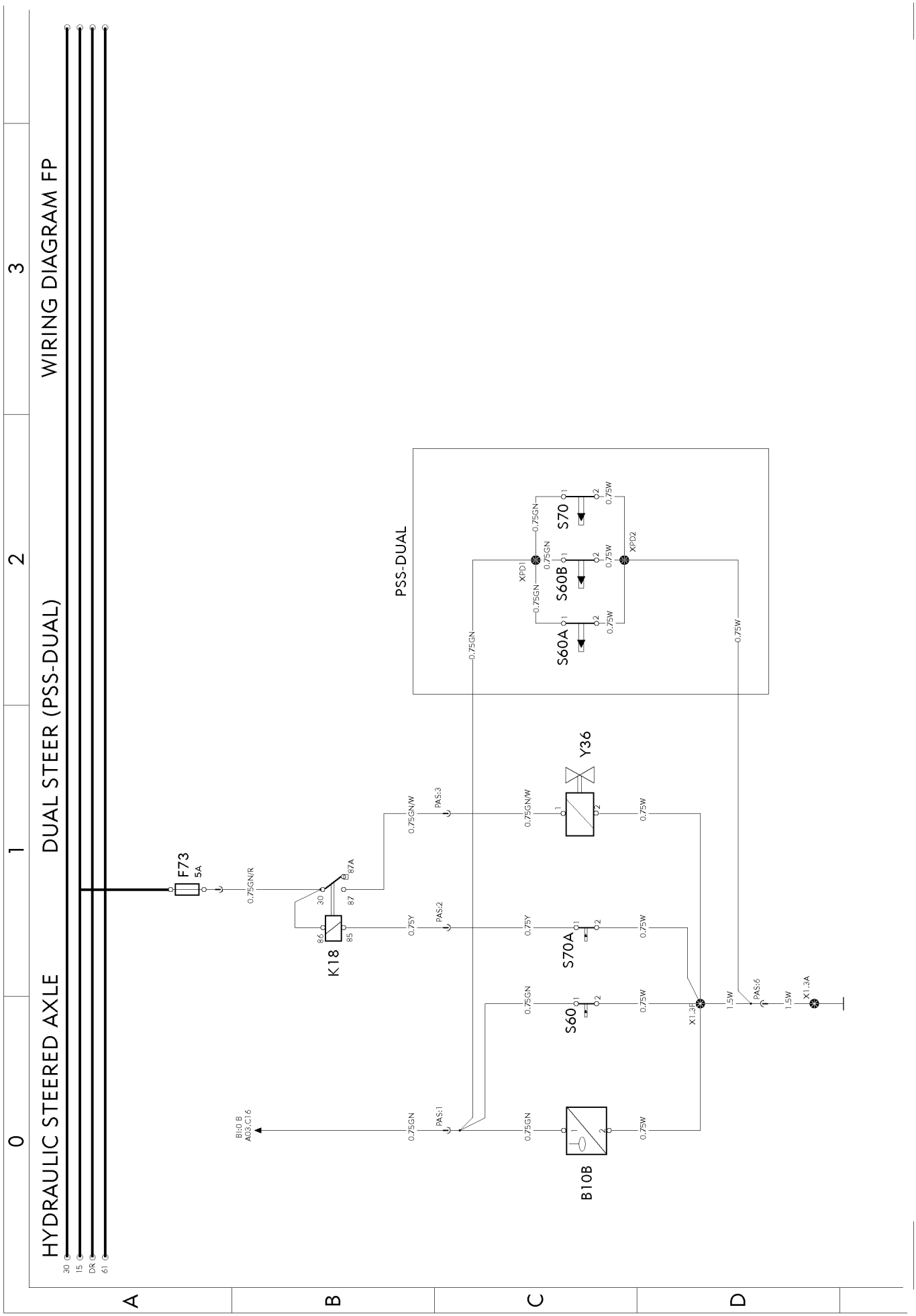

T3018267

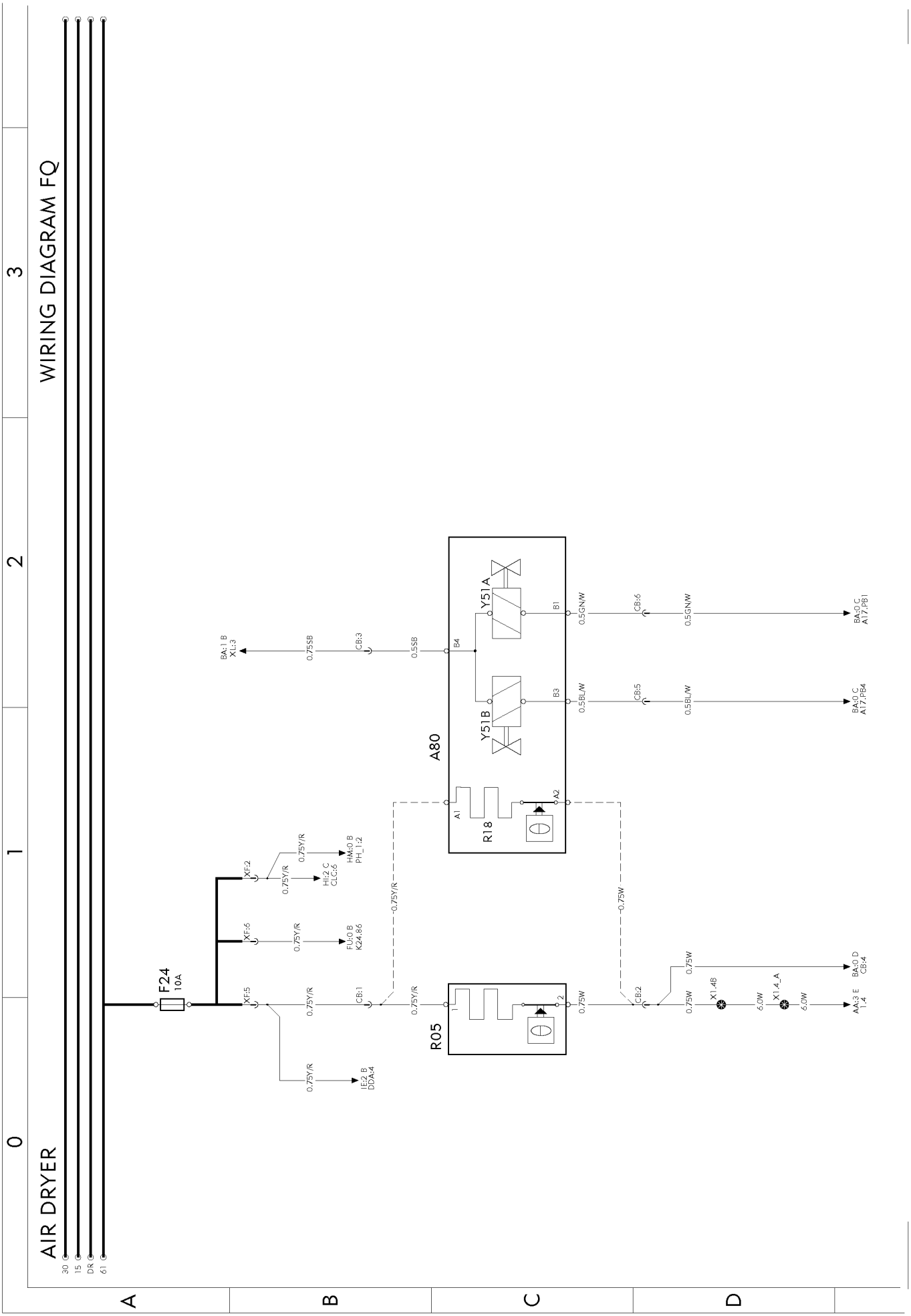
AIR DRYER
WIRING DIAGRAM FQ
30
15
DR
61
F24
10A
XF:5
XF:6
XF:2
0.75Y/R
IE:2 B
DDA:4
FU:10 B
K24:86
HI:2 C
CLC:6
HM:0 B
PH_1:2
CB:1
CB:3
BA:1 B
XL:3
0.75SB
0.5SB
R05
R18
A80
Y51A
Y51B
A1
A2
B1
B3
B4
0.5GN/W
0.5BL/W
CB:6
CB:5
BA:0 C
A17:PB1
BA:0 C
A17:PB4
CB:2
0.75W
X1.4B
X1.4_A
6.0W
BA:0 D
CB:4
AA:3 E
1:4

https://truckmanualshub.com/

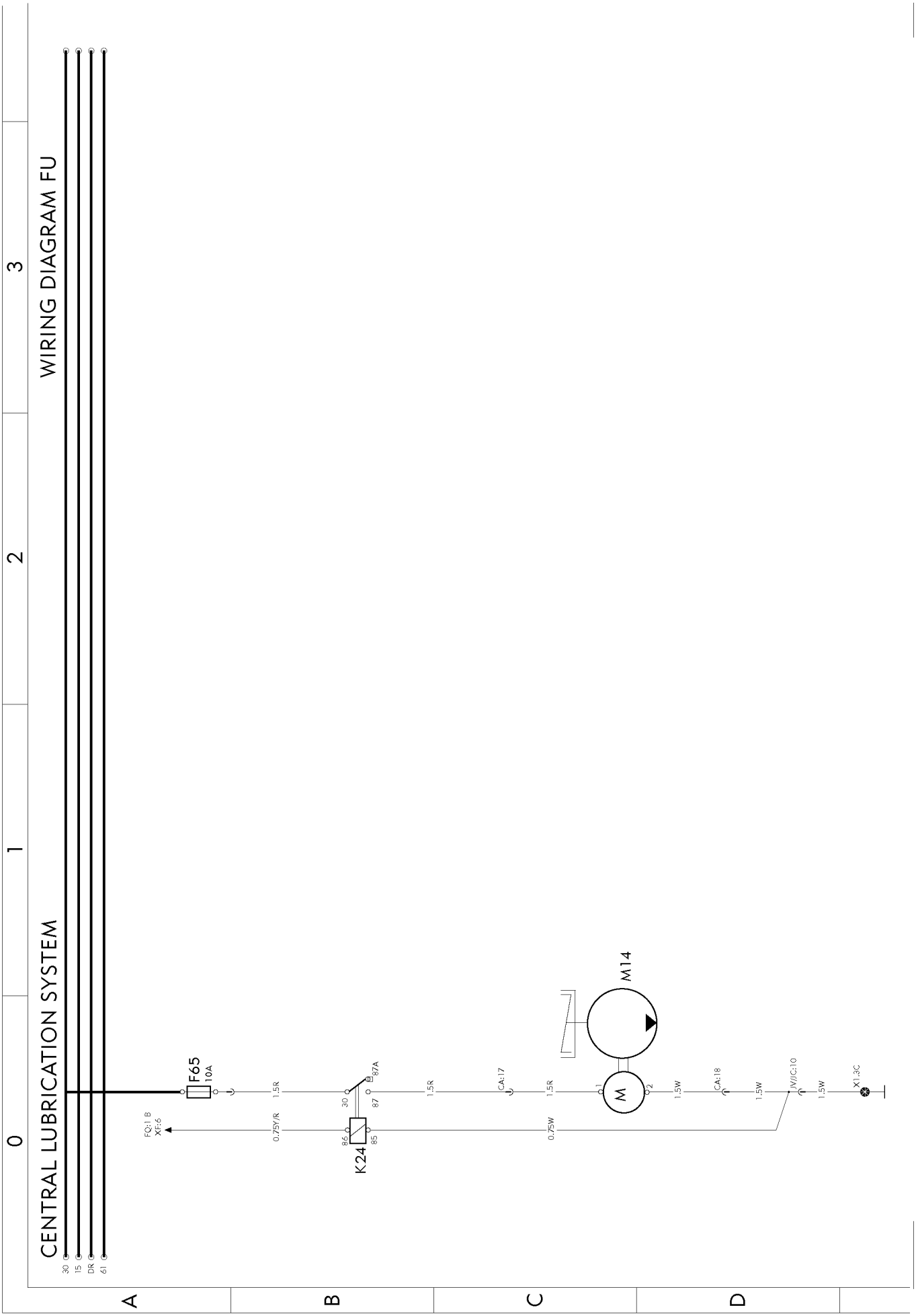

T3017667

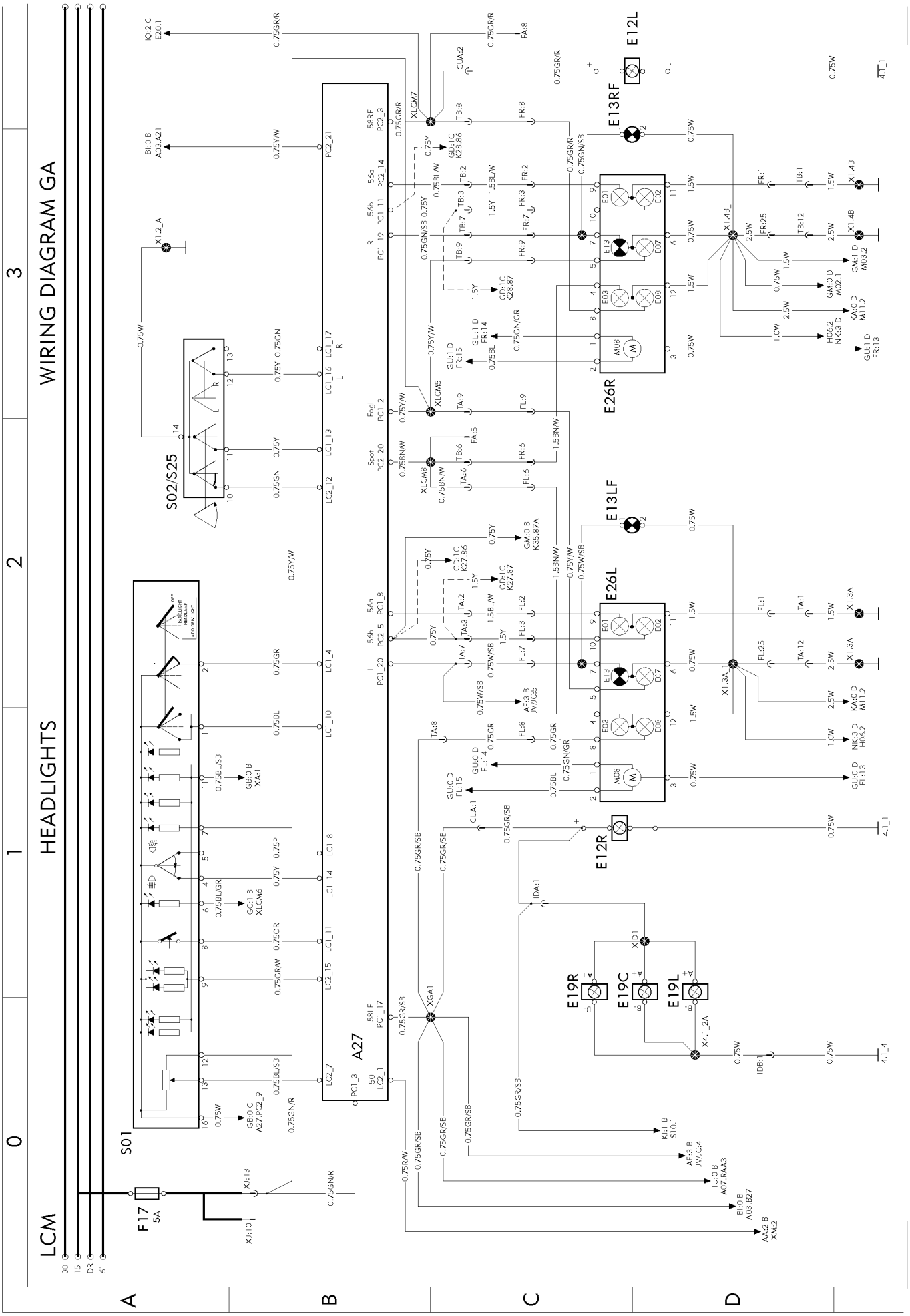
WIRING DIAGRAM GA
HEADLIGHTS
LCM
S01
S02/S25
A27
E26R
E26L
E13LF
E13RF
E12L
E12R
E19R
E19C
E19L
F17
5A

https://truckmanualshub.com/

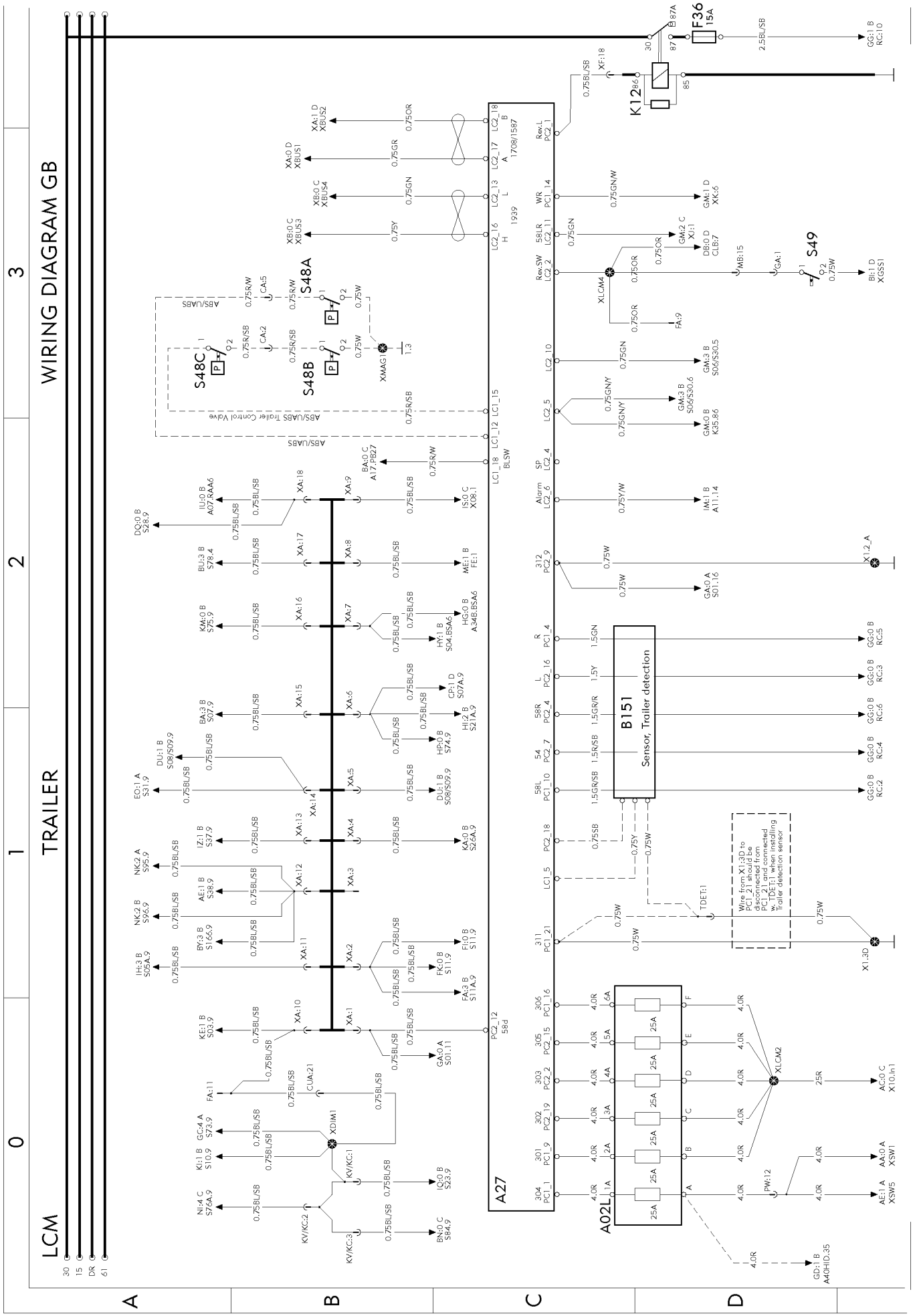

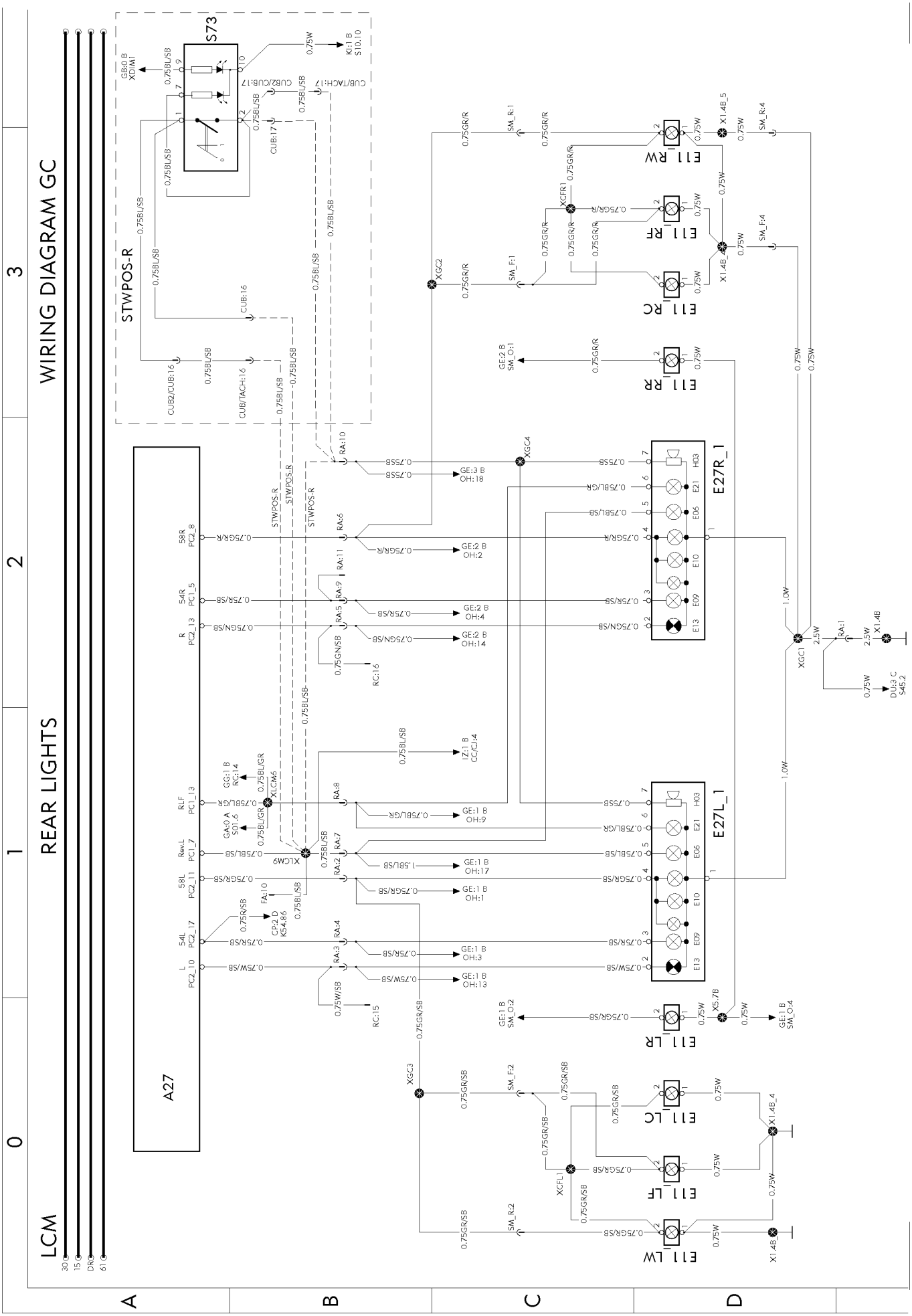
WIRING DIAGRAM GC
LCM
REAR LIGHTS
STWPOS-R
S73
A27
E27R_1
E27L_1
E11_RW
E11_RF
E11_RC
E11_RR
E11_LR
E11_LC
E11_LF
E11_LW
XGC1
XGC2
XGC3
XGC4
XCFR1
XCFL1
XLCM9
XLCM6
X1.4B_5
X1.4B_4
X1.4B
X5.7B
SM_R:1
SM_R:4
SM_F:1
SM_F:4
SM_F:2
SM_R:2
GE:2 B SM_O:1
GE:1 B SM_O:2
GE:1 B SM_O:4
GE:3 B OH:18
GE:2 B OH:2
GE:2 B OH:4
GE:2 B OH:14
GE:1 B OH:9
GE:1 B OH:17
GE:1 B OH:1
GE:1 B OH:3
GE:1 B OH:13
IZ:1 B CC/CI:4
GG:1 B RC:14
GA:0 A SQ1.6
CP:2 D K54.86
DU:3 C S45.2
GB:0 B XDIM1
KL:1 B S10.10
CUB2/CUB:16
CUB/TACH:16
CUB2/CUB:17
CUB/TACH:17
CUB:16
CUB:17
RA:10
RA:6
RA:11
RA:9
RA:5
RA:8
RA:7
RA:2
RA:4
RA:3
RA:1
RC:16
RC:15
FA:10
58R PC2_8
54R PC1_5
R PC2_13
RLF PC1_13
RevL PC1_7
58L PC2_11
54L PC2_17
L PC2_10
30
15
DR
61
A
B
C
D
0
1
2
3

https://truckmanualshub.com/

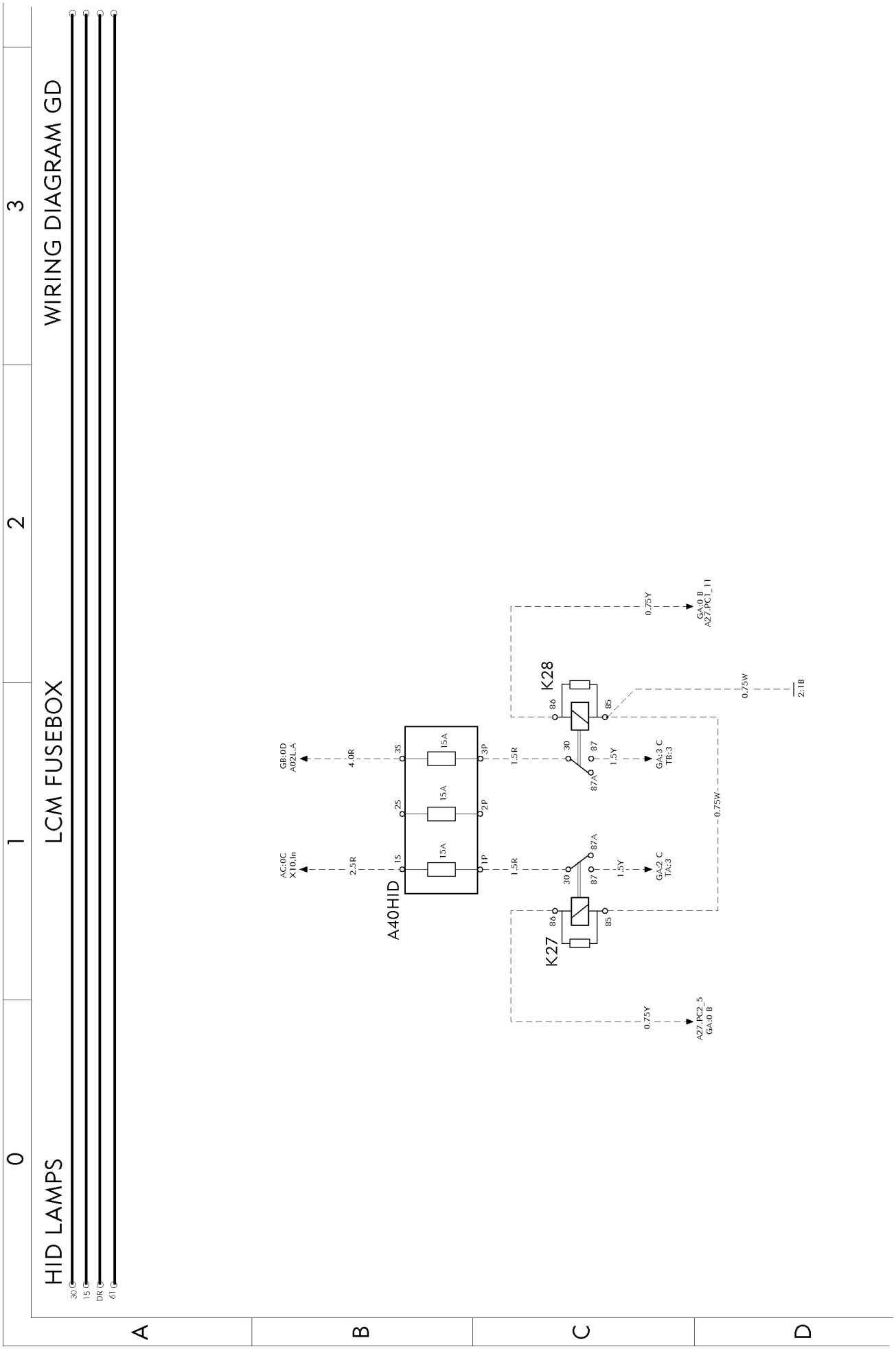

T3018719

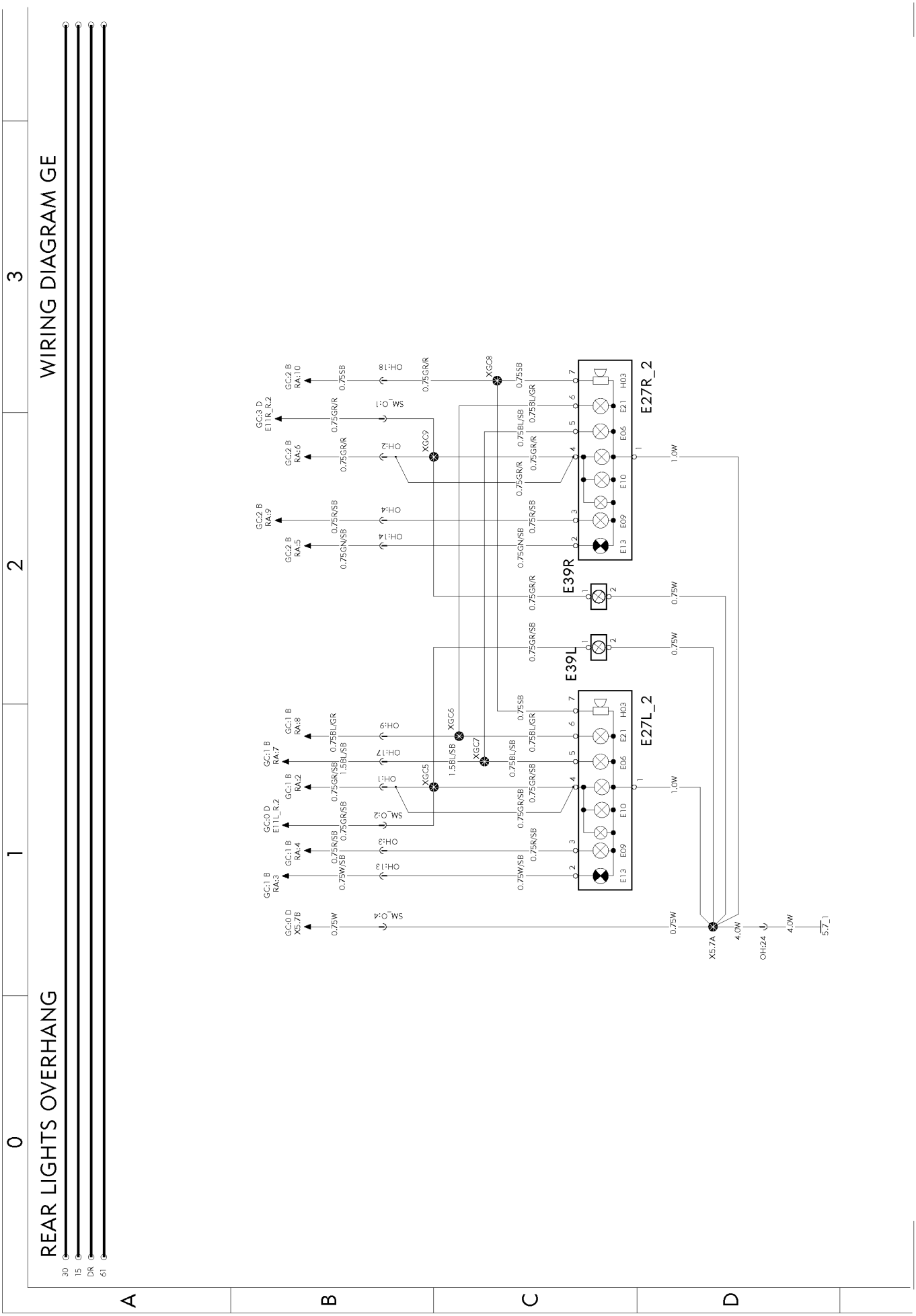
REAR LIGHTS OVERHANG
WIRING DIAGRAM GE
30
15
DR
61
E27R_2
E39R
E39L
E27L_2
XGC5
XGC6
XGC7
XGC8
XGC9
X5.7A
OH:24
5.7_1

https://truckmanualshub.com/

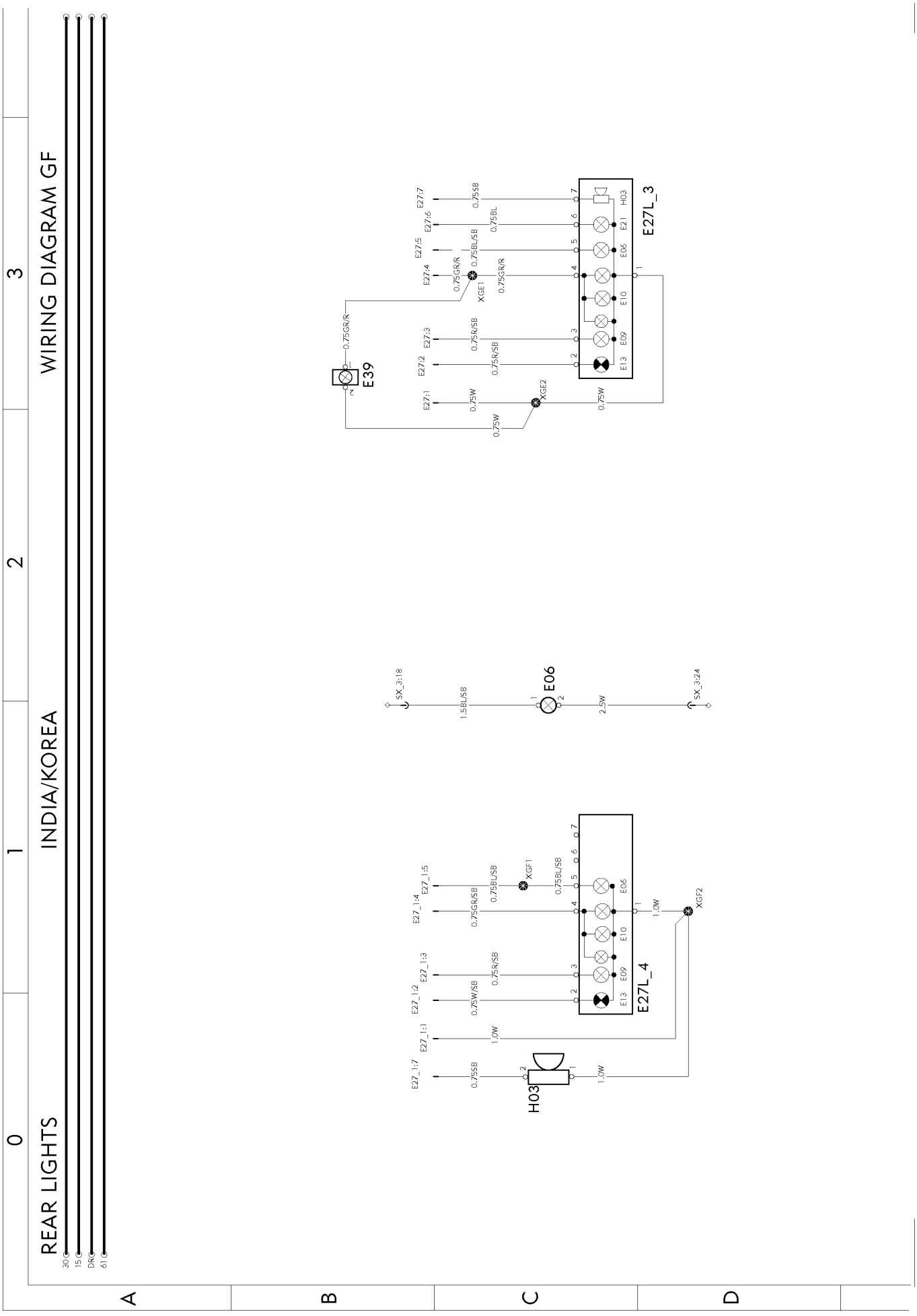

T3018720

https://truckmanualshub.com/

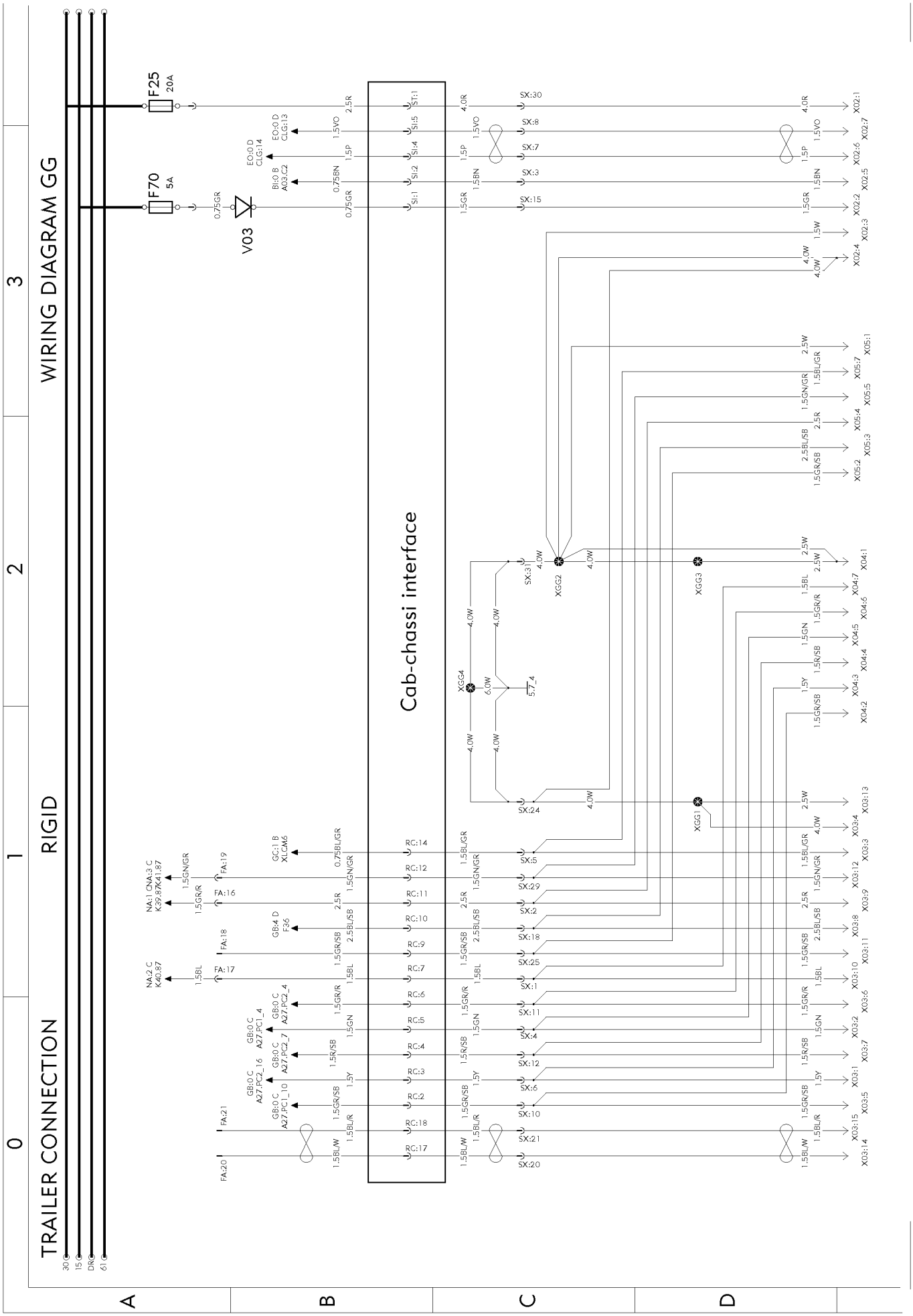

https://truckmanualshub.com/

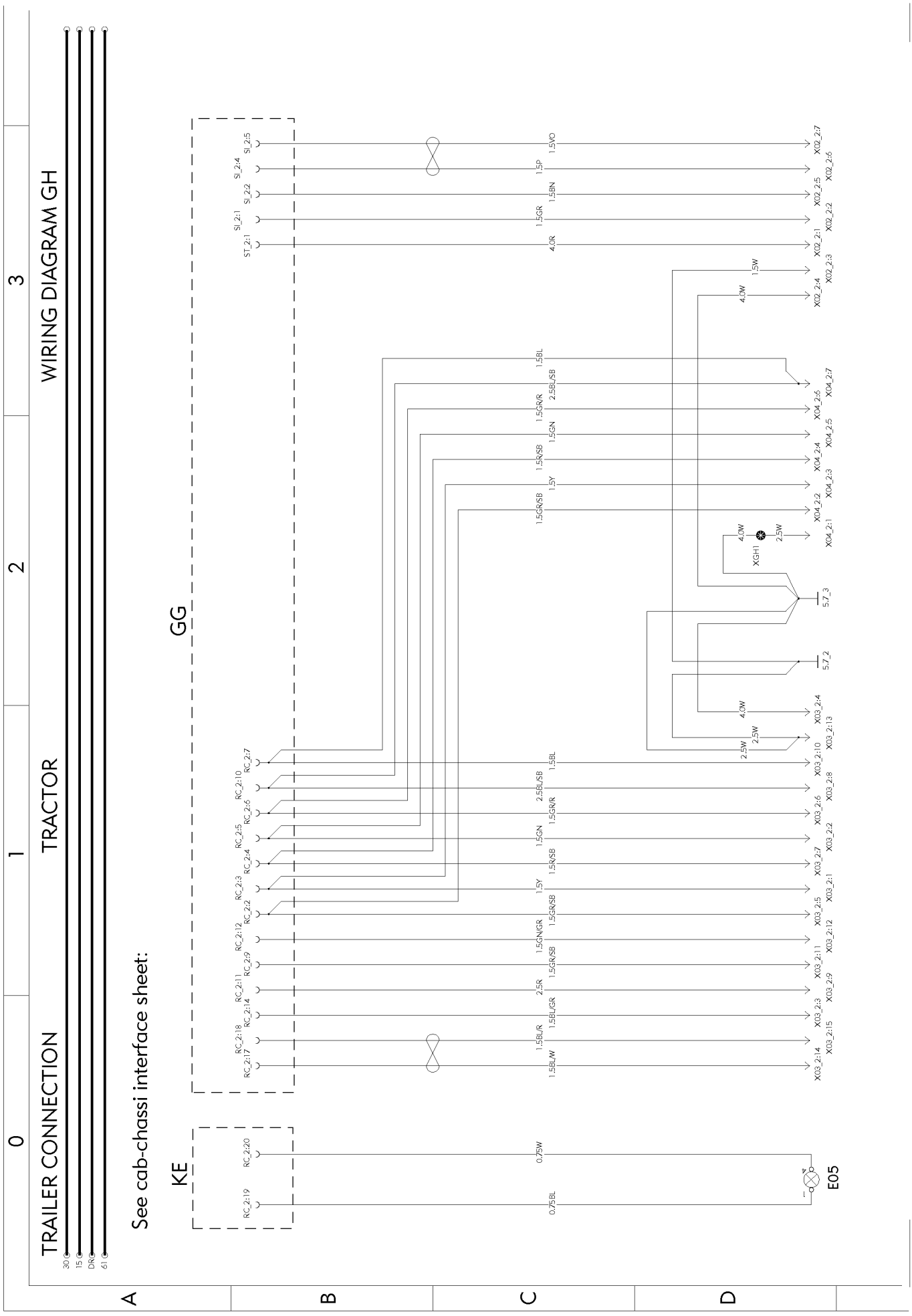

T3017674

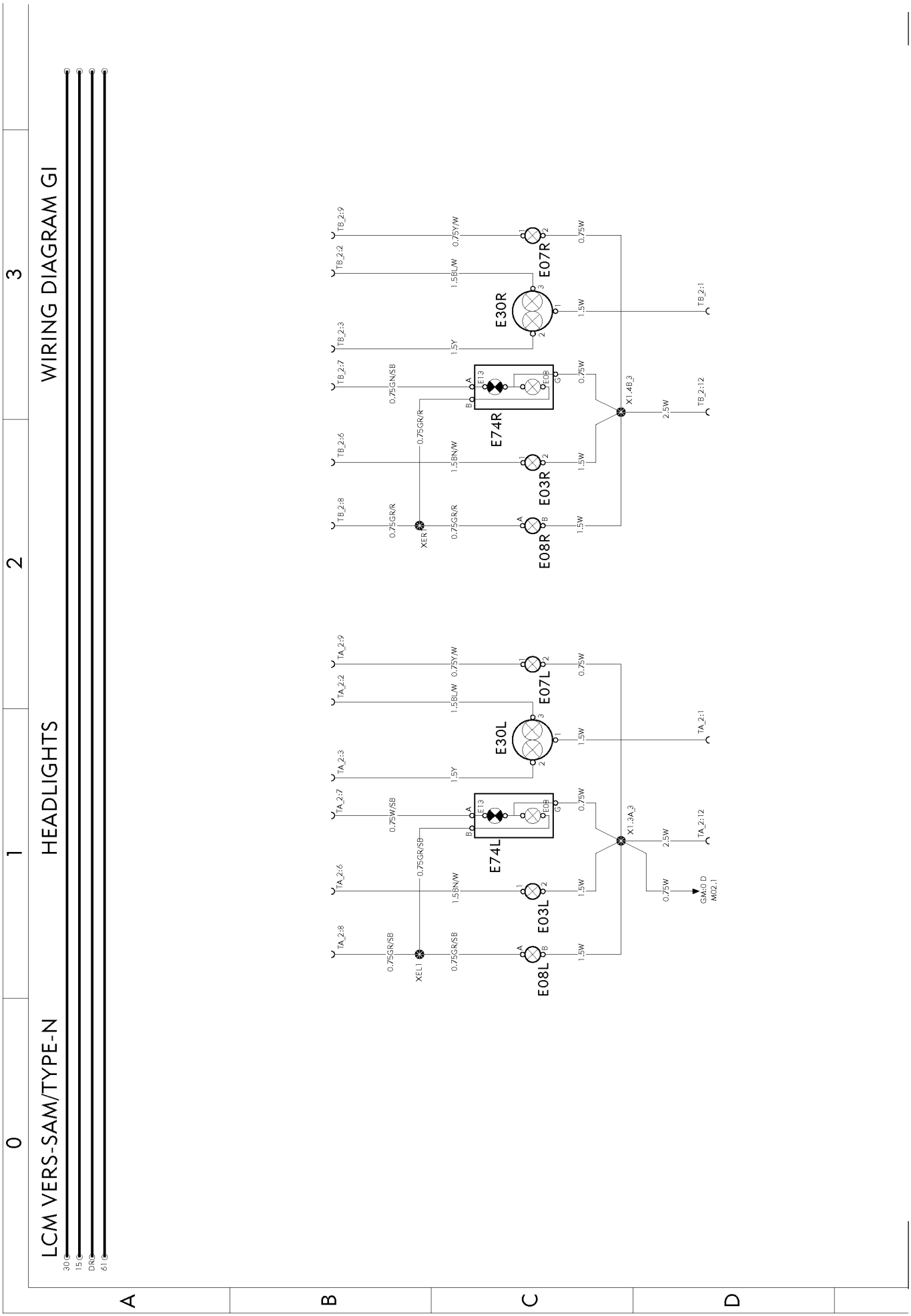
LCM VERS-SAM/TYPE-N
HEADLIGHTS
WIRING DIAGRAM GI
30
15
DR
61
0
1
2
3
A
B
C
D
E08L
E03L
E74L
E30L
E07L
E08R
E03R
E74R
E30R
E07R
XEL1
XER1
X1.3A_3
X1.4B_3
TA_2:8
TA_2:6
TA_2:7
TA_2:3
TA_2:2
TA_2:9
TA_2:1
TA_2:12
TB_2:8
TB_2:6
TB_2:7
TB_2:3
TB_2:2
TB_2:9
TB_2:1
TB_2:12
0.75GR/SB
0.75GR/SB
0.75W/SB
1.5BN/W
0.75GR/SB
1.5Y
1.5BL/W
0.75YW
0.75GR/R
0.75GR/R
0.75GR/R
1.5BN/W
0.75GN/SB
1.5Y
1.5BL/W
0.75YW
1.5W
0.75W
1.5W
0.75W
1.5W
0.75W
1.5W
0.75W
1.5W
0.75W
2.5W
2.5W
GM.0 D
MQ2.1

https://truckmanualshub.com/

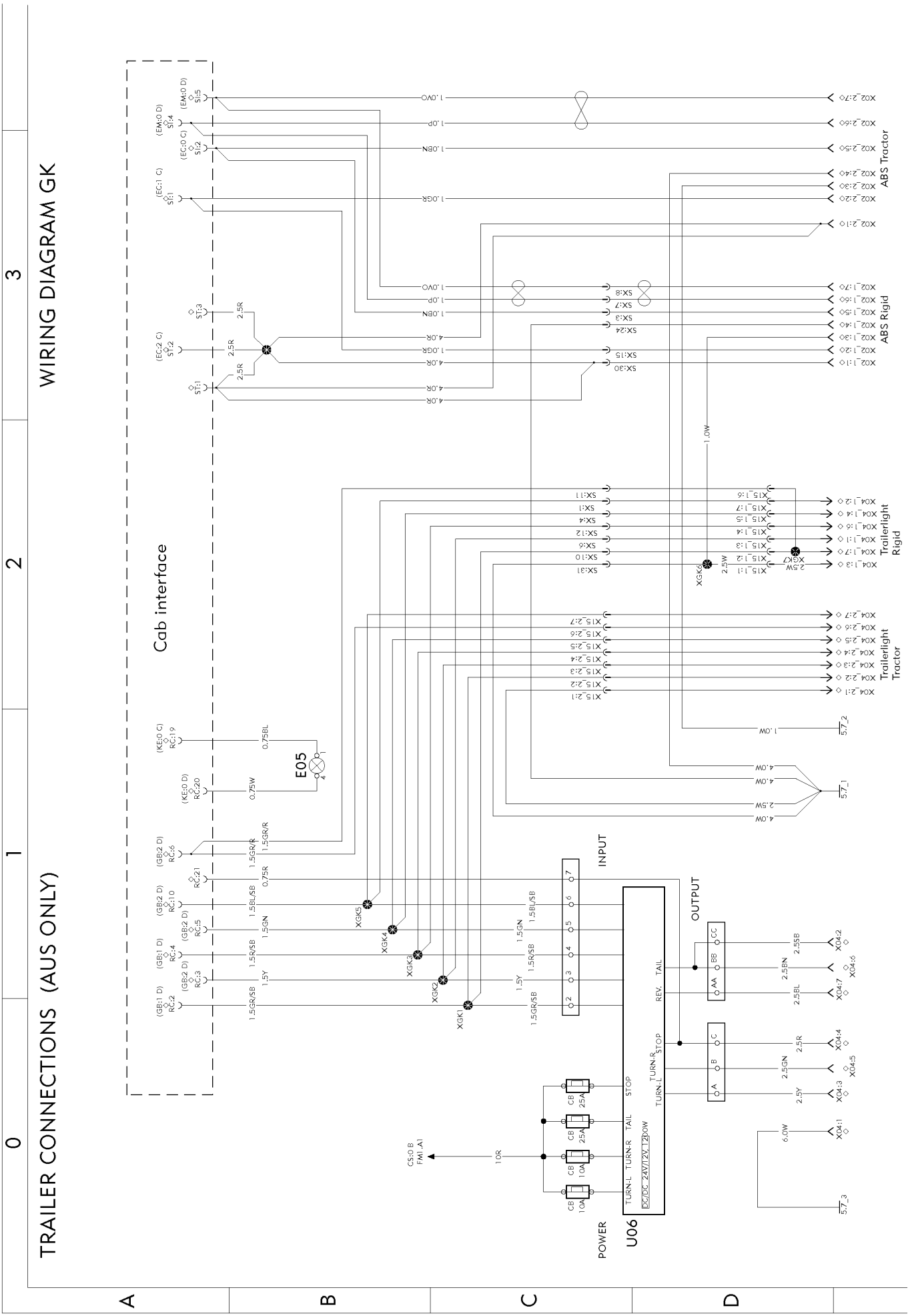

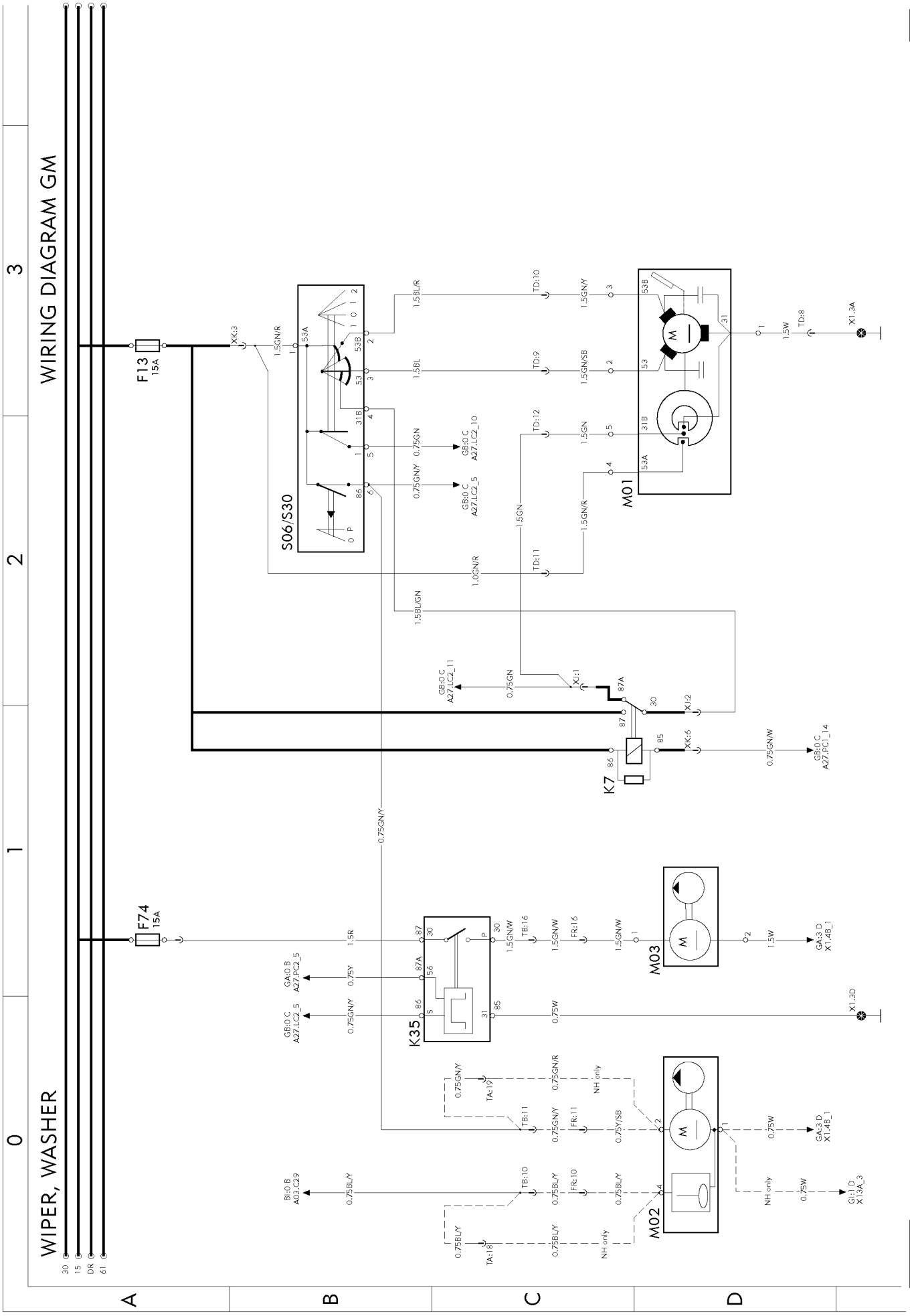
WIPER, WASHER
WIRING DIAGRAM GM
F13
15A
F74
15A
S06/S30
M01
M02
M03
K7
K35
30
15
DR
61
A
B
C
D
0
1
2
3

https://truckmanualshub.com/

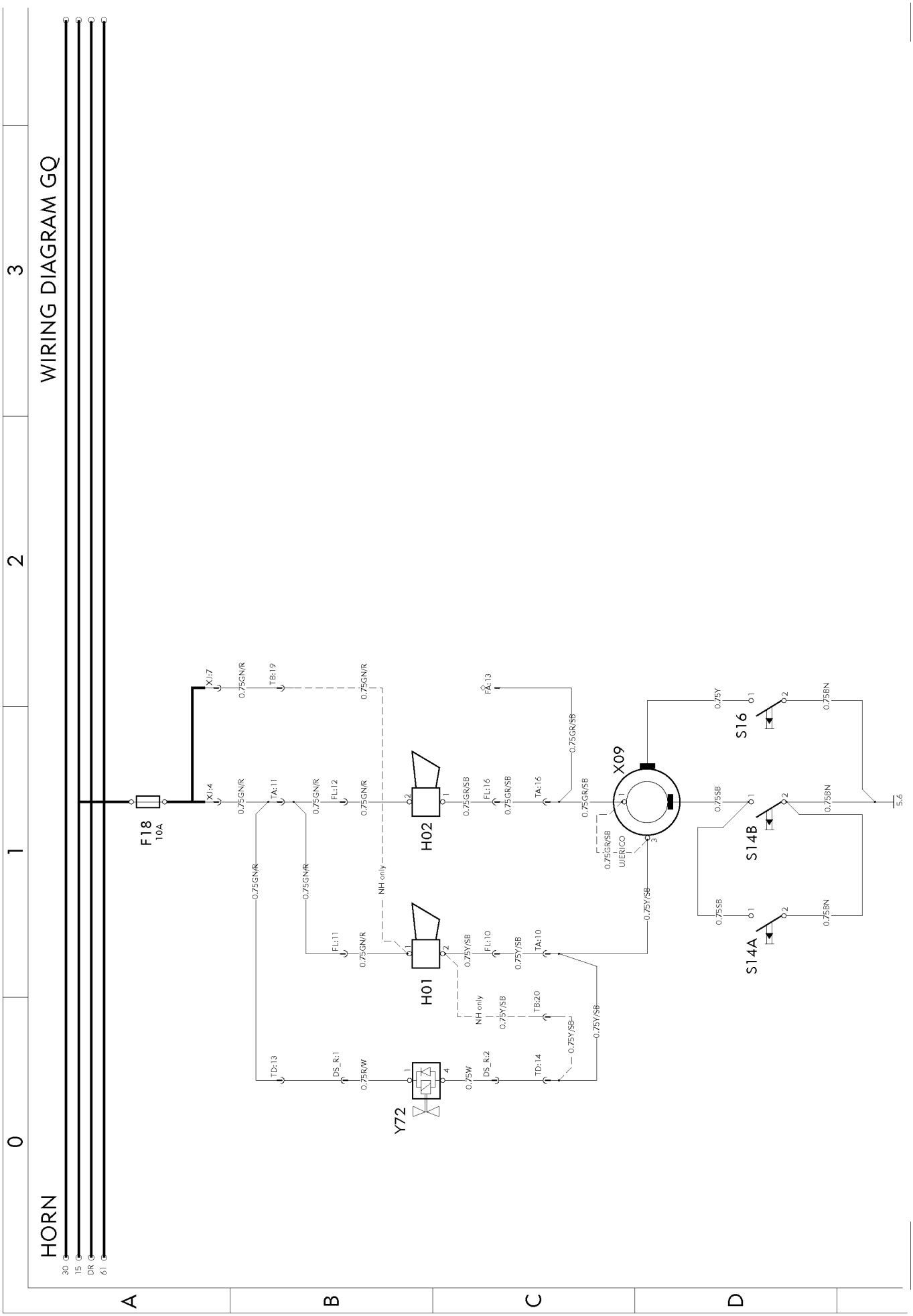

T3018275

https://truckmanualshub.com/

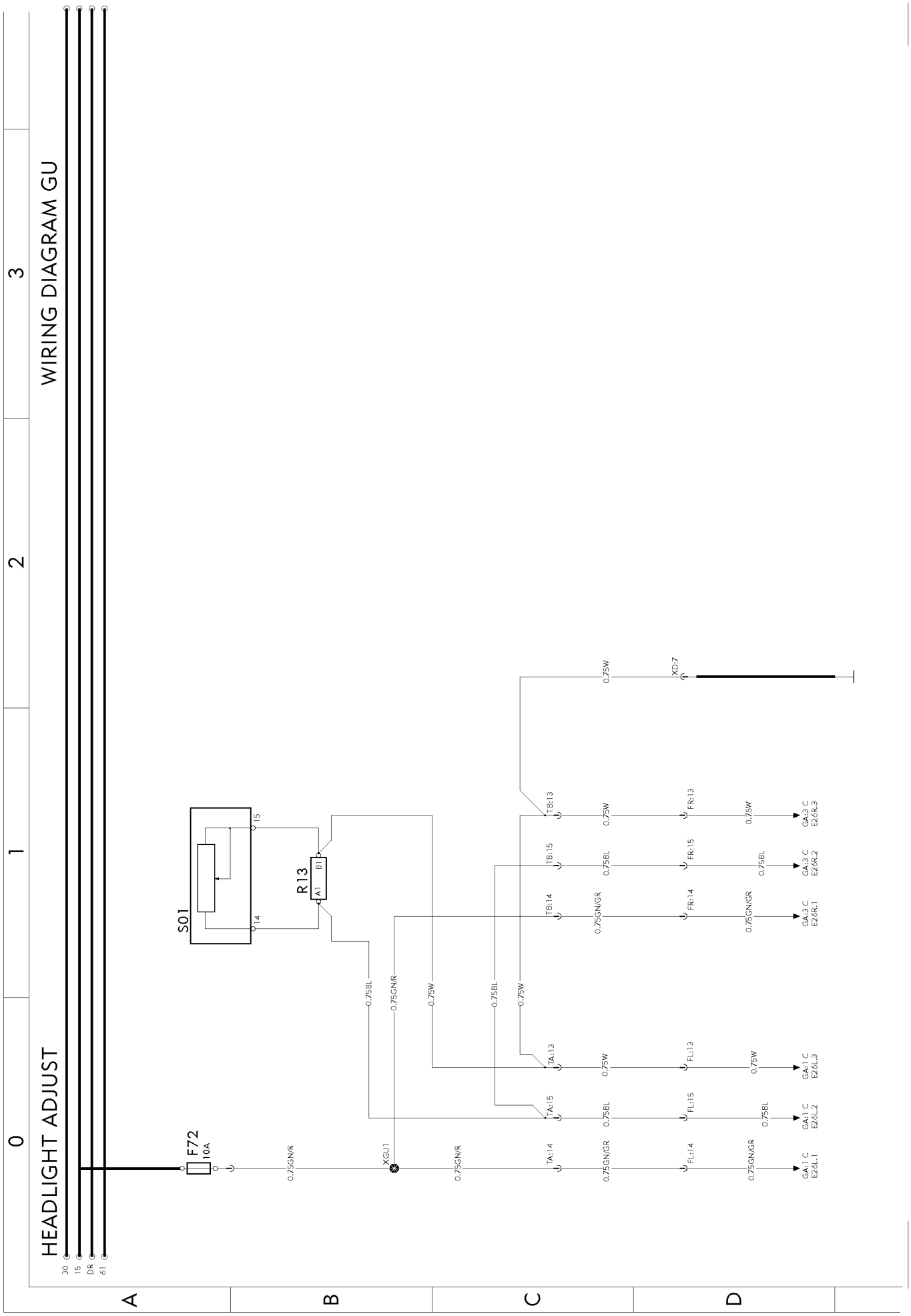

https://truckmanualshub.com/

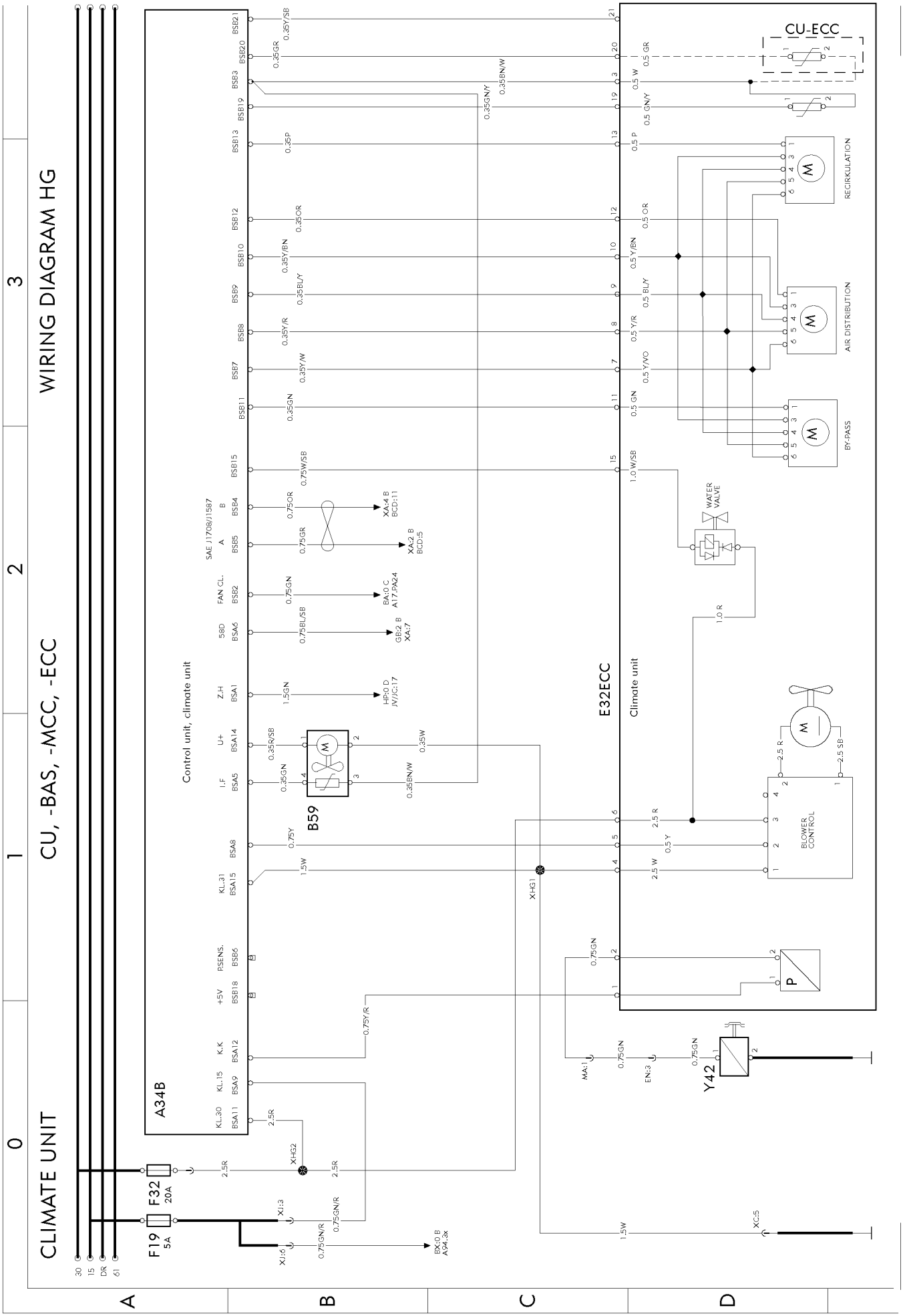

T3017679

https://truckmanualshub.com/

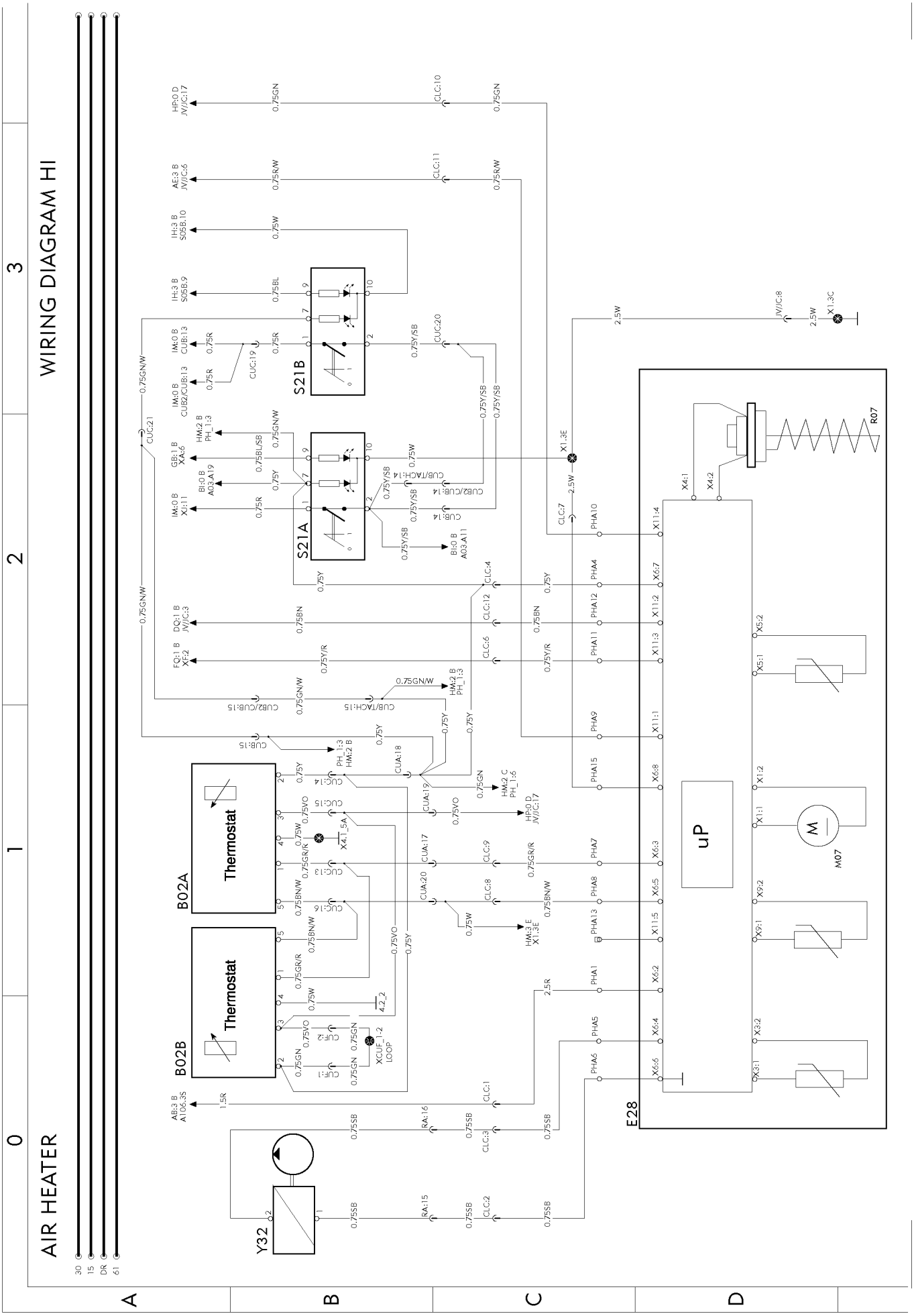

https://truckmanualshub.com/

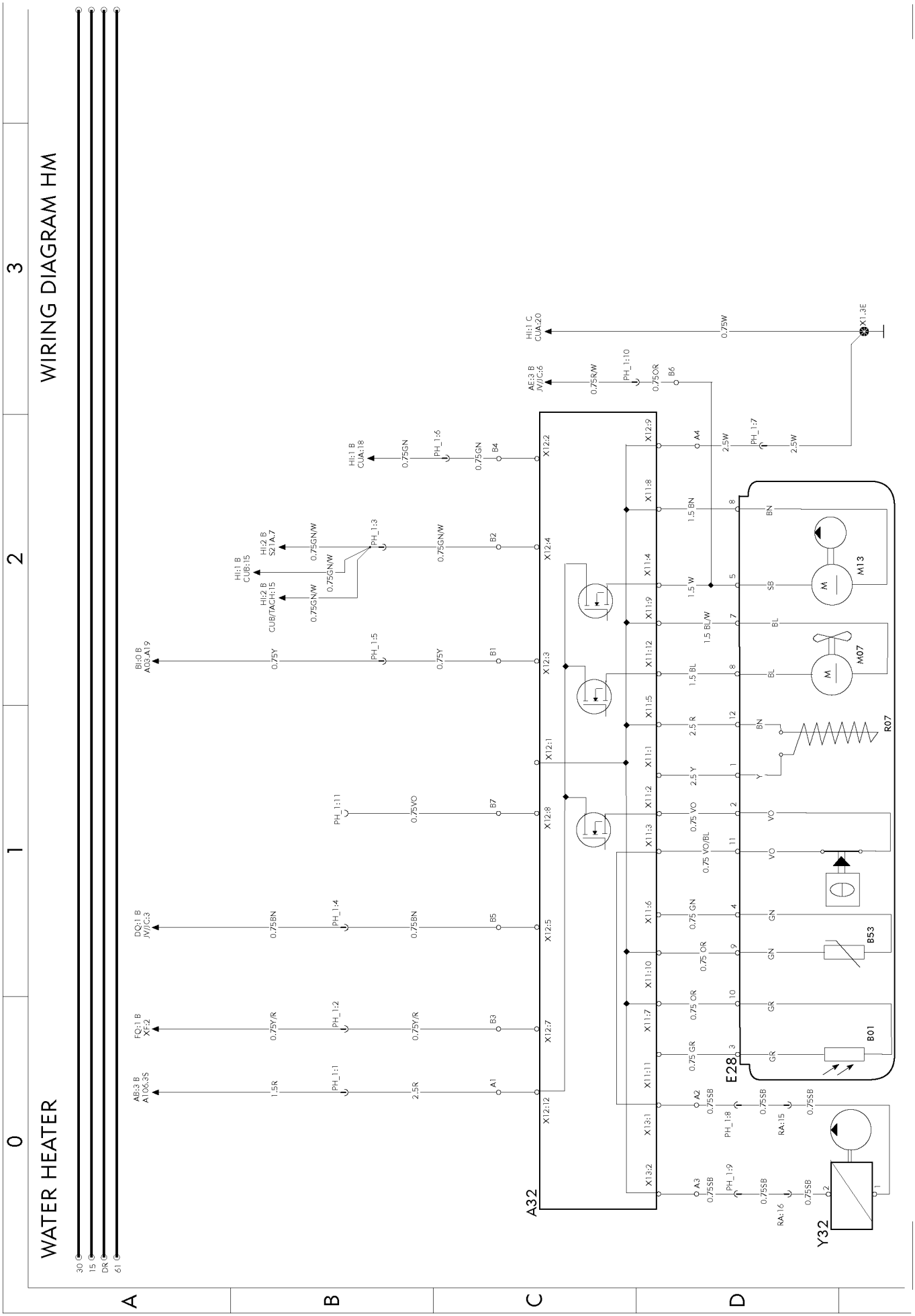

https://truckmanualshub.com/

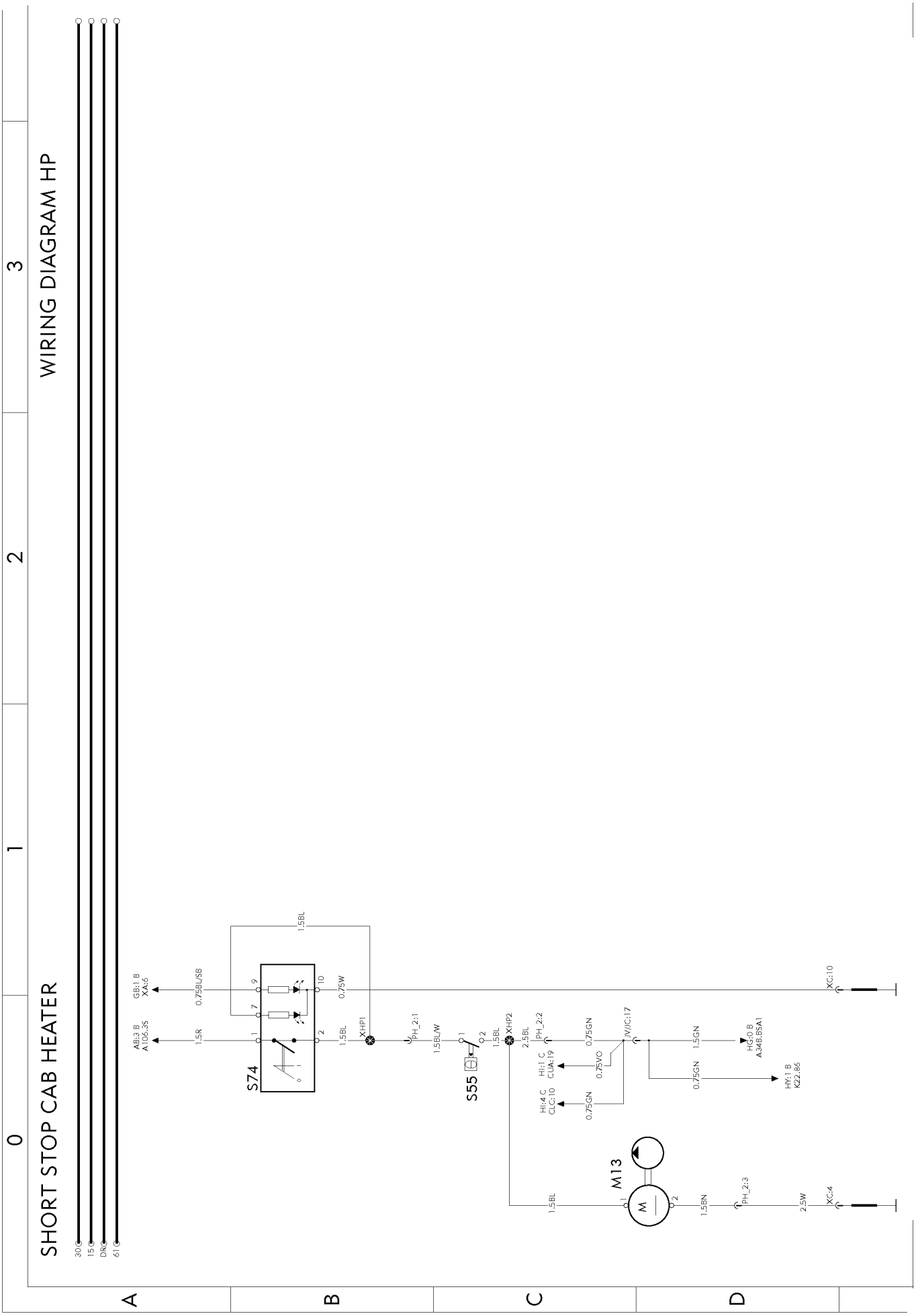

https://truckmanualshub.com/

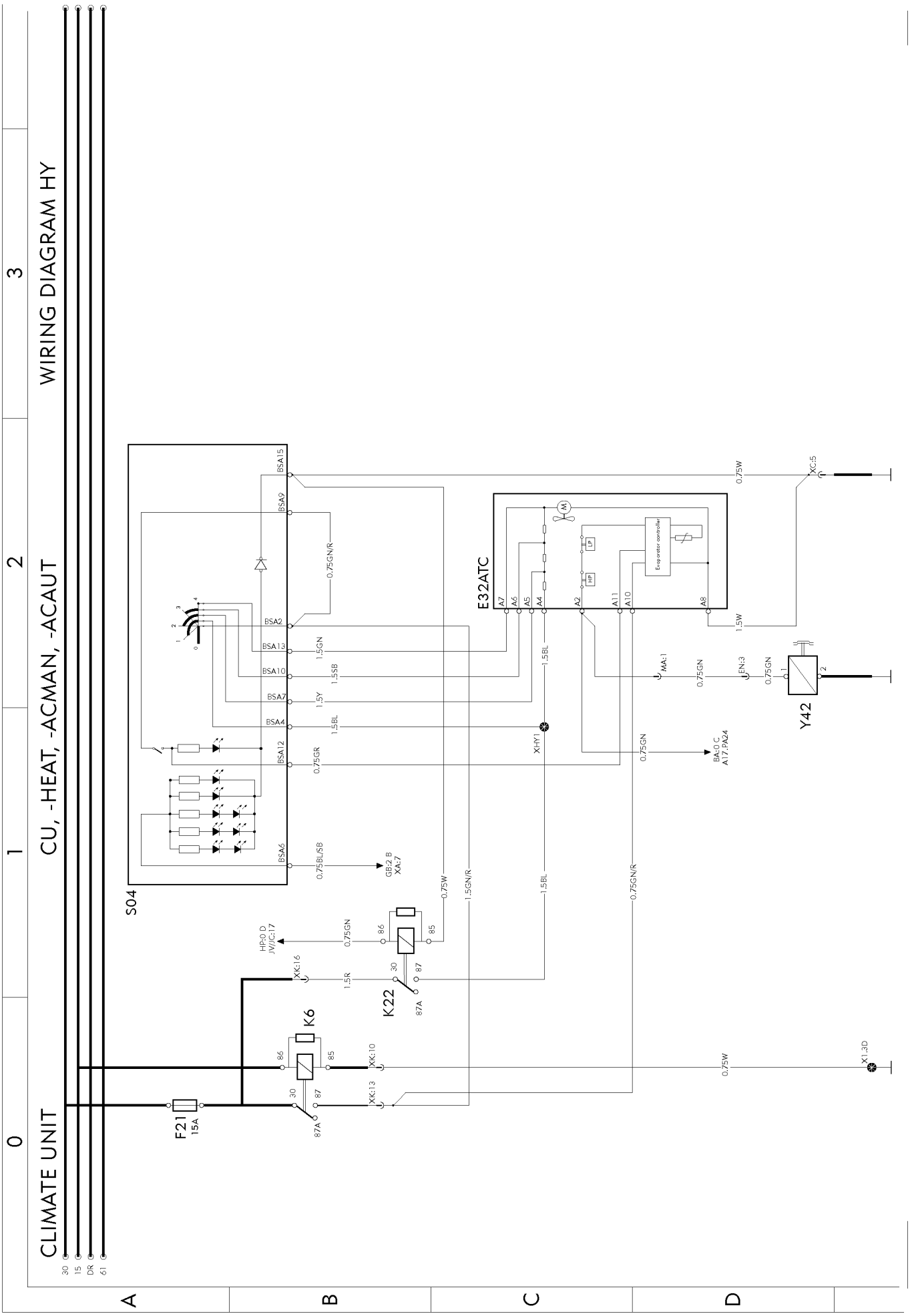

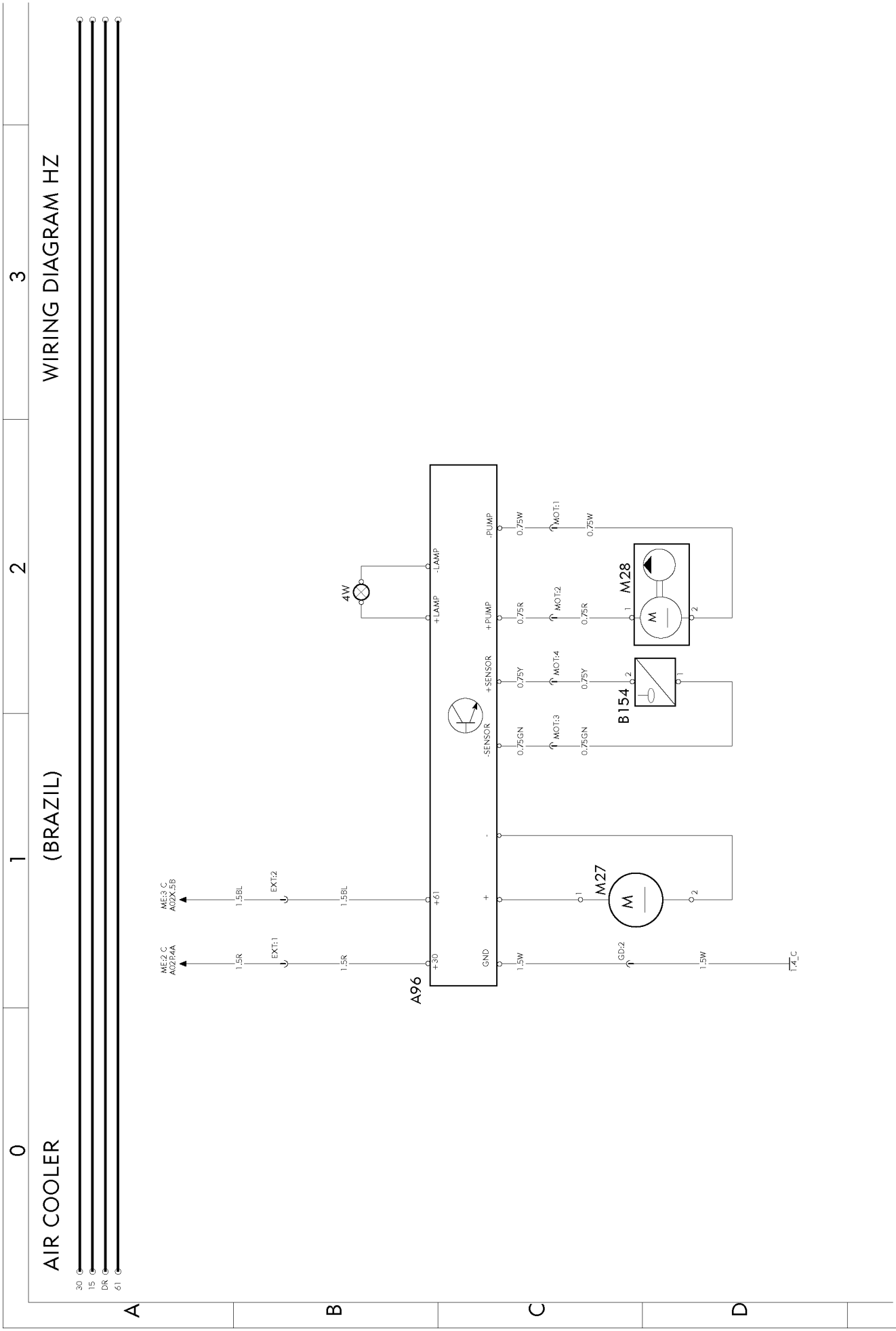
AIR COOLER
(BRAZIL)
WIRING DIAGRAM HZ
30
15
DR
61
A96
4W
-LAMP
+LAMP
-PUMP
+PUMP
+SENSOR
-SENSOR
GND
+30
+61
ME:2 C
A02P.4A
ME:3 C
A02X.5B
EXT:1
EXT:2
1.5R
1.5BL
1.5W
0.75W
0.75R
0.75Y
0.75GN
MOT:1
MOT:2
MOT:4
MOT:3
GD:2
M27
M28
B154
1.4_C

https://truckmanualshub.com/

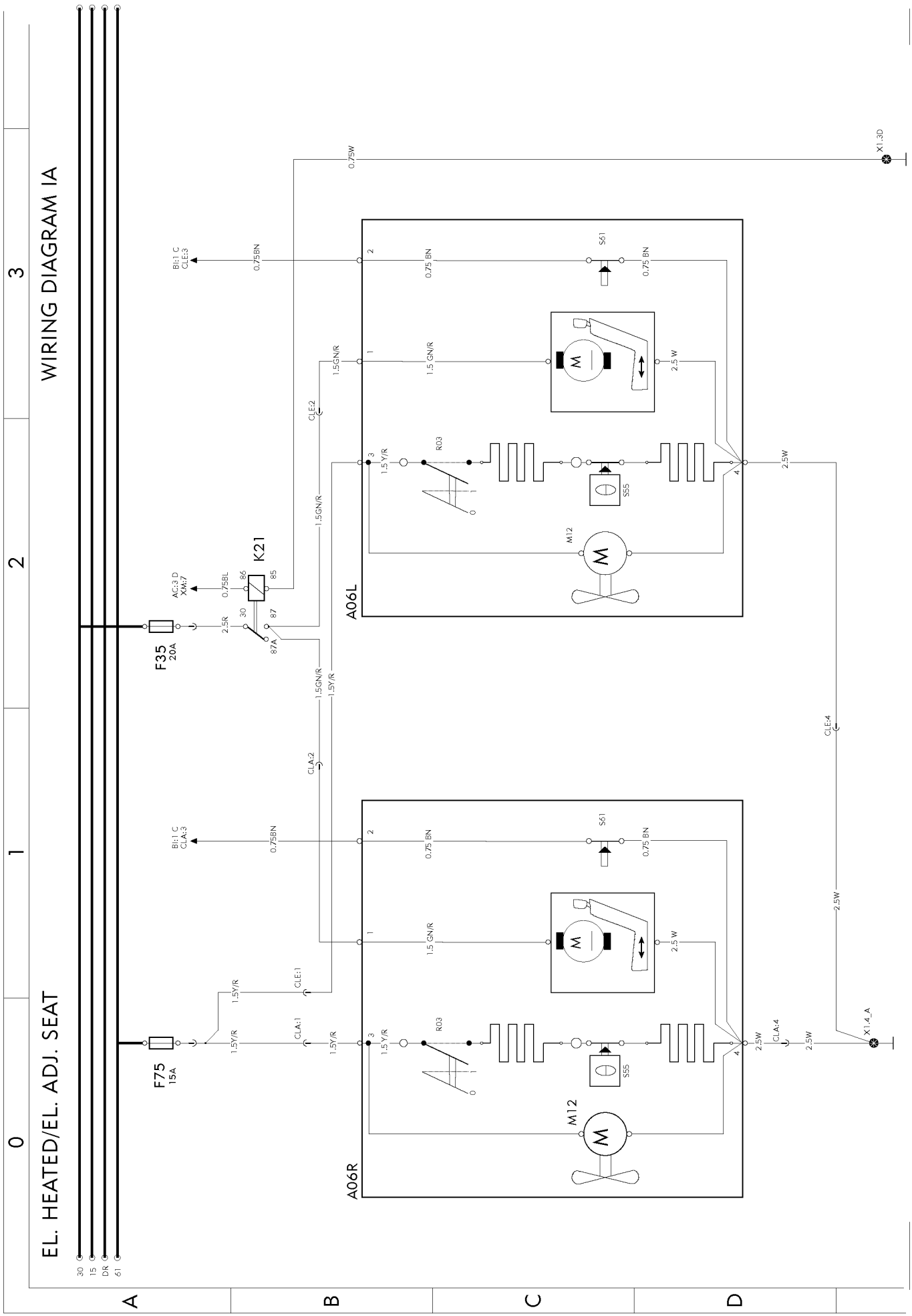

T3017685

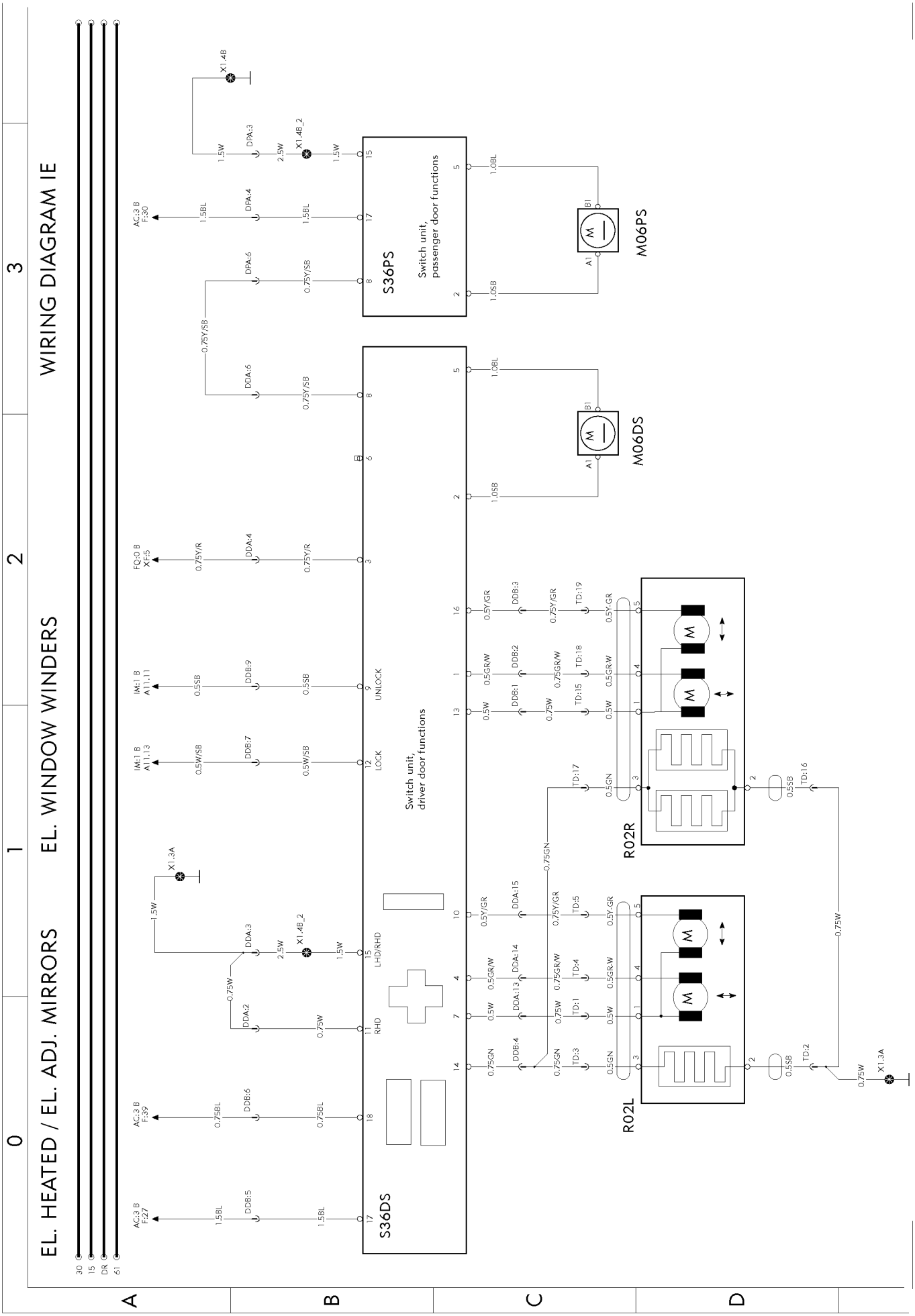
EL. HEATED / EL. ADJ. MIRRORS
EL. WINDOW WINDERS
WIRING DIAGRAM IE
S36DS
S36PS
Switch unit, driver door functions
Switch unit, passenger door functions
M06DS
M06PS
R02L
R02R
LOCK
UNLOCK
LHD/RHD
RHD
30
15
DR
61

https://truckmanualshub.com/

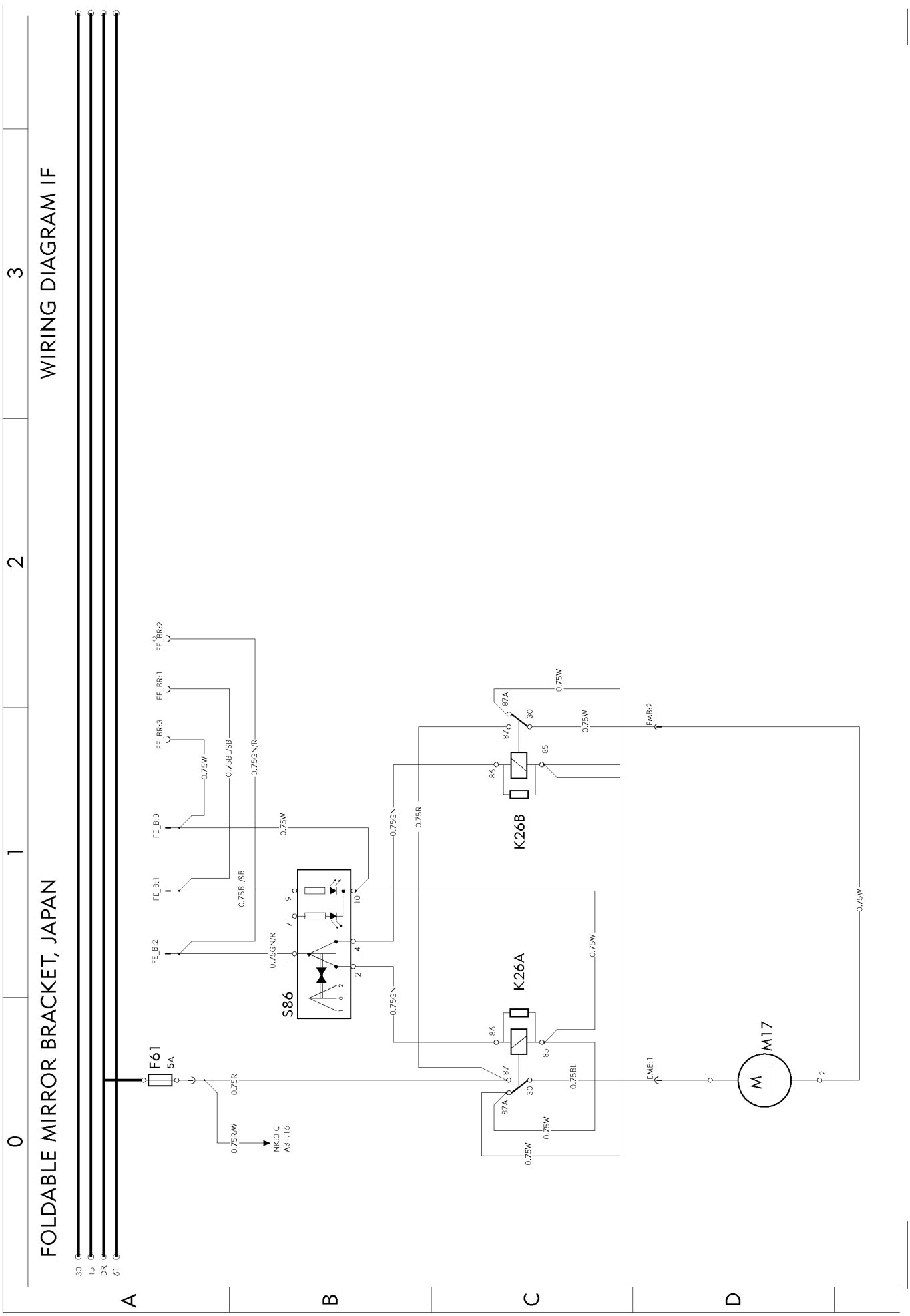

T3018276

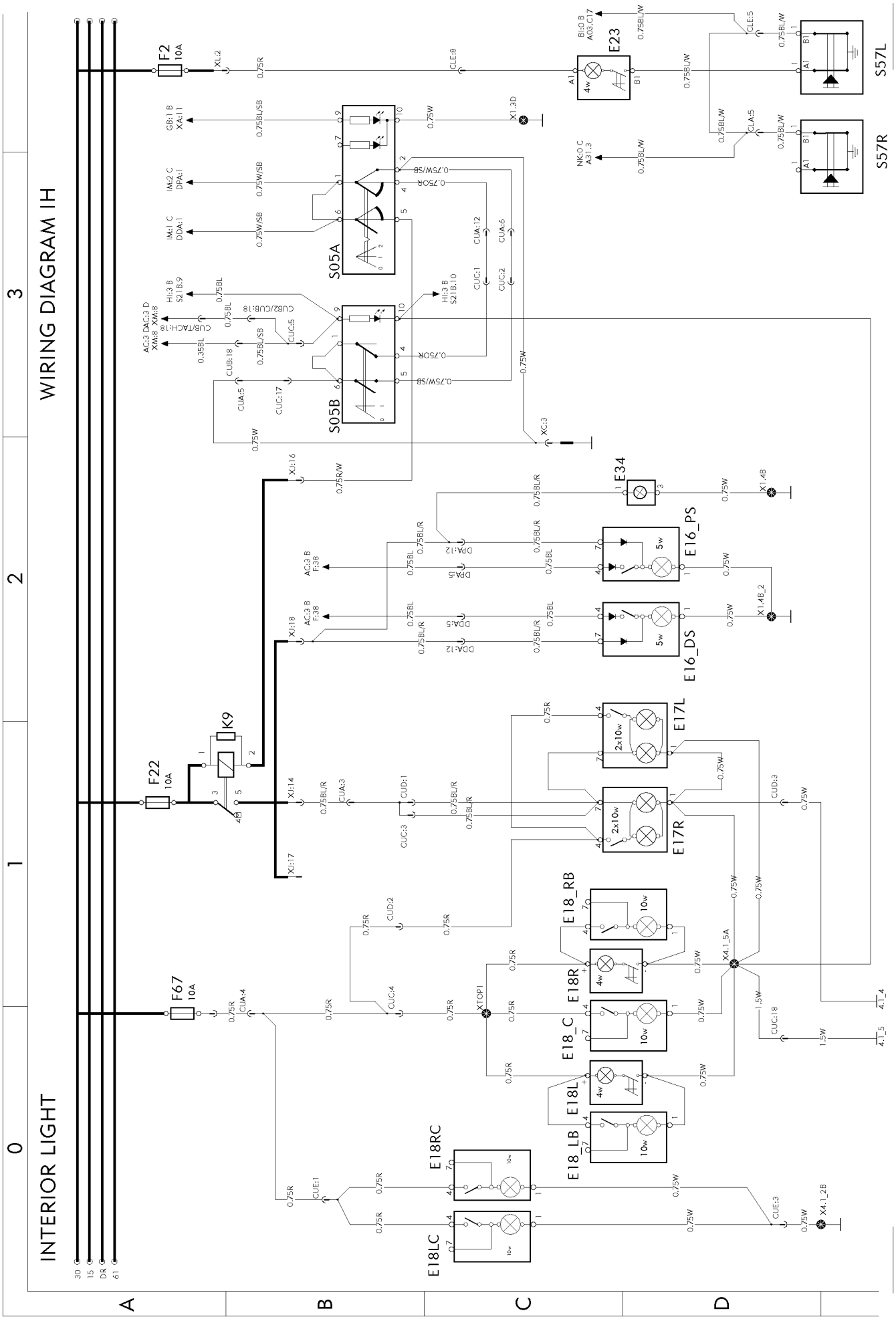
INTERIOR LIGHT
WIRING DIAGRAM IH
F2
10A
F22
10A
F67
10A
K9
S05A
S05B
E23
S57L
S57R
E34
E16_PS
E16_DS
E17L
E17R
E18_RB
E18R
E18_C
E18L
E18_LB
E18RC
E18LC
30
15
DR
61

https://truckmanualshub.com/

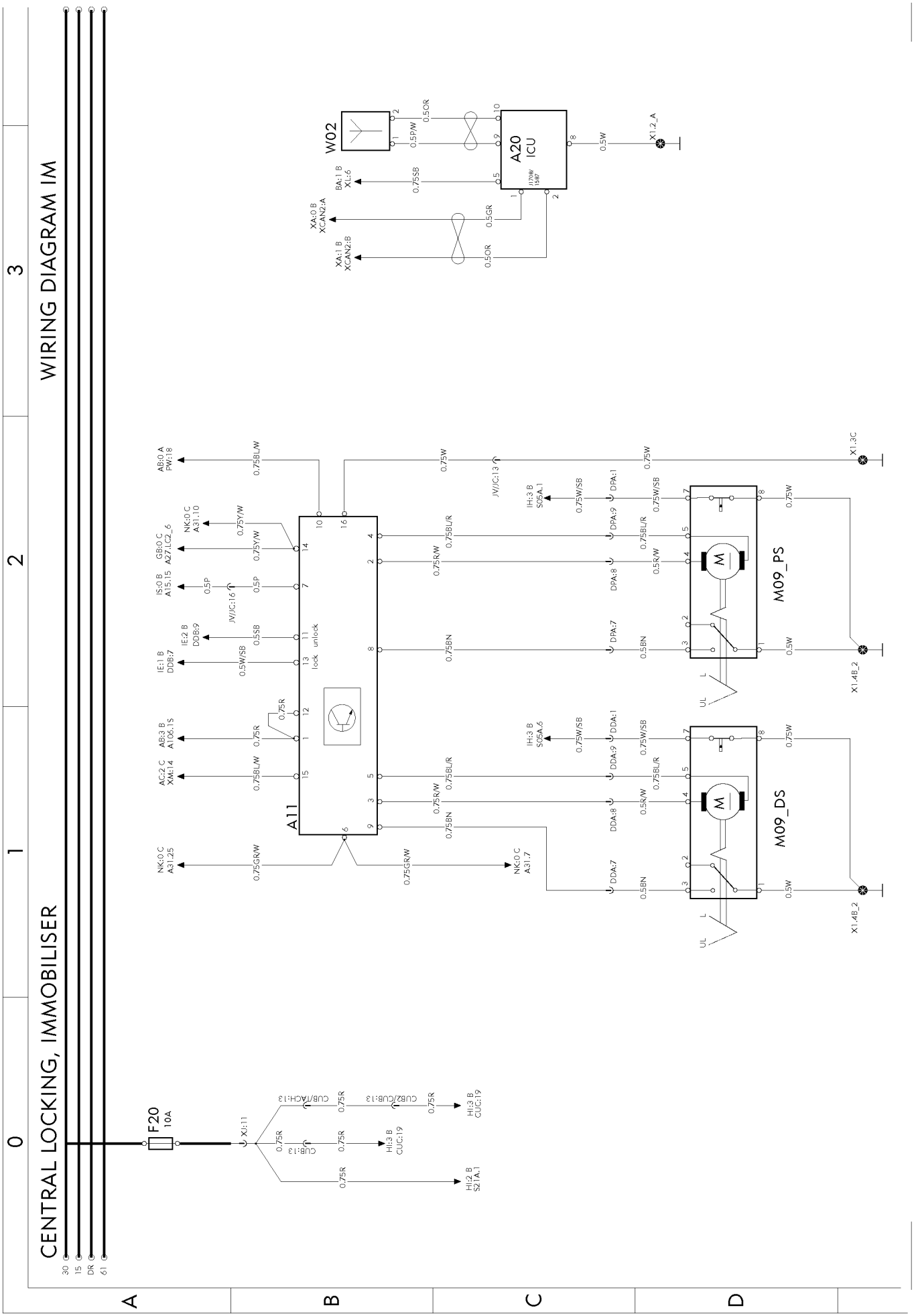

T3018761

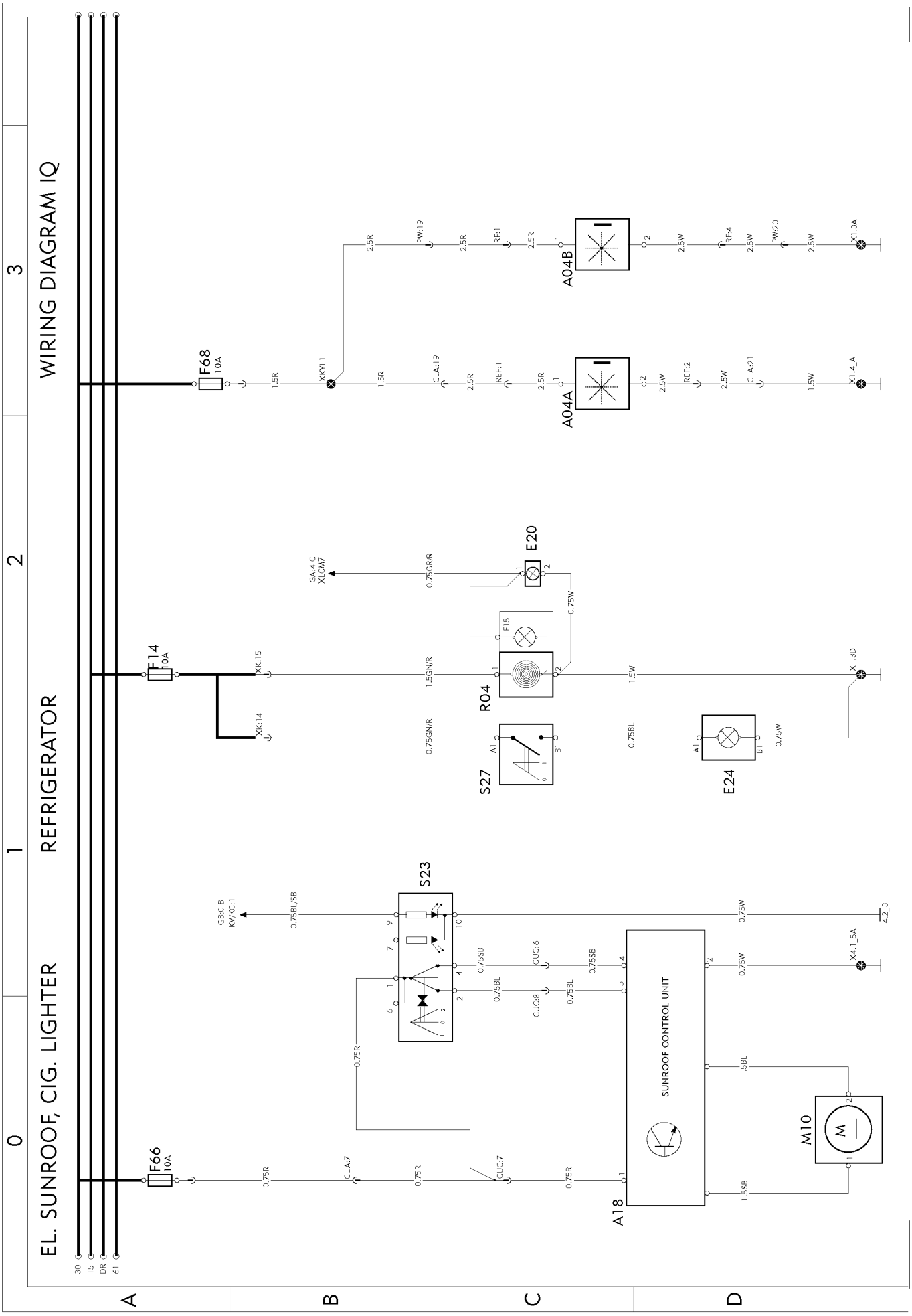
WIRING DIAGRAM IQ
REFRIGERATOR
EL. SUNROOF, CIG. LIGHTER
0
1
2
3
A
B
C
D
30
15
DR
61
F68
10A
F14
10A
F66
10A
A04A
A04B
R04
E20
E15
S27
E24
S23
A18
SUNROOF CONTROL UNIT
M10
X1.3A
X1.4_A
X1.3D
X4.1_5A
4.2_3
GA:4 C
XLCM7
GB:0 B
KV/KC:1
XKYL1
XK:15
XK:14
PW:19
RF:1
RF:4
PW:20
CLA:19
REF:1
REF:2
CLA:21
CUA:7
CUC:7
CUC:6
CUC:8
0.75R
0.75GR/R
0.75W
1.5GN/R
0.75GN/R
0.75BL
0.75BL/SB
0.75SB
1.5W
1.5R
2.5R
2.5W
1.5W
1.5BL
1.5SB

https://truckmanualshub.com/

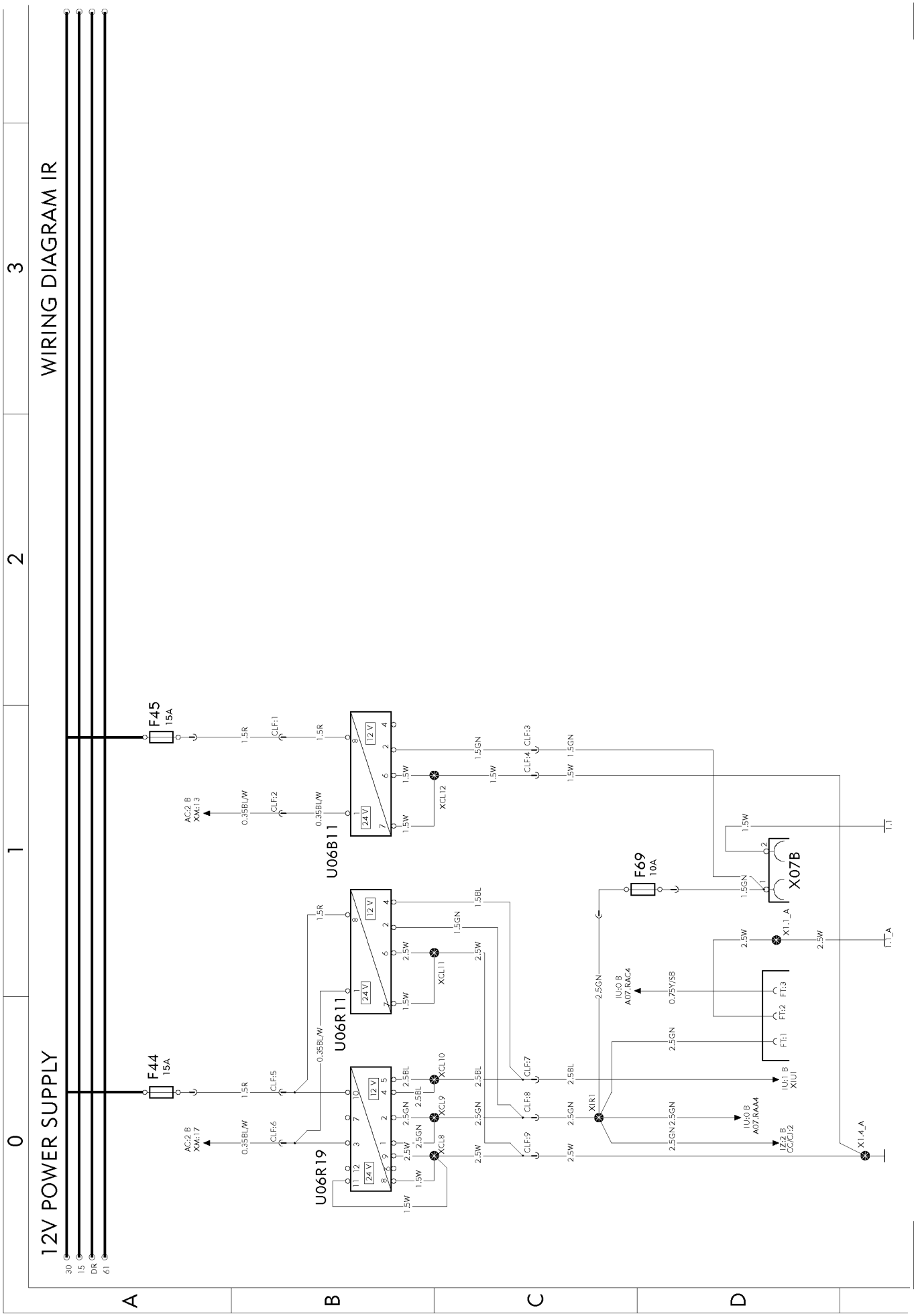

T3017691

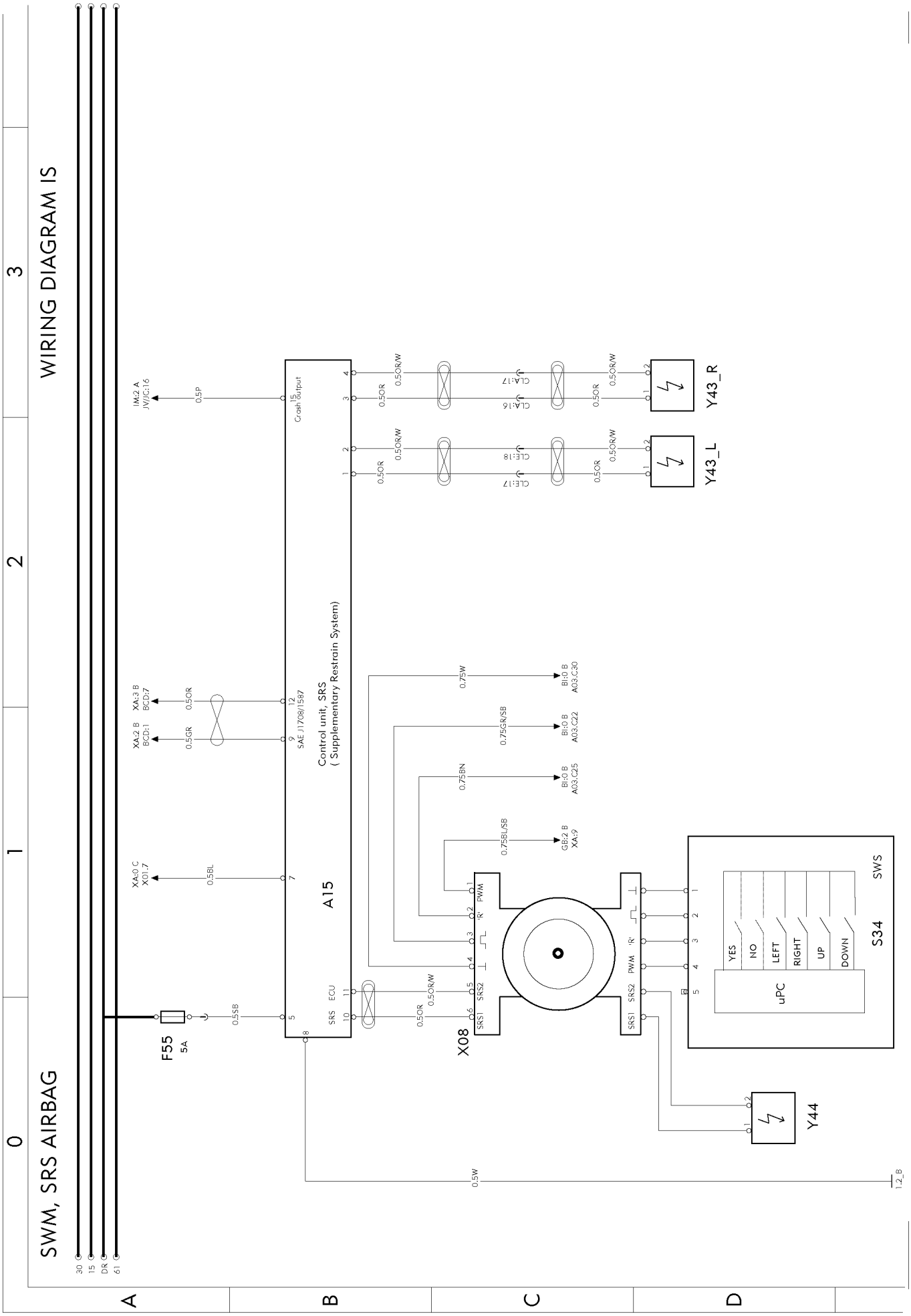
WIRING DIAGRAM IS
SWM, SRS AIRBAG
30
15
DR
61
F55
5A
0.5SB
XA:0 C
X01:7
0.5BL
XA:2 B
BCD:1
0.5GR
XA:3 B
BCD:7
0.5OR
IM:2 A
JVIC:16
0.5P
A15
Control unit, SRS
(Supplementary Restrain System)
SAE 11708/1587
Crash output
SRS ECU
X08
SRS1 SRS2 PWM
0.75W
0.75GR/SB
0.75BN
0.75BL/SB
Bl:0 B
A03.G30
Bl:0 B
A03.G22
Bl:0 B
A03.C25
GB:2 B
XA:9
0.5OR/W
0.5OR
CLE:17
CLE:18
CLA:16
CLA:17
Y43_L
Y43_R
S34
SWS
YES
NO
LEFT
RIGHT
UP
DOWN
uPC
Y44
0.5W
1.2_B
A
B
C
D
0
1
2
3

https://truckmanualshub.com/

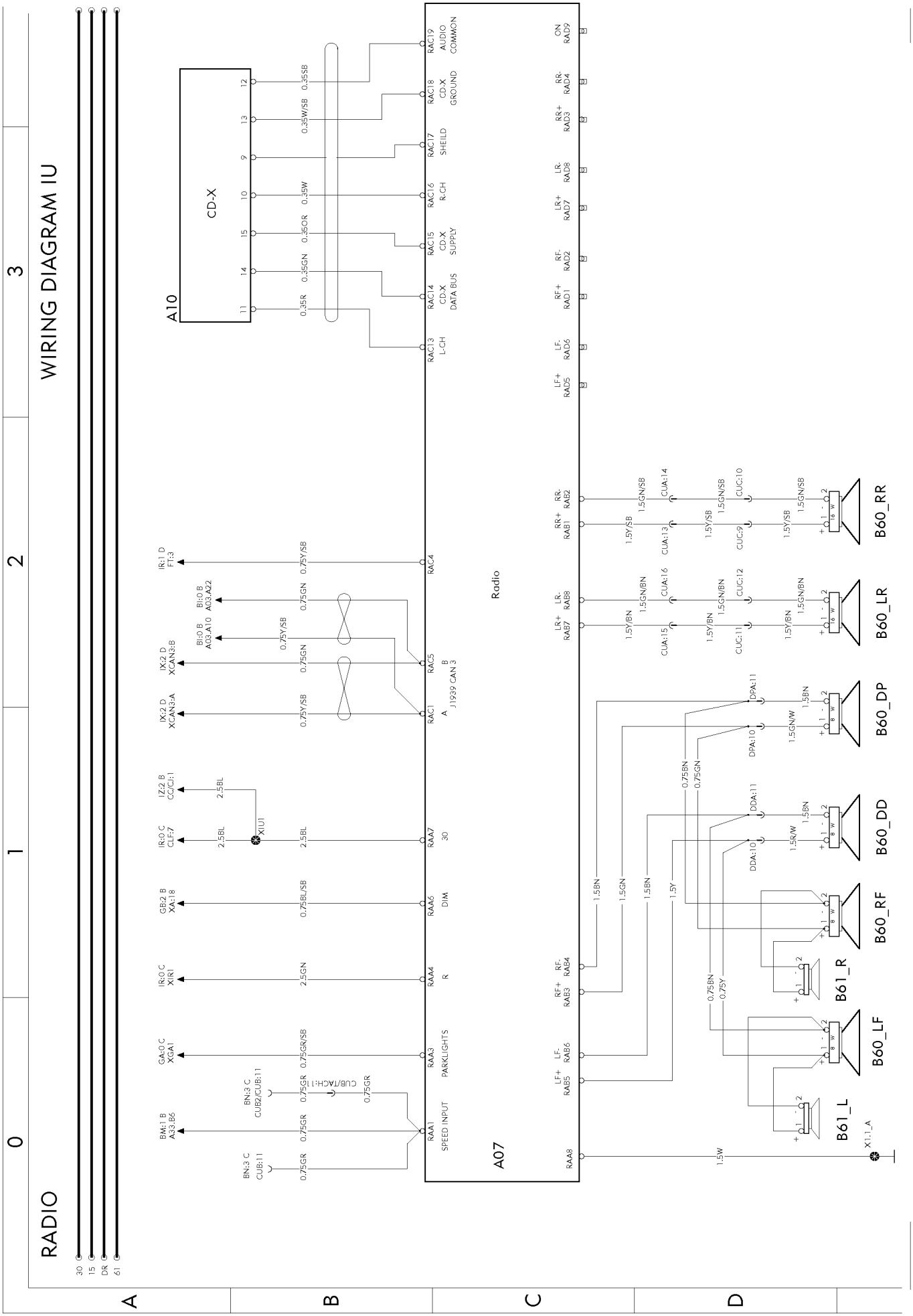

https://truckmanualshub.com/

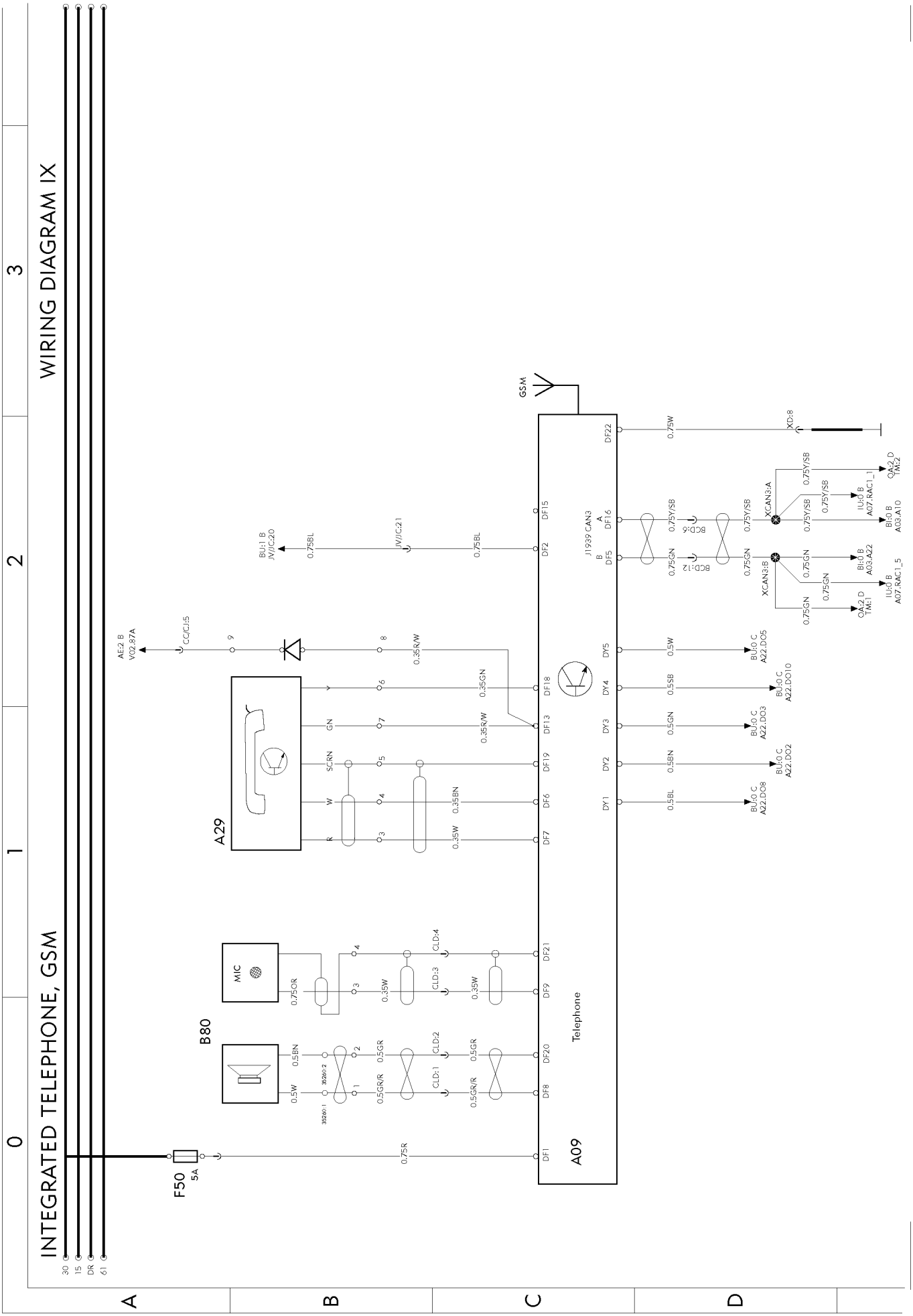

https://truckmanualshub.com/

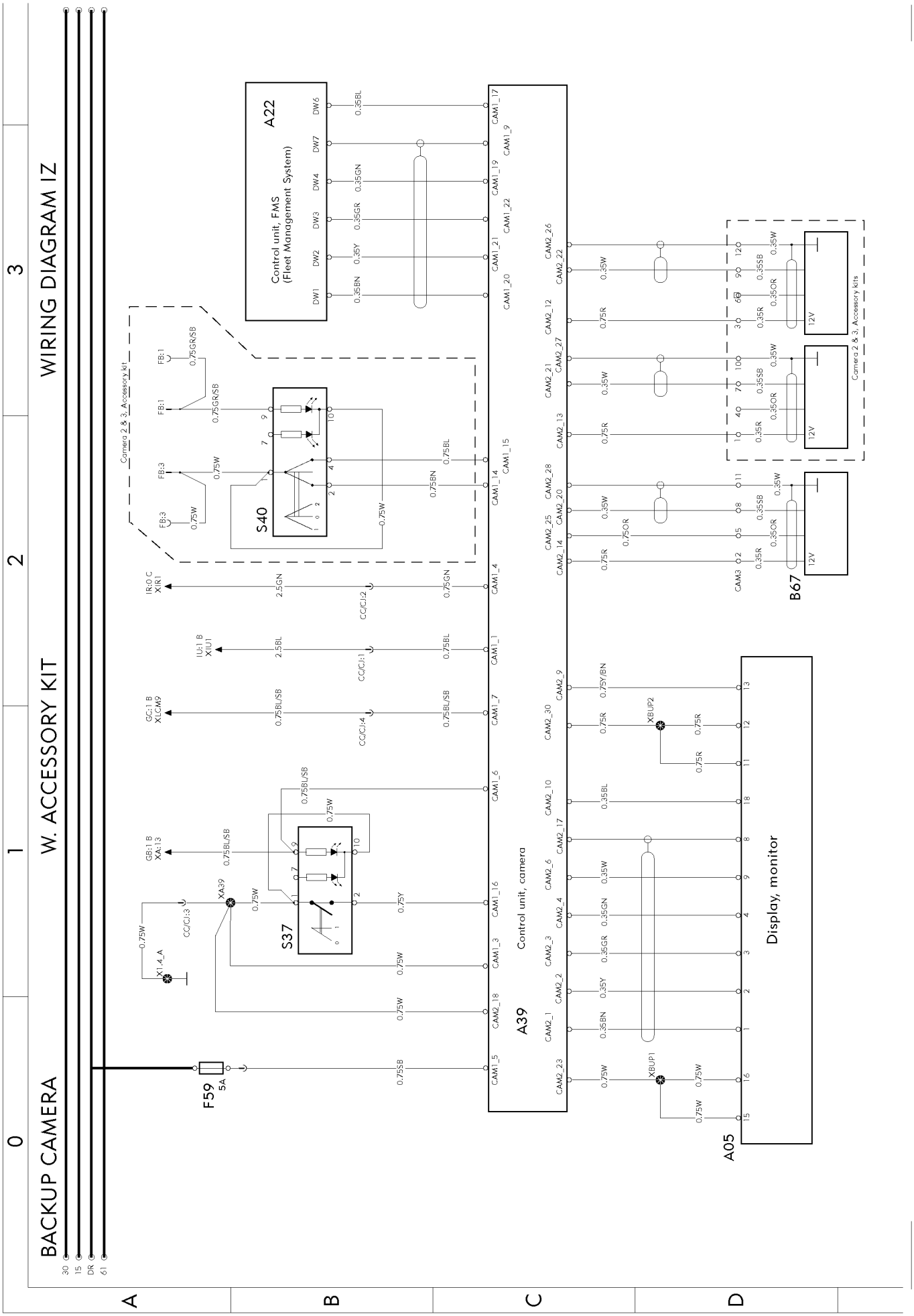

T3018278

https://truckmanualshub.com/

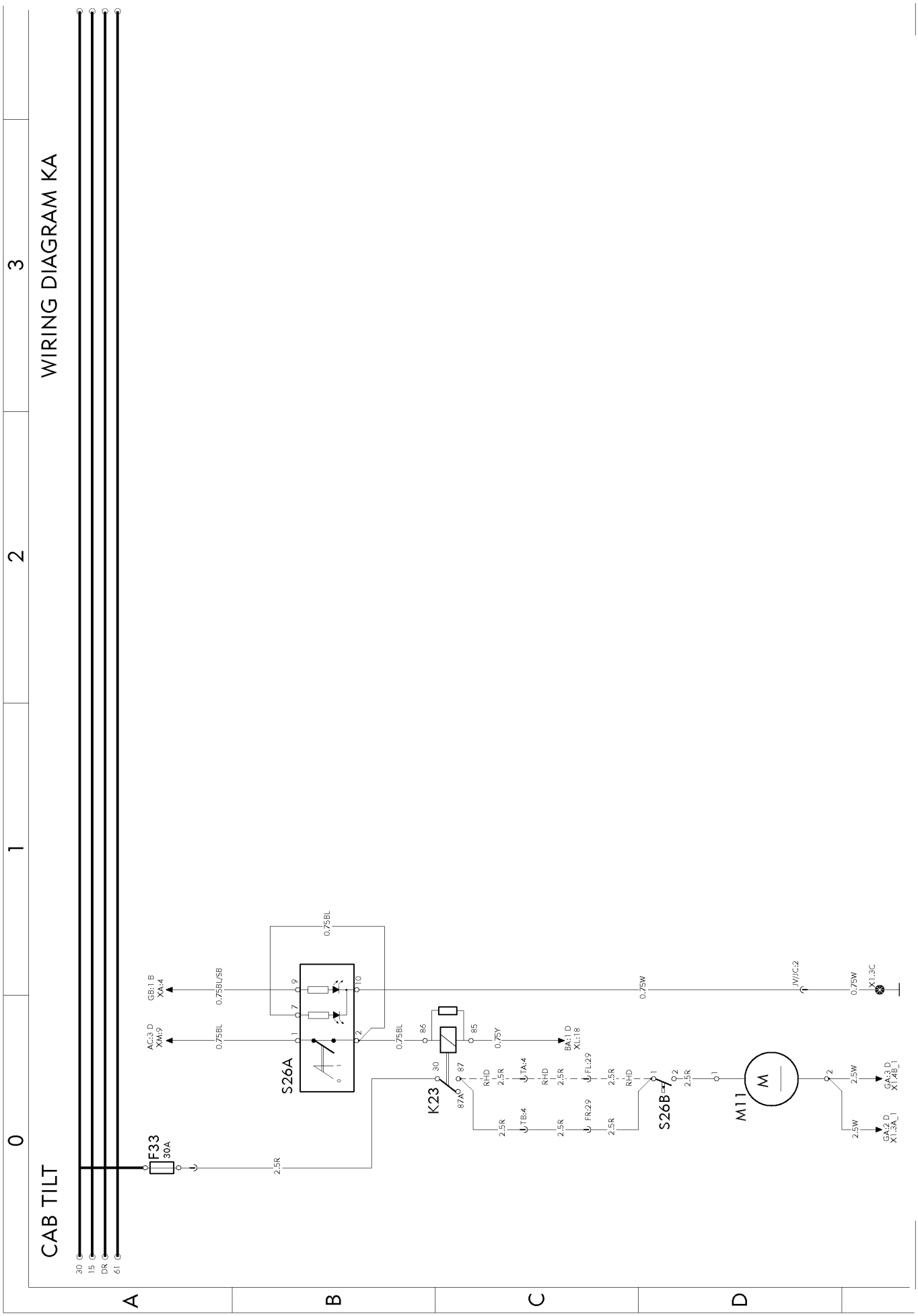

https://truckmanualshub.com/

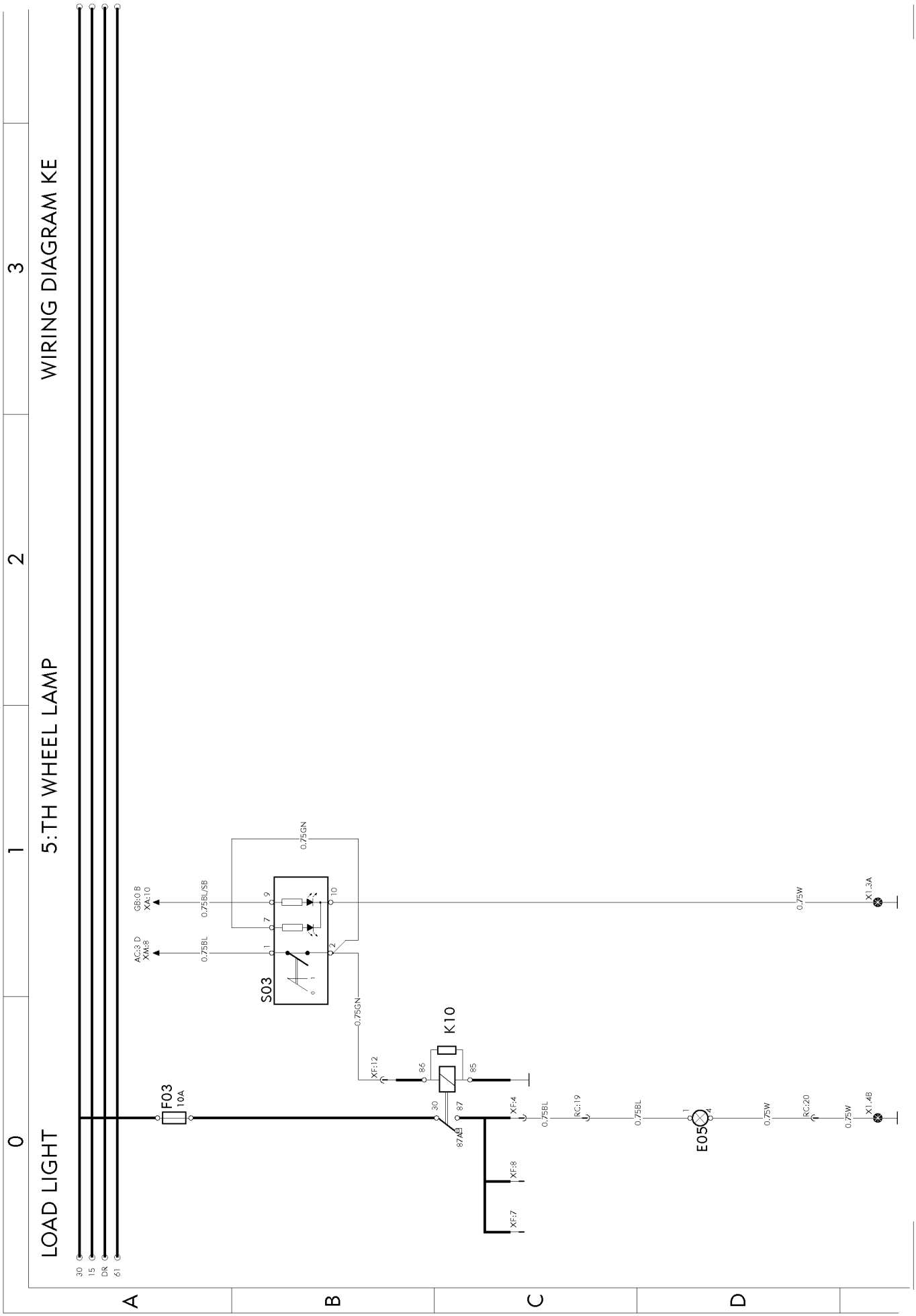

T3017697

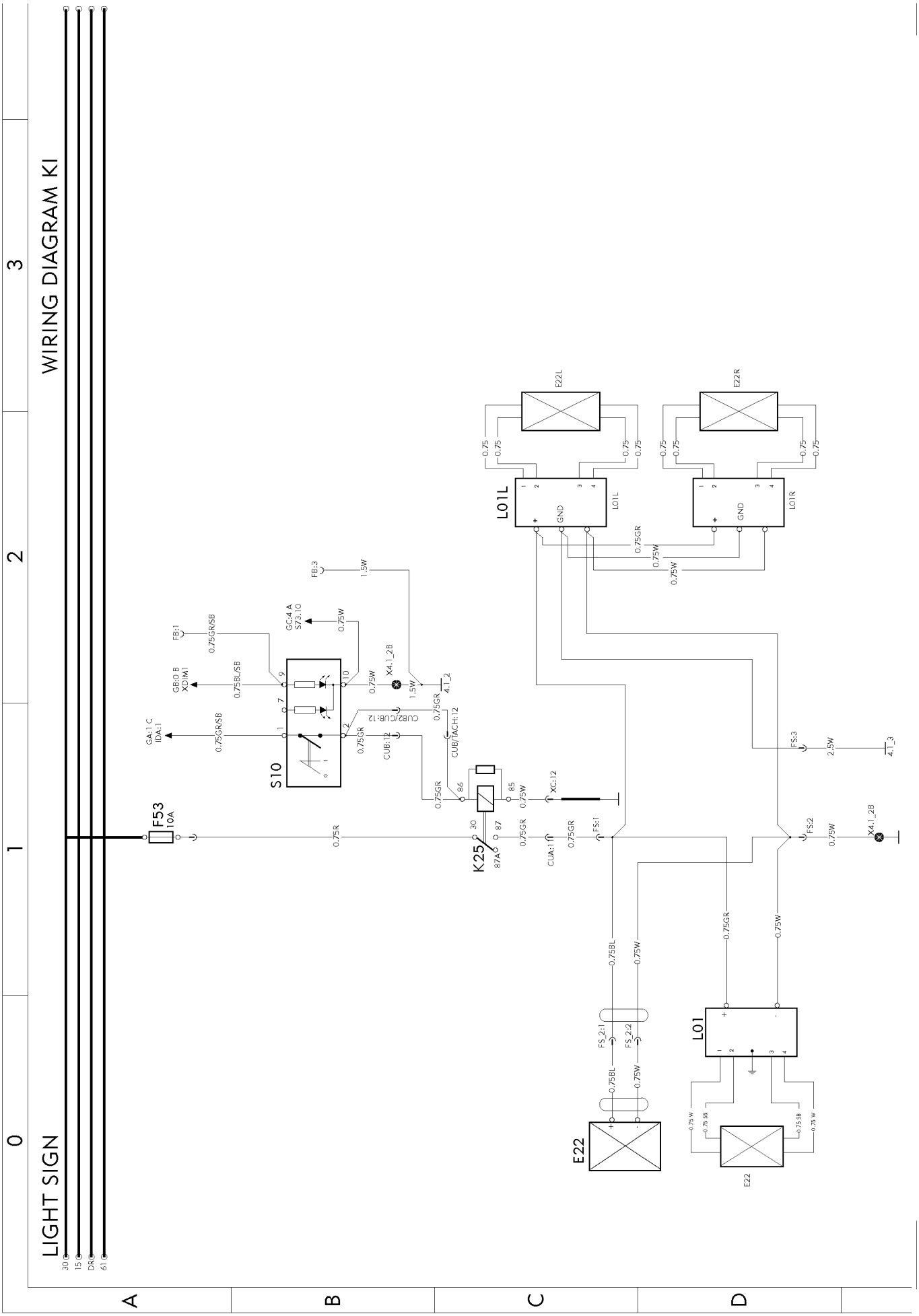
WIRING DIAGRAM KI
LIGHT SIGN
30
15
DR
61
F53
10A
S10
K25
L01L
L01R
L01
E22L
E22R
E22
GND
X4:1_2B
4:1_2
4:1_3
FB:1
FB:3
GB:0 B
XD:M1
GA:1 C
IDA:1
GC:4 A
S73:10
CUB:12
CUB2/CUB:12
CUB/TACH:12
XC:12
CUA:1
FS:1
FS:2
FS:3
FS_2:1
FS_2:2
0.75R
0.75GR
0.75GR/SB
0.75BL/SB
0.75W
0.75BL
1.5W
2.5W
0.75

https://truckmanualshub.com/

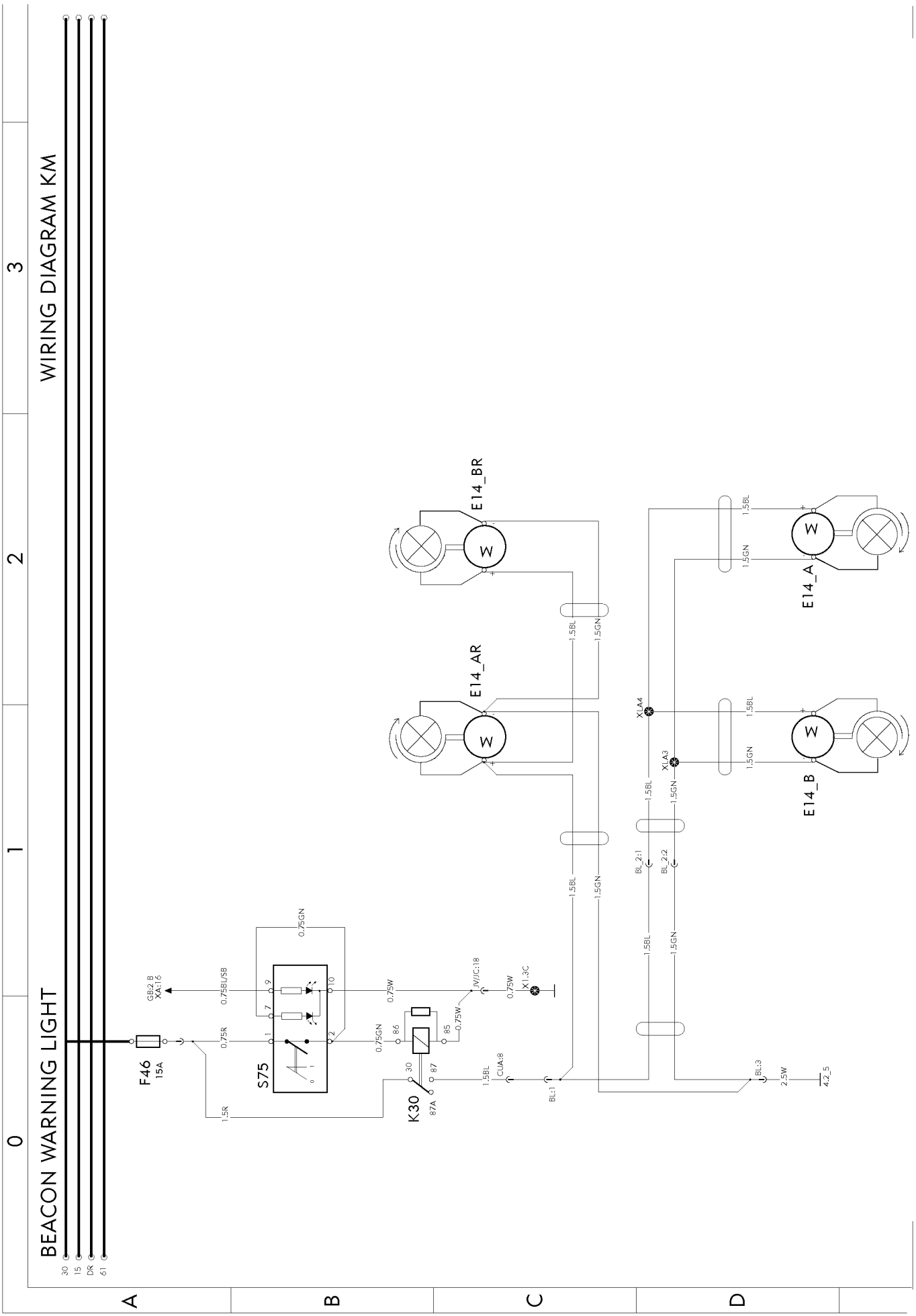

T3017699

https://truckmanualshub.com/

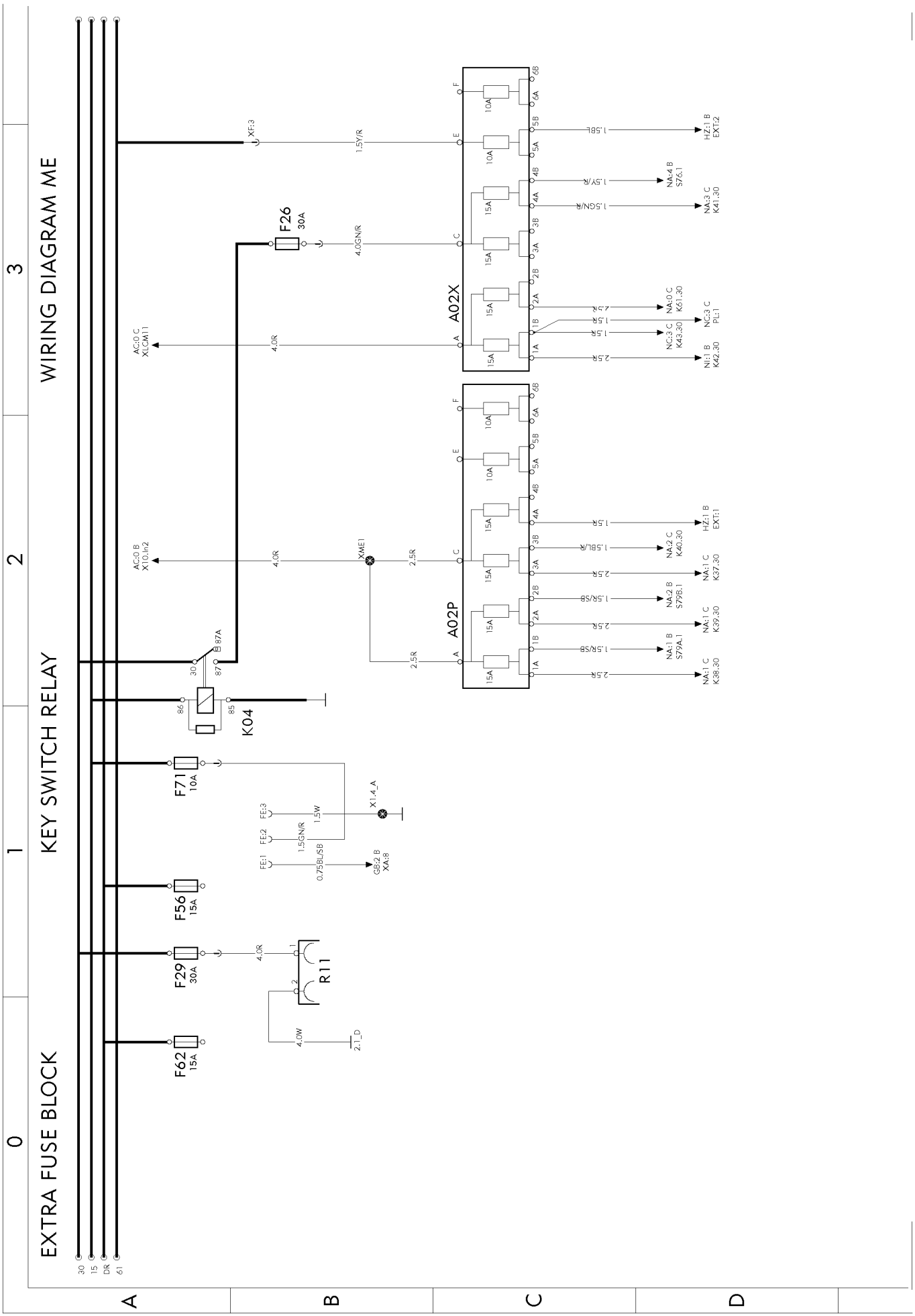

https://truckmanualshub.com/

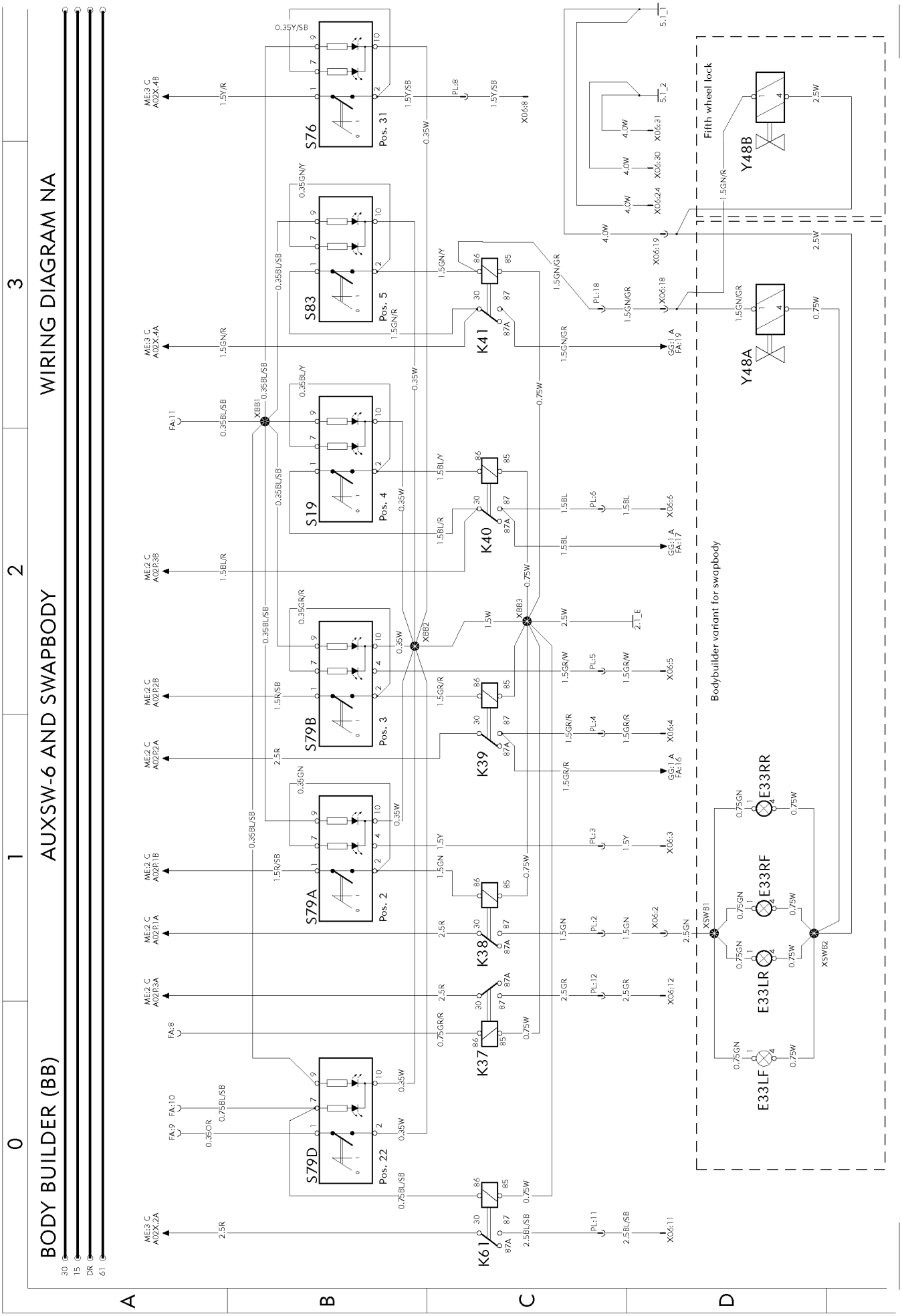

https://truckmanualshub.com/

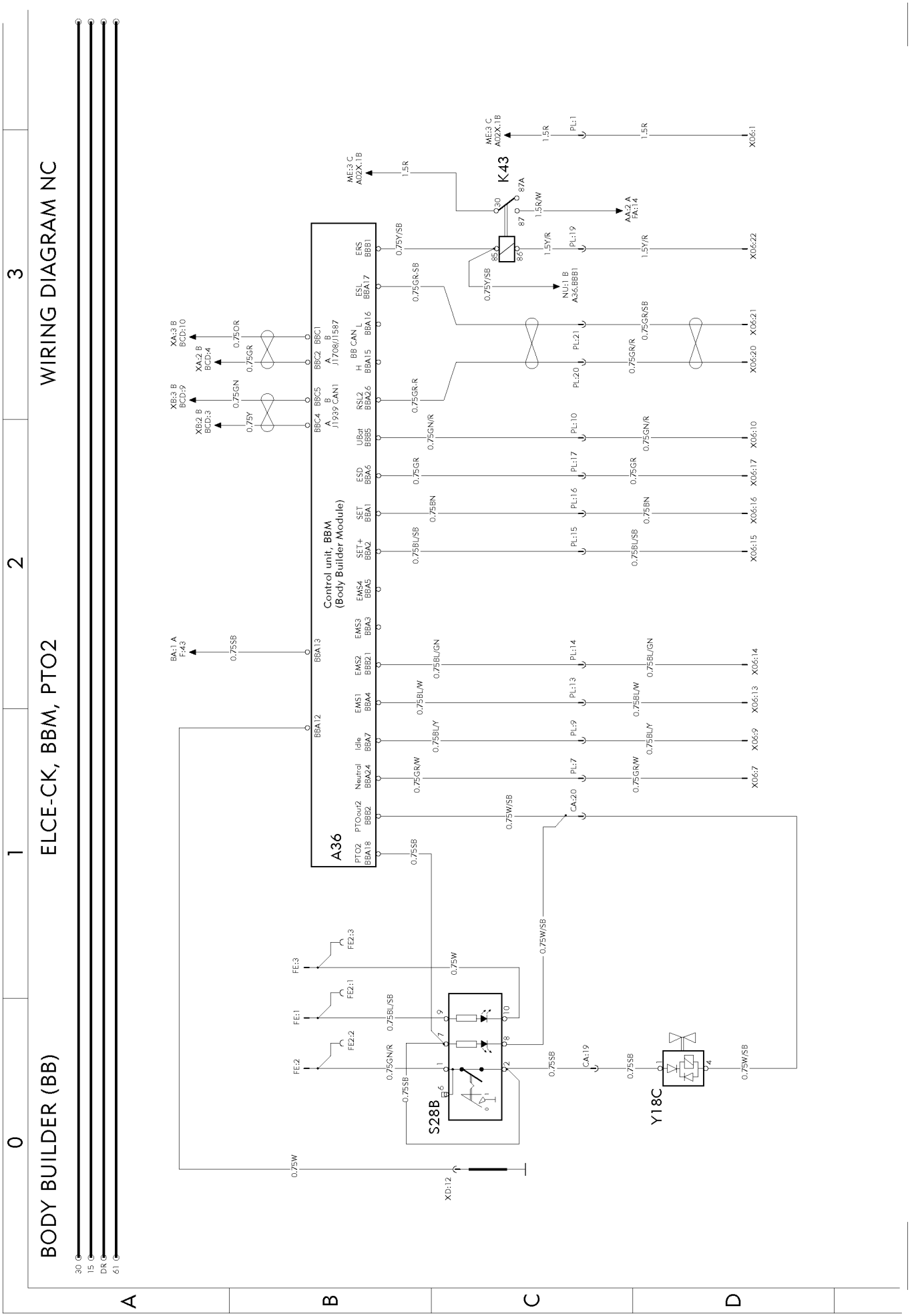

https://truckmanualshub.com/

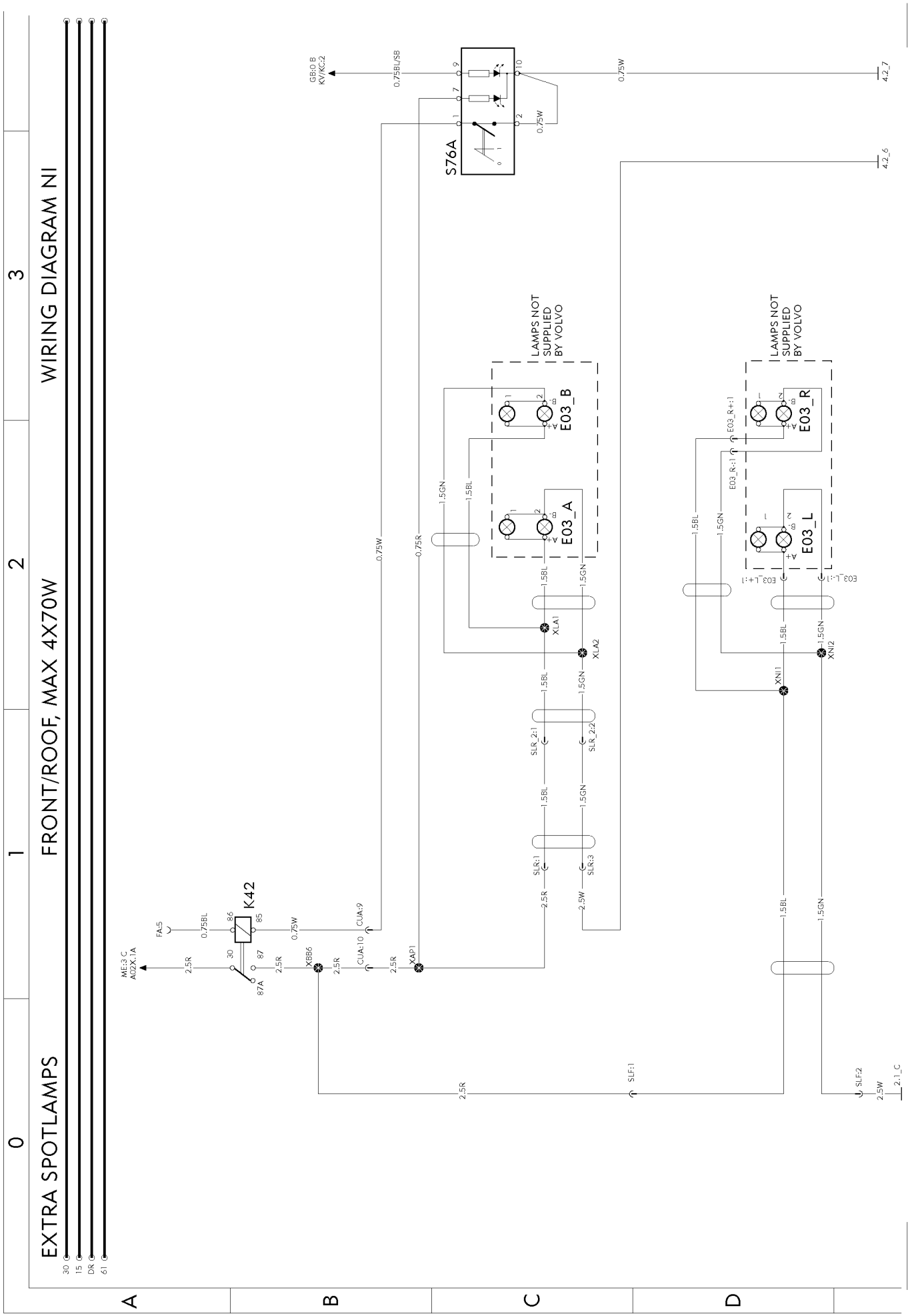

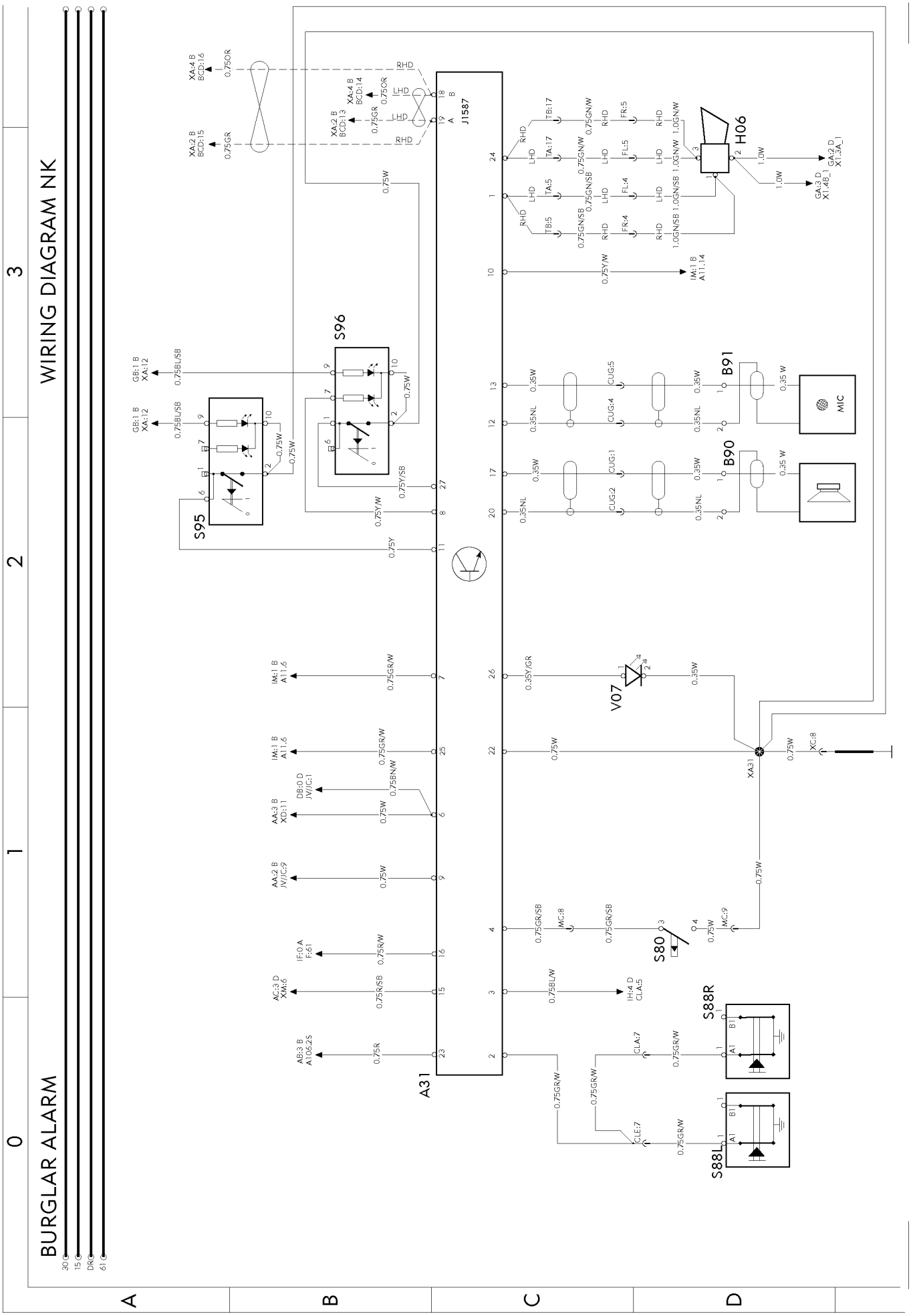
BURGLAR ALARM
WIRING DIAGRAM NK
A31
J1587
S95
S96
S80
S88R
S88L
H06
B90
B91
MIC
V07
XA31
RHD
LHD

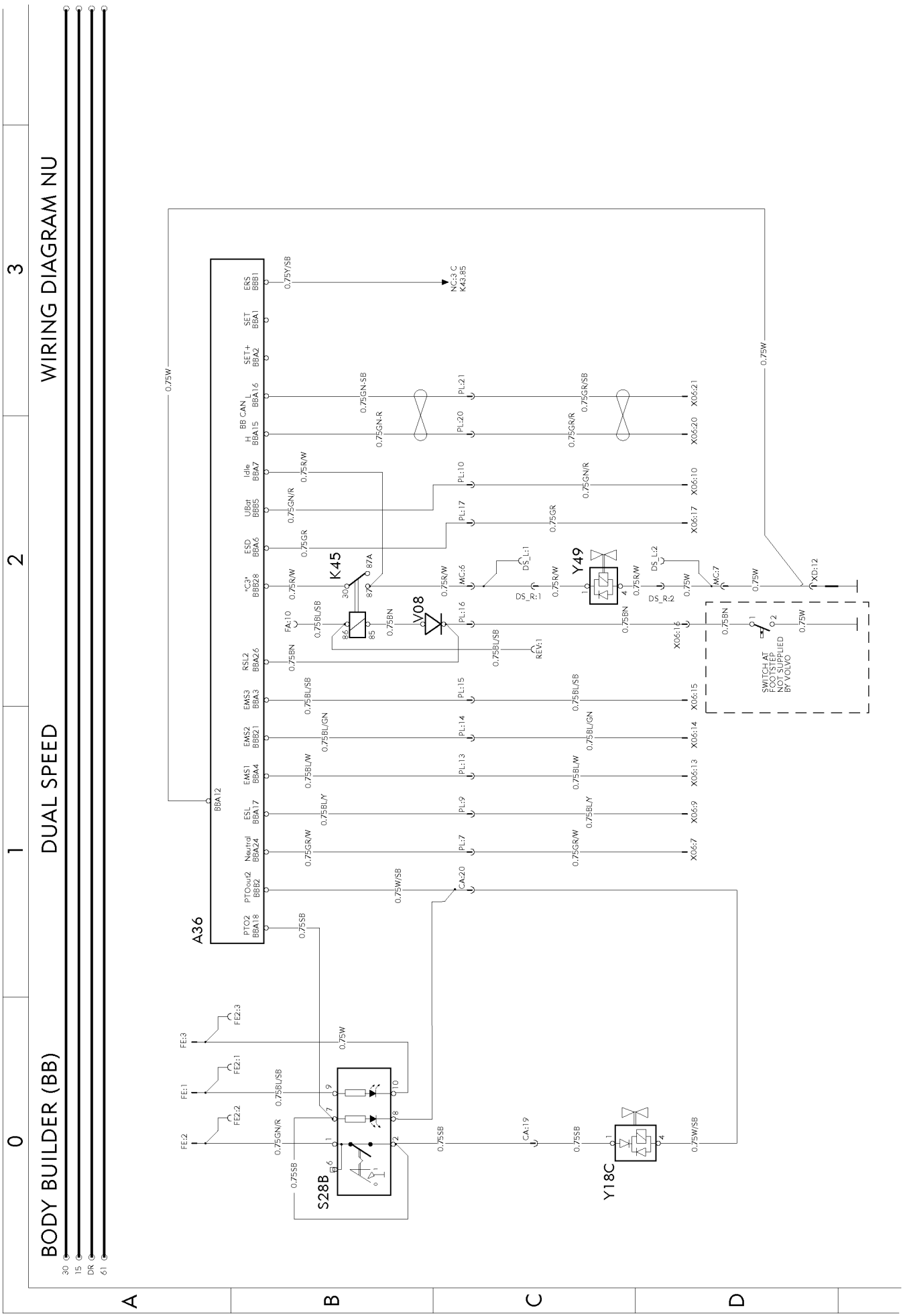
WIRING DIAGRAM NU
DUAL SPEED
BODY BUILDER (BB)
A36
K45
Y49
V08
S28B
Y18C
SWITCH AT FOOTSTEP NOT SUPPLIED BY VOLVO

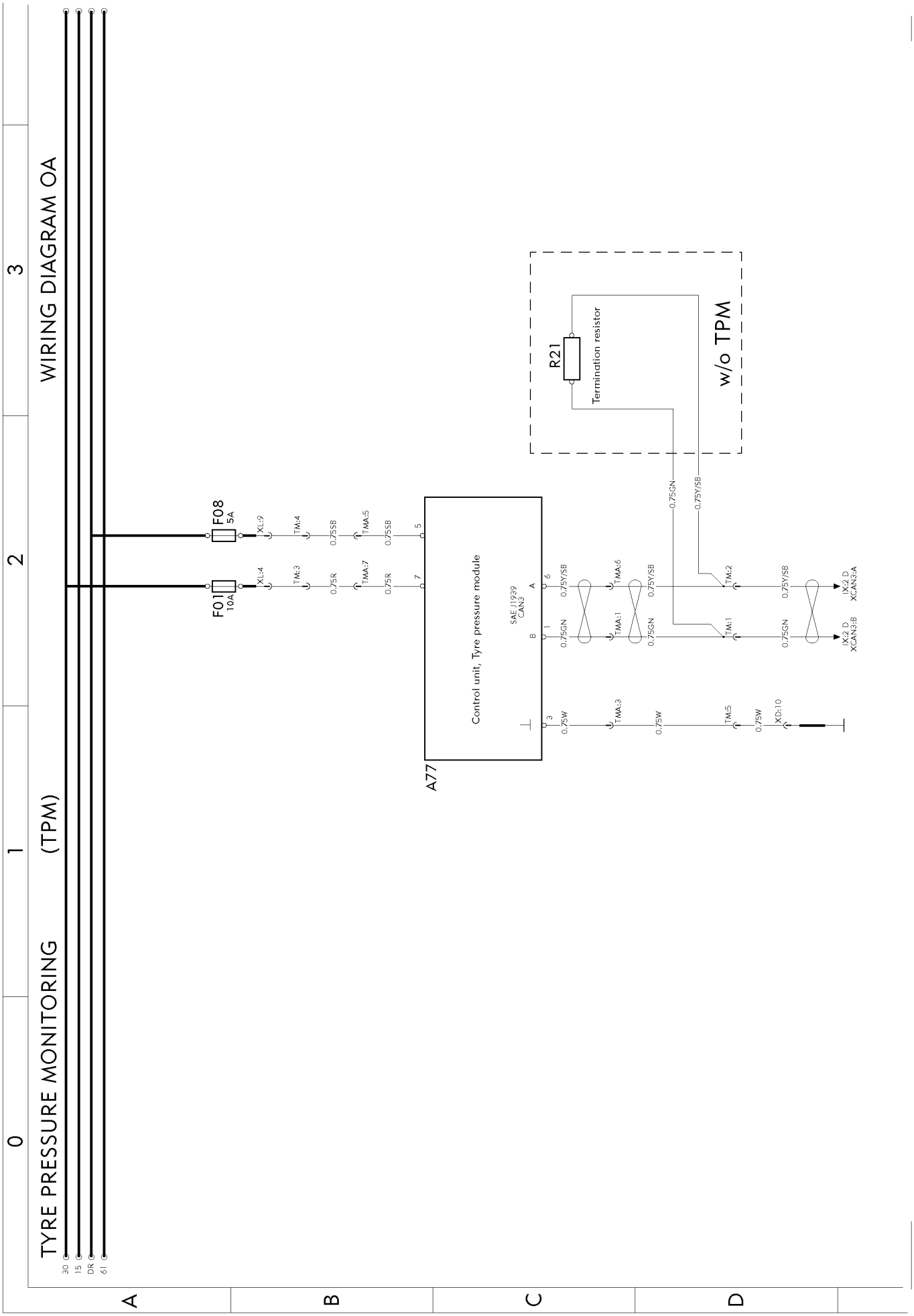
TYRE PRESSURE MONITORING (TPM)
WIRING DIAGRAM OA
30
15
DR
61
F01
10A
F08
5A
XL:4
XL:9
TM:3
TM:4
0.75R
0.75SB
TMA:7
TMA:5
7
5
A77
Control unit, Tyre pressure module
SAE J1939
CAN3
A
B
6
1
3
0.75Y/SB
0.75GN
0.75W
TMA:6
TMA:1
TMA:3
TM:2
TM:1
TM:5
XD:10
IX2 D
XCAN3:A
IX2 D
XCAN3:B
R21
Termination resistor
w/o TPM

https://truckmanualshub.com/

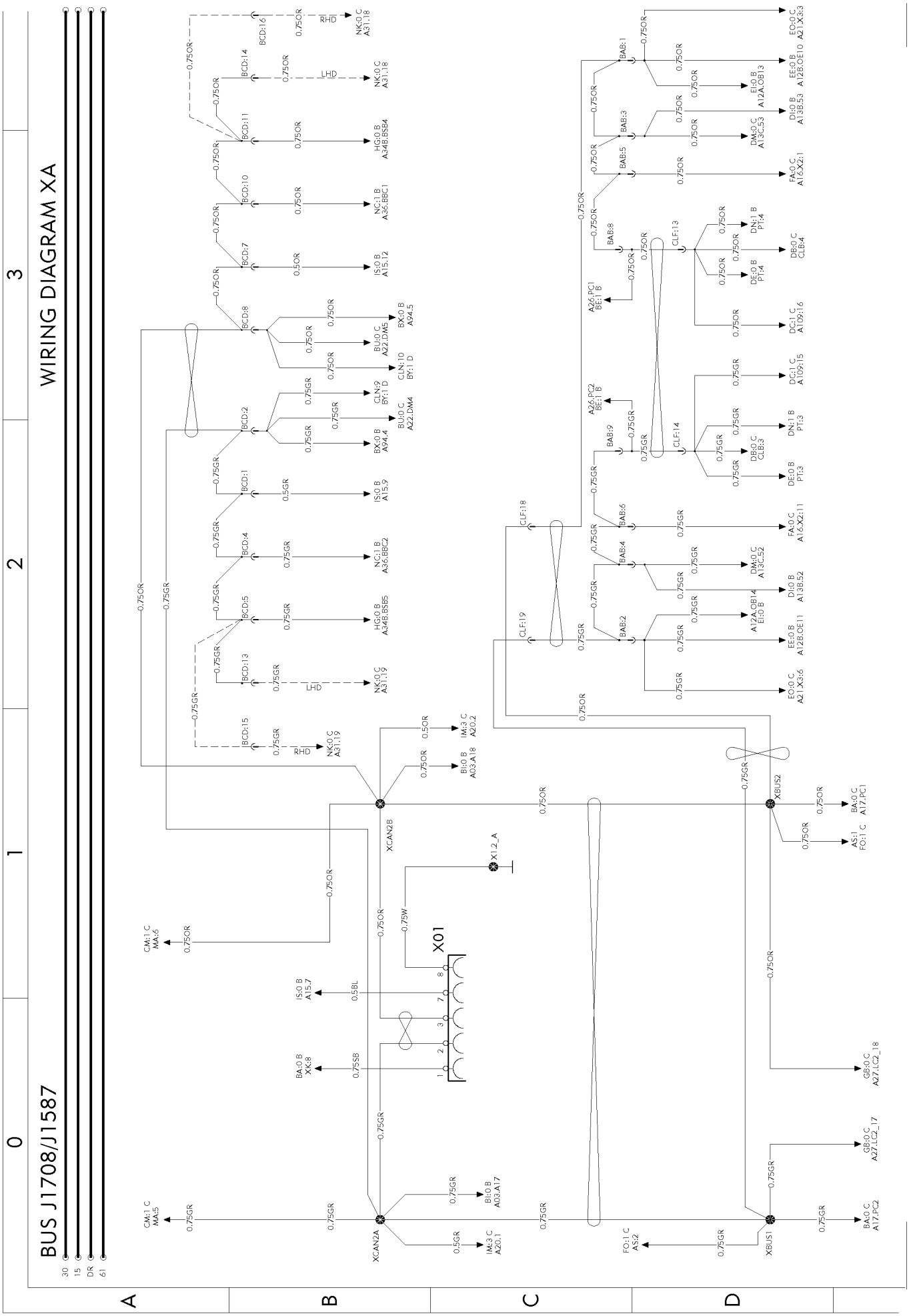

T3018732

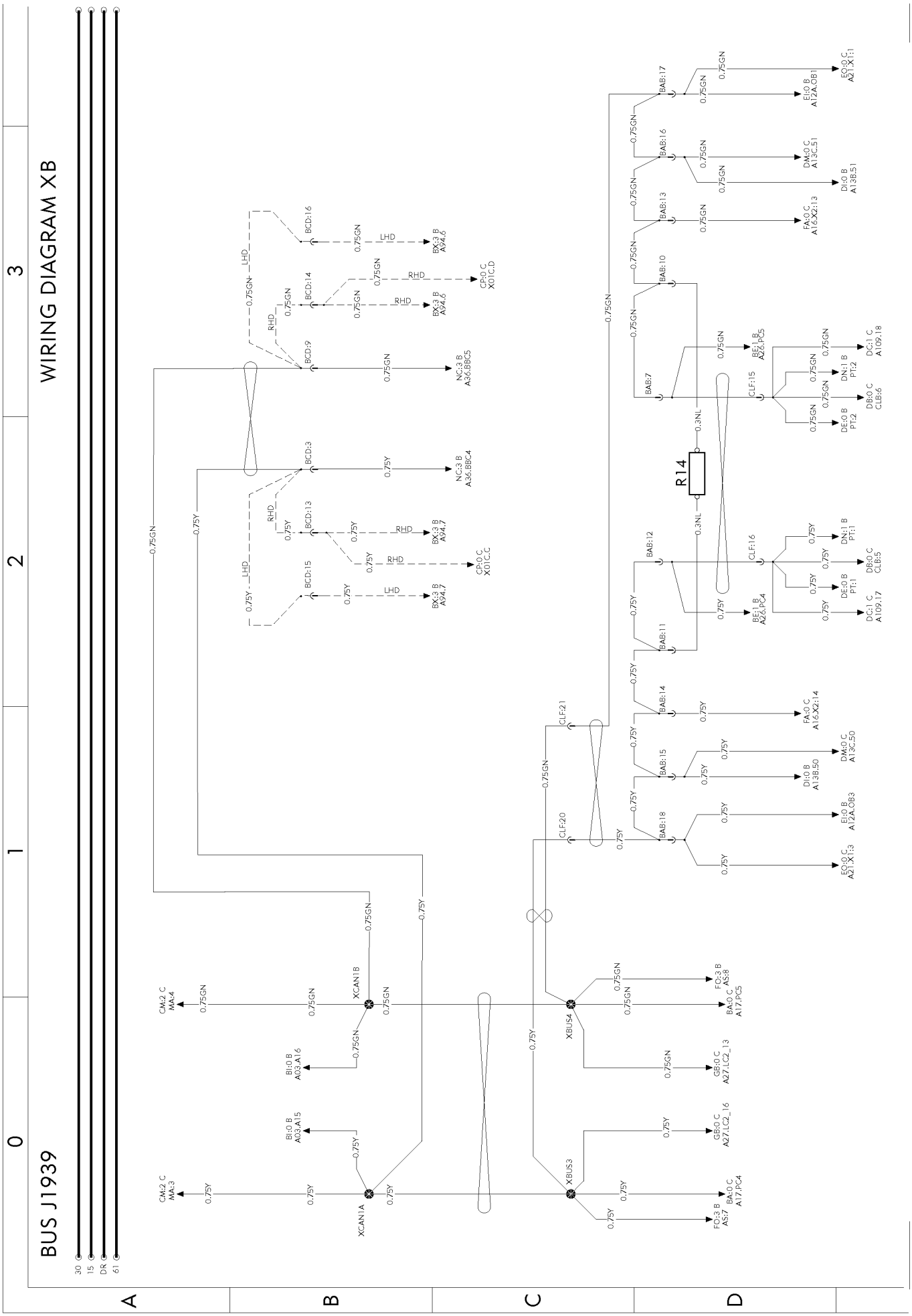
WIRING DIAGRAM XB
BUS J1939
30
15
DR
61
0
1
2
3
A
B
C
D
XCAN1A
XCAN1B
XBUS3
XBUS4
R14
CLF:20
CLF:21
CLF:15
CLF:16
BAB:7
BAB:10
BAB:11
BAB:12
BAB:13
BAB:14
BAB:15
BAB:16
BAB:17
BAB:18
BCD:3
BCD:9
BCD:13
BCD:14
BCD:15
BCD:16
0.75GN
0.75Y
0.3NL
LHD
RHD

https://truckmanualshub.com/

Illustrations index

-	Aerial	page 91
-	Battery cables	page 92
-	Switches	page 94
-	Cab/chassis interface	page 96
1000	Wiring harness, instruments	page 98
1006	Wiring harness, roof	page 108
1007	Wiring harness, floor	page 113
1018	Wiring harness, air conditioning	page 121
1020	Wiring harness, cowl	page 122
1025	Wiring harness, engine-chassis	page 124
1030	Wiring harness, engine	page 126
1037	Wiring harness, bogie lift	page 129
1040	Wiring harness, frame	page 130
1047	Wiring harness, roof beacon light	page 132
1056	Wiring harness, air dryer	page 134
1062	Wiring harness, parking heater, frame	page 135
1063	Wiring harness, trailer connections	page 136
1072	Wiring harness, air suspension chassis	page 138
1077	Wiring harness, side marking lamps	page 140
1083	Wiring harness, door	page 141
1086	Wiring harness, ABS chassis	page 143
1401	Wiring harness, solenoid valves	page 147
1403	Wiring harness, retarder	page 149
1435	Wiring harness, main switch	page 150
1436	Wiring harness, roof sign lighting	page 132
1458	Wiring harness, front wheel drive	page 153
1460	Wiring harness, cab-battery box	page 150
1470	Wiring harness, el.operated mirror arch	page 166
1472	Wiring harness, load indicator	page 154
1476	Wiring harness, cab-engine	page 124
1484	Wiring harness, floor gear shift selector	page 155
1493	Wiring harness, power steering	page 157
1494	Wiring harness, gearbox	page 159
1499	Wiring harness, cab-gearbox	page 159
1501	Wiring harness, upper front	page 164
1502	Wiring harness, lower front left	page 164
1503	Wiring harness, lower front right	page 165
1504	Wiring harness, firewall	page 166
1505	Wiring harness, body builder connections	page 168
1506	Wiring harness, demountable (swap-body)	page 168
1507	Wiring harness, ESP chassis	page 169
1508	Wiring harness, TPM	page 170

https://truckmanualshub.com/

Illustrations

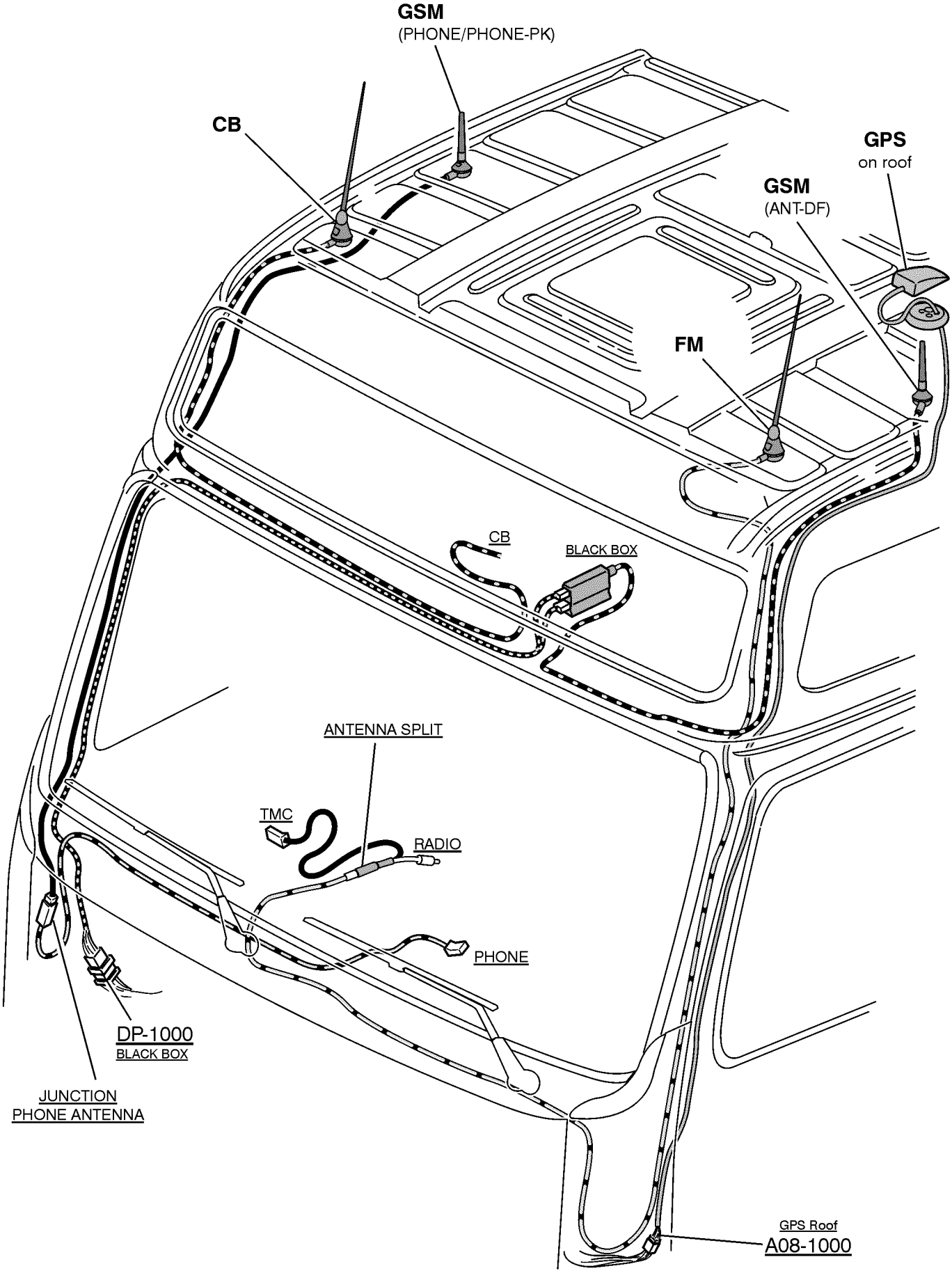

https://truckmanualshub.com/

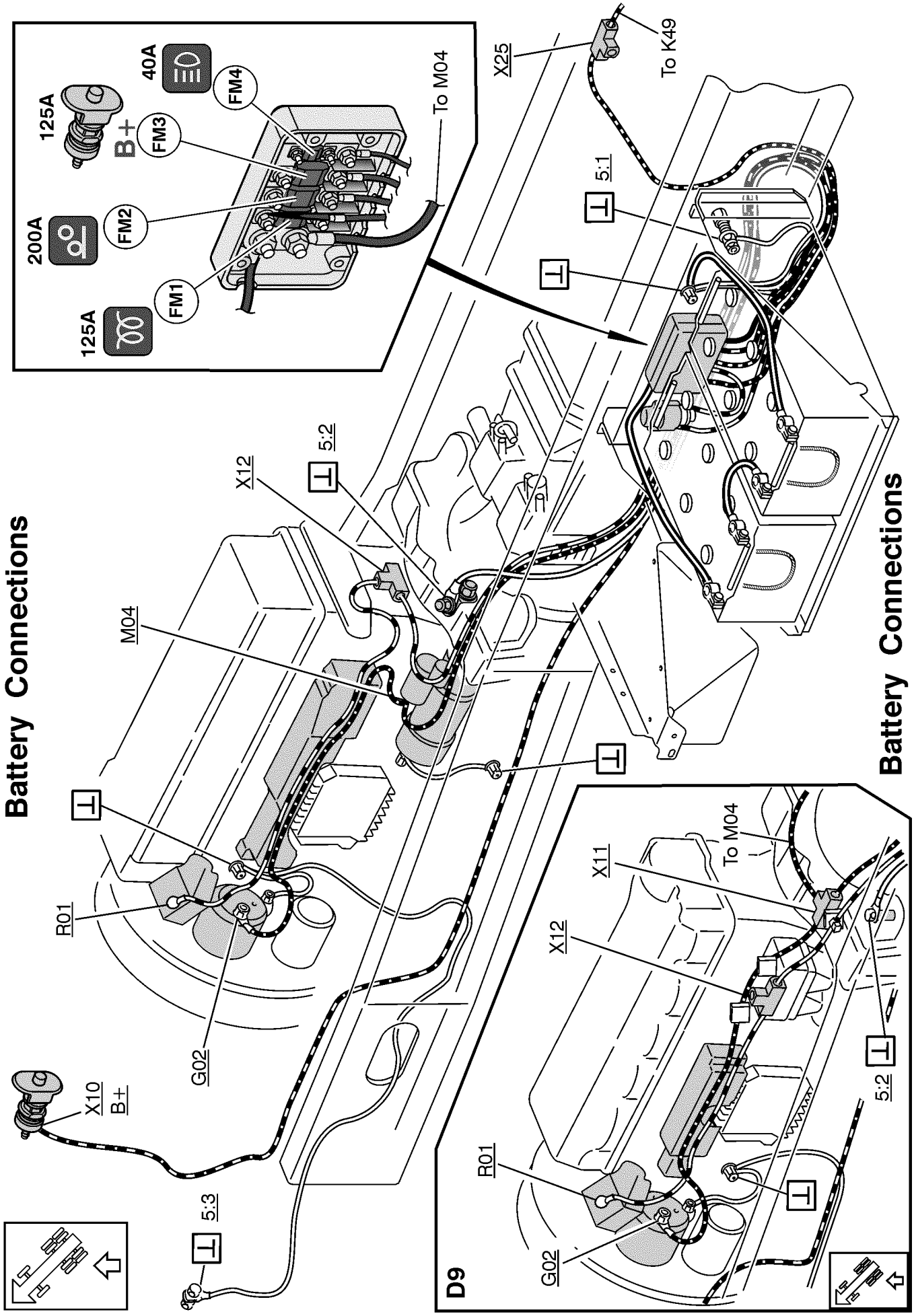

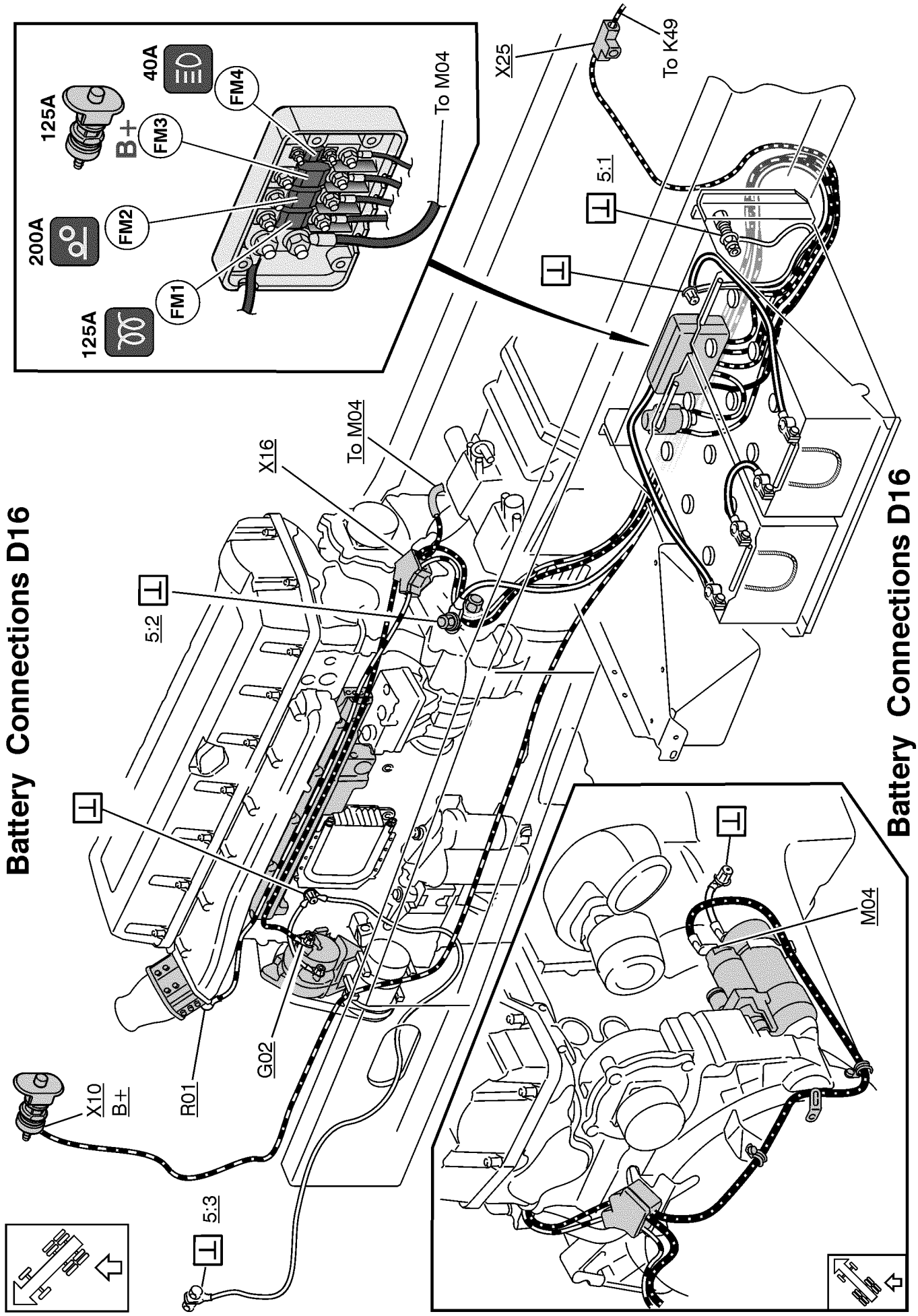
Battery Connections D16
125A
B+
40A
FM4
FM3
FM2
FM1
200A
125A
To M04
X25
To K49
5:1
X16
To M04
5:2
X10
B+
R01
G02
5:3
M04
Battery Connections D16

https://truckmanualshub.com/

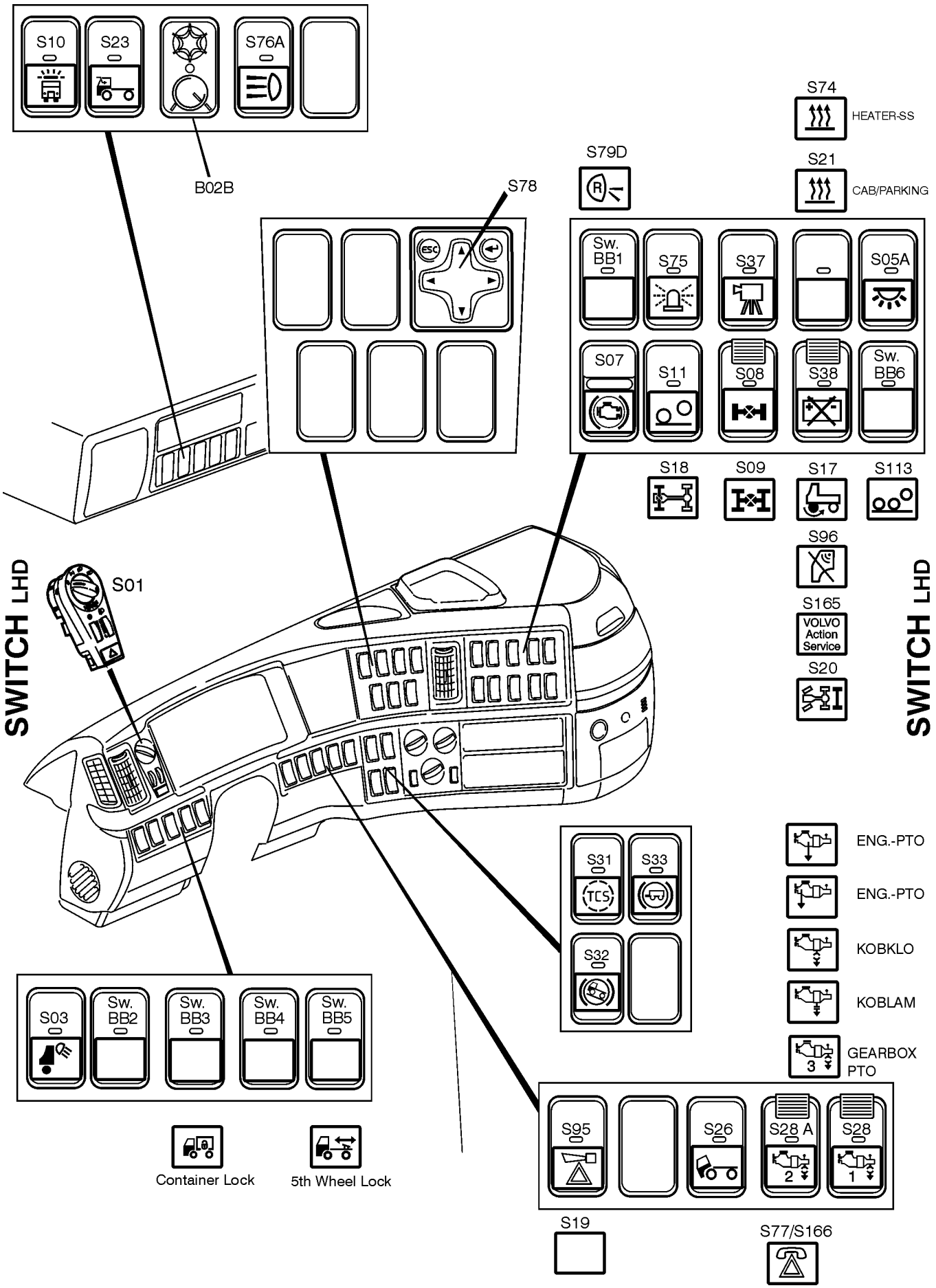

T3018734

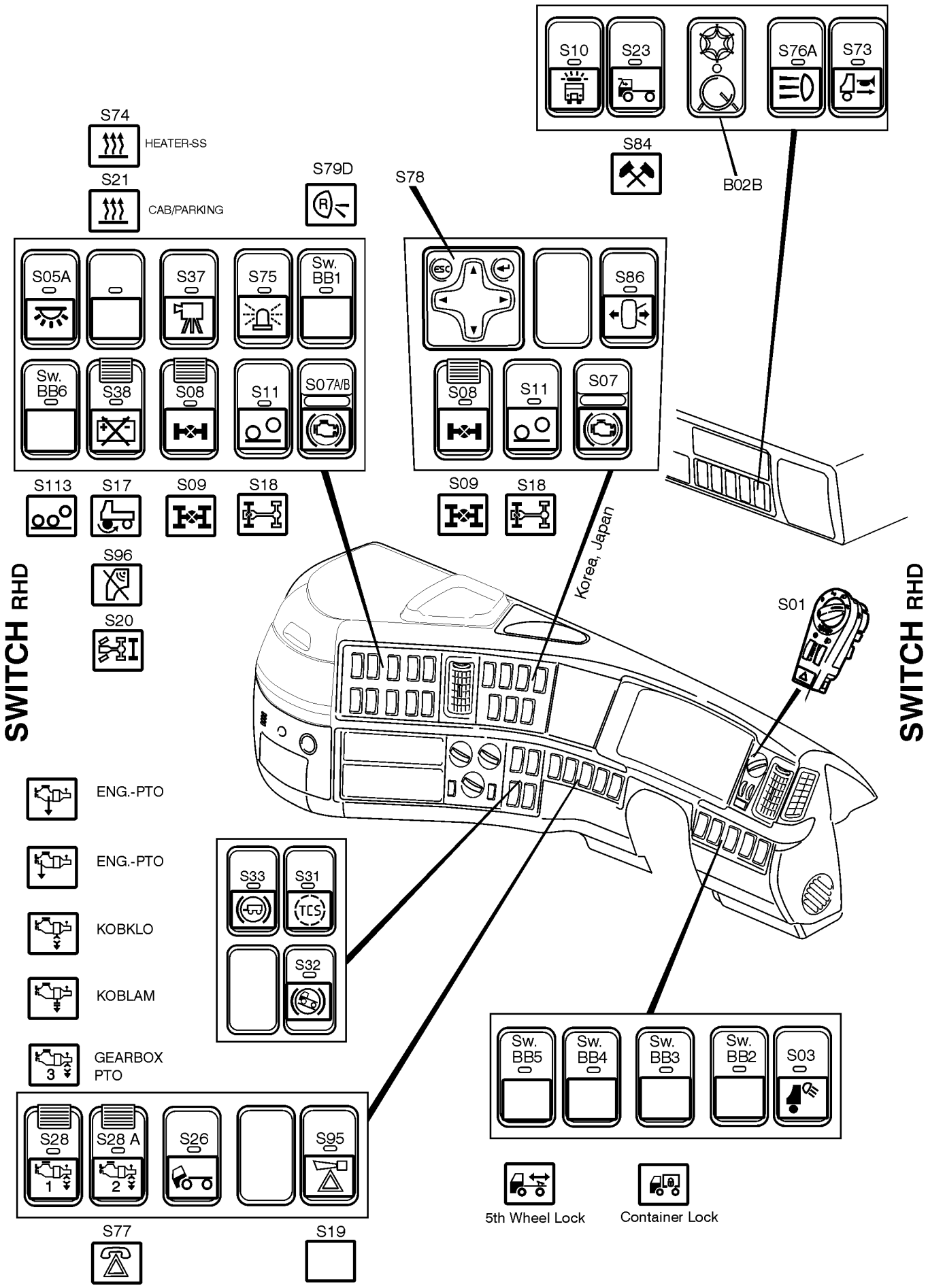
S10
S23
S76A
S73
S84
B02B
S74
HEATER-SS
S21
CAB/PARKING
S79D
S78
S05A
S37
S75
Sw. BB1
S86
Sw. BB6
S38
S08
S11
S07A/B
S07
S113
S17
S09
S18
S96
S20
SWITCH RHD
Korea, Japan
S01
ENG.-PTO
ENG.-PTO
KOBKLO
KOBLAM
GEARBOX PTO
S33
S31
S32
Sw. BB5
Sw. BB4
Sw. BB3
Sw. BB2
S03
S28
S28 A
S26
S95
5th Wheel Lock
Container Lock
S77
S19
T3018735

https://truckmanualshub.com/

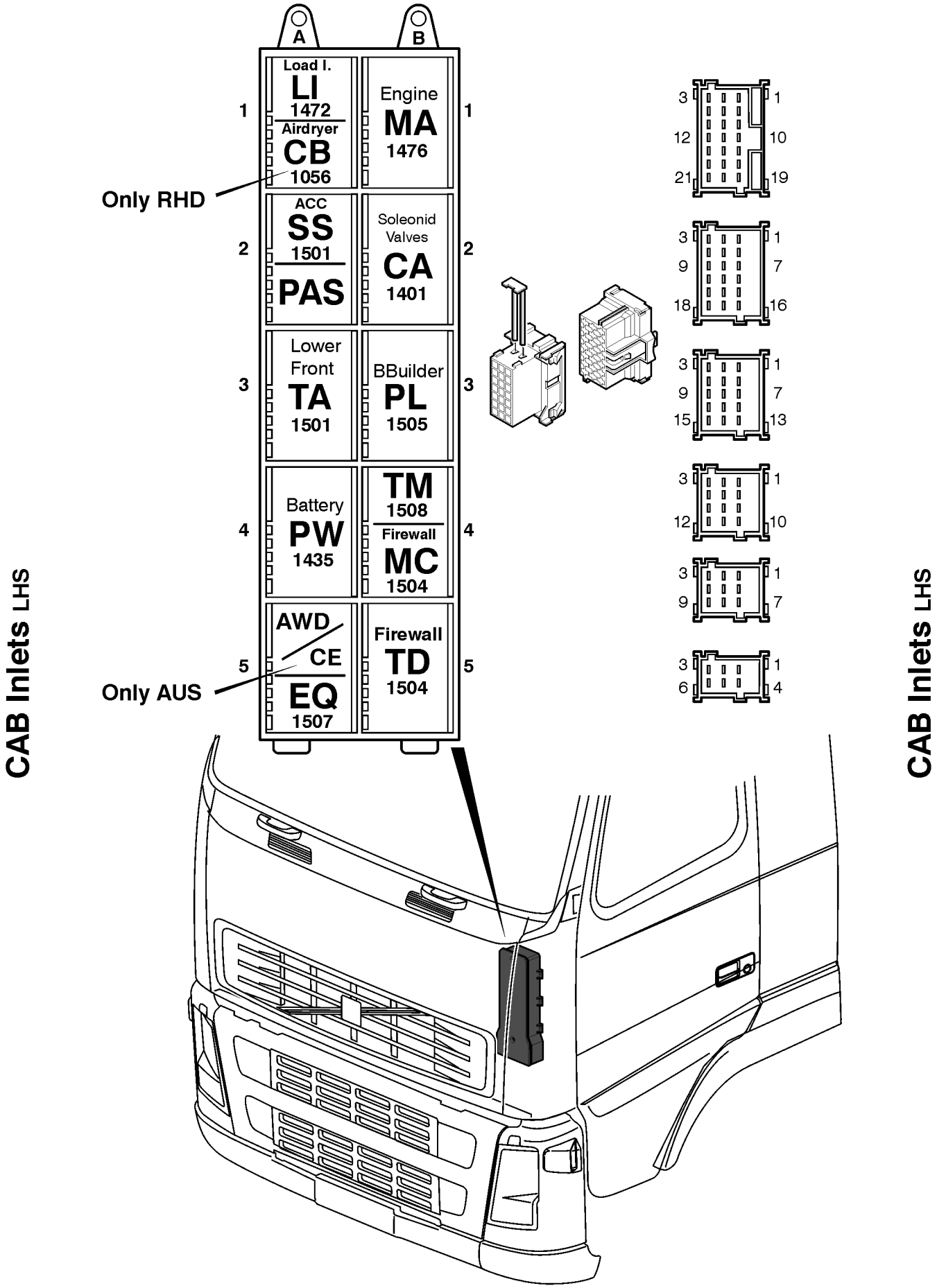

T3018314

https://truckmanualshub.com/

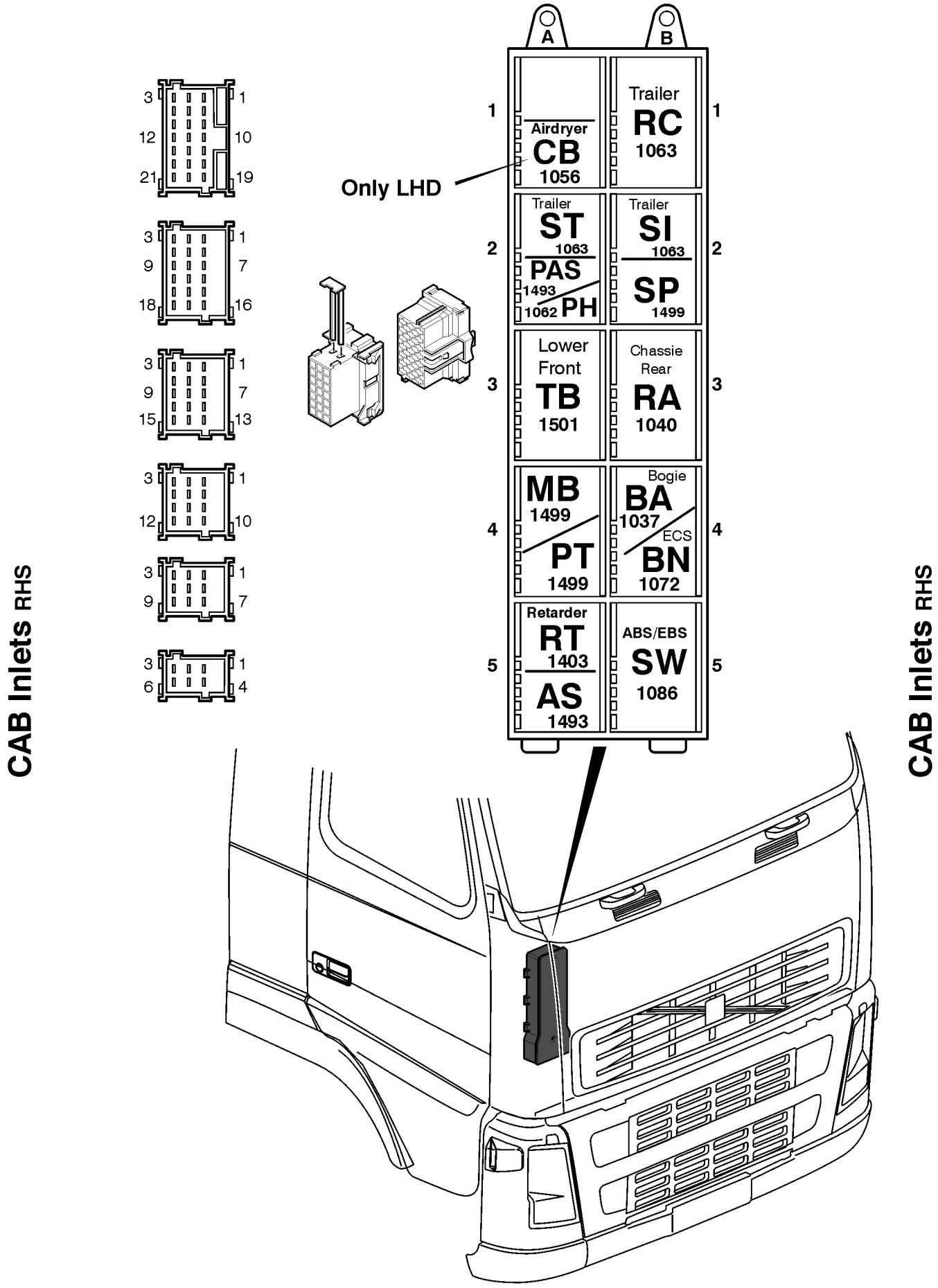

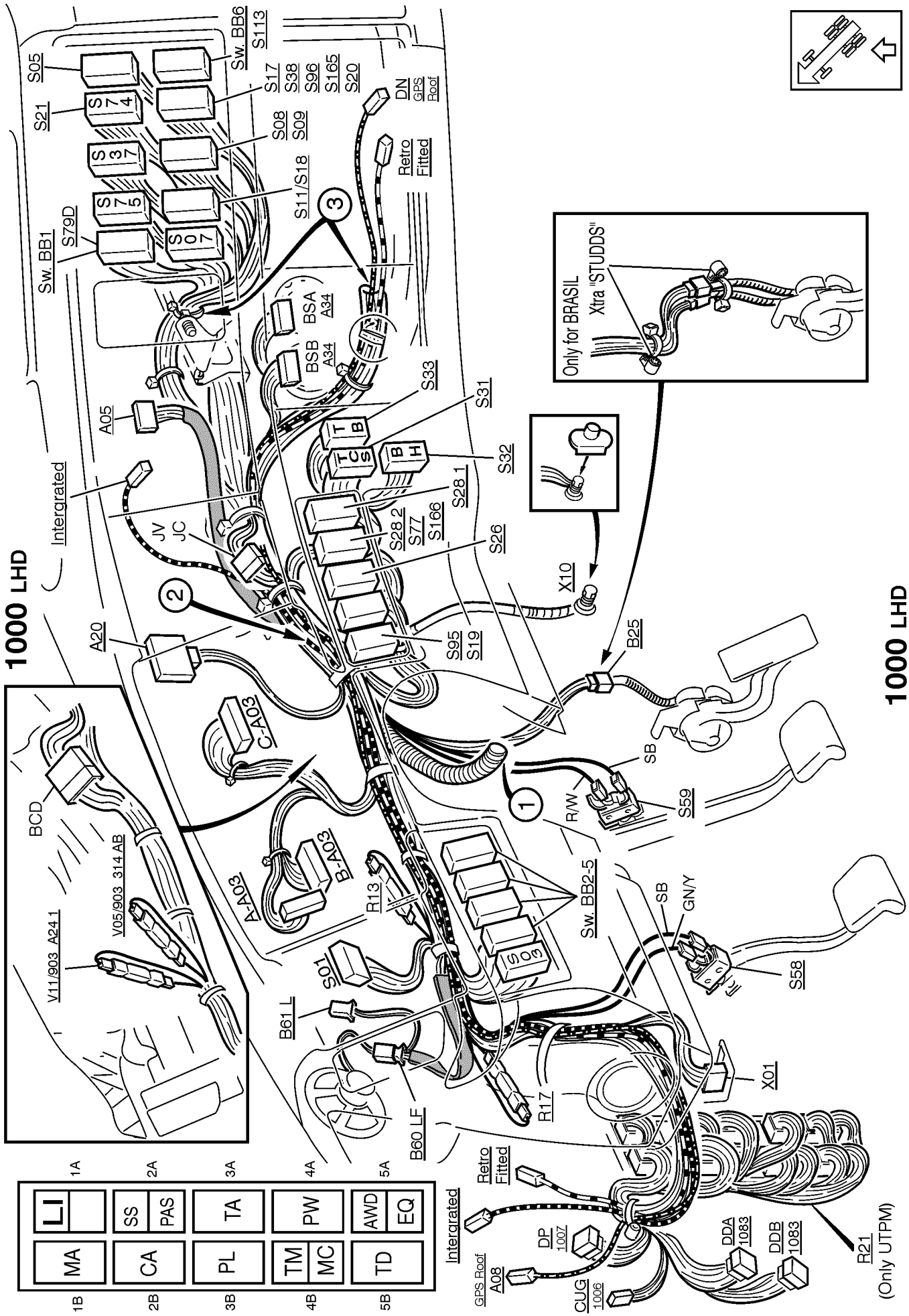
1000 LHD
Sw. BB1
S79D
S05
S21
Sw. BB6
S113
S17
S38
S96
S165
S20
S08
S09
S11/S18
DN
GPS Roof
Retro Fitted
BSA
A34
BSB
A34
A05
Intergrated
JV
JC
A20
S33
S31
S32
S28 1
S28 2
S77
S166
S26
S95
S19
X10
B25
Only for BRASIL
Xtra "STUDDS"
BCD
V05/903 314 AB
V11/903 A24 1
C-A03
A-A03
B-A03
R13
S01
B61 L
B60 LF
R17
Sw. BB2-5
SB
R/W
S59
GN/Y
S58
X01
R21
(Only UTPM)
DDA
1083
DDB
1083
DP
1007
CUG
1006
A08
GPS Roof
Intergrated
Retro Fitted
LI
MA
SS
PAS
CA
TA
PL
PW
TM
MC
AWD
EQ
TD
1A
2A
3A
4A
5A
1B
2B
3B
4B
5B
1000 LHD

T3018736

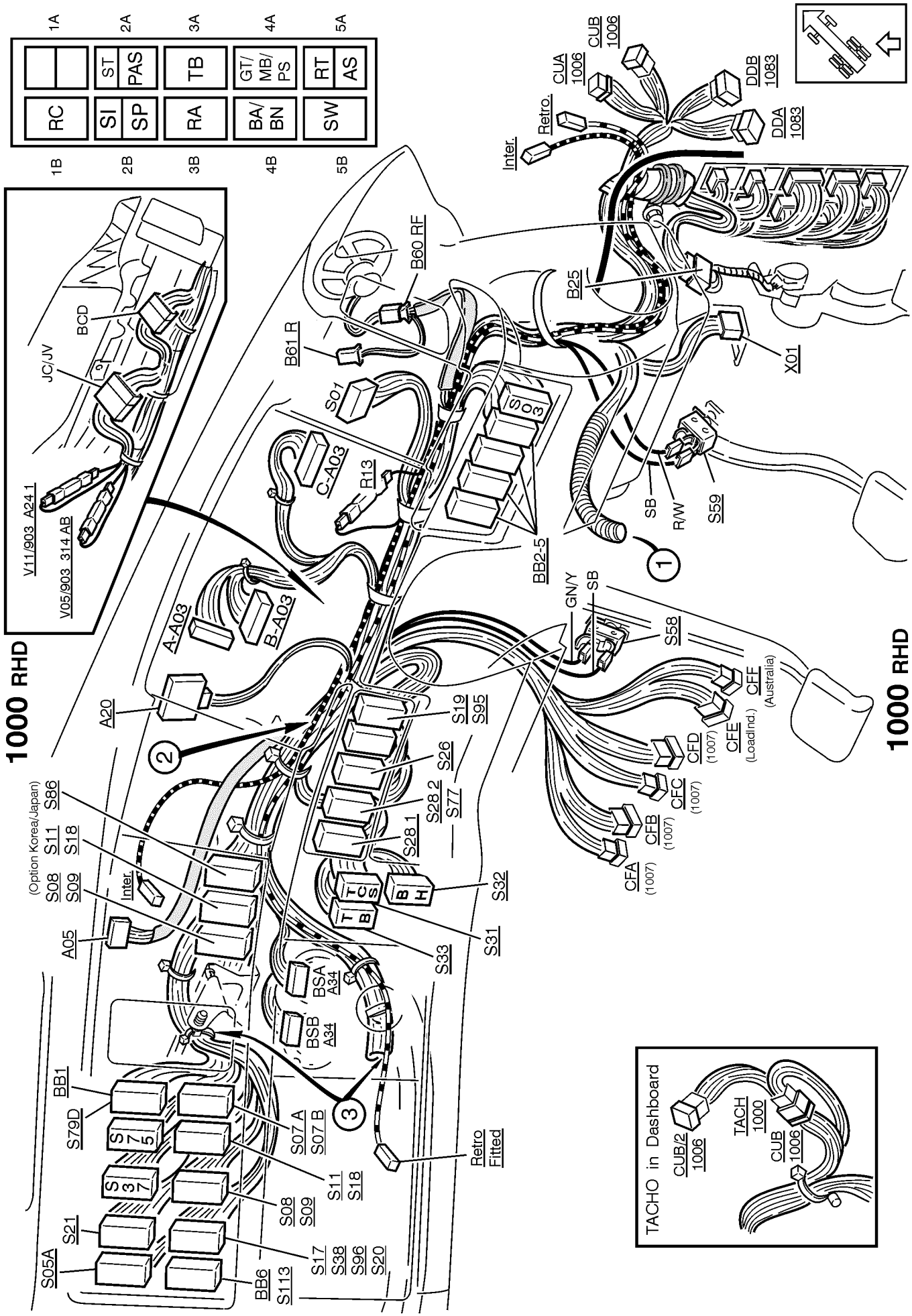
1000 RHD
1A
2A
3A
4A
5A
RC
SI
SP
ST
PAS
RA
TB
BA/
BN
GT/
MB/
PS
SW
RT
AS
1B
2B
3B
4B
5B
V11/903 A24 1
V05/903 314 AB
JC/JV
BCD
B61 R
B60 RF
S01
C-A03
R13
A-A03
B-A03
A20
A05
Inter.
(Option Korea/Japan)
S08
S09
S11
S18
S86
BB1
S79D
S75
S37
S21
S05A
BB6
S113
S07 A
S07 B
S17
S38
S96
S20
BSA
A34
BSB
A34
S19
S95
S26
S28 2
S77
S28 1
S32
S31
S33
BB2-5
GN/Y
SB
S58
Retro
Fitted
Inter.
Retro.
CUA
1006
CUB
1006
DDB
1083
DDA
1083
B25
X01
SB
R/W
S59
CFA
(1007)
CFB
(1007)
CFC
(1007)
CFD
(1007)
CFE
(LoadInd.)
CFF
(Australia)
TACHO in Dashboard
CUB/2
1006
TACH
1000
CUB
1006

https://truckmanualshub.com/

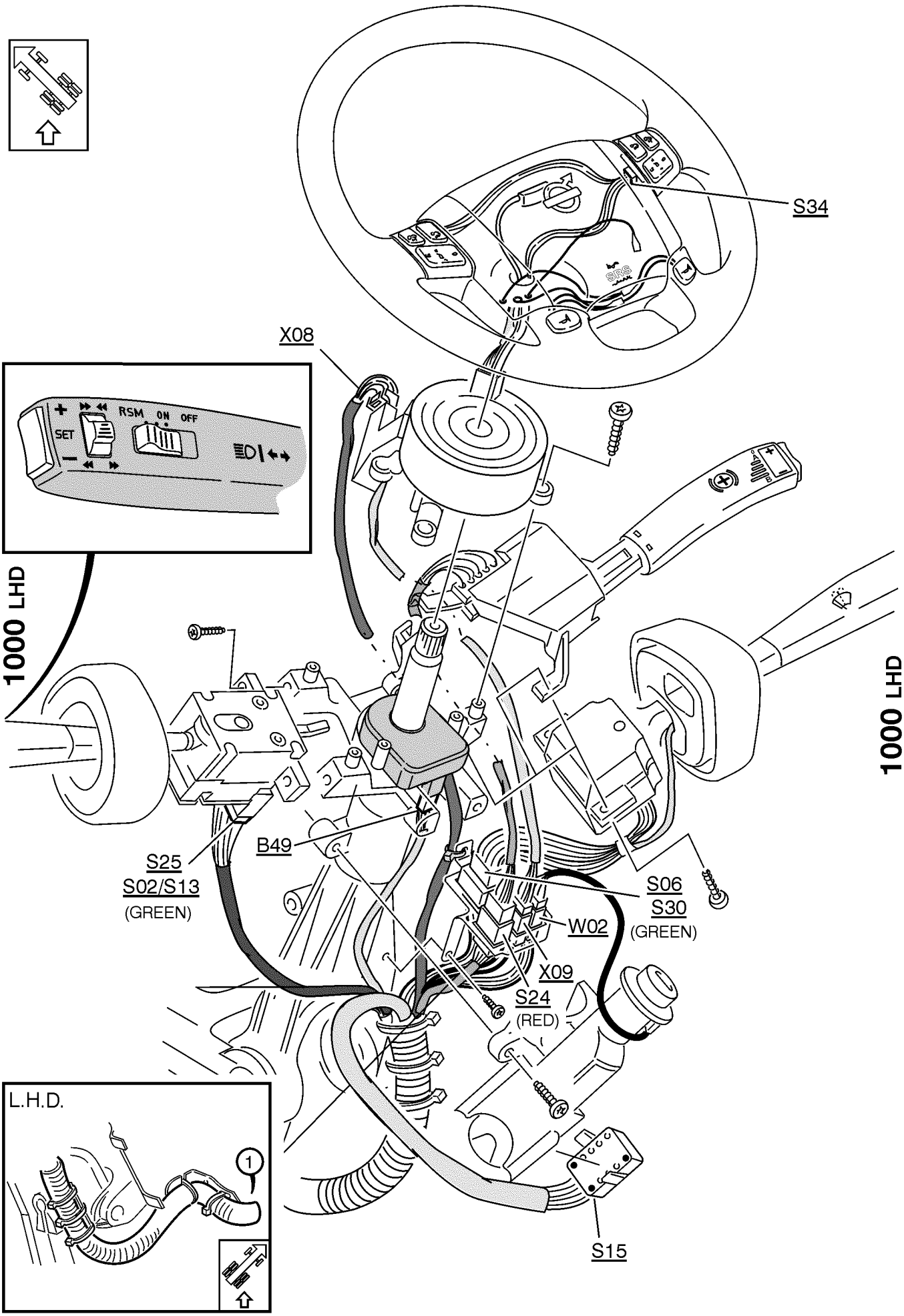

T3017748

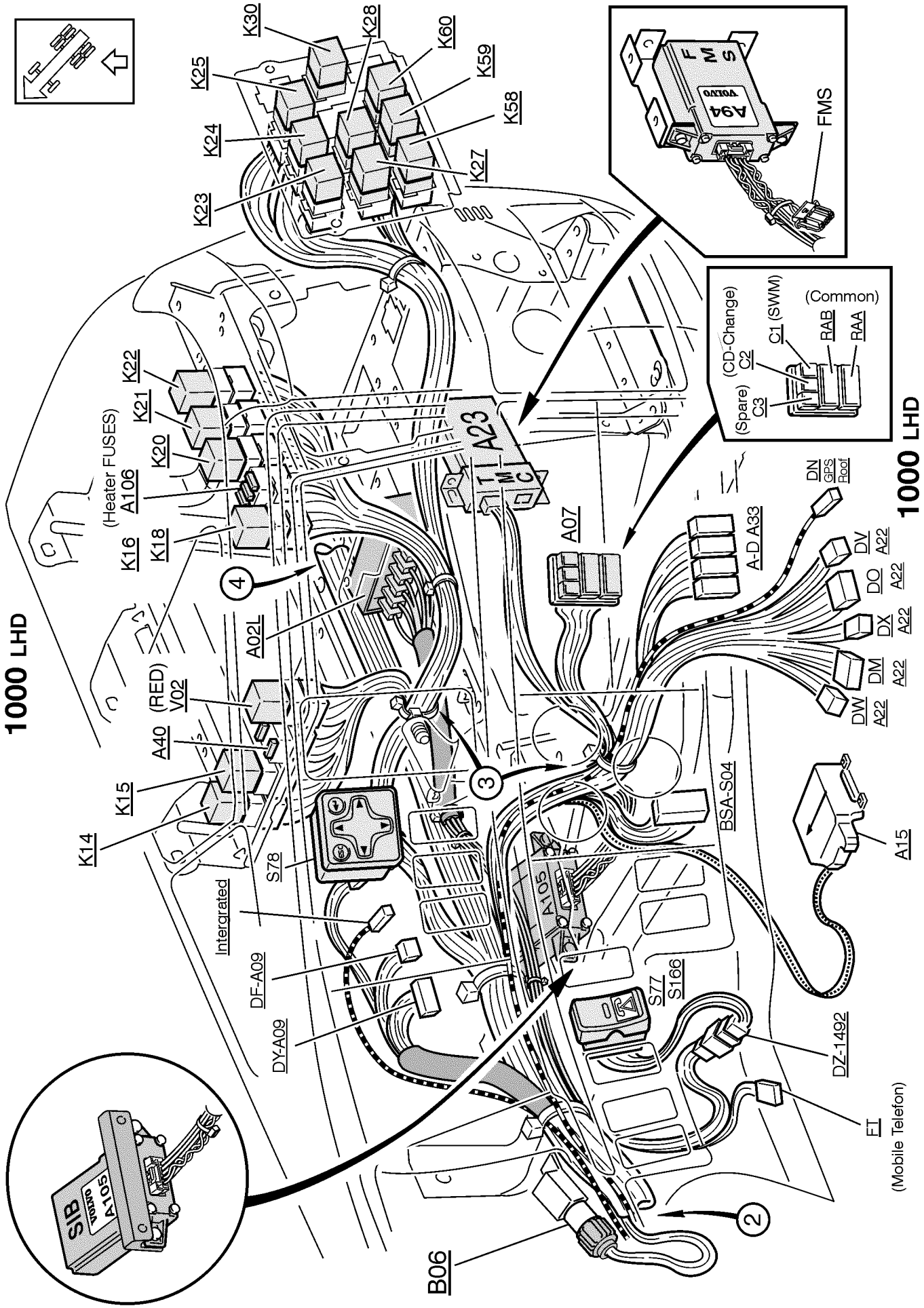
1000 LHD
1000 LHD
K30
K28
K60
K25
K59
K24
K58
K23
K27
A94
VOLVO
F
M
S
FMS
(CD-Change)
C2
C1 (SWM)
(Common)
RAB
RAA
(Spare)
C3
K22
K21
K20
(Heater FUSES)
A106
K16
K18
A23
T
M
C
A07
A-D A33
DN
GPS
Roof
DV
A22
DO
A22
DX
A22
DM
A22
DW
A22
4
A02L
(RED)
V02
A40
K15
K14
3
S78
BSA-S04
A15
Integrated
DF-A09
DY-A09
A105
S77
S166
DZ-1492
FT
(Mobile Telefon)
2
B06
SIB
VOLVO
A105

https://truckmanualshub.com/

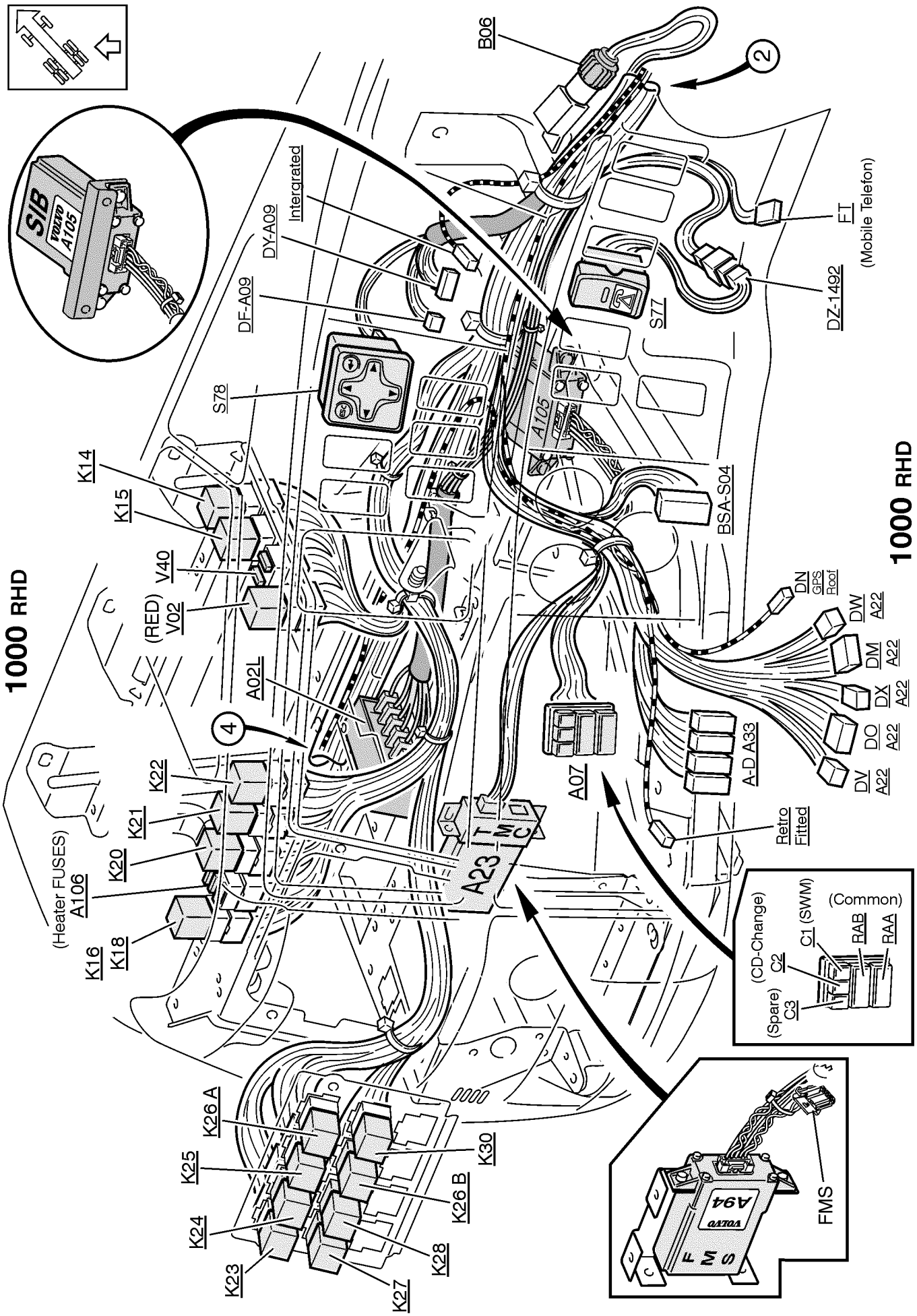

T3018313

https://truckmanualshub.com/

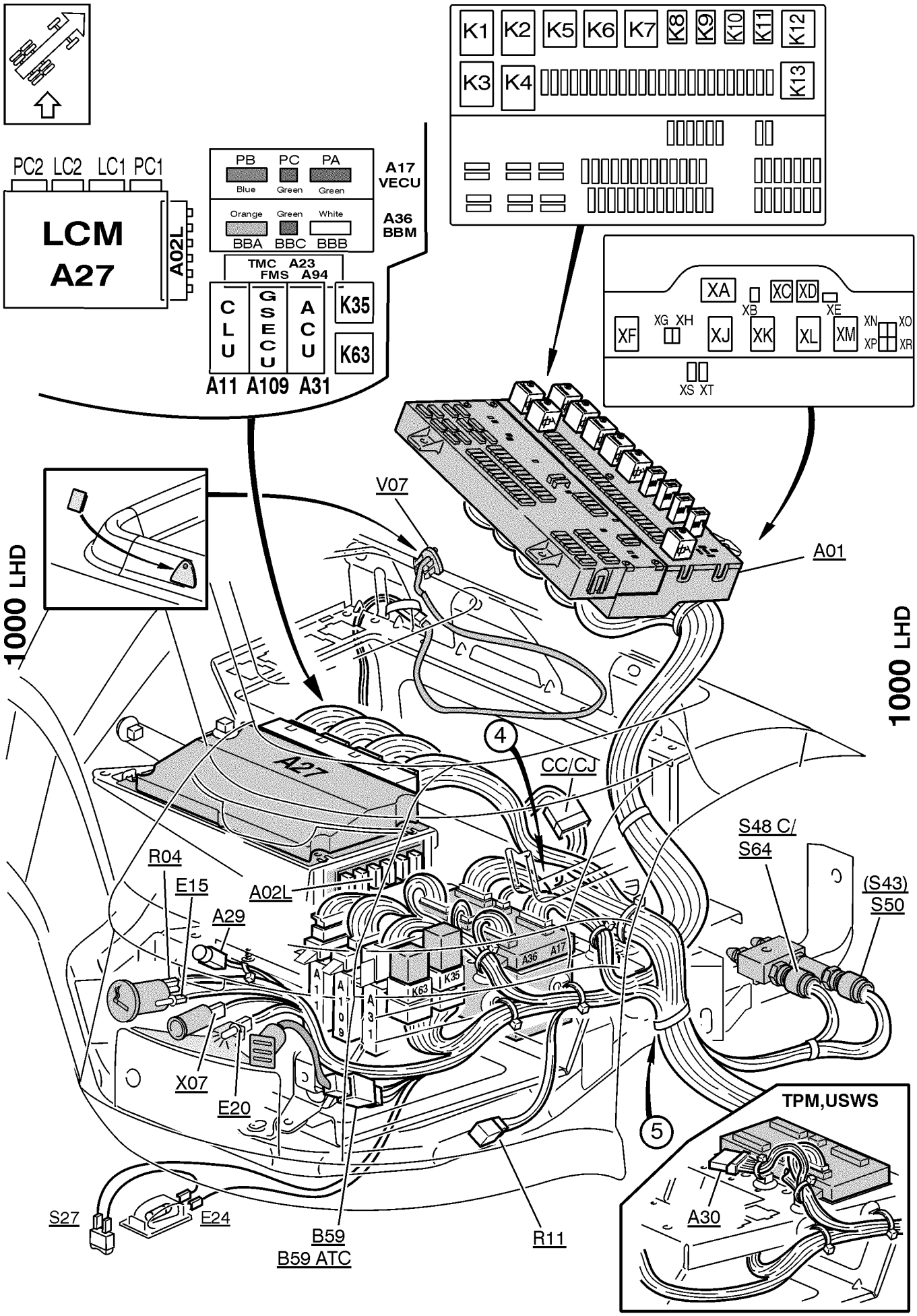

https://truckmanualshub.com/

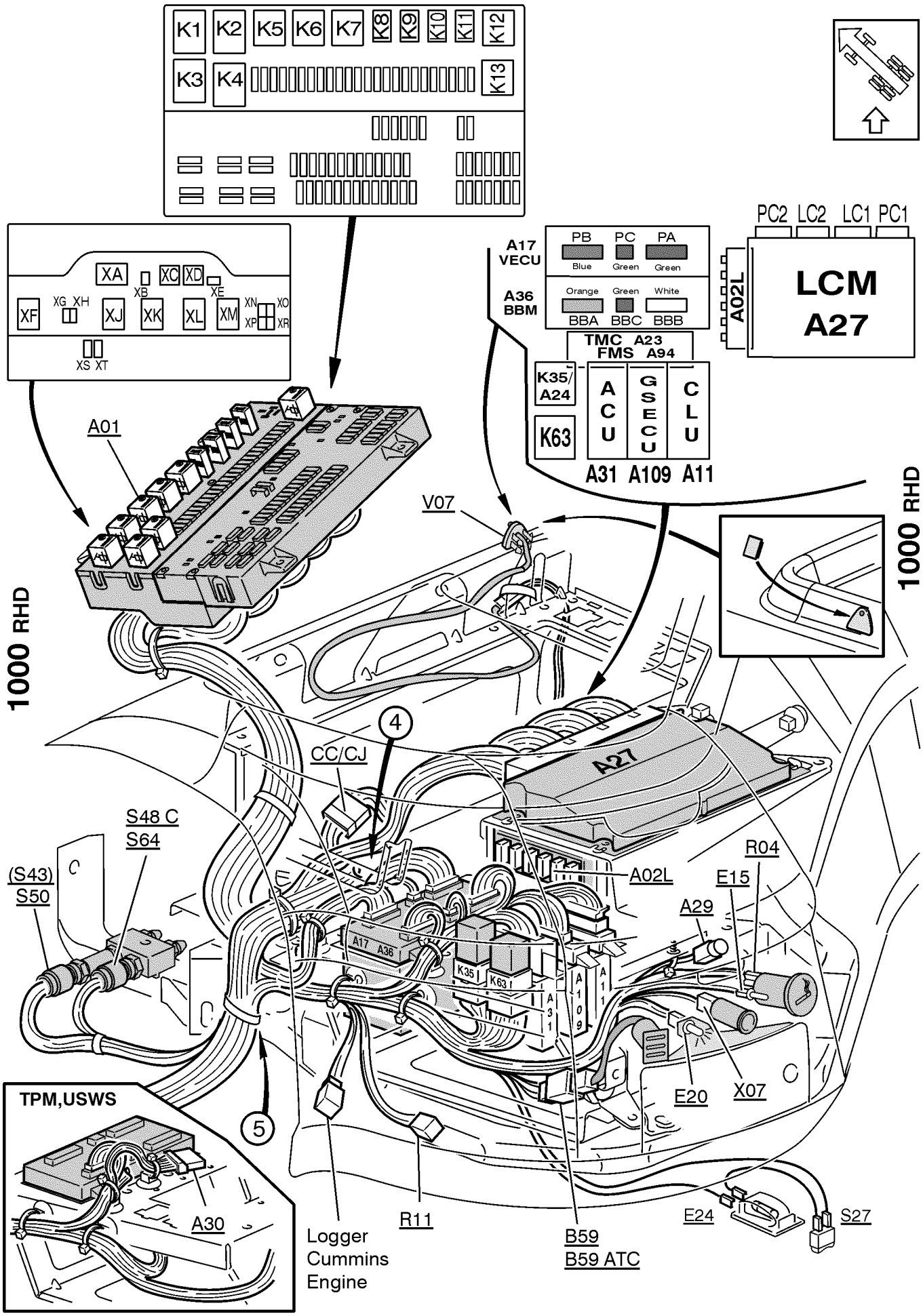

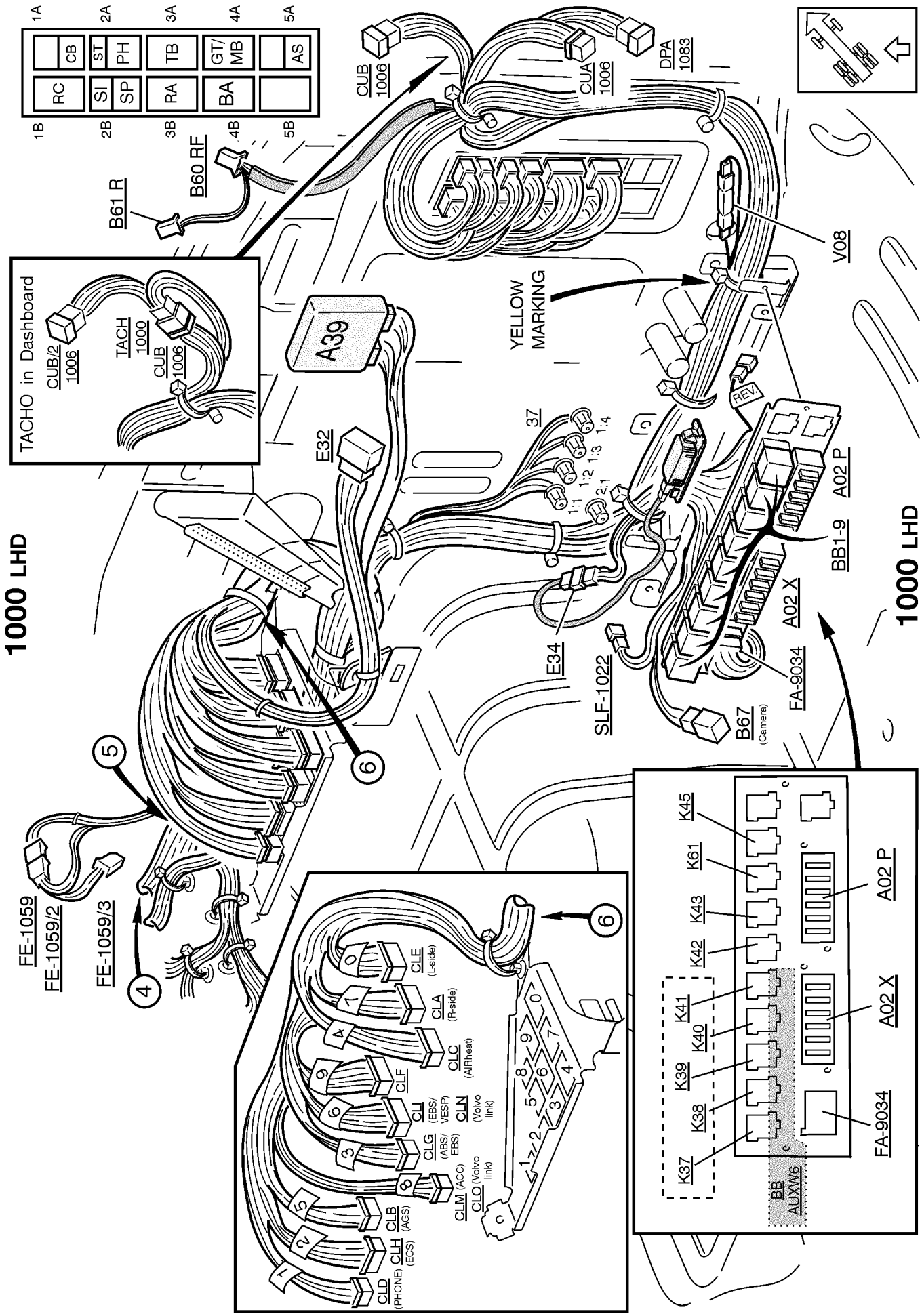
1000 LHD
1A
2A
3A
4A
5A
CB
ST
PH
TB
GT/
MB
AS
RC
SI
SP
RA
BA
1B
2B
3B
4B
5B
B61 R
B60 RF
CUB
1006
CUA
1006
DPA
1083
V08
YELLOW
MARKING
TACHO in Dashboard
CUB/2
1006
TACH
1000
CUB
1006
A39
E32
37
1:1
1:2
1:3
1:4
2:1
REV.
A02 P
BB1-9
A02 X
FA-9034
B67
(Camera)
SLF-1022
E34
5
6
FE-1059
FE-1059/2
FE-1059/3
4
CLE
(L-side)
CLA
(R-side)
CLC
(AlRheat)
CLF
CLI
(EBS/
VESP)
CLN
(Volvo
link)
CLG
(ABS/
EBS)
CLM (ACC)
CLO (Volvo
link)
CLB
(AGS)
CLH
(ECS)
CLD
(PHONE)
K45
K61
K43
K42
K41
K40
K39
K38
K37
BB
AUXW6
A02 P
A02 X
FA-9034
1000 LHD

https://truckmanualshub.com/

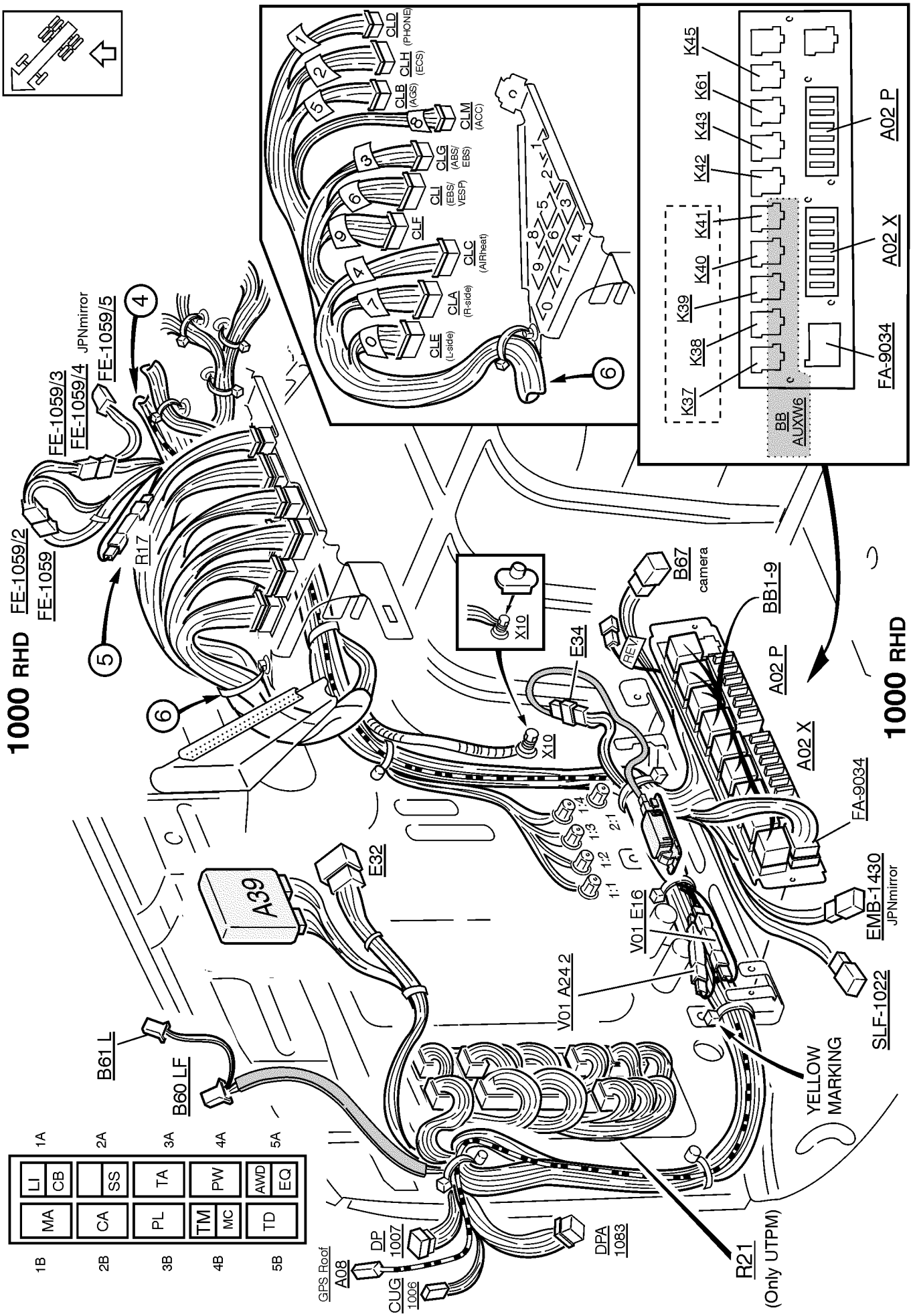

T3017717

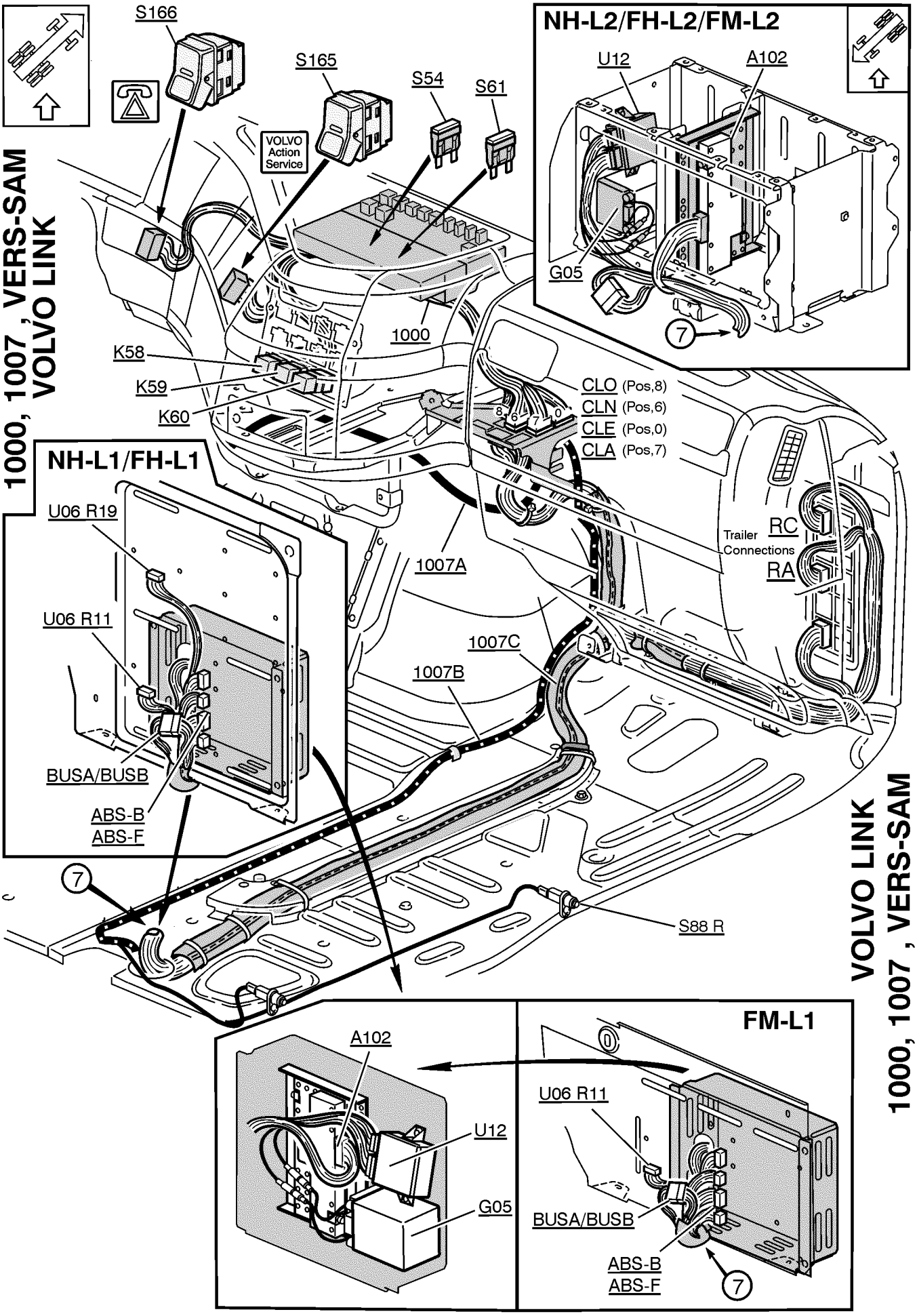
1000, 1007 , VERS-SAM
VOLVO LINK
S166
S165
S54
S61
VOLVO Action Service
NH-L2/FH-L2/FM-L2
U12
A102
G05
7
1000
K58
K59
K60
CLO (Pos,8)
CLN (Pos,6)
CLE (Pos,0)
CLA (Pos,7)
NH-L1/FH-L1
U06 R19
U06 R11
BUSA/BUSB
ABS-B
ABS-F
1007A
1007C
1007B
Trailer Connections
RC
RA
S88 R
VOLVO LINK
1000, 1007 , VERS-SAM
FM-L1
A102
U12
G05
U06 R11
BUSA/BUSB
ABS-B
ABS-F
7

T3017718

https://truckmanualshub.com/

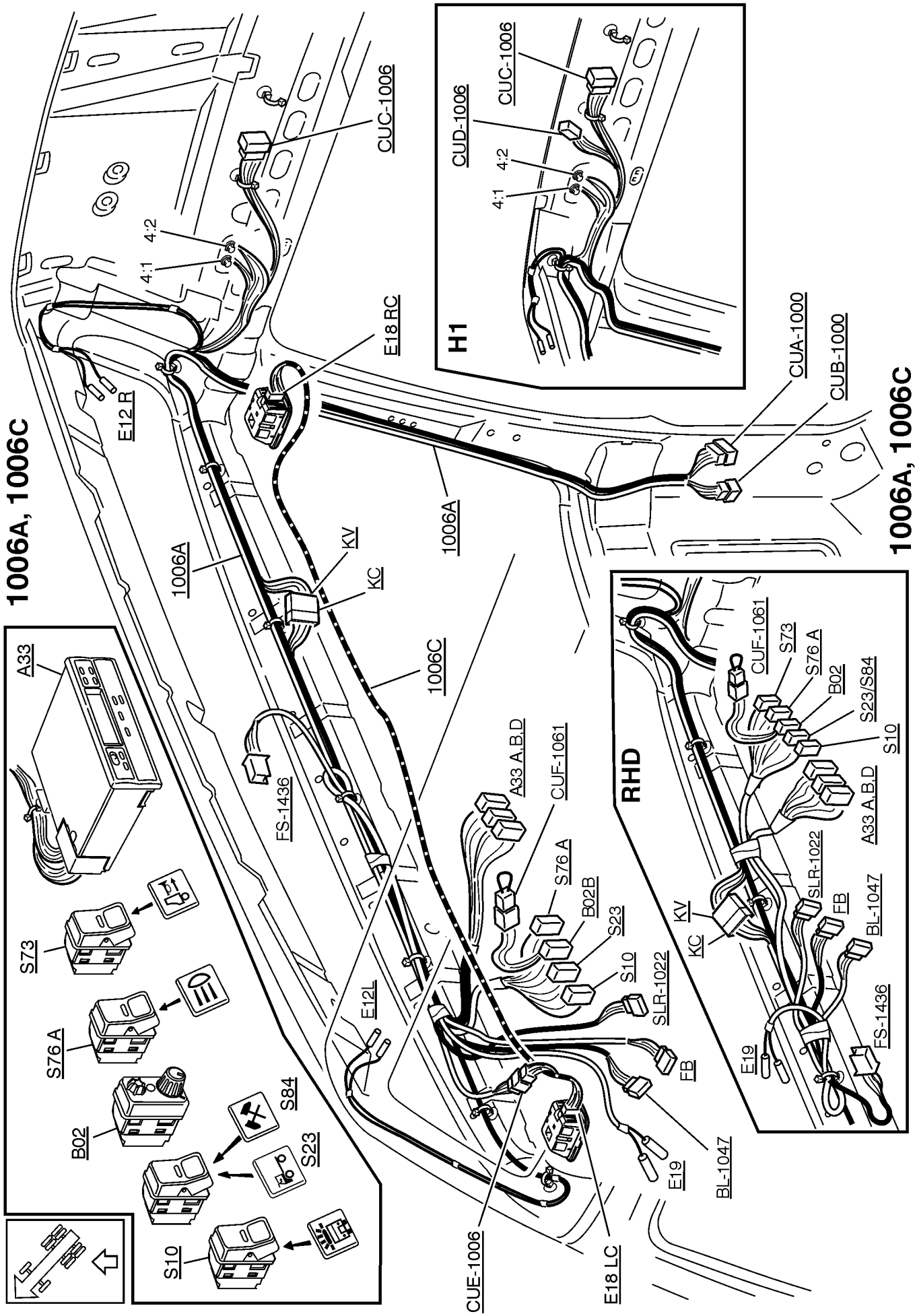

T3016391

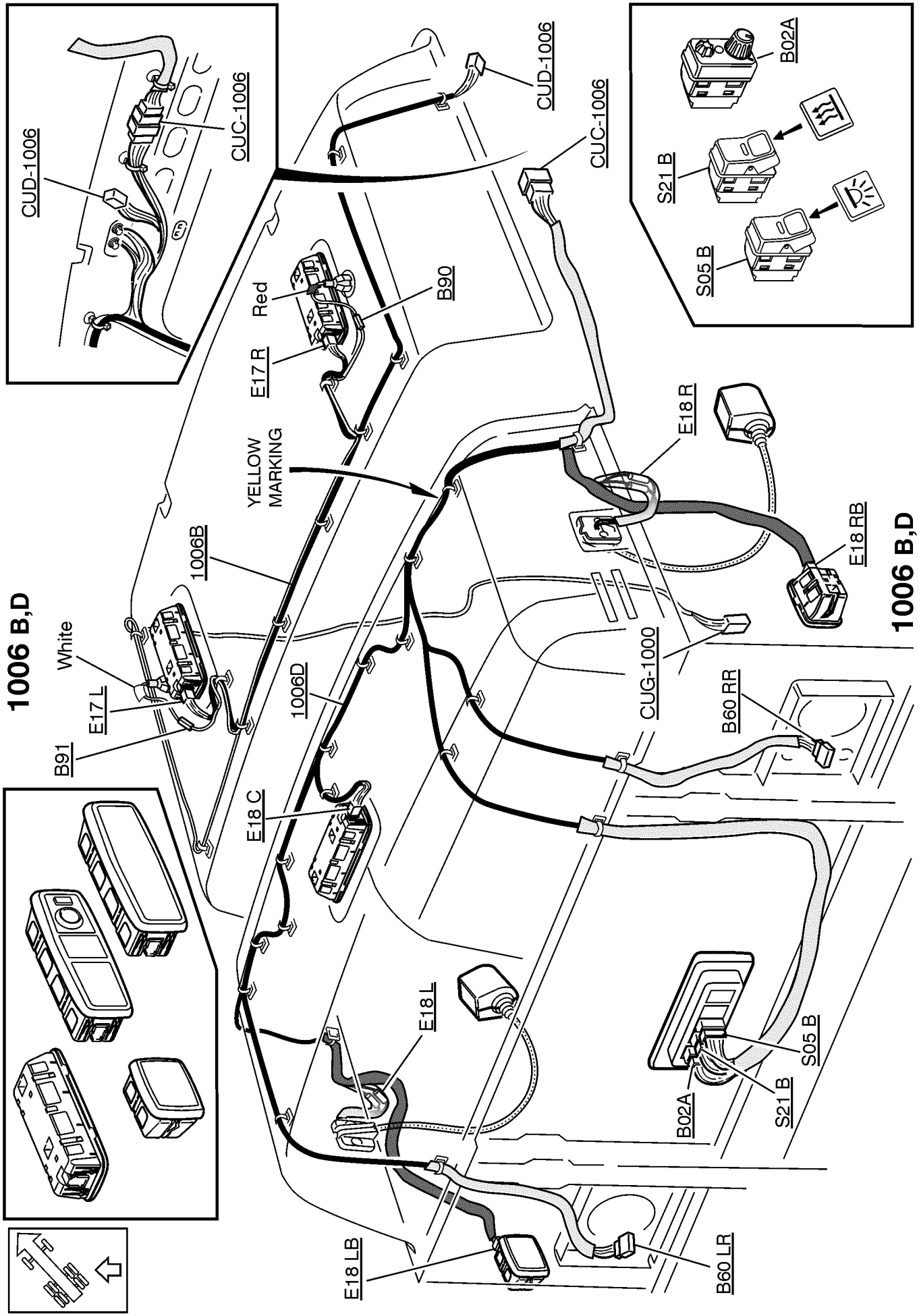
1006 B,D
CUD-1006
CUC-1006
CUD-1006
CUC-1006
B02A
S21 B
S05 B
Red
E17 R
B90
YELLOW MARKING
E18 R
E18 RB
1006B
White
E17 L
B91
1006D
CUG-1000
B60 RR
E18 C
E18 L
S05 B
B02A
S21 B
E18 LB
B60 LR
1006 B,D

https://truckmanualshub.com/

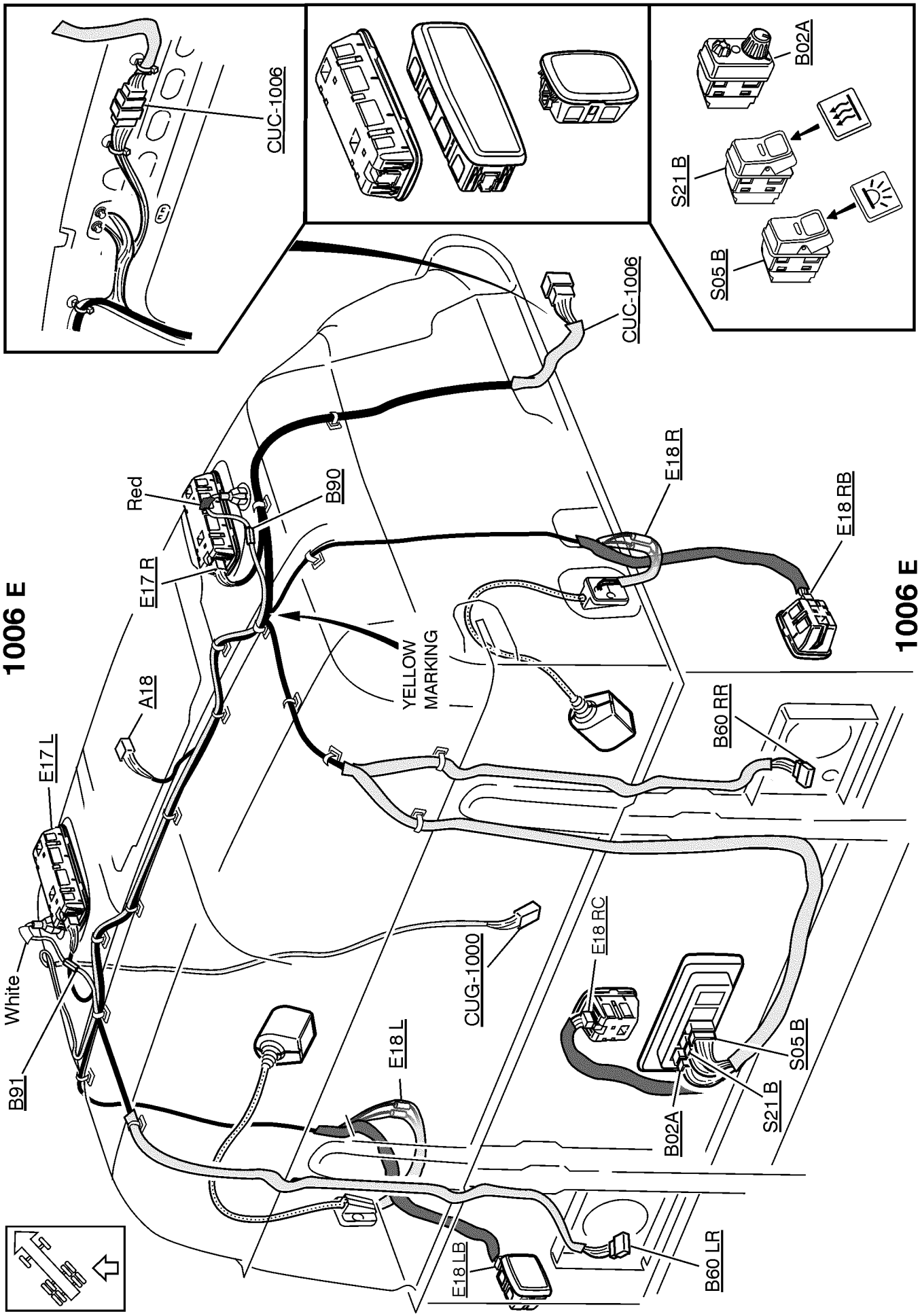

T3016393

https://truckmanualshub.com/

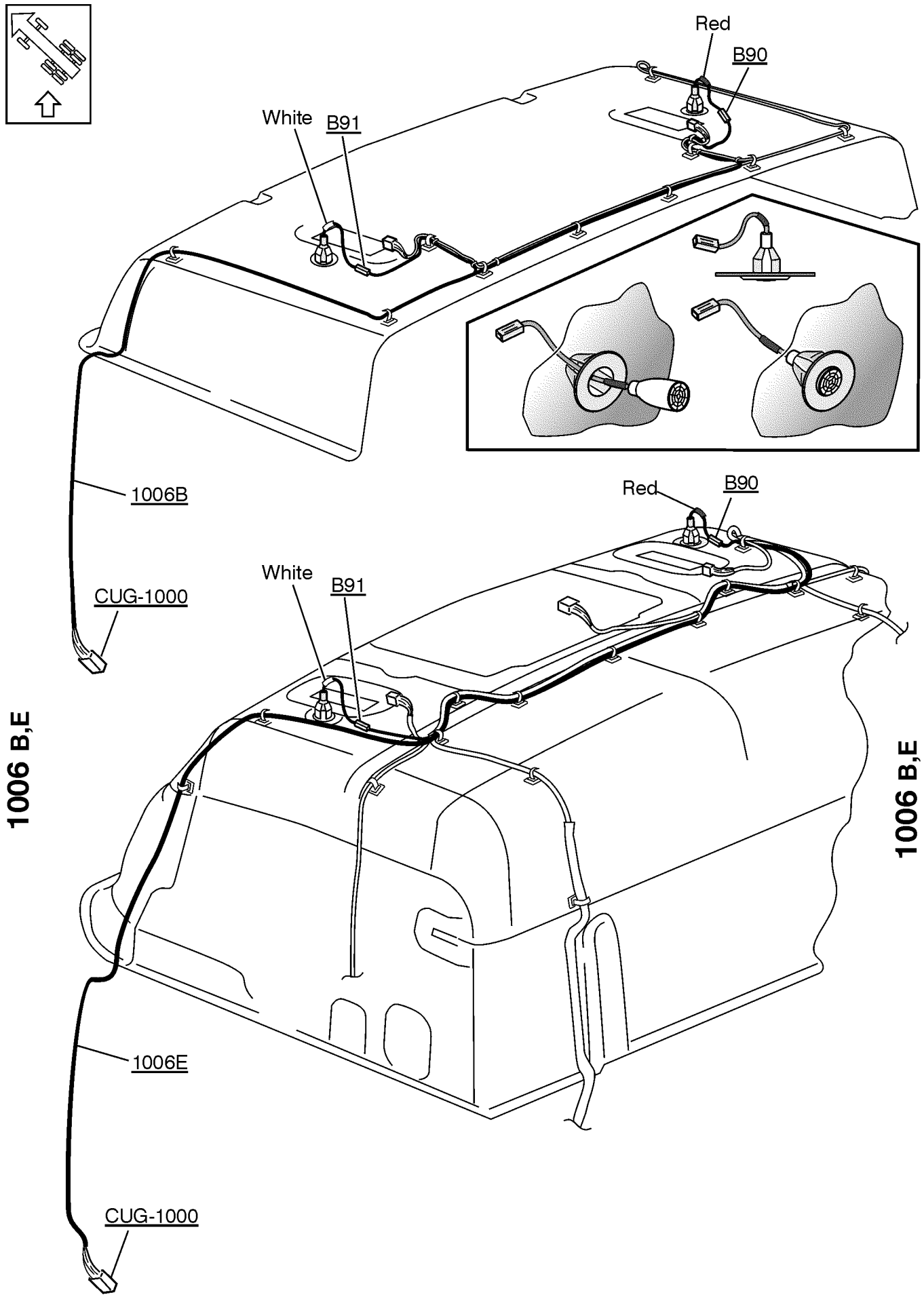

https://truckmanualshub.com/

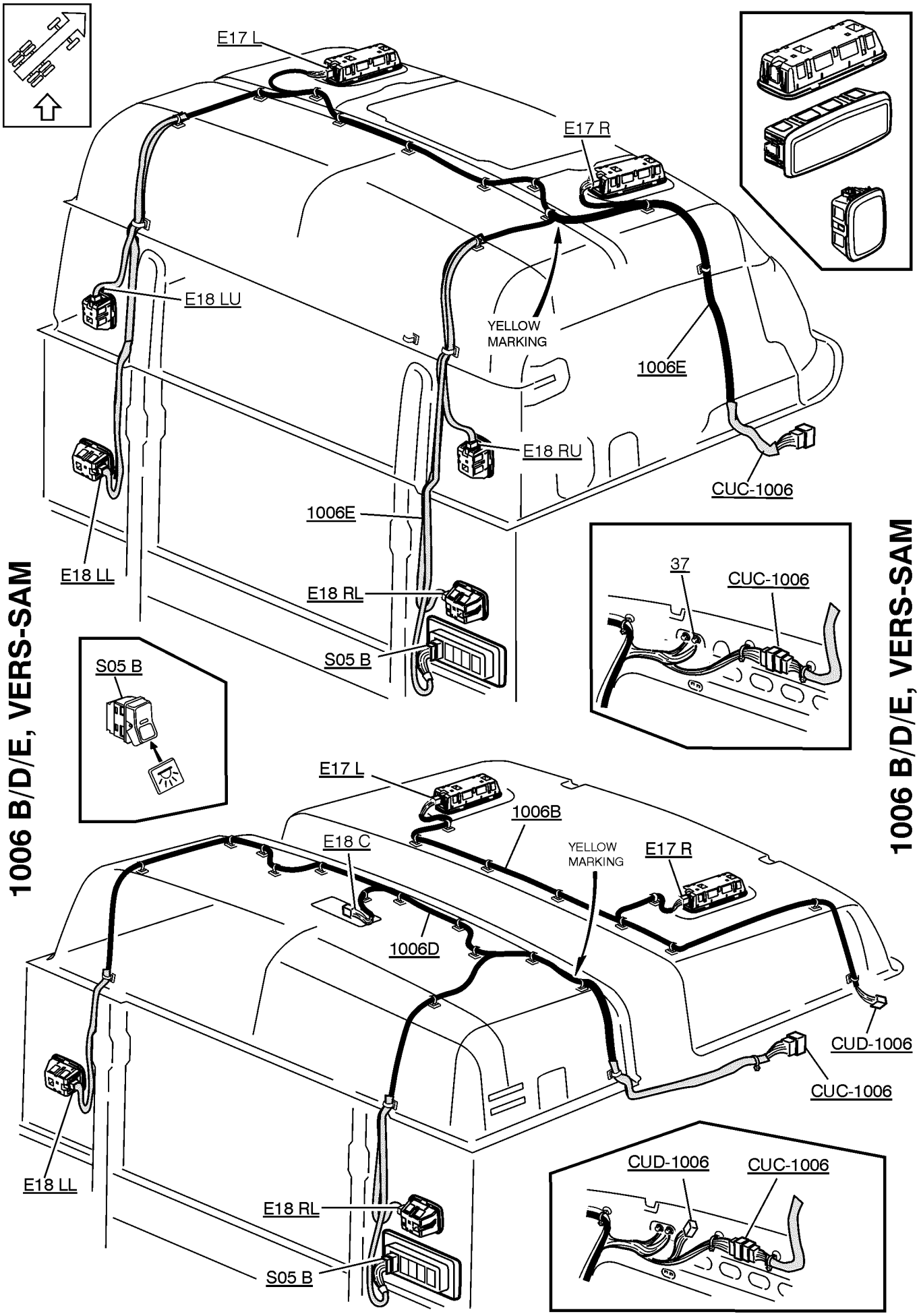

https://truckmanualshub.com/

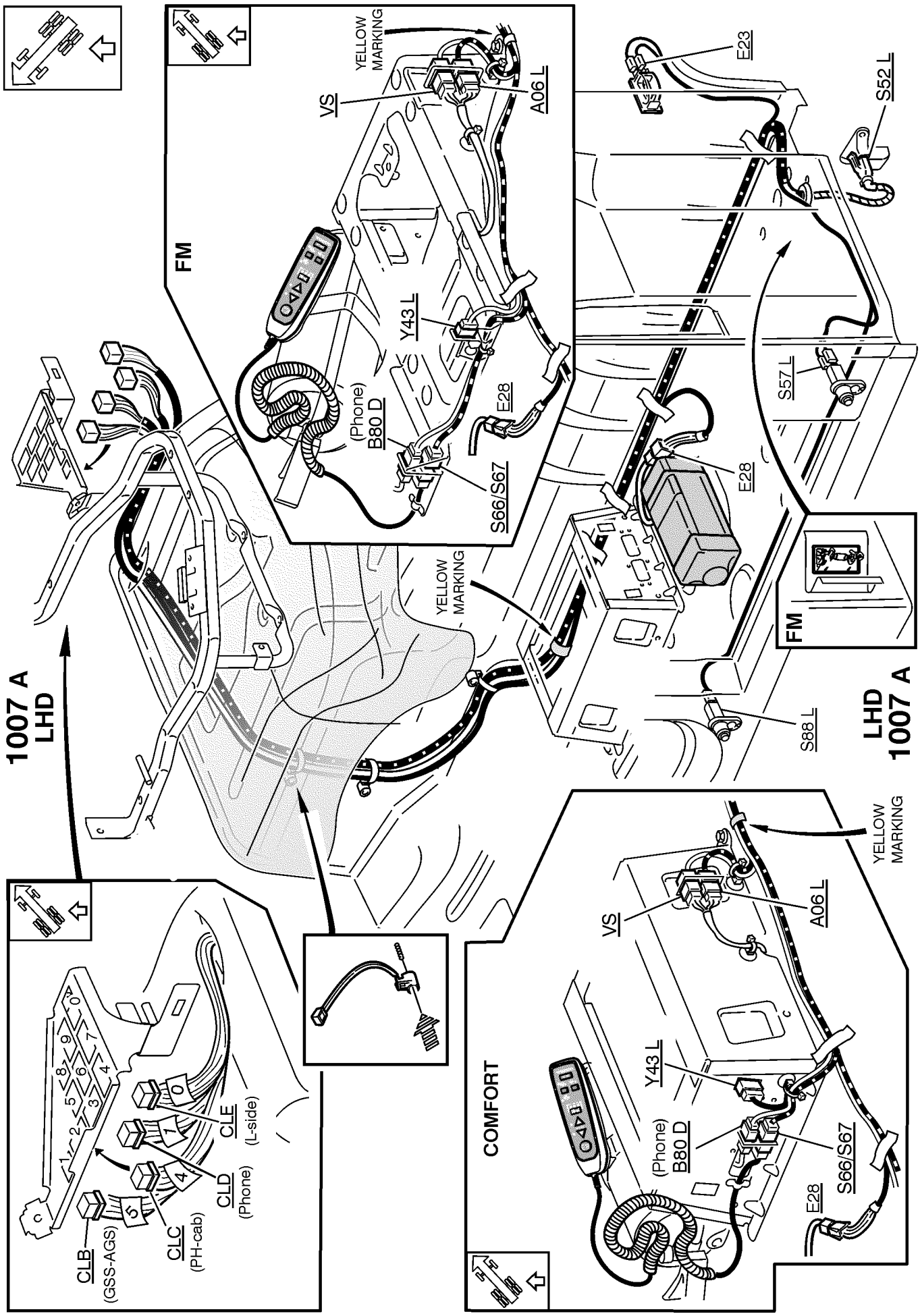

https://truckmanualshub.com/

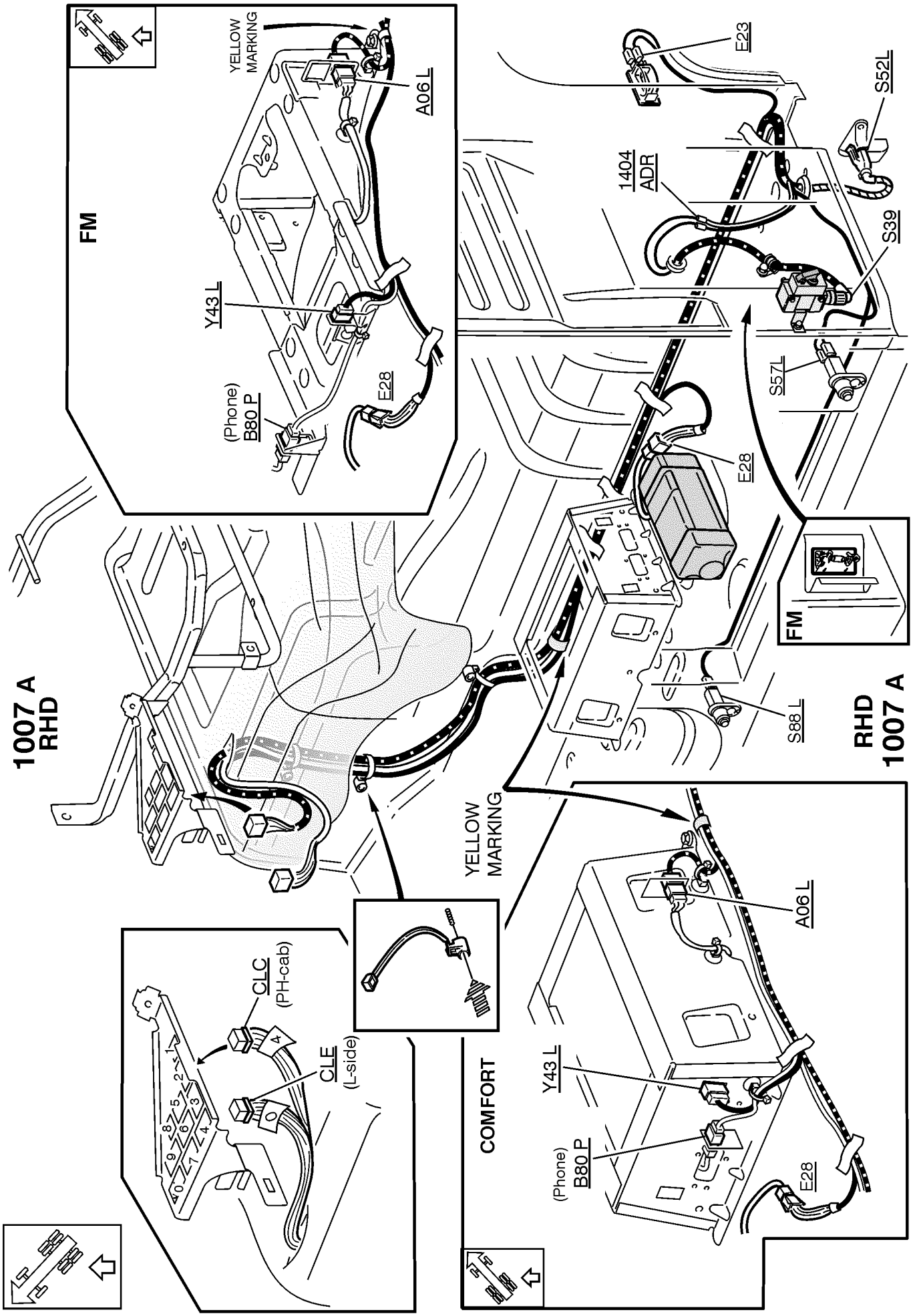

T3016396

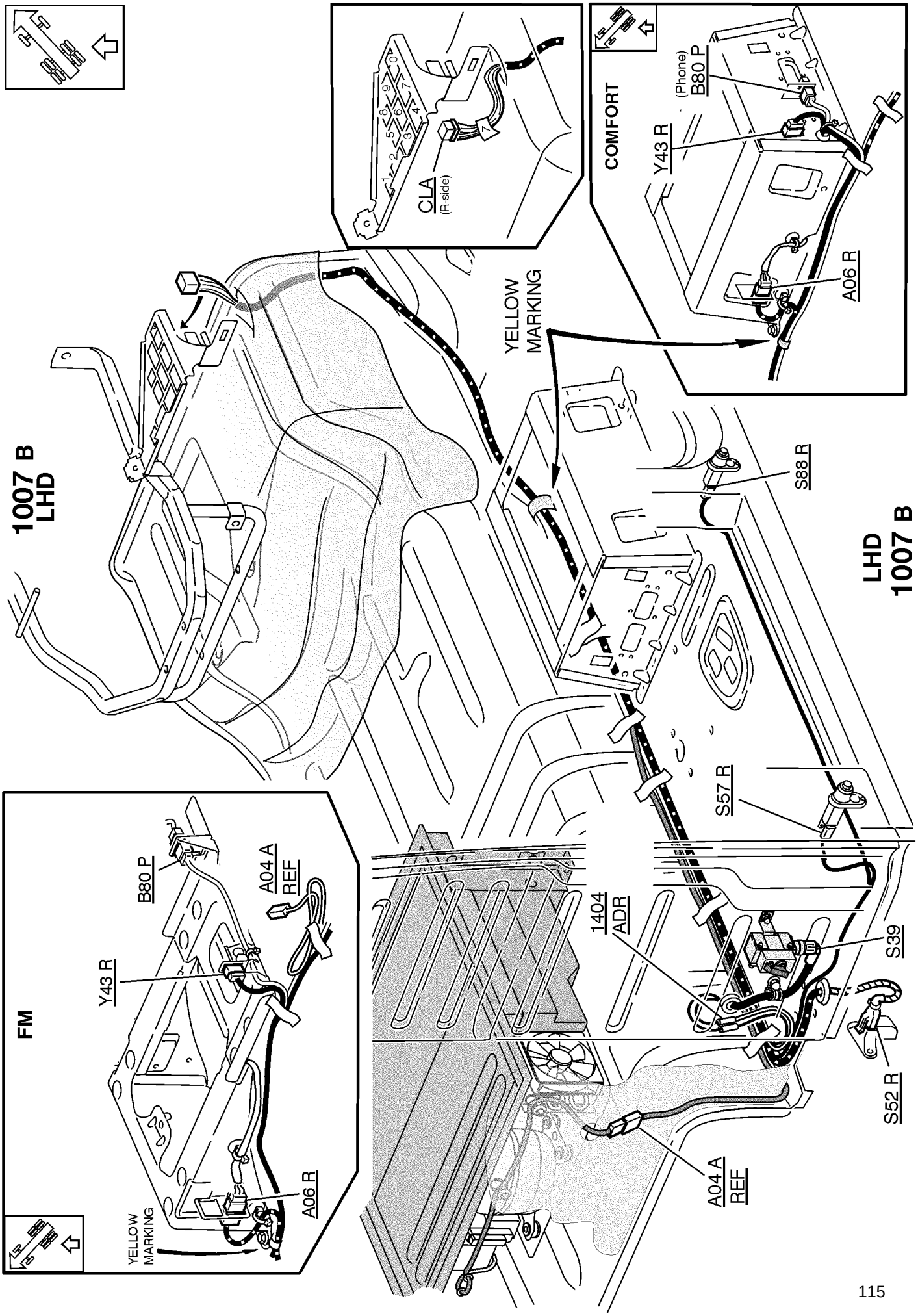
1007 B
LHD
CLA
(R-side)
COMFORT
Y43 R
(Phone)
B80 P
A06 R
YELLOW
MARKING
S88 R
LHD
1007 B
S57 R
1404
ADR
S39
S52 R
A04 A
REF
FM
B80 P
A04 A
REF
Y43 R
A06 R
YELLOW
MARKING

T3016397

https://truckmanualshub.com/

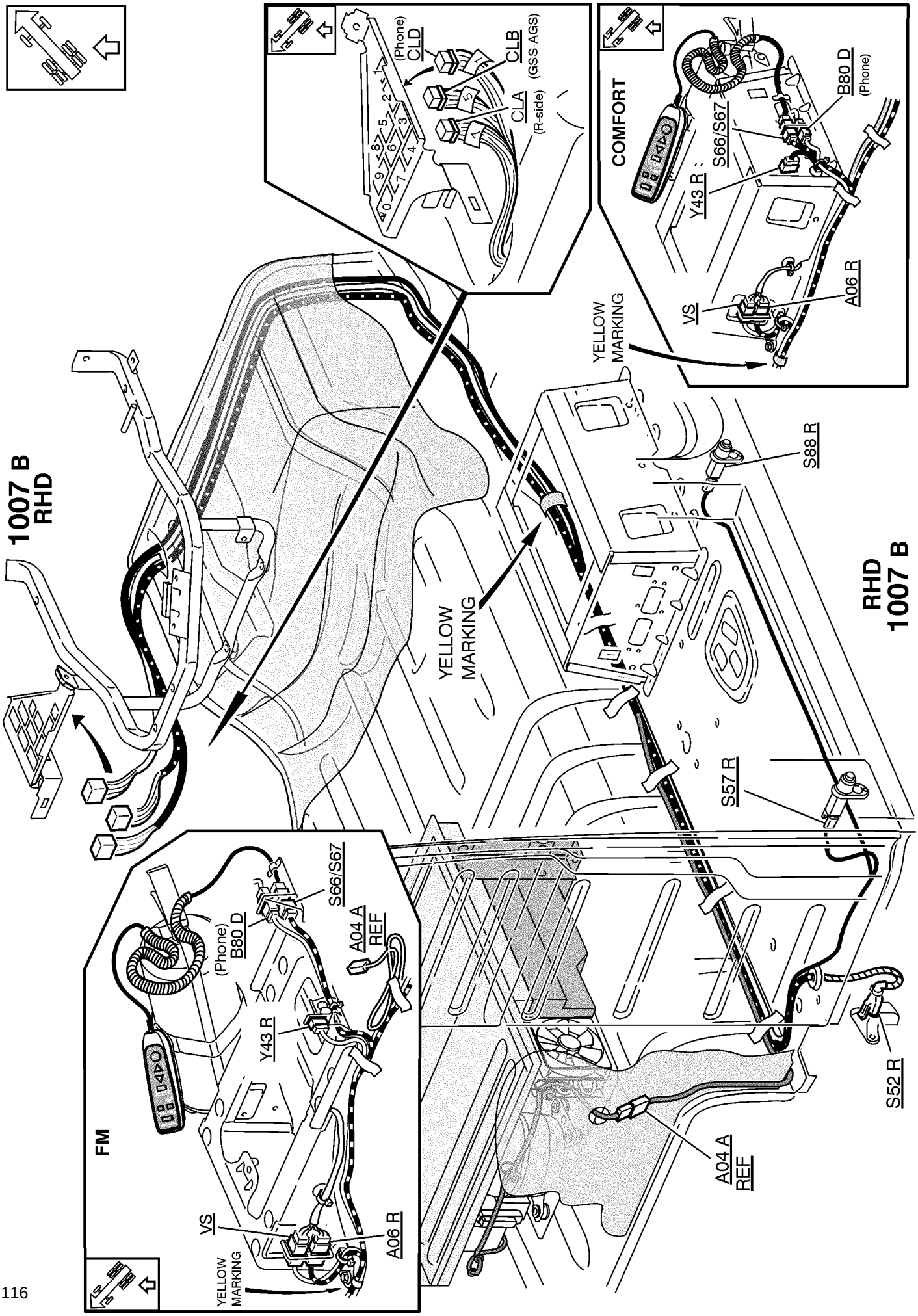

T3018741

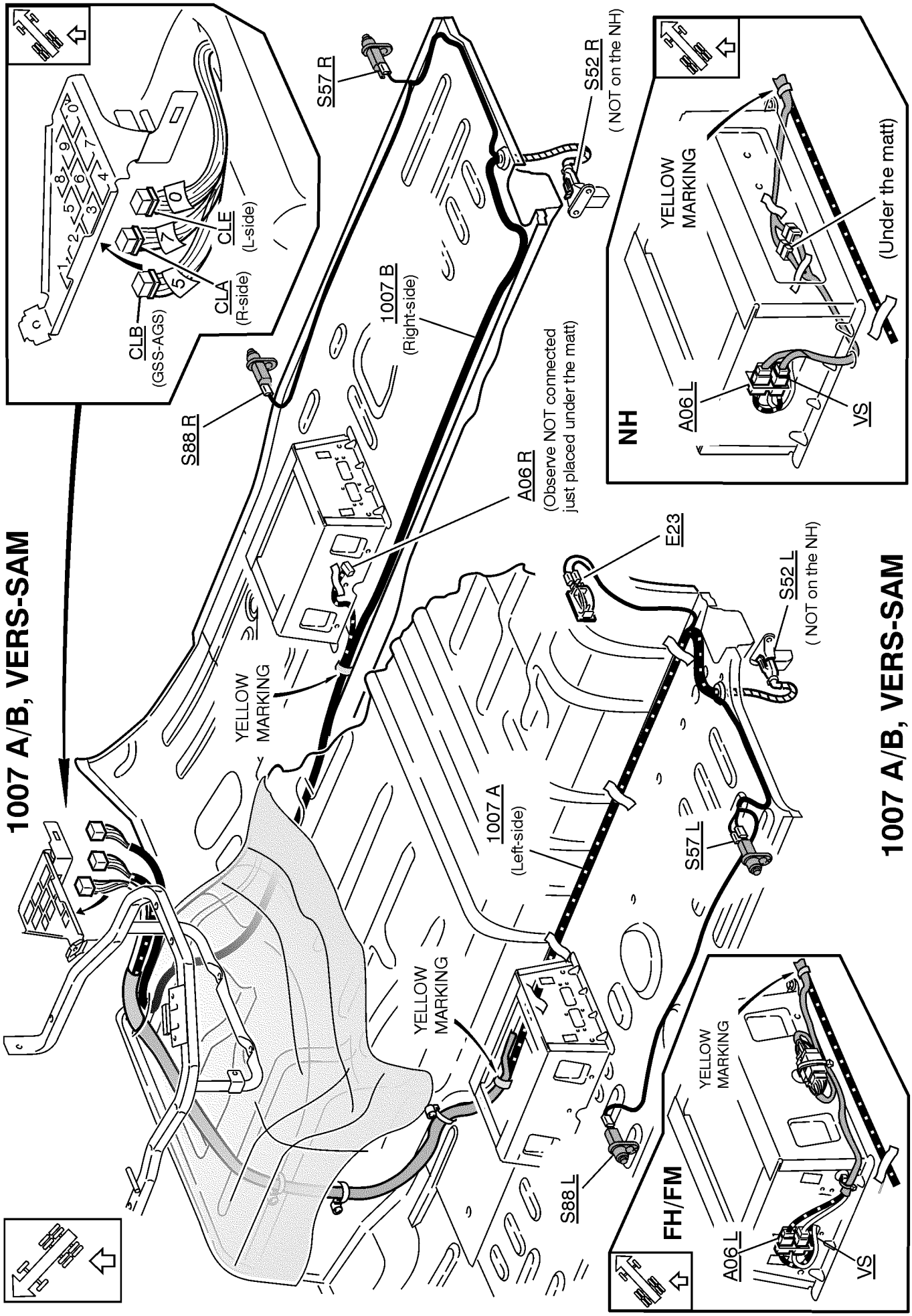
1007 A/B, VERS-SAM
CLB
(GSS-AGS)
CLA
(R-side)
CLE
(L-side)
S57 R
S52 R
(NOT on the NH)
1007 B
(Right-side)
S88 R
A06 R
(Observe NOT connected
just placed under the matt)
YELLOW
MARKING
E23
S52 L
(NOT on the NH)
1007 A
(Left-side)
S57 L
S88 L
NH
A06 L
VS
(Under the matt)
FH/FM
A06 L
VS
1007 A/B, VERS-SAM

https://truckmanualshub.com/

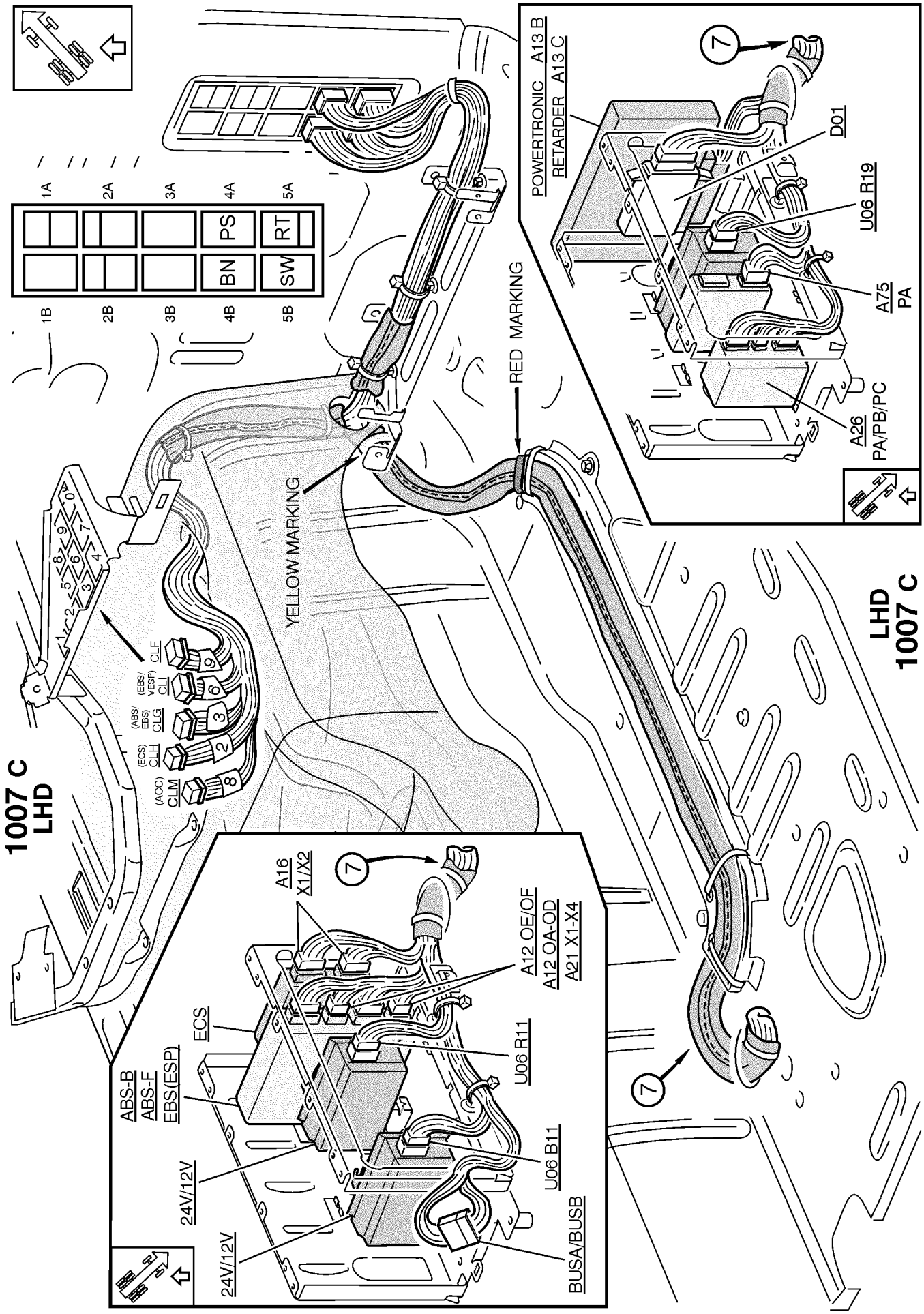

T3017719

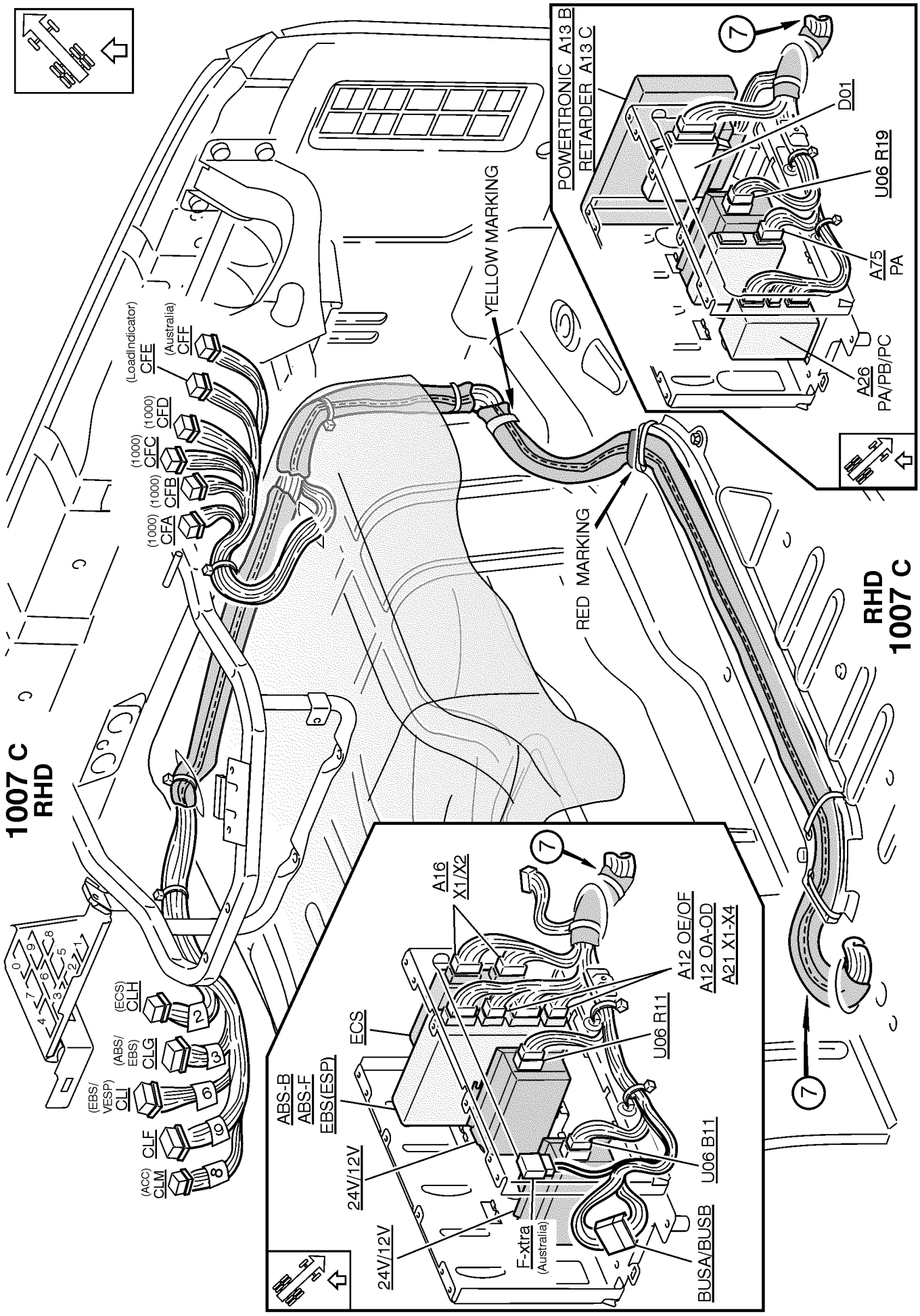
1007 C
RHD
RHD
1007 C
YELLOW MARKING
RED MARKING
POWERTRONIC A13 B
RETARDER A13 C
D01
U06 R19
A75
PA
A26
PA/PB/PC
(Load Indicator)
CFE
(Australia)
CFF
(1000)
CFD
(1000)
CFC
(1000)
CFB
(1000)
CFA
(ECS)
CLH
(ABS/
EBS)
CLG
(EBS/
VESP)
CLI
CLF
(ACC)
CLM
A16
X1/X2
A12 OE/OF
A12 OA-OD
A21 X1-X4
ECS
U06 R11
ABS-B
ABS-F
EBS(ESP)
24V/12V
24V/12V
U06 B11
F-xtra
(Australia)
BUSA/BUSB

https://truckmanualshub.com/

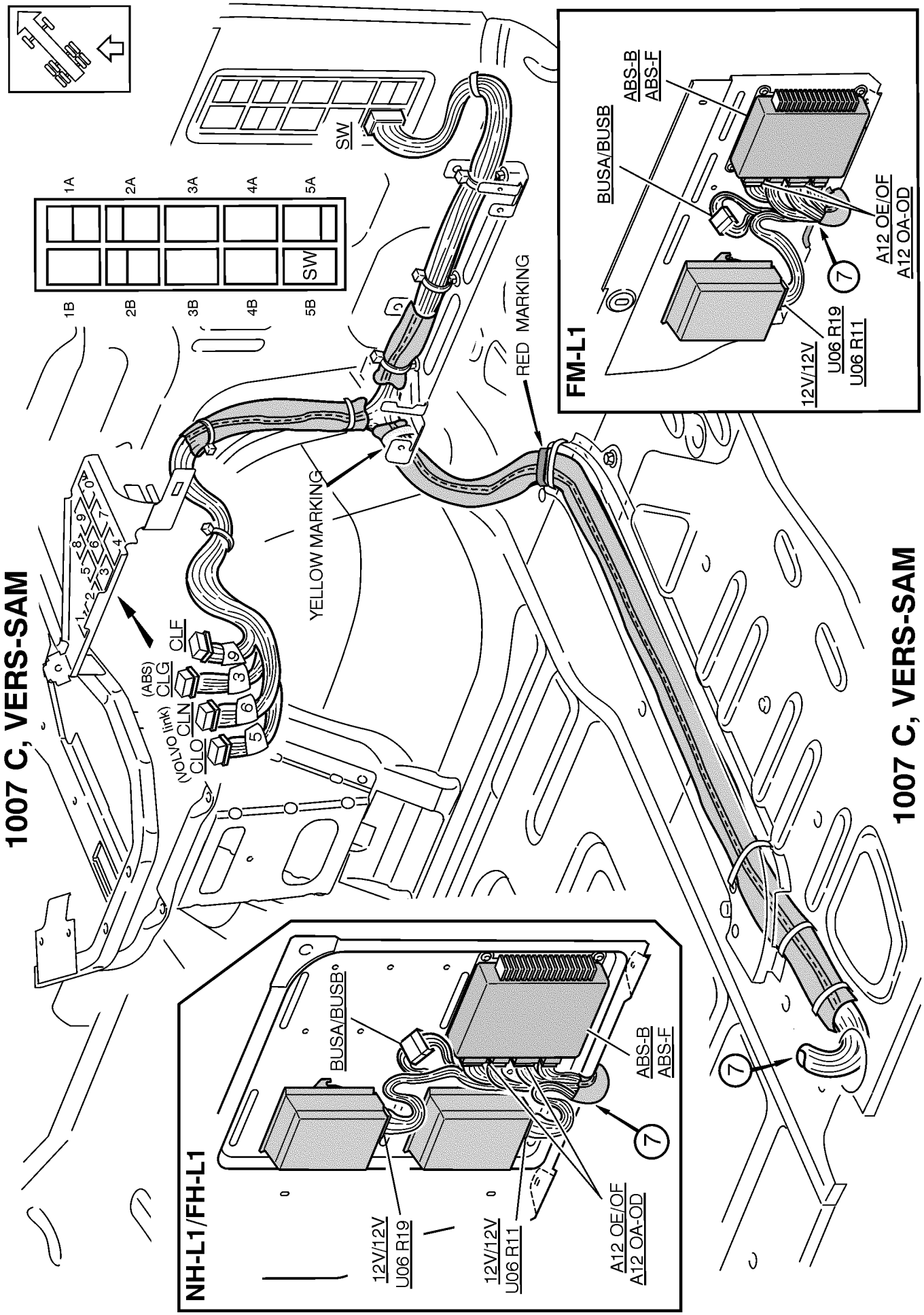

https://truckmanualshub.com/

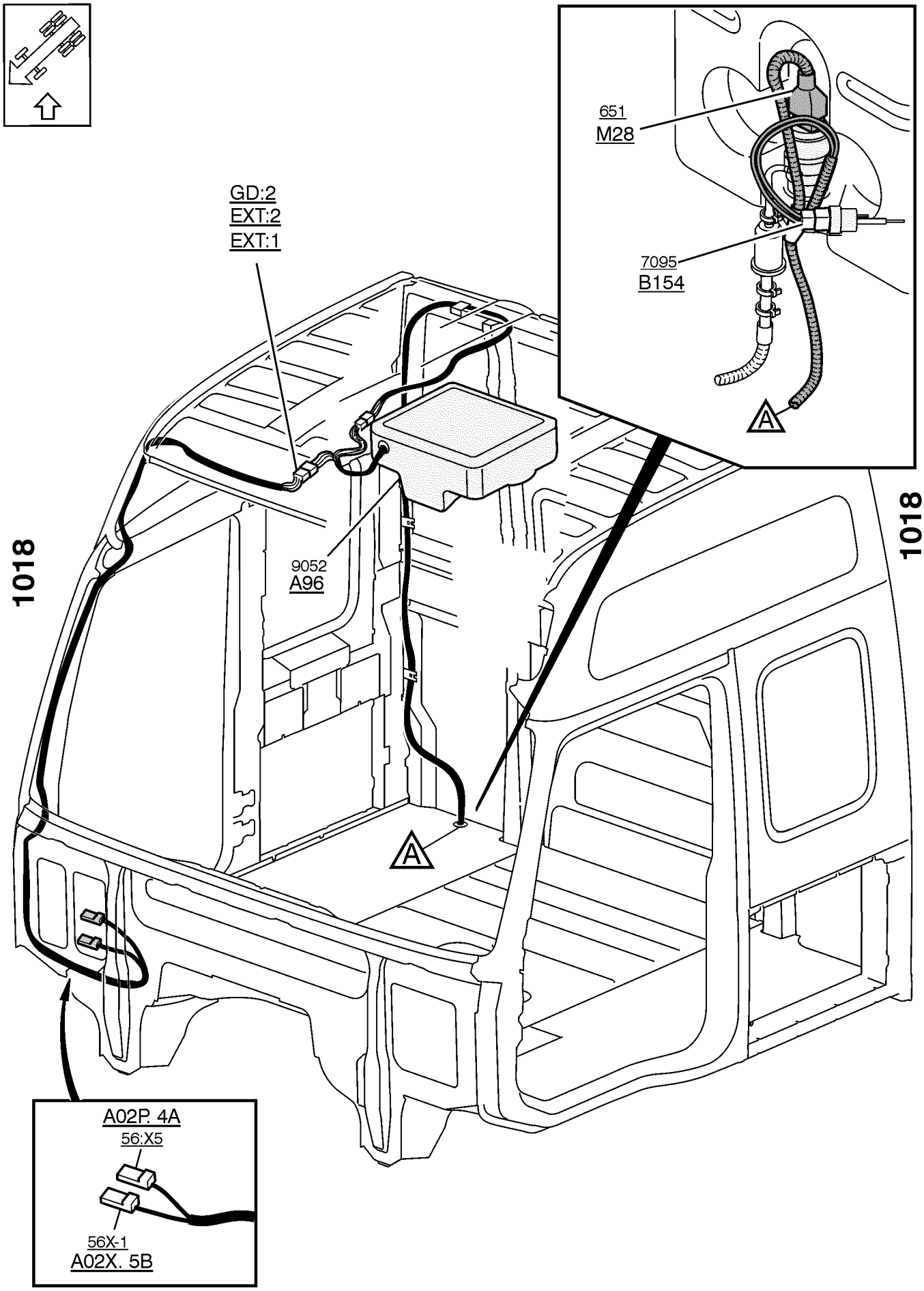

https://truckmanualshub.com/

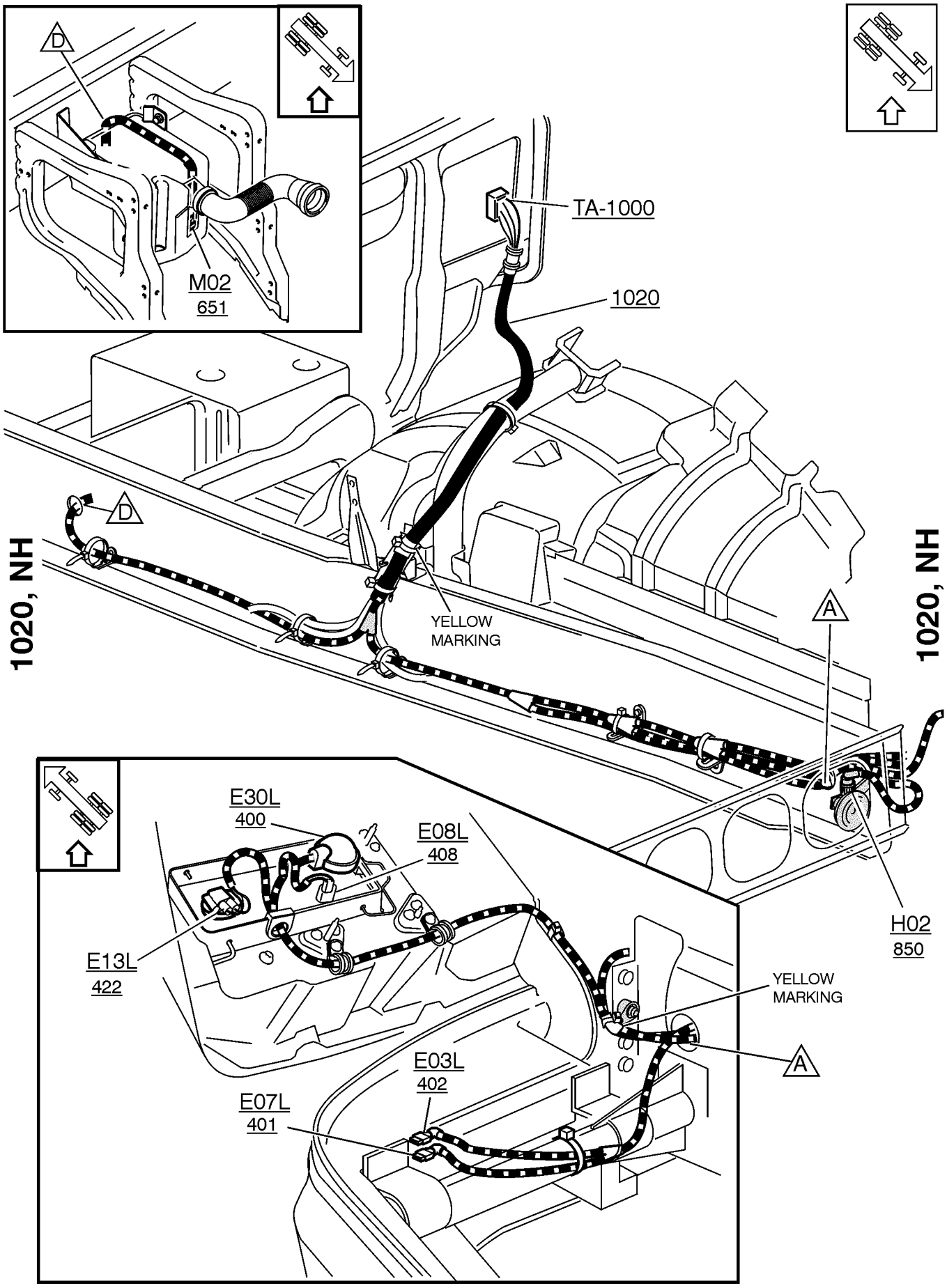

https://truckmanualshub.com/

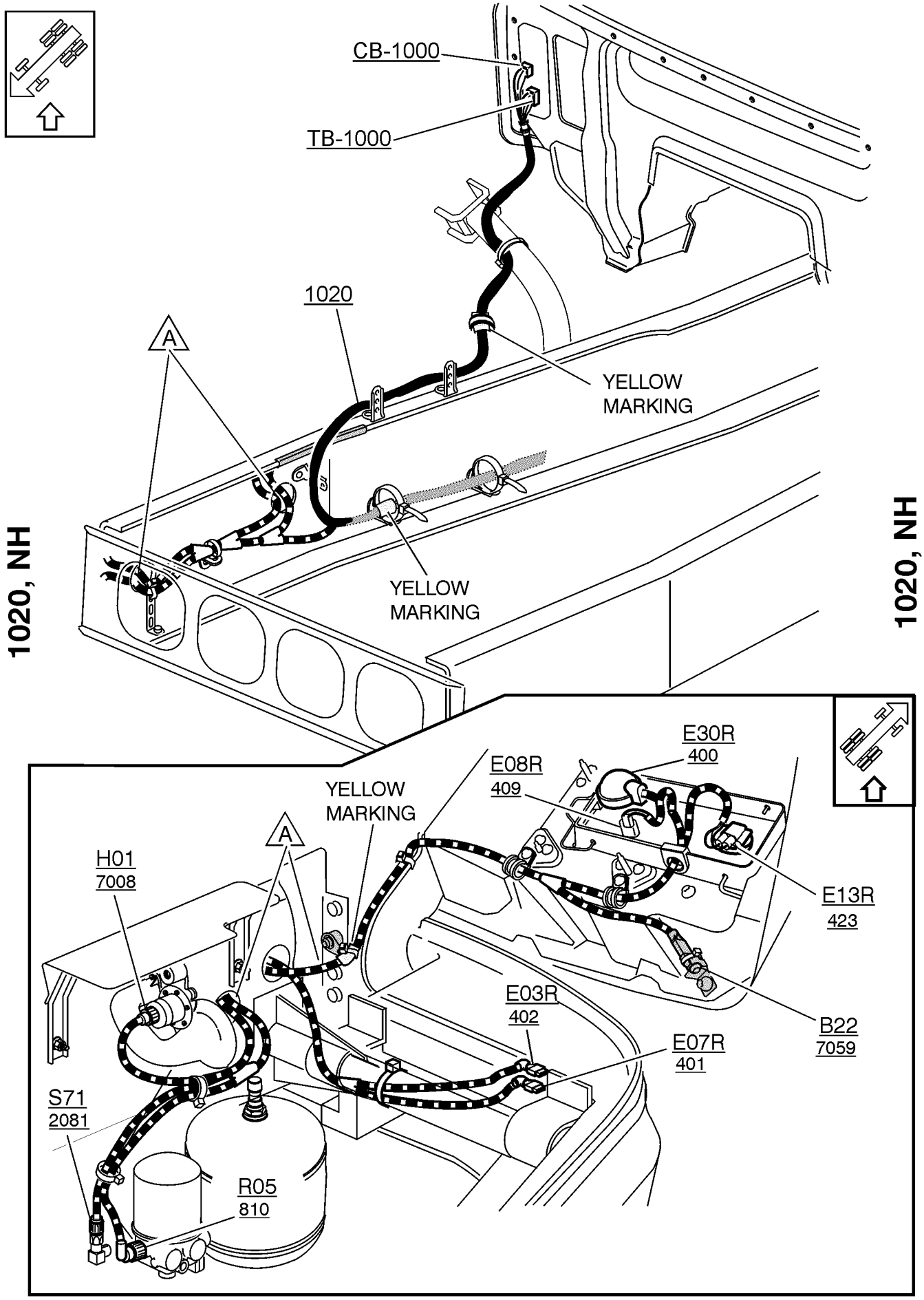

T3016979

https://truckmanualshub.com/

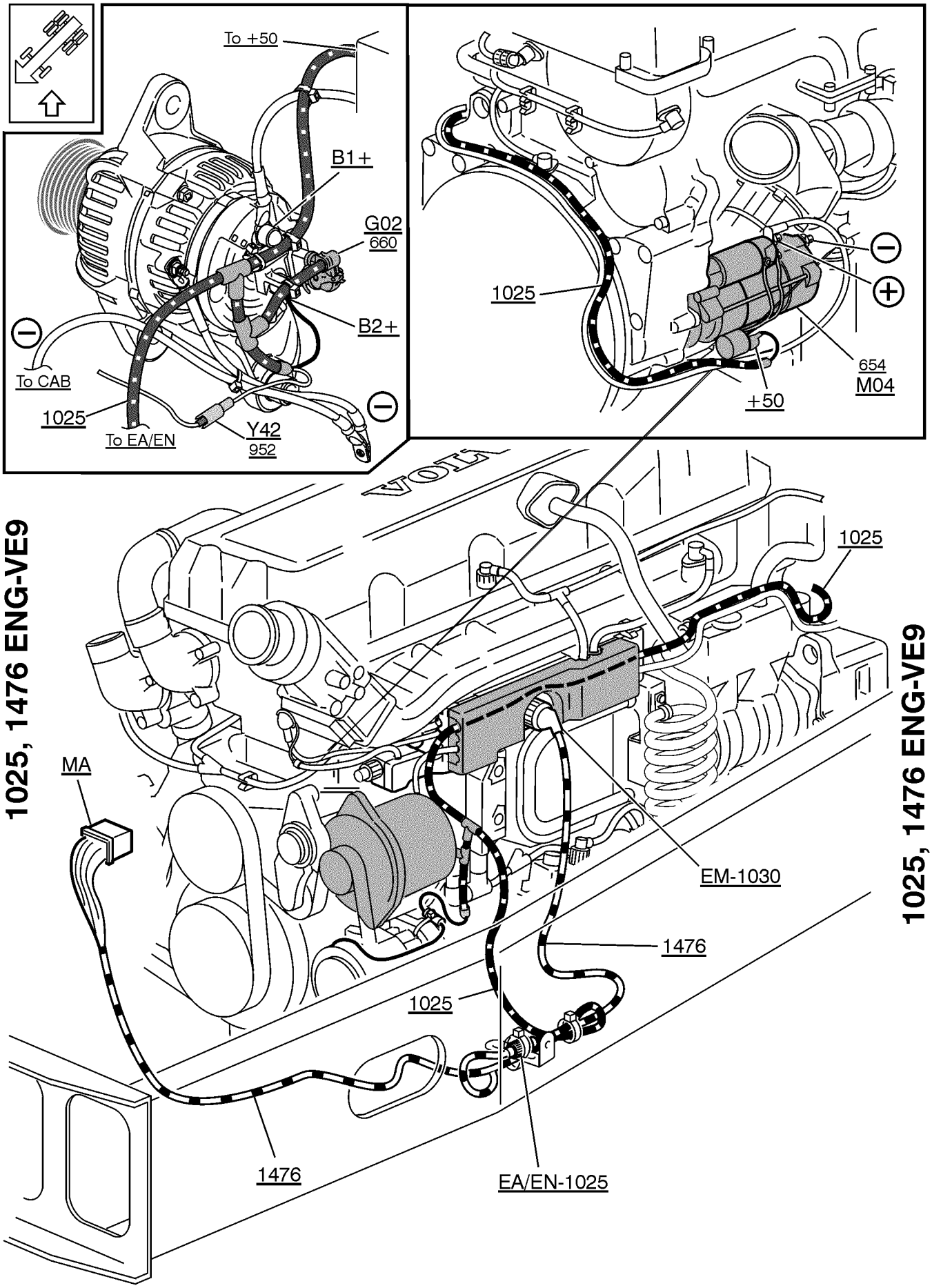

T3016956

https://truckmanualshub.com/

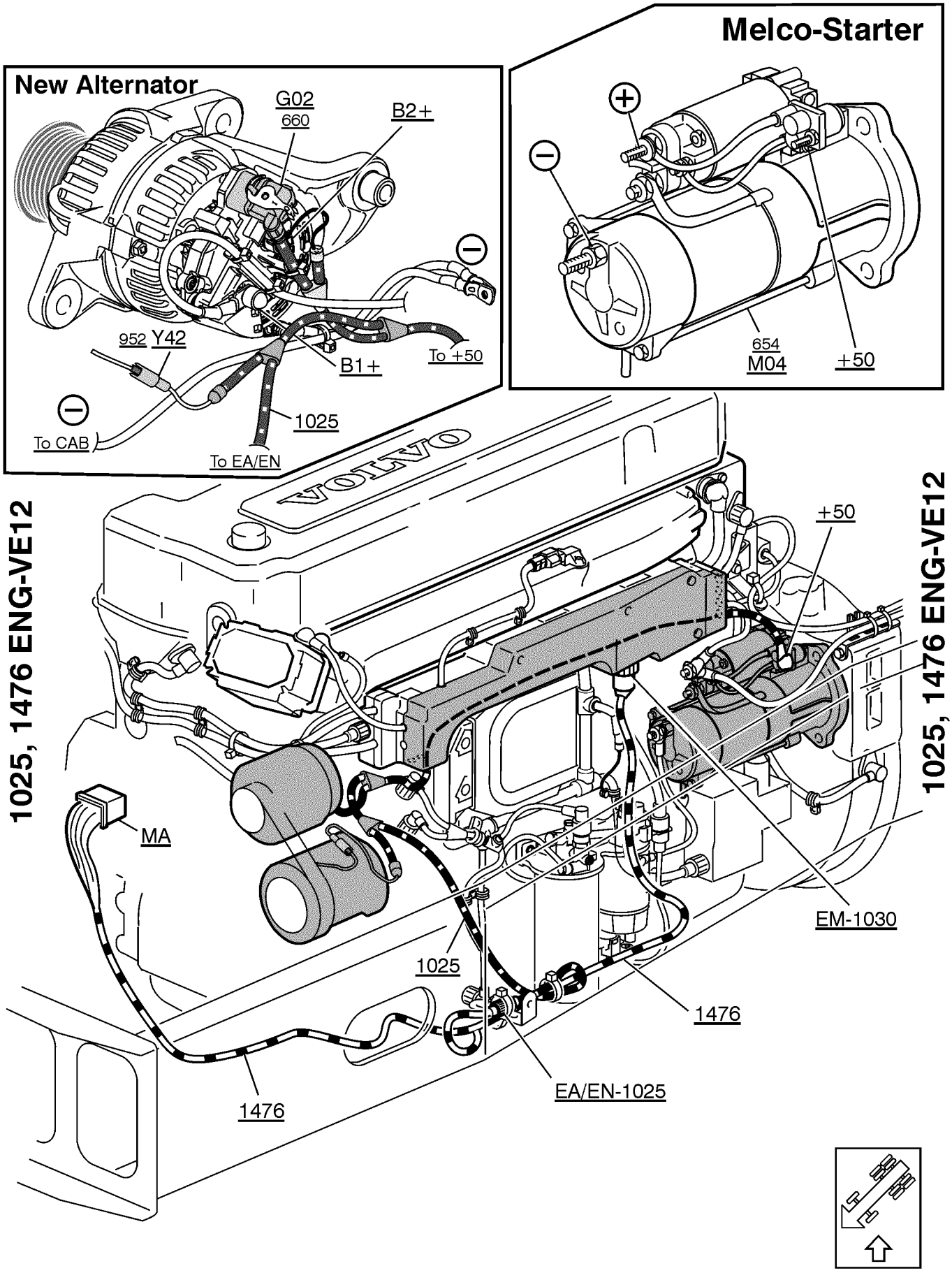

https://truckmanualshub.com/

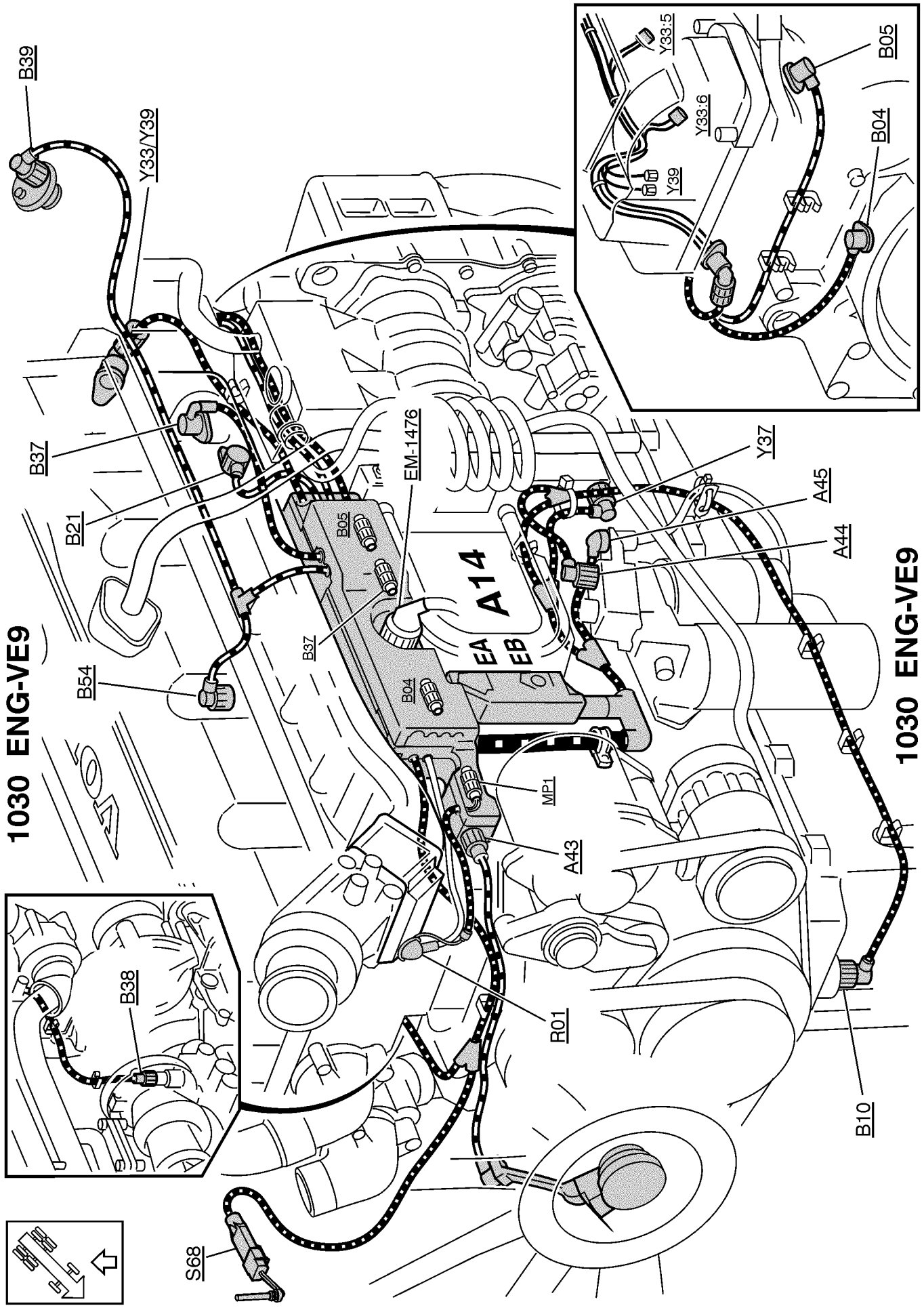

T3016959

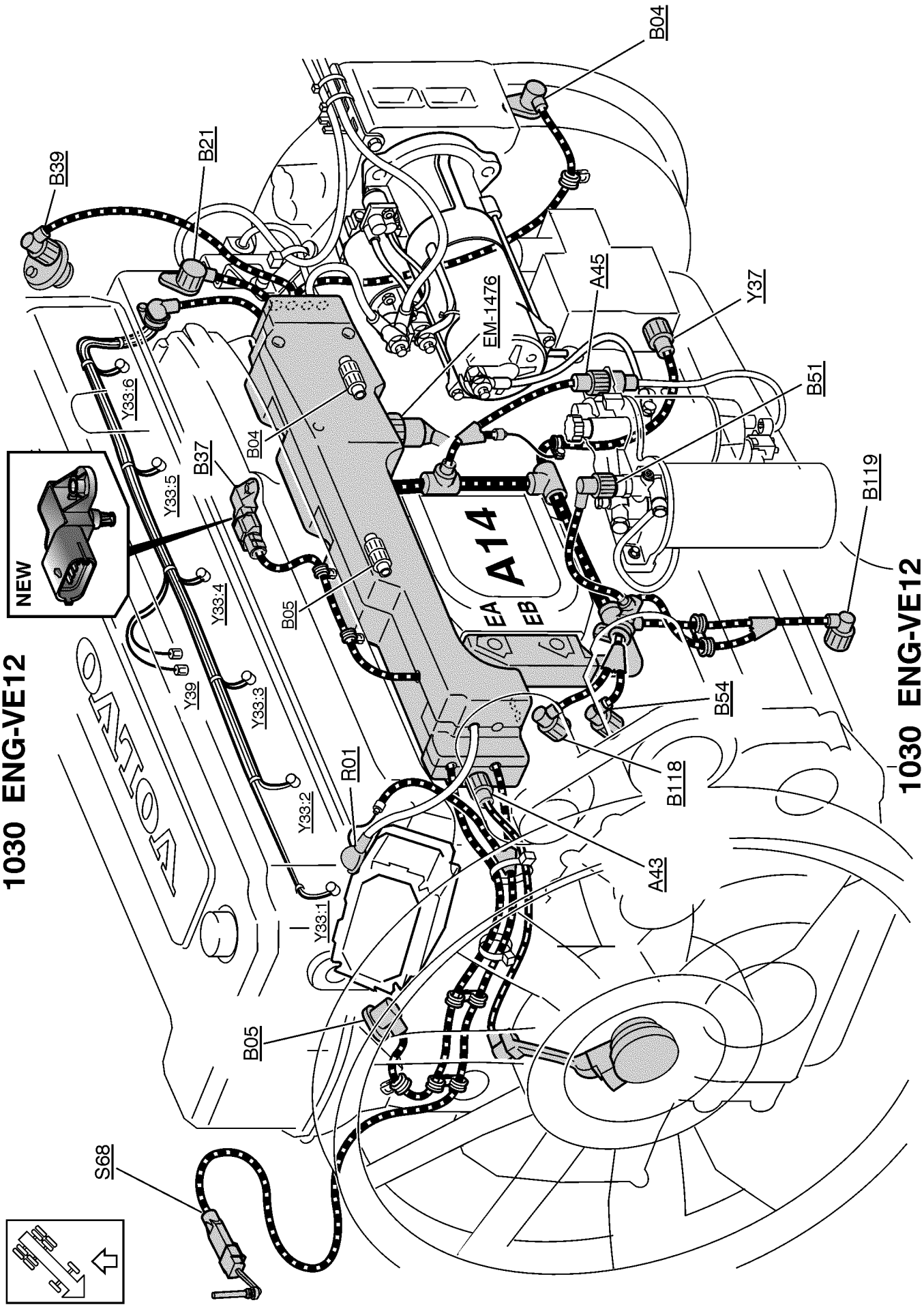
1030 ENG-VE12
NEW
B39
B21
B04
Y33:6
Y33:5
B37
Y33:4
Y39
Y33:3
Y33:2
Y33:1
B05
R01
B05
S68
B04
EM-1476
A45
Y37
B51
B119
A14
EA
EB
B54
B118
A43
1030 ENG-VE12

https://truckmanualshub.com/

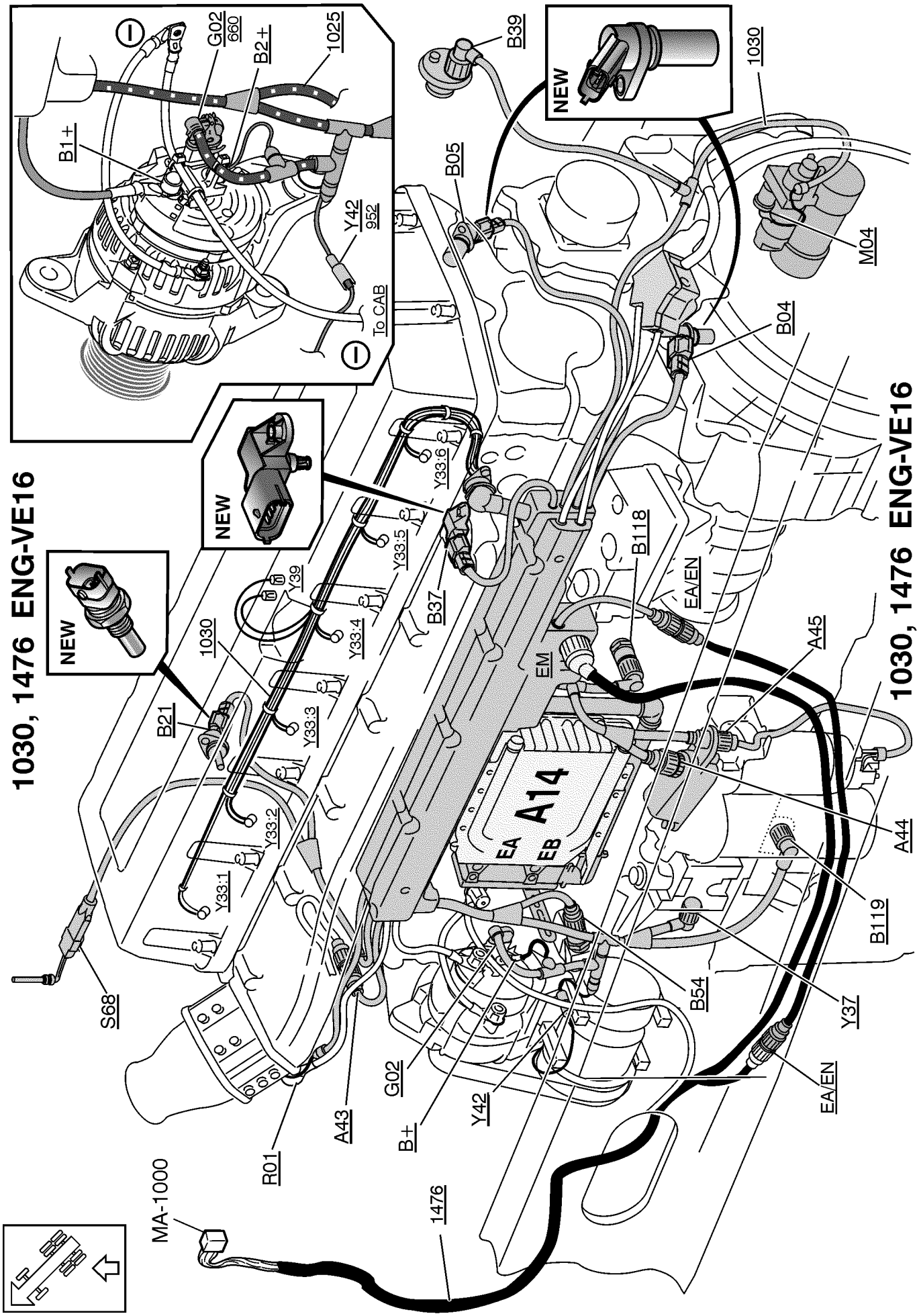

https://truckmanualshub.com/

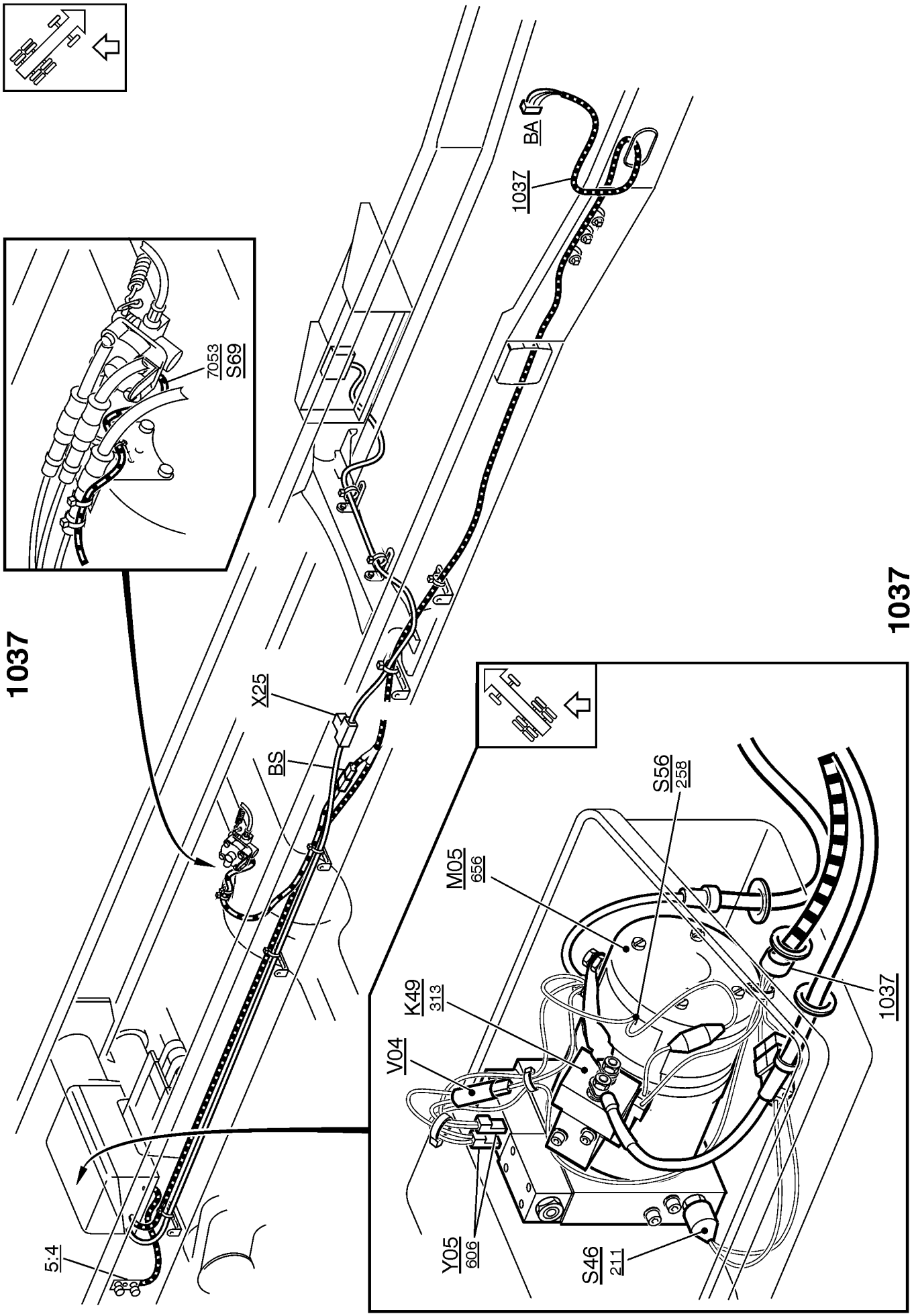

https://truckmanualshub.com/

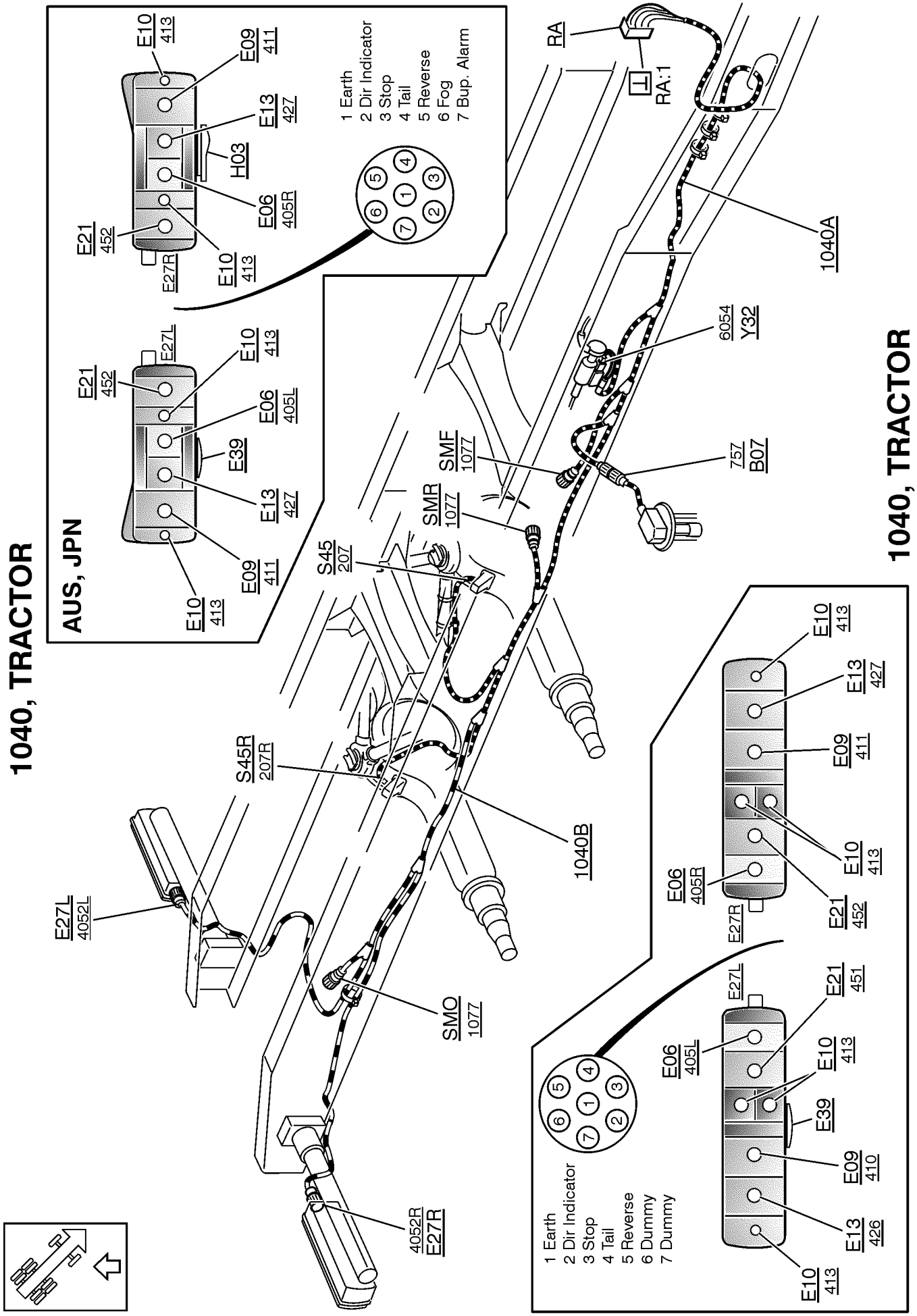

T3017727

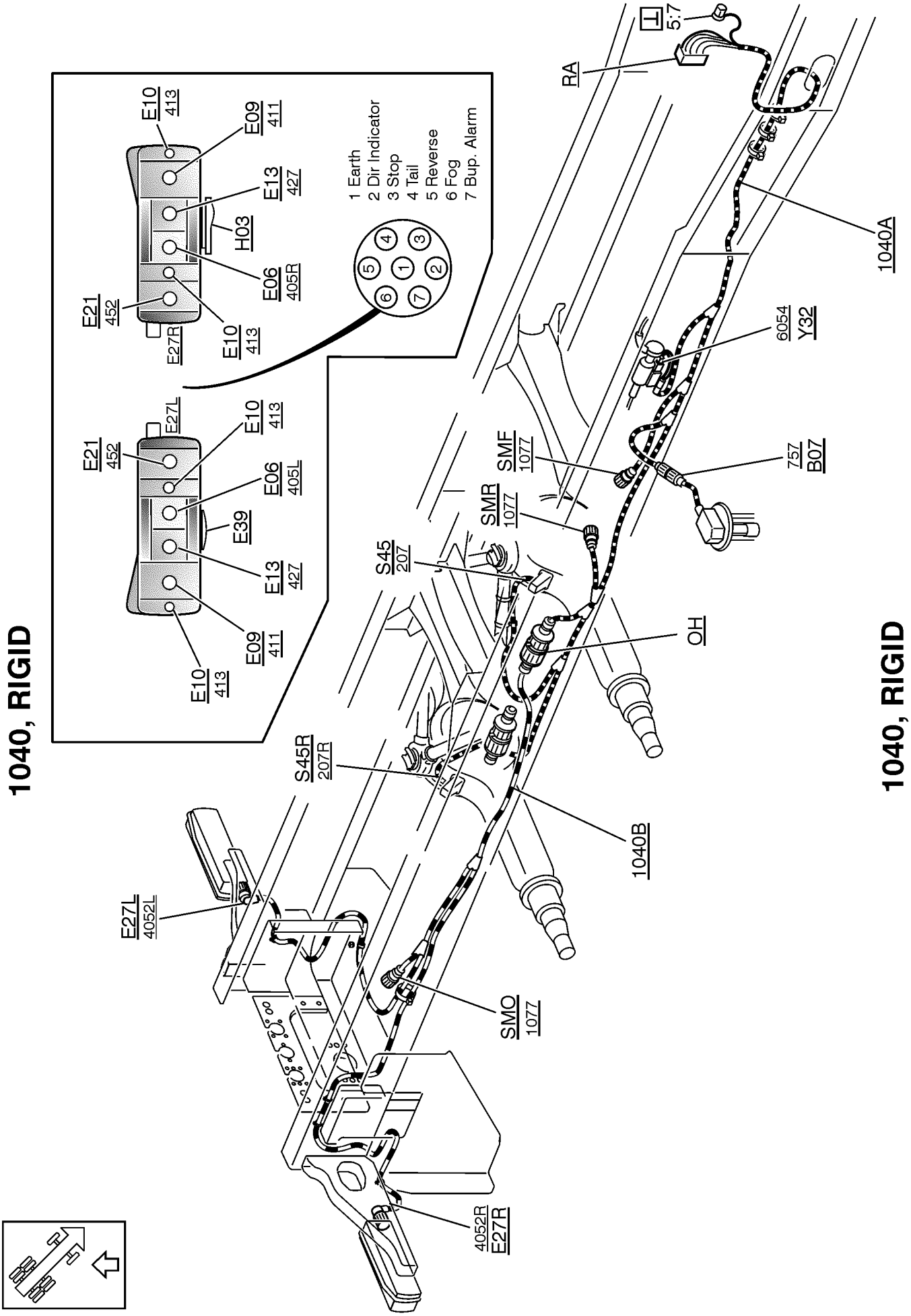
1040, RIGID
E10 413
E09 411
E13 427
H03
E06 405R
E21 452
E27R
E10 413
1 Earth
2 Dir Indicator
3 Stop
4 Tail
5 Reverse
6 Fog
7 Bup. Alarm
E27L
E21 452
E10 413
E06 405L
E39
E13 427
E09 411
E10 413
RA
5:7
1040A
6054 Y32
SMF 1077
757 B07
SMR 1077
S45 207
OH
S45R 207R
1040B
E27L 4052L
SMO 1077
4052R E27R
1040, RIGID

https://truckmanualshub.com/

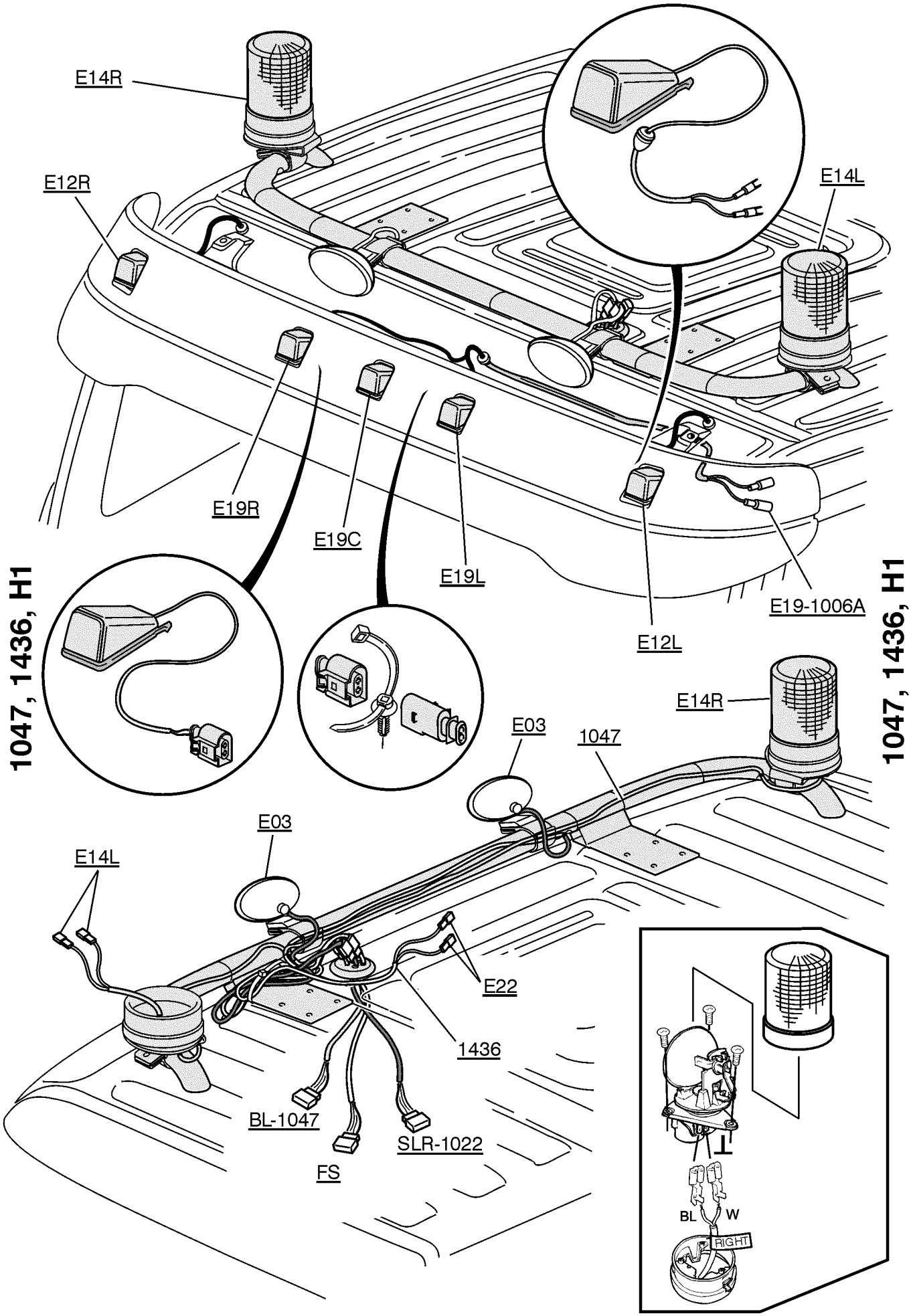

T3016405

https://truckmanualshub.com/

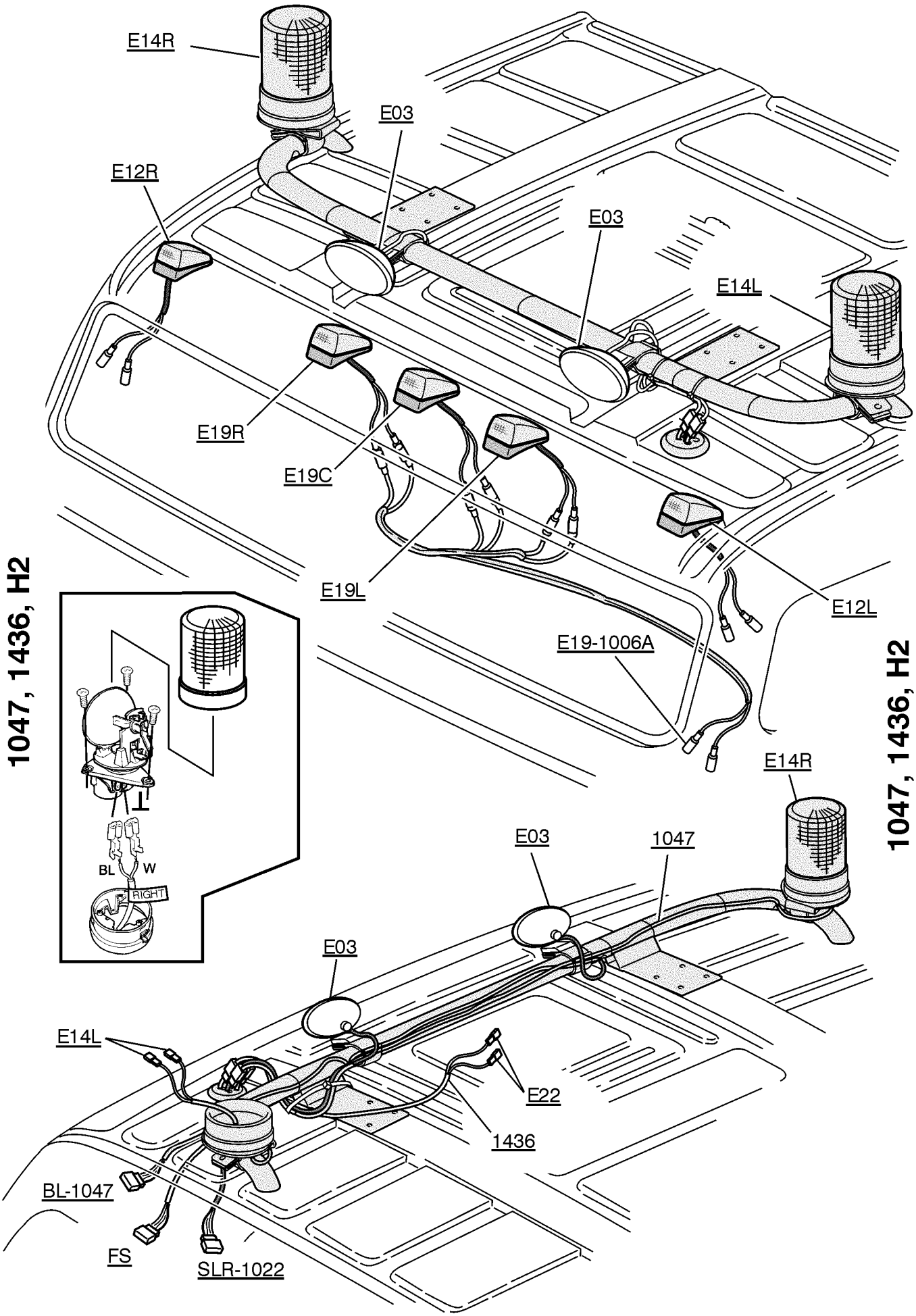

https://truckmanualshub.com/

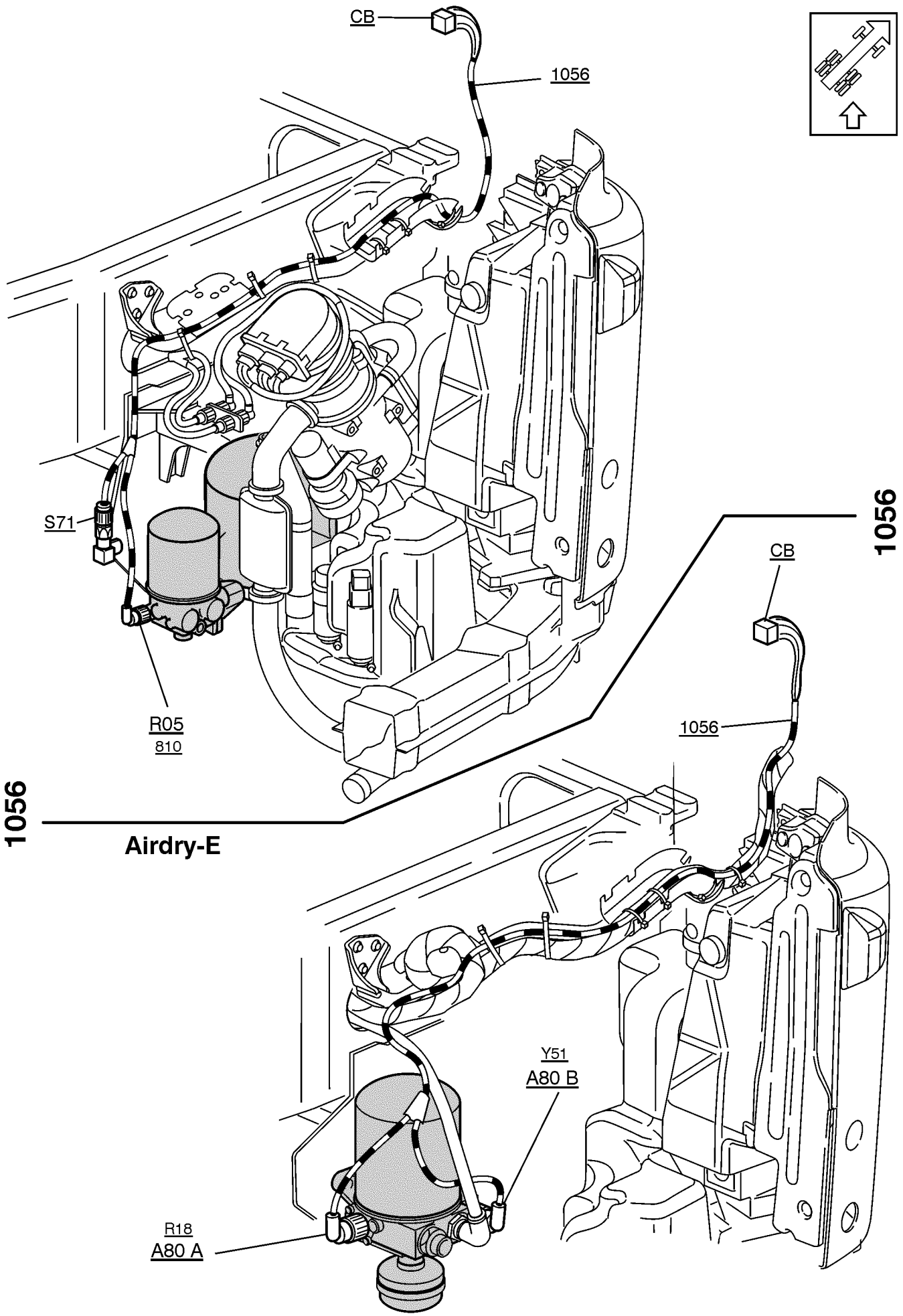

T3016962

https://truckmanualshub.com/

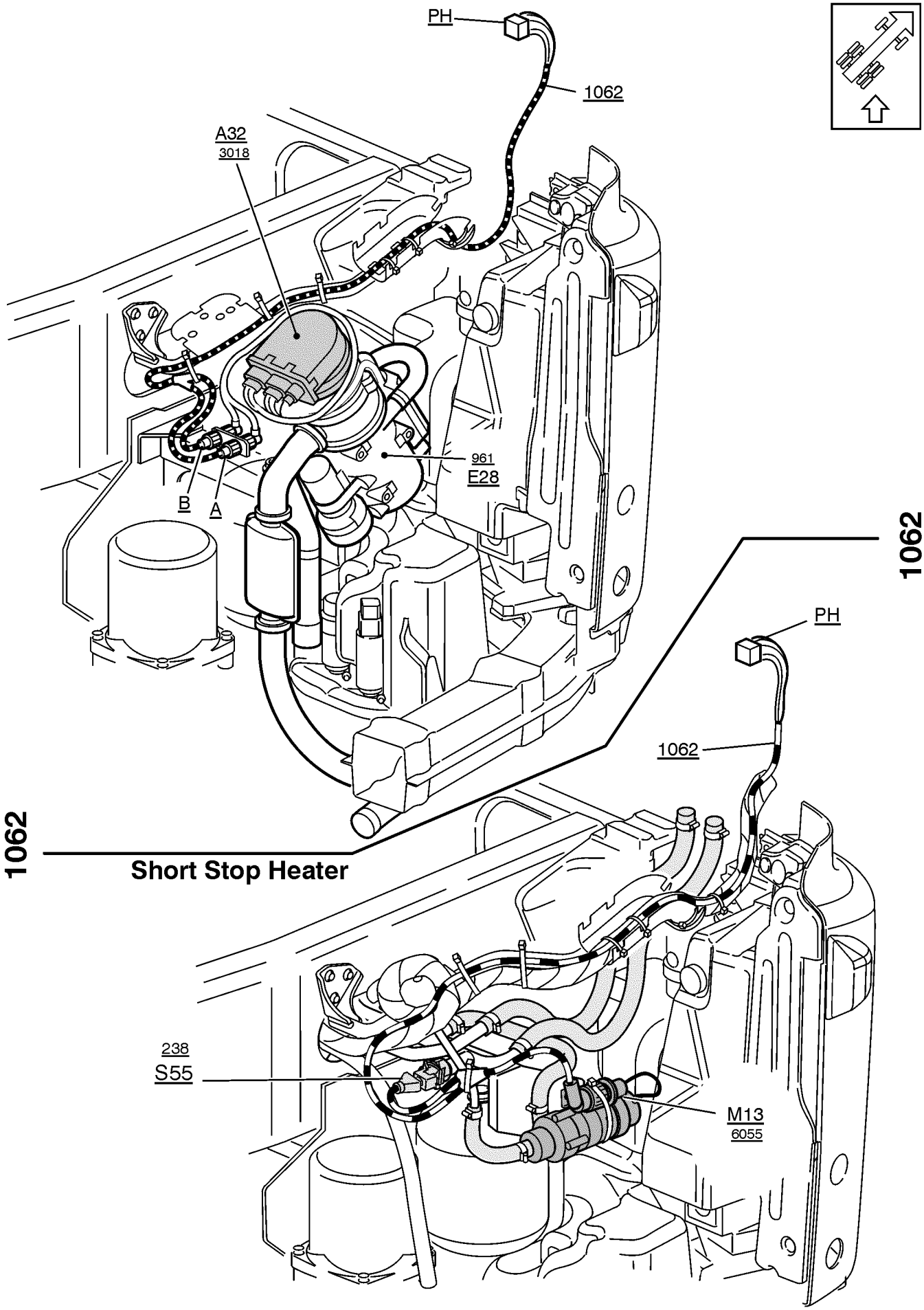

https://truckmanualshub.com/

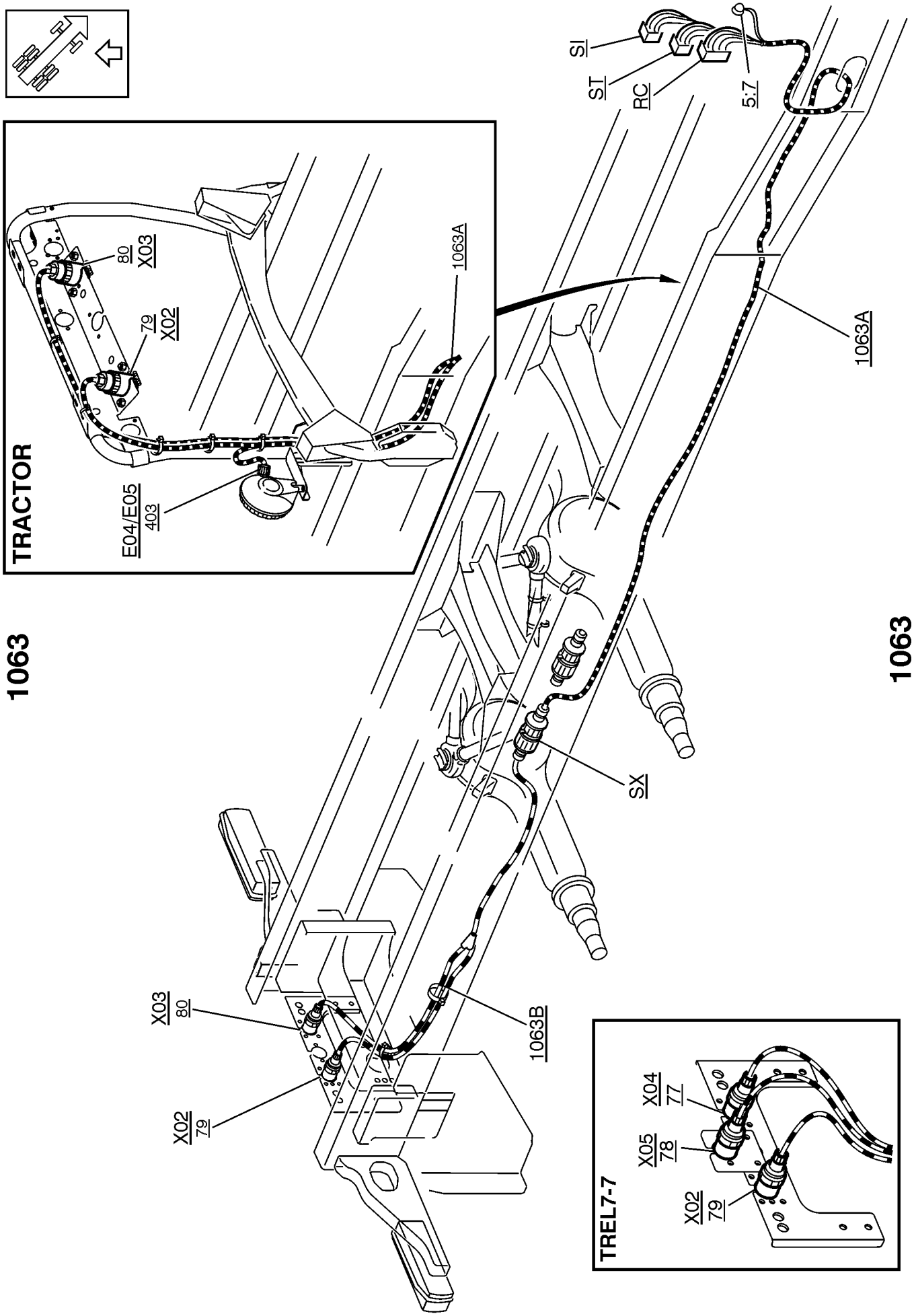

https://truckmanualshub.com/

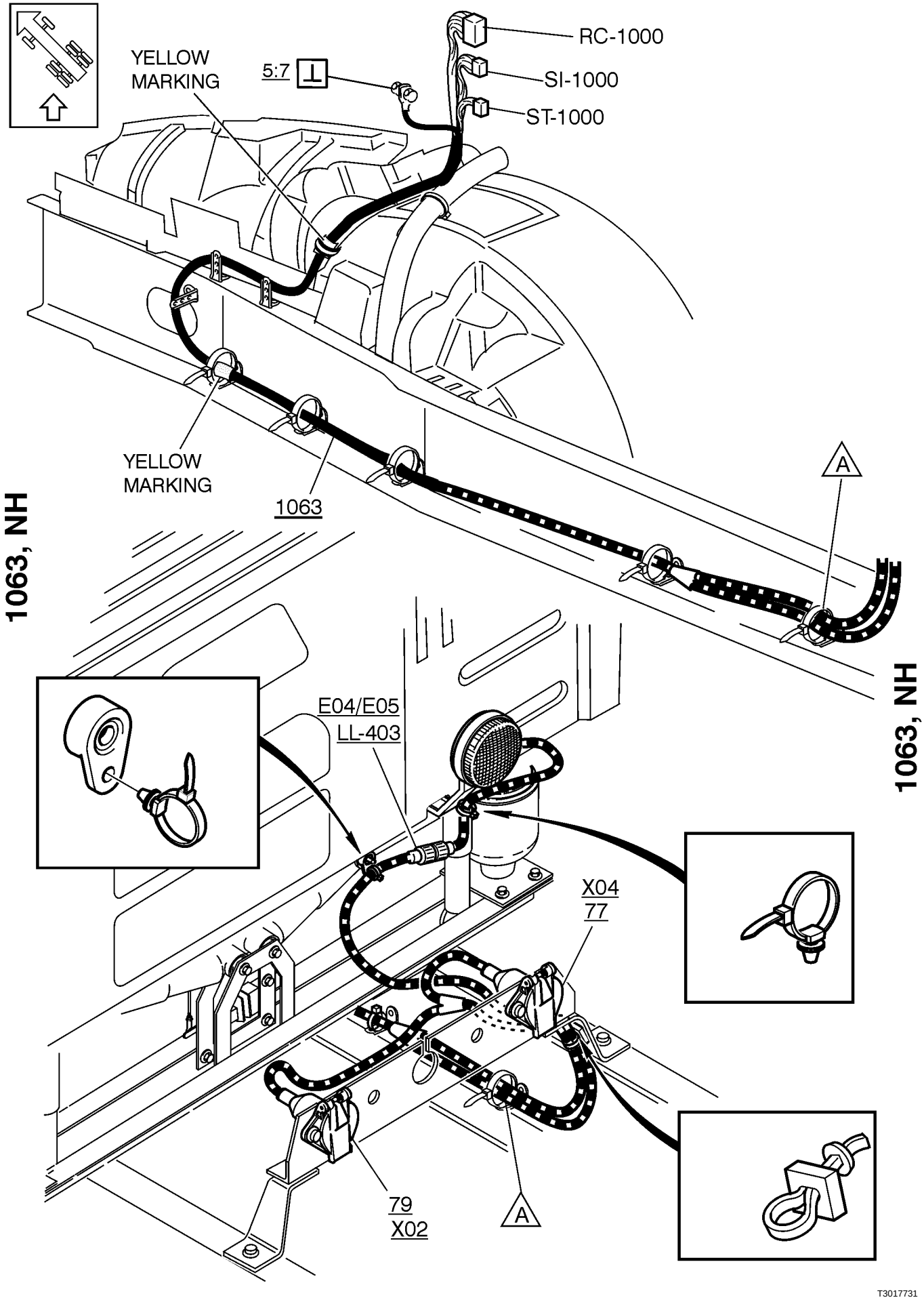

https://truckmanualshub.com/

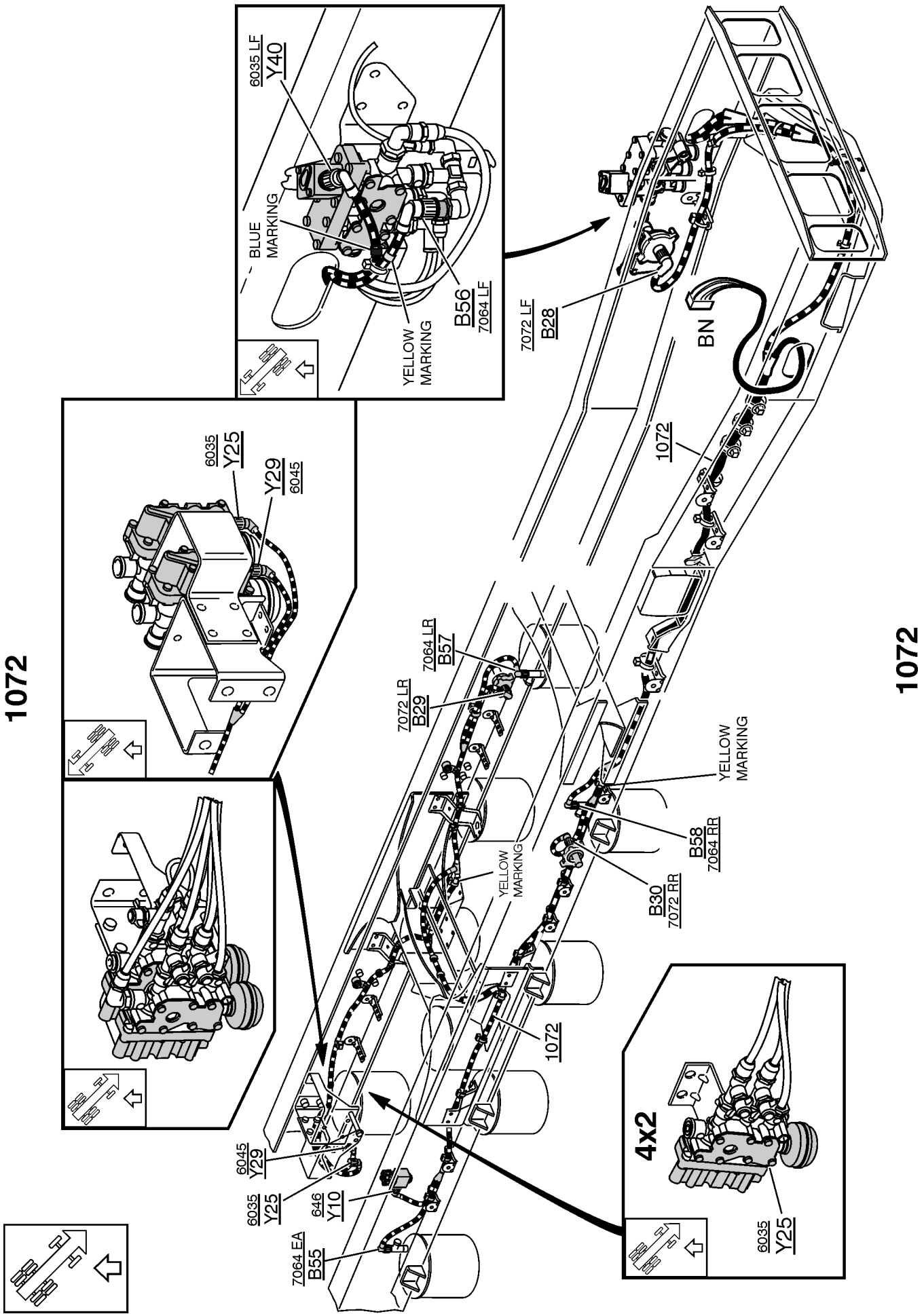

T3018307

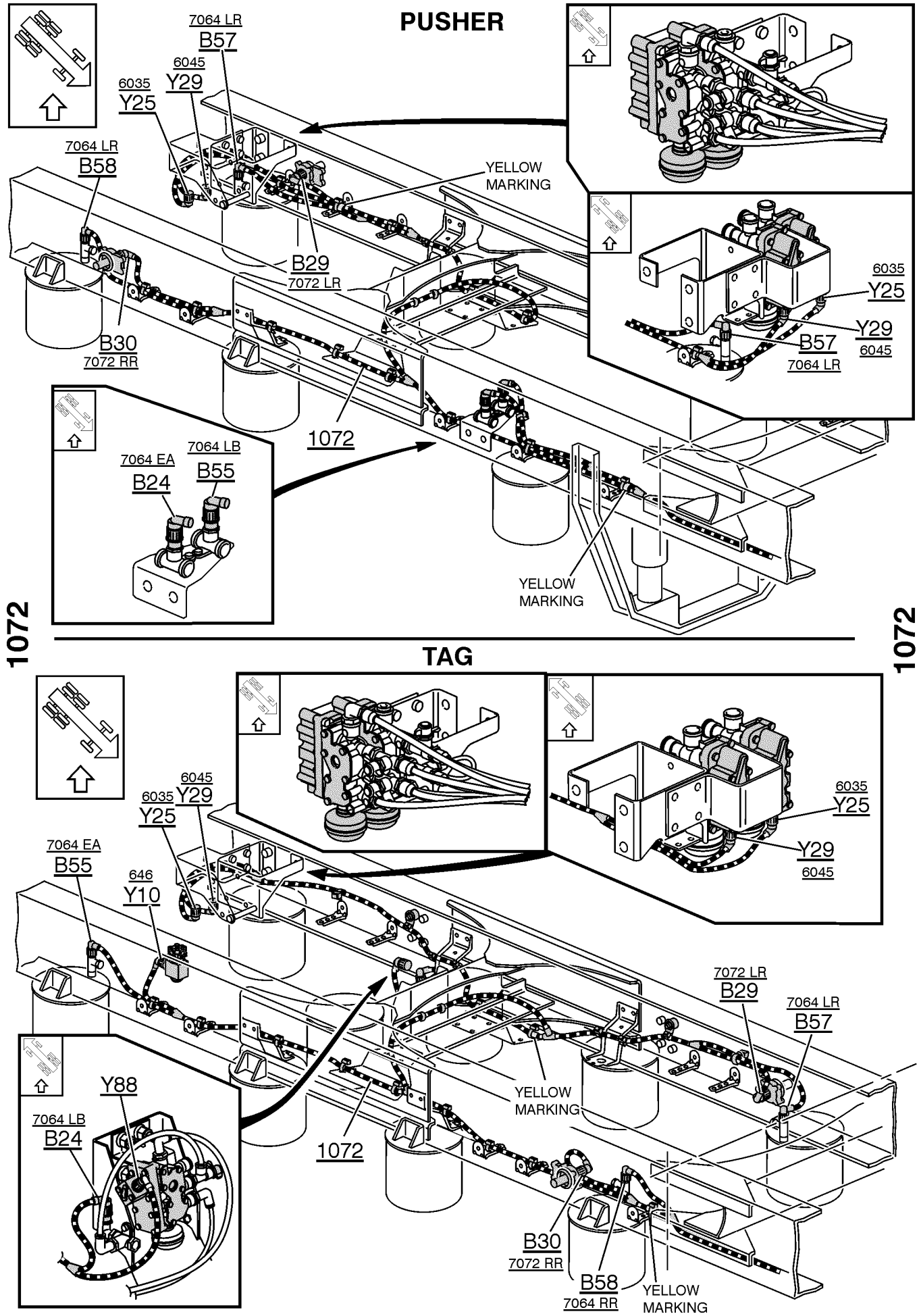
PUSHER
7064 LR
B57
6045
Y29
6035
Y25
7064 LR
B58
YELLOW
MARKING
B29
7072 LR
B30
7072 RR
1072
7064 EA
B24
7064 LB
B55
YELLOW
MARKING
1072
1072
TAG
6045
6035
Y29
Y25
7064 EA
B55
646
Y10
7072 LR
B29
7064 LR
B57
Y88
7064 LB
B24
YELLOW
MARKING
1072
B30
7072 RR
B58
7064 RR
YELLOW
MARKING

https://truckmanualshub.com/

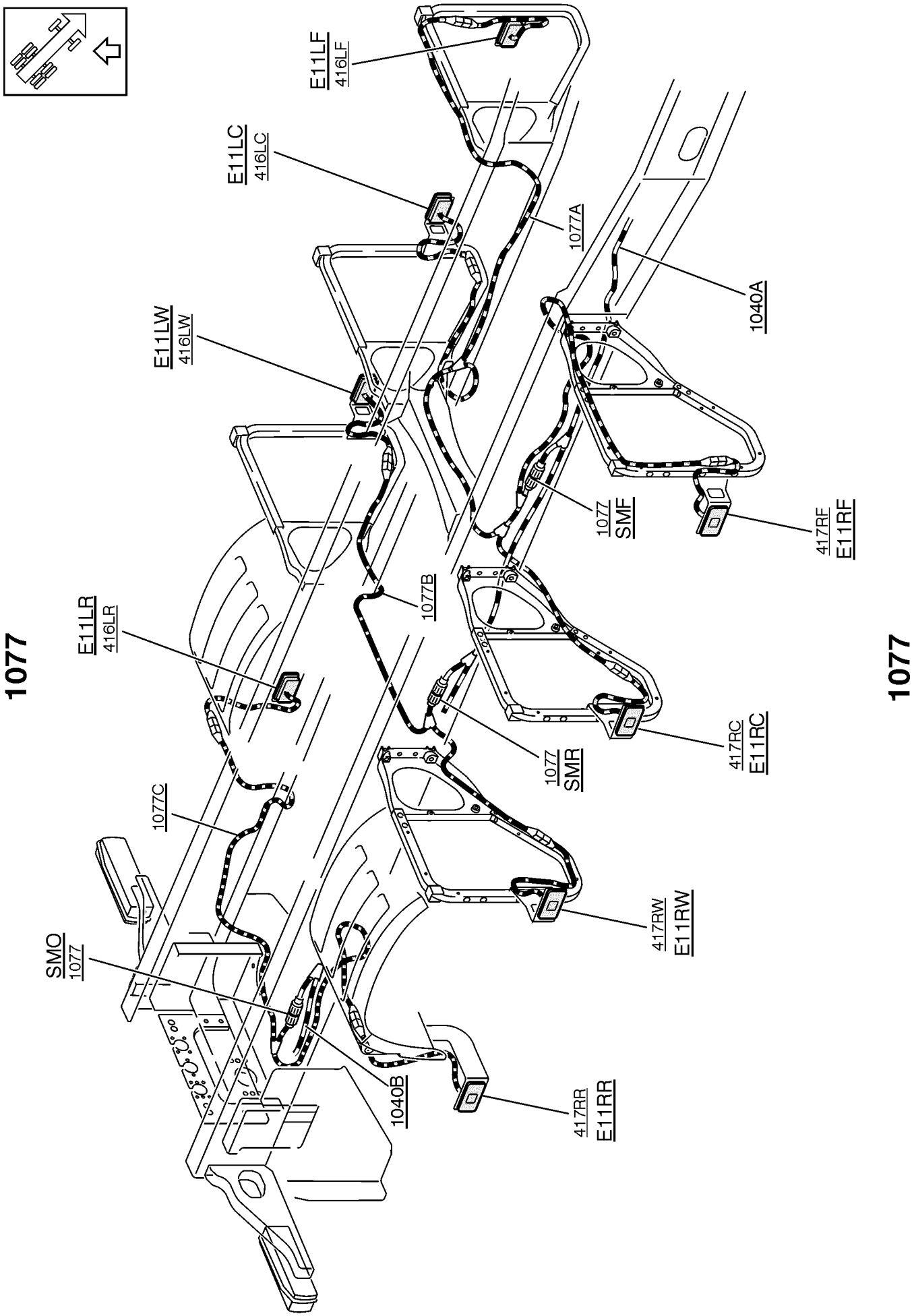

T3016409

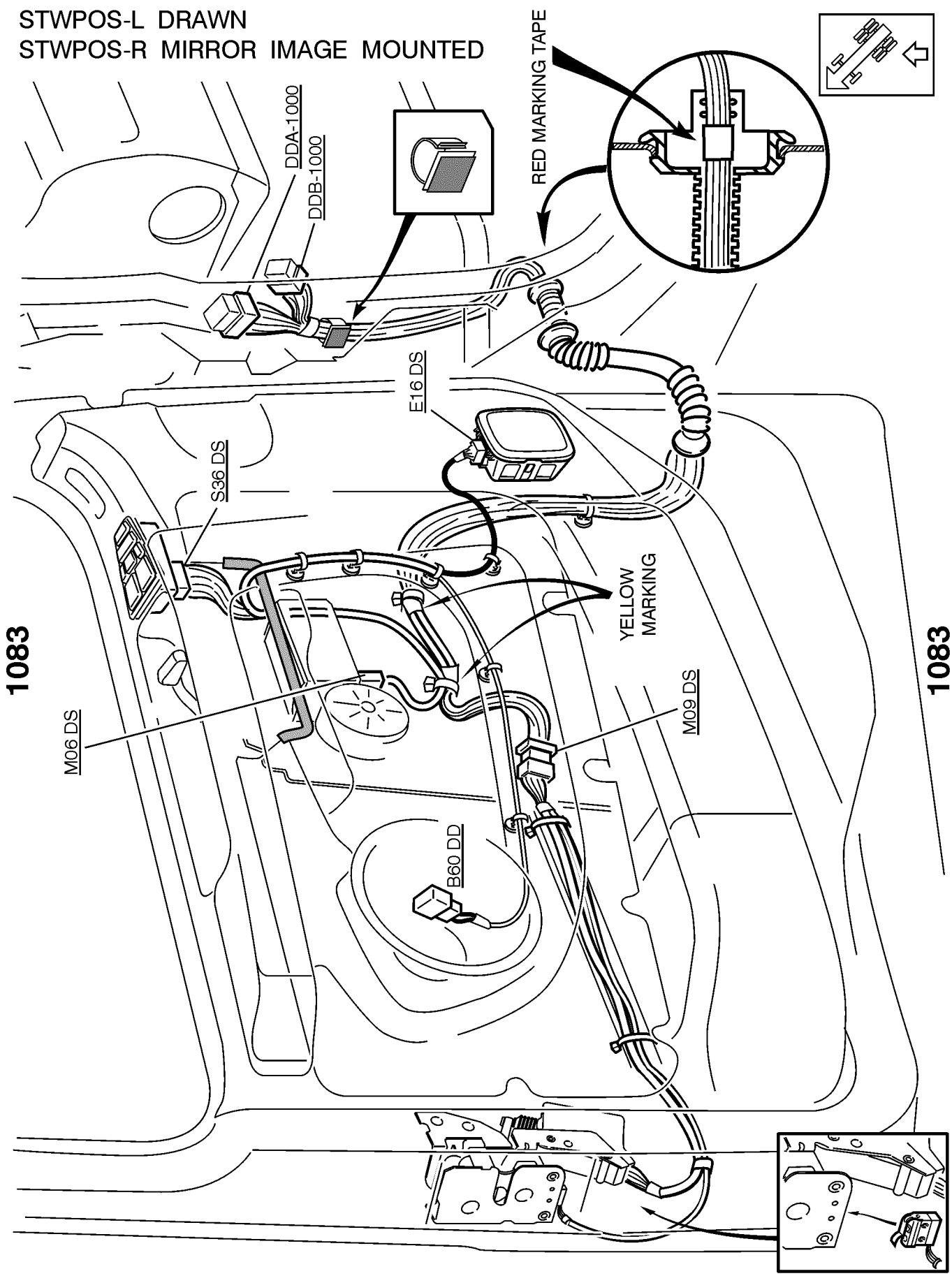
STWPOS-L DRAWN
STWPOS-R MIRROR IMAGE MOUNTED
DDA-1000
DDB-1000
RED MARKING TAPE
E16 DS
S36 DS
YELLOW MARKING
1083
M06 DS
M09 DS
B60 DD
1083

T3017732

https://truckmanualshub.com/

STWPOS-L DRAWN
STWPOS-R MIRROR IMAGE MOUNTED

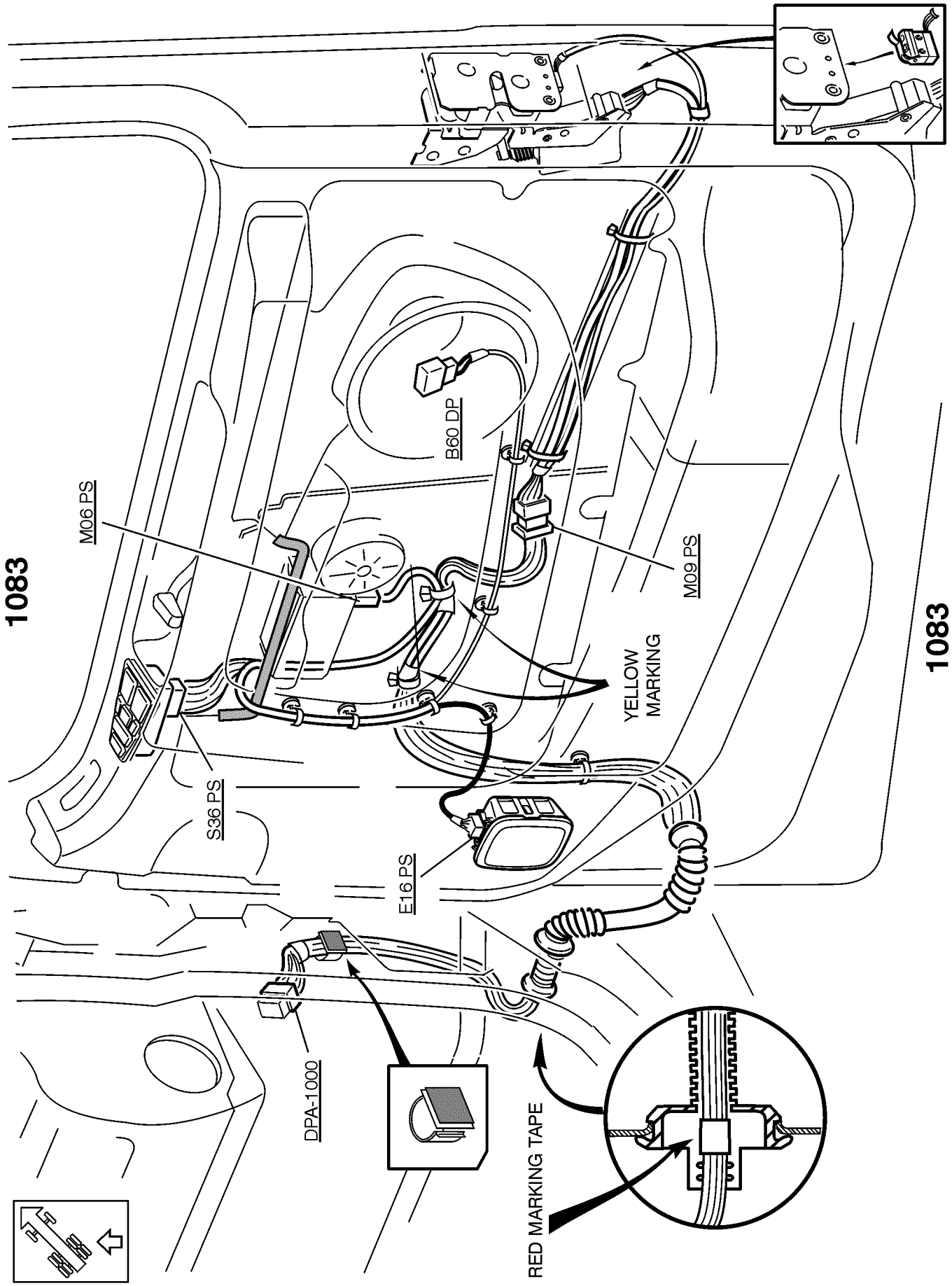

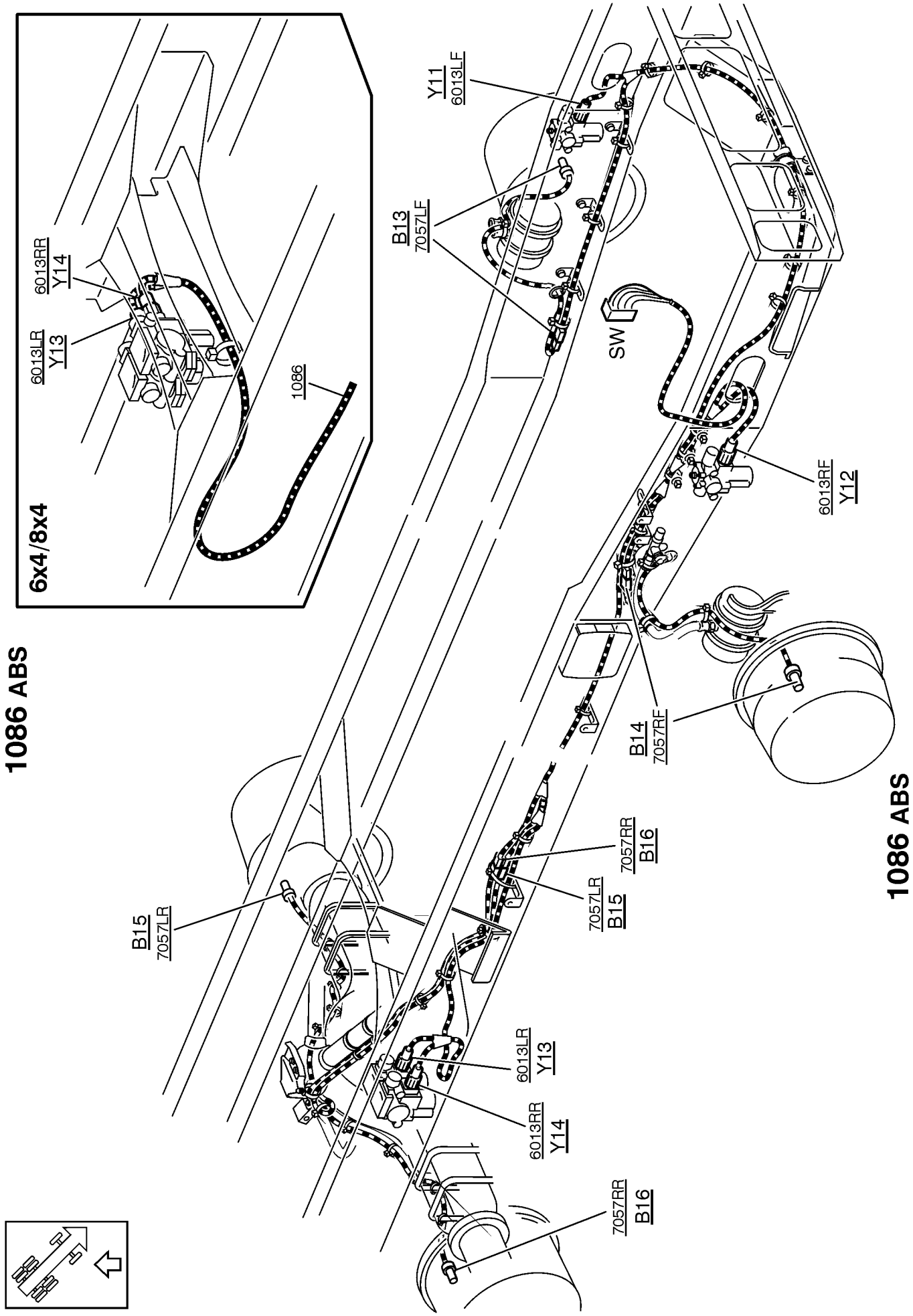
1086 ABS
6x4/8x4
6013RR
Y14
6013LR
Y13
1086
Y11
6013LF
B13
7057LF
SW
6013RF
Y12
B14
7057RF
7057RR
B16
7057LR
B15
B15
7057LR
6013LR
Y13
6013RR
Y14
7057RR
B16
1086 ABS

https://truckmanualshub.com/

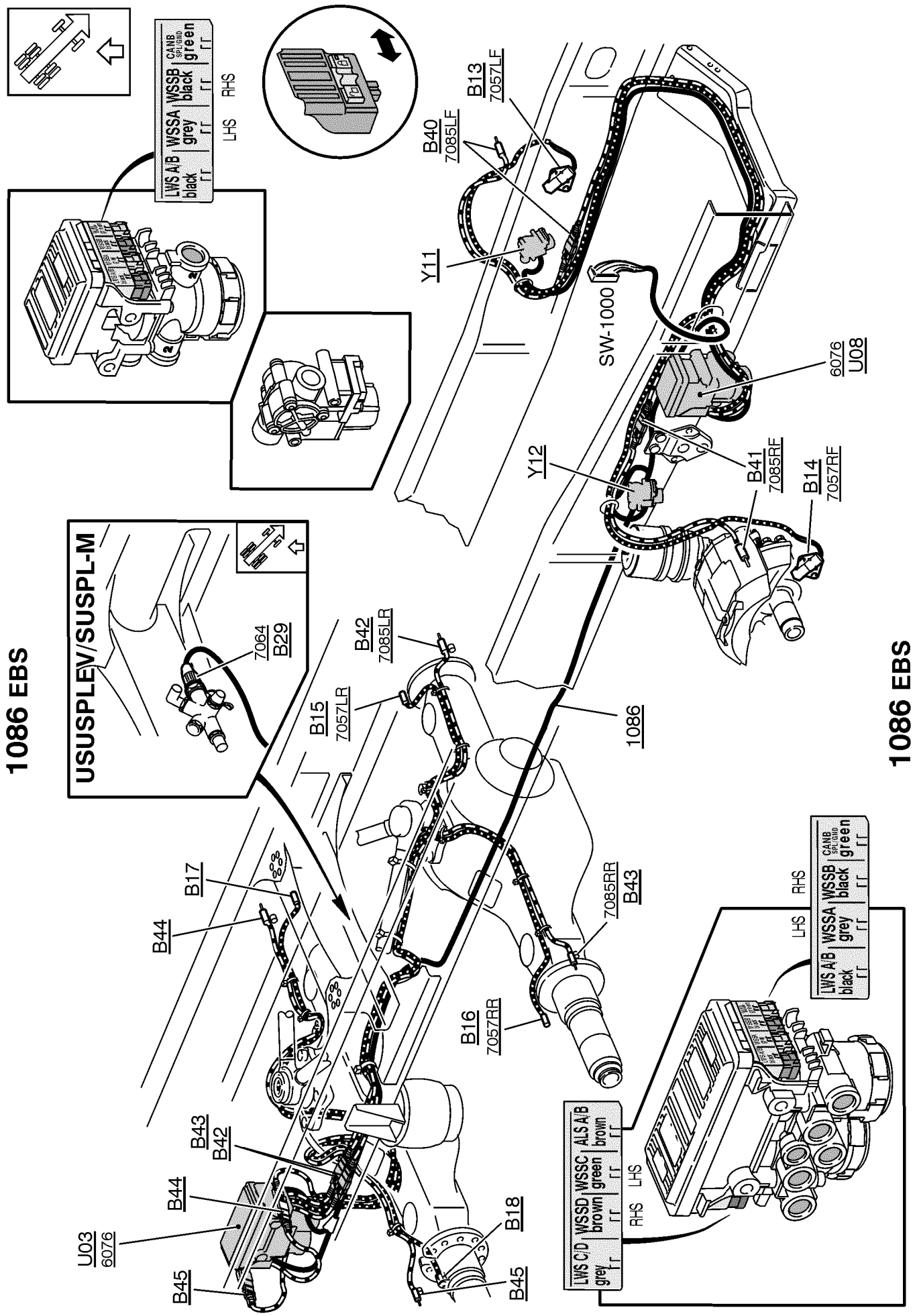

T3017734

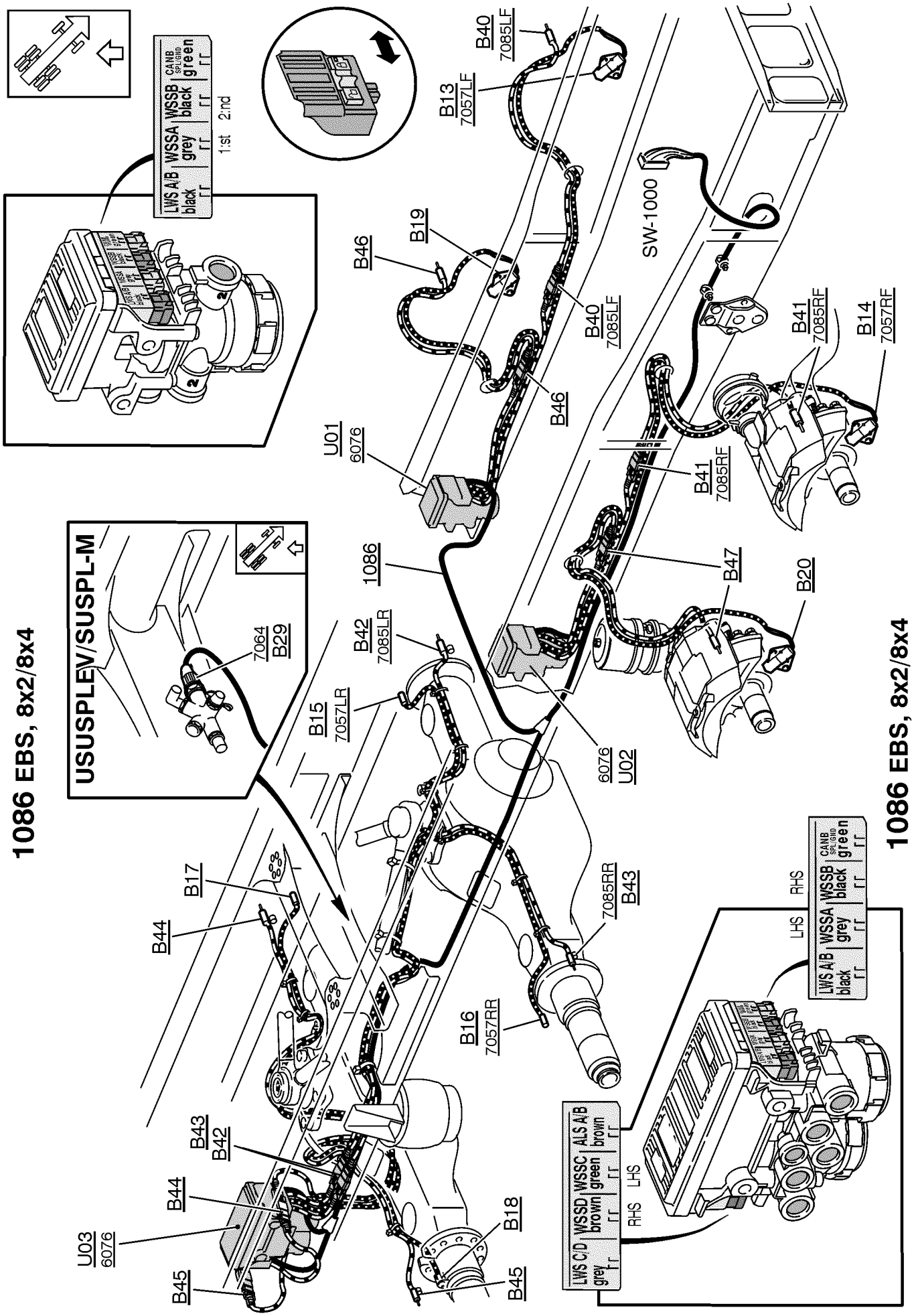
1086 EBS, 8x2/8x4
USUSPLEV/SUSPL-M
7064
B29
LWS A/B black
WSSA grey
WSSB black
CANB SPLGND green
1:st 2:nd
B40
7085LF
B13
7057LF
B19
B46
SW-1000
U01
6076
1086
B41
7085RF
B14
7057RF
B47
B20
B42
7085LR
B15
7057LR
6076
U02
B17
B44
7085RR
B43
B16
7057RR
B43
B42
B44
U03
6076
B45
B18
B45
LWS C/D grey
WSSD brown
WSSC green
ALS A/B brown
RHS
LHS
1086 EBS, 8x2/8x4

https://truckmanualshub.com/

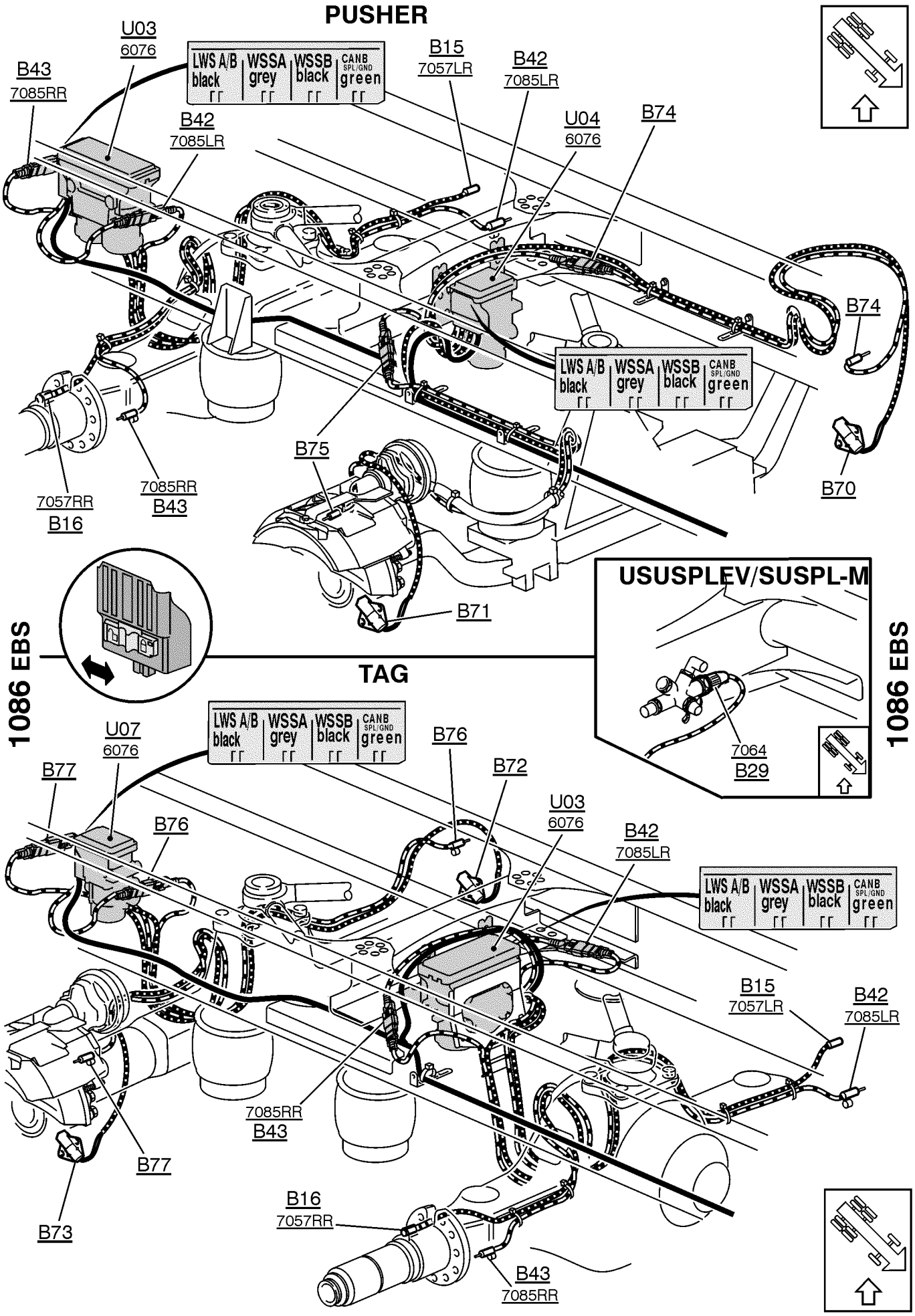

T3016968

https://truckmanualshub.com/

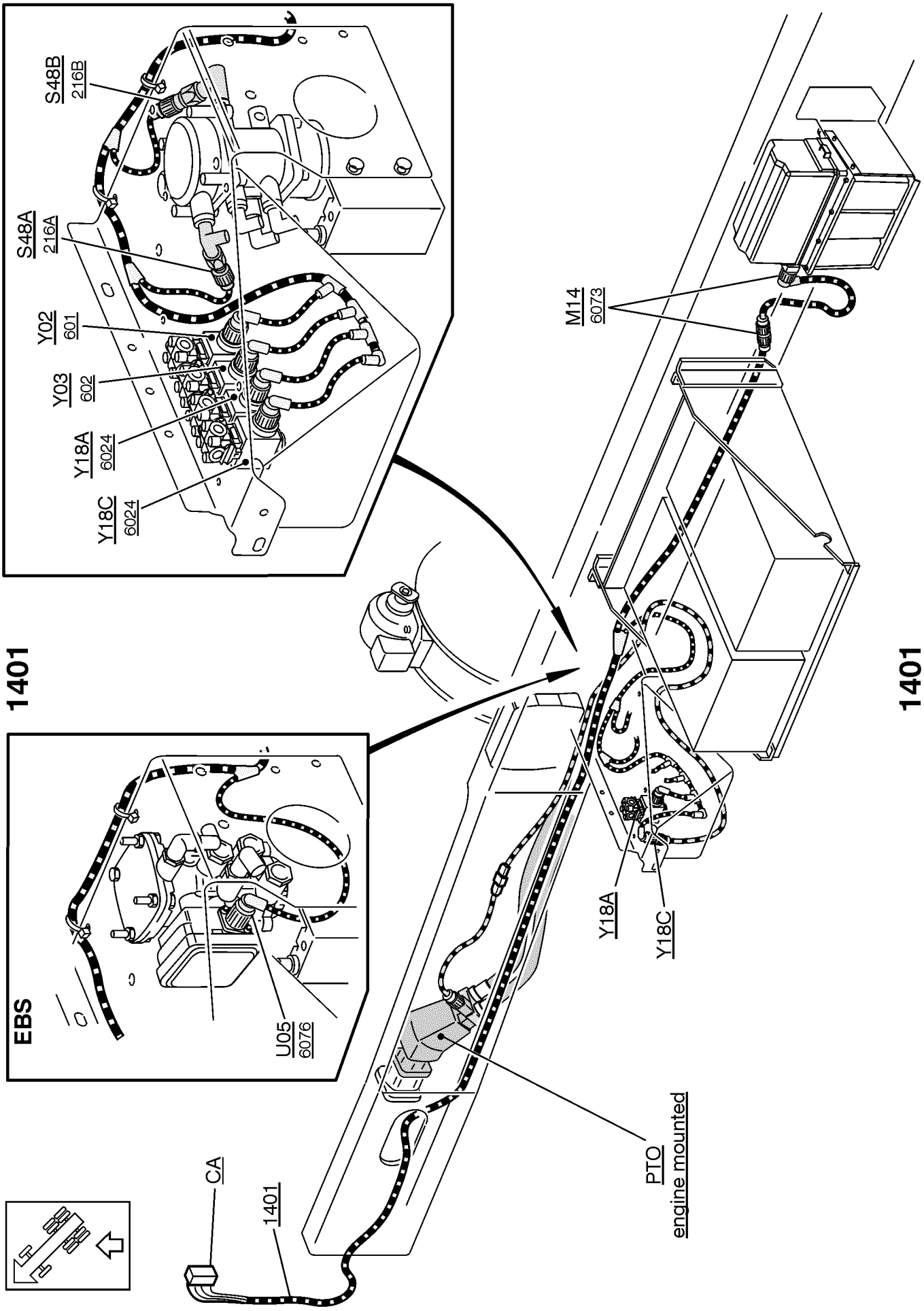

https://truckmanualshub.com/

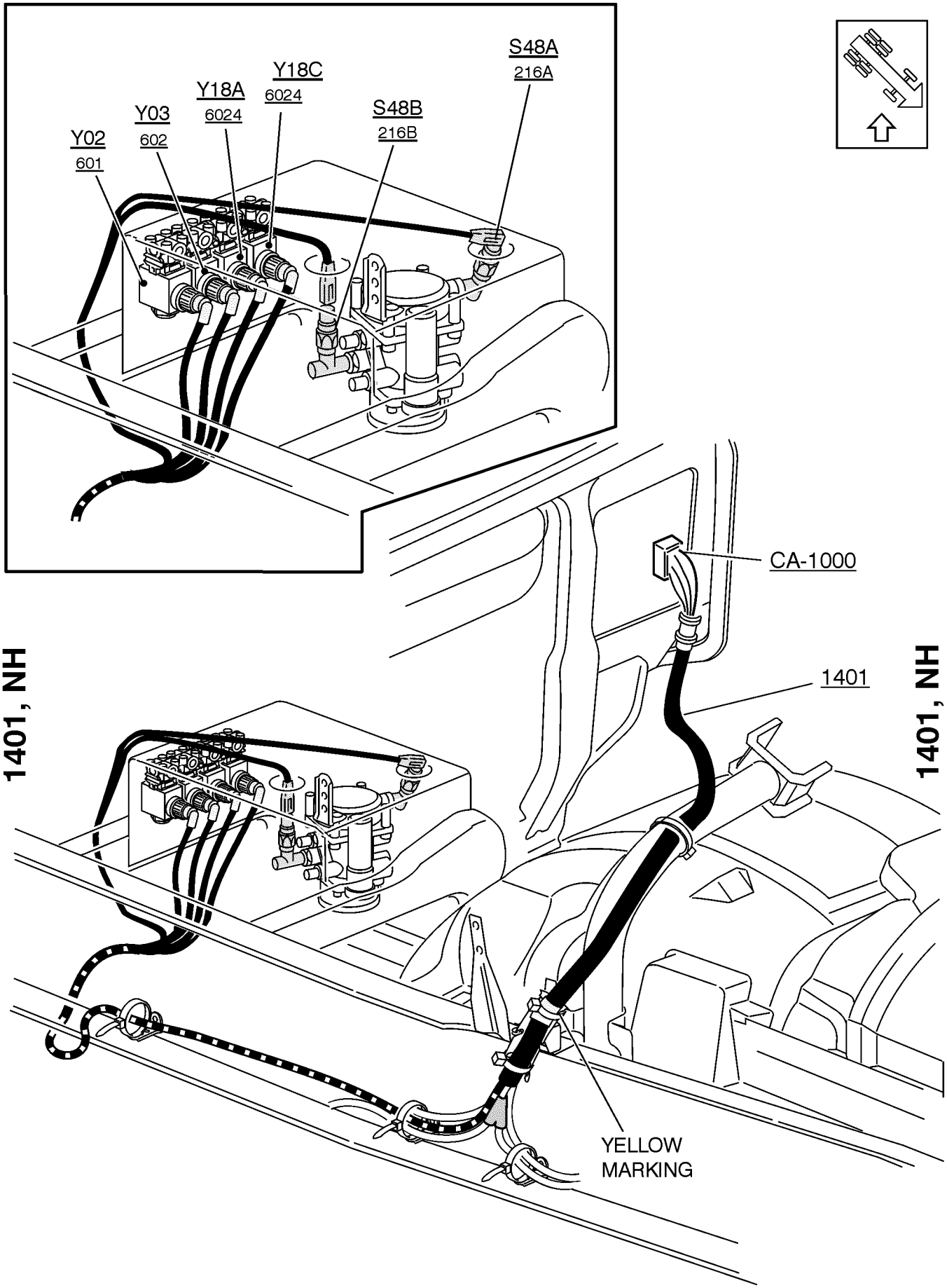

https://truckmanualshub.com/

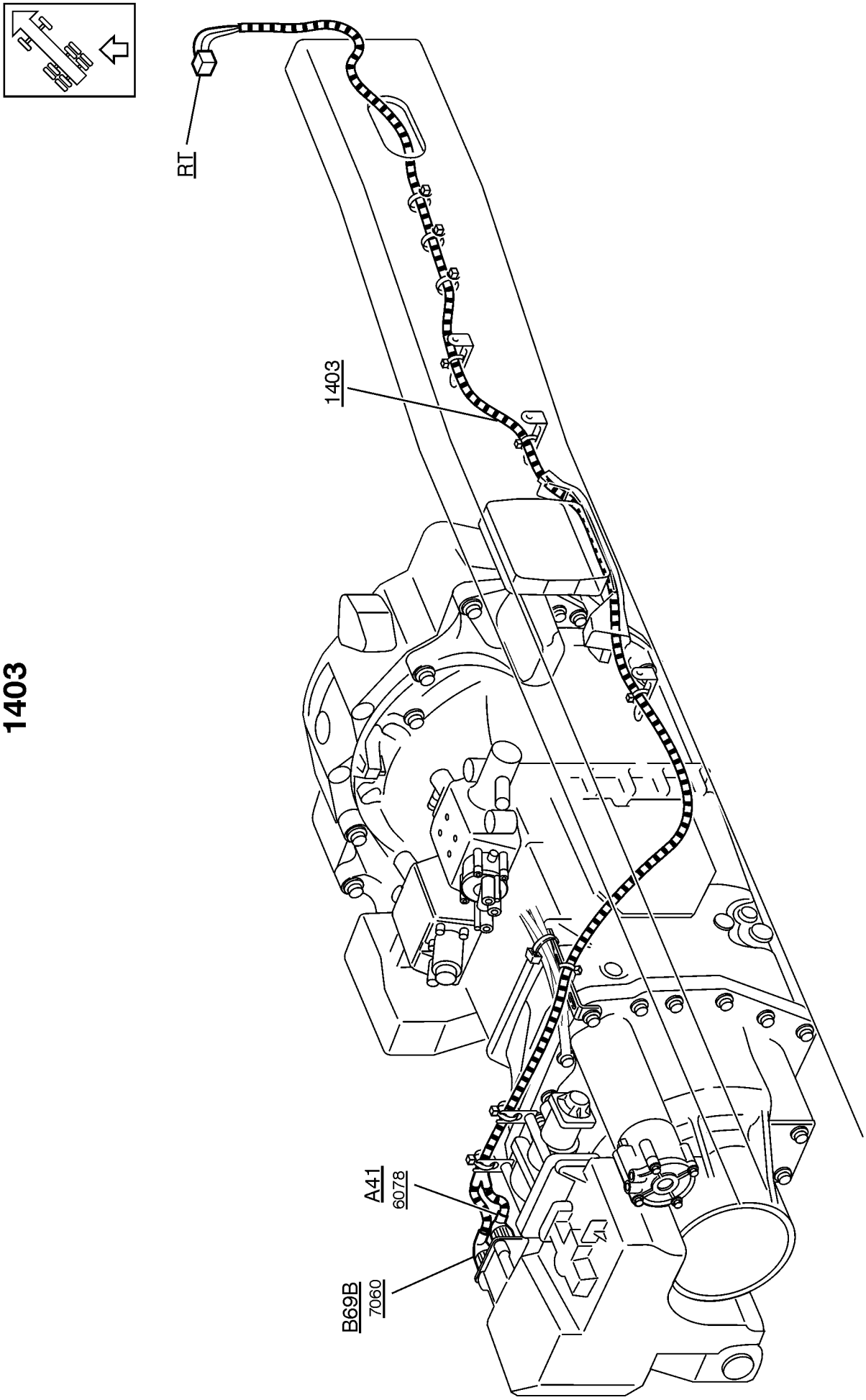

1403

1403

https://truckmanualshub.com/

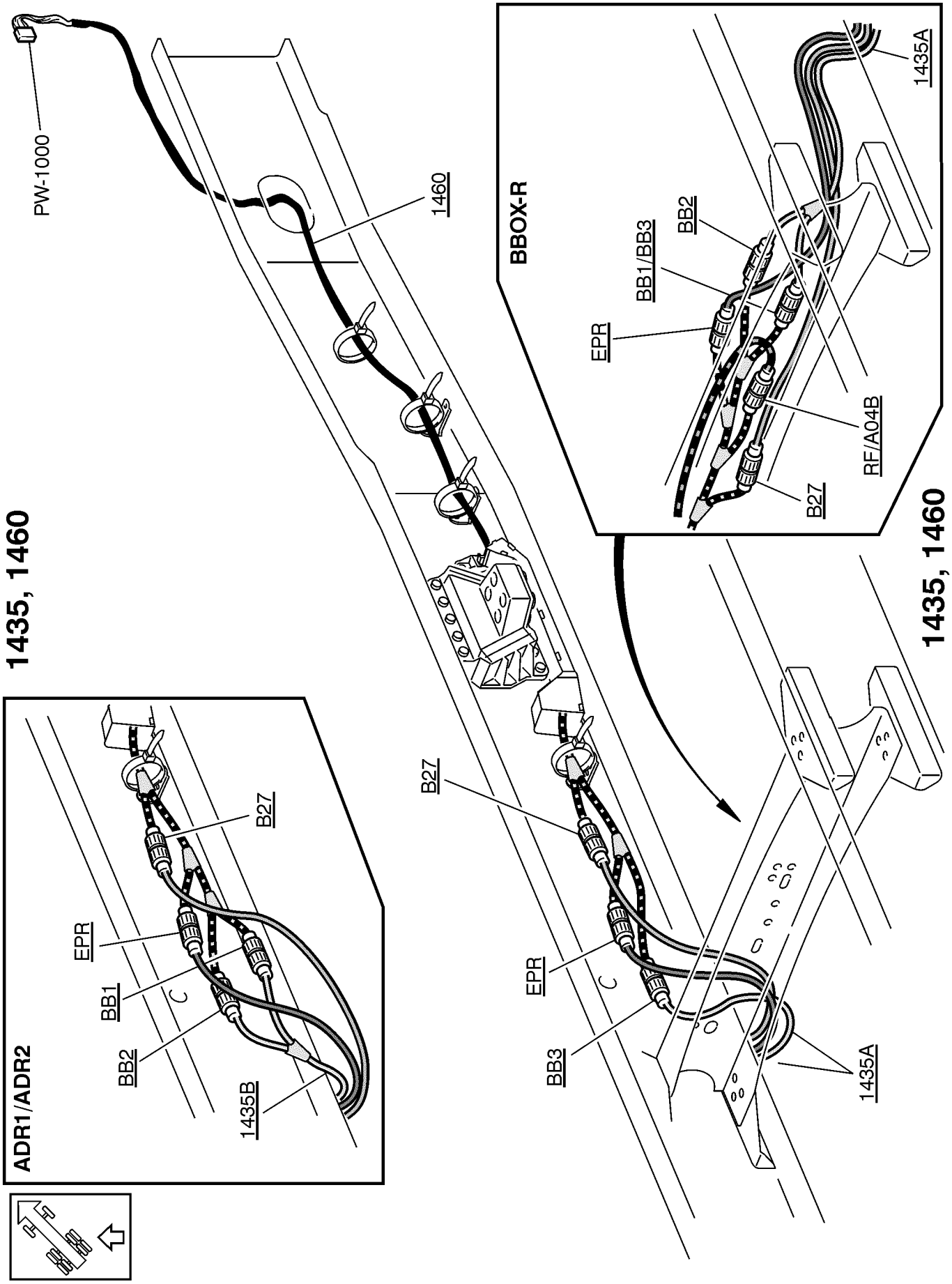

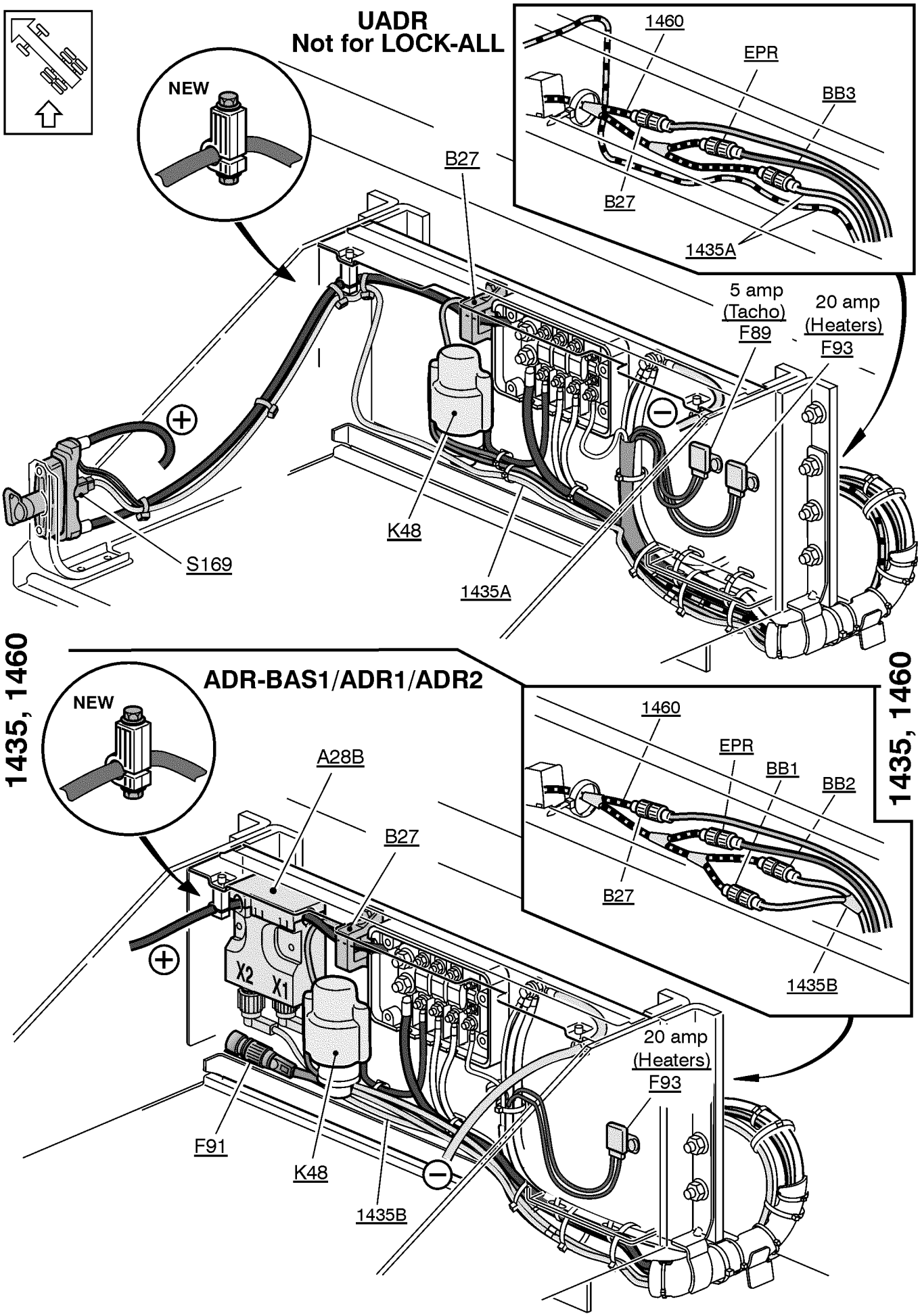
UADR
Not for LOCK-ALL
NEW
1460
EPR
BB3
B27
1435A
B27
5 amp
(Tacho)
F89
20 amp
(Heaters)
F93
K48
S169
1435A
1435, 1460
ADR-BAS1/ADR1/ADR2
NEW
1460
EPR
BB1
BB2
1435, 1460
A28B
B27
B27
1435B
X2
X1
20 amp
(Heaters)
F93
F91
K48
1435B

https://truckmanualshub.com/

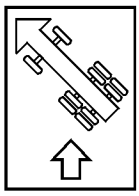

MAINSWI, LOCK-ALL

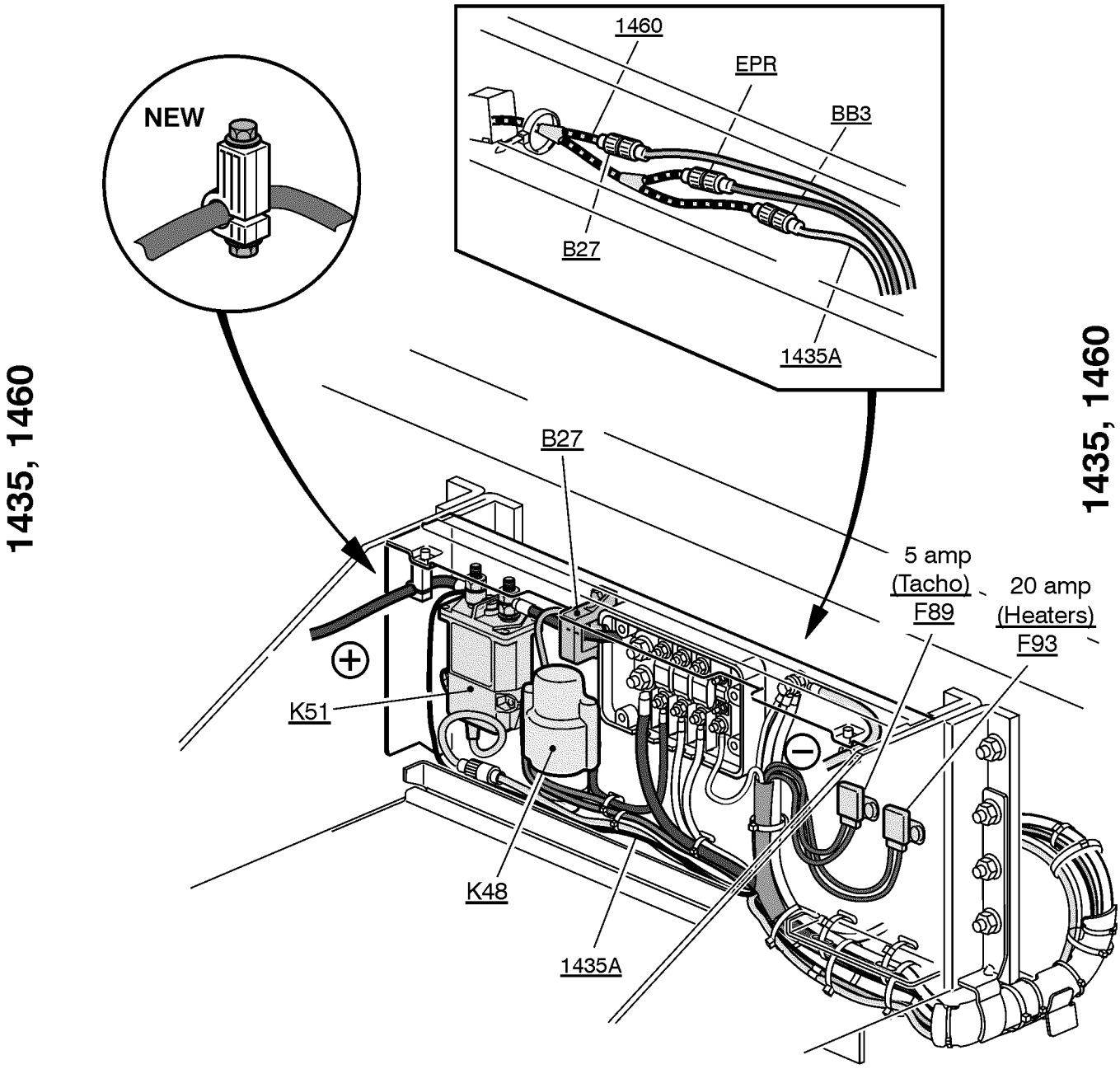

T3018744

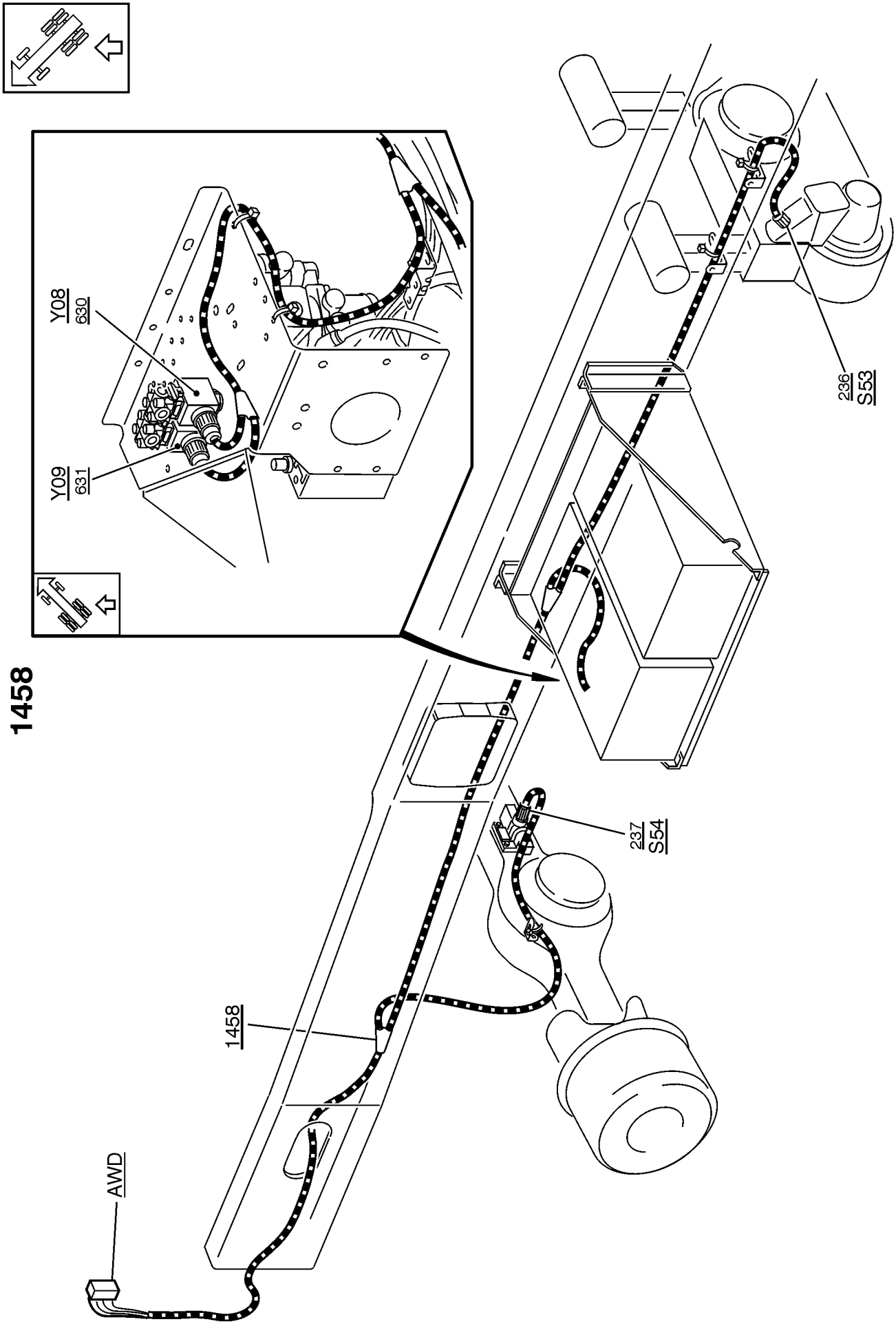
1458
Y08
630
Y09
631
236
S53
237
S54
1458
AWD
1458

https://truckmanualshub.com/

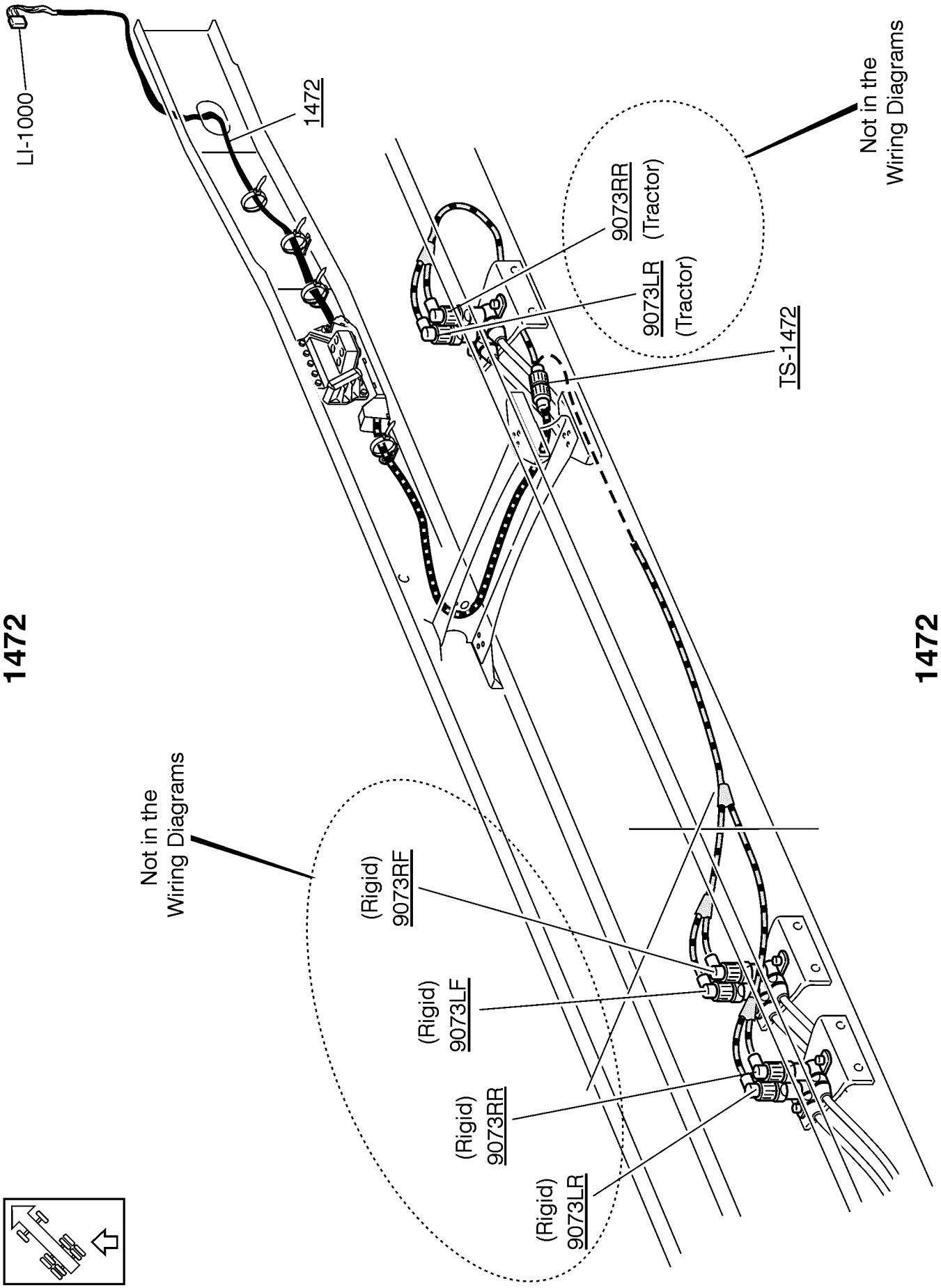

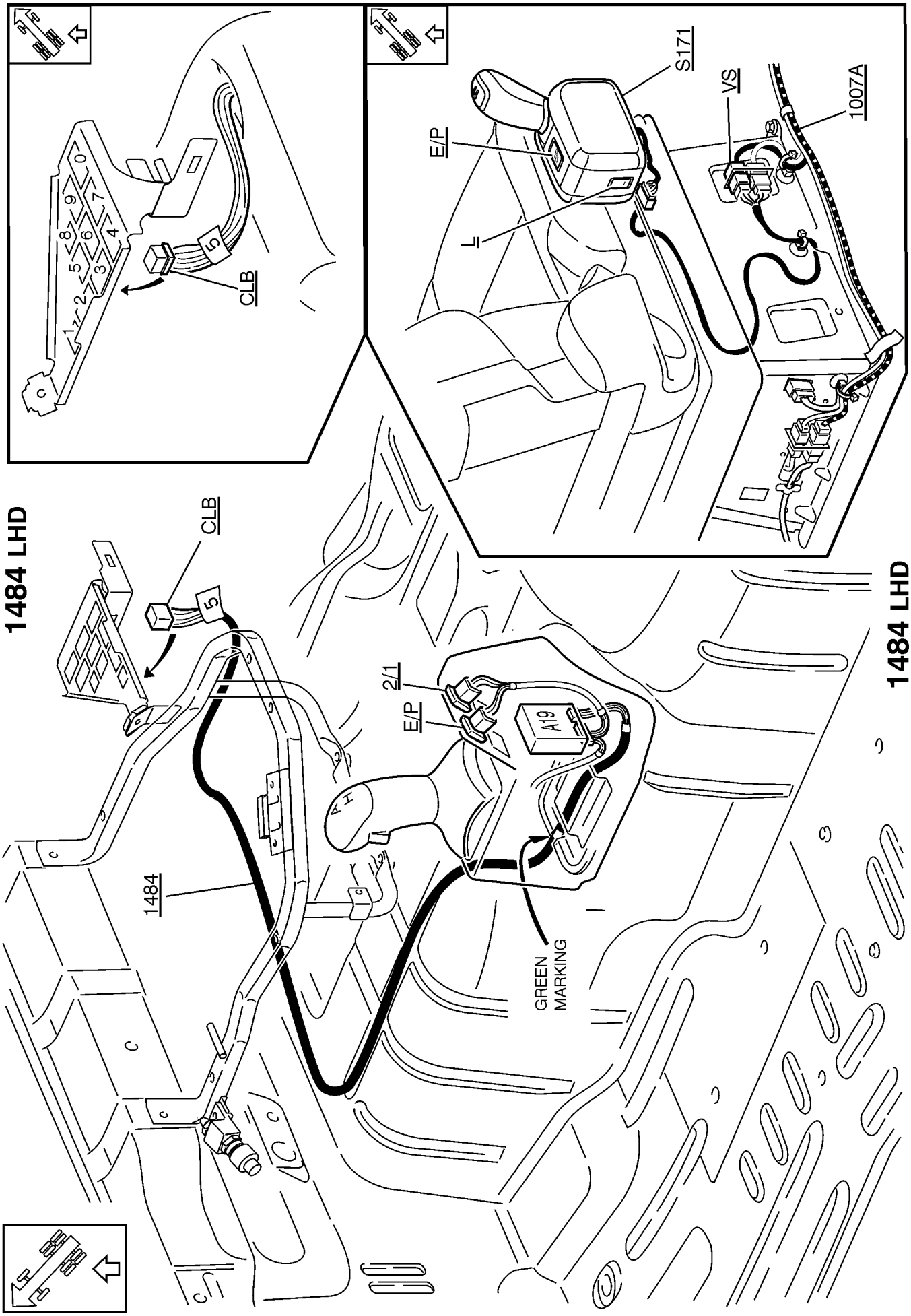
1484 LHD
CLB
5
1484
2/1
E/P
A19
GREEN
MARKING
1484 LHD
CLB
5
E/P
L
S171
VS
1007A

https://truckmanualshub.com/

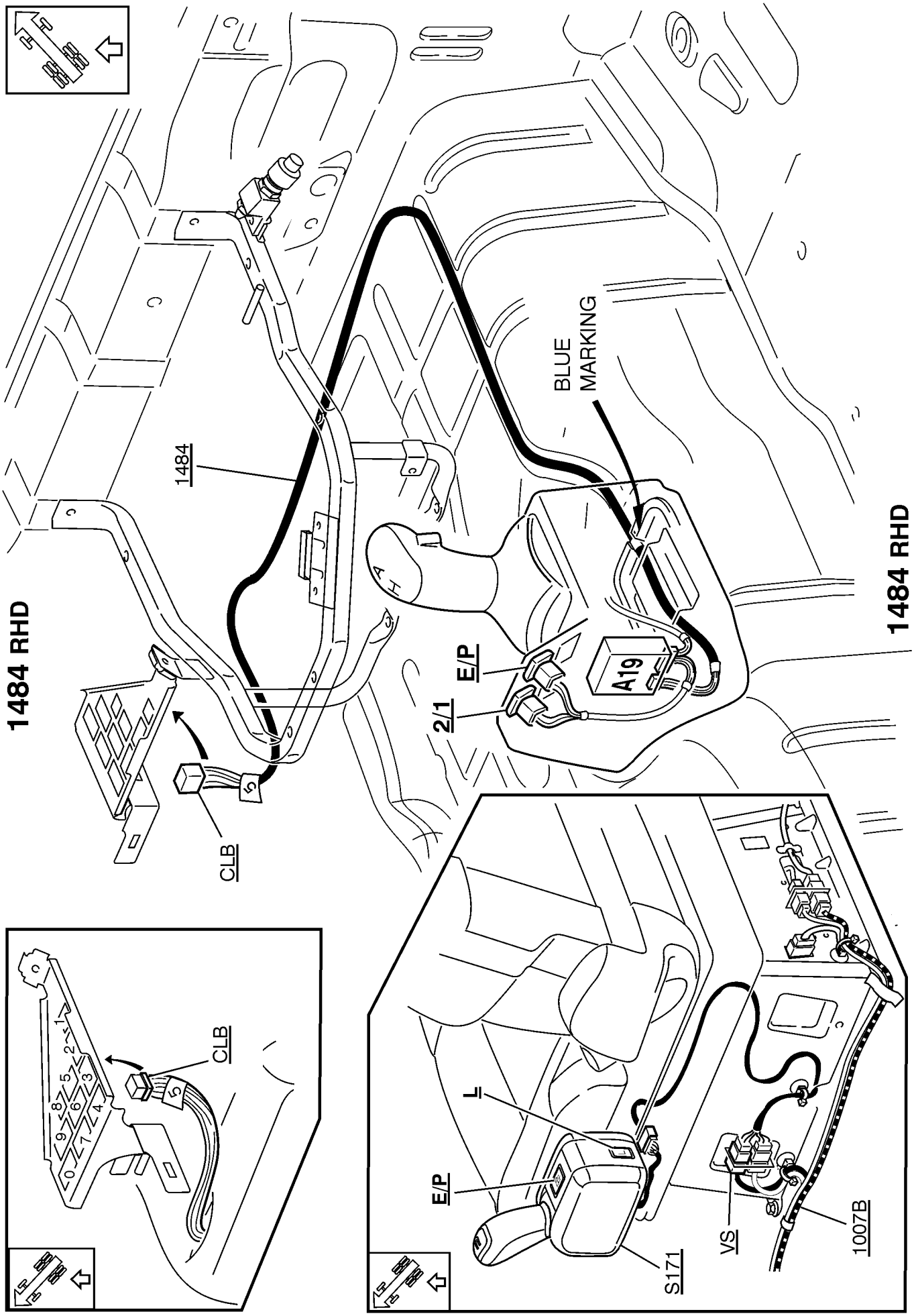

T3018746

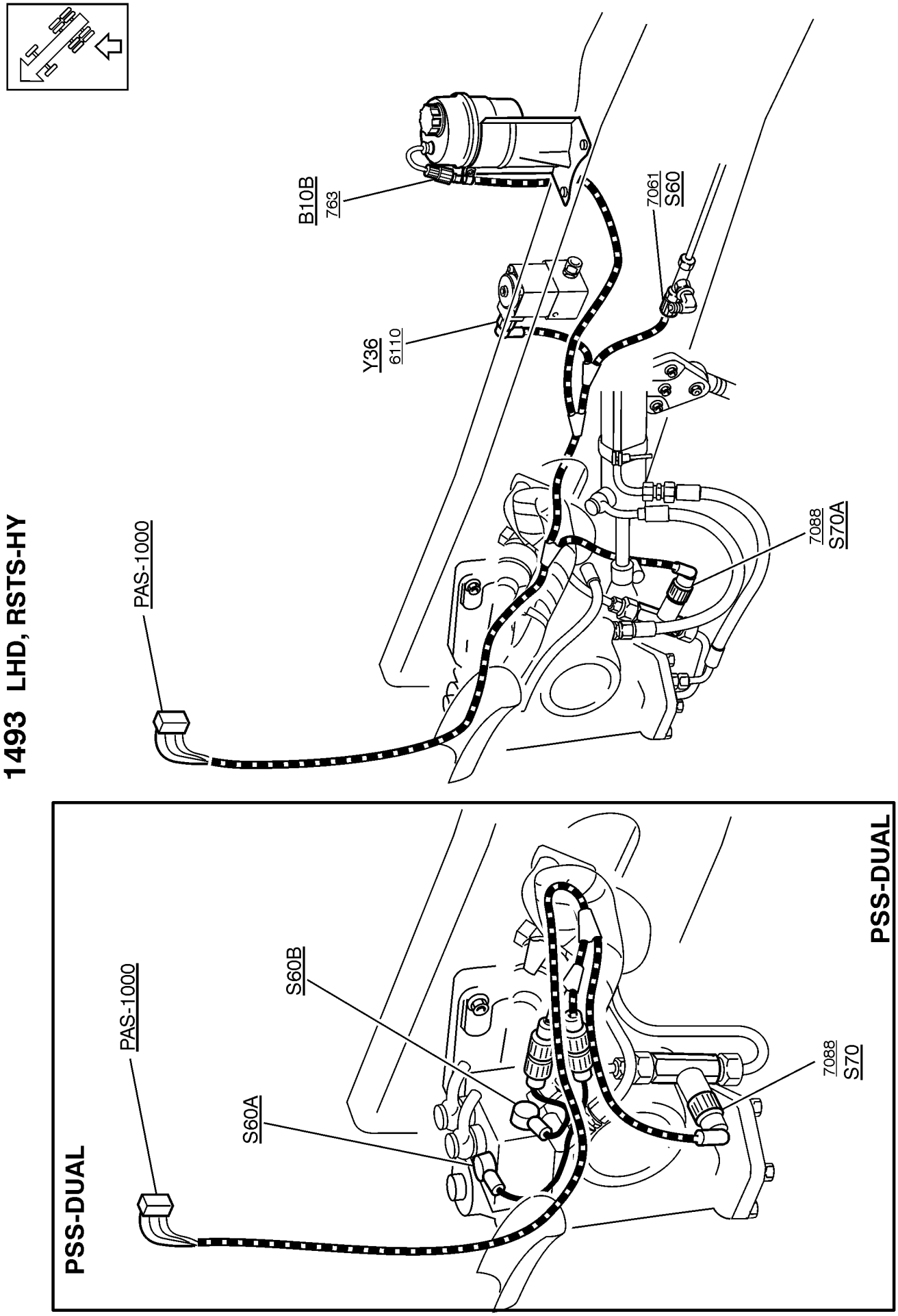
1493 LHD, RSTS-HY
PAS-1000
B10B
763
Y36
6110
7061
S60
7088
S70A
1493 LHD, RSTS-HY
PSS-DUAL
PAS-1000
S60B
S60A
7088
S70
PSS-DUAL

https://truckmanualshub.com/

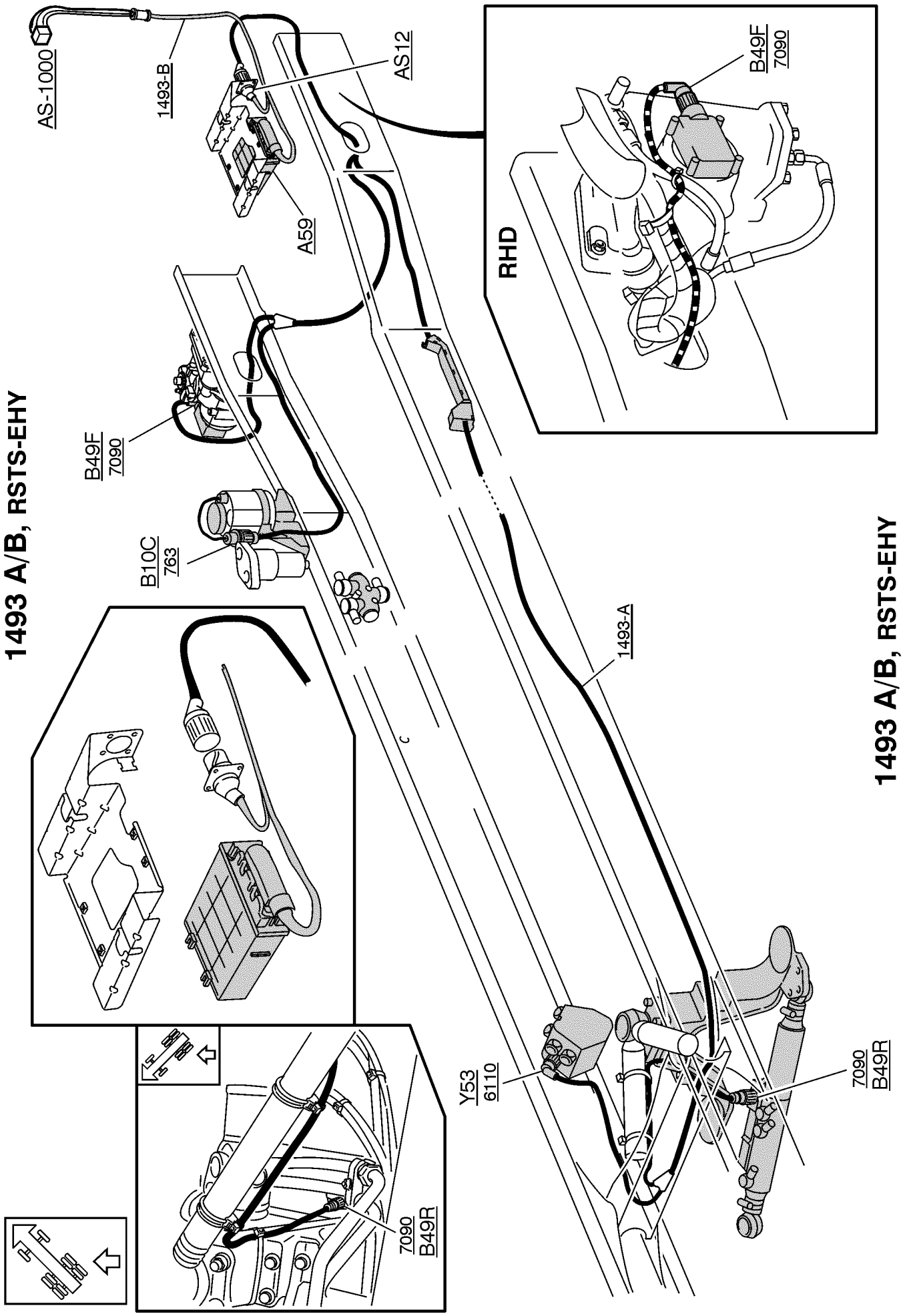

T3017761

https://truckmanualshub.com/

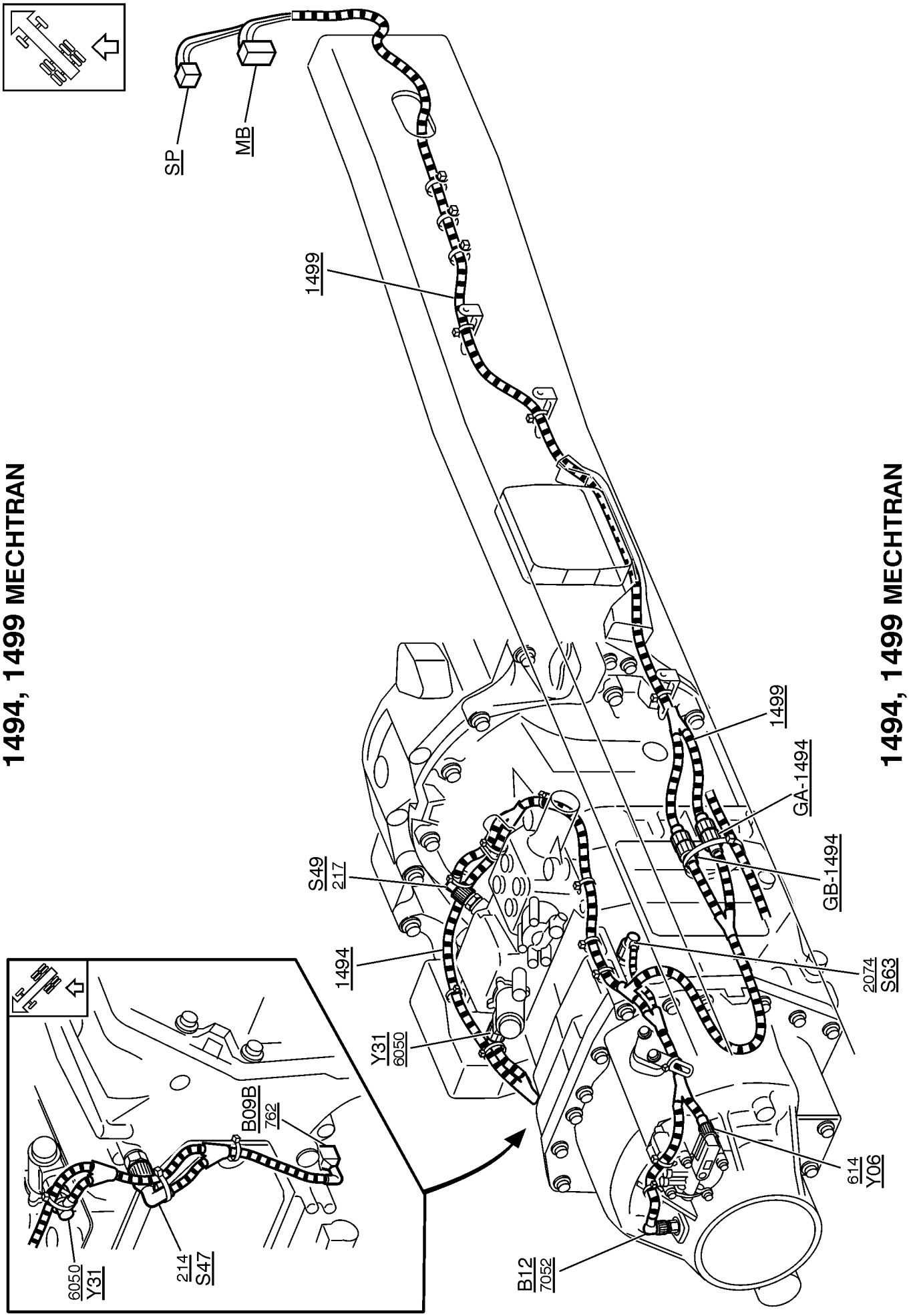

https://truckmanualshub.com/

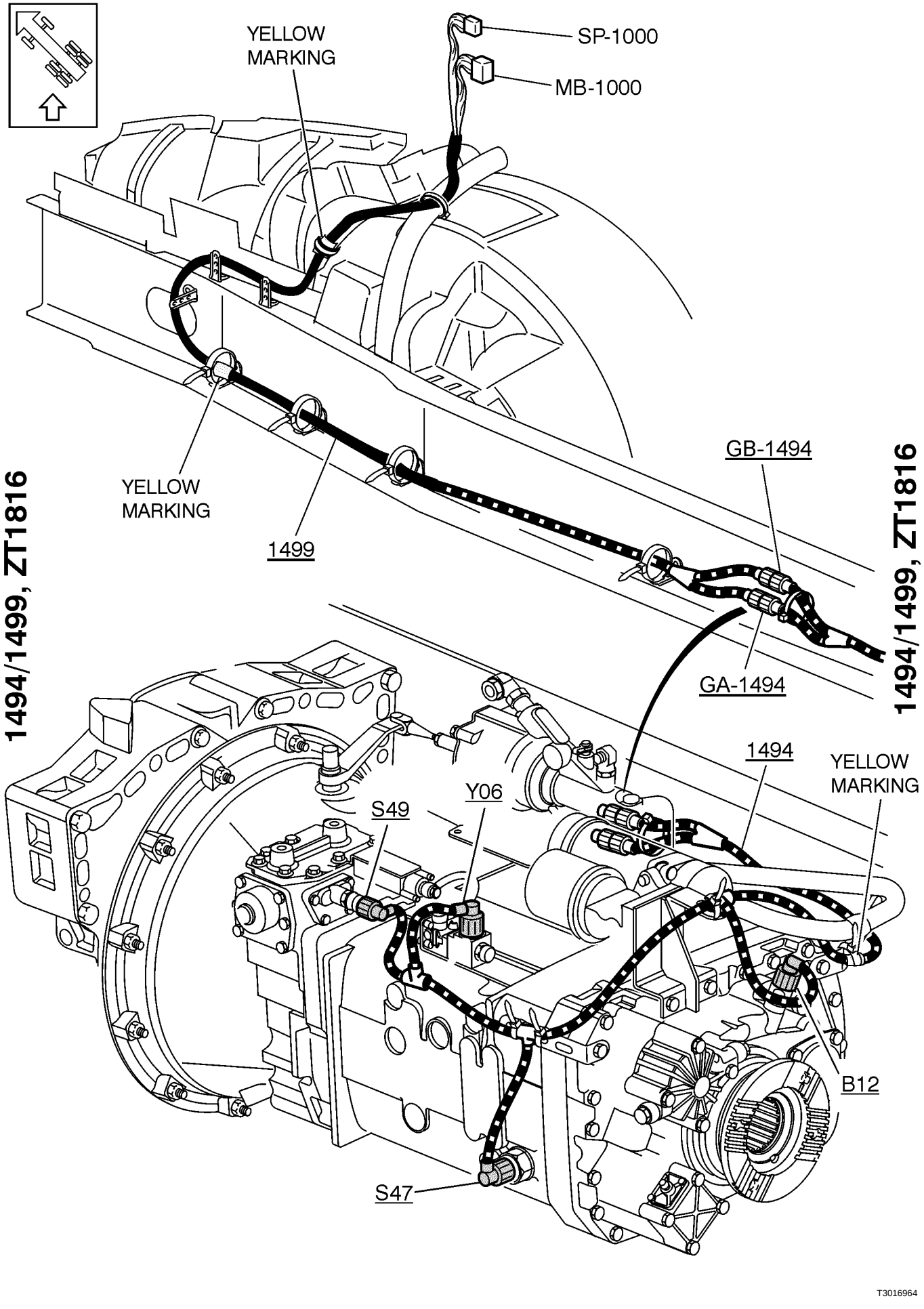

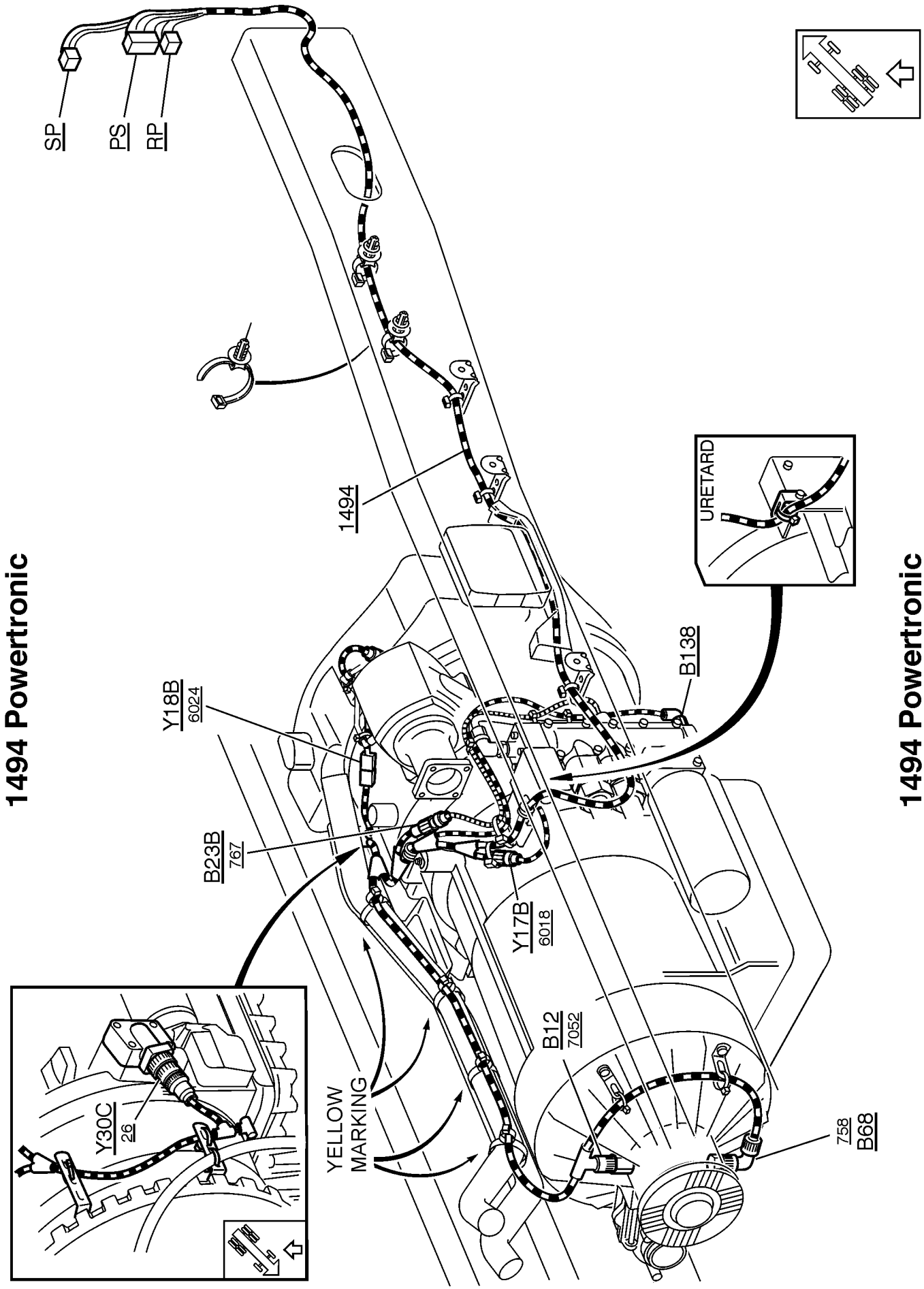
1494 Powertronic
SP
PS
RP
1494
URETARD
B138
Y18B
6024
B23B
767
Y17B
6018
B12
7052
YELLOW
MARKING
Y30C
26
758
B68
1494 Powertronic

T3016974

https://truckmanualshub.com/

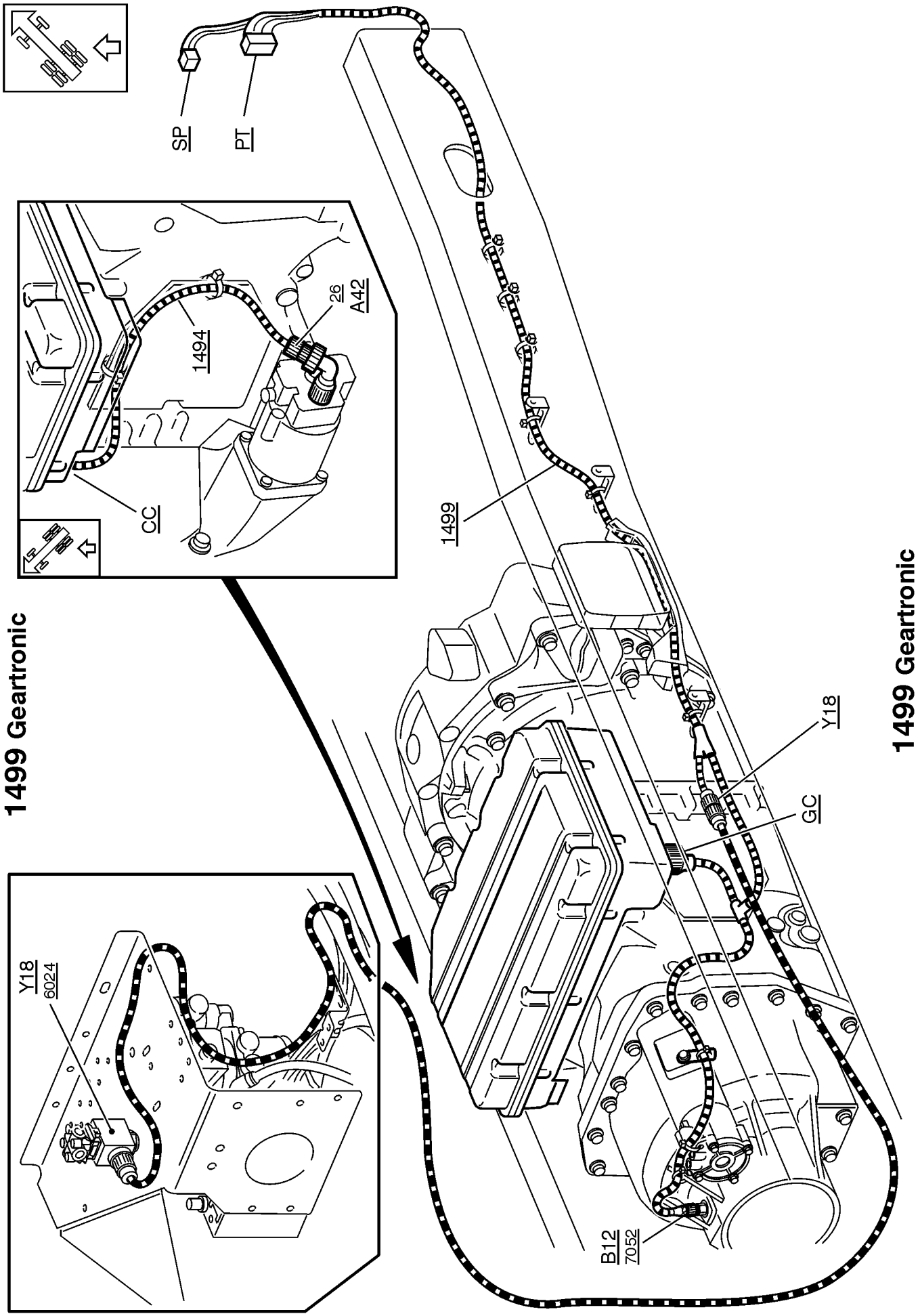

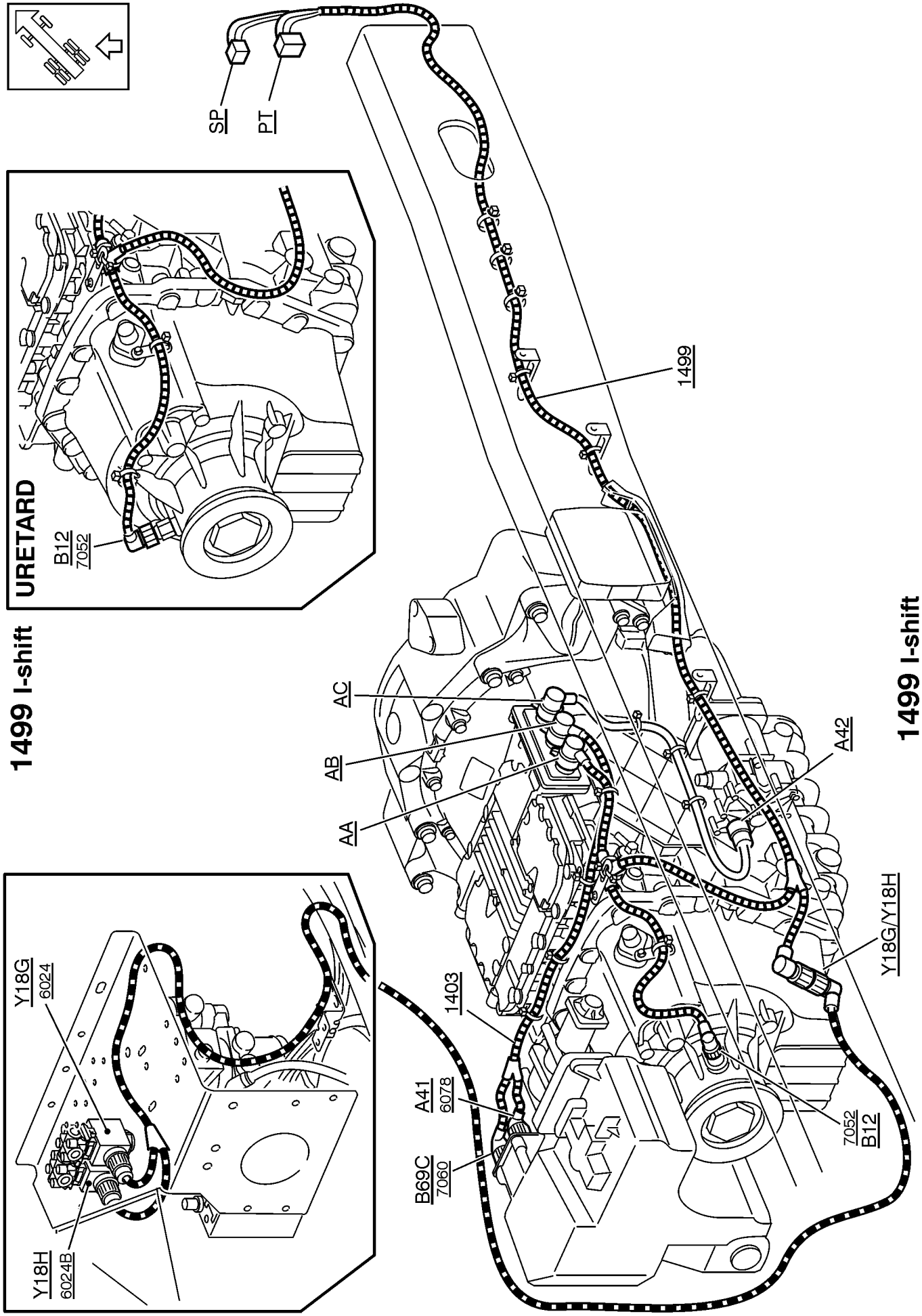
1499 I-shift
URETARD
B12
7052
SP
PT
1499
AC
AB
AA
A42
Y18G/Y18H
1403
A41
6078
B69C
7060
7052
B12
Y18G
6024
Y18H
6024B
1499 I-shift

https://truckmanualshub.com/

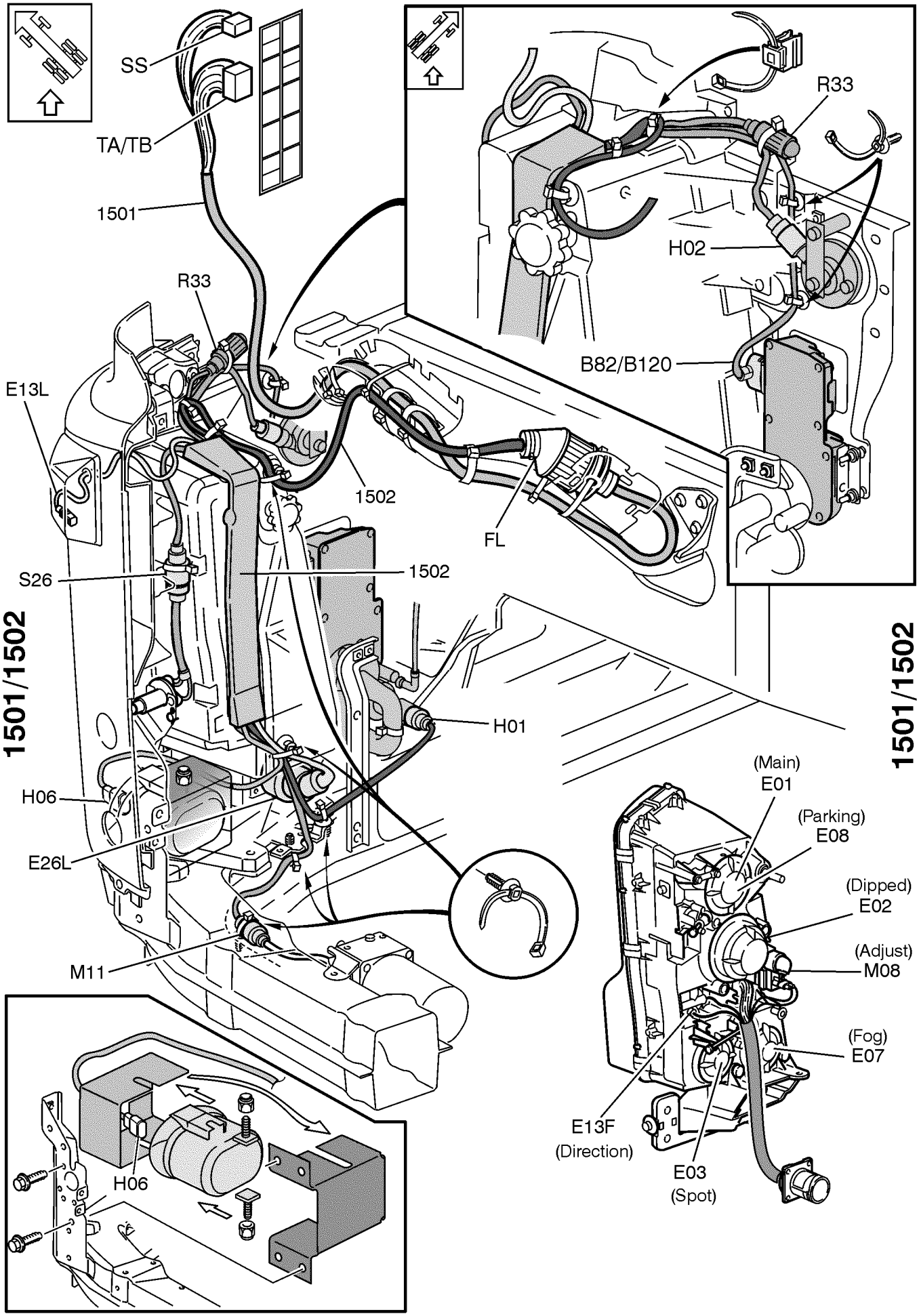

T3017739

https://truckmanualshub.com/

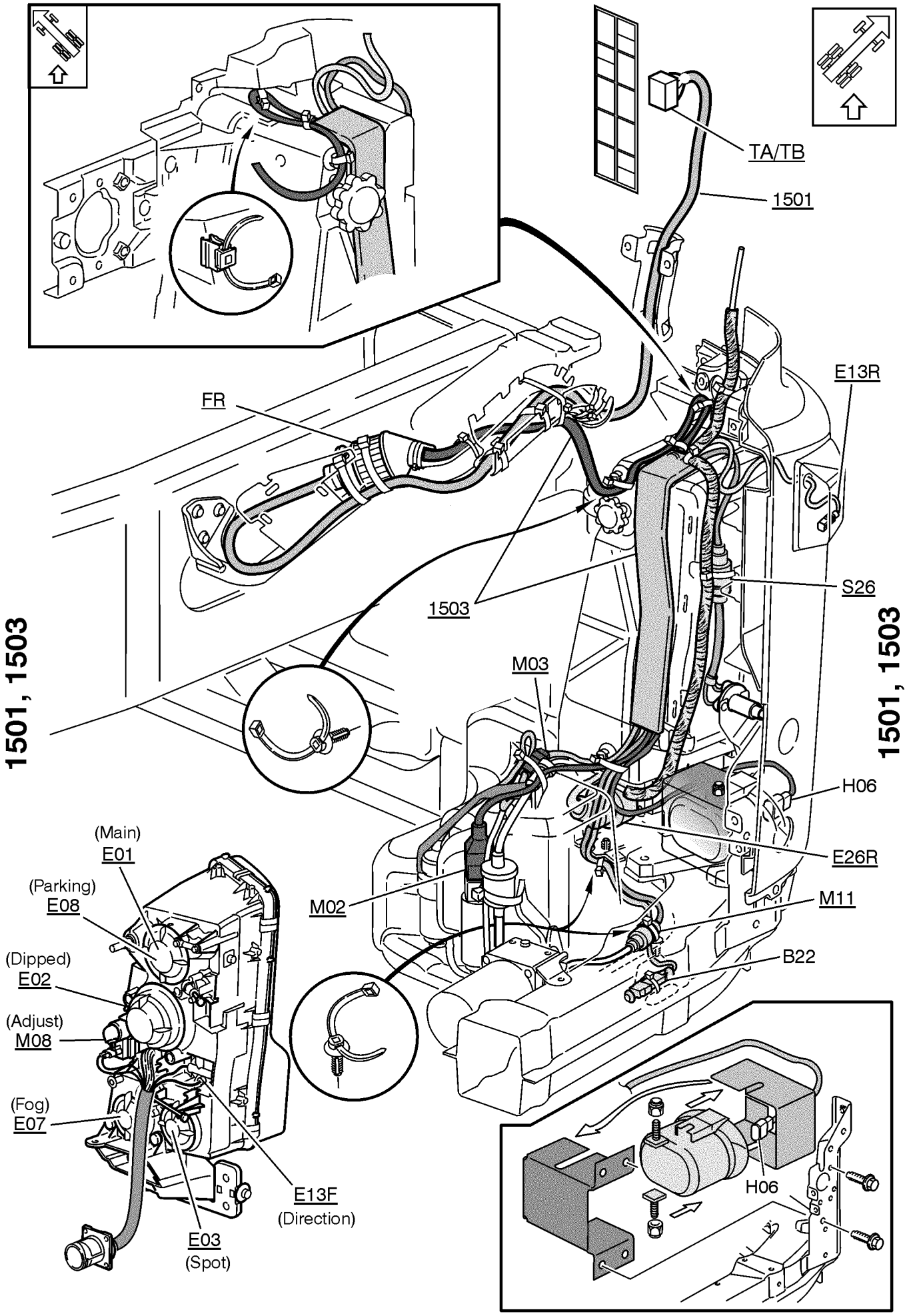

https://truckmanualshub.com/

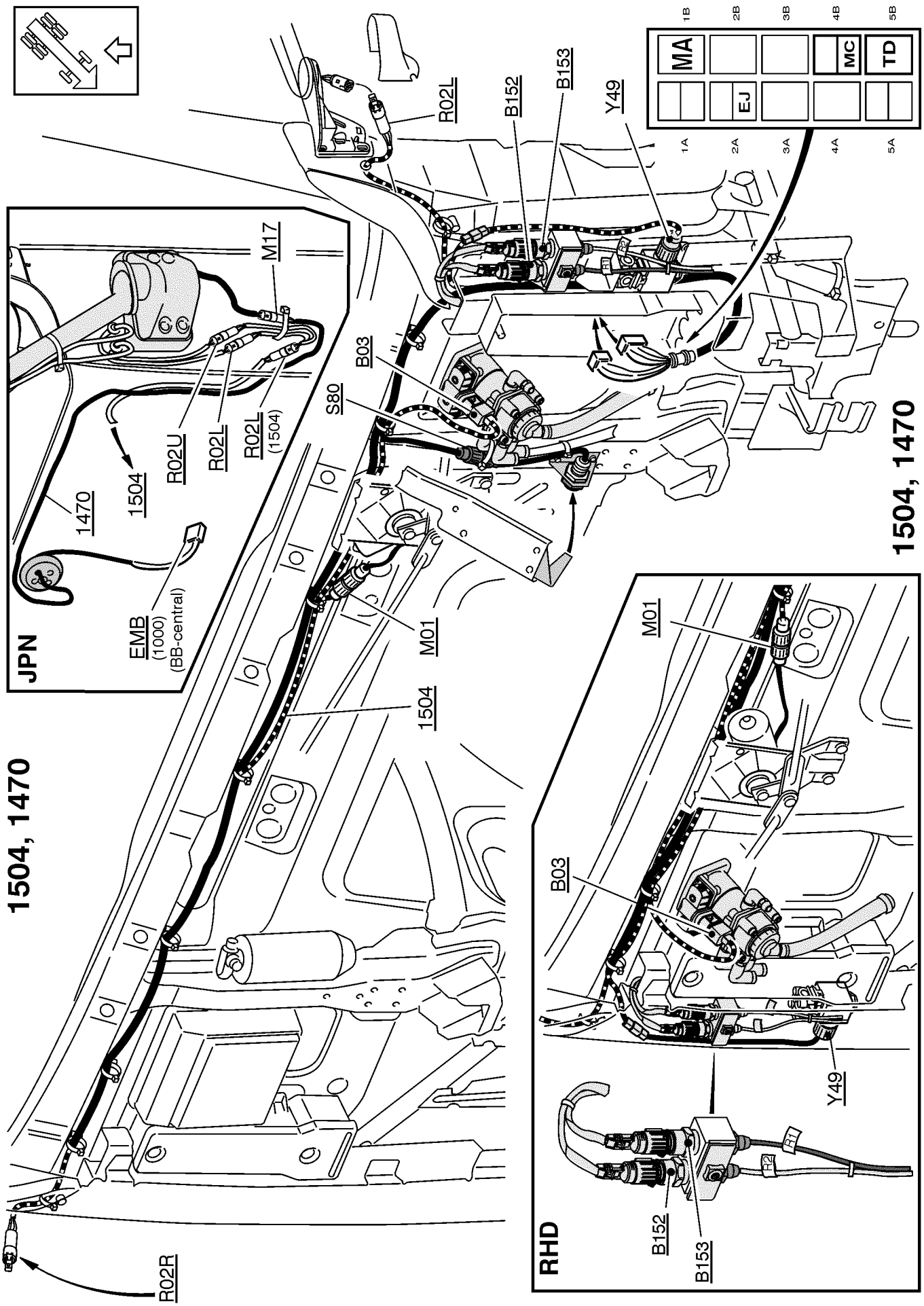

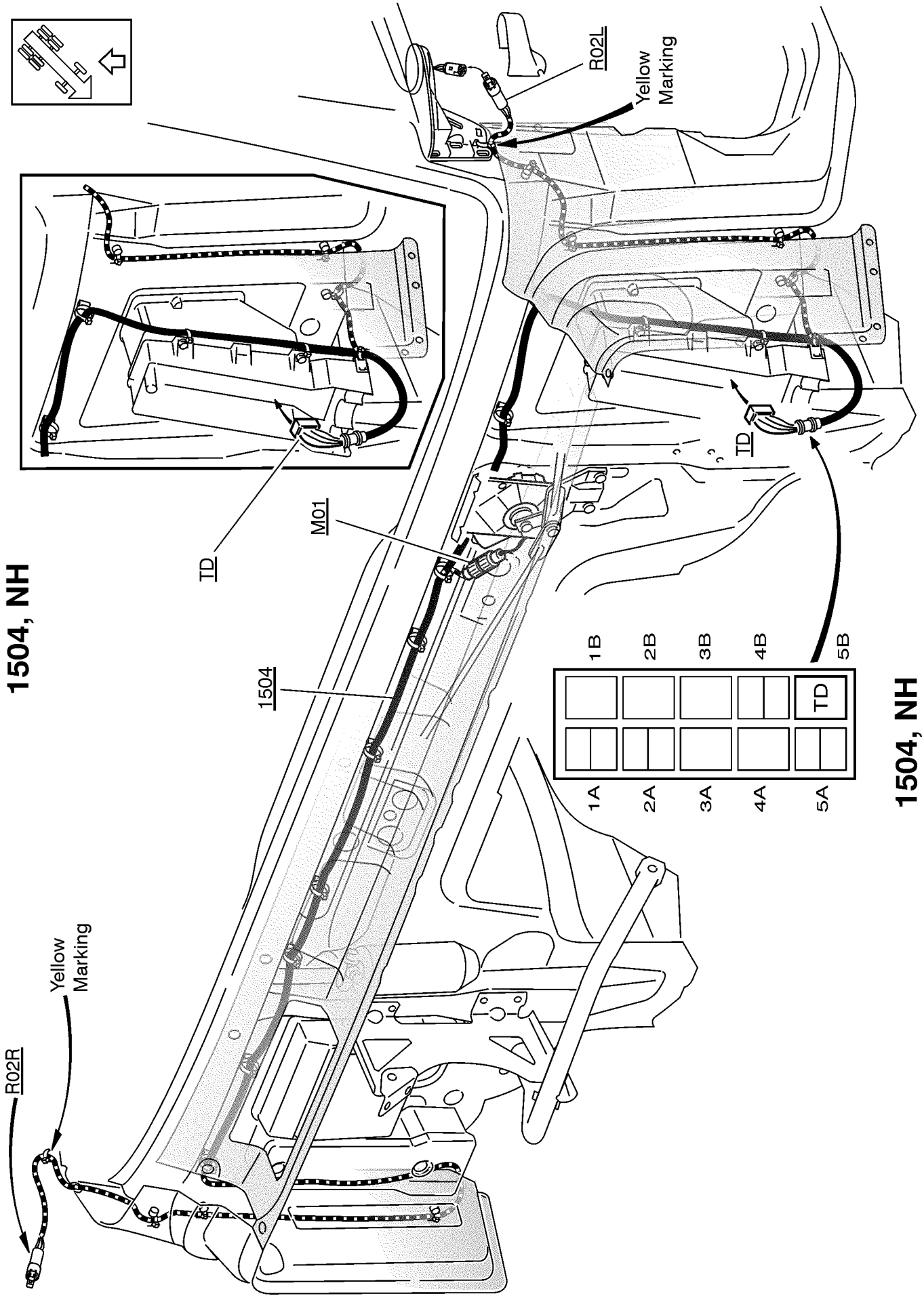
1504, NH
R02R
Yellow Marking
1504
M01
TD
R02L
Yellow Marking
TD
1B
2B
3B
4B
5B
TD
1A
2A
3A
4A
5A
1504, NH

https://truckmanualshub.com/

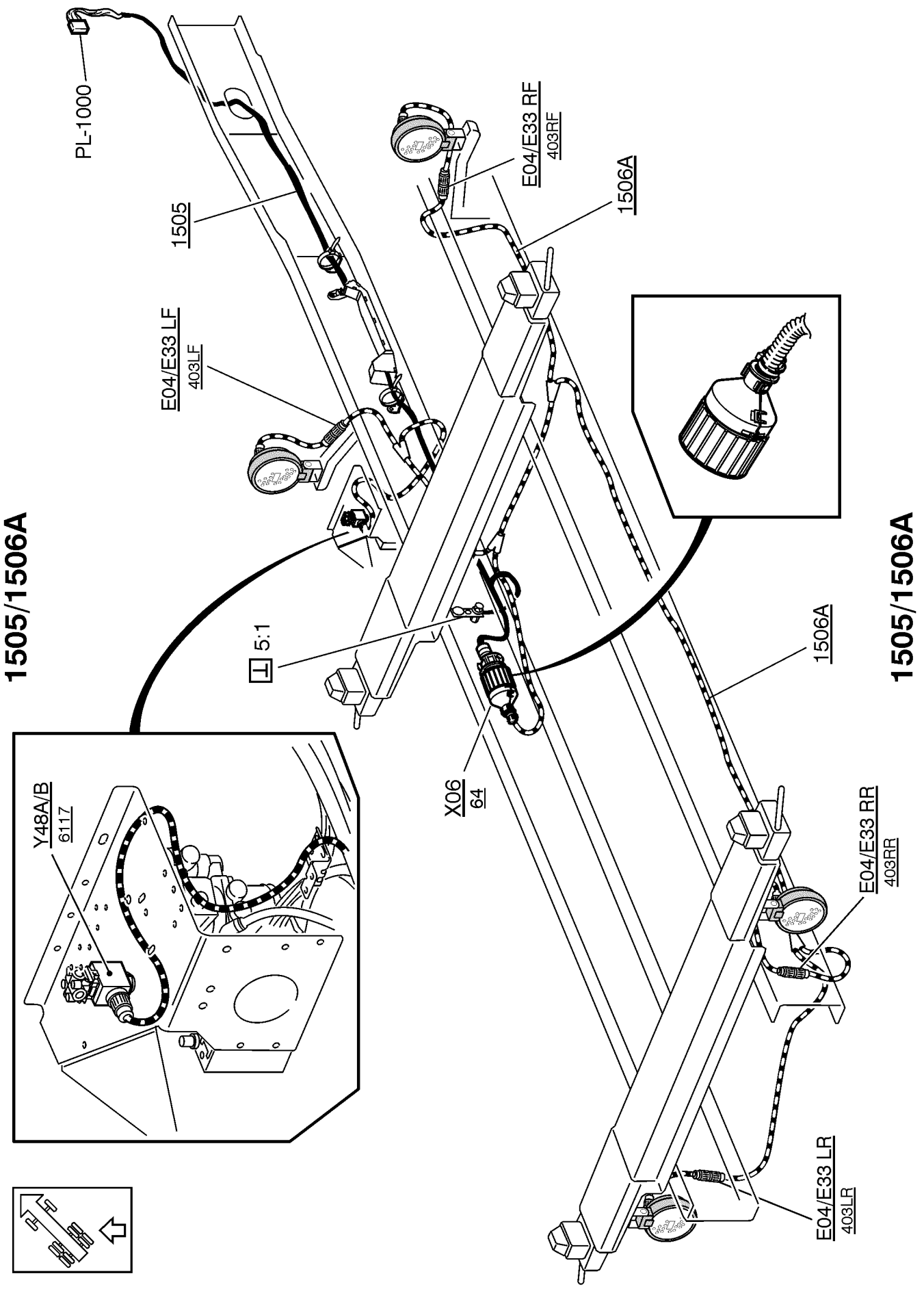

https://truckmanualshub.com/

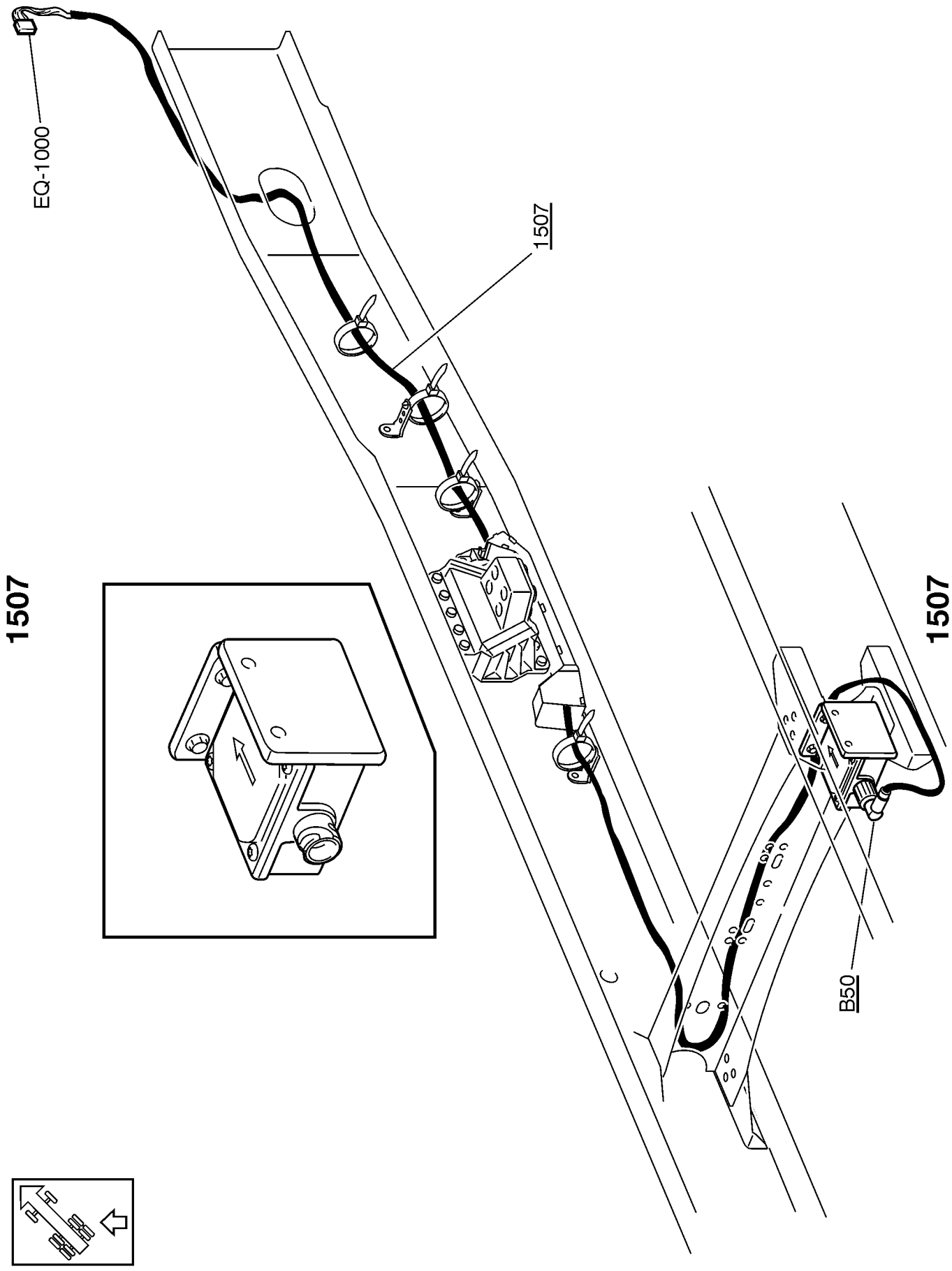

https://truckmanualshub.com/

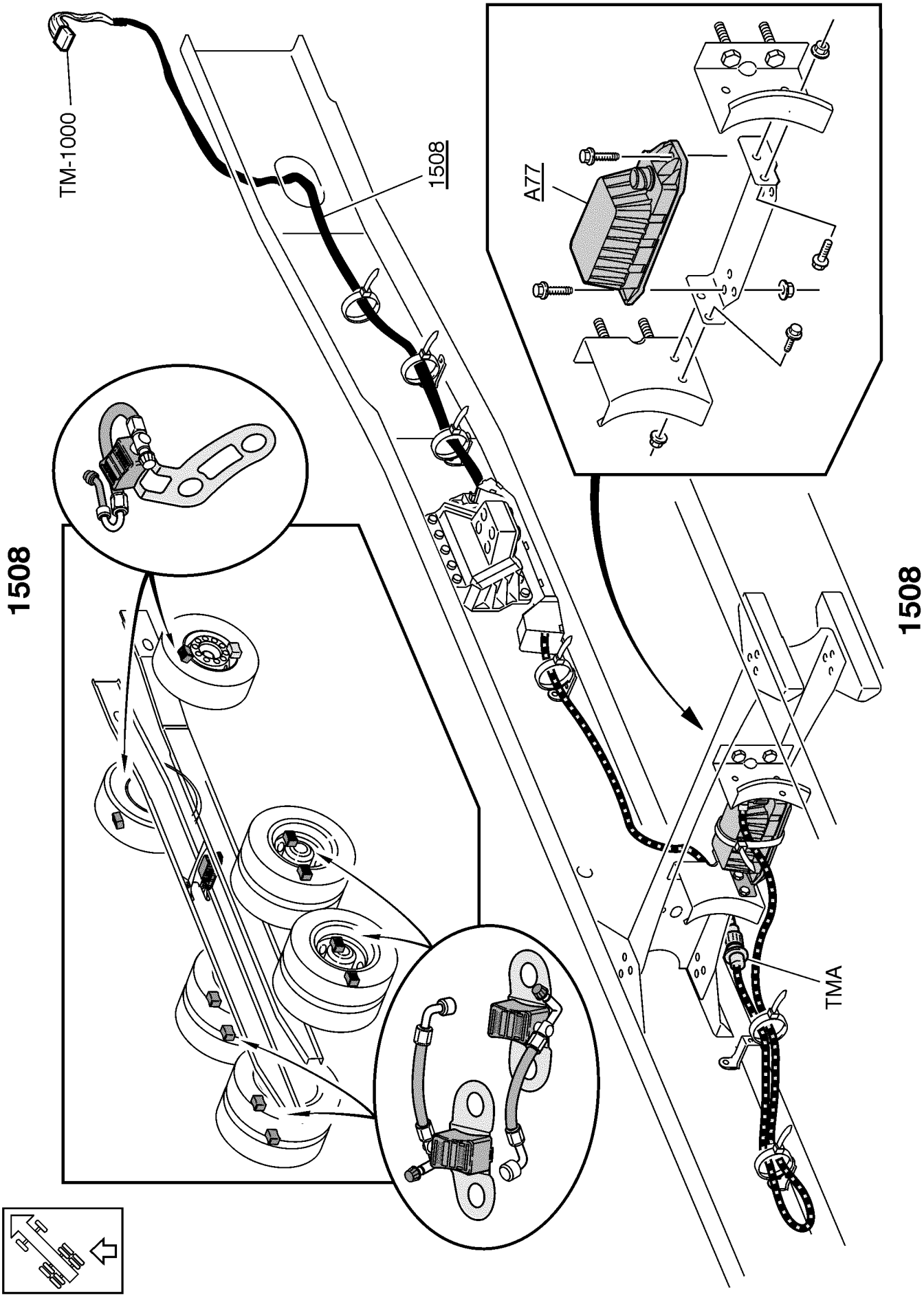

https://truckmanualshub.com/

Fuses

F1	TPM (Tyre pressure Monitoring)	(OA:2 A)
F2	Luggage compartment illumination	(IH:4 A)
F3	Loadlight, 5:th wheel lamp	(KE:0 A)
F4	Key switch, radiopos.	(AC:3 D)
F5	Instrumentation, (kl.30)	(BI:3 A)
F6	Air dryer	(BA:1 B)
F7	Vehicle ECU, immobiliser	(BA:1 B)
F8	Instrumentation, TPM (Tyre Pressure Monitoring)	(BI:0 A/ OA:2 A)
F9	Range-, area-inhibitors	(BA:0 A)
F11	Gear selector ECU	(DB:1 B/ DC:1 B/ DM:0 B)
F12	Transmission ECU/retarder	(DB:1 B/ DM:1 B)
F13	Windscreen wiper	(GM:3 A)
F14	Cigarette lighter, centre section storage lamp	(IQ:2 A)
F15	Water separator heater and water drain	(CM:0 A)
F16	Differential lock, power take off	(DQ:0 A/ DU:1 A)
F17	LCM control	(GA:0 A)
F18	Horn, solenoid valve for air horn	(GQ:1 A)
F19	Climate unit, FMS gateway	(HG:0 A)
F20	Central locking, parking heater control	(IM:0 A)
F21	Fan, climate unit	(HY:0 A)
F22	Interior lamps	(IH:1 A)
F23	Air suspension	(FA:4 A)
F24	El. heated air dryer, parking heater ADR/TRS, el. heated mirrors	(FQ:0 A)
F25	Supply ABS/EBS trailer	(GG:4 A/ CP:4 A)
F26	Body builder fuse box	(ME:3 B)
F27	El. window winder lhs, el. heated mirrors	(AC:3 B)
F28	Supply ABS/EBS truck	(EE:0 A/ EI:0 A/ EO:2 A)
F29	Coffee maker	(ME:1 A)
F30	El. window winder, rhs	(AC:3 B)
F31	Main fuse for fuses 95–97	(AB:3 A)
F32	ECC climate unit	(HG:0 A)
F33	El. cab tilt	(KA:0 A)
F35	El. adjustable seat	(IA:2 A)
F36	Reverse lamp circuit trailer	(GB:4 D)
F37	Dynafleet	(AC:3 C)
F38	Instep lamps	(AC:3 B)
F39	El. adjustable rear view mirrors	(AC:3 B)
F40	Engine ECU	(CM:1 A)
F41	Engine solenoid valves, el. fuel pump	(CM:3 A)
F42	Engine preheating relay, cooling fan clutch	(CM:2 A)
F43	BBM (body builder module)	(BA:1 A)
F44	Voltage converter for radio, 12V outlet	(IR:0 A)
F45	Supplementary voltage converter, 12V outlet	(IR:1 A)
F46	Beacon warning light	(KM:0 A)
F47	ACC	(BE:2 A)
F48	ABS/EBS, EBS switches	(EE:0 A/ EI:0 A/ EO:0 A)
F49	Air suspension/A-ride/tag axle	(FA:3 A/ FK:1 A/ FI:0 A)
F50	Telephone	(IX:0 A)
F51	Hydraulic steered axle	(FO:1 A)
F52	Control circuit engine preheating, radio position relay	(AC:1 A)
F53	Light sign	(KI:1 A)
F54	Dynafleet, FMS gateway	(BU:0 A/ BX:0 A/ BY:1 A)
F55	SRS airbag, safety belt tensioner	(IS:0 A)
F56	Free	(ME:1 A)
F57	Gear selector ECU/retarder	(DB:0 A/ DC:0 A/ DM:1 B)
F58	ADR/TRS, D+ short circuit relay	(AB:2 A/ AE:4 B)
F59	Rear view camera	(IZ:0 A)
F60	Hydraulic steered axle, ISX-functions (AUS only)	(CP:1 A/ FO:1 A)
F61	Foldable rear view mirror arm, Japan, burglar alarm, Volvo link	(BY:2 A/ IF:0 A)
F62	Free	(ME:0 A)
F63	Free/ISX-functions (AUS only)	(CP:0 A)
F64	Free/ISX-functions (AUS only)	(CP:0 A)

https://truckmanualshub.com/

F65	Central lubrication system	(FU:0 A)
F66	Roof hatch	(IQ:0 A)
F67	Reading lamps, bedlamps	(IH:0 A)
F68	Refrigerator	(IQ:3 A)
F69	12-volt outlet	(IR:1 C)
F70	Trailer ABS/EBS, (kl.15)	(CP:4 A/ GG:3 A)
F71	Extra equipment	(ME:1 A)
F72	Headlamp level regulation system	(GU:0 A)
F73	Hydraulic steered axle	(FP:1 A)
F74	Headlamp high-pressure washer	(GM:1 A)
F75	El. heated seat	(IA:0 A)
F76	ADR/TRS, D+ short circuit relay .	(AE:4 B)
F89	Tachograph	(AB:4 D) (1435)
F90	12V converter, ABS trailer/info-module	(CP:3 C)
F91	Tachograph, ADR	(AE:0 D)
F93	Main (not main switch dependent)	(AB:3 D/ AE:0 D)
F95	Central door lock	(AB:3 B)
F96	Burglar alarm	(AB:3 B)
F97	Parking heater	(AB:3 B)
FM1	Fuse, main, preheating	(AA:1 B/ AE:2 B)
FM2	Fuse, main, bogie lift/extra equipment	(AA:1 B/ AE:1 B)
FM3	Fuse, main, cab and chassis	(AA:1 B/ AE:2 B)
FM4	Fuse, main, light, back-up	(AA:0 B/ AE:1 B)

Relays

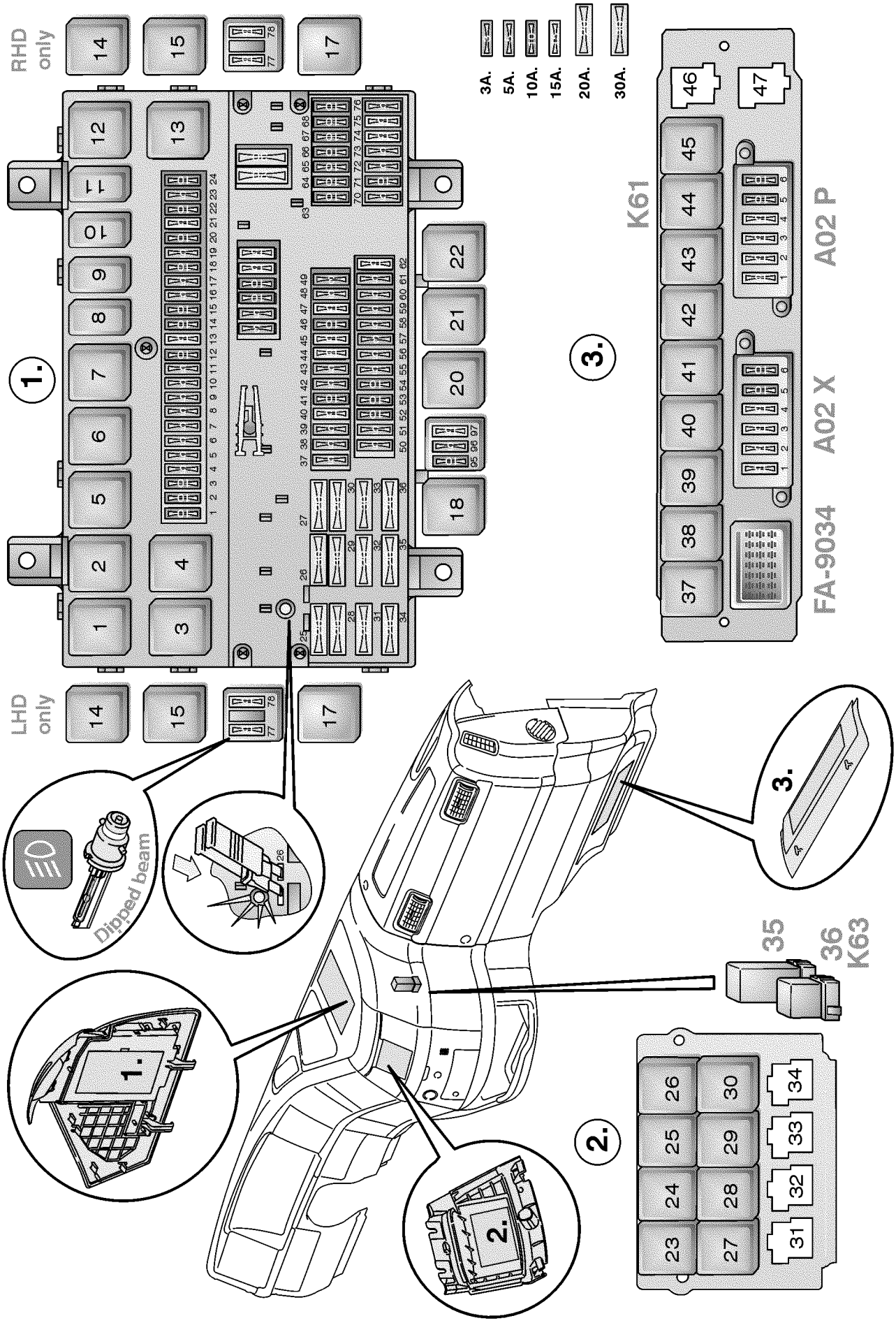

T3018310

https://truckmanualshub.com/

K1	Relay, starting switch, radio position	(AC:3 C)
K2	Relay, EMS (Engine Management System)	(BA:1 A)
K3	Relay, starter motor	(AA:2 B)
K3B	Relay, starter motor, Cummins	(CS:1 C)
K4	Relay, body builder fuse box (kl.15)	(ME:2 A)
K5	Relay, automatic transmission	(DB:1 A/ DC:0 A/ DM:0 A)
K6	Relay, fan climate unit	(HY:0 B)
K7	Relay, intermittent wiper	(GM:1 C)
K8	Relay, gearbox area inhibitor	(BA:1 A)
K9	Relay, interior lamps	(IH:1 A)
K10	Relay, fifth wheel-, working-light	(KE:0 C)
K11	Relay, air suspension	(FA:4 B)
K12	Relay, reverse light, trailer	(GB:4 D)
K13	Relay, alternator controlled	(AA:4 B)
K14	Time delay relay, bogie lift, A-ride	(FI:1 B/ FK:1 C)
K15	Time delay relay, bogie lift, A-ride, with axle load limiter	(FK:2 C)
K16	Relay, bogie lift, A-ride, with axle load limiter	(FK:1 C)
K18	Relay, hydraulic steered axle	(FP:1 B)
K20	Relay, D+ short-circuit, (ADR-trucks only)	(AE:4 D)
K21	Relay, el. adjustable seat	(IA:2 B)
K22	Relay, climate fan, 1:st speed (by parking heater)	(HY:1 B)
K23	Relay, cab tilt	(KA:0 C)
K24	Relay, central lubrication	(FU:0 B)
K25	Relay, light sign	(KI:1 C)
K26A	Relay, foldable rear view mirror arm, Japan	(IF:0 C)
K26B	Relay, foldable rear view mirror arm, Japan	(IF:1 C)
K27	Relay, gas discharge lamp, dipped beam, lhs	(GD:1 C)
K28	Relay, gas discharge lamp, dipped beam, rhs	(GD:1 C)
K30	Relay, beacon warning light	(KM:0 B)
K35	Relay, headlamp high pressure wash	(GM:0 B)
K37	Relay, parking light	(NA:1 C)
K38	Relay, body builder preparation, swapboby lamps	(NA:1 C)
K39	Relay, body builder preparation, plough light, spotlights	(NA:1 C)
K40	Relay, body builder preparation	(NA:2 C)
K41	Relay, body builder preparation, swapbody	(NA:3 C)
K42	Relay, body builder preparation, spotlights	(NI:1 B)
K43	Relay, body builder preparation, external start	(NC:3 C)
K45	Relay, body builder preparation, dual speed, extra foglight	(NU:2 B)
K48	Power relay, engine preheating	(CM:2 B)
K49	Power relay, bogie lift motor	(FI:3 B/ FK:3 D)
K51	Power relay, battery main switch	(AB:0 C)
K54	Relay, 12V ABS Trailer	(CP:2 D)
K58	Relay, speed limiter, Volvo link	(BY:3 B)
K59	Relay, engine shut off, Volvo link	(BY:4 B)
K60	Relay, trailer lock, Volvo link	(BY:3 D)
K61	Relay, auxiliary reverse light, truck	(NA:0 C)
K63	Relay, ACC Adaptive cruise control	(BE:2 B)

https://truckmanualshub.com/

Wiring harness illustration index

1000	Wiring harness, instruments	page 98
1006	Wiring harness, roof	page 108
1007	Wiring harness, floor	page 113
1018	Wiring harness, air conditioning	page 121
1020	Wiring harness, cowl	page 122
1025	Wiring harness, engine-chassi	page 124
1030	Wiring harness, engine	page 126
1037	Wiring harness, bogie lift	page 129
1040	Wiring harness, frame	page 130
1047	Wiring harness, roof beacon light	page 132
1056	Wiring harness, air dryer	page 134
1062	Wiring harness, parking heater, frame	page 135
1063	Wiring harness, trailer connections	page 136
1072	Wiring harness, air suspension chassis	page 138
1077	Wiring harness, side marking lamps	page 140
1083	Wiring harness, door	page 141
1086	Wiring harness, ABS chassis	page 143
1401	Wiring harness, solenoid valves	page 147
1403	Wiring harness, retarder	page 149
1435	Wiring harness, main switch	page 150
1436	Wiring harness, roof sign lighting	page 132
1458	Wiring harness, front wheel drive	page 153
1460	Wiring harness, cab-battery box	page 150
1470	Wiring harness, el.operated mirror arch	page 166
1472	Wiring harness, load indicator	page 154
1476	Wiring harness, cab-engine	page 124
1484	Wiring harness, floor gear shift selector	page 155
1493	Wiring harness, power steering	page 157
1494	Wiring harness, gearbox	page 159
1499	Wiring harness, cab-gearbox	page 159
1501	Wiring harness, upper front	page 164
1502	Wiring harness, lower front left	page 164
1503	Wiring harness, lower front right	page 165
1504	Wiring harness, firewall	page 166
1505	Wiring harness, body builder connections	page 168
1506	Wiring harness, demountable (swap-body)	page 168
1507	Wiring harness, ESP chassis	page 169
1508	Wiring harness, TPM	page 170

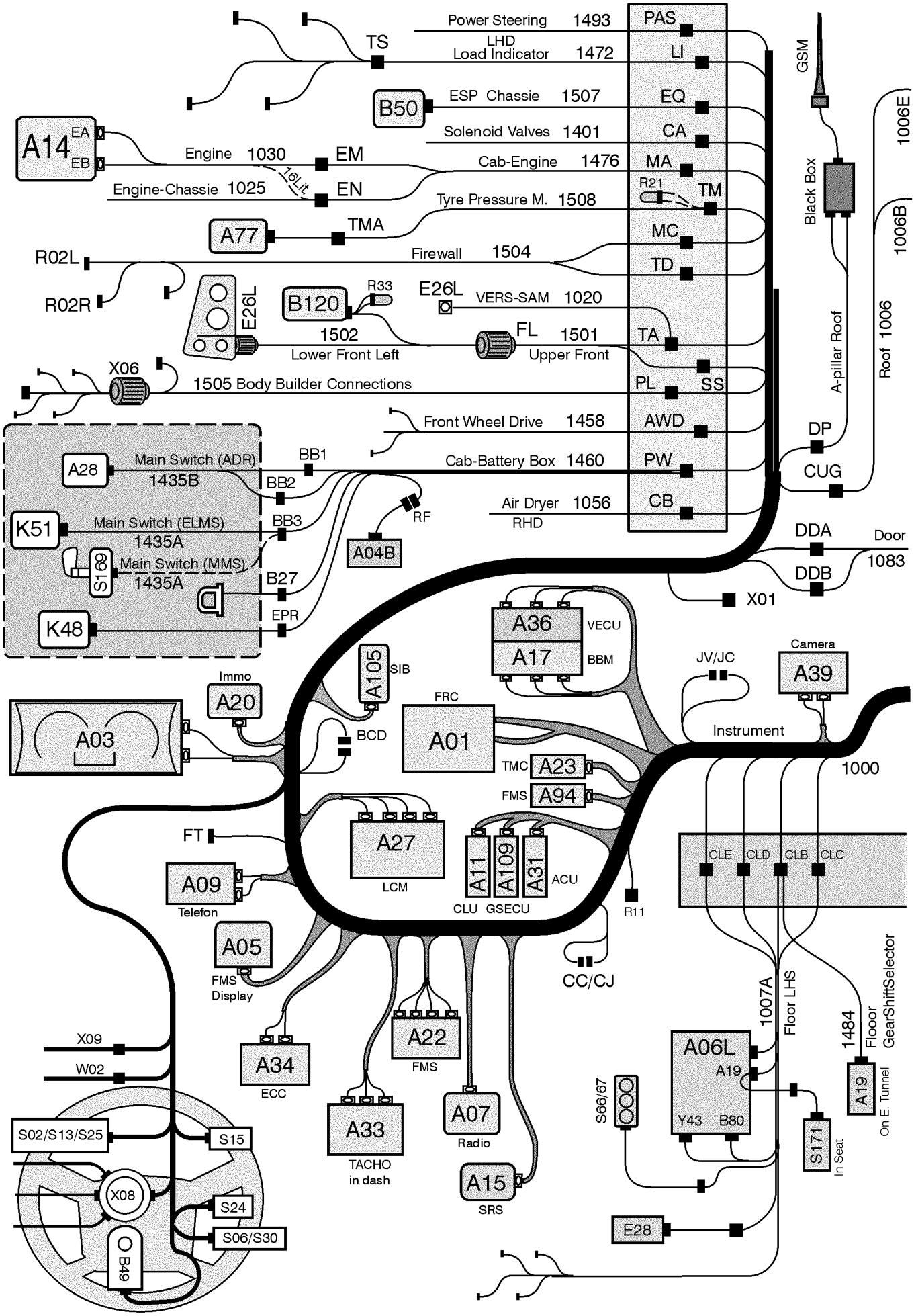
Power Steering 1493
LHD
Load Indicator 1472
TS
PAS
LI
ESP Chassie 1507
B50
EQ
Solenoid Valves 1401
CA
A14
EA
EB
Engine 1030
EM
Cab-Engine 1476
MA
Engine-Chassie 1025
16Lit.
EN
R21
TM
Tyre Pressure M. 1508
A77
TMA
MC
R02L
Firewall 1504
TD
R02R
E26L
B120
R33
E26L
VERS-SAM 1020
1502
Lower Front Left
FL 1501
Upper Front
TA
X06
1505 Body Builder Connections
PL
SS
Front Wheel Drive 1458
AWD
A28
Main Switch (ADR)
1435B
BB1
Cab-Battery Box 1460
PW
BB2
K51
Main Switch (ELMS)
1435A
BB3
RF
Air Dryer 1056
RHD
CB
A04B
S169
Main Switch (MMS)
1435A
B27
K48
EPR
GSM
Black Box
1006E
1006B
A-pillar Roof
Roof 1006
DP
CUG
DDA
Door
1083
DDB
X01
A36
VECU
A17
BBM
A105
SIB
Immo
A20
FRC
A01
JV/JC
Camera
A39
Instrument
A03
BCD
TMC
A23
FMS
A94
1000
FT
A27
LCM
A11
A109
A31
ACU
CLU
GSECU
CLE
CLD
CLB
CLC
A09
Telefon
R11
A05
FMS
Display
CC/CJ
1007A
Floor LHS
1484
Floor
GearShiftSelector
X09
W02
A34
ECC
A22
FMS
A06L
A19
Y43
B80
S66/67
A19
On E. Tunnel
S171
In Seat
A33
TACHO
in dash
A07
Radio
S02/S13/S25
S15
X08
S24
S06/S30
B49
A15
SRS
E28
T3018747

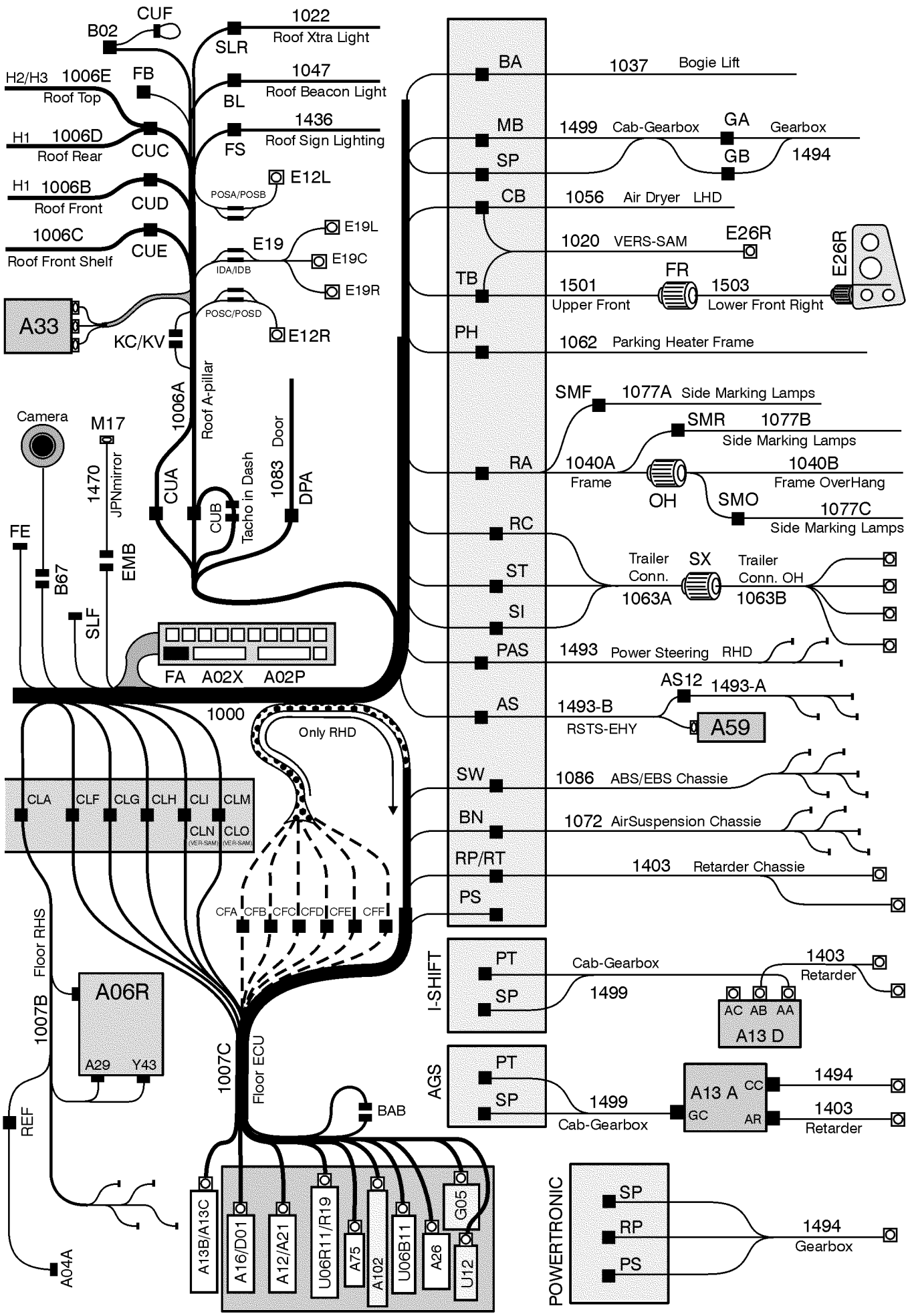
CUF
B02
SLR
1022
Roof Xtra Light
H2/H3
1006E
FB
Roof Top
BL
1047
Roof Beacon Light
H1
1006D
Roof Rear
CUC
FS
1436
Roof Sign Lighting
H1
1006B
Roof Front
CUD
E12L
POSA/POSB
1006C
Roof Front Shelf
CUE
E19
E19L
E19C
E19R
IDA/IDB
A33
KC/KV
POSC/POSD
E12R
1006A
Roof A-pillar
Camera
M17
1470
JPNmirror
CUA
CUB
Tacho in Dash
1083
Door
DPA
FE
B67
EMB
SLF
FA
A02X
A02P
1000
Only RHD
CLA
CLF
CLG
CLH
CLI
CLM
CLN
(VER-SAM)
CLO
(VER-SAM)
CFA
CFB
CFC
CFD
CFE
CFF
Floor RHS
1007B
A06R
A29
Y43
1007C
Floor ECU
REF
A04A
BAB
A13B/A13C
A16/D01
A12/A21
U06R11/R19
A75
A102
U06B11
A26
G05
U12
BA
1037
Bogie Lift
MB
1499
Cab-Gearbox
GA
Gearbox
SP
GB
1494
CB
1056
Air Dryer LHD
1020
VERS-SAM
E26R
TB
1501
Upper Front
FR
1503
Lower Front Right
PH
1062
Parking Heater Frame
SMF
1077A
Side Marking Lamps
SMR
1077B
Side Marking Lamps
RA
1040A
Frame
OH
1040B
Frame OverHang
SMO
1077C
Side Marking Lamps
RC
ST
Trailer
Conn.
SX
Trailer
Conn. OH
1063A
1063B
SI
PAS
1493
Power Steering RHD
AS12
1493-A
AS
1493-B
RSTS-EHY
A59
SW
1086
ABS/EBS Chassie
BN
1072
AirSuspension Chassie
RP/RT
1403
Retarder Chassie
PS
I-SHIFT
PT
SP
Cab-Gearbox
1499
1403
Retarder
AC
AB
AA
A13 D
AGS
PT
SP
1499
Cab-Gearbox
A13 A
CC
GC
AR
1494
1403
Retarder
POWERTRONIC
SP
RP
PS
1494
Gearbox
T301337

https://truckmanualshub.com/

Earth connections

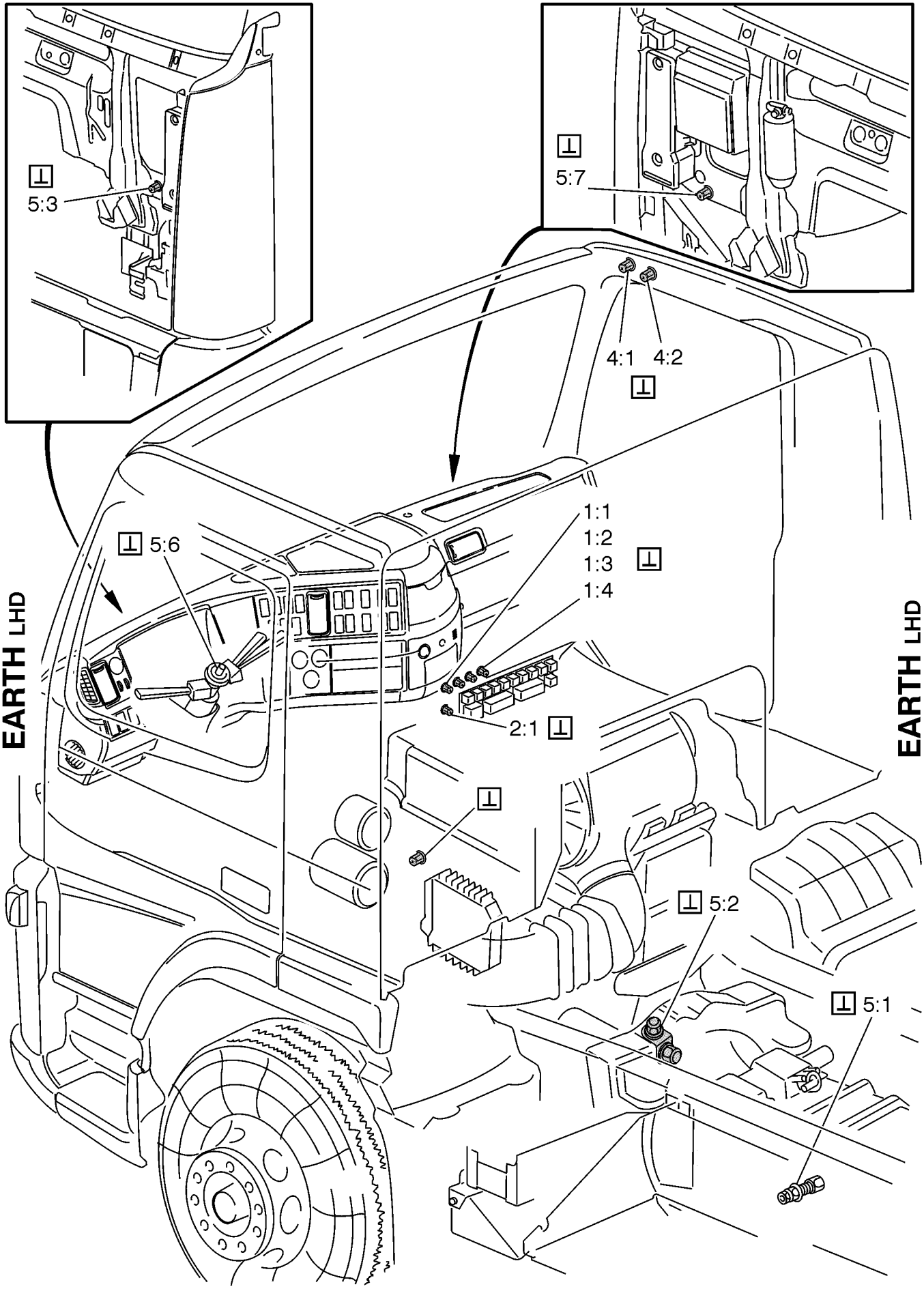

https://truckmanualshub.com/

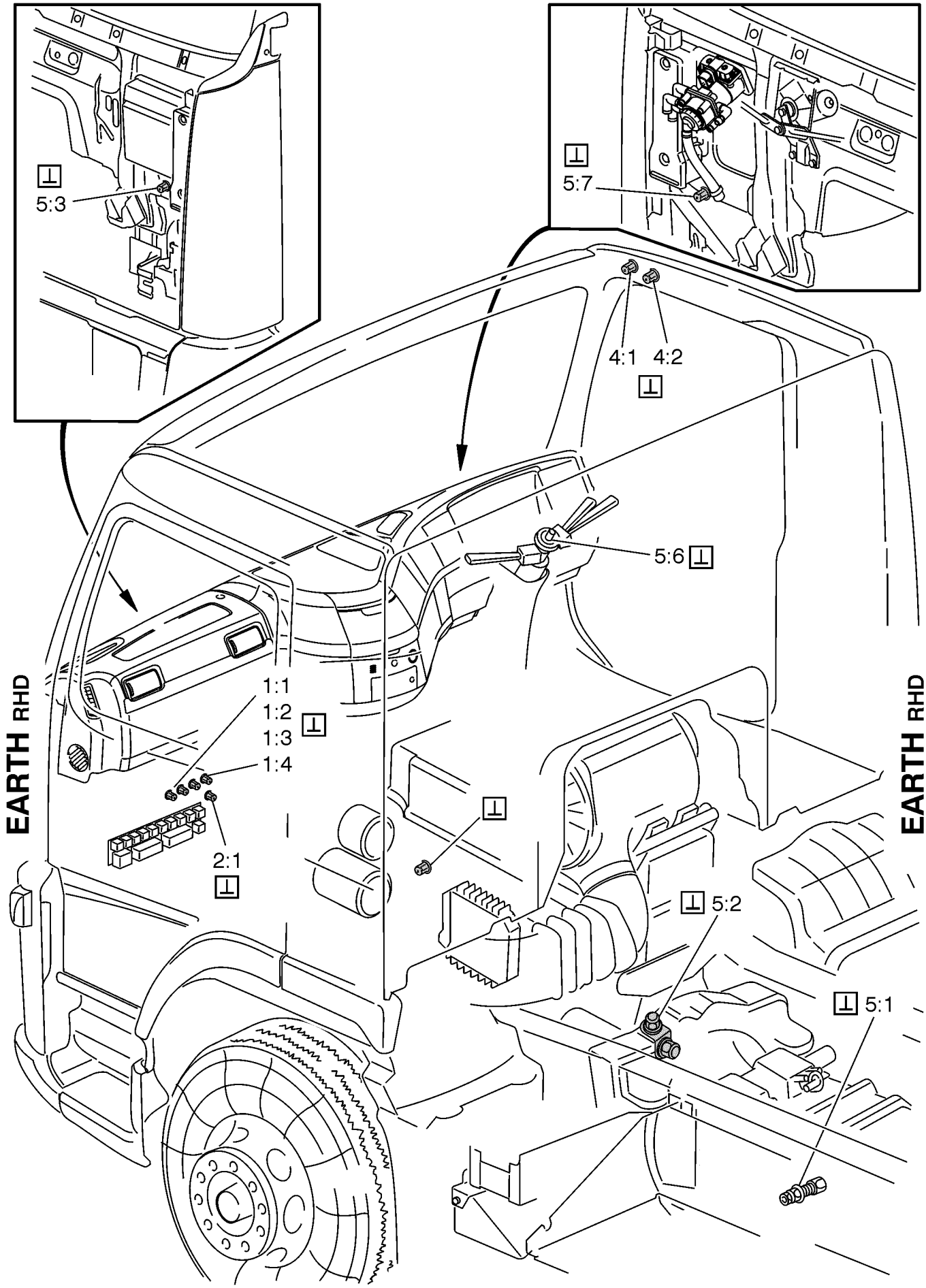

https://truckmanualshub.com/

List of earth connections

1:1	(IR:1 E)	4:1_5	(IH:0 E)	5:2	(AE:0 E)
1:1_A	(IR:1 E)	4:2_1	(BN:0 D)	5:2	(AE:2 E)
1:2_A	(BA:2 E)	4:2_1	(BN:1 D)	5:2	(AE:3 E)
1:2_B	(IS:0 E)	4:2_2	(HI:0 B)	5:3	(AA:3 E)
1:3	(AE:4 E)	4:2_3	(IQ:1 E)	5:4	(FI:3 D)
1:4	(AA:3 E)	4:2_4	(BN:1 D)	5:4	(FK:3 E)
1:4	(AC:2 D)	4:2_5	(KM:0 D)	5:6	(GQ:1 E)
1:4_B	(AA:4 E)	4:2_6	(NI:3 E)	5:7_1	(GE:1 D)
1:4_C	(HZ:1 D)	4:2_7	(NI:4 E)	5:7_2	(GH:2 D)
2:1_A	(CP:4 C)	5:1	(AA:0 E)	5:7_3	(GH:2 D)
2:1_C	(NI:0 E)	5:1	(AB:0 D)	5:7_4	(GG:2 C)
2:1_D	(ME:0 B)	5:1	(AB:2 D)	5:9_1	(AA:0 E)
2:1_E	(NA:2 D)	5:1	(AE:0 E)	5:9_1	(AB:0 D)
2:1_F	(BE:4 E)	5:1_1	(NA:4 D)	5:9_1	(AB:2 D)
4:1_1	(GA:1 E)	5:1_2	(NA:4 D)	5:9_1	(AE:0 E)
4:1_1	(GA:4 E)	5:2	(AA:0 E)	5:9_3	(AB:0 D)
4:1_2	(KI:2 B)	5:2	(AA:1 E)	5:9_3	(AB:2 D)
4:1_3	(KI:1 E)	5:2	(AA:2 E)		
4:1_4	(GA:0 E)	5:2	(AB:0 D)		
4:1_4	(IH:1 E)	5:2	(AB:2 D)		

https://truckmanualshub.com/

List of connectors

ADR1:1	(AE:1 C)
ADR1:2	(AE:1 C)
ADR2:1	(AE:1 C)
ADR2:2	(AE:1 C)
ADR3:1	(AE:2 C)
ADR3:2	(AE:2 C)
ADR4:1	(AE:2 C)
ADR4:2	(AE:2 C)
AG:1	(FO:2 D)
AG:2	(FO:2 D)
AG:3	(FO:2 D)
AG:4	(FO:2 D)
AR:1	(DE:1 D)
AR:2	(DE:0 C)
AR:3	(DE:0 C)
AR:4	(DE:0 C)
AR:5	(DE:1 C)
AR:6	(DE:1 C)
AR:7	(DE:1 C)
AS:1	(FO:1 C)
AS:2	(FO:1 C)
AS:4	(FO:1 B)
AS:5	(FO:1 B)
AS:6	(FO:2 B)
AS:7	(FO:3 B)
AS:8	(FO:3 B)
AS:9	(FO:1 E)
AS12:1	(FO:3 C)
AS12:2	(FO:3 C)
AS12:3	(FO:3 C)
AS12:4	(FO:3 C)
AS12:5	(FO:2 C)
AS12:6	(FO:2 C)
AS12:7	(FO:2 C)
AS12:8	(FO:2 C)
AS12:9	(FO:1 C)
AS12:10	(FO:0 B)
AS12:11	(FO:0 B)
AS12:12	(FO:1 D)
AWD:3	(DU:2 C)
AWD:4	(DU:2 C)
AWD:5	(DU:4 C)
AWD:6	(DU:4 C)
AWD:8	(DU:2 D)
B07_1:1	(BI:2 C)
B07_1:2	(BI:2 D)
BA:1	(FI:1 C)
BA:1	(FK:1 D)
BA:2	(FI:2 C)
BA:2	(FK:3 D)
BA:3	(FI:0 C)
BA:3	(FK:0 D)
BA:5	(FK:1 D)
BA:7	(FI:3 B)
BA:7	(FK:3 C)
BA:8	(FK:1 D)
BAB:1	(XA:4 D)
BAB:2	(XA:2 D)
BAB:3	(XA:3 D)
BAB:4	(XA:2 D)
BAB:5	(XA:3 D)
BAB:6	(XA:2 D)
BAB:7	(XB:3 D)
BAB:8	(XA:3 C)
BAB:9	(XA:2 C)
BAB:10	(XB:3 D)
BAB:11	(XB:2 D)
BAB:12	(XB:2 D)
BAB:13	(XB:3 D)
BAB:14	(XB:1 D)
BAB:15	(XB:1 D)
BAB:16	(XB:3 D)
BAB:17	(XB:4 D)
BAB:18	(XB:1 D)
BB1:1	(AE:1 A)
BB1:2	(AE:0 D)
BB1:3	(AE:1 E)
BB1:4	(AE:1 A)
BB1:5	(AE:2 D)
BB1:6	(AE:2 D)
BB1:7	(AE:0 D)
BB2:1	(AE:0 C)
BB2:2	(AE:1 C)
BB2:3	(AE:1 D)
BB2:4	(AE:1 D)
BB3:1	(AB:0 B)
BB3:2	(AB:1 C)
BB3:3	(AB:1 D)
BB3:3	(AB:2 C)
BB3:4	(AB:0 B)
BB3:5	(AB:3 C)
BB3:6	(AB:0 B)
BCD:1	(XA:2 B)
BCD:2	(XA:3 B)
BCD:3	(XB:0 B)
BCD:4	(XA:2 B)
BCD:5	(XA:2 B)
BCD:6	(IX:2 D)
BCD:7	(XA:3 B)
BCD:8	(XA:3 B)
BCD:9	(XB:0 B)
BCD:10	(XA:3 B)
BCD:11	(XA:4 B)
BCD:12	(IX:2 D)
BCD:13	(XA:2 B)
BCD:14	(XA:4 B)
BCD:15	(XB:0 C)
BCD:16	(XB:0 C)
BL:1	(KM:0 C)
BL:3	(KM:0 D)
BL_2:1	(KM:1 D)
BL_2:2	(KM:1 D)
BL:3:1	(KM:0 C)
BN:1	(FA:1 A)
BN:2	(FA:1 D)
BN:3	(FA:1 D)
BN:4	(FA:2 D)
BN:5	(FA:0 B)
BN:6	(FA:1 B)
BN:7	(FA:1 B)
BN:8	(FA:2 D)
BN:9	(FA:0 B)
BN:10	(FA:1 D)
BN:11	(FA:1 B)
BN:12	(FA:1 B)
BN:13	(FA:1 B)
BN:14	(FA:0 D)
BN:15	(FA:1 D)
BN:16	(FA:1 D)
BN:16	(FG:1 C)
BN:17	(FA:1 D)
BN:18	(FA:1 D)
BN:18	(FG:0 C)
BN:19	(FA:0 D)
BN:20	(FA:0 D)
BN:21	(FM:0 C)
CA:1	(DQ:0 D)
CA:2	(GB:3 B)
CA:3	(DU:1 C)
CA:4	(DQ:0 C)
CA:5	(GB:3 B)
CA:6	(EO:3 B)
CA:9	(DU:1 C)
CA:10	(EO:3 B)
CA:11	(EO:3 B)
CA:12	(EO:3 B)
CA:13	(EO:3 B)
CA:14	(EO:3 B)
CA:15	(EO:3 B)
CA:16	(DU:1 D)
CA:17	(FU:0 C)
CA:18	(FU:0 D)
CA:19	(NC:0 C)
CA:19	(NU:0 C)
CA:20	(NC:1 C)
CA:20	(NU:1 C)
CB:1	(FQ:0 B)
CB:2	(FQ:0 D)
CB:3	(BA:0 D)
CB:3	(FQ:2 B)
CB:4	(BA:0 D)
CB:5	(FQ:2 D)
CB:6	(FQ:2 D)
CC/CJ:1	(IZ:2 B)
CC/CJ:2	(IZ:2 B)
CC/CJ:3	(IZ:1 A)
CC/CJ:4	(IZ:1 B)
CC/CJ:5	(IX:2 A)
CC:1	(DE:3 D)
CC:3	(DE:3 C)
CC:4	(DE:2 C)
CC:5	(DE:3 C)
CC:6	(DE:2 C)
CC:9	(DE:2 C)
CC:10	(DE:2 C)
CC:11	(DE:2 C)
CC:12	(DE:2 D)
CE:1	(CP:1 A)
CE:2	(CP:1 A)
CE:3	(CP:1 A)
CE:4	(CP:1 A)
CE:5	(CP:1 A)
CE:6	(CP:1 A)
CE:7	(CP:1 A)
CFB:16	(FG:2 C)
CFB:18	(FG:2 C)
CFD:1	(DM:3 C)
CFD:2	(DM:2 C)
CFD:3	(DM:2 C)
CFD:4	(DM:2 C)
CFD:5	(DM:2 C)
CFD:6	(DM:3 C)
CFD:7	(DM:3 C)
CFE:1	(FG:1 C)
CFE:2	(FG:2 C)
CFE:3	(FG:2 C)
CFE:4	(FG:2 C)
CFE:5	(FG:2 C)

https://truckmanualshub.com/

CFE:6	(FG:2 C)	CLC:7	(HI:3 C)	CLG:6	(EE:3 B)
CFF:1	(CP:4 B)	CLC:8	(HI:1 C)	CLG:6	(EI:3 B)
CFF:2	(CP:3 B)	CLC:9	(HI:1 C)	CLG:6	(EO:1 C)
CFF:3	(CP:3 B)	CLC:10	(HI:4 C)	CLG:7	(EO:1 C)
CFF:4	(CP:4 C)	CLC:11	(HI:3 C)	CLG:8	(EO:1 C)
CFF:5	(CP:3 C)	CLC:12	(HI:2 C)	CLG:9	(EO:0 C)
CFF_2:1	(CP:4 B)	CLD:1	(IX:0 C)	CLG:10	(EO:0 C)
CFF_2:2	(CP:4 B)	CLD:2	(IX:0 C)	CLG:11	(EO:1 C)
CFF_2:3	(CP:3 B)	CLD:3	(IX:1 C)	CLG:12	(EO:1 C)
CFF_2:4	(CP:4 C)	CLD:4	(IX:1 C)	CLG:13	(EO:0 D)
CFF_2:5	(CP:3 C)	CLE:1	(IA:1 B)	CLG:14	(EO:0 D)
CLA:1	(IA:0 B)	CLE:2	(IA:3 B)	CLG:15	(EO:1 D)
CLA:2	(IA:1 B)	CLE:3	(BI:1 C)	CLG:16	(EO:3 C)
CLA:3	(BI:1 C)	CLE:4	(IA:1 E)	CLG:17	(EO:3 C)
CLA:4	(IA:0 D)	CLE:5	(IH:4 D)	CLG:18	(EO:3 C)
CLA:5	(IH:4 D)	CLE:6	(BI:3 C)	CLG:20	(EE:4 D)
CLA:6	(BI:3 D)	CLE:7	(BY:2 D)	CLG:20	(EI:4 C)
CLA:7	(BY:2 D)	CLE:7	(NK:0 D)	CLG:20	(EO:0 D)
CLA:7	(NK:0 D)	CLE:8	(IH:4 C)	CLG:21	(EI:0 C)
CLA:9	(AE:2 C)	CLE:9	(AE:1 C)	CLH:1	(FA:3 B)
CLA:10	(AE:2 C)	CLE:9	(FA:2 D)	CLH:1	(FK:2 B)
CLA:11	(AE:2 C)	CLE:10	(AE:1 C)	CLH:2	(FA:4 C)
CLA:12	(AE:2 C)	CLE:10	(FA:2 D)	CLH:3	(FA:2 B)
CLA:16	(IS:3 C)	CLE:11	(AE:1 C)	CLH:3	(FK:2 B)
CLA:17	(IS:3 C)	CLE:11	(FA:2 D)	CLH:4	(FG:0 C)
CLA:19	(IQ:3 C)	CLE:12	(AE:1 C)	CLH:4	(FK:2 B)
CLA:20	(BI:3 D)	CLE:12	(FA:2 D)	CLH:5	(FA:2 B)
CLA:21	(IQ:3 D)	CLE:13	(FA:3 D)	CLH:5	(FK:2 B)
CLB:1	(DB:1 C)	CLE:14	(FA:3 D)	CLH:6	(FA:2 D)
CLB:1	(DC:1 D)	CLE:15	(FA:3 D)	CLH:6	(FK:2 B)
CLB:2	(DB:1 C)	CLE:16	(FA:3 D)	CLH:7	(FA:2 D)
CLB:2	(DC:2 D)	CLE:17	(IS:2 C)	CLH:8	(FA:2 D)
CLB:3	(DB:0 C)	CLE:18	(IS:2 C)	CLH:9	(FA:2 D)
CLB:3	(DC:2 D)	CLE:19	(FA:3 D)	CLH:10	(FA:3 D)
CLB:4	(DB:0 C)	CLE:20	(BI:3 C)	CLH:11	(FA:3 D)
CLB:4	(DC:2 D)	CLF:1	(IR:1 B)	CLH:12	(FA:3 D)
CLB:5	(DB:0 B)	CLF:2	(IR:1 B)	CLH:13	(FM:0 B)
CLB:5	(DC:0 B)	CLF:3	(IR:1 C)	CLH:14	(FG:0 C)
CLB:5	(XB:2 E)	CLF:4	(IR:1 C)	CLH:15	(FG:0 C)
CLB:6	(DB:0 B)	CLF:5	(IR:0 B)	CLH:16	(FA:3 B)
CLB:6	(DC:0 B)	CLF:6	(IR:0 B)	CLH:17	(FA:3 B)
CLB:6	(XB:2 E)	CLF:7	(IR:0 C)	CLH:18	(FG:1 C)
CLB:7	(DB:0 D)	CLF:8	(IR:0 C)	CLH:19	(FG:1 C)
CLB:7	(DC:2 D)	CLF:9	(IR:0 C)	CLH:20	(FA:3 C)
CLB:8	(DB:0 D)	CLF:10	(DB:2 B)	CLH:21	(FA:3 D)
CLB:8	(DC:2 D)	CLF:10	(DM:1 C)	CLI:1	(EO:0 D)
CLB:9	(DB:0 C)	CLF:11	(DB:1 D)	CLI:2	(EO:1 D)
CLB:9	(DC:2 D)	CLF:11	(DM:0 D)	CLI:3	(EO:1 D)
CLB:11	(DB:3 C)	CLF:12	(DM:0 C)	CLI:4	(EO:1 D)
CLB:11	(DC:2 D)	CLF:13	(XA:3 D)	CLI:5	(EO:3 C)
CLB:12	(DC:2 D)	CLF:14	(XA:2 D)	CLI:6	(EO:3 C)
CLB:15	(DB:1 D)	CLF:15	(XB:3 D)	CLI:7	(EO:3.C)
CLB:15	(DC:2 D)	CLF:16	(XB:2 D)	CLI:8	(EO:3 C)
CLB_2:1	(DC:1 D)	CLF:17	(FG:1 C)	CLI:9	(EO:3 C)
CLB_2:2	(DC:2 D)	CLF:18	(XA:2 C)	CLI:10	(EO:3 C)
CLB_2:3	(DC:2 D)	CLF:19	(XA:2 C)	CLI:11	(EO:4 C)
CLB_2:4	(DC:2 D)	CLF:20	(XB:1 C)	CLI:12	(EO:4 C)
CLB_2:7	(DC:2 D)	CLF:21	(XB:1 C)	CLM:1	(BE:1 B)
CLB_2:8	(DC:2 D)	CLG:1	(EE:0 B)	CLM:2	(BE:1 B)
CLB_2:9	(DC:2 D)	CLG:1	(EI:0 B)	CLM:3	(BE:2 B)
CLB_2:11	(DC:2 D)	CLG:1	(EO:0 C)	CLM:4	(BE:1 C)
CLB_2:12	(DC:2 D)	CLG:2	(EE:0 B)	CLM:5	(BE:1 C)
CLB_2:15	(DC:2 D)	CLG:2	(EI:0 B)	CLM:6	(BE:3 C)
CLC:1	(HI:0 C)	CLG:2	(EO:2 B)	CLM:7	(BE:3 C)
CLC:2	(HI:0 C)	CLG:3	(EE:3 B)	CLM:8	(BE:3 C)
CLC:3	(HI:0 C)	CLG:3	(EI:2 B)	CLM:9	(FA:3 D)
CLC:4	(HI:2 C)	CLG:4	(EO:2 C)	CLN:1	(BY:1 B)
CLC:6	(HI:2 C)	CLG:5	(EO:2 C)	CLN:2	(BY:1 C)

https://truckmanualshub.com/

CLN:3	(BY:2 C)
CLN:4	(BY:2 C)
CLN:5	(BY:2 C)
CLN:6	(BY:3 C)
CLN:7	(BY:3 C)
CLN:8	(BY:4 C)
CLN:9	(BY:1 D)
CLN:10	(BY:1 D)
CLO:1	(BY:2 D)
CLO:2	(BY:3 D)
CLO:4	(BY:2 D)
CLO:5	(BY:2 D)
CUA:1	(GA:1 C)
CUA:2	(GA:4 C)
CUA:3	(IH:1 B)
CUA:4	(IH:0 B)
CUA:5	(IH:3 B)
CUA:6	(IH:3 C)
CUA:7	(IQ:0 B)
CUA:8	(KM:0 C)
CUA:9	(NI:1 B)
CUA:10	(NI:1 B)
CUA:11	(KI:1 C)
CUA:12	(IH:3 C)
CUA:13	(IU:2 D)
CUA:14	(IU:2 D)
CUA:15	(IU:2 D)
CUA:16	(IU:2 D)
CUA:17	(HI:1 C)
CUA:18	(HI:1 B)
CUA:19	(HI:1 C)
CUA:20	(HI:1 C)
CUA:21	(GB:0 B)
CUB/TACH:1	(BM:1 A)
CUB/TACH:2	(BM:3 C)
CUB/TACH:3	(BM:1 A)
CUB/TACH:4	(BM:2 A)
CUB/TACH:5	(BM:3 A)
CUB/TACH:6	(BM:3 C)
CUB/TACH:7	(BM:2 C)
CUB/TACH:8	(BM:2 C)
CUB/TACH:9	(BM:2 C)
CUB/TACH:10	(BM:2 C)
CUB/TACH:11	(IU:0 B)
CUB/TACH:12	(KI:1 C)
CUB/TACH:13	(IM:0 B)
CUB/TACH:14	(HI:2 B)
CUB/TACH:15	(HI:2 B)
CUB/TACH:16	(GC:3 B)
CUB/TACH:17	(GC:3 B)
CUB/TACH:18	(IH:3 A)
CUB:1	(BN:1 B)
CUB:2	(BN:3 C)
CUB:3	(BN:1 B)
CUB:4	(BN:3 B)
CUB:5	(BN:3 B)
CUB:6	(BN:3 C)
CUB:7	(BN:2 C)
CUB:8	(BN:2 C)
CUB:9	(BN:2 C)
CUB:10	(BN:2 C)
CUB:11	(BN:3 C)
CUB:11	(IU:0 B)
CUB:12	(KI:1 B)
CUB:13	(IM:0 B)
CUB:14	(HI:2 C)
CUB:15	(HI:1 B)
CUB:16	(GC:3 A)
CUB:17	(GC:3 B)
CUB:18	(IH:3 B)
CUB2/CUB:11	(IU:0 B)
CUB2/CUB:12	(KI:1 B)
CUB2/CUB:13	(IM:0 B)
CUB2/CUB:14	(HI:2 C)
CUB2/CUB:15	(HI:2 B)
CUB2/CUB:18	(IH:3 B)
CUC:1	(IH:3 C)
CUC:2	(IH:3 C)
CUC:3	(IH:1 B)
CUC:4	(IH:0 B)
CUC:5	(IH:3 B)
CUC:6	(IQ:1 C)
CUC:7	(IQ:0 C)
CUC:8	(IQ:1 C)
CUC:9	(IU:2 D)
CUC:10	(IU:2 D)
CUC:11	(IU:2 D)
CUC:12	(IU:2 D)
CUC:13	(HI:1 B)
CUC:14	(HI:1 B)
CUC:15	(HI:1 B)
CUC:16	(HI:1 B)
CUC:17	(IH:3 B)
CUC:18	(IH:0 D)
CUC:19	(HI:3 B)
CUC:20	(HI:3 C)
CUC:21	(HI:2 A)
CUD:1	(IH:1 B)
CUD:2	(IH:1 B)
CUD:3	(IH:1 D)
CUE:1	(IH:0 B)
CUE:3	(IH:0 D)
CUF:1	(HI:0 B)
CUF:2	(HI:0 B)
CUG:1	(NK:2 C)
CUG:2	(NK:2 C)
CUG:4	(NK:2 C)
CUG:5	(NK:3 C)
DDA:1	(IM:1 C)
DDA:2	(IE:0 B)
DDA:3	(IE:1 A)
DDA:4	(IE:2 B)
DDA:5	(IH:2 C)
DDA:6	(IE:3 B)
DDA:7	(IM:1 C)
DDA:8	(IM:1 C)
DDA:9	(IM:1 C)
DDA:10	(IU:1 D)
DDA:11	(IU:1 D)
DDA:12	(IH:2 C)
DDA:13	(IE:0 C)
DDA:14	(IE:1 C)
DDA:15	(IE:1 C)
DDB:1	(IE:1 C)
DDB:2	(IE:2 C)
DDB:3	(IE:2 C)
DDB:4	(IE:0 C)
DDB:5	(IE:0 B)
DDB:6	(IE:0 B)
DDB:7	(IE:1 B)
DDB:9	(IE:2 B)
DP:1	(BU:0 A)
DP:2	(BU:0 A)
DP:3	(BU:1 D)
DP:4	(BU:0 D)
DP:5	(BU:0 D)
DP:6	(BU:0 D)
DP:7	(BU:1 D)
DP:8	(BU:1 D)
DP:9	(BU:1 D)
DP:10	(BU:1 D)
DP:11	(BU:1 D)
DP:12	(BU:1 D)
DPA:1	(IM:2 C)
DPA:3	(IE:3 B)
DPA:4	(IE:3 B)
DPA:5	(IH:2 C)
DPA:6	(IE:3 B)
DPA:7	(IM:2 C)
DPA:8	(IM:2 C)
DPA:9	(IM:2 C)
DPA:10	(IU:1 D)
DPA:11	(IU:2 D)
DPA:12	(IH:2 C)
DS_L:1	(NU:2 C)
DS_L:2	(NU:2 D)
DS_R:1	(GQ:0 B)
DS_R:1	(NU:2 C)
DS_R:2	(GQ:0 C)
DS_R:2	(NU:2 D)
DZ:1	(BU:0 B)
DZ:2	(BU:1 B)
DZ:3	(BU:1 B)
E03_L-:1	(NI:2 D)
E03_L+:1	(NI:2 D)
E03_R-:1	(NI:2 D)
E03_R+:1	(NI:2 D)
E27:1	(GF:3 C)
E27:2	(GF:3 C)
E27:3	(GF:3 C)
E27:4	(GF:3 C)
E27:5	(GF:3 C)
E27:6	(GF:3 C)
E27:7	(GF:3 C)
E27_1:1	(GF:0 C)
E27_1:2	(GF:0 C)
E27_1:3	(GF:1 C)
E27_1:4	(GF:1 C)
E27_1:5	(GF:1 C)
E27_1:7	(GF:0 C)
EA:1	(CS:1 B)
EA:2	(CS:1 B)
EA:3	(CS:2 B)
EA:4	(CS:1 B)
EM:1	(CM:1 D)
EM:1	(CO:1 B)
EM:1	(CS:3 B)
EM:2	(CM:2 D)
EM:2	(CO:2 B)
EM:2	(CS:3 B)
EM:3	(CM:2 D)
EM:3	(CO:2 B)
EM:3	(CS:3 B)
EM:4	(CM:1 D)
EM:4	(CO:1 B)
EM:4	(CS:3 B)
EM:5	(CM:1 D)
EM:5	(CO:2 B)
EM:5	(CS:3 B)
EM:6	(CM:2 D)
EM:6	(CO:3 B)
EM:6	(CS:2 B)
EM:7	(CM:3 D)
EM:7	(CO:4 B)

https://truckmanualshub.com/

EM:8	(CS:2 B)
EM:9	(CM:1 D)
EM:9	(CO:1 B)
EM:9	(CS:3 B)
EM:10	(CM:0 D)
EM:10	(CO:3 B)
EM:10	(CS:3 D)
EM:11	(CM:2 D)
EM:11	(CO:0 B)
EM:12	(CM:0 D)
EM:12	(CO:4 B)
EM:12	(CS:2 B)
EMB:1	(IF:0 D)
EMB:2	(IF:1 D)
EN:1	(AA:3 D)
EN:1	(AE:3 D)
EN:2	(AA:3 D)
EN:2	(AE:3 D)
EN:3	(HG:0 D)
EN:3	(HY:2 D)
EN:4	(AA:2 D)
EPR:1	(CM:2 B)
EPR:3	(CM:3 B)
EPR:4	(CM:2 C)
EQ_A:1	(EO:4 B)
EQ_A:2	(EO:4 B)
EQ_A:3	(EO:4 B)
EQ_A:4	(EO:4 C)
EXT:1	(HZ:1 B)
EXT:2	(HZ:1 B)
FA:1	(BI:4 B)
FA:2	(FA:2 B)
FA:3	(FA:2 B)
FA:5	(GA:2 C)
FA:5	(NI:1 A)
FA:6	(BA:0 C)
FA:7	(BI:1 C)
FA:8	(GA:4 C)
FA:8	(NA:0 A)
FA:9	(GB:3 D)
FA:9	(NA:0 A)
FA:10	(GC:3 B)
FA:10	(NA:0 A)
FA:10	(NU:2 B)
FA:11	(GB:0 A)
FA:11	(NA:3 A)
FA:12	(BA:1 D)
FA:13	(GQ:2 C)
FA:14	(AA:2 A)
FA:16	(GG:1 A)
FA:17	(GG:1 A)
FA:18	(GG:1 A)
FA:19	(GG:1 A)
FA:20	(GG:0 A)
FA:21	(GG:0 A)
FB:1	(KI:2 A)
FB:3	(KI:2 B)
FE:1	(ME:1 B)
FE:1	(NC:0 B)
FE:1	(NU:0 A)
FE:2	(ME:1 B)
FE:2	(NC:0 B)
FE:2	(NU:0 A)
FE:3	(ME:1 B)
FE:3	(NC:1 B)
FE:3	(NU:0 A)
FE_B:1	(IF:1 A)
FE_B:2	(IF:1 A)
FE_B:3	(IF:1 A)
FE_BR:1	(IF:2 A)
FE_BR:2	(IF:2 A)
FE_BR:3	(IF:1 A)
FE2:1	(NC:1 B)
FE2:1	(NU:0 B)
FE2:2	(NC:0 B)
FE2:2	(NU:0 B)
FE2:3	(NC:1 B)
FE2:3	(NU:0 B)
FL:1	(GA:2 D)
FL:2	(GA:2 C)
FL:3	(GA:2 C)
FL:4	(NK:3 D)
FL:5	(NK:3 D)
FL:6	(GA:2 C)
FL:7	(GA:2 C)
FL:8	(GA:1 C)
FL:9	(GA:3 C)
FL:10	(GQ:1 C)
FL:11	(GQ:1 B)
FL:12	(GQ:1 B)
FL:13	(GU:0 D)
FL:14	(GU:0 D)
FL:15	(GU:0 D)
FL:16	(GQ:1 C)
FL:20	(BE:1 D)
FL:21	(BE:1 D)
FL:22	(BE:1 D)
FL:23	(BE:1 E)
FL:25	(GA:2 D)
FL:29	(KA:0 C)
FMS:1	(BX:1 D)
FMS:2	(BX:1 D)
FR:1	(GA:3 D)
FR:2	(GA:3 C)
FR:3	(GA:3 C)
FR:4	(NK:3 D)
FR:5	(NK:4 D)
FR:6	(GA:2 C)
FR:7	(GA:3 C)
FR:8	(GA:4 C)
FR:9	(GA:3 C)
FR:10	(GM:0 C)
FR:11	(GM:0 C)
FR:13	(GU:1 D)
FR:14	(GU:1 D)
FR:15	(GU:1 D)
FR:16	(GM:1 C)
FR:17	(BI:2 C)
FR:18	(BI:2 D)
FR:25	(GA:3 D)
FR:29	(KA:0 C)
FS:1	(KI:1 C)
FS:2	(KI:1 D)
FS:3	(KI:1 D)
FS_2:1	(KI:0 C)
FS_2:2	(KI:0 D)
FT:1	(IR:0 D)
FT:2	(IR:0 D)
FT:3	(IR:1 D)
GA:1	(GB:3 D)
GA:2	(BI:1 D)
GA:3	(BI:1 C)
GA:4	(BA:1 B)
GA:5	(BA:0 B)
GA:6	(BA:0 C)
GA:7	(BA:0 C)
GB:1	(BI:2 C)
GB:2	(BI:2 D)
GB:3	(BM:2 D)
GB:4	(BM:2 D)
GB:5	(BM:2 D)
GB:6	(BM:2 D)
GC:1	(DE:0 B)
GC:2	(DE:0 B)
GC:3	(DE:0 B)
GC:4	(DE:0 B)
GC:7	(DE:2 B)
GC:8	(DE:2 B)
GC:10	(DE:3 E)
GC:11	(DE:0 B)
GC:12	(DE:0 C)
GD:2	(HZ:1 C)
IDA:1	(GA:1 C)
IDB:1	(GA:0 D)
IS:1	(DE:3 B)
IS:2	(DE:3 B)
IS:3	(DE:2 C)
IS:4	(DE:2 C)
JV/JC:1	(DB:0 D)
JV/JC:2	(KA:1 D)
JV/JC:3	(DQ:1 B)
JV/JC:4	(AE:3 B)
JV/JC:5	(AE:3 B)
JV/JC:6	(AE:3 B)
JV/JC:7	(AC:1 D)
JV/JC:7	(AE:4 D)
JV/JC:8	(CP:1 B)
JV/JC:8	(HI:3 D)
JV/JC:9	(AA:3 B)
JV/JC:9	(BA:0 C)
JV/JC:10	(FU:0 D)
JV/JC:11	(BA:3 C)
JV/JC:12	(BA:3 D)
JV/JC:13	(IM:2 C)
JV/JC:15	(BU:0 B)
JV/JC:16	(IM:2 A)
JV/JC:17	(HP:0 D)
JV/JC:18	(KM:1 C)
JV/JC:19	(BI:2 D)
JV/JC:20	(BU:1 B)
JV/JC:21	(IX:2 B)
KV/KC:1	(GB:0 B)
KV/KC:2	(GB:0 B)
KV/KC:3	(GB:0 B)
LI:1	(FG:0 B)
LI:2	(FG:0 B)
LI:3	(FG:0 B)
LI:4	(FG:1 B)
LI:5	(FG:1 B)
LI:6	(FG:1 B)
MA:1	(CS:2 A)
MA:1	(HG:0 C)
MA:1	(HY:2 D)
MA:2	(AA:2 C)
MA:2	(CS:1 A)
MA:3	(CM:2 C)
MA:3	(CS:3 A)
MA:4	(CM:2 C)
MA:5	(CM:1 C)
MA:5	(CS:3 A)
MA:6	(CS:3 A)
MA:7	(CM:2 C)
MA:7	(CS:2 A)
MA:8	(CM:2 C)

https://truckmanualshub.com/

MA:9	(AC:4 D)
MA:9	(AE:4 D)
MA:11	(CM:1 C)
MA:11	(CP:0 A)
MA:11	(CS:3 A)
MA:12	(CM:0 C)
MA:12	(CS:4 A)
MA:13	(AA:3 D)
MA:13	(AE:3 D)
MA:13	(CS:1 A)
MA:14	(CM:3 C)
MA:15	(BA:0 D)
MA:15	(CM:1 C)
MA:15	(CP:0 A)
MA:15	(CS:3 A)
MA:16	(BI:0 D)
MA:16	(CS:1 A)
MA:17	(CM:0 C)
MA:17	(CU:0 C)
MA:19	(CP:0 A)
MA:19	(CS:2 B)
MA:20	(CP:0 A)
MA:20	(CS:2 A)
MB:1	(BI:2 D)
MB:2	(BA:0 C)
MB:4	(BA:1 B)
MB:5	(BI:2 C)
MB:8	(BI:1 D)
MB:9	(BA:0 B)
MB:14	(BI:1 C)
MB:15	(GB:3 D)
MB:16	(BA:0 C)
MC:1	(EO:0 D)
MC:2	(EO:1 D)
MC:3	(EO:1 D)
MC:4	(EO:1 D)
MC:5	(EO:1 D)
MC:6	(NU:2 C)
MC:7	(NU:2 D)
MC:8	(NK:1 C)
MC:9	(NK:1 D)
MOT:1	(HZ:2 C)
MOT:2	(HZ:2 C)
MOT:3	(HZ:1 C)
MOT:4	(HZ:2 C)
MP:1	(CO:3 C)
MT:1	(CS:1 C)
MT:2	(CS:1 C)
MT:3	(CS:3 D)
MT:5	(CS:2 D)
MT:6	(CS:2 D)
MT:7	(CS:2 D)
MT:8	(CS:2 D)
MT:9	(CS:4 B)
MT:10	(CS:4 B)
OH:1	(GE:1 B)
OH:2	(GE:2 B)
OH:3	(GE:1 B)
OH:4	(GE:2 B)
OH:9	(GE:1 B)
OH:13	(GE:1 B)
OH:14	(GE:2 B)
OH:17	(GE:1 B)
OH:18	(GE:3 B)
OH:24	(GE:1 D)
PAS:1	(FP:0 C)
PAS:2	(FP:1 C)
PAS:3	(FP:1 C)
PAS:6	(FP:0 D)
PH_1:1	(HM:0 B)
PH_1:2	(HM:0 B)
PH_1:3	(HM:2 B)
PH_1:4	(HM:1 B)
PH_1:5	(HM:2 B)
PH_1:6	(HM:2 C)
PH_1:7	(HM:2 D)
PH_1:8	(HM:0 D)
PH_1:9	(HM:0 D)
PH_1:10	(HM:3 D)
PH_1:11	(HM:1 B)
PH_2:1	(HP:0 B)
PH_2:2	(HP:0 C)
PH_2:3	(HP:0 D)
PL:1	(NC:3 C)
PL:2	(NA:1 C)
PL:3	(NA:1 C)
PL:4	(NA:1 C)
PL:5	(NA:2 C)
PL:6	(NA:2 C)
PL:7	(NC:1 C)
PL:7	(NU:1 C)
PL:8	(NA:4 C)
PL:9	(NC:1 C)
PL:9	(NU:1 C)
PL:10	(NC:2 C)
PL:10	(NU:2 C)
PL:11	(NA:0 C)
PL:12	(NA:1 C)
PL:13	(NC:2 C)
PL:13	(NU:1 C)
PL:14	(NC:2 C)
PL:14	(NU:1 C)
PL:15	(NC:2 C)
PL:15	(NU:2 C)
PL:16	(NC:2 C)
PL:16	(NU:2 C)
PL:17	(NC:2 C)
PL:17	(NU:2 C)
PL:18	(NA:3 C)
PL:19	(NC:3 C)
PL:20	(NC:3 C)
PL:20	(NU:2 C)
PL:21	(NC:3 C)
PL:21	(NU:3 C)
PS:1	(DI:0 C)
PS:2	(DI:0 C)
PS:3	(DI:0 C)
PS:4	(DI:0 C)
PS:5	(DI:0 C)
PS:6	(DI:0 C)
PS:7	(DI:1 C)
PS:8	(DI:1 C)
PS:9	(DI:1 C)
PS:14	(DI:1 C)
PS:15	(DI:1 C)
PS:16	(DI:1 C)
PS:17	(DI:1 C)
PS:18	(DI:1 C)
PS:19	(DI:1 C)
PS:20	(DI:1 C)
PS:21	(DI:1 C)
PT:1	(DE:0 B)
PT:1	(DN:1 B)
PT:2	(DE:0 B)
PT:2	(DN:1 B)
PT:3	(DE:0 B)
PT:3	(DN:1 B)
PT:4	(DE:0 B)
PT:4	(DN:1 B)
PT:6	(DE:0 B)
PT:6	(DN:0 B)
PT:7	(DE:0 D)
PT:7	(DN:0 B)
PT:8	(DN:0 B)
PT:9	(DN:0 B)
PW:1	(AB:4 C)
PW:2	(AB:3 C)
PW:3	(AE:0 C)
PW:4	(AE:1 C)
PW:5	(AE:1 D)
PW:6	(AE:1 D)
PW:7	(AE:2 D)
PW:8	(AE:2 D)
PW:9	(BI:2 D)
PW:10	(BI:2 C)
PW:11	(BI:2 C)
PW:12	(GB:0 D)
PW:13	(AB:2 B)
PW:14	(AE:2 D)
PW:15	(CM:3 B)
PW:16	(CM:2 B)
PW:17	(CM:2 C)
PW:18	(AB:0 B)
PW:19	(IQ:3 C)
PW:20	(IQ:3 D)
PW:21	(AB:0 B)
RA:1	(GC:2 E)
RA:2	(GC:1 B)
RA:3	(GC:1 B)
RA:4	(GC:1 B)
RA:5	(GC:2 B)
RA:6	(GC:2 B)
RA:7	(GC:1 B)
RA:8	(GC:1 B)
RA:9	(GC:2 B)
RA:10	(GC:2 B)
RA:11	(GC:2 B)
RA:12	(BI:2 C)
RA:13	(BI:2 D)
RA:14	(DU:3 C)
RA:15	(HI:0 C)
RA:15	(HM:0 D)
RA:16	(HI:0 C)
RA:16	(HM:0 D)
RA:17	(DU:3 C)
RA:19	(BY:2 D)
RC:1	(BY:3 D)
RC:2	(GG:0 B)
RC:2	(GK:0 A)
RC:3	(GG:0 B)
RC:3	(GK:1 A)
RC:4	(GG:0 B)
RC:4	(GK:1 A)
RC:5	(GG:0 B)
RC:5	(GK:1 A)
RC:6	(GG:0 B)
RC:6	(GK:1 A)
RC:7	(GG:1 B)
RC:8	(BY:3 D)
RC:9	(GG:1 B)
RC:10	(GG:1 B)
RC:10	(GK:1 A)
RC:11	(GG:1 B)
RC:12	(GG:1 B)

https://truckmanualshub.com/

RC:14	(GG:1 B)
RC:15	(GC:0 B)
RC:16	(GC:2 B)
RC:17	(GG:0 B)
RC:18	(GG:0 B)
RC:19	(GK:1 A)
RC:19	(KE:0 C)
RC:20	(GK:1 A)
RC:20	(KE:0 D)
RC:21	(CP:3 A)
RC:21	(GK:1 A)
RC_2:2	(GH:1 B)
RC_2:3	(GH:1 B)
RC_2:4	(GH:1 B)
RC_2:5	(GH:1 B)
RC_2:6	(GH:1 B)
RC_2:7	(GH:1 B)
RC_2:9	(GH:1 B)
RC_2:10	(GH:1 B)
RC_2:11	(GH:1 B)
RC_2:12	(GH:1 B)
RC_2:14	(GH:0 B)
RC_2:17	(GH:0 B)
RC_2:18	(GH:0 B)
RC_2:19	(GH:0 B)
RC_2:20	(GH:0 B)
REF:1	(IQ:3 C)
REF:2	(IQ:3 D)
REV:1	(NU:2 C)
RF:1	(IQ:3 C)
RF:4	(IQ:3 D)
RP:1	(DI:2 C)
RP:2	(DI:2 C)
RP:3	(DI:2 C)
RP:4	(DI:2 C)
RP:5	(DI:2 C)
RP:6	(DI:2 C)
RP:7	(DI:2 C)
RP:8	(DI:2 B)
RP:9	(DI:2 B)
RT:1	(DM:3 C)
RT:2	(DM:2 C)
RT:3	(DM:2 C)
RT:4	(DM:2 C)
RT:5	(DM:2 C)
RT:6	(DM:3 C)
RT:7	(DM:3 C)
SI:1	(GG:3 B)
SI:1	(GK:3 A)
SI:2	(GG:3 B)
SI:2	(GK:3 A)
SI:4	(GG:3 B)
SI:4	(GK:4 A)
SI:5	(GG:3 B)
SI:5	(GK:4 A)
SI_2:1	(GH:3 B)
SI_2:2	(GH:3 B)
SI_2:4	(GH:3 B)
SI_2:5	(GH:3 B)
SI_3:1	(CP:3 A)
SI_3:2	(CP:3 A)
SLF:1	(NI:0 D)
SLF:2	(NI:0 E)
SLR:1	(NI:1 C)
SLR:2	(NI:1 C)
SLR_2:1	(NI:1 C)
SLR_2:2	(NI:1 C)
SM_F:1	(GC:3 C)
SM_F:2	(GC:0 C)
SM_F:4	(GC:3 D)
SM_O:1	(GE:2 B)
SM_O:2	(GE:1 B)
SM_O:4	(GE:1 B)
SM_R:1	(GC:3 C)
SM_R:2	(GC:0 C)
SM_R:4	(GC:3 D)
SP:1	(BM:2 C)
SP:2	(BM:2 C)
SP:3	(BM:2 C)
SP:4	(BM:2 C)
SS:1	(BE:3 D)
SS:2	(BE:3 D)
SS:3	(BE:1 C)
SS:4	(BE:1 C)
ST:1	(GG:4 B)
ST:1	(GK:3 A)
ST_2:1	(GH:3 B)
ST_3:1	(CP:3 A)
SW_1:1	(EE:0 C)
SW_1:1	(EI:0 C)
SW_1:2	(EE:0 C)
SW_1:2	(EI:0 C)
SW_1:3	(EE:0 D)
SW_1:3	(EI:1 C)
SW_1:4	(EE:1 C)
SW_1:4	(EI:1 C)
SW_1:5	(EE:1 C)
SW_1:5	(Ei:1 C)
SW_1:6	(EE:1 D)
SW_1:6	(EI:1 C)
SW_1:7	(EE:2 C)
SW_1:7	(EI:2 C)
SW_1:8	(EE:2 C)
SW_1:8	(EI:2 C)
SW_1:9	(EE:2 D)
SW_1:9	(EI:2 C)
SW_1:10	(EE:3 C)
SW_1:10	(EI:3 C)
SW_1:11	(EE:3 C)
SW_1:11	(EI:3 C)
SW_1:12	(EE:3 D)
SW_1:12	(EI:3 C)
SW_1:13	(EE:0 C)
SW_1:13	(EI:0 C)
SW_1:14	(EE:0 C)
SW_1:14	(EI:0 C)
SW_1:15	(EE:1 C)
SW_1:15	(EI:1 C)
SW_1:16	(EE:1 C)
SW_1:16	(EI:1 C)
SW_1:17	(EE:2 C)
SW_1:17	(EI:2 C)
SW_1:18	(EE:2 C)
SW_1:18	(EI:2 C)
SW_1:19	(EE:3 C)
SW_1:19	(EI:3 C)
SW_1:20	(EE:3 C)
SW_1:20	(EI:3 C)
SW_2:1	(EO:3 D)
SW_2:10	(EO:3 D)
SW_2:11	(EO:4 D)
SW_2:12	(EO:4 D)
SW_2:13	(EO:3 D)
SW_2:14	(EO:3 D)
SW_2:15	(EO:4 D)
SW_2:2	(EO:3 D)
SW_2:3	(EO:1 D)
SW_2:4	(EO:1 D)
SW_2:5	(EO:2 D)
SW_2:6	(EO:2 D)
SW_2:7	(EO:2 D)
SW_2:8	(EO:2 D)
SW_2:9	(EO:3 D)
SX:1	(GG:1 C)
SX:1	(GK:2 C)
SX:2	(GG:1 C)
SX:3	(GG:3 C)
SX:3	(GK:3 C)
SX:4	(GG:0 C)
SX:4	(GK:2 C)
SX:5	(GG:1 C)
SX:6	(GG:0 C)
SX:6	(GK:2 C)
SX:7	(GG:3 C)
SX:7	(GK:3 C)
SX:8	(GG:3 C)
SX:8	(GK:3 C)
SX:10	(GG:0 C)
SX:10	(GK:2 C)
SX:11	(GG:0 C)
SX:11	(GK:2 C)
SX:12	(GG:0 C)
SX:12	(GK:2 C)
SX:15	(GG:3 C)
SX:15	(GK:3 C)
SX:18	(GG:1 C)
SX:20	(GG:0 C)
SX:21	(GG:0 C)
SX:24	(GG:1 C)
SX:24	(GK:3 C)
SX:25	(GG:1 C)
SX:29	(GG:1 C)
SX:30	(GG:4 C)
SX:30	(GK:3 C)
SX:31	(GG:2 C)
SX:31	(GK:2 C)
TA:1	(GA:2 D)
TA:2	(GA:2 C)
TA:3	(GA:2 C)
TA:4	(KA:0 C)
TA:5	(NK:3 C)
TA:6	(GA:2 C)
TA:7	(GA:2 C)
TA:8	(GA:1 C)
TA:9	(GA:3 C)
TA:10	(GQ:1 C)
TA:11	(GQ:1 B)
TA:12	(GA:2 D)
TA:13	(GU:0 C)
TA:14	(GU:0 C)
TA:15	(GU:0 C)
TA:16	(GQ:1 C)
TA:17	(NK:3 C)
TA:18	(GM:0 C)
TA:19	(GM:0 C)
TA_2:1	(GI:1 D)
TA_2:2	(GI:2 B)
TA_2:3	(GI:1 B)
TA_2:6	(GI:1 B)
TA_2:7	(GI:1 B)
TA_2:8	(GI:1 B)
TA_2:9	(GI:2 B)
TA_2:12	(GI:1 D)
TB:1	(GA:3 D)

https://truckmanualshub.com/

TB:2	(GA:3 C)	X02:1	(GK:3 E)	X04:3	(GK:2 E)
TB:3	(GA:3 C)	X02:2	(GG:3 E)	X04:4	(GG:2 E)
TB:4	(KA:0 C)	X02:2	(GK:3 E)	X04:4	(GK:2 E)
TB:5	(NK:3 C)	X02:3	(GG:3 E)	X04:5	(GG:2 E)
TB:6	(GA:2 C)	X02:3	(GK:3 E)	X04:5	(GK:2 E)
TB:7	(GA:3 C)	X02:4	(GG:3 E)	X04:6	(GG:2 E)
TB:8	(GA:4 C)	X02:4	(GK:3 E)	X04:6	(GK:2 E)
TB:9	(GA:3 C)	X02:5	(GG:3 E)	X04:6	(GG:2 E)
TB:10	(GM:0 C)	X02:5	(GK:3 E)	X04:7	(GK:2 E)
TB:11	(GM:0 C)	X02:6	(GG:3 E)	X04_2:1	(GH:2 D)
TB:12	(GA:3 D)	X02:6	(GK:3 E)	X04_2:2	(GH:2 D)
TB:13	(GU:1 C)	X02:7	(GG:3 E)	X04_2:3	(GH:2 D)
TB:14	(GU:1 C)	X02:7	(GK:3 E)	X04_2:4	(GH:2 D)
TB:15	(GU:1 C)	X02_2:1	(GH:3 D)	X04_2:5	(GH:2 D)
TB:16	(GM:1 C)	X02_2:2	(GH:3 D)	X04_2:6	(GH:3 D)
TB:17	(NK:4 C)	X02_2:3	(GH:3 D)	X04_2:7	(GH:3 D)
TB:18	(BI:2 D)	X02_2:4	(GH:3 D)	X05:1	(GG:3 E)
TB:19	(GQ:2 B)	X02_2:5	(GH:3 D)	X05:2	(GG:2 E)
TB:20	(GQ:0 C)	X02_2:6	(GH:3 D)	X05:3	(GG:2 E)
TB:21	(BI:2 D)	X02_2:7	(GH:3 D)	X05:4	(GG:2 E)
TB_2:1	(GI:3 D)	X03:1	(GG:0 E)	X05:5	(GG:3 E)
TB_2:2	(GI:3 B)	X03:2	(GG:0 E)	X05:7	(GG:3 E)
TB_2:3	(GI:3 B)	X03:3	(GG:1 E)	X06:1	(NC:3 D)
TB_2:6	(GI:2 B)	X03:4	(GG:1 E)	X06:2	(NA:1 D)
TB_2:7	(GI:3 B)	X03:5	(GG:0 E)	X06:3	(NA:1 D)
TB_2:8	(GI:2 B)	X03:6	(GG:0 E)	X06:4	(NA:1 D)
TB_2:9	(GI:3 B)	X03:7	(GG:0 E)	X06:5	(NA:2 D)
TB_2:12	(GI:3 D)	X03:8	(GG:1 E)	X06:6	(NA:2 D)
TB_2:18	(BI:0 E)	X03:9	(GG:1 E)	X06:7	(NC:1 D)
TB_2:21	(BI:0 D)	X03:10	(GG:1 E)	X06:7	(NU:1 D)
TD:1	(IE:0 C)	X03:11	(GG:1 E)	X06:8	(NC:4 C)
TD:2	(IE:0 D)	X03:12	(GG:1 E)	X06:9	(NC:1 D)
TD:3	(IE:0 C)	X03:13	(GG:1 E)	X06:9	(NU:1 D)
TD:4	(IE:1 C)	X03:14	(GG:0 E)	X06:10	(NC:2 D)
TD:5	(IE:1 C)	X03:15	(GG:0 E)	X06:10	(NU:2 D)
TD:6	(BI:3 C)	X03:2	(GG:0 E)	X06:11	(NA:0 D)
TD:7	(BI:3 C)	X03:3	(GG:1 E)	X06:12	(NA:1 D)
TD:8	(GM:3 D)	X03:4	(GG:1 E)	X06:13	(NC:2 D)
TD:9	(GM:3 C)	X03:5	(GG:0 E)	X06:13	(NU:1 D)
TD:10	(GM:3 C)	X03:6	(GG:0 E)	X06:14	(NC:2 D)
TD:11	(GM:2 C)	X03:7	(GG:0 E)	X06:14	(NU:1 D)
TD:12	(GM:2 C)	X03:8	(GG:1 E)	X06:15	(NC:2 D)
TD:13	(BI:3 D)	X03:9	(GG:1 E)	X06:15	(NU:2 D)
TD:15	(IE:1 C)	X03:10	(GG:1 E)	X06:16	(NC:2 D)
TD:16	(IE:1 D)	X03:11	(GG:1 E)	X06:16	(NU:2 D)
TD:17	(IE:1 C)	X03:12	(GG:1 E)	X06:17	(NC:2 D)
TD:18	(IE:2 C)	X03:13	(GG:1 E)	X06:17	(NU:2 D)
TD:19	(IE:2 C)	X03:15	(GG:0 E)	X06:18	(NA:3 D)
TD:20	(BI:3 C)	X03_2:1	(GH:1 D)	X06:19	(NA:3 D)
TD:21	(BI:3 C)	X03_2:2	(GH:1 D)	X06:20	(NC:3 D)
TDET:1	(GB:1 D)	X03_2:3	(GH:0 D)	X06:20	(NU:2 D)
TM:1	(OA:2 D)	X03_2:4	(GH:1 D)	X06:21	(NC:3 D)
TM:2	(OA:2 D)	X03_2:5	(GH:1 D)	X06:21	(NU:3 D)
TM:3	(OA:2 B)	X03_2:6	(GH:1 D)	X06:22	(NC:3 D)
TM:4	(OA:2 B)	X03_2:7	(GH:1 D)	X06:24	(NA:3 D)
TM:5	(OA:1 D)	X03_2:8	(GH:1 D)	X06:30	(NA:3 D)
TMA:1	(OA:2 C)	X03_2:9	(GH:1 D)	X06:31	(NA:4 D)
TMA:3	(OA:1 C)	X03_2:10	(GH:1 D)	X46:2	(BY:3 E)
TMA:5	(OA:2 B)	X03_2:11	(GH:1 D)	X46:3	(BY:2 E)
TMA:6	(OA:2 C)	X03_2:12	(GH:1 D)	X46:4	(BY:2 E)
TMA:7	(OA:2 B)	X03_2:13	(GH:1 D)	X46:5	(BY:3 E)
TS:1	(FG:0 A)	X03_2:14	(GH:0 D)	X46:6	(BY:3 E)
TS:2	(FG:0 A)	X03_2:15	(GH:0 D)	XA:1	(GB:0 B)
TS:3	(FG:0 A)	X04:1	(GG:2 E)	XA:2	(GB:1 B)
TS:4	(FG:1 A)	X04:1	(GK:2 E)	XA:3	(GB:1 B)
TS:5	(FG:1 A)	X04:2	(GG:1 E)	XA:4	(GB:1 B)
TS:6	(FG:1 A)	X04:2	(GK:2 E)	XA:5	(GB:1 B)
X02:1	(GG:4 E)	X04:3	(GG:2 E)	XA:6	(GB:1 B)

https://truckmanualshub.com/

XA:7	(GB:2 B)
XA:8	(GB:2 B)
XA:9	(GB:2 B)
XA:10	(GB:0 B)
XA:11	(GB:1 B)
XA:12	(GB:1 B)
XA:13	(GB:1 B)
XA:14	(GB:1 B)
XA:15	(GB:1 B)
XA:16	(GB:2 B)
XA:17	(GB:2 B)
XA:18	(GB:2 B)
XB:1	(AA:4 D)
XC:1	(BM:1 C)
XC:3	(IH:2 C)
XC:4	(HP:0 E)
XC:5	(HG:0 D)
XC:5	(HY:2 D)
XC:6	(BU:2 C)
XC:7	(BM:1 C)
XC:8	(AE:2 C)
XC:8	(NK:1 D)
XC:9	(DB:1 E)
XC:9	(DM:0 E)
XC:10	(HP:1 E)
XC:11	(BU:0 A)
XC:12	(KI:1 C)
XD:1	(BU:1 C)
XD:1	(BX:1 D)
XD:1	(BY:1 D)
XD:2	(CU:1 C)
XD:3	(CP:2 D)
XD:4	(EE:4 D)
XD:4	(EI:0 D)
XD:4	(EI:4 D)
XD:4	(EO:0 D)
XD:5	(DU:2 E)
XD:5	(EO:0 D)
XD:6	(FA:3 D)
XD:6	(FI:0 C)
XD:6	(FK:1 D)
XD:7	(GU:2 D)
XD:8	(IX:2 D)
XD:9	(BI:1 E)
XD:10	(IS:1 D)
XD:10	(OA:1 D)
XD:11	(AA:2 C)
XD:12	(NC:0 C)
XD:12	(NU:2 D)
XE:1	(AA:3 D)
XE:1	(AC:2 D)
XF:1	(FA:4 B)
XF:2	(FQ:1 B)
XF:3	(ME:3 B)
XF:4	(KE:0 C)
XF:5	(FQ:0 B)
XF:6	(FQ:1 B)
XF:7	(KE:0 C)
XF:8	(KE:0 C)
XF:9	(AA:3 C)
XF:10	(FA:4 B)
XF:12	(KE:0 B)
XF:13	(BA:0 B)
XF:15	(FA:4 B)
XF:18	(GB:3 C)
XG:1	(AC:0 A)
XH:1	(AC:2 A)
XJ:1	(GM:2 C)
XJ:2	(GM:1 D)
XJ:3	(HG:0 B)
XJ:4	(GQ:1 A)
XJ:6	(HG:0 B)
XJ:7	(GQ:2 A)
XJ:10	(GA:0 B)
XJ:11	(IM:0 B)
XJ:12	(BA:1 B)
XJ:13	(GA:0 B)
XJ:14	(IH:1 B)
XJ:15	(BA:0 B)
XJ:16	(IH:2 B)
XJ:17	(IH:1 B)
XJ:18	(IH:2 B)
XK:1	(BA:0 B)
XK:3	(GM:3 B)
XK:4	(BA:0 B)
XK:6	(GM:1 D)
XK:7	(BA:0 A)
XK:8	(BA:0 B)
XK:9	(DB:1 B)
XK:9	(DM:1 B)
XK:10	(HY:0 B)
XK:11	(DB:1 B)
XK:11	(DM:0 B)
XK:12	(DB:1 B)
XK:12	(DM:1 B)
XK:13	(HY:0 B)
XK:14	(IQ:1 B)
XK:15	(IQ:2 B)
XK:16	(HY:1 B)
XK:17	(CU:0 B)
XK:18	(CU:0 B)
XL:1	(BA:1 B)
XL:2	(IH:4 B)
XL:3	(BA:1 B)
XL:4	(OA:2 B)
XL:5	(BA:1 B)
XL:6	(BA:1 B)
XL:7	(DB:1 B)
XL:7	(DM:0 B)
XL:8	(BI:0 B)
XL:9	(BI:0 B)
XL:9	(OA:2 B)
XL:10	(DB:1 B)
XL:10	(DM:0 B)
XL:11	(BI:0 B)
XL:12	(BA:1 B)
XL:13	(DQ:0 B)
XL:14	(DU:1 B)
XL:15	(BA:1 D)
XL:16	(BA:1 D)
XL:17	(BA:1 D)
XL:18	(BA:1 D)
XM:1	(AA:2 B)
XM:2	(AA:2 B)
XM:3	(AA:2 B)
XM:4	(AA:2 A)
XM:5	(AA:3 A)
XM:6	(AC:3 D)
XM:7	(AC:3 D)
XM:8	(AC:3 D)
XM:9	(AC:3 D)
XM:10	(AC:3 D)
XM:11	(AC:2 C)
XM:12	(BI:3 B)
XM:13	(AC:2 B)
XM:14	(AC:2 C)
XM:15	(BI:3 B)
XM:16	(AC:2 B)
XM:17	(AC:2 B)
XM:18	(BI:3 B)
XO:1	(AC:0 A)
XS:1	(AC:2 A)
XT:1	(AC:1 A)
Y18GH:1	(DN:2 B)
Y18GH:2	(DN:2 B)
Y18GH:4	(DN:2 A)

https://truckmanualshub.com/

List of components

A01	Fuse and Relay Centre (1000)
A02L	Fuse holder, 6–fuses (GB:0 D) (1000)
A02P	Fuse holder, 6–fuses (ME:2 C) (1000)
A02X	Fuse holder, 6–fuses (ME:3 C) (1000)
A03	Instrument cluster (BI:0 B) (CP:2 D) (1000)
A04A	Refrigerator (IQ:3 C) (1007B)
A04B	Refrigerator (IQ:3 C) (1460)
A05	Display, FMS (Fleet Management System) (BU:2 D/IZ:0 D) (1000)
A06L	El. adjustable seat (IA:2 B) (1007A)
A06R	El. adjustable seat (IA:0 B) (1007B)
A07	Radio (IU:0 B) (1000)
A08	Control unit, GPS receiver (Global Positioning System) (BU:2 D) (1000)
A09	Telephone (IX:0 C) (1000)
A10	CD player (IU:3 B)
A11	Control unit, door lock (IM:1 B) (1000)
A12A	Control unit, ABS (Anti-lock Brake System) (EI:0 B) (1007C)
A12B	Control unit, ABS (Anti-lock Brake System) (EE:0 B) (1007C)
A13A	Control unit, TECU (automatic transmission) (DE:0 C)
A13B	Control unit, TECU (automatic transmission) (DI:0 B) (1007C)
A13C	Control unit, TECU (automatic transmission) (DM:0 C) (1007C)
A13D	Control unit, TECU (automatic transmission) (DN:0 B)
A14	Control unit, EMS (Engine Management System) (CO:2 C/CS:2 C) (1030)
A15	Control unit, SRS (Supplementary Restrain System) (IS:0 B) (1000)
A16	Control unit, ECS (Electronic Controlled air Suspension) (FA:0 C/FG:0 D/FG:2 D) (1007C)
A17	Control unit, VECU (Vehicle ECU) (BA:0 C) (1000)
A18	Control unit, roof hatch (IQ:0 C) (1006E)
A19A	Control unit, GECU (gear selector ECU) (Geartronic) (DB:1 C) (1007A/1007B/1484)
A20	Control unit, Immobiliser (IM:3 C) (1000)
A21	Control unit, EBS (Electronic Brake System) (EO:0 C) (1007C)
A22	Control unit, FMS (Fleet Management System) (BU:0 C/IZ:3 B) (1000)
A23	Control unit, FMS, TMC (Traffic Message Channel) (BU:3 B) (1000)
A24	Control unit, information module trailer without ABS (CP:3 C)
A26	Control unit, ACC (Adaptive Cruise Control) (BE:1 B) (1007C)
A27	Control unit, LCM (Light Control Module) (GB:0 C/GC:0 A/GA:0 B) (1000)
A28B	Control unit, ADR main switch, integrated power relay (AE:0 C) (1435B)
A29	Telephone handset, secrecy receiver (IX:1 B) (1000)
A31	Control unit, burglar alarm (NK:0 C) (1000)
A32	Control unit, parking heater (HM:0 C) (1062)
A33	Tachograph (BM:1 B) (CP:1 D) (1000)
A33B	Tachograph (/BN:1 B) (1006)
A34B	Control unit, climate unit (HG:0 B) (1000)
A36	Control unit, BBM (Body Builder Module) (NC:1 B/NU:1 B) (1000)
A39	Control unit, camera (IZ:0 C) (1000)
A40 HID	Fuse holder, 3-fuses (GD:1 C) (1000)
A41	Component group transmission. Contains B23, B138 and Y17 (DN:0 D/DE:0 C/DM:2 B) (1403/1499)
A42	Component group transmission. Contains B26, Y21, Y22, Y23 and Y26 (DN:2 D/DE:2 C) (1494/1499)
A43	Electric fan control (B32 fan speed sensor, Y35 visco clutch) (CO:1 D) (1030)
A45	Fuel pre filter (B52 water level sensor, R10 heater, Y38 water drain solenoid (CO:3 B) (1030)
A44	Fuel filter bracket (B51 fuel pressure sensor, M15 priming pump) (CO:2 D) (1030)
A54	Control unit, Coolant level (CS:2 D)
A59	Control unit, RAS (Rear Axle Steering) (FO:1 B) (1493)
A75	Yawrate sensor and power supply unit, ACC (BE:2 C) (1007C)
A77	Control unit, Tyre pressure monitoring (OA:1 B) (1508)
A80	Airdryer, electronical controlled (FQ:1 C) (1056)
A94	FMS Gateway, Fleet Management System (BX:0 B) (1000)
A96	Control unit, Roof cooler (HZ:1 B) (1018)
A102	Control unit, Volvo Link (VERS-SAM) (BY:1 C) (1000)
A105	Serial Interface Box (BU:0 B) (1000)
A106	Fuse holder, 3–fuses, not mainswitch dependent (AB:3 B) (1000)
A109	Control unit, GSECU (Gearshift ECU) (DC:1 C) (1000)
A121	Logger, AUS (CP:1 B)
B02A	Thermostat, parking heater (HI:1 B) (1006A/1006E)
B02B	Thermostat, parking heater (HI:0 B) (1006A/1006E)
B03_A	Sensor, footbrake valve (EO:0 D) (1504)
B04	Sensor, engine speed, crankshaft (CO:0 D) (1030)
B05	Sensor, engine speed, camshaft (CO:0 D) (1030)
B06	Sensor, air pressure, air tank (BA:2 D) (1000)
B07	Sensor, fuel level (BI:2 C) (1040)
B08	Sensor, input shaft speed, gearbox (DE:3 B)
B09A	Sensor, oil temperature, gearbox (DE:2 D)
B09B	Sensor, oil temperature, gearbox (BI:2 C) (1494)
B10	Sensor, oil level (CO:0 B) (1030)
B10B	Sensor, oil level (FP:0 C) (1493)
B10C	Sensor, oil level (FO:0 C) (1493)
B12	Sensor, tachograph/speedometer (BM:2 D) (1494)
B12B	Sensor, tachograph/speedometer (BM:1 D) (1494)
B13A	Sensor, wheel speed, lhs. 1:st front axle (EI:0 D/EE:0 D) (1086)
B13B	Sensor, wheel speed, lhs. 1:st front axle (EP:1 B/EP:3 B) (1086)
B14A	Sensor, wheel speed, rhs. 1:st front axle (EI:1 D/EE:1 D) (1086)
B14B	Sensor, wheel speed, rhs. 1:st front axle (EP:2 B/EP:3 B) (1086)
B15A	Sensor, wheel speed, lhs. 1:st driven rear axle (EI:2 D/EE:2 D) (1086)
B15B	Sensor, wheel speed, lhs. 1:st driven rear axle (EP:1 D/EP:2 D) (1086)
B16A	Sensor, wheel speed, rhs. 1:st driven rear axle (EI:3 D/EE:3 D) (1086)
B16B	Sensor, wheel speed, rhs. 1:st driven rear axle (EP:1 D/EP:2 D) (1086)
B17	Sensor, wheel speed, lhs. 2:nd driven rear axle (EP:1 D) (1086)
B18	Sensor, wheel speed, rhs. 2:nd driven rear axle (EP:1 D) (1086)

https://truckmanualshub.com/

B19	Sensor, wheel speed, lhs. 2:nd front axle (EP:1 B) (1086)
B20	Sensor, wheel speed, rhs. 2:nd front axle (EP:2 B) (1086)
B21	Sensor, coolant temperature, engine (CO:1 D) (1030)
B22	Sensor, outdoor temperature (BI:2 C) (1503)
B23A	Sensor, oil temperature, retarder (DE:1 D)
B23B	Sensor, oil temperature, retarder (DI:0 D) (1494)
B24	Sensor, air pressure, bogie lift bellow (FA:0 D) (1072)
B25	Sensor, accelerator pedal (BA:4 D) (1000)
B26A	Sensor, clutch position (DE:2 D)
B27	Sensor, battery charging (BI:2 C) (1435A/1435B)
B28	Sensor, chassi level, front axle (FA:1 D) (1072)
B29B	Sensor, chassis level, lhs. rear axle (FA:1 D) (1072)
B30	Sensor, chassis level, rhs. rear axle (FA:2 D) (1072)
B34A	Sensor, gear position (DE:2 B)
B34B	Sensor, gear position (DE:3 B)
B35	Sensor, range gear position (DE:3 B)
B36	Sensor, split gear position (DE:3 B)
B37	Sensor, boost pressure and boost temperature (CO:0 D) (1030)
B38	Sensor, oil pressure and oil temperature (CO:1 D) (1030)
B39	Sensor, air filter pressure and air filter temperature (CO:1 B/CS:1 D) (1030)
B40A	Sensor, brake lining wear indicator, lhs. 1:st front axle (EP:2 B) (1086)
B40B	Sensor, brake lining wear indicator, lhs. 1:st front axle (EP:0 B) (1086)
B41A	Sensor, brake lining wear indicator, rhs. 1:st front axle (EP:3 B) (1086)
B41B	Sensor, brake lining wear indicator, rhs. 1:st front axle (EP:1 B) (1086)
B42A	Sensor, brake lining wear indicator, lhs. 1:st driven rear axle (EP:1 D) (1086)
B42B	Sensor, brake lining wear indicator, lhs. 1:st driven rear axle (EP:0 D) (1086)
B42A	Sensor, brake lining wear indicator, lhs. 1:st driven rear axle (EP:1 D) (1086)
B42B	Sensor, brake lining wear indicator, rhs. 1:st driven rear axle (EP:0 D) (1086)
B43A	Sensor, brake lining wear indicator, lhs. 1:st driven rear axle (EP:2 D) (1086)
B43B	Sensor, brake lining wear indicator, lhs. 1:st driven rear axle (EP:2 D) (1086)
B44B	Sensor, brake lining wear indicator, lhs. 2:nd driven rear axle (EP:0 D) (1086)
B45B	Sensor, brake lining wear indicator, rhs. 2:nd driven rear axle (EP:0 D) (1086)
B46B	Sensor, brake lining wear indicator, lhs. 2:nd front axle (EP:0 B) (1086)
B47B	Sensor, brake lining wear indicator, rhs. 2:nd front axle (EP:2 B) (1086)
B49	Sensor, steering angle (EO:3 A) (1000)
B49F	Sensor, steering angle (FO:1 D) (1493)
B49R	Sensor, steering angle (FO:2 D) (1493)
B50	Sensor, yaw-rate (EO:4 B) (1507)
B51	Sensor, fuel pressure (CO:2 D) (1030)
B54	Sensor, crank case pressure (CO:0 B) (1030)
B55	Sensor, air pressure, suspension bellows, 3:th axle (FA:0 D) (1072)
B56	Sensor, air pressure, suspension bellows, front axle (FA:0 D) (1072)
B57	Sensor, air pressure, suspension bellows, lhs. rear (FA:0 D) (1072)
B58	Sensor, air pressure, suspension bellows, rhs. rear (FA:1 D) (1072)
B59	Sensor, indoor temperature (HG:1 B) (1000)
B60_DD	Loudspeaker (IU:1 D) (1083)
B60_DP	Loudspeaker (IU:1 D) (1083)
B60_LF	Loudspeaker (IU:0 D) (1000)
B60_LR	Loudspeaker (IU:2 D) (1006D/1006E)
B60_RF	Loudspeaker (IU:1 D) (1000)
B60_RR	Loudspeaker (IU:2 D) (1006D/1006E)
B61_L	Loudspeaker, treble (IU:0 D) (1000)
B61_R	Loudspeaker, treble (IU:1 D) (1000)
B64	Sensor, air pressure, valve unit gearbox (DE:1 D)
B67	Rear view camera (IZ:2 D) (1000)
B68	Sensor, output shaft speed, gearbox (DI:2 D) (1494)
B69A	Sensor, coolant temperature, retarder (DE:1 D)
B69B	Sensor, coolant temperature, retarder (DM:3 B) (1403)
B69C	Sensor, coolant temperature, retarder (DN:0 D) (1403)
B70	Sensor, wheel speed, lhs., pusher axle (EP:3 D) (1086)
B71	Sensor, wheel speed, rhs., pusher axle (EP:3 D) (1086)
B72	Sensor, wheel speed, lhs., tag axle (EP:4 D) 1086)
B73	Sensor, wheel speed, rhs., tag axle (EP:4 D) (1086)
B74B	Sensor, brake lining wear indicator, lhs., pusher axle (EP:2 D) (1086)
B75B	Sensor, brake lining wear indicator, rhs., pusher axle (EP:3 D) (1086)
B76B	Sensor, brake lining wear indicator, lhs., tag axle (EP:3 D) (1086)
B77B	Sensor, brake lining wear indicator, rhs., tag axle (EP:3 D) (1086)
B80	Handsfree, Loudspeaker, Microphone (IX:0 B) (1007A/1007B)
B90	Transmitter, movement sensor (NK:2 D) (1006B/1006E)
B91	Receiver, movement sensor (NK:3 D) (1006B/1006E)
B118	Sensor, oil pressure (CO:1 D) (1030)
B119	Sensor, oil level and oil temp (CO:0 B) (1030)
B120	Radar ACC, Adaptive Cruise Control (BE:1 D) (1502)
B138A	Sensor, Control pressure retarder (DE:0 D) (1494)
B138B	Sensor, Control pressure retarder (DI:3 B) (1494)
B151	Sensor, trailer detection (GB:1 C)
B152	Sensor, brake airpressure, front (BI:3 C)
B153	Sensor, brake airpressure, rear (BI:3 C)
B154	Sensor, water level roof cooler (HZ:2 C) (1018)
D01	Time delay relay, bogie lift, axle load limiter (FK:3 B) (1007C)
E01	Lamp, full beams (GA:2 C/GA:3 C) (1502/1503)
E02	Lamp, dipped beams (GA:2 D/GA:3 D) (1502/1503)
E03	Lamp, spot light (GA:1 C/GA:3 C) (1502/1503)
E03A	Lamp, spot light (NI:2 C)
E03B	Lamp, spot light (NI:2 C)
E03L	Lamp, spot light (GI:1 C) (NI:2 D)
E03R	Lamp, spot light (GI:2 C) (NI:2 D)
E05	Lamp, 5:th wheel light (KE:0 D/GH:0 D/GF:1 C) (1063)
E06	Lamp, reversing light (GC:1 D/GC:2 D/GF:1 C) (1040)
E07	Lamp, fog light (GA:1 C/GA:3 C) (1502/1503)
E07L	Lamp, fog light (GI:1 C)
E07R	Lamp, fog light (GI:3 C)
E08	Lamp, parking light, front (GA:1 D/GA:3 D) (1502/1503)
E08L	Lamp, parking light, front (GI:1 C)

https://truckmanualshub.com/

E08R	Lamp, parking light, front (GI:1 C)
E09	Lamp, brake light (GC:1 D/GC:2 D) (1040)
E10	Lamp, tail light (GC:1 D/GC:2 D) (1040)
E11_LC	Lamp, side marker light (GC:0 D) (1077)
E11_LF	Lamp, side marker light (GC:0 D) (1077)
E11_LR	Lamp, side marker light (GC:0 D) (1077)
E11_LW	Lamp, side marker light (GC:0 D) (1077)
E11_RC	Lamp, side marker light (GC:3 D) (1077)
E11_RF	Lamp, side marker light (GC:3 D) (1077)
E11_RR	Lamp, side marker light (GC:3 D) (1077)
E11_RW	Lamp, side marker light (GC:3 D) (1077)
E12L	Lamp, roof position light (GA:4 C) (1006A)
E12R	Lamp, roof position light (GA:1 C) (1006A)
E13	Lamp, direction indicator (GC:1 D/GC:2 D) (1040)
E13LF	Lamp, direction indicator (GA:2 C) (1502)
E13RF	Lamp, direction indicator (GA:3 C) (1503)
E14_A	Lamp, beacon warning lamp (KM:2 D) (1047)
E14_AR	Lamp, beacon warning lamp (KM:1 C) (1047)
E14_B	Lamp, beacon warning lamp (KM:1 D) (1047)
E14_BR	Lamp, beacon warning lamp (KM:2 C) (1047)
E15	Lamp, cigarette lighter illumination (IQ:2 C) (1000)
E16_DS	Lamp, instep light (IH:2 C) (1083)
E16_PS	Lamp, instep light (IH:2 C) (1083)
E17L	Lamp, interior light (IH:1 C) (1006B/1006E)
E17R	Lamp, interior light (IH:1 C) (1006B/1006E)
E18_C	Lamp, reading light (IH:0 C) (1006D)
E18_LB	Lamp, reading light (IH:0 C) (1006D/1006E)
E18_RB	Lamp, reading light (IH:1 C) (1006D/1006E)
E18L	Lamp, reading light (IH:0 C) (1006D/1006E)
E18LC	Lamp, reading light (IH:0 C) (1006C/1006E)
E18R	Lamp, reading light (IH:1 C) (1006D/1006E)
E18RC	Lamp, reading light (IH:0 C) (1006C)
E19C	Lamp, identification light, roof (GA:0 C) (1006A/1436)
E19L	Lamp, identification light, roof (GA:0 D) (1006A/1436)
E19R	Lamp, identification light, roof (GA:0 C) (1006A/1436)
E20	Lamp, ashtray illumination (IQ:2 C) (1000)
E21	Lamp, rear fog light (GC:1 D/GC:2 D) (1040)
E22	Lamp, roof sign illumination (KI:0 C) (1436)
E23	Lamp, luggage compartment illumination (IH:4 C) (1007A)
E24	Lamp, storage tray illumination (IQ:1 D) (1000)
E26L	Headlight module (GA:1 C) (1502)
E26R	Headlight module (GA:3 C) (1503)
E27L_1	Tail lamp module (GC:1 D) (1040)
E27L_2	Tail lamp module (GE:1 C) (1040)
E27L_3	Tail lamp module (GF:3 C) (1040)
E27L_4	Tail lamp module (GF:0 C) (1040)
E27R_1	Tail lamp module (GC:2 D) (1040)
E27R_2	Tail lamp module (GE:2 C) (1040)
E28	Parking heater (HI:0 C/HM:0 D) (1007A/1062)
E30L	Lamp, full- and dipped beams (GI:1 C)
E30R	Lamp, full- and dipped beams (GI:3 C)
E32ATC	Climate unit (HY:2 C) (1000)
E32ECC	Climate unit (HG:1 C) (1000)
E33LF	Lamp, additional load lamps (revers lamps) (NA:0 D) (1506A)
E33LR	Lamp, additional load lamps (revers lamps) (NA:1 D) (1506A)
E33RF	Lamp, additional load lamps (revers lamps) (NA:1 D) (1506A)
E33RR	Lamp, additional load lamps (revers lamps) (NA:1 D) (1506A)
E34	Lamp, body builder centre light (IH:2 D) (1000)
E39	Licence Plate Illumination (GF:3 B)
E39L	Licence Plate Illumination (GE:2 C) (1040)
E39R	Licence Plate Illumination (GE:2 C) (1040)
E74L	Lamp, parking light front direction indicator (GI:1 C)
E74R	Lamp, parking light front direction indicator (GI:3 C)
G01A	Battery (AA:0 D/AB:1 D/AE:0 C/CS:0 C)
G01B	Battery (AA:0 D/AB:1 D/AE:0 D/CS:0 D)
G02	Alternator (AA:3 D/AE:3 D/CS:1 D) (1025)
G05	Battery, backup Volvo Link (VERS-SAM) (BY:0 C) (1000)
H01	Horn, air-operated (GQ:1 B) (1502)
H02	Horn (GQ:1 B) (1502)
H03	Reverse warner, acoustic (GF:0 C) (1040)
H06	Siren (NK:3 D) (1502/1503)
K1	Relay, starting switch, radio position (AC:3 C) (1000)
K2	Relay, EMS (Engine Management System) (BA:1 A) (1000)
K3	Relay, starter motor (AA:2 B) (1000)
K3B	Relay, starter motor, Cummins (CS:1 C)
K4	Relay, body builder fuse box (kl.15) (ME:2 A) (1000)
K5	Relay, automatic transmission (DB:1 A/DC:0 A/DM:0 A) (1000)
K6	Relay, fan climate unit (HY:0 B) (1000)
K7	Relay, intermittent wiper (GM:1 C) (1000)
K8	Relay, gearbox area inhibitor (BA:1 A) (1000)
K9	Relay, interior lamps (IH:1 A) (1000)
K10	Relay, fifth wheel-, working-light (KE:0 C) (1000)
K11	Relay, air suspension (FA:4 B) (1000)
K12	Relay, reverse light, trailer (GB:4 D) (1000)
K13	Relay, alternator controlled (AA:4 B) (1000)
K14	Time delay relay, bogie lift, A-ride (FI:1 B/FK:1 C) (1000)
K15	Time delay relay, bogie lift, A-ride, with axle load limiter (FK:2 C) (1000)
K16	Relay, bogie lift, A-ride, with axle load limiter (FK:1 C) (1000)
K18	Relay, hydraulic steered axle (FP:1 B) (1000)
K20	Relay, D+ short-circuit, (ADR-trucks only) (AE:4 D) (1000)
K21	Relay, el. adjustable seat (IA:2 B) (1000)
K22	Relay, climate fan, 1:st speed (by parking heater) (HY:1 B) (1000)
K23	Relay, cab tilt (KA:0 C) (1000)
K24	Relay, central lubrication (FU:0 B) (1000)
K25	Relay, light sign (KI:1 C) (1000)
K26A	Relay, foldable rear view mirror arm, Japan (IF:0 C) (1000)
K26B	Relay, foldable rear view mirror arm, Japan (IF:1 C) (1000)
K27	Relay, gas discharge lamp, dipped beam, lhs (GD:1 C) (1000)
K28	Relay, gas discharge lamp, dipped beam, rhs (GD:1 C) (1000)
K30	Relay, beacon warning light (KM:0 B) (1000)
K35	Relay, headlamp high pressure wash (GM:0 B) (1000)
K37	Relay, parking light (NA:1 C) (1000)
K38	Relay, body builder preparation, pressure sel./switch 2/free (NA:1 C) (1000)
K39	Relay, body builder preparation, plough light, spotlights (NA:1 C) (1000)
K40	Relay, body builder preparation (NA:2 C) (1000)
K41	Relay, body builder preparation, swapbody (NA:3 C) (1000)
K42	Relay, body builder preparation, spotlights/free (NI:1 B) (1000)
K43	Relay, body builder preparation, external start/free (NC:3 C) (1000)

https://truckmanualshub.com/

K45	Relay, free reserved for body-builder (NU:2 B) (1000)
K48	Power relay, engine preheating (CM:2 B) (1435A/1435B)
K49	Power relay, bogie lift motor (FI:3 B/FK:3 D) (1037)
K51	Power relay, battery main switch (AB:0 C/CS:0 C) (1435A)
K51_A	Power relay, battery main switch (AB:1 C) (1435A)
K52	Power relay, ADR battery main switch (AE:0 B) (1435B)
K54	Relay, 12V ABS Trailer (CP:2 D)
K58	Relay, speed limiter, Volvo link (BY:3 B) (1000)
K59	Relay, engine shut off, Volvo link (BY:4 B) (1000)
K60	Relay, trailer lock, Volvo link (BY:3 D) (1000)
K61	Relay, auxiliary revers light, truck (NA:0 C) (1000)
K63	Relay, ACC Adaptive cruise control (BE:1 B)
L01	Reactor, light sign illumination (KI:0 D)
L01L	Reactor, light sign illumination (KI:2 C)
L01R	Reactor, light sign illumination (KI:2 D)
M01	Motor, windscreen wiper (GM:2 C) (1504)
M02	Motor, windscreen washer pump (GM:0 D) (1503)
M03	Motor, headlamp high pressure washer pump (GM:1 D) (1503)
M04	Motor, starter motor (AA:2 D/AE:2 D/CS:0 C) (1025)
M05	Motor, hydraulic bogie lift pump unit (FI:3 B/FK:3 C) (1037)
M06DS	Motor, window winder (IE:2 C) (1083)
M06PS	Motor, window winder (IE:3 C) (1083)
M08	Motor, levelling control, headlights (GA:1 C/GA:3 C) (1502/1503)
M09DS	Motor, door lock (IM:1 D) (1083)
M09PS	Motor, door lock (IM:2 D) (1083)
M10	Motor, roof hatch (IQ:0 E)
M11	Motor, cab tilt pump (KA:0 D) (1502/1503)
M13	Motor, coolant pump, parking heater (HP:0 C) (1062)
M14	Motor, central lubrication pump (FU:0 C) (1401)
M17	Motor, foldable rear view mirror arm, Japan (IF:0 D) (1470)
M27	Motor, roof cooler fan (HZ:1 C)
M28	Motor, washer, roof cooler (HZ:2 C) (1018)
R01	Heater, engine preheat (CO:3 B) (1030)
R02L	Heater, rear-view mirror (IE:0 D) (1504)
R02R	Heater, rear-view mirror (IE:1 D) (1504)
R04	Cigarette lighter (IQ:2 C) (1000)
R05	Heater, air dryer (FQ:0 C) (1056)
R08	Termination resistor, CAN-bus (CS:3 B)
R11	Heater, coffee maker (ME:1 B) (1000)
R13	Resistor, LCP headlight adjust (GU:1 B) (1000)
R14	Termination resistor (XB:2 D)
R17	Resistor (AB:2 B)
R14B	Termination resistor (DI:3 D)
R17	Resistor (AC:4 C/AE:4 C) (1000)
R18	Heater, electronic controlled air dryer (FQ:1 C) (1056)
R21	Termination resistor (OA:3 C) (1000)
R33	Termination resistor (BE:2 D) (1502)
R34	Termination resistor (DE:0 B)
S01	Switch, main lighting, selector type (GA:0 A/GU:1 B) (1000)
S02	Stalk switch, full-/dipped beam, direction indicator (GA:2 B) (1000)
S03	Switch, loading lamps/working lamps (KE:1 B) (1000)
S04	Switch unit, climate fan (HY:1 B)
S05A	Switch, interior light, selector type (IH:3 B) (1000)
S05B	Switch, interior light, selector type (IH:3 B) (1006D/1006E)
S06	Stalk switch, windscreen wiper, selector type (BI:3 B) (1000)
S06	Stalk switch, windscreen wiper, selector type (GM:3 B) (1000)
S07	Switch, engine brake, selector type (BA:3 B) (1000)
S07A	Switch, engine brake, selector type (CP:0 D)
S07B	Switch, engine brake, selector type (CP:0 D)
S08	Switch, differential gear lock, rear wheels (DU:1 B) (1000)
S09	Switch, differential gear locks, inter axles and rear wheels, selector type (DU:1 B) (1000)
S10	Switch, sign light, roof (KI:1 B) (1006A)
S11	Switch, bogie lift, selector type (FI:0 B/FK:0 B) (1000)
S11A	Switch, bogie lift, selector type (FA:3 B) (1000)
S14A	Switch, push button, horn (GQ:1 D)
S14B	Switch, push button, horn (GQ:1 D)
S15	Switch, starting (AC:1 B/AE:0 B) (1000)
S16	Switch, push button, air horn (GQ:2 D)
S17	Switch, front wheel drive (DU:2 B) (1000)
S18	Switch, differential gear lock, front (DU:2 B) (1000)
S19	Switch, extra (NA:2 B)
S20	Switch, 3:rd axle lock (FO:2 B) (1000)
S21A	Switch, parking heater (HI:2 B) (1000)
S21B	Switch, parking heater (HI:3 B) (1006D/1006E)
S23	Switch, roof hatch, selector type (IQ:0 B) (1006A)
S24	Stalk switch, retarder, selector type (BA:3 B) (1000)
S25	Switch unit, cruise control (BA:2 B) (1000)
S26A	Switch, cab tilt pump (KA:0 B) (1000)
S26B	Switch, cab tilt pump (KA:0 D) (1502/1503)
S27	Switch, storage tray illumination (IQ:1 C) (1000)
S28A	Switch, power take off (DQ:0 B) (1000)
S28B	Switch, power take off (NC:0 C/NU:0 B) (1000)
S30	Switch unit, multi-function display (BI:3 B) (1000)
S31	Switch, TCS (Traction Control System) (EO:1 A) (1000)
S32	Switch, brake hold (EO:1 B) (1000)
S33	Switch, trailer brake (EO:0 B) (1000)
S34	Switch unit, steering wheel push buttons (IS:1 D) (1000)
S36DS	Switch unit, door functions (IE:0 B) (1083)
S36PS	Switch unit, door functions (IE:3 B) (1083)
S37	Switch, rear view camera, camera activation (IZ:1 B) (1000)
S38	Switch, ADR, emergency switch, cab (AE:1 B) (1000)
S39	Switch, ADR, emergency switch, exterior (AE:1 C) (1007A)
S39_B	Switch, ADR, emergency switch, exterior (AE:2 C) (1007B)
S40	Switch, rear view camera, camera selection (IZ:2 B)
S43	Pressure switch, parking brake indicator, NC. (BA:1 D) (1000)
S45	Position switch, differential gear lock indicator, rear wheels, NC. or NO. (DU:3 C) (1040)
S45R	Position switch, differential gear lock indicator, rear wheels, NC. or NO. (DU:3 C) (1040)
S46	Pressure switch, bogie lift indicator, NO. (FI:2 D/FK:3 E) (1037)
S47	Position switch, low split indicator, NO. (BI:1 D) (1494)
S48A	Pressure switch, brake light, NO. (ABS/UABS) (GB:3 B) (1401)
S48B	Pressure switch, brake light, NO. (ABS/UABS trailer control valve) (GB:3 B) (1401)
S48C	Pressure switch, brake light, NO. (ABS/UABS trailer control valve) (GB:3 A) (1000)
S49	Position switch, reverse lamps, NO (GB:3 D) (1494)

https://truckmanualshub.com/

S52_L	Proximity switch, cab lock, NO. (BI:1 C) (1007A)
S52_R	Proximity switch, cab lock, NO. (BI:1 D) (1007B)
S53	Position switch, front-wheel drive indication, NO. (DU:4 C) (1458)
S54	Position switch, differential gear lock, front-wheels, NO. (DU:4 C) (1458)
S55	Thermal switch (HP:0 C) (1062)
S56	Thermal switch, bogie lift, NC (FI:3 C/FK:3 D) (1037)
S57L	Position switch, luggage compartment lighting, NC. (IH:4 D) (1007A)
S57R	Position switch, luggage compartment lighting, NC. (IH:3 D) (1007B)
S58	Position switch, clutch pedal, NO. (BA:3 D) (1000)
S59	Position switch, brake pedal, NO. (BA:3 D) (1000)
S60	Pressure switch, oil, power steering, NC. (FP:0 C) (1493)
S60A	Pressure switch, oil, power steering, NC. (FP:2 C) (1493)
S60B	Pressure switch, oil, power steering, NC. (FP:2 C) (1493)
S63	Position switch, low range gear (BA:0 B) (1494)
S64	Pressure switch, air pressure, parking brake tank, NC. (EO:1 B) (1000)
S66_L	Switch unit, ECS (electronic controlled susp.), full air suspension (FA:2 D) (1007A/1007B)
S68	Sensor, coolant level (CO:1 C/CS:3 D) (1030)
S69	Proximity switch, bogie lift position, NO. (FK:1 D) (1037)
S70	Position switch, flow sensor, power-steering, NC. (FP:2 C) (1493)
S70A	Position switch, flow sensor, power-steering, NC. (FP:1 C) (1493)
S71	Pressure switch, compressor charging, NO. (BA:0 D) (1056)
S73	Switch, acoustic reverse warning (GC:4 A) (1006A)
S74	Switch, short stop cab heater (HP:0 B) (1000)
S75	Switch, beacon warning light (KM:0 B) (1000)
S76	Switch, spotlights (NA:4 B)
S76A	Switch, spotlights (NI:4 C) (1006A)
S77	Switch, emergency call (BU:1 B) (1000)
S78	Switch unit, TIS (Traffic Information System) (BU:3 B) (1000)
S79A	Switch, additional work lamps (revers lamps), manual turn on (NA:1 B)
S79B	Switch, additional work lamps (revers lamps), manual turn on (NA:2 B)
S79D	Switch, additional work lamps (revers lamps), manual turn on (NA:0 B)
S80	Position switch, front hatch (NK:1 D) (1504)
S83	Switch, container lock (NA:3 B)
S84	Switch, tachograph mode (BN:0 C) (1006)
S86	Switch, foldable rear view mirror arm, Japan (IF:1 B) (1000)
S88L	Position switch, door, NC (BY:2 D/NK:0 D) (1007A)
S88R	Position switch, door, NC (BY:2 D/NK:0 D) (1007B)
S95	Switch, Panic alarm (NK:2 A) (1000)
S96	Switch, Reduced set, Alarm (NK:2 B) (1000)
S165	Switch, Volvo Action Service, (VERS-SAM) (BY:2 B) (1000)
S166	Switch, panic alarm, Volvo link, (VERS-SAM) (BY:3 B) (1000)
S169	Switch, battery main switch (AB:2 C) (1435)
S171	Switch, GLU (Gearlever unit) (DC:1 D) (1007A/1484)
U01_A	Modulator, EBS, left front (EP:0 A) (1086)
U02_A	Modulator, EBS, right front (EP:1 A) (1086)
U03_A	Modulator, EBS, rear axle (EP:1 C) (1086)
U03_B	Modulator, EBS, rear axle (EP:0 C) (1086)
U04_A	Modulator, EBS, pusher axle (EP:2 C) (1086)
U05_A	Modulator, EBS, trailer (EO:3 B) (1401)
U06B11	Voltage converter (IR:1 B) (1007C)
U06R11	Voltage converter (IR:1 B) (1007C)
U06R19	Voltage converter (IR:0 B) (1007C)
U07_A	Modulator, EBS, tag axle (EP:3 C) (1086)
U08_A	Modulator, EBS, front (EP:2 A) (1086)
U10	Voltage converter, 12V ABS Trailer (CP:4 B)
U12	Voltage converter, Volvo link, (VERS-SAM) (BY:1 B) (1000)
V02	Diode module (AE:2 B) (1000)
V03	Diode (GG:3 B)
V04	Diode (FI:0 D/FK:0 D) (1037)
V05	Diode (FK:2 D)
V07	LED, indicator, Alarm (NK:2 C) (1000)
V08	Diode (NU:2 B) (1000)
V09	Diode (CP:2 B)
V10	Diode (CP:2 C)
V11	Diode (CP:3 C)
W02	Antenna, immobiliser (IM:3 B) (1000)
X01	Connector, vehicle diagnostics (XA:0 C) (1000)
X01B	Connector, vehicle diagnostics (CP:1 B)
X01C	Connector, vehicle diagnostics (CP:0 C)
X02	Trailer connection, ABS/EBS (1063)
X03	Trailer connection, 15–pole unit (1063)
X04	Trailer connection, 7–pole unit, 24 N (1063)
X05	Trailer connection, 7–pole unit, 24 S (1063)
X06	Connector, 31–pole, in lhs. frame side, for body builder preparations (1505)
X07B	Socket, 12V (IR:1 D) (1000)
X08	Contact reel, air bag (IS:0 C) (1000)
X09	Slip contact, horn (GQ:1 C) (1000)
X10	B+ pass through, cab (AC:0 B) (1000)
X11	Power connector, engine (AA:2 D/AE:2 C/CS:0 D)
X12	Power connector (CO:3 B/CM:3 D)
X16	Power connector, engine (CO:3 B/CM:3 D)
X25	Power connector, bogie lift/extra equipment (AA:1 B/AE:1 A)
Y02	Solenoid valve, differential lock, rear wheels (DU:1 D) (1401)
Y03	Solenoid valve, differential lock, inter axles, rear (DU:1 D) (1401)
Y05	Solenoid valve, bogie lift (FI:0 D/FK:0 D) (1037)
Y06	Solenoid valve, range inhibitor (BA:0 B) (1494)
Y08	Solenoid valve, front-wheel drive (DU:2 D) (1458)
Y09	Solenoid valve, differential lock, front axle (DU:2 D) (1458)
Y10	Solenoid valve, 3:rd axle lock (FM:0 C) (1072)
Y11	Solenoid valve unit, ABS, lhs. front (EE:0 D/EI:0 D) (1086)
Y11_A	Solenoid valve unit, ABS, lhs. front (EO:3 D) (1086)
Y12	Solenoid valve unit, ABS, rhs. front (EE:1 D/EI:1 D) (1086)
Y12_A	Solenoid valve unit, ABS, rhs. front (EO:4 D) (1086)
Y13	Solenoid valve unit, ABS, lhs. rear (EE:2 D/EI:2 D) (1086)
Y14	Solenoid valve unit, ABS, rhs. rear (EE:3 D/EI:3 D) (1086)
Y17A	Solenoid valve, retarder (DE:0 D)
Y17B	Solenoid valve, retarder (DI:2 D) (1494)
Y18	Solenoid valve, PTO (Power Take Off) (DE:2 B) (1499)
Y18A	Solenoid valve, PTO (Power Take Off) (DQ:0 D) (1401)
Y18B	Solenoid valve, PTO (Power Take Off) (DI:0 C) (1494)

https://truckmanualshub.com/

Y18C	Solenoid valve, PTO (Power Take Off) (NC:0 D/NU:0 C)
Y18G	Solenoid valve, PTO (Power Take Off) (DN:2 B) (1499)
Y18H	Solenoid valve, PTO (Power Take Off) (DN:2 B) (1499)
Y21	Solenoid valve, slow clutch disengage (DE:2 D)
Y22	Solenoid valve, fast clutch disengage (DE:3 D)
Y23	Solenoid valve, fast clutch engage (DE:3 D)
Y25	Solenoid valve unit, level control, air suspension (FA:1 B) (1072)
Y26	Solenoid valve, slow clutch control (DE:2 D)
Y29	Solenoid valve unit, trailing axle (FA:1 B) (1072)
Y30A	Solenoid valve unit, gearbox (DE:0 B)
Y30B	Solenoid valve unit, gearbox (DE:1 B)
Y30C	Solenoid valve unit, gearbox (DI:0 D) (1494)
Y31	Solenoid valve, area inhibitor (BA:1 B) (1494)
Y32	Fuel dosing pump, parking heater (HI:0 B/HM:0 D) (1040)
Y33	Solenoid valve, UI (Unit Injectors) (CO:3 D) (1030)
Y36	Solenoid valve, steerable axle (FP:1 C) (1493)
Y37	Solenoid valve unit, AVU (CO:2 C) (1030)
Y39	Solenoid valve, VCB (CO:3 D) (1030)
Y40	Solenoid valve unit, front axle, air suspension (FA:0 B) (1072)
Y42	Clutch, magnetic, air conditioning compressor (HG:0 D/HY:2 D/CS:2 D) (1025)
Y43L	Seat belt tensioner, pyrotechnical (IS:2 D) (1007A)
Y43R	Seat belt tensioner, pyrotechnical (IS:3 D) (1007B)
Y44	Air-bag, pyrotechnical (IS:0 D)
Y48A	Solenoid valve, container lock (NA:3 D) (1506A)
Y48B	Solenoid valve, fifth wheel lock (NA:4 D) (1506A)
Y49	Solenoid valve, parking brake (NU:2 C) (1504)
Y51A	Solenoid valve, regeneration (FQ:2 C) (1056)
Y51B	Solenoid valve, compressor control (FQ:2 C) (1056)
Y52	Clutch, magnetic, engine fan (CS:4 B)
Y53	Control valve block , RAS (FO:3 D) (1493)
Y72	Solenoid valve, Airhorn (GQ:0 B) (1504)
Y88	Solenoid valve, trailing axle, air suspension, bogie lift (FA:2 B) (1072)

https://truckmanualshub.com/

Abbreviations

ABS	Antilock brake system
ACC	Adaptive cruise control
ACU	Alarm control unit
ADR-BAS1/ ADR1	ADR adaptation, 1 switch
ADR2	ADR adaptation, 2 switches
AIRDRY-E	Electric airdryer
ATB	Axle load limiter
ATC	Automatic temperature control
AUS	Australia
AUXSW-6	Wiring for six auxiliary switches for body building
AWD	All wheel drive
BBM	Body builder module
BBOX-R	Battery box right hand side
CLU	Central locking unit
CU-ACAUT	Air condition, automatic
CU-ACMAN	Air condition, manual
CU-BAS	Basic version with stepper motor without air condition
CU-ECC	Electronic controlled climate control air condition
CU-HEAT	Heater unit
CU-MCC	Manual controlled climate control air condition
DS	Driver side
EBS	Electronic brake system
ECS	Electronic controlled air suspension
ELCE-CK	Electrical complete kit for body builder
ELMS	Electrical main switch
ENG-VE9	Volvo engine 9 litre
ENG-VE12	Volvo engine 12 litre
ENG-VE16	Volvo engine 16 litre
EPG	Exhaust pressure governor
ESP	Electronic stability program
FAA10	1 front axle, non driven
FAA20	2 front axle, non driven
FMS	Fleet management system
FSS-LEAF	Leaf suspension, front
GECU	Gear selector electronic control unit
GSS-AGS	Automatic gear shifting system
GSS-RC	Range gear shifting, cable manoeuvred
GSS-SRC	Split and range gear shifting, cable manoeuvred
ISX	Engine variant (Australia only)
JPN	Japan
L	Left
LCM	Light control module
L1H1	Short cab
L2H1	Long cab
L2H2	Long high cab (Globetrotter)
LF	Left front
LHD	Left hand drive
LHS	Left hand side
LOCK-ALL	Central door lock and cut off electricity of truck
LR	Left rear
MAINSWI	Main switch
MECHTRAN	Mechanical transmission
MMS	Mechanical main switch
PH-CAB	Cab parking heater
PH-ENGCA	Engine and cab parking heater
PS	Passenger side
PSS-DUAL	Power steering system dual
PTO	Power take off
R	Right
RADT-A8	6x2, air spring, 8 bellows, tag axle
RADT-AR	6x2, leaf spring (A-ride)
RF	Right front
RHD	Right hand drive
RHS	Right hand side
RIGID	Platform or tipper truck
RR	Right rear
RSTS-EHY	Rear steering system, electrical controlled, hydraulic
RSTS-HY	Rear steering system, hydraulic
SI-GRAF	Tachograph
SI-GRAFR	Tachograph
SI-SPEED	Speedometer
SPEED-DU	Dual speed limiter
SRS	Supplementary restrain system
STWPOS-L	Steering wheel position left hand side

https://truckmanualshub.com/

STWPOS-R	Steering wheel position right hand side
SUSPL-EC	Air suspension, electronic control system levelling device
SUSPL-M	Air suspension, manual regulation levelling device
SWAPBODY	Swap body
SWM	Steering wheel module
TECU	Transmission electronic control unit
TMC	Traffic message channel
TPM	Tyre pressure monitoring
TRACTOR	Semi-trailer tractor
TREL7-7	Trailer connectors 2x7-unit
UADR	Without ADR adaptation
UALARMB	Without alarm
UJERICO	Without Jerico horn
UMAINSWI	Without main switch
URETARD	Without retarder
USUSPLEV	Without air suspension levelling device
USWS	Without steering wheel switches
UTPM	Without tyre pressure monitoring
VECU	Vehicle electronic control unit
VERS-SAM	South American Version
ZT1816	Gearbox variant (South America only)

https://truckmanualshub.com/

Cable colour code

BL	Blue
BN	Brown
GN	Green
GR	Grey
OR	Orange
P	Pink
R	Red
SB	Black
VO	Violet
W	White
Y	Yellow

Note: If a wire have two colours, this is written out like the following example: Y/R = Yellow/Red.

https://truckmanualshub.com/

Feedback

One of our objectives is that workshop personnel should have access to correct and appropriate service manuals where it concerns fault tracing, repairs and maintenance of Volvo vehicles.
In order to maintain the high standards of our literature, your opinions and experience when using this manual would be greatly appreciated.
If you have any comments or suggestions, make a copy of this page, write down your comments and send them to us, either via telefax or mailing directly to the address listed below.

To

Volvo Parts Corporation

Dept. Technical Support Center 31610
SE-405 08 GÖTEBORG

Fax +46 31 661060

From

.....

.....

.....

.....

.....

.....

.....

Comments/proposals

.....

.....

.....

.....

.....

.....

.....

.....

.....

.....

.....

.....

.....

.....

.....

Concerns Service Manual: .....

https://truckmanualshub.com/

https://truckmanualshub.com/

VOLVO

Volvo Truck Corporation

Göteborg, Sweden

20 037631 English 2500.9.2005 Printed in Sweden